Cooper Response

Smith, Vanessa (A)

From: Russ Christian [rchristian@columbiapipe.com]
Sent: Saturday, February 18, 2012 8:39 AM
To: DeVine, Dan (DJ)
Subject: Fw: LDAR Info
Attachments: ISO 15848 FE Test - Cooper 4 in Cl600 Gate Valve.pdf; ISO 15848 FE Test - Cooper 4 in Cl600 Globe Valve.pdf; ISO 15848 FE Test - Cooper 3 in Cl150 Gate Valve.pdf; DOW Michigan Low-E Valve Questionnaire.docx; image002.jpg

Dan,

More to follow

Russ

Sent from my Verizon Wireless Phone

-----Original message-----

From: Amy Casner <acasner@coopervalves.com>
To: Russ Christian <rchristian@columbiapipe.com>
Cc: Ginger Restovic <grestovic@coopervalves.com>, Adam Ryan <aryan@coopervalves.com>, Pete Kapuza <pkapuza@coopervalves.com>
Sent: Fri, Feb 17, 2012 23:00:02 GMT+00:00
Subject: LDAR Info

Russ,

Please see the attached test reports and questionnaire document for Cooper Valves. Please let me know if there is anything else you need from us.

Thanks,

Amy Casner
Senior Engineer

Cooper Valves, LP
14090 Southwest Freeway, Suite 220
Sugar land, TX 77478
Office: 281-397-3934
Cell: 540-660-2112
www.coopervalves.com
acasner@coopervalves.com
E-link: **14090 Southwest Fwy #220**

COOPER®
Valves

LOW FUGITIVE EMISSION VALVE AND PACKING QUESTIONNAIRE

Two production units at The Dow Chemical Company **Michigan Operations Site** recently came under a Consent Decree from the EPA. One part of this Consent Decree requires installation of Low Fugitive Emission valves and/or Low Fugitive Emission valve stem packing that meets the definition shown below. It also requires supporting documentation.

"Low-Emissions Valve" or "Low-E Valve" shall mean either (i) or (ii) as follows:

(i) A valve (including its specific packing assembly) for which the manufacturer has issued a written warranty that it will not emit fugitives at greater than 100 ppm, and that, if it does so emit at any time in the first five years, the manufacturer will replace the valve; provided however, that no valve shall qualify as "Low-E" by reason of written warranty unless the valve (including its specific packing assembly) either:

(a) first was tested by the manufacturer or a qualified testing firm pursuant to generally-accepted good engineering practices for testing fugitive emissions and the results of the testing reasonably support the warranty; or

(b) is as an Extension of another valve that qualified as "Low-E" per the definition of "Extension" listed below.

Or

(ii) A valve (including its specific packing assembly) that:

a. Has been tested by the manufacturer or a qualified testing firm pursuant to generally-accepted good engineering practices for testing fugitive emissions and that, during the test, at no time leaked at greater than 500 ppm, and on average, leaked at less than 100 ppm; or

b. Is an Extension of another valve that qualified as "Low-E" per the definition of "Extension" listed below.

NOTE: "Extension" shall mean that: (i) the tested and untested valves were produced by the same manufacturer to the same or essentially equivalent quality requirements; (ii) the characteristics of the valve that affect sealing performance (e.g., type of valve, stem motion, tolerances, surface finishes, loading arrangement, and stem and body seal material, design, and construction) are the same or essentially equivalent as between the tested valve and the untested valve; and (iii) the temperature and pressure ratings of the tested valve are at least as high as the temperature and pressure ratings of the untested valve.

Therefore can you please answer **ALL** of the following questions regarding valves that could be supplied to The Dow Chemical Company, Michigan Operations Site?

COMPANY NAME: ____Cooper Valves_____

1) Will your company provide a written warranty for low emission valves as defined above? YES or NO?

   If YES, please describe the testing (the nature of the test and the resulting data) that supports the warranty.

   OR

2) Does your company produce valves that have been proven through testing to meet the emission limits in the definition for low emission valves? YES or NO
   Yes.

If yes to the above questions, what size and type of valves that your company produces will meet this definition or warranty? Please be specific as possible (i.e. which series of valves or models numbers).

Ball?

Plug?

Gate? Cooper Models: 101, 115, 3381, 130, 3611, 160

Globe? Cooper Models: 215, 11, 230, 4301, 260, 4601

Butterfly?

Other?

3) Which valves, including sizes, were tested?

   3" Class 150 (Model 115) Gate, 4" Class 600 (Model 160) Gate, 4" Class 600 (260) Model Globe

4) Which valves, including sizes, are qualified per an extension?
   I believe we are qualified for ½" through 12" Class 150 through 600 on Gates and Globes.

5) Will you provide the test data to The Dow Chemical Company for review? If yes, please include it in the response.
   Yes.

6) Does your Company offer a valve with low emission packing per the following definition?

"Low-Emissions Packing" or "Low-E Packing" shall mean either (i) or (ii) as follows:

(i) A valve packing product, independent of any specific valve, for which the manufacturer has issued a written warranty that the packing will not emit fugitives at greater than 100 ppm, and that, if it does so emit at any time in the first five years, the manufacturer will replace the product; provided however, that no packing product shall qualify as "Low-E" by reason of written warranty unless the packing first was tested by the manufacturer or a qualified testing firm pursuant to generally-accepted good engineering practices for testing fugitive emissions and the results of the testing reasonably support the warranty;

Or

(ii) A valve packing product, independent of any specific valve that has been tested by the manufacturer or a qualified testing firm pursuant to generally-accepted good engineering practices for testing fugitive emissions, and that, during the test, at no time leaked at greater than 500 ppm, and on average leaked at less than 100 ppm.

We use Garlock EVSP 9000.

7) If yes, for which valves would "Low-E Packing" be offered?

All

8) For which types of packing is "Low-E" status based on a written warranty?

9) For which types of packing is "Low-E" status based on testing that shows the packing meets the emission limits in the definition above?

10) If yes, can this Low-E Packing testing information be provided to The Dow Chemical Company for review? If yes, please include it with the response.

Thank you for your assistance to help meet low emission compliance.

Please contact Dan DeVine at 989-636-4330, or by email at devinedj@dow.com with questions or clarifications.

ISO 15848-1
Helium Fugitive Emission Test Report

Performed for

Newmans

www.newmansvalves.com

4" Class 600 Cooper Gate Valve

Item #: CU46R66CEAA

Project Number: 210107
Test Date: June 22, 2010

Performed by

YARMOUTH RESEARCH AND TECHNOLOGY, LLC

434 Walnut Hill Road
North Yarmouth, ME 04097 USA
(207) 829-5359
info@yarmouthresearch.com
www.yarmouthresearch.com

Yarmouth Research and Technology, LLC

Fugitive Emission Test Data Sheet

Customer: Newmans Inc. **Date:** 6/22/2010
Contact: Jim Pease **Project #:** 210107
Product Description: 4 inch Class 600 Cooper Gate Valve
CU46R66CEAA 4IN 600 GT RF CF8M
Sample Supplied by: Customer
Stem Diameter: 29 mm
Packing Nut Torque: 30 ft-lb

Test Conditions

Test Standard: ISO 15848-1 **Test Stand:** Yarmouth Stand 1
Tightness Class: CH 5.0e-3 atm cc/sec **Test Media:** 99% Helium
Endurance Class: C01 500 Mechanical Cycles
Temperature Class: 400C 2 Thermal Cycles
Pressure Class: ANSI Class 600 1440 psig @ Ambient, 845 psig @ 400C
Testing Method: Purge/Sniff for stem seals, sniffing (enclosed area) for bonnet seal
Mounting Position: Stem and Bore Horizontal
Max. Allowable Bonnet Gasket Leakage: 50 PPMv by sniffing method
Leakage Device: Pfeiffer SmartTest HLT560
Cycling Rate: 1 cycle per 60 seconds, 43 rpm handwheel speed

Test Data Summary - Stem Seal

		Stem Seal Leakage Readings - atm cc/sec				*Packing*	*Opening*	*Closing*
Cycle	*Nom.Temp*	*Static*		*Dynamic*		*Retorque*	*Torque*	*Torque*
Number	*(C)*	*Avg.*	*Max.*	*Avg.*	*Max.*	*See Notes*	*(ft-lb)*	*(ft-lb)*
0	20	1.4E-03	2.3E-03	1.8E-03	2.4E-03		30	60
125	20	4.0E-03	4.4E-03	3.6E-03	4.3E-03		30	50
125	400	1.6E-03	1.9E-03	2.6E-04	1.1E-03	1	30	60
250	400	1.1E-04	1.1E-04	1.9E-04	4.9E-04		25	60
250	20	2.9E-03	3.0E-03	3.1E-03	3.6E-03		25	50
375	20	4.2E-03	4.2E-03	4.1E-03	4.3E-03		25	50
375	400	4.3E-04	4.7E-04	6.2E-04	8.3E-04		25	50
500	400	6.1E-04	6.4E-04	6.9E-04	8.8E-04		20	50
500	20	3.8E-03	3.9E-03	4.1E-03	5.0E-03		20	45
Maximum Leakage:		**4.2E-03**	**4.4E-03**	**4.1E-03**	**5.0E-03**		**30**	**60**
Maximum Allowable:		**5.0E-03**	**5.0E-03**					

Yarmouth Research and Technology, LLC

Test Data Summary - Bonnet Seal

Cycle Number	Nom.Temp (C)	Leakage - PPMv Avg.	Leakage - PPMv Max.
0	20	0.3	0.5
500	20	8.1	8.7
Maximum Leakage:		**8.1**	**8.7**
Maximum Allowable:		**50**	**50**

Packing Retorque Notes:

Adjustment Number	Cycle Number	Nom.Temp (C)	Static Leakage Readings before Tightening Avg.	Static Leakage Readings before Tightening Max.	Before Adjustment Nut Torque (ft-lb)	After Adjustment Nut Torque (ft-lb)
1	125	20	4.9E-02	5.0E-02	30	60
	Maximum Leakage:		**4.9E-02**	**5.0E-02**		

Results

Valve passed the requirments of the test standard with 1 packing nut adjustment.

Normal stem wear on stem was observed after test.

Witnessed:

President, Yarmouth Research

STATE OF MAINE
MATTHEW J WASIELEWSKI
No. 7437
LICENSED PROFESSIONAL ENGINEER

Yarmouth Research and Technology

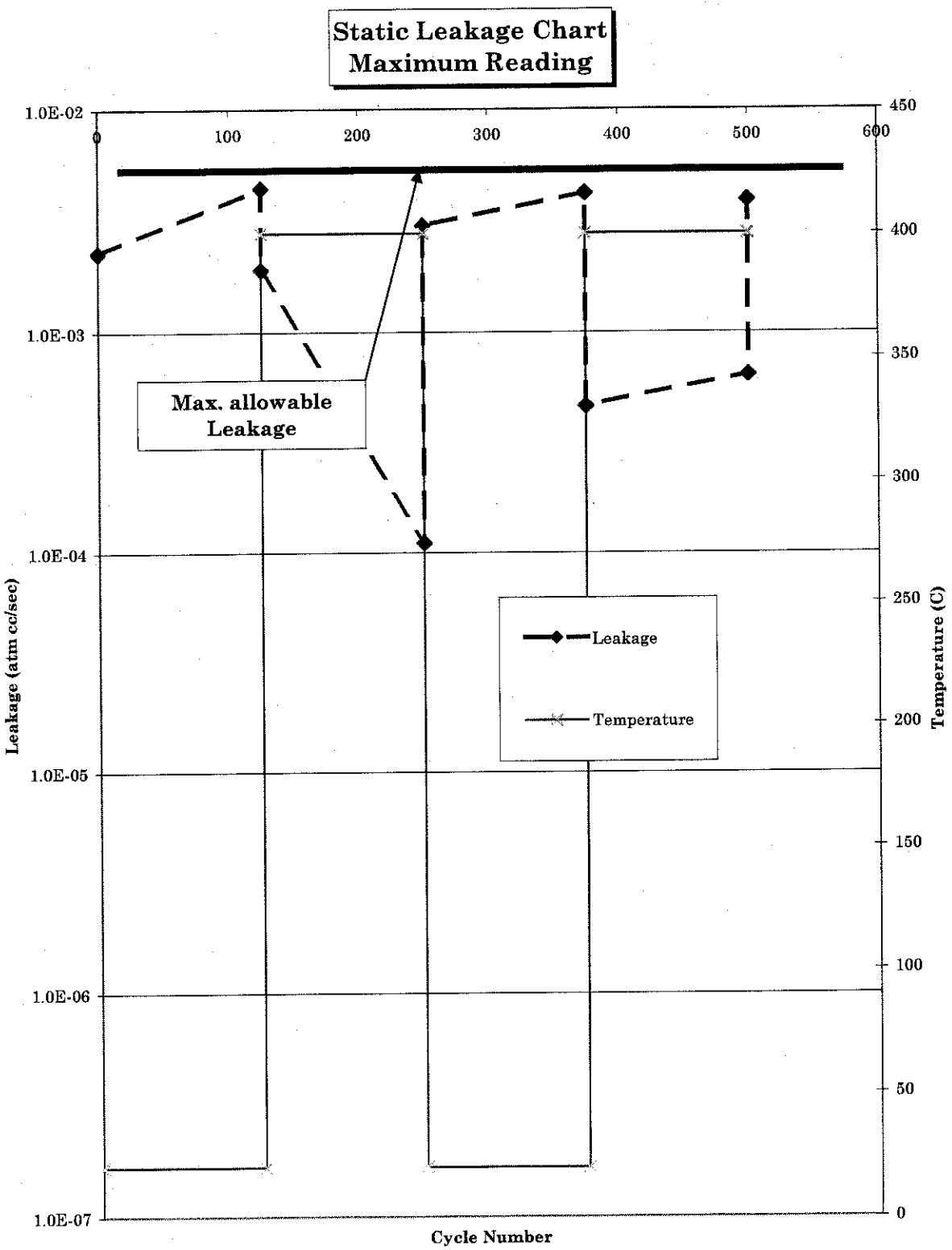

92 East Elm Street, Yarmouth, Maine, 04096 USA
www.yarmouthresearch.com

PHOTOGRAPHS

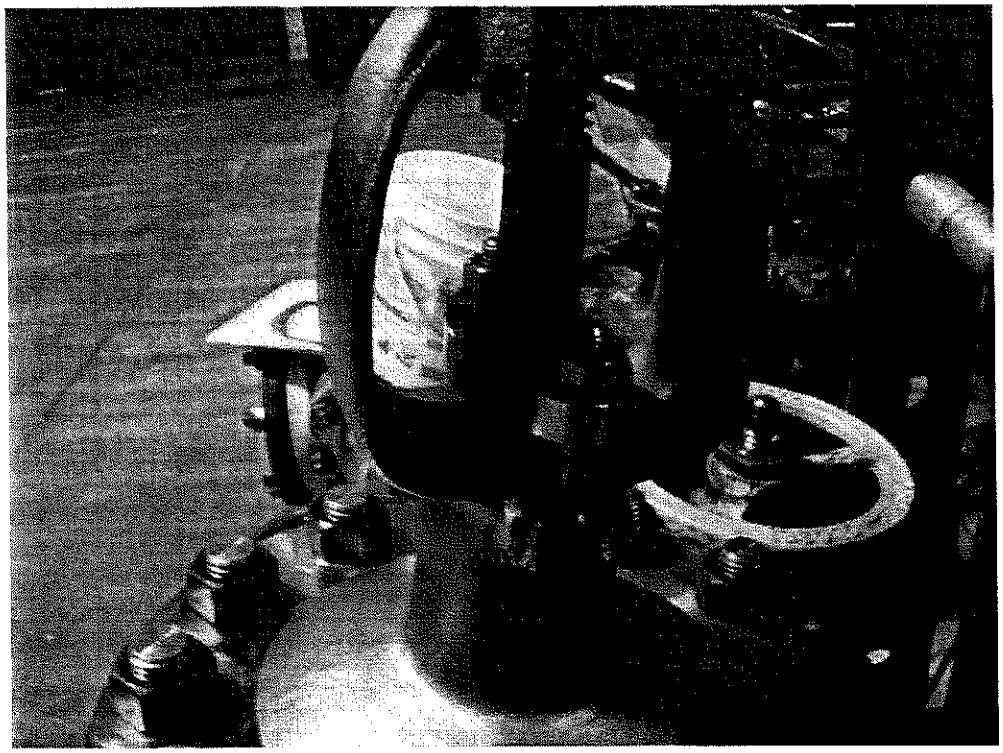

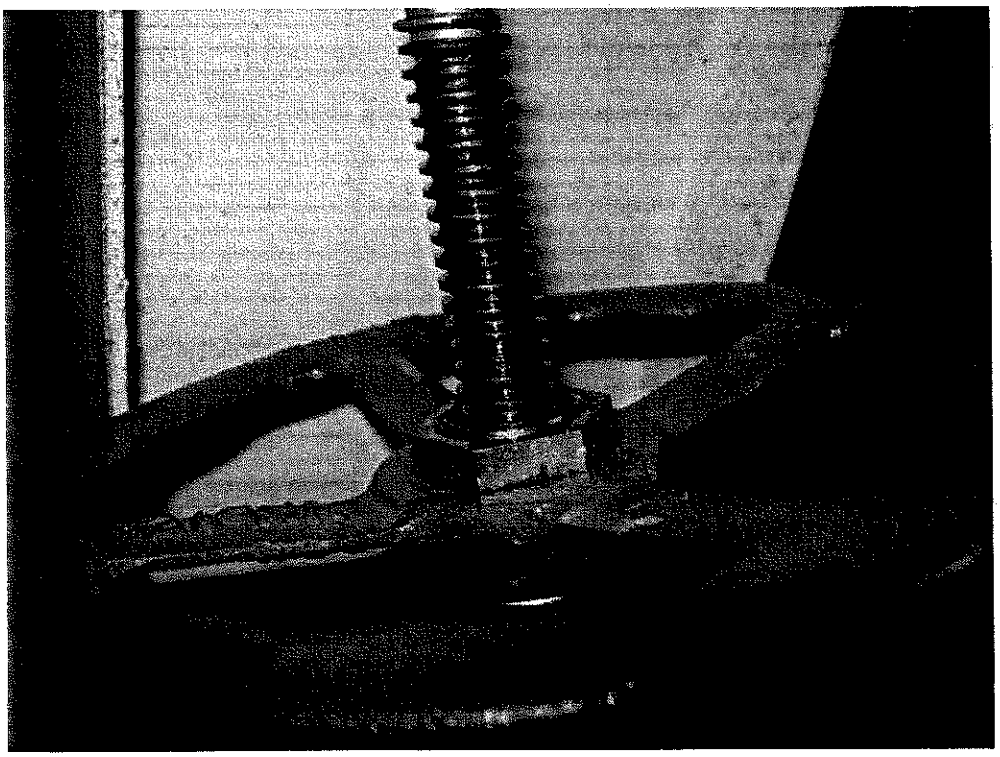

Test Valve

info@yarmouthresearch.com
www.yarmouthresearch.com

Yarmouth Research and Technology, LLC

Valve Description: 4 in Class 600 Cooper Gate Valve **Date:** 6/22/2010

Cycle Number: 0

Time	Pressure (psig)	Bonnet (deg. C)	Body Temp (deg. C)	Inside Temp (deg. C)	Leakage (Atm cc/sec)
1:32:42 PM	1440	21	21	21	2.2E-03
1:32:43 PM	1440	21	21	21	1.5E-03
1:32:44 PM	1440	21	21	21	1.2E-03
1:32:45 PM	1440	21	20	21	1.1E-03
1:32:46 PM	1440	21	21	21	1.0E-03
1:32:47 PM	1440	21	21	21	9.7E-04
1:32:48 PM	1440	21	20	21	9.0E-04
1:32:49 PM	1440	21	20	21	8.4E-04
1:32:50 PM	1440	21	21	21	8.0E-04
1:32:51 PM	1440	21	20	21	7.7E-04
1:32:52 PM	1440	21	21	21	7.3E-04
1:32:53 PM	1440	21	20	21	6.7E-04
1:32:54 PM	1440	21	21	21	6.6E-04
1:32:55 PM	1440	21	21	21	6.6E-04
1:32:56 PM	1440	21	20	21	6.4E-04
1:32:57 PM	1440	21	21	21	6.2E-04
1:32:58 PM	1440	21	20	21	6.0E-04
1:32:59 PM	1440	21	21	21	5.7E-04
1:33:00 PM	1440	21	21	21	5.6E-04
1:33:01 PM	1440	21	21	21	5.5E-04
1:33:02 PM	1440	21	20	21	5.3E-04
1:33:03 PM	1440	21	21	21	5.2E-04
1:33:04 PM	1440	20	21	21	5.1E-04
1:33:05 PM	1440	21	21	21	5.1E-04
1:33:06 PM	1440	21	21	21	5.0E-04
1:33:07 PM	1440	21	21	21	4.9E-04
1:33:08 PM	1440	21	20	21	4.9E-04
1:33:09 PM	1440	21	21	21	4.9E-04
1:33:10 PM	1440	21	21	21	4.9E-04
1:33:11 PM	1440	21	21	21	4.9E-04
1:33:12 PM	1440	21	21	21	5.0E-04
1:33:13 PM	1440	21	21	21	5.1E-04
1:33:14 PM	1440	21	21	21	5.3E-04
1:33:15 PM	1440	21	21	21	5.8E-04
1:33:16 PM	1440	21	21	21	1.5E-03
1:33:17 PM	1440	21	21	21	2.2E-03
1:33:18 PM	1440	20	21	21	2.2E-03
1:33:19 PM	1440	21	21	21	2.2E-03
1:33:20 PM	1440	21	20	21	2.3E-03
1:33:21 PM	1440	21	20	21	2.3E-03
1:33:22 PM	1440	21	20	21	2.3E-03
1:33:23 PM	1440	21	20	21	2.3E-03
1:33:24 PM	1440	21	20	21	2.3E-03
1:33:25 PM	1440	21	21	21	2.3E-03
1:33:26 PM	1440	21	21	21	2.3E-03
1:33:27 PM	1440	21	20	21	2.3E-03
1:33:28 PM	1440	21	21	21	2.3E-03
1:33:29 PM	1440	21	21	21	2.3E-03
1:33:30 PM	1440	21	21	21	2.2E-03
1:33:31 PM	1440	21	20	21	2.2E-03
1:33:32 PM	1440	21	20	21	2.2E-03
1:33:33 PM	1440	21	21	21	2.2E-03
1:33:34 PM	1440	21	20	21	2.2E-03
1:33:35 PM	1440	21	21	21	2.2E-03
1:33:36 PM	1440	21	20	21	2.2E-03
1:33:37 PM	1440	21	20	21	2.2E-03
1:33:38 PM	1440	21	21	21	2.2E-03
1:33:39 PM	1440	21	21	21	2.2E-03
1:33:40 PM	1440	21	20	21	2.2E-03
1:33:41 PM	1440	21	21	21	2.2E-03
Averages ->	**1440**	**21**	**21**	**21**	**1.4E-03**
				Maximum ->	**2.3E-03**

Yarmouth Research and Technology, LLC

Valve Description: 4 in Class 600 Cooper Gate Valve **Date:** 6/22/2010

Cycle Number: 0

Time	Pressure (psig)	Bonnet (deg. C)	Body Temp (deg. C)	Inside Temp (deg. C)	Leakage (Atm cc/sec)
1:34:38 PM	1440	20	20	21	2.4E-03
1:34:39 PM	1440	20	20	21	2.4E-03
1:34:40 PM	1440	20	20	21	2.3E-03
1:34:41 PM	1440	20	20	21	2.4E-03
1:34:42 PM	1440	20	20	21	2.3E-03
1:34:43 PM	1440	20	20	21	2.4E-03
1:34:44 PM	1440	20	20	21	2.4E-03
1:34:45 PM	1440	21	20	21	2.4E-03
1:34:46 PM	1440	21	20	21	2.4E-03
1:34:47 PM	1440	21	21	21	2.4E-03
1:34:48 PM	1440	21	20	21	2.4E-03
1:34:49 PM	1440	20	20	21	2.4E-03
1:34:50 PM	1440	21	21	21	2.4E-03
1:34:51 PM	1440	20	20	21	2.4E-03
1:34:52 PM	1440	20	20	21	2.4E-03
1:34:53 PM	1440	20	20	21	2.4E-03
1:34:54 PM	1440	20	20	21	2.4E-03
1:34:55 PM	1440	20	21	21	2.4E-03
1:34:56 PM	1440	20	20	21	2.4E-03
1:34:57 PM	1440	21	21	21	2.4E-03
1:34:58 PM	1440	20	20	21	2.4E-03
1:34:59 PM	1440	21	20	21	2.4E-03
1:35:00 PM	1440	21	20	21	2.4E-03
1:35:01 PM	1440	20	20	21	2.4E-03
1:35:02 PM	1440	20	20	21	2.4E-03
1:35:03 PM	1440	21	20	21	2.4E-03
1:35:04 PM	1440	20	20	21	2.4E-03
1:35:05 PM	1440	20	21	21	2.4E-03
1:35:06 PM	1440	21	20	21	2.4E-03
1:35:07 PM	1440	20	20	21	2.4E-03
1:35:08 PM	1440	20	20	21	2.4E-03
1:35:09 PM	1440	20	20	21	2.4E-03
1:35:10 PM	1440	20	20	21	2.4E-03
1:35:11 PM	1440	21	20	21	2.4E-03
1:35:12 PM	1440	20	20	21	2.4E-03
1:35:13 PM	1440	20	20	21	2.4E-03
1:35:14 PM	1440	20	20	21	2.4E-03
1:35:15 PM	1440	21	20	21	2.4E-03
1:35:16 PM	1440	20	20	21	2.4E-03
1:35:17 PM	1440	21	20	21	2.4E-03
1:35:18 PM	1440	20	20	21	2.2E-03
1:35:19 PM	1440	20	20	21	1.9E-03
1:35:20 PM	1440	21	20	21	1.8E-03
1:35:21 PM	1440	20	20	21	1.3E-03
1:35:22 PM	1440	20	20	21	1.1E-03
1:35:23 PM	1440	20	20	21	1.0E-03
1:35:24 PM	1440	20	20	21	8.3E-04
1:35:25 PM	1440	21	20	21	7.1E-04
1:35:26 PM	1440	21	20	21	7.5E-04
1:35:27 PM	1440	21	21	21	8.3E-04
1:35:28 PM	1440	21	20	21	1.6E-03
1:35:29 PM	1440	21	20	21	4.4E-04
1:35:30 PM	1440	21	21	21	1.1E-04
1:35:31 PM	1440	21	20	21	4.0E-05
1:35:32 PM	1440	21	21	21	2.0E-05
1:35:33 PM	1440	21	21	21	1.9E-05
1:35:34 PM	1440	21	20	21	2.1E-05
1:35:35 PM	1440	21	21	21	2.0E-05
1:35:36 PM	1440	21	21	21	1.2E-05
1:35:37 PM	1440	21	21	21	4.0E-06
Averages ->	**1440**	**21**	**20**	**21**	**1.8E-03**
				Maximum ->	**2.4E-03**

Yarmouth Research and Technology, LLC

Valve Description: 4 in Class 600 Cooper Gate Valve **Date:** 6/22/2010

Cycle Number: 125

Time	Pressure (psig)	Bonnet (deg. C)	Body Temp (deg. C)	Inside Temp (deg. C)	Leakage (Atm cc/sec)
5:05:03 PM	1440	23	22	21	4.4E-03
5:05:04 PM	1440	23	22	22	4.4E-03
5:05:05 PM	1440	23	21	21	4.3E-03
5:05:06 PM	1440	23	21	21	4.3E-03
5:05:07 PM	1440	23	22	22	4.2E-03
5:05:08 PM	1440	23	22	21	4.2E-03
5:05:09 PM	1440	23	21	21	4.1E-03
5:05:10 PM	1440	23	21	22	4.1E-03
5:05:11 PM	1440	23	21	21	4.2E-03
5:05:12 PM	1440	23	21	22	4.1E-03
5:05:13 PM	1440	23	22	21	4.2E-03
5:05:14 PM	1440	23	21	22	4.2E-03
5:05:15 PM	1440	23	22	22	4.2E-03
5:05:16 PM	1440	23	21	22	4.3E-03
5:05:17 PM	1440	23	22	22	4.3E-03
5:05:18 PM	1440	23	22	22	4.4E-03
5:05:19 PM	1440	23	22	21	4.4E-03
5:05:20 PM	1440	23	21	22	4.4E-03
5:05:21 PM	1440	23	21	22	4.4E-03
5:05:22 PM	1440	23	21	22	4.4E-03
5:05:23 PM	1440	23	22	21	4.4E-03
5:05:24 PM	1440	23	22	21	4.3E-03
5:05:25 PM	1440	23	22	22	4.3E-03
5:05:26 PM	1440	23	21	22	4.2E-03
5:05:27 PM	1440	23	21	22	4.1E-03
5:05:28 PM	1440	23	22	22	4.1E-03
5:05:29 PM	1440	23	21	22	4.1E-03
5:05:30 PM	1440	23	22	22	4.0E-03
5:05:31 PM	1440	23	21	22	4.0E-03
5:05:32 PM	1440	23	21	22	4.0E-03
5:05:33 PM	1440	23	22	21	4.0E-03
5:05:34 PM	1440	23	22	22	3.9E-03
5:05:35 PM	1440	23	22	21	3.9E-03
5:05:36 PM	1440	23	21	21	3.9E-03
5:05:37 PM	1440	23	22	22	3.9E-03
5:05:38 PM	1440	23	21	21	3.9E-03
5:05:39 PM	1440	23	21	22	3.8E-03
5:05:40 PM	1440	23	21	22	3.9E-03
5:05:41 PM	1440	23	21	22	3.9E-03
5:05:42 PM	1440	23	21	21	3.8E-03
5:05:43 PM	1440	23	21	22	3.8E-03
5:05:44 PM	1440	23	21	21	3.8E-03
5:05:45 PM	1440	23	22	22	3.8E-03
5:05:46 PM	1440	23	21	21	3.8E-03
5:05:47 PM	1440	23	21	22	3.8E-03
5:05:48 PM	1440	23	21	21	3.7E-03
5:05:49 PM	1440	23	21	21	3.7E-03
5:05:50 PM	1440	23	22	21	3.7E-03
5:05:51 PM	1440	23	21	21	3.7E-03
5:05:52 PM	1440	23	21	21	3.6E-03
5:05:53 PM	1440	23	21	21	3.6E-03
5:05:54 PM	1440	23	21	21	3.6E-03
5:05:55 PM	1440	23	21	22	3.6E-03
5:05:56 PM	1440	23	21	22	3.6E-03
5:05:57 PM	1440	23	21	21	3.6E-03
5:05:58 PM	1440	23	21	22	3.7E-03
5:05:59 PM	1440	23	22	22	3.7E-03
5:06:00 PM	1440	23	21	21	3.7E-03
5:06:01 PM	1440	23	22	21	3.8E-03
5:06:02 PM	1440	23	21	21	3.8E-03
Averages ->	**1440**	**23**	**21**	**22**	**4.0E-03**
				Maximum ->	**4.4E-03**

Yarmouth Research and Technology, LLC

Valve Description: 4 in Class 600 Cooper Gate Valve **Date:** 6/22/2010

Cycle Number: 125

Time	Pressure (psig)	Bonnet (deg. C)	Body Temp (deg. C)	Inside Temp (deg. C)	Leakage (Atm cc/sec)
5:08:05 PM	1440	23	21	22	4.3E-03
5:08:06 PM	1440	23	21	21	4.3E-03
5:08:07 PM	1440	23	21	22	4.2E-03
5:08:08 PM	1440	23	21	21	4.2E-03
5:08:09 PM	1440	23	21	21	4.2E-03
5:08:10 PM	1440	23	21	21	4.1E-03
5:08:11 PM	1440	23	21	21	4.1E-03
5:08:12 PM	1440	23	21	21	4.1E-03
5:08:13 PM	1440	23	21	21	4.0E-03
5:08:14 PM	1440	23	21	21	4.0E-03
5:08:15 PM	1440	23	21	21	4.0E-03
5:08:16 PM	1440	23	21	21	3.9E-03
5:08:17 PM	1440	23	21	21	3.9E-03
5:08:18 PM	1440	23	21	21	3.9E-03
5:08:19 PM	1440	23	21	21	3.9E-03
5:08:20 PM	1440	23	21	21	3.9E-03
5:08:21 PM	1440	23	21	21	3.9E-03
5:08:22 PM	1440	23	21	21	3.9E-03
5:08:23 PM	1440	23	21	21	3.9E-03
5:08:24 PM	1440	23	21	21	4.0E-03
5:08:25 PM	1440	23	21	22	4.0E-03
5:08:26 PM	1440	23	21	21	4.1E-03
5:08:27 PM	1440	23	21	21	4.1E-03
5:08:28 PM	1440	23	21	22	4.2E-03
5:08:29 PM	1440	23	21	21	4.3E-03
5:08:30 PM	1440	23	21	21	4.3E-03
5:08:31 PM	1440	23	21	22	4.3E-03
5:08:32 PM	1440	23	21	21	4.3E-03
5:08:33 PM	1440	23	21	21	4.2E-03
5:08:34 PM	1440	23	21	21	4.2E-03
5:08:35 PM	1440	22	21	21	4.1E-03
5:08:36 PM	1440	22	21	21	3.9E-03
5:08:37 PM	1440	22	21	21	3.8E-03
5:08:38 PM	1440	23	21	21	3.7E-03
5:08:39 PM	1440	23	21	21	3.6E-03
5:08:40 PM	1440	23	21	21	3.5E-03
5:08:41 PM	1440	23	21	21	3.4E-03
5:08:42 PM	1440	23	21	21	3.3E-03
5:08:43 PM	1440	23	21	21	3.2E-03
5:08:44 PM	1440	22	21	21	3.2E-03
5:08:45 PM	1440	22	21	22	3.1E-03
5:08:46 PM	1440	22	21	21	3.1E-03
5:08:47 PM	1440	22	21	21	3.0E-03
5:08:48 PM	1440	22	21	22	3.0E-03
5:08:49 PM	1440	23	21	21	2.9E-03
5:08:50 PM	1440	23	21	21	2.9E-03
5:08:51 PM	1440	23	21	21	2.9E-03
5:08:52 PM	1440	23	21	21	2.8E-03
5:08:53 PM	1440	23	21	21	2.8E-03
5:08:54 PM	1440	22	21	21	2.8E-03
5:08:55 PM	1440	23	21	21	2.7E-03
5:08:56 PM	1440	23	21	21	2.7E-03
5:08:57 PM	1440	23	21	21	2.7E-03
5:08:58 PM	1440	22	21	21	2.8E-03
5:08:59 PM	1440	23	21	21	2.8E-03
5:09:00 PM	1440	23	21	21	2.9E-03
5:09:01 PM	1440	22	21	21	3.0E-03
5:09:02 PM	1440	22	21	21	3.0E-03
5:09:03 PM	1440	23	21	21	3.1E-03
5:09:04 PM	1440	23	21	21	3.2E-03
Averages ->	**1440**	**23**	**21**	**21**	**3.6E-03**
				Maximum ->	**4.3E-03**

Yarmouth Research and Technology, LLC

Valve Description: 4 in Class 600 Cooper Gate Valve **Date:** 6/23/2010

Cycle Number: 125

Time	Pressure (psig)	Bonnet (deg. C)	Body Temp (deg. C)	Inside Temp (deg. C)	Leakage (Atm cc/sec)
2:11:49 PM	845	397	383	399	1.9E-03
2:11:50 PM	845	397	383	399	1.9E-03
2:11:51 PM	845	397	383	399	1.9E-03
2:11:52 PM	845	397	383	398	1.9E-03
2:11:53 PM	845	397	383	398	1.9E-03
2:11:54 PM	845	398	383	399	1.9E-03
2:11:55 PM	845	398	383	398	1.9E-03
2:11:56 PM	845	398	383	399	1.8E-03
2:11:57 PM	845	398	383	399	1.8E-03
2:11:58 PM	845	399	383	398	1.8E-03
2:11:59 PM	845	399	383	399	1.8E-03
2:12:00 PM	845	399	383	398	1.8E-03
2:12:01 PM	845	399	383	398	1.8E-03
2:12:02 PM	845	400	383	399	1.8E-03
2:12:03 PM	845	400	383	399	1.8E-03
2:12:04 PM	845	400	383	399	1.8E-03
2:12:05 PM	845	401	383	399	1.8E-03
2:12:06 PM	845	401	383	399	1.7E-03
2:12:07 PM	845	401	383	399	1.7E-03
2:12:08 PM	845	401	383	399	1.7E-03
2:12:09 PM	845	402	383	398	1.7E-03
2:12:10 PM	845	402	383	399	1.7E-03
2:12:11 PM	845	402	383	399	1.7E-03
2:12:12 PM	845	403	383	399	1.7E-03
2:12:13 PM	845	403	383	398	1.7E-03
2:12:14 PM	845	403	383	398	1.7E-03
2:12:15 PM	845	403	383	398	1.7E-03
2:12:16 PM	845	404	383	399	1.6E-03
2:12:17 PM	845	404	383	399	1.6E-03
2:12:18 PM	845	404	383	399	1.6E-03
2:12:19 PM	845	404	383	399	1.6E-03
2:12:20 PM	845	404	383	399	1.6E-03
2:12:21 PM	845	404	383	398	1.6E-03
2:12:22 PM	845	404	383	398	1.6E-03
2:12:23 PM	845	404	383	398	1.5E-03
2:12:24 PM	845	404	383	398	1.5E-03
2:12:25 PM	845	404	383	398	1.5E-03
2:12:26 PM	845	404	384	399	1.5E-03
2:12:27 PM	845	404	383	398	1.4E-03
2:12:28 PM	845	404	383	398	1.4E-03
2:12:29 PM	845	404	383	398	1.4E-03
2:12:30 PM	845	404	383	398	1.4E-03
2:12:31 PM	845	404	383	398	1.4E-03
2:12:32 PM	845	403	383	398	1.4E-03
2:12:33 PM	845	403	383	398	1.4E-03
2:12:34 PM	845	403	383	398	1.3E-03
2:12:35 PM	845	403	383	398	1.4E-03
2:12:36 PM	845	403	383	398	1.3E-03
2:12:37 PM	845	403	383	398	1.3E-03
2:12:38 PM	845	402	383	398	1.3E-03
2:12:39 PM	845	402	383	398	1.3E-03
2:12:40 PM	845	402	383	398	1.3E-03
2:12:41 PM	845	402	383	398	1.3E-03
2:12:42 PM	845	402	383	399	1.2E-03
2:12:43 PM	845	401	383	398	1.2E-03
2:12:44 PM	845	401	383	399	1.3E-03
2:12:45 PM	845	401	383	398	1.2E-03
2:12:46 PM	845	400	383	398	1.2E-03
2:12:47 PM	845	400	383	398	1.2E-03
2:12:48 PM	845	400	383	398	1.2E-03
Averages ->	**845**	**401**	**383**	**398**	**1.6E-03**
				Maximum ->	**1.9E-03**

Yarmouth Research and Technology, LLC

Valve Description: 4 in Class 600 Cooper Gate Valve **Date:** 6/23/2010

Cycle Number: 125

Time	Pressure (psig)	Bonnet (deg. C)	Body Temp (deg. C)	Inside Temp (deg. C)	Leakage (Atm cc/sec)
2:13:13 PM	845	397	383	398	2.1E-05
2:13:14 PM	845	397	383	398	1.2E-05
2:13:15 PM	845	397	383	398	-3.1E-06
2:13:16 PM	845	397	383	398	1.5E-06
2:13:17 PM	845	397	383	398	3.7E-05
2:13:18 PM	845	398	383	398	-1.4E-05
2:13:19 PM	845	398	383	398	2.1E-05
2:13:20 PM	845	398	383	398	2.7E-05
2:13:21 PM	845	398	383	398	-2.4E-05
2:13:22 PM	845	398	383	398	9.2E-06
2:13:23 PM	845	399	383	399	9.2E-06
2:13:24 PM	845	399	383	399	-1.4E-05
2:13:25 PM	845	399	383	398	1.1E-05
2:13:26 PM	845	399	383	398	3.2E-05
2:13:27 PM	845	400	383	398	-3.5E-05
2:13:28 PM	845	400	382	398	-2.7E-05
2:13:29 PM	845	400	383	398	4.6E-05
2:13:30 PM	845	400	383	398	-2.6E-05
2:13:31 PM	845	401	383	399	-2.7E-05
2:13:32 PM	845	401	383	399	4.7E-05
2:13:33 PM	845	401	383	398	3.8E-05
2:13:34 PM	845	402	383	398	1.7E-05
2:13:35 PM	845	402	383	399	-1.7E-05
2:13:36 PM	845	402	383	399	-6.1E-06
2:13:37 PM	845	403	383	398	1.7E-05
2:13:38 PM	845	403	383	399	1.1E-05
2:13:39 PM	845	403	383	398	1.2E-05
2:13:40 PM	845	403	383	399	1.2E-05
2:13:41 PM	845	403	383	398	3.1E-06
2:13:42 PM	845	403	383	398	1.5E-05
2:13:43 PM	845	404	383	398	2.0E-05
2:13:44 PM	845	404	383	398	1.1E-05
2:13:45 PM	845	404	383	398	7.6E-06
2:13:46 PM	845	404	383	398	-1.1E-05
2:13:47 PM	845	404	383	398	2.9E-05
2:13:48 PM	845	404	383	398	1.7E-05
2:13:49 PM	845	404	383	398	2.0E-05
2:13:50 PM	845	404	383	398	2.7E-05
2:13:51 PM	845	404	383	398	3.1E-06
2:13:52 PM	845	404	383	398	1.1E-05
2:13:53 PM	845	404	383	399	1.8E-05
2:13:54 PM	845	404	383	399	2.1E-05
2:13:55 PM	845	403	383	398	1.2E-05
2:13:56 PM	845	403	383	399	2.3E-05
2:13:57 PM	845	403	383	399	3.1E-06
2:13:58 PM	845	403	383	399	7.6E-05
2:13:59 PM	845	403	383	399	1.0E-03
2:14:00 PM	845	403	383	398	1.0E-03
2:14:01 PM	845	402	383	399	1.0E-03
2:14:02 PM	845	402	383	398	1.1E-03
2:14:03 PM	845	402	383	399	1.1E-03
2:14:04 PM	845	402	383	399	1.1E-03
2:14:05 PM	845	402	383	399	1.1E-03
2:14:06 PM	845	401	383	398	1.1E-03
2:14:07 PM	845	401	383	398	1.1E-03
2:14:08 PM	845	401	383	398	1.1E-03
2:14:09 PM	845	401	383	399	1.1E-03
2:14:10 PM	845	400	383	398	1.1E-03
2:14:11 PM	845	400	383	399	1.1E-03
2:14:12 PM	845	400	383	398	1.1E-03
Averages ->	**845**	**401**	**383**	**398**	**2.6E-04**
				Maximum ->	**1.1E-03**

Yarmouth Research and Technology, LLC

Valve Description: 4 in Class 600 Cooper Gate Valve **Date:** 6/23/2010

Cycle Number: 250

Time	Pressure (psig)	Bonnet (deg. C)	Body Temp (deg. C)	Inside Temp (deg. C)	Leakage (Atm cc/sec)
4:54:41 PM	845	388	399	399	1.1E-04
4:54:42 PM	845	388	399	399	1.1E-04
4:54:43 PM	845	388	399	399	1.1E-04
4:54:44 PM	845	388	399	399	1.1E-04
4:54:45 PM	845	388	399	399	1.1E-04
4:54:46 PM	845	388	399	399	1.1E-04
4:54:47 PM	845	388	399	399	1.1E-04
4:54:48 PM	845	388	399	399	1.1E-04
4:54:49 PM	845	388	399	399	1.1E-04
4:54:50 PM	845	388	399	399	1.1E-04
4:54:51 PM	845	388	399	399	1.1E-04
4:54:52 PM	845	388	399	400	1.1E-04
4:54:53 PM	845	388	399	400	1.1E-04
4:54:54 PM	845	388	399	399	1.1E-04
4:54:55 PM	845	388	399	400	1.1E-04
4:54:56 PM	845	388	399	400	1.1E-04
4:54:57 PM	845	388	399	399	1.1E-04
4:54:58 PM	845	388	399	399	1.1E-04
4:54:59 PM	845	388	399	400	1.1E-04
4:55:00 PM	845	388	399	399	1.1E-04
4:55:01 PM	845	388	399	400	1.1E-04
4:55:02 PM	845	388	399	399	1.1E-04
4:55:03 PM	845	388	399	399	1.1E-04
4:55:04 PM	845	388	399	400	1.1E-04
4:55:05 PM	845	388	399	399	1.1E-04
4:55:06 PM	845	389	399	400	1.1E-04
4:55:07 PM	845	388	399	399	1.1E-04
4:55:08 PM	845	388	399	400	1.1E-04
4:55:09 PM	845	388	399	399	1.1E-04
4:55:10 PM	845	388	399	399	1.1E-04
4:55:11 PM	845	388	399	399	1.1E-04
4:55:12 PM	845	388	399	399	1.1E-04
4:55:13 PM	845	388	399	399	1.1E-04
4:55:14 PM	845	388	399	400	1.1E-04
4:55:15 PM	845	388	399	400	1.1E-04
4:55:16 PM	845	388	399	399	1.1E-04
4:55:17 PM	845	388	399	400	1.1E-04
4:55:18 PM	845	389	399	399	1.1E-04
4:55:19 PM	845	388	399	400	1.1E-04
4:55:20 PM	845	388	399	399	1.1E-04
4:55:21 PM	845	389	399	400	1.1E-04
4:55:22 PM	845	389	399	399	1.1E-04
4:55:23 PM	845	389	399	399	1.1E-04
4:55:24 PM	845	389	399	400	1.1E-04
4:55:25 PM	845	389	399	400	1.1E-04
4:55:26 PM	845	389	399	400	1.1E-04
4:55:27 PM	845	389	399	399	1.1E-04
4:55:28 PM	845	388	399	400	1.1E-04
4:55:29 PM	845	389	399	400	1.1E-04
4:55:30 PM	845	389	399	399	1.1E-04
4:55:31 PM	845	388	399	399	1.1E-04
4:55:32 PM	845	388	399	399	1.1E-04
4:55:33 PM	845	389	399	400	1.1E-04
4:55:34 PM	845	389	399	399	1.1E-04
4:55:35 PM	845	389	399	399	1.1E-04
4:55:36 PM	845	388	399	399	1.1E-04
4:55:37 PM	845	388	399	399	1.1E-04
4:55:38 PM	845	389	399	400	1.1E-04
4:55:39 PM	845	389	399	399	1.1E-04
4:55:40 PM	845	388	399	399	1.1E-04
Averages ->	**845**	**388**	**399**	**399**	**1.1E-04**
				Maximum ->	**1.1E-04**

Yarmouth Research and Technology, LLC

Valve Description: 4 in Class 600 Cooper Gate Valve **Date:** 6/23/2010

Cycle Number: 250

Time	Pressure (psig)	Bonnet (deg. C)	Body Temp (deg. C)	Inside Temp (deg. C)	Leakage (Atm cc/sec)
4:56:03 PM	845	389	399	400	1.1E-04
4:56:04 PM	845	389	399	400	1.1E-04
4:56:05 PM	845	389	399	400	1.1E-04
4:56:06 PM	845	389	399	400	1.1E-04
4:56:07 PM	845	389	399	400	1.1E-04
4:56:08 PM	845	389	399	400	1.1E-04
4:56:09 PM	845	389	399	400	1.1E-04
4:56:10 PM	845	389	399	400	1.1E-04
4:56:11 PM	845	389	399	400	1.1E-04
4:56:12 PM	845	389	399	400	1.1E-04
4:56:13 PM	845	389	399	399	1.1E-04
4:56:14 PM	845	389	399	399	1.1E-04
4:56:15 PM	845	389	399	400	1.1E-04
4:56:16 PM	845	389	399	400	1.1E-04
4:56:17 PM	845	389	399	399	1.1E-04
4:56:18 PM	845	389	399	399	1.1E-04
4:56:19 PM	845	389	399	400	1.1E-04
4:56:20 PM	845	389	399	400	1.1E-04
4:56:21 PM	845	389	399	399	1.1E-04
4:56:22 PM	845	389	399	399	1.1E-04
4:56:23 PM	845	389	399	400	1.1E-04
4:56:24 PM	845	389	399	400	1.1E-04
4:56:25 PM	845	389	399	400	1.1E-04
4:56:26 PM	845	389	399	400	1.1E-04
4:56:27 PM	845	389	399	400	1.1E-04
4:56:28 PM	845	389	399	400	1.1E-04
4:56:29 PM	845	389	399	400	1.1E-04
4:56:30 PM	845	389	399	399	1.1E-04
4:56:31 PM	845	389	399	400	1.1E-04
4:56:32 PM	845	389	399	400	1.1E-04
4:56:33 PM	845	389	399	400	1.1E-04
4:56:34 PM	845	389	399	400	1.1E-04
4:56:35 PM	845	389	399	400	1.1E-04
4:56:36 PM	845	389	399	400	1.1E-04
4:56:37 PM	845	389	399	400	1.1E-04
4:56:38 PM	845	389	399	400	1.1E-04
4:56:39 PM	845	389	399	400	1.1E-04
4:56:40 PM	845	389	399	400	1.2E-04
4:56:41 PM	845	389	399	399	1.2E-04
4:56:42 PM	845	389	399	400	1.3E-04
4:56:43 PM	845	389	399	400	1.4E-04
4:56:44 PM	845	389	399	400	1.5E-04
4:56:45 PM	845	390	399	400	1.7E-04
4:56:46 PM	845	389	399	400	1.9E-04
4:56:47 PM	845	389	399	400	2.2E-04
4:56:48 PM	845	390	399	400	2.5E-04
4:56:49 PM	845	390	399	400	2.8E-04
4:56:50 PM	845	390	399	400	3.2E-04
4:56:51 PM	845	389	399	400	3.5E-04
4:56:52 PM	845	389	399	400	3.7E-04
4:56:53 PM	845	390	399	400	4.0E-04
4:56:54 PM	845	390	399	400	4.2E-04
4:56:55 PM	845	389	399	400	4.4E-04
4:56:56 PM	845	390	399	400	4.5E-04
4:56:57 PM	845	389	399	400	4.7E-04
4:56:58 PM	845	389	399	400	4.8E-04
4:56:59 PM	845	389	399	400	4.8E-04
4:57:00 PM	845	389	399	400	4.9E-04
4:57:01 PM	845	390	399	400	4.9E-04
4:57:02 PM	845	389	399	400	4.8E-04
Averages ->	**845**	**389**	**399**	**400**	**1.9E-04**
				Maximum ->	**4.9E-04**

Yarmouth Research and Technology, LLC

Valve Description: 4 in Class 600 Cooper Gate Valve **Date:** 6/24/2010

Cycle Number: 250

Time	Pressure (psig)	Bonnet (deg. C)	Body Temp (deg. C)	Inside Temp (deg. C)	Leakage (Atm cc/sec)
8:35:58 AM	1440	21	29	28	2.7E-03
8:35:59 AM	1440	21	29	28	2.7E-03
8:36:00 AM	1440	21	29	28	2.7E-03
8:36:01 AM	1440	21	29	28	2.7E-03
8:36:02 AM	1440	21	29	28	2.7E-03
8:36:03 AM	1440	21	29	28	2.7E-03
8:36:04 AM	1440	21	29	28	2.7E-03
8:36:05 AM	1440	21	29	28	2.8E-03
8:36:06 AM	1440	21	29	28	2.8E-03
8:36:07 AM	1440	21	29	28	2.8E-03
8:36:08 AM	1440	21	29	28	2.8E-03
8:36:09 AM	1440	21	29	28	2.8E-03
8:36:10 AM	1440	21	29	28	2.8E-03
8:36:11 AM	1440	21	29	28	2.9E-03
8:36:12 AM	1440	21	29	28	2.9E-03
8:36:13 AM	1440	21	29	28	2.9E-03
8:36:14 AM	1440	21	29	28	2.9E-03
8:36:15 AM	1440	21	29	28	2.9E-03
8:36:16 AM	1440	21	29	28	2.9E-03
8:36:17 AM	1440	21	29	28	2.9E-03
8:36:18 AM	1440	21	29	28	2.9E-03
8:36:19 AM	1440	21	29	28	2.9E-03
8:36:20 AM	1440	21	29	28	2.9E-03
8:36:21 AM	1440	21	29	28	2.9E-03
8:36:22 AM	1440	21	29	28	3.0E-03
8:36:23 AM	1440	21	29	28	2.9E-03
8:36:24 AM	1440	21	29	28	3.0E-03
8:36:25 AM	1440	21	29	28	3.0E-03
8:36:26 AM	1440	21	29	28	2.9E-03
8:36:27 AM	1440	21	29	28	3.0E-03
8:36:28 AM	1440	21	29	28	3.0E-03
8:36:29 AM	1440	21	29	28	3.0E-03
8:36:30 AM	1440	21	29	27	3.0E-03
8:36:31 AM	1440	21	29	27	2.9E-03
8:36:32 AM	1440	21	29	28	3.0E-03
8:36:33 AM	1440	21	29	28	2.9E-03
8:36:34 AM	1440	21	29	27	2.9E-03
8:36:35 AM	1440	21	29	28	3.0E-03
8:36:36 AM	1440	21	29	27	3.0E-03
8:36:37 AM	1440	21	29	27	3.0E-03
8:36:38 AM	1440	21	29	27	3.0E-03
8:36:39 AM	1440	21	29	28	2.9E-03
8:36:40 AM	1440	21	29	28	2.9E-03
8:36:41 AM	1440	21	29	28	2.9E-03
8:36:42 AM	1440	21	29	28	2.9E-03
8:36:43 AM	1440	21	29	28	2.9E-03
8:36:44 AM	1440	21	29	28	2.9E-03
8:36:45 AM	1440	21	29	28	3.0E-03
8:36:46 AM	1440	21	29	28	2.9E-03
8:36:47 AM	1440	21	29	28	2.9E-03
8:36:48 AM	1440	21	29	28	3.0E-03
8:36:49 AM	1440	21	29	28	3.0E-03
8:36:50 AM	1440	21	29	28	2.9E-03
8:36:51 AM	1440	21	29	28	3.0E-03
8:36:52 AM	1440	21	29	28	3.0E-03
8:36:53 AM	1440	21	29	28	3.0E-03
8:36:54 AM	1440	21	29	28	3.0E-03
8:36:55 AM	1440	21	29	27	3.0E-03
8:36:56 AM	1440	21	29	28	3.0E-03
8:36:57 AM	1440	21	29	28	3.0E-03
Averages ->	**1440**	**21**	**29**	**28**	**2.9E-03**
				Maximum ->	**3.0E-03**

Yarmouth Research and Technology, LLC

Valve Description: 4 in Class 600 Cooper Gate Valve **Date:** 6/24/2010

Cycle Number: 250

Time	Pressure (psig)	Bonnet (deg. C)	Body Temp (deg. C)	Inside Temp (deg. C)	Leakage (Atm cc/sec)
8:37:45 AM	1440	21	29	28	3.0E-03
8:37:46 AM	1440	21	29	28	3.1E-03
8:37:47 AM	1440	21	29	28	3.1E-03
8:37:48 AM	1440	21	29	28	3.0E-03
8:37:49 AM	1440	21	29	28	3.0E-03
8:37:50 AM	1440	21	29	28	3.0E-03
8:37:51 AM	1440	21	29	28	3.0E-03
8:37:52 AM	1440	21	29	28	3.0E-03
8:37:53 AM	1440	21	29	27	3.0E-03
8:37:54 AM	1440	21	29	28	3.0E-03
8:37:55 AM	1440	21	29	28	3.0E-03
8:37:56 AM	1440	21	29	28	3.0E-03
8:37:57 AM	1440	21	29	28	3.0E-03
8:37:58 AM	1440	21	29	27	3.0E-03
8:37:59 AM	1440	21	29	28	3.0E-03
8:38:00 AM	1440	21	29	28	3.0E-03
8:38:01 AM	1440	21	29	28	3.0E-03
8:38:02 AM	1440	21	29	28	3.0E-03
8:38:03 AM	1440	21	29	28	2.9E-03
8:38:04 AM	1440	21	29	27	2.9E-03
8:38:05 AM	1440	21	29	28	2.9E-03
8:38:06 AM	1440	21	29	27	2.9E-03
8:38:07 AM	1440	21	29	28	2.9E-03
8:38:08 AM	1440	21	29	28	2.9E-03
8:38:09 AM	1440	21	29	28	2.9E-03
8:38:10 AM	1440	21	29	28	2.9E-03
8:38:11 AM	1440	21	29	28	2.9E-03
8:38:12 AM	1440	21	29	28	2.9E-03
8:38:13 AM	1440	21	29	28	2.9E-03
8:38:14 AM	1440	21	29	28	2.9E-03
8:38:15 AM	1440	21	29	27	2.9E-03
8:38:16 AM	1440	21	29	27	2.9E-03
8:38:17 AM	1440	21	29	28	2.9E-03
8:38:18 AM	1440	21	29	28	3.0E-03
8:38:19 AM	1440	21	29	27	3.0E-03
8:38:20 AM	1440	21	29	28	3.1E-03
8:38:21 AM	1440	21	29	28	3.1E-03
8:38:22 AM	1440	21	29	28	3.2E-03
8:38:23 AM	1440	21	29	28	3.3E-03
8:38:24 AM	1440	21	29	27	3.3E-03
8:38:25 AM	1440	21	29	28	3.4E-03
8:38:26 AM	1440	21	29	27	3.5E-03
8:38:27 AM	1440	21	29	27	3.5E-03
8:38:28 AM	1440	21	29	28	3.6E-03
8:38:29 AM	1440	21	29	27	3.6E-03
8:38:30 AM	1440	21	29	27	3.6E-03
8:38:31 AM	1440	21	29	28	3.6E-03
8:38:32 AM	1440	21	29	27	3.6E-03
8:38:33 AM	1440	21	29	27	3.6E-03
8:38:34 AM	1440	21	29	27	3.5E-03
8:38:35 AM	1440	21	29	28	3.5E-03
8:38:36 AM	1440	21	29	28	3.4E-03
8:38:37 AM	1440	21	29	28	3.4E-03
8:38:38 AM	1440	21	29	28	3.3E-03
8:38:39 AM	1440	21	29	27	3.3E-03
8:38:40 AM	1440	21	29	27	3.3E-03
8:38:41 AM	1440	21	29	28	3.3E-03
8:38:42 AM	1440	21	29	28	3.2E-03
8:38:43 AM	1440	21	29	27	3.3E-03
8:38:44 AM	1440	21	29	27	3.3E-03
Averages ->	**1440**	**21**	**29**	**28**	**3.1E-03**
				Maximum ->	**3.6E-03**

Yarmouth Research and Technology, LLC

Valve Description: 4 in Class 600 Cooper Gate Valve **Date:** 6/24/2010

Cycle Number: 375

Time	Pressure (psig)	Bonnet (deg. C)	Body Temp (deg. C)	Inside Temp (deg. C)	Leakage (Atm cc/sec)
10:54:57 AM	1440	24	25	24	4.1E-03
10:54:58 AM	1440	24	25	24	4.1E-03
10:54:59 AM	1440	24	25	24	4.1E-03
10:55:00 AM	1440	24	25	24	4.1E-03
10:55:01 AM	1440	24	25	24	4.1E-03
10:55:02 AM	1440	24	25	24	4.1E-03
10:55:03 AM	1440	24	25	24	4.1E-03
10:55:04 AM	1440	24	25	24	4.1E-03
10:55:05 AM	1440	24	25	24	4.1E-03
10:55:06 AM	1440	24	25	24	4.1E-03
10:55:07 AM	1440	24	25	24	4.1E-03
10:55:08 AM	1440	24	25	24	4.1E-03
10:55:09 AM	1440	24	25	24	4.1E-03
10:55:10 AM	1440	24	25	24	4.1E-03
10:55:11 AM	1440	24	25	24	4.1E-03
10:55:12 AM	1440	24	25	24	4.2E-03
10:55:13 AM	1440	24	25	24	4.2E-03
10:55:14 AM	1440	24	25	24	4.2E-03
10:55:15 AM	1440	24	25	24	4.2E-03
10:55:16 AM	1440	24	25	24	4.2E-03
10:55:17 AM	1440	24	25	24	4.2E-03
10:55:18 AM	1440	24	25	24	4.2E-03
10:55:19 AM	1440	24	25	24	4.2E-03
10:55:20 AM	1440	24	25	24	4.2E-03
10:55:21 AM	1440	24	25	24	4.2E-03
10:55:22 AM	1440	24	25	24	4.2E-03
10:55:23 AM	1440	24	25	24	4.2E-03
10:55:24 AM	1440	24	25	24	4.2E-03
10:55:25 AM	1440	24	25	24	4.2E-03
10:55:26 AM	1440	24	25	24	4.2E-03
10:55:27 AM	1440	24	25	24	4.2E-03
10:55:28 AM	1440	24	25	24	4.2E-03
10:55:29 AM	1440	24	25	24	4.2E-03
10:55:30 AM	1440	24	25	24	4.1E-03
10:55:31 AM	1440	24	25	24	4.1E-03
10:55:32 AM	1440	24	25	24	4.1E-03
10:55:33 AM	1440	24	25	24	4.1E-03
10:55:34 AM	1440	24	25	24	4.1E-03
10:55:35 AM	1440	24	25	24	4.1E-03
10:55:36 AM	1440	24	25	24	4.1E-03
10:55:37 AM	1440	24	25	24	4.1E-03
10:55:38 AM	1440	24	25	24	4.2E-03
10:55:39 AM	1440	24	25	24	4.1E-03
10:55:40 AM	1440	24	25	24	4.2E-03
10:55:41 AM	1440	24	25	24	4.2E-03
10:55:42 AM	1440	24	25	24	4.2E-03
10:55:43 AM	1440	24	25	24	4.2E-03
10:55:44 AM	1440	24	25	24	4.2E-03
10:55:45 AM	1440	24	25	24	4.2E-03
10:55:46 AM	1440	24	25	24	4.2E-03
10:55:47 AM	1440	24	25	24	4.2E-03
10:55:48 AM	1440	24	25	24	4.2E-03
10:55:49 AM	1440	24	25	24	4.2E-03
10:55:50 AM	1440	24	25	24	4.2E-03
10:55:51 AM	1440	24	25	24	4.2E-03
10:55:52 AM	1440	24	25	24	4.2E-03
10:55:53 AM	1440	24	25	24	4.2E-03
10:55:54 AM	1440	24	25	24	4.2E-03
10:55:55 AM	1440	24	25	24	4.2E-03
10:55:56 AM	1440	23	25	24	4.2E-03
Averages ->	**1440**	**24**	**25**	**24**	**4.2E-03**
				Maximum ->	**4.2E-03**

Yarmouth Research and Technology, LLC

Valve Description: 4 in Class 600 Cooper Gate Valve **Date:** 6/24/2010

Cycle Number: 375

Time	Pressure (psig)	Bonnet (deg. C)	Body Temp (deg. C)	Inside Temp (deg. C)	Leakage (Atm cc/sec)
10:56:42 AM	1440	24	25	24	4.2E-03
10:56:43 AM	1440	24	25	24	4.2E-03
10:56:44 AM	1440	24	25	24	4.3E-03
10:56:45 AM	1440	24	25	24	4.2E-03
10:56:46 AM	1440	23	25	24	4.2E-03
10:56:47 AM	1440	24	25	24	4.2E-03
10:56:48 AM	1440	24	25	24	4.2E-03
10:56:49 AM	1440	24	25	24	4.2E-03
10:56:50 AM	1440	24	25	24	4.2E-03
10:56:51 AM	1440	24	25	24	4.2E-03
10:56:52 AM	1440	24	25	24	4.2E-03
10:56:53 AM	1440	24	25	24	4.2E-03
10:56:54 AM	1440	24	25	24	4.2E-03
10:56:55 AM	1440	24	25	24	4.2E-03
10:56:56 AM	1440	24	25	24	4.2E-03
10:56:57 AM	1440	24	25	24	4.3E-03
10:56:58 AM	1440	24	25	24	4.3E-03
10:56:59 AM	1440	24	25	24	4.2E-03
10:57:00 AM	1440	23	25	24	4.2E-03
10:57:01 AM	1440	24	25	24	4.2E-03
10:57:02 AM	1440	24	25	24	4.2E-03
10:57:03 AM	1440	24	25	24	4.2E-03
10:57:04 AM	1440	24	25	24	4.2E-03
10:57:05 AM	1440	24	25	24	4.2E-03
10:57:06 AM	1440	23	25	24	4.2E-03
10:57:07 AM	1440	24	25	24	4.2E-03
10:57:08 AM	1440	24	25	24	4.3E-03
10:57:09 AM	1440	23	25	24	4.3E-03
10:57:10 AM	1440	23	25	24	4.3E-03
10:57:11 AM	1440	24	25	24	4.3E-03
10:57:12 AM	1440	24	25	24	4.3E-03
10:57:13 AM	1440	24	25	24	4.3E-03
10:57:14 AM	1440	23	25	24	4.3E-03
10:57:15 AM	1440	23	25	24	4.3E-03
10:57:16 AM	1440	24	25	24	4.3E-03
10:57:17 AM	1440	24	25	24	4.2E-03
10:57:18 AM	1440	23	25	24	4.2E-03
10:57:19 AM	1440	23	25	24	4.2E-03
10:57:20 AM	1440	24	25	24	4.1E-03
10:57:21 AM	1440	24	25	24	4.1E-03
10:57:22 AM	1440	24	25	24	4.1E-03
10:57:23 AM	1440	24	25	24	4.0E-03
10:57:24 AM	1440	23	25	24	4.0E-03
10:57:25 AM	1440	24	25	24	3.9E-03
10:57:26 AM	1440	23	25	24	3.9E-03
10:57:27 AM	1440	23	25	24	3.9E-03
10:57:28 AM	1440	24	25	24	3.9E-03
10:57:29 AM	1440	23	25	24	3.9E-03
10:57:30 AM	1440	23	25	24	3.9E-03
10:57:31 AM	1440	23	25	24	3.8E-03
10:57:32 AM	1440	23	25	24	3.8E-03
10:57:33 AM	1440	24	25	24	3.8E-03
10:57:34 AM	1440	24	25	24	3.9E-03
10:57:35 AM	1440	24	25	24	3.8E-03
10:57:36 AM	1440	24	25	24	3.9E-03
10:57:37 AM	1440	24	25	24	3.9E-03
10:57:38 AM	1440	24	25	24	3.9E-03
10:57:39 AM	1440	24	25	24	4.0E-03
10:57:40 AM	1440	24	25	24	4.0E-03
10:57:41 AM	1440	25	25	24	4.0E-03
Averages ->	**1440**	**24**	**25**	**24**	**4.1E-03**
				Maximum ->	**4.3E-03**

Yarmouth Research and Technology, LLC

Valve Description: 4 in Class 600 Cooper Gate Valve **Date:** 6/24/2010

Cycle Number: 375

Time	Pressure (psig)	Bonnet (deg. C)	Body Temp (deg. C)	Inside Temp (deg. C)	Leakage (Atm cc/sec)
3:49:55 PM	845	382	393	398	4.3E-04
3:49:56 PM	845	382	394	398	4.3E-04
3:49:57 PM	845	382	393	399	4.3E-04
3:49:58 PM	845	382	394	399	4.3E-04
3:49:59 PM	845	382	394	399	4.4E-04
3:50:00 PM	845	382	394	399	4.4E-04
3:50:01 PM	845	382	394	399	4.4E-04
3:50:02 PM	845	382	394	398	4.5E-04
3:50:03 PM	845	382	393	399	4.5E-04
3:50:04 PM	845	382	393	398	4.5E-04
3:50:05 PM	845	383	394	398	4.6E-04
3:50:06 PM	845	382	394	399	4.6E-04
3:50:07 PM	845	383	394	399	4.6E-04
3:50:08 PM	845	383	394	399	4.6E-04
3:50:09 PM	845	383	394	399	4.7E-04
3:50:10 PM	845	383	394	399	4.6E-04
3:50:11 PM	845	383	394	399	4.6E-04
3:50:12 PM	845	383	394	399	4.6E-04
3:50:13 PM	845	383	394	398	4.6E-04
3:50:14 PM	845	383	394	399	4.5E-04
3:50:15 PM	845	383	394	399	4.5E-04
3:50:16 PM	845	383	394	399	4.5E-04
3:50:17 PM	845	383	394	399	4.5E-04
3:50:18 PM	845	383	394	399	4.4E-04
3:50:19 PM	845	383	394	399	4.4E-04
3:50:20 PM	845	383	394	399	4.4E-04
3:50:21 PM	845	383	394	398	4.4E-04
3:50:22 PM	845	383	394	398	4.3E-04
3:50:23 PM	845	383	394	399	4.3E-04
3:50:24 PM	845	383	394	399	4.3E-04
3:50:25 PM	845	383	394	399	4.3E-04
3:50:26 PM	845	383	394	399	4.3E-04
3:50:27 PM	845	383	394	399	4.3E-04
3:50:28 PM	845	383	393	399	4.3E-04
3:50:29 PM	845	383	394	398	4.3E-04
3:50:30 PM	845	383	394	399	4.3E-04
3:50:31 PM	845	383	394	399	4.3E-04
3:50:32 PM	845	383	394	398	4.3E-04
3:50:33 PM	845	383	394	399	4.3E-04
3:50:34 PM	845	383	394	399	4.3E-04
3:50:35 PM	845	383	394	399	4.3E-04
3:50:36 PM	845	383	394	399	4.3E-04
3:50:37 PM	845	383	394	398	4.3E-04
3:50:38 PM	845	383	394	399	4.3E-04
3:50:39 PM	845	383	394	399	4.3E-04
3:50:40 PM	845	383	394	398	4.2E-04
3:50:41 PM	845	383	394	399	4.2E-04
3:50:42 PM	845	383	394	399	4.2E-04
3:50:43 PM	845	383	394	399	4.2E-04
3:50:44 PM	845	383	394	399	4.2E-04
3:50:45 PM	845	383	394	399	4.2E-04
3:50:46 PM	845	383	394	399	4.2E-04
3:50:47 PM	845	383	394	399	4.2E-04
3:50:48 PM	845	383	394	398	4.2E-04
3:50:49 PM	845	383	394	399	4.2E-04
3:50:50 PM	845	383	394	399	4.2E-04
3:50:51 PM	845	383	393	399	4.2E-04
3:50:52 PM	845	383	394	399	4.2E-04
3:50:53 PM	845	383	394	399	4.2E-04
3:50:54 PM	845	383	394	399	4.2E-04
Averages ->	**845**	**383**	**394**	**399**	**4.3E-04**
				Maximum ->	**4.7E-04**

Yarmouth Research and Technology, LLC

Valve Description: 4 in Class 600 Cooper Gate Valve **Date:** 6/24/2010

Cycle Number: 375

Time	Pressure (psig)	Bonnet (deg. C)	Body Temp (deg. C)	Inside Temp (deg. C)	Leakage (Atm cc/sec)
3:52:38 PM	845	384	394	399	6.2E-04
3:52:39 PM	845	384	394	399	6.1E-04
3:52:40 PM	845	384	394	399	6.0E-04
3:52:41 PM	845	384	394	399	5.9E-04
3:52:42 PM	845	384	394	399	5.8E-04
3:52:43 PM	845	384	394	399	5.8E-04
3:52:44 PM	845	384	394	399	5.7E-04
3:52:45 PM	845	384	394	399	5.7E-04
3:52:46 PM	845	384	394	399	5.6E-04
3:52:47 PM	845	384	394	399	5.7E-04
3:52:48 PM	845	384	394	399	5.7E-04
3:52:49 PM	845	384	394	399	5.7E-04
3:52:50 PM	845	384	394	399	5.8E-04
3:52:51 PM	845	384	394	399	5.8E-04
3:52:52 PM	845	384	394	399	5.9E-04
3:52:53 PM	845	384	394	399	6.0E-04
3:52:54 PM	845	384	394	399	6.1E-04
3:52:55 PM	845	384	394	399	6.2E-04
3:52:56 PM	845	384	394	399	6.3E-04
3:52:57 PM	845	384	394	399	6.4E-04
3:52:58 PM	845	384	394	399	6.4E-04
3:52:59 PM	845	384	394	399	6.4E-04
3:53:00 PM	845	384	394	399	6.3E-04
3:53:01 PM	845	384	394	399	6.3E-04
3:53:02 PM	845	384	394	399	6.2E-04
3:53:03 PM	845	384	394	399	6.1E-04
3:53:04 PM	845	384	394	399	6.1E-04
3:53:05 PM	845	384	394	399	6.0E-04
3:53:06 PM	845	384	394	399	5.9E-04
3:53:07 PM	845	384	394	399	5.8E-04
3:53:08 PM	845	384	394	399	5.7E-04
3:53:09 PM	845	384	394	399	5.6E-04
3:53:10 PM	845	384	394	399	5.6E-04
3:53:11 PM	845	384	394	399	5.5E-04
3:53:12 PM	845	384	394	399	5.6E-04
3:53:13 PM	845	384	394	399	5.6E-04
3:53:14 PM	845	384	394	399	5.6E-04
3:53:15 PM	845	384	394	399	5.7E-04
3:53:16 PM	845	384	394	399	5.7E-04
3:53:17 PM	845	384	394	399	5.7E-04
3:53:18 PM	845	384	394	399	5.8E-04
3:53:19 PM	845	384	394	399	5.9E-04
3:53:20 PM	845	384	394	399	6.0E-04
3:53:21 PM	845	384	394	399	6.1E-04
3:53:22 PM	845	384	394	399	6.2E-04
3:53:23 PM	845	384	394	399	6.3E-04
3:53:24 PM	845	384	394	399	6.4E-04
3:53:25 PM	845	384	394	399	6.5E-04
3:53:26 PM	845	384	394	399	6.6E-04
3:53:27 PM	845	384	394	399	6.8E-04
3:53:28 PM	845	384	394	399	6.9E-04
3:53:29 PM	845	384	394	399	7.1E-04
3:53:30 PM	845	384	394	399	7.2E-04
3:53:31 PM	845	384	394	399	7.4E-04
3:53:32 PM	845	384	394	399	7.6E-04
3:53:33 PM	845	384	394	399	7.7E-04
3:53:34 PM	845	384	394	399	7.9E-04
3:53:35 PM	845	384	394	399	8.0E-04
3:53:36 PM	845	384	394	399	8.1E-04
3:53:37 PM	845	384	394	399	8.3E-04
Averages ->	**845**	**384**	**394**	**399**	**6.2E-04**
				Maximum ->	**8.3E-04**

Yarmouth Research and Technology, LLC

Valve Description: 4 in Class 600 Cooper Gate Valve **Date:** 6/24/2010

Cycle Number: 500

Time	Pressure (psig)	Bonnet (deg. C)	Body Temp (deg. C)	Inside Temp (deg. C)	Leakage (Atm cc/sec)
6:15:59 PM	845	390	397	399	6.2E-04
6:16:00 PM	845	390	397	399	6.2E-04
6:16:01 PM	845	390	397	399	6.2E-04
6:16:02 PM	845	390	397	399	6.1E-04
6:16:03 PM	845	390	397	399	6.1E-04
6:16:04 PM	845	390	397	399	6.1E-04
6:16:05 PM	845	390	397	399	6.1E-04
6:16:07 PM	845	390	397	400	6.0E-04
6:16:08 PM	845	390	397	399	6.0E-04
6:16:09 PM	845	390	397	399	6.1E-04
6:16:10 PM	845	390	397	399	6.1E-04
6:16:11 PM	845	390	397	399	6.1E-04
6:16:12 PM	845	390	397	399	6.2E-04
6:16:13 PM	845	390	397	399	6.2E-04
6:16:14 PM	845	390	397	399	6.2E-04
6:16:15 PM	845	390	397	399	6.2E-04
6:16:16 PM	845	390	397	399	6.2E-04
6:16:17 PM	845	390	397	399	6.2E-04
6:16:18 PM	845	390	397	399	6.1E-04
6:16:19 PM	845	390	397	399	6.1E-04
6:16:20 PM	845	390	397	399	6.1E-04
6:16:21 PM	845	390	397	399	6.1E-04
6:16:22 PM	845	390	397	399	6.0E-04
6:16:23 PM	845	390	397	399	6.0E-04
6:16:24 PM	845	390	397	399	6.0E-04
6:16:25 PM	845	390	397	400	6.0E-04
6:16:26 PM	845	390	397	399	5.9E-04
6:16:27 PM	845	390	397	400	5.9E-04
6:16:28 PM	845	390	397	399	5.9E-04
6:16:29 PM	845	390	397	399	5.9E-04
6:16:30 PM	845	390	397	399	5.9E-04
6:16:31 PM	845	390	397	399	5.9E-04
6:16:32 PM	845	390	397	399	5.9E-04
6:16:33 PM	845	390	397	400	5.9E-04
6:16:34 PM	845	390	397	399	6.0E-04
6:16:35 PM	845	390	397	399	6.0E-04
6:16:36 PM	845	390	397	399	6.0E-04
6:16:37 PM	845	390	397	399	6.1E-04
6:16:38 PM	845	390	398	399	6.1E-04
6:16:39 PM	845	390	398	399	6.1E-04
6:16:40 PM	845	390	397	400	6.1E-04
6:16:41 PM	845	390	397	399	6.2E-04
6:16:42 PM	845	390	397	399	6.2E-04
6:16:43 PM	845	390	397	399	6.2E-04
6:16:44 PM	845	390	397	399	6.2E-04
6:16:45 PM	845	390	397	399	6.2E-04
6:16:46 PM	845	390	397	399	6.3E-04
6:16:47 PM	845	390	397	400	6.2E-04
6:16:48 PM	845	390	397	399	6.3E-04
6:16:49 PM	845	390	397	399	6.3E-04
6:16:50 PM	845	390	397	400	6.3E-04
6:16:51 PM	845	390	397	400	6.4E-04
6:16:52 PM	845	390	397	400	6.4E-04
6:16:53 PM	845	390	397	400	6.4E-04
6:16:54 PM	845	390	397	399	6.4E-04
6:16:55 PM	845	390	398	399	6.4E-04
6:16:56 PM	845	390	397	400	6.4E-04
6:16:57 PM	845	390	397	399	6.4E-04
6:16:58 PM	845	390	397	399	6.4E-04
6:16:59 PM	845	390	397	400	6.4E-04
Averages ->	**845**	**390**	**397**	**399**	**6.1E-04**
				Maximum ->	**6.4E-04**

Yarmouth Research and Technology, LLC

Valve Description: 4 in Class 600 Cooper Gate Valve **Date:** 6/24/2010

Cycle Number: 500

Time	Pressure (psig)	Bonnet (deg. C)	Body Temp (deg. C)	Inside Temp (deg. C)	Leakage (Atm cc/sec)
6:17:42 PM	845	390	397	400	6.2E-04
6:17:43 PM	845	390	398	400	6.2E-04
6:17:44 PM	845	390	398	400	6.2E-04
6:17:45 PM	845	390	398	400	6.1E-04
6:17:46 PM	845	390	398	400	6.0E-04
6:17:47 PM	845	390	397	399	6.0E-04
6:17:48 PM	845	390	398	400	6.0E-04
6:17:49 PM	845	390	398	400	5.9E-04
6:17:50 PM	845	390	398	400	5.8E-04
6:17:51 PM	845	390	398	400	5.8E-04
6:17:52 PM	845	390	398	400	5.8E-04
6:17:53 PM	845	390	397	400	5.7E-04
6:17:54 PM	845	390	398	400	5.7E-04
6:17:55 PM	845	390	398	400	5.7E-04
6:17:56 PM	845	390	398	400	5.8E-04
6:17:57 PM	845	390	398	400	5.8E-04
6:17:58 PM	845	390	398	400	5.9E-04
6:17:59 PM	845	390	397	400	6.0E-04
6:18:00 PM	845	390	398	400	6.1E-04
6:18:01 PM	845	390	398	400	6.3E-04
6:18:02 PM	845	390	398	400	6.5E-04
6:18:03 PM	845	390	398	400	6.7E-04
6:18:04 PM	845	390	398	400	7.0E-04
6:18:05 PM	845	389	398	400	7.2E-04
6:18:06 PM	845	390	398	400	7.5E-04
6:18:07 PM	845	389	398	400	7.8E-04
6:18:08 PM	845	390	398	400	8.1E-04
6:18:09 PM	845	390	398	400	8.3E-04
6:18:10 PM	845	389	398	400	8.5E-04
6:18:11 PM	845	389	398	400	8.7E-04
6:18:12 PM	845	389	397	400	8.8E-04
6:18:13 PM	845	389	398	400	8.8E-04
6:18:14 PM	845	389	398	400	8.8E-04
6:18:15 PM	845	389	398	400	8.7E-04
6:18:16 PM	845	389	398	400	8.7E-04
6:18:17 PM	845	389	398	400	8.5E-04
6:18:18 PM	845	389	398	400	8.4E-04
6:18:19 PM	845	389	398	400	8.3E-04
6:18:20 PM	845	389	398	400	8.2E-04
6:18:21 PM	845	389	398	400	8.1E-04
6:18:22 PM	845	390	398	400	7.9E-04
6:18:23 PM	845	389	398	400	7.8E-04
6:18:24 PM	845	389	398	400	7.7E-04
6:18:25 PM	845	390	398	400	7.5E-04
6:18:26 PM	845	389	398	400	7.3E-04
6:18:27 PM	845	389	398	400	7.2E-04
6:18:28 PM	845	389	398	400	7.0E-04
6:18:29 PM	845	389	397	400	6.9E-04
6:18:30 PM	845	389	398	399	6.7E-04
6:18:31 PM	845	389	398	400	6.6E-04
6:18:32 PM	845	389	398	400	6.5E-04
6:18:33 PM	845	389	398	400	6.5E-04
6:18:34 PM	845	389	398	400	6.4E-04
6:18:35 PM	845	389	398	399	6.4E-04
6:18:36 PM	845	389	398	400	6.3E-04
6:18:37 PM	845	389	398	400	6.3E-04
6:18:38 PM	845	389	398	400	6.3E-04
6:18:39 PM	845	389	398	400	6.3E-04
6:18:40 PM	845	389	398	400	6.3E-04
6:18:41 PM	845	389	398	400	6.3E-04
Averages ->	**845**	**390**	**398**	**400**	**6.9E-04**
				Maximum ->	**8.8E-04**

Yarmouth Research and Technology, LLC

Valve Description: 4 in Class 600 Cooper Gate Valve **Date:** 6/25/2010

Cycle Number: 500

Time	Pressure (psig)	Bonnet (deg. C)	Body Temp (deg. C)	Inside Temp (deg. C)	Leakage (Atm cc/sec)
8:50:03 AM	1440	25	26	26	3.9E-03
8:50:04 AM	1440	25	26	26	3.9E-03
8:50:05 AM	1440	25	26	26	3.8E-03
8:50:06 AM	1440	25	26	26	3.8E-03
8:50:07 AM	1440	25	26	26	3.8E-03
8:50:08 AM	1440	25	26	26	3.7E-03
8:50:09 AM	1440	25	26	26	3.7E-03
8:50:10 AM	1440	25	26	26	3.7E-03
8:50:11 AM	1440	25	26	26	3.7E-03
8:50:12 AM	1440	25	26	26	3.7E-03
8:50:13 AM	1440	25	26	26	3.7E-03
8:50:14 AM	1440	25	26	25	3.7E-03
8:50:15 AM	1440	25	26	26	3.8E-03
8:50:16 AM	1440	25	26	25	3.8E-03
8:50:17 AM	1440	25	26	26	3.8E-03
8:50:18 AM	1440	25	26	26	3.8E-03
8:50:19 AM	1440	25	26	26	3.8E-03
8:50:20 AM	1440	25	26	26	3.8E-03
8:50:21 AM	1440	25	26	26	3.8E-03
8:50:22 AM	1440	25	26	26	3.8E-03
8:50:23 AM	1440	25	26	26	3.8E-03
8:50:24 AM	1440	25	26	26	3.8E-03
8:50:25 AM	1440	25	26	26	3.8E-03
8:50:26 AM	1440	25	26	26	3.8E-03
8:50:27 AM	1440	25	26	26	3.8E-03
8:50:28 AM	1440	25	26	26	3.8E-03
8:50:29 AM	1440	25	26	26	3.8E-03
8:50:30 AM	1440	25	26	26	3.9E-03
8:50:31 AM	1440	25	26	26	3.9E-03
8:50:32 AM	1440	25	26	26	3.9E-03
8:50:33 AM	1440	25	26	26	3.9E-03
8:50:34 AM	1440	25	26	26	3.9E-03
8:50:35 AM	1440	25	26	26	3.9E-03
8:50:36 AM	1440	25	26	26	3.8E-03
8:50:37 AM	1440	25	26	26	3.8E-03
8:50:38 AM	1440	25	26	26	3.8E-03
8:50:39 AM	1440	25	26	26	3.8E-03
8:50:40 AM	1440	25	26	26	3.8E-03
8:50:41 AM	1440	25	26	26	3.8E-03
8:50:42 AM	1440	25	26	26	3.8E-03
8:50:43 AM	1440	25	26	26	3.9E-03
8:50:44 AM	1440	25	26	26	3.8E-03
8:50:45 AM	1440	25	26	26	3.8E-03
8:50:46 AM	1440	25	26	26	3.8E-03
8:50:47 AM	1440	25	26	26	3.8E-03
8:50:48 AM	1440	25	26	26	3.8E-03
8:50:49 AM	1440	25	26	26	3.7E-03
8:50:50 AM	1440	25	26	26	3.7E-03
8:50:51 AM	1440	25	26	26	3.7E-03
8:50:52 AM	1440	25	26	26	3.7E-03
8:50:53 AM	1440	25	26	26	3.7E-03
8:50:54 AM	1440	25	26	26	3.7E-03
8:50:55 AM	1440	25	26	26	3.7E-03
8:50:56 AM	1440	25	26	26	3.7E-03
8:50:57 AM	1440	25	26	26	3.7E-03
8:50:58 AM	1440	25	26	26	3.7E-03
8:50:59 AM	1440	25	26	26	3.7E-03
8:51:00 AM	1440	25	26	26	3.7E-03
8:51:01 AM	1440	25	26	26	3.7E-03
8:51:02 AM	1440	25	26	26	3.8E-03
Averages ->	**1440**	**25**	**26**	**26**	**3.8E-03**
				Maximum ->	**3.9E-03**

Yarmouth Research and Technology, LLC

Valve Description: 4 in Class 600 Cooper Gate Valve **Date:** 6/25/2010

Cycle Number: 500

Time	Pressure (psig)	Bonnet (deg. C)	Body Temp (deg. C)	Inside Temp (deg. C)	Leakage (Atm cc/sec)
8:51:23 AM	1440	25	26	26	3.9E-03
8:51:24 AM	1440	25	26	26	3.9E-03
8:51:25 AM	1440	25	26	26	4.0E-03
8:51:26 AM	1440	25	26	26	4.0E-03
8:51:27 AM	1440	25	26	26	4.0E-03
8:51:28 AM	1440	25	26	26	4.0E-03
8:51:29 AM	1440	25	26	26	4.0E-03
8:51:30 AM	1440	25	26	26	4.1E-03
8:51:31 AM	1440	25	26	26	4.1E-03
8:51:32 AM	1440	25	26	26	4.1E-03
8:51:33 AM	1440	25	26	26	4.1E-03
8:51:34 AM	1440	25	26	25	4.1E-03
8:51:35 AM	1440	25	26	26	4.1E-03
8:51:36 AM	1440	25	26	26	4.1E-03
8:51:37 AM	1440	25	26	26	4.1E-03
8:51:38 AM	1440	25	26	26	4.1E-03
8:51:39 AM	1440	25	26	26	4.1E-03
8:51:40 AM	1440	25	26	26	4.1E-03
8:51:41 AM	1440	25	26	26	4.1E-03
8:51:42 AM	1440	25	26	26	4.1E-03
8:51:43 AM	1440	25	26	26	4.0E-03
8:51:44 AM	1440	25	26	26	4.0E-03
8:51:45 AM	1440	25	26	26	4.0E-03
8:51:46 AM	1440	25	26	26	4.0E-03
8:51:47 AM	1440	25	26	26	4.0E-03
8:51:48 AM	1440	25	26	26	4.0E-03
8:51:49 AM	1440	25	26	26	4.0E-03
8:51:50 AM	1440	25	26	26	4.0E-03
8:51:51 AM	1440	25	26	26	4.0E-03
8:51:52 AM	1440	25	26	26	4.0E-03
8:51:53 AM	1440	25	26	26	4.0E-03
8:51:54 AM	1440	25	26	26	4.0E-03
8:51:55 AM	1440	25	26	26	4.0E-03
8:51:56 AM	1440	25	26	26	4.0E-03
8:51:57 AM	1440	25	26	26	4.0E-03
8:51:58 AM	1440	25	26	26	4.0E-03
8:51:59 AM	1440	25	26	26	3.9E-03
8:52:00 AM	1440	25	26	26	3.9E-03
8:52:01 AM	1440	25	26	26	3.9E-03
8:52:02 AM	1440	25	26	26	3.9E-03
8:52:03 AM	1440	25	26	26	3.9E-03
8:52:04 AM	1440	25	26	26	3.9E-03
8:52:05 AM	1440	25	26	26	3.9E-03
8:52:06 AM	1440	25	26	26	3.9E-03
8:52:07 AM	1440	25	26	26	4.0E-03
8:52:08 AM	1440	25	26	26	4.0E-03
8:52:09 AM	1440	25	26	26	4.1E-03
8:52:10 AM	1440	25	26	26	4.1E-03
8:52:11 AM	1440	25	26	26	4.2E-03
8:52:12 AM	1440	25	26	26	4.3E-03
8:52:13 AM	1440	25	26	26	4.3E-03
8:52:14 AM	1440	25	26	26	4.5E-03
8:52:15 AM	1440	25	26	26	4.6E-03
8:52:16 AM	1440	25	26	26	4.7E-03
8:52:17 AM	1440	25	26	26	4.8E-03
8:52:18 AM	1440	25	26	25	4.9E-03
8:52:19 AM	1440	25	26	26	5.0E-03
8:52:20 AM	1440	25	26	26	5.0E-03
8:52:21 AM	1440	25	26	25	5.0E-03
8:52:22 AM	1440	25	26	26	5.0E-03
Averages ->	**1440**	**25**	**26**	**26**	**4.1E-03**
				Maximum ->	**5.0E-03**

Yarmouth Research and Technology, LLC

Valve Description: 4 in Class 600 Cooper Gate Valve **Date:** 6/22/2010

Cycle Number: 0

Bonnet Gasket

Time	Pressure (psig)	Bonnet (deg. C)	Body Temp (deg. C)	Inside Temp (deg. C)	Leakage (PPMv)
1:25:16 PM	1440	21	21	21	0.4
1:25:17 PM	1440	21	21	21	0.4
1:25:18 PM	1440	21	21	21	0.4
1:25:19 PM	1440	21	21	21	0.2
1:25:20 PM	1440	21	20	21	0.2
1:25:21 PM	1440	21	21	21	0.2
1:25:22 PM	1440	20	21	21	0.2
1:25:23 PM	1440	21	21	21	0.2
1:25:24 PM	1440	21	20	21	0.2
1:25:25 PM	1440	21	21	21	0.2
1:25:26 PM	1440	21	21	21	0.2
1:25:27 PM	1440	21	21	21	0.2
1:25:28 PM	1440	21	20	21	0.2
1:25:29 PM	1440	21	21	21	0.1
1:25:30 PM	1440	21	21	21	0.1
1:25:31 PM	1440	21	21	21	0.1
1:25:32 PM	1440	20	21	21	0.1
1:25:33 PM	1440	21	21	21	0.1
1:25:34 PM	1440	21	21	21	0.3
1:25:35 PM	1440	21	21	21	0.2
1:25:36 PM	1440	21	21	21	0.3
1:25:37 PM	1440	21	21	21	0.3
1:25:38 PM	1440	21	21	21	0.4
1:25:39 PM	1440	21	21	21	0.4
1:25:40 PM	1440	21	21	21	0.4
1:25:41 PM	1440	21	21	21	0.4
1:25:42 PM	1440	21	21	21	0.4
1:25:43 PM	1440	21	20	21	0.3
1:25:44 PM	1440	21	20	21	0.4
1:25:45 PM	1440	20	21	21	0.3
1:25:46 PM	1440	21	21	21	0.2
1:25:47 PM	1440	21	21	21	0.2
1:25:48 PM	1440	21	20	21	0.2
1:25:49 PM	1440	21	21	21	0.4
1:25:50 PM	1440	21	20	21	0.4
1:25:51 PM	1440	21	21	21	0.4
1:25:52 PM	1440	21	21	21	0.4
1:25:53 PM	1440	21	21	21	0.3
1:25:54 PM	1440	21	21	21	0.4
1:25:55 PM	1440	21	21	21	0.4
1:25:56 PM	1440	21	21	21	0.4
1:25:57 PM	1440	21	21	21	0.4
1:25:58 PM	1440	21	21	21	0.4
1:25:59 PM	1440	21	21	21	0.4
1:26:00 PM	1440	21	21	21	0.4
1:26:01 PM	1440	21	21	21	0.4
1:26:02 PM	1440	21	21	21	0.4
1:26:03 PM	1440	21	21	21	0.4
1:26:04 PM	1440	21	21	21	0.4
1:26:05 PM	1440	21	21	21	0.5
1:26:06 PM	1440	21	21	21	0.5
1:26:07 PM	1440	21	21	21	0.5
1:26:08 PM	1440	21	21	21	0.5
1:26:09 PM	1440	21	21	21	0.5
1:26:10 PM	1440	21	20	21	0.5
1:26:11 PM	1440	21	21	21	0.5
1:26:12 PM	1440	21	21	21	0.5
1:26:13 PM	1440	21	21	21	0.5
1:26:14 PM	1440	21	21	21	0.5
1:26:15 PM	1440	21	21	21	0.5
Averages ->	**1440**	**20.6**	**20.6**	**21.0**	**0.3**
				Maximum ->	**0.5**

Yarmouth Research and Technology, LLC

Valve Description: 4 In Class 600 Cooper Gate Valve **Date:** 6/25/2010

Cycle Number: 501

Bonnet Gasket

Time	Pressure (psig)	Bonnet (deg. C)	Body Temp (deg. C)	Inside Temp (deg. C)	Leakage (PPMv)
8:53:51 AM	1440	25	26	26	8.0
8:53:52 AM	1440	25	26	26	8.1
8:53:53 AM	1440	25	26	26	8.2
8:53:54 AM	1440	25	26	26	8.2
8:53:55 AM	1440	25	26	26	8.2
8:53:56 AM	1440	25	26	26	8.3
8:53:57 AM	1440	25	26	26	8.3
8:53:58 AM	1440	25	26	26	8.4
8:53:59 AM	1440	25	26	26	8.5
8:54:00 AM	1440	25	26	25	8.5
8:54:01 AM	1440	25	26	25	8.5
8:54:02 AM	1440	25	26	25	8.6
8:54:03 AM	1440	25	26	26	8.6
8:54:04 AM	1440	25	26	25	8.7
8:54:05 AM	1440	25	26	25	8.7
8:54:06 AM	1440	25	26	26	8.7
8:54:07 AM	1440	25	26	26	8.6
8:54:08 AM	1440	25	26	26	8.6
8:54:09 AM	1440	25	26	26	8.6
8:54:10 AM	1440	25	26	25	8.5
8:54:11 AM	1440	25	26	25	8.5
8:54:12 AM	1440	25	26	25	8.5
8:54:13 AM	1440	25	26	26	8.5
8:54:14 AM	1440	25	26	26	8.5
8:54:15 AM	1440	25	26	26	8.4
8:54:16 AM	1440	25	26	26	8.3
8:54:17 AM	1440	25	26	26	8.4
8:54:18 AM	1440	25	26	26	8.4
8:54:19 AM	1440	25	26	25	8.4
8:54:20 AM	1440	25	26	26	8.4
8:54:21 AM	1440	25	26	26	8.4
8:54:22 AM	1440	25	26	25	8.3
8:54:23 AM	1440	25	26	26	8.3
8:54:24 AM	1440	25	26	25	8.2
8:54:25 AM	1440	25	26	26	8.2
8:54:26 AM	1440	25	26	25	8.1
8:54:27 AM	1440	25	26	26	8.1
8:54:28 AM	1440	25	26	26	8.1
8:54:29 AM	1440	25	26	26	8.1
8:54:30 AM	1440	25	26	26	8.0
8:54:31 AM	1440	25	26	26	8.0
8:54:32 AM	1440	25	26	26	7.9
8:54:33 AM	1440	25	26	26	7.9
8:54:34 AM	1440	25	26	26	7.9
8:54:35 AM	1440	25	26	26	7.8
8:54:36 AM	1440	25	26	25	7.8
8:54:37 AM	1440	25	26	26	7.8
8:54:38 AM	1440	25	26	26	7.8
8:54:39 AM	1440	25	26	26	7.8
8:54:40 AM	1440	25	26	26	7.7
8:54:41 AM	1440	25	26	26	7.7
8:54:42 AM	1440	25	26	26	7.6
8:54:43 AM	1440	25	26	26	7.6
8:54:44 AM	1440	25	26	26	7.6
8:54:45 AM	1440	25	26	25	7.6
8:54:46 AM	1440	25	26	26	7.5
8:54:47 AM	1440	25	26	26	7.5
8:54:48 AM	1440	25	26	25	7.5
8:54:49 AM	1440	25	26	26	7.4
8:54:50 AM	1440	25	26	26	7.4
Averages ->	**1440**	**25.2**	**25.9**	**25.6**	**8.1**
				Maximum ->	**8.7**

Yarmouth Research and Technology, LLC

Valve Description: 4 in Class 600 Cooper Gate Valve

Cycle Number: 125 **Date:** 6/23/2010

Leakage Greater than Allowable

Time	Pressure (psig)	Bonnet Temp (deg. C)	Leakage (mbar -l / sec)
2:02:03 PM	718.7	390.2	4.3E-02
2:02:04 PM	718.7	390.1	4.4E-02
2:02:05 PM	718.8	390.1	4.5E-02
2:02:06 PM	719.0	390.2	4.6E-02
2:02:07 PM	718.6	390.2	4.7E-02
2:02:08 PM	718.6	390.1	4.7E-02
2:02:09 PM	718.4	390.1	4.8E-02
2:02:10 PM	718.6	390.3	4.8E-02
2:02:11 PM	718.4	390.2	4.8E-02
2:02:12 PM	718.1	390.1	4.9E-02
2:02:13 PM	718.4	390.0	4.9E-02
2:02:14 PM	718.2	390.2	4.9E-02
2:02:15 PM	718.4	390.2	4.9E-02
2:02:16 PM	718.0	390.0	4.9E-02
2:02:17 PM	718.1	390.1	4.9E-02
2:02:18 PM	718.1	390.1	4.9E-02
2:02:19 PM	718.0	390.1	4.9E-02
2:02:20 PM	718.0	390.0	4.9E-02
2:02:21 PM	718.0	390.1	4.9E-02
2:02:22 PM	718.0	390.2	4.9E-02
2:02:23 PM	717.7	390.2	4.9E-02
2:02:24 PM	718.0	390.2	4.9E-02
2:02:25 PM	717.8	390.1	5.0E-02
2:02:26 PM	717.8	390.2	5.0E-02
2:02:27 PM	717.9	390.1	5.0E-02
2:02:28 PM	717.7	390.0	5.0E-02
2:02:29 PM	717.8	390.2	5.0E-02
2:02:30 PM	717.7	390.2	5.0E-02
2:02:31 PM	717.8	390.1	5.0E-02
2:02:32 PM	717.6	390.1	5.0E-02
2:02:33 PM	717.6	390.1	5.0E-02
2:02:34 PM	717.6	390.1	5.0E-02
2:02:35 PM	717.7	390.0	5.0E-02
2:02:36 PM	717.5	390.2	5.0E-02
2:02:37 PM	717.4	390.1	5.0E-02
2:02:38 PM	717.7	390.1	5.0E-02
2:02:39 PM	717.8	390.2	5.0E-02
2:02:40 PM	717.6	390.0	5.0E-02
2:02:41 PM	717.6	390.2	5.0E-02
2:02:42 PM	717.8	390.2	5.0E-02
2:02:43 PM	717.4	390.1	5.0E-02
2:02:44 PM	717.6	390.1	5.0E-02
2:02:45 PM	717.7	390.1	5.0E-02
2:02:46 PM	717.7	390.2	5.0E-02
2:02:47 PM	717.6	390.1	5.0E-02
2:02:48 PM	717.8	390.1	5.0E-02
2:02:49 PM	717.5	390.1	5.0E-02
2:02:50 PM	717.5	390.2	5.0E-02
2:02:51 PM	717.6	390.0	5.0E-02
2:02:52 PM	717.7	390.1	5.0E-02
2:02:53 PM	717.7	390.2	5.0E-02
2:02:54 PM	717.6	390.1	5.0E-02
2:02:55 PM	717.7	390.2	5.0E-02
2:02:56 PM	717.8	390.1	5.0E-02
2:02:57 PM	718.1	390.1	5.0E-02
2:02:58 PM	717.7	390.1	5.0E-02
2:02:59 PM	717.9	390.2	5.0E-02
2:03:00 PM	717.6	390.0	5.0E-02
2:03:01 PM	717.9	390.1	5.0E-02
2:03:02 PM	717.8	390.1	5.0E-02
Averages ->	**717.9**	**390.1**	**4.9E-02**
			5.0E-02

ISO 15848-1
Helium Fugitive Emission Test Report

Performed for

Newmans

www.newmansvalves.com

4" Class 600 Cooper Globe Valve

Item #: CV46R66CEAA

Project Number: 210107
Test Date: June 30, 2010

Performed by

YARMOUTH RESEARCH AND TECHNOLOGY, LLC

434 Walnut Hill Road
North Yarmouth, ME 04097 USA
(207) 829-5359
info@yarmouthresearch.com
www.yarmouthresearch.com

Yarmouth Research and Technology, LLC

Fugitive Emission Test Data Sheet

Customer: Newmans Inc. **Date:** 7/1/2010
Contact: Jim Pease **Project #:** 210107
Product Description: 4 inch Class 600 Cooper Globe Valve
CV46R66CEAA 4IN 600 GL RF CF8M
Sample Supplied by: Customer
Stem Diameter: 29 mm
Packing Nut Torque: 30 ft-lb

Test Conditions

Test Standard: ISO 15848-1 **Test Stand:** Yarmouth Stand 1
Tightness Class: CH 5.0e-3 atm cc/sec **Test Media:** 99% Helium
Endurance Class: C01 500 Mechanical Cycles
Temperature Class: 400C 2 Thermal Cycles
Pressure Class: ANSI Class 600 1440 psig @ Ambient, 845 psig @ 400C
Testing Method: Purge/Sniff for stem seals, sniffing (enclosed area) for bonnet seal
Mounting Position: Stem and Bore Horizontal
Max. Allowable Bonnet Gasket Leakage: 50 PPMv by sniffing method
Leakage Device: Pfeiffer SmartTest HLT560
Cycling Rate: 1 cycle per 60 seconds, 43 rpm handwheel speed

Test Data Summary - Stem Seal

		Stem Seal Leakage Readings - atm cc/sec				*Packing*	*Opening*	*Closing*
Cycle	*Nom.Temp*	*Static*		*Dynamic*		*Retorque*	*Torque*	*Torque*
Number	*(C)*	*Avg.*	*Max.*	*Avg.*	*Max.*	*See Notes*	*(ft-lb)*	*(ft-lb)*
0	20	2.3E-05	2.4E-05	2.8E-05	3.0E-05		40	65
125	20	1.9E-05	2.1E-05	2.4E-05	2.6E-05		35	60
125	400	1.9E-03	2.0E-03	1.7E-03	2.0E-03		35	65
250	400	2.4E-03	2.6E-03	2.5E-03	2.7E-03		35	60
250	20	7.7E-04	8.1E-04	6.5E-04	6.6E-04	1	30	60
375	20	3.6E-05	4.0E-05	5.6E-05	6.2E-05		30	50
375	400	4.3E-05	4.6E-05	5.6E-05	8.5E-05		30	50
500	400	2.0E-04	2.2E-04	2.7E-04	3.0E-04		30	45
500	20	1.8E-03	1.9E-03	1.7E-03	2.0E-03		30	45
Maximum Leakage:		**2.4E-03**	**2.6E-03**	**2.5E-03**	**2.7E-03**		**40**	**65**
Maximum Allowable:		**5.0E-03**	**5.0E-03**					

Yarmouth Research and Technology, LLC

Test Data Summary - Bonnet Seal

Cycle Number	*Nom.Temp (C)*	*Leakage - PPMv*	
		Avg.	*Max.*
0	20	0.9	0.9
500	20	1.3	1.4
Maximum Leakage:		**1.3**	**1.4**
Maximum Allowable:		**50**	**50**

Packing Retorque Notes:

Adjustment Number	*Cycle Number*	*Nom.Temp (C)*	*Static Leakage Readings before Tightening*		*Before Adjustment Nut Torque (ft-lb)*	*After Adjustment Nut Torque (ft-lb)*
			Avg.	*Max.*		
1	250	20	5.5E-03	5.7E-03	25	40
	Maximum Leakage:		**5.5E-03**	**5.7E-03**		

Results

Valve passed the requirments of the test standard with 1 packing nut adjustment.

Normal stem wear on stem was observed after test.

Witnessed:

President, Yarmouth Research

STATE OF MAINE
MATTHEW J WASIELEWSKI
No. 7437
LICENSED
PROFESSIONAL ENGINEER

Yarmouth Research and Technology

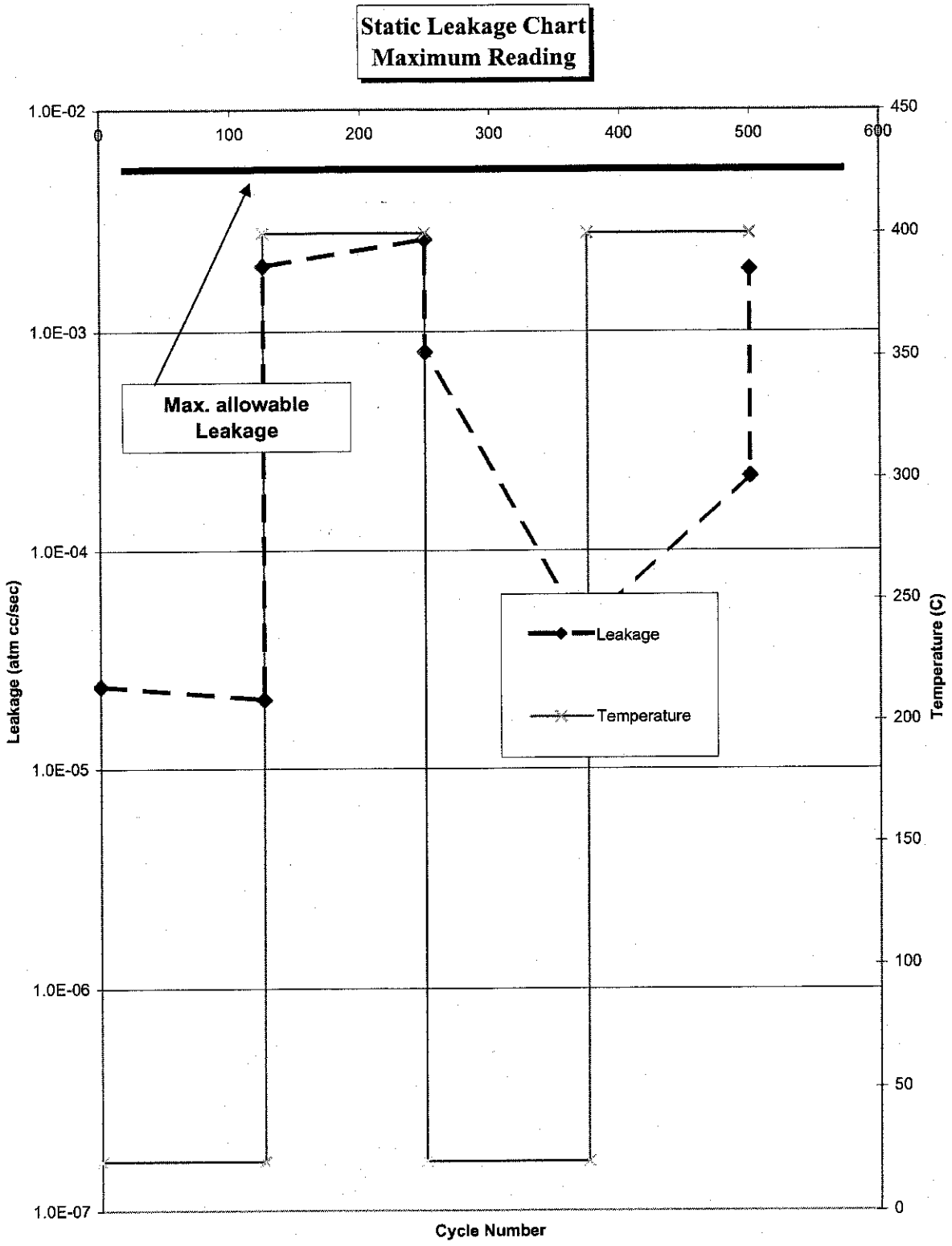

92 East Elm Street, Yarmouth, Maine, 04096 USA
www.yarmouthresearch.com

PHOTOGRAPHS

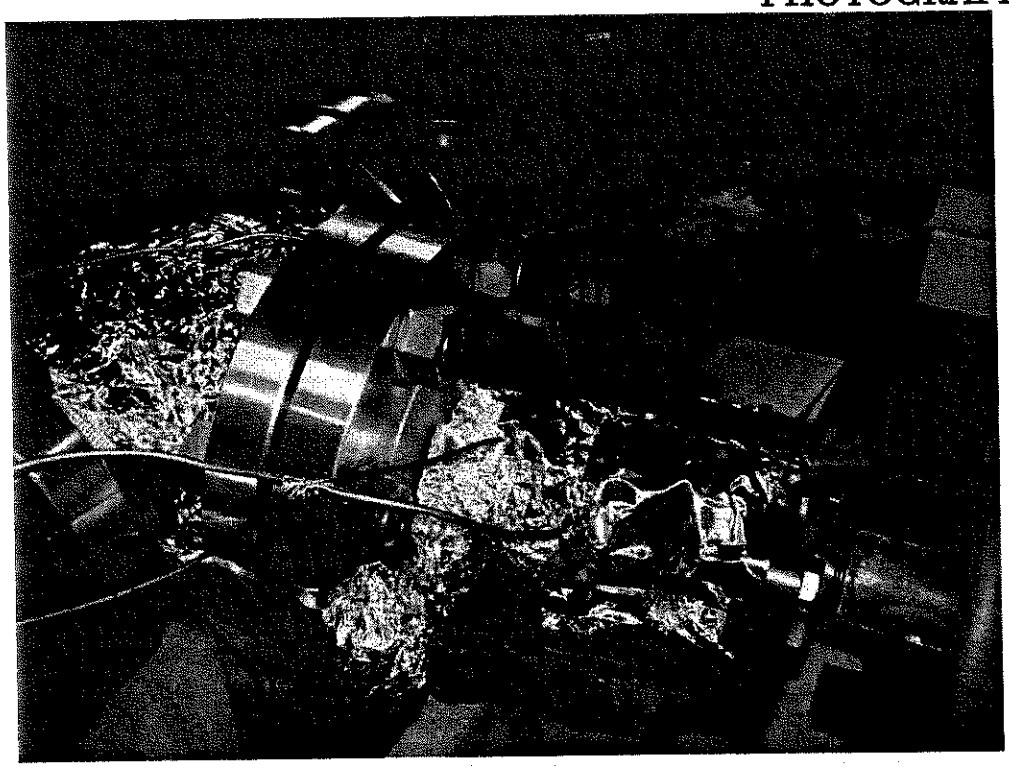

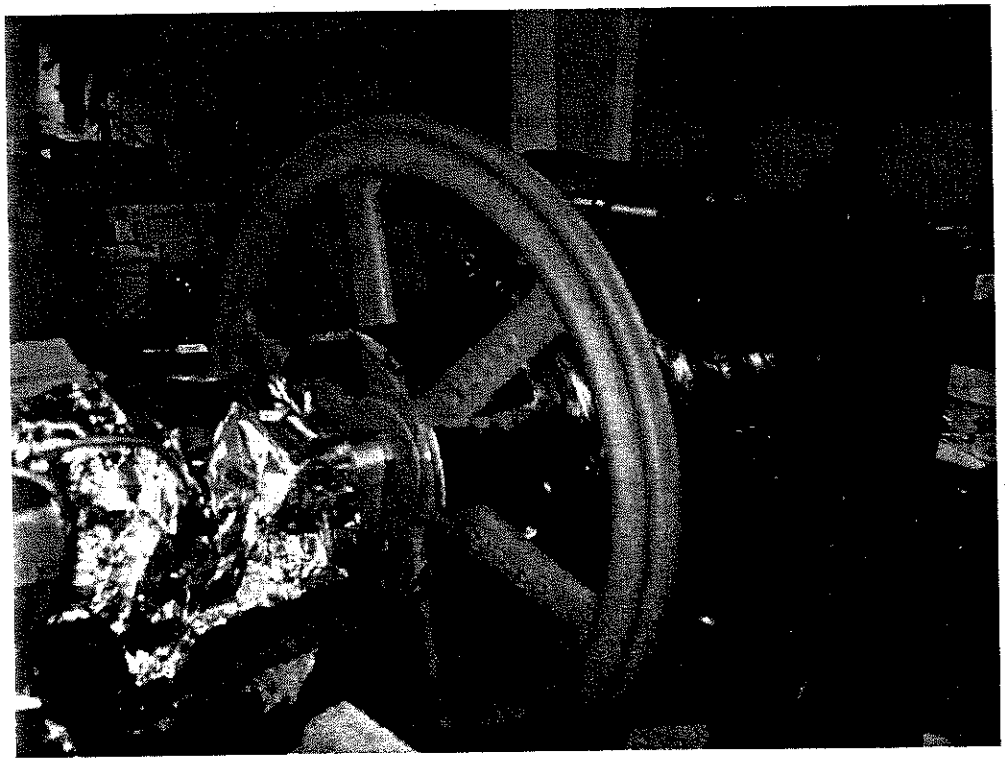

Test Valve

info@yarmouthresearch.com
www.yarmouthresearch.com

Yarmouth Research and Technology, LLC

Valve Description: Cooper 4 inch Cl600 Globe Valve **Date:** 7/1/2010

Cycle Number: 0

Time	Pressure (psig)	Bonnet (deg. C)	Body Temp (deg. C)	Inside Temp (deg. C)	Leakage (Atm cc/sec)
9:58:55 AM	1440	21	23	21	2.2E-05
9:58:56 AM	1440	21	23	21	2.2E-05
9:58:57 AM	1440	21	23	21	2.2E-05
9:58:58 AM	1440	21	23	21	2.2E-05
9:58:59 AM	1440	21	23	21	2.2E-05
9:59:00 AM	1440	21	23	21	2.2E-05
9:59:01 AM	1440	21	23	21	2.2E-05
9:59:02 AM	1440	21	23	21	2.2E-05
9:59:03 AM	1440	21	23	21	2.2E-05
9:59:04 AM	1440	21	23	21	2.2E-05
9:59:05 AM	1440	21	23	21	2.2E-05
9:59:06 AM	1440	21	23	21	2.2E-05
9:59:07 AM	1440	21	23	21	2.2E-05
9:59:08 AM	1440	21	23	21	2.2E-05
9:59:09 AM	1440	21	23	21	2.2E-05
9:59:10 AM	1440	21	23	21	2.2E-05
9:59:11 AM	1440	21	23	21	2.2E-05
9:59:12 AM	1440	21	23	21	2.2E-05
9:59:13 AM	1440	21	23	22	2.2E-05
9:59:14 AM	1440	21	23	21	2.2E-05
9:59:15 AM	1440	21	23	21	2.2E-05
9:59:16 AM	1440	21	23	21	2.3E-05
9:59:17 AM	1440	21	23	21	2.3E-05
9:59:18 AM	1440	21	23	21	2.3E-05
9:59:19 AM	1440	21	23	21	2.3E-05
9:59:20 AM	1440	21	23	21	2.3E-05
9:59:21 AM	1440	21	23	21	2.3E-05
9:59:22 AM	1440	21	23	21	2.3E-05
9:59:23 AM	1440	21	23	21	2.3E-05
9:59:24 AM	1440	21	23	21	2.3E-05
9:59:25 AM	1440	21	23	21	2.3E-05
9:59:26 AM	1440	21	23	21	2.3E-05
9:59:27 AM	1440	21	23	21	2.3E-05
9:59:28 AM	1440	21	23	21	2.3E-05
9:59:29 AM	1440	21	23	21	2.3E-05
9:59:30 AM	1440	21	23	21	2.3E-05
9:59:31 AM	1440	21	23	21	2.3E-05
9:59:32 AM	1440	21	23	21	2.3E-05
9:59:33 AM	1440	21	23	21	2.3E-05
9:59:34 AM	1440	21	23	21	2.3E-05
9:59:35 AM	1440	21	23	21	2.3E-05
9:59:36 AM	1440	21	23	21	2.3E-05
9:59:37 AM	1440	21	23	21	2.3E-05
9:59:38 AM	1440	21	23	21	2.3E-05
9:59:39 AM	1440	21	23	21	2.4E-05
9:59:40 AM	1440	21	23	21	2.4E-05
9:59:41 AM	1440	21	23	21	2.4E-05
9:59:42 AM	1440	21	23	21	2.4E-05
9:59:43 AM	1440	21	23	21	2.4E-05
9:59:44 AM	1440	21	23	21	2.4E-05
9:59:45 AM	1440	21	23	21	2.4E-05
9:59:46 AM	1440	21	23	21	2.4E-05
9:59:47 AM	1440	21	23	21	2.4E-05
9:59:48 AM	1440	21	23	21	2.4E-05
9:59:49 AM	1440	21	23	21	2.4E-05
9:59:50 AM	1440	21	23	21	2.4E-05
9:59:51 AM	1440	21	23	21	2.4E-05
9:59:52 AM	1440	21	23	21	2.4E-05
9:59:53 AM	1440	21	23	21	2.4E-05
9:59:54 AM	1440	21	23	21	2.4E-05
Averages ->	**1440**	**21**	**23**	**21**	**2.3E-05**
				Maximum ->	**2.4E-05**

Yarmouth Research and Technology, LLC

Valve Description: Cooper 4 inch Cl600 Globe Valve **Date:** 7/1/2010

Cycle Number: 0

Time	Pressure (psig)	Bonnet (deg. C)	Body Temp (deg. C)	Inside Temp (deg. C)	Leakage (Atm cc/sec)
10:00:40 AM	1440	21	23	21	2.6E-05
10:00:41 AM	1440	21	23	21	2.6E-05
10:00:42 AM	1440	21	23	21	2.6E-05
10:00:43 AM	1440	21	23	21	2.6E-05
10:00:44 AM	1440	21	23	21	2.6E-05
10:00:45 AM	1440	21	23	21	2.6E-05
10:00:46 AM	1440	21	23	21	2.6E-05
10:00:47 AM	1440	21	23	21	2.6E-05
10:00:48 AM	1440	21	23	21	2.6E-05
10:00:49 AM	1440	21	23	21	2.6E-05
10:00:50 AM	1440	21	23	21	2.6E-05
10:00:51 AM	1440	21	23	21	2.6E-05
10:00:52 AM	1440	21	23	21	2.6E-05
10:00:53 AM	1440	21	23	21	2.6E-05
10:00:54 AM	1440	22	23	21	2.6E-05
10:00:55 AM	1440	21	23	21	2.6E-05
10:00:56 AM	1440	21	23	21	2.6E-05
10:00:57 AM	1440	22	22	21	2.6E-05
10:00:58 AM	1440	22	23	21	2.7E-05
10:00:59 AM	1440	21	23	21	2.7E-05
10:01:00 AM	1440	22	23	21	2.7E-05
10:01:01 AM	1440	22	23	21	2.7E-05
10:01:02 AM	1440	21	23	21	2.7E-05
10:01:03 AM	1440	22	22	21	2.7E-05
10:01:04 AM	1440	21	23	21	2.7E-05
10:01:05 AM	1440	22	23	21	2.8E-05
10:01:06 AM	1440	22	23	21	2.8E-05
10:01:07 AM	1440	22	23	21	2.8E-05
10:01:08 AM	1440	22	23	21	2.8E-05
10:01:09 AM	1440	22	23	21	2.8E-05
10:01:10 AM	1440	22	23	21	2.8E-05
10:01:11 AM	1440	22	23	21	2.8E-05
10:01:12 AM	1440	22	23	21	2.9E-05
10:01:13 AM	1440	22	23	22	2.9E-05
10:01:14 AM	1440	22	23	21	2.9E-05
10:01:15 AM	1440	22	23	21	2.9E-05
10:01:16 AM	1440	22	23	21	2.9E-05
10:01:17 AM	1440	22	23	21	2.9E-05
10:01:18 AM	1440	22	23	21	2.9E-05
10:01:19 AM	1440	22	23	21	2.9E-05
10:01:20 AM	1440	22	23	21	2.9E-05
10:01:21 AM	1440	22	23	21	2.9E-05
10:01:22 AM	1440	22	23	21	2.9E-05
10:01:23 AM	1440	22	23	21	2.9E-05
10:01:24 AM	1440	22	23	21	2.9E-05
10:01:25 AM	1440	22	23	21	2.9E-05
10:01:26 AM	1440	22	23	21	2.9E-05
10:01:27 AM	1440	22	23	21	2.9E-05
10:01:28 AM	1440	22	23	21	2.9E-05
10:01:29 AM	1440	22	23	21	2.9E-05
10:01:30 AM	1440	22	23	21	2.9E-05
10:01:31 AM	1440	22	23	21	2.9E-05
10:01:32 AM	1440	22	23	21	3.0E-05
10:01:33 AM	1440	22	23	21	3.0E-05
10:01:34 AM	1440	22	23	21	3.0E-05
10:01:35 AM	1440	22	23	21	3.0E-05
10:01:36 AM	1440	22	23	21	3.0E-05
10:01:37 AM	1440	22	23	21	3.0E-05
10:01:38 AM	1440	22	23	21	3.0E-05
10:01:39 AM	1440	22	23	21	3.0E-05
Averages ->	**1440**	**22**	**23**	**21**	**2.8E-05**
				Maximum ->	**3.0E-05**

Yarmouth Research and Technology, LLC

Valve Description: Cooper 4 inch Cl600 Globe Valve **Date:** 7/1/2010

Cycle Number: 125

Time	Pressure (psig)	Bonnet (deg. C)	Body Temp (deg. C)	Inside Temp (deg. C)	Leakage (Atm cc/sec)
11:09:58 AM	1440	37	23	24	1.8E-05
11:09:59 AM	1440	37	23	24	1.8E-05
11:10:00 AM	1440	37	23	24	1.8E-05
11:10:01 AM	1440	37	23	24	1.8E-05
11:10:02 AM	1440	37	23	24	1.8E-05
11:10:03 AM	1440	37	23	24	1.8E-05
11:10:04 AM	1440	37	23	24	1.8E-05
11:10:05 AM	1440	37	23	24	1.8E-05
11:10:06 AM	1440	37	23	24	1.9E-05
11:10:07 AM	1440	37	23	24	1.9E-05
11:10:08 AM	1440	37	23	24	1.9E-05
11:10:09 AM	1440	37	23	24	1.9E-05
11:10:10 AM	1440	37	23	24	1.9E-05
11:10:11 AM	1440	37	23	24	1.9E-05
11:10:12 AM	1440	37	23	24	1.9E-05
11:10:13 AM	1440	37	23	24	1.9E-05
11:10:14 AM	1440	37	22	24	1.9E-05
11:10:15 AM	1440	37	23	24	1.9E-05
11:10:16 AM	1440	37	23	24	1.9E-05
11:10:17 AM	1440	37	23	24	1.9E-05
11:10:18 AM	1440	37	23	24	1.9E-05
11:10:19 AM	1440	37	23	24	1.9E-05
11:10:20 AM	1440	37	23	24	1.9E-05
11:10:21 AM	1440	37	23	24	1.9E-05
11:10:22 AM	1440	37	23	24	1.9E-05
11:10:23 AM	1440	37	23	24	1.9E-05
11:10:24 AM	1440	37	23	24	1.9E-05
11:10:25 AM	1440	37	23	24	1.9E-05
11:10:26 AM	1440	37	23	24	1.9E-05
11:10:27 AM	1440	37	23	24	1.9E-05
11:10:28 AM	1440	37	23	24	1.9E-05
11:10:29 AM	1440	37	23	24	1.9E-05
11:10:30 AM	1440	37	23	24	1.9E-05
11:10:31 AM	1440	37	23	24	1.9E-05
11:10:32 AM	1440	37	23	24	1.9E-05
11:10:33 AM	1440	37	23	24	1.9E-05
11:10:34 AM	1440	37	23	24	1.9E-05
11:10:35 AM	1440	37	23	24	1.9E-05
11:10:36 AM	1440	37	23	24	1.9E-05
11:10:37 AM	1440	36	23	24	1.9E-05
11:10:38 AM	1440	37	23	24	1.9E-05
11:10:39 AM	1440	37	23	24	1.9E-05
11:10:40 AM	1440	36	23	24	2.0E-05
11:10:41 AM	1440	37	23	24	2.0E-05
11:10:42 AM	1440	37	23	24	2.0E-05
11:10:43 AM	1440	37	23	24	2.0E-05
11:10:44 AM	1440	37	23	24	2.0E-05
11:10:45 AM	1440	37	23	24	2.0E-05
11:10:46 AM	1440	36	23	24	2.0E-05
11:10:47 AM	1440	36	23	24	2.0E-05
11:10:48 AM	1440	37	23	24	2.0E-05
11:10:49 AM	1440	36	23	24	2.1E-05
11:10:50 AM	1440	36	23	24	2.1E-05
11:10:51 AM	1440	36	23	24	2.1E-05
11:10:52 AM	1440	36	23	24	2.1E-05
11:10:53 AM	1440	36	23	24	2.1E-05
11:10:54 AM	1440	36	23	24	2.1E-05
11:10:55 AM	1440	36	23	24	2.1E-05
11:10:56 AM	1440	36	23	24	2.1E-05
11:10:57 AM	1440	36	23	24	2.1E-05
Averages ->	**1440**	**37**	**23**	**24**	**1.9E-05**
				Maximum ->	**2.1E-05**

Yarmouth Research and Technology, LLC

Valve Description: Cooper 4 inch Cl600 Globe Valve **Date:** 7/1/2010

Cycle Number: 125

Time	Pressure (psig)	Bonnet (deg. C)	Body Temp (deg. C)	Inside Temp (deg. C)	Leakage (Atm cc/sec)
11:11:14 AM	1440	36	23	24	2.2E-05
11:11:15 AM	1440	36	23	24	2.2E-05
11:11:16 AM	1440	36	23	24	2.3E-05
11:11:17 AM	1440	36	23	24	2.3E-05
11:11:18 AM	1440	36	23	24	2.3E-05
11:11:19 AM	1440	36	23	24	2.3E-05
11:11:20 AM	1440	36	23	24	2.3E-05
11:11:21 AM	1440	36	23	24	2.4E-05
11:11:22 AM	1440	36	23	24	2.4E-05
11:11:23 AM	1440	36	23	24	2.4E-05
11:11:24 AM	1440	36	23	24	2.4E-05
11:11:25 AM	1440	36	23	24	2.5E-05
11:11:26 AM	1440	36	23	24	2.5E-05
11:11:27 AM	1440	36	23	24	2.5E-05
11:11:28 AM	1440	36	23	24	2.5E-05
11:11:29 AM	1440	36	23	24	2.5E-05
11:11:30 AM	1440	36	23	24	2.5E-05
11:11:31 AM	1440	36	23	24	2.5E-05
11:11:32 AM	1440	36	23	24	2.5E-05
11:11:33 AM	1440	35	23	24	2.5E-05
11:11:34 AM	1440	36	23	24	2.5E-05
11:11:35 AM	1440	36	23	24	2.5E-05
11:11:36 AM	1440	36	23	24	2.5E-05
11:11:37 AM	1440	36	23	24	2.4E-05
11:11:38 AM	1440	36	23	24	2.5E-05
11:11:39 AM	1440	36	23	24	2.4E-05
11:11:40 AM	1440	36	23	24	2.4E-05
11:11:41 AM	1440	36	23	24	2.4E-05
11:11:42 AM	1440	36	23	24	2.4E-05
11:11:43 AM	1440	36	23	24	2.4E-05
11:11:44 AM	1440	36	23	24	2.5E-05
11:11:45 AM	1440	36	23	24	2.5E-05
11:11:46 AM	1440	36	23	24	2.5E-05
11:11:47 AM	1440	36	23	24	2.5E-05
11:11:48 AM	1440	36	23	24	2.5E-05
11:11:49 AM	1440	36	23	24	2.5E-05
11:11:50 AM	1440	36	23	24	2.5E-05
11:11:51 AM	1440	36	23	24	2.5E-05
11:11:52 AM	1440	36	23	24	2.5E-05
11:11:53 AM	1440	36	23	24	2.5E-05
11:11:54 AM	1440	36	23	24	2.6E-05
11:11:55 AM	1440	36	23	24	2.6E-05
11:11:56 AM	1440	36	23	24	2.5E-05
11:11:57 AM	1440	36	23	24	2.5E-05
11:11:58 AM	1440	36	23	24	2.5E-05
11:11:59 AM	1440	36	23	24	2.5E-05
11:12:00 AM	1440	36	23	24	2.5E-05
11:12:01 AM	1440	36	23	24	2.4E-05
11:12:02 AM	1440	36	23	24	2.4E-05
11:12:03 AM	1440	36	23	24	2.3E-05
11:12:04 AM	1440	36	23	24	2.3E-05
11:12:05 AM	1440	36	23	24	2.2E-05
11:12:06 AM	1440	36	23	24	2.2E-05
11:12:07 AM	1440	36	23	24	2.2E-05
11:12:08 AM	1440	36	23	24	2.2E-05
11:12:09 AM	1440	36	23	24	2.2E-05
11:12:10 AM	1440	36	23	24	2.3E-05
11:12:11 AM	1440	36	23	24	2.3E-05
11:12:12 AM	1440	36	23	24	2.3E-05
11:12:13 AM	1440	36	23	24	2.3E-05
Averages ->	**1440**	**36**	**23**	**24**	**2.4E-05**
				Maximum ->	**2.6E-05**

Yarmouth Research and Technology, LLC

Valve Description: Cooper 4 inch Cl600 Globe Valve **Date:** 7/1/2010

Cycle Number: 125

Time	Pressure (psig)	Bonnet (deg. C)	Body Temp (deg. C)	Inside Temp (deg. C)	Leakage (Atm cc/sec)
6:07:16 PM	845	384	395	400	1.9E-03
6:07:17 PM	845	384	395	400	1.9E-03
6:07:18 PM	845	385	395	400	1.9E-03
6:07:19 PM	845	384	395	400	1.9E-03
6:07:20 PM	845	385	395	400	1.9E-03
6:07:21 PM	845	384	395	400	1.9E-03
6:07:22 PM	845	385	395	400	1.9E-03
6:07:23 PM	845	385	395	400	1.9E-03
6:07:24 PM	845	385	395	400	1.9E-03
6:07:25 PM	845	385	395	400	1.9E-03
6:07:26 PM	845	385	395	400	1.9E-03
6:07:27 PM	845	385	395	400	1.9E-03
6:07:28 PM	845	385	395	400	1.9E-03
6:07:29 PM	845	385	395	400	1.9E-03
6:07:30 PM	845	385	395	400	1.9E-03
6:07:31 PM	845	385	395	400	1.9E-03
6:07:32 PM	845	385	395	400	1.9E-03
6:07:33 PM	845	385	395	400	1.9E-03
6:07:34 PM	845	385	395	400	2.0E-03
6:07:35 PM	845	385	395	400	2.0E-03
6:07:36 PM	845	385	395	400	2.0E-03
6:07:37 PM	845	385	395	400	2.0E-03
6:07:38 PM	845	385	395	400	2.0E-03
6:07:39 PM	845	385	395	400	2.0E-03
6:07:40 PM	845	385	395	400	2.0E-03
6:07:41 PM	845	385	395	400	2.0E-03
6:07:42 PM	845	385	395	400	2.0E-03
6:07:43 PM	845	385	395	400	2.0E-03
6:07:44 PM	845	385	395	400	1.9E-03
6:07:45 PM	845	385	395	400	1.9E-03
6:07:46 PM	845	385	395	400	1.9E-03
6:07:47 PM	845	385	395	400	1.9E-03
6:07:48 PM	845	385	395	400	1.9E-03
6:07:49 PM	845	385	395	400	1.9E-03
6:07:50 PM	845	385	395	400	1.9E-03
6:07:51 PM	845	385	395	400	1.9E-03
6:07:52 PM	845	385	395	400	1.9E-03
6:07:53 PM	845	385	395	400	1.9E-03
6:07:54 PM	845	385	395	400	1.9E-03
6:07:55 PM	845	385	395	400	1.9E-03
6:07:56 PM	845	385	395	400	1.9E-03
6:07:57 PM	845	385	395	400	1.9E-03
6:07:58 PM	845	385	395	400	1.9E-03
6:07:59 PM	845	385	395	400	1.9E-03
6:08:00 PM	845	385	395	400	1.9E-03
6:08:01 PM	845	385	395	400	1.9E-03
6:08:02 PM	845	385	395	400	1.9E-03
6:08:03 PM	845	385	395	400	1.8E-03
6:08:04 PM	845	385	395	400	1.8E-03
6:08:05 PM	845	385	395	400	1.7E-03
6:08:06 PM	845	385	395	400	1.7E-03
6:08:07 PM	845	385	395	400	1.6E-03
6:08:08 PM	845	385	395	400	1.5E-03
6:08:09 PM	845	385	395	400	1.5E-03
6:08:10 PM	845	385	395	400	1.5E-03
6:08:11 PM	845	385	395	400	1.5E-03
6:08:12 PM	845	385	395	400	1.5E-03
6:08:13 PM	845	385	395	400	1.5E-03
6:08:14 PM	845	385	395	400	1.5E-03
6:08:15 PM	845	384	395	400	1.5E-03
Averages ->	**845**	**385**	**395**	**400**	**1.9E-03**
				Maximum ->	**2.0E-03**

Yarmouth Research and Technology, LLC

Valve Description: Cooper 4 inch Cl600 Globe Valve **Date:** 7/1/2010

Cycle Number: 125

Time	Pressure (psig)	Bonnet (deg. C)	Body Temp (deg. C)	Inside Temp (deg. C)	Leakage (Atm cc/sec)
6:09:15 PM	845	384	395	400	2.0E-03
6:09:16 PM	845	384	395	400	2.0E-03
6:09:17 PM	845	384	395	400	2.0E-03
6:09:18 PM	845	384	395	400	2.0E-03
6:09:19 PM	845	384	395	400	1.9E-03
6:09:20 PM	845	384	395	400	1.9E-03
6:09:21 PM	845	384	395	400	1.9E-03
6:09:22 PM	845	384	395	400	1.9E-03
6:09:23 PM	845	384	395	400	1.9E-03
6:09:24 PM	845	384	395	400	1.9E-03
6:09:25 PM	845	384	395	400	1.8E-03
6:09:26 PM	845	384	395	400	1.8E-03
6:09:27 PM	845	384	395	400	1.8E-03
6:09:28 PM	845	384	395	400	1.8E-03
6:09:29 PM	845	384	395	400	1.8E-03
6:09:30 PM	845	384	395	400	1.8E-03
6:09:31 PM	845	384	395	400	1.9E-03
6:09:32 PM	845	384	395	400	1.9E-03
6:09:33 PM	845	384	395	400	1.9E-03
6:09:34 PM	845	384	395	400	2.0E-03
6:09:35 PM	845	384	395	400	2.0E-03
6:09:36 PM	845	385	395	400	2.0E-03
6:09:37 PM	845	384	395	400	2.0E-03
6:09:38 PM	845	384	395	400	2.0E-03
6:09:39 PM	845	384	395	400	2.0E-03
6:09:40 PM	845	385	395	400	1.9E-03
6:09:41 PM	845	384	395	400	1.9E-03
6:09:42 PM	845	385	395	400	1.9E-03
6:09:43 PM	845	384	395	400	1.9E-03
6:09:44 PM	845	385	395	400	1.9E-03
6:09:45 PM	845	384	395	400	1.9E-03
6:09:46 PM	845	384	395	400	1.9E-03
6:09:47 PM	845	384	395	400	1.9E-03
6:09:48 PM	845	384	395	400	1.9E-03
6:09:49 PM	845	384	395	400	1.9E-03
6:09:50 PM	845	384	395	400	1.9E-03
6:09:51 PM	845	384	395	400	1.8E-03
6:09:52 PM	845	384	395	400	1.7E-03
6:09:53 PM	845	384	395	400	1.7E-03
6:09:54 PM	845	384	395	400	1.6E-03
6:09:55 PM	845	384	395	400	1.6E-03
6:09:56 PM	845	384	395	400	1.5E-03
6:09:57 PM	845	384	395	400	1.5E-03
6:09:58 PM	845	384	396	400	1.5E-03
6:09:59 PM	845	384	395	400	1.4E-03
6:10:00 PM	845	384	395	400	1.4E-03
6:10:01 PM	845	384	395	400	1.3E-03
6:10:02 PM	845	384	395	400	1.3E-03
6:10:03 PM	845	384	395	400	1.3E-03
6:10:04 PM	845	384	395	400	1.3E-03
6:10:05 PM	845	384	395	400	1.3E-03
6:10:06 PM	845	384	395	400	1.3E-03
6:10:07 PM	845	384	395	400	1.3E-03
6:10:08 PM	845	384	396	400	1.3E-03
6:10:09 PM	845	384	395	400	1.3E-03
6:10:10 PM	845	384	395	400	1.3E-03
6:10:11 PM	845	384	395	400	1.4E-03
6:10:12 PM	845	384	395	400	1.4E-03
6:10:13 PM	845	384	395	400	1.5E-03
6:10:14 PM	845	384	395	400	1.6E-03
Averages ->	**845**	**384**	**395**	**400**	**1.7E-03**
				Maximum ->	**2.0E-03**

Yarmouth Research and Technology, LLC

Valve Description: Cooper 4 inch Cl600 Globe Valve **Date:** 7/1/2010

Cycle Number: 250

Time	Pressure (psig)	Bonnet (deg. C)	Body Temp (deg. C)	Inside Temp (deg. C)	Leakage (Atm cc/sec)
7:30:56 PM	845	388	397	400	2.1E-03
7:30:57 PM	845	388	397	400	2.2E-03
7:30:58 PM	845	388	397	400	2.2E-03
7:30:59 PM	845	388	397	400	2.2E-03
7:31:00 PM	845	388	397	400	2.2E-03
7:31:01 PM	845	388	397	400	2.2E-03
7:31:02 PM	845	388	398	400	2.2E-03
7:31:03 PM	845	388	397	400	2.2E-03
7:31:04 PM	845	388	397	400	2.2E-03
7:31:05 PM	845	389	397	400	2.2E-03
7:31:06 PM	845	388	398	400	2.2E-03
7:31:07 PM	845	389	398	400	2.2E-03
7:31:08 PM	845	388	397	400	2.2E-03
7:31:09 PM	845	389	397	400	2.2E-03
7:31:10 PM	845	389	397	400	2.2E-03
7:31:11 PM	845	389	397	400	2.3E-03
7:31:12 PM	845	389	398	400	2.3E-03
7:31:13 PM	845	389	397	400	2.3E-03
7:31:14 PM	845	389	397	400	2.3E-03
7:31:15 PM	845	389	398	400	2.3E-03
7:31:16 PM	845	389	397	400	2.3E-03
7:31:17 PM	845	389	397	400	2.3E-03
7:31:18 PM	845	389	397	400	2.3E-03
7:31:19 PM	845	389	397	400	2.3E-03
7:31:20 PM	845	389	397	400	2.3E-03
7:31:21 PM	845	389	398	400	2.3E-03
7:31:22 PM	845	389	397	400	2.3E-03
7:31:23 PM	845	389	397	400	2.3E-03
7:31:24 PM	845	389	398	400	2.3E-03
7:31:25 PM	845	389	398	400	2.3E-03
7:31:26 PM	845	389	398	400	2.3E-03
7:31:27 PM	845	389	397	400	2.3E-03
7:31:28 PM	845	389	397	400	2.3E-03
7:31:29 PM	845	389	398	400	2.4E-03
7:31:30 PM	845	389	398	400	2.4E-03
7:31:31 PM	845	389	398	400	2.4E-03
7:31:32 PM	845	389	397	400	2.4E-03
7:31:33 PM	845	389	397	400	2.5E-03
7:31:34 PM	845	389	397	400	2.5E-03
7:31:35 PM	845	389	397	400	2.5E-03
7:31:36 PM	845	389	397	400	2.5E-03
7:31:37 PM	845	389	397	400	2.5E-03
7:31:38 PM	845	389	397	400	2.5E-03
7:31:39 PM	845	389	397	400	2.5E-03
7:31:40 PM	845	389	397	400	2.4E-03
7:31:41 PM	845	389	397	400	2.4E-03
7:31:42 PM	845	389	397	400	2.5E-03
7:31:43 PM	845	390	397	400	2.5E-03
7:31:44 PM	845	390	398	400	2.5E-03
7:31:45 PM	845	390	397	400	2.5E-03
7:31:46 PM	845	390	397	400	2.5E-03
7:31:47 PM	845	390	397	400	2.6E-03
7:31:48 PM	845	390	397	400	2.6E-03
7:31:49 PM	845	390	397	400	2.6E-03
7:31:50 PM	845	390	397	400	2.6E-03
7:31:51 PM	845	390	398	400	2.6E-03
7:31:52 PM	845	390	397	400	2.6E-03
7:31:53 PM	845	390	398	400	2.6E-03
7:31:54 PM	845	390	398	400	2.6E-03
7:31:55 PM	845	390	397	400	2.5E-03
Averages ->	**845**	**389**	**397**	**400**	**2.4E-03**
				Maximum ->	**2.6E-03**

Yarmouth Research and Technology, LLC

Valve Description: Cooper 4 inch Cl600 Globe Valve **Date:** 7/1/2010

Cycle Number: 250

Time	Pressure (psig)	Bonnet (deg. C)	Body Temp (deg. C)	Inside Temp (deg. C)	Leakage (Atm cc/sec)
7:32:13 PM	845	390	397	400	2.6E-03
7:32:14 PM	845	390	397	400	2.6E-03
7:32:15 PM	845	390	397	400	2.6E-03
7:32:16 PM	845	390	397	400	2.6E-03
7:32:17 PM	845	390	398	400	2.5E-03
7:32:18 PM	845	390	397	400	2.5E-03
7:32:19 PM	845	390	397	400	2.5E-03
7:32:20 PM	845	390	397	400	2.5E-03
7:32:21 PM	845	390	397	400	2.5E-03
7:32:22 PM	845	390	397	400	2.5E-03
7:32:23 PM	845	390	398	400	2.5E-03
7:32:24 PM	845	390	397	400	2.5E-03
7:32:25 PM	845	390	397	400	2.5E-03
7:32:26 PM	845	390	397	400	2.5E-03
7:32:27 PM	845	390	397	400	2.5E-03
7:32:28 PM	845	390	397	400	2.5E-03
7:32:29 PM	845	390	397	400	2.5E-03
7:32:30 PM	845	390	397	400	2.5E-03
7:32:31 PM	845	390	398	400	2.5E-03
7:32:32 PM	845	390	398	400	2.5E-03
7:32:33 PM	845	390	397	400	2.5E-03
7:32:34 PM	845	390	398	400	2.5E-03
7:32:35 PM	845	390	397	400	2.5E-03
7:32:36 PM	845	390	398	400	2.5E-03
7:32:37 PM	845	390	397	400	2.6E-03
7:32:38 PM	845	390	397	400	2.6E-03
7:32:39 PM	845	390	398	400	2.6E-03
7:32:40 PM	845	390	397	400	2.7E-03
7:32:41 PM	845	390	397	400	2.7E-03
7:32:42 PM	845	390	397	400	2.7E-03
7:32:43 PM	845	390	398	400	2.7E-03
7:32:44 PM	845	390	397	400	2.7E-03
7:32:45 PM	845	390	397	400	2.7E-03
7:32:46 PM	845	390	398	400	2.6E-03
7:32:47 PM	845	390	397	400	2.6E-03
7:32:48 PM	845	390	397	400	2.5E-03
7:32:49 PM	845	390	397	400	2.5E-03
7:32:50 PM	845	390	397	400	2.5E-03
7:32:51 PM	845	390	397	400	2.5E-03
7:32:52 PM	845	390	397	400	2.4E-03
7:32:53 PM	845	390	397	400	2.4E-03
7:32:54 PM	845	390	397	400	2.5E-03
7:32:55 PM	845	390	397	400	2.5E-03
7:32:56 PM	845	390	397	400	2.5E-03
7:32:57 PM	845	390	398	400	2.5E-03
7:32:58 PM	845	390	398	400	2.5E-03
7:32:59 PM	845	390	397	400	2.5E-03
7:33:00 PM	845	390	397	400	2.5E-03
7:33:01 PM	845	390	397	400	2.5E-03
7:33:02 PM	845	390	397	400	2.5E-03
7:33:03 PM	845	390	397	400	2.5E-03
7:33:04 PM	845	390	397	400	2.5E-03
7:33:05 PM	845	390	397	399	2.5E-03
7:33:06 PM	845	390	397	399	2.5E-03
7:33:07 PM	845	390	397	399	2.5E-03
7:33:08 PM	845	390	397	399	2.5E-03
7:33:09 PM	845	389	397	399	2.5E-03
7:33:10 PM	845	389	397	399	2.5E-03
7:33:11 PM	845	390	397	399	2.4E-03
7:33:12 PM	845	389	397	399	2.4E-03
Averages ->	**845**	**390**	**397**	**400**	**2.5E-03**
				Maximum ->	**2.7E-03**

Yarmouth Research and Technology, LLC

Valve Description: Cooper 4 inch Cl600 Globe Valve **Date:** 7/2/2010

Cycle Number: 250

Time	Pressure (psig)	Bonnet (deg. C)	Body Temp (deg. C)	Inside Temp (deg. C)	Leakage (Atm cc/sec)
9:33:24 AM	1440	26	24	24	8.0E-04
9:33:25 AM	1440	26	24	24	8.0E-04
9:33:26 AM	1440	26	24	24	8.0E-04
9:33:27 AM	1440	26	24	24	8.0E-04
9:33:28 AM	1440	26	24	24	8.1E-04
9:33:29 AM	1440	26	24	24	8.1E-04
9:33:30 AM	1440	26	24	24	8.1E-04
9:33:31 AM	1440	26	24	24	8.1E-04
9:33:32 AM	1440	26	24	24	8.1E-04
9:33:33 AM	1440	26	24	24	8.1E-04
9:33:34 AM	1440	26	24	24	8.1E-04
9:33:35 AM	1440	26	24	24	8.0E-04
9:33:36 AM	1440	26	24	24	8.0E-04
9:33:37 AM	1440	26	24	24	8.0E-04
9:33:38 AM	1440	26	24	24	8.0E-04
9:33:39 AM	1440	26	24	24	8.0E-04
9:33:40 AM	1440	26	24	24	8.0E-04
9:33:41 AM	1440	26	24	24	7.9E-04
9:33:42 AM	1440	26	24	24	8.0E-04
9:33:43 AM	1440	26	24	24	8.0E-04
9:33:44 AM	1440	26	24	24	8.0E-04
9:33:45 AM	1440	26	24	24	8.0E-04
9:33:46 AM	1440	26	24	24	7.9E-04
9:33:47 AM	1440	26	24	24	7.9E-04
9:33:48 AM	1440	26	24	24	7.9E-04
9:33:49 AM	1440	26	24	24	7.9E-04
9:33:50 AM	1440	26	24	24	7.9E-04
9:33:51 AM	1440	26	24	24	7.9E-04
9:33:52 AM	1440	26	24	24	7.9E-04
9:33:53 AM	1440	26	24	24	7.9E-04
9:33:54 AM	1440	26	24	24	7.9E-04
9:33:55 AM	1440	26	23	24	7.9E-04
9:33:56 AM	1440	26	24	24	7.8E-04
9:33:57 AM	1440	26	24	24	7.8E-04
9:33:58 AM	1440	26	24	24	7.8E-04
9:33:59 AM	1440	26	24	24	7.8E-04
9:34:00 AM	1440	26	24	24	7.8E-04
9:34:01 AM	1440	26	24	24	7.8E-04
9:34:02 AM	1440	26	24	24	7.8E-04
9:34:03 AM	1440	26	24	24	7.8E-04
9:34:04 AM	1440	26	24	24	7.7E-04
9:34:05 AM	1440	26	24	24	7.7E-04
9:34:06 AM	1440	26	24	24	7.6E-04
9:34:07 AM	1440	26	24	24	7.6E-04
9:34:08 AM	1440	26	24	24	7.6E-04
9:34:09 AM	1440	26	24	24	7.5E-04
9:34:10 AM	1440	26	24	24	7.4E-04
9:34:11 AM	1440	26	24	24	7.3E-04
9:34:12 AM	1440	26	24	24	7.3E-04
9:34:13 AM	1440	26	24	24	7.2E-04
9:34:14 AM	1440	26	24	24	7.1E-04
9:34:15 AM	1440	26	24	24	7.1E-04
9:34:16 AM	1440	26	24	24	7.0E-04
9:34:17 AM	1440	26	24	24	6.9E-04
9:34:18 AM	1440	26	24	24	6.9E-04
9:34:19 AM	1440	26	23	24	6.9E-04
9:34:20 AM	1440	26	24	24	6.8E-04
9:34:21 AM	1440	26	24	24	6.7E-04
9:34:22 AM	1440	26	24	24	6.7E-04
9:34:23 AM	1440	26	24	24	6.7E-04
Averages ->	**1440**	**26**	**24**	**24**	**7.7E-04**
				Maximum ->	**8.1E-04**

Yarmouth Research and Technology, LLC

Valve Description: Cooper 4 inch Cl600 Globe Valve **Date:** 7/2/2010

Cycle Number: 250

Time	Pressure (psig)	Bonnet (deg. C)	Body Temp (deg. C)	Inside Temp (deg. C)	Leakage (Atm cc/sec)
9:35:09 AM	1440	26	24	24	6.4E-04
9:35:10 AM	1440	26	24	24	6.4E-04
9:35:11 AM	1440	26	24	24	6.4E-04
9:35:12 AM	1440	26	23	24	6.4E-04
9:35:13 AM	1440	26	24	24	6.4E-04
9:35:14 AM	1440	26	24	24	6.4E-04
9:35:15 AM	1440	26	23	24	6.4E-04
9:35:16 AM	1440	26	23	24	6.4E-04
9:35:17 AM	1440	26	23	24	6.4E-04
9:35:18 AM	1440	26	24	24	6.5E-04
9:35:19 AM	1440	26	24	24	6.5E-04
9:35:20 AM	1440	26	24	24	6.5E-04
9:35:21 AM	1440	26	24	24	6.5E-04
9:35:22 AM	1440	26	24	24	6.5E-04
9:35:23 AM	1440	26	24	24	6.5E-04
9:35:24 AM	1440	26	24	24	6.5E-04
9:35:25 AM	1440	26	24	24	6.5E-04
9:35:26 AM	1440	26	24	24	6.5E-04
9:35:27 AM	1440	26	23	24	6.5E-04
9:35:28 AM	1440	26	23	24	6.5E-04
9:35:29 AM	1440	26	24	24	6.5E-04
9:35:30 AM	1440	26	24	24	6.5E-04
9:35:31 AM	1440	26	23	24	6.5E-04
9:35:32 AM	1440	26	24	24	6.6E-04
9:35:33 AM	1440	26	23	24	6.5E-04
9:35:34 AM	1440	26	24	24	6.6E-04
9:35:35 AM	1440	26	24	24	6.5E-04
9:35:36 AM	1440	26	23	24	6.6E-04
9:35:37 AM	1440	26	24	24	6.6E-04
9:35:38 AM	1440	26	24	24	6.6E-04
9:35:39 AM	1440	26	23	24	6.6E-04
9:35:40 AM	1440	26	24	24	6.6E-04
9:35:41 AM	1440	26	24	24	6.6E-04
9:35:42 AM	1440	26	23	24	6.6E-04
9:35:43 AM	1440	26	24	24	6.6E-04
9:35:44 AM	1440	26	23	24	6.6E-04
9:35:45 AM	1440	26	24	24	6.6E-04
9:35:46 AM	1440	26	24	24	6.6E-04
9:35:47 AM	1440	26	24	24	6.6E-04
9:35:48 AM	1440	26	24	24	6.6E-04
9:35:49 AM	1440	26	23	24	6.6E-04
9:35:50 AM	1440	26	24	24	6.6E-04
9:35:51 AM	1440	26	23	24	6.5E-04
9:35:52 AM	1440	26	24	24	6.5E-04
9:35:53 AM	1440	26	23	24	6.5E-04
9:35:54 AM	1440	26	24	24	6.4E-04
9:35:55 AM	1440	27	24	24	6.5E-04
9:35:56 AM	1440	26	24	24	6.5E-04
9:35:57 AM	1440	26	24	24	6.5E-04
9:35:58 AM	1440	27	24	24	6.5E-04
9:35:59 AM	1440	26	24	24	6.5E-04
9:36:00 AM	1440	27	24	24	6.5E-04
9:36:01 AM	1440	27	24	24	6.6E-04
9:36:02 AM	1440	26	24	24	6.5E-04
9:36:03 AM	1440	27	24	24	6.5E-04
9:36:04 AM	1440	27	24	24	6.5E-04
9:36:05 AM	1440	27	24	24	6.5E-04
9:36:06 AM	1440	27	24	24	6.5E-04
9:36:07 AM	1440	27	24	24	6.6E-04
9:36:08 AM	1440	27	24	24	6.6E-04
Averages ->	**1440**	**26**	**24**	**24**	**6.5E-04**
				Maximum ->	**6.6E-04**

Yarmouth Research and Technology, LLC

Valve Description: Cooper 4 inch Cl600 Globe Valve **Date:** 7/2/2010

Cycle Number: 375

Time	Pressure (psig)	Bonnet (deg. C)	Body Temp (deg. C)	Inside Temp (deg. C)	Leakage (Atm cc/sec)
10:58:13 AM	1440	51	23	24	3.1E-05
10:58:14 AM	1440	51	23	24	3.1E-05
10:58:15 AM	1440	51	23	24	3.1E-05
10:58:16 AM	1440	51	23	24	3.2E-05
10:58:17 AM	1440	51	23	24	3.2E-05
10:58:18 AM	1440	51	23	24	3.3E-05
10:58:19 AM	1440	51	23	24	3.3E-05
10:58:20 AM	1440	51	23	24	3.4E-05
10:58:21 AM	1440	51	23	24	3.4E-05
10:58:22 AM	1440	51	23	24	3.4E-05
10:58:23 AM	1440	51	23	24	3.5E-05
10:58:24 AM	1440	51	23	24	3.5E-05
10:58:25 AM	1440	51	23	24	3.4E-05
10:58:26 AM	1440	51	23	24	3.4E-05
10:58:27 AM	1440	51	23	24	3.4E-05
10:58:28 AM	1440	51	23	24	3.4E-05
10:58:29 AM	1440	51	23	24	3.3E-05
10:58:30 AM	1440	51	23	24	3.3E-05
10:58:31 AM	1440	51	23	24	3.3E-05
10:58:32 AM	1440	51	23	24	3.3E-05
10:58:33 AM	1440	51	23	24	3.3E-05
10:58:34 AM	1440	51	24	24	3.3E-05
10:58:35 AM	1440	51	23	24	3.3E-05
10:58:36 AM	1440	51	23	24	3.3E-05
10:58:37 AM	1440	51	23	24	3.4E-05
10:58:38 AM	1440	51	23	24	3.4E-05
10:58:39 AM	1440	51	23	24	3.4E-05
10:58:40 AM	1440	51	23	24	3.4E-05
10:58:41 AM	1440	51	23	24	3.5E-05
10:58:42 AM	1440	51	23	24	3.5E-05
10:58:43 AM	1440	51	23	24	3.5E-05
10:58:44 AM	1440	51	23	24	3.5E-05
10:58:45 AM	1440	51	23	24	3.5E-05
10:58:46 AM	1440	51	23	24	3.6E-05
10:58:47 AM	1440	51	23	24	3.6E-05
10:58:48 AM	1440	51	23	24	3.6E-05
10:58:49 AM	1440	51	23	24	3.6E-05
10:58:50 AM	1440	51	23	24	3.7E-05
10:58:51 AM	1440	51	23	24	3.7E-05
10:58:52 AM	1440	51	23	24	3.7E-05
10:58:53 AM	1440	51	23	24	3.7E-05
10:58:54 AM	1440	51	23	24	3.7E-05
10:58:55 AM	1440	51	23	24	3.8E-05
10:58:56 AM	1440	51	23	24	3.8E-05
10:58:57 AM	1440	51	23	24	3.8E-05
10:58:58 AM	1440	51	23	24	3.8E-05
10:58:59 AM	1440	50	23	24	3.8E-05
10:59:00 AM	1440	51	23	24	3.8E-05
10:59:01 AM	1440	51	23	24	3.8E-05
10:59:02 AM	1440	51	23	24	3.9E-05
10:59:03 AM	1440	51	23	24	3.9E-05
10:59:04 AM	1440	50	23	24	3.9E-05
10:59:05 AM	1440	51	23	24	4.0E-05
10:59:06 AM	1440	51	23	24	4.0E-05
10:59:07 AM	1440	50	23	24	4.0E-05
10:59:08 AM	1440	50	23	24	4.0E-05
10:59:09 AM	1440	50	23	24	4.0E-05
10:59:10 AM	1440	50	23	24	4.0E-05
10:59:11 AM	1440	51	23	24	4.0E-05
10:59:12 AM	1440	50	23	24	4.0E-05
Averages ->	**1440**	**51**	**23**	**24**	**3.6E-05**
				Maximum ->	**4.0E-05**

Yarmouth Research and Technology, LLC

Valve Description: Cooper 4 inch Cl600 Globe Valve **Date:** 7/2/2010

Cycle Number: 377

Time	Pressure (psig)	Bonnet (deg. C)	Body Temp (deg. C)	Inside Temp (deg. C)	Leakage (Atm cc/sec)
11:00:48 AM	1440	49	23	24	5.9E-05
11:00:49 AM	1440	49	23	24	5.8E-05
11:00:50 AM	1440	49	23	24	5.8E-05
11:00:51 AM	1440	49	23	24	5.8E-05
11:00:52 AM	1440	49	23	24	5.7E-05
11:00:53 AM	1440	49	23	24	5.7E-05
11:00:54 AM	1440	49	23	24	5.7E-05
11:00:55 AM	1440	49	23	24	5.7E-05
11:00:56 AM	1440	49	23	24	5.8E-05
11:00:57 AM	1440	49	24	24	5.7E-05
11:00:58 AM	1440	49	23	24	5.7E-05
11:00:59 AM	1440	49	23	24	5.8E-05
11:01:00 AM	1440	49	23	24	5.8E-05
11:01:01 AM	1440	49	23	24	5.9E-05
11:01:02 AM	1440	49	23	24	6.0E-05
11:01:03 AM	1440	49	24	24	6.1E-05
11:01:04 AM	1440	49	23	24	6.2E-05
11:01:05 AM	1440	49	23	24	6.2E-05
11:01:06 AM	1440	49	23	24	6.2E-05
11:01:07 AM	1440	49	23	24	6.2E-05
11:01:08 AM	1440	49	23	24	6.2E-05
11:01:09 AM	1440	49	23	24	6.0E-05
11:01:10 AM	1440	49	24	24	5.9E-05
11:01:11 AM	1440	49	23	24	5.8E-05
11:01:12 AM	1440	49	23	24	5.6E-05
11:01:13 AM	1440	49	23	24	5.5E-05
11:01:14 AM	1440	49	23	24	5.4E-05
11:01:15 AM	1440	49	23	24	5.3E-05
11:01:16 AM	1440	49	23	24	5.3E-05
11:01:17 AM	1440	49	23	24	5.3E-05
11:01:18 AM	1440	49	23	24	5.3E-05
11:01:19 AM	1440	49	23	86	5.3E-05
11:01:20 AM	1440	49	23	24	5.4E-05
11:01:21 AM	1440	49	23	24	5.4E-05
11:01:22 AM	1440	49	23	24	5.5E-05
11:01:23 AM	1440	49	23	24	5.5E-05
11:01:24 AM	1440	49	23	24	5.5E-05
11:01:25 AM	1440	49	23	24	5.5E-05
11:01:26 AM	1440	49	23	24	5.6E-05
11:01:27 AM	1440	49	23	24	5.5E-05
11:01:28 AM	1440	49	23	24	5.5E-05
11:01:29 AM	1440	49	23	24	5.6E-05
11:01:30 AM	1440	49	23	24	5.6E-05
11:01:31 AM	1440	49	23	24	5.7E-05
11:01:32 AM	1440	49	23	24	5.7E-05
11:01:33 AM	1440	49	23	24	5.8E-05
11:01:34 AM	1440	49	23	24	5.9E-05
11:01:35 AM	1440	49	23	24	6.0E-05
11:01:36 AM	1440	49	23	24	5.9E-05
11:01:37 AM	1440	49	23	24	5.9E-05
11:01:38 AM	1440	49	23	24	5.8E-05
11:01:39 AM	1440	49	23	24	5.7E-05
11:01:40 AM	1440	49	23	24	5.5E-05
11:01:41 AM	1440	49	23	24	5.3E-05
11:01:42 AM	1440	49	23	24	5.2E-05
11:01:43 AM	1440	49	23	24	5.1E-05
11:01:44 AM	1440	49	23	24	5.0E-05
11:01:45 AM	1440	49	23	24	5.0E-05
11:01:46 AM	1440	49	23	24	5.0E-05
11:01:47 AM	1440	49	23	24	5.0E-05
Averages ->	**1440**	**49**	**23**	**25**	**5.6E-05**
				Maximum ->	**6.2E-05**

Yarmouth Research and Technology, LLC

Valve Description: Cooper 4 inch Cl600 Globe Valve **Date:** 7/2/2010

Cycle Number: 375

Time	Pressure (psig)	Bonnet (deg. C)	Body Temp (deg. C)	Inside Temp (deg. C)	Leakage (Atm cc/sec)
5:17:01 PM	845	384	398	394	4.0E-05
5:17:02 PM	845	384	398	394	4.0E-05
5:17:03 PM	845	384	398	394	4.1E-05
5:17:04 PM	845	384	398	394	4.1E-05
5:17:05 PM	845	384	398	394	4.2E-05
5:17:06 PM	845	384	398	394	4.2E-05
5:17:07 PM	845	384	398	394	4.2E-05
5:17:08 PM	845	384	398	394	4.2E-05
5:17:09 PM	845	384	398	394	4.2E-05
5:17:10 PM	845	384	398	394	4.2E-05
5:17:11 PM	845	384	398	394	4.2E-05
5:17:12 PM	845	383	398	394	4.2E-05
5:17:13 PM	845	384	398	394	4.3E-05
5:17:14 PM	845	383	398	394	4.3E-05
5:17:15 PM	845	384	398	394	4.3E-05
5:17:16 PM	845	384	398	394	4.2E-05
5:17:17 PM	845	383	398	394	4.2E-05
5:17:18 PM	845	383	398	394	4.2E-05
5:17:19 PM	845	384	398	394	4.2E-05
5:17:20 PM	845	384	398	394	4.2E-05
5:17:21 PM	845	384	398	394	4.2E-05
5:17:22 PM	845	384	398	394	4.2E-05
5:17:23 PM	845	384	398	394	4.3E-05
5:17:24 PM	845	384	398	394	4.3E-05
5:17:25 PM	845	384	398	394	4.4E-05
5:17:26 PM	845	384	398	394	4.5E-05
5:17:27 PM	845	384	398	394	4.5E-05
5:17:28 PM	845	384	398	394	4.5E-05
5:17:29 PM	845	384	398	394	4.5E-05
5:17:30 PM	845	384	398	394	4.4E-05
5:17:31 PM	845	384	398	394	4.4E-05
5:17:32 PM	845	384	398	394	4.4E-05
5:17:33 PM	845	384	398	394	4.4E-05
5:17:34 PM	845	384	398	394	4.4E-05
5:17:35 PM	845	384	398	394	4.4E-05
5:17:36 PM	845	384	398	394	4.4E-05
5:17:37 PM	845	384	398	394	4.4E-05
5:17:38 PM	845	384	398	394	4.5E-05
5:17:39 PM	845	384	398	394	4.5E-05
5:17:40 PM	845	384	398	394	4.6E-05
5:17:41 PM	845	384	398	394	4.6E-05
5:17:42 PM	845	384	398	394	4.5E-05
5:17:43 PM	845	384	398	394	4.5E-05
5:17:44 PM	845	384	398	394	4.5E-05
5:17:45 PM	845	384	398	394	4.5E-05
5:17:46 PM	845	384	398	394	4.4E-05
5:17:47 PM	845	384	398	394	4.4E-05
5:17:48 PM	845	384	398	394	4.3E-05
5:17:49 PM	845	384	398	394	4.2E-05
5:17:50 PM	845	384	398	394	4.2E-05
5:17:51 PM	845	384	398	394	4.1E-05
5:17:52 PM	845	384	398	394	4.0E-05
5:17:53 PM	845	384	398	394	4.0E-05
5:17:54 PM	845	384	398	394	3.9E-05
5:17:55 PM	845	384	398	394	3.9E-05
5:17:56 PM	845	384	398	394	3.9E-05
5:17:57 PM	845	384	398	394	3.9E-05
5:17:58 PM	845	384	398	394	3.9E-05
5:17:59 PM	845	384	398	394	3.9E-05
5:18:00 PM	845	384	398	394	4.0E-05
Averages ->	**845**	**384**	**398**	**394**	**4.3E-05**
				Maximum ->	**4.6E-05**

Yarmouth Research and Technology, LLC

Valve Description: Cooper 4 inch Cl600 Globe Valve **Date:** 7/2/2010

Cycle Number: 375

Time	Pressure (psig)	Bonnet (deg. C)	Body Temp (deg. C)	Inside Temp (deg. C)	Leakage (Atm cc/sec)
5:18:18 PM	845	385	398	394	4.5E-05
5:18:19 PM	845	385	398	394	4.5E-05
5:18:20 PM	845	385	398	394	4.5E-05
5:18:21 PM	845	385	398	394	4.5E-05
5:18:22 PM	845	385	398	394	4.5E-05
5:18:23 PM	845	385	398	394	4.5E-05
5:18:24 PM	845	385	398	394	4.5E-05
5:18:25 PM	845	385	399	394	4.5E-05
5:18:26 PM	845	385	398	394	4.5E-05
5:18:27 PM	845	385	398	394	4.5E-05
5:18:28 PM	845	385	398	394	4.5E-05
5:18:29 PM	845	385	398	394	4.5E-05
5:18:30 PM	845	385	399	394	4.5E-05
5:18:31 PM	845	385	398	394	4.5E-05
5:18:32 PM	845	385	398	394	4.5E-05
5:18:33 PM	845	385	398	394	4.4E-05
5:18:34 PM	845	385	398	394	4.4E-05
5:18:35 PM	845	385	398	394	4.3E-05
5:18:36 PM	845	385	398	394	4.3E-05
5:18:37 PM	845	385	398	394	4.2E-05
5:18:38 PM	845	385	398	394	4.2E-05
5:18:39 PM	845	385	398	394	4.1E-05
5:18:40 PM	845	385	398	394	4.0E-05
5:18:41 PM	845	385	398	394	3.9E-05
5:18:42 PM	845	385	398	394	3.9E-05
5:18:43 PM	845	385	399	394	3.9E-05
5:18:44 PM	845	385	398	394	3.9E-05
5:18:45 PM	845	385	399	394	3.8E-05
5:18:46 PM	845	385	399	394	3.8E-05
5:18:47 PM	845	385	398	394	3.9E-05
5:18:48 PM	845	385	398	394	4.0E-05
5:18:49 PM	845	385	398	394	4.2E-05
5:18:50 PM	845	385	399	394	4.4E-05
5:18:51 PM	845	385	398	394	4.7E-05
5:18:52 PM	845	385	398	394	5.1E-05
5:18:53 PM	845	385	398	394	5.4E-05
5:18:54 PM	845	385	399	394	5.7E-05
5:18:55 PM	845	385	398	394	6.0E-05
5:18:56 PM	845	385	398	394	6.3E-05
5:18:57 PM	845	386	398	394	6.5E-05
5:18:58 PM	845	385	398	394	6.7E-05
5:18:59 PM	845	385	399	394	6.9E-05
5:19:00 PM	845	386	398	394	7.1E-05
5:19:01 PM	845	385	398	394	7.2E-05
5:19:02 PM	845	385	398	394	7.3E-05
5:19:03 PM	845	385	398	394	7.4E-05
5:19:04 PM	845	385	398	394	7.5E-05
5:19:05 PM	845	386	398	394	7.6E-05
5:19:06 PM	845	385	399	394	7.7E-05
5:19:07 PM	845	385	452	394	7.7E-05
5:19:08 PM	845	386	398	394	7.8E-05
5:19:09 PM	845	386	399	394	7.9E-05
5:19:10 PM	845	386	398	394	7.9E-05
5:19:11 PM	845	386	398	394	8.0E-05
5:19:12 PM	845	386	399	394	8.0E-05
5:19:13 PM	845	386	399	394	8.1E-05
5:19:14 PM	845	386	399	394	8.2E-05
5:19:15 PM	845	385	398	394	8.3E-05
5:19:16 PM	845	386	398	394	8.3E-05
5:19:17 PM	845	386	399	394	8.5E-05
Averages ->	**845**	**385**	**399**	**394**	**5.6E-05**
				Maximum ->	**8.5E-05**

Yarmouth Research and Technology, LLC

Valve Description: Cooper 4 inch Cl600 Globe Valve **Date:** 7/2/2010

Cycle Number: 500

Time	Pressure (psig)	Bonnet (deg. C)	Body Temp (deg. C)	Inside Temp (deg. C)	Leakage (Atm cc/sec)
6:33:02 PM	845	394	400	399	1.7E-04
6:33:03 PM	845	394	400	399	1.8E-04
6:33:05 PM	845	394	400	399	1.8E-04
6:33:06 PM	845	394	400	399	1.8E-04
6:33:07 PM	845	394	400	399	1.8E-04
6:33:08 PM	845	394	400	399	1.8E-04
6:33:09 PM	845	394	400	399	1.8E-04
6:33:10 PM	845	394	400	399	1.8E-04
6:33:11 PM	845	394	400	399	1.8E-04
6:33:12 PM	845	394	400	399	1.9E-04
6:33:13 PM	845	394	400	399	1.9E-04
6:33:14 PM	845	394	400	399	1.9E-04
6:33:15 PM	845	394	400	399	1.9E-04
6:33:16 PM	845	394	400	399	1.9E-04
6:33:17 PM	845	393	400	399	2.0E-04
6:33:18 PM	845	394	400	399	2.0E-04
6:33:19 PM	845	394	400	399	1.9E-04
6:33:20 PM	845	394	400	399	1.9E-04
6:33:21 PM	845	393	400	399	1.9E-04
6:33:22 PM	845	394	400	399	1.9E-04
6:33:23 PM	845	394	400	399	1.9E-04
6:33:24 PM	845	394	400	399	1.9E-04
6:33:25 PM	845	394	400	399	1.9E-04
6:33:26 PM	845	394	400	399	1.9E-04
6:33:27 PM	845	393	400	399	2.0E-04
6:33:28 PM	845	394	400	399	2.0E-04
6:33:29 PM	845	394	400	399	2.0E-04
6:33:30 PM	845	394	400	399	2.0E-04
6:33:31 PM	845	394	400	399	2.0E-04
6:33:32 PM	845	394	400	399	2.1E-04
6:33:33 PM	845	394	400	399	2.1E-04
6:33:34 PM	845	394	400	399	2.1E-04
6:33:35 PM	845	394	400	399	2.1E-04
6:33:36 PM	845	394	400	399	2.1E-04
6:33:37 PM	845	394	400	399	2.1E-04
6:33:38 PM	845	394	400	399	2.1E-04
6:33:39 PM	845	394	400	399	2.1E-04
6:33:40 PM	845	394	400	399	2.1E-04
6:33:41 PM	845	394	400	399	2.1E-04
6:33:42 PM	845	394	400	399	2.1E-04
6:33:43 PM	845	394	400	399	2.1E-04
6:33:44 PM	845	394	400	399	2.2E-04
6:33:45 PM	845	394	400	399	2.2E-04
6:33:46 PM	845	394	400	399	2.2E-04
6:33:47 PM	845	394	400	399	2.2E-04
6:33:48 PM	845	394	400	399	2.2E-04
6:33:49 PM	845	395	400	399	2.2E-04
6:33:50 PM	845	395	400	399	2.2E-04
6:33:51 PM	845	395	400	399	2.2E-04
6:33:52 PM	845	395	400	399	2.2E-04
6:33:53 PM	845	395	400	399	2.2E-04
6:33:54 PM	845	395	400	399	2.1E-04
6:33:55 PM	845	395	400	399	2.1E-04
6:33:56 PM	845	395	400	399	2.1E-04
6:33:57 PM	845	395	400	399	2.1E-04
6:33:58 PM	845	395	400	399	2.1E-04
6:33:59 PM	845	395	400	399	2.1E-04
6:34:00 PM	845	395	400	399	2.1E-04
6:34:01 PM	845	396	400	399	2.1E-04
6:34:02 PM	845	396	400	399	2.1E-04
Averages ->	**845**	**394**	**400**	**399**	**2.0E-04**
				Maximum ->	**2.2E-04**

Yarmouth Research and Technology, LLC

Valve Description: Cooper 4 inch Cl600 Globe Valve **Date:** 7/2/2010

Cycle Number: 500

Time	Pressure (psig)	Bonnet (deg. C)	Body Temp (deg. C)	Inside Temp (deg. C)	Leakage (Atm cc/sec)
6:47:09 PM	845	399	398	399	2.8E-04
6:47:10 PM	845	400	398	399	2.8E-04
6:47:11 PM	845	399	398	399	2.8E-04
6:47:12 PM	845	399	398	399	2.8E-04
6:47:13 PM	845	399	398	400	2.7E-04
6:47:14 PM	845	399	398	399	2.7E-04
6:47:15 PM	845	399	398	399	2.7E-04
6:47:16 PM	845	399	398	399	2.7E-04
6:47:17 PM	845	399	398	399	2.7E-04
6:47:18 PM	845	398	398	399	2.7E-04
6:47:19 PM	845	399	398	399	2.7E-04
6:47:20 PM	845	398	398	399	2.6E-04
6:47:21 PM	845	399	398	400	2.6E-04
6:47:22 PM	845	398	398	399	2.6E-04
6:47:23 PM	845	398	398	399	2.6E-04
6:47:24 PM	845	398	398	399	2.6E-04
6:47:25 PM	845	398	398	399	2.5E-04
6:47:26 PM	845	398	398	399	2.5E-04
6:47:27 PM	845	397	398	399	2.5E-04
6:47:28 PM	845	397	398	400	2.5E-04
6:47:29 PM	845	397	398	399	2.5E-04
6:47:30 PM	845	397	398	399	2.5E-04
6:47:31 PM	845	397	398	399	2.5E-04
6:47:32 PM	845	397	398	399	2.5E-04
6:47:33 PM	845	397	398	399	2.5E-04
6:47:34 PM	845	396	398	399	2.5E-04
6:47:35 PM	845	396	398	399	2.5E-04
6:47:36 PM	845	396	398	399	2.6E-04
6:47:37 PM	845	396	398	400	2.6E-04
6:47:38 PM	845	396	398	399	2.6E-04
6:47:39 PM	845	395	398	399	2.7E-04
6:47:40 PM	845	395	398	399	2.8E-04
6:47:41 PM	845	395	398	400	2.8E-04
6:47:42 PM	845	395	398	399	2.9E-04
6:47:43 PM	845	395	398	399	2.9E-04
6:47:44 PM	845	394	398	399	2.9E-04
6:47:45 PM	845	394	398	399	3.0E-04
6:47:46 PM	845	394	398	399	3.0E-04
6:47:47 PM	845	394	398	399	3.0E-04
6:47:48 PM	845	394	398	399	3.0E-04
6:47:49 PM	845	394	398	399	2.9E-04
6:47:50 PM	845	393	398	399	2.9E-04
6:47:51 PM	845	393	398	399	2.9E-04
6:47:52 PM	845	393	398	399	2.9E-04
6:47:53 PM	845	393	398	399	2.8E-04
6:47:54 PM	845	393	398	399	2.8E-04
6:47:55 PM	845	392	398	399	2.8E-04
6:47:56 PM	845	392	398	399	2.7E-04
6:47:57 PM	845	392	398	399	2.7E-04
6:47:58 PM	845	392	398	399	2.7E-04
6:47:59 PM	845	391	398	399	2.7E-04
6:48:00 PM	845	392	398	399	2.7E-04
6:48:01 PM	845	391	398	399	2.7E-04
6:48:02 PM	845	391	398	399	2.6E-04
6:48:03 PM	845	391	398	399	2.6E-04
6:48:04 PM	845	391	398	399	2.7E-04
6:48:05 PM	845	391	398	399	2.7E-04
6:48:06 PM	845	390	398	399	2.7E-04
6:48:07 PM	845	390	398	399	2.8E-04
6:48:08 PM	845	390	398	399	2.8E-04
Averages ->	**845**	**395**	**398**	**399**	**2.7E-04**
				Maximum ->	**3.0E-04**

Yarmouth Research and Technology, LLC

Valve Description: Cooper 4 inch Cl600 Globe Valve **Date:** 7/3/2010

Cycle Number: 500

Time	Pressure (psig)	Bonnet (deg. C)	Body Temp (deg. C)	Inside Temp (deg. C)	Leakage (Atm cc/sec)
8:46:05 AM	1440	32	36	37	1.7E-03
8:46:06 AM	1440	32	36	37	1.7E-03
8:46:07 AM	1440	32	36	37	1.8E-03
8:46:08 AM	1440	32	36	37	1.8E-03
8:46:09 AM	1440	32	36	37	1.8E-03
8:46:10 AM	1440	32	36	37	1.8E-03
8:46:11 AM	1440	32	36	37	1.7E-03
8:46:12 AM	1440	32	36	37	1.7E-03
8:46:13 AM	1440	32	36	37	1.7E-03
8:46:14 AM	1440	32	36	37	1.7E-03
8:46:15 AM	1440	32	36	37	1.7E-03
8:46:16 AM	1440	31	36	37	1.7E-03
8:46:17 AM	1440	32	36	37	1.7E-03
8:46:18 AM	1440	32	36	37	1.7E-03
8:46:19 AM	1440	32	36	37	1.7E-03
8:46:20 AM	1440	32	36	37	1.7E-03
8:46:21 AM	1440	31	36	37	1.8E-03
8:46:22 AM	1440	31	36	37	1.8E-03
8:46:23 AM	1440	32	36	37	1.8E-03
8:46:24 AM	1440	32	36	37	1.8E-03
8:46:25 AM	1440	32	36	37	1.8E-03
8:46:26 AM	1440	32	36	37	1.8E-03
8:46:27 AM	1440	32	36	37	1.8E-03
8:46:28 AM	1440	32	36	37	1.8E-03
8:46:29 AM	1440	32	36	37	1.9E-03
8:46:30 AM	1440	32	36	37	1.9E-03
8:46:31 AM	1440	32	36	37	1.9E-03
8:46:32 AM	1440	32	36	37	1.9E-03
8:46:33 AM	1440	32	36	37	1.9E-03
8:46:34 AM	1440	31	36	37	1.9E-03
8:46:35 AM	1440	31	36	37	1.9E-03
8:46:36 AM	1440	31	36	37	1.9E-03
8:46:37 AM	1440	32	36	37	1.9E-03
8:46:38 AM	1440	31	36	37	1.9E-03
8:46:39 AM	1440	32	36	37	1.9E-03
8:46:40 AM	1440	32	36	37	1.9E-03
8:46:41 AM	1440	31	36	37	1.9E-03
8:46:42 AM	1440	31	36	37	1.9E-03
8:46:43 AM	1440	31	36	37	1.8E-03
8:46:44 AM	1440	31	36	37	1.8E-03
8:46:45 AM	1440	32	36	37	1.8E-03
8:46:46 AM	1440	32	36	37	1.8E-03
8:46:47 AM	1440	31	36	37	1.8E-03
8:46:48 AM	1440	31	36	37	1.8E-03
8:46:49 AM	1440	32	36	37	1.7E-03
8:46:50 AM	1440	31	36	37	1.7E-03
8:46:51 AM	1440	32	36	37	1.7E-03
8:46:52 AM	1440	32	36	37	1.7E-03
8:46:53 AM	1440	32	36	37	1.7E-03
8:46:54 AM	1440	32	36	37	1.7E-03
8:46:55 AM	1440	31	36	37	1.7E-03
8:46:56 AM	1440	32	36	37	1.8E-03
8:46:57 AM	1440	32	36	37	1.8E-03
8:46:58 AM	1440	31	36	37	1.8E-03
8:46:59 AM	1440	31	36	37	1.8E-03
8:47:00 AM	1440	32	36	37	1.8E-03
8:47:01 AM	1440	32	36	37	1.8E-03
8:47:02 AM	1440	32	36	37	1.9E-03
8:47:03 AM	1440	32	36	37	1.9E-03
8:47:04 AM	1440	32	36	37	1.9E-03
Averages ->	**1440**	**32**	**36**	**37**	**1.8E-03**
				Maximum ->	**1.9E-03**

Yarmouth Research and Technology, LLC

Valve Description: Cooper 4 inch Cl600 Globe Valve **Date:** 7/3/2010

Cycle Number: 500

Time	Pressure (psig)	Bonnet (deg. C)	Body Temp (deg. C)	Inside Temp (deg. C)	Leakage (Atm cc/sec)
8:47:34 AM	1440	31	36	37	1.8E-03
8:47:35 AM	1440	31	36	37	1.9E-03
8:47:36 AM	1440	31	36	36	1.9E-03
8:47:37 AM	1440	31	36	37	1.9E-03
8:47:38 AM	1440	32	36	37	1.9E-03
8:47:39 AM	1440	32	36	37	1.9E-03
8:47:40 AM	1440	31	36	37	1.9E-03
8:47:41 AM	1440	32	36	37	2.0E-03
8:47:42 AM	1440	32	36	37	2.0E-03
8:47:43 AM	1440	31	36	37	2.0E-03
8:47:44 AM	1440	32	36	37	2.0E-03
8:47:45 AM	1440	32	36	37	2.0E-03
8:47:46 AM	1440	31	36	37	2.0E-03
8:47:47 AM	1440	32	36	37	2.0E-03
8:47:48 AM	1440	32	36	37	2.0E-03
8:47:49 AM	1440	32	36	37	2.0E-03
8:47:50 AM	1440	32	36	37	2.0E-03
8:47:51 AM	1440	32	36	37	1.9E-03
8:47:52 AM	1440	31	36	37	1.9E-03
8:47:53 AM	1440	32	36	37	1.9E-03
8:47:54 AM	1440	32	36	37	1.9E-03
8:47:55 AM	1440	32	36	37	1.9E-03
8:47:56 AM	1440	32	36	37	1.9E-03
8:47:57 AM	1440	31	36	37	1.9E-03
8:47:58 AM	1440	32	36	37	1.9E-03
8:47:59 AM	1440	31	36	37	1.9E-03
8:48:00 AM	1440	32	36	37	1.8E-03
8:48:01 AM	1440	32	36	37	1.8E-03
8:48:02 AM	1440	31	36	37	1.8E-03
8:48:03 AM	1440	32	36	37	1.8E-03
8:48:04 AM	1440	32	36	37	1.8E-03
8:48:05 AM	1440	31	36	37	1.7E-03
8:48:06 AM	1440	32	36	37	1.7E-03
8:48:07 AM	1440	32	36	37	1.6E-03
8:48:08 AM	1440	32	36	37	1.6E-03
8:48:09 AM	1440	32	36	37	1.6E-03
8:48:10 AM	1440	31	36	37	1.6E-03
8:48:11 AM	1440	32	36	37	1.5E-03
8:48:12 AM	1440	32	36	37	1.5E-03
8:48:13 AM	1440	31	36	37	1.5E-03
8:48:14 AM	1440	32	36	37	1.4E-03
8:48:15 AM	1440	32	36	37	1.4E-03
8:48:16 AM	1440	31	36	37	1.4E-03
8:48:17 AM	1440	31	36	37	1.4E-03
8:48:18 AM	1440	32	36	37	1.3E-03
8:48:19 AM	1440	32	36	37	1.3E-03
8:48:20 AM	1440	32	36	37	1.3E-03
8:48:21 AM	1440	32	36	37	1.3E-03
8:48:22 AM	1440	31	36	37	1.2E-03
8:48:23 AM	1440	32	36	37	1.2E-03
8:48:24 AM	1440	32	36	37	1.2E-03
8:48:25 AM	1440	32	36	37	1.2E-03
8:48:26 AM	1440	31	36	37	1.3E-03
8:48:27 AM	1440	32	36	37	1.3E-03
8:48:28 AM	1440	32	36	37	1.3E-03
8:48:29 AM	1440	31	36	36	1.4E-03
8:48:30 AM	1440	32	36	36	1.4E-03
8:48:31 AM	1440	32	36	37	1.4E-03
8:48:32 AM	1440	32	36	37	1.5E-03
8:48:33 AM	1440	31	36	37	1.5E-03
Averages ->	**1440**	**32**	**36**	**37**	**1.7E-03**
				Maximum ->	**2.0E-03**

Yarmouth Research and Technology, LLC

Valve Description: Cooper 4 inch Cl600 Globe Valve **Date:** 7/1/2010

Cycle Number: 0

Bonnet Gasket

Time	Pressure (psig)	Bonnet (deg. C)	Body Temp (deg. C)	Inside Temp (deg. C)	Leakage (PPMv)
9:55:38 AM	1440	21	23	21	0.8
9:55:39 AM	1440	21	23	21	0.8
9:55:40 AM	1440	21	23	21	0.8
9:55:41 AM	1440	21	23	21	0.8
9:55:42 AM	1440	21	23	21	0.8
9:55:43 AM	1440	21	23	21	0.8
9:55:44 AM	1440	21	23	21	0.8
9:55:45 AM	1440	21	23	21	0.8
9:55:46 AM	1440	21	23	21	0.8
9:55:47 AM	1440	21	23	21	0.8
9:55:48 AM	1440	21	23	21	0.9
9:55:49 AM	1440	21	23	21	0.9
9:55:50 AM	1440	21	23	21	0.9
9:55:51 AM	1440	21	23	21	0.9
9:55:52 AM	1440	21	23	21	0.9
9:55:53 AM	1440	21	23	21	0.9
9:55:54 AM	1440	21	23	21	0.9
9:55:55 AM	1440	21	23	21	0.9
9:55:56 AM	1440	21	23	21	0.9
9:55:57 AM	1440	21	23	21	0.9
9:55:58 AM	1440	21	23	21	0.9
9:55:59 AM	1440	21	23	21	0.9
9:56:00 AM	1440	21	23	21	0.9
9:56:01 AM	1440	21	23	21	0.9
9:56:02 AM	1440	21	23	21	0.9
9:56:03 AM	1440	21	23	21	0.9
9:56:04 AM	1440	21	23	21	0.9
9:56:05 AM	1440	21	23	21	0.9
9:56:06 AM	1440	21	23	21	0.9
9:56:07 AM	1440	21	23	21	0.9
9:56:08 AM	1440	21	23	21	0.9
9:56:09 AM	1440	21	23	21	0.9
9:56:10 AM	1440	21	23	21	0.9
9:56:11 AM	1440	21	23	21	0.9
9:56:12 AM	1440	21	23	21	0.9
9:56:13 AM	1440	21	23	21	0.9
9:56:14 AM	1440	21	23	21	0.9
9:56:15 AM	1440	21	23	21	0.9
9:56:16 AM	1440	21	23	21	0.9
9:56:17 AM	1440	21	23	21	0.9
9:56:18 AM	1440	21	23	21	0.9
9:56:19 AM	1440	21	23	21	0.9
9:56:20 AM	1440	21	23	21	0.9
9:56:21 AM	1440	21	23	21	0.9
9:56:22 AM	1440	21	23	21	0.9
9:56:23 AM	1440	21	23	21	0.9
9:56:24 AM	1440	21	23	21	0.9
9:56:25 AM	1440	21	23	21	0.9
9:56:26 AM	1440	21	23	21	0.9
9:56:27 AM	1440	21	23	21	0.9
9:56:28 AM	1440	21	23	21	0.9
9:56:29 AM	1440	21	23	21	0.9
9:56:30 AM	1440	21	23	21	0.9
9:56:31 AM	1440	21	23	21	0.9
9:56:32 AM	1440	21	23	22	0.9
9:56:33 AM	1440	21	23	21	0.9
9:56:34 AM	1440	21	23	21	0.9
9:56:35 AM	1440	21	23	21	0.9
9:56:36 AM	1440	21	23	21	0.9
9:56:37 AM	1440	21	23	21	0.9
Averages ->	**1440**	**21.3**	**22.8**	**21.4**	**0.9**
				Maximum ->	**0.9**

Yarmouth Research and Technology, LLC

Valve Description: Cooper 4 inch Cl600 Globe Valve **Date:** 7/3/2010

Cycle Number: 500

Bonnet Gasket

Time	Pressure (psig)	Bonnet (deg. C)	Body Temp (deg. C)	Inside Temp (deg. C)	Leakage (PPMv)
8:50:37 AM	1440	31	36	36	1.3
8:50:38 AM	1440	31	36	36	1.3
8:50:39 AM	1440	31	35	36	1.3
8:50:40 AM	1440	31	36	36	1.3
8:50:41 AM	1440	31	36	36	1.3
8:50:42 AM	1440	31	35	36	1.3
8:50:43 AM	1440	31	36	36	1.3
8:50:44 AM	1440	31	36	36	1.3
8:50:45 AM	1440	31	36	36	1.3
8:50:46 AM	1440	31	36	36	1.3
8:50:47 AM	1440	31	36	36	1.3
8:50:48 AM	1440	31	35	36	1.4
8:50:49 AM	1440	31	36	36	1.4
8:50:50 AM	1440	31	35	36	1.4
8:50:51 AM	1440	31	36	36	1.4
8:50:52 AM	1440	31	35	36	1.4
8:50:53 AM	1440	31	36	36	1.4
8:50:54 AM	1440	31	36	36	1.3
8:50:55 AM	1440	31	36	36	1.3
8:50:56 AM	1440	31	36	36	1.3
8:50:57 AM	1440	32	36	36	1.3
8:50:58 AM	1440	31	36	36	1.3
8:50:59 AM	1440	31	36	36	1.2
8:51:00 AM	1440	31	36	36	1.2
8:51:01 AM	1440	31	35	36	1.2
8:51:02 AM	1440	31	35	36	1.2
8:51:03 AM	1440	31	35	36	1.2
8:51:04 AM	1440	31	36	36	1.2
8:51:05 AM	1440	31	36	36	1.2
8:51:06 AM	1440	31	36	36	1.2
8:51:07 AM	1440	31	36	36	1.2
8:51:08 AM	1440	31	35	36	1.2
8:51:09 AM	1440	31	36	36	1.2
8:51:10 AM	1440	31	36	36	1.2
8:51:11 AM	1440	31	36	36	1.2
8:51:12 AM	1440	31	35	36	1.2
8:51:13 AM	1440	31	35	36	1.3
8:51:14 AM	1440	31	36	36	1.3
8:51:15 AM	1440	31	35	36	1.3
8:51:16 AM	1440	31	35	36	1.3
8:51:17 AM	1440	31	36	36	1.3
8:51:18 AM	1440	31	36	36	1.3
8:51:19 AM	1440	31	36	36	1.3
8:51:20 AM	1440	31	36	36	1.3
8:51:21 AM	1440	31	35	36	1.3
8:51:22 AM	1440	31	35	36	1.3
8:51:23 AM	1440	31	35	36	1.2
8:51:24 AM	1440	31	36	36	1.2
8:51:25 AM	1440	31	35	36	1.2
8:51:26 AM	1440	31	35	36	1.2
8:51:27 AM	1440	32	36	36	1.2
8:51:28 AM	1440	31	35	36	1.2
8:51:29 AM	1440	31	35	36	1.2
8:51:30 AM	1440	31	36	36	1.2
8:51:31 AM	1440	31	36	36	1.2
8:51:32 AM	1440	31	35	36	1.2
8:51:33 AM	1440	31	36	36	1.3
8:51:34 AM	1440	31	35	36	1.3
8:51:35 AM	1440	31	36	36	1.3
8:51:36 AM	1440	31	35	36	1.3
Averages ->	**1440**	**31.4**	**35.5**	**36.2**	**1.3**
				Maximum ->	**1.4**

Yarmouth Research and Technology, LLC

Valve Description: Cooper 4 inch Cl600 Globe Valve

Cycle Number: 250 **Date:** 7/2/2010

Leakage Greater than Allowable

Time	Pressure (psig)	Bonnet Temp (deg. C)	Leakage (mbar -l / sec)
8:59:14 AM	85.5	24.7	5.7E-03
8:59:15 AM	85.7	24.6	5.7E-03
8:59:16 AM	85.7	24.7	5.7E-03
8:59:17 AM	85.5	24.7	5.7E-03
8:59:18 AM	85.7	24.5	5.7E-03
8:59:19 AM	85.7	24.6	5.7E-03
8:59:20 AM	85.5	24.6	5.7E-03
8:59:21 AM	85.5	24.6	5.7E-03
8:59:22 AM	85.7	24.6	5.7E-03
8:59:23 AM	85.3	24.6	5.7E-03
8:59:24 AM	85.5	24.5	5.7E-03
8:59:25 AM	85.3	24.6	5.7E-03
8:59:26 AM	85.6	24.6	5.7E-03
8:59:27 AM	85.3	24.6	5.7E-03
8:59:28 AM	85.3	24.7	5.7E-03
8:59:29 AM	85.4	24.6	5.7E-03
8:59:30 AM	85.5	24.6	5.7E-03
8:59:31 AM	85.4	24.7	5.7E-03
8:59:32 AM	85.5	24.5	5.7E-03
8:59:33 AM	85.3	24.6	5.7E-03
8:59:34 AM	85.5	24.5	5.7E-03
8:59:35 AM	85.5	24.6	5.7E-03
8:59:36 AM	85.3	24.7	5.6E-03
8:59:37 AM	85.5	24.6	5.7E-03
8:59:38 AM	85.1	24.6	5.6E-03
8:59:39 AM	85.3	24.6	5.6E-03
8:59:40 AM	85.5	24.5	5.6E-03
8:59:41 AM	85.2	24.6	5.6E-03
8:59:42 AM	85.4	24.6	5.6E-03
8:59:43 AM	85.3	24.5	5.6E-03
8:59:44 AM	85.3	24.7	5.6E-03
8:59:45 AM	85.5	24.5	5.6E-03
8:59:46 AM	85.3	24.5	5.6E-03
8:59:47 AM	85.4	24.5	5.6E-03
8:59:48 AM	85.3	24.6	5.5E-03
8:59:49 AM	85.2	24.6	5.5E-03
8:59:50 AM	85.5	24.8	5.5E-03
8:59:51 AM	85.5	24.6	5.5E-03
8:59:52 AM	85.4	24.7	5.5E-03
8:59:53 AM	85.2	24.7	5.4E-03
8:59:54 AM	85.3	24.6	5.4E-03
8:59:55 AM	85.4	24.6	5.3E-03
8:59:56 AM	85.5	24.5	5.3E-03
8:59:57 AM	85.4	24.7	5.3E-03
8:59:58 AM	85.3	24.5	5.3E-03
8:59:59 AM	85.3	24.6	5.3E-03
9:00:00 AM	85.2	24.6	5.3E-03
9:00:01 AM	85.3	24.7	5.3E-03
9:00:02 AM	85.2	24.5	5.3E-03
9:00:03 AM	85.2	24.6	5.3E-03
9:00:04 AM	84.8	24.5	5.3E-03
9:00:05 AM	85.3	24.6	5.3E-03
9:00:06 AM	85.4	24.6	5.3E-03
9:00:07 AM	85.2	24.6	5.3E-03
9:00:08 AM	85.2	24.5	5.3E-03
9:00:09 AM	85.3	24.5	5.3E-03
9:00:10 AM	85.2	24.6	5.2E-03
9:00:11 AM	85.3	24.5	5.3E-03
9:00:12 AM	85.2	24.7	5.2E-03
9:00:13 AM	85.3	24.6	5.2E-03
Averages ->	**85.4**	**24.6**	**5.5E-03**
			5.7E-03

ISO 15848-1
Helium Fugitive Emission Test Report

Performed for

Newmans

www.newmansvalves.com

3" Class 150 Cooper Gate Valve

Item #: CU31R66CEAA

Project Number: 210107
Test Date: June 17, 2010

Performed by

YARMOUTH RESEARCH AND TECHNOLOGY, LLC

434 Walnut Hill Road
North Yarmouth, ME 04097 USA
(207) 829-5359
info@yarmouthresearch.com
www.yarmouthresearch.com

Yarmouth Research and Technology, LLC

Fugitive Emission Test Data Sheet

Customer: Newmans Inc. **Date:** 6/17/2010
Contact: Jim Pease **Project #:** 210107
Product Description: 3 inch Class 150 Cooper Gate Valve
CU31R66CEAA 3IN 150 GT RF CF8M Body Heat #: CD0925-CF8M
Sample Supplied by: Customer
Stem Diameter: 22 mm
Packing Nut Torque: 25 ft-lb

Test Conditions

Test Standard: ISO 15848-1 **Test Stand:** Yarmouth Stand 1
Tightness Class: CH 3.85e-3 atm cc/sec **Test Media:** 99% Helium
Endurance Class: C01 500 Mechanical Cycles
Temperature Class: 400C 2 Thermal Cycles
Pressure Class: ANSI Class 150 275 psig @ Ambient, 95 psig @ 400C
Testing Method: Purge/Sniff for stem seals, sniffing (enclosed area) for bonnet seal
Mounting Position: Stem and Bore Horizontal
Max. Allowable Bonnet Gasket Leakage: 50 PPMv by sniffing method
Leakage Device: Pfeiffer SmartTest HLT560
Cycling Rate: 1 cycle per 60 seconds, 43 rpm handwheel speed

Test Data Summary - Stem Seal

		Stem Seal Leakage Readings - atm cc/sec				*Packing*	*Opening*	*Closing*
Cycle	*Nom.Temp*	*Static*		*Dynamic*		*Retorque*	*Torque*	*Torque*
Number	*(C)*	*Avg.*	*Max.*	*Avg.*	*Max.*	*See Notes*	*(ft-lb)*	*(ft-lb)*
0	20	5.3E-06	5.6E-06	4.9E-06	6.2E-06		5	10
125	20	2.8E-06	2.8E-06	3.4E-06	4.1E-06		5	10
125	400	5.9E-06	5.9E-06	5.7E-06	6.0E-06		5	10
250	400	5.0E-06	5.1E-06	5.0E-06	5.7E-06		5	10
250	20	4.7E-04	4.8E-04	4.2E-04	4.9E-04		5	10
375	20	1.1E-04	1.4E-04	9.8E-05	1.5E-04		5	10
375	400	8.0E-06	8.1E-06	8.0E-06	8.2E-06		5	10
500	400	6.4E-06	6.7E-06	5.3E-06	5.6E-06		5	10
500	20	1.7E-03	1.9E-03	1.9E-03	2.0E-03	1	5	10
Maximum Leakage:		**1.7E-03**	**1.9E-03**	**1.9E-03**	**2.0E-03**		**5**	**10**
Maximum Allowable:		**3.8E-03**	**3.8E-03**					

Yarmouth Research and Technology, LLC

Test Data Summary - Bonnet Seal

Cycle Number	*Nom.Temp (C)*	*Leakage - PPMv*	
		Avg.	*Max.*
0	20	0.8	0.8
500	20	2.5	2.7
Maximum Leakage:		**2.5**	**2.7**
Maximum Allowable:		**50**	**50**

Packing Retorque Notes:

Adjustment Number	*Cycle Number*	*Nom.Temp (C)*	*Static Leakage Readings before Tightening*		*Before Adjustment Nut Torque (ft-lb)*	*After Adjustment Nut Torque (ft-lb)*
			Avg.	*Max.*		
1	500	20	4.0E-03	4.3E-03	8	25
	Maximum Leakage:		**4.0E-03**	**4.3E-03**		

Results

Valve passed the requirments of the test standard with 1 packing nut adjustment.

Normal stem wear on stem was observed after test.

Witnessed:

President, Yarmouth Research

STATE OF MAINE
MATTHEW J WASIELEWSKI
No. 7437
LICENSED PROFESSIONAL ENGINEER

Yarmouth Research and Technology

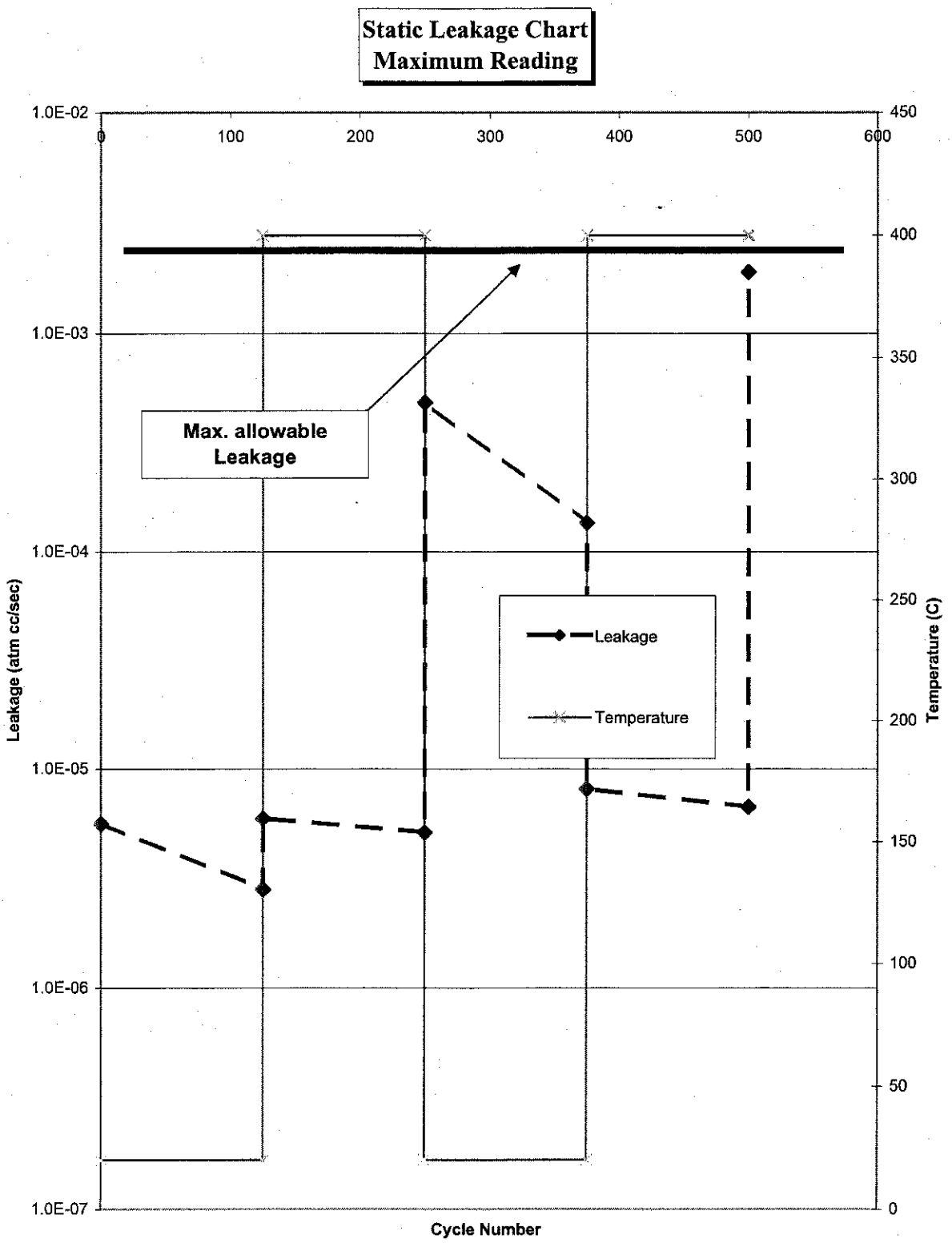

92 East Elm Street, Yarmouth, Maine, 04096 USA
www.yarmouthresearch.com

Yarmouth Research and Technology, LLC

Valve Description: 3 in Class 150 Cooper Gate Valve **Date:** 6/17/2010

Cycle Number: 125

Time	Pressure (psig)	Bonnet (deg. C)	Body Temp (deg. C)	Inside Temp (deg. C)	Leakage (Atm cc/sec)
1:15:25 PM	275	34	23	25	2.7E-06
1:15:26 PM	275	34	23	25	2.7E-06
1:15:27 PM	275	34	23	25	2.7E-06
1:15:28 PM	275	34	23	25	2.8E-06
1:15:29 PM	275	34	23	25	2.7E-06
1:15:30 PM	275	34	23	25	2.8E-06
1:15:31 PM	275	34	23	25	2.7E-06
1:15:32 PM	275	34	23	24	2.8E-06
1:15:33 PM	275	34	23	25	2.7E-06
1:15:34 PM	275	34	23	25	2.7E-06
1:15:35 PM	275	34	23	25	2.7E-06
1:15:36 PM	275	34	23	25	2.7E-06
1:15:37 PM	275	34	23	25	2.8E-06
1:15:38 PM	275	34	23	25	2.7E-06
1:15:39 PM	275	34	23	25	2.8E-06
1:15:40 PM	275	34	23	25	2.8E-06
1:15:41 PM	275	34	23	25	2.7E-06
1:15:42 PM	275	34	23	25	2.7E-06
1:15:43 PM	275	34	23	25	2.8E-06
1:15:44 PM	275	34	23	24	2.7E-06
1:15:45 PM	275	34	23	24	2.8E-06
1:15:46 PM	275	34	23	25	2.7E-06
1:15:47 PM	275	34	23	25	2.7E-06
1:15:48 PM	275	34	23	25	2.7E-06
1:15:49 PM	275	34	23	25	2.7E-06
1:15:50 PM	275	34	23	24	2.7E-06
1:15:51 PM	275	34	23	25	2.7E-06
1:15:52 PM	275	34	23	25	2.7E-06
1:15:53 PM	275	34	23	25	2.8E-06
1:15:54 PM	275	34	23	25	2.7E-06
1:15:55 PM	275	34	23	25	2.7E-06
1:15:56 PM	275	34	23	25	2.8E-06
1:15:57 PM	275	34	23	25	2.7E-06
1:15:58 PM	275	34	23	25	2.8E-06
1:15:59 PM	275	33	23	25	2.8E-06
1:16:00 PM	275	34	23	25	2.8E-06
1:16:01 PM	275	34	23	25	2.8E-06
1:16:02 PM	275	34	24	24	2.7E-06
1:16:03 PM	275	34	23	25	2.8E-06
1:16:04 PM	275	34	23	24	2.8E-06
1:16:05 PM	275	34	23	25	2.8E-06
1:16:06 PM	275	33	23	24	2.8E-06
1:16:07 PM	275	34	23	25	2.8E-06
1:16:08 PM	275	34	23	25	2.8E-06
1:16:09 PM	275	34	23	24	2.8E-06
1:16:10 PM	275	34	23	24	2.8E-06
1:16:11 PM	275	34	24	25	2.8E-06
1:16:12 PM	275	34	23	25	2.8E-06
1:16:13 PM	275	33	23	25	2.8E-06
1:16:14 PM	275	34	23	25	2.8E-06
1:16:15 PM	275	34	23	25	2.8E-06
1:16:16 PM	275	34	23	25	2.8E-06
1:16:17 PM	275	33	23	24	2.8E-06
1:16:18 PM	275	34	23	25	2.8E-06
1:16:19 PM	275	34	23	25	2.8E-06
1:16:20 PM	275	34	23	25	2.8E-06
1:16:21 PM	275	34	23	25	2.8E-06
1:16:22 PM	275	33	23	24	2.8E-06
1:16:23 PM	275	33	23	24	2.8E-06
1:16:24 PM	275	33	23	25	2.8E-06
Averages ->	**275**	**34**	**23**	**25**	**2.8E-06**
				Maximum ->	**2.8E-06**

Yarmouth Research and Technology, LLC

Valve Description: 3 in Class 150 Cooper Gate Valve **Date:** 6/17/2010

Cycle Number: 0

Time	Pressure (psig)	Bonnet (deg. C)	Body Temp (deg. C)	Inside Temp (deg. C)	Leakage (Atm cc/sec)
10:33:23 AM	275	22	22	22	5.1E-06
10:33:24 AM	275	22	22	22	5.1E-06
10:33:25 AM	275	22	22	22	5.1E-06
10:33:26 AM	275	22	22	22	5.2E-06
10:33:27 AM	275	22	22	22	5.1E-06
10:33:28 AM	275	22	22	22	5.2E-06
10:33:29 AM	275	22	22	22	5.1E-06
10:33:30 AM	275	22	22	22	5.1E-06
10:33:31 AM	275	22	22	22	5.2E-06
10:33:32 AM	275	22	22	22	5.2E-06
10:33:33 AM	275	22	22	22	5.1E-06
10:33:34 AM	275	22	22	22	5.1E-06
10:33:35 AM	275	22	22	22	5.1E-06
10:33:36 AM	275	22	22	22	5.1E-06
10:33:37 AM	275	22	22	22	5.1E-06
10:33:38 AM	275	22	22	22	5.0E-06
10:33:39 AM	275	23	22	22	5.0E-06
10:33:40 AM	275	22	22	22	5.0E-06
10:33:41 AM	275	22	22	22	5.0E-06
10:33:42 AM	275	22	22	22	4.9E-06
10:33:43 AM	275	22	22	22	4.9E-06
10:33:44 AM	275	22	22	22	4.9E-06
10:33:45 AM	275	23	22	22	4.9E-06
10:33:46 AM	275	23	22	22	4.9E-06
10:33:47 AM	275	22	22	22	4.9E-06
10:33:48 AM	275	22	22	22	4.9E-06
10:33:49 AM	275	22	22	22	4.9E-06
10:33:50 AM	275	22	22	22	4.9E-06
10:33:51 AM	275	22	22	22	4.8E-06
10:33:52 AM	275	22	22	22	4.8E-06
10:33:53 AM	275	22	22	22	4.7E-06
10:33:54 AM	275	22	22	22	4.7E-06
10:33:55 AM	275	22	22	22	4.6E-06
10:33:56 AM	275	23	22	22	4.5E-06
10:33:57 AM	275	23	22	22	4.5E-06
10:33:58 AM	275	23	22	22	4.4E-06
10:33:59 AM	275	23	22	22	4.3E-06
10:34:00 AM	275	22	22	22	4.3E-06
10:34:01 AM	275	23	22	22	4.2E-06
10:34:02 AM	275	22	22	22	4.2E-06
10:34:03 AM	275	22	22	22	4.2E-06
10:34:04 AM	275	23	22	22	4.2E-06
10:34:05 AM	275	23	22	22	4.3E-06
10:34:06 AM	275	23	22	22	4.3E-06
10:34:07 AM	275	23	22	22	4.4E-06
10:34:08 AM	275	23	22	22	4.5E-06
10:34:09 AM	275	23	22	22	4.6E-06
10:34:10 AM	275	23	22	22	4.8E-06
10:34:11 AM	275	23	22	22	4.9E-06
10:34:12 AM	275	23	22	22	5.0E-06
10:34:13 AM	275	23	22	22	5.1E-06
10:34:14 AM	275	23	22	22	5.2E-06
10:34:15 AM	275	23	22	22	5.4E-06
10:34:16 AM	275	23	22	22	5.5E-06
10:34:17 AM	275	23	22	22	5.6E-06
10:34:18 AM	275	23	22	22	5.7E-06
10:34:19 AM	275	23	22	22	5.8E-06
10:34:20 AM	275	23	22	22	6.0E-06
10:34:21 AM	275	23	22	22	6.1E-06
10:34:22 AM	275	23	22	22	6.2E-06
Averages ->	**275**	**22**	**22**	**22**	**4.9E-06**
				Maximum ->	**6.2E-06**

Yarmouth Research and Technology, LLC

Valve Description: 3 in Class 150 Cooper Gate Valve **Date:** 6/17/2010

Cycle Number: 0

Time	Pressure (psig)	Bonnet (deg. C)	Body Temp (deg. C)	Inside Temp (deg. C)	Leakage (Atm cc/sec)
10:31:29 AM	275	22	22	22	5.0E-06
10:31:30 AM	275	22	22	22	5.0E-06
10:31:31 AM	275	22	22	22	5.0E-06
10:31:32 AM	275	22	22	22	4.9E-06
10:31:33 AM	275	22	22	22	4.9E-06
10:31:34 AM	275	22	22	22	5.0E-06
10:31:35 AM	275	22	22	22	5.0E-06
10:31:36 AM	275	22	22	22	5.0E-06
10:31:37 AM	275	22	22	22	4.9E-06
10:31:38 AM	275	22	22	22	4.9E-06
10:31:39 AM	275	22	22	22	5.0E-06
10:31:40 AM	275	22	22	22	5.0E-06
10:31:41 AM	275	22	22	22	5.0E-06
10:31:42 AM	275	22	22	22	5.0E-06
10:31:43 AM	275	22	22	22	5.0E-06
10:31:44 AM	275	22	22	22	5.0E-06
10:31:45 AM	275	22	22	22	5.1E-06
10:31:46 AM	275	22	22	22	5.1E-06
10:31:47 AM	275	22	22	22	5.1E-06
10:31:48 AM	275	22	22	22	5.1E-06
10:31:49 AM	275	22	22	22	5.1E-06
10:31:50 AM	275	22	22	22	5.1E-06
10:31:51 AM	275	22	22	22	5.2E-06
10:31:52 AM	275	22	22	22	5.2E-06
10:31:53 AM	275	22	22	22	5.2E-06
10:31:54 AM	275	22	22	22	5.3E-06
10:31:55 AM	275	22	22	22	5.3E-06
10:31:56 AM	275	22	22	22	5.3E-06
10:31:57 AM	275	22	22	22	5.4E-06
10:31:58 AM	275	22	22	22	5.4E-06
10:31:59 AM	275	22	22	22	5.5E-06
10:32:00 AM	275	22	22	22	5.5E-06
10:32:01 AM	275	22	22	22	5.5E-06
10:32:02 AM	275	22	22	22	5.6E-06
10:32:03 AM	275	22	22	22	5.5E-06
10:32:04 AM	275	22	22	22	5.6E-06
10:32:05 AM	275	22	22	22	5.6E-06
10:32:06 AM	275	22	22	22	5.6E-06
10:32:07 AM	275	22	22	22	5.6E-06
10:32:08 AM	275	22	22	22	5.6E-06
10:32:09 AM	275	22	22	22	5.6E-06
10:32:10 AM	275	22	22	22	5.6E-06
10:32:11 AM	275	22	22	22	5.6E-06
10:32:12 AM	275	22	22	23	5.6E-06
10:32:13 AM	275	22	22	22	5.6E-06
10:32:14 AM	275	22	22	22	5.5E-06
10:32:15 AM	275	22	22	22	5.5E-06
10:32:16 AM	275	22	22	22	5.5E-06
10:32:17 AM	275	22	22	22	5.5E-06
10:32:18 AM	275	22	22	22	5.5E-06
10:32:19 AM	275	22	22	22	5.5E-06
10:32:20 AM	275	22	22	22	5.5E-06
10:32:21 AM	275	22	22	22	5.5E-06
10:32:22 AM	275	22	22	22	5.5E-06
10:32:23 AM	275	22	22	22	5.5E-06
10:32:24 AM	275	22	22	22	5.5E-06
10:32:25 AM	275	22	22	22	5.5E-06
10:32:26 AM	275	22	22	22	5.5E-06
10:32:27 AM	275	22	22	22	5.5E-06
10:32:28 AM	275	22	22	22	5.5E-06
Averages ->	**275**	**22**	**22**	**22**	**5.3E-06**
				Maximum ->	**5.6E-06**

PHOTOGRAPHS

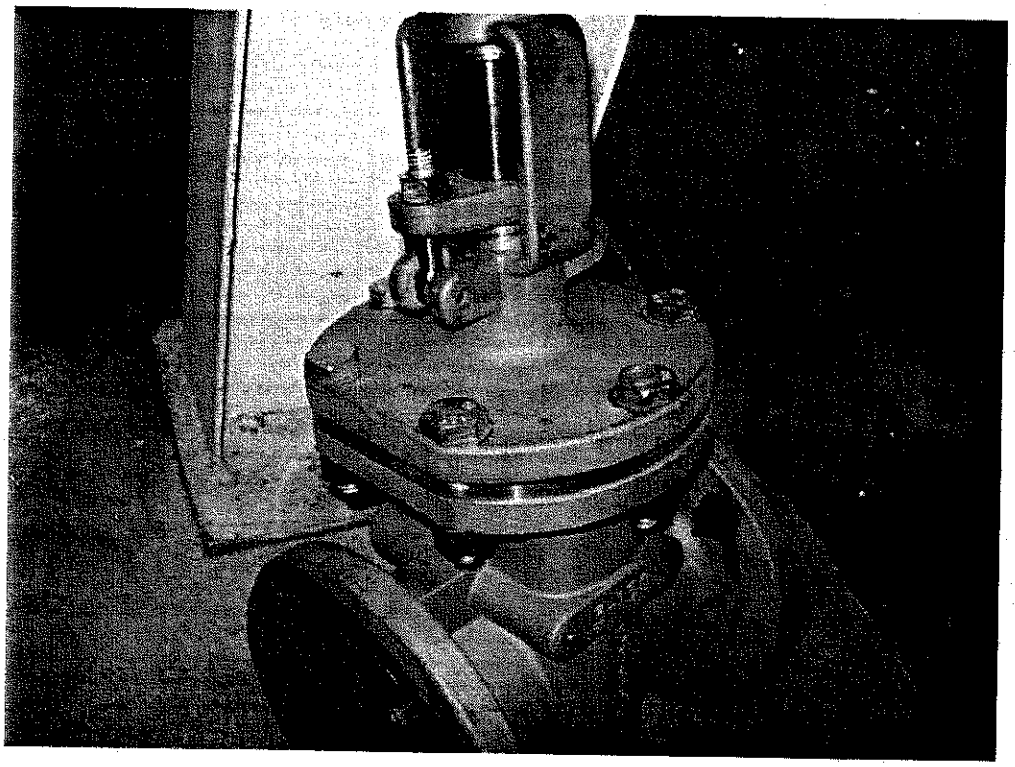

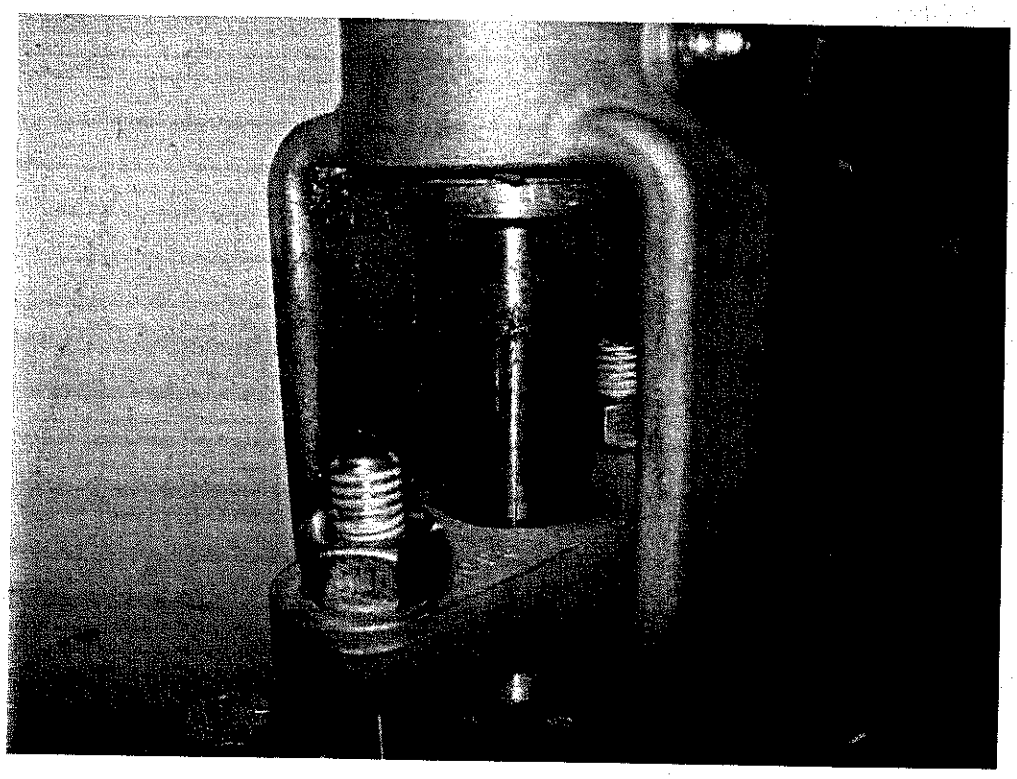

Test Valve

info@yarmouthresearch.com
www.yarmouthresearch.com

Yarmouth Research and Technology, LLC

Valve Description: 3 In Class 150 Cooper Gate Valve **Date:** 6/17/2010

Cycle Number: 125

Time	Pressure (psig)	Bonnet (deg. C)	Body Temp (deg. C)	Inside Temp (deg. C)	Leakage (Atm cc/sec)
1:16:52 PM	275	33	23	25	2.8E-06
1:16:53 PM	275	33	23	25	2.8E-06
1:16:54 PM	275	33	23	25	2.8E-06
1:16:55 PM	275	33	23	25	2.8E-06
1:16:56 PM	275	33	23	25	2.7E-06
1:16:57 PM	275	33	23	24	2.8E-06
1:16:58 PM	275	33	23	24	2.8E-06
1:16:59 PM	275	33	23	25	2.8E-06
1:17:00 PM	275	33	23	25	2.8E-06
1:17:01 PM	275	33	23	25	2.8E-06
1:17:02 PM	275	33	23	24	2.7E-06
1:17:03 PM	275	33	23	25	2.8E-06
1:17:04 PM	275	33	23	25	2.8E-06
1:17:05 PM	275	33	23	25	2.9E-06
1:17:06 PM	275	33	24	25	2.9E-06
1:17:07 PM	275	33	23	25	2.9E-06
1:17:08 PM	275	33	23	25	2.9E-06
1:17:09 PM	275	33	23	25	3.0E-06
1:17:10 PM	275	33	23	25	3.1E-06
1:17:11 PM	275	33	23	24	3.1E-06
1:17:12 PM	275	33	23	25	3.2E-06
1:17:13 PM	275	33	23	25	3.2E-06
1:17:14 PM	275	33	23	24	3.2E-06
1:17:15 PM	275	33	23	25	3.4E-06
1:17:16 PM	275	33	23	25	3.4E-06
1:17:17 PM	275	33	23	25	3.5E-06
1:17:18 PM	275	33	23	25	3.6E-06
1:17:19 PM	275	33	23	25	3.7E-06
1:17:20 PM	275	33	23	25	3.8E-06
1:17:21 PM	275	33	23	25	3.8E-06
1:17:22 PM	275	33	23	25	3.9E-06
1:17:23 PM	275	33	24	24	4.0E-06
1:17:24 PM	275	33	23	25	4.0E-06
1:17:25 PM	275	33	23	25	4.0E-06
1:17:26 PM	275	33	23	25	4.0E-06
1:17:27 PM	275	33	23	24	4.1E-06
1:17:28 PM	275	33	23	25	4.1E-06
1:17:29 PM	275	33	23	25	4.1E-06
1:17:30 PM	275	33	23	25	4.1E-06
1:17:31 PM	275	33	23	25	4.0E-06
1:17:32 PM	275	33	23	25	4.0E-06
1:17:33 PM	275	33	23	25	4.0E-06
1:17:34 PM	275	33	23	25	4.0E-06
1:17:35 PM	275	33	23	25	3.9E-06
1:17:36 PM	275	33	24	25	3.8E-06
1:17:37 PM	275	33	24	25	3.8E-06
1:17:38 PM	275	33	23	25	3.7E-06
1:17:39 PM	275	33	23	25	3.7E-06
1:17:40 PM	275	33	24	25	3.6E-06
1:17:41 PM	275	33	24	25	3.6E-06
1:17:42 PM	275	33	24	25	3.6E-06
1:17:43 PM	275	33	24	26	3.5E-06
1:17:44 PM	275	33	24	26	3.5E-06
1:17:45 PM	275	33	24	26	3.5E-06
1:17:46 PM	275	33	24	26	3.4E-06
1:17:47 PM	275	33	24	26	3.4E-06
1:17:48 PM	275	33	24	26	3.4E-06
1:17:49 PM	275	33	24	26	3.4E-06
1:17:50 PM	275	33	24	27	3.4E-06
1:17:51 PM	275	34	25	27	3.3E-06
Averages ->	**275**	**33**	**23**	**25**	**3.4E-06**
				Maximum ->	**4.1E-06**

Yarmouth Research and Technology, LLC

Valve Description: 3 in Class 150 Cooper Gate Valve **Date:** 6/17/2010

Cycle Number: 125

Time	Pressure (psig)	Bonnet (deg. C)	Body Temp (deg. C)	Inside Temp (deg. C)	Leakage (Atm cc/sec)
4:26:10 PM	95	378	392	397	5.9E-06
4:26:11 PM	95	378	391	398	5.9E-06
4:26:12 PM	95	378	391	398	5.8E-06
4:26:13 PM	95	378	391	398	5.8E-06
4:26:14 PM	95	378	392	398	5.8E-06
4:26:15 PM	95	378	392	398	5.8E-06
4:26:16 PM	95	378	391	398	5.8E-06
4:26:17 PM	95	378	391	398	5.8E-06
4:26:18 PM	95	378	391	398	5.8E-06
4:26:19 PM	95	378	392	398	5.8E-06
4:26:20 PM	95	378	392	398	5.8E-06
4:26:21 PM	95	378	392	398	5.8E-06
4:26:22 PM	95	378	391	397	5.8E-06
4:26:23 PM	95	378	391	397	5.8E-06
4:26:24 PM	95	378	391	398	5.9E-06
4:26:25 PM	95	378	391	397	5.8E-06
4:26:26 PM	95	378	391	398	5.8E-06
4:26:27 PM	95	378	391	398	5.9E-06
4:26:28 PM	95	378	391	398	5.9E-06
4:26:29 PM	95	378	391	398	5.9E-06
4:26:30 PM	95	378	392	398	5.9E-06
4:26:31 PM	95	378	392	398	5.9E-06
4:26:32 PM	95	378	391	397	5.9E-06
4:26:33 PM	95	378	391	397	5.9E-06
4:26:34 PM	95	378	391	397	5.9E-06
4:26:35 PM	95	378	392	397	5.9E-06
4:26:36 PM	95	378	391	397	5.9E-06
4:26:37 PM	95	378	391	397	5.9E-06
4:26:38 PM	95	378	391	397	5.9E-06
4:26:39 PM	95	378	391	398	5.9E-06
4:26:40 PM	95	378	391	398	5.9E-06
4:26:41 PM	95	378	392	398	5.9E-06
4:26:42 PM	95	378	391	397	5.9E-06
4:26:43 PM	95	378	391	397	5.9E-06
4:26:44 PM	95	378	391	397	5.9E-06
4:26:45 PM	95	378	391	398	5.9E-06
4:26:46 PM	95	378	391	398	5.9E-06
4:26:47 PM	95	378	391	398	5.9E-06
4:26:48 PM	95	378	391	398	5.9E-06
4:26:49 PM	95	378	391	397	5.9E-06
4:26:50 PM	95	378	392	398	5.9E-06
4:26:51 PM	95	378	391	398	5.9E-06
4:26:52 PM	95	378	391	398	5.9E-06
4:26:53 PM	95	378	391	398	5.9E-06
4:26:54 PM	95	378	391	397	5.9E-06
4:26:55 PM	95	378	391	397	5.9E-06
4:26:56 PM	95	378	391	398	5.9E-06
4:26:57 PM	95	378	391	398	5.9E-06
4:26:58 PM	95	378	391	398	5.9E-06
4:26:59 PM	95	378	392	397	5.9E-06
4:27:00 PM	95	378	391	398	5.9E-06
4:27:01 PM	95	378	392	398	5.9E-06
4:27:02 PM	95	378	392	398	5.9E-06
4:27:03 PM	95	378	391	398	5.9E-06
4:27:04 PM	95	378	391	398	5.9E-06
4:27:05 PM	95	378	391	398	5.9E-06
4:27:06 PM	95	378	391	398	5.9E-06
4:27:07 PM	95	378	392	398	5.9E-06
4:27:08 PM	95	378	392	398	5.9E-06
4:27:09 PM	95	378	392	398	5.9E-06
Averages ->	**95**	**378**	**391**	**398**	**5.9E-06**
				Maximum ->	**5.9E-06**

Yarmouth Research and Technology, LLC

Valve Description: 3 in Class 150 Cooper Gate Valve **Date:** 6/17/2010

Cycle Number: 125

Time	Pressure (psig)	Bonnet (deg. C)	Body Temp (deg. C)	Inside Temp (deg. C)	Leakage (Atm cc/sec)
4:27:46 PM	95	378	391	398	5.8E-06
4:27:47 PM	95	379	391	398	5.8E-06
4:27:48 PM	95	378	391	398	5.8E-06
4:27:49 PM	95	379	392	398	5.8E-06
4:27:50 PM	95	379	392	398	5.8E-06
4:27:51 PM	95	379	391	398	5.8E-06
4:27:52 PM	95	379	392	398	5.8E-06
4:27:53 PM	95	379	391	398	5.8E-06
4:27:54 PM	95	379	391	398	5.8E-06
4:27:55 PM	95	379	392	398	5.8E-06
4:27:56 PM	95	379	392	398	5.8E-06
4:27:57 PM	95	379	392	398	5.7E-06
4:27:58 PM	95	379	391	398	5.7E-06
4:27:59 PM	95	380	392	398	5.6E-06
4:28:00 PM	95	380	392	398	5.6E-06
4:28:01 PM	95	380	392	397	5.6E-06
4:28:02 PM	95	380	392	398	5.6E-06
4:28:03 PM	95	380	392	398	5.6E-06
4:28:04 PM	95	380	391	398	5.7E-06
4:28:05 PM	95	380	392	398	5.7E-06
4:28:06 PM	95	380	391	398	5.7E-06
4:28:07 PM	95	381	391	398	5.7E-06
4:28:08 PM	95	381	392	398	5.7E-06
4:28:09 PM	95	381	392	398	5.7E-06
4:28:10 PM	95	381	392	398	5.7E-06
4:28:11 PM	95	381	392	398	5.6E-06
4:28:12 PM	95	381	392	398	5.6E-06
4:28:13 PM	95	381	391	398	5.5E-06
4:28:14 PM	95	381	391	398	5.5E-06
4:28:15 PM	95	381	391	398	5.5E-06
4:28:16 PM	95	381	392	398	5.5E-06
4:28:17 PM	95	381	392	398	5.5E-06
4:28:18 PM	95	382	392	398	5.5E-06
4:28:19 PM	95	381	391	398	5.5E-06
4:28:20 PM	95	381	392	398	5.6E-06
4:28:21 PM	95	381	392	398	5.6E-06
4:28:22 PM	95	381	392	398	5.6E-06
4:28:23 PM	95	382	392	398	5.6E-06
4:28:24 PM	95	382	392	398	5.6E-06
4:28:25 PM	95	382	392	398	5.6E-06
4:28:26 PM	95	382	392	398	5.6E-06
4:28:27 PM	95	382	392	398	5.6E-06
4:28:28 PM	95	382	392	398	5.7E-06
4:28:29 PM	95	381	392	398	5.7E-06
4:28:30 PM	95	381	392	398	5.8E-06
4:28:31 PM	95	381	391	397	5.8E-06
4:28:32 PM	95	381	391	398	5.9E-06
4:28:33 PM	95	381	391	398	5.9E-06
4:28:34 PM	95	381	392	398	6.0E-06
4:28:35 PM	95	381	392	398	6.0E-06
4:28:36 PM	95	381	392	398	6.0E-06
4:28:37 PM	95	381	392	398	6.0E-06
4:28:38 PM	95	381	392	398	5.9E-06
4:28:39 PM	95	381	392	398	5.9E-06
4:28:40 PM	95	381	392	398	5.9E-06
4:28:41 PM	95	381	392	398	5.9E-06
4:28:42 PM	95	381	391	398	5.9E-06
4:28:43 PM	95	381	392	398	5.9E-06
4:28:44 PM	95	381	392	398	5.9E-06
4:28:45 PM	95	381	392	398	5.9E-06
Averages ->	**95**	**381**	**392**	**398**	**5.7E-06**
				Maximum ->	**6.0E-06**

Yarmouth Research and Technology, LLC

Valve Description: 3 in Class 150 Cooper Gate Valve **Date:** 6/17/2010

Cycle Number: 250

Time	Pressure (psig)	Bonnet (deg. C)	Body Temp (deg. C)	Inside Temp (deg. C)	Leakage (Atm cc/sec)
6:50:05 PM	95	389	398	399	5.1E-06
6:50:06 PM	95	389	398	399	5.1E-06
6:50:07 PM	95	389	398	399	5.1E-06
6:50:08 PM	95	389	398	399	5.1E-06
6:50:09 PM	95	389	398	399	5.1E-06
6:50:10 PM	95	389	398	399	5.1E-06
6:50:11 PM	95	389	398	399	5.1E-06
6:50:12 PM	95	389	398	399	5.1E-06
6:50:13 PM	95	389	398	399	5.0E-06
6:50:14 PM	95	389	398	399	5.0E-06
6:50:15 PM	95	389	398	399	5.1E-06
6:50:16 PM	95	390	398	399	5.0E-06
6:50:17 PM	95	389	398	399	5.0E-06
6:50:18 PM	95	389	398	399	5.1E-06
6:50:19 PM	95	389	398	399	5.0E-06
6:50:20 PM	95	389	398	399	5.0E-06
6:50:21 PM	95	389	398	399	5.0E-06
6:50:22 PM	95	390	398	399	5.1E-06
6:50:23 PM	95	389	398	399	5.1E-06
6:50:24 PM	95	389	398	399	5.1E-06
6:50:25 PM	95	389	398	399	5.0E-06
6:50:26 PM	95	389	398	399	5.0E-06
6:50:27 PM	95	390	398	399	5.0E-06
6:50:28 PM	95	390	398	399	5.0E-06
6:50:29 PM	95	389	398	399	5.0E-06
6:50:30 PM	95	389	397	399	5.0E-06
6:50:31 PM	95	390	398	399	5.0E-06
6:50:32 PM	95	389	398	399	5.0E-06
6:50:33 PM	95	389	398	399	5.0E-06
6:50:34 PM	95	389	398	399	5.0E-06
6:50:35 PM	95	389	398	399	5.0E-06
6:50:36 PM	95	390	398	399	4.9E-06
6:50:37 PM	95	390	398	399	5.0E-06
6:50:38 PM	95	390	398	399	5.0E-06
6:50:39 PM	95	390	398	399	5.0E-06
6:50:40 PM	95	390	398	399	5.0E-06
6:50:41 PM	95	390	398	399	5.1E-06
6:50:42 PM	95	390	398	399	5.0E-06
6:50:43 PM	95	390	398	399	5.0E-06
6:50:44 PM	95	390	398	399	5.1E-06
6:50:45 PM	95	390	398	399	5.1E-06
6:50:46 PM	95	389	398	399	5.1E-06
6:50:47 PM	95	390	398	399	5.1E-06
6:50:48 PM	95	389	398	399	5.1E-06
6:50:49 PM	95	390	398	399	5.1E-06
6:50:50 PM	95	390	398	399	5.1E-06
6:50:51 PM	95	389	398	399	5.1E-06
6:50:52 PM	95	390	398	399	5.0E-06
6:50:53 PM	95	390	398	399	5.1E-06
6:50:54 PM	95	390	398	399	5.1E-06
6:50:55 PM	95	389	398	399	5.0E-06
6:50:56 PM	95	390	398	399	5.1E-06
6:50:57 PM	95	390	398	399	5.0E-06
6:50:58 PM	95	390	398	399	5.1E-06
6:50:59 PM	95	389	398	399	5.1E-06
6:51:00 PM	95	390	398	399	5.1E-06
6:51:01 PM	95	389	398	399	5.1E-06
6:51:02 PM	95	390	399	399	5.1E-06
6:51:03 PM	95	390	398	399	5.1E-06
6:51:04 PM	95	390	398	399	5.1E-06
Averages ->	**95**	**390**	**398**	**399**	**5.0E-06**
				Maximum ->	**5.1E-06**

Yarmouth Research and Technology, LLC

Valve Description: 3 in Class 150 Cooper Gate Valve **Date:** 6/17/2010

Cycle Number: 250

Time	Pressure (psig)	Bonnet (deg. C)	Body Temp (deg. C)	Inside Temp (deg. C)	Leakage (Atm cc/sec)
6:51:53 PM	95	389	398	399	4.8E-06
6:51:54 PM	95	389	399	399	4.8E-06
6:51:55 PM	95	389	399	399	4.8E-06
6:51:56 PM	95	389	399	399	4.8E-06
6:51:57 PM	95	389	398	399	4.8E-06
6:51:58 PM	95	388	398	399	4.8E-06
6:51:59 PM	95	388	399	399	4.8E-06
6:52:00 PM	95	388	399	399	4.8E-06
6:52:01 PM	95	388	399	399	4.8E-06
6:52:02 PM	95	388	399	399	4.8E-06
6:52:03 PM	95	388	399	399	4.8E-06
6:52:04 PM	95	387	399	399	4.8E-06
6:52:05 PM	95	387	399	399	4.8E-06
6:52:06 PM	95	387	399	399	4.8E-06
6:52:07 PM	95	387	399	399	4.8E-06
6:52:08 PM	95	387	399	399	4.8E-06
6:52:09 PM	95	387	399	399	4.9E-06
6:52:10 PM	95	387	399	399	4.8E-06
6:52:11 PM	95	387	399	399	4.8E-06
6:52:12 PM	95	387	399	399	4.9E-06
6:52:13 PM	95	387	399	399	4.8E-06
6:52:14 PM	95	386	398	399	4.9E-06
6:52:15 PM	95	387	399	399	4.9E-06
6:52:16 PM	95	386	399	399	4.8E-06
6:52:17 PM	95	386	398	399	4.8E-06
6:52:18 PM	95	386	399	398	4.8E-06
6:52:19 PM	95	386	399	399	4.8E-06
6:52:20 PM	95	386	398	399	4.7E-06
6:52:21 PM	95	386	399	399	4.7E-06
6:52:22 PM	95	386	399	399	4.7E-06
6:52:23 PM	95	387	399	399	4.7E-06
6:52:24 PM	95	386	399	399	4.6E-06
6:52:25 PM	95	386	399	399	4.6E-06
6:52:26 PM	95	386	398	398	4.6E-06
6:52:27 PM	95	386	399	398	4.6E-06
6:52:28 PM	95	387	399	399	4.5E-06
6:52:29 PM	95	387	399	399	4.5E-06
6:52:30 PM	95	387	399	399	4.5E-06
6:52:31 PM	95	387	399	398	4.6E-06
6:52:32 PM	95	387	399	398	4.6E-06
6:52:33 PM	95	387	399	399	4.7E-06
6:52:34 PM	95	387	398	399	4.7E-06
6:52:35 PM	95	387	398	399	4.8E-06
6:52:36 PM	95	387	399	398	4.9E-06
6:52:37 PM	95	387	399	399	5.0E-06
6:52:38 PM	95	387	399	399	5.1E-06
6:52:39 PM	95	387	399	399	5.2E-06
6:52:40 PM	95	387	399	398	5.3E-06
6:52:41 PM	95	387	398	399	5.4E-06
6:52:42 PM	95	387	399	399	5.5E-06
6:52:43 PM	95	387	399	399	5.6E-06
6:52:44 PM	95	387	399	398	5.6E-06
6:52:45 PM	95	387	399	399	5.7E-06
6:52:46 PM	95	387	399	399	5.7E-06
6:52:47 PM	95	387	399	399	5.7E-06
6:52:48 PM	95	387	399	399	5.7E-06
6:52:49 PM	95	387	399	398	5.7E-06
6:52:50 PM	95	387	399	399	5.7E-06
6:52:51 PM	95	387	399	399	5.7E-06
6:52:52 PM	95	387	399	399	5.7E-06
Averages ->	**95**	**387**	**399**	**399**	**5.0E-06**
				Maximum ->	**5.7E-06**

Yarmouth Research and Technology, LLC

Valve Description: 3 in Class 150 Cooper Gate Valve **Date:** 6/18/2010

Cycle Number: 250

Time	Pressure (psig)	Bonnet (deg. C)	Body Temp (deg. C)	Inside Temp (deg. C)	Leakage (Atm cc/sec)
8:11:20 AM	275	26	27	27	4.8E-04
8:11:21 AM	275	26	27	27	4.8E-04
8:11:22 AM	275	26	27	27	4.8E-04
8:11:23 AM	275	26	27	27	4.8E-04
8:11:24 AM	275	26	27	27	4.8E-04
8:11:25 AM	275	26	27	27	4.8E-04
8:11:26 AM	275	26	27	27	4.8E-04
8:11:27 AM	275	26	27	27	4.8E-04
8:11:28 AM	275	26	27	27	4.8E-04
8:11:29 AM	275	26	27	27	4.8E-04
8:11:30 AM	275	26	27	27	4.8E-04
8:11:31 AM	275	26	27	27	4.8E-04
8:11:32 AM	275	26	27	27	4.7E-04
8:11:33 AM	275	26	27	27	4.7E-04
8:11:34 AM	275	26	27	27	4.7E-04
8:11:35 AM	275	26	27	27	4.7E-04
8:11:36 AM	275	26	27	27	4.7E-04
8:11:37 AM	275	26	27	27	4.7E-04
8:11:38 AM	275	26	27	27	4.7E-04
8:11:39 AM	275	26	27	27	4.7E-04
8:11:40 AM	275	26	27	27	4.7E-04
8:11:41 AM	275	26	27	27	4.7E-04
8:11:42 AM	275	26	27	27	4.7E-04
8:11:43 AM	275	26	27	27	4.7E-04
8:11:44 AM	275	26	27	27	4.7E-04
8:11:45 AM	275	26	27	27	4.7E-04
8:11:46 AM	275	26	27	27	4.7E-04
8:11:47 AM	275	26	27	27	4.7E-04
8:11:48 AM	275	26	27	27	4.7E-04
8:11:49 AM	275	26	27	27	4.7E-04
8:11:50 AM	275	26	27	27	4.7E-04
8:11:51 AM	275	26	27	27	4.7E-04
8:11:52 AM	275	26	27	27	4.7E-04
8:11:53 AM	275	26	27	27	4.7E-04
8:11:54 AM	275	26	27	27	4.7E-04
8:11:55 AM	275	26	27	27	4.7E-04
8:11:56 AM	275	26	27	27	4.7E-04
8:11:57 AM	275	26	27	27	4.7E-04
8:11:58 AM	275	26	27	27	4.7E-04
8:11:59 AM	275	26	27	27	4.7E-04
8:12:00 AM	275	26	27	27	4.7E-04
8:12:01 AM	275	26	27	27	4.7E-04
8:12:02 AM	275	26	27	27	4.7E-04
8:12:03 AM	275	26	27	27	4.7E-04
8:12:04 AM	275	26	27	27	4.7E-04
8:12:05 AM	275	26	27	27	4.8E-04
8:12:06 AM	275	26	27	27	4.7E-04
8:12:07 AM	275	26	27	27	4.7E-04
8:12:08 AM	275	26	28	27	4.8E-04
8:12:09 AM	275	26	27	27	4.8E-04
8:12:10 AM	275	26	27	27	4.7E-04
8:12:11 AM	275	26	27	27	4.7E-04
8:12:12 AM	275	26	27	27	4.7E-04
8:12:13 AM	275	26	27	27	4.7E-04
8:12:14 AM	275	26	27	27	4.7E-04
8:12:15 AM	275	26	27	27	4.7E-04
8:12:16 AM	275	26	27	27	4.7E-04
8:12:17 AM	275	26	27	27	4.7E-04
8:12:18 AM	275	26	27	27	4.7E-04
8:12:19 AM	275	26	27	27	4.7E-04
Averages ->	**275**	**26**	**27**	**27**	**4.7E-04**
				Maximum ->	**4.8E-04**

Yarmouth Research and Technology, LLC

Valve Description: 3 in Class 150 Cooper Gate Valve **Date:** 6/18/2010

Cycle Number: 250

Time	Pressure (psig)	Bonnet (deg. C)	Body Temp (deg. C)	Inside Temp (deg. C)	Leakage (Atm cc/sec)
8:12:53 AM	275	26	27	27	4.8E-04
8:12:54 AM	275	26	27	27	4.8E-04
8:12:55 AM	275	26	27	27	4.8E-04
8:12:56 AM	275	26	27	27	4.8E-04
8:12:57 AM	275	26	27	27	4.8E-04
8:12:58 AM	275	26	27	27	4.8E-04
8:12:59 AM	275	26	27	27	4.8E-04
8:13:00 AM	275	26	27	27	4.8E-04
8:13:01 AM	275	26	27	27	4.8E-04
8:13:02 AM	275	26	27	27	4.8E-04
8:13:03 AM	275	26	27	27	4.9E-04
8:13:04 AM	275	26	27	27	4.9E-04
8:13:05 AM	275	26	27	27	4.9E-04
8:13:06 AM	275	26	27	27	4.9E-04
8:13:07 AM	275	26	27	27	4.8E-04
8:13:08 AM	275	26	27	27	4.6E-04
8:13:09 AM	275	26	27	27	4.5E-04
8:13:10 AM	275	26	27	27	4.3E-04
8:13:11 AM	275	26	27	27	4.2E-04
8:13:12 AM	275	26	27	27	4.1E-04
8:13:13 AM	275	26	27	27	3.9E-04
8:13:14 AM	275	26	27	27	3.8E-04
8:13:15 AM	275	26	27	27	3.8E-04
8:13:16 AM	275	26	27	27	3.7E-04
8:13:17 AM	275	26	27	27	3.6E-04
8:13:18 AM	275	26	27	27	3.6E-04
8:13:19 AM	275	26	27	27	3.6E-04
8:13:20 AM	275	26	27	27	3.6E-04
8:13:21 AM	275	26	27	27	3.6E-04
8:13:22 AM	275	26	27	27	3.6E-04
8:13:23 AM	275	26	27	27	3.6E-04
8:13:24 AM	275	26	27	27	3.5E-04
8:13:25 AM	275	26	27	27	3.5E-04
8:13:26 AM	275	26	27	27	3.5E-04
8:13:27 AM	275	26	27	27	3.5E-04
8:13:28 AM	275	26	27	27	3.6E-04
8:13:29 AM	275	26	27	27	3.6E-04
8:13:30 AM	275	26	27	27	3.7E-04
8:13:31 AM	275	26	27	27	3.8E-04
8:13:32 AM	275	26	27	27	3.8E-04
8:13:33 AM	275	26	27	27	3.9E-04
8:13:34 AM	275	26	27	27	4.0E-04
8:13:35 AM	275	26	27	27	4.0E-04
8:13:36 AM	275	26	27	27	4.1E-04
8:13:37 AM	275	26	27	27	4.1E-04
8:13:38 AM	275	26	27	27	4.1E-04
8:13:39 AM	275	26	27	27	4.1E-04
8:13:40 AM	275	26	27	27	4.1E-04
8:13:41 AM	275	26	27	27	4.0E-04
8:13:42 AM	275	26	27	27	4.1E-04
8:13:43 AM	275	26	27	27	4.1E-04
8:13:44 AM	275	26	27	27	4.1E-04
8:13:45 AM	275	26	27	27	4.1E-04
8:13:46 AM	275	26	27	27	4.1E-04
8:13:47 AM	275	26	27	27	4.1E-04
8:13:48 AM	275	26	27	27	4.2E-04
8:13:49 AM	275	26	27	27	4.2E-04
8:13:50 AM	275	26	27	27	4.3E-04
8:13:51 AM	275	26	27	27	4.3E-04
8:13:52 AM	275	26	27	27	4.4E-04
Averages ->	**275**	**26**	**27**	**27**	**4.2E-04**
				Maximum ->	**4.9E-04**

Yarmouth Research and Technology, LLC

Valve Description: 3 in Class 150 Cooper Gate Valve **Date:** 6/18/2010

Cycle Number: 375

Time	Pressure (psig)	Bonnet (deg. C)	Body Temp (deg. C)	Inside Temp (deg. C)	Leakage (Atm cc/sec)
10:31:25 AM	275	32	27	27	1.1E-06
10:31:26 AM	275	32	27	27	1.1E-06
10:31:27 AM	275	32	27	27	3.1E-07
10:31:28 AM	275	32	27	27	5.8E-05
10:31:29 AM	275	32	27	27	9.9E-05
10:31:30 AM	275	32	27	27	9.9E-05
10:31:31 AM	275	32	27	27	1.0E-04
10:31:32 AM	275	32	27	27	1.0E-04
10:31:33 AM	275	32	26	27	1.1E-04
10:31:34 AM	275	32	27	27	1.0E-04
10:31:35 AM	275	32	27	27	1.1E-04
10:31:36 AM	275	32	27	27	1.1E-04
10:31:37 AM	275	32	27	27	1.1E-04
10:31:38 AM	275	32	27	27	1.1E-04
10:31:39 AM	275	32	27	27	1.1E-04
10:31:40 AM	275	32	26	27	1.1E-04
10:31:41 AM	275	32	27	27	1.2E-04
10:31:42 AM	275	32	27	27	1.2E-04
10:31:43 AM	275	32	27	27	1.1E-04
10:31:44 AM	275	32	26	27	1.2E-04
10:31:45 AM	275	32	27	27	1.2E-04
10:31:46 AM	275	32	27	27	1.2E-04
10:31:47 AM	275	32	27	27	1.2E-04
10:31:48 AM	275	32	27	27	1.2E-04
10:31:49 AM	275	32	27	27	1.2E-04
10:31:50 AM	275	32	27	27	1.2E-04
10:31:51 AM	275	32	27	27	1.2E-04
10:31:52 AM	275	32	26	27	1.2E-04
10:31:53 AM	275	32	27	27	1.2E-04
10:31:54 AM	275	32	27	27	1.2E-04
10:31:55 AM	275	32	27	27	1.2E-04
10:31:56 AM	275	32	27	27	1.2E-04
10:31:57 AM	275	32	27	27	1.2E-04
10:31:58 AM	275	32	27	27	1.2E-04
10:31:59 AM	275	32	27	27	1.1E-04
10:32:00 AM	275	32	27	27	1.1E-04
10:32:01 AM	275	32	26	27	1.1E-04
10:32:02 AM	275	32	27	27	1.1E-04
10:32:03 AM	275	32	27	27	1.1E-04
10:32:04 AM	275	32	27	27	1.1E-04
10:32:05 AM	275	32	27	27	1.1E-04
10:32:06 AM	275	32	27	27	1.1E-04
10:32:07 AM	275	32	27	27	1.1E-04
10:32:08 AM	275	32	27	27	1.1E-04
10:32:09 AM	275	32	27	27	1.2E-04
10:32:10 AM	275	32	27	27	1.1E-04
10:32:11 AM	275	32	27	27	1.2E-04
10:32:12 AM	275	32	27	27	1.2E-04
10:32:13 AM	275	32	26	27	1.2E-04
10:32:14 AM	275	32	27	27	1.2E-04
10:32:15 AM	275	32	27	27	1.3E-04
10:32:16 AM	275	32	27	27	1.2E-04
10:32:17 AM	275	32	27	27	1.3E-04
10:32:18 AM	275	32	27	27	1.3E-04
10:32:19 AM	275	32	27	27	1.3E-04
10:32:20 AM	275	32	27	27	1.3E-04
10:32:21 AM	275	32	27	27	1.3E-04
10:32:22 AM	275	32	27	27	1.3E-04
10:32:23 AM	275	32	27	27	1.3E-04
10:32:24 AM	275	32	27	27	1.4E-04
Averages ->	**275**	**32**	**27**	**27**	**1.1E-04**
				Maximum ->	**1.4E-04**

Yarmouth Research and Technology, LLC

Valve Description: 3 in Class 150 Cooper Gate Valve **Date:** 6/18/2010

Cycle Number: 375

Time	Pressure (psig)	Bonnet (deg. C)	Body Temp (deg. C)	Inside Temp (deg. C)	Leakage (Atm cc/sec)
10:34:15 AM	275	32	27	27	1.4E-04
10:34:16 AM	275	32	27	27	1.4E-04
10:34:17 AM	275	32	27	27	1.4E-04
10:34:18 AM	275	32	27	27	1.4E-04
10:34:19 AM	275	32	27	27	1.4E-04
10:34:20 AM	275	32	27	27	1.4E-04
10:34:21 AM	275	32	27	27	1.4E-04
10:34:22 AM	275	32	27	27	1.4E-04
10:34:23 AM	275	32	27	27	1.4E-04
10:34:24 AM	275	32	27	27	1.4E-04
10:34:25 AM	275	32	27	27	1.4E-04
10:34:26 AM	275	32	27	26	1.4E-04
10:34:27 AM	275	32	27	26	1.4E-04
10:34:28 AM	275	32	27	27	1.3E-04
10:34:29 AM	275	32	27	27	1.3E-04
10:34:30 AM	275	32	27	27	1.2E-04
10:34:31 AM	275	32	27	27	1.2E-04
10:34:32 AM	275	32	27	27	1.2E-04
10:34:33 AM	275	32	27	27	1.1E-04
10:34:34 AM	275	32	27	27	1.1E-04
10:34:35 AM	275	32	27	27	1.1E-04
10:34:36 AM	275	32	26	27	1.1E-04
10:34:37 AM	275	32	27	27	1.1E-04
10:34:38 AM	275	32	27	27	1.1E-04
10:34:39 AM	275	32	26	27	1.1E-04
10:34:40 AM	275	32	27	27	1.1E-04
10:34:41 AM	275	32	27	27	1.0E-04
10:34:42 AM	275	32	27	27	1.0E-04
10:34:43 AM	275	32	27	27	1.0E-04
10:34:44 AM	275	32	27	27	1.0E-04
10:34:45 AM	275	32	27	27	1.0E-04
10:34:46 AM	275	32	27	27	1.0E-04
10:34:47 AM	275	32	26	27	1.0E-04
10:34:48 AM	275	32	27	27	1.1E-04
10:34:49 AM	275	32	27	27	1.1E-04
10:34:50 AM	275	32	27	27	1.2E-04
10:34:51 AM	275	32	27	27	1.3E-04
10:34:52 AM	275	32	27	27	1.4E-04
10:34:53 AM	275	32	26	27	1.5E-04
10:34:54 AM	275	32	27	27	1.5E-04
10:34:55 AM	275	32	27	27	1.5E-04
10:34:56 AM	275	32	26	27	1.5E-04
10:34:57 AM	275	32	27	27	1.4E-04
10:34:58 AM	275	32	27	27	1.3E-04
10:34:59 AM	275	32	27	27	1.2E-04
10:35:00 AM	275	32	27	27	1.1E-04
10:35:01 AM	275	32	27	27	1.1E-04
10:35:02 AM	275	32	27	27	2.1E-05
10:35:03 AM	275	32	27	27	9.2E-07
10:35:04 AM	275	32	27	27	9.2E-07
10:35:05 AM	275	32	27	27	-1.8E-06
10:35:06 AM	275	32	27	27	2.1E-06
10:35:07 AM	275	32	27	27	2.1E-06
10:35:08 AM	275	32	27	27	3.5E-06
10:35:09 AM	275	32	27	27	-7.6E-07
10:35:10 AM	275	32	26	27	1.4E-06
10:35:11 AM	275	32	27	27	3.2E-06
10:35:12 AM	275	32	27	27	3.1E-07
10:35:13 AM	275	32	27	27	3.4E-06
10:35:14 AM	275	32	27	27	2.7E-06
Averages ->	**275**	**32**	**27**	**27**	**9.8E-05**
				Maximum ->	**1.5E-04**

Yarmouth Research and Technology, LLC

Valve Description: 3 in Class 150 Cooper Gate Valve **Date:** 6/18/2010

Cycle Number: 375

Time	Pressure (psig)	Bonnet (deg. C)	Body Temp (deg. C)	Inside Temp (deg. C)	Leakage (Atm cc/sec)
2:33:29 PM	95	365	385	399	8.1E-06
2:33:30 PM	95	365	385	399	8.1E-06
2:33:31 PM	95	365	385	399	8.1E-06
2:33:32 PM	95	365	385	399	8.1E-06
2:33:33 PM	95	365	385	398	8.0E-06
2:33:34 PM	95	365	385	399	8.0E-06
2:33:35 PM	95	365	385	398	8.0E-06
2:33:36 PM	95	365	385	398	8.0E-06
2:33:37 PM	95	365	385	398	8.0E-06
2:33:38 PM	95	365	385	399	8.0E-06
2:33:39 PM	95	365	385	398	8.0E-06
2:33:40 PM	95	365	385	399	8.0E-06
2:33:41 PM	95	365	385	399	8.0E-06
2:33:42 PM	95	365	385	399	8.0E-06
2:33:43 PM	95	365	385	398	8.0E-06
2:33:44 PM	95	365	385	398	8.0E-06
2:33:45 PM	95	365	385	399	8.0E-06
2:33:46 PM	95	365	385	398	8.0E-06
2:33:47 PM	95	366	385	398	8.1E-06
2:33:48 PM	95	365	385	399	8.0E-06
2:33:49 PM	95	365	385	398	8.1E-06
2:33:50 PM	95	365	385	398	8.1E-06
2:33:51 PM	95	365	385	398	8.1E-06
2:33:52 PM	95	365	385	399	8.0E-06
2:33:53 PM	95	365	385	398	8.1E-06
2:33:54 PM	95	365	385	398	8.0E-06
2:33:55 PM	95	365	385	398	8.1E-06
2:33:56 PM	95	365	385	398	8.0E-06
2:33:57 PM	95	365	385	399	8.0E-06
2:33:58 PM	95	366	385	398	8.0E-06
2:33:59 PM	95	365	385	398	8.0E-06
2:34:00 PM	95	365	385	398	8.0E-06
2:34:01 PM	95	365	385	398	8.0E-06
2:34:02 PM	95	365	385	398	8.0E-06
2:34:03 PM	95	365	385	399	8.0E-06
2:34:04 PM	95	365	386	398	8.0E-06
2:34:05 PM	95	365	385	398	8.0E-06
2:34:06 PM	95	365	385	398	8.0E-06
2:34:07 PM	95	365	385	399	8.0E-06
2:34:08 PM	95	365	385	398	8.1E-06
2:34:09 PM	95	365	385	398	8.0E-06
2:34:10 PM	95	365	386	398	8.0E-06
2:34:11 PM	95	365	385	398	8.1E-06
2:34:12 PM	95	366	385	398	8.1E-06
2:34:13 PM	95	365	385	399	8.1E-06
2:34:14 PM	95	365	385	398	8.1E-06
2:34:15 PM	95	365	385	398	8.1E-06
2:34:16 PM	95	365	385	399	8.1E-06
2:34:17 PM	95	365	385	398	8.1E-06
2:34:18 PM	95	365	385	399	8.1E-06
2:34:19 PM	95	365	385	398	8.1E-06
2:34:20 PM	95	365	385	398	8.1E-06
2:34:21 PM	95	365	385	399	8.1E-06
2:34:22 PM	95	365	385	398	8.1E-06
2:34:23 PM	95	365	385	398	8.1E-06
2:34:24 PM	95	366	385	399	8.0E-06
2:34:25 PM	95	365	385	399	8.0E-06
2:34:26 PM	95	366	385	398	8.1E-06
2:34:27 PM	95	365	385	398	8.1E-06
2:34:28 PM	95	365	385	398	8.0E-06
Averages ->	**95**	**365**	**385**	**398**	**8.0E-06**
				Maximum ->	**8.1E-06**

Yarmouth Research and Technology, LLC

Valve Description: 3 in Class 150 Cooper Gate Valve **Date:** 6/18/2010

Cycle Number: 375

Time	Pressure (psig)	Bonnet (deg. C)	Body Temp (deg. C)	Inside Temp (deg. C)	Leakage (Atm cc/sec)
2:34:54 PM	95	366	385	398	8.1E-06
2:34:55 PM	95	366	385	399	8.1E-06
2:34:56 PM	95	366	385	398	8.1E-06
2:34:57 PM	95	366	385	398	8.1E-06
2:34:58 PM	95	366	385	398	8.1E-06
2:34:59 PM	95	367	385	398	8.1E-06
2:35:00 PM	95	367	385	398	8.1E-06
2:35:01 PM	95	367	385	398	8.1E-06
2:35:02 PM	95	367	385	398	8.2E-06
2:35:03 PM	95	367	385	398	8.2E-06
2:35:04 PM	95	367	385	398	8.2E-06
2:35:05 PM	95	367	385	398	8.2E-06
2:35:06 PM	95	368	385	398	8.2E-06
2:35:07 PM	95	368	385	398	8.2E-06
2:35:08 PM	95	368	385	398	8.2E-06
2:35:09 PM	95	368	385	398	8.2E-06
2:35:10 PM	95	368	385	399	8.2E-06
2:35:11 PM	95	368	385	398	8.2E-06
2:35:12 PM	95	368	385	398	8.1E-06
2:35:13 PM	95	368	385	398	8.1E-06
2:35:14 PM	95	368	385	398	8.1E-06
2:35:15 PM	95	368	385	398	8.0E-06
2:35:16 PM	95	369	385	398	8.0E-06
2:35:17 PM	95	369	385	398	8.0E-06
2:35:18 PM	95	369	385	398	8.0E-06
2:35:19 PM	95	369	385	398	8.0E-06
2:35:20 PM	95	369	385	398	8.0E-06
2:35:21 PM	95	369	385	398	8.0E-06
2:35:22 PM	95	369	385	398	8.0E-06
2:35:23 PM	95	369	385	398	7.9E-06
2:35:24 PM	95	369	385	398	7.9E-06
2:35:25 PM	95	369	385	398	7.9E-06
2:35:26 PM	95	369	385	398	7.9E-06
2:35:27 PM	95	369	385	398	7.9E-06
2:35:28 PM	95	369	385	398	7.9E-06
2:35:29 PM	95	369	385	398	7.9E-06
2:35:30 PM	95	369	385	398	7.9E-06
2:35:31 PM	95	369	385	398	7.9E-06
2:35:32 PM	95	369	385	398	7.9E-06
2:35:33 PM	95	369	385	398	7.9E-06
2:35:34 PM	95	369	385	398	7.9E-06
2:35:35 PM	95	369	385	398	7.9E-06
2:35:36 PM	95	368	385	398	7.9E-06
2:35:37 PM	95	368	385	398	8.0E-06
2:35:38 PM	95	368	385	398	7.9E-06
2:35:39 PM	95	368	385	398	7.9E-06
2:35:40 PM	95	368	385	398	7.9E-06
2:35:41 PM	95	368	385	398	7.9E-06
2:35:42 PM	95	368	385	398	7.9E-06
2:35:43 PM	95	368	385	398	7.9E-06
2:35:44 PM	95	368	385	398	7.9E-06
2:35:45 PM	95	368	385	398	7.8E-06
2:35:46 PM	95	368	385	398	7.8E-06
2:35:47 PM	95	368	385	398	7.7E-06
2:35:48 PM	95	368	385	398	7.7E-06
2:35:49 PM	95	368	385	398	7.6E-06
2:35:50 PM	95	368	385	398	7.5E-06
2:35:51 PM	95	368	385	398	7.5E-06
2:35:52 PM	95	368	385	398	7.4E-06
2:35:53 PM	95	368	385	398	7.4E-06
Averages ->	**95**	**368**	**385**	**398**	**8.0E-06**
				Maximum ->	**8.2E-06**

Yarmouth Research and Technology, LLC

Valve Description: 3 in Class 150 Cooper Gate Valve **Date:** 6/18/2010

Cycle Number: 500

Time	Pressure (psig)	Bonnet (deg. C)	Body Temp (deg. C)	Inside Temp (deg. C)	Leakage (Atm cc/sec)
4:56:26 PM	95	381	396	398	6.6E-06
4:56:27 PM	95	381	396	398	6.6E-06
4:56:28 PM	95	381	396	398	6.6E-06
4:56:29 PM	95	381	396	398	6.7E-06
4:56:30 PM	95	381	396	398	6.7E-06
4:56:31 PM	95	381	396	398	6.7E-06
4:56:32 PM	95	381	396	398	6.7E-06
4:56:33 PM	95	381	396	398	6.7E-06
4:56:34 PM	95	381	396	398	6.7E-06
4:56:35 PM	95	381	396	398	6.7E-06
4:56:36 PM	95	381	396	398	6.7E-06
4:56:37 PM	95	381	396	398	6.7E-06
4:56:38 PM	95	381	396	398	6.7E-06
4:56:39 PM	95	381	396	398	6.7E-06
4:56:40 PM	95	381	396	398	6.7E-06
4:56:41 PM	95	381	396	398	6.7E-06
4:56:42 PM	95	381	396	398	6.6E-06
4:56:43 PM	95	381	396	398	6.6E-06
4:56:44 PM	95	381	396	398	6.6E-06
4:56:45 PM	95	381	396	398	6.6E-06
4:56:46 PM	95	381	396	398	6.6E-06
4:56:47 PM	95	381	396	398	6.6E-06
4:56:48 PM	95	381	396	398	6.6E-06
4:56:49 PM	95	381	396	398	6.5E-06
4:56:50 PM	95	381	396	397	6.5E-06
4:56:51 PM	95	381	396	398	6.5E-06
4:56:52 PM	95	381	396	398	6.5E-06
4:56:53 PM	95	381	396	398	6.5E-06
4:56:54 PM	95	381	396	398	6.4E-06
4:56:55 PM	95	381	396	398	6.5E-06
4:56:56 PM	95	381	396	398	6.4E-06
4:56:57 PM	95	381	396	398	6.5E-06
4:56:58 PM	95	381	396	398	6.4E-06
4:56:59 PM	95	381	396	398	6.4E-06
4:57:00 PM	95	381	396	398	6.4E-06
4:57:01 PM	95	381	396	397	6.4E-06
4:57:02 PM	95	381	396	397	6.3E-06
4:57:03 PM	95	381	396	397	6.3E-06
4:57:04 PM	95	381	396	398	6.3E-06
4:57:05 PM	95	381	396	397	6.3E-06
4:57:06 PM	95	381	396	398	6.3E-06
4:57:07 PM	95	381	396	397	6.3E-06
4:57:08 PM	95	381	396	398	6.3E-06
4:57:09 PM	95	381	396	398	6.2E-06
4:57:10 PM	95	381	396	397	6.2E-06
4:57:11 PM	95	381	396	397	6.2E-06
4:57:12 PM	95	381	396	397	6.2E-06
4:57:13 PM	95	381	396	397	6.2E-06
4:57:14 PM	95	381	396	397	6.2E-06
4:57:15 PM	95	381	396	397	6.2E-06
4:57:16 PM	95	381	396	397	6.1E-06
4:57:17 PM	95	381	396	397	6.1E-06
4:57:18 PM	95	381	396	397	6.1E-06
4:57:19 PM	95	381	396	397	6.1E-06
4:57:20 PM	95	381	396	397	6.1E-06
4:57:21 PM	95	381	396	397	6.1E-06
4:57:22 PM	95	381	396	397	6.1E-06
4:57:23 PM	95	381	396	397	6.0E-06
4:57:24 PM	95	381	396	397	6.0E-06
4:57:25 PM	95	381	396	397	6.0E-06
Averages ->	**95**	**381**	**396**	**398**	**6.4E-06**
				Maximum ->	**6.7E-06**

Yarmouth Research and Technology, LLC

Valve Description: 3 in Class 150 Cooper Gate Valve **Date:** 6/18/2010

Cycle Number: 500

Time	Pressure (psig)	Bonnet (deg. C)	Body Temp (deg. C)	Inside Temp (deg. C)	Leakage (Atm cc/sec)
4:58:10 PM	95	381	396	397	5.6E-06
4:58:11 PM	95	381	396	397	5.6E-06
4:58:12 PM	95	381	396	397	5.6E-06
4:58:13 PM	95	381	396	397	5.5E-06
4:58:14 PM	95	381	396	397	5.5E-06
4:58:15 PM	95	381	396	397	5.5E-06
4:58:16 PM	95	381	396	397	5.4E-06
4:58:17 PM	95	381	396	397	5.1E-06
4:58:18 PM	95	381	396	397	5.5E-06
4:58:19 PM	95	381	396	397	5.4E-06
4:58:20 PM	95	381	396	397	5.4E-06
4:58:21 PM	95	381	396	397	5.4E-06
4:58:22 PM	95	381	396	397	5.5E-06
4:58:23 PM	95	381	396	397	5.5E-06
4:58:24 PM	95	381	396	397	5.5E-06
4:58:25 PM	95	381	396	397	5.5E-06
4:58:26 PM	95	380	396	397	5.5E-06
4:58:27 PM	95	380	396	397	5.4E-06
4:58:28 PM	95	380	396	397	5.5E-06
4:58:29 PM	95	380	396	397	5.5E-06
4:58:30 PM	95	380	396	397	5.4E-06
4:58:31 PM	95	380	396	397	5.4E-06
4:58:32 PM	95	380	396	397	5.4E-06
4:58:33 PM	95	380	396	397	5.4E-06
4:58:34 PM	95	380	396	397	5.4E-06
4:58:35 PM	95	379	396	397	5.4E-06
4:58:36 PM	95	380	397	397	5.3E-06
4:58:37 PM	95	379	396	397	5.3E-06
4:58:38 PM	95	379	396	397	5.3E-06
4:58:39 PM	95	379	396	397	5.3E-06
4:58:40 PM	95	379	396	397	5.3E-06
4:58:41 PM	95	379	396	397	5.3E-06
4:58:42 PM	95	379	396	397	5.3E-06
4:58:43 PM	95	379	396	397	5.3E-06
4:58:44 PM	95	379	396	397	5.2E-06
4:58:45 PM	95	378	396	397	5.2E-06
4:58:46 PM	95	378	396	397	5.2E-06
4:58:47 PM	95	378	396	397	5.2E-06
4:58:48 PM	95	378	396	397	5.2E-06
4:58:49 PM	95	378	396	397	5.2E-06
4:58:50 PM	95	378	396	397	5.2E-06
4:58:51 PM	95	378	396	397	5.3E-06
4:58:52 PM	95	378	396	397	5.3E-06
4:58:53 PM	95	378	396	396	5.3E-06
4:58:54 PM	95	378	396	396	5.3E-06
4:58:55 PM	95	378	396	396	5.3E-06
4:58:56 PM	95	378	396	396	5.2E-06
4:58:57 PM	95	378	396	396	5.2E-06
4:58:58 PM	95	378	396	396	5.1E-06
4:58:59 PM	95	378	396	396	5.1E-06
4:59:00 PM	95	378	395	396	5.1E-06
4:59:01 PM	95	378	395	396	5.0E-06
4:59:02 PM	95	378	395	395	4.9E-06
4:59:03 PM	95	378	395	395	4.9E-06
4:59:04 PM	95	378	395	395	4.8E-06
4:59:05 PM	95	378	395	395	4.8E-06
4:59:06 PM	95	378	395	395	4.8E-06
4:59:07 PM	95	378	395	395	4.9E-06
4:59:08 PM	95	378	395	395	4.9E-06
4:59:09 PM	95	378	395	394	4.9E-06
Averages ->	**95**	**379**	**396**	**397**	**5.3E-06**
				Maximum ->	**5.6E-06**

Yarmouth Research and Technology, LLC

Valve Description: 3 in Class 150 Cooper Gate Valve **Date:** 6/21/2010

Cycle Number: 500

Time	Pressure (psig)	Bonnet (deg. C)	Body Temp (deg. C)	Inside Temp (deg. C)	Leakage (Atm cc/sec)
10:37:38 AM	275	22	22	22	1.5E-03
10:37:39 AM	275	22	22	22	1.5E-03
10:37:40 AM	275	22	22	22	1.5E-03
10:37:41 AM	275	22	22	22	1.5E-03
10:37:42 AM	275	22	22	22	1.6E-03
10:37:43 AM	275	22	22	22	1.6E-03
10:37:44 AM	275	22	22	22	1.6E-03
10:37:45 AM	275	22	22	22	1.6E-03
10:37:46 AM	275	22	22	22	1.6E-03
10:37:47 AM	275	22	22	22	1.6E-03
10:37:48 AM	275	22	22	22	1.6E-03
10:37:49 AM	275	22	22	22	1.6E-03
10:37:50 AM	275	22	22	22	1.6E-03
10:37:51 AM	275	22	22	22	1.6E-03
10:37:52 AM	275	22	22	22	1.6E-03
10:37:53 AM	275	22	22	22	1.7E-03
10:37:54 AM	275	22	22	22	1.7E-03
10:37:55 AM	275	22	22	22	1.7E-03
10:37:56 AM	275	22	22	22	1.7E-03
10:37:57 AM	275	22	22	22	1.7E-03
10:37:58 AM	275	22	22	22	1.7E-03
10:37:59 AM	275	22	22	22	1.7E-03
10:38:00 AM	275	22	22	22	1.7E-03
10:38:01 AM	275	22	22	22	1.7E-03
10:38:02 AM	275	22	22	22	1.7E-03
10:38:03 AM	275	22	22	22	1.7E-03
10:38:04 AM	275	22	22	22	1.7E-03
10:38:05 AM	275	22	22	22	1.7E-03
10:38:06 AM	275	22	22	22	1.7E-03
10:38:07 AM	275	22	22	22	1.7E-03
10:38:08 AM	275	22	22	22	1.7E-03
10:38:09 AM	275	22	22	22	1.8E-03
10:38:10 AM	275	22	22	22	1.8E-03
10:38:11 AM	275	22	22	22	1.8E-03
10:38:12 AM	275	22	22	22	1.8E-03
10:38:13 AM	275	22	22	22	1.8E-03
10:38:14 AM	275	22	22	22	1.8E-03
10:38:15 AM	275	22	22	22	1.8E-03
10:38:16 AM	275	22	22	22	1.8E-03
10:38:17 AM	275	22	22	22	1.8E-03
10:38:18 AM	275	22	22	22	1.8E-03
10:38:19 AM	275	22	22	22	1.8E-03
10:38:20 AM	275	22	22	22	1.8E-03
10:38:21 AM	275	22	22	22	1.8E-03
10:38:22 AM	275	22	22	22	1.8E-03
10:38:23 AM	275	22	21	22	1.8E-03
10:38:24 AM	275	22	22	22	1.8E-03
10:38:25 AM	275	22	22	22	1.8E-03
10:38:26 AM	275	22	22	22	1.8E-03
10:38:27 AM	275	22	22	22	1.8E-03
10:38:28 AM	275	22	22	22	1.8E-03
10:38:29 AM	275	22	22	21	1.8E-03
10:38:30 AM	275	22	22	22	1.8E-03
10:38:31 AM	275	22	22	22	1.9E-03
10:38:32 AM	275	22	22	22	1.9E-03
10:38:33 AM	275	22	22	22	1.9E-03
10:38:34 AM	275	22	22	22	1.9E-03
10:38:35 AM	275	22	22	22	1.9E-03
10:38:36 AM	275	22	22	22	1.9E-03
10:38:37 AM	275	22	22	22	1.9E-03
Averages ->	**275**	**22**	**22**	**22**	**1.7E-03**
				Maximum ->	**1.9E-03**

Yarmouth Research and Technology, LLC

Valve Description: 3 in Class 150 Cooper Gate Valve **Date:** 6/21/2010

Cycle Number: 500

Time	Pressure (psig)	Bonnet (deg. C)	Body Temp (deg. C)	Inside Temp (deg. C)	Leakage (Atm cc/sec)
10:39:23 AM	275	22	22	22	2.0E-03
10:39:24 AM	275	22	21	22	2.0E-03
10:39:25 AM	275	22	22	22	2.0E-03
10:39:26 AM	275	22	22	22	2.0E-03
10:39:27 AM	275	22	22	22	2.0E-03
10:39:28 AM	275	22	22	22	2.0E-03
10:39:29 AM	275	22	21	22	2.0E-03
10:39:30 AM	275	22	22	22	2.0E-03
10:39:31 AM	275	22	22	22	2.0E-03
10:39:32 AM	275	22	22	22	2.0E-03
10:39:33 AM	275	22	22	22	2.0E-03
10:39:34 AM	275	22	21	22	2.0E-03
10:39:35 AM	275	22	22	22	2.0E-03
10:39:36 AM	275	22	21	22	2.0E-03
10:39:37 AM	275	22	22	22	2.0E-03
10:39:38 AM	275	22	22	22	2.0E-03
10:39:39 AM	275	22	22	22	2.0E-03
10:39:40 AM	275	22	22	22	2.0E-03
10:39:41 AM	275	22	22	22	2.0E-03
10:39:42 AM	275	22	22	22	2.0E-03
10:39:43 AM	275	22	22	22	2.0E-03
10:39:44 AM	275	22	22	22	2.0E-03
10:39:45 AM	275	22	22	22	2.0E-03
10:39:46 AM	275	22	21	22	2.0E-03
10:39:47 AM	275	22	22	22	2.0E-03
10:39:48 AM	275	22	22	22	2.0E-03
10:39:49 AM	275	22	22	22	2.0E-03
10:39:50 AM	275	22	22	22	2.0E-03
10:39:51 AM	275	22	22	22	2.0E-03
10:39:52 AM	275	22	22	21	2.0E-03
10:39:53 AM	275	22	22	22	2.0E-03
10:39:54 AM	275	22	22	22	2.0E-03
10:39:55 AM	275	22	22	22	2.0E-03
10:39:56 AM	275	22	22	22	2.0E-03
10:39:57 AM	275	22	22	22	2.0E-03
10:39:58 AM	275	22	22	22	2.0E-03
10:39:59 AM	275	22	22	22	2.0E-03
10:40:00 AM	275	22	22	22	2.0E-03
10:40:01 AM	275	22	22	22	2.0E-03
10:40:02 AM	275	22	22	22	2.0E-03
10:40:03 AM	275	22	22	22	2.0E-03
10:40:04 AM	275	22	22	22	2.0E-03
10:40:05 AM	275	22	22	22	1.9E-03
10:40:06 AM	275	22	22	22	1.9E-03
10:40:07 AM	275	22	22	22	1.9E-03
10:40:08 AM	275	22	22	22	1.8E-03
10:40:09 AM	275	22	22	22	1.8E-03
10:40:10 AM	275	22	22	22	1.7E-03
10:40:11 AM	275	22	22	22	1.7E-03
10:40:12 AM	275	22	22	22	1.6E-03
10:40:13 AM	275	22	22	22	1.5E-03
10:40:14 AM	275	22	22	22	1.5E-03
10:40:15 AM	275	22	22	22	1.4E-03
10:40:16 AM	275	22	22	22	1.4E-03
10:40:17 AM	275	22	22	22	1.3E-03
10:40:18 AM	275	22	22	22	1.2E-03
10:40:19 AM	275	22	22	22	1.2E-03
10:40:20 AM	275	22	22	22	1.1E-03
10:40:21 AM	275	22	22	22	1.1E-03
10:40:22 AM	275	22	22	22	1.1E-03
Averages ->	**275**	**22**	**22**	**22**	**1.9E-03**
				Maximum ->	**2.0E-03**

Yarmouth Research and Technology, LLC

Valve Description: 3 in Class 150 Cooper Gate Valve **Date:** 6/17/2010

Cycle Number: 0

Bonnet Gasket

Time	Pressure (psig)	Bonnet (deg. C)	Body Temp (deg. C)	Inside Temp (deg. C)	Leakage (PPMv)
10:25:07 AM	275	23	22	22	0.8
10:25:08 AM	275	23	22	22	0.8
10:25:09 AM	275	23	22	22	0.8
10:25:10 AM	275	23	22	22	0.8
10:25:11 AM	275	23	22	22	0.8
10:25:12 AM	275	23	22	22	0.8
10:25:13 AM	275	23	22	22	0.8
10:25:14 AM	275	23	22	22	0.8
10:25:15 AM	275	23	22	22	0.8
10:25:16 AM	275	23	22	22	0.8
10:25:17 AM	275	23	22	22	0.8
10:25:18 AM	275	23	22	22	0.8
10:25:19 AM	275	23	22	22	0.8
10:25:20 AM	275	23	22	22	0.8
10:25:21 AM	275	23	22	22	0.8
10:25:22 AM	275	23	22	22	0.8
10:25:23 AM	275	23	22	22	0.8
10:25:24 AM	275	23	22	22	0.8
10:25:25 AM	275	23	22	22	0.8
10:25:26 AM	275	23	22	22	0.8
10:25:27 AM	275	23	22	22	0.8
10:25:28 AM	275	23	22	22	0.8
10:25:29 AM	275	23	22	22	0.8
10:25:30 AM	275	23	22	22	0.8
10:25:31 AM	275	23	22	22	0.8
10:25:32 AM	275	23	22	22	0.8
10:25:33 AM	275	23	22	22	0.8
10:25:34 AM	275	23	22	22	0.8
10:25:35 AM	275	23	22	22	0.8
10:25:36 AM	275	23	22	22	0.8
10:25:37 AM	275	23	22	22	0.8
10:25:38 AM	275	23	22	22	0.8
10:25:39 AM	275	23	22	22	0.7
10:25:40 AM	275	23	22	22	0.7
10:25:41 AM	275	23	22	22	0.7
10:25:42 AM	275	23	22	22	0.7
10:25:43 AM	275	23	22	22	0.7
10:25:44 AM	275	23	22	22	0.7
10:25:45 AM	275	23	22	22	0.7
10:25:46 AM	275	23	22	22	0.7
10:25:47 AM	275	23	22	22	0.7
10:25:48 AM	275	23	22	22	0.7
10:25:49 AM	275	23	22	22	0.7
10:25:50 AM	275	23	22	22	0.7
10:25:51 AM	275	23	22	22	0.7
10:25:52 AM	275	23	22	22	0.7
10:25:53 AM	275	23	22	22	0.7
10:25:54 AM	275	23	22	22	0.7
10:25:55 AM	275	23	22	22	0.7
10:25:56 AM	275	23	22	22	0.7
10:25:57 AM	275	23	22	22	0.7
10:25:58 AM	275	23	22	22	0.7
10:25:59 AM	275	23	22	22	0.7
10:26:00 AM	275	23	22	22	0.6
10:26:01 AM	275	23	22	22	0.6
10:26:02 AM	275	23	22	22	0.6
10:26:03 AM	275	23	22	22	0.6
10:26:04 AM	275	23	22	22	0.6
10:26:05 AM	275	23	22	22	0.6
10:26:06 AM	275	23	22	22	0.6
Averages ->	**275**	**22.7**	**22.1**	**22.3**	**0.8**
				Maximum ->	**0.8**

Yarmouth Research and Technology, LLC

Valve Description: 3 in Class 150 Cooper Gate Valve **Date:** 6/21/2010

Cycle Number: 500

Bonnet Gasket

Time	Pressure (psig)	Bonnet (deg. C)	Body Temp (deg. C)	Inside Temp (deg. C)	Leakage (PPMv)
10:41:42 AM	275	22	21	22	2.3
10:41:43 AM	275	22	22	22	2.3
10:41:44 AM	275	22	22	22	2.3
10:41:45 AM	275	22	21	22	2.3
10:41:46 AM	275	22	22	21	2.3
10:41:47 AM	275	22	21	22	2.3
10:41:48 AM	275	22	22	22	2.3
10:41:49 AM	275	22	22	22	2.3
10:41:50 AM	275	22	22	22	2.4
10:41:51 AM	275	22	22	22	2.4
10:41:52 AM	275	22	22	22	2.4
10:41:53 AM	275	22	22	22	2.4
10:41:54 AM	275	22	22	22	2.4
10:41:55 AM	275	22	22	22	2.4
10:41:56 AM	275	22	22	22	2.4
10:41:57 AM	275	22	22	22	2.5
10:41:58 AM	275	22	22	22	2.6
10:41:59 AM	275	22	22	22	2.6
10:42:00 AM	275	22	22	22	2.6
10:42:01 AM	275	22	22	22	2.6
10:42:02 AM	275	22	22	22	2.6
10:42:03 AM	275	22	22	22	2.6
10:42:04 AM	275	22	22	22	2.5
10:42:05 AM	275	22	21	22	2.5
10:42:06 AM	275	22	22	22	2.5
10:42:07 AM	275	22	22	22	2.5
10:42:08 AM	275	22	22	22	2.5
10:42:09 AM	275	22	22	22	2.5
10:42:10 AM	275	22	22	22	2.5
10:42:11 AM	275	22	22	22	2.5
10:42:12 AM	275	22	22	22	2.5
10:42:13 AM	275	22	22	22	2.5
10:42:14 AM	275	22	21	22	2.5
10:42:15 AM	275	22	22	22	2.6
10:42:16 AM	275	22	22	22	2.6
10:42:17 AM	275	22	22	22	2.6
10:42:18 AM	275	22	22	22	2.6
10:42:19 AM	275	22	22	22	2.6
10:42:20 AM	275	22	22	22	2.6
10:42:21 AM	275	22	21	22	2.6
10:42:22 AM	275	22	22	22	2.6
10:42:23 AM	275	22	22	22	2.6
10:42:24 AM	275	22	22	22	2.6
10:42:25 AM	275	22	22	22	2.7
10:42:26 AM	275	22	21	22	2.7
10:42:27 AM	275	22	22	22	2.7
10:42:28 AM	275	22	22	22	2.7
10:42:29 AM	275	22	22	22	2.6
10:42:30 AM	275	22	22	22	2.6
10:42:31 AM	275	22	22	22	2.6
10:42:32 AM	275	22	21	22	2.6
10:42:33 AM	275	22	22	22	2.6
10:42:34 AM	275	22	22	22	2.6
10:42:35 AM	275	22	22	22	2.6
10:42:36 AM	275	22	22	21	2.5
10:42:37 AM	275	22	22	22	2.5
10:42:38 AM	275	22	22	22	2.5
10:42:39 AM	275	22	21	22	2.5
10:42:40 AM	275	22	22	22	2.5
10:42:41 AM	275	22	22	22	2.6
Averages ->	**275**	**22.2**	**21.7**	**21.8**	**2.5**
				Maximum ->	**2.7**

Yarmouth Research and Technology, LLC

Valve Description: 3 in Class 150 Cooper Gate Valve

Cycle Number: 500 **Date:** 6/21/2010

Leakage Greater than Allowable

Time	Pressure (psig)	Bonnet Temp (deg. C)	Leakage (mbar -l / sec)
10:20:59 AM	71.6	22.1	3.3E-03
10:21:00 AM	71.7	21.9	3.3E-03
10:21:01 AM	71.6	22.0	3.4E-03
10:21:02 AM	71.7	21.8	3.4E-03
10:21:03 AM	71.8	22.1	3.4E-03
10:21:04 AM	71.9	21.8	3.5E-03
10:21:05 AM	71.8	22.0	3.5E-03
10:21:06 AM	71.6	21.8	3.6E-03
10:21:07 AM	71.5	22.2	3.6E-03
10:21:08 AM	71.5	21.9	3.6E-03
10:21:09 AM	71.7	21.5	3.6E-03
10:21:10 AM	71.7	22.1	3.6E-03
10:21:11 AM	71.5	22.1	3.6E-03
10:21:12 AM	71.5	21.8	3.7E-03
10:21:13 AM	71.8	21.8	3.7E-03
10:21:14 AM	71.8	21.9	3.7E-03
10:21:15 AM	71.6	21.9	3.7E-03
10:21:16 AM	71.5	22.0	3.7E-03
10:21:17 AM	71.5	22.0	3.8E-03
10:21:18 AM	71.6	22.0	3.8E-03
10:21:19 AM	71.5	21.9	3.8E-03
10:21:20 AM	71.6	22.0	3.9E-03
10:21:21 AM	71.7	22.0	3.9E-03
10:21:22 AM	71.6	22.2	3.9E-03
10:21:23 AM	71.6	21.8	4.0E-03
10:21:24 AM	71.6	21.7	4.0E-03
10:21:25 AM	71.5	21.8	4.1E-03
10:21:26 AM	71.7	21.9	4.1E-03
10:21:27 AM	71.7	22.0	4.1E-03
10:21:28 AM	71.5	22.0	4.2E-03
10:21:29 AM	71.6	22.0	4.2E-03
10:21:30 AM	71.7	21.9	4.2E-03
10:21:31 AM	71.5	21.9	4.3E-03
10:21:32 AM	71.6	22.1	4.3E-03
10:21:33 AM	71.6	22.1	4.3E-03
10:21:34 AM	71.6	22.4	4.3E-03
10:21:35 AM	71.6	21.8	4.3E-03
10:21:36 AM	71.7	22.3	4.3E-03
10:21:37 AM	71.7	21.5	4.3E-03
10:21:38 AM	71.5	22.3	4.3E-03
10:21:39 AM	71.6	22.0	4.3E-03
10:21:40 AM	71.6	22.0	4.3E-03
10:21:41 AM	71.5	22.0	4.3E-03
10:21:42 AM	71.5	22.1	4.3E-03
10:21:43 AM	71.7	22.0	4.3E-03
10:21:44 AM	71.5	22.1	4.2E-03
10:21:45 AM	71.7	22.0	4.2E-03
10:21:46 AM	71.5	22.0	4.1E-03
10:21:47 AM	71.7	22.2	4.1E-03
10:21:48 AM	71.6	22.1	4.1E-03
10:21:49 AM	71.5	22.0	4.1E-03
10:21:50 AM	71.7	22.0	4.1E-03
10:21:51 AM	71.7	21.8	4.1E-03
10:21:52 AM	71.5	22.1	4.1E-03
10:21:53 AM	71.5	22.3	4.1E-03
10:21:54 AM	71.3	22.2	4.1E-03
10:21:55 AM	71.7	22.1	4.1E-03
10:21:56 AM	71.8	21.9	4.2E-03
10:21:57 AM	71.6	21.9	4.2E-03
10:21:58 AM	71.4	22.0	4.2E-03
Averages ->	**71.6**	**22.0**	**4.0E-03**
			4.3E-03

2012 ELP COMPLIANCE STATUS REPORT

Consent Decree No. 1:11-cv-13330-TLL-CEB

See Corresponding Tab in the Confidential Folder for Relevant Documentation

2012 ELP COMPLIANCE STATUS REPORT

Consent Decree No. 1:11-cv-13330-TLL-CEB

See Corresponding Tab in the Confidential Folder for Relevant Documentation

Fluoroseal Response

Smith, Vanessa (A)

From: Russ Christian [rchristian@columbiapipe.com]
Sent: Wednesday, February 29, 2012 4:32 PM
To: DeVine, Dan (DJ)
Cc: 'Dayries, Richard [HDS]'
Subject: FW: LDAR Low Fugitive Emission Questionnaire
Attachments: Alain L. Roquet (aroquet@fluorosealvalves.com) .vcf; Fluoroseal 2 inch Severe Service Plug Valve Fugitive Emission Report.pdf; Fluoroseal 2 inch Plug Valve Fugitive Emission Report.pdf; ive Emission Test Report - 6 in Cl600 EZ-Seal Fluoroseal Valve- Ambient Test.pdf; n Test Report - 1 in Cl600 EZ-Seal Fluoroseal Valve- Ambient Test - Dec 2009.pdf; n Test Report - 2 in Cl600 EZ-Seal Fluoroseal Valve- Ambient Test - Dec 2009.pdf; on Test Report - 2 in Cl600 Fugitive Emission Fluoroseal Valve- Ambient Test.pdf; ve Emission Test Report - 8 in Cl600 Std-Seal Fluoroseal Valve- Ambient Test.pdf; Low-E Valve Questionnaire (2).docx

Importance: High

Dan

Information for your review

Russ Christian
Sunbelt / Columbia

From: Fluoroseal Sales [mailto:sales@fluorosealvalves.com]
Sent: Wednesday, February 29, 2012 4:20 PM
To: Russ Christian
Cc: usasales@fluorosealvalves.com
Subject: FW: LDAR Low Fugitive Emission Questionnaire
Importance: High

Russ,

Please find attached filled-in questionnaire for low fugitive emission.

Best regards,

Alain Roquet

From: Larry Carlson [mailto:lcarlson@fluorosealvalves.com]
Sent: Thursday, February 16, 2012 2:14 PM
To: 'Fluoroseal Sales'
Cc: USA Fluoroseal
Subject: FW: LDAR Low Fugitive Emission Questionnaire
Importance: High

From: Russ Christian [mailto:rchristian@columbiapipe.com]
Sent: Thursday, February 16, 2012 1:53 PM
To: 'Tony Boland'; 'Mark Slayton'; 'Adam Ryan (aryan@coopervalves.com)'; 'Mark Cottrell'; 'wayne.gallupe@metso.com';

'Janet Green'; 'Sumit Gupta'; 'jstewart@kennedyind.com'; 'brianm@kitz.com'; 'Terry Thurn (tthurn@tycovalves.com)'; 'Terry Thurn (tthurn@tycovalves.com)'; 'BDiStefano@ladishvalves.com'; 'mcoles@newdellco.com'; 'tom.stricklen@c-a-m.com'; 'landerschier@forberg.com'; 'rkim@swivalves.com'; 'jyonkman@lockwoodint.com'; 'clark.kreutzberg@midlandvf.com'; 'stmiller@flowserve.com'; 'sales-hoke@circortech.com'; 'Roger Shemberger (rscontrols@rscontrols.com)'; 'Rick Anderson (randerson@xomox.com)'; 'jhlee@tyvalve.co.kr'; 'larry@fluorosealvalves.com'; 'sales@douglas-chero.com'; 'jason.legendre@f-e-t.com'; 'theo.borgemeester@bacvalves.com'
Cc: 'DeVine, Dan (DJ)'; 'Dayries, Richard [HDS]'; 'Tammy Whitmer [HDS]'
Subject: LDAR Low Fugitive Emission Questionnaire
Importance: High

Reminder to all,

If you have already addressed this message please disregard. If you have not the due date is tomorrow February 17th, 2012. Please respond ASAP

Thank you

Russell Christian

To All,

Dow has requested that each of manufacturers listed on the attached excel spreadsheet fill out and return the following attached questionnaire.
The "Low-E Valve Questionnaire" will act as a record to determine if each manufacturer valves and valve design comply with EPA Method 21 and that the stem leakage is designed to be 100 ppm or less over 5 years of service.

This is all a part of Dow's LDAR program (leak detection and repair). The EPA's Consent Decree went into effect on November 23rd of 2011 for the Michigan Operations site and Dow has a limited time to meet compliance. Please fill the questionnaire to the best of your ability and with as much detail as you can provide.
The attached spreadsheet consist of two tabs that you'll reference to complete the questionnaire. The first tab is sorted by Mfg and includes the Dow CPPS number. The second tab provides a description of the Dow CPPS valve code.

I would appreciate a response that you have received this message; and please provide an estimated time for delivery of the questionnaire.
We would like a completed questionnaire no later than Friday February 17th, 2012.
Feel free to direct any questions to myself or Dan DeVine.

Regards,

Russell Christian
Regional Manager
Sunbelt / Columbia
Midland, Michigan
Ph 989-496-9260 Ext. 2001
Fx 989-496-9261
Cell 989-600-8297

As we discussed, here is the Low Fugitive Emission Questionnaire that I need to have completed. The Consent Decree went into effect on November 23rd for Michigan Operations.

If you could please assist me in collecting data, it would be greatly appreciated. (Dow has six months to get in compliance). If you can send the answers back to me I will compile the information. If we do not get responses we will need to follow up and I need to document it too.

Hopefully this will also help Sunbelt too, in case other oil or chemical companies ask for this information, if they have to deal with a Consent Decree.

.here are 33 valve manufacturers, over 100 valve items codes, in the Dow pipe specifications that require this information. See attached spreadsheet. It can sorted in different ways, but I can help with that if needed. Using the first tab (called mfg) and clicking on the drop down arrows or sorting by manufacturer may be the easiest way to build a list of who all needs to be contacted.

I look forward to working with you on this. Please contact me with any questions or let me know if there is an easier way to do this or how I can help.

Thanks,

Dan DeVine
Piping DAS, Site CPPS Technical Resource,
MIOPs, WVO, ECO, and Business Aligned Sites
Piping Practices Technical Resource Leader
Engineering Solutions
The Dow Chemical Company
1400 Building, Michigan Operations
Midland, MI 48640
phone 989-636-4330
Fax 989-638-3929
email: devinedj@dow.com

LOW FUGITIVE EMISSION VALVE AND PACKING QUESTIONNAIRE

Two production units at The Dow Chemical Company **Michigan Operations Site** recently came under a Consent Decree from the EPA. One part of this Consent Decree requires installation of Low Fugitive Emission valves and/or Low Fugitive Emission valve stem packing that meets the definition shown below. It also requires supporting documentation.

"Low-Emissions Valve" or "Low-E Valve" shall mean either (i) or (ii) as follows:

(i) A valve (including its specific packing assembly) for which the manufacturer has issued a written warranty that it will not emit fugitives at greater than 100 ppm, and that, if it does so emit at any time in the first five years, the manufacturer will replace the valve; provided however, that no valve shall qualify as "Low-E" by reason of written warranty unless the valve (including its specific packing assembly) either:

(a) first was tested by the manufacturer or a qualified testing firm pursuant to generally-accepted good engineering practices for testing fugitive emissions and the results of the testing reasonably support the warranty; or

(b) is as an Extension of another valve that qualified as "Low-E" per the definition of "Extension" listed below.

Or

(ii) A valve (including its specific packing assembly) that:

a. Has been tested by the manufacturer or a qualified testing firm pursuant to generally-accepted good engineering practices for testing fugitive emissions and that, during the test, at no time leaked at greater than 500 ppm, and on average, leaked at less than 100 ppm; or

b. Is an Extension of another valve that qualified as "Low-E" per the definition of "Extension" listed below.

NOTE: "Extension" shall mean that: (i) the tested and untested valves were produced by the same manufacturer to the same or essentially equivalent quality requirements; (ii) the characteristics of the valve that affect sealing performance (e.g., type of valve, stem motion, tolerances, surface finishes, loading arrangement, and stem and body seal material, design, and construction) are the same or essentially equivalent as between the tested valve and the untested valve; and (iii) the temperature and pressure ratings of the tested valve are at least as high as the temperature and pressure ratings of the untested valve.

Therefore can you please answer **ALL** of the following questions regarding valves that could be supplied to The Dow Chemical Company, Michigan Operations Site?

COMPANY NAME: ____FluoroSeal Inc._____

1) Will your company provide a written warranty for low emission valves as defined above?

YES or NO? NO

If YES, please describe the testing (the nature of the test and the resulting data) that supports the warranty.

OR

2) Does your company produce valves that have been proven through testing to meet the emission limits in the definition for low emission valves? YES or NO? YES

If yes to the above questions, what size and type of valves that your company produces will meet this definition or warranty? Please be specific as possible (i.e. which series of valves or models numbers).

Ball?

Plug? ½" to 24", standard configuration, Class 150, 300 & 600.

½" to 14", severe service configuration, Class 150, 300 & 600.

½" to 6". EZ-Seal configuration, Class 150, 300 & 600.

Gate?

Globe?

Butterfly?

Other?

3) Which valves, including sizes, were tested?

1", 2" & 6" EZ-Seal configuration class 600;

2" standard configuration class 150; 8" standard configuration class 600;

2" severe service configuration class 150; 2" severe service class 600.

4) Which valves, including sizes, are qualified per an extension?

½" to 24", standard configuration, Class 150, 300 & 600.

½" to 14", severe service configuration, Class 150, 300 & 600.

½" to 6". EZ-Seal configuration, Class 150, 300 & 600.

5) Will you provide the test data to The Dow Chemical Company for review? If yes, please include it in the response. YES

6) Does your Company offer a valve with low emission packing per the following definition? NO

"Low-Emissions Packing" or "Low-E Packing" shall mean either (i) or (ii) as follows:

(i) A valve packing product, independent of any specific valve, for which the manufacturer has issued a written warranty that the packing will not emit fugitives at greater than 100 ppm, and that, if it does so emit at any time in the first five years, the manufacturer will replace the product; provided however, that no packing product shall qualify as "Low-E" by reason of written warranty unless the packing first was tested by the manufacturer or a qualified testing firm pursuant to generally-accepted good engineering practices for testing fugitive emissions and the results of the testing reasonably support the warranty;

Or

(ii) A valve packing product, independent of any specific valve that has been tested by the manufacturer or a qualified testing firm pursuant to generally-accepted good engineering practices for testing fugitive emissions, and that, during the test, at no time leaked at greater than 500 ppm, and on average leaked at less than 100 ppm.

7) If yes, for which valves would "Low-E Packing" be offered? N/A

8) For which types of packing is "Low-E" status based on a written warranty? N/A

9) For which types of packing is "Low-E" status based on testing that shows the packing meets the emission limits in the definition above? N/A

10) If yes, can this Low-E Packing testing information be provided to The Dow Chemical Company for review? If yes, please include it with the response. N/A

Thank you for your assistance to help meet low emission compliance.

Please contact Dan DeVine at 989-636-4330, or by email at devinedj@dow.com with questions or clarifications.

Fugitive Emission Test Report

VDI 2440 Test Standard

Performed for

Fluoroseal Specialty Valves

www.fluorosealvalves.com

1" Class 600 Fluoroseal Plug Valve
EZ Seal Configuration
Model 602F
Ambient Temperature
Project Number: 209169

December 2009

Performed by

YARMOUTH RESEARCH AND TECHNOLOGY

434 Walnut Hill Road
N. Yarmouth, ME 04097 USA
(207) 829-5359
info@yarmouthresearch.com
www.yarmouthresearch.com

Yarmouth Research and Technology

VDI 2440 Fugitive Emission Test Summary Sheet

Customer:	**Fluoroseal Specialty Valves**	**Date:**	1-Dec-09
Project Number:	209169		
Product Description:	1 inch Class 600 Fluoroseal Plug Valve		
	Fig. 602F, EZ Seal, Model 602F		
	Body/Class WCB/600, Plug CF8M, Hi-Temp Sleeve		
	S/N 09/117636		
Packing Description:	Delta Ring		
Stem Diameter (mm):	17.0	**Circumference:**	0.053 meter
Mean Bonnet Diameter (mm):	42.8	**Circumference:**	0.134 meter

Test Temperature:	Ambient	**Test Pressure (bar):**	99
Cycling Rate:	once per 15 seconds		
Leakage Device:	Pfeiffer HLT-560		
Pressure Gauge:	PG-2000-1	**Thermocouple Type:**	K

Maximum Allowable Leakage: 10-4 mbar-l/sec per mean seal circumference (m) for < 250C

Calculated Values: Stem Seal: 5.3E-06 mbar-l/sec

Bonnet Seal: 1.3E-05 mbar-l/sec

Test Results:

Bonnet Gasket Leakage:

Leakage Reading:	6.4E-06 mbar-l/sec
Allowable:	1.3E-05 mbar-l/sec
Was Leakage Below Allowable:	**Yes**

Stem Seal Leakage:

Leakage Reading at 0 Cycles:	2.4E-06 mbar-l/sec
Leakage Reading at 1,000 Cycles:	1.9E-06 mbar-l/sec
Allowable:	5.3E-06 mbar-l/sec
Were Leakages Below Allowable:	**Yes**

Valve passes requirements of VDI2440 at ambient temperature for 1,000 mechanical cycles.

Witness

President, Yarmouth Research and Technology

STATE OF MAINE
MATTHEW J WASIELEWSKI
No. 7437
LICENSED PROFESSIONAL ENGINEER

TÜVRheinland®
Precisely Right.

CERTIFICATE

Certificate No.: 01 202 USA-TA-09-78552-4

Concerning the Agreement with the Technical Requirements in:

TA-Luft 2002, VDI 2440 Nov. 2000, Sec. 3.3.1.3

Test report: **209169-1EZ** **Datum:** **01 December, 2009**

Client : **Fluoroseal Specialty Valves**

Manufacturer's Address : **1875, 46e Avenue, Lachine**
Montreal, QC, H8T 2N8

The stem sealing system and internal flange connection have been successfully tested to meet the tightness criteria of ≤ 10^{-4} mbar x l/(s x m) with a helium mass spectrometer under the following conditions. The BFV Valve with the examined mechanical shaft seals fulfills the requirements of Section 5.2.6.4 of The German Clean Air Act, (TA-Luft), (Leakage Verification) in accordance with Section 3.3.1.3 of VDI 2440 (Rev. 2000).

Kind of Valve:	**Fluoroseal Plug Valve**	
Valve Type:	**1 inch, Class 600, EZ Seal, Figure 602F** **A216 – WCB / Plug CF8M**	
Sealing System:	**Hi-Temp Sleeve**	
Nominal Size, Nominal Pressure:	**1 inch, ANSI 600**	
Inspection Media/Pressure:	**Helium / 99 Bars**	**Temperature = Ambient**
Switching Cycles: (4/min):	**0 Cycles**	**Total Cycles 1,000**
Leakage Rate : [mbar · l / sec]	**2.4e-6 (mbar – l/sec)**	**1.9e-6 (mbar – l/sec)**
Testing Method:	**Helium Leak Test – VDI 2440, Appendix A**	

Testing Laboratory:

YARMOUTH RESEARCH AND TECHNOLOGY

Matthew J Wasielewski, PE

434 Walnut Hill Road, N. Yarmouth, ME USA

www.yarmouthresearch.com

TÜV Rheinland North America, Inc.
Industrial Services Division, Newtown, CT., USA

Kasuma J. Santos, Jr. – Examiner

TÜVRheinland® Inspection Body

TA-zertdeut

Rev C

BILL OF MATERIAL				
ITEM	QTY	DESCRIPTION		DRAWING#
1	1	BODY		3Y0-5-0XX
2	1	PLUG		421-5-0XX
3	1	SLEEVE		620-5-0XX
4	1	COVER		L501-5-0XX
5	1	COMBINED DIAPHRAGM/DELTARING		665-0-0XX
6	1	METAL DIAPHRAGM		680-0-3XX
7	1	EZ CAM		L641-0-0XX
8	1	EZ LOCK		900-5-0XX
9	1	EZ BRACKET		77Y-4-0XX
10	VAR.	COVER BOLT		PURCHASE
11	1	ADJUSTMENT SCREW		L871-0-0XX
12	4	BRACKET BOLT		PURCHASE
13	1	FLUOROSEAL WRENCH	●	L700-0-0XX
14	1	WRENCH BOLT	●	PURCHASE
15	1	GEAR ACTUATOR	✱	PURCHASE
16	4	GEAR BOLT	✱	PURCHASE

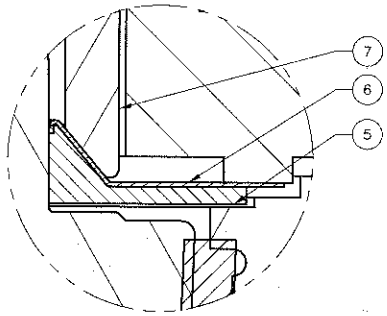

DETAIL A
N.T.S.

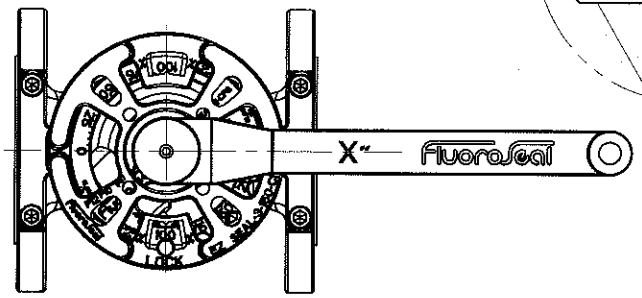

PLAN VIEW

LEGEND:
✱ FOR USE WITH ACTUATOR ONLY.
● FOR USE WITH WRENCH ONLY

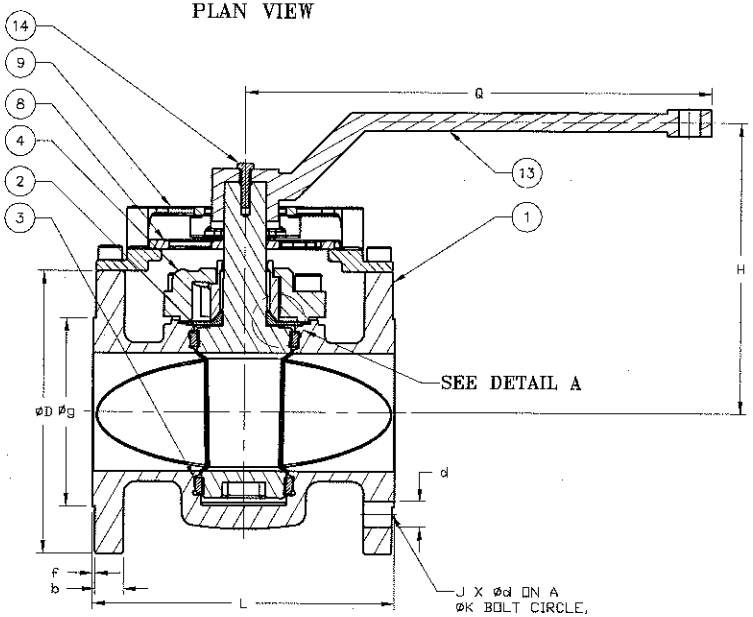

SECTION A-A

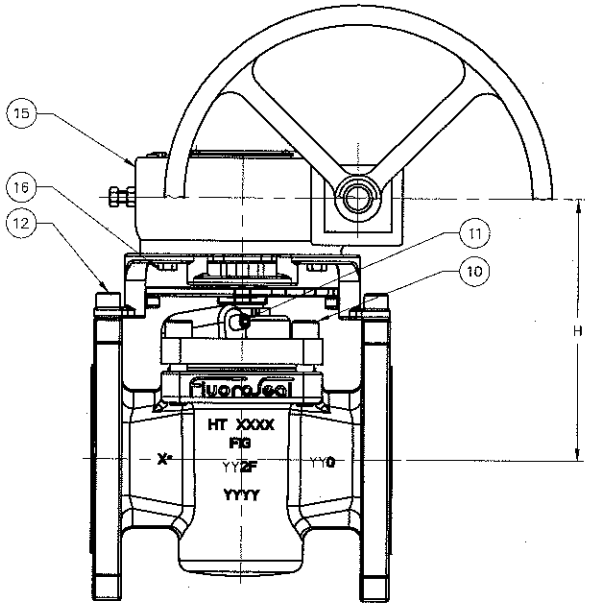

REV	DESCRIPTION	DATE	DFTR	APVD
0	SEE #NPD-0610	2008/08/14	K.D.	S.E.

REVISION

This drawing and the information herein contained is the property of FluoroSeal Specialty Valves and/or its subsidiaries and is supplied upon the express conditions that the same be returned to FluoroSeal Specialty Valves upon request; all information herein contained is to be treated as secret and confidential; no reproduction of this drawing or any part thereof shall be made without the written permission of FluoroSeal Specialty Valves; acceptance of this drawing shall be deemed acceptance of the foregoing conditions.

FluoroSeal EPOXIMATT VALVES
1875, 46e Avenue Lachine
Montreal QC, H8T 2N8
TEL: (514)739-0220
FAX: (514)739-5452

TITLE:
FLUOROSEAL EZ PLUG VALVE
1/2" TO 6" 152F/302F/602F ASSEMBLY
STD. CONFIG.

SIZE	DWG NO.	REV
A	FPS-152-302-602-F-EZ-05-15	0

DRAWN BY: K.DEBCHI	DATE: 2008/08/14	SCALE: N.T.S	
CHKD BY: S.ELFASHNY	DATE: 2008/08/14	SHEET: 1/2	

THIRD ANGLE PROJECTION DO NOT SCALE DRAWING

THIS DRAWING AND INFORMATION HEREIN CONTAINED IS THE PROPERTY OF FLUOROSEAL SPECIALITY VALVES AND FOR ITS SUB-SIDIARIES AND IS SUPPLIED UPON THE EXPRESS CONDITIONS THAT THE SAME BE RETURNED TO FLUOROSEAL SPECIALITY VALVES UPON REQUEST:
ALL INFORMATION HEREIN CONTAINED IS TO BE TREATED AS SECRET AND CONFIDENTIAL; NO REPRODUCTION OF THIS DRAWING OF ANY PART THEREOF SHALL BE MADE WITHOUT THE WRITTEN PERMISSION OF FLUOROSEAL SPECIALITY VALVES; ACCEPTANCE OF THE FOREGOING CONDITIONS.

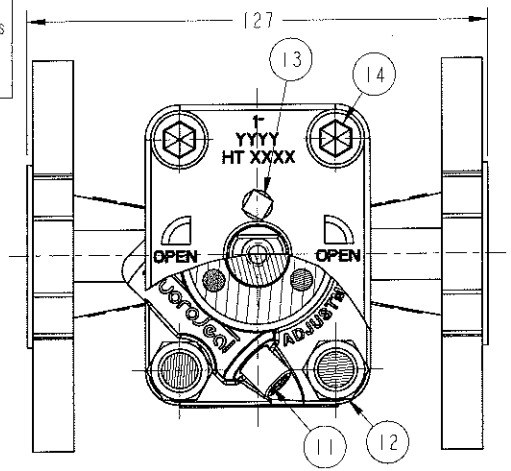

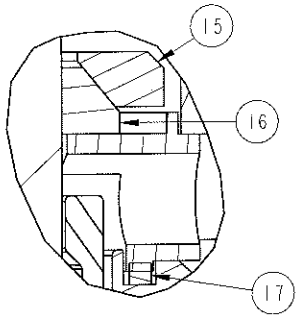

DETAIL B
SCALE 3:2

INDEX	DESCRIPTION	MATERIAL	.	DWG NUMBER
1	BODY	AS REQUEST	1	
2	EZ MODIFIED PLUG	CF8M	1	X-0560
3	SLEEVE	PTFE	1	
4	COVER JOINT	PTFE	1	X-0558
5	METAL DIAPHRAGM	304	1	
6	PLASTIC DIAPHRAGM	PTFE	1	
7	EZ COVER	CF8	1	X-0559
8	TEST CYLINDER	304	1	X-0556
9	COVER	CF8	1	
10	EZ CAM	CD4MCu	1	
11	3/8"-24 UNF X 1 1/4" SET SCREW	304	1	
12	3/8-16 UNC NUT	304	4	
13	SQ HEAD 1/4"-20 UNC X 3/4"	304	3	
14	HHCS 3/8-16 UNC X 2.5"	304	4	
15	TRUST WASHER	CF8M	1	
16	TEST PLASTIC DIAPHRAGM	PTFE	1	X-0555
17	TOP COVER JOINT	PTFE	1	X-0557

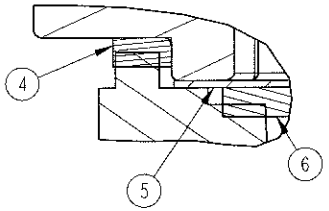

DETAIL A
SCALE 2:1

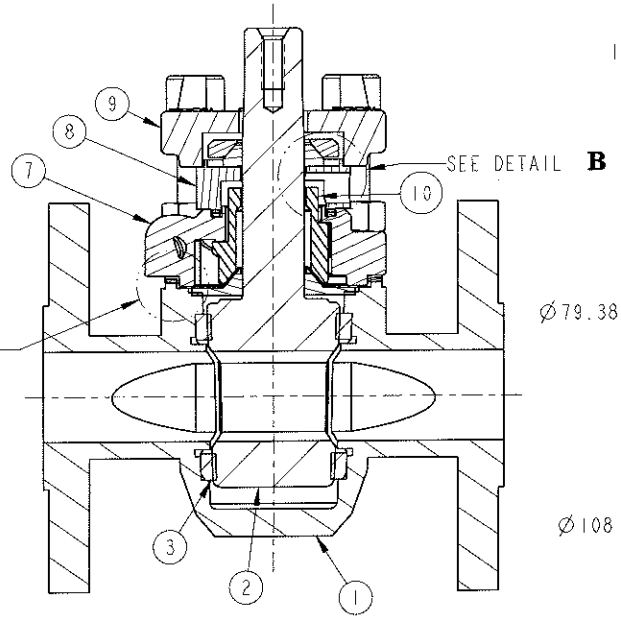

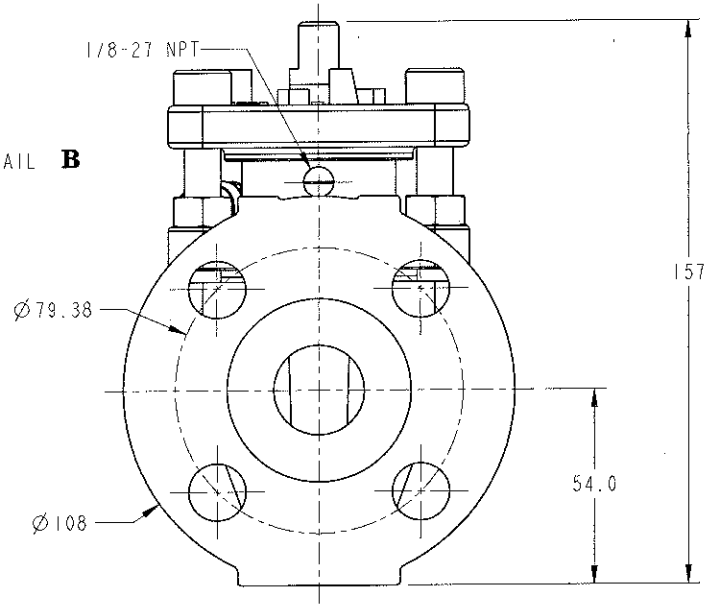

REV.	DESCRIPTION	DATE	DFTR	CHKD
0	SEE # NPD-0693	2009/02/11	Y.J.	S.E.

NOTE:
1.PARTS WITH DWG NUMBER ARE FOR TEST PURPOSE, OTHER PARTS AS STANDARD.

TITLE: FLUOROSEAL PLUG VALVE 1" FE VALVE FOE FE TEST ASSEMBLY			PART SIZE: 1"
SIZE: A	DRAWING NUMBER: ASM		REV: 0
	DRAWN BY: Y.JIANG	DATE: 2009/02/11	SCALE: 1:2
	CHEKED BY: S.ELFASHNY	DATE: 2009/02/11	PG: 1/1
MATERIAL: SEE TABLE	THIRD ANGLE PROJECTION	DO NOT SCALE DRAWING	

FluoroSeal
1875,46TH AVENUE, LACHINE, QC, H8T 2N8 TEL:(514)739-0220 FAX:(514)739-5452

Yarmouth Research and Technology

Yarmouth Research Addendum to VDI 2440 (2000)

Scope: This addendum provides additional information and recommendations for valve tests performed according to VDI 2440. This does not supersede the VDI specification. Recommendations for sliding stem on-off valves (gates/globes), quarter-turn valves (ball, butterfly, plug, etc) and control valves are covered by this addendum.

Test Parameters:

Test Fluid	99% minimum purity helium		
Test Pressure	Full rated pressure at test temperature		
Temperature:	Ambient, 200C or 400C (or as stated by mfgr)		
Number of Mechanical Cycles	**Valve Type**	**Minimum**	**Extended**
	Gate/Globes	100	500
	Quarter Turns	1000	5000
	Control	1000	25000
Allowable Leakage:	1 x 10-4 mbar-l/sec per meter of mean seal circumference for temperatures at or below 250C 1 x 10-2 mbar-l/sec per meter of mean seal circumference for temperatures greater than 250C		

Test Procedure:

1. Assemble valves with suitable flanges, fittings and gaskets for the test conditions.
2. Calculate maximum allowable leakage of seals and gaskets by multiplying the above maximum allowable leakage rate by the mean seal diameter(meters)
3. For tests at a temperature greater than ambient, heat insulated valve to required temperature. Tolerance on temperature shall be +/- 5 degree C. Ambient temperature shall be 15-27 degree C. Thermocouple shall be inserted into the valve body near the stem seals.
4. After temperature has stabilized, pressurize valve with helium to the rated pressure. Tolerance on pressure shall be +/- 5%
5. Check fittings, gaskets, etc for leakage and adjust as required.
6. Adjust packing gland nuts to manufacturer's recommended torque.
7. Hold pressure for a minimum of 24 hours prior to leakage readings.
8. Cycle valve to "Minimum" cycle number stated above.
9. Create a small chamber around the stem seal area using AL foil and foil tape. The enclosure shall have a small diameter tube inside the chamber at the uppermost position, so that the rising helium leakage is collected.
10. Calibrate mass spectrometer with known leak rate. Zero meter to atmospheric conditions.
11. Attach the mass spectrometer leakage probe to the stem seal chamber tube.
12. After a 5 minute duration or until the leakage as stabilized, record the leakage over a 1 minute duration. Record the highest leakage.
13. Cycle the valve 1 time and record leakage reading during and after the cycling is completed to record maximum leakage.
14. If leakage is below the allowable, the additional cycles may be performed on the valve to the "Extended" cycle number and steps 11-13 shall be repeated.

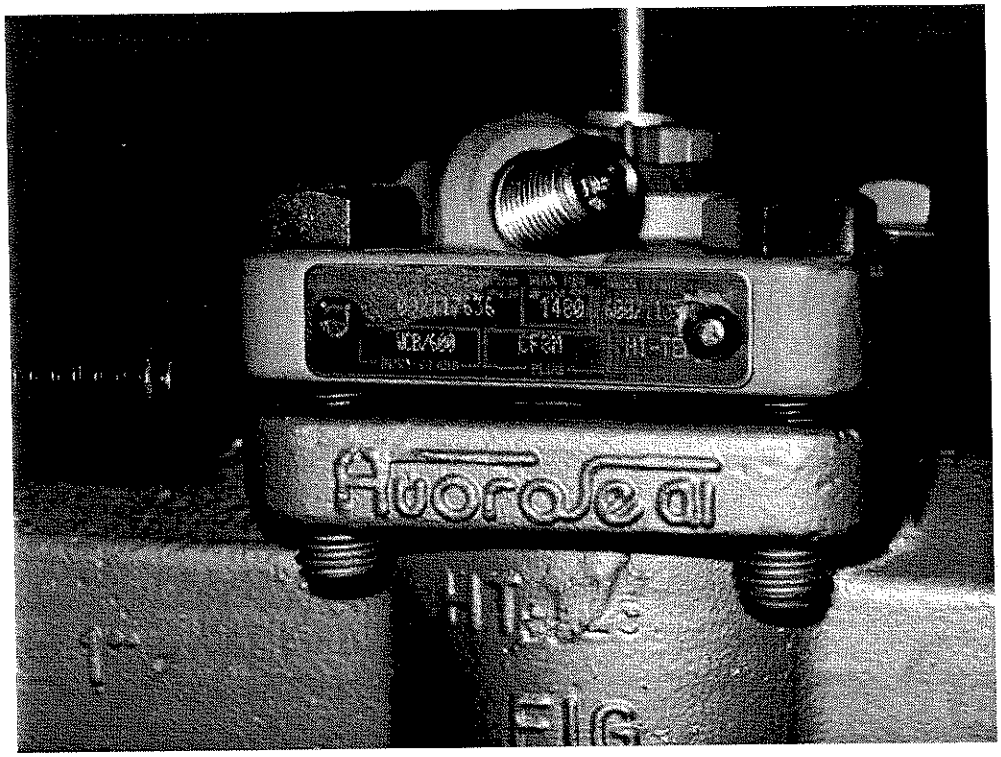

Tag Information

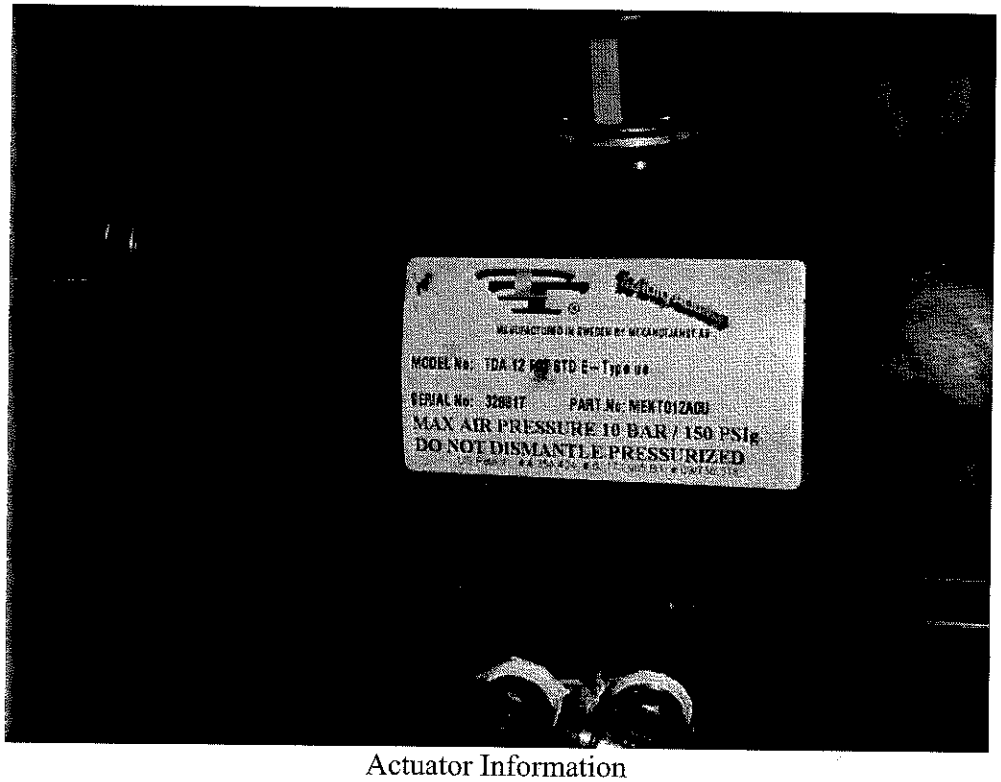

Actuator Information

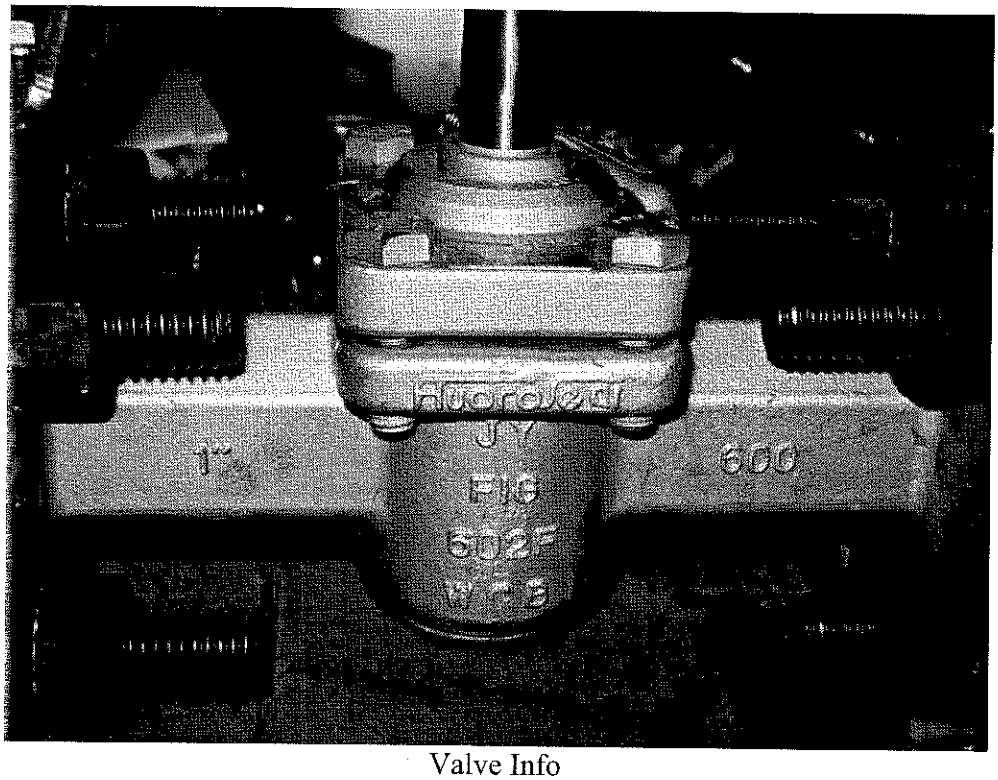

Valve Info

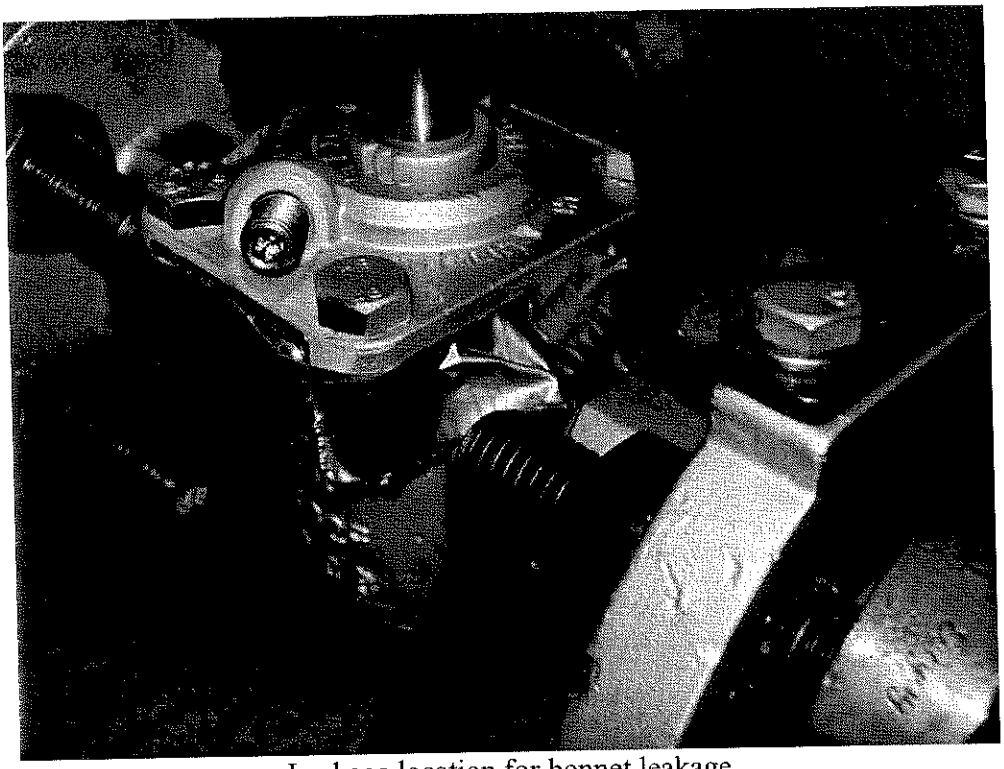

Leakage location for bonnet leakage

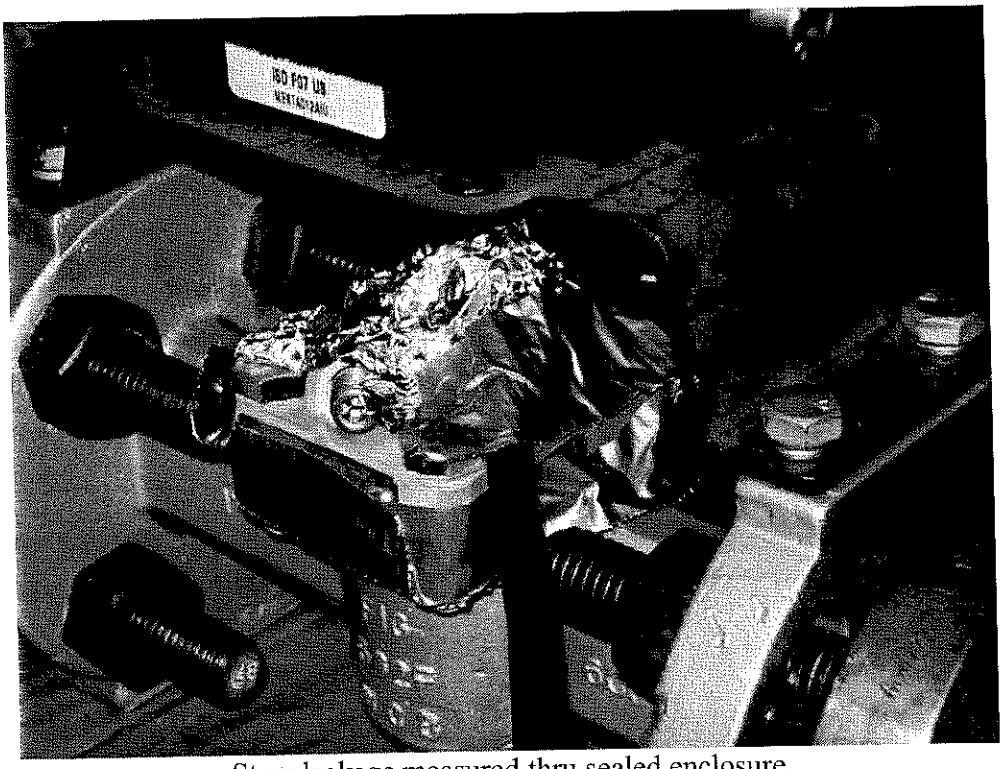

Stem leakage measured thru sealed enclosure

Yarmouth Research and Technology

Valve Description: 1 inch Cl600 Fluoroseal EZ Seal Valve **Date:** 12/1/2009

Cycle Number: 0

Time	Pressure (bar)	Bonnet (deg. C)	Body Temp (deg. C)	Body Temp (deg. C)	Leakage (mbar -l/sec)
9:21:48 AM	102	21	21	21	2.4E-06
9:21:49 AM	102	21	21	21	2.3E-06
9:21:50 AM	102	21	21	21	2.3E-06
9:21:51 AM	102	21	21	21	2.3E-06
9:21:52 AM	102	21	21	21	2.2E-06
9:21:53 AM	102	21	21	21	2.2E-06
9:21:54 AM	102	21	21	21	2.2E-06
9:21:55 AM	102	21	21	21	2.2E-06
9:21:56 AM	102	21	21	21	2.2E-06
9:21:57 AM	102	21	21	21	2.2E-06
9:21:58 AM	102	21	21	21	2.2E-06
9:21:59 AM	102	21	21	21	2.2E-06
9:22:00 AM	102	21	21	21	2.2E-06
9:22:01 AM	102	21	21	21	2.2E-06
9:22:02 AM	102	21	21	21	2.2E-06
9:22:03 AM	102	21	21	21	2.2E-06
9:22:04 AM	102	21	21	21	2.2E-06
9:22:05 AM	102	21	21	21	2.2E-06
9:22:06 AM	102	21	21	21	2.2E-06
9:22:07 AM	102	21	21	21	2.2E-06
9:22:08 AM	102	21	21	21	2.2E-06
9:22:09 AM	102	21	21	21	2.1E-06
9:22:10 AM	102	21	21	21	2.1E-06
9:22:11 AM	102	21	21	21	2.1E-06
9:22:12 AM	102	21	21	21	2.1E-06
9:22:13 AM	102	21	21	21	2.1E-06
9:22:14 AM	102	21	21	21	2.1E-06
9:22:15 AM	102	21	21	21	2.1E-06
9:22:16 AM	102	21	21	21	2.0E-06
9:22:17 AM	102	21	21	21	2.0E-06
9:22:18 AM	102	21	21	21	2.0E-06
9:22:19 AM	102	21	21	21	2.0E-06
9:22:20 AM	102	21	21	21	2.0E-06
9:22:21 AM	102	21	21	21	2.0E-06
9:22:22 AM	102	21	21	21	2.0E-06
9:22:23 AM	102	21	21	21	1.9E-06
9:22:24 AM	102	21	21	21	1.9E-06
9:22:25 AM	102	21	21	21	1.9E-06
9:22:26 AM	102	21	21	21	1.9E-06
9:22:27 AM	102	21	21	21	1.9E-06
9:22:28 AM	102	21	21	21	1.9E-06
9:22:29 AM	102	21	21	21	1.8E-06
9:22:30 AM	102	21	21	21	1.8E-06
9:22:31 AM	102	21	21	21	1.8E-06
9:22:32 AM	102	21	21	21	1.8E-06
9:22:33 AM	102	21	21	21	1.8E-06
9:22:34 AM	102	21	21	21	1.8E-06
9:22:35 AM	102	21	21	21	1.8E-06
9:22:36 AM	102	21	21	21	1.8E-06
9:22:37 AM	102	21	21	21	1.8E-06
9:22:38 AM	102	21	21	21	1.8E-06
9:22:39 AM	102	21	21	21	1.8E-06
9:22:40 AM	102	21	21	21	1.8E-06
9:22:41 AM	102	21	21	21	1.8E-06
9:22:42 AM	102	21	21	21	1.8E-06
9:22:43 AM	102	21	21	21	1.8E-06
9:22:44 AM	102	21	21	21	1.8E-06
9:22:45 AM	102	21	21	21	1.8E-06
9:22:46 AM	102	21	21	21	1.8E-06
9:22:47 AM	102	21	21	21	1.8E-06
Averages ->	**102**	**21**	**21**	**21**	**2.0E-06**
			Maximum ->		**2.4E-06**

Yarmouth Research and Technology

Valve Description: 1 inch Cl600 Fluoroseal EZ Seal Valve **Date:** 12/1/2009

Cycle Number: 1000

Time	Pressure (bar)	Bonnet (deg. C)	Body Temp (deg. C)	Body Temp (deg. C)	Leakage (mbar -l/sec)
1:50:57 PM	102	22	22	22	1.8E-06
1:50:58 PM	102	22	22	22	1.8E-06
1:50:59 PM	102	22	22	22	1.9E-06
1:51:00 PM	102	22	22	22	1.9E-06
1:51:01 PM	102	22	22	22	1.8E-06
1:51:02 PM	102	22	22	22	1.8E-06
1:51:03 PM	102	22	22	22	1.8E-06
1:51:04 PM	102	22	22	22	1.8E-06
1:51:05 PM	102	22	22	22	1.8E-06
1:51:06 PM	102	22	22	22	1.9E-06
1:51:07 PM	102	22	22	22	1.8E-06
1:51:08 PM	102	22	22	22	1.8E-06
1:51:09 PM	102	22	22	22	1.8E-06
1:51:10 PM	102	22	22	22	1.8E-06
1:51:11 PM	102	22	22	22	1.8E-06
1:51:12 PM	102	22	22	22	1.9E-06
1:51:13 PM	102	22	22	22	1.8E-06
1:51:14 PM	102	22	22	22	1.8E-06
1:51:15 PM	102	22	22	22	1.8E-06
1:51:16 PM	102	22	22	22	1.8E-06
1:51:17 PM	102	22	22	22	1.8E-06
1:51:18 PM	102	22	22	22	1.8E-06
1:51:19 PM	102	22	22	22	1.8E-06
1:51:20 PM	102	22	22	22	1.8E-06
1:51:21 PM	102	22	22	22	1.8E-06
1:51:22 PM	102	22	22	22	1.8E-06
1:51:23 PM	102	22	22	22	1.8E-06
1:51:24 PM	102	22	22	22	1.8E-06
1:51:25 PM	102	22	22	22	1.8E-06
1:51:26 PM	102	22	22	22	1.8E-06
1:51:27 PM	102	22	22	22	1.8E-06
1:51:28 PM	102	22	22	22	1.8E-06
1:51:29 PM	102	22	22	22	1.8E-06
1:51:30 PM	102	22	22	22	1.8E-06
1:51:31 PM	102	22	22	22	1.8E-06
1:51:32 PM	102	22	22	22	1.8E-06
1:51:33 PM	102	22	22	22	1.8E-06
1:51:34 PM	102	22	22	22	1.8E-06
1:51:35 PM	102	22	22	22	1.8E-06
1:51:36 PM	102	22	22	22	1.8E-06
1:51:37 PM	102	22	22	22	1.8E-06
1:51:38 PM	102	22	22	22	1.8E-06
1:51:39 PM	102	22	22	22	1.8E-06
1:51:40 PM	102	22	22	22	1.8E-06
1:51:41 PM	102	22	22	22	1.8E-06
1:51:42 PM	102	22	22	22	1.8E-06
1:51:43 PM	102	22	22	22	1.8E-06
1:51:44 PM	102	22	22	22	1.8E-06
1:51:45 PM	102	22	22	22	1.8E-06
1:51:46 PM	102	22	22	22	1.8E-06
1:51:47 PM	102	22	22	22	1.8E-06
1:51:48 PM	102	22	22	22	1.8E-06
1:51:49 PM	102	22	22	22	1.8E-06
1:51:50 PM	102	22	22	22	1.8E-06
1:51:51 PM	102	22	22	22	1.8E-06
1:51:52 PM	102	22	22	22	1.8E-06
1:51:53 PM	102	22	22	22	1.8E-06
1:51:54 PM	102	22	22	22	1.8E-06
1:51:55 PM	102	22	22	22	1.8E-06
1:51:56 PM	102	22	22	22	1.8E-06
Averages ->	**102**	**22**	**22**	**22**	**1.8E-06**
			Maximum ->		**1.9E-06**

Yarmouth Research and Technology

Valve Description: 1 inch Cl600 Fluoroseal EZ Seal Valve **Date:** 12/1/2009

Cycle Number: Start of Test - Bonnet Gasket Static Leakage

Time	Pressure (bar)	Bonnet (deg. C)	Body Temp (deg. C)	Body Temp (deg. C)	Leakage (mbar -l/sec)
9:12:50 AM	102	21	21	21	6.4E-06
9:12:51 AM	102	21	21	21	6.4E-06
9:12:52 AM	102	21	21	21	6.3E-06
9:12:53 AM	102	21	21	21	6.3E-06
9:12:54 AM	102	21	21	21	6.2E-06
9:12:55 AM	102	21	21	21	6.2E-06
9:12:56 AM	102	21	21	21	6.2E-06
9:12:57 AM	102	21	21	21	6.1E-06
9:12:58 AM	102	21	21	21	6.1E-06
9:12:59 AM	102	21	21	21	6.1E-06
9:13:00 AM	102	21	21	21	6.0E-06
9:13:01 AM	102	21	21	21	6.0E-06
9:13:02 AM	102	21	21	21	6.0E-06
9:13:03 AM	102	21	21	21	6.0E-06
9:13:04 AM	102	21	21	21	6.0E-06
9:13:05 AM	102	21	21	21	5.9E-06
9:13:06 AM	102	21	21	21	5.9E-06
9:13:07 AM	102	21	21	21	5.9E-06
9:13:08 AM	102	21	21	21	5.9E-06
9:13:09 AM	102	21	21	21	5.9E-06
9:13:10 AM	102	21	21	21	5.9E-06
9:13:11 AM	102	21	21	21	5.9E-06
9:13:12 AM	102	21	21	21	5.9E-06
9:13:13 AM	102	21	21	21	5.9E-06
9:13:14 AM	102	21	21	21	5.8E-06
9:13:15 AM	102	21	21	21	5.8E-06
9:13:16 AM	102	21	21	21	5.8E-06
9:13:17 AM	102	21	21	21	5.8E-06
9:13:18 AM	102	21	21	21	5.8E-06
9:13:19 AM	102	21	21	21	5.8E-06
9:13:20 AM	102	21	21	21	5.8E-06
9:13:21 AM	102	21	21	21	5.8E-06
9:13:22 AM	102	21	21	21	5.7E-06
9:13:23 AM	102	21	21	21	5.8E-06
9:13:24 AM	102	21	21	21	5.7E-06
9:13:25 AM	102	21	21	21	5.8E-06
9:13:26 AM	102	21	21	21	5.8E-06
9:13:27 AM	102	21	21	21	5.8E-06
9:13:28 AM	102	21	21	21	5.9E-06
9:13:29 AM	102	21	21	21	5.9E-06
9:13:30 AM	102	21	21	21	6.0E-06
9:13:31 AM	102	21	21	21	6.1E-06
9:13:32 AM	102	21	21	21	6.1E-06
9:13:33 AM	102	21	21	21	6.1E-06
9:13:34 AM	102	21	21	21	6.1E-06
9:13:35 AM	102	21	21	21	6.1E-06
9:13:36 AM	102	21	21	21	6.1E-06
9:13:37 AM	102	21	21	21	6.1E-06
9:13:38 AM	102	21	21	21	6.0E-06
9:13:39 AM	102	21	21	21	6.0E-06
9:13:40 AM	102	21	21	21	5.9E-06
9:13:41 AM	102	21	21	21	5.9E-06
9:13:42 AM	102	21	21	21	5.9E-06
9:13:43 AM	102	21	21	21	5.9E-06
9:13:44 AM	102	21	21	21	5.8E-06
9:13:45 AM	102	21	21	21	5.8E-06
9:13:46 AM	102	21	21	21	5.8E-06
9:13:47 AM	102	21	21	21	5.7E-06
9:13:48 AM	102	21	21	21	5.8E-06
9:13:49 AM	102	21	21	21	5.8E-06
Averages ->	**102**	**21**	**21**	**21**	**5.9E-06**
			Maximum ->		**6.4E-06**

Fugitive Emission Test Report

Performed for

FluoroSeal Speciality Valves
6418 Transcanadian Hwy, West
Montreal, Canada H4T 1X4
www.fluorosealvalves.com

2 inch Class 150 Severe Service Plug Valve

Project Number: 20354
May 2003

Performed by

YARMOUTH RESEARCH AND TECHNOLOGY

92 East Elm Street
Yarmouth, ME 04096 USA
(207) 829-5359
yrtlab@maine.rr.com
www.yarmouthresearch.com

Yarmouth Research and Technology

PROJECT SUMMARY

Project Number: 20354

Customer: Fluoroseal Specialty Valves

Contact: Mr. Riad Haffar

Date(s) of Test: 5/7/03 – 6/2/03

Product(s) Tested: One 2 inch Class 150 Severe Service Plug Valve with double acting pneumatic actuator

Purpose of Test: The test was conducted to evaluate the valve's stem seal sealing performance when measured according to the test specification and 40 CFR Part 60, Appendix A, Method 21.

Test Procedure: The ISO Fugitive Emission Draft Specification was used for this test. The basic test parameters were:

- The valve was cycled at a rate of 4 times per minute.
- Test pressure was 250 psig.
- Test media was 99% methane.
- Test temperature was ambient.
- Leakage measurements were made with the stem static and with the stem in motion.
- Measurements were made every 5000 cycles.

Conclusion: Valve was tested as received without any packing adjustments being made throughout the test.

Maximum leakage reading with the stem static was 3.2 PPMv and with the stem in motion 6.0 PPMv with methane.

At the conclusion of the 100,000 cycles, a leakage reading was made using helium as the test media. Maximum leakage reading with the stem static was 17.7 PPMv and with the stem in motion 28.3 PPMv.

Leakage of the bonnet/body seal was below 1 PPMv at the beginning and end of the cycling.

See attached data sheets for more information.

Test Witness:

Matthew J. Wasielewski, P.E., President

STATE OF MAINE
MATTHEW J. WASIELEWSKI
#7437
REGISTERED
MECHANICAL ENGINEER

92 East Elm Street, Yarmouth, Maine 04096 USA
www.yarmouthresearch.com

Yarmouth Research and Technology

DATA SUMMARY

Customer: Fluoroseal Specialty Valves **Date:** 27-May-03

Product Description: 2 inch Class 150 Fluoroseal Severe Service Plug Valve

Project Number: 20354

Test Pressure: 250 psig

Test Media: 99% Methane

Test Results: The average and maximum leakage results shown below were calculated from 60 readings measured during a minute duration.

See data sheets for more detailed information.

		Stem Seal Leakage Readings (PPMv)			
		Static Condition		*Dynamic Condition*	
Cycle Number	*Temperature (F)*	*Avg.*	*Max.*	*Avg.*	*Max.*
0	Ambient	0.3	0.3	0.3	0.3
5000	Ambient	0.1	0.4	0.4	0.6
10000	Ambient	0.1	0.6	0.1	0.1
15000	Ambient	1.1	2.8	0.5	0.7
20000	Ambient	0.2	0.3	0.3	0.3
25000	Ambient	0.2	0.3	0.1	0.1
30000	Ambient	0.8	1.0	0.7	0.9
35000	Ambient	0.3	0.5	0.3	0.4
40000	Ambient	0.8	2.0	1.2	6.0
45000	Ambient	1.5	1.8	1.1	1.7
50000	Ambient	0.6	1.2	0.6	1.9
55000	Ambient	0.2	0.3	0.1	0.2
60000	Ambient	0.6	1.1	0.4	0.5
65000	Ambient	1.0	1.2	1.0	1.4
70000	Ambient	1.6	1.7	1.3	2.3
75000	Ambient	0.8	1.6	1.0	1.2
80000	Ambient	1.0	3.2	0.5	2.0
85000	Ambient	0.6	0.7	1.9	10
90000	Ambient	0.4	0.6	0.4	0.5
95000	Ambient	1.2	1.6	1.1	1.4
100000	Ambient	1.5	2.1	1.9	2.5
100004	Helium Test	13.3	17.7	22.6	28.3

Bonnet Gasket Leakage

Leakage was measured at the bonnet/body seal at the start and end of the cycling.

Measurements were below 1 PPMv.

STATE OF MAINE
MATTHEW J. WASIELEWSKI
#7437
REGISTERED MECHANICAL ENGINEER

Witness

92 East Elm Street, Yarmouth, Maine, 04096 USA
www.yarmouthresearch.com

Yarmouth Research and Technology

Static Leakage Chart

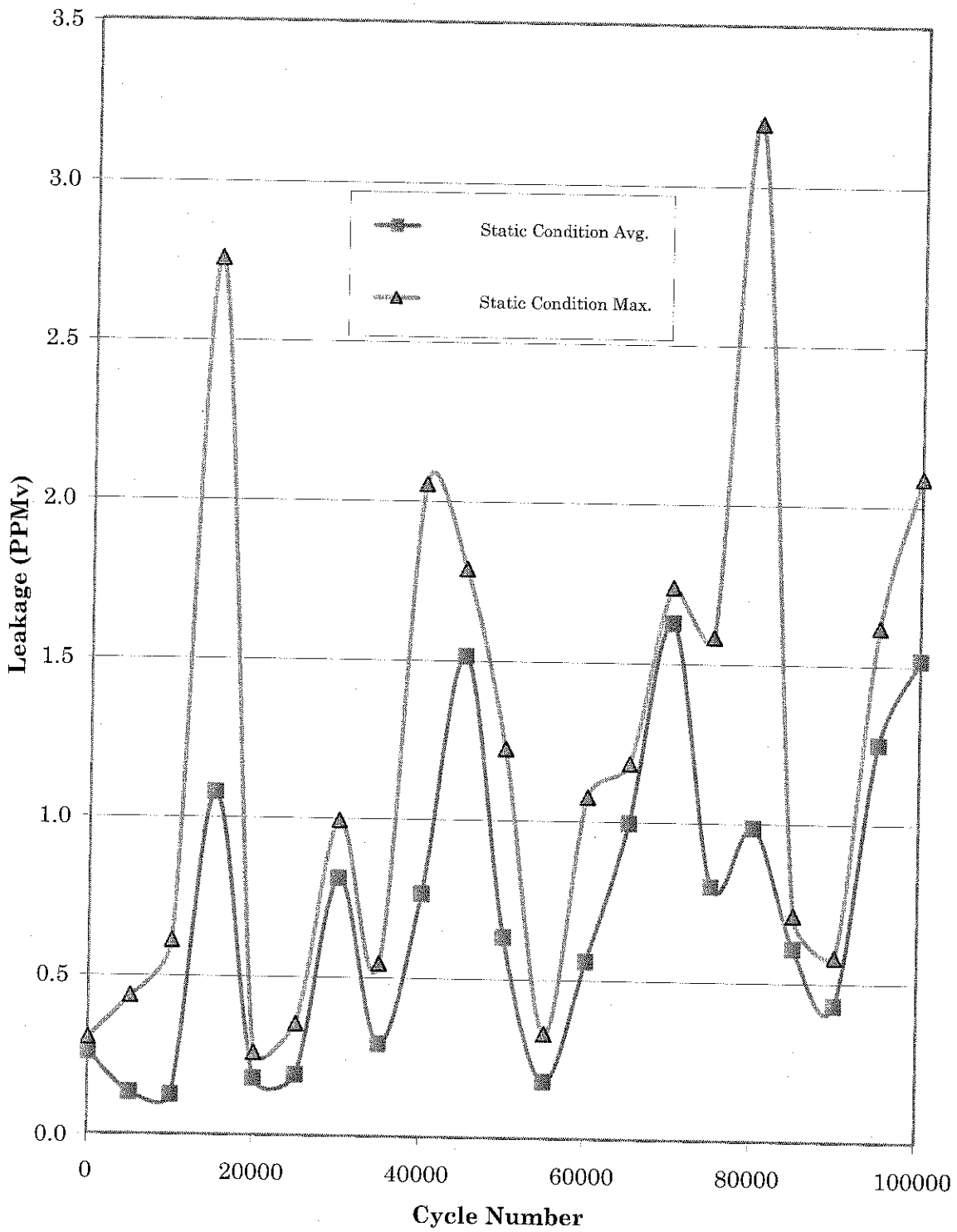

92 East Elm Street, Yarmouth, Maine, 04096 USA
www.yarmouthresearch.com

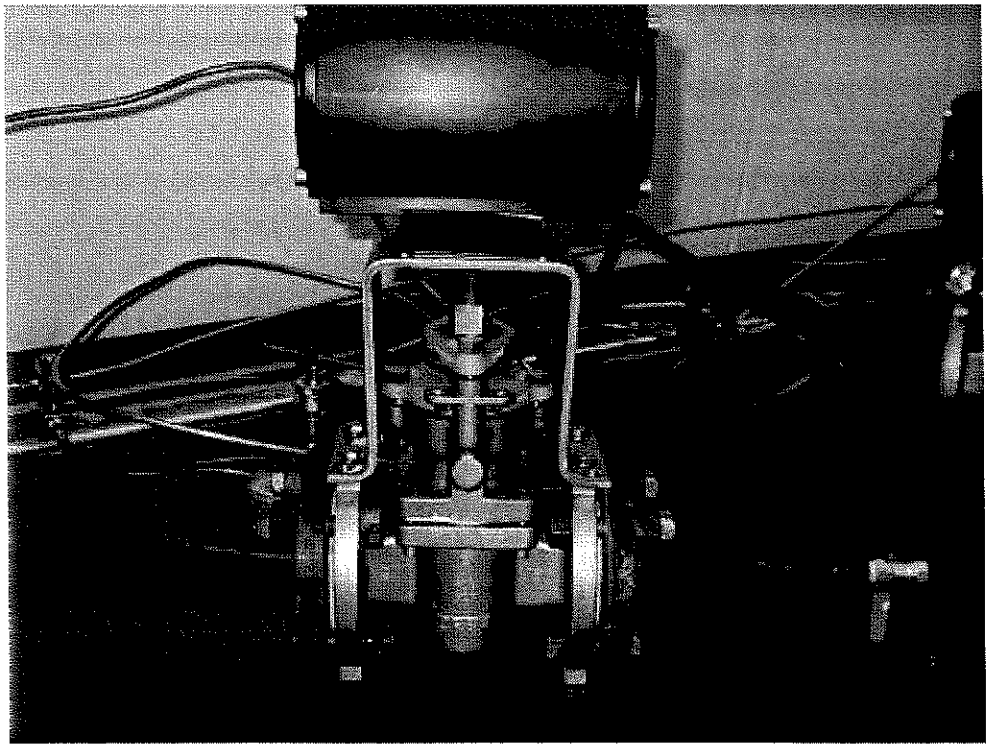

Valve Setup for Test

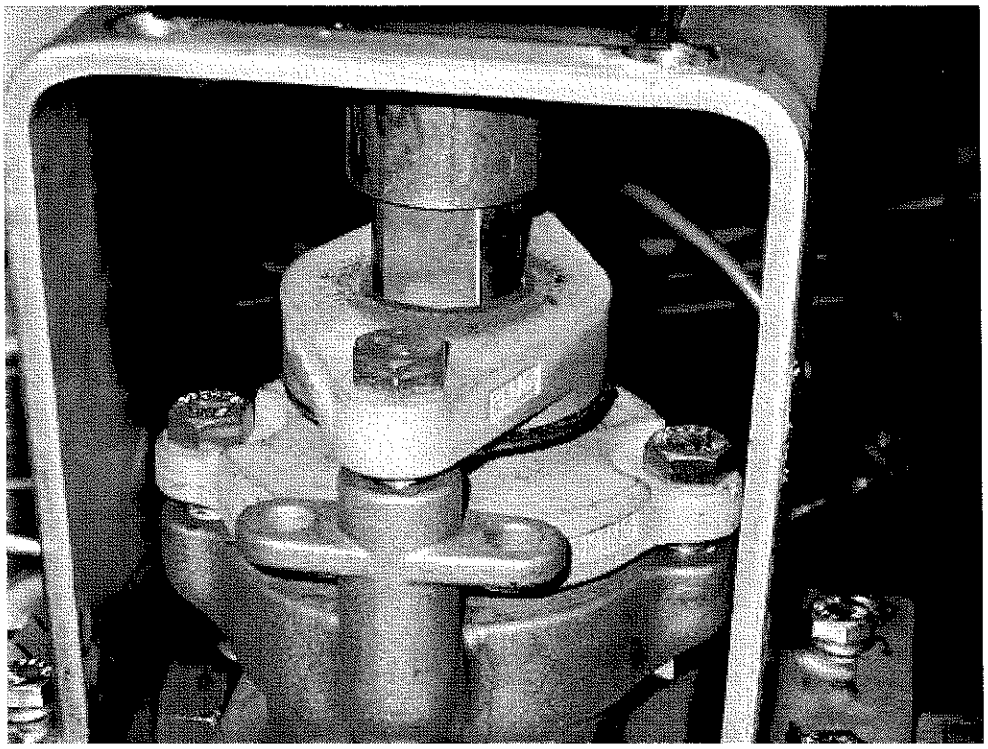

Bonnet After 100,000 Cycles

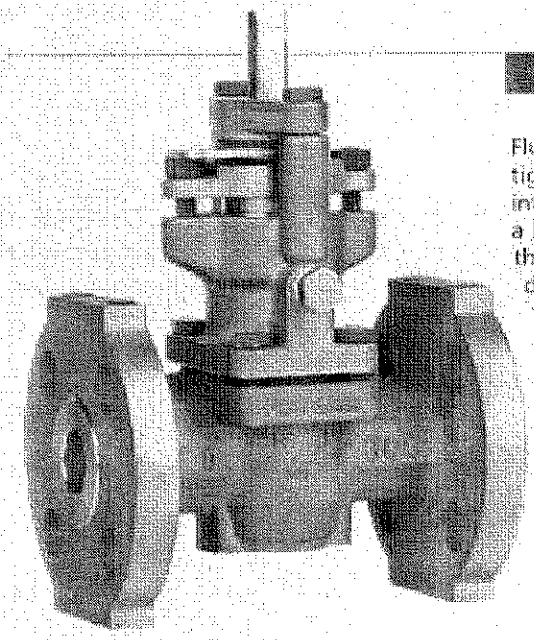

FluoroSeal Severe Service Sleeved Plug Valves

FluoroSeal has developed this FE model sleeved plug valve for tight emissions control in more demanding services. This valve is intended for applications in processes involving thermal cycles or a high number of mechanical operations. Proven features from the standard FluoroSeal sleeved plug valve form the basis of the design, combined with innovative use of other proven seal technologies all incorporated into a compact but robust package. Extensive testing across the envelope of intended conditions have proven the capability of the design to perform under varying applications.

DESIGN FEATURES

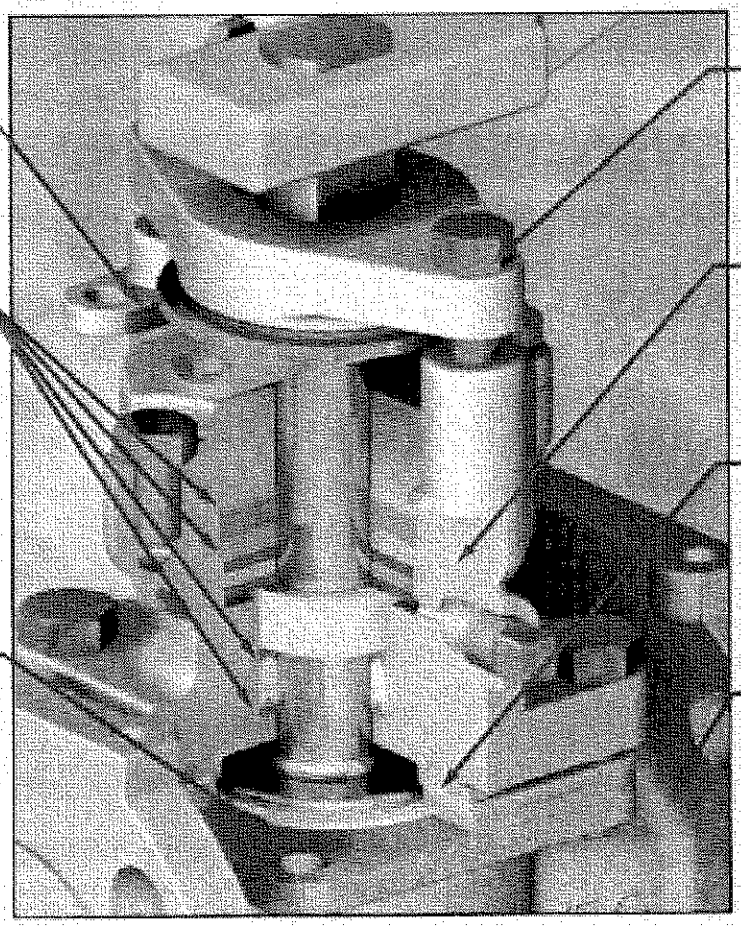

Standard blowout capability and seat position stop.

Primary shaft seal consists of compacted unprocessed PTFE seal ring. Secondary shaft seal utilizes tight cap metallic cloth for fail safe to metal containment.

PTFE sleeve provides wide and precise seal. Performance is enhanced with 360 compensations of port opening and precise load ratio to basic sealing forces on plug.

In-line seal adjustable independent of shaft seal.

Innovative shaft seal provides self adjusting redundant and independent packing available in all PTFE or PTFE and flexible graphite combinations. Capacitated for optional monitoring or injection port.

Bonnet is double sealed with fully contained independent PTFE and flexible graphite seal backing up the primary seal at the sleeve.

Precision (investment) cast body provides tight dimensional control to ensure concentricity between plug and body. This maximizes inherent safe back to the primary seals and shaft seals during operation.

Trim Rating

Yarmouth Research and Technology

Valve Description: 2 inch Class 150 Fluoroseal Severe Service Plug Valve

Cycle Number: 0 **Date** 5/7/2003

Time	Pressure (psig)	Temp. (deg. F)	Sampling Rate (l/m)	PPMv Reading
3:16:16 PM	249.9	73.0	1.0	0.2
3:16:17 PM	249.9	73.0	1.0	0.2
3:16:18 PM	249.9	73.0	1.0	0.2
3:16:19 PM	249.9	73.0	1.0	0.2
3:16:20 PM	249.8	73.0	1.0	0.2
3:16:21 PM	249.8	73.0	1.0	0.2
3:16:22 PM	249.9	73.0	1.0	0.2
3:16:23 PM	249.8	73.0	1.0	0.2
3:16:24 PM	249.8	73.0	1.0	0.3
3:16:25 PM	249.8	73.0	1.0	0.3
3:16:26 PM	249.8	73.0	1.0	0.3
3:16:27 PM	249.8	73.0	1.0	0.3
3:16:28 PM	249.8	73.0	1.0	0.3
3:16:29 PM	249.9	73.0	1.0	0.3
3:16:30 PM	249.8	73.0	1.0	0.3
3:16:31 PM	249.9	73.0	1.0	0.3
3:16:32 PM	249.9	73.0	1.0	0.2
3:16:34 PM	249.9	73.0	1.0	0.3
3:16:35 PM	249.8	73.0	1.0	0.3
3:16:36 PM	249.8	73.0	1.0	0.3
3:16:37 PM	249.9	73.0	1.0	0.2
3:16:38 PM	249.8	73.0	1.0	0.2
3:16:39 PM	249.8	73.0	1.0	0.2
3:16:40 PM	249.8	73.0	1.0	0.2
3:16:41 PM	249.9	73.0	1.0	0.2
3:16:42 PM	249.9	73.0	1.0	0.2
3:16:43 PM	249.9	73.0	1.0	0.2
3:16:44 PM	249.9	73.0	1.0	0.3
3:16:45 PM	249.8	73.0	1.0	0.3
3:16:46 PM	249.9	73.0	1.0	0.3
3:16:47 PM	249.8	73.0	1.0	0.2
3:16:48 PM	249.9	73.0	1.0	0.2
3:16:49 PM	249.9	73.0	1.0	0.2
3:16:50 PM	249.8	73.0	1.0	0.2
3:16:51 PM	249.9	73.0	1.0	0.3
3:16:52 PM	249.9	73.0	1.0	0.3
3:16:53 PM	249.9	73.0	1.0	0.3
3:16:54 PM	249.9	73.0	1.0	0.3
3:16:55 PM	249.9	73.0	1.0	0.3
3:16:56 PM	249.8	73.0	1.0	0.3
3:16:58 PM	249.8	74.0	1.0	0.3
3:16:59 PM	249.9	73.0	1.0	0.3
3:17:00 PM	249.9	73.0	1.0	0.3
3:17:01 PM	249.9	73.0	1.0	0.3
3:17:02 PM	249.9	73.0	1.0	0.3
3:17:03 PM	249.9	73.0	1.0	0.3
3:17:04 PM	249.8	73.0	1.0	0.3
3:17:05 PM	249.9	73.0	1.0	0.3
3:17:06 PM	249.8	73.0	1.0	0.3
3:17:07 PM	249.9	73.0	1.0	0.3
3:17:08 PM	249.9	73.0	1.0	0.3
3:17:09 PM	249.9	73.0	1.0	0.3
3:17:10 PM	249.9	73.0	1.0	0.2
3:17:11 PM	249.9	73.0	1.0	0.2
3:17:12 PM	249.9	73.0	1.0	0.3
3:17:13 PM	249.9	73.0	1.0	0.2
3:17:14 PM	249.9	73.0	1.0	0.2
3:17:15 PM	249.9	73.0	1.0	0.2
3:17:16 PM	249.9	73.0	1.0	0.2
3:17:17 PM	249.9	73.0	1.0	0.2
Averages ->	**249.8**	**73.0**	**1.0**	**0.3**
			Maximum ->	**0.3**

Yarmouth Research and Technology

Valve Description: 2 inch Class 150 Fluoroseal Severe Service Plug Valve

Cycle Number: 0 **Date** 5/7/2003

Time	Pressure (psig)	Temp. (deg. F)	Sampling Rate (l/m)	PPMv Reading
3:22:10 PM	250.7	75.0	1.0	0.3
3:22:11 PM	250.7	75.0	1.0	0.3
3:22:12 PM	250.7	75.0	1.0	0.3
3:22:13 PM	250.7	75.0	1.0	0.3
3:22:14 PM	250.7	75.0	1.0	0.3
3:22:15 PM	250.7	75.0	1.0	0.3
3:22:16 PM	250.7	75.0	1.0	0.3
3:22:17 PM	250.7	75.0	1.0	0.3
3:22:18 PM	250.7	76.0	1.0	0.3
3:22:19 PM	250.7	75.0	1.0	0.3
3:22:20 PM	250.7	75.0	1.0	0.3
3:22:21 PM	250.7	75.0	1.0	0.3
3:22:22 PM	250.7	75.0	1.0	0.3
3:22:23 PM	250.7	75.0	1.0	0.3
3:22:24 PM	250.7	75.0	1.0	0.3
3:22:25 PM	250.7	75.0	1.0	0.3
3:22:26 PM	250.7	75.0	1.0	0.3
3:22:27 PM	250.7	75.0	1.0	0.3
3:22:28 PM	250.7	75.0	1.0	0.3
3:22:29 PM	250.7	75.0	1.0	0.3
3:22:31 PM	250.7	75.0	1.0	0.3
3:22:32 PM	250.8	75.0	1.0	0.3
3:22:33 PM	250.8	75.0	1.0	0.3
3:22:34 PM	250.8	75.0	1.0	0.3
3:22:35 PM	250.7	75.0	1.0	0.3
3:22:36 PM	250.8	75.0	1.0	0.3
3:22:37 PM	250.7	75.0	1.0	0.3
3:22:38 PM	250.8	75.0	1.0	0.3
3:22:39 PM	250.7	75.0	1.0	0.3
3:22:40 PM	250.7	75.0	1.0	0.3
3:22:41 PM	250.7	75.0	1.0	0.3
3:22:42 PM	250.7	75.0	1.0	0.3
3:22:43 PM	250.7	76.0	1.0	0.3
3:22:44 PM	250.8	76.0	1.0	0.3
3:22:45 PM	250.8	75.0	1.0	0.3
3:22:46 PM	250.8	75.0	1.0	0.3
3:22:47 PM	250.8	75.0	1.0	0.3
3:22:48 PM	250.8	76.0	1.0	0.3
3:22:49 PM	250.8	76.0	1.0	0.3
3:22:50 PM	250.8	75.0	1.0	0.3
3:22:51 PM	250.8	76.0	1.0	0.3
3:22:53 PM	250.8	75.0	1.0	0.3
3:22:54 PM	250.7	75.0	1.0	0.3
3:22:55 PM	250.8	75.0	1.0	0.3
3:22:56 PM	250.7	75.0	1.0	0.3
3:22:57 PM	250.7	75.0	1.0	0.3
3:22:58 PM	250.8	75.0	1.0	0.3
3:22:59 PM	250.7	75.0	1.0	0.3
3:23:00 PM	250.8	75.0	1.0	0.3
3:23:01 PM	250.9	75.0	1.0	0.3
3:23:02 PM	250.9	75.0	1.0	0.3
3:23:03 PM	250.9	75.0	1.0	0.3
3:23:04 PM	250.8	75.0	1.0	0.3
3:23:05 PM	250.8	76.0	1.0	0.3
3:23:06 PM	250.8	75.0	1.0	0.3
3:23:07 PM	250.8	75.0	1.0	0.3
3:23:08 PM	250.8	75.0	1.0	0.3
3:23:09 PM	250.8	76.0	1.0	0.3
3:23:10 PM	250.8	76.0	1.0	0.3
3:23:11 PM	250.8	75.0	1.0	0.3
Averages ->	**250.8**	**75.2**	**1.0**	**0.3**
			Maximum ->	**0.3**

92 East Elm Street, Yarmouth, Maine, 04096 USA
www.yarmouthresearch.com

Yarmouth Research and Technology

Valve Description: 2 inch Class 150 Fluoroseal Severe Service Plug Valve

Cycle Number: 5000 **Date** 5/8/2003

Time	Pressure (psig)	Temp. (deg. F)	Sampling Rate (l/m)	PPMv Reading
2:38:21 PM	249.7	74.0	1.0	0.0
2:38:22 PM	249.7	74.0	1.0	0.0
2:38:23 PM	249.7	74.0	1.0	0.0
2:38:24 PM	249.7	74.0	1.0	0.0
2:38:25 PM	249.6	74.0	1.0	0.0
2:38:26 PM	249.7	74.0	1.0	0.0
2:38:27 PM	249.6	74.0	1.0	0.1
2:38:28 PM	249.7	74.0	1.0	0.2
2:38:29 PM	249.7	74.0	1.0	0.3
2:38:30 PM	249.7	74.0	1.0	0.4
2:38:31 PM	249.6	74.0	1.0	0.4
2:38:32 PM	249.7	74.0	1.0	0.4
2:38:33 PM	249.7	74.0	1.0	0.3
2:38:34 PM	249.7	74.0	1.0	0.3
2:38:35 PM	249.7	73.0	1.0	0.3
2:38:36 PM	249.7	74.0	1.0	0.2
2:38:37 PM	249.7	74.0	1.0	0.1
2:38:38 PM	249.6	74.0	1.0	0.1
2:38:39 PM	249.7	74.0	1.0	0.1
2:38:41 PM	249.7	74.0	1.0	0.0
2:38:42 PM	249.7	73.0	1.0	0.0
2:38:43 PM	249.6	74.0	1.0	0.0
2:38:44 PM	249.6	74.0	1.0	0.0
2:38:45 PM	249.7	74.0	1.0	0.1
2:38:46 PM	249.7	74.0	1.0	0.1
2:38:47 PM	249.6	74.0	1.0	0.1
2:38:48 PM	249.6	74.0	1.0	0.1
2:38:49 PM	249.7	74.0	1.0	0.1
2:38:50 PM	249.6	74.0	1.0	0.2
2:38:51 PM	249.6	74.0	1.0	0.2
2:38:52 PM	249.6	74.0	1.0	0.2
2:38:53 PM	249.6	74.0	1.0	0.2
2:38:54 PM	249.6	74.0	1.0	0.2
2:38:55 PM	249.6	74.0	1.0	0.2
2:38:56 PM	249.6	74.0	1.0	0.2
2:38:57 PM	249.6	74.0	1.0	0.3
2:38:58 PM	249.7	74.0	1.0	0.2
2:38:59 PM	249.7	74.0	1.0	0.3
2:39:00 PM	249.6	74.0	1.0	0.2
2:39:01 PM	249.6	74.0	1.0	0.2
2:39:03 PM	249.6	74.0	1.0	0.1
2:39:04 PM	249.6	74.0	1.0	0.1
2:39:05 PM	249.6	74.0	1.0	0.1
2:39:06 PM	249.6	74.0	1.0	0.1
2:39:07 PM	249.7	74.0	1.0	0.1
2:39:08 PM	249.7	74.0	1.0	0.0
2:39:09 PM	249.7	74.0	1.0	0.0
2:39:10 PM	249.6	74.0	1.0	0.0
2:39:11 PM	249.6	74.0	1.0	0.0
2:39:12 PM	249.6	74.0	1.0	0.0
2:39:13 PM	249.6	74.0	1.0	0.1
2:39:14 PM	249.6	74.0	1.0	0.1
2:39:15 PM	249.6	74.0	1.0	0.1
2:39:16 PM	249.6	74.0	1.0	0.1
2:39:17 PM	249.6	74.0	1.0	0.1
2:39:18 PM	249.6	74.0	1.0	0.1
2:39:19 PM	249.7	74.0	1.0	0.1
2:39:20 PM	249.6	74.0	1.0	0.1
2:39:21 PM	249.6	74.0	1.0	0.1
2:39:22 PM	249.6	74.0	1.0	0.1
Averages ->	**249.7**	**74.0**	**1.0**	**0.1**
			Maximum ->	**0.4**

92 East Elm Street, Yarmouth, Maine, 04096 USA
www.yarmouthresearch.com

Yarmouth Research and Technology

Valve Description: 2 inch Class 150 Fluoroseal Severe Service Plug Valve

Cycle Number: 5000 **Date** 5/8/2003

Time	Pressure (psig)	Temp. (deg. F)	Sampling Rate (l/m)	PPMv Reading
2:40:40 PM	249.6	73.0	1.0	0.2
2:40:41 PM	249.6	74.0	1.0	0.2
2:40:42 PM	249.6	74.0	1.0	0.2
2:40:43 PM	249.6	74.0	1.0	0.2
2:40:44 PM	249.6	74.0	1.0	0.2
2:40:45 PM	249.6	74.0	1.0	0.1
2:40:46 PM	249.7	74.0	1.0	0.1
2:40:47 PM	249.7	74.0	1.0	0.1
2:40:48 PM	249.7	74.0	1.0	0.2
2:40:49 PM	249.7	74.0	1.0	0.3
2:40:50 PM	249.6	74.0	1.0	0.4
2:40:51 PM	249.6	74.0	1.0	0.4
2:40:52 PM	249.7	74.0	1.0	0.4
2:40:53 PM	249.6	74.0	1.0	0.4
2:40:55 PM	249.6	74.0	1.0	0.4
2:40:56 PM	249.7	74.0	1.0	0.4
2:40:57 PM	249.6	74.0	1.0	0.4
2:40:58 PM	249.7	74.0	1.0	0.4
2:40:59 PM	249.6	74.0	1.0	0.4
2:41:00 PM	249.6	74.0	1.0	0.4
2:41:01 PM	249.7	74.0	1.0	0.3
2:41:02 PM	249.7	74.0	1.0	0.3
2:41:03 PM	249.7	74.0	1.0	0.3
2:41:04 PM	249.7	74.0	1.0	0.3
2:41:05 PM	249.7	74.0	1.0	0.3
2:41:06 PM	249.7	74.0	1.0	0.3
2:41:07 PM	249.7	74.0	1.0	0.3
2:41:08 PM	249.7	74.0	1.0	0.3
2:41:09 PM	249.7	74.0	1.0	0.3
2:41:10 PM	249.7	74.0	1.0	0.3
2:41:11 PM	249.7	74.0	1.0	0.3
2:41:12 PM	249.7	74.0	1.0	0.4
2:41:13 PM	249.7	74.0	1.0	0.4
2:41:14 PM	249.7	74.0	1.0	0.4
2:41:15 PM	249.7	74.0	1.0	0.4
2:41:16 PM	249.8	74.0	1.0	0.4
2:41:18 PM	249.7	74.0	1.0	0.5
2:41:19 PM	249.7	74.0	1.0	0.6
2:41:20 PM	249.7	74.0	1.0	0.6
2:41:21 PM	249.7	74.0	1.0	0.6
2:41:22 PM	249.7	74.0	1.0	0.6
2:41:23 PM	249.6	74.0	1.0	0.6
2:41:24 PM	249.6	74.0	1.0	0.5
2:41:25 PM	249.7	74.0	1.0	0.5
2:41:26 PM	249.7	74.0	1.0	0.5
2:41:27 PM	249.7	74.0	1.0	0.5
2:41:28 PM	249.7	74.0	1.0	0.5
2:41:29 PM	249.6	74.0	1.0	0.4
2:41:30 PM	249.7	74.0	1.0	0.4
2:41:31 PM	249.8	74.0	1.0	0.3
2:41:32 PM	249.7	74.0	1.0	0.4
2:41:33 PM	249.7	74.0	1.0	0.4
2:41:34 PM	249.7	74.0	1.0	0.4
2:41:35 PM	249.7	74.0	1.0	0.4
2:41:36 PM	249.7	74.0	1.0	0.3
2:41:37 PM	249.7	74.0	1.0	0.3
2:41:38 PM	249.6	74.0	1.0	0.4
2:41:40 PM	249.7	74.0	1.0	0.4
2:41:41 PM	249.7	74.0	1.0	0.4
2:41:42 PM	249.7	74.0	1.0	0.4
Averages ->	**249.7**	**74.0**	**1.0**	**0.4**
			Maximum ->	**0.6**

92 East Elm Street, Yarmouth, Maine, 04096 USA
www.yarmouthresearch.com

Yarmouth Research and Technology

Valve Description: 2 inch Class 150 Fluoroseal Severe Service Plug Valve

Cycle Number: 10000 **Date** 5/9/2003

Time	Pressure (psig)	Temp. (deg. F)	Sampling Rate (l/m)	PPMv Reading
12:46:58 PM	250.4	74.0	1.0	0.1
12:46:59 PM	250.3	74.0	1.0	0.1
12:47:00 PM	250.3	74.0	1.0	0.1
12:47:01 PM	250.3	74.0	1.0	0.1
12:47:02 PM	250.3	74.0	1.0	0.1
12:47:03 PM	250.3	74.0	1.0	0.1
12:47:04 PM	250.3	74.0	1.0	0.1
12:47:05 PM	250.3	74.0	1.0	0.1
12:47:06 PM	250.3	74.0	1.0	0.1
12:47:07 PM	250.3	74.0	1.0	0.1
12:47:08 PM	250.3	74.0	1.0	0.1
12:47:09 PM	250.3	74.0	1.0	0.1
12:47:11 PM	250.3	74.0	1.0	0.1
12:47:12 PM	250.3	74.0	1.0	0.1
12:47:13 PM	250.3	74.0	1.0	0.1
12:47:14 PM	250.3	74.0	1.0	0.1
12:47:15 PM	250.3	74.0	1.0	0.1
12:47:16 PM	250.3	74.0	1.0	0.1
12:47:17 PM	250.2	74.0	1.0	0.1
12:47:18 PM	250.3	74.0	1.0	0.1
12:47:19 PM	250.2	74.0	1.0	0.1
12:47:20 PM	250.2	74.0	1.0	0.1
12:47:21 PM	250.2	74.0	1.0	0.1
12:47:22 PM	250.2	74.0	1.0	0.2
12:47:23 PM	250.2	74.0	1.0	0.2
12:47:24 PM	250.2	74.0	1.0	0.2
12:47:25 PM	250.2	74.0	1.0	0.2
12:47:26 PM	250.2	74.0	1.0	0.3
12:47:27 PM	250.2	74.0	1.0	0.5
12:47:28 PM	250.2	74.0	1.0	0.6
12:47:29 PM	250.2	75.0	1.0	0.6
12:47:30 PM	250.2	74.0	1.0	0.5
12:47:31 PM	250.2	74.0	1.0	0.3
12:47:32 PM	250.2	74.0	1.0	0.2
12:47:34 PM	250.1	74.0	1.0	0.1
12:47:35 PM	250.1	74.0	1.0	0.1
12:47:36 PM	250.2	74.0	1.0	0.1
12:47:37 PM	250.1	74.0	1.0	0.1
12:47:38 PM	250.2	74.0	1.0	0.1
12:47:39 PM	250.2	74.0	1.0	0.0
12:47:40 PM	250.1	74.0	1.0	0.1
12:47:41 PM	250.1	74.0	1.0	0.0
12:47:42 PM	250.1	74.0	1.0	0.0
12:47:43 PM	250.1	74.0	1.0	0.0
12:47:44 PM	250.1	74.0	1.0	0.0
12:47:45 PM	250.1	75.0	1.0	0.0
12:47:46 PM	250.1	74.0	1.0	0.0
12:47:47 PM	250.1	74.0	1.0	0.0
12:47:48 PM	250.1	74.0	1.0	0.0
12:47:49 PM	250.1	74.0	1.0	0.0
12:47:50 PM	250.1	74.0	1.0	0.0
12:47:51 PM	250.1	74.0	1.0	0.1
12:47:52 PM	250.1	74.0	1.0	0.1
12:47:53 PM	250.1	74.0	1.0	0.0
12:47:54 PM	250.1	74.0	1.0	0.0
12:47:55 PM	250.1	74.0	1.0	0.1
12:47:56 PM	250.1	74.0	1.0	0.1
12:47:58 PM	250.1	74.0	1.0	0.1
12:47:59 PM	250.1	74.0	1.0	0.1
12:48:00 PM	250.1	74.0	1.0	0.1
Averages ->	**250.2**	**74.0**	**1.0**	**0.1**
			Maximum ->	**0.6**

92 East Elm Street, Yarmouth, Maine, 04096 USA
www.yarmouthresearch.com

Yarmouth Research and Technology

Valve Description: 2 inch Class 150 Fluoroseal Severe Service Plug Valve

Cycle Number: 10000 **Date** 5/9/2003

Time	Pressure (psig)	Temp. (deg. F)	Sampling Rate (l/m)	PPMv Reading
12:48:11 PM	250.0	75.0	1.0	0.1
12:48:12 PM	250.0	74.0	1.0	0.1
12:48:13 PM	249.9	75.0	1.0	0.1
12:48:14 PM	249.9	74.0	1.0	0.1
12:48:15 PM	249.9	74.0	1.0	0.1
12:48:16 PM	249.8	74.0	1.0	0.1
12:48:17 PM	249.7	74.0	1.0	0.0
12:48:18 PM	249.7	74.0	1.0	0.0
12:48:19 PM	249.7	74.0	1.0	0.1
12:48:20 PM	249.7	74.0	1.0	0.1
12:48:21 PM	249.7	74.0	1.0	0.0
12:48:22 PM	249.7	74.0	1.0	0.1
12:48:23 PM	249.8	74.0	1.0	0.1
12:48:24 PM	249.7	74.0	1.0	0.1
12:48:25 PM	249.7	74.0	1.0	0.1
12:48:26 PM	249.8	74.0	1.0	0.1
12:48:27 PM	249.7	75.0	1.0	0.1
12:48:28 PM	249.7	74.0	1.0	0.1
12:48:29 PM	249.7	74.0	1.0	0.1
12:48:30 PM	249.7	74.0	1.0	0.1
12:48:31 PM	249.6	74.0	1.0	0.1
12:48:33 PM	249.6	74.0	1.0	0.1
12:48:34 PM	249.6	74.0	1.0	0.1
12:48:35 PM	249.6	75.0	1.0	0.1
12:48:36 PM	249.7	75.0	1.0	0.1
12:48:37 PM	249.6	74.0	1.0	0.1
12:48:38 PM	249.6	74.0	1.0	0.1
12:48:39 PM	249.6	75.0	1.0	0.1
12:48:40 PM	249.6	75.0	1.0	0.1
12:48:41 PM	249.6	74.0	1.0	0.1
12:48:42 PM	249.6	74.0	1.0	0.1
12:48:43 PM	249.6	74.0	1.0	0.1
12:48:44 PM	249.5	75.0	1.0	0.1
12:48:45 PM	249.5	74.0	1.0	0.1
12:48:46 PM	249.5	74.0	1.0	0.1
12:48:47 PM	249.5	75.0	1.0	0.1
12:48:48 PM	249.5	75.0	1.0	0.1
12:48:49 PM	249.4	74.0	1.0	0.1
12:48:50 PM	249.5	74.0	1.0	0.1
12:48:51 PM	249.5	75.0	1.0	0.1
12:48:52 PM	249.5	74.0	1.0	0.1
12:48:53 PM	249.4	74.0	1.0	0.1
12:48:54 PM	249.4	74.0	1.0	0.1
12:48:55 PM	249.5	74.0	1.0	0.1
12:48:57 PM	249.4	74.0	1.0	0.1
12:48:58 PM	249.4	74.0	1.0	0.1
12:48:59 PM	249.4	74.0	1.0	0.0
12:49:00 PM	249.4	74.0	1.0	0.0
12:49:01 PM	249.4	74.0	1.0	0.0
12:49:02 PM	249.4	74.0	1.0	0.0
12:49:03 PM	249.3	74.0	1.0	0.0
12:49:04 PM	249.3	74.0	1.0	0.0
12:49:05 PM	249.3	75.0	1.0	0.0
12:49:06 PM	249.3	74.0	1.0	0.0
12:49:07 PM	249.3	74.0	1.0	0.0
12:49:08 PM	249.3	74.0	1.0	0.0
12:49:09 PM	249.3	74.0	1.0	0.0
12:49:10 PM	249.3	74.0	1.0	0.0
12:49:11 PM	249.3	74.0	1.0	0.0
12:49:12 PM	249.3	74.0	1.0	0.0
Averages ->	**249.6**	**74.2**	**1.0**	**0.1**
			Maximum ->	**0.1**

92 East Elm Street, Yarmouth, Maine, 04096 USA
www.yarmouthresearch.com

Yarmouth Research and Technology

Valve Description: 2 inch Class 150 Fluoroseal Severe Service Plug Valve

Cycle Number: 15000 **Date** 5/10/2003

Time	Pressure (psig)	Temp. (deg. F)	Sampling Rate (l/m)	PPMv Reading
10:50:25 AM	250.6	73.0	1.0	0.5
10:50:26 AM	250.6	74.0	1.0	0.5
10:50:27 AM	250.6	73.0	1.0	0.5
10:50:28 AM	250.6	73.0	1.0	0.5
10:50:29 AM	250.6	73.0	1.0	0.4
10:50:30 AM	250.6	74.0	1.0	0.4
10:50:31 AM	250.6	73.0	1.0	0.4
10:50:32 AM	250.6	74.0	1.0	0.4
10:50:33 AM	250.6	74.0	1.0	0.4
10:50:34 AM	250.6	74.0	1.0	0.4
10:50:35 AM	250.6	74.0	1.0	0.4
10:50:36 AM	250.6	74.0	1.0	0.4
10:50:37 AM	250.7	73.0	1.0	0.5
10:50:39 AM	250.6	74.0	1.0	0.6
10:50:40 AM	250.6	73.0	1.0	0.8
10:50:41 AM	250.6	74.0	1.0	1.0
10:50:42 AM	250.6	74.0	1.0	1.1
10:50:43 AM	250.6	73.0	1.0	1.2
10:50:44 AM	250.6	73.0	1.0	1.3
10:50:45 AM	250.6	74.0	1.0	1.5
10:50:46 AM	250.6	74.0	1.0	1.7
10:50:47 AM	250.6	73.0	1.0	1.9
10:50:48 AM	250.6	74.0	1.0	2.3
10:50:49 AM	250.6	74.0	1.0	2.5
10:50:50 AM	250.6	73.0	1.0	2.8
10:50:51 AM	250.6	73.0	1.0	2.7
10:50:52 AM	250.6	74.0	1.0	2.5
10:50:53 AM	250.6	73.0	1.0	2.2
10:50:54 AM	250.6	73.0	1.0	1.9
10:50:55 AM	250.6	73.0	1.0	1.5
10:50:56 AM	250.6	73.0	1.0	1.2
10:50:57 AM	250.6	73.0	1.0	0.9
10:50:58 AM	250.6	74.0	1.0	0.7
10:50:59 AM	250.6	74.0	1.0	0.6
10:51:00 AM	250.6	74.0	1.0	0.6
10:51:02 AM	250.6	74.0	1.0	0.7
10:51:03 AM	250.7	74.0	1.0	0.8
10:51:04 AM	250.7	74.0	1.0	1.0
10:51:05 AM	250.7	74.0	1.0	1.3
10:51:06 AM	250.6	74.0	1.0	1.5
10:51:07 AM	250.6	74.0	1.0	1.5
10:51:08 AM	250.6	73.0	1.0	1.5
10:51:09 AM	250.6	74.0	1.0	1.7
10:51:10 AM	250.6	73.0	1.0	1.7
10:51:11 AM	250.6	74.0	1.0	1.5
10:51:12 AM	250.6	74.0	1.0	1.3
10:51:13 AM	250.6	74.0	1.0	1.1
10:51:14 AM	250.6	74.0	1.0	0.9
10:51:15 AM	250.6	74.0	1.0	0.8
10:51:16 AM	250.6	74.0	1.0	0.8
10:51:17 AM	250.6	74.0	1.0	0.8
10:51:18 AM	250.6	73.0	1.0	0.8
10:51:19 AM	250.6	74.0	1.0	0.8
10:51:20 AM	250.6	73.0	1.0	0.8
10:51:21 AM	250.6	74.0	1.0	0.7
10:51:23 AM	250.6	74.0	1.0	0.7
10:51:24 AM	250.6	74.0	1.0	0.7
10:51:25 AM	250.6	74.0	1.0	0.7
10:51:26 AM	250.6	74.0	1.0	0.7
10:51:27 AM	250.6	74.0	1.0	0.7
Averages ->	**250.6**	**73.7**	**1.0**	**1.1**
			Maximum ->	**2.8**

Yarmouth Research and Technology

Valve Description: 2 inch Class 150 Fluoroseal Severe Service Plug Valve

Cycle Number: 15000 **Date** 5/10/2003

Time	Pressure (psig)	Temp. (deg. F)	Sampling Rate (l/m)	PPMv Reading
10:51:35 AM	250.6	74.0	1.0	0.7
10:51:36 AM	250.6	74.0	1.0	0.7
10:51:37 AM	250.6	73.0	1.0	0.6
10:51:38 AM	250.7	73.0	1.0	0.6
10:51:39 AM	250.6	74.0	1.0	0.6
10:51:40 AM	250.6	74.0	1.0	0.6
10:51:41 AM	250.7	74.0	1.0	0.6
10:51:42 AM	250.7	74.0	1.0	0.6
10:51:43 AM	250.7	73.0	1.0	0.6
10:51:44 AM	250.7	74.0	1.0	0.6
10:51:46 AM	250.7	74.0	1.0	0.6
10:51:47 AM	250.7	74.0	1.0	0.6
10:51:48 AM	250.7	74.0	1.0	0.5
10:51:49 AM	250.6	74.0	1.0	0.5
10:51:50 AM	250.6	74.0	1.0	0.5
10:51:51 AM	250.6	74.0	1.0	0.4
10:51:52 AM	250.7	74.0	1.0	0.4
10:51:53 AM	250.7	74.0	1.0	0.4
10:51:54 AM	250.6	74.0	1.0	0.3
10:51:55 AM	250.7	74.0	1.0	0.3
10:51:56 AM	250.7	73.0	1.0	0.3
10:51:57 AM	250.7	73.0	1.0	0.3
10:51:58 AM	250.7	74.0	1.0	0.3
10:51:59 AM	250.7	74.0	1.0	0.3
10:52:00 AM	250.7	74.0	1.0	0.3
10:52:01 AM	250.7	74.0	1.0	0.3
10:52:02 AM	250.7	74.0	1.0	0.4
10:52:03 AM	250.7	74.0	1.0	0.4
10:52:04 AM	250.7	74.0	1.0	0.4
10:52:05 AM	250.7	74.0	1.0	0.4
10:52:06 AM	250.7	74.0	1.0	0.5
10:52:08 AM	250.7	74.0	1.0	0.6
10:52:09 AM	250.7	74.0	1.0	0.6
10:52:10 AM	250.6	74.0	1.0	0.6
10:52:11 AM	250.7	73.0	1.0	0.5
10:52:12 AM	250.7	74.0	1.0	0.5
10:52:13 AM	250.7	74.0	1.0	0.5
10:52:14 AM	250.7	74.0	1.0	0.4
10:52:15 AM	250.7	74.0	1.0	0.4
10:52:16 AM	250.7	73.0	1.0	0.4
10:52:17 AM	250.7	73.0	1.0	0.4
10:52:18 AM	250.7	74.0	1.0	0.4
10:52:19 AM	250.7	73.0	1.0	0.4
10:52:20 AM	250.7	73.0	1.0	0.4
10:52:21 AM	250.7	74.0	1.0	0.4
10:52:22 AM	250.7	74.0	1.0	0.4
10:52:23 AM	250.7	74.0	1.0	0.4
10:52:24 AM	250.7	74.0	1.0	0.3
10:52:25 AM	250.7	74.0	1.0	0.4
10:52:26 AM	250.7	73.0	1.0	0.4
10:52:27 AM	250.7	74.0	1.0	0.4
10:52:28 AM	250.7	74.0	1.0	0.4
10:52:30 AM	250.7	74.0	1.0	0.4
10:52:31 AM	250.7	74.0	1.0	0.4
10:52:32 AM	250.7	74.0	1.0	0.4
10:52:33 AM	250.7	74.0	1.0	0.4
10:52:34 AM	250.7	74.0	1.0	0.5
10:52:35 AM	250.7	74.0	1.0	0.5
10:52:36 AM	250.7	73.0	1.0	0.5
10:52:37 AM	250.7	74.0	1.0	0.4
Averages ->	**250.7**	**73.8**	**1.0**	**0.5**
			Maximum ->	**0.7**

92 East Elm Street, Yarmouth, Maine, 04096 USA
www.yarmouthresearch.com

Yarmouth Research and Technology

Valve Description: 2 inch Class 150 Fluoroseal Severe Service Plug Valve

Cycle Number: 20000 **Date** 5/11/2003

Time	Pressure (psig)	Temp. (deg. F)	Sampling Rate (l/m)	PPMv Reading
7:44:04 AM	250.4	75.0	1.0	0.2
7:44:05 AM	250.4	75.0	1.0	0.2
7:44:06 AM	250.4	75.0	1.0	0.2
7:44:07 AM	250.4	75.0	1.0	0.2
7:44:08 AM	250.4	75.0	1.0	0.2
7:44:09 AM	250.5	75.0	1.0	0.2
7:44:10 AM	250.4	75.0	1.0	0.3
7:44:12 AM	250.4	75.0	1.0	0.2
7:44:13 AM	250.4	75.0	1.0	0.2
7:44:14 AM	250.4	75.0	1.0	0.2
7:44:15 AM	250.4	75.0	1.0	0.2
7:44:16 AM	250.4	75.0	1.0	0.2
7:44:17 AM	250.4	75.0	1.0	0.2
7:44:18 AM	250.4	75.0	1.0	0.2
7:44:19 AM	250.4	75.0	1.0	0.2
7:44:20 AM	250.4	75.0	1.0	0.2
7:44:21 AM	250.4	75.0	1.0	0.2
7:44:22 AM	250.4	75.0	1.0	0.2
7:44:23 AM	250.4	75.0	1.0	0.2
7:44:24 AM	250.4	75.0	1.0	0.2
7:44:25 AM	250.4	75.0	1.0	0.2
7:44:26 AM	250.4	75.0	1.0	0.2
7:44:27 AM	250.4	75.0	1.0	0.2
7:44:28 AM	250.4	75.0	1.0	0.2
7:44:29 AM	250.4	75.0	1.0	0.2
7:44:30 AM	250.4	75.0	1.0	0.1
7:44:31 AM	250.4	75.0	1.0	0.1
7:44:32 AM	250.4	75.0	1.0	0.2
7:44:33 AM	250.4	75.0	1.0	0.2
7:44:35 AM	250.4	75.0	1.0	0.1
7:44:36 AM	250.4	75.0	1.0	0.2
7:44:37 AM	250.4	75.0	1.0	0.2
7:44:38 AM	250.4	75.0	1.0	0.2
7:44:39 AM	250.4	75.0	1.0	0.2
7:44:40 AM	250.4	75.0	1.0	0.1
7:44:41 AM	250.4	75.0	1.0	0.1
7:44:42 AM	250.4	75.0	1.0	0.1
7:44:43 AM	250.4	75.0	1.0	0.1
7:44:44 AM	250.4	75.0	1.0	0.1
7:44:45 AM	250.4	75.0	1.0	0.2
7:44:46 AM	250.4	75.0	1.0	0.2
7:44:47 AM	250.4	75.0	1.0	0.2
7:44:48 AM	250.4	75.0	1.0	0.2
7:44:49 AM	250.4	75.0	1.0	0.2
7:44:50 AM	250.4	75.0	1.0	0.1
7:44:51 AM	250.4	75.0	1.0	0.1
7:44:52 AM	250.5	75.0	1.0	0.1
7:44:53 AM	250.5	75.0	1.0	0.1
7:44:54 AM	250.4	75.0	1.0	0.1
7:44:55 AM	250.5	75.0	1.0	0.2
7:44:56 AM	250.4	75.0	1.0	0.2
7:44:57 AM	250.4	75.0	1.0	0.1
7:44:59 AM	250.4	75.0	1.0	0.1
7:45:00 AM	250.4	75.0	1.0	0.1
7:45:01 AM	250.4	75.0	1.0	0.1
7:45:02 AM	250.4	75.0	1.0	0.2
7:45:03 AM	250.4	75.0	1.0	0.2
7:45:04 AM	250.4	75.0	1.0	0.2
7:45:05 AM	250.4	75.0	1.0	0.2
7:45:06 AM	250.4	75.0	1.0	0.2
Averages ->	**250.4**	**75.0**	**1.0**	**0.2**
			Maximum ->	**0.3**

Yarmouth Research and Technology

Valve Description: 2 inch Class 150 Fluoroseal Severe Service Plug Valve

Cycle Number: 20000 **Date** 5/11/2003

Time	Pressure (psig)	Temp. (deg. F)	Sampling Rate (l/m)	PPMv Reading
7:45:17 AM	250.4	75.0	1.0	0.2
7:45:18 AM	250.4	75.0	1.0	0.2
7:45:19 AM	250.4	75.0	1.0	0.2
7:45:20 AM	250.4	75.0	1.0	0.2
7:45:21 AM	250.4	75.0	1.0	0.2
7:45:22 AM	250.4	75.0	1.0	0.2
7:45:23 AM	250.4	75.0	1.0	0.2
7:45:24 AM	250.5	75.0	1.0	0.2
7:45:25 AM	250.4	75.0	1.0	0.2
7:45:26 AM	250.5	75.0	1.0	0.2
7:45:27 AM	250.4	75.0	1.0	0.2
7:45:28 AM	250.4	75.0	1.0	0.2
7:45:29 AM	250.4	75.0	1.0	0.2
7:45:30 AM	250.4	75.0	1.0	0.2
7:45:31 AM	250.4	75.0	1.0	0.2
7:45:32 AM	250.5	75.0	1.0	0.2
7:45:33 AM	250.5	75.0	1.0	0.2
7:45:34 AM	250.4	75.0	1.0	0.3
7:45:35 AM	250.4	75.0	1.0	0.3
7:45:36 AM	250.4	75.0	1.0	0.3
7:45:37 AM	250.4	75.0	1.0	0.3
7:45:39 AM	250.5	75.0	1.0	0.3
7:45:40 AM	250.5	75.0	1.0	0.3
7:45:41 AM	250.4	75.0	1.0	0.2
7:45:42 AM	250.5	75.0	1.0	0.3
7:45:43 AM	250.4	75.0	1.0	0.2
7:45:44 AM	250.4	75.0	1.0	0.3
7:45:45 AM	250.4	75.0	1.0	0.3
7:45:46 AM	250.4	75.0	1.0	0.3
7:45:47 AM	250.5	75.0	1.0	0.3
7:45:48 AM	250.5	75.0	1.0	0.3
7:45:49 AM	250.5	75.0	1.0	0.3
7:45:50 AM	250.4	75.0	1.0	0.3
7:45:51 AM	250.4	75.0	1.0	0.3
7:45:52 AM	250.5	75.0	1.0	0.3
7:45:53 AM	250.5	75.0	1.0	0.3
7:45:54 AM	250.5	75.0	1.0	0.3
7:45:55 AM	250.5	75.0	1.0	0.3
7:45:56 AM	250.5	75.0	1.0	0.3
7:45:57 AM	250.4	75.0	1.0	0.3
7:45:58 AM	250.4	75.0	1.0	0.3
7:45:59 AM	250.4	75.0	1.0	0.3
7:46:00 AM	250.4	75.0	1.0	0.3
7:46:02 AM	250.5	75.0	1.0	0.3
7:46:03 AM	250.5	75.0	1.0	0.3
7:46:04 AM	250.4	75.0	1.0	0.3
7:46:05 AM	250.4	75.0	1.0	0.3
7:46:06 AM	250.5	75.0	1.0	0.3
7:46:07 AM	250.5	75.0	1.0	0.3
7:46:08 AM	250.5	75.0	1.0	0.3
7:46:09 AM	250.5	75.0	1.0	0.3
7:46:10 AM	250.5	75.0	1.0	0.3
7:46:11 AM	250.5	75.0	1.0	0.3
7:46:12 AM	250.5	75.0	1.0	0.3
7:46:13 AM	250.5	75.0	1.0	0.3
7:46:14 AM	250.4	75.0	1.0	0.3
7:46:15 AM	250.4	75.0	1.0	0.3
7:46:16 AM	250.5	75.0	1.0	0.3
7:46:17 AM	250.4	75.0	1.0	0.3
7:46:18 AM	250.5	75.0	1.0	0.3
Averages ->	**250.5**	**75.0**	**1.0**	**0.3**
			Maximum ->	**0.3**

92 East Elm Street, Yarmouth, Maine, 04096 USA
www.yarmouthresearch.com

Yarmouth Research and Technology

Valve Description: 2 inch Class 150 Fluoroseal Severe Service Plug Valve

Cycle Number: 25000 **Date** 5/12/2003

Time	Pressure (psig)	Temp. (deg. F)	Sampling Rate (l/m)	PPMv Reading
1:35:19 PM	250.3	74.0	1.0	0.3
1:35:20 PM	250.3	74.0	1.0	0.3
1:35:21 PM	250.3	74.0	1.0	0.3
1:35:22 PM	250.3	73.0	1.0	0.3
1:35:23 PM	250.3	73.0	1.0	0.3
1:35:24 PM	250.3	73.0	1.0	0.3
1:35:25 PM	250.2	73.0	1.0	0.3
1:35:26 PM	250.2	73.0	1.0	0.3
1:35:27 PM	250.2	73.0	1.0	0.3
1:35:28 PM	250.3	73.0	1.0	0.3
1:35:29 PM	250.2	73.0	1.0	0.2
1:35:30 PM	250.3	73.0	1.0	0.2
1:35:31 PM	250.3	73.0	1.0	0.2
1:35:32 PM	250.3	74.0	1.0	0.2
1:35:33 PM	250.3	73.0	1.0	0.2
1:35:34 PM	250.3	74.0	1.0	0.2
1:35:35 PM	250.3	73.0	1.0	0.2
1:35:36 PM	250.3	73.0	1.0	0.2
1:35:38 PM	250.3	73.0	1.0	0.2
1:35:39 PM	250.3	74.0	1.0	0.2
1:35:40 PM	250.3	74.0	1.0	0.2
1:35:41 PM	250.3	73.0	1.0	0.2
1:35:42 PM	250.3	74.0	1.0	0.2
1:35:43 PM	250.3	74.0	1.0	0.2
1:35:44 PM	250.3	74.0	1.0	0.2
1:35:45 PM	250.3	73.0	1.0	0.2
1:35:46 PM	250.3	74.0	1.0	0.2
1:35:47 PM	250.3	73.0	1.0	0.2
1:35:48 PM	250.3	74.0	1.0	0.2
1:35:49 PM	250.3	74.0	1.0	0.2
1:35:50 PM	250.3	74.0	1.0	0.1
1:35:51 PM	250.2	74.0	1.0	0.1
1:35:52 PM	250.2	74.0	1.0	0.2
1:35:53 PM	250.3	74.0	1.0	0.2
1:35:54 PM	250.3	74.0	1.0	0.1
1:35:55 PM	250.3	74.0	1.0	0.2
1:35:56 PM	250.3	74.0	1.0	0.2
1:35:57 PM	250.3	74.0	1.0	0.1
1:35:58 PM	250.3	74.0	1.0	0.2
1:35:59 PM	250.2	74.0	1.0	0.1
1:36:01 PM	250.2	73.0	1.0	0.1
1:36:02 PM	250.2	74.0	1.0	0.1
1:36:03 PM	250.3	74.0	1.0	0.2
1:36:04 PM	250.3	74.0	1.0	0.2
1:36:05 PM	250.3	74.0	1.0	0.2
1:36:06 PM	250.3	74.0	1.0	0.1
1:36:07 PM	250.2	74.0	1.0	0.1
1:36:08 PM	250.3	74.0	1.0	0.1
1:36:09 PM	250.3	74.0	1.0	0.1
1:36:10 PM	250.2	73.0	1.0	0.2
1:36:11 PM	250.3	74.0	1.0	0.1
1:36:12 PM	250.3	74.0	1.0	0.1
1:36:13 PM	250.3	74.0	1.0	0.1
1:36:14 PM	250.3	74.0	1.0	0.1
1:36:15 PM	250.3	73.0	1.0	0.1
1:36:16 PM	250.2	74.0	1.0	0.1
1:36:17 PM	250.2	73.0	1.0	0.1
1:36:18 PM	250.2	74.0	1.0	0.1
1:36:19 PM	250.3	74.0	1.0	0.1
1:36:20 PM	250.3	74.0	1.0	0.1
Averages ->	**250.3**	**73.7**	**1.0**	**0.2**
			Maximum ->	**0.3**

Yarmouth Research and Technology

Valve Description: 2 inch Class 150 Fluoroseal Severe Service Plug Valve

Cycle Number: 25000 **Date** 5/12/2003

Time	Pressure (psig)	Temp. (deg. F)	Sampling Rate (l/m)	PPMv Reading
1:36:29 PM	250.3	73.0	1.0	0.1
1:36:30 PM	250.3	74.0	1.0	0.1
1:36:31 PM	250.3	74.0	1.0	0.1
1:36:32 PM	250.2	73.0	1.0	0.1
1:36:33 PM	250.3	73.0	1.0	0.0
1:36:34 PM	250.3	74.0	1.0	0.1
1:36:35 PM	250.3	74.0	1.0	0.1
1:36:36 PM	250.3	74.0	1.0	0.1
1:36:37 PM	250.3	74.0	1.0	0.1
1:36:38 PM	250.3	73.0	1.0	0.1
1:36:39 PM	250.3	74.0	1.0	0.1
1:36:40 PM	250.3	73.0	1.0	0.1
1:36:41 PM	250.3	73.0	1.0	0.1
1:36:42 PM	250.2	74.0	1.0	0.1
1:36:43 PM	250.3	74.0	1.0	0.1
1:36:44 PM	250.3	73.0	1.0	0.1
1:36:46 PM	250.3	73.0	1.0	0.1
1:36:47 PM	250.3	73.0	1.0	0.1
1:36:48 PM	250.3	73.0	1.0	0.1
1:36:49 PM	250.3	74.0	1.0	0.1
1:36:50 PM	250.3	73.0	1.0	0.1
1:36:51 PM	250.3	73.0	1.0	0.1
1:36:52 PM	250.3	74.0	1.0	0.1
1:36:53 PM	250.2	74.0	1.0	0.1
1:36:54 PM	250.3	74.0	1.0	0.1
1:36:55 PM	250.3	73.0	1.0	0.1
1:36:56 PM	250.3	74.0	1.0	0.1
1:36:57 PM	250.3	74.0	1.0	0.1
1:36:58 PM	250.2	74.0	1.0	0.1
1:36:59 PM	250.3	73.0	1.0	0.1
1:37:00 PM	250.3	73.0	1.0	0.1
1:37:01 PM	250.3	73.0	1.0	0.1
1:37:02 PM	250.3	73.0	1.0	0.1
1:37:03 PM	250.3	74.0	1.0	0.1
1:37:04 PM	250.3	74.0	1.0	0.1
1:37:05 PM	250.3	74.0	1.0	0.1
1:37:06 PM	250.3	73.0	1.0	0.1
1:37:08 PM	250.3	74.0	1.0	0.1
1:37:09 PM	250.3	74.0	1.0	0.1
1:37:10 PM	250.3	73.0	1.0	0.1
1:37:11 PM	250.3	74.0	1.0	0.1
1:37:12 PM	250.3	74.0	1.0	0.1
1:37:13 PM	250.3	74.0	1.0	0.1
1:37:14 PM	250.3	73.0	1.0	0.1
1:37:15 PM	250.3	74.0	1.0	0.1
1:37:16 PM	250.3	74.0	1.0	0.1
1:37:17 PM	250.3	74.0	1.0	0.1
1:37:18 PM	250.3	74.0	1.0	0.1
1:37:19 PM	250.3	74.0	1.0	0.1
1:37:20 PM	250.3	73.0	1.0	0.1
1:37:21 PM	250.3	74.0	1.0	0.1
1:37:22 PM	250.3	74.0	1.0	0.1
1:37:23 PM	250.3	73.0	1.0	0.1
1:37:24 PM	250.3	73.0	1.0	0.1
1:37:25 PM	250.3	73.0	1.0	0.1
1:37:26 PM	250.3	74.0	1.0	0.1
1:37:28 PM	250.3	74.0	1.0	0.1
1:37:29 PM	250.3	74.0	1.0	0.1
1:37:30 PM	250.3	74.0	1.0	0.1
1:37:31 PM	250.3	73.0	1.0	0.1
Averages ->	**250.3**	**73.6**	**1.0**	**0.1**
			Maximum ->	**0.1**

Yarmouth Research and Technology

Valve Description: 2 inch Class 150 Fluoroseal Severe Service Plug Valve

Cycle Number: 30000 **Date** 5/13/2003

Time	Pressure (psig)	Temp. (deg. F)	Sampling Rate (l/m)	PPMv Reading
12:53:08 PM	251.0	74.0	1.0	0.8
12:53:09 PM	251.0	74.0	1.0	0.8
12:53:10 PM	251.0	74.0	1.0	0.8
12:53:11 PM	251.0	74.0	1.0	0.8
12:53:12 PM	251.0	74.0	1.0	0.8
12:53:13 PM	251.0	74.0	1.0	0.8
12:53:14 PM	251.0	74.0	1.0	0.8
12:53:15 PM	251.0	74.0	1.0	0.8
12:53:16 PM	251.0	74.0	1.0	0.7
12:53:17 PM	251.0	73.0	1.0	0.8
12:53:18 PM	251.0	74.0	1.0	0.8
12:53:19 PM	251.0	74.0	1.0	0.8
12:53:20 PM	251.0	74.0	1.0	0.8
12:53:21 PM	251.0	74.0	1.0	0.9
12:53:22 PM	251.0	73.0	1.0	0.9
12:53:24 PM	251.0	73.0	1.0	0.9
12:53:25 PM	251.0	74.0	1.0	0.9
12:53:26 PM	251.0	74.0	1.0	0.9
12:53:27 PM	251.0	74.0	1.0	0.8
12:53:28 PM	251.0	74.0	1.0	0.8
12:53:29 PM	251.0	74.0	1.0	0.8
12:53:30 PM	251.0	74.0	1.0	0.8
12:53:31 PM	251.0	74.0	1.0	0.8
12:53:32 PM	251.0	74.0	1.0	0.8
12:53:33 PM	251.0	74.0	1.0	0.8
12:53:34 PM	251.0	74.0	1.0	0.7
12:53:35 PM	251.0	74.0	1.0	0.7
12:53:36 PM	251.0	74.0	1.0	0.7
12:53:37 PM	251.0	73.0	1.0	0.7
12:53:38 PM	251.0	73.0	1.0	0.7
12:53:39 PM	251.0	74.0	1.0	0.7
12:53:40 PM	251.0	74.0	1.0	0.7
12:53:41 PM	251.0	74.0	1.0	0.8
12:53:42 PM	251.0	74.0	1.0	0.8
12:53:43 PM	251.0	73.0	1.0	0.7
12:53:44 PM	251.0	73.0	1.0	0.7
12:53:45 PM	251.0	74.0	1.0	0.7
12:53:46 PM	251.0	74.0	1.0	0.8
12:53:48 PM	251.0	74.0	1.0	0.8
12:53:49 PM	251.0	74.0	1.0	0.8
12:53:50 PM	251.0	74.0	1.0	0.8
12:53:51 PM	251.0	74.0	1.0	0.8
12:53:52 PM	251.0	74.0	1.0	0.8
12:53:53 PM	251.0	73.0	1.0	0.8
12:53:54 PM	251.0	74.0	1.0	0.8
12:53:55 PM	251.0	74.0	1.0	0.8
12:53:56 PM	251.0	73.0	1.0	0.8
12:53:57 PM	251.0	74.0	1.0	0.8
12:53:58 PM	251.0	73.0	1.0	0.9
12:53:59 PM	251.0	74.0	1.0	1.0
12:54:00 PM	251.0	74.0	1.0	1.0
12:54:01 PM	251.0	74.0	1.0	0.9
12:54:02 PM	251.0	74.0	1.0	0.9
12:54:03 PM	251.0	74.0	1.0	0.9
12:54:04 PM	251.0	74.0	1.0	0.8
12:54:05 PM	251.0	74.0	1.0	0.8
12:54:06 PM	250.9	73.0	1.0	0.8
12:54:07 PM	251.0	74.0	1.0	0.8
12:54:08 PM	251.0	73.0	1.0	0.8
12:54:09 PM	251.0	74.0	1.0	0.8
Averages ->	**251.0**	**73.8**	**1.0**	**0.8**
			Maximum ->	**1.0**

92 East Elm Street, Yarmouth, Maine, 04096 USA
www.yarmouthresearch.com

Yarmouth Research and Technology

Valve Description: 2 inch Class 150 Fluoroseal Severe Service Plug Valve

Cycle Number: 30000 **Date** 5/13/2003

Time	Pressure (psig)	Temp. (deg. F)	Sampling Rate (l/m)	PPMv Reading
12:55:00 PM	251.0	74.0	1.0	0.9
12:55:01 PM	251.0	74.0	1.0	0.9
12:55:02 PM	251.0	74.0	1.0	0.9
12:55:03 PM	251.0	74.0	1.0	0.9
12:55:04 PM	251.0	73.0	1.0	0.9
12:55:05 PM	250.9	74.0	1.0	0.9
12:55:06 PM	251.0	74.0	1.0	0.9
12:55:07 PM	251.0	73.0	1.0	0.9
12:55:08 PM	251.0	74.0	1.0	0.8
12:55:09 PM	251.0	74.0	1.0	0.8
12:55:10 PM	250.9	73.0	1.0	0.8
12:55:11 PM	251.0	74.0	1.0	0.8
12:55:12 PM	251.0	74.0	1.0	0.8
12:55:13 PM	251.0	74.0	1.0	0.7
12:55:14 PM	251.0	74.0	1.0	0.8
12:55:15 PM	251.0	74.0	1.0	0.7
12:55:16 PM	251.0	74.0	1.0	0.7
12:55:17 PM	251.0	74.0	1.0	0.7
12:55:18 PM	251.0	74.0	1.0	0.7
12:55:19 PM	251.0	74.0	1.0	0.7
12:55:20 PM	251.0	74.0	1.0	0.7
12:55:22 PM	251.0	74.0	1.0	0.7
12:55:23 PM	251.0	74.0	1.0	0.7
12:55:24 PM	251.0	74.0	1.0	0.7
12:55:25 PM	251.0	74.0	1.0	0.7
12:55:26 PM	251.0	74.0	1.0	0.7
12:55:27 PM	251.0	74.0	1.0	0.7
12:55:28 PM	251.0	74.0	1.0	0.7
12:55:29 PM	251.0	74.0	1.0	0.7
12:55:30 PM	251.0	74.0	1.0	0.6
12:55:31 PM	251.0	74.0	1.0	0.6
12:55:32 PM	251.0	74.0	1.0	0.6
12:55:33 PM	251.0	74.0	1.0	0.6
12:55:34 PM	251.0	74.0	1.0	0.6
12:55:35 PM	251.0	74.0	1.0	0.6
12:55:36 PM	251.0	74.0	1.0	0.6
12:55:37 PM	251.0	74.0	1.0	0.6
12:55:38 PM	251.0	74.0	1.0	0.6
12:55:39 PM	251.0	74.0	1.0	0.6
12:55:40 PM	251.0	74.0	1.0	0.6
12:55:41 PM	251.0	74.0	1.0	0.6
12:55:42 PM	251.0	74.0	1.0	0.6
12:55:43 PM	251.0	74.0	1.0	0.6
12:55:44 PM	251.0	74.0	1.0	0.6
12:55:46 PM	251.0	73.0	1.0	0.7
12:55:47 PM	251.0	74.0	1.0	0.7
12:55:48 PM	251.0	73.0	1.0	0.6
12:55:49 PM	251.0	74.0	1.0	0.6
12:55:50 PM	251.0	74.0	1.0	0.6
12:55:51 PM	251.0	74.0	1.0	0.6
12:55:52 PM	251.0	74.0	1.0	0.6
12:55:53 PM	251.0	74.0	1.0	0.6
12:55:54 PM	251.0	74.0	1.0	0.7
12:55:55 PM	251.0	74.0	1.0	0.7
12:55:56 PM	251.0	74.0	1.0	0.7
12:55:57 PM	251.0	74.0	1.0	0.7
12:55:58 PM	251.0	74.0	1.0	0.7
12:55:59 PM	251.0	74.0	1.0	0.7
12:56:00 PM	251.0	73.0	1.0	0.7
12:56:01 PM	251.0	74.0	1.0	0.7
Averages ->	**251.0**	**73.9**	**1.0**	**0.7**
			Maximum ->	**0.9**

92 East Elm Street, Yarmouth, Maine, 04096 USA
www.yarmouthresearch.com

Yarmouth Research and Technology

Valve Description: 2 inch Class 150 Fluoroseal Severe Service Plug Valve

Cycle Number: 35000 **Date** 5/14/2003

Time	Pressure (psig)	Temp. (deg. F)	Sampling Rate (l/m)	PPMv Reading
9:39:17 AM	250.1	74.0	1.0	0.2
9:39:18 AM	250.1	73.0	1.0	0.2
9:39:19 AM	250.1	73.0	1.0	0.2
9:39:20 AM	250.1	74.0	1.0	0.2
9:39:21 AM	250.1	73.0	1.0	0.2
9:39:22 AM	250.1	74.0	1.0	0.2
9:39:23 AM	250.1	74.0	1.0	0.3
9:39:24 AM	250.1	73.0	1.0	0.2
9:39:25 AM	250.1	73.0	1.0	0.3
9:39:26 AM	250.1	74.0	1.0	0.3
9:39:27 AM	250.1	73.0	1.0	0.3
9:39:28 AM	250.1	74.0	1.0	0.3
9:39:30 AM	250.1	73.0	1.0	0.3
9:39:31 AM	250.1	73.0	1.0	0.3
9:39:32 AM	250.0	73.0	1.0	0.5
9:39:33 AM	250.0	74.0	1.0	0.5
9:39:34 AM	250.0	73.0	1.0	0.5
9:39:35 AM	250.1	73.0	1.0	0.4
9:39:36 AM	250.1	73.0	1.0	0.3
9:39:37 AM	250.1	73.0	1.0	0.3
9:39:38 AM	250.1	73.0	1.0	0.3
9:39:39 AM	250.1	73.0	1.0	0.3
9:39:40 AM	250.1	73.0	1.0	0.3
9:39:41 AM	250.1	74.0	1.0	0.3
9:39:42 AM	250.1	74.0	1.0	0.3
9:39:43 AM	250.0	74.0	1.0	0.3
9:39:44 AM	250.1	73.0	1.0	0.3
9:39:45 AM	250.0	73.0	1.0	0.3
9:39:46 AM	250.0	73.0	1.0	0.3
9:39:47 AM	250.1	74.0	1.0	0.3
9:39:48 AM	250.0	73.0	1.0	0.3
9:39:49 AM	250.1	73.0	1.0	0.3
9:39:50 AM	250.0	74.0	1.0	0.2
9:39:51 AM	250.0	74.0	1.0	0.3
9:39:52 AM	250.1	74.0	1.0	0.3
9:39:54 AM	250.1	74.0	1.0	0.3
9:39:55 AM	250.1	74.0	1.0	0.3
9:39:56 AM	250.1	74.0	1.0	0.3
9:39:57 AM	250.0	74.0	1.0	0.3
9:39:58 AM	250.1	74.0	1.0	0.3
9:39:59 AM	250.1	73.0	1.0	0.3
9:40:00 AM	250.1	74.0	1.0	0.3
9:40:01 AM	250.1	73.0	1.0	0.3
9:40:02 AM	250.0	74.0	1.0	0.3
9:40:03 AM	250.0	74.0	1.0	0.3
9:40:04 AM	250.1	74.0	1.0	0.3
9:40:05 AM	250.1	73.0	1.0	0.3
9:40:06 AM	250.0	73.0	1.0	0.3
9:40:07 AM	250.0	74.0	1.0	0.3
9:40:08 AM	250.1	74.0	1.0	0.3
9:40:09 AM	250.1	74.0	1.0	0.3
9:40:10 AM	250.1	73.0	1.0	0.3
9:40:11 AM	250.1	73.0	1.0	0.3
9:40:12 AM	250.1	74.0	1.0	0.3
9:40:13 AM	250.1	74.0	1.0	0.3
9:40:14 AM	250.1	74.0	1.0	0.3
9:40:16 AM	250.0	74.0	1.0	0.3
9:40:17 AM	250.1	73.0	1.0	0.3
9:40:18 AM	250.1	73.0	1.0	0.3
9:40:19 AM	250.1	74.0	1.0	0.3
Averages ->	**250.1**	**73.5**	**1.0**	**0.3**
			Maximum ->	**0.5**

92 East Elm Street, Yarmouth, Maine, 04096 USA
www.yarmouthresearch.com

Yarmouth Research and Technology

Valve Description: 2 inch Class 150 Fluoroseal Severe Service Plug Valve

Cycle Number: 35000 **Date** 5/14/2003

Time	Pressure (psig)	Temp. (deg. F)	Sampling Rate (l/m)	PPMv Reading
9:40:42 AM	250.0	73.0	1.0	0.3
9:40:43 AM	249.9	73.0	1.0	0.3
9:40:44 AM	250.1	74.0	1.0	0.3
9:40:45 AM	250.1	74.0	1.0	0.3
9:40:46 AM	250.1	73.0	1.0	0.3
9:40:47 AM	250.1	73.0	1.0	0.3
9:40:48 AM	250.0	74.0	1.0	0.4
9:40:49 AM	250.1	73.0	1.0	0.4
9:40:50 AM	250.2	74.0	1.0	0.3
9:40:51 AM	250.1	74.0	1.0	0.4
9:40:52 AM	250.1	73.0	1.0	0.4
9:40:53 AM	250.1	73.0	1.0	0.4
9:40:54 AM	250.0	73.0	1.0	0.3
9:40:55 AM	250.1	74.0	1.0	0.4
9:40:56 AM	250.0	74.0	1.0	0.4
9:40:57 AM	250.1	74.0	1.0	0.4
9:40:58 AM	250.1	73.0	1.0	0.3
9:40:59 AM	250.1	74.0	1.0	0.3
9:41:00 AM	250.1	74.0	1.0	0.4
9:41:01 AM	250.1	73.0	1.0	0.4
9:41:03 AM	250.1	73.0	1.0	0.4
9:41:04 AM	250.2	74.0	1.0	0.4
9:41:05 AM	250.1	73.0	1.0	0.4
9:41:06 AM	250.2	73.0	1.0	0.4
9:41:07 AM	250.1	73.0	1.0	0.4
9:41:08 AM	250.1	73.0	1.0	0.3
9:41:09 AM	250.1	74.0	1.0	0.4
9:41:10 AM	250.0	74.0	1.0	0.4
9:41:11 AM	250.0	73.0	1.0	0.4
9:41:12 AM	250.0	74.0	1.0	0.4
9:41:13 AM	250.1	73.0	1.0	0.4
9:41:14 AM	250.1	73.0	1.0	0.3
9:41:15 AM	250.1	73.0	1.0	0.3
9:41:16 AM	250.1	74.0	1.0	0.3
9:41:17 AM	250.1	73.0	1.0	0.3
9:41:18 AM	250.1	73.0	1.0	0.3
9:41:19 AM	250.1	73.0	1.0	0.3
9:41:20 AM	250.1	74.0	1.0	0.3
9:41:21 AM	250.1	73.0	1.0	0.3
9:41:22 AM	250.0	74.0	1.0	0.3
9:41:23 AM	250.1	74.0	1.0	0.3
9:41:24 AM	250.0	74.0	1.0	0.3
9:41:26 AM	250.0	74.0	1.0	0.4
9:41:27 AM	250.0	74.0	1.0	0.4
9:41:28 AM	250.1	74.0	1.0	0.3
9:41:29 AM	250.1	74.0	1.0	0.3
9:41:30 AM	250.0	73.0	1.0	0.3
9:41:31 AM	250.1	74.0	1.0	0.3
9:41:32 AM	250.0	73.0	1.0	0.3
9:41:33 AM	250.2	74.0	1.0	0.3
9:41:34 AM	250.1	73.0	1.0	0.3
9:41:35 AM	250.1	73.0	1.0	0.3
9:41:36 AM	250.2	74.0	1.0	0.3
9:41:37 AM	250.1	73.0	1.0	0.3
9:41:38 AM	250.0	73.0	1.0	0.3
9:41:39 AM	250.0	74.0	1.0	0.3
9:41:40 AM	250.0	74.0	1.0	0.3
9:41:41 AM	250.1	74.0	1.0	0.3
9:41:42 AM	250.1	74.0	1.0	0.4
9:41:43 AM	250.0	73.0	1.0	0.3
Averages ->	**250.1**	**73.5**	**1.0**	**0.3**
			Maximum ->	**0.4**

92 East Elm Street, Yarmouth, Maine, 04096 USA
www.yarmouthresearch.com

Yarmouth Research and Technology

Valve Description: 2 inch Class 150 Fluoroseal Severe Service Plug Valve

Cycle Number: 40000 **Date** 5/15/2003

Time	Pressure (psig)	Temp. (deg. F)	Sampling Rate (l/m)	PPMv Reading
7:55:36 AM	247.0	74.0	1.0	0.5
7:55:37 AM	247.0	74.0	1.0	0.5
7:55:38 AM	247.0	74.0	1.0	0.5
7:55:39 AM	246.9	75.0	1.0	0.5
7:55:40 AM	246.9	74.0	1.0	0.6
7:55:41 AM	246.9	74.0	1.0	0.6
7:55:42 AM	247.0	74.0	1.0	0.6
7:55:43 AM	246.9	74.0	1.0	0.6
7:55:44 AM	246.9	74.0	1.0	0.6
7:55:45 AM	246.9	74.0	1.0	0.6
7:55:46 AM	246.9	74.0	1.0	0.6
7:55:47 AM	246.9	74.0	1.0	0.6
7:55:48 AM	246.9	74.0	1.0	0.7
7:55:49 AM	247.0	74.0	1.0	0.8
7:55:50 AM	246.9	74.0	1.0	0.9
7:55:51 AM	246.9	74.0	1.0	1.0
7:55:52 AM	247.0	74.0	1.0	1.0
7:55:53 AM	246.9	74.0	1.0	1.2
7:55:54 AM	246.9	74.0	1.0	1.2
7:55:55 AM	246.9	74.0	1.0	1.2
7:55:57 AM	246.9	74.0	1.0	1.4
7:55:58 AM	246.9	74.0	1.0	1.8
7:55:59 AM	246.9	74.0	1.0	2.0
7:56:00 AM	246.9	74.0	1.0	1.8
7:56:01 AM	246.9	75.0	1.0	1.5
7:56:02 AM	246.9	75.0	1.0	1.4
7:56:03 AM	246.9	74.0	1.0	1.4
7:56:04 AM	246.9	74.0	1.0	1.6
7:56:05 AM	247.0	74.0	1.0	1.6
7:56:06 AM	246.9	74.0	1.0	1.6
7:56:07 AM	246.9	74.0	1.0	1.4
7:56:08 AM	246.9	74.0	1.0	1.3
7:56:09 AM	246.9	74.0	1.0	1.1
7:56:10 AM	246.9	74.0	1.0	0.9
7:56:11 AM	246.9	74.0	1.0	0.7
7:56:12 AM	246.8	74.0	1.0	0.7
7:56:13 AM	246.9	74.0	1.0	0.7
7:56:14 AM	246.9	74.0	1.0	0.7
7:56:15 AM	246.9	74.0	1.0	0.6
7:56:16 AM	246.9	74.0	1.0	0.6
7:56:17 AM	246.8	74.0	1.0	0.5
7:56:18 AM	246.8	74.0	1.0	0.5
7:56:19 AM	246.8	74.0	1.0	0.4
7:56:21 AM	246.9	74.0	1.0	0.4
7:56:22 AM	246.9	74.0	1.0	0.4
7:56:23 AM	246.9	74.0	1.0	0.4
7:56:24 AM	246.8	74.0	1.0	0.4
7:56:25 AM	246.9	74.0	1.0	0.4
7:56:26 AM	246.8	74.0	1.0	0.3
7:56:27 AM	246.8	74.0	1.0	0.3
7:56:28 AM	246.8	74.0	1.0	0.3
7:56:29 AM	246.9	74.0	1.0	0.3
7:56:30 AM	246.9	74.0	1.0	0.3
7:56:31 AM	246.8	74.0	1.0	0.3
7:56:32 AM	246.9	74.0	1.0	0.3
7:56:33 AM	246.9	74.0	1.0	0.2
7:56:34 AM	246.8	74.0	1.0	0.2
7:56:35 AM	246.8	74.0	1.0	0.2
7:56:36 AM	246.9	74.0	1.0	0.2
7:56:37 AM	246.8	74.0	1.0	0.2
Averages ->	**246.9**	**74.1**	**1.0**	**0.8**
			Maximum ->	**2.0**

92 East Elm Street, Yarmouth, Maine, 04096 USA
www.yarmouthresearch.com

Yarmouth Research and Technology

Valve Description: 2 inch Class 150 Fluoroseal Severe Service Plug Valve

Cycle Number: 40000 **Date** 5/15/2003

Time	Pressure (psig)	Temp. (deg. F)	Sampling Rate (l/m)	PPMv Reading
7:56:50 AM	246.9	74.0	1.0	0.6
7:56:51 AM	246.9	74.0	1.0	1.2
7:56:52 AM	246.9	74.0	1.0	1.9
7:56:53 AM	246.8	74.0	1.0	2.3
7:56:54 AM	246.8	74.0	1.0	2.1
7:56:55 AM	246.8	74.0	1.0	1.8
7:56:56 AM	247.0	74.0	1.0	1.9
7:56:57 AM	247.2	74.0	1.0	2.4
7:56:58 AM	247.1	74.0	1.0	2.9
7:56:59 AM	247.0	74.0	1.0	3.2
7:57:00 AM	247.0	74.0	1.0	3.3
7:57:01 AM	246.9	74.0	1.0	3.2
7:57:02 AM	246.9	74.0	1.0	2.7
7:57:03 AM	246.9	74.0	1.0	1.6
7:57:04 AM	247.0	74.0	1.0	1.1
7:57:05 AM	247.0	75.0	1.0	0.8
7:57:06 AM	246.9	74.0	1.0	0.6
7:57:07 AM	246.9	74.0	1.0	0.4
7:57:08 AM	246.9	74.0	1.0	0.3
7:57:09 AM	247.0	74.0	1.0	0.3
7:57:10 AM	247.1	74.0	1.0	0.3
7:57:11 AM	247.2	74.0	1.0	0.5
7:57:12 AM	247.1	74.0	1.0	1.9
7:57:14 AM	247.0	74.0	1.0	4.2
7:57:15 AM	246.9	74.0	1.0	6.0
7:57:16 AM	246.9	74.0	1.0	5.6
7:57:17 AM	246.9	74.0	1.0	3.2
7:57:18 AM	246.9	74.0	1.0	1.8
7:57:19 AM	246.9	74.0	1.0	1.1
7:57:20 AM	247.0	74.0	1.0	0.8
7:57:21 AM	246.9	74.0	1.0	0.6
7:57:22 AM	246.9	74.0	1.0	0.5
7:57:23 AM	246.8	74.0	1.0	0.4
7:57:24 AM	246.9	74.0	1.0	0.3
7:57:25 AM	247.0	74.0	1.0	0.3
7:57:26 AM	247.2	74.0	1.0	0.3
7:57:27 AM	247.0	74.0	1.0	0.3
7:57:28 AM	247.0	74.0	1.0	0.3
7:57:29 AM	246.9	74.0	1.0	0.3
7:57:30 AM	246.9	74.0	1.0	0.3
7:57:31 AM	246.9	74.0	1.0	0.3
7:57:32 AM	246.9	74.0	1.0	0.3
7:57:33 AM	247.0	74.0	1.0	0.3
7:57:34 AM	246.9	74.0	1.0	0.3
7:57:36 AM	246.9	74.0	1.0	0.3
7:57:37 AM	246.9	74.0	1.0	0.3
7:57:38 AM	246.9	75.0	1.0	0.3
7:57:39 AM	247.0	74.0	1.0	0.3
7:57:40 AM	247.2	74.0	1.0	0.3
7:57:41 AM	247.2	74.0	1.0	0.3
7:57:42 AM	247.0	74.0	1.0	0.3
7:57:43 AM	246.9	74.0	1.0	0.3
7:57:44 AM	246.9	74.0	1.0	0.3
7:57:45 AM	246.9	74.0	1.0	0.4
7:57:46 AM	246.9	74.0	1.0	0.4
7:57:47 AM	246.9	74.0	1.0	0.3
7:57:48 AM	246.9	74.0	1.0	0.4
7:57:49 AM	246.9	74.0	1.0	0.3
7:57:50 AM	246.9	74.0	1.0	0.3
7:57:51 AM	246.9	74.0	1.0	0.4
Averages ->	**247.0**	**74.0**	**1.0**	**1.2**
			Maximum ->	**6.0**

92 East Elm Street, Yarmouth, Maine, 04096 USA
www.yarmouthresearch.com

Yarmouth Research and Technology

Valve Description: 2 inch Class 150 Fluoroseal Severe Service Plug Valve

Cycle Number: 45000 **Date** 5/16/2003

Time	Pressure (psig)	Temp. (deg. F)	Sampling Rate (l/m)	PPMv Reading
12:21:48 PM	249.4	72.0	1.0	1.6
12:21:49 PM	249.3	72.0	1.0	1.6
12:21:50 PM	249.4	72.0	1.0	1.6
12:21:51 PM	249.3	72.0	1.0	1.6
12:21:52 PM	249.3	72.0	1.0	1.5
12:21:53 PM	249.3	72.0	1.0	1.4
12:21:54 PM	249.3	72.0	1.0	1.2
12:21:55 PM	249.4	73.0	1.0	1.2
12:21:56 PM	249.3	72.0	1.0	1.3
12:21:57 PM	249.4	72.0	1.0	1.4
12:21:58 PM	249.3	72.0	1.0	1.5
12:21:59 PM	249.4	72.0	1.0	1.5
12:22:00 PM	249.3	72.0	1.0	1.6
12:22:01 PM	249.3	72.0	1.0	1.6
12:22:02 PM	249.3	72.0	1.0	1.6
12:22:04 PM	249.3	72.0	1.0	1.6
12:22:05 PM	249.3	72.0	1.0	1.5
12:22:06 PM	249.3	72.0	1.0	1.4
12:22:07 PM	249.3	73.0	1.0	1.5
12:22:08 PM	249.2	72.0	1.0	1.5
12:22:09 PM	249.3	73.0	1.0	1.6
12:22:10 PM	249.3	72.0	1.0	1.6
12:22:11 PM	249.3	73.0	1.0	1.6
12:22:12 PM	249.3	72.0	1.0	1.6
12:22:13 PM	249.3	72.0	1.0	1.5
12:22:14 PM	249.3	72.0	1.0	1.5
12:22:15 PM	249.2	72.0	1.0	1.5
12:22:16 PM	249.3	72.0	1.0	1.5
12:22:17 PM	249.3	72.0	1.0	1.5
12:22:18 PM	249.3	72.0	1.0	1.4
12:22:19 PM	249.3	73.0	1.0	1.4
12:22:20 PM	249.3	72.0	1.0	1.3
12:22:21 PM	249.2	72.0	1.0	1.3
12:22:22 PM	249.2	72.0	1.0	1.4
12:22:23 PM	249.3	72.0	1.0	1.3
12:22:24 PM	249.2	73.0	1.0	1.4
12:22:25 PM	249.2	72.0	1.0	1.3
12:22:26 PM	249.2	72.0	1.0	1.4
12:22:28 PM	249.3	72.0	1.0	1.4
12:22:29 PM	249.3	72.0	1.0	1.5
12:22:30 PM	249.3	72.0	1.0	1.6
12:22:31 PM	249.3	72.0	1.0	1.7
12:22:32 PM	249.3	73.0	1.0	1.8
12:22:33 PM	249.2	72.0	1.0	1.7
12:22:34 PM	249.2	72.0	1.0	1.7
12:22:35 PM	249.2	72.0	1.0	1.7
12:22:36 PM	249.3	72.0	1.0	1.8
12:22:37 PM	249.2	72.0	1.0	1.8
12:22:38 PM	249.3	72.0	1.0	1.8
12:22:39 PM	249.3	72.0	1.0	1.8
12:22:40 PM	249.3	72.0	1.0	1.7
12:22:41 PM	249.3	72.0	1.0	1.7
12:22:42 PM	249.3	72.0	1.0	1.5
12:22:43 PM	249.2	72.0	1.0	1.4
12:22:44 PM	249.3	73.0	1.0	1.4
12:22:45 PM	249.2	72.0	1.0	1.4
12:22:46 PM	249.2	72.0	1.0	1.4
12:22:47 PM	249.2	72.0	1.0	1.4
12:22:49 PM	249.2	72.0	1.0	1.5
12:22:50 PM	249.3	72.0	1.0	1.5
Averages ->	**249.3**	**72.1**	**1.0**	**1.5**
			Maximum ->	**1.8**

Yarmouth Research and Technology

Valve Description: 2 inch Class 150 Fluoroseal Severe Service Plug Valve

Cycle Number: 45000 **Date** 5/16/2003

Time	Pressure (psig)	Temp. (deg. F)	Sampling Rate (l/m)	PPMv Reading
12:23:18 PM	249.3	73.0	1.0	1.2
12:23:19 PM	249.2	72.0	1.0	1.2
12:23:21 PM	249.3	72.0	1.0	1.2
12:23:22 PM	249.3	72.0	1.0	1.2
12:23:23 PM	249.3	72.0	1.0	1.3
12:23:24 PM	249.3	72.0	1.0	1.3
12:23:25 PM	249.2	72.0	1.0	1.3
12:23:26 PM	249.3	72.0	1.0	1.3
12:23:27 PM	249.3	72.0	1.0	1.2
12:23:28 PM	249.3	72.0	1.0	1.2
12:23:29 PM	249.2	72.0	1.0	1.2
12:23:30 PM	249.3	72.0	1.0	1.2
12:23:31 PM	249.2	72.0	1.0	1.3
12:23:32 PM	249.2	72.0	1.0	1.3
12:23:33 PM	249.2	72.0	1.0	1.4
12:23:34 PM	249.3	72.0	1.0	1.6
12:23:35 PM	249.2	72.0	1.0	1.7
12:23:36 PM	249.2	72.0	1.0	1.6
12:23:37 PM	249.2	72.0	1.0	1.5
12:23:38 PM	249.3	72.0	1.0	1.4
12:23:39 PM	249.3	73.0	1.0	1.4
12:23:40 PM	249.3	72.0	1.0	1.4
12:23:42 PM	249.3	72.0	1.0	1.5
12:23:43 PM	249.3	72.0	1.0	1.4
12:23:44 PM	249.3	73.0	1.0	1.3
12:23:45 PM	249.2	72.0	1.0	1.2
12:23:46 PM	249.2	72.0	1.0	1.1
12:23:47 PM	249.2	72.0	1.0	0.9
12:23:48 PM	249.2	72.0	1.0	0.9
12:23:49 PM	249.3	72.0	1.0	0.8
12:23:50 PM	249.2	72.0	1.0	0.8
12:23:51 PM	249.3	72.0	1.0	0.8
12:23:52 PM	249.2	72.0	1.0	0.7
12:23:53 PM	249.3	72.0	1.0	0.7
12:23:54 PM	249.3	72.0	1.0	0.8
12:23:55 PM	249.3	73.0	1.0	0.8
12:23:56 PM	249.3	72.0	1.0	0.8
12:23:57 PM	249.3	72.0	1.0	0.9
12:23:58 PM	249.3	73.0	1.0	0.9
12:23:59 PM	249.2	72.0	1.0	0.9
12:24:00 PM	249.3	72.0	1.0	1.0
12:24:01 PM	249.3	72.0	1.0	1.0
12:24:03 PM	249.3	72.0	1.0	1.0
12:24:04 PM	249.3	72.0	1.0	1.1
12:24:05 PM	249.3	72.0	1.0	1.1
12:24:06 PM	249.3	72.0	1.0	1.1
12:24:07 PM	249.3	72.0	1.0	1.1
12:24:08 PM	249.3	72.0	1.0	1.0
12:24:09 PM	249.3	72.0	1.0	1.0
12:24:10 PM	249.3	72.0	1.0	1.0
12:24:11 PM	249.3	72.0	1.0	1.0
12:24:12 PM	249.3	72.0	1.0	1.0
12:24:13 PM	249.3	72.0	1.0	1.0
12:24:14 PM	249.3	72.0	1.0	1.0
12:24:15 PM	249.2	72.0	1.0	1.0
12:24:16 PM	249.2	72.0	1.0	1.1
12:24:17 PM	249.2	72.0	1.0	1.1
12:24:18 PM	249.3	72.0	1.0	1.0
12:24:19 PM	249.3	72.0	1.0	1.0
12:24:20 PM	249.3	72.0	1.0	0.9
Averages ->	**249.3**	**72.1**	**1.0**	**1.1**
			Maximum ->	**1.7**

92 East Elm Street, Yarmouth, Maine, 04096 USA
www.yarmouthresearch.com

Yarmouth Research and Technology

Valve Description: 2 inch Class 150 Fluoroseal Severe Service Plug Valve

Cycle Number: 50000 **Date** 5/17/2003

Time	Pressure (psig)	Temp. (deg. F)	Sampling Rate (l/m)	PPMv Reading
9:20:50 AM	251.9	73.0	1.0	1.2
9:20:51 AM	252.0	73.0	1.0	1.1
9:20:52 AM	252.0	73.0	1.0	1.1
9:20:53 AM	252.0	73.0	1.0	0.9
9:20:54 AM	252.0	73.0	1.0	0.9
9:20:55 AM	252.0	73.0	1.0	0.8
9:20:56 AM	252.0	73.0	1.0	0.8
9:20:57 AM	252.0	73.0	1.0	0.7
9:20:58 AM	251.9	73.0	1.0	0.6
9:20:59 AM	251.9	73.0	1.0	0.5
9:21:00 AM	252.0	73.0	1.0	0.5
9:21:01 AM	252.0	73.0	1.0	0.4
9:21:02 AM	251.9	73.0	1.0	0.4
9:21:03 AM	252.0	73.0	1.0	0.3
9:21:05 AM	251.9	73.0	1.0	0.3
9:21:06 AM	252.0	73.0	1.0	0.3
9:21:07 AM	252.0	73.0	1.0	0.3
9:21:08 AM	251.9	73.0	1.0	0.3
9:21:09 AM	251.9	73.0	1.0	0.4
9:21:10 AM	251.9	72.0	1.0	0.4
9:21:11 AM	252.0	73.0	1.0	0.3
9:21:12 AM	251.9	73.0	1.0	0.3
9:21:13 AM	252.0	73.0	1.0	0.3
9:21:14 AM	251.9	73.0	1.0	0.3
9:21:15 AM	252.0	72.0	1.0	0.3
9:21:16 AM	251.9	73.0	1.0	0.3
9:21:17 AM	251.9	73.0	1.0	0.3
9:21:18 AM	252.0	73.0	1.0	0.4
9:21:19 AM	252.0	73.0	1.0	0.4
9:21:20 AM	251.9	73.0	1.0	0.4
9:21:21 AM	252.0	73.0	1.0	0.5
9:21:22 AM	251.9	73.0	1.0	0.8
9:21:23 AM	252.0	73.0	1.0	0.9
9:21:24 AM	251.9	73.0	1.0	0.8
9:21:25 AM	252.0	73.0	1.0	0.8
9:21:27 AM	251.9	73.0	1.0	0.7
9:21:28 AM	252.0	73.0	1.0	0.8
9:21:29 AM	251.9	73.0	1.0	0.9
9:21:30 AM	251.9	73.0	1.0	1.0
9:21:31 AM	251.9	73.0	1.0	1.0
9:21:32 AM	251.9	73.0	1.0	1.0
9:21:33 AM	251.9	73.0	1.0	0.8
9:21:34 AM	251.9	73.0	1.0	0.7
9:21:35 AM	251.9	73.0	1.0	0.6
9:21:36 AM	251.9	73.0	1.0	0.6
9:21:37 AM	251.9	73.0	1.0	0.6
9:21:38 AM	252.0	73.0	1.0	0.6
9:21:39 AM	251.9	73.0	1.0	0.6
9:21:40 AM	251.9	73.0	1.0	0.7
9:21:41 AM	252.0	73.0	1.0	0.6
9:21:42 AM	252.0	73.0	1.0	0.6
9:21:43 AM	252.0	73.0	1.0	0.7
9:21:44 AM	251.9	73.0	1.0	0.7
9:21:45 AM	251.9	73.0	1.0	0.7
9:21:46 AM	251.9	73.0	1.0	0.6
9:21:47 AM	251.9	73.0	1.0	0.6
9:21:48 AM	252.0	73.0	1.0	0.7
9:21:49 AM	251.9	73.0	1.0	0.7
9:21:51 AM	251.9	73.0	1.0	0.8
9:21:52 AM	251.9	73.0	1.0	0.8
Averages ->	**251.9**	**73.0**	**1.0**	**0.6**
			Maximum ->	**1.2**

92 East Elm Street, Yarmouth, Maine, 04096 USA
www.yarmouthresearch.com

Yarmouth Research and Technology

Valve Description: 2 inch Class 150 Fluoroseal Severe Service Plug Valve

Cycle Number: 50000 **Date** 5/17/2003

Time	Pressure (psig)	Temp. (deg. F)	Sampling Rate (l/m)	PPMv Reading
9:22:11 AM	252.0	73.0	1.0	0.3
9:22:12 AM	252.0	73.0	1.0	0.3
9:22:13 AM	252.0	73.0	1.0	0.2
9:22:14 AM	251.9	73.0	1.0	0.2
9:22:15 AM	252.0	73.0	1.0	0.2
9:22:16 AM	252.0	73.0	1.0	0.2
9:22:17 AM	252.0	73.0	1.0	0.2
9:22:18 AM	251.9	73.0	1.0	0.2
9:22:19 AM	252.0	73.0	1.0	0.2
9:22:20 AM	251.9	73.0	1.0	0.2
9:22:21 AM	252.0	73.0	1.0	0.2
9:22:22 AM	252.0	73.0	1.0	0.2
9:22:23 AM	251.9	73.0	1.0	0.2
9:22:24 AM	252.0	73.0	1.0	0.2
9:22:25 AM	252.0	73.0	1.0	0.2
9:22:26 AM	252.0	73.0	1.0	0.2
9:22:27 AM	252.0	73.0	1.0	0.2
9:22:28 AM	252.0	73.0	1.0	0.2
9:22:29 AM	252.0	73.0	1.0	0.1
9:22:30 AM	251.9	73.0	1.0	0.1
9:22:31 AM	252.0	73.0	1.0	0.1
9:22:32 AM	251.9	73.0	1.0	0.1
9:22:34 AM	251.9	73.0	1.0	0.1
9:22:35 AM	251.9	73.0	1.0	0.2
9:22:36 AM	251.9	73.0	1.0	0.1
9:22:37 AM	252.0	73.0	1.0	0.1
9:22:38 AM	251.9	73.0	1.0	0.1
9:22:39 AM	251.8	73.0	1.0	0.2
9:22:40 AM	251.9	73.0	1.0	0.3
9:22:41 AM	251.9	73.0	1.0	0.4
9:22:42 AM	251.9	73.0	1.0	0.4
9:22:43 AM	252.0	73.0	1.0	0.5
9:22:44 AM	252.0	73.0	1.0	0.6
9:22:45 AM	251.9	73.0	1.0	0.7
9:22:46 AM	252.0	73.0	1.0	0.7
9:22:47 AM	252.0	73.0	1.0	0.8
9:22:48 AM	251.9	73.0	1.0	0.8
9:22:49 AM	251.9	73.0	1.0	0.8
9:22:50 AM	251.9	73.0	1.0	0.7
9:22:51 AM	251.9	73.0	1.0	0.6
9:22:52 AM	251.9	73.0	1.0	0.6
9:22:53 AM	251.9	73.0	1.0	0.5
9:22:54 AM	251.9	73.0	1.0	0.6
9:22:55 AM	251.9	73.0	1.0	0.6
9:22:57 AM	251.9	73.0	1.0	0.7
9:22:58 AM	251.9	73.0	1.0	0.8
9:22:59 AM	251.9	73.0	1.0	0.9
9:23:00 AM	252.0	73.0	1.0	1.0
9:23:01 AM	252.0	73.0	1.0	1.0
9:23:02 AM	251.9	73.0	1.0	1.2
9:23:03 AM	251.9	73.0	1.0	1.4
9:23:04 AM	252.0	73.0	1.0	1.5
9:23:05 AM	252.0	73.0	1.0	1.7
9:23:06 AM	252.0	73.0	1.0	1.8
9:23:07 AM	252.0	73.0	1.0	1.9
9:23:08 AM	252.0	73.0	1.0	1.9
9:23:09 AM	252.0	73.0	1.0	1.9
9:23:10 AM	251.9	73.0	1.0	1.9
9:23:11 AM	251.9	73.0	1.0	1.8
9:23:12 AM	251.9	73.0	1.0	1.7
Averages ->	**251.9**	**73.0**	**1.0**	**0.6**
			Maximum ->	**1.9**

Yarmouth Research and Technology

Valve Description: 2 inch Class 150 Fluoroseal Severe Service Plug Valve

Cycle Number: 55000 **Date** 5/18/2003

Time	Pressure (psig)	Temp. (deg. F)	Sampling Rate (l/m)	PPMv Reading
8:42:02 AM	249.8	75.0	1.0	0.1
8:42:03 AM	249.7	74.0	1.0	0.1
8:42:04 AM	249.8	75.0	1.0	0.2
8:42:05 AM	249.8	74.0	1.0	0.2
8:42:06 AM	249.8	74.0	1.0	0.1
8:42:07 AM	249.8	74.0	1.0	0.1
8:42:08 AM	249.8	74.0	1.0	0.1
8:42:09 AM	249.8	75.0	1.0	0.0
8:42:10 AM	249.8	75.0	1.0	0.0
8:42:11 AM	249.8	74.0	1.0	0.0
8:42:12 AM	249.8	75.0	1.0	0.0
8:42:13 AM	249.8	75.0	1.0	0.0
8:42:14 AM	249.8	75.0	1.0	0.0
8:42:15 AM	249.8	75.0	1.0	0.1
8:42:16 AM	249.8	75.0	1.0	0.0
8:42:18 AM	249.8	75.0	1.0	0.1
8:42:19 AM	249.8	74.0	1.0	0.1
8:42:20 AM	249.8	75.0	1.0	0.2
8:42:21 AM	249.8	74.0	1.0	0.1
8:42:22 AM	249.8	74.0	1.0	0.1
8:42:23 AM	249.8	74.0	1.0	0.2
8:42:24 AM	249.8	75.0	1.0	0.1
8:42:25 AM	249.8	75.0	1.0	0.2
8:42:26 AM	249.8	74.0	1.0	0.2
8:42:27 AM	249.8	74.0	1.0	0.1
8:42:28 AM	249.8	75.0	1.0	0.1
8:42:29 AM	249.7	75.0	1.0	0.1
8:42:30 AM	249.8	75.0	1.0	0.1
8:42:31 AM	249.7	75.0	1.0	0.1
8:42:32 AM	249.8	75.0	1.0	0.2
8:42:33 AM	249.8	74.0	1.0	0.3
8:42:34 AM	249.8	74.0	1.0	0.3
8:42:35 AM	249.8	75.0	1.0	0.3
8:42:36 AM	249.8	74.0	1.0	0.2
8:42:37 AM	249.8	74.0	1.0	0.3
8:42:38 AM	249.8	74.0	1.0	0.3
8:42:39 AM	249.8	75.0	1.0	0.3
8:42:40 AM	249.8	75.0	1.0	0.3
8:42:42 AM	249.7	74.0	1.0	0.3
8:42:43 AM	249.8	75.0	1.0	0.3
8:42:44 AM	249.7	75.0	1.0	0.3
8:42:45 AM	249.8	75.0	1.0	0.3
8:42:46 AM	249.7	74.0	1.0	0.3
8:42:47 AM	249.8	75.0	1.0	0.3
8:42:48 AM	249.8	75.0	1.0	0.3
8:42:49 AM	249.8	74.0	1.0	0.3
8:42:50 AM	249.8	75.0	1.0	0.3
8:42:51 AM	249.8	74.0	1.0	0.3
8:42:52 AM	249.7	75.0	1.0	0.3
8:42:53 AM	249.8	74.0	1.0	0.2
8:42:54 AM	249.8	75.0	1.0	0.2
8:42:55 AM	249.8	74.0	1.0	0.2
8:42:56 AM	249.8	75.0	1.0	0.1
8:42:57 AM	249.8	74.0	1.0	0.2
8:42:58 AM	249.8	75.0	1.0	0.2
8:42:59 AM	249.8	74.0	1.0	0.2
8:43:00 AM	249.8	74.0	1.0	0.2
8:43:01 AM	249.8	74.0	1.0	0.2
8:43:02 AM	249.8	74.0	1.0	0.2
8:43:03 AM	249.8	74.0	1.0	0.2
Averages ->	**249.8**	**74.5**	**1.0**	**0.2**
			Maximum ->	**0.3**

92 East Elm Street, Yarmouth, Maine, 04096 USA
www.yarmouthresearch.com

Yarmouth Research and Technology

Valve Description: 2 inch Class 150 Fluoroseal Severe Service Plug Valve

Cycle Number: 55000 **Date** 5/18/2003

Time	Pressure (psig)	Temp. (deg. F)	Sampling Rate (l/m)	PPMv Reading
8:43:50 AM	249.7	74.0	1.0	0.2
8:43:51 AM	249.7	75.0	1.0	0.2
8:43:52 AM	249.7	74.0	1.0	0.1
8:43:53 AM	249.7	74.0	1.0	0.1
8:43:54 AM	249.7	75.0	1.0	0.0
8:43:55 AM	249.7	74.0	1.0	0.0
8:43:56 AM	249.7	74.0	1.0	0.0
8:43:57 AM	249.6	74.0	1.0	0.0
8:43:58 AM	249.6	75.0	1.0	0.0
8:43:59 AM	249.6	75.0	1.0	0.0
8:44:00 AM	249.7	74.0	1.0	0.0
8:44:01 AM	249.6	75.0	1.0	0.1
8:44:03 AM	249.7	74.0	1.0	0.1
8:44:04 AM	249.7	74.0	1.0	0.1
8:44:05 AM	249.7	74.0	1.0	0.1
8:44:06 AM	249.7	74.0	1.0	0.1
8:44:07 AM	249.6	74.0	1.0	0.2
8:44:08 AM	249.7	74.0	1.0	0.2
8:44:09 AM	249.7	75.0	1.0	0.2
8:44:10 AM	249.6	74.0	1.0	0.2
8:44:11 AM	249.7	75.0	1.0	0.1
8:44:12 AM	249.7	74.0	1.0	0.0
8:44:13 AM	249.6	75.0	1.0	0.0
8:44:14 AM	249.6	74.0	1.0	0.1
8:44:15 AM	249.6	74.0	1.0	0.1
8:44:16 AM	249.6	74.0	1.0	0.1
8:44:17 AM	249.7	74.0	1.0	0.1
8:44:18 AM	249.6	74.0	1.0	0.0
8:44:19 AM	249.6	75.0	1.0	0.0
8:44:20 AM	249.6	74.0	1.0	0.0
8:44:21 AM	249.6	74.0	1.0	0.0
8:44:22 AM	249.6	74.0	1.0	0.0
8:44:24 AM	249.7	74.0	1.0	0.0
8:44:25 AM	249.7	74.0	1.0	0.0
8:44:26 AM	249.7	74.0	1.0	0.0
8:44:27 AM	249.6	75.0	1.0	0.0
8:44:28 AM	249.6	74.0	1.0	0.1
8:44:29 AM	249.7	75.0	1.0	0.1
8:44:30 AM	249.7	75.0	1.0	0.1
8:44:31 AM	249.6	74.0	1.0	0.1
8:44:32 AM	249.6	74.0	1.0	0.1
8:44:33 AM	249.7	75.0	1.0	0.1
8:44:34 AM	249.7	75.0	1.0	0.1
8:44:35 AM	249.7	74.0	1.0	0.1
8:44:36 AM	249.7	75.0	1.0	0.0
8:44:37 AM	249.7	74.0	1.0	0.1
8:44:38 AM	249.7	75.0	1.0	0.1
8:44:39 AM	249.7	75.0	1.0	0.0
8:44:40 AM	249.7	75.0	1.0	0.0
8:44:41 AM	249.7	74.0	1.0	0.0
8:44:42 AM	249.7	74.0	1.0	0.0
8:44:43 AM	249.7	74.0	1.0	0.0
8:44:44 AM	249.7	74.0	1.0	0.0
8:44:46 AM	249.7	74.0	1.0	0.0
8:44:47 AM	249.7	74.0	1.0	0.0
8:44:48 AM	249.6	74.0	1.0	0.0
8:44:49 AM	249.6	75.0	1.0	0.0
8:44:50 AM	249.6	74.0	1.0	0.0
8:44:51 AM	249.7	74.0	1.0	0.0
8:44:52 AM	249.6	75.0	1.0	0.0
Averages ->	**249.6**	**74.3**	**1.0**	**0.1**
			Maximum ->	**0.2**

92 East Elm Street, Yarmouth, Maine, 04096 USA
www.yarmouthresearch.com

Yarmouth Research and Technology

Valve Description: 2 inch Class 150 Fluoroseal Severe Service Plug Valve

Cycle Number: 60000 **Date** 5/19/2003

Time	Pressure (psig)	Temp. (deg. F)	Sampling Rate (l/m)	PPMv Reading
9:12:47 AM	250.7	74.0	1.0	0.6
9:12:48 AM	250.7	74.0	1.0	0.6
9:12:49 AM	250.7	74.0	1.0	0.6
9:12:50 AM	250.7	74.0	1.0	0.6
9:12:51 AM	250.8	74.0	1.0	0.6
9:12:52 AM	250.7	74.0	1.0	0.5
9:12:53 AM	250.8	74.0	1.0	0.5
9:12:54 AM	250.8	74.0	1.0	0.5
9:12:55 AM	250.7	74.0	1.0	0.5
9:12:56 AM	250.7	74.0	1.0	0.5
9:12:57 AM	250.7	74.0	1.0	0.6
9:12:58 AM	250.8	74.0	1.0	0.6
9:12:59 AM	250.7	74.0	1.0	0.7
9:13:00 AM	250.7	74.0	1.0	0.8
9:13:01 AM	250.7	74.0	1.0	0.9
9:13:02 AM	250.8	74.0	1.0	0.9
9:13:03 AM	250.7	74.0	1.0	1.0
9:13:04 AM	250.7	74.0	1.0	1.0
9:13:05 AM	250.7	74.0	1.0	1.1
9:13:06 AM	250.7	74.0	1.0	1.0
9:13:08 AM	250.7	74.0	1.0	0.9
9:13:09 AM	250.8	74.0	1.0	0.8
9:13:10 AM	250.7	74.0	1.0	0.7
9:13:11 AM	250.7	74.0	1.0	0.7
9:13:12 AM	250.8	74.0	1.0	0.6
9:13:13 AM	250.7	74.0	1.0	0.6
9:13:14 AM	250.7	74.0	1.0	0.6
9:13:15 AM	250.7	74.0	1.0	0.5
9:13:16 AM	250.7	74.0	1.0	0.5
9:13:17 AM	250.7	75.0	1.0	0.5
9:13:18 AM	250.7	74.0	1.0	0.5
9:13:19 AM	250.7	74.0	1.0	0.5
9:13:20 AM	250.7	74.0	1.0	0.5
9:13:21 AM	250.7	74.0	1.0	0.5
9:13:22 AM	250.7	74.0	1.0	0.4
9:13:23 AM	250.7	74.0	1.0	0.4
9:13:24 AM	250.7	74.0	1.0	0.4
9:13:25 AM	250.7	74.0	1.0	0.4
9:13:26 AM	250.7	74.0	1.0	0.4
9:13:27 AM	250.7	74.0	1.0	0.4
9:13:28 AM	250.7	74.0	1.0	0.5
9:13:29 AM	250.7	75.0	1.0	0.5
9:13:31 AM	250.7	74.0	1.0	0.5
9:13:32 AM	250.7	74.0	1.0	0.4
9:13:33 AM	250.7	74.0	1.0	0.4
9:13:34 AM	250.7	75.0	1.0	0.4
9:13:35 AM	250.7	74.0	1.0	0.4
9:13:36 AM	250.7	74.0	1.0	0.4
9:13:37 AM	250.7	74.0	1.0	0.4
9:13:38 AM	250.7	74.0	1.0	0.4
9:13:39 AM	250.7	74.0	1.0	0.4
9:13:40 AM	250.7	74.0	1.0	0.4
9:13:41 AM	250.7	74.0	1.0	0.4
9:13:42 AM	250.7	74.0	1.0	0.4
9:13:43 AM	250.7	74.0	1.0	0.4
9:13:44 AM	250.7	74.0	1.0	0.4
9:13:45 AM	250.7	74.0	1.0	0.4
9:13:46 AM	250.7	74.0	1.0	0.4
9:13:47 AM	250.7	74.0	1.0	0.4
9:13:48 AM	250.7	74.0	1.0	0.4
Averages ->	**250.7**	**74.1**	**1.0**	**0.6**
			Maximum ->	**1.1**

92 East Elm Street, Yarmouth, Maine, 04096 USA
www.yarmouthresearch.com

Yarmouth Research and Technology

Valve Description: 2 inch Class 150 Fluoroseal Severe Service Plug Valve

Cycle Number: 60000 **Date** 5/19/2003

Time	Pressure (psig)	Temp. (deg. F)	Sampling Rate (l/m)	PPMv Reading
9:14:28 AM	250.7	74.0	1.0	0.3
9:14:30 AM	250.6	74.0	1.0	0.3
9:14:31 AM	250.6	74.0	1.0	0.4
9:14:32 AM	250.6	74.0	1.0	0.3
9:14:33 AM	250.6	74.0	1.0	0.3
9:14:34 AM	250.6	74.0	1.0	0.3
9:14:35 AM	250.6	74.0	1.0	0.3
9:14:36 AM	250.5	74.0	1.0	0.4
9:14:37 AM	250.6	74.0	1.0	0.4
9:14:38 AM	250.6	74.0	1.0	0.3
9:14:39 AM	250.6	74.0	1.0	0.3
9:14:40 AM	250.6	74.0	1.0	0.3
9:14:41 AM	250.6	74.0	1.0	0.3
9:14:42 AM	250.6	74.0	1.0	0.3
9:14:43 AM	250.6	74.0	1.0	0.3
9:14:44 AM	250.6	74.0	1.0	0.4
9:14:45 AM	250.6	74.0	1.0	0.3
9:14:46 AM	250.6	74.0	1.0	0.4
9:14:47 AM	250.6	74.0	1.0	0.4
9:14:48 AM	250.6	74.0	1.0	0.3
9:14:49 AM	250.6	74.0	1.0	0.3
9:14:50 AM	250.5	74.0	1.0	0.3
9:14:51 AM	250.5	74.0	1.0	0.4
9:14:52 AM	250.6	74.0	1.0	0.4
9:14:54 AM	250.5	74.0	1.0	0.4
9:14:55 AM	250.6	74.0	1.0	0.3
9:14:56 AM	250.6	74.0	1.0	0.3
9:14:57 AM	250.6	74.0	1.0	0.4
9:14:58 AM	250.6	74.0	1.0	0.4
9:14:59 AM	250.6	74.0	1.0	0.4
9:15:00 AM	250.6	74.0	1.0	0.4
9:15:01 AM	250.6	74.0	1.0	0.4
9:15:02 AM	250.6	74.0	1.0	0.4
9:15:03 AM	250.6	74.0	1.0	0.4
9:15:04 AM	250.5	74.0	1.0	0.4
9:15:05 AM	250.6	74.0	1.0	0.4
9:15:06 AM	250.5	74.0	1.0	0.4
9:15:07 AM	250.6	74.0	1.0	0.4
9:15:08 AM	250.5	74.0	1.0	0.4
9:15:09 AM	250.6	74.0	1.0	0.4
9:15:10 AM	250.6	74.0	1.0	0.4
9:15:11 AM	250.6	74.0	1.0	0.4
9:15:12 AM	250.6	74.0	1.0	0.4
9:15:13 AM	250.6	74.0	1.0	0.4
9:15:14 AM	250.6	74.0	1.0	0.4
9:15:15 AM	250.6	74.0	1.0	0.4
9:15:17 AM	250.6	74.0	1.0	0.4
9:15:18 AM	250.6	74.0	1.0	0.4
9:15:19 AM	250.6	74.0	1.0	0.4
9:15:20 AM	250.5	74.0	1.0	0.4
9:15:21 AM	250.6	74.0	1.0	0.4
9:15:22 AM	250.6	74.0	1.0	0.4
9:15:23 AM	250.6	74.0	1.0	0.4
9:15:24 AM	250.6	74.0	1.0	0.4
9:15:25 AM	250.6	74.0	1.0	0.4
9:15:26 AM	250.6	74.0	1.0	0.5
9:15:27 AM	250.6	74.0	1.0	0.4
9:15:28 AM	250.6	74.0	1.0	0.5
9:15:29 AM	250.6	74.0	1.0	0.5
9:15:30 AM	250.6	74.0	1.0	0.5
Averages ->	**250.6**	**74.0**	**1.0**	**0.4**
			Maximum ->	**0.5**

92 East Elm Street, Yarmouth, Maine, 04096 USA
www.yarmouthresearch.com

Yarmouth Research and Technology

Valve Description: 2 inch Class 150 Fluoroseal Severe Service Plug Valve

Cycle Number: 65000 **Date** 5/20/2003

Time	Pressure (psig)	Temp. (deg. F)	Sampling Rate (l/m)	PPMv Reading
1:27:55 PM	251.1	72.0	1.0	1.0
1:27:56 PM	251.1	72.0	1.0	1.0
1:27:57 PM	251.2	72.0	1.0	1.0
1:27:58 PM	251.1	72.0	1.0	1.1
1:27:59 PM	251.1	72.0	1.0	1.1
1:28:00 PM	251.1	72.0	1.0	1.1
1:28:01 PM	251.2	72.0	1.0	1.1
1:28:02 PM	251.1	72.0	1.0	1.1
1:28:03 PM	251.2	72.0	1.0	1.2
1:28:05 PM	251.2	72.0	1.0	1.2
1:28:06 PM	251.2	72.0	1.0	1.2
1:28:07 PM	251.1	72.0	1.0	1.2
1:28:08 PM	251.2	72.0	1.0	1.2
1:28:09 PM	251.1	72.0	1.0	1.1
1:28:10 PM	251.2	72.0	1.0	1.1
1:28:11 PM	251.1	72.0	1.0	1.1
1:28:12 PM	251.1	72.0	1.0	1.1
1:28:13 PM	251.1	72.0	1.0	1.0
1:28:14 PM	251.2	72.0	1.0	1.0
1:28:15 PM	251.1	72.0	1.0	1.0
1:28:16 PM	251.1	72.0	1.0	1.0
1:28:17 PM	251.1	72.0	1.0	0.9
1:28:18 PM	251.2	72.0	1.0	1.0
1:28:19 PM	251.2	72.0	1.0	1.0
1:28:20 PM	251.1	72.0	1.0	1.0
1:28:21 PM	251.2	72.0	1.0	0.9
1:28:22 PM	251.2	72.0	1.0	0.9
1:28:23 PM	251.2	72.0	1.0	0.9
1:28:24 PM	251.2	72.0	1.0	0.9
1:28:25 PM	251.2	72.0	1.0	0.9
1:28:26 PM	251.2	72.0	1.0	0.9
1:28:27 PM	251.2	72.0	1.0	0.9
1:28:29 PM	251.2	72.0	1.0	0.9
1:28:30 PM	251.3	72.0	1.0	0.9
1:28:31 PM	251.2	72.0	1.0	0.9
1:28:32 PM	251.2	72.0	1.0	0.9
1:28:33 PM	251.2	72.0	1.0	0.9
1:28:34 PM	251.1	72.0	1.0	0.9
1:28:35 PM	251.2	72.0	1.0	0.9
1:28:36 PM	251.2	72.0	1.0	0.9
1:28:37 PM	251.2	72.0	1.0	1.0
1:28:38 PM	251.2	72.0	1.0	1.0
1:28:39 PM	251.2	72.0	1.0	1.0
1:28:40 PM	251.2	72.0	1.0	1.0
1:28:41 PM	251.1	72.0	1.0	1.0
1:28:42 PM	251.1	72.0	1.0	1.0
1:28:43 PM	251.2	72.0	1.0	1.0
1:28:44 PM	251.2	73.0	1.0	1.0
1:28:45 PM	251.2	72.0	1.0	0.9
1:28:46 PM	251.2	72.0	1.0	1.0
1:28:47 PM	251.2	72.0	1.0	1.0
1:28:48 PM	251.3	72.0	1.0	1.0
1:28:49 PM	251.1	72.0	1.0	1.0
1:28:51 PM	251.2	72.0	1.0	1.0
1:28:52 PM	251.3	72.0	1.0	1.0
1:28:53 PM	251.3	72.0	1.0	0.9
1:28:54 PM	251.2	72.0	1.0	0.9
1:28:55 PM	251.2	72.0	1.0	1.0
1:28:56 PM	251.1	72.0	1.0	1.0
1:28:57 PM	251.2	72.0	1.0	1.0
Averages ->	**251.2**	**72.0**	**1.0**	**1.0**
			Maximum ->	**1.2**

92 East Elm Street, Yarmouth, Maine, 04096 USA
www.yarmouthresearch.com

Yarmouth Research and Technology

Valve Description: 2 inch Class 150 Fluoroseal Severe Service Plug Valve

Cycle Number: 65000 **Date** 5/20/2003

Time	Pressure (psig)	Temp. (deg. F)	Sampling Rate (l/m)	PPMv Reading
1:29:34 PM	251.1	72.0	1.0	1.0
1:29:35 PM	251.2	72.0	1.0	0.9
1:29:36 PM	251.1	72.0	1.0	1.0
1:29:37 PM	251.1	72.0	1.0	1.0
1:29:39 PM	251.2	72.0	1.0	1.0
1:29:40 PM	251.1	72.0	1.0	1.0
1:29:41 PM	251.1	72.0	1.0	1.0
1:29:42 PM	251.1	72.0	1.0	1.0
1:29:43 PM	251.1	72.0	1.0	1.0
1:29:44 PM	251.1	72.0	1.0	1.0
1:29:45 PM	251.2	72.0	1.0	1.0
1:29:46 PM	251.1	72.0	1.0	1.0
1:29:47 PM	251.1	73.0	1.0	1.0
1:29:48 PM	251.1	72.0	1.0	1.0
1:29:49 PM	251.2	72.0	1.0	1.0
1:29:50 PM	251.1	72.0	1.0	1.0
1:29:51 PM	251.1	72.0	1.0	1.0
1:29:52 PM	251.2	72.0	1.0	1.0
1:29:53 PM	251.1	72.0	1.0	1.0
1:29:54 PM	251.1	72.0	1.0	1.0
1:29:55 PM	251.1	72.0	1.0	1.1
1:29:56 PM	251.1	72.0	1.0	1.2
1:29:57 PM	251.1	72.0	1.0	1.2
1:29:58 PM	251.1	72.0	1.0	1.2
1:29:59 PM	251.1	72.0	1.0	1.4
1:30:01 PM	251.2	72.0	1.0	1.4
1:30:02 PM	251.1	72.0	1.0	1.2
1:30:03 PM	251.1	72.0	1.0	1.0
1:30:04 PM	251.2	72.0	1.0	1.0
1:30:05 PM	251.1	72.0	1.0	1.0
1:30:06 PM	251.2	72.0	1.0	1.0
1:30:07 PM	251.1	72.0	1.0	1.0
1:30:08 PM	251.2	72.0	1.0	1.0
1:30:09 PM	251.2	72.0	1.0	1.0
1:30:10 PM	251.2	72.0	1.0	1.0
1:30:11 PM	251.1	72.0	1.0	1.0
1:30:12 PM	251.2	72.0	1.0	1.0
1:30:13 PM	251.3	72.0	1.0	1.0
1:30:14 PM	251.2	72.0	1.0	1.0
1:30:15 PM	251.2	72.0	1.0	1.0
1:30:16 PM	251.2	72.0	1.0	1.0
1:30:17 PM	251.3	72.0	1.0	1.0
1:30:18 PM	251.3	72.0	1.0	1.0
1:30:19 PM	251.2	72.0	1.0	1.0
1:30:21 PM	251.2	72.0	1.0	1.0
1:30:22 PM	251.2	72.0	1.0	1.0
1:30:23 PM	251.2	72.0	1.0	1.0
1:30:24 PM	251.1	72.0	1.0	1.0
1:30:25 PM	251.2	72.0	1.0	1.0
1:30:26 PM	251.1	72.0	1.0	1.0
1:30:27 PM	251.2	72.0	1.0	1.0
1:30:28 PM	251.2	72.0	1.0	1.0
1:30:29 PM	251.2	72.0	1.0	1.0
1:30:30 PM	251.2	72.0	1.0	1.0
1:30:31 PM	251.1	73.0	1.0	1.0
1:30:32 PM	251.1	72.0	1.0	1.0
1:30:33 PM	251.2	72.0	1.0	1.0
1:30:34 PM	251.2	72.0	1.0	1.0
1:30:35 PM	251.3	72.0	1.0	1.0
1:30:36 PM	251.2	72.0	1.0	1.0
Averages ->	**251.2**	**72.0**	**1.0**	**1.0**
			Maximum ->	**1.4**

92 East Elm Street, Yarmouth, Maine, 04096 USA
www.yarmouthresearch.com

Yarmouth Research and Technology

Valve Description: 2 inch Class 150 Fluoroseal Severe Service Plug Valve

Cycle Number: 70000 **Date** 5/21/2003

Time	Pressure (psig)	Temp. (deg. F)	Sampling Rate (l/m)	PPMv Reading
4:02:04 PM	249.9	75.0	1.0	1.7
4:02:05 PM	249.8	75.0	1.0	1.7
4:02:06 PM	249.9	75.0	1.0	1.7
4:02:07 PM	249.9	75.0	1.0	1.7
4:02:08 PM	249.9	75.0	1.0	1.7
4:02:09 PM	249.9	75.0	1.0	1.7
4:02:10 PM	249.9	75.0	1.0	1.7
4:02:11 PM	249.8	74.0	1.0	1.7
4:02:12 PM	249.9	74.0	1.0	1.7
4:02:13 PM	249.8	75.0	1.0	1.7
4:02:14 PM	249.8	75.0	1.0	1.7
4:02:15 PM	249.9	75.0	1.0	1.7
4:02:16 PM	249.8	75.0	1.0	1.7
4:02:17 PM	249.7	75.0	1.0	1.7
4:02:18 PM	249.9	75.0	1.0	1.7
4:02:19 PM	249.8	74.0	1.0	1.7
4:02:20 PM	249.8	75.0	1.0	1.7
4:02:21 PM	249.9	75.0	1.0	1.6
4:02:22 PM	249.7	75.0	1.0	1.6
4:02:23 PM	249.8	75.0	1.0	1.6
4:02:24 PM	249.7	75.0	1.0	1.7
4:02:25 PM	249.7	75.0	1.0	1.7
4:02:27 PM	249.7	75.0	1.0	1.6
4:02:28 PM	249.9	75.0	1.0	1.6
4:02:29 PM	249.9	75.0	1.0	1.6
4:02:30 PM	249.9	75.0	1.0	1.6
4:02:31 PM	249.8	75.0	1.0	1.6
4:02:32 PM	249.8	75.0	1.0	1.5
4:02:33 PM	249.7	75.0	1.0	1.5
4:02:34 PM	249.9	75.0	1.0	1.5
4:02:35 PM	250.0	75.0	1.0	1.5
4:02:36 PM	249.9	74.0	1.0	1.6
4:02:37 PM	249.9	75.0	1.0	1.6
4:02:38 PM	249.9	75.0	1.0	1.6
4:02:39 PM	249.9	75.0	1.0	1.6
4:02:40 PM	249.9	74.0	1.0	1.6
4:02:41 PM	249.9	75.0	1.0	1.6
4:02:42 PM	249.8	75.0	1.0	1.6
4:02:43 PM	249.9	75.0	1.0	1.6
4:02:44 PM	249.9	75.0	1.0	1.6
4:02:45 PM	249.8	75.0	1.0	1.6
4:02:46 PM	249.9	75.0	1.0	1.6
4:02:47 PM	249.9	75.0	1.0	1.6
4:02:48 PM	249.9	75.0	1.0	1.6
4:02:49 PM	250.0	75.0	1.0	1.6
4:02:51 PM	249.9	75.0	1.0	1.6
4:02:52 PM	249.8	75.0	1.0	1.6
4:02:53 PM	249.9	75.0	1.0	1.6
4:02:54 PM	249.9	75.0	1.0	1.6
4:02:55 PM	249.8	75.0	1.0	1.6
4:02:56 PM	249.8	75.0	1.0	1.6
4:02:57 PM	249.9	75.0	1.0	1.6
4:02:58 PM	249.9	75.0	1.0	1.5
4:02:59 PM	249.8	75.0	1.0	1.6
4:03:00 PM	249.8	75.0	1.0	1.6
4:03:01 PM	249.7	75.0	1.0	1.6
4:03:02 PM	249.8	75.0	1.0	1.6
4:03:03 PM	249.9	75.0	1.0	1.6
4:03:04 PM	249.8	75.0	1.0	1.6
4:03:05 PM	249.8	75.0	1.0	1.6
Averages ->	**249.8**	**74.9**	**1.0**	**1.6**
			Maximum ->	**1.7**

92 East Elm Street, Yarmouth, Maine, 04096 USA
www.yarmouthresearch.com

Yarmouth Research and Technology

Valve Description: 2 inch Class 150 Fluoroseal Severe Service Plug Valve

Cycle Number: 70000 **Date** 5/21/2003

Time	Pressure (psig)	Temp. (deg. F)	Sampling Rate (l/m)	PPMv Reading
4:03:15 PM	249.9	75.0	1.0	1.5
4:03:16 PM	249.9	75.0	1.0	1.5
4:03:18 PM	249.9	75.0	1.0	1.5
4:03:19 PM	249.7	75.0	1.0	1.5
4:03:20 PM	249.7	75.0	1.0	1.5
4:03:21 PM	249.8	75.0	1.0	1.6
4:03:22 PM	249.7	75.0	1.0	1.6
4:03:23 PM	249.8	75.0	1.0	1.6
4:03:24 PM	249.8	75.0	1.0	1.6
4:03:25 PM	249.7	75.0	1.0	1.6
4:03:26 PM	249.7	75.0	1.0	1.5
4:03:27 PM	249.8	75.0	1.0	1.6
4:03:28 PM	249.9	75.0	1.0	1.6
4:03:29 PM	249.8	75.0	1.0	1.6
4:03:30 PM	249.9	75.0	1.0	1.6
4:03:31 PM	249.8	75.0	1.0	1.6
4:03:32 PM	249.8	74.0	1.0	1.6
4:03:33 PM	249.9	75.0	1.0	1.6
4:03:34 PM	249.8	75.0	1.0	1.6
4:03:35 PM	249.8	74.0	1.0	1.6
4:03:36 PM	249.9	75.0	1.0	1.6
4:03:37 PM	249.9	74.0	1.0	1.5
4:03:38 PM	249.8	75.0	1.0	1.5
4:03:40 PM	249.7	75.0	1.0	1.6
4:03:41 PM	249.9	75.0	1.0	1.6
4:03:42 PM	249.9	75.0	1.0	1.6
4:03:43 PM	249.9	75.0	1.0	1.6
4:03:44 PM	249.8	75.0	1.0	1.6
4:03:45 PM	249.7	75.0	1.0	1.6
4:03:46 PM	249.8	75.0	1.0	1.7
4:03:47 PM	249.9	75.0	1.0	1.7
4:03:48 PM	249.8	75.0	1.0	1.5
4:03:49 PM	249.9	75.0	1.0	1.3
4:03:50 PM	249.7	75.0	1.0	1.2
4:03:51 PM	249.7	75.0	1.0	1.2
4:03:52 PM	249.7	75.0	1.0	1.2
4:03:53 PM	249.7	75.0	1.0	1.1
4:03:54 PM	249.8	75.0	1.0	1.1
4:03:55 PM	249.7	75.0	1.0	1.3
4:03:56 PM	249.9	75.0	1.0	2.1
4:03:57 PM	249.7	75.0	1.0	2.3
4:03:58 PM	249.8	75.0	1.0	2.0
4:03:59 PM	249.7	75.0	1.0	1.8
4:04:00 PM	249.8	74.0	1.0	1.4
4:04:01 PM	249.8	75.0	1.0	1.0
4:04:02 PM	249.8	75.0	1.0	0.8
4:04:04 PM	249.8	75.0	1.0	0.8
4:04:05 PM	249.8	75.0	1.0	0.7
4:04:06 PM	249.9	75.0	1.0	0.7
4:04:07 PM	249.9	75.0	1.0	0.7
4:04:08 PM	249.8	75.0	1.0	0.7
4:04:09 PM	249.8	75.0	1.0	0.7
4:04:10 PM	249.7	75.0	1.0	0.7
4:04:11 PM	249.8	75.0	1.0	0.7
4:04:12 PM	249.8	75.0	1.0	0.7
4:04:13 PM	249.7	74.0	1.0	0.7
4:04:14 PM	249.8	75.0	1.0	0.7
4:04:15 PM	249.9	75.0	1.0	0.7
4:04:16 PM	249.9	75.0	1.0	0.7
4:04:17 PM	249.8	75.0	1.0	0.7
Averages ->	**249.8**	**74.9**	**1.0**	**1.3**
			Maximum ->	**2.3**

92 East Elm Street, Yarmouth, Maine, 04096 USA
www.yarmouthresearch.com

Yarmouth Research and Technology

Valve Description: 2 inch Class 150 Fluoroseal Severe Service Plug Valve

Cycle Number: 75000 **Date** 5/22/2003

Time	Pressure (psig)	Temp. (deg. F)	Sampling Rate (l/m)	PPMv Reading
9:14:09 AM	249.8	74.0	1.0	0.7
9:14:10 AM	249.7	74.0	1.0	0.7
9:14:11 AM	249.7	74.0	1.0	0.7
9:14:12 AM	249.8	74.0	1.0	0.7
9:14:13 AM	249.7	74.0	1.0	0.7
9:14:15 AM	249.7	74.0	1.0	0.7
9:14:16 AM	249.4	74.0	1.0	0.7
9:14:17 AM	249.7	74.0	1.0	0.7
9:14:18 AM	249.6	74.0	1.0	0.7
9:14:19 AM	249.8	73.0	1.0	0.7
9:14:20 AM	249.8	74.0	1.0	0.7
9:14:21 AM	249.7	74.0	1.0	0.7
9:14:22 AM	249.7	74.0	1.0	0.7
9:14:23 AM	249.6	74.0	1.0	0.7
9:14:24 AM	249.7	74.0	1.0	0.7
9:14:25 AM	249.6	74.0	1.0	0.7
9:14:26 AM	249.6	74.0	1.0	0.7
9:14:27 AM	249.8	74.0	1.0	0.7
9:14:28 AM	249.6	74.0	1.0	0.7
9:14:29 AM	249.7	74.0	1.0	0.7
9:14:30 AM	249.7	74.0	1.0	0.7
9:14:31 AM	249.7	74.0	1.0	0.7
9:14:32 AM	249.7	73.0	1.0	0.7
9:14:33 AM	249.8	74.0	1.0	0.7
9:14:34 AM	249.7	74.0	1.0	0.7
9:14:35 AM	249.8	74.0	1.0	0.7
9:14:36 AM	249.6	74.0	1.0	0.7
9:14:38 AM	249.8	74.0	1.0	0.8
9:14:39 AM	249.7	74.0	1.0	0.8
9:14:40 AM	249.7	74.0	1.0	0.9
9:14:41 AM	249.6	74.0	1.0	0.9
9:14:42 AM	249.7	74.0	1.0	0.9
9:14:43 AM	249.6	74.0	1.0	0.9
9:14:44 AM	249.7	74.0	1.0	0.8
9:14:45 AM	249.6	74.0	1.0	0.8
9:14:46 AM	249.7	74.0	1.0	0.7
9:14:47 AM	249.6	73.0	1.0	0.7
9:14:48 AM	249.6	73.0	1.0	0.8
9:14:49 AM	249.6	73.0	1.0	0.9
9:14:50 AM	249.7	73.0	1.0	1.0
9:14:51 AM	249.8	73.0	1.0	1.3
9:14:52 AM	249.6	74.0	1.0	1.6
9:14:53 AM	249.7	74.0	1.0	1.5
9:14:54 AM	249.7	74.0	1.0	1.2
9:14:55 AM	249.7	74.0	1.0	0.9
9:14:56 AM	249.7	74.0	1.0	0.8
9:14:57 AM	249.7	74.0	1.0	0.8
9:14:58 AM	249.8	73.0	1.0	0.7
9:15:00 AM	249.7	74.0	1.0	0.7
9:15:01 AM	249.6	74.0	1.0	0.7
9:15:02 AM	249.6	74.0	1.0	0.7
9:15:03 AM	249.8	74.0	1.0	0.7
9:15:04 AM	249.8	74.0	1.0	0.8
9:15:05 AM	249.7	74.0	1.0	0.8
9:15:06 AM	249.8	74.0	1.0	0.8
9:15:07 AM	249.7	74.0	1.0	0.8
9:15:08 AM	249.7	74.0	1.0	0.7
9:15:09 AM	249.8	74.0	1.0	0.7
9:15:10 AM	249.7	74.0	1.0	0.7
9:15:11 AM	249.7	74.0	1.0	0.8
Averages ->	**249.7**	**73.9**	**1.0**	**0.8**
			Maximum ->	**1.6**

92 East Elm Street, Yarmouth, Maine, 04096 USA
www.yarmouthresearch.com

Yarmouth Research and Technology

Valve Description: 2 inch Class 150 Fluoroseal Severe Service Plug Valve

Cycle Number: 75000 **Date** 5/22/2003

Time	Pressure (psig)	Temp. (deg. F)	Sampling Rate (l/m)	PPMv Reading
9:15:19 AM	249.8	74.0	1.0	0.8
9:15:20 AM	249.8	74.0	1.0	0.9
9:15:21 AM	249.7	74.0	1.0	0.9
9:15:22 AM	249.7	74.0	1.0	0.9
9:15:23 AM	249.8	74.0	1.0	0.8
9:15:24 AM	249.8	74.0	1.0	0.9
9:15:25 AM	249.7	74.0	1.0	0.9
9:15:26 AM	249.8	74.0	1.0	0.9
9:15:27 AM	249.8	73.0	1.0	1.0
9:15:28 AM	249.8	74.0	1.0	1.0
9:15:29 AM	249.8	74.0	1.0	1.0
9:15:30 AM	249.7	74.0	1.0	1.0
9:15:31 AM	249.9	74.0	1.0	1.0
9:15:32 AM	249.7	74.0	1.0	1.0
9:15:34 AM	249.9	74.0	1.0	1.1
9:15:35 AM	249.8	74.0	1.0	1.1
9:15:36 AM	249.7	74.0	1.0	1.0
9:15:37 AM	249.7	74.0	1.0	1.0
9:15:38 AM	249.8	74.0	1.0	0.9
9:15:39 AM	249.7	74.0	1.0	0.9
9:15:40 AM	249.6	74.0	1.0	1.0
9:15:41 AM	249.7	74.0	1.0	0.9
9:15:42 AM	249.7	74.0	1.0	0.9
9:15:43 AM	249.7	74.0	1.0	0.9
9:15:44 AM	249.7	74.0	1.0	0.9
9:15:45 AM	249.7	74.0	1.0	0.9
9:15:46 AM	249.7	74.0	1.0	0.9
9:15:47 AM	249.7	74.0	1.0	0.9
9:15:48 AM	249.7	74.0	1.0	0.9
9:15:49 AM	249.7	74.0	1.0	0.9
9:15:50 AM	249.7	74.0	1.0	0.9
9:15:51 AM	249.7	74.0	1.0	0.9
9:15:52 AM	249.8	74.0	1.0	0.9
9:15:53 AM	249.7	74.0	1.0	0.9
9:15:54 AM	249.8	74.0	1.0	0.9
9:15:55 AM	249.7	74.0	1.0	0.9
9:15:56 AM	249.7	74.0	1.0	0.9
9:15:58 AM	249.5	74.0	1.0	0.9
9:15:59 AM	249.9	74.0	1.0	0.9
9:16:00 AM	249.8	74.0	1.0	0.9
9:16:01 AM	249.7	74.0	1.0	1.0
9:16:02 AM	249.7	74.0	1.0	1.0
9:16:03 AM	249.7	74.0	1.0	1.1
9:16:04 AM	249.6	74.0	1.0	1.1
9:16:05 AM	249.8	74.0	1.0	1.1
9:16:06 AM	249.6	74.0	1.0	1.1
9:16:07 AM	249.7	74.0	1.0	1.1
9:16:08 AM	249.7	74.0	1.0	1.1
9:16:09 AM	249.6	74.0	1.0	1.0
9:16:10 AM	249.7	74.0	1.0	1.0
9:16:11 AM	249.8	74.0	1.0	0.9
9:16:12 AM	249.8	74.0	1.0	0.9
9:16:13 AM	249.7	74.0	1.0	0.8
9:16:14 AM	249.8	74.0	1.0	0.8
9:16:15 AM	249.7	74.0	1.0	0.8
9:16:16 AM	249.8	73.0	1.0	0.9
9:16:17 AM	249.7	74.0	1.0	0.9
9:16:18 AM	249.8	74.0	1.0	0.9
9:16:19 AM	249.8	74.0	1.0	1.0
9:16:21 AM	249.8	74.0	1.0	1.2
Averages ->	**249.7**	**74.0**	**1.0**	**1.0**
			Maximum ->	**1.2**

Yarmouth Research and Technology

Valve Description: 2 inch Class 150 Fluoroseal Severe Service Plug Valve

Cycle Number: 80000 **Date** 5/23/2003

Time	Pressure (psig)	Temp. (deg. F)	Sampling Rate (l/m)	PPMv Reading
9:15:14 AM	249.9	74.0	1.0	3.2
9:15:15 AM	249.9	74.0	1.0	2.7
9:15:16 AM	249.9	74.0	1.0	2.8
9:15:17 AM	249.9	74.0	1.0	2.6
9:15:18 AM	249.9	74.0	1.0	2.0
9:15:19 AM	249.9	74.0	1.0	2.0
9:15:20 AM	249.8	74.0	1.0	1.9
9:15:21 AM	249.9	74.0	1.0	1.6
9:15:22 AM	249.9	74.0	1.0	1.3
9:15:23 AM	249.9	74.0	1.0	1.2
9:15:24 AM	249.8	74.0	1.0	1.1
9:15:25 AM	249.8	74.0	1.0	1.1
9:15:26 AM	249.9	74.0	1.0	1.1
9:15:28 AM	249.8	74.0	1.0	1.0
9:15:29 AM	249.8	74.0	1.0	1.0
9:15:30 AM	249.9	74.0	1.0	1.0
9:15:31 AM	249.8	74.0	1.0	1.0
9:15:32 AM	249.9	73.0	1.0	1.0
9:15:33 AM	249.9	74.0	1.0	1.0
9:15:34 AM	249.9	73.0	1.0	1.0
9:15:35 AM	249.9	74.0	1.0	1.0
9:15:36 AM	249.9	74.0	1.0	1.0
9:15:37 AM	249.8	74.0	1.0	0.9
9:15:38 AM	249.7	74.0	1.0	0.9
9:15:39 AM	249.9	74.0	1.0	0.9
9:15:40 AM	249.8	74.0	1.0	0.9
9:15:41 AM	249.8	74.0	1.0	0.9
9:15:42 AM	249.8	74.0	1.0	0.8
9:15:43 AM	249.7	74.0	1.0	0.8
9:15:44 AM	249.9	74.0	1.0	0.8
9:15:45 AM	249.8	74.0	1.0	0.8
9:15:46 AM	249.8	74.0	1.0	0.8
9:15:47 AM	249.7	74.0	1.0	0.8
9:15:48 AM	249.9	74.0	1.0	0.8
9:15:49 AM	249.8	74.0	1.0	0.8
9:15:50 AM	249.8	74.0	1.0	0.8
9:15:52 AM	249.9	74.0	1.0	0.8
9:15:53 AM	249.8	74.0	1.0	0.7
9:15:54 AM	249.8	74.0	1.0	0.7
9:15:55 AM	249.8	74.0	1.0	0.7
9:15:56 AM	249.8	74.0	1.0	0.7
9:15:57 AM	249.8	74.0	1.0	0.7
9:15:58 AM	249.8	74.0	1.0	0.7
9:15:59 AM	249.9	74.0	1.0	0.7
9:16:00 AM	249.9	74.0	1.0	0.6
9:16:01 AM	249.8	74.0	1.0	0.6
9:16:02 AM	249.7	74.0	1.0	0.5
9:16:03 AM	249.8	74.0	1.0	0.5
9:16:04 AM	249.8	74.0	1.0	0.5
9:16:05 AM	249.8	74.0	1.0	0.5
9:16:06 AM	249.8	74.0	1.0	0.5
9:16:07 AM	249.9	74.0	1.0	0.4
9:16:08 AM	249.8	74.0	1.0	0.4
9:16:09 AM	249.9	74.0	1.0	0.4
9:16:10 AM	249.6	74.0	1.0	0.4
9:16:11 AM	249.8	74.0	1.0	0.6
9:16:12 AM	249.7	74.0	1.0	0.7
9:16:13 AM	249.8	74.0	1.0	0.5
9:16:15 AM	249.9	74.0	1.0	0.4
9:16:16 AM	249.9	74.0	1.0	0.3
Averages ->	**249.8**	**74.0**	**1.0**	**1.0**
			Maximum ->	**3.2**

Yarmouth Research and Technology

Valve Description: 2 inch Class 150 Fluoroseal Severe Service Plug Valve

Cycle Number: 80000 **Date** 5/23/2003

Time	Pressure (psig)	Temp. (deg. F)	Sampling Rate (l/m)	PPMv Reading
9:24:30 AM	249.9	74.0	1.0	2.0
9:24:31 AM	249.9	74.0	1.0	1.9
9:24:32 AM	249.9	74.0	1.0	1.7
9:24:33 AM	249.8	74.0	1.0	1.4
9:24:34 AM	249.9	74.0	1.0	1.1
9:24:35 AM	249.9	74.0	1.0	0.9
9:24:36 AM	249.9	74.0	1.0	0.7
9:24:37 AM	249.8	74.0	1.0	0.6
9:24:38 AM	249.9	74.0	1.0	0.6
9:24:39 AM	249.9	74.0	1.0	0.7
9:24:40 AM	250.0	74.0	1.0	0.7
9:24:41 AM	249.9	74.0	1.0	0.7
9:24:42 AM	249.8	74.0	1.0	0.6
9:24:43 AM	249.8	74.0	1.0	0.6
9:24:44 AM	249.9	74.0	1.0	0.5
9:24:45 AM	249.9	74.0	1.0	0.5
9:24:46 AM	249.9	74.0	1.0	0.4
9:24:47 AM	249.9	74.0	1.0	0.4
9:24:48 AM	249.9	74.0	1.0	0.4
9:24:50 AM	249.8	74.0	1.0	0.5
9:24:51 AM	250.0	74.0	1.0	0.5
9:24:52 AM	249.9	74.0	1.0	0.5
9:24:53 AM	249.8	74.0	1.0	0.4
9:24:54 AM	249.9	74.0	1.0	0.4
9:24:55 AM	249.9	74.0	1.0	0.4
9:24:56 AM	249.9	74.0	1.0	0.5
9:24:57 AM	250.0	74.0	1.0	0.5
9:24:58 AM	249.9	74.0	1.0	0.5
9:24:59 AM	249.9	74.0	1.0	0.6
9:25:00 AM	249.9	74.0	1.0	0.5
9:25:01 AM	249.9	74.0	1.0	0.5
9:25:02 AM	250.0	74.0	1.0	0.6
9:25:03 AM	249.9	74.0	1.0	0.6
9:25:04 AM	249.9	74.0	1.0	0.5
9:25:05 AM	249.9	74.0	1.0	0.4
9:25:06 AM	249.8	74.0	1.0	0.4
9:25:07 AM	249.7	74.0	1.0	0.3
9:25:08 AM	249.8	74.0	1.0	0.3
9:25:09 AM	249.9	74.0	1.0	0.3
9:25:10 AM	250.1	74.0	1.0	0.3
9:25:11 AM	249.9	74.0	1.0	0.3
9:25:12 AM	250.0	74.0	1.0	0.3
9:25:14 AM	250.1	74.0	1.0	0.3
9:25:15 AM	249.9	74.0	1.0	0.3
9:25:16 AM	249.9	74.0	1.0	0.3
9:25:17 AM	250.0	74.0	1.0	0.3
9:25:18 AM	250.0	74.0	1.0	0.3
9:25:19 AM	249.9	74.0	1.0	0.3
9:25:20 AM	249.9	74.0	1.0	0.3
9:25:21 AM	249.9	74.0	1.0	0.3
9:25:22 AM	249.9	74.0	1.0	0.3
9:25:23 AM	249.9	74.0	1.0	0.3
9:25:24 AM	250.0	74.0	1.0	0.3
9:25:25 AM	250.1	74.0	1.0	0.3
9:25:26 AM	249.9	74.0	1.0	0.3
9:25:27 AM	249.9	74.0	1.0	0.3
9:25:28 AM	250.0	74.0	1.0	0.3
9:25:29 AM	250.0	74.0	1.0	0.3
9:25:30 AM	249.9	74.0	1.0	0.3
9:25:31 AM	250.0	74.0	1.0	0.2
Averages ->	**249.9**	**74.0**	**1.0**	**0.5**
			Maximum ->	**2.0**

92 East Elm Street, Yarmouth, Maine, 04096 USA
www.yarmouthresearch.com

Yarmouth Research and Technology

Valve Description: 2 inch Class 150 Fluoroseal Severe Service Plug Valve

Cycle Number: 85000 **Date** 5/24/2003

Time	Pressure (psig)	Temp. (deg. F)	Sampling Rate (l/m)	PPMv Reading
7:00:24 AM	248.5	74.0	1.0	0.6
7:00:25 AM	248.5	74.0	1.0	0.6
7:00:26 AM	248.5	74.0	1.0	0.6
7:00:27 AM	248.4	74.0	1.0	0.6
7:00:28 AM	248.5	74.0	1.0	0.7
7:00:29 AM	248.6	74.0	1.0	0.7
7:00:30 AM	248.7	74.0	1.0	0.7
7:00:31 AM	248.5	74.0	1.0	0.7
7:00:32 AM	248.6	74.0	1.0	0.7
7:00:33 AM	248.6	74.0	1.0	0.6
7:00:34 AM	248.5	74.0	1.0	0.6
7:00:35 AM	248.6	74.0	1.0	0.6
7:00:36 AM	248.5	74.0	1.0	0.6
7:00:37 AM	248.6	74.0	1.0	0.6
7:00:38 AM	248.6	74.0	1.0	0.6
7:00:39 AM	248.5	74.0	1.0	0.6
7:00:40 AM	248.7	74.0	1.0	0.6
7:00:41 AM	248.5	74.0	1.0	0.6
7:00:42 AM	248.5	74.0	1.0	0.6
7:00:43 AM	248.7	74.0	1.0	0.6
7:00:44 AM	248.5	74.0	1.0	0.6
7:00:46 AM	248.5	75.0	1.0	0.6
7:00:47 AM	248.7	74.0	1.0	0.6
7:00:48 AM	248.4	74.0	1.0	0.6
7:00:49 AM	248.5	74.0	1.0	0.6
7:00:50 AM	248.5	74.0	1.0	0.6
7:00:51 AM	248.5	74.0	1.0	0.6
7:00:52 AM	248.5	74.0	1.0	0.6
7:00:53 AM	248.4	74.0	1.0	0.6
7:00:54 AM	248.5	74.0	1.0	0.6
7:00:55 AM	248.5	74.0	1.0	0.6
7:00:56 AM	248.5	74.0	1.0	0.6
7:00:57 AM	248.5	74.0	1.0	0.6
7:00:58 AM	248.5	74.0	1.0	0.6
7:00:59 AM	248.6	74.0	1.0	0.6
7:01:00 AM	248.5	74.0	1.0	0.6
7:01:01 AM	248.5	74.0	1.0	0.7
7:01:02 AM	248.5	74.0	1.0	0.7
7:01:03 AM	248.5	74.0	1.0	0.7
7:01:04 AM	248.5	75.0	1.0	0.7
7:01:05 AM	248.5	74.0	1.0	0.7
7:01:06 AM	248.5	74.0	1.0	0.7
7:01:07 AM	248.4	74.0	1.0	0.7
7:01:09 AM	248.5	74.0	1.0	0.7
7:01:10 AM	248.5	74.0	1.0	0.6
7:01:11 AM	248.5	74.0	1.0	0.6
7:01:12 AM	248.5	74.0	1.0	0.6
7:01:13 AM	248.5	74.0	1.0	0.6
7:01:14 AM	248.5	74.0	1.0	0.6
7:01:15 AM	248.5	74.0	1.0	0.6
7:01:16 AM	248.5	74.0	1.0	0.6
7:01:17 AM	248.5	74.0	1.0	0.6
7:01:18 AM	248.6	74.0	1.0	0.6
7:01:19 AM	248.5	74.0	1.0	0.6
7:01:20 AM	248.7	74.0	1.0	0.5
7:01:21 AM	248.4	74.0	1.0	0.5
7:01:22 AM	248.5	74.0	1.0	0.5
7:01:23 AM	248.4	74.0	1.0	0.5
7:01:24 AM	248.5	74.0	1.0	0.5
7:01:25 AM	248.5	74.0	1.0	0.5
Averages ->	**248.5**	**74.0**	**1.0**	**0.6**
			Maximum ->	**0.7**

92 East Elm Street, Yarmouth, Maine, 04096 USA
www.yarmouthresearch.com

Yarmouth Research and Technology

Valve Description: 2 inch Class 150 Fluoroseal Severe Service Plug Valve

Cycle Number: 85000 **Date** 5/24/2003

Time	Pressure (psig)	Temp. (deg. F)	Sampling Rate (l/m)	PPMv Reading
7:04:54 AM	248.2	74.0	1.0	0.6
7:04:56 AM	248.2	74.0	1.0	0.6
7:04:57 AM	248.3	74.0	1.0	0.5
7:04:58 AM	248.1	74.0	1.0	0.5
7:04:59 AM	248.1	74.0	1.0	0.5
7:05:00 AM	248.2	74.0	1.0	0.5
7:05:01 AM	248.2	75.0	1.0	0.5
7:05:02 AM	248.2	74.0	1.0	0.5
7:05:03 AM	248.2	74.0	1.0	0.7
7:05:04 AM	248.3	74.0	1.0	1.5
7:05:05 AM	248.2	74.0	1.0	3.5
7:05:06 AM	248.2	74.0	1.0	6.5
7:05:07 AM	248.3	74.0	1.0	9.3
7:05:08 AM	248.2	74.0	1.0	10.0
7:05:09 AM	248.2	74.0	1.0	10.0
7:05:10 AM	248.2	74.0	1.0	9.2
7:05:11 AM	248.2	74.0	1.0	6.5
7:05:12 AM	248.1	74.0	1.0	4.5
7:05:13 AM	248.2	74.0	1.0	3.3
7:05:14 AM	248.2	74.0	1.0	2.6
7:05:15 AM	248.0	74.0	1.0	2.1
7:05:16 AM	248.2	74.0	1.0	1.8
7:05:17 AM	248.0	74.0	1.0	1.7
7:05:19 AM	248.3	74.0	1.0	1.7
7:05:20 AM	248.2	74.0	1.0	1.8
7:05:21 AM	248.1	74.0	1.0	1.8
7:05:22 AM	248.1	74.0	1.0	1.7
7:05:23 AM	248.2	74.0	1.0	1.6
7:05:24 AM	248.2	74.0	1.0	1.5
7:05:25 AM	248.2	74.0	1.0	1.4
7:05:26 AM	248.3	74.0	1.0	1.3
7:05:27 AM	248.2	74.0	1.0	1.2
7:05:28 AM	248.2	74.0	1.0	1.1
7:05:29 AM	248.2	74.0	1.0	1.0
7:05:30 AM	248.2	74.0	1.0	0.9
7:05:31 AM	248.2	74.0	1.0	0.9
7:05:32 AM	248.3	74.0	1.0	0.9
7:05:33 AM	248.2	74.0	1.0	0.8
7:05:34 AM	248.1	74.0	1.0	0.8
7:05:35 AM	248.1	75.0	1.0	0.9
7:05:36 AM	248.2	74.0	1.0	0.9
7:05:37 AM	248.1	75.0	1.0	0.9
7:05:38 AM	248.0	74.0	1.0	1.0
7:05:39 AM	248.2	75.0	1.0	0.9
7:05:41 AM	248.1	74.0	1.0	0.9
7:05:42 AM	248.2	74.0	1.0	0.9
7:05:43 AM	248.1	74.0	1.0	0.9
7:05:44 AM	248.1	74.0	1.0	0.8
7:05:45 AM	248.1	74.0	1.0	0.8
7:05:46 AM	248.1	74.0	1.0	0.8
7:05:47 AM	248.2	75.0	1.0	0.8
7:05:48 AM	248.2	74.0	1.0	0.8
7:05:49 AM	248.3	74.0	1.0	0.7
7:05:50 AM	248.1	74.0	1.0	0.7
7:05:51 AM	248.2	74.0	1.0	0.7
7:05:52 AM	248.2	74.0	1.0	0.7
7:05:53 AM	248.2	74.0	1.0	0.7
7:05:54 AM	248.2	74.0	1.0	0.7
7:05:55 AM	248.1	74.0	1.0	0.7
7:05:56 AM	248.2	74.0	1.0	0.7
Averages ->	**248.2**	**74.1**	**1.0**	**1.9**
			Maximum ->	**10.0**

92 East Elm Street, Yarmouth, Maine, 04096 USA
www.yarmouthresearch.com

Yarmouth Research and Technology

Valve Description: 2 inch Class 150 Fluoroseal Severe Service Plug Valve

Cycle Number: 90000 **Date** 5/25/2003

Time	Pressure (psig)	Temp. (deg. F)	Sampling Rate (l/m)	PPMv Reading
7:33:33 AM	250.8	74.0	1.0	0.4
7:33:34 AM	250.7	74.0	1.0	0.4
7:33:35 AM	250.8	74.0	1.0	0.4
7:33:36 AM	250.8	74.0	1.0	0.4
7:33:37 AM	250.7	74.0	1.0	0.4
7:33:39 AM	250.7	74.0	1.0	0.4
7:33:40 AM	250.7	74.0	1.0	0.4
7:33:41 AM	250.7	74.0	1.0	0.4
7:33:42 AM	250.6	74.0	1.0	0.4
7:33:43 AM	250.8	74.0	1.0	0.4
7:33:44 AM	250.8	74.0	1.0	0.4
7:33:45 AM	250.7	74.0	1.0	0.5
7:33:46 AM	250.7	74.0	1.0	0.6
7:33:47 AM	250.7	74.0	1.0	0.5
7:33:48 AM	250.6	74.0	1.0	0.4
7:33:49 AM	250.6	74.0	1.0	0.4
7:33:50 AM	250.7	74.0	1.0	0.5
7:33:51 AM	250.7	74.0	1.0	0.5
7:33:52 AM	250.6	74.0	1.0	0.5
7:33:53 AM	250.6	74.0	1.0	0.4
7:33:54 AM	250.7	74.0	1.0	0.4
7:33:55 AM	250.6	74.0	1.0	0.4
7:33:56 AM	250.8	74.0	1.0	0.4
7:33:57 AM	250.6	74.0	1.0	0.4
7:33:58 AM	250.7	74.0	1.0	0.4
7:33:59 AM	250.6	75.0	1.0	0.4
7:34:00 AM	250.6	75.0	1.0	0.4
7:34:02 AM	250.7	74.0	1.0	0.4
7:34:03 AM	250.6	74.0	1.0	0.4
7:34:04 AM	250.6	74.0	1.0	0.4
7:34:05 AM	250.6	74.0	1.0	0.4
7:34:06 AM	250.7	74.0	1.0	0.4
7:34:07 AM	250.6	74.0	1.0	0.4
7:34:08 AM	250.6	74.0	1.0	0.4
7:34:09 AM	250.6	74.0	1.0	0.4
7:34:10 AM	250.6	74.0	1.0	0.4
7:34:11 AM	250.5	74.0	1.0	0.5
7:34:12 AM	250.6	74.0	1.0	0.4
7:34:13 AM	250.6	74.0	1.0	0.4
7:34:14 AM	250.6	74.0	1.0	0.4
7:34:15 AM	250.5	74.0	1.0	0.4
7:34:16 AM	250.6	74.0	1.0	0.4
7:34:17 AM	250.6	74.0	1.0	0.4
7:34:18 AM	250.5	74.0	1.0	0.4
7:34:19 AM	250.5	74.0	1.0	0.4
7:34:20 AM	250.6	74.0	1.0	0.4
7:34:21 AM	250.5	74.0	1.0	0.4
7:34:22 AM	250.4	74.0	1.0	0.4
7:34:23 AM	250.6	74.0	1.0	0.4
7:34:25 AM	250.7	74.0	1.0	0.4
7:34:26 AM	250.8	74.0	1.0	0.4
7:34:27 AM	250.6	74.0	1.0	0.4
7:34:28 AM	250.6	74.0	1.0	0.4
7:34:29 AM	250.7	74.0	1.0	0.4
7:34:30 AM	250.6	74.0	1.0	0.4
7:34:31 AM	250.5	74.0	1.0	0.5
7:34:32 AM	250.5	74.0	1.0	0.6
7:34:33 AM	250.6	74.0	1.0	0.6
7:34:34 AM	250.6	74.0	1.0	0.5
7:34:35 AM	250.7	74.0	1.0	0.5
Averages ->	**250.6**	**74.0**	**1.0**	**0.4**
			Maximum ->	**0.6**

Yarmouth Research and Technology

Valve Description: 2 inch Class 150 Fluoroseal Severe Service Plug Valve

Cycle Number: 90000 **Date** 5/25/2003

Time	Pressure (psig)	Temp. (deg. F)	Sampling Rate (l/m)	PPMv Reading
7:34:45 AM	250.6	74.0	1.0	0.5
7:34:46 AM	250.6	74.0	1.0	0.5
7:34:47 AM	250.6	74.0	1.0	0.4
7:34:48 AM	250.5	74.0	1.0	0.4
7:34:49 AM	250.5	74.0	1.0	0.4
7:34:50 AM	250.5	74.0	1.0	0.4
7:34:51 AM	250.6	74.0	1.0	0.4
7:34:52 AM	250.6	74.0	1.0	0.4
7:34:53 AM	250.7	74.0	1.0	0.4
7:34:54 AM	250.8	74.0	1.0	0.4
7:34:55 AM	250.7	74.0	1.0	0.4
7:34:56 AM	250.6	74.0	1.0	0.4
7:34:57 AM	250.6	74.0	1.0	0.4
7:34:58 AM	250.7	74.0	1.0	0.4
7:34:59 AM	250.6	74.0	1.0	0.4
7:35:00 AM	250.6	74.0	1.0	0.4
7:35:01 AM	250.6	74.0	1.0	0.4
7:35:02 AM	250.6	74.0	1.0	0.4
7:35:03 AM	250.6	74.0	1.0	0.4
7:35:04 AM	250.6	74.0	1.0	0.4
7:35:05 AM	250.9	74.0	1.0	0.4
7:35:06 AM	250.8	74.0	1.0	0.4
7:35:08 AM	250.8	74.0	1.0	0.4
7:35:09 AM	250.6	74.0	1.0	0.4
7:35:10 AM	250.6	74.0	1.0	0.4
7:35:11 AM	250.6	74.0	1.0	0.4
7:35:12 AM	250.6	74.0	1.0	0.4
7:35:13 AM	250.6	74.0	1.0	0.4
7:35:14 AM	250.6	74.0	1.0	0.4
7:35:15 AM	250.6	74.0	1.0	0.4
7:35:16 AM	250.6	74.0	1.0	0.4
7:35:17 AM	250.7	74.0	1.0	0.3
7:35:18 AM	250.7	75.0	1.0	0.3
7:35:19 AM	250.5	74.0	1.0	0.3
7:35:20 AM	250.6	74.0	1.0	0.3
7:35:21 AM	250.8	74.0	1.0	0.3
7:35:22 AM	250.8	74.0	1.0	0.4
7:35:23 AM	250.7	74.0	1.0	0.4
7:35:24 AM	250.7	74.0	1.0	0.4
7:35:25 AM	250.7	74.0	1.0	0.4
7:35:26 AM	250.6	74.0	1.0	0.4
7:35:27 AM	250.6	74.0	1.0	0.3
7:35:28 AM	250.7	74.0	1.0	0.3
7:35:29 AM	250.6	74.0	1.0	0.3
7:35:31 AM	250.7	74.0	1.0	0.3
7:35:32 AM	250.4	74.0	1.0	0.3
7:35:33 AM	250.6	74.0	1.0	0.3
7:35:34 AM	250.6	74.0	1.0	0.3
7:35:35 AM	250.8	75.0	1.0	0.3
7:35:36 AM	250.6	74.0	1.0	0.3
7:35:37 AM	250.7	74.0	1.0	0.4
7:35:38 AM	250.7	74.0	1.0	0.4
7:35:39 AM	250.6	74.0	1.0	0.4
7:35:40 AM	250.7	74.0	1.0	0.4
7:35:41 AM	250.5	74.0	1.0	0.3
7:35:42 AM	250.5	74.0	1.0	0.3
7:35:43 AM	250.6	74.0	1.0	0.3
7:35:44 AM	250.6	74.0	1.0	0.4
7:35:45 AM	250.6	74.0	1.0	0.4
7:35:46 AM	250.6	74.0	1.0	0.4
Averages ->	**250.6**	**74.0**	**1.0**	**0.4**
			Maximum ->	**0.5**

92 East Elm Street, Yarmouth, Maine, 04096 USA
www.yarmouthresearch.com

Yarmouth Research and Technology

Valve Description: 2 inch Class 150 Fluoroseal Severe Service Plug Valve

Cycle Number: 95000 **Date** 5/26/2003

Time	Pressure (psig)	Temp. (deg. F)	Sampling Rate (l/m)	PPMv Reading
7:35:05 AM	251.1	75.0	1.0	1.3
7:35:06 AM	251.1	74.0	1.0	1.2
7:35:08 AM	251.2	74.0	1.0	1.2
7:35:09 AM	251.1	75.0	1.0	1.2
7:35:10 AM	251.1	74.0	1.0	1.3
7:35:11 AM	251.2	74.0	1.0	1.4
7:35:12 AM	251.1	74.0	1.0	1.4
7:35:13 AM	251.1	74.0	1.0	1.4
7:35:14 AM	251.1	74.0	1.0	1.4
7:35:15 AM	251.0	75.0	1.0	1.4
7:35:16 AM	251.1	74.0	1.0	1.5
7:35:17 AM	251.1	74.0	1.0	1.5
7:35:18 AM	251.1	74.0	1.0	1.4
7:35:19 AM	251.0	75.0	1.0	1.4
7:35:20 AM	251.1	74.0	1.0	1.4
7:35:21 AM	251.1	74.0	1.0	1.4
7:35:22 AM	251.1	74.0	1.0	1.3
7:35:23 AM	251.1	74.0	1.0	1.3
7:35:24 AM	251.1	75.0	1.0	1.2
7:35:25 AM	251.1	74.0	1.0	1.2
7:35:26 AM	251.1	74.0	1.0	1.3
7:35:27 AM	251.2	74.0	1.0	1.4
7:35:28 AM	251.1	74.0	1.0	1.4
7:35:29 AM	251.1	75.0	1.0	1.3
7:35:31 AM	251.0	74.0	1.0	1.2
7:35:32 AM	251.2	74.0	1.0	1.1
7:35:33 AM	251.1	74.0	1.0	1.0
7:35:34 AM	251.0	74.0	1.0	1.0
7:35:35 AM	251.0	74.0	1.0	1.0
7:35:36 AM	251.0	74.0	1.0	1.1
7:35:37 AM	251.0	74.0	1.0	1.1
7:35:38 AM	251.1	74.0	1.0	1.2
7:35:39 AM	251.0	74.0	1.0	1.3
7:35:40 AM	251.1	75.0	1.0	1.4
7:35:41 AM	251.0	74.0	1.0	1.5
7:35:42 AM	251.1	75.0	1.0	1.6
7:35:43 AM	251.0	75.0	1.0	1.6
7:35:44 AM	251.1	74.0	1.0	1.5
7:35:45 AM	251.1	74.0	1.0	1.4
7:35:46 AM	251.0	74.0	1.0	1.3
7:35:47 AM	251.1	74.0	1.0	1.3
7:35:48 AM	251.0	75.0	1.0	1.3
7:35:49 AM	251.1	74.0	1.0	1.3
7:35:50 AM	251.1	74.0	1.0	1.3
7:35:51 AM	251.0	74.0	1.0	1.3
7:35:52 AM	251.1	74.0	1.0	1.2
7:35:53 AM	251.1	74.0	1.0	1.1
7:35:55 AM	251.1	74.0	1.0	1.1
7:35:56 AM	251.1	74.0	1.0	1.1
7:35:57 AM	251.1	74.0	1.0	1.1
7:35:58 AM	251.0	74.0	1.0	1.0
7:35:59 AM	251.1	74.0	1.0	1.0
7:36:00 AM	251.0	74.0	1.0	1.1
7:36:01 AM	250.9	74.0	1.0	1.1
7:36:02 AM	251.0	74.0	1.0	1.1
7:36:03 AM	251.1	74.0	1.0	1.0
7:36:04 AM	251.1	74.0	1.0	1.0
7:36:05 AM	251.1	74.0	1.0	1.0
7:36:06 AM	251.0	74.0	1.0	1.0
7:36:07 AM	251.2	74.0	1.0	1.0
Averages ->	**251.1**	**74.2**	**1.0**	**1.2**
			Maximum ->	**1.6**

Yarmouth Research and Technology

Valve Description: 2 inch Class 150 Fluoroseal Severe Service Plug Valve

Cycle Number: 95000 **Date** 5/26/2003

Time	Pressure (psig)	Temp. (deg. F)	Sampling Rate (l/m)	PPMv Reading
7:36:29 AM	251.0	74.0	1.0	1.3
7:36:30 AM	251.0	74.0	1.0	1.2
7:36:31 AM	251.1	74.0	1.0	1.1
7:36:32 AM	251.1	74.0	1.0	1.1
7:36:33 AM	251.0	75.0	1.0	1.1
7:36:34 AM	251.0	74.0	1.0	1.1
7:36:36 AM	251.1	75.0	1.0	1.1
7:36:37 AM	251.1	74.0	1.0	1.1
7:36:38 AM	251.1	74.0	1.0	1.0
7:36:39 AM	251.0	74.0	1.0	1.0
7:36:40 AM	251.1	74.0	1.0	1.0
7:36:41 AM	251.1	75.0	1.0	0.9
7:36:42 AM	251.0	74.0	1.0	0.9
7:36:43 AM	250.9	74.0	1.0	1.0
7:36:44 AM	251.0	74.0	1.0	1.0
7:36:45 AM	251.0	74.0	1.0	1.0
7:36:46 AM	251.1	74.0	1.0	1.1
7:36:47 AM	251.0	75.0	1.0	1.1
7:36:48 AM	251.0	74.0	1.0	1.1
7:36:49 AM	251.1	75.0	1.0	1.1
7:36:50 AM	251.0	74.0	1.0	1.1
7:36:51 AM	251.2	74.0	1.0	1.1
7:36:52 AM	251.1	74.0	1.0	1.0
7:36:53 AM	251.1	74.0	1.0	1.0
7:36:54 AM	251.1	74.0	1.0	1.0
7:36:55 AM	251.0	75.0	1.0	1.0
7:36:56 AM	251.0	74.0	1.0	1.1
7:36:57 AM	251.1	74.0	1.0	1.1
7:36:59 AM	251.1	75.0	1.0	1.1
7:37:00 AM	251.0	74.0	1.0	1.1
7:37:01 AM	251.0	74.0	1.0	1.2
7:37:02 AM	251.0	74.0	1.0	1.0
7:37:03 AM	251.0	74.0	1.0	1.0
7:37:04 AM	251.1	75.0	1.0	1.0
7:37:05 AM	251.3	74.0	1.0	1.1
7:37:06 AM	251.1	74.0	1.0	1.1
7:37:07 AM	251.3	74.0	1.0	1.2
7:37:08 AM	251.2	75.0	1.0	1.1
7:37:09 AM	251.0	74.0	1.0	1.2
7:37:10 AM	251.2	74.0	1.0	1.2
7:37:11 AM	251.1	75.0	1.0	1.2
7:37:12 AM	251.1	74.0	1.0	1.2
7:37:13 AM	251.0	74.0	1.0	1.3
7:37:14 AM	251.1	74.0	1.0	1.2
7:37:15 AM	251.0	74.0	1.0	1.2
7:37:16 AM	251.0	75.0	1.0	1.2
7:37:17 AM	251.0	74.0	1.0	1.3
7:37:18 AM	251.0	74.0	1.0	1.3
7:37:19 AM	251.0	74.0	1.0	1.4
7:37:20 AM	251.1	74.0	1.0	1.4
7:37:21 AM	251.1	74.0	1.0	1.4
7:37:23 AM	251.0	75.0	1.0	1.4
7:37:24 AM	251.1	74.0	1.0	1.3
7:37:25 AM	251.0	74.0	1.0	1.2
7:37:26 AM	251.0	74.0	1.0	1.0
7:37:27 AM	251.0	74.0	1.0	1.0
7:37:28 AM	251.0	74.0	1.0	1.0
7:37:29 AM	251.0	75.0	1.0	1.1
7:37:30 AM	251.0	74.0	1.0	1.1
7:37:31 AM	251.0	74.0	1.0	1.1
Averages ->	**251.0**	**74.2**	**1.0**	**1.1**
			Maximum ->	**1.4**

92 East Elm Street, Yarmouth, Maine, 04096 USA
www.yarmouthresearch.com

Yarmouth Research and Technology

Valve Description: 2 inch Class 150 Fluoroseal Severe Service Plug Valve

Cycle Number: 100000 **Date** 5/27/2003

Time	Pressure (psig)	Temp. (deg. F)	Sampling Rate (l/m)	PPMv Reading
9:59:08 AM	250.5	72.0	1.0	1.1
9:59:09 AM	250.5	72.0	1.0	1.1
9:59:10 AM	250.5	72.0	1.0	1.1
9:59:11 AM	250.6	72.0	1.0	1.1
9:59:12 AM	250.5	72.0	1.0	1.1
9:59:13 AM	250.4	72.0	1.0	1.1
9:59:14 AM	250.5	72.0	1.0	1.2
9:59:15 AM	250.5	72.0	1.0	1.5
9:59:16 AM	250.5	72.0	1.0	1.6
9:59:17 AM	250.5	72.0	1.0	1.5
9:59:19 AM	250.5	72.0	1.0	1.4
9:59:20 AM	250.4	72.0	1.0	1.3
9:59:21 AM	250.4	72.0	1.0	1.2
9:59:22 AM	250.4	72.0	1.0	1.2
9:59:23 AM	250.4	72.0	1.0	1.2
9:59:24 AM	250.5	72.0	1.0	1.2
9:59:25 AM	250.5	72.0	1.0	1.3
9:59:26 AM	250.6	72.0	1.0	1.4
9:59:27 AM	250.5	72.0	1.0	1.5
9:59:28 AM	250.4	72.0	1.0	1.7
9:59:29 AM	250.6	72.0	1.0	1.9
9:59:30 AM	250.4	72.0	1.0	2.0
9:59:31 AM	250.5	72.0	1.0	2.1
9:59:32 AM	250.4	72.0	1.0	2.0
9:59:33 AM	250.6	72.0	1.0	1.8
9:59:34 AM	250.5	72.0	1.0	1.7
9:59:35 AM	250.6	72.0	1.0	1.6
9:59:36 AM	250.5	72.0	1.0	1.6
9:59:37 AM	250.5	73.0	1.0	1.6
9:59:38 AM	250.6	72.0	1.0	1.5
9:59:39 AM	250.5	72.0	1.0	1.5
9:59:40 AM	250.5	72.0	1.0	1.4
9:59:42 AM	250.5	72.0	1.0	1.4
9:59:43 AM	250.5	72.0	1.0	1.3
9:59:44 AM	250.5	72.0	1.0	1.3
9:59:45 AM	250.4	72.0	1.0	1.3
9:59:46 AM	250.7	72.0	1.0	1.4
9:59:47 AM	250.5	72.0	1.0	1.4
9:59:48 AM	250.4	72.0	1.0	1.4
9:59:49 AM	250.5	72.0	1.0	1.5
9:59:50 AM	250.5	72.0	1.0	1.6
9:59:51 AM	250.5	72.0	1.0	1.6
9:59:52 AM	250.5	72.0	1.0	1.6
9:59:53 AM	250.4	72.0	1.0	1.6
9:59:54 AM	250.5	72.0	1.0	1.6
9:59:55 AM	250.5	72.0	1.0	1.6
9:59:56 AM	250.4	72.0	1.0	1.6
9:59:57 AM	250.5	72.0	1.0	1.6
9:59:58 AM	250.7	72.0	1.0	1.7
9:59:59 AM	250.6	72.0	1.0	1.8
10:00:00 AM	250.5	72.0	1.0	1.9
10:00:01 AM	250.4	72.0	1.0	1.9
10:00:03 AM	250.6	72.0	1.0	1.8
10:00:04 AM	250.4	72.0	1.0	1.7
10:00:05 AM	250.5	72.0	1.0	1.7
10:00:06 AM	250.5	72.0	1.0	1.6
10:00:07 AM	250.5	72.0	1.0	1.6
10:00:08 AM	250.4	72.0	1.0	1.6
10:00:09 AM	250.4	72.0	1.0	1.6
10:00:10 AM	250.5	72.0	1.0	1.6
Averages ->	**250.5**	**72.0**	**1.0**	**1.5**
			Maximum ->	**2.1**

92 East Elm Street, Yarmouth, Maine, 04096 USA
www.yarmouthresearch.com

Yarmouth Research and Technology

Valve Description: 2 inch Class 150 Fluoroseal Severe Service Plug Valve

Cycle Number: 100000 **Date** 5/27/2003

Time	Pressure (psig)	Temp. (deg. F)	Sampling Rate (l/m)	PPMv Reading
10:00:22 AM	250.5	72.0	1.0	1.4
10:00:23 AM	250.3	72.0	1.0	1.4
10:00:24 AM	250.5	72.0	1.0	1.4
10:00:26 AM	250.4	72.0	1.0	1.6
10:00:27 AM	250.5	72.0	1.0	1.8
10:00:28 AM	250.4	72.0	1.0	2.0
10:00:29 AM	250.5	72.0	1.0	2.2
10:00:30 AM	250.5	72.0	1.0	2.3
10:00:31 AM	250.5	72.0	1.0	2.3
10:00:32 AM	250.5	72.0	1.0	2.3
10:00:33 AM	250.5	72.0	1.0	2.4
10:00:34 AM	250.5	72.0	1.0	2.4
10:00:35 AM	250.5	73.0	1.0	2.5
10:00:36 AM	250.5	72.0	1.0	2.4
10:00:37 AM	250.5	73.0	1.0	2.4
10:00:38 AM	250.5	72.0	1.0	2.2
10:00:39 AM	250.5	72.0	1.0	2.1
10:00:40 AM	250.4	72.0	1.0	2.0
10:00:41 AM	250.4	72.0	1.0	2.1
10:00:42 AM	250.5	72.0	1.0	2.1
10:00:43 AM	250.5	72.0	1.0	2.1
10:00:44 AM	250.4	72.0	1.0	2.1
10:00:45 AM	250.4	72.0	1.0	2.0
10:00:46 AM	250.5	72.0	1.0	1.9
10:00:47 AM	250.5	72.0	1.0	1.8
10:00:49 AM	250.5	72.0	1.0	1.7
10:00:50 AM	250.4	72.0	1.0	1.7
10:00:51 AM	250.5	72.0	1.0	1.8
10:00:52 AM	250.4	72.0	1.0	1.8
10:00:53 AM	250.4	72.0	1.0	1.8
10:00:54 AM	250.5	72.0	1.0	1.9
10:00:55 AM	250.5	72.0	1.0	1.9
10:00:56 AM	250.5	72.0	1.0	2.0
10:00:57 AM	250.5	72.0	1.0	2.0
10:00:58 AM	250.5	72.0	1.0	2.0
10:00:59 AM	250.5	72.0	1.0	2.1
10:01:00 AM	250.5	72.0	1.0	2.1
10:01:01 AM	250.6	72.0	1.0	2.1
10:01:02 AM	250.5	73.0	1.0	2.1
10:01:03 AM	250.5	72.0	1.0	2.1
10:01:04 AM	250.6	72.0	1.0	2.1
10:01:05 AM	250.5	72.0	1.0	2.1
10:01:06 AM	250.4	72.0	1.0	2.0
10:01:07 AM	250.5	72.0	1.0	1.9
10:01:08 AM	250.5	73.0	1.0	1.8
10:01:09 AM	250.6	72.0	1.0	1.7
10:01:10 AM	250.3	72.0	1.0	1.6
10:01:11 AM	250.5	73.0	1.0	1.5
10:01:13 AM	250.5	72.0	1.0	1.5
10:01:14 AM	250.5	72.0	1.0	1.6
10:01:15 AM	250.5	72.0	1.0	1.7
10:01:16 AM	250.5	72.0	1.0	1.8
10:01:17 AM	250.5	72.0	1.0	1.9
10:01:18 AM	250.5	72.0	1.0	1.9
10:01:19 AM	250.5	72.0	1.0	1.8
10:01:20 AM	250.6	72.0	1.0	1.8
10:01:21 AM	250.5	72.0	1.0	1.8
10:01:22 AM	250.5	72.0	1.0	1.7
10:01:23 AM	250.6	72.0	1.0	1.7
10:01:24 AM	250.5	72.0	1.0	1.6
Averages ->	**250.5**	**72.1**	**1.0**	**1.9**
			Maximum ->	**2.5**

92 East Elm Street, Yarmouth, Maine, 04096 USA
www.yarmouthresearch.com

Yarmouth Research and Technology

Valve Description: 2 inch Class 150 Fluoroseal Severe Service Plug Valve

Cycle Number: 100004 **Date** 6/2/2003

Time	Pressure (psig)	Temp. (deg. F)	Sampling Rate (l/m)	PPMv Reading
2:14:18 PM	250.6	73.0	1.0	11.2
2:14:19 PM	250.6	73.0	1.0	11.2
2:14:20 PM	250.6	74.0	1.0	11.6
2:14:21 PM	250.6	73.0	1.0	14.0
2:14:22 PM	250.6	73.0	1.0	15.3
2:14:23 PM	250.5	74.0	1.0	15.3
2:14:24 PM	250.5	74.0	1.0	15.8
2:14:25 PM	250.6	74.0	1.0	17.7
2:14:27 PM	250.5	73.0	1.0	15.3
2:14:28 PM	250.6	74.0	1.0	12.2
2:14:29 PM	250.5	73.0	1.0	10.0
2:14:30 PM	250.6	73.0	1.0	9.5
2:14:31 PM	250.5	74.0	1.0	8.8
2:14:32 PM	250.5	73.0	1.0	11.5
2:14:33 PM	250.5	74.0	1.0	13.7
2:14:34 PM	250.5	74.0	1.0	13.3
2:14:35 PM	250.5	74.0	1.0	13.7
2:14:36 PM	250.5	74.0	1.0	14.0
2:14:37 PM	250.6	74.0	1.0	15.6
2:14:38 PM	250.5	74.0	1.0	12.8
2:14:39 PM	250.5	74.0	1.0	13.0
2:14:40 PM	250.5	74.0	1.0	12.8
2:14:41 PM	250.8	74.0	1.0	13.3
2:14:42 PM	250.5	74.0	1.0	12.8
2:14:43 PM	250.5	74.0	1.0	13.5
2:14:44 PM	250.6	74.0	1.0	11.2
2:14:45 PM	250.5	74.0	1.0	12.3
2:14:46 PM	250.6	74.0	1.0	10.6
2:14:47 PM	250.5	74.0	1.0	12.4
2:14:48 PM	250.6	74.0	1.0	13.0
2:14:49 PM	250.5	74.0	1.0	13.2
2:14:51 PM	250.6	74.0	1.0	10.2
2:14:52 PM	250.5	74.0	1.0	10.8
2:14:53 PM	250.5	74.0	1.0	13.7
2:14:54 PM	250.6	74.0	1.0	14.6
2:14:55 PM	250.6	74.0	1.0	13.2
2:14:56 PM	250.5	74.0	1.0	14.4
2:14:57 PM	250.8	74.0	1.0	15.6
2:14:58 PM	250.5	74.0	1.0	13.1
2:14:59 PM	250.7	74.0	1.0	14.7
2:15:00 PM	250.6	74.0	1.0	16.3
2:15:01 PM	250.5	74.0	1.0	16.3
2:15:02 PM	250.5	74.0	1.0	13.9
2:15:03 PM	250.6	74.0	1.0	10.3
2:15:04 PM	250.5	74.0	1.0	10.1
2:15:05 PM	250.5	74.0	1.0	7.8
2:15:06 PM	250.5	74.0	1.0	9.7
2:15:07 PM	250.6	74.0	1.0	13.7
2:15:08 PM	250.6	74.0	1.0	15.9
2:15:09 PM	250.6	74.0	1.0	15.0
2:15:10 PM	250.5	74.0	1.0	16.0
2:15:11 PM	250.5	74.0	1.0	15.7
2:15:13 PM	250.7	74.0	1.0	14.0
2:15:14 PM	250.3	74.0	1.0	13.8
2:15:15 PM	250.6	74.0	1.0	15.5
2:15:16 PM	250.6	74.0	1.0	16.0
2:15:17 PM	250.5	74.0	1.0	16.0
2:15:18 PM	250.5	74.0	1.0	14.1
2:15:19 PM	250.5	73.0	1.0	13.4
2:15:20 PM	250.5	74.0	1.0	13.3
Averages ->	**250.6**	**73.9**	**1.0**	**13.3**
			Maximum ->	**17.7**

92 East Elm Street, Yarmouth, Maine, 04096 USA
www.yarmouthresearch.com

Yarmouth Research and Technology

Valve Description: 2 inch Class 150 Fluoroseal Severe Service Plug Valve

Cycle Number: 100004 **Date** 6/2/2003

Time	Pressure (psig)	Temp. (deg. F)	Sampling Rate (l/m)	PPMv Reading
2:15:32 PM	250.5	74.0	1.0	18.2
2:15:33 PM	250.5	74.0	1.0	20.9
2:15:34 PM	250.5	74.0	1.0	21.9
2:15:35 PM	250.5	74.0	1.0	22.1
2:15:36 PM	250.4	74.0	1.0	22.4
2:15:37 PM	250.5	74.0	1.0	22.8
2:15:38 PM	250.5	74.0	1.0	21.0
2:15:39 PM	250.5	74.0	1.0	19.3
2:15:40 PM	250.5	74.0	1.0	19.7
2:15:41 PM	250.5	74.0	1.0	21.3
2:15:42 PM	250.5	74.0	1.0	21.1
2:15:43 PM	250.6	74.0	1.0	18.8
2:15:44 PM	250.4	74.0	1.0	19.4
2:15:45 PM	250.5	74.0	1.0	20.4
2:15:46 PM	250.5	74.0	1.0	19.6
2:15:47 PM	250.5	74.0	1.0	17.8
2:15:48 PM	250.6	74.0	1.0	19.0
2:15:49 PM	250.5	74.0	1.0	21.5
2:15:50 PM	250.3	74.0	1.0	19.6
2:15:51 PM	250.6	74.0	1.0	19.8
2:15:53 PM	250.6	74.0	1.0	20.5
2:15:54 PM	250.6	74.0	1.0	17.8
2:15:55 PM	250.5	74.0	1.0	16.7
2:15:56 PM	250.5	74.0	1.0	18.5
2:15:57 PM	250.4	74.0	1.0	20.1
2:15:58 PM	250.4	74.0	1.0	21.9
2:15:59 PM	250.5	74.0	1.0	24.0
2:16:00 PM	250.5	74.0	1.0	24.9
2:16:01 PM	250.4	74.0	1.0	23.6
2:16:02 PM	250.5	74.0	1.0	23.5
2:16:03 PM	250.5	74.0	1.0	25.1
2:16:04 PM	250.5	74.0	1.0	25.0
2:16:05 PM	250.5	74.0	1.0	22.1
2:16:06 PM	250.5	74.0	1.0	20.8
2:16:07 PM	250.5	74.0	1.0	20.4
2:16:08 PM	250.6	74.0	1.0	20.2
2:16:09 PM	250.6	74.0	1.0	20.2
2:16:10 PM	250.5	74.0	1.0	18.0
2:16:11 PM	250.5	74.0	1.0	16.1
2:16:12 PM	250.5	74.0	1.0	24.5
2:16:13 PM	250.5	74.0	1.0	26.9
2:16:14 PM	250.6	74.0	1.0	27.8
2:16:16 PM	250.6	74.0	1.0	27.5
2:16:17 PM	250.5	74.0	1.0	25.2
2:16:18 PM	250.5	74.0	1.0	27.2
2:16:19 PM	250.6	74.0	1.0	27.3
2:16:20 PM	250.4	74.0	1.0	26.7
2:16:21 PM	250.4	74.0	1.0	26.5
2:16:22 PM	250.5	74.0	1.0	26.6
2:16:23 PM	250.4	74.0	1.0	26.7
2:16:24 PM	250.5	74.0	1.0	26.7
2:16:25 PM	250.4	74.0	1.0	26.8
2:16:26 PM	250.4	74.0	1.0	26.7
2:16:27 PM	250.6	74.0	1.0	26.7
2:16:28 PM	250.4	74.0	1.0	27.7
2:16:29 PM	250.5	74.0	1.0	28.3
2:16:30 PM	250.6	74.0	1.0	27.0
2:16:31 PM	250.4	74.0	1.0	24.5
2:16:32 PM	250.5	74.0	1.0	22.0
2:16:33 PM	250.4	74.0	1.0	20.2
Averages ->	**250.5**	**74.0**	**1.0**	**22.6**
			Maximum ->	**28.3**

92 East Elm Street, Yarmouth, Maine, 04096 USA
www.yarmouthresearch.com

Fugitive Emission Test Report

Performed for

FluoroSeal Speciality Valves
6418 Transcanadian Hwy, West
Montreal, Canada H4T 1X4
www.fluorosealvalves.com

2 inch Class 150 Plug Valve

Project Number: 20354
May 2003

Performed by

YARMOUTH RESEARCH AND TECHNOLOGY

92 East Elm Street
Yarmouth, ME 04096 USA
(207) 829-5359
yrtlab@maine.rr.com
www.yarmouthresearch.com

Yarmouth Research and Technology

PROJECT SUMMARY

Project Number: 20354

Customer: Fluoroseal Specialty Valves

Contact: Mr. Riad Haffar

Date(s) of Test: 5/7/03 – 5/27/03

Product(s) Tested: One 2 inch Class 150 Plug Valve with double acting pneumatic actuator

Purpose of Test: The test was conducted to evaluate the valve's stem seal sealing performance when measured according to the test specification and 40 CFR Part 60, Appendix A, Method 21.

Test Procedure: The ISO Fugitive Emission Draft Specification was used for this test. The basic test parameters were:

- The valve was cycled at a rate of 4 times per minute.
- Test pressure was 250 psig.
- Test media was 99% methane.
- Test temperature was ambient.
- Leakage measurements were made with the stem static and with the stem in motion.
- Measurements were made every 5000 cycles.

Conclusion: Valve was tested as received without any packing adjustments being made throughout the test.

Maximum leakage reading with the stem static was 182 PPMv and with the stem in motion 561 PPMv.

Leakage of the bonnet/body seal was below 1 PPMv at the beginning and end of the cycling.

See attached data sheets for more information.

Test Witness:

Matthew J. Wasielewski, P.E., President
YARMOUTH RESEARCH AND TECHNOLOGY

STATE OF MAINE
MATTHEW J. WASIELEWSKI
#7437
REGISTERED MECHANICAL ENGINEER

92 East Elm Street, Yarmouth, Maine 04096 USA
www.yarmouthresearch.com

Yarmouth Research and Technology

DATA SUMMARY

Customer: Fluoroseal Specialty Valves **Date:** 27-May-03

Product Description: 2 inch Class 150 Fluoroseal Plug Valve

Project Number: 20354

Test Pressure: 250 psig

Test Media: 99% Methane

Test Results: The average and maximum leakage results shown below were calculated from 60 readings measured during a minute duration.

See data sheets for more detailed information.

		Stem Seal Leakage Readings (PPMv)			
Cycle Number	*Temperature (F)*	*Static Condition*		*Dynamic Condition*	
		Avg.	*Max.*	*Avg.*	*Max.*
0	Ambient	0.3	0.3	0.3	0.3
5000	Ambient	0.8	1.9	0.5	0.7
10000	Ambient	2.0	2.8	1.2	1.6
15000	Ambient	2.7	3.7	5.3	10.0
20000	Ambient	0.8	1.0	0.6	0.7
25000	Ambient	0.8	1.3	1.0	2.0
30000	Ambient	1.1	1.4	1.5	1.8
35000	Ambient	1.8	1.9	2.0	2.7
40000	Ambient	1.2	2.2	1.3	2.1
45000	Ambient	2.6	2.9	2.6	3.9
50000	Ambient	9.3	11.3	31.7	62.6
55000	Ambient	14.8	17.7	27.5	64.0
60000	Ambient	6.2	6.5	72.9	100.0
65000	Ambient	170.2	182.3	330.5	560.7
70000	Ambient	31.9	34.7	56.6	76.1
75000	Ambient	97.8	126.7	76.7	142.5
80000	Ambient	41.1	61.2	48.0	90.6
85000	Ambient	38.7	50.5	44.7	102.3
90000	Ambient	33.4	45.7	41.7	54.7
95000	Ambient	21.5	27.7	47.8	87.2
100000	Ambient	18.2	24.6	32.3	39.5

Bonnet Gasket Leakage

Leakage was measured at the bonnet/body seal at the start and end of the cycling.
Measurements were below 1 PPMv.

Witness

STATE OF MAINE
MATTHEW J. WASIELEWSKI
#7437
REGISTERED MECHANICAL ENGINEER

92 East Elm Street, Yarmouth, Maine, 04096 USA
www.yarmouthresearch.com

Yarmouth Research and Technology

Static Leakage Chart

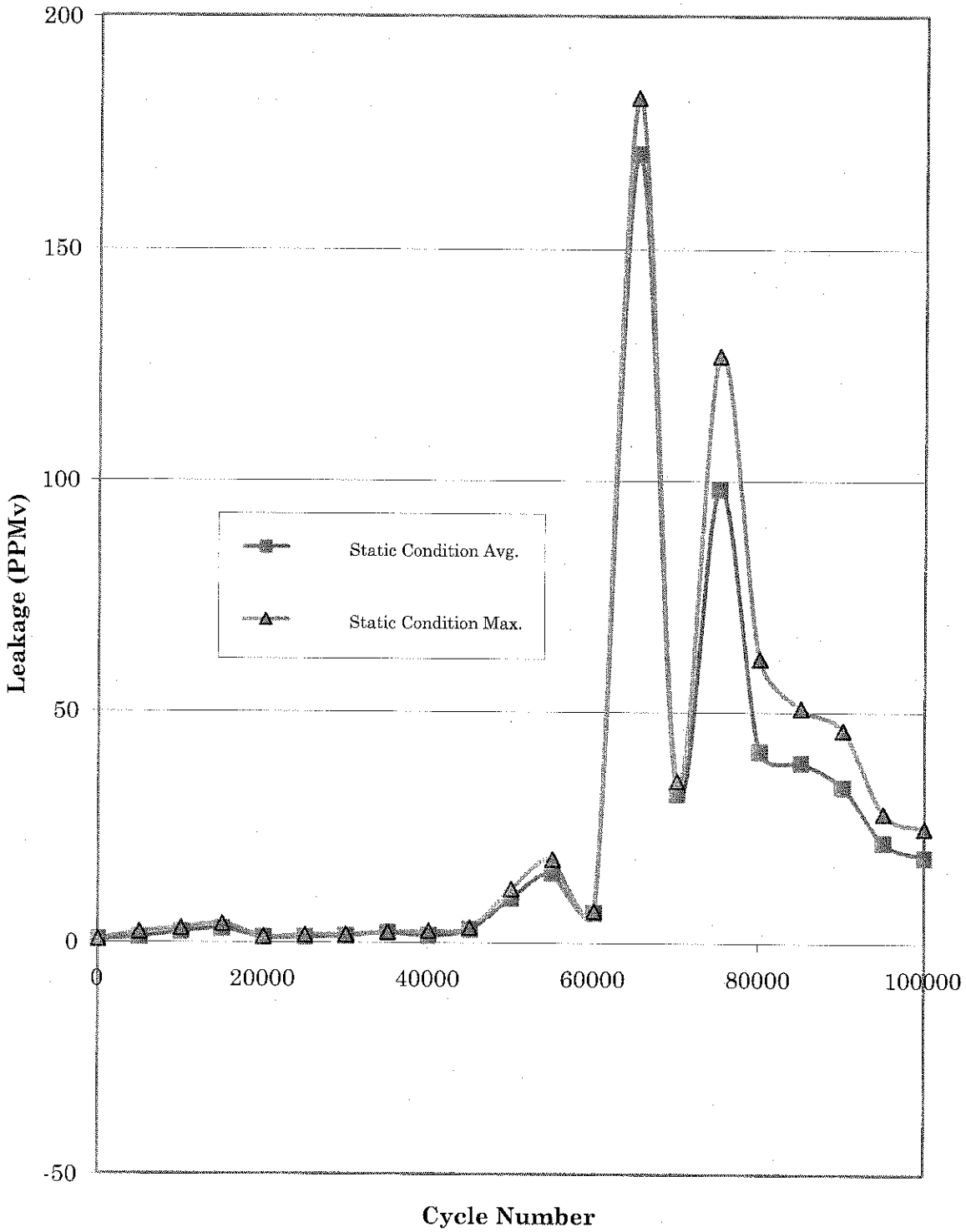

92 East Elm Street, Yarmouth, Maine, 04096 USA
www.yarmouthresearch.com

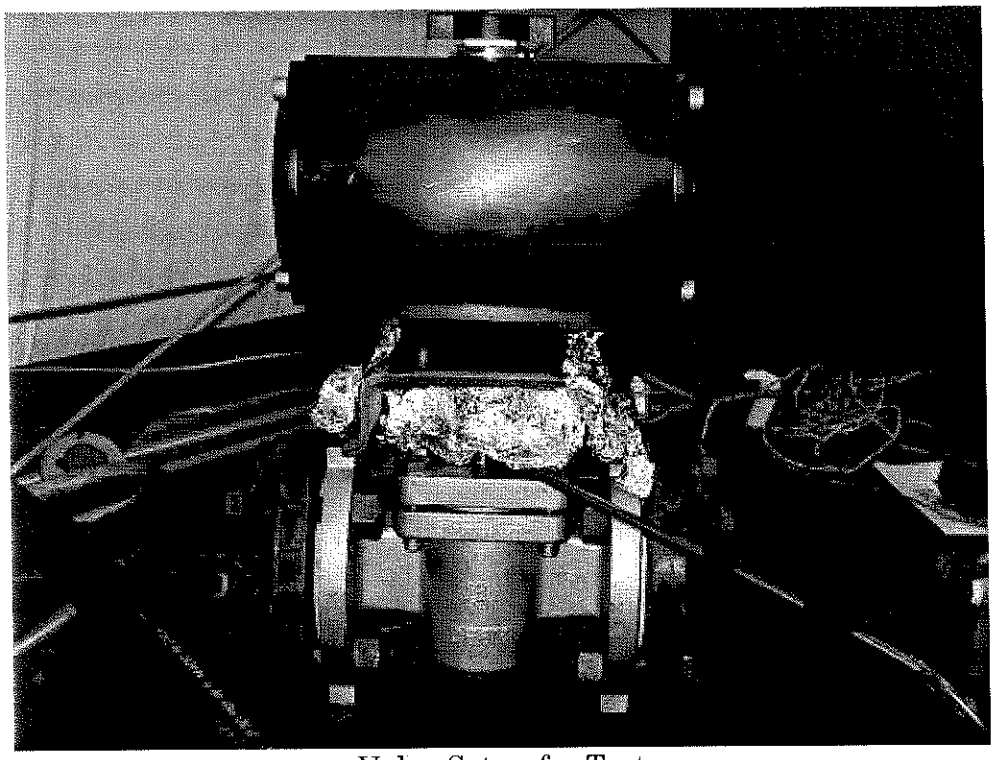

Valve Setup for Test

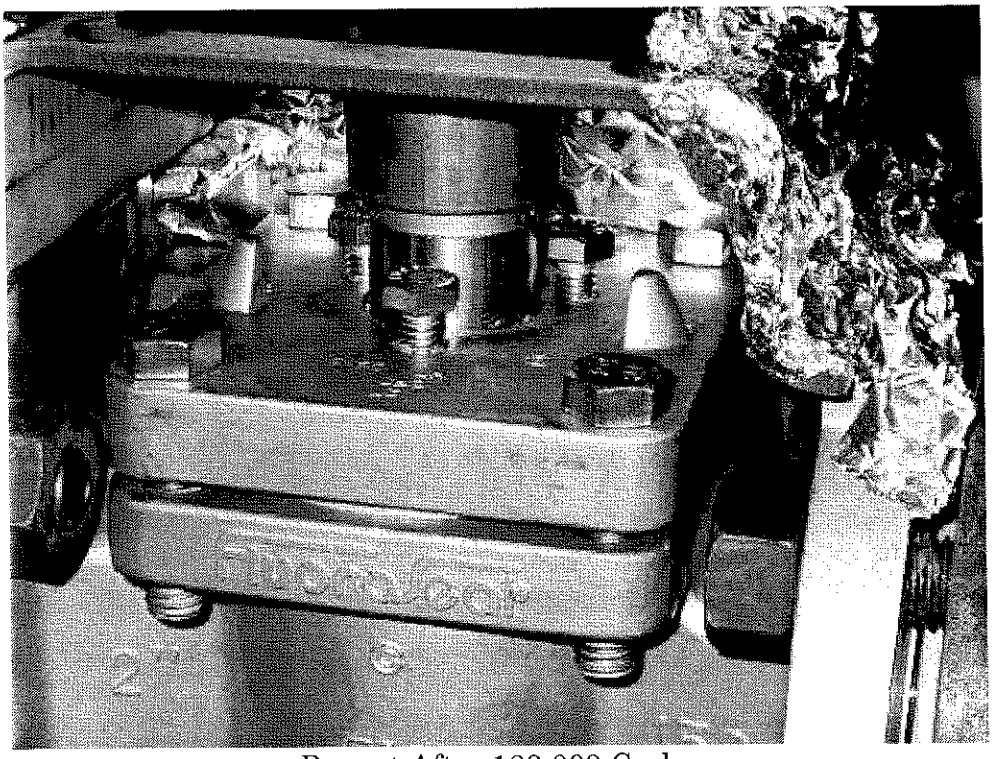

Bonnet After 100,000 Cycles

VALVE COMPONENTS

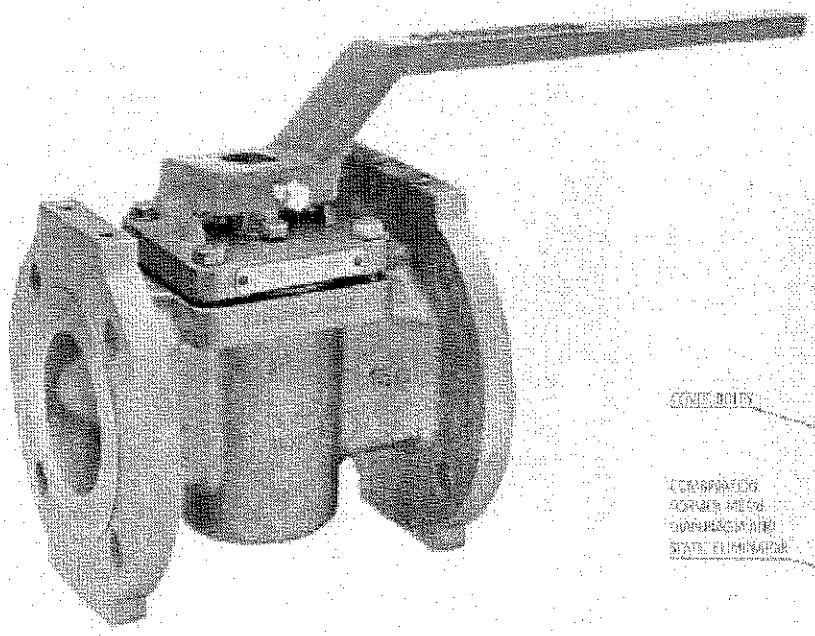

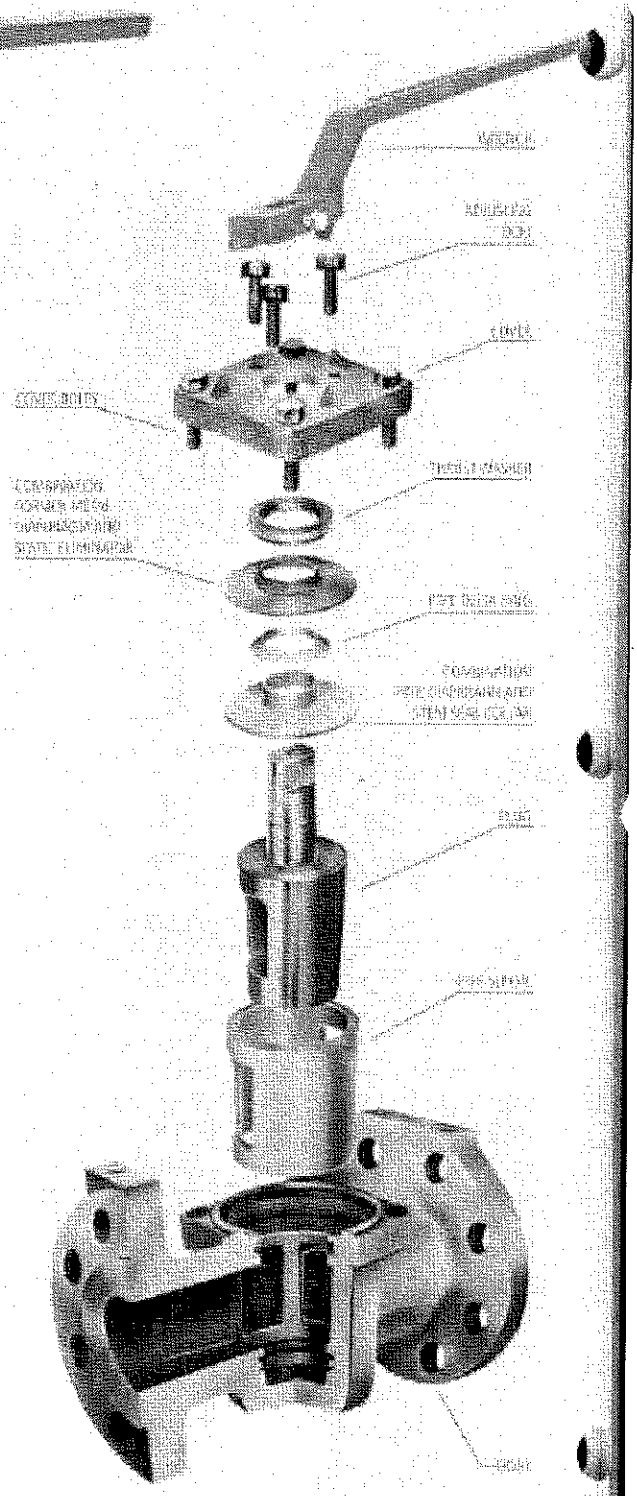

MATERIALS OF CONSTRUCTION

Body and Plug	As specified
Cover	Ductile Iron, Carbon Steel, 304 SS
Cover Bolts[1]	Steel, 304 SS
Adjusting Bolts	304 SS
Thrust Washer	304 SS
Metal Diaphragm[2]	304 SS, Monel
Tacks Ring	PTFE Fluorocarbon
Diaphragm	PTFE Fluorocarbon
Sleeve[2]	PTFE Fluorocarbon
Wrench Operator	Ductile Iron
Wrench Bolt[3]	Steel
Gear Assembly	Cast Steel Housing
Gear Adapter[3]	Steel
Gear Mounting Bracket	304 SS
Mounting Bracket Bolts[3]	Steel

1. See "Selection Guide" for material selection. Ductile iron plugs will be supplied with 304 SS bolts, unless otherwise specified.
2. Gear and DIS actuators of standard materials will be supplied in accordance with the following table:

Specified Body Material	Cover Material	Actuator Body Material
Ductile Iron	Ductile Iron	ASTM A-126 Cl. B
Carbon Steel	Carbon Steel	ASTM A-216 Gr. WCB
All other materials	316 SS	ASTM A-351 Gr. CF8M

3. Monel metal diaphragms will be supplied with valve having a metal to metal body or plug. All others will be supplied with 304 SS of the same.
4. Glass surfaced PTFE, PFA Fluorocarbon and Ceramic sleeves are available upon special order.
5. 304 SS Available on special order.

Yarmouth Research and Technology

Valve Description: 2 inch Class 150 Fluoroseal Plug Valve

Cycle Number: 0 **Date** 5/7/2003

Time	Pressure (psig)	Temp. (deg. F)	Sampling Rate (l/m)	PPMv Reading
3:25:08 PM	250.9	75.0	1.0	0.3
3:25:10 PM	250.9	75.0	1.0	0.3
3:25:11 PM	250.9	75.0	1.0	0.3
3:25:12 PM	250.9	75.0	1.0	0.3
3:25:13 PM	250.9	75.0	1.0	0.3
3:25:14 PM	250.9	75.0	1.0	0.3
3:25:15 PM	250.9	75.0	1.0	0.3
3:25:16 PM	250.9	75.0	1.0	0.3
3:25:17 PM	250.9	75.0	1.0	0.3
3:25:18 PM	250.8	75.0	1.0	0.3
3:25:19 PM	250.9	75.0	1.0	0.3
3:25:20 PM	250.9	75.0	1.0	0.3
3:25:21 PM	250.8	75.0	1.0	0.3
3:25:22 PM	250.9	75.0	1.0	0.3
3:25:23 PM	250.8	75.0	1.0	0.3
3:25:24 PM	250.9	75.0	1.0	0.3
3:25:25 PM	250.9	75.0	1.0	0.3
3:25:26 PM	250.9	75.0	1.0	0.3
3:25:27 PM	250.9	75.0	1.0	0.3
3:25:28 PM	250.9	75.0	1.0	0.3
3:25:29 PM	250.9	75.0	1.0	0.3
3:25:30 PM	250.9	75.0	1.0	0.3
3:25:31 PM	250.9	75.0	1.0	0.3
3:25:32 PM	250.9	75.0	1.0	0.3
3:25:34 PM	250.9	75.0	1.0	0.3
3:25:35 PM	250.9	75.0	1.0	0.3
3:25:36 PM	250.9	74.0	1.0	0.3
3:25:37 PM	250.8	74.0	1.0	0.3
3:25:38 PM	250.8	74.0	1.0	0.3
3:25:39 PM	250.9	74.0	1.0	0.3
3:25:40 PM	250.8	74.0	1.0	0.3
3:25:41 PM	250.8	74.0	1.0	0.3
3:25:42 PM	250.8	74.0	1.0	0.3
3:25:43 PM	250.8	74.0	1.0	0.3
3:25:44 PM	250.9	74.0	1.0	0.3
3:25:45 PM	250.8	74.0	1.0	0.3
3:25:46 PM	250.9	74.0	1.0	0.3
3:25:47 PM	250.8	74.0	1.0	0.3
3:25:48 PM	250.8	74.0	1.0	0.3
3:25:49 PM	250.8	74.0	1.0	0.3
3:25:50 PM	250.8	74.0	1.0	0.3
3:25:51 PM	250.8	74.0	1.0	0.3
3:25:52 PM	250.8	74.0	1.0	0.3
3:25:53 PM	250.8	74.0	1.0	0.3
3:25:54 PM	250.9	74.0	1.0	0.3
3:25:55 PM	250.8	74.0	1.0	0.3
3:25:57 PM	250.8	74.0	1.0	0.3
3:25:58 PM	250.9	74.0	1.0	0.3
3:25:59 PM	250.9	74.0	1.0	0.3
3:26:00 PM	250.9	74.0	1.0	0.3
3:26:01 PM	250.8	74.0	1.0	0.3
3:26:02 PM	250.9	74.0	1.0	0.3
3:26:03 PM	250.8	74.0	1.0	0.3
3:26:04 PM	250.8	74.0	1.0	0.3
3:26:05 PM	250.9	74.0	1.0	0.3
3:26:06 PM	250.8	74.0	1.0	0.3
3:26:07 PM	250.8	74.0	1.0	0.3
3:26:08 PM	250.8	74.0	1.0	0.3
3:26:09 PM	250.9	74.0	1.0	0.3
3:26:10 PM	250.9	74.0	1.0	0.3
Averages ->	**250.8**	**74.4**	**1.0**	**0.3**
			Maximum ->	**0.3**

92 East Elm Street, Yarmouth, Maine, 04096 USA
www.yarmouthresearch.com

Yarmouth Research and Technology

Valve Description: 2 inch Class 150 Fluoroseal Plug Valve

Cycle Number: 0 **Date** 5/7/2003

Time	Pressure (psig)	Temp. (deg. F)	Sampling Rate (l/m)	PPMv Reading
3:26:25 PM	250.9	74.0	1.0	0.3
3:26:26 PM	250.9	74.0	1.0	0.2
3:26:28 PM	250.9	74.0	1.0	0.3
3:26:29 PM	250.9	74.0	1.0	0.3
3:26:30 PM	250.9	74.0	1.0	0.3
3:26:31 PM	250.9	74.0	1.0	0.3
3:26:32 PM	250.9	74.0	1.0	0.3
3:26:33 PM	250.9	74.0	1.0	0.3
3:26:34 PM	250.9	74.0	1.0	0.3
3:26:35 PM	250.9	74.0	1.0	0.3
3:26:36 PM	250.9	74.0	1.0	0.3
3:26:37 PM	250.9	74.0	1.0	0.3
3:26:38 PM	250.9	74.0	1.0	0.3
3:26:39 PM	250.9	74.0	1.0	0.3
3:26:40 PM	250.9	74.0	1.0	0.3
3:26:41 PM	250.9	74.0	1.0	0.3
3:26:42 PM	250.9	74.0	1.0	0.3
3:26:43 PM	250.9	74.0	1.0	0.3
3:26:44 PM	250.9	74.0	1.0	0.3
3:26:45 PM	250.9	74.0	1.0	0.3
3:26:46 PM	251.0	74.0	1.0	0.3
3:26:47 PM	250.9	74.0	1.0	0.3
3:26:48 PM	250.9	74.0	1.0	0.3
3:26:49 PM	251.0	74.0	1.0	0.3
3:26:50 PM	250.9	74.0	1.0	0.3
3:26:52 PM	250.9	74.0	1.0	0.3
3:26:53 PM	251.0	74.0	1.0	0.3
3:26:54 PM	250.9	74.0	1.0	0.3
3:26:55 PM	250.9	74.0	1.0	0.3
3:26:56 PM	251.0	74.0	1.0	0.3
3:26:57 PM	251.0	74.0	1.0	0.3
3:26:58 PM	251.0	74.0	1.0	0.3
3:26:59 PM	250.9	74.0	1.0	0.3
3:27:00 PM	250.9	74.0	1.0	0.3
3:27:01 PM	250.9	74.0	1.0	0.3
3:27:02 PM	251.0	74.0	1.0	0.3
3:27:03 PM	251.0	74.0	1.0	0.3
3:27:04 PM	251.0	74.0	1.0	0.3
3:27:05 PM	251.0	74.0	1.0	0.3
3:27:06 PM	250.9	74.0	1.0	0.3
3:27:07 PM	251.0	74.0	1.0	0.3
3:27:08 PM	251.0	74.0	1.0	0.3
3:27:09 PM	251.0	74.0	1.0	0.3
3:27:10 PM	251.0	74.0	1.0	0.3
3:27:11 PM	251.0	74.0	1.0	0.3
3:27:13 PM	251.0	74.0	1.0	0.3
3:27:14 PM	250.9	74.0	1.0	0.3
3:27:15 PM	251.0	74.0	1.0	0.3
3:27:16 PM	251.0	74.0	1.0	0.3
3:27:17 PM	251.0	74.0	1.0	0.3
3:27:18 PM	251.0	74.0	1.0	0.3
3:27:19 PM	250.9	74.0	1.0	0.3
3:27:20 PM	250.9	74.0	1.0	0.3
3:27:21 PM	250.9	74.0	1.0	0.3
3:27:22 PM	251.0	74.0	1.0	0.3
3:27:23 PM	250.9	74.0	1.0	0.2
3:27:24 PM	251.0	74.0	1.0	0.2
3:27:25 PM	251.0	74.0	1.0	0.2
3:27:26 PM	251.0	74.0	1.0	0.3
3:27:27 PM	251.0	74.0	1.0	0.3
Averages ->	**250.9**	**74.0**	**1.0**	**0.3**
			Maximum ->	**0.3**

92 East Elm Street, Yarmouth, Maine, 04096 USA
www.yarmouthresearch.com

Yarmouth Research and Technology

Valve Description: 2 inch Class 150 Fluoroseal Plug Valve

Cycle Number: 5000 **Date** 5/8/2003

Time	Pressure (psig)	Temp. (deg. F)	Sampling Rate (l/m)	PPMv Reading
2:34:36 PM	249.9	75.0	1.0	0.4
2:34:37 PM	249.9	75.0	1.0	0.4
2:34:38 PM	249.9	75.0	1.0	0.4
2:34:39 PM	249.9	75.0	1.0	0.4
2:34:40 PM	249.9	75.0	1.0	0.4
2:34:41 PM	249.9	75.0	1.0	0.4
2:34:42 PM	249.9	75.0	1.0	0.4
2:34:43 PM	249.9	75.0	1.0	0.4
2:34:44 PM	249.9	75.0	1.0	0.4
2:34:45 PM	249.9	75.0	1.0	0.4
2:34:46 PM	249.9	75.0	1.0	0.4
2:34:47 PM	249.9	75.0	1.0	0.4
2:34:48 PM	249.9	75.0	1.0	0.4
2:34:49 PM	249.9	75.0	1.0	0.4
2:34:50 PM	249.9	75.0	1.0	0.4
2:34:52 PM	249.9	75.0	1.0	0.4
2:34:53 PM	249.9	75.0	1.0	0.4
2:34:54 PM	249.9	75.0	1.0	0.4
2:34:55 PM	249.9	75.0	1.0	0.4
2:34:56 PM	249.9	75.0	1.0	0.5
2:34:57 PM	249.9	75.0	1.0	0.5
2:34:58 PM	249.9	75.0	1.0	0.5
2:34:59 PM	249.8	75.0	1.0	0.5
2:35:00 PM	249.9	75.0	1.0	0.6
2:35:01 PM	249.9	75.0	1.0	0.6
2:35:02 PM	249.9	75.0	1.0	0.6
2:35:03 PM	249.9	75.0	1.0	0.7
2:35:04 PM	249.9	75.0	1.0	0.7
2:35:05 PM	249.9	75.0	1.0	0.8
2:35:06 PM	249.9	75.0	1.0	1.0
2:35:07 PM	249.9	75.0	1.0	1.1
2:35:08 PM	249.8	75.0	1.0	1.2
2:35:09 PM	249.9	75.0	1.0	1.4
2:35:10 PM	249.9	75.0	1.0	1.5
2:35:11 PM	249.8	75.0	1.0	1.7
2:35:12 PM	249.8	75.0	1.0	1.8
2:35:13 PM	249.8	75.0	1.0	1.9
2:35:14 PM	249.9	75.0	1.0	1.9
2:35:16 PM	249.8	75.0	1.0	1.9
2:35:17 PM	249.9	75.0	1.0	1.8
2:35:18 PM	249.8	75.0	1.0	1.7
2:35:19 PM	249.8	75.0	1.0	1.6
2:35:20 PM	249.8	75.0	1.0	1.5
2:35:21 PM	249.8	75.0	1.0	1.3
2:35:22 PM	249.8	75.0	1.0	1.2
2:35:23 PM	249.8	75.0	1.0	1.1
2:35:24 PM	249.8	75.0	1.0	1.0
2:35:25 PM	249.8	75.0	1.0	0.9
2:35:26 PM	249.8	75.0	1.0	0.8
2:35:27 PM	249.8	75.0	1.0	0.8
2:35:28 PM	249.8	75.0	1.0	0.7
2:35:29 PM	249.9	75.0	1.0	0.7
2:35:30 PM	249.8	75.0	1.0	0.6
2:35:31 PM	249.8	75.0	1.0	0.6
2:35:32 PM	249.9	75.0	1.0	0.6
2:35:33 PM	249.8	75.0	1.0	0.6
2:35:34 PM	249.8	75.0	1.0	0.6
2:35:35 PM	249.8	75.0	1.0	0.6
2:35:37 PM	249.8	75.0	1.0	0.6
2:35:38 PM	249.9	75.0	1.0	0.6
Averages ->	**249.9**	**75.0**	**1.0**	**0.8**
			Maximum ->	**1.9**

92 East Elm Street, Yarmouth, Maine, 04096 USA
www.yarmouthresearch.com

Yarmouth Research and Technology

Valve Description: 2 inch Class 150 Fluoroseal Plug Valve

Cycle Number: 5000 **Date** 5/8/2003

Time	Pressure (psig)	Temp. (deg. F)	Sampling Rate (l/m)	PPMv Reading
2:35:51 PM	249.8	75.0	1.0	0.5
2:35:52 PM	249.7	75.0	1.0	0.5
2:35:53 PM	249.6	75.0	1.0	0.5
2:35:54 PM	249.6	75.0	1.0	0.5
2:35:56 PM	249.6	75.0	1.0	0.5
2:35:57 PM	249.6	75.0	1.0	0.5
2:35:58 PM	249.6	75.0	1.0	0.4
2:35:59 PM	249.6	75.0	1.0	0.4
2:36:00 PM	249.6	75.0	1.0	0.4
2:36:01 PM	249.6	75.0	1.0	0.4
2:36:02 PM	249.6	75.0	1.0	0.4
2:36:03 PM	249.6	75.0	1.0	0.4
2:36:04 PM	249.6	75.0	1.0	0.4
2:36:05 PM	249.6	75.0	1.0	0.5
2:36:06 PM	249.6	75.0	1.0	0.5
2:36:07 PM	249.6	75.0	1.0	0.4
2:36:08 PM	249.6	75.0	1.0	0.4
2:36:09 PM	249.6	75.0	1.0	0.4
2:36:10 PM	249.6	75.0	1.0	0.5
2:36:11 PM	249.6	75.0	1.0	0.4
2:36:12 PM	249.6	75.0	1.0	0.5
2:36:13 PM	249.6	75.0	1.0	0.5
2:36:14 PM	249.6	75.0	1.0	0.5
2:36:15 PM	249.6	75.0	1.0	0.5
2:36:16 PM	249.6	75.0	1.0	0.5
2:36:17 PM	249.6	75.0	1.0	0.5
2:36:19 PM	249.6	75.0	1.0	0.5
2:36:20 PM	249.6	75.0	1.0	0.5
2:36:21 PM	249.6	75.0	1.0	0.6
2:36:22 PM	249.7	75.0	1.0	0.6
2:36:23 PM	249.7	75.0	1.0	0.6
2:36:24 PM	249.6	75.0	1.0	0.6
2:36:25 PM	249.6	75.0	1.0	0.6
2:36:26 PM	249.6	75.0	1.0	0.6
2:36:27 PM	249.6	75.0	1.0	0.6
2:36:28 PM	249.6	75.0	1.0	0.7
2:36:29 PM	249.6	75.0	1.0	0.7
2:36:30 PM	249.6	75.0	1.0	0.7
2:36:31 PM	249.7	75.0	1.0	0.7
2:36:32 PM	249.7	75.0	1.0	0.6
2:36:33 PM	249.6	75.0	1.0	0.6
2:36:34 PM	249.6	75.0	1.0	0.6
2:36:35 PM	249.6	75.0	1.0	0.6
2:36:36 PM	249.6	75.0	1.0	0.6
2:36:37 PM	249.7	75.0	1.0	0.6
2:36:38 PM	249.7	75.0	1.0	0.6
2:36:39 PM	249.7	75.0	1.0	0.6
2:36:40 PM	249.6	75.0	1.0	0.6
2:36:41 PM	249.7	75.0	1.0	0.6
2:36:43 PM	249.7	75.0	1.0	0.6
2:36:44 PM	249.7	75.0	1.0	0.5
2:36:45 PM	249.7	75.0	1.0	0.5
2:36:46 PM	249.7	75.0	1.0	0.5
2:36:47 PM	249.7	75.0	1.0	0.5
2:36:48 PM	249.6	75.0	1.0	0.5
2:36:49 PM	249.6	75.0	1.0	0.5
2:36:50 PM	249.6	75.0	1.0	0.4
2:36:51 PM	249.7	75.0	1.0	0.4
2:36:52 PM	249.7	75.0	1.0	0.5
2:36:53 PM	249.7	75.0	1.0	0.5
Averages ->	**249.6**	**75.0**	**1.0**	**0.5**
			Maximum ->	**0.7**

Yarmouth Research and Technology

Valve Description: 2 inch Class 150 Fluoroseal Plug Valve

Cycle Number: 10000 **Date** 5/9/2003

Time	Pressure (psig)	Temp. (deg. F)	Sampling Rate (l/m)	PPMv Reading
12:50:01 PM	249.2	75.0	1.0	0.9
12:50:02 PM	249.2	75.0	1.0	0.9
12:50:03 PM	249.2	75.0	1.0	0.8
12:50:04 PM	249.2	75.0	1.0	0.8
12:50:05 PM	249.2	75.0	1.0	0.7
12:50:06 PM	249.2	75.0	1.0	0.7
12:50:07 PM	249.2	75.0	1.0	0.8
12:50:08 PM	249.2	75.0	1.0	0.7
12:50:09 PM	249.2	75.0	1.0	0.7
12:50:10 PM	249.2	75.0	1.0	0.7
12:50:11 PM	249.2	75.0	1.0	0.8
12:50:12 PM	249.2	75.0	1.0	0.8
12:50:13 PM	249.2	75.0	1.0	0.9
12:50:14 PM	249.2	75.0	1.0	1.0
12:50:15 PM	249.2	75.0	1.0	1.1
12:50:17 PM	249.2	75.0	1.0	1.2
12:50:18 PM	249.2	75.0	1.0	1.3
12:50:19 PM	249.2	75.0	1.0	1.5
12:50:20 PM	249.2	75.0	1.0	1.6
12:50:21 PM	249.2	75.0	1.0	1.7
12:50:22 PM	249.2	75.0	1.0	1.9
12:50:23 PM	249.2	75.0	1.0	2.0
12:50:24 PM	249.2	75.0	1.0	2.1
12:50:25 PM	249.2	75.0	1.0	2.1
12:50:26 PM	249.2	75.0	1.0	2.1
12:50:27 PM	249.2	75.0	1.0	2.2
12:50:28 PM	249.2	75.0	1.0	2.2
12:50:29 PM	249.2	75.0	1.0	2.2
12:50:30 PM	249.2	75.0	1.0	2.2
12:50:31 PM	249.2	75.0	1.0	2.2
12:50:32 PM	249.2	75.0	1.0	2.3
12:50:33 PM	249.2	75.0	1.0	2.3
12:50:34 PM	249.2	75.0	1.0	2.3
12:50:35 PM	249.2	75.0	1.0	2.4
12:50:36 PM	249.2	75.0	1.0	2.4
12:50:37 PM	249.2	75.0	1.0	2.4
12:50:38 PM	249.2	75.0	1.0	2.5
12:50:40 PM	249.2	75.0	1.0	2.5
12:50:41 PM	249.2	75.0	1.0	2.6
12:50:42 PM	249.2	75.0	1.0	2.6
12:50:43 PM	249.2	75.0	1.0	2.5
12:50:44 PM	249.2	75.0	1.0	2.6
12:50:45 PM	249.1	75.0	1.0	2.6
12:50:46 PM	249.2	75.0	1.0	2.6
12:50:47 PM	249.2	75.0	1.0	2.7
12:50:48 PM	249.2	75.0	1.0	2.7
12:50:49 PM	249.2	75.0	1.0	2.7
12:50:50 PM	249.2	75.0	1.0	2.7
12:50:51 PM	249.2	75.0	1.0	2.7
12:50:52 PM	249.2	75.0	1.0	2.8
12:50:53 PM	249.2	75.0	1.0	2.7
12:50:54 PM	249.2	75.0	1.0	2.7
12:50:55 PM	249.2	75.0	1.0	2.7
12:50:56 PM	249.2	75.0	1.0	2.7
12:50:57 PM	249.2	75.0	1.0	2.7
12:50:58 PM	249.2	75.0	1.0	2.7
12:50:59 PM	249.2	75.0	1.0	2.7
12:51:00 PM	249.2	75.0	1.0	2.8
12:51:01 PM	249.2	75.0	1.0	2.8
12:51:02 PM	249.2	75.0	1.0	2.8
Averages ->	**249.2**	**75.0**	**1.0**	**2.0**
			Maximum ->	**2.8**

92 East Elm Street, Yarmouth, Maine, 04096 USA
www.yarmouthresearch.com

Yarmouth Research and Technology

Valve Description: 2 inch Class 150 Fluoroseal Plug Valve

Cycle Number: 10000 **Date** 5/9/2003

Time	Pressure (psig)	Temp. (deg. F)	Sampling Rate (l/m)	PPMv Reading
12:51:42 PM	249.1	75.0	1.0	1.6
12:51:43 PM	249.1	75.0	1.0	1.4
12:51:44 PM	249.1	75.0	1.0	1.3
12:51:45 PM	249.1	75.0	1.0	1.3
12:51:46 PM	249.1	75.0	1.0	1.3
12:51:47 PM	249.1	75.0	1.0	1.3
12:51:48 PM	249.0	75.0	1.0	1.3
12:51:49 PM	249.0	75.0	1.0	1.2
12:51:50 PM	249.0	75.0	1.0	1.3
12:51:51 PM	249.1	75.0	1.0	1.3
12:51:52 PM	249.0	75.0	1.0	1.3
12:51:53 PM	249.0	75.0	1.0	1.3
12:51:54 PM	249.0	75.0	1.0	1.2
12:51:55 PM	249.0	75.0	1.0	1.2
12:51:56 PM	249.0	75.0	1.0	1.1
12:51:57 PM	249.1	75.0	1.0	1.1
12:51:58 PM	249.0	75.0	1.0	1.1
12:51:59 PM	249.0	75.0	1.0	1.1
12:52:01 PM	249.0	75.0	1.0	1.0
12:52:02 PM	249.0	75.0	1.0	1.1
12:52:03 PM	249.0	75.0	1.0	1.1
12:52:04 PM	249.0	75.0	1.0	1.1
12:52:05 PM	249.0	75.0	1.0	1.0
12:52:06 PM	249.0	75.0	1.0	1.0
12:52:07 PM	249.0	75.0	1.0	1.0
12:52:08 PM	249.0	75.0	1.0	1.0
12:52:09 PM	248.9	75.0	1.0	1.0
12:52:10 PM	249.0	75.0	1.0	1.0
12:52:11 PM	249.0	75.0	1.0	1.1
12:52:12 PM	249.0	75.0	1.0	1.1
12:52:13 PM	248.9	75.0	1.0	1.1
12:52:14 PM	249.0	75.0	1.0	1.2
12:52:15 PM	249.0	75.0	1.0	1.2
12:52:16 PM	249.0	75.0	1.0	1.2
12:52:17 PM	249.0	75.0	1.0	1.3
12:52:18 PM	249.0	75.0	1.0	1.3
12:52:19 PM	248.9	75.0	1.0	1.4
12:52:20 PM	249.0	75.0	1.0	1.4
12:52:22 PM	248.9	74.0	1.0	1.4
12:52:23 PM	249.0	75.0	1.0	1.4
12:52:24 PM	249.0	75.0	1.0	1.4
12:52:25 PM	248.9	75.0	1.0	1.4
12:52:26 PM	248.9	75.0	1.0	1.4
12:52:27 PM	248.9	75.0	1.0	1.4
12:52:28 PM	248.9	75.0	1.0	1.3
12:52:29 PM	248.9	75.0	1.0	1.3
12:52:30 PM	249.0	75.0	1.0	1.3
12:52:31 PM	248.9	75.0	1.0	1.3
12:52:32 PM	248.9	75.0	1.0	1.2
12:52:33 PM	248.9	75.0	1.0	1.2
12:52:34 PM	248.9	75.0	1.0	1.2
12:52:35 PM	248.9	75.0	1.0	1.2
12:52:36 PM	248.8	75.0	1.0	1.1
12:52:37 PM	248.9	75.0	1.0	1.1
12:52:38 PM	248.8	75.0	1.0	1.1
12:52:39 PM	248.9	75.0	1.0	1.1
12:52:40 PM	248.9	75.0	1.0	1.1
12:52:41 PM	248.9	75.0	1.0	1.0
12:52:42 PM	248.9	75.0	1.0	1.0
12:52:44 PM	248.9	75.0	1.0	1.0
Averages ->	**249.0**	**75.0**	**1.0**	**1.2**
			Maximum ->	**1.6**

92 East Elm Street, Yarmouth, Maine, 04096 USA
www.yarmouthresearch.com

Yarmouth Research and Technology

Valve Description: 2 inch Class 150 Fluoroseal Plug Valve

Cycle Number: 15000 **Date** 5/10/2003

Time	Pressure (psig)	Temp. (deg. F)	Sampling Rate (l/m)	PPMv Reading
10:45:36 AM	250.6	74.0	1.0	3.7
10:45:38 AM	250.7	74.0	1.0	3.7
10:45:39 AM	250.6	74.0	1.0	3.6
10:45:40 AM	250.6	74.0	1.0	3.5
10:45:41 AM	250.6	74.0	1.0	3.4
10:45:42 AM	250.6	74.0	1.0	3.4
10:45:43 AM	250.6	74.0	1.0	3.4
10:45:44 AM	250.7	74.0	1.0	3.3
10:45:45 AM	250.6	74.0	1.0	3.2
10:45:46 AM	250.6	74.0	1.0	3.2
10:45:47 AM	250.6	74.0	1.0	3.2
10:45:48 AM	250.6	74.0	1.0	3.1
10:45:49 AM	250.6	74.0	1.0	3.0
10:45:50 AM	250.7	74.0	1.0	3.0
10:45:51 AM	250.6	74.0	1.0	3.0
10:45:52 AM	250.6	74.0	1.0	3.0
10:45:53 AM	250.7	74.0	1.0	2.9
10:45:54 AM	250.6	74.0	1.0	2.9
10:45:55 AM	250.6	74.0	1.0	2.9
10:45:56 AM	250.6	74.0	1.0	2.9
10:45:57 AM	250.6	74.0	1.0	2.8
10:45:58 AM	250.6	74.0	1.0	2.8
10:45:59 AM	250.6	74.0	1.0	2.9
10:46:01 AM	250.7	74.0	1.0	2.9
10:46:02 AM	250.6	74.0	1.0	2.8
10:46:03 AM	250.7	74.0	1.0	2.7
10:46:04 AM	250.6	74.0	1.0	2.7
10:46:05 AM	250.6	74.0	1.0	2.7
10:46:06 AM	250.6	74.0	1.0	2.6
10:46:07 AM	250.6	74.0	1.0	2.7
10:46:08 AM	250.6	74.0	1.0	2.6
10:46:09 AM	250.6	74.0	1.0	2.5
10:46:10 AM	250.6	74.0	1.0	2.6
10:46:11 AM	250.6	74.0	1.0	2.5
10:46:12 AM	250.6	74.0	1.0	2.5
10:46:13 AM	250.6	74.0	1.0	2.5
10:46:14 AM	250.6	74.0	1.0	2.5
10:46:15 AM	250.6	74.0	1.0	2.5
10:46:16 AM	250.6	74.0	1.0	2.5
10:46:17 AM	250.6	74.0	1.0	2.4
10:46:18 AM	250.6	74.0	1.0	2.4
10:46:19 AM	250.6	74.0	1.0	2.4
10:46:20 AM	250.6	74.0	1.0	2.3
10:46:21 AM	250.6	74.0	1.0	2.3
10:46:22 AM	250.6	74.0	1.0	2.3
10:46:23 AM	250.6	74.0	1.0	2.3
10:46:25 AM	250.6	74.0	1.0	2.2
10:46:26 AM	250.6	74.0	1.0	2.2
10:46:27 AM	250.6	74.0	1.0	2.2
10:46:28 AM	250.6	74.0	1.0	2.1
10:46:29 AM	250.6	74.0	1.0	2.1
10:46:30 AM	250.6	74.0	1.0	2.1
10:46:31 AM	250.6	74.0	1.0	2.1
10:46:32 AM	250.6	74.0	1.0	2.0
10:46:33 AM	250.6	74.0	1.0	2.0
10:46:34 AM	250.6	74.0	1.0	1.9
10:46:35 AM	250.6	73.0	1.0	1.9
10:46:36 AM	250.6	74.0	1.0	1.9
10:46:37 AM	250.6	74.0	1.0	1.9
10:46:38 AM	250.6	74.0	1.0	1.9
Averages ->	**250.6**	**74.0**	**1.0**	**2.7**
			Maximum ->	**3.7**

92 East Elm Street, Yarmouth, Maine, 04096 USA
www.yarmouthresearch.com

Yarmouth Research and Technology

Valve Description: 2 inch Class 150 Fluoroseal Plug Valve

Cycle Number: 15000 **Date** 5/10/2003

Time	Pressure (psig)	Temp. (deg. F)	Sampling Rate (l/m)	PPMv Reading
10:46:49 AM	250.6	74.0	1.0	1.8
10:46:50 AM	250.6	74.0	1.0	1.7
10:46:51 AM	250.7	74.0	1.0	1.7
10:46:52 AM	250.7	74.0	1.0	1.7
10:46:54 AM	250.6	74.0	1.0	1.7
10:46:55 AM	250.6	74.0	1.0	1.6
10:46:56 AM	250.7	74.0	1.0	1.6
10:46:57 AM	250.7	74.0	1.0	1.6
10:46:58 AM	250.6	74.0	1.0	1.6
10:46:59 AM	250.6	74.0	1.0	1.6
10:47:00 AM	250.7	74.0	1.0	1.7
10:47:01 AM	250.7	74.0	1.0	1.9
10:47:02 AM	250.6	74.0	1.0	2.3
10:47:03 AM	250.7	74.0	1.0	3.1
10:47:04 AM	250.6	74.0	1.0	3.6
10:47:05 AM	250.7	74.0	1.0	3.9
10:47:06 AM	250.6	74.0	1.0	4.0
10:47:07 AM	250.6	74.0	1.0	4.0
10:47:08 AM	250.6	74.0	1.0	4.0
10:47:09 AM	250.6	74.0	1.0	4.1
10:47:10 AM	250.7	74.0	1.0	4.2
10:47:11 AM	250.7	74.0	1.0	4.1
10:47:12 AM	250.6	74.0	1.0	4.0
10:47:13 AM	250.7	74.0	1.0	3.9
10:47:14 AM	250.6	74.0	1.0	3.7
10:47:15 AM	250.6	74.0	1.0	3.8
10:47:16 AM	250.6	74.0	1.0	4.0
10:47:18 AM	250.6	74.0	1.0	4.3
10:47:19 AM	250.6	74.0	1.0	4.7
10:47:20 AM	250.7	73.0	1.0	5.2
10:47:21 AM	250.6	74.0	1.0	5.5
10:47:22 AM	250.7	74.0	1.0	5.7
10:47:23 AM	250.6	74.0	1.0	5.7
10:47:24 AM	250.6	74.0	1.0	5.9
10:47:25 AM	250.6	74.0	1.0	6.1
10:47:26 AM	250.6	74.0	1.0	5.8
10:47:27 AM	250.6	74.0	1.0	5.7
10:47:28 AM	250.6	74.0	1.0	5.7
10:47:29 AM	250.6	74.0	1.0	5.7
10:47:30 AM	250.6	74.0	1.0	6.0
10:47:31 AM	250.6	74.0	1.0	6.4
10:47:32 AM	250.6	74.0	1.0	6.9
10:47:33 AM	250.6	74.0	1.0	7.4
10:47:34 AM	250.6	74.0	1.0	7.8
10:47:35 AM	250.6	74.0	1.0	8.0
10:47:36 AM	250.7	74.0	1.0	8.1
10:47:37 AM	250.7	74.0	1.0	8.3
10:47:38 AM	250.7	74.0	1.0	8.3
10:47:40 AM	250.7	74.0	1.0	8.5
10:47:41 AM	250.7	74.0	1.0	8.4
10:47:42 AM	250.7	74.0	1.0	8.3
10:47:43 AM	250.6	74.0	1.0	8.3
10:47:44 AM	250.7	73.0	1.0	8.3
10:47:45 AM	250.7	74.0	1.0	8.3
10:47:46 AM	250.7	74.0	1.0	8.6
10:47:47 AM	250.6	74.0	1.0	9.1
10:47:48 AM	250.7	74.0	1.0	10.0
10:47:49 AM	250.7	74.0	1.0	10.0
10:47:50 AM	250.6	74.0	1.0	10.0
10:47:51 AM	250.6	74.0	1.0	10.0
Averages ->	**250.6**	**74.0**	**1.0**	**5.3**
			Maximum ->	**10.0**

92 East Elm Street, Yarmouth, Maine, 04096 USA
www.yarmouthresearch.com

Yarmouth Research and Technology

Valve Description: 2 inch Class 150 Fluoroseal Plug Valve

Cycle Number: 20000 **Date** 5/11/2003

Time	Pressure (psig)	Temp. (deg. F)	Sampling Rate (l/m)	PPMv Reading
7:47:10 AM	250.4	75.0	1.0	0.7
7:47:11 AM	250.4	74.0	1.0	0.8
7:47:12 AM	250.4	75.0	1.0	0.8
7:47:13 AM	250.4	74.0	1.0	0.9
7:47:14 AM	250.4	75.0	1.0	0.9
7:47:15 AM	250.4	74.0	1.0	0.9
7:47:16 AM	250.4	74.0	1.0	1.0
7:47:17 AM	250.4	74.0	1.0	1.0
7:47:18 AM	250.4	74.0	1.0	1.0
7:47:19 AM	250.4	74.0	1.0	0.9
7:47:20 AM	250.4	75.0	1.0	0.9
7:47:21 AM	250.4	74.0	1.0	0.9
7:47:23 AM	250.4	74.0	1.0	0.9
7:47:24 AM	250.4	74.0	1.0	0.9
7:47:25 AM	250.4	74.0	1.0	0.9
7:47:26 AM	250.4	74.0	1.0	0.9
7:47:27 AM	250.4	74.0	1.0	0.9
7:47:28 AM	250.4	74.0	1.0	0.8
7:47:29 AM	250.4	75.0	1.0	0.8
7:47:30 AM	250.4	74.0	1.0	0.8
7:47:31 AM	250.4	74.0	1.0	0.7
7:47:32 AM	250.4	74.0	1.0	0.7
7:47:33 AM	250.4	74.0	1.0	0.7
7:47:34 AM	250.4	74.0	1.0	0.6
7:47:35 AM	250.4	74.0	1.0	0.6
7:47:36 AM	250.4	74.0	1.0	0.6
7:47:37 AM	250.4	74.0	1.0	0.6
7:47:38 AM	250.4	74.0	1.0	0.6
7:47:39 AM	250.4	74.0	1.0	0.6
7:47:40 AM	250.4	74.0	1.0	0.6
7:47:41 AM	250.4	74.0	1.0	0.6
7:47:42 AM	250.4	74.0	1.0	0.6
7:47:43 AM	250.4	74.0	1.0	0.6
7:47:44 AM	250.4	74.0	1.0	0.6
7:47:45 AM	250.4	74.0	1.0	0.6
7:47:47 AM	250.4	74.0	1.0	0.6
7:47:48 AM	250.4	74.0	1.0	0.6
7:47:49 AM	250.4	74.0	1.0	0.6
7:47:50 AM	250.4	75.0	1.0	0.6
7:47:51 AM	250.4	74.0	1.0	0.7
7:47:52 AM	250.4	74.0	1.0	0.7
7:47:53 AM	250.4	74.0	1.0	0.7
7:47:54 AM	250.4	75.0	1.0	0.8
7:47:55 AM	250.4	74.0	1.0	0.8
7:47:56 AM	250.4	74.0	1.0	0.8
7:47:57 AM	250.4	74.0	1.0	0.7
7:47:58 AM	250.4	75.0	1.0	0.7
7:47:59 AM	250.4	74.0	1.0	0.8
7:48:00 AM	250.4	74.0	1.0	0.8
7:48:01 AM	250.4	75.0	1.0	0.8
7:48:02 AM	250.4	74.0	1.0	0.9
7:48:03 AM	250.4	74.0	1.0	0.9
7:48:04 AM	250.4	75.0	1.0	0.9
7:48:05 AM	250.4	75.0	1.0	0.9
7:48:06 AM	250.4	75.0	1.0	0.9
7:48:07 AM	250.4	74.0	1.0	0.9
7:48:09 AM	250.4	74.0	1.0	0.8
7:48:10 AM	250.3	75.0	1.0	0.8
7:48:11 AM	250.4	74.0	1.0	0.8
7:48:12 AM	250.4	74.0	1.0	0.8
Averages ->	**250.4**	**74.2**	**1.0**	**0.8**
			Maximum ->	**1.0**

Yarmouth Research and Technology

Valve Description: 2 inch Class 150 Fluoroseal Plug Valve

Cycle Number: 20000 **Date** 5/11/2003

Time	Pressure (psig)	Temp. (deg. F)	Sampling Rate (l/m)	PPMv Reading
7:48:38 AM	250.4	74.0	1.0	0.6
7:48:39 AM	250.4	74.0	1.0	0.6
7:48:40 AM	250.4	74.0	1.0	0.6
7:48:41 AM	250.4	75.0	1.0	0.6
7:48:42 AM	250.4	74.0	1.0	0.6
7:48:43 AM	250.4	74.0	1.0	0.6
7:48:44 AM	250.4	74.0	1.0	0.6
7:48:45 AM	250.4	74.0	1.0	0.6
7:48:46 AM	250.4	74.0	1.0	0.6
7:48:47 AM	250.4	74.0	1.0	0.6
7:48:49 AM	250.4	74.0	1.0	0.6
7:48:50 AM	250.4	74.0	1.0	0.6
7:48:51 AM	250.4	74.0	1.0	0.6
7:48:52 AM	250.4	74.0	1.0	0.6
7:48:53 AM	250.4	74.0	1.0	0.6
7:48:54 AM	250.4	75.0	1.0	0.6
7:48:55 AM	250.4	74.0	1.0	0.6
7:48:56 AM	250.3	74.0	1.0	0.6
7:48:57 AM	250.4	74.0	1.0	0.6
7:48:58 AM	250.4	74.0	1.0	0.6
7:48:59 AM	250.4	74.0	1.0	0.6
7:49:00 AM	250.4	74.0	1.0	0.7
7:49:01 AM	250.4	74.0	1.0	0.7
7:49:02 AM	250.4	74.0	1.0	0.6
7:49:03 AM	250.4	74.0	1.0	0.7
7:49:04 AM	250.4	74.0	1.0	0.6
7:49:05 AM	250.4	75.0	1.0	0.7
7:49:06 AM	250.4	75.0	1.0	0.7
7:49:07 AM	250.4	74.0	1.0	0.7
7:49:08 AM	250.4	75.0	1.0	0.7
7:49:09 AM	250.4	74.0	1.0	0.6
7:49:10 AM	250.4	74.0	1.0	0.6
7:49:12 AM	250.4	74.0	1.0	0.6
7:49:13 AM	250.4	74.0	1.0	0.6
7:49:14 AM	250.4	74.0	1.0	0.6
7:49:15 AM	250.5	74.0	1.0	0.6
7:49:16 AM	250.4	74.0	1.0	0.6
7:49:17 AM	250.4	74.0	1.0	0.6
7:49:18 AM	250.4	74.0	1.0	0.6
7:49:19 AM	250.4	74.0	1.0	0.6
7:49:20 AM	250.4	75.0	1.0	0.6
7:49:21 AM	250.4	74.0	1.0	0.6
7:49:22 AM	250.4	74.0	1.0	0.6
7:49:23 AM	250.4	75.0	1.0	0.6
7:49:24 AM	250.4	74.0	1.0	0.6
7:49:25 AM	250.4	74.0	1.0	0.6
7:49:26 AM	250.4	74.0	1.0	0.6
7:49:27 AM	250.4	74.0	1.0	0.6
7:49:28 AM	250.4	74.0	1.0	0.6
7:49:29 AM	250.5	75.0	1.0	0.6
7:49:30 AM	250.4	74.0	1.0	0.6
7:49:31 AM	250.4	75.0	1.0	0.5
7:49:32 AM	250.4	75.0	1.0	0.5
7:49:33 AM	250.4	75.0	1.0	0.5
7:49:35 AM	250.4	75.0	1.0	0.5
7:49:36 AM	250.4	75.0	1.0	0.5
7:49:37 AM	250.3	74.0	1.0	0.6
7:49:38 AM	250.4	74.0	1.0	0.6
7:49:39 AM	250.4	74.0	1.0	0.5
7:49:40 AM	250.4	74.0	1.0	0.5
Averages ->	**250.4**	**74.2**	**1.0**	**0.6**
			Maximum ->	**0.7**

Yarmouth Research and Technology

Valve Description: 2 inch Class 150 Fluoroseal Plug Valve

Cycle Number: 25000 **Date** 5/12/2003

Time	Pressure (psig)	Temp. (deg. F)	Sampling Rate (l/m)	PPMv Reading
1:31:53 PM	234.3	74.0	1.0	1.3
1:31:54 PM	234.2	74.0	1.0	1.3
1:31:55 PM	234.2	74.0	1.0	1.3
1:31:56 PM	234.2	74.0	1.0	1.3
1:31:57 PM	234.2	74.0	1.0	1.3
1:31:58 PM	234.2	74.0	1.0	1.3
1:31:59 PM	234.3	74.0	1.0	1.2
1:32:00 PM	234.3	75.0	1.0	1.2
1:32:01 PM	234.2	74.0	1.0	1.2
1:32:02 PM	234.2	74.0	1.0	1.1
1:32:03 PM	234.2	74.0	1.0	1.1
1:32:04 PM	234.2	74.0	1.0	1.0
1:32:05 PM	234.2	74.0	1.0	1.0
1:32:06 PM	234.2	74.0	1.0	1.0
1:32:07 PM	234.2	74.0	1.0	1.0
1:32:08 PM	234.2	74.0	1.0	1.0
1:32:09 PM	234.2	74.0	1.0	1.0
1:32:10 PM	234.2	74.0	1.0	1.0
1:32:11 PM	234.2	74.0	1.0	1.0
1:32:12 PM	234.2	74.0	1.0	1.0
1:32:13 PM	234.2	74.0	1.0	0.9
1:32:14 PM	234.2	74.0	1.0	0.9
1:32:15 PM	234.3	74.0	1.0	0.9
1:32:17 PM	234.3	75.0	1.0	0.8
1:32:18 PM	234.2	74.0	1.0	0.8
1:32:19 PM	234.2	74.0	1.0	0.8
1:32:20 PM	234.2	74.0	1.0	0.8
1:32:21 PM	234.2	74.0	1.0	0.8
1:32:22 PM	234.2	74.0	1.0	0.8
1:32:23 PM	234.2	74.0	1.0	0.7
1:32:24 PM	234.2	74.0	1.0	0.7
1:32:25 PM	234.2	74.0	1.0	0.7
1:32:26 PM	234.2	75.0	1.0	0.7
1:32:27 PM	234.2	75.0	1.0	0.7
1:32:28 PM	234.2	74.0	1.0	0.7
1:32:29 PM	234.2	74.0	1.0	0.7
1:32:30 PM	234.2	74.0	1.0	0.7
1:32:31 PM	234.3	74.0	1.0	0.7
1:32:32 PM	234.2	74.0	1.0	0.7
1:32:33 PM	234.3	75.0	1.0	0.7
1:32:34 PM	234.2	74.0	1.0	0.7
1:32:35 PM	234.2	74.0	1.0	0.7
1:32:36 PM	234.2	74.0	1.0	0.7
1:32:37 PM	234.3	74.0	1.0	0.7
1:32:39 PM	234.2	74.0	1.0	0.7
1:32:40 PM	234.2	74.0	1.0	0.7
1:32:41 PM	234.2	74.0	1.0	0.7
1:32:42 PM	249.2	74.0	1.0	0.7
1:32:43 PM	249.3	74.0	1.0	0.6
1:32:44 PM	249.2	74.0	1.0	0.6
1:32:45 PM	249.3	75.0	1.0	0.6
1:32:46 PM	249.2	74.0	1.0	0.7
1:32:47 PM	249.3	74.0	1.0	0.6
1:32:48 PM	249.3	74.0	1.0	0.6
1:32:49 PM	249.2	74.0	1.0	0.6
1:32:50 PM	249.2	75.0	1.0	0.7
1:32:51 PM	249.2	75.0	1.0	0.6
1:32:52 PM	249.2	74.0	1.0	0.6
1:32:53 PM	249.2	74.0	1.0	0.6
1:32:54 PM	249.2	75.0	1.0	0.6
Averages ->	**237.5**	**74.2**	**1.0**	**0.8**
			Maximum ->	**1.3**

Yarmouth Research and Technology

Valve Description: 2 inch Class 150 Fluoroseal Plug Valve

Cycle Number: 25000 **Date** 5/12/2003

Time	Pressure (psig)	Temp. (deg. F)	Sampling Rate (l/m)	PPMv Reading
1:33:11 PM	249.2	74.0	1.0	0.8
1:33:12 PM	249.2	74.0	1.0	0.8
1:33:13 PM	249.2	74.0	1.0	0.8
1:33:14 PM	249.2	74.0	1.0	0.8
1:33:15 PM	249.2	74.0	1.0	0.8
1:33:16 PM	249.3	74.0	1.0	0.8
1:33:17 PM	249.2	74.0	1.0	0.8
1:33:18 PM	249.2	74.0	1.0	0.8
1:33:19 PM	249.3	74.0	1.0	0.8
1:33:20 PM	249.2	74.0	1.0	0.8
1:33:21 PM	249.2	74.0	1.0	0.8
1:33:22 PM	249.3	74.0	1.0	0.8
1:33:23 PM	249.2	74.0	1.0	0.9
1:33:24 PM	249.3	75.0	1.0	0.9
1:33:25 PM	249.2	74.0	1.0	0.9
1:33:26 PM	249.3	74.0	1.0	0.9
1:33:27 PM	249.3	74.0	1.0	0.9
1:33:28 PM	249.3	75.0	1.0	0.8
1:33:29 PM	249.3	74.0	1.0	0.9
1:33:30 PM	249.3	74.0	1.0	0.8
1:33:32 PM	249.3	74.0	1.0	0.8
1:33:33 PM	249.2	74.0	1.0	0.8
1:33:34 PM	249.2	74.0	1.0	0.8
1:33:35 PM	249.3	74.0	1.0	0.8
1:33:36 PM	249.2	74.0	1.0	0.8
1:33:37 PM	249.2	75.0	1.0	0.8
1:33:38 PM	249.2	74.0	1.0	0.8
1:33:39 PM	249.2	74.0	1.0	0.9
1:33:40 PM	249.3	74.0	1.0	0.9
1:33:41 PM	249.2	74.0	1.0	0.9
1:33:42 PM	249.3	74.0	1.0	0.9
1:33:43 PM	249.2	74.0	1.0	0.8
1:33:44 PM	249.3	74.0	1.0	0.8
1:33:45 PM	249.2	74.0	1.0	0.8
1:33:46 PM	249.3	74.0	1.0	0.8
1:33:47 PM	249.3	74.0	1.0	0.8
1:33:48 PM	249.2	74.0	1.0	0.8
1:33:49 PM	249.2	74.0	1.0	0.8
1:33:50 PM	249.3	74.0	1.0	0.8
1:33:51 PM	249.2	74.0	1.0	0.8
1:33:52 PM	249.3	75.0	1.0	0.9
1:33:53 PM	249.2	74.0	1.0	1.2
1:33:54 PM	249.3	74.0	1.0	1.4
1:33:56 PM	249.2	74.0	1.0	1.6
1:33:57 PM	249.3	74.0	1.0	2.0
1:33:58 PM	249.3	74.0	1.0	2.0
1:33:59 PM	249.3	74.0	1.0	2.0
1:34:00 PM	249.3	74.0	1.0	2.0
1:34:01 PM	249.3	75.0	1.0	2.0
1:34:02 PM	249.2	75.0	1.0	1.6
1:34:03 PM	249.3	74.0	1.0	1.4
1:34:04 PM	249.2	74.0	1.0	1.3
1:34:05 PM	249.3	74.0	1.0	1.2
1:34:06 PM	249.3	74.0	1.0	1.0
1:34:07 PM	249.3	74.0	1.0	0.9
1:34:08 PM	249.3	74.0	1.0	0.8
1:34:09 PM	249.3	74.0	1.0	0.8
1:34:10 PM	249.3	74.0	1.0	0.8
1:34:11 PM	249.3	74.0	1.0	0.8
1:34:12 PM	249.3	74.0	1.0	0.8
Averages ->	**249.3**	**74.1**	**1.0**	**1.0**
			Maximum ->	**2.0**

92 East Elm Street, Yarmouth, Maine, 04096 USA
www.yarmouthresearch.com

Yarmouth Research and Technology

Valve Description: 2 inch Class 150 Fluoroseal Plug Valve

Cycle Number: 30000 **Date** 5/13/2003

Time	Pressure (psig)	Temp. (deg. F)	Sampling Rate (l/m)	PPMv Reading
12:56:39 PM	251.0	75.0	1.0	1.4
12:56:40 PM	251.0	74.0	1.0	1.4
12:56:41 PM	251.0	74.0	1.0	1.4
12:56:42 PM	251.0	74.0	1.0	1.3
12:56:43 PM	251.0	74.0	1.0	1.3
12:56:44 PM	251.0	75.0	1.0	1.3
12:56:45 PM	251.0	75.0	1.0	1.3
12:56:46 PM	251.0	74.0	1.0	1.3
12:56:47 PM	251.0	74.0	1.0	1.3
12:56:48 PM	251.0	74.0	1.0	1.3
12:56:49 PM	251.0	75.0	1.0	1.3
12:56:50 PM	251.0	74.0	1.0	1.3
12:56:51 PM	251.0	74.0	1.0	1.3
12:56:52 PM	251.0	74.0	1.0	1.3
12:56:53 PM	251.0	74.0	1.0	1.3
12:56:54 PM	251.0	74.0	1.0	1.3
12:56:55 PM	251.0	74.0	1.0	1.3
12:56:56 PM	251.0	74.0	1.0	1.2
12:56:57 PM	251.0	74.0	1.0	1.2
12:56:59 PM	251.0	74.0	1.0	1.2
12:57:00 PM	251.0	74.0	1.0	1.2
12:57:01 PM	251.0	74.0	1.0	1.2
12:57:02 PM	251.0	75.0	1.0	1.2
12:57:03 PM	251.0	74.0	1.0	1.2
12:57:04 PM	251.0	75.0	1.0	1.1
12:57:05 PM	251.0	74.0	1.0	1.1
12:57:06 PM	251.0	74.0	1.0	1.2
12:57:07 PM	251.0	74.0	1.0	1.2
12:57:08 PM	251.0	74.0	1.0	1.2
12:57:09 PM	251.0	74.0	1.0	1.2
12:57:10 PM	251.0	74.0	1.0	1.1
12:57:11 PM	251.0	74.0	1.0	1.1
12:57:12 PM	251.0	74.0	1.0	1.0
12:57:13 PM	251.0	74.0	1.0	1.0
12:57:14 PM	251.0	74.0	1.0	0.9
12:57:15 PM	251.0	74.0	1.0	0.9
12:57:16 PM	251.0	74.0	1.0	0.9
12:57:17 PM	251.0	75.0	1.0	0.9
12:57:18 PM	251.0	74.0	1.0	0.9
12:57:19 PM	251.0	75.0	1.0	0.8
12:57:20 PM	251.0	74.0	1.0	0.9
12:57:21 PM	251.0	75.0	1.0	0.8
12:57:23 PM	251.0	75.0	1.0	0.8
12:57:24 PM	251.0	74.0	1.0	0.8
12:57:25 PM	251.0	74.0	1.0	0.8
12:57:26 PM	251.0	74.0	1.0	0.8
12:57:27 PM	251.0	75.0	1.0	0.8
12:57:28 PM	251.0	74.0	1.0	0.8
12:57:29 PM	251.0	74.0	1.0	0.8
12:57:30 PM	251.0	75.0	1.0	0.9
12:57:31 PM	251.0	74.0	1.0	0.9
12:57:32 PM	251.0	75.0	1.0	0.9
12:57:33 PM	251.0	75.0	1.0	0.9
12:57:34 PM	251.0	74.0	1.0	0.9
12:57:35 PM	251.0	75.0	1.0	0.9
12:57:36 PM	251.0	74.0	1.0	0.9
12:57:37 PM	251.0	75.0	1.0	0.9
12:57:38 PM	251.0	75.0	1.0	0.9
12:57:39 PM	251.0	75.0	1.0	0.9
12:57:40 PM	251.0	75.0	1.0	0.9
Averages ->	**251.0**	**74.3**	**1.0**	**1.1**
			Maximum ->	**1.4**

92 East Elm Street, Yarmouth, Maine, 04096 USA
www.yarmouthresearch.com

Yarmouth Research and Technology

Valve Description: 2 inch Class 150 Fluoroseal Plug Valve

Cycle Number: 30000 **Date** 5/13/2003

Time	Pressure (psig)	Temp. (deg. F)	Sampling Rate (l/m)	PPMv Reading
12:58:03 PM	251.0	74.0	1.0	1.8
12:58:04 PM	251.0	74.0	1.0	1.8
12:58:05 PM	251.0	75.0	1.0	1.8
12:58:06 PM	251.0	75.0	1.0	1.7
12:58:07 PM	251.0	75.0	1.0	1.6
12:58:08 PM	251.0	74.0	1.0	1.6
12:58:09 PM	251.0	74.0	1.0	1.6
12:58:11 PM	251.1	74.0	1.0	1.6
12:58:12 PM	251.0	74.0	1.0	1.6
12:58:13 PM	251.0	74.0	1.0	1.5
12:58:14 PM	251.0	74.0	1.0	1.6
12:58:15 PM	251.0	75.0	1.0	1.6
12:58:16 PM	251.0	74.0	1.0	1.6
12:58:17 PM	251.0	75.0	1.0	1.6
12:58:18 PM	251.0	75.0	1.0	1.7
12:58:19 PM	251.1	74.0	1.0	1.7
12:58:20 PM	251.0	75.0	1.0	1.7
12:58:21 PM	251.0	74.0	1.0	1.7
12:58:22 PM	251.0	74.0	1.0	1.7
12:58:23 PM	251.0	74.0	1.0	1.7
12:58:24 PM	251.0	74.0	1.0	1.7
12:58:25 PM	251.0	74.0	1.0	1.7
12:58:26 PM	251.0	74.0	1.0	1.7
12:58:27 PM	251.0	75.0	1.0	1.7
12:58:28 PM	251.0	74.0	1.0	1.7
12:58:29 PM	251.0	74.0	1.0	1.7
12:58:30 PM	251.1	74.0	1.0	1.7
12:58:31 PM	251.0	74.0	1.0	1.7
12:58:32 PM	251.0	75.0	1.0	1.6
12:58:34 PM	251.1	74.0	1.0	1.6
12:58:35 PM	251.0	74.0	1.0	1.6
12:58:36 PM	251.0	74.0	1.0	1.6
12:58:37 PM	251.0	74.0	1.0	1.5
12:58:38 PM	251.0	74.0	1.0	1.5
12:58:39 PM	251.0	74.0	1.0	1.5
12:58:40 PM	251.0	74.0	1.0	1.5
12:58:41 PM	251.0	74.0	1.0	1.5
12:58:42 PM	251.0	74.0	1.0	1.4
12:58:43 PM	251.0	75.0	1.0	1.4
12:58:44 PM	251.0	75.0	1.0	1.4
12:58:45 PM	251.0	75.0	1.0	1.4
12:58:46 PM	251.0	74.0	1.0	1.4
12:58:47 PM	251.0	74.0	1.0	1.4
12:58:48 PM	251.1	74.0	1.0	1.4
12:58:49 PM	251.1	75.0	1.0	1.4
12:58:50 PM	251.0	74.0	1.0	1.4
12:58:51 PM	251.0	75.0	1.0	1.4
12:58:52 PM	251.0	75.0	1.0	1.4
12:58:53 PM	251.0	75.0	1.0	1.4
12:58:54 PM	251.0	74.0	1.0	1.4
12:58:55 PM	251.1	74.0	1.0	1.4
12:58:56 PM	251.0	74.0	1.0	1.4
12:58:58 PM	251.1	75.0	1.0	1.3
12:58:59 PM	251.0	75.0	1.0	1.3
12:59:00 PM	251.1	75.0	1.0	1.3
12:59:01 PM	251.0	74.0	1.0	1.3
12:59:02 PM	251.0	74.0	1.0	1.3
12:59:03 PM	251.1	74.0	1.0	1.3
12:59:04 PM	251.1	74.0	1.0	1.3
12:59:05 PM	251.1	75.0	1.0	1.3
Averages ->	**251.0**	**74.3**	**1.0**	**1.5**
			Maximum ->	**1.8**

92 East Elm Street, Yarmouth, Maine, 04096 USA
www.yarmouthresearch.com

Yarmouth Research and Technology

Valve Description: 2 inch Class 150 Fluoroseal Plug Valve

Cycle Number: 35000 **Date** 5/14/2003

Time	Pressure (psig)	Temp. (deg. F)	Sampling Rate (l/m)	PPMv Reading
9:35:48 AM	250.5	74.0	1.0	1.7
9:35:49 AM	250.5	74.0	1.0	1.7
9:35:50 AM	250.5	73.0	1.0	1.7
9:35:51 AM	250.4	74.0	1.0	1.7
9:35:52 AM	250.4	73.0	1.0	1.8
9:35:53 AM	250.5	73.0	1.0	1.8
9:35:54 AM	250.4	73.0	1.0	1.8
9:35:55 AM	250.4	73.0	1.0	1.9
9:35:56 AM	250.4	74.0	1.0	1.9
9:35:58 AM	250.4	73.0	1.0	1.9
9:35:59 AM	250.4	74.0	1.0	1.9
9:36:00 AM	250.4	74.0	1.0	1.9
9:36:01 AM	250.4	74.0	1.0	1.9
9:36:02 AM	250.5	74.0	1.0	1.9
9:36:03 AM	250.4	73.0	1.0	1.9
9:36:04 AM	250.4	74.0	1.0	1.9
9:36:05 AM	250.4	74.0	1.0	1.9
9:36:06 AM	250.4	73.0	1.0	1.9
9:36:07 AM	250.4	73.0	1.0	1.9
9:36:08 AM	250.3	74.0	1.0	1.9
9:36:09 AM	250.3	74.0	1.0	1.9
9:36:10 AM	250.3	73.0	1.0	1.9
9:36:11 AM	250.3	73.0	1.0	1.9
9:36:12 AM	250.4	73.0	1.0	1.9
9:36:13 AM	250.3	74.0	1.0	1.9
9:36:14 AM	250.3	73.0	1.0	1.9
9:36:15 AM	250.3	73.0	1.0	1.9
9:36:16 AM	250.4	73.0	1.0	1.9
9:36:17 AM	250.4	73.0	1.0	1.9
9:36:19 AM	250.4	73.0	1.0	1.9
9:36:20 AM	250.3	74.0	1.0	1.8
9:36:21 AM	250.3	73.0	1.0	1.8
9:36:22 AM	250.3	74.0	1.0	1.8
9:36:23 AM	250.3	73.0	1.0	1.8
9:36:24 AM	250.3	73.0	1.0	1.8
9:36:25 AM	250.3	74.0	1.0	1.8
9:36:26 AM	250.3	74.0	1.0	1.8
9:36:27 AM	250.3	74.0	1.0	1.8
9:36:28 AM	250.3	74.0	1.0	1.8
9:36:29 AM	250.3	73.0	1.0	1.8
9:36:30 AM	250.3	73.0	1.0	1.8
9:36:31 AM	250.3	73.0	1.0	1.8
9:36:32 AM	250.3	73.0	1.0	1.8
9:36:33 AM	250.3	73.0	1.0	1.8
9:36:34 AM	250.3	73.0	1.0	1.8
9:36:35 AM	250.3	73.0	1.0	1.8
9:36:36 AM	250.3	73.0	1.0	1.8
9:36:37 AM	250.3	73.0	1.0	1.8
9:36:38 AM	250.2	73.0	1.0	1.8
9:36:39 AM	250.3	74.0	1.0	1.8
9:36:40 AM	250.3	73.0	1.0	1.8
9:36:41 AM	250.2	73.0	1.0	1.8
9:36:43 AM	250.3	73.0	1.0	1.8
9:36:44 AM	250.2	74.0	1.0	1.8
9:36:45 AM	250.3	73.0	1.0	1.8
9:36:46 AM	250.2	73.0	1.0	1.8
9:36:47 AM	250.2	73.0	1.0	1.8
9:36:48 AM	250.2	73.0	1.0	1.9
9:36:49 AM	250.2	73.0	1.0	1.9
9:36:50 AM	250.1	74.0	1.0	1.8
Averages ->	**250.3**	**73.4**	**1.0**	**1.8**
			Maximum ->	**1.9**

92 East Elm Street, Yarmouth, Maine, 04096 USA
www.yarmouthresearch.com

Yarmouth Research and Technology

Valve Description: 2 inch Class 150 Fluoroseal Plug Valve

Cycle Number: 35000 **Date** 5/14/2003

Time	Pressure (psig)	Temp. (deg. F)	Sampling Rate (l/m)	PPMv Reading
9:36:59 AM	250.2	73.0	1.0	1.8
9:37:00 AM	250.2	74.0	1.0	1.8
9:37:01 AM	250.2	73.0	1.0	1.8
9:37:02 AM	250.2	73.0	1.0	1.8
9:37:03 AM	250.2	74.0	1.0	1.8
9:37:04 AM	250.2	74.0	1.0	1.8
9:37:05 AM	250.3	73.0	1.0	1.8
9:37:06 AM	250.3	74.0	1.0	1.8
9:37:07 AM	250.3	74.0	1.0	1.8
9:37:09 AM	250.3	74.0	1.0	1.7
9:37:10 AM	250.2	74.0	1.0	1.8
9:37:11 AM	250.3	74.0	1.0	1.7
9:37:12 AM	250.3	73.0	1.0	1.8
9:37:13 AM	250.3	73.0	1.0	1.8
9:37:14 AM	250.3	73.0	1.0	1.8
9:37:15 AM	250.3	73.0	1.0	1.8
9:37:16 AM	250.3	74.0	1.0	1.8
9:37:17 AM	250.2	73.0	1.0	1.8
9:37:18 AM	250.3	73.0	1.0	1.8
9:37:19 AM	250.3	73.0	1.0	1.8
9:37:20 AM	250.3	74.0	1.0	1.8
9:37:21 AM	250.3	74.0	1.0	1.8
9:37:22 AM	250.3	74.0	1.0	1.8
9:37:23 AM	250.3	73.0	1.0	1.8
9:37:24 AM	250.3	73.0	1.0	1.8
9:37:25 AM	250.3	74.0	1.0	1.8
9:37:26 AM	250.3	74.0	1.0	1.8
9:37:27 AM	250.2	73.0	1.0	1.8
9:37:28 AM	250.3	74.0	1.0	1.8
9:37:29 AM	250.3	73.0	1.0	1.9
9:37:31 AM	250.3	73.0	1.0	1.9
9:37:32 AM	250.2	74.0	1.0	1.9
9:37:33 AM	250.2	74.0	1.0	1.9
9:37:34 AM	250.2	73.0	1.0	1.9
9:37:35 AM	250.3	73.0	1.0	1.9
9:37:36 AM	250.3	73.0	1.0	1.8
9:37:37 AM	250.3	73.0	1.0	1.9
9:37:38 AM	250.3	74.0	1.0	1.8
9:37:39 AM	250.3	74.0	1.0	1.8
9:37:40 AM	250.2	74.0	1.0	1.8
9:37:41 AM	250.2	74.0	1.0	1.8
9:37:42 AM	250.3	73.0	1.0	1.8
9:37:43 AM	250.2	74.0	1.0	1.8
9:37:44 AM	250.2	74.0	1.0	1.8
9:37:45 AM	250.2	74.0	1.0	1.8
9:37:46 AM	250.3	74.0	1.0	2.1
9:37:47 AM	250.2	73.0	1.0	2.5
9:37:48 AM	250.2	74.0	1.0	2.6
9:37:49 AM	250.2	74.0	1.0	2.6
9:37:50 AM	250.4	74.0	1.0	2.7
9:37:51 AM	250.3	74.0	1.0	2.7
9:37:52 AM	250.3	74.0	1.0	2.5
9:37:54 AM	250.3	73.0	1.0	2.4
9:37:55 AM	250.3	73.0	1.0	2.3
9:37:56 AM	250.3	73.0	1.0	2.3
9:37:57 AM	250.2	74.0	1.0	2.3
9:37:58 AM	250.2	74.0	1.0	2.3
9:37:59 AM	250.2	74.0	1.0	2.3
9:38:00 AM	250.2	74.0	1.0	2.4
9:38:01 AM	250.3	74.0	1.0	2.4
Averages ->	**250.3**	**73.6**	**1.0**	**2.0**
			Maximum ->	**2.7**

Yarmouth Research and Technology

Valve Description: 2 inch Class 150 Fluoroseal Plug Valve

Cycle Number: 40000 **Date** 5/15/2003

Time	Pressure (psig)	Temp. (deg. F)	Sampling Rate (l/m)	PPMv Reading
7:59:16 AM	248.6	74.0	1.0	0.8
7:59:17 AM	248.6	74.0	1.0	0.7
7:59:18 AM	248.6	75.0	1.0	0.8
7:59:19 AM	248.6	75.0	1.0	0.8
7:59:20 AM	248.7	75.0	1.0	0.9
7:59:21 AM	248.6	74.0	1.0	0.9
7:59:22 AM	248.6	75.0	1.0	1.0
7:59:23 AM	248.7	74.0	1.0	1.2
7:59:24 AM	248.7	74.0	1.0	1.3
7:59:25 AM	248.7	74.0	1.0	1.5
7:59:26 AM	248.6	74.0	1.0	1.6
7:59:27 AM	248.6	74.0	1.0	1.7
7:59:28 AM	248.6	74.0	1.0	1.7
7:59:29 AM	248.7	74.0	1.0	1.8
7:59:30 AM	248.6	75.0	1.0	1.9
7:59:31 AM	248.7	74.0	1.0	2.0
7:59:32 AM	248.6	74.0	1.0	2.1
7:59:33 AM	248.6	74.0	1.0	2.2
7:59:35 AM	248.7	74.0	1.0	2.2
7:59:36 AM	248.6	74.0	1.0	2.1
7:59:37 AM	248.6	74.0	1.0	2.0
7:59:38 AM	248.6	75.0	1.0	2.0
7:59:39 AM	248.7	74.0	1.0	2.0
7:59:40 AM	248.6	74.0	1.0	1.9
7:59:41 AM	248.6	74.0	1.0	1.8
7:59:42 AM	248.6	75.0	1.0	1.7
7:59:43 AM	248.7	74.0	1.0	1.6
7:59:44 AM	248.6	74.0	1.0	1.6
7:59:45 AM	248.7	75.0	1.0	1.5
7:59:46 AM	248.7	74.0	1.0	1.4
7:59:47 AM	248.7	75.0	1.0	1.2
7:59:48 AM	248.7	74.0	1.0	1.2
7:59:49 AM	248.6	74.0	1.0	1.1
7:59:50 AM	248.6	75.0	1.0	1.1
7:59:51 AM	248.6	74.0	1.0	1.1
7:59:52 AM	248.6	74.0	1.0	1.0
7:59:53 AM	248.6	74.0	1.0	1.0
7:59:54 AM	248.7	75.0	1.0	1.0
7:59:56 AM	248.7	74.0	1.0	0.9
7:59:57 AM	248.6	75.0	1.0	0.9
7:59:58 AM	248.6	74.0	1.0	0.9
7:59:59 AM	248.6	74.0	1.0	0.9
8:00:00 AM	248.6	74.0	1.0	0.9
8:00:01 AM	248.6	75.0	1.0	0.9
8:00:02 AM	248.6	75.0	1.0	0.8
8:00:03 AM	248.6	75.0	1.0	0.8
8:00:04 AM	248.6	74.0	1.0	0.8
8:00:05 AM	248.6	74.0	1.0	0.8
8:00:06 AM	248.7	74.0	1.0	0.8
8:00:07 AM	248.7	74.0	1.0	0.8
8:00:08 AM	248.6	75.0	1.0	0.8
8:00:09 AM	248.6	75.0	1.0	0.8
8:00:10 AM	248.6	75.0	1.0	0.8
8:00:11 AM	248.6	74.0	1.0	0.8
8:00:12 AM	248.6	75.0	1.0	0.8
8:00:13 AM	248.7	75.0	1.0	0.8
8:00:14 AM	248.6	75.0	1.0	0.8
8:00:15 AM	248.6	74.0	1.0	0.8
8:00:16 AM	248.6	75.0	1.0	0.8
8:00:17 AM	248.6	74.0	1.0	0.8
Averages ->	**248.6**	**74.4**	**1.0**	**1.2**
			Maximum ->	**2.2**

92 East Elm Street, Yarmouth, Maine, 04096 USA
www.yarmouthresearch.com

Yarmouth Research and Technology

Valve Description: 2 inch Class 150 Fluoroseal Plug Valve

Cycle Number: 40000 **Date** 5/15/2003

Time	Pressure (psig)	Temp. (deg. F)	Sampling Rate (l/m)	PPMv Reading
8:00:28 AM	248.7	74.0	1.0	0.6
8:00:29 AM	248.7	74.0	1.0	0.6
8:00:30 AM	248.6	75.0	1.0	0.6
8:00:31 AM	248.6	74.0	1.0	0.6
8:00:32 AM	248.7	74.0	1.0	0.6
8:00:33 AM	248.7	74.0	1.0	0.6
8:00:35 AM	248.9	74.0	1.0	0.6
8:00:36 AM	248.9	74.0	1.0	0.6
8:00:37 AM	248.8	74.0	1.0	0.6
8:00:38 AM	248.7	74.0	1.0	0.6
8:00:39 AM	248.7	74.0	1.0	0.6
8:00:40 AM	248.7	75.0	1.0	0.6
8:00:41 AM	248.7	74.0	1.0	0.6
8:00:42 AM	248.6	74.0	1.0	0.6
8:00:43 AM	248.7	74.0	1.0	0.6
8:00:44 AM	248.7	74.0	1.0	0.6
8:00:45 AM	248.7	74.0	1.0	0.6
8:00:46 AM	248.7	75.0	1.0	0.6
8:00:47 AM	248.7	75.0	1.0	0.6
8:00:48 AM	248.8	74.0	1.0	0.6
8:00:49 AM	248.9	74.0	1.0	0.6
8:00:50 AM	248.8	74.0	1.0	0.6
8:00:51 AM	248.7	75.0	1.0	0.7
8:00:52 AM	248.7	74.0	1.0	0.7
8:00:53 AM	248.7	74.0	1.0	0.8
8:00:54 AM	248.7	74.0	1.0	0.9
8:00:55 AM	248.6	74.0	1.0	1.0
8:00:56 AM	248.7	74.0	1.0	1.1
8:00:57 AM	248.7	74.0	1.0	1.1
8:00:59 AM	248.6	74.0	1.0	1.2
8:01:00 AM	248.7	74.0	1.0	1.3
8:01:01 AM	248.7	75.0	1.0	1.4
8:01:02 AM	248.7	74.0	1.0	1.5
8:01:03 AM	248.8	75.0	1.0	1.6
8:01:04 AM	248.9	74.0	1.0	1.7
8:01:05 AM	248.9	74.0	1.0	1.8
8:01:06 AM	248.9	75.0	1.0	1.9
8:01:07 AM	248.7	74.0	1.0	2.0
8:01:08 AM	248.6	74.0	1.0	2.0
8:01:09 AM	248.7	74.0	1.0	2.1
8:01:10 AM	248.7	75.0	1.0	2.1
8:01:11 AM	248.6	74.0	1.0	2.1
8:01:12 AM	248.7	74.0	1.0	2.1
8:01:13 AM	248.7	74.0	1.0	2.0
8:01:14 AM	248.7	74.0	1.0	2.0
8:01:15 AM	248.7	74.0	1.0	2.0
8:01:16 AM	248.6	74.0	1.0	1.9
8:01:17 AM	248.8	74.0	1.0	1.9
8:01:18 AM	248.9	74.0	1.0	1.9
8:01:19 AM	248.9	74.0	1.0	1.9
8:01:21 AM	248.8	74.0	1.0	1.9
8:01:22 AM	248.7	74.0	1.0	1.9
8:01:23 AM	248.7	74.0	1.0	1.9
8:01:24 AM	248.7	74.0	1.0	1.9
8:01:25 AM	248.7	74.0	1.0	1.9
8:01:26 AM	248.6	74.0	1.0	1.9
8:01:27 AM	248.7	75.0	1.0	1.8
8:01:28 AM	248.7	74.0	1.0	1.8
8:01:29 AM	248.7	74.0	1.0	1.7
8:01:30 AM	248.7	74.0	1.0	1.7
Averages ->	**248.7**	**74.2**	**1.0**	**1.3**
			Maximum ->	**2.1**

92 East Elm Street, Yarmouth, Maine, 04096 USA
www.yarmouthresearch.com

Yarmouth Research and Technology

Valve Description: 2 inch Class 150 Fluoroseal Plug Valve

Cycle Number: 45000 **Date** 5/16/2003

Time	Pressure (psig)	Temp. (deg. F)	Sampling Rate (l/m)	PPMv Reading
12:15:24 PM	249.4	73.0	1.0	1.9
12:15:25 PM	249.5	73.0	1.0	1.9
12:15:26 PM	249.5	73.0	1.0	1.9
12:15:27 PM	249.5	73.0	1.0	1.9
12:15:28 PM	249.5	73.0	1.0	2.0
12:15:29 PM	249.5	73.0	1.0	2.1
12:15:30 PM	249.4	73.0	1.0	2.1
12:15:31 PM	249.5	73.0	1.0	2.2
12:15:32 PM	249.5	73.0	1.0	2.3
12:15:33 PM	249.5	73.0	1.0	2.3
12:15:34 PM	249.5	73.0	1.0	2.4
12:15:35 PM	249.5	73.0	1.0	2.5
12:15:36 PM	249.5	73.0	1.0	2.6
12:15:37 PM	249.5	73.0	1.0	2.6
12:15:39 PM	249.5	73.0	1.0	2.7
12:15:40 PM	249.5	73.0	1.0	2.8
12:15:41 PM	249.4	73.0	1.0	2.8
12:15:42 PM	249.5	73.0	1.0	2.8
12:15:43 PM	249.4	73.0	1.0	2.8
12:15:44 PM	249.4	73.0	1.0	2.9
12:15:45 PM	249.5	73.0	1.0	2.9
12:15:46 PM	249.5	73.0	1.0	2.9
12:15:47 PM	249.5	73.0	1.0	2.9
12:15:48 PM	249.5	73.0	1.0	2.9
12:15:49 PM	249.5	73.0	1.0	2.9
12:15:50 PM	249.5	73.0	1.0	2.9
12:15:51 PM	249.5	73.0	1.0	2.9
12:15:52 PM	249.5	73.0	1.0	2.9
12:15:53 PM	249.5	73.0	1.0	2.8
12:15:54 PM	249.5	73.0	1.0	2.8
12:15:55 PM	249.5	73.0	1.0	2.8
12:15:56 PM	249.5	73.0	1.0	2.7
12:15:57 PM	249.5	73.0	1.0	2.7
12:15:58 PM	249.5	73.0	1.0	2.7
12:15:59 PM	249.5	73.0	1.0	2.7
12:16:00 PM	249.5	73.0	1.0	2.7
12:16:02 PM	249.5	73.0	1.0	2.7
12:16:03 PM	249.4	73.0	1.0	2.6
12:16:04 PM	249.4	73.0	1.0	2.6
12:16:05 PM	249.5	73.0	1.0	2.6
12:16:06 PM	249.5	73.0	1.0	2.7
12:16:07 PM	249.5	73.0	1.0	2.7
12:16:08 PM	249.5	73.0	1.0	2.7
12:16:09 PM	249.5	73.0	1.0	2.6
12:16:10 PM	249.5	73.0	1.0	2.7
12:16:11 PM	249.5	73.0	1.0	2.6
12:16:12 PM	249.4	73.0	1.0	2.6
12:16:13 PM	249.5	73.0	1.0	2.6
12:16:14 PM	249.4	73.0	1.0	2.6
12:16:15 PM	249.4	73.0	1.0	2.6
12:16:16 PM	249.5	73.0	1.0	2.6
12:16:17 PM	249.5	73.0	1.0	2.6
12:16:18 PM	249.5	73.0	1.0	2.6
12:16:19 PM	249.5	73.0	1.0	2.6
12:16:20 PM	249.4	73.0	1.0	2.6
12:16:21 PM	249.5	73.0	1.0	2.6
12:16:22 PM	249.5	73.0	1.0	2.6
12:16:23 PM	249.5	73.0	1.0	2.5
12:16:25 PM	249.5	73.0	1.0	2.5
12:16:26 PM	249.5	73.0	1.0	2.5
Averages ->	**249.5**	**73.0**	**1.0**	**2.6**
			Maximum ->	**2.9**

92 East Elm Street, Yarmouth, Maine, 04096 USA
www.yarmouthresearch.com

Yarmouth Research and Technology

Valve Description: 2 inch Class 150 Fluoroseal Plug Valve

Cycle Number: 45000 **Date** 5/16/2003

Time	Pressure (psig)	Temp. (deg. F)	Sampling Rate (l/m)	PPMv Reading
12:17:20 PM	249.4	73.0	1.0	2.0
12:17:21 PM	249.4	73.0	1.0	2.0
12:17:23 PM	249.4	73.0	1.0	2.0
12:17:24 PM	249.4	73.0	1.0	2.1
12:17:25 PM	249.4	73.0	1.0	2.1
12:17:26 PM	249.4	73.0	1.0	2.1
12:17:27 PM	249.4	73.0	1.0	2.1
12:17:28 PM	249.4	73.0	1.0	2.1
12:17:29 PM	249.4	73.0	1.0	2.1
12:17:30 PM	249.4	73.0	1.0	2.1
12:17:31 PM	249.4	73.0	1.0	2.0
12:17:32 PM	249.4	73.0	1.0	2.0
12:17:33 PM	249.4	73.0	1.0	2.1
12:17:34 PM	249.4	73.0	1.0	2.1
12:17:35 PM	249.4	73.0	1.0	2.1
12:17:36 PM	249.5	73.0	1.0	2.1
12:17:37 PM	249.5	73.0	1.0	2.1
12:17:38 PM	249.4	73.0	1.0	2.1
12:17:39 PM	249.4	73.0	1.0	2.1
12:17:40 PM	249.4	73.0	1.0	2.1
12:17:41 PM	249.4	73.0	1.0	2.1
12:17:42 PM	249.5	73.0	1.0	2.1
12:17:43 PM	249.4	73.0	1.0	2.1
12:17:45 PM	249.4	73.0	1.0	2.1
12:17:46 PM	249.4	73.0	1.0	2.1
12:17:47 PM	249.4	73.0	1.0	2.1
12:17:48 PM	249.4	73.0	1.0	2.2
12:17:49 PM	249.4	73.0	1.0	2.2
12:17:50 PM	249.4	73.0	1.0	2.2
12:17:51 PM	249.4	73.0	1.0	2.2
12:17:52 PM	249.4	73.0	1.0	2.2
12:17:53 PM	249.4	73.0	1.0	2.2
12:17:54 PM	249.5	73.0	1.0	2.2
12:17:55 PM	249.4	73.0	1.0	2.2
12:17:56 PM	249.4	73.0	1.0	2.3
12:17:57 PM	249.4	73.0	1.0	2.4
12:17:58 PM	249.4	73.0	1.0	2.6
12:17:59 PM	249.4	73.0	1.0	2.7
12:18:00 PM	249.4	73.0	1.0	2.9
12:18:01 PM	249.4	73.0	1.0	2.9
12:18:02 PM	249.4	73.0	1.0	3.0
12:18:03 PM	249.4	73.0	1.0	3.1
12:18:04 PM	249.4	73.0	1.0	3.1
12:18:06 PM	249.4	73.0	1.0	3.2
12:18:07 PM	249.4	73.0	1.0	3.5
12:18:08 PM	249.5	73.0	1.0	3.7
12:18:09 PM	249.4	73.0	1.0	3.8
12:18:10 PM	249.4	73.0	1.0	3.8
12:18:11 PM	249.4	73.0	1.0	3.9
12:18:12 PM	249.5	73.0	1.0	3.9
12:18:13 PM	249.4	73.0	1.0	3.8
12:18:14 PM	249.4	73.0	1.0	3.8
12:18:15 PM	249.4	73.0	1.0	3.8
12:18:16 PM	249.5	73.0	1.0	3.7
12:18:17 PM	249.4	73.0	1.0	3.6
12:18:18 PM	249.4	73.0	1.0	3.5
12:18:19 PM	249.4	73.0	1.0	3.4
12:18:20 PM	249.4	73.0	1.0	3.3
12:18:21 PM	249.5	73.0	1.0	3.2
12:18:22 PM	249.5	73.0	1.0	3.2
Averages ->	**249.4**	**73.0**	**1.0**	**2.6**
			Maximum ->	**3.9**

Yarmouth Research and Technology

Valve Description: 2 inch Class 150 Fluoroseal Plug Valve

Cycle Number: 50000 **Date** 5/17/2003

Time	Pressure (psig)	Temp. (deg. F)	Sampling Rate (l/m)	PPMv Reading
9:27:12 AM	251.8	74.0	1.0	11.1
9:27:13 AM	251.8	74.0	1.0	11.2
9:27:14 AM	251.8	74.0	1.0	10.7
9:27:15 AM	251.8	74.0	1.0	10.8
9:27:16 AM	251.8	73.0	1.0	11.3
9:27:17 AM	251.8	74.0	1.0	10.8
9:27:19 AM	251.8	73.0	1.0	10.6
9:27:20 AM	251.8	74.0	1.0	10.5
9:27:21 AM	251.8	74.0	1.0	10.8
9:27:22 AM	251.8	74.0	1.0	10.3
9:27:23 AM	251.8	73.0	1.0	10.2
9:27:24 AM	251.8	74.0	1.0	10.7
9:27:25 AM	251.8	74.0	1.0	10.0
9:27:26 AM	251.8	73.0	1.0	10.7
9:27:27 AM	251.8	74.0	1.0	10.4
9:27:28 AM	251.8	73.0	1.0	9.8
9:27:29 AM	251.8	74.0	1.0	10.7
9:27:30 AM	251.8	74.0	1.0	9.9
9:27:31 AM	251.8	74.0	1.0	9.6
9:27:32 AM	251.8	74.0	1.0	10.2
9:27:33 AM	251.8	74.0	1.0	9.7
9:27:34 AM	251.8	74.0	1.0	9.2
9:27:35 AM	251.8	74.0	1.0	9.9
9:27:36 AM	251.8	74.0	1.0	9.5
9:27:37 AM	251.8	74.0	1.0	9.7
9:27:38 AM	251.8	73.0	1.0	9.0
9:27:39 AM	251.8	74.0	1.0	8.9
9:27:40 AM	251.8	73.0	1.0	9.3
9:27:41 AM	251.8	74.0	1.0	8.9
9:27:43 AM	251.8	74.0	1.0	8.7
9:27:44 AM	251.8	74.0	1.0	8.9
9:27:45 AM	251.8	74.0	1.0	9.0
9:27:46 AM	251.8	74.0	1.0	8.7
9:27:47 AM	251.8	74.0	1.0	8.6
9:27:48 AM	251.8	74.0	1.0	9.0
9:27:49 AM	251.8	73.0	1.0	8.7
9:27:50 AM	251.7	74.0	1.0	8.4
9:27:51 AM	251.7	74.0	1.0	8.6
9:27:52 AM	251.8	74.0	1.0	8.9
9:27:53 AM	251.7	74.0	1.0	8.2
9:27:54 AM	251.8	74.0	1.0	9.1
9:27:55 AM	251.8	74.0	1.0	8.4
9:27:56 AM	251.8	74.0	1.0	8.5
9:27:57 AM	251.8	74.0	1.0	8.8
9:27:58 AM	251.8	74.0	1.0	8.3
9:27:59 AM	251.8	74.0	1.0	8.6
9:28:00 AM	251.8	74.0	1.0	8.4
9:28:01 AM	251.8	74.0	1.0	8.3
9:28:02 AM	251.8	74.0	1.0	8.8
9:28:03 AM	251.8	74.0	1.0	8.7
9:28:05 AM	251.8	74.0	1.0	8.7
9:28:06 AM	251.7	74.0	1.0	8.3
9:28:07 AM	251.8	73.0	1.0	8.4
9:28:08 AM	251.8	73.0	1.0	8.8
9:28:09 AM	251.8	74.0	1.0	8.7
9:28:10 AM	251.7	74.0	1.0	8.3
9:28:11 AM	251.7	73.0	1.0	8.1
9:28:12 AM	251.7	73.0	1.0	8.5
9:28:13 AM	251.7	74.0	1.0	8.5
9:28:14 AM	251.7	74.0	1.0	7.9
Averages ->	**251.8**	**73.8**	**1.0**	**9.3**
			Maximum ->	**11.3**

92 East Elm Street, Yarmouth, Maine, 04096 USA
www.yarmouthresearch.com

Yarmouth Research and Technology

Valve Description: 2 inch Class 150 Fluoroseal Plug Valve

Cycle Number: 50000 **Date** 5/17/2003

Time	Pressure (psig)	Temp. (deg. F)	Sampling Rate (l/m)	PPMv Reading
9:29:46 AM	251.8	74.0	1.0	6.0
9:29:47 AM	251.8	74.0	1.0	5.5
9:29:49 AM	251.8	73.0	1.0	5.8
9:29:50 AM	251.8	74.0	1.0	5.8
9:29:51 AM	251.8	73.0	1.0	5.5
9:29:52 AM	251.8	74.0	1.0	7.1
9:29:53 AM	251.8	73.0	1.0	13.1
9:29:54 AM	251.8	74.0	1.0	15.6
9:29:55 AM	251.8	74.0	1.0	16.0
9:29:56 AM	251.8	74.0	1.0	15.0
9:29:57 AM	251.8	74.0	1.0	15.2
9:29:58 AM	251.8	74.0	1.0	14.0
9:29:59 AM	251.8	74.0	1.0	12.5
9:30:00 AM	251.8	74.0	1.0	16.1
9:30:01 AM	251.8	73.0	1.0	20.7
9:30:02 AM	251.8	74.0	1.0	22.1
9:30:03 AM	251.8	74.0	1.0	23.5
9:30:04 AM	251.8	73.0	1.0	26.4
9:30:05 AM	251.8	73.0	1.0	27.2
9:30:06 AM	251.8	74.0	1.0	25.8
9:30:07 AM	251.8	73.0	1.0	25.2
9:30:08 AM	251.8	73.0	1.0	26.6
9:30:09 AM	251.8	74.0	1.0	26.6
9:30:10 AM	251.8	73.0	1.0	27.7
9:30:11 AM	251.8	74.0	1.0	32.5
9:30:13 AM	251.8	74.0	1.0	37.4
9:30:14 AM	251.8	74.0	1.0	44.5
9:30:15 AM	251.8	73.0	1.0	41.0
9:30:16 AM	251.7	74.0	1.0	42.1
9:30:17 AM	251.8	74.0	1.0	40.9
9:30:18 AM	251.8	74.0	1.0	40.1
9:30:19 AM	251.8	74.0	1.0	43.0
9:30:20 AM	251.8	74.0	1.0	39.9
9:30:21 AM	251.8	74.0	1.0	40.7
9:30:22 AM	251.8	74.0	1.0	35.8
9:30:23 AM	251.8	74.0	1.0	34.2
9:30:24 AM	251.8	74.0	1.0	33.8
9:30:25 AM	251.8	74.0	1.0	32.7
9:30:26 AM	251.8	74.0	1.0	34.8
9:30:27 AM	251.8	74.0	1.0	37.2
9:30:28 AM	251.8	74.0	1.0	39.2
9:30:29 AM	251.8	74.0	1.0	39.3
9:30:30 AM	251.8	74.0	1.0	37.5
9:30:31 AM	251.8	74.0	1.0	37.7
9:30:32 AM	251.8	74.0	1.0	40.4
9:30:34 AM	251.8	74.0	1.0	38.8
9:30:35 AM	251.8	74.0	1.0	37.6
9:30:36 AM	251.8	74.0	1.0	53.3
9:30:37 AM	251.8	74.0	1.0	59.9
9:30:38 AM	251.8	73.0	1.0	59.3
9:30:39 AM	251.8	73.0	1.0	62.2
9:30:40 AM	251.8	74.0	1.0	62.6
9:30:41 AM	251.8	74.0	1.0	57.1
9:30:42 AM	251.8	74.0	1.0	49.3
9:30:43 AM	251.8	74.0	1.0	38.3
9:30:44 AM	251.8	74.0	1.0	35.4
9:30:45 AM	251.8	74.0	1.0	35.2
9:30:46 AM	251.8	74.0	1.0	35.3
9:30:47 AM	251.8	74.0	1.0	36.3
9:30:48 AM	251.8	74.0	1.0	34.2
Averages ->	**251.8**	**73.8**	**1.0**	**31.7**
			Maximum ->	**62.6**

Yarmouth Research and Technology

Valve Description: 2 inch Class 150 Fluoroseal Plug Valve

Cycle Number: 55000 **Date** 5/18/2003

Time	Pressure (psig)	Temp. (deg. F)	Sampling Rate (l/m)	PPMv Reading
8:39:02 AM	250.2	74.0	1.0	14.6
8:39:03 AM	250.2	74.0	1.0	14.4
8:39:04 AM	250.1	74.0	1.0	14.3
8:39:05 AM	250.1	74.0	1.0	14.0
8:39:06 AM	250.2	74.0	1.0	13.9
8:39:07 AM	250.1	75.0	1.0	13.8
8:39:09 AM	250.1	74.0	1.0	13.6
8:39:10 AM	250.1	75.0	1.0	13.5
8:39:11 AM	250.2	75.0	1.0	13.4
8:39:12 AM	250.1	75.0	1.0	13.3
8:39:13 AM	250.2	75.0	1.0	13.2
8:39:14 AM	250.1	75.0	1.0	13.4
8:39:15 AM	250.1	75.0	1.0	13.1
8:39:16 AM	250.1	75.0	1.0	13.6
8:39:17 AM	250.1	74.0	1.0	13.2
8:39:18 AM	250.2	74.0	1.0	13.3
8:39:19 AM	250.1	74.0	1.0	13.2
8:39:20 AM	250.1	75.0	1.0	13.0
8:39:21 AM	250.1	74.0	1.0	13.4
8:39:22 AM	250.1	75.0	1.0	13.2
8:39:23 AM	250.1	74.0	1.0	13.5
8:39:24 AM	250.1	75.0	1.0	13.7
8:39:25 AM	250.1	75.0	1.0	13.9
8:39:26 AM	250.1	75.0	1.0	13.9
8:39:27 AM	250.1	75.0	1.0	14.0
8:39:28 AM	250.1	74.0	1.0	14.1
8:39:29 AM	250.1	74.0	1.0	14.1
8:39:30 AM	250.1	75.0	1.0	14.0
8:39:32 AM	250.1	75.0	1.0	14.1
8:39:33 AM	250.1	75.0	1.0	14.0
8:39:34 AM	250.1	74.0	1.0	14.0
8:39:35 AM	250.1	75.0	1.0	14.1
8:39:36 AM	250.1	74.0	1.0	14.3
8:39:37 AM	250.1	74.0	1.0	14.3
8:39:38 AM	250.1	74.0	1.0	14.3
8:39:39 AM	250.1	74.0	1.0	14.3
8:39:40 AM	250.1	75.0	1.0	14.4
8:39:41 AM	250.1	75.0	1.0	14.6
8:39:42 AM	250.1	74.0	1.0	14.7
8:39:43 AM	250.1	74.0	1.0	14.8
8:39:44 AM	250.1	75.0	1.0	14.8
8:39:45 AM	250.1	74.0	1.0	15.0
8:39:46 AM	250.1	75.0	1.0	15.3
8:39:47 AM	250.1	75.0	1.0	15.2
8:39:48 AM	250.1	74.0	1.0	15.6
8:39:49 AM	250.1	75.0	1.0	15.9
8:39:50 AM	250.1	74.0	1.0	15.9
8:39:51 AM	250.1	75.0	1.0	16.0
8:39:52 AM	250.1	75.0	1.0	16.2
8:39:54 AM	250.1	74.0	1.0	16.4
8:39:55 AM	250.1	74.0	1.0	16.7
8:39:56 AM	250.1	75.0	1.0	17.1
8:39:57 AM	250.1	75.0	1.0	17.3
8:39:58 AM	250.1	74.0	1.0	17.4
8:39:59 AM	250.1	75.0	1.0	17.5
8:40:00 AM	250.1	74.0	1.0	17.6
8:40:01 AM	250.1	75.0	1.0	17.7
8:40:02 AM	250.1	74.0	1.0	17.7
8:40:03 AM	250.1	75.0	1.0	17.7
8:40:04 AM	250.0	74.0	1.0	17.6
Averages ->	**250.1**	**74.5**	**1.0**	**14.8**
			Maximum ->	**17.7**

92 East Elm Street, Yarmouth, Maine, 04096 USA
www.yarmouthresearch.com

Yarmouth Research and Technology

Valve Description: 2 inch Class 150 Fluoroseal Plug Valve

Cycle Number: 55000 **Date** 5/18/2003

Time	Pressure (psig)	Temp. (deg. F)	Sampling Rate (l/m)	PPMv Reading
8:40:16 AM	250.0	75.0	1.0	17.8
8:40:17 AM	250.0	75.0	1.0	18.1
8:40:18 AM	250.0	74.0	1.0	18.5
8:40:19 AM	250.0	75.0	1.0	18.8
8:40:20 AM	250.0	74.0	1.0	19.3
8:40:21 AM	250.0	75.0	1.0	19.7
8:40:22 AM	250.0	74.0	1.0	20.5
8:40:23 AM	249.9	75.0	1.0	21.8
8:40:24 AM	249.9	74.0	1.0	22.5
8:40:25 AM	250.0	74.0	1.0	22.7
8:40:26 AM	249.9	74.0	1.0	22.9
8:40:27 AM	250.0	74.0	1.0	23.0
8:40:28 AM	250.0	74.0	1.0	22.6
8:40:29 AM	250.0	74.0	1.0	23.1
8:40:30 AM	250.0	75.0	1.0	23.2
8:40:31 AM	250.0	75.0	1.0	22.5
8:40:32 AM	250.0	75.0	1.0	21.8
8:40:33 AM	249.9	74.0	1.0	21.6
8:40:34 AM	249.9	75.0	1.0	21.8
8:40:35 AM	249.9	74.0	1.0	21.9
8:40:36 AM	249.9	75.0	1.0	22.8
8:40:37 AM	249.9	75.0	1.0	23.2
8:40:39 AM	249.9	75.0	1.0	23.1
8:40:40 AM	249.9	75.0	1.0	22.9
8:40:41 AM	249.9	74.0	1.0	22.7
8:40:42 AM	249.9	75.0	1.0	23.7
8:40:43 AM	249.8	75.0	1.0	24.8
8:40:44 AM	249.9	75.0	1.0	24.9
8:40:45 AM	249.9	74.0	1.0	24.4
8:40:46 AM	249.9	75.0	1.0	23.7
8:40:47 AM	249.9	74.0	1.0	23.3
8:40:48 AM	249.9	75.0	1.0	22.9
8:40:49 AM	249.9	75.0	1.0	22.2
8:40:50 AM	249.9	75.0	1.0	21.6
8:40:51 AM	249.9	75.0	1.0	21.0
8:40:52 AM	249.9	74.0	1.0	21.4
8:40:53 AM	249.9	74.0	1.0	22.5
8:40:54 AM	249.9	75.0	1.0	23.0
8:40:55 AM	249.9	75.0	1.0	23.5
8:40:56 AM	249.9	75.0	1.0	25.8
8:40:57 AM	249.9	75.0	1.0	28.6
8:40:58 AM	250.0	75.0	1.0	29.0
8:40:59 AM	249.9	75.0	1.0	28.2
8:41:01 AM	249.9	75.0	1.0	27.1
8:41:02 AM	250.0	75.0	1.0	26.2
8:41:03 AM	249.9	75.0	1.0	25.7
8:41:04 AM	249.9	75.0	1.0	25.5
8:41:05 AM	249.8	75.0	1.0	24.7
8:41:06 AM	249.8	75.0	1.0	25.5
8:41:07 AM	249.8	74.0	1.0	26.9
8:41:08 AM	249.8	75.0	1.0	27.8
8:41:09 AM	249.8	75.0	1.0	29.3
8:41:10 AM	249.8	74.0	1.0	32.0
8:41:11 AM	249.8	75.0	1.0	42.7
8:41:12 AM	249.8	75.0	1.0	56.9
8:41:13 AM	249.8	75.0	1.0	63.4
8:41:14 AM	249.8	75.0	1.0	64.0
8:41:15 AM	249.8	75.0	1.0	62.8
8:41:16 AM	249.8	74.0	1.0	58.6
8:41:17 AM	249.9	75.0	1.0	57.1
Averages ->	**249.9**	**74.7**	**1.0**	**27.5**
			Maximum ->	**64.0**

Yarmouth Research and Technology

Valve Description: 2 inch Class 150 Fluoroseal Plug Valve

Cycle Number: 60000 **Date** 5/19/2003

Time	Pressure (psig)	Temp. (deg. F)	Sampling Rate (l/m)	PPMv Reading
9:20:51 AM	250.4	73.0	1.0	6.4
9:20:52 AM	250.4	74.0	1.0	6.5
9:20:53 AM	250.4	74.0	1.0	6.4
9:20:54 AM	250.4	74.0	1.0	6.4
9:20:55 AM	250.4	74.0	1.0	6.3
9:20:56 AM	250.4	74.0	1.0	6.3
9:20:57 AM	250.4	74.0	1.0	6.4
9:20:58 AM	250.5	74.0	1.0	6.2
9:20:59 AM	250.5	74.0	1.0	6.3
9:21:00 AM	250.5	74.0	1.0	6.2
9:21:01 AM	250.4	74.0	1.0	6.2
9:21:02 AM	250.5	74.0	1.0	6.2
9:21:03 AM	250.5	74.0	1.0	6.2
9:21:04 AM	250.4	74.0	1.0	6.3
9:21:05 AM	250.4	74.0	1.0	6.1
9:21:07 AM	250.4	74.0	1.0	6.2
9:21:08 AM	250.5	74.0	1.0	6.2
9:21:09 AM	250.4	74.0	1.0	6.1
9:21:10 AM	250.4	74.0	1.0	6.1
9:21:11 AM	250.4	74.0	1.0	6.1
9:21:12 AM	250.4	74.0	1.0	6.1
9:21:13 AM	250.4	74.0	1.0	6.1
9:21:14 AM	250.4	74.0	1.0	6.0
9:21:15 AM	250.5	74.0	1.0	6.1
9:21:16 AM	250.5	74.0	1.0	6.0
9:21:17 AM	250.4	74.0	1.0	6.0
9:21:18 AM	250.5	74.0	1.0	6.1
9:21:19 AM	250.4	74.0	1.0	6.0
9:21:20 AM	250.4	74.0	1.0	6.1
9:21:21 AM	250.5	74.0	1.0	6.1
9:21:22 AM	250.5	74.0	1.0	6.1
9:21:23 AM	250.4	74.0	1.0	6.1
9:21:24 AM	250.5	74.0	1.0	6.2
9:21:25 AM	250.4	74.0	1.0	6.1
9:21:26 AM	250.4	74.0	1.0	6.2
9:21:27 AM	250.4	74.0	1.0	6.1
9:21:28 AM	250.4	74.0	1.0	6.3
9:21:29 AM	250.4	74.0	1.0	6.3
9:21:31 AM	250.4	74.0	1.0	6.4
9:21:32 AM	250.4	74.0	1.0	6.2
9:21:33 AM	250.4	74.0	1.0	6.2
9:21:34 AM	250.4	74.0	1.0	6.3
9:21:35 AM	250.4	74.0	1.0	6.3
9:21:36 AM	250.4	74.0	1.0	6.3
9:21:37 AM	250.4	74.0	1.0	6.4
9:21:38 AM	250.4	74.0	1.0	6.3
9:21:39 AM	250.4	74.0	1.0	6.3
9:21:40 AM	250.4	74.0	1.0	6.2
9:21:41 AM	250.4	74.0	1.0	6.2
9:21:42 AM	250.4	74.0	1.0	6.3
9:21:43 AM	250.4	74.0	1.0	6.2
9:21:44 AM	250.4	74.0	1.0	6.2
9:21:45 AM	250.4	74.0	1.0	6.2
9:21:46 AM	250.4	74.0	1.0	6.1
9:21:47 AM	250.4	74.0	1.0	6.1
9:21:48 AM	250.4	74.0	1.0	6.1
9:21:49 AM	250.4	74.0	1.0	6.2
9:21:50 AM	250.4	74.0	1.0	5.9
9:21:51 AM	250.4	74.0	1.0	6.1
9:21:53 AM	250.4	74.0	1.0	6.0
Averages ->	**250.4**	**74.0**	**1.0**	**6.2**
			Maximum ->	**6.5**

Yarmouth Research and Technology

Valve Description: 2 inch Class 150 Fluoroseal Plug Valve

Cycle Number: 60000 **Date** 5/19/2003

Time	Pressure (psig)	Temp. (deg. F)	Sampling Rate (l/m)	PPMv Reading
9:22:09 AM	250.4	74.0	1.0	5.9
9:22:10 AM	250.4	74.0	1.0	6.0
9:22:11 AM	250.4	74.0	1.0	6.0
9:22:12 AM	250.4	74.0	1.0	6.1
9:22:13 AM	250.4	74.0	1.0	6.0
9:22:14 AM	250.4	74.0	1.0	6.5
9:22:15 AM	250.4	74.0	1.0	25.6
9:22:16 AM	250.4	75.0	1.0	62.2
9:22:17 AM	250.4	74.0	1.0	74.5
9:22:18 AM	250.4	74.0	1.0	75.8
9:22:19 AM	250.3	74.0	1.0	74.3
9:22:20 AM	250.4	74.0	1.0	86.1
9:22:21 AM	250.4	74.0	1.0	99.4
9:22:22 AM	250.3	74.0	1.0	91.1
9:22:23 AM	250.4	74.0	1.0	75.7
9:22:24 AM	250.4	74.0	1.0	63.7
9:22:25 AM	250.4	74.0	1.0	56.1
9:22:26 AM	250.4	74.0	1.0	50.9
9:22:27 AM	250.4	74.0	1.0	46.9
9:22:29 AM	250.3	74.0	1.0	40.8
9:22:30 AM	250.3	74.0	1.0	54.8
9:22:31 AM	250.4	74.0	1.0	79.8
9:22:32 AM	250.4	74.0	1.0	78.3
9:22:33 AM	250.4	75.0	1.0	73.4
9:22:34 AM	250.4	74.0	1.0	70.1
9:22:35 AM	250.4	74.0	1.0	76.4
9:22:36 AM	250.4	75.0	1.0	93.0
9:22:37 AM	250.4	74.0	1.0	86.6
9:22:38 AM	250.4	74.0	1.0	77.0
9:22:39 AM	250.4	74.0	1.0	70.9
9:22:40 AM	250.4	74.0	1.0	65.6
9:22:41 AM	250.4	74.0	1.0	62.8
9:22:42 AM	250.4	74.0	1.0	59.8
9:22:43 AM	250.4	74.0	1.0	57.8
9:22:44 AM	250.4	74.0	1.0	54.3
9:22:45 AM	250.4	74.0	1.0	81.3
9:22:46 AM	250.4	75.0	1.0	100.0
9:22:47 AM	250.4	74.0	1.0	100.0
9:22:48 AM	250.4	74.0	1.0	98.3
9:22:49 AM	250.4	74.0	1.0	95.0
9:22:50 AM	250.4	74.0	1.0	100.0
9:22:52 AM	250.4	74.0	1.0	99.9
9:22:53 AM	250.4	74.0	1.0	97.1
9:22:54 AM	250.4	74.0	1.0	90.0
9:22:55 AM	250.4	74.0	1.0	84.2
9:22:56 AM	250.4	74.0	1.0	80.4
9:22:57 AM	250.4	74.0	1.0	76.9
9:22:58 AM	250.4	74.0	1.0	70.8
9:22:59 AM	250.4	74.0	1.0	78.8
9:23:00 AM	250.4	74.0	1.0	99.1
9:23:01 AM	250.4	74.0	1.0	100.0
9:23:02 AM	250.4	74.0	1.0	100.0
9:23:03 AM	250.4	75.0	1.0	100.0
9:23:04 AM	250.4	75.0	1.0	100.0
9:23:05 AM	250.4	74.0	1.0	100.0
9:23:06 AM	250.4	74.0	1.0	100.0
9:23:07 AM	250.4	74.0	1.0	100.0
9:23:08 AM	250.4	74.0	1.0	100.0
9:23:09 AM	250.4	74.0	1.0	100.0
9:23:10 AM	250.4	74.0	1.0	100.0
Averages ->	**250.4**	**74.1**	**1.0**	**72.9**
			Maximum ->	**100.0**

Valve Description: 2 inch Class 150 Fluoroseal Plug Valve

92 East Elm Street, Yarmouth, Maine, 04096 USA
www.yarmouthresearch.com

Yarmouth Research and Technology

Cycle Number: 65000 **Date** 5/20/2003

Time	Pressure (psig)	Temp. (deg. F)	Sampling Rate (l/m)	PPMv Reading
1:24:55 PM	251.1	72.0	1.0	179.8
1:24:56 PM	251.2	72.0	1.0	177.6
1:24:57 PM	251.1	72.0	1.0	168.8
1:24:58 PM	251.2	72.0	1.0	182.3
1:24:59 PM	251.2	73.0	1.0	167.5
1:25:00 PM	251.2	73.0	1.0	175.4
1:25:01 PM	251.1	72.0	1.0	168.9
1:25:02 PM	251.3	73.0	1.0	166.7
1:25:03 PM	251.2	72.0	1.0	174.2
1:25:04 PM	251.2	73.0	1.0	164.8
1:25:05 PM	251.2	73.0	1.0	174.0
1:25:06 PM	251.3	73.0	1.0	174.9
1:25:07 PM	251.3	73.0	1.0	164.5
1:25:08 PM	251.1	73.0	1.0	179.2
1:25:09 PM	251.3	73.0	1.0	168.3
1:25:10 PM	251.3	72.0	1.0	175.3
1:25:11 PM	251.2	73.0	1.0	175.8
1:25:12 PM	251.1	73.0	1.0	163.6
1:25:13 PM	251.2	73.0	1.0	172.9
1:25:14 PM	251.2	73.0	1.0	164.6
1:25:16 PM	251.1	73.0	1.0	165.0
1:25:17 PM	251.2	73.0	1.0	161.7
1:25:18 PM	251.2	73.0	1.0	168.9
1:25:19 PM	251.2	73.0	1.0	170.3
1:25:20 PM	251.2	72.0	1.0	161.0
1:25:21 PM	251.2	72.0	1.0	172.9
1:25:22 PM	251.2	73.0	1.0	166.1
1:25:23 PM	251.2	72.0	1.0	165.7
1:25:24 PM	251.2	72.0	1.0	171.9
1:25:25 PM	251.3	73.0	1.0	163.3
1:25:26 PM	251.2	73.0	1.0	165.6
1:25:27 PM	251.1	72.0	1.0	170.6
1:25:28 PM	251.2	72.0	1.0	170.0
1:25:29 PM	251.2	73.0	1.0	166.9
1:25:30 PM	251.2	73.0	1.0	163.7
1:25:31 PM	251.2	73.0	1.0	164.5
1:25:32 PM	251.1	72.0	1.0	170.4
1:25:33 PM	251.3	73.0	1.0	165.4
1:25:34 PM	251.2	73.0	1.0	162.4
1:25:35 PM	251.2	73.0	1.0	172.5
1:25:36 PM	251.1	72.0	1.0	170.4
1:25:38 PM	251.2	73.0	1.0	166.9
1:25:39 PM	251.1	73.0	1.0	165.0
1:25:40 PM	251.2	73.0	1.0	173.1
1:25:41 PM	251.2	72.0	1.0	166.1
1:25:42 PM	251.3	72.0	1.0	168.9
1:25:43 PM	251.2	72.0	1.0	176.2
1:25:44 PM	251.2	73.0	1.0	173.4
1:25:45 PM	251.2	73.0	1.0	169.6
1:25:46 PM	251.1	73.0	1.0	172.6
1:25:47 PM	251.1	72.0	1.0	176.4
1:25:48 PM	251.2	73.0	1.0	176.0
1:25:49 PM	251.1	72.0	1.0	173.3
1:25:50 PM	251.1	73.0	1.0	169.6
1:25:51 PM	251.1	72.0	1.0	174.4
1:25:52 PM	251.2	72.0	1.0	177.6
1:25:53 PM	251.2	72.0	1.0	173.1
1:25:54 PM	251.1	73.0	1.0	168.6
1:25:55 PM	251.1	73.0	1.0	168.9
1:25:56 PM	251.1	72.0	1.0	176.9
Averages ->	**251.2**	**72.6**	**1.0**	**170.2**
			Maximum ->	**182.3**

Valve Description: 2 inch Class 150 Fluoroseal Plug Valve

Cycle Number: 65000 **Date** 5/20/2003

Yarmouth Research and Technology

Time	Pressure (psig)	Temp. (deg. F)	Sampling Rate (l/m)	PPMv Reading
1:26:08 PM	251.1	73.0	1.0	166.3
1:26:09 PM	251.2	72.0	1.0	173.8
1:26:11 PM	251.1	73.0	1.0	169.1
1:26:12 PM	251.1	73.0	1.0	165.0
1:26:13 PM	251.1	73.0	1.0	170.1
1:26:14 PM	251.1	73.0	1.0	177.0
1:26:15 PM	251.1	72.0	1.0	240.2
1:26:16 PM	251.1	73.0	1.0	237.3
1:26:17 PM	251.0	72.0	1.0	235.3
1:26:18 PM	251.0	72.0	1.0	225.9
1:26:19 PM	251.0	72.0	1.0	218.1
1:26:20 PM	251.1	72.0	1.0	259.5
1:26:21 PM	251.1	73.0	1.0	282.8
1:26:22 PM	251.1	73.0	1.0	288.8
1:26:23 PM	251.1	72.0	1.0	287.9
1:26:24 PM	251.1	73.0	1.0	262.1
1:26:25 PM	251.1	72.0	1.0	284.9
1:26:26 PM	251.1	73.0	1.0	264.8
1:26:27 PM	251.1	73.0	1.0	289.1
1:26:28 PM	251.1	73.0	1.0	340.2
1:26:29 PM	251.0	73.0	1.0	547.2
1:26:30 PM	251.1	73.0	1.0	478.6
1:26:31 PM	251.1	73.0	1.0	420.8
1:26:32 PM	251.0	73.0	1.0	362.1
1:26:34 PM	251.0	73.0	1.0	344.5
1:26:35 PM	251.1	72.0	1.0	341.4
1:26:36 PM	251.1	73.0	1.0	409.9
1:26:37 PM	251.0	73.0	1.0	369.0
1:26:38 PM	251.1	73.0	1.0	348.7
1:26:39 PM	251.2	73.0	1.0	316.9
1:26:40 PM	251.1	72.0	1.0	303.0
1:26:41 PM	251.1	72.0	1.0	307.4
1:26:42 PM	251.0	73.0	1.0	290.5
1:26:43 PM	251.1	73.0	1.0	301.1
1:26:44 PM	251.1	73.0	1.0	423.8
1:26:45 PM	251.1	73.0	1.0	407.2
1:26:46 PM	251.1	73.0	1.0	354.1
1:26:47 PM	251.1	72.0	1.0	351.8
1:26:48 PM	251.0	72.0	1.0	326.5
1:26:49 PM	251.0	72.0	1.0	314.7
1:26:50 PM	251.1	72.0	1.0	372.3
1:26:51 PM	251.1	72.0	1.0	346.4
1:26:52 PM	251.1	72.0	1.0	359.7
1:26:53 PM	251.1	72.0	1.0	324.3
1:26:54 PM	251.2	72.0	1.0	347.2
1:26:55 PM	251.1	72.0	1.0	320.3
1:26:56 PM	251.1	73.0	1.0	342.9
1:26:58 PM	251.2	72.0	1.0	375.9
1:26:59 PM	251.1	73.0	1.0	560.7
1:27:00 PM	251.1	73.0	1.0	507.3
1:27:01 PM	251.1	73.0	1.0	428.7
1:27:02 PM	251.1	72.0	1.0	437.7
1:27:03 PM	251.1	72.0	1.0	399.4
1:27:04 PM	251.1	73.0	1.0	406.1
1:27:05 PM	251.1	72.0	1.0	371.4
1:27:06 PM	251.0	73.0	1.0	393.7
1:27:07 PM	251.1	73.0	1.0	359.6
1:27:08 PM	251.1	72.0	1.0	385.7
1:27:09 PM	251.0	73.0	1.0	372.3
1:27:10 PM	251.1	72.0	1.0	359.9
Averages ->	**251.1**	**72.6**	**1.0**	**330.5**
			Maximum ->	**560.7**

Valve Description: 2 inch Class 150 Fluoroseal Plug Valve

Cycle Number: 70000 **Date** 5/21/2003

Yarmouth Research and Technology

Time	Pressure (psig)	Temp. (deg. F)	Sampling Rate (l/m)	PPMv Reading
4:07:30 PM	249.9	75.0	1.0	34.7
4:07:31 PM	249.7	75.0	1.0	33.8
4:07:32 PM	249.8	75.0	1.0	33.8
4:07:33 PM	249.9	75.0	1.0	32.8
4:07:34 PM	249.8	75.0	1.0	32.8
4:07:35 PM	249.9	75.0	1.0	33.1
4:07:36 PM	249.9	76.0	1.0	32.5
4:07:37 PM	249.9	75.0	1.0	32.9
4:07:38 PM	249.9	75.0	1.0	32.5
4:07:39 PM	249.9	75.0	1.0	32.1
4:07:40 PM	250.0	75.0	1.0	31.4
4:07:41 PM	249.9	75.0	1.0	30.5
4:07:42 PM	249.7	76.0	1.0	29.5
4:07:43 PM	249.8	75.0	1.0	30.2
4:07:44 PM	249.8	75.0	1.0	31.3
4:07:45 PM	249.8	75.0	1.0	31.4
4:07:46 PM	249.8	75.0	1.0	32.9
4:07:48 PM	249.8	75.0	1.0	33.0
4:07:49 PM	249.9	75.0	1.0	32.7
4:07:50 PM	249.9	76.0	1.0	32.3
4:07:51 PM	249.7	76.0	1.0	32.8
4:07:52 PM	249.9	76.0	1.0	31.8
4:07:53 PM	249.7	76.0	1.0	31.6
4:07:54 PM	249.9	75.0	1.0	31.8
4:07:55 PM	249.9	75.0	1.0	32.6
4:07:56 PM	249.7	76.0	1.0	32.2
4:07:57 PM	249.9	75.0	1.0	31.3
4:07:58 PM	249.9	75.0	1.0	31.6
4:07:59 PM	249.9	75.0	1.0	32.0
4:08:00 PM	249.9	76.0	1.0	30.8
4:08:01 PM	249.9	76.0	1.0	30.6
4:08:02 PM	249.8	75.0	1.0	29.8
4:08:03 PM	249.8	76.0	1.0	29.8
4:08:04 PM	249.9	75.0	1.0	29.7
4:08:05 PM	250.0	76.0	1.0	30.6
4:08:06 PM	249.9	76.0	1.0	31.1
4:08:07 PM	249.8	76.0	1.0	32.3
4:08:08 PM	249.8	76.0	1.0	31.3
4:08:09 PM	249.8	76.0	1.0	31.4
4:08:11 PM	249.9	75.0	1.0	31.3
4:08:12 PM	249.8	75.0	1.0	31.8
4:08:13 PM	249.9	75.0	1.0	32.5
4:08:14 PM	249.9	76.0	1.0	32.0
4:08:15 PM	249.8	76.0	1.0	31.9
4:08:16 PM	249.8	76.0	1.0	32.3
4:08:17 PM	249.8	75.0	1.0	31.5
4:08:18 PM	249.8	76.0	1.0	32.4
4:08:19 PM	249.8	75.0	1.0	32.6
4:08:20 PM	249.8	75.0	1.0	33.1
4:08:21 PM	249.8	76.0	1.0	32.8
4:08:22 PM	249.8	76.0	1.0	32.3
4:08:23 PM	249.9	76.0	1.0	32.5
4:08:24 PM	249.8	76.0	1.0	32.0
4:08:25 PM	249.8	75.0	1.0	32.2
4:08:26 PM	249.7	76.0	1.0	32.1
4:08:27 PM	249.8	75.0	1.0	32.4
4:08:28 PM	249.9	76.0	1.0	32.1
4:08:29 PM	249.9	75.0	1.0	31.5
4:08:30 PM	249.7	76.0	1.0	30.7
4:08:31 PM	249.8	76.0	1.0	31.0
Averages ->	**249.8**	**75.5**	**1.0**	**31.9**
			Maximum ->	**34.7**

Valve Description: 2 inch Class 150 Fluoroseal Plug Valve

Cycle Number: 70000 **Date** 5/21/2003

Time	Pressure	Temp.	Sampling	PPMv

Yarmouth Research and Technology

	(psig)	(deg. F)	Rate (l/m)	Reading
4:08:43 PM	249.8	76.0	1.0	33.2
4:08:44 PM	249.8	76.0	1.0	32.7
4:08:45 PM	250.0	75.0	1.0	33.1
4:08:46 PM	249.9	76.0	1.0	33.9
4:08:47 PM	249.8	76.0	1.0	34.2
4:08:48 PM	249.8	76.0	1.0	34.0
4:08:49 PM	249.9	75.0	1.0	35.2
4:08:50 PM	249.6	76.0	1.0	42.6
4:08:51 PM	249.8	75.0	1.0	50.1
4:08:52 PM	249.9	75.0	1.0	51.7
4:08:53 PM	249.8	75.0	1.0	51.2
4:08:54 PM	249.8	75.0	1.0	51.2
4:08:55 PM	249.9	76.0	1.0	55.1
4:08:56 PM	249.7	75.0	1.0	65.6
4:08:57 PM	249.7	76.0	1.0	69.3
4:08:58 PM	249.8	76.0	1.0	65.8
4:09:00 PM	249.9	76.0	1.0	59.9
4:09:01 PM	249.9	76.0	1.0	56.0
4:09:02 PM	249.8	75.0	1.0	52.2
4:09:03 PM	249.9	75.0	1.0	49.6
4:09:04 PM	249.8	75.0	1.0	47.2
4:09:05 PM	249.7	75.0	1.0	49.1
4:09:06 PM	249.8	75.0	1.0	52.8
4:09:07 PM	249.9	76.0	1.0	52.8
4:09:08 PM	249.8	76.0	1.0	52.2
4:09:09 PM	249.7	75.0	1.0	55.1
4:09:10 PM	249.9	75.0	1.0	65.2
4:09:11 PM	249.8	75.0	1.0	68.9
4:09:12 PM	249.8	75.0	1.0	66.5
4:09:13 PM	249.8	76.0	1.0	61.5
4:09:14 PM	249.8	76.0	1.0	57.4
4:09:15 PM	250.0	75.0	1.0	55.2
4:09:16 PM	249.9	76.0	1.0	52.9
4:09:17 PM	249.9	76.0	1.0	50.9
4:09:18 PM	249.9	76.0	1.0	49.5
4:09:19 PM	249.8	76.0	1.0	53.7
4:09:20 PM	249.9	76.0	1.0	57.2
4:09:21 PM	249.9	76.0	1.0	58.6
4:09:23 PM	249.7	76.0	1.0	57.9
4:09:24 PM	249.8	75.0	1.0	57.4
4:09:25 PM	249.8	76.0	1.0	59.7
4:09:26 PM	249.7	75.0	1.0	67.6
4:09:27 PM	249.8	76.0	1.0	72.1
4:09:28 PM	249.9	76.0	1.0	70.1
4:09:29 PM	249.8	76.0	1.0	65.9
4:09:30 PM	249.8	76.0	1.0	61.5
4:09:31 PM	249.8	76.0	1.0	58.5
4:09:32 PM	249.9	75.0	1.0	54.8
4:09:33 PM	249.8	75.0	1.0	53.5
4:09:34 PM	249.7	75.0	1.0	58.6
4:09:35 PM	249.8	76.0	1.0	65.9
4:09:36 PM	249.7	76.0	1.0	67.3
4:09:37 PM	249.8	76.0	1.0	66.6
4:09:38 PM	249.9	76.0	1.0	66.6
4:09:39 PM	249.8	75.0	1.0	67.9
4:09:40 PM	249.9	76.0	1.0	74.7
4:09:41 PM	250.0	75.0	1.0	76.1
4:09:42 PM	249.9	75.0	1.0	73.4
4:09:43 PM	250.0	75.0	1.0	69.2
4:09:44 PM	249.8	76.0	1.0	65.3
Averages ->	**249.8**	**75.6**	**1.0**	**56.6**
			Maximum ->	**76.1**

Valve Description: 2 inch Class 150 Fluoroseal Plug Valve

Cycle Number: 75000 **Date** 5/22/2003

Time	Pressure (psig)	Temp. (deg. F)	Sampling Rate (l/m)	PPMv Reading

Yarmouth Research and Technology

9:09:30 AM	249.8	73.0	1.0	126.7
9:09:31 AM	249.7	74.0	1.0	116.4
9:09:32 AM	249.8	74.0	1.0	122.7
9:09:33 AM	249.8	74.0	1.0	118.8
9:09:34 AM	250.0	74.0	1.0	117.3
9:09:35 AM	249.7	74.0	1.0	116.1
9:09:36 AM	249.7	74.0	1.0	116.0
9:09:37 AM	249.7	74.0	1.0	110.6
9:09:38 AM	249.8	74.0	1.0	118.3
9:09:39 AM	249.7	75.0	1.0	111.1
9:09:40 AM	249.7	74.0	1.0	117.4
9:09:41 AM	249.8	74.0	1.0	108.9
9:09:42 AM	249.7	74.0	1.0	118.5
9:09:44 AM	249.9	74.0	1.0	105.2
9:09:45 AM	249.7	74.0	1.0	108.3
9:09:46 AM	249.6	74.0	1.0	105.3
9:09:47 AM	249.7	74.0	1.0	111.7
9:09:48 AM	249.7	74.0	1.0	99.1
9:09:49 AM	249.7	74.0	1.0	108.7
9:09:50 AM	249.8	74.0	1.0	99.3
9:09:51 AM	249.8	74.0	1.0	106.9
9:09:52 AM	249.7	74.0	1.0	97.8
9:09:53 AM	249.8	74.0	1.0	106.4
9:09:54 AM	249.8	74.0	1.0	95.1
9:09:55 AM	249.7	74.0	1.0	102.1
9:09:56 AM	249.7	74.0	1.0	93.4
9:09:57 AM	249.8	75.0	1.0	94.0
9:09:58 AM	249.8	74.0	1.0	98.3
9:09:59 AM	249.7	74.0	1.0	94.5
9:10:00 AM	249.7	74.0	1.0	92.6
9:10:01 AM	249.8	74.0	1.0	97.7
9:10:02 AM	249.7	75.0	1.0	90.3
9:10:03 AM	249.7	74.0	1.0	94.8
9:10:04 AM	249.7	75.0	1.0	91.9
9:10:05 AM	249.7	74.0	1.0	91.5
9:10:07 AM	249.7	74.0	1.0	94.1
9:10:08 AM	249.7	74.0	1.0	89.0
9:10:09 AM	249.9	74.0	1.0	95.5
9:10:10 AM	249.8	74.0	1.0	88.2
9:10:11 AM	249.9	74.0	1.0	92.9
9:10:12 AM	249.8	74.0	1.0	91.0
9:10:13 AM	249.7	74.0	1.0	85.7
9:10:14 AM	249.8	75.0	1.0	92.8
9:10:15 AM	249.7	74.0	1.0	86.2
9:10:16 AM	249.7	74.0	1.0	87.9
9:10:17 AM	249.7	74.0	1.0	89.4
9:10:18 AM	249.7	74.0	1.0	84.2
9:10:19 AM	249.8	74.0	1.0	84.1
9:10:20 AM	249.7	74.0	1.0	86.0
9:10:21 AM	249.7	74.0	1.0	85.9
9:10:22 AM	249.8	74.0	1.0	82.2
9:10:23 AM	249.8	74.0	1.0	87.7
9:10:24 AM	249.7	74.0	1.0	81.5
9:10:25 AM	249.7	74.0	1.0	85.3
9:10:27 AM	249.7	74.0	1.0	83.4
9:10:28 AM	249.8	74.0	1.0	80.5
9:10:29 AM	249.8	74.0	1.0	87.1
9:10:30 AM	249.7	74.0	1.0	79.8
9:10:31 AM	249.7	74.0	1.0	86.9
9:10:32 AM	249.8	74.0	1.0	79.5
Averages ->	**249.8**	**74.1**	**1.0**	**97.8**
			Maximum ->	**126.7**

Valve Description: 2 inch Class 150 Fluoroseal Plug Valve

Cycle Number: 75000 **Date** 5/22/2003

Time	Pressure (psig)	Temp. (deg. F)	Sampling Rate (l/m)	PPMv Reading

Yarmouth Research and Technology

9:11:02 AM	249.7	74.0	1.0	71.8
9:11:03 AM	249.6	74.0	1.0	66.7
9:11:04 AM	249.7	74.0	1.0	73.3
9:11:05 AM	249.8	75.0	1.0	66.2
9:11:06 AM	249.7	74.0	1.0	70.2
9:11:07 AM	249.7	74.0	1.0	67.5
9:11:08 AM	249.6	74.0	1.0	65.6
9:11:09 AM	249.9	74.0	1.0	66.8
9:11:10 AM	249.7	74.0	1.0	87.8
9:11:11 AM	249.7	74.0	1.0	92.5
9:11:12 AM	249.6	74.0	1.0	107.6
9:11:13 AM	249.7	74.0	1.0	114.9
9:11:14 AM	249.7	74.0	1.0	142.5
9:11:15 AM	249.7	74.0	1.0	136.4
9:11:17 AM	249.6	74.0	1.0	111.3
9:11:18 AM	249.7	74.0	1.0	107.8
9:11:19 AM	249.5	74.0	1.0	91.3
9:11:20 AM	249.7	74.0	1.0	93.4
9:11:21 AM	249.7	74.0	1.0	81.6
9:11:22 AM	249.7	74.0	1.0	82.9
9:11:23 AM	249.7	74.0	1.0	66.9
9:11:24 AM	249.7	74.0	1.0	79.5
9:11:25 AM	249.7	74.0	1.0	78.1
9:11:26 AM	249.8	74.0	1.0	86.8
9:11:27 AM	249.7	74.0	1.0	81.5
9:11:28 AM	249.6	74.0	1.0	88.3
9:11:29 AM	249.7	74.0	1.0	91.7
9:11:30 AM	249.7	74.0	1.0	80.5
9:11:31 AM	249.7	74.0	1.0	81.1
9:11:32 AM	249.7	74.0	1.0	74.0
9:11:33 AM	249.6	74.0	1.0	77.5
9:11:34 AM	249.6	73.0	1.0	70.5
9:11:35 AM	249.7	74.0	1.0	75.2
9:11:36 AM	249.7	74.0	1.0	65.2
9:11:37 AM	249.6	74.0	1.0	62.2
9:11:39 AM	249.7	74.0	1.0	64.8
9:11:40 AM	249.6	74.0	1.0	68.2
9:11:41 AM	249.6	74.0	1.0	70.7
9:11:42 AM	249.7	74.0	1.0	68.3
9:11:43 AM	249.7	74.0	1.0	72.8
9:11:44 AM	249.7	74.0	1.0	72.8
9:11:45 AM	249.6	74.0	1.0	77.7
9:11:46 AM	249.7	74.0	1.0	67.3
9:11:47 AM	249.7	74.0	1.0	64.9
9:11:48 AM	249.7	74.0	1.0	66.4
9:11:49 AM	249.6	74.0	1.0	59.2
9:11:50 AM	249.6	74.0	1.0	63.7
9:11:51 AM	249.7	74.0	1.0	57.1
9:11:52 AM	249.7	74.0	1.0	49.4
9:11:53 AM	249.7	74.0	1.0	57.9
9:11:54 AM	249.5	74.0	1.0	61.4
9:11:55 AM	249.7	74.0	1.0	61.5
9:11:56 AM	249.6	74.0	1.0	61.5
9:11:57 AM	249.7	74.0	1.0	77.2
9:11:58 AM	249.7	74.0	1.0	72.3
9:11:59 AM	249.6	74.0	1.0	73.5
9:12:00 AM	249.6	74.0	1.0	67.0
9:12:01 AM	249.6	74.0	1.0	65.4
9:12:03 AM	249.7	74.0	1.0	64.0
9:12:04 AM	249.6	74.0	1.0	61.2
Averages ->	**249.7**	**74.0**	**1.0**	**76.7**
			Maximum ->	**142.5**

Valve Description: 2 inch Class 150 Fluoroseal Plug Valve

Cycle Number: 80000 **Date** 5/23/2003

Time	Pressure (psig)	Temp. (deg. F)	Sampling Rate (l/m)	PPMv Reading
9:27:31 AM	250.0	74.0	1.0	61.2

9:27:32 AM	250.0	74.0	1.0	58.8
9:27:33 AM	249.9	74.0	1.0	58.8
9:27:34 AM	250.1	74.0	1.0	58.7
9:27:35 AM	250.0	74.0	1.0	60.3
9:27:36 AM	250.0	74.0	1.0	55.9
9:27:37 AM	250.1	74.0	1.0	59.2
9:27:39 AM	250.0	75.0	1.0	54.3
9:27:40 AM	250.0	74.0	1.0	57.5
9:27:41 AM	250.0	74.0	1.0	52.1
9:27:42 AM	250.1	74.0	1.0	56.6
9:27:43 AM	250.0	74.0	1.0	51.7
9:27:44 AM	249.7	74.0	1.0	53.8
9:27:45 AM	250.0	74.0	1.0	50.8
9:27:46 AM	249.9	74.0	1.0	53.2
9:27:47 AM	250.0	74.0	1.0	48.1
9:27:48 AM	249.9	74.0	1.0	46.2
9:27:49 AM	250.0	74.0	1.0	50.4
9:27:50 AM	250.0	74.0	1.0	45.7
9:27:51 AM	249.9	74.0	1.0	47.6
9:27:52 AM	250.0	74.0	1.0	45.8
9:27:53 AM	250.0	74.0	1.0	43.6
9:27:54 AM	250.1	74.0	1.0	46.4
9:27:55 AM	250.1	74.0	1.0	40.9
9:27:56 AM	249.9	74.0	1.0	44.4
9:27:57 AM	250.0	74.0	1.0	40.4
9:27:58 AM	250.1	75.0	1.0	43.4
9:27:59 AM	250.0	74.0	1.0	37.6
9:28:00 AM	249.8	74.0	1.0	39.3
9:28:02 AM	250.0	74.0	1.0	39.5
9:28:03 AM	250.1	75.0	1.0	36.2
9:28:04 AM	249.9	74.0	1.0	38.1
9:28:05 AM	249.9	74.0	1.0	35.9
9:28:06 AM	249.8	74.0	1.0	36.0
9:28:07 AM	249.9	74.0	1.0	36.5
9:28:08 AM	249.9	74.0	1.0	33.6
9:28:09 AM	250.1	74.0	1.0	33.8
9:28:10 AM	249.9	74.0	1.0	34.4
9:28:11 AM	249.9	74.0	1.0	33.2
9:28:12 AM	250.0	74.0	1.0	33.7
9:28:13 AM	250.1	74.0	1.0	30.7
9:28:14 AM	249.9	74.0	1.0	30.6
9:28:15 AM	250.0	74.0	1.0	31.7
9:28:16 AM	250.1	74.0	1.0	29.8
9:28:17 AM	250.0	74.0	1.0	29.7
9:28:18 AM	249.9	74.0	1.0	30.5
9:28:19 AM	250.0	74.0	1.0	29.9
9:28:20 AM	250.0	74.0	1.0	29.3
9:28:21 AM	250.0	74.0	1.0	31.2
9:28:22 AM	250.1	74.0	1.0	28.1
9:28:24 AM	250.1	74.0	1.0	31.3
9:28:25 AM	250.1	74.0	1.0	29.4
9:28:26 AM	250.1	74.0	1.0	29.6
9:28:27 AM	250.1	74.0	1.0	31.6
9:28:28 AM	250.1	74.0	1.0	30.3
9:28:29 AM	249.9	74.0	1.0	31.2
9:28:30 AM	250.1	74.0	1.0	32.2
9:28:31 AM	250.0	74.0	1.0	29.0
9:28:32 AM	249.9	74.0	1.0	33.0
9:28:33 AM	250.0	74.0	1.0	33.1
Averages ->	**250.0**	**74.1**	**1.0**	**41.1**
			Maximum ->	**61.2**

Valve Description: 2 inch Class 150 Fluoroseal Plug Valve

Cycle Number: 80000 **Date** 5/23/2003

Time	Pressure (psig)	Temp. (deg. F)	Sampling Rate (l/m)	PPMv Reading
9:28:44 AM	250.0	74.0	1.0	32.7
9:28:45 AM	250.0	74.0	1.0	30.5

Yarmouth Research and Technology

9:28:46 AM	250.0	74.0	1.0	30.3
9:28:47 AM	250.0	74.0	1.0	24.7
9:28:48 AM	250.0	74.0	1.0	25.1
9:28:49 AM	250.0	74.0	1.0	22.2
9:28:50 AM	250.0	74.0	1.0	23.6
9:28:51 AM	250.0	74.0	1.0	23.3
9:28:52 AM	250.1	74.0	1.0	27.4
9:28:53 AM	250.1	74.0	1.0	24.8
9:28:54 AM	250.0	74.0	1.0	28.1
9:28:55 AM	250.0	74.0	1.0	28.1
9:28:56 AM	249.9	74.0	1.0	40.5
9:28:57 AM	250.0	74.0	1.0	41.6
9:28:58 AM	250.0	74.0	1.0	44.0
9:28:59 AM	250.1	74.0	1.0	39.3
9:29:01 AM	250.0	74.0	1.0	39.8
9:29:02 AM	250.1	74.0	1.0	37.4
9:29:03 AM	250.1	74.0	1.0	38.5
9:29:04 AM	250.0	74.0	1.0	34.9
9:29:05 AM	250.0	74.0	1.0	28.6
9:29:06 AM	250.1	74.0	1.0	32.1
9:29:07 AM	250.0	75.0	1.0	33.5
9:29:08 AM	250.0	74.0	1.0	38.3
9:29:09 AM	250.1	74.0	1.0	39.4
9:29:10 AM	250.1	74.0	1.0	47.2
9:29:11 AM	250.0	74.0	1.0	55.0
9:29:12 AM	250.0	74.0	1.0	49.2
9:29:13 AM	250.1	74.0	1.0	51.9
9:29:14 AM	250.1	74.0	1.0	48.4
9:29:15 AM	250.0	74.0	1.0	48.7
9:29:16 AM	250.1	74.0	1.0	48.4
9:29:17 AM	250.1	74.0	1.0	45.1
9:29:18 AM	250.0	74.0	1.0	47.7
9:29:19 AM	250.0	74.0	1.0	39.5
9:29:20 AM	250.0	74.0	1.0	38.2
9:29:22 AM	250.1	74.0	1.0	43.6
9:29:23 AM	250.1	74.0	1.0	43.5
9:29:24 AM	249.9	74.0	1.0	48.7
9:29:25 AM	250.1	74.0	1.0	48.0
9:29:26 AM	250.1	74.0	1.0	64.9
9:29:27 AM	250.1	74.0	1.0	72.7
9:29:28 AM	250.1	74.0	1.0	71.3
9:29:29 AM	250.0	74.0	1.0	67.8
9:29:30 AM	250.1	74.0	1.0	66.9
9:29:31 AM	250.2	74.0	1.0	63.1
9:29:32 AM	250.1	74.0	1.0	60.5
9:29:33 AM	250.0	74.0	1.0	56.9
9:29:34 AM	250.1	74.0	1.0	52.9
9:29:35 AM	250.1	74.0	1.0	51.2
9:29:36 AM	250.0	74.0	1.0	53.9
9:29:37 AM	250.1	74.0	1.0	60.7
9:29:38 AM	250.0	74.0	1.0	60.2
9:29:39 AM	250.1	74.0	1.0	63.2
9:29:40 AM	250.1	74.0	1.0	83.5
9:29:41 AM	250.0	74.0	1.0	90.6
9:29:42 AM	250.0	74.0	1.0	85.5
9:29:43 AM	249.9	75.0	1.0	85.8
9:29:45 AM	250.0	74.0	1.0	79.0
9:29:46 AM	250.2	74.0	1.0	77.5
Averages ->	**250.0**	**74.0**	**1.0**	**48.0**
			Maximum ->	**90.6**

Valve Description: 2 inch Class 150 Fluoroseal Plug Valve

Cycle Number: 85000 **Date** 5/24/2003

Time	Pressure (psig)	Temp. (deg. F)	Sampling Rate (l/m)	PPMv Reading
6:55:57 AM	249.1	74.0	1.0	36.3
6:55:58 AM	249.1	75.0	1.0	34.8
6:55:59 AM	249.0	74.0	1.0	33.7

Yarmouth Research and Technology

6:56:00 AM	249.1	75.0	1.0	32.4
6:56:01 AM	249.2	75.0	1.0	31.7
6:56:02 AM	249.0	75.0	1.0	30.9
6:56:03 AM	249.2	75.0	1.0	30.3
6:56:04 AM	249.1	75.0	1.0	28.9
6:56:05 AM	249.1	75.0	1.0	28.6
6:56:06 AM	249.1	74.0	1.0	27.6
6:56:07 AM	249.0	75.0	1.0	27.2
6:56:08 AM	249.1	75.0	1.0	26.3
6:56:09 AM	249.1	75.0	1.0	26.0
6:56:10 AM	249.1	75.0	1.0	26.5
6:56:12 AM	249.1	75.0	1.0	27.2
6:56:13 AM	249.2	75.0	1.0	28.8
6:56:14 AM	249.1	74.0	1.0	29.5
6:56:15 AM	249.1	75.0	1.0	30.5
6:56:16 AM	249.2	75.0	1.0	31.0
6:56:17 AM	249.0	74.0	1.0	31.8
6:56:18 AM	249.1	75.0	1.0	31.9
6:56:19 AM	249.1	75.0	1.0	32.3
6:56:20 AM	249.2	75.0	1.0	32.7
6:56:21 AM	249.0	75.0	1.0	33.9
6:56:22 AM	249.1	75.0	1.0	35.0
6:56:23 AM	249.1	75.0	1.0	37.0
6:56:24 AM	249.0	75.0	1.0	38.3
6:56:25 AM	249.1	75.0	1.0	40.0
6:56:26 AM	249.1	75.0	1.0	43.3
6:56:27 AM	249.2	75.0	1.0	44.9
6:56:28 AM	249.0	75.0	1.0	45.8
6:56:29 AM	248.9	75.0	1.0	46.6
6:56:30 AM	248.9	75.0	1.0	47.3
6:56:31 AM	249.0	75.0	1.0	48.4
6:56:32 AM	249.0	75.0	1.0	48.8
6:56:34 AM	249.0	75.0	1.0	49.7
6:56:35 AM	249.1	75.0	1.0	50.4
6:56:36 AM	248.9	75.0	1.0	50.5
6:56:37 AM	249.0	75.0	1.0	50.5
6:56:38 AM	249.0	75.0	1.0	50.2
6:56:39 AM	249.0	74.0	1.0	49.8
6:56:40 AM	249.0	75.0	1.0	49.2
6:56:41 AM	249.0	75.0	1.0	48.0
6:56:42 AM	249.0	74.0	1.0	48.2
6:56:43 AM	249.0	75.0	1.0	46.9
6:56:44 AM	249.1	75.0	1.0	45.9
6:56:45 AM	249.0	74.0	1.0	45.8
6:56:46 AM	249.0	75.0	1.0	45.6
6:56:47 AM	249.0	75.0	1.0	45.3
6:56:48 AM	248.9	75.0	1.0	44.0
6:56:49 AM	249.2	74.0	1.0	42.9
6:56:50 AM	249.0	74.0	1.0	42.5
6:56:51 AM	249.2	74.0	1.0	42.3
6:56:52 AM	249.0	75.0	1.0	41.5
6:56:53 AM	249.0	74.0	1.0	40.8
6:56:54 AM	249.0	75.0	1.0	39.2
6:56:55 AM	249.0	75.0	1.0	38.0
6:56:57 AM	249.0	75.0	1.0	37.5
6:56:58 AM	248.9	74.0	1.0	36.6
6:56:59 AM	249.0	75.0	1.0	36.1
Averages ->	**249.1**	**74.8**	**1.0**	**38.7**
			Maximum ->	**50.5**

Valve Description: 2 inch Class 150 Fluoroseal Plug Valve

Cycle Number: 85000 **Date** 5/24/2003

Time	Pressure (psig)	Temp. (deg. F)	Sampling Rate (l/m)	PPMv Reading
6:58:12 AM	248.9	75.0	1.0	22.2
6:58:13 AM	248.9	76.0	1.0	21.6
6:58:14 AM	248.9	74.0	1.0	20.7
6:58:15 AM	248.9	75.0	1.0	20.8

Yarmouth Research and Technology

6:58:16 AM	248.8	75.0	1.0	20.3
6:58:17 AM	248.9	74.0	1.0	19.7
6:58:18 AM	248.8	75.0	1.0	19.6
6:58:19 AM	248.8	75.0	1.0	19.2
6:58:20 AM	248.8	75.0	1.0	18.8
6:58:21 AM	248.9	75.0	1.0	18.3
6:58:22 AM	248.9	75.0	1.0	17.5
6:58:23 AM	248.8	75.0	1.0	16.8
6:58:24 AM	248.8	75.0	1.0	16.9
6:58:25 AM	248.8	75.0	1.0	17.0
6:58:26 AM	248.7	75.0	1.0	16.3
6:58:27 AM	248.9	75.0	1.0	16.3
6:58:29 AM	248.7	75.0	1.0	16.0
6:58:30 AM	248.8	75.0	1.0	15.5
6:58:31 AM	248.9	75.0	1.0	15.1
6:58:32 AM	248.7	75.0	1.0	14.6
6:58:33 AM	248.9	75.0	1.0	14.2
6:58:34 AM	248.8	75.0	1.0	14.0
6:58:35 AM	248.7	75.0	1.0	14.4
6:58:36 AM	248.8	75.0	1.0	14.7
6:58:37 AM	248.8	74.0	1.0	15.0
6:58:38 AM	248.9	75.0	1.0	14.7
6:58:39 AM	248.7	74.0	1.0	14.8
6:58:40 AM	248.7	75.0	1.0	14.9
6:58:41 AM	248.8	75.0	1.0	15.4
6:58:42 AM	248.9	75.0	1.0	17.0
6:58:43 AM	248.8	75.0	1.0	18.9
6:58:44 AM	248.7	75.0	1.0	22.0
6:58:45 AM	248.8	75.0	1.0	25.7
6:58:46 AM	248.7	75.0	1.0	29.4
6:58:47 AM	248.8	74.0	1.0	33.9
6:58:48 AM	248.5	75.0	1.0	38.2
6:58:49 AM	248.9	74.0	1.0	42.4
6:58:50 AM	248.8	75.0	1.0	46.9
6:58:52 AM	248.7	75.0	1.0	51.7
6:58:53 AM	248.9	75.0	1.0	56.1
6:58:54 AM	248.7	75.0	1.0	61.2
6:58:55 AM	248.7	75.0	1.0	66.3
6:58:56 AM	248.7	75.0	1.0	72.2
6:58:57 AM	248.7	74.0	1.0	77.6
6:58:58 AM	248.6	74.0	1.0	81.9
6:58:59 AM	248.8	75.0	1.0	84.9
6:59:00 AM	248.7	75.0	1.0	87.5
6:59:01 AM	248.8	75.0	1.0	90.7
6:59:02 AM	248.7	74.0	1.0	91.6
6:59:03 AM	248.7	75.0	1.0	93.0
6:59:04 AM	248.7	75.0	1.0	94.2
6:59:05 AM	248.7	75.0	1.0	96.1
6:59:06 AM	248.6	75.0	1.0	98.3
6:59:07 AM	248.7	75.0	1.0	99.8
6:59:08 AM	248.7	75.0	1.0	101.2
6:59:09 AM	248.8	75.0	1.0	101.4
6:59:10 AM	248.9	74.0	1.0	101.7
6:59:11 AM	248.6	76.0	1.0	101.3
6:59:12 AM	248.7	75.0	1.0	101.8
6:59:13 AM	248.6	75.0	1.0	102.3
Averages ->	**248.8**	**74.9**	**1.0**	**44.7**
			Maximum ->	**102.3**

Valve Description: 2 inch Class 150 Fluoroseal Plug Valve

Cycle Number: 90000 **Date** 5/25/2003

Time	Pressure (psig)	Temp. (deg. F)	Sampling Rate (l/m)	PPMv Reading
7:36:53 AM	250.4	74.0	1.0	45.7
7:36:54 AM	250.3	74.0	1.0	44.7
7:36:55 AM	250.4	74.0	1.0	43.9
7:36:56 AM	250.4	73.0	1.0	43.0
7:36:57 AM	250.3	73.0	1.0	42.3

Yarmouth Research and Technology

7:36:58 AM	250.3	74.0	1.0	41.8
7:36:59 AM	250.3	74.0	1.0	40.9
7:37:00 AM	250.4	74.0	1.0	40.0
7:37:01 AM	250.4	74.0	1.0	39.0
7:37:02 AM	250.4	75.0	1.0	37.9
7:37:03 AM	250.4	74.0	1.0	37.2
7:37:04 AM	250.5	74.0	1.0	36.7
7:37:05 AM	250.4	74.0	1.0	36.0
7:37:06 AM	250.5	74.0	1.0	34.9
7:37:07 AM	250.5	74.0	1.0	31.2
7:37:08 AM	250.4	74.0	1.0	29.8
7:37:10 AM	250.5	74.0	1.0	29.2
7:37:11 AM	250.5	74.0	1.0	28.4
7:37:12 AM	250.5	73.0	1.0	27.3
7:37:13 AM	250.5	73.0	1.0	26.0
7:37:14 AM	250.5	74.0	1.0	24.7
7:37:15 AM	250.5	74.0	1.0	23.6
7:37:16 AM	250.3	74.0	1.0	22.6
7:37:17 AM	250.4	74.0	1.0	21.9
7:37:18 AM	250.5	74.0	1.0	21.1
7:37:19 AM	250.4	74.0	1.0	20.7
7:37:20 AM	250.5	74.0	1.0	20.1
7:37:21 AM	250.5	74.0	1.0	20.1
7:37:22 AM	250.4	73.0	1.0	21.0
7:37:23 AM	250.4	74.0	1.0	22.9
7:37:24 AM	250.3	74.0	1.0	25.1
7:37:25 AM	250.4	74.0	1.0	26.1
7:37:26 AM	250.5	74.0	1.0	26.3
7:37:27 AM	250.4	74.0	1.0	26.3
7:37:28 AM	250.5	74.0	1.0	26.6
7:37:29 AM	250.5	73.0	1.0	27.2
7:37:30 AM	250.4	74.0	1.0	27.6
7:37:31 AM	250.3	74.0	1.0	28.2
7:37:33 AM	250.3	74.0	1.0	29.1
7:37:34 AM	250.4	74.0	1.0	30.3
7:37:35 AM	250.4	74.0	1.0	31.6
7:37:36 AM	250.5	73.0	1.0	33.0
7:37:37 AM	250.5	74.0	1.0	35.5
7:37:38 AM	250.4	74.0	1.0	38.1
7:37:39 AM	250.3	74.0	1.0	40.1
7:37:40 AM	250.5	74.0	1.0	41.5
7:37:41 AM	250.3	74.0	1.0	42.5
7:37:42 AM	250.4	73.0	1.0	42.8
7:37:43 AM	250.5	74.0	1.0	42.7
7:37:44 AM	250.5	74.0	1.0	42.1
7:37:45 AM	250.5	74.0	1.0	41.6
7:37:46 AM	250.5	74.0	1.0	41.4
7:37:47 AM	250.4	74.0	1.0	41.4
7:37:48 AM	250.4	74.0	1.0	41.1
7:37:49 AM	250.3	74.0	1.0	40.6
7:37:50 AM	250.4	74.0	1.0	39.5
7:37:51 AM	250.3	74.0	1.0	38.3
7:37:52 AM	250.4	73.0	1.0	36.7
7:37:53 AM	250.4	74.0	1.0	34.4
7:37:54 AM	250.3	73.0	1.0	33.6
Averages ->	**250.4**	**73.9**	**1.0**	**33.4**
			Maximum ->	**45.7**

Valve Description: 2 inch Class 150 Fluoroseal Plug Valve

Cycle Number: 90000 **Date** 5/25/2003

Time	Pressure (psig)	Temp. (deg. F)	Sampling Rate (l/m)	PPMv Reading
7:38:16 AM	250.5	73.0	1.0	42.1
7:38:17 AM	250.6	74.0	1.0	42.3
7:38:18 AM	250.5	74.0	1.0	42.3
7:38:20 AM	250.5	74.0	1.0	42.3
7:38:21 AM	250.5	74.0	1.0	44.2
7:38:22 AM	250.5	73.0	1.0	46.5

Yarmouth Research and Technology

7:38:23 AM	250.3	74.0	1.0	46.9
7:38:24 AM	250.4	74.0	1.0	45.9
7:38:25 AM	250.6	74.0	1.0	42.9
7:38:26 AM	250.5	74.0	1.0	39.9
7:38:27 AM	250.4	74.0	1.0	37.6
7:38:28 AM	250.5	74.0	1.0	35.8
7:38:29 AM	250.6	74.0	1.0	34.4
7:38:30 AM	250.5	74.0	1.0	33.8
7:38:31 AM	250.7	74.0	1.0	32.9
7:38:32 AM	250.6	74.0	1.0	31.9
7:38:33 AM	250.5	74.0	1.0	31.2
7:38:34 AM	250.6	74.0	1.0	31.9
7:38:35 AM	250.5	74.0	1.0	33.5
7:38:36 AM	250.3	74.0	1.0	40.0
7:38:37 AM	250.3	73.0	1.0	45.1
7:38:38 AM	250.5	74.0	1.0	44.8
7:38:39 AM	250.4	73.0	1.0	39.7
7:38:40 AM	250.5	74.0	1.0	37.5
7:38:41 AM	250.4	74.0	1.0	35.6
7:38:42 AM	250.5	74.0	1.0	33.6
7:38:44 AM	250.5	74.0	1.0	33.2
7:38:45 AM	250.6	74.0	1.0	33.7
7:38:46 AM	250.6	74.0	1.0	34.2
7:38:47 AM	250.5	74.0	1.0	35.2
7:38:48 AM	250.5	74.0	1.0	36.9
7:38:49 AM	250.5	74.0	1.0	39.2
7:38:50 AM	250.4	74.0	1.0	44.4
7:38:51 AM	250.4	73.0	1.0	48.3
7:38:52 AM	250.4	73.0	1.0	48.3
7:38:53 AM	250.6	74.0	1.0	46.9
7:38:54 AM	250.5	74.0	1.0	45.0
7:38:55 AM	250.5	74.0	1.0	43.0
7:38:56 AM	250.4	74.0	1.0	40.6
7:38:57 AM	250.5	74.0	1.0	38.3
7:38:58 AM	250.3	74.0	1.0	37.9
7:38:59 AM	250.5	74.0	1.0	40.2
7:39:00 AM	250.6	73.0	1.0	42.9
7:39:01 AM	250.5	74.0	1.0	43.4
7:39:02 AM	250.4	74.0	1.0	42.9
7:39:03 AM	250.5	74.0	1.0	43.3
7:39:04 AM	250.3	74.0	1.0	49.3
7:39:06 AM	250.3	74.0	1.0	54.4
7:39:07 AM	250.3	74.0	1.0	54.7
7:39:08 AM	250.5	74.0	1.0	52.1
7:39:09 AM	250.4	74.0	1.0	50.6
7:39:10 AM	250.5	74.0	1.0	48.8
7:39:11 AM	250.4	74.0	1.0	47.1
7:39:12 AM	250.4	74.0	1.0	45.3
7:39:13 AM	250.5	74.0	1.0	46.0
7:39:14 AM	250.6	74.0	1.0	45.8
7:39:15 AM	250.6	74.0	1.0	44.1
7:39:16 AM	250.5	74.0	1.0	42.6
7:39:17 AM	250.4	73.0	1.0	42.8
7:39:18 AM	250.5	74.0	1.0	44.7
Averages ->	**250.5**	**73.9**	**1.0**	**41.7**
			Maximum ->	**54.7**

Valve Description: 2 inch Class 150 Fluoroseal Plug Valve

Cycle Number: 95000 **Date** 5/26/2003

Time	Pressure (psig)	Temp. (deg. F)	Sampling Rate (l/m)	PPMv Reading
7:31:55 AM	251.4	74.0	1.0	18.1
7:31:56 AM	251.4	74.0	1.0	18.0
7:31:57 AM	251.4	74.0	1.0	18.6
7:31:58 AM	251.5	74.0	1.0	18.4
7:31:59 AM	251.4	74.0	1.0	18.7
7:32:00 AM	251.5	74.0	1.0	18.5
7:32:01 AM	251.2	74.0	1.0	18.8

Yarmouth Research and Technology

7:32:02 AM	251.4	74.0	1.0	18.6
7:32:03 AM	251.4	74.0	1.0	18.8
7:32:04 AM	251.4	74.0	1.0	19.0
7:32:05 AM	251.4	73.0	1.0	18.8
7:32:06 AM	251.4	74.0	1.0	19.5
7:32:07 AM	251.5	74.0	1.0	21.5
7:32:08 AM	251.4	74.0	1.0	23.8
7:32:09 AM	251.4	73.0	1.0	25.7
7:32:10 AM	251.4	74.0	1.0	26.8
7:32:11 AM	251.3	74.0	1.0	27.3
7:32:12 AM	251.4	73.0	1.0	27.7
7:32:13 AM	251.4	74.0	1.0	27.4
7:32:15 AM	251.4	74.0	1.0	26.9
7:32:16 AM	251.4	74.0	1.0	26.0
7:32:17 AM	251.4	74.0	1.0	25.2
7:32:18 AM	251.5	74.0	1.0	24.6
7:32:19 AM	251.4	74.0	1.0	23.6
7:32:20 AM	251.4	74.0	1.0	23.3
7:32:21 AM	251.4	74.0	1.0	23.2
7:32:22 AM	251.4	74.0	1.0	23.3
7:32:23 AM	251.4	74.0	1.0	23.5
7:32:24 AM	251.6	74.0	1.0	23.2
7:32:25 AM	251.4	74.0	1.0	23.2
7:32:26 AM	251.4	74.0	1.0	22.9
7:32:27 AM	251.5	74.0	1.0	22.9
7:32:28 AM	251.4	74.0	1.0	22.8
7:32:29 AM	251.4	74.0	1.0	22.5
7:32:30 AM	251.4	74.0	1.0	22.2
7:32:31 AM	251.4	74.0	1.0	21.9
7:32:32 AM	251.4	74.0	1.0	21.4
7:32:33 AM	251.3	74.0	1.0	21.2
7:32:34 AM	251.4	74.0	1.0	21.0
7:32:35 AM	251.3	74.0	1.0	20.9
7:32:36 AM	251.4	74.0	1.0	20.8
7:32:37 AM	251.3	74.0	1.0	20.9
7:32:39 AM	251.2	74.0	1.0	20.8
7:32:40 AM	251.4	74.0	1.0	20.7
7:32:41 AM	251.3	74.0	1.0	20.3
7:32:42 AM	251.3	74.0	1.0	20.1
7:32:43 AM	251.4	74.0	1.0	19.9
7:32:44 AM	251.3	74.0	1.0	20.0
7:32:45 AM	251.4	74.0	1.0	19.8
7:32:46 AM	251.3	74.0	1.0	19.9
7:32:47 AM	251.3	74.0	1.0	19.8
7:32:48 AM	251.3	74.0	1.0	19.8
7:32:49 AM	251.3	74.0	1.0	19.6
7:32:50 AM	251.3	74.0	1.0	19.9
7:32:51 AM	251.4	74.0	1.0	19.6
7:32:52 AM	251.2	74.0	1.0	19.9
7:32:53 AM	251.2	74.0	1.0	19.5
7:32:54 AM	251.4	74.0	1.0	19.1
7:32:55 AM	251.3	74.0	1.0	19.2
7:32:56 AM	251.3	74.0	1.0	19.2
Averages ->	**251.4**	**74.0**	**1.0**	**21.5**
			Maximum ->	**27.7**

Valve Description: 2 inch Class 150 Fluoroseal Plug Valve

Cycle Number: 95000 **Date** 5/26/2003

Time	Pressure (psig)	Temp. (deg. F)	Sampling Rate (l/m)	PPMv Reading
7:33:10 AM	251.3	74.0	1.0	17.6
7:33:11 AM	251.3	74.0	1.0	17.6
7:33:12 AM	251.3	74.0	1.0	17.6
7:33:13 AM	251.4	74.0	1.0	17.7
7:33:14 AM	251.3	74.0	1.0	17.7
7:33:15 AM	251.5	74.0	1.0	17.7
7:33:16 AM	251.6	74.0	1.0	18.2
7:33:17 AM	251.4	74.0	1.0	18.9

Yarmouth Research and Technology

7:33:18 AM	251.5	74.0	1.0	19.4
7:33:19 AM	251.5	74.0	1.0	20.1
7:33:20 AM	251.4	74.0	1.0	22.4
7:33:21 AM	251.4	74.0	1.0	29.3
7:33:23 AM	251.3	74.0	1.0	35.8
7:33:24 AM	251.4	74.0	1.0	37.8
7:33:25 AM	251.5	74.0	1.0	37.3
7:33:26 AM	251.4	74.0	1.0	34.6
7:33:27 AM	251.3	74.0	1.0	33.5
7:33:28 AM	251.4	74.0	1.0	32.5
7:33:29 AM	251.5	74.0	1.0	31.0
7:33:30 AM	251.5	74.0	1.0	30.4
7:33:31 AM	251.5	74.0	1.0	31.3
7:33:32 AM	251.4	74.0	1.0	32.5
7:33:33 AM	251.5	74.0	1.0	34.2
7:33:34 AM	251.3	74.0	1.0	35.6
7:33:35 AM	251.4	74.0	1.0	40.1
7:33:36 AM	251.3	74.0	1.0	52.3
7:33:37 AM	251.3	74.0	1.0	61.3
7:33:38 AM	251.4	74.0	1.0	62.0
7:33:39 AM	251.3	74.0	1.0	59.7
7:33:40 AM	251.4	74.0	1.0	56.5
7:33:41 AM	251.3	75.0	1.0	53.9
7:33:42 AM	251.4	74.0	1.0	50.6
7:33:43 AM	251.3	74.0	1.0	47.6
7:33:44 AM	251.4	74.0	1.0	45.7
7:33:46 AM	251.4	74.0	1.0	46.2
7:33:47 AM	251.3	74.0	1.0	47.3
7:33:48 AM	251.4	74.0	1.0	48.1
7:33:49 AM	251.4	73.0	1.0	49.5
7:33:50 AM	251.3	74.0	1.0	64.1
7:33:51 AM	251.5	75.0	1.0	71.5
7:33:52 AM	251.3	74.0	1.0	71.5
7:33:53 AM	251.3	74.0	1.0	68.6
7:33:54 AM	251.3	74.0	1.0	65.6
7:33:55 AM	251.3	74.0	1.0	63.1
7:33:56 AM	251.3	74.0	1.0	61.2
7:33:57 AM	251.3	74.0	1.0	59.6
7:33:58 AM	251.4	74.0	1.0	55.9
7:33:59 AM	251.4	74.0	1.0	54.9
7:34:00 AM	251.4	74.0	1.0	56.5
7:34:01 AM	251.3	74.0	1.0	58.3
7:34:02 AM	251.6	74.0	1.0	59.4
7:34:03 AM	251.3	74.0	1.0	61.2
7:34:04 AM	251.3	74.0	1.0	66.2
7:34:05 AM	251.5	74.0	1.0	79.7
7:34:06 AM	251.3	74.0	1.0	87.2
7:34:07 AM	251.1	74.0	1.0	86.8
7:34:08 AM	251.3	74.0	1.0	83.2
7:34:10 AM	251.4	74.0	1.0	79.5
7:34:11 AM	251.3	74.0	1.0	76.2
7:34:12 AM	251.4	74.0	1.0	73.9
Averages ->	**251.4**	**74.0**	**1.0**	**47.8**
			Maximum ->	**87.2**

Valve Description: 2 inch Class 150 Fluoroseal Plug Valve

Cycle Number: 100000 **Date** 5/27/2003

Time	Pressure (psig)	Temp. (deg. F)	Sampling Rate (l/m)	PPMv Reading
10:02:49 AM	250.4	73.0	1.0	18.0
10:02:50 AM	250.5	74.0	1.0	17.9
10:02:51 AM	250.5	74.0	1.0	17.9
10:02:52 AM	250.5	73.0	1.0	17.7
10:02:53 AM	250.4	74.0	1.0	17.7
10:02:55 AM	250.5	74.0	1.0	17.7
10:02:56 AM	250.5	73.0	1.0	17.5
10:02:57 AM	250.6	74.0	1.0	17.2
10:02:58 AM	250.5	74.0	1.0	16.9

Yarmouth Research and Technology

10:02:59 AM	250.5	73.0	1.0	16.9
10:03:00 AM	250.5	74.0	1.0	16.9
10:03:01 AM	250.5	73.0	1.0	16.9
10:03:02 AM	250.5	73.0	1.0	16.7
10:03:03 AM	250.5	74.0	1.0	16.7
10:03:04 AM	250.5	74.0	1.0	16.8
10:03:05 AM	250.5	73.0	1.0	16.9
10:03:06 AM	250.6	73.0	1.0	16.9
10:03:07 AM	250.5	73.0	1.0	16.9
10:03:08 AM	250.6	73.0	1.0	16.8
10:03:09 AM	250.4	74.0	1.0	16.7
10:03:10 AM	250.5	74.0	1.0	16.7
10:03:11 AM	250.4	74.0	1.0	16.6
10:03:12 AM	250.5	74.0	1.0	16.5
10:03:13 AM	250.6	73.0	1.0	16.4
10:03:14 AM	250.5	73.0	1.0	16.3
10:03:15 AM	250.5	73.0	1.0	16.1
10:03:16 AM	250.5	74.0	1.0	15.9
10:03:17 AM	250.5	73.0	1.0	15.7
10:03:19 AM	250.5	73.0	1.0	15.5
10:03:20 AM	250.5	74.0	1.0	15.3
10:03:21 AM	250.5	73.0	1.0	15.2
10:03:22 AM	250.5	73.0	1.0	15.1
10:03:23 AM	250.6	73.0	1.0	14.8
10:03:24 AM	250.5	74.0	1.0	14.8
10:03:25 AM	250.5	73.0	1.0	14.7
10:03:26 AM	250.5	73.0	1.0	14.9
10:03:27 AM	250.5	73.0	1.0	15.1
10:03:28 AM	250.5	74.0	1.0	15.2
10:03:29 AM	250.4	73.0	1.0	15.3
10:03:30 AM	250.4	73.0	1.0	15.9
10:03:31 AM	250.5	73.0	1.0	16.5
10:03:32 AM	250.4	73.0	1.0	17.4
10:03:33 AM	250.4	73.0	1.0	18.3
10:03:34 AM	250.4	74.0	1.0	19.5
10:03:35 AM	250.5	73.0	1.0	20.1
10:03:36 AM	250.5	73.0	1.0	20.7
10:03:37 AM	250.5	73.0	1.0	21.0
10:03:38 AM	250.4	74.0	1.0	21.6
10:03:40 AM	250.5	73.0	1.0	21.7
10:03:41 AM	250.5	73.0	1.0	22.3
10:03:42 AM	250.5	73.0	1.0	22.8
10:03:43 AM	250.6	74.0	1.0	23.3
10:03:44 AM	250.6	74.0	1.0	23.5
10:03:45 AM	250.5	74.0	1.0	24.2
10:03:46 AM	250.5	73.0	1.0	24.2
10:03:47 AM	250.6	73.0	1.0	24.4
10:03:48 AM	250.5	74.0	1.0	24.3
10:03:49 AM	250.4	73.0	1.0	24.5
10:03:50 AM	250.5	73.0	1.0	24.3
10:03:51 AM	250.5	74.0	1.0	24.6
Averages ->	**250.5**	**73.4**	**1.0**	**18.2**
			Maximum ->	**24.6**

Valve Description: 2 inch Class 150 Fluoroseal Plug Valve

Cycle Number: 100000 **Date** 5/27/2003

Time	Pressure (psig)	Temp. (deg. F)	Sampling Rate (l/m)	PPMv Reading
10:04:02 AM	250.5	73.0	1.0	27.6
10:04:03 AM	250.5	74.0	1.0	28.3
10:04:05 AM	250.5	73.0	1.0	28.8
10:04:06 AM	250.5	74.0	1.0	29.3
10:04:07 AM	250.6	74.0	1.0	29.9
10:04:08 AM	250.5	74.0	1.0	30.5
10:04:09 AM	250.4	74.0	1.0	31.5
10:04:10 AM	250.5	74.0	1.0	32.3
10:04:11 AM	250.5	74.0	1.0	33.1
10:04:12 AM	250.5	73.0	1.0	33.9

10:04:13 AM	250.5	74.0	1.0	35.0
10:04:14 AM	250.5	73.0	1.0	35.9
10:04:15 AM	250.3	73.0	1.0	36.8
10:04:16 AM	250.5	74.0	1.0	38.1
10:04:17 AM	250.5	74.0	1.0	38.8
10:04:18 AM	250.5	74.0	1.0	38.9
10:04:19 AM	250.6	74.0	1.0	38.8
10:04:20 AM	250.6	74.0	1.0	38.8
10:04:21 AM	250.5	74.0	1.0	38.8
10:04:22 AM	250.5	74.0	1.0	38.7
10:04:23 AM	250.4	73.0	1.0	39.0
10:04:24 AM	250.5	73.0	1.0	39.3
10:04:26 AM	250.5	73.0	1.0	39.5
10:04:27 AM	250.5	74.0	1.0	39.3
10:04:28 AM	250.6	74.0	1.0	39.1
10:04:29 AM	250.5	73.0	1.0	38.6
10:04:30 AM	250.6	74.0	1.0	38.3
10:04:31 AM	250.4	73.0	1.0	38.7
10:04:32 AM	250.5	73.0	1.0	38.0
10:04:33 AM	250.5	73.0	1.0	36.9
10:04:34 AM	250.5	73.0	1.0	35.6
10:04:35 AM	250.5	73.0	1.0	34.4
10:04:36 AM	250.5	74.0	1.0	33.2
10:04:37 AM	250.5	74.0	1.0	32.3
10:04:38 AM	250.6	73.0	1.0	31.5
10:04:39 AM	250.5	73.0	1.0	30.6
10:04:40 AM	250.5	74.0	1.0	29.7
10:04:41 AM	250.4	74.0	1.0	29.5
10:04:42 AM	250.6	73.0	1.0	29.6
10:04:43 AM	250.7	73.0	1.0	29.8
10:04:44 AM	250.5	73.0	1.0	30.4
10:04:45 AM	250.5	74.0	1.0	30.9
10:04:46 AM	250.5	73.0	1.0	30.5
10:04:48 AM	250.5	74.0	1.0	29.2
10:04:49 AM	250.5	74.0	1.0	28.3
10:04:50 AM	250.4	74.0	1.0	27.4
10:04:51 AM	250.5	73.0	1.0	26.8
10:04:52 AM	250.4	74.0	1.0	26.1
10:04:53 AM	250.5	74.0	1.0	25.8
10:04:54 AM	250.5	74.0	1.0	25.9
10:04:55 AM	250.5	73.0	1.0	26.2
10:04:56 AM	250.5	74.0	1.0	26.3
10:04:57 AM	250.4	73.0	1.0	26.2
10:04:58 AM	250.5	73.0	1.0	26.2
10:04:59 AM	250.5	74.0	1.0	26.8
10:05:00 AM	250.6	73.0	1.0	28.1
10:05:01 AM	250.5	73.0	1.0	28.2
10:05:02 AM	250.5	74.0	1.0	27.7
10:05:03 AM	250.5	73.0	1.0	26.9
10:05:04 AM	250.5	74.0	1.0	26.5
Averages ->	**250.5**	**73.6**	**1.0**	**32.3**
			Maximum ->	**39.5**

Fugitive Emission Test Report

VDI 2440 Test Standard

Performed for

Fluoroseal Specialty Valves

www.fluorosealvalves.com

2" Class 600 Fluoroseal Plug Valve
EZ Seal Configuration
Model 602F
Ambient Temperature
Project Number: 209169

December 2009

Performed by

YARMOUTH RESEARCH AND TECHNOLOGY

434 Walnut Hill Road
N. Yarmouth, ME 04097 USA
(207) 829-5359
info@yarmouthresearch.com
www.yarmouthresearch.com

Yarmouth Research and Technology

VDI 2440 Fugitive Emission Test Summary Sheet

Customer:	**Fluoroseal Specialty Valves**	**Date:**	1-Dec-09
Project Number:	209169		
Product Description:	2 inch Class 600 Fluoroseal Plug Valve		
	Fig. 602F, EZ Seal, Model 602F		
	Body/Class WCB/600, Plug CF8M, Hi-Temp Sleeve		
	S/N 09/1120248		
Packing Description:	Delta Ring		
Stem Diameter (mm):	29.7	**Circumference:**	0.093 meter
Mean Bonnet Diameter (mm):	69.6	**Circumference:**	0.219 meter

Test Temperature:	Ambient	**Test Pressure (bar):**	99
Cycling Rate:	once per 15 seconds		
Leakage Device:	Pfeiffer HLT-560		
Pressure Gauge:	PG-2000-1	**Thermocouple Type:**	K

Maximum Allowable Leakage: 10-4 mbar-l/sec per mean seal circumference (m) for < 250C

Calculated Values: Stem Seal: 9.3E-06 mbar-l/sec
Bonnet Seal: 2.2E-05 mbar-l/sec

Test Results:

Bonnet Gasket Leakage:	Leakage Reading:	1.4E-05 mbar-l/sec
	Allowable:	2.2E-05 mbar-l/sec
	Was Leakage Below Allowable:	**Yes**
Stem Seal Leakage:		
	Leakage Reading at 0 Cycles:	6.7E-06 mbar-l/sec
	Leakage Reading at 10,000 Cycles:	2.8E-06 mbar-l/sec
	Allowable:	9.3E-06 mbar-l/sec
	Were Leakages Below Allowable:	**Yes**

Valve passes requirements of VDI2440 at ambient temperature for 10,000 mechanical cycles.

Witness

President, Yarmouth Research and Technology

STATE OF MAINE
MATTHEW J WASIELEWSKI
No. 7437
LICENSED PROFESSIONAL ENGINEER

TÜVRheinland®
Precisely Right.

CERTIFICATE

Certificate No.: 01 202 USA-TA-09-78552-4

Concerning the Agreement with the Technical Requirements in:

TA-Luft 2002, VDI 2440 Nov. 2000, Sec. 3.3.1.3

Test report: **209169-2EZ** **Datum:** **02 December, 2009**

Client : **Fluoroseal Specialty Valves**

Manufacturer's Address : **1875, 46e Avenue, Lachine**
Montreal, OC, H8T 2N8

The stem sealing system and internal flange connection have been successfully tested to meet the tightness criteria of ≤ 10^{-4} mbar x l/(s x m) with a helium mass spectrometer under the following conditions. The BFV Valve with the examined mechanical shaft seals fulfills the requirements of Section 5.2.6.4 of The German Clean Air Act, (TA-Luft), (Leakage Verification) in accordance with Section 3.3.1.3 of VDI 2440 (Rev. 2000).

Kind of Valve:	**Fluoroseal Plug Valve**	
Valve Type:	**2 inch, Class 600, EZ Seal, Figure 602F** **A216 – WCB / Plug CF8M**	
Sealing System:	**Hi-Temp Sleeve**	
Nominal Size, Nominal Pressure:	**2 inch, ANSI 600**	
Inspection Media/Pressure:	**Helium / 99 Bars**	**Temperature = Ambient**
Switching Cycles: (4/min):	**0 Cycles**	**Total Cycles 10,000**
Leakage Rate : [mbar · l / sec]	**6.7e-6 (mbar – l/sec)**	**2.8e-6 (mbar – l/sec)**
Testing Method:	**Helium Leak Test – VDI 2440, Appendix A**	

Testing Laboratory:

YARMOUTH RESEARCH AND TECHNOLOGY

Matthew J Wasielewski, PE

434 Walnut Hill Road, N. Yarmouth, ME USA

www.yarmouthresearch.com

TÜV Rheinland North America, Inc.
Industrial Services Division, Newtown, CT., USA

Kasuma J. Santos, Jr. – Examiner

TÜVRheinland® Inspection Body Rev 6

TA-zertdeut

BILL OF MATERIAL				
ITEM	QTY	DESCRIPTION		DRAWING#
1	1	BODY		3Y0-5-0XX
2	1	PLUG		421-5-0XX
3	1	SLEEVE		620-5-0XX
4	1	COVER		L501-5-0XX
5	1	COMBINED DIAPHRAGM/DELTARING		665-0-0XX
6	1	METAL DIAPHRAGM		680-0-3XX
7	1	EZ CAM		L641-0-0XX
8	1	EZ LOCK		900-5-0XX
9	1	EZ BRACKET		77Y-4-0XX
10	VAR.	COVER BOLT		PURCHASE
11	1	ADJUSTMENT SCREW		L871-0-0XX
12	4	BRACKET BOLT		PURCHASE
13	1	FLUOROSEAL WRENCH	●	L700-0-0XX
14	1	WRENCH BOLT	●	PURCHASE
15	1	GEAR ACTUATOR	✱	PURCHASE
16	4	GEAR BOLT	✱	PURCHASE

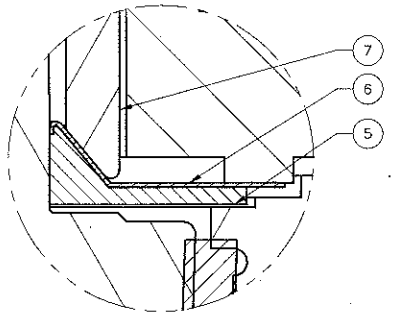

DETAIL A
N.T.S.

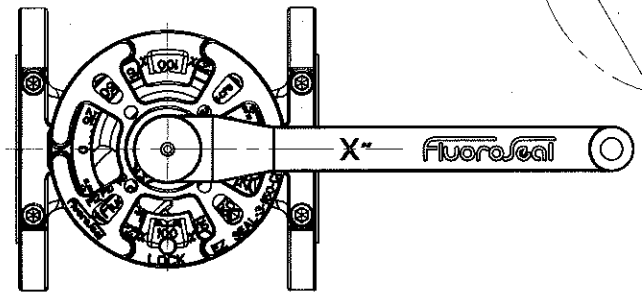

PLAN VIEW

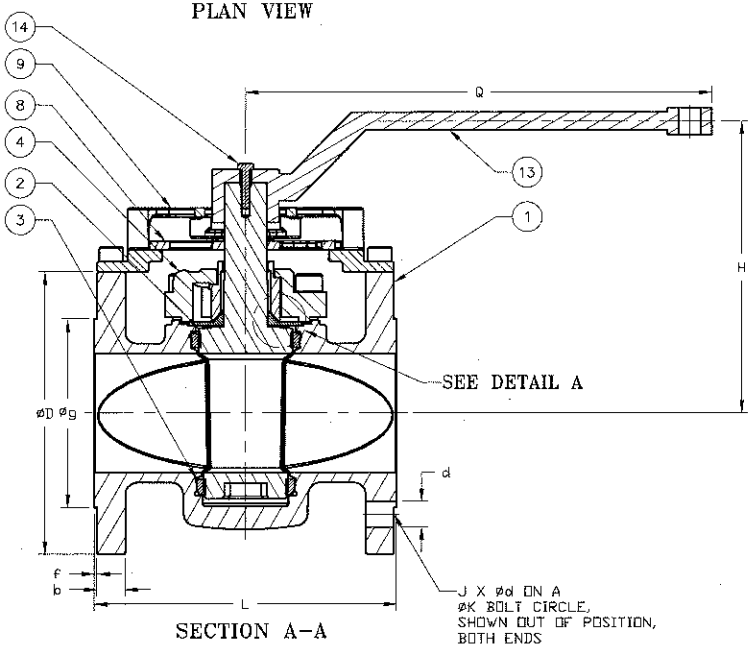

SECTION A-A

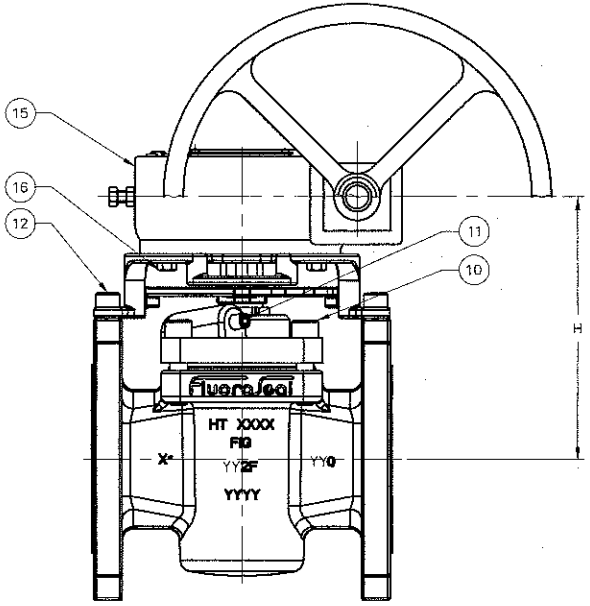

LEGEND:
✱ FOR USE WITH ACTUATOR ONLY.
● FOR USE WITH WRENCH ONLY

REV	DESCRIPTION	DATE	DFTR	APVD
0	SEE #NPD-0610	2008/08/14	K.D.	S.E.

REVISION

This drawing and the information herein contained is the property of FluoroSeal Specialty Valves and/or its subsidiaries and is supplied upon the express conditions that the same be returned to FluoroSeal Specialty Valves upon request; all information herein contained is to be treated as secret and confidential; no reproduction of this drawing or any part thereof shall be made without the written permission of FluoroSeal Specialty Valves; acceptance of this drawing shall be deemed acceptance of the foregoing conditions.

FluoroSeal SPECIALTY VALVES
1875, 46e Avenue Lachine
Montreal QC, H8T 2N8
TEL: (514)739-0220
FAX: (514)739-5452

TITLE:
FLUOROSEAL EZ PLUG VALVE
1/2" TO 6" 152F/302F/602F ASSEMBLY
STD. CONFIG.

SIZE	DWG NO.	REV
A	FPS-152-302-602-F-EZ-05-15	0

DRAWN BY: K.DEBCHI	DATE: 2008/08/14	SCALE: N.T.S
CHKD BY: S.ELFASHNY	DATE: 2008/08/14	SHEET: 1/2

THIRD ANGLE PROJECTION DO NOT SCALE DRAWING

THIS DRAWING AND INFORMATION HEREIN CONTAINED IS THE PROPERTY OF FLUOROSEAL SPECIALITY VALVES AND FOR ITS SUB-SIDIARIES AND IS SUPPLIED UPON THE EXPRESS CONDITIONS THAT THE SAME BE RETURNED TO FLUOROSEAL SPECIALITY VALVES UPON REQUEST; ALL INFORMATION HEREIN CONTAINED IS TO BE TREATED AS SECRET AND CONFIDENTIAL; NO REPRODUCTION OF THIS DRAWING OF ANY PART THEREOF SHALL BE MADE WITHOUT THE WRITTEN PERMISSION OF FLUOROSEAL SPECIALITY VALVES; ACCEPTANCE OF THE FOREGOING CONDITIONS.

INDEX	DESCRIPTION	MATERIAL		DWG NUMBER
1	2" BODY	AS REQUEST	1	
2	2" EZ PLUG MODIFIED	AS REQUEST	1	X-0779
3	2" SLEEVE	Hi-Temp	1	
4	2" COVER JOINT	PTFE	1	X-0777
5	METAL DIAPHRAGM	304	1	
6	PLASTIC DIAPHRAGM	PTFE	1	
7	2" EZ COVER MODIFIED	AS REQUEST	1	X-0778
8	2" TEST CYLINDER	AS REQUEST	1	X-0775
9	2" COVER	AS REQUEST	1	
10	2"-3" EZ CAM	CD4MCu	1	
11	3/8"-24 UNF X 1 3/4" SET SCREW	AS REQUEST	1	
12	7/16-14 UNC NUT	AS REQUEST	8	
13	SQ HEAD 5/16"-18 UNC X 3/4"	AS REQUEST	3	
14	STUD 7/16-14 UNC X 4.63"	AS REQUEST	4	
15	2"-3" TRUST WASHER	CF8	1	
16	2" PLASTIC DELTA RING	PTFE	1	X-0774
17	2" TOP COVER JOINT	PTFE	1	X-0776

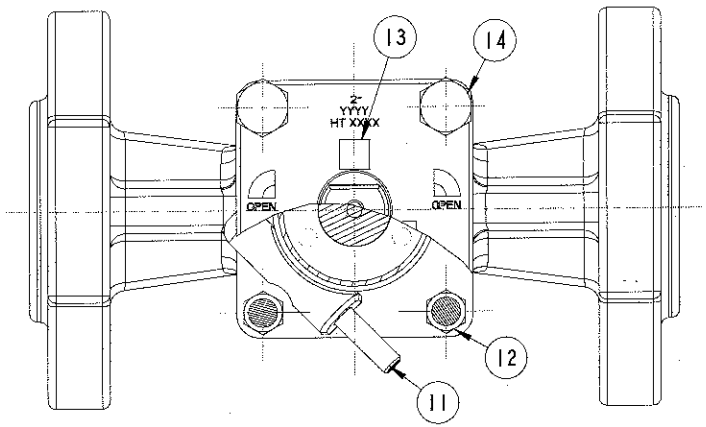

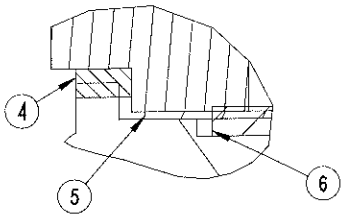

DETAIL A
SCALE 2:1

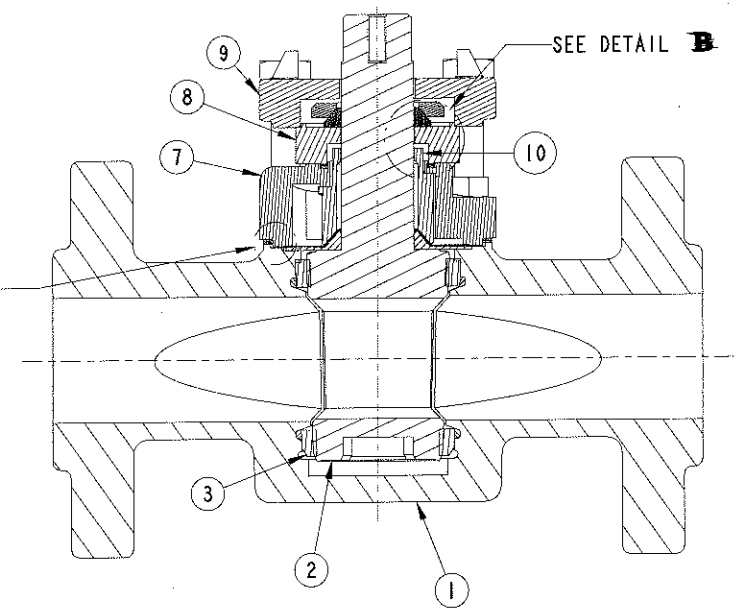

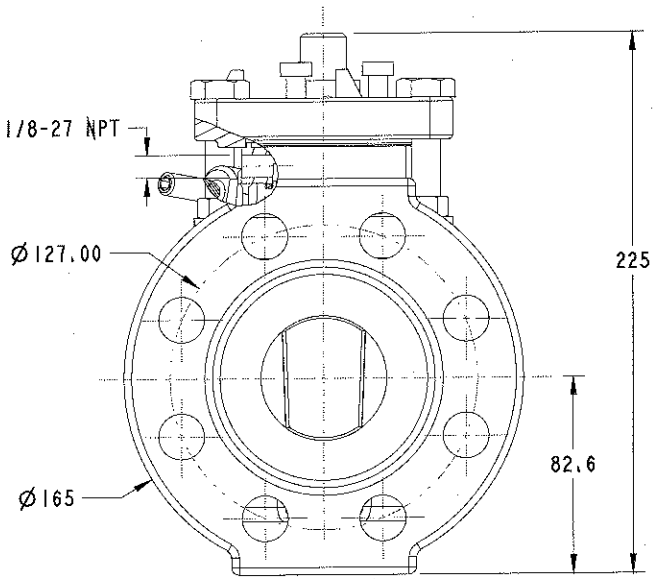

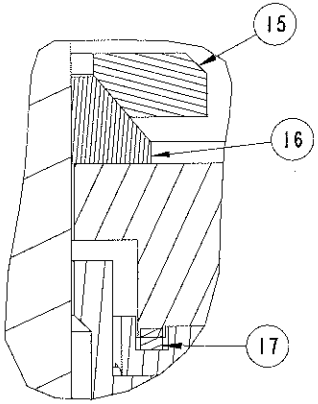

DETAIL B
SCALE 3:2

NOTE:
1.PARTS WITH DWG NUMBER ARE FOR TEST PURPOSE, OTHER PARTS AS STANDARD.

REV.	DESCRIPTION	DATE	DFTR	CHKD
0	SEE # NPD-0751	2009/09/24	Y.J.	S.E.

UNLESS OTHERWISE SPECIFIED DIMENSIONS ARE IN INCHES

REMOVE ALL BURRS AND SHARP EDGES

TOLERANCES: ANGLES: ±1/2° FINISH 125 ✓

DECIMALS:		METRIC EQUIVALENT	
.X	±0.020	.X	±.25
.XX	±0.010	.XX	± .13
.XXX	±0.005		

MATERIAL: AS TABLE

TITLE: FLUOROSEAL PLUG VALVE 2" FE VALVE FOR TEST MACHINING

PART SIZE: 2"

SIZE: A

DRAWING NUMBER: DRW0001

REV: 0

DRAWN BY: Y.JIANG DATE: 2009/09/24

SCALE: 1:3

CHEKED BY: S.ELFASHNY DATE: 2009/09/24

PG: 1/1

THIRD ANGLE PROJECTION DO NOT SCALE DRAWING

1875,46TH AVENUE, LACHINE, QC, H8T 2N8 TEL:(514)739-0220 FAX:(514)739-5452

Yarmouth Research and Technology

Yarmouth Research Addendum to VDI 2440 (2000)

Scope: This addendum provides additional information and recommendations for valve tests performed according to VDI 2440. This does not supersede the VDI specification. Recommendations for sliding stem on-off valves (gates/globes), quarter-turn valves (ball, butterfly, plug, etc) and control valves are covered by this addendum.

Test Parameters:

Test Fluid	99% minimum purity helium		
Test Pressure	Full rated pressure at test temperature		
Temperature:	Ambient, 200C or 400C (or as stated by mfgr)		
Number of Mechanical Cycles	**Valve Type**	**Minimum**	**Extended**
	Gate/Globes	100	500
	Quarter Turns	1000	5000
	Control	1000	25000
Allowable Leakage:	1 x 10-4 mbar-l/sec per meter of mean seal circumference for temperatures at or below 250C 1 x 10-2 mbar-l/sec per meter of mean seal circumference for temperatures greater than 250C		

Test Procedure:

1. Assemble valves with suitable flanges, fittings and gaskets for the test conditions.
2. Calculate maximum allowable leakage of seals and gaskets by multiplying the above maximum allowable leakage rate by the mean seal diameter(meters)
3. For tests at a temperature greater than ambient, heat insulated valve to required temperature. Tolerance on temperature shall be +/- 5 degree C. Ambient temperature shall be 15-27 degree C. Thermocouple shall be inserted into the valve body near the stem seals.
4. After temperature has stabilized, pressurize valve with helium to the rated pressure. Tolerance on pressure shall be +/- 5%
5. Check fittings, gaskets, etc for leakage and adjust as required.
6. Adjust packing gland nuts to manufacturer's recommended torque.
7. Hold pressure for a minimum of 24 hours prior to leakage readings.
8. Cycle valve to "Minimum" cycle number stated above.
9. Create a small chamber around the stem seal area using AL foil and foil tape. The enclosure shall have a small diameter tube inside the chamber at the uppermost position, so that the rising helium leakage is collected.
10. Calibrate mass spectrometer with known leak rate. Zero meter to atmospheric conditions.
11. Attach the mass spectrometer leakage probe to the stem seal chamber tube.
12. After a 5 minute duration or until the leakage as stabilized, record the leakage over a 1 minute duration. Record the highest leakage.
13. Cycle the valve 1 time and record leakage reading during and after the cycling is completed to record maximum leakage.
14. If leakage is below the allowable, the additional cycles may be performed on the valve to the "Extended" cycle number and steps 11-13 shall be repeated.

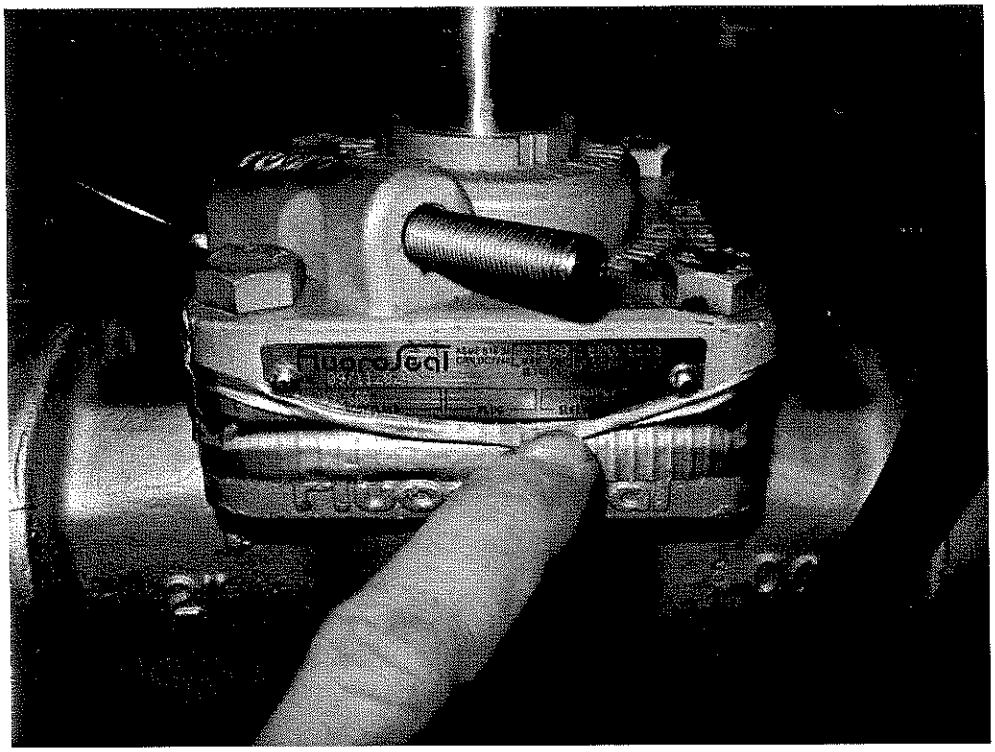

Tag Information

Actuator Information

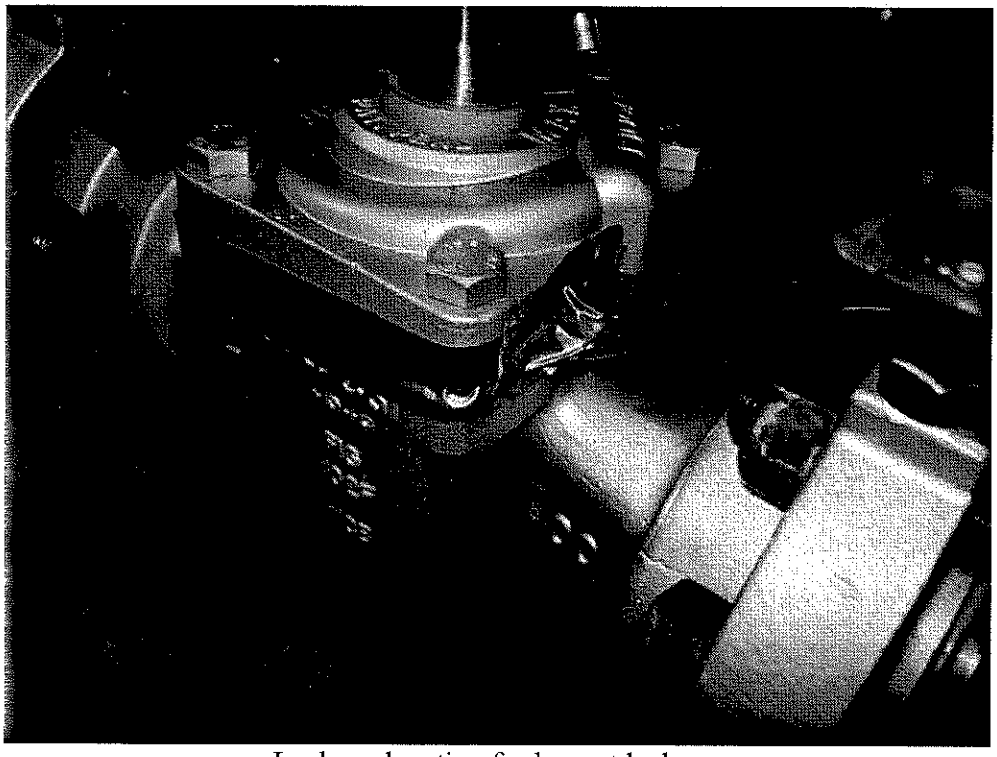

Leakage location for bonnet leakage

Stem leakage measured thru sealed enclosure

Yarmouth Research and Technology

Valve Description: 2 inch Cl600 Fluoroseal EZ Seal Valve **Date:** 12/1/2009

Cycle Number: 0

Time	Pressure (bar)	Bonnet (deg. C)	Body Temp (deg. C)	Body Temp (deg. C)	Leakage (mbar -l/sec)
9:05:06 AM	102	22	22	22	6.7E-06
9:05:07 AM	102	22	22	22	6.6E-06
9:05:08 AM	102	22	22	22	6.6E-06
9:05:09 AM	102	22	22	22	6.6E-06
9:05:10 AM	102	22	22	22	6.6E-06
9:05:11 AM	102	22	22	22	6.6E-06
9:05:12 AM	102	22	22	22	6.5E-06
9:05:13 AM	102	22	22	22	6.5E-06
9:05:14 AM	102	22	22	22	6.5E-06
9:05:15 AM	102	22	22	22	6.5E-06
9:05:16 AM	102	22	22	22	6.5E-06
9:05:17 AM	102	22	22	22	6.5E-06
9:05:18 AM	102	22	22	22	6.4E-06
9:05:19 AM	102	22	22	22	6.4E-06
9:05:20 AM	102	22	22	22	6.4E-06
9:05:21 AM	102	22	22	22	6.4E-06
9:05:22 AM	102	22	22	22	6.4E-06
9:05:23 AM	102	22	22	22	6.4E-06
9:05:24 AM	102	22	22	22	6.4E-06
9:05:25 AM	102	22	22	22	6.4E-06
9:05:26 AM	102	22	22	22	6.4E-06
9:05:27 AM	102	22	22	22	6.4E-06
9:05:28 AM	102	22	22	22	6.4E-06
9:05:29 AM	102	22	22	22	6.4E-06
9:05:30 AM	102	22	22	22	6.4E-06
9:05:31 AM	102	22	22	22	6.3E-06
9:05:32 AM	102	22	22	22	6.3E-06
9:05:33 AM	102	22	22	22	6.3E-06
9:05:34 AM	102	22	22	22	6.3E-06
9:05:35 AM	102	22	22	22	6.3E-06
9:05:36 AM	102	22	22	22	6.2E-06
9:05:37 AM	102	22	22	22	6.2E-06
9:05:38 AM	102	22	22	22	6.2E-06
9:05:39 AM	102	22	22	22	6.2E-06
9:05:40 AM	102	22	22	22	6.2E-06
9:05:41 AM	102	22	22	22	6.2E-06
9:05:42 AM	102	22	22	22	6.2E-06
9:05:43 AM	102	22	22	22	6.2E-06
9:05:44 AM	102	22	22	22	6.2E-06
9:05:45 AM	102	22	22	22	6.1E-06
9:05:46 AM	102	22	22	22	6.1E-06
9:05:47 AM	102	22	22	22	6.1E-06
9:05:48 AM	102	22	22	22	6.1E-06
9:05:49 AM	102	22	22	22	6.1E-06
9:05:50 AM	102	22	22	22	6.1E-06
9:05:51 AM	102	22	22	22	6.1E-06
9:05:52 AM	102	22	22	22	6.1E-06
9:05:53 AM	102	22	22	22	6.1E-06
9:05:54 AM	102	22	22	22	6.1E-06
9:05:55 AM	102	22	22	22	6.0E-06
9:05:56 AM	102	22	22	22	6.0E-06
9:05:57 AM	102	22	22	22	6.0E-06
9:05:58 AM	102	22	22	22	6.0E-06
9:05:59 AM	102	22	22	22	6.0E-06
9:06:00 AM	102	22	22	22	6.0E-06
9:06:01 AM	102	22	22	22	6.0E-06
9:06:02 AM	102	22	22	22	6.0E-06
9:06:03 AM	102	22	22	22	6.0E-06
9:06:04 AM	102	22	22	22	6.0E-06
9:06:05 AM	102	22	22	22	6.0E-06
Averages ->	**102**	**22**	**22**	**22**	**6.3E-06**
			Maximum ->		**6.7E-06**

Yarmouth Research and Technology

Valve Description: 2 inch Cl600 Fluoroseal EZ Seal Valve **Date:** 12/3/2009

Cycle Number: 10000

Time	Pressure (bar)	Bonnet (deg. C)	Body Temp (deg. C)	Body Temp (deg. C)	Leakage (mbar -l/sec)
8:21:11 AM	102	23	23	23	2.8E-06
8:21:12 AM	102	23	23	23	2.7E-06
8:21:13 AM	102	23	23	23	2.7E-06
8:21:14 AM	102	23	23	23	2.8E-06
8:21:15 AM	102	23	23	23	2.8E-06
8:21:16 AM	102	23	23	23	2.7E-06
8:21:17 AM	102	23	23	23	2.7E-06
8:21:18 AM	102	23	23	23	2.7E-06
8:21:19 AM	102	23	23	23	2.7E-06
8:21:20 AM	102	23	23	23	2.7E-06
8:21:21 AM	102	23	23	23	2.7E-06
8:21:22 AM	102	23	23	23	2.7E-06
8:21:23 AM	102	23	23	23	2.6E-06
8:21:24 AM	102	23	23	23	2.6E-06
8:21:25 AM	102	23	23	23	2.5E-06
8:21:26 AM	102	23	23	23	2.5E-06
8:21:27 AM	102	23	23	23	2.4E-06
8:21:28 AM	102	23	23	23	2.4E-06
8:21:29 AM	102	23	23	23	2.4E-06
8:21:30 AM	102	23	23	23	2.3E-06
8:21:31 AM	102	23	23	23	2.4E-06
8:21:32 AM	102	23	23	23	2.3E-06
8:21:33 AM	102	23	23	23	2.3E-06
8:21:34 AM	102	23	23	23	2.3E-06
8:21:35 AM	102	23	23	23	2.3E-06
8:21:36 AM	102	23	23	23	2.4E-06
8:21:37 AM	102	23	23	23	2.4E-06
8:21:38 AM	102	23	23	23	2.4E-06
8:21:39 AM	102	23	23	23	2.5E-06
8:21:40 AM	102	23	23	23	2.5E-06
8:21:41 AM	102	23	23	23	2.5E-06
8:21:42 AM	102	23	23	23	2.6E-06
8:21:43 AM	102	23	23	23	2.6E-06
8:21:44 AM	102	23	23	23	2.6E-06
8:21:45 AM	102	23	23	23	2.6E-06
8:21:46 AM	102	23	23	23	2.7E-06
8:21:47 AM	102	23	23	23	2.7E-06
8:21:48 AM	102	23	23	23	2.7E-06
8:21:49 AM	102	23	23	23	2.7E-06
8:21:50 AM	102	23	23	23	2.7E-06
8:21:51 AM	102	23	23	23	2.6E-06
8:21:52 AM	102	23	23	23	2.6E-06
8:21:53 AM	102	23	23	23	2.6E-06
8:21:54 AM	102	23	23	23	2.6E-06
8:21:55 AM	102	23	23	23	2.6E-06
8:21:56 AM	102	23	23	23	2.5E-06
8:21:57 AM	102	23	23	23	2.5E-06
8:21:58 AM	102	23	22	23	2.5E-06
8:21:59 AM	102	23	23	23	2.5E-06
8:22:00 AM	102	23	23	23	2.5E-06
8:22:01 AM	102	23	23	23	2.6E-06
8:22:02 AM	102	23	23	23	2.6E-06
8:22:03 AM	102	23	23	23	2.6E-06
8:22:04 AM	102	23	23	23	2.6E-06
8:22:05 AM	102	23	23	23	2.6E-06
8:22:06 AM	102	23	23	23	2.6E-06
8:22:07 AM	102	23	23	23	2.6E-06
8:22:08 AM	102	23	23	23	2.6E-06
8:22:09 AM	102	23	23	23	2.6E-06
8:22:10 AM	102	23	23	23	2.6E-06
Averages ->	**102**	**23**	**23**	**23**	**2.6E-06**
			Maximum ->		**2.8E-06**

Yarmouth Research and Technology

Valve Description: 2 inch Cl600 Fluoroseal EZ Seal Valve **Date:** 12/1/2009

Cycle Number: Start of Test - Bonnet Gasket Static Leakage

Time	Pressure (bar)	Bonnet (deg. C)	Body Temp (deg. C)	Body Temp (deg. C)	Leakage (mbar -l/sec)
8:40:53 AM	102	22	22	22	1.3E-05
8:40:54 AM	102	22	22	22	1.2E-05
8:40:55 AM	102	22	22	22	1.2E-05
8:40:56 AM	102	22	22	22	1.3E-05
8:40:57 AM	102	22	22	22	1.4E-05
8:40:58 AM	102	22	22	22	1.4E-05
8:40:59 AM	102	22	22	22	1.4E-05
8:41:00 AM	102	22	22	22	1.4E-05
8:41:01 AM	102	22	22	22	1.3E-05
8:41:02 AM	102	22	22	22	1.2E-05
8:41:03 AM	102	22	22	22	1.1E-05
8:41:04 AM	102	22	22	22	1.1E-05
8:41:05 AM	102	22	22	22	1.0E-05
8:41:06 AM	102	22	22	22	9.9E-06
8:41:07 AM	102	22	22	22	9.5E-06
8:41:08 AM	102	22	22	22	9.1E-06
8:41:09 AM	102	22	22	22	8.9E-06
8:41:10 AM	102	22	22	22	8.6E-06
8:41:11 AM	102	22	22	22	8.3E-06
8:41:12 AM	102	22	22	22	8.1E-06
8:41:13 AM	102	22	22	22	7.8E-06
8:41:14 AM	102	22	22	22	7.5E-06
8:41:15 AM	102	22	22	22	7.1E-06
8:41:16 AM	102	22	22	22	6.8E-06
8:41:17 AM	102	22	22	22	6.5E-06
8:41:18 AM	102	22	22	22	6.1E-06
8:41:19 AM	102	22	22	22	5.8E-06
8:41:20 AM	102	22	22	22	5.5E-06
8:41:21 AM	102	22	22	22	5.2E-06
8:41:22 AM	102	22	22	22	5.0E-06
8:41:23 AM	102	22	22	22	4.8E-06
8:41:24 AM	102	22	22	22	4.6E-06
8:41:25 AM	102	22	22	22	4.5E-06
8:41:26 AM	102	22	22	22	4.4E-06
8:41:27 AM	102	22	22	22	4.4E-06
8:41:28 AM	102	22	22	22	4.5E-06
8:41:29 AM	102	22	22	22	4.5E-06
8:41:30 AM	102	22	22	22	4.6E-06
8:41:31 AM	102	22	22	22	4.6E-06
8:41:32 AM	102	22	22	22	4.6E-06
8:41:33 AM	102	22	22	22	4.6E-06
8:41:34 AM	102	22	22	22	4.5E-06
8:41:35 AM	102	22	22	22	4.4E-06
8:41:36 AM	102	22	22	22	4.4E-06
8:41:37 AM	102	22	22	22	4.5E-06
8:41:38 AM	102	22	22	22	4.5E-06
8:41:39 AM	102	22	22	22	4.5E-06
8:41:40 AM	102	22	22	22	4.4E-06
8:41:41 AM	102	22	22	22	4.3E-06
8:41:42 AM	102	22	22	22	4.2E-06
8:41:43 AM	102	22	22	22	4.1E-06
8:41:44 AM	102	22	22	22	4.1E-06
8:41:45 AM	102	22	22	22	4.0E-06
8:41:46 AM	102	22	22	22	4.0E-06
8:41:47 AM	102	22	22	22	3.9E-06
8:41:48 AM	102	22	22	22	3.8E-06
8:41:49 AM	102	22	22	22	3.6E-06
8:41:50 AM	102	22	22	22	3.4E-06
8:41:51 AM	102	22	22	22	3.2E-06
8:41:52 AM	102	22	22	22	3.0E-06
Averages ->	**102**	**22**	**22**	**22**	**6.9E-06**
			Maximum ->		**1.4E-05**

Fugitive Emission Test Report

VDI 2440 Test Standard

Performed for

Fluoroseal Specialty Valves

www.fluorosealvalves.com

2" Class 600 Fluoroseal Plug Valve
Fugitive Emission Configuration

Ambient Temperature
Project Number: 209169

October 2009

Performed by

YARMOUTH RESEARCH AND TECHNOLOGY

434 Walnut Hill Road
N. Yarmouth, ME 04097 USA
(207) 829-5359
info@yarmouthresearch.com
www.yarmouthresearch.com

Yarmouth Research and Technology

VDI 2440 Fugitive Emission Test Summary Sheet

Customer:	**Fluoroseal Specialty Valves**	**Date:**	7-Oct-09
Project Number:	209169		
Product Description:	2 inch Class 600 Fluoroseal Plug Valve		
	Severe Service Assembly, S/N 09/091808S		
	Body/Class WCB/600-FE, Plug CF8M		
Packing Description:	Hi-Temp sleeve		
Stem Diameter (mm):	28.6	**Circumference:**	0.090 meter
Mean Bonnet Diameter (mm):	71.6	**Circumference:**	0.225 meter

Test Temperature:	Ambient	**Test Pressure (bar):**	99
Cycling Rate:	once per 15 seconds		
Leakage Device:	Pfeiffer HLT-560		
Pressure Gauge:	PG-2000-1	**Thermocouple Type:**	K

Maximum Allowable Leakage: 10-4 mbar-l/sec per mean seal circumference (m) for < 250C

Calculated Values: Stem Seal: 9.0E-06 mbar-l/sec
Bonnet Seal: 2.2E-05 mbar-l/sec

Test Results:

Bonnet Gasket Leakage:	Leakage Reading:	1.3E-06 mbar-l/sec
	Allowable:	2.2E-05 mbar-l/sec
	Was Leakage Below Allowable:	**Yes**
Stem Seal Leakage:		
	Leakage Reading at 0 Cycles:	2.2E-07 mbar-l/sec
	Leakage Reading at 25,000 Cycles:	1.4E-06 mbar-l/sec
	Allowable:	9.0E-06 mbar-l/sec
	Were Leakages Below Allowable:	**Yes**

Valves passes requirements of VDI2440 at ambient temperature for 25,000 mechanical cycles.

Witness

President, Yarmouth Research and Technology

STATE OF MAINE
MATTHEW J WASIELEWSKI
No. 7437
LICENSED
PROFESSIONAL ENGINEER

This drawing and the information herein contained is the property of FluoroSeal Specialty Valves and/or its subsidiaries and is supplied upon the express conditions that the same be returned to FluoroSeal Specialty Valves upon request; all information herein contained is to be treated as secret and confidential; no reproduction of this drawing or any part thereof shall be made without the written permission of FluoroSeal Specialty Valves; acceptance of this drawing shall be deemed acceptance of the foregoing conditions.

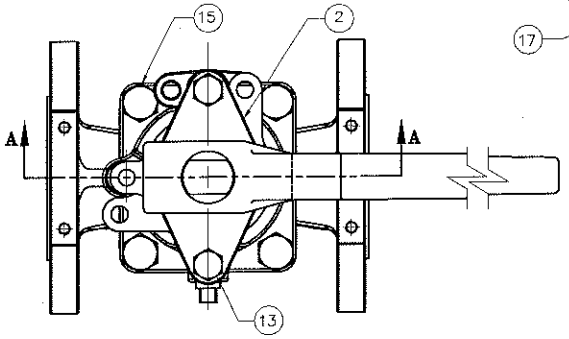

PLAN VIEW

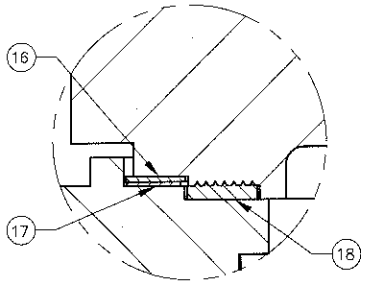

DETAIL A
N.T.S.

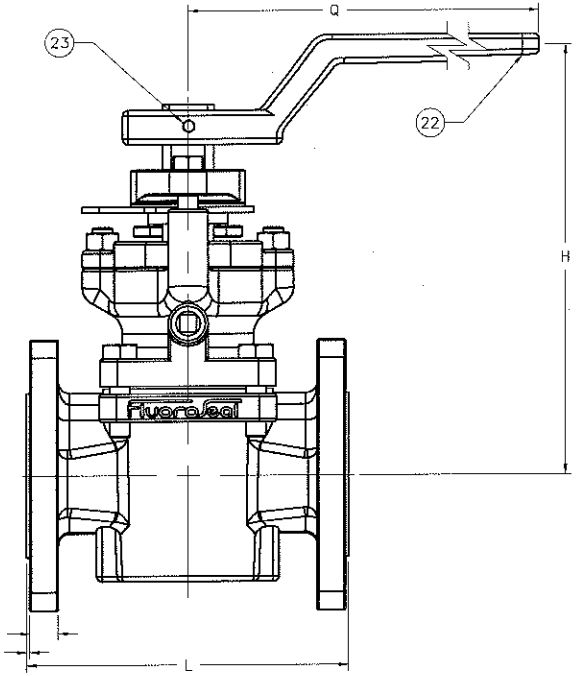

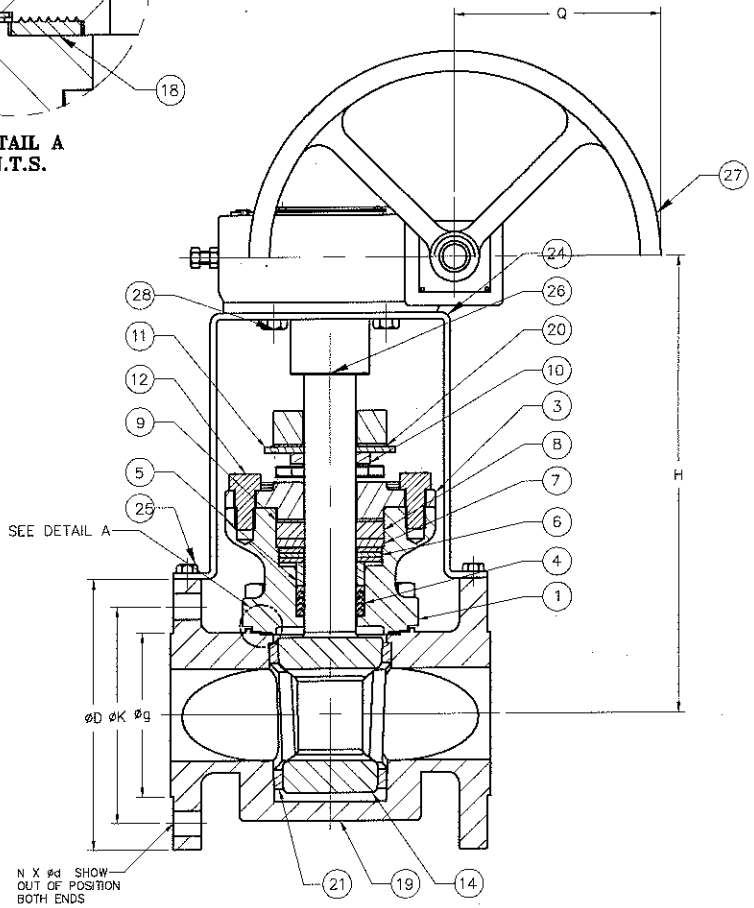

SECTION A–A

REV	DESCRIPTION	DATE	DFTR	APVD
0	SEE #NPD–0610	2008/08/08	K.D.	S.E.

REVISION

This drawing and the information herein contained is the property of FluoroSeal Specialty Valves and/or its subsidiaries and is supplied upon the express conditions that the same be returned to FluoroSeal Specialty Valves upon request; all information herein contained is to be treated as secret and confidential; no reproduction of this drawing or any part thereof shall be made without the written permission of FluoroSeal Specialty Valves; acceptance of this drawing shall be deemed acceptance of the foregoing conditions.

FluoroSeal SPECIALTY VALVES
1875, 46e Avenue Lachine
Montreal QC, H8T 2N8
TEL: (514)739–0220
FAX: (514)739–5452

TITLE:
FLUOROSEAL PLUG VALVE
1/2" TO 14" 152/302/602
SEVERE SERVICE ASSEMBLY

SIZE	DWG NO.	REV
A	ASS–152–302–602–F–SS–05–19	0

DRAWN BY: K.DEBCHI	DATE: 2008/08/08	SCALE: N.T.S
CHKD BY: S.ELFASHNY	DATE: 2008/08/08	SHEET: 1/2

THIRD ANGLE PROJECTION DO NOT SCALE DRAWING

This drawing and the information herein contained is the property of FluoroSeal Specialty Valves and/or its subsidiaries and is supplied upon the express conditions that the same be returned to FluoroSeal Specialty Valves upon request; all information herein contained is to be treated as secret and confidential; no reproduction of this drawing or any part thereof shall be made without the written permission of FluoroSeal Specialty Valves; acceptance of this drawing shall be deemed acceptance of the foregoing conditions.

	NOMINAL		SEVERE SERVICE DATA SHEET									
	SIZE (XX)	CLASS (Y)	L	H	D	K	g	b	f	d	N	Q
LEVER	1/2"	150	4.25	7.8	3.50	2.38	1.38	0.31	0.06	0.63	4	9.0
	3/4"	150	4.62	7.8	3.88	2.75	1.68	0.34	0.06	0.63	4	9.0
	1"	150	5.00	8.3	4.25	3.13	2.00	0.38	0.06	0.63	4	9.0
	1-1/2"	150	6.50	8.8	5.00	3.88	2.88	0.50	0.06	0.63	4	14.3
	2"	150	7.00	9.9	6.00	4.75	3.63	0.56	0.06	0.75	4	16.5
	2-1/2"	150	8.00	10.5	7.50	5.50	4.13	0.69	0.06	0.75	4	16.5
	3"	150	8.00	10.5	7.50	6.00	5.00	0.69	0.06	0.75	4	16.5
	4"	150	9.00	12.4	9.00	7.50	6.19	0.88	0.06	0.75	8	23.6
EG	4"	150	9.00	13.7	9.00	7.50	6.19	0.88	0.06	0.75	8	7.3
	6"	150	10.50	19.5	11.00	9.50	8.50	0.94	0.06	0.88	8	7.3
	8"	150	11.50	23.4	13.50	11.75	10.63	1.06	0.06	0.88	8	9.8
	10"	150	13.00	24.4	16.00	14.25	12.75	1.12	0.06	1.00	12	9.8
	12"	150	14.00	26.5	19.00	17.00	15.00	1.19	0.06	1.00	12	13.8
	14"	150	15.00	27.5	21.00	18.75	16.25	1.31	0.06	1.12	12	13.8
LEVER	1/2"	300	5.50	7.8	3.75	2.63	1.38	0.50	0.06	0.63	4	9.0
	3/4"	300	6.00	7.8	4.63	3.25	1.68	0.56	0.06	0.75	4	9.0
	1"	300	6.50	8.3	4.88	3.50	2.00	0.62	0.06	0.75	4	9.0
	1-1/2"	300	7.50	8.8	6.13	4.50	2.88	0.75	0.06	0.88	4	14.3
	2"	300	8.50	9.9	6.50	5.00	3.63	0.81	0.06	0.75	8	16.5
	2-1/2"	300	11.13	10.5	8.25	5.88	4.13	1.06	0.06	0.88	8	16.5
	3"	300	11.13	10.5	8.25	6.63	5.00	1.06	0.06	0.88	8	16.5
	4"	300	12.00	12.4	10.00	7.88	6.19	1.19	0.06	0.88	8	23.6
EG	4"	300	12.00	13.7	10.00	7.88	6.19	1.19	0.06	0.88	8	7.3
	6"	300	15.88	19.5	12.50	10.63	8.50	1.38	0.06	0.88	12	7.3
	8"	300	16.50	23.4	15.00	13.00	10.63	1.56	0.06	1.00	12	9.8
	10"	300	18.00	24.4	17.50	15.25	12.75	1.81	0.06	1.13	16	9.8
	12"	300	19.75	26.5	20.50	17.75	15.00	1.94	0.06	1.25	16	13.8
	14"	300	30.00	27.5	23.00	20.25	16.25	2.06	0.06	1.25	20	13.8
LEVER	1/2"	600	6.50	7.8	3.75	2.63	1.38	0.56	0.25	0.63	4	9.0
	3/4"	600	7.50	7.8	4.63	3.25	1.68	0.62	0.25	0.75	4	9.0
	1"	600	8.50	8.3	4.88	3.50	2.00	0.69	0.25	0.75	4	9.0
	1-1/2"	600	9.50	8.8	6.13	4.50	2.88	0.88	0.25	0.88	4	14.3
	2"	600	11.50	9.9	6.50	5.00	3.63	1.00	0.25	0.75	8	16.5
	2-1/2"	600	14.00	10.5	8.25	5.88	4.12	1.25	0.25	0.88	8	16.5
	3"	600	14.00	10.5	8.25	6.63	5.00	1.25	0.25	0.88	8	16.5
	4"	600	17.00	12.4	10.75	8.50	6.19	1.50	0.25	1.00	8	23.6
EG	4"	600	17.00	13.7	10.75	8.50	6.19	1.50	0.25	1.00	8	7.3
	6"	600	22.00	19.5	14.00	11.50	8.50	1.88	0.25	1.12	12	7.3
	8"	600	26.00	23.4	16.50	13.75	10.63	2.19	0.25	1.25	12	9.8
	10"	600	31.00	24.4	20.00	17.00	12.75	2.50	0.25	1.38	16	9.8
	12"	600	33.00	26.5	22.00	19.25	15.00	2.62	0.25	1.38	20	13.8
	14"	600	35.00	27.5	23.75	20.75	16.25	2.75	0.25	1.50	20	13.8

NOTE:
1–(EG) ENCLOSED GEAR
2–ALL DIMENSIONS ARE IN INCHES

BILL OF MATERIAL

ITEM	QTY	DESCRIPTION	DWG#
1	1	BONNET	S500–5–0XX
2	1	PLUG ADJUSTER	S640–0–0XX
3	1	PACKING GLAND	S510–0–0XX
4	1	PACKING SET	S66(0,1,2)–0–0XX
5	1	FOLLOWER	S650–0–0XX
6	VAR.	BELLEVILLE WASHER	PURCHASE
7	1	SEALWASHER	S655–0–0XX
8	1	TOP PACKING	S665–X–0XX
9	1	SEAL RETAINER	S680–0–0XX
10	1	SHAFT ADAPTER	S630–0–0XX
11	1	TRAVEL STOP/LOCK COMBINATION	S690–0–0XX
12	2	PACKING BOLT	PURCHASE
13	2	PLUG ADJUSTER BOLT	PURCHASE
14	1	PLUG	S420–5–0XX
15	VAR	BONNET BOLT	PURCHASE
16	1	BODYSEAL RETAINER	S672–0–0XX
17	1	BODYSEAL	S670–0–0XX
18	1	BODYSEAL	675–0–1XX
19	1	BODY	3Y0–5–0XX
20	1	THRUST WASHER	S685–0–0XX
21	1	SLEEVE	620–5–0XX
22	1	WRENCH ●	700–5–0XX
23	1	WRENCH BOLT ●	PURCHASE
24	1	MOUNTING BRACKET *	S77Y–1–0XX
25	4	MOUNTING BRACKET BOLT *	PURCHASE
26	1	COUPLING *	S760–6–0XX
27	1	GEAR OPERATOR *	PURCHASE
28	VAR	ACTUATOR BOLT *	PURCHASE

LEGEND:
* FOR USE WITH ACTUATOR ONLY.
● FOR USE WITH WRENCH ONLY

REV	DESCRIPTION	DATE	DFTR	APVD
0	SEE #NPD–0610	2008/08/08	K.D.	S.E.

REVISION

This drawing and the information herein contained is the property of FluoroSeal Specialty Valves and/or its subsidiaries and is supplied upon the express conditions that the same be returned to FluoroSeal Specialty Valves upon request; all information herein contained is to be treated as secret and confidential; no reproduction of this drawing or any part thereof shall be made without the written permission of FluoroSeal Specialty Valves; acceptance of this drawing shall be deemed acceptance of the foregoing conditions.

FluoroSeal SPECIALITY VALVES
1875, 46e Avenue Lachine
Montreal QC, H8T 2N8
TEL: (514)739–0220
FAX: (514)739–5452

TITLE:
FLUOROSEAL PLUG VALVE
1/2" TO 14" 152/302/602
SEVERE SERVICE ASSEMBLY

SIZE	DWG NO.	REV
A	ASS–152–302–602–F–SS–05–19	0

DRAWN BY: K.DEBCHI	DATE: 2008/08/08	SCALE: N.T.S
CHKD BY: S.ELFASHNY	DATE: 2008/08/08	SHEET: 2/2

THIRD ANGLE PROJECTION DO NOT SCALE DRAWING

Yarmouth Research and Technology

Yarmouth Research Addendum to VDI 2440 (2000)

Scope: This addendum provides additional information and recommendations for valve tests performed according to VDI 2440. This does not supersede the VDI specification. Recommendations for sliding stem on-off valves (gates/globes), quarter-turn valves (ball, butterfly, plug, etc) and control valves are covered by this addendum.

Test Parameters:

Test Fluid	99% minimum purity helium		
Test Pressure	Full rated pressure at test temperature		
Temperature:	Ambient, 200C or 400C (or as stated by mfgr)		
Number of Mechanical Cycles	**Valve Type**	**Minimum**	**Extended**
	Gate/Globes	100	500
	Quarter Turns	1000	5000
	Control	1000	25000
Allowable Leakage:	1 x 10-4 mbar-l/sec per meter of mean seal circumference for temperatures at or below 250C 1 x 10-2 mbar-l/sec per meter of mean seal circumference for temperatures greater than 250C		

Test Procedure:

1. Assemble valves with suitable flanges, fittings and gaskets for the test conditions.
2. Calculate maximum allowable leakage of seals and gaskets by multiplying the above maximum allowable leakage rate by the mean seal diameter(meters)
3. For tests at a temperature greater than ambient, heat insulated valve to required temperature. Tolerance on temperature shall be +/- 5 degree C. Ambient temperature shall be 15-27 degree C. Thermocouple shall be inserted into the valve body near the stem seals.
4. After temperature has stabilized, pressurize valve with helium to the rated pressure. Tolerance on pressure shall be +/- 5%
5. Check fittings, gaskets, etc for leakage and adjust as required.
6. Adjust packing gland nuts to manufacturer's recommended torque.
7. Hold pressure for a minimum of 24 hours prior to leakage readings.
8. Cycle valve to "Minimum" cycle number stated above.
9. Create a small chamber around the stem seal area using AL foil and foil tape. The enclosure shall have a small diameter tube inside the chamber at the uppermost position, so that the rising helium leakage is collected.
10. Calibrate mass spectrometer with known leak rate. Zero meter to atmospheric conditions.
11. Attach the mass spectrometer leakage probe to the stem seal chamber tube.
12. After a 5 minute duration or until the leakage as stabilized, record the leakage over a 1 minute duration. Record the highest leakage.
13. Cycle the valve 1 time and record leakage reading during and after the cycling is completed to record maximum leakage.
14. If leakage is below the allowable, the additional cycles may be performed on the valve to the "Extended" cycle number and steps 11-13 shall be repeated.

Yarmouth Research and Technology

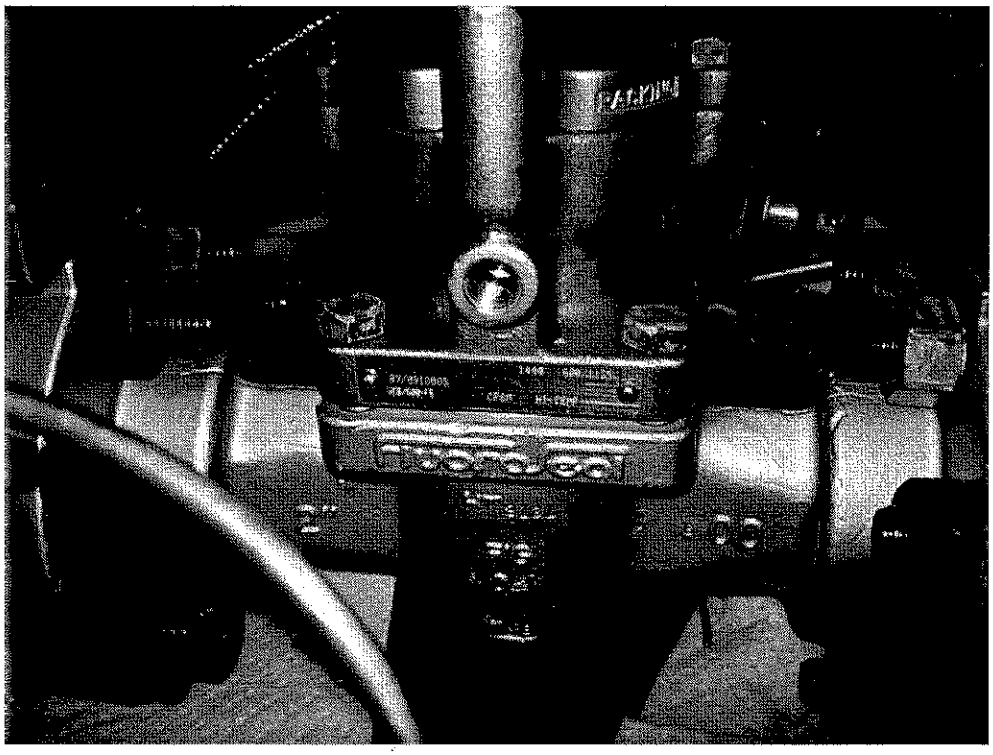

Tag Information

Yarmouth Research and Technology

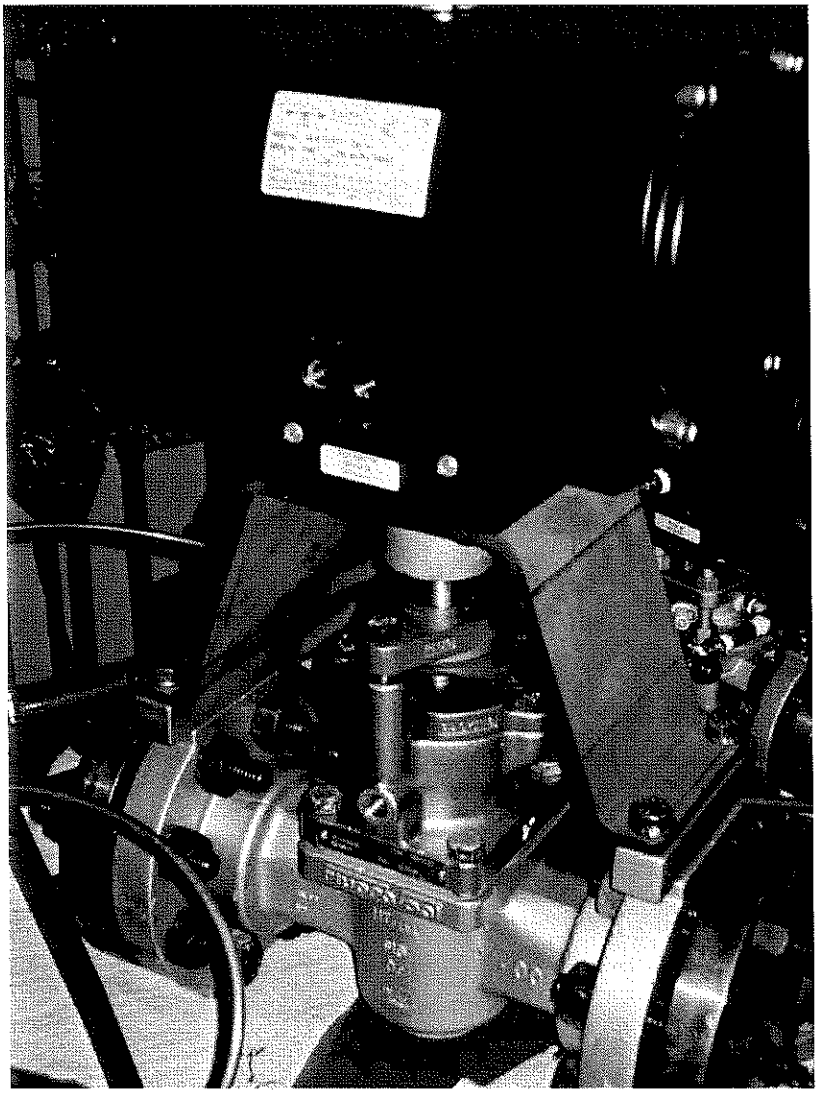

92 East Elm Street, Yarmouth, Maine 04096 USA
www.yarmouthresearch.com

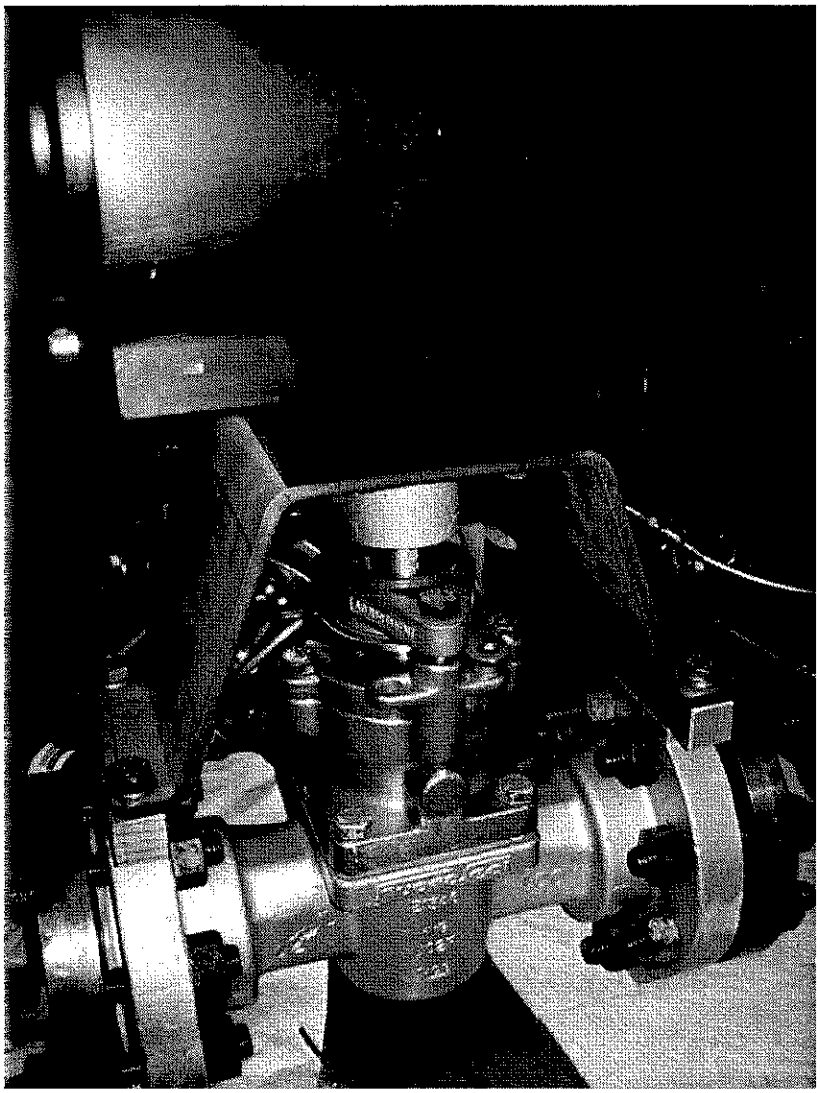

Valve Setup on Test Stand

Yarmouth Research and Technology

Valve Description: 2 inch Cl600 Fluoroseal FE Valve **Date:** 10/7/2009

Cycle Number: 0

Time	Pressure (bar)	Bonnet (deg. C)	Body Temp (deg. C)	Body Temp (deg. C)	Leakage (mbar -l/sec)
10:20:03 AM	99	19	18	19	2.2E-07
10:20:04 AM	99	18	18	18	2.1E-07
10:20:05 AM	99	18	18	19	2.2E-07
10:20:06 AM	99	18	18	18	2.1E-07
10:20:07 AM	99	18	18	18	2.2E-07
10:20:08 AM	99	18	18	19	2.2E-07
10:20:09 AM	99	18	18	19	2.2E-07
10:20:10 AM	99	18	18	19	2.2E-07
10:20:11 AM	99	18	18	18	2.1E-07
10:20:12 AM	99	19	18	19	2.2E-07
10:20:13 AM	99	18	18	19	2.2E-07
10:20:14 AM	99	18	18	19	2.2E-07
10:20:15 AM	99	18	18	19	2.2E-07
10:20:16 AM	99	18	18	18	2.1E-07
10:20:17 AM	99	19	18	19	2.1E-07
10:20:18 AM	99	18	18	19	2.2E-07
10:20:19 AM	99	18	18	19	2.1E-07
10:20:20 AM	99	18	18	19	2.1E-07
10:20:21 AM	99	19	18	19	2.2E-07
10:20:22 AM	99	18	18	19	2.1E-07
10:20:23 AM	99	18	18	18	2.1E-07
10:20:24 AM	99	18	18	19	2.2E-07
10:20:25 AM	99	19	18	18	2.2E-07
10:20:26 AM	99	18	18	18	2.2E-07
10:20:27 AM	99	18	18	19	2.2E-07
10:20:28 AM	99	18	18	18	2.2E-07
10:20:29 AM	99	18	18	19	2.2E-07
10:20:30 AM	99	18	18	18	2.2E-07
10:20:31 AM	99	19	18	19	2.1E-07
10:20:32 AM	99	18	18	19	2.1E-07
10:20:33 AM	99	18	18	19	2.2E-07
10:20:34 AM	99	18	18	19	2.2E-07
10:20:35 AM	99	18	18	19	2.2E-07
10:20:36 AM	99	19	18	19	2.2E-07
10:20:37 AM	99	19	18	19	2.1E-07
10:20:38 AM	99	19	18	19	2.1E-07
10:20:39 AM	99	18	18	19	2.1E-07
10:20:40 AM	99	18	18	19	2.2E-07
10:20:41 AM	99	18	18	19	2.2E-07
10:20:42 AM	99	18	18	19	2.1E-07
10:20:43 AM	99	19	18	19	2.2E-07
10:20:44 AM	99	18	18	18	2.1E-07
10:20:45 AM	99	18	18	19	2.1E-07
10:20:46 AM	99	19	18	18	2.1E-07
10:20:47 AM	99	19	18	19	2.2E-07
10:20:48 AM	99	19	18	18	2.2E-07
10:20:49 AM	99	18	18	19	2.1E-07
10:20:50 AM	99	18	18	19	2.2E-07
10:20:51 AM	99	19	18	19	2.2E-07
10:20:52 AM	99	19	18	19	2.1E-07
10:20:53 AM	99	18	18	19	2.2E-07
10:20:54 AM	99	18	18	18	2.2E-07
10:20:55 AM	99	18	18	19	2.1E-07
10:20:56 AM	99	18	18	19	2.2E-07
10:20:57 AM	99	18	18	19	2.2E-07
10:20:58 AM	99	18	18	19	2.2E-07
10:20:59 AM	99	18	18	19	2.2E-07
10:21:00 AM	99	19	18	19	2.2E-07
10:21:01 AM	99	18	18	19	2.2E-07
10:21:02 AM	99	18	18	19	2.2E-07
Averages ->	**99**	**18**	**18**	**19**	**2.2E-07**
			Maximum ->		**2.2E-07**

Yarmouth Research and Technology

Valve Description: 2 inch Cl600 Fluoroseal FE Valve **Date:** 10/15/2009

Cycle Number: 25000

Time	Pressure (bar)	Bonnet (deg. C)	Body Temp (deg. C)	Body Temp (deg. C)	Leakage (mbar -l/sec)
13:41:03 PM	99	20	22	22	1.4E-06
13:41:04 PM	99	20	22	22	1.4E-06
13:41:03 PM	99	20	22	22	1.4E-06
13:41:04 PM	99	20	22	22	1.3E-06
13:41:03 PM	99	20	22	22	1.3E-06
13:41:04 PM	99	20	22	22	1.3E-06
13:41:03 PM	99	20	22	22	1.3E-06
13:41:04 PM	99	20	22	22	1.4E-06
13:41:03 PM	99	20	21	22	1.4E-06
13:41:04 PM	99	20	22	22	1.4E-06
13:41:03 PM	99	20	22	22	1.4E-06
13:41:04 PM	99	20	21	22	1.4E-06
13:41:03 PM	99	20	21	22	9.5E-07
13:41:04 PM	99	20	21	22	7.1E-07
13:41:03 PM	99	20	21	22	7.6E-07
13:41:04 PM	99	20	21	22	7.3E-07
13:41:03 PM	99	20	21	22	7.6E-07
13:41:04 PM	99	20	22	22	8.1E-07
13:41:03 PM	99	20	22	22	8.3E-07
13:41:04 PM	99	20	22	22	8.0E-07
13:41:03 PM	99	20	22	22	8.2E-07
13:41:04 PM	99	20	22	22	8.5E-07
13:41:03 PM	99	20	22	22	8.1E-07
13:41:04 PM	99	20	22	22	7.9E-07
13:41:03 PM	99	20	22	22	8.2E-07
13:41:04 PM	99	20	22	22	8.3E-07
13:41:03 PM	99	20	22	22	8.6E-07
13:41:04 PM	99	20	22	22	8.2E-07
13:41:03 PM	99	20	22	22	8.1E-07
13:41:04 PM	99	20	22	22	7.8E-07
13:41:03 PM	99	20	22	22	7.6E-07
13:41:04 PM	99	20	22	22	7.5E-07
13:41:03 PM	99	20	22	22	7.5E-07
13:41:04 PM	99	20	22	22	7.5E-07
13:41:03 PM	99	20	22	22	7.3E-07
13:41:04 PM	99	20	22	22	7.2E-07
13:41:03 PM	99	20	22	22	7.4E-07
13:41:04 PM	99	20	22	22	7.4E-07
13:41:03 PM	99	20	22	22	7.8E-07
13:41:04 PM	99	20	22	22	7.8E-07
13:41:03 PM	99	20	22	22	8.2E-07
13:41:04 PM	99	20	22	22	7.9E-07
13:41:03 PM	99	20	22	22	8.3E-07
13:41:04 PM	99	20	22	22	8.9E-07
13:41:03 PM	99	20	22	22	9.5E-07
13:41:04 PM	99	20	22	22	9.0E-07
13:41:03 PM	99	20	22	22	9.1E-07
13:41:04 PM	99	20	22	22	9.6E-07
13:41:03 PM	99	20	22	22	9.9E-07
13:41:04 PM	99	20	22	22	1.0E-06
13:41:03 PM	99	20	22	22	9.7E-07
13:41:04 PM	99	20	21	22	9.2E-07
13:41:03 PM	99	20	22	22	9.8E-07
13:41:04 PM	99	20	22	22	1.0E-06
13:41:03 PM	99	20	22	22	1.0E-06
13:41:04 PM	99	20	22	22	1.0E-06
13:41:03 PM	99	20	22	22	1.0E-06
13:41:04 PM	99	20	22	22	1.1E-06
13:41:03 PM	99	20	22	22	1.0E-06
13:41:04 PM	99	20	22	22	1.1E-06
Averages ->	**99**	**20**	**22**	**22**	**9.6E-07**
			Maximum ->		**1.4E-06**

Yarmouth Research and Technology

Valve Description: 2 inch Cl600 Fluoroseal FE Valve **Date:** 10/7/2009

Cycle Number: Start of Test - Bonnet Gasket Static Leakage

Time	Pressure (bar)	Bonnet (deg. C)	Body Temp (deg. C)	Body Temp (deg. C)	Leakage (mbar -l/sec)
10:07:24 AM	99	18	18	18	9.5E-07
10:07:25 AM	99	18	18	18	9.7E-07
10:07:26 AM	99	18	18	18	9.9E-07
10:07:27 AM	99	18	18	19	9.9E-07
10:07:28 AM	99	18	18	18	9.9E-07
10:07:29 AM	99	18	18	18	9.6E-07
10:07:30 AM	99	18	18	19	9.2E-07
10:07:31 AM	99	18	18	18	9.3E-07
10:07:32 AM	99	18	18	18	9.4E-07
10:07:33 AM	99	18	18	19	9.5E-07
10:07:34 AM	99	18	18	18	9.4E-07
10:07:35 AM	99	18	18	18	9.1E-07
10:07:36 AM	99	18	18	18	9.0E-07
10:07:37 AM	99	18	18	18	9.0E-07
10:07:38 AM	99	18	18	18	8.9E-07
10:07:39 AM	99	18	18	18	8.3E-07
10:07:40 AM	99	18	18	18	8.0E-07
10:07:41 AM	99	18	18	18	8.3E-07
10:07:42 AM	99	18	18	18	8.1E-07
10:07:43 AM	99	18	18	18	7.6E-07
10:07:44 AM	99	18	18	18	7.5E-07
10:07:45 AM	99	18	18	19	7.9E-07
10:07:46 AM	99	18	18	18	8.4E-07
10:07:47 AM	99	18	18	18	8.5E-07
10:07:48 AM	99	18	18	18	8.7E-07
10:07:49 AM	99	18	18	18	1.0E-06
10:07:50 AM	99	18	18	18	1.1E-06
10:07:51 AM	99	18	18	18	1.1E-06
10:07:52 AM	99	18	18	18	1.2E-06
10:07:53 AM	99	18	18	18	1.3E-06
10:07:54 AM	99	18	18	18	1.3E-06
10:07:55 AM	99	18	18	18	1.2E-06
10:07:56 AM	99	18	18	18	1.2E-06
10:07:57 AM	99	18	18	18	1.2E-06
10:07:58 AM	99	18	18	18	1.3E-06
10:07:59 AM	99	18	18	18	1.2E-06
10:08:00 AM	99	18	18	18	1.2E-06
10:08:01 AM	99	18	18	18	1.2E-06
10:08:02 AM	99	18	18	18	1.2E-06
10:08:03 AM	99	18	18	18	1.1E-06
10:08:04 AM	99	18	18	18	1.0E-06
10:08:05 AM	99	18	18	18	1.1E-06
10:08:06 AM	99	18	18	18	1.1E-06
10:08:07 AM	99	18	18	18	1.1E-06
10:08:08 AM	99	18	18	19	9.6E-07
10:08:09 AM	99	18	18	18	9.7E-07
10:08:10 AM	99	18	18	18	1.0E-06
10:08:11 AM	99	18	18	18	9.2E-07
10:08:12 AM	99	18	18	18	8.8E-07
10:08:13 AM	99	18	18	18	8.9E-07
10:08:14 AM	99	19	18	18	8.9E-07
10:08:15 AM	99	18	18	18	8.8E-07
10:08:16 AM	99	18	18	18	9.2E-07
10:08:17 AM	99	18	18	19	9.3E-07
10:08:18 AM	99	18	18	19	9.6E-07
10:08:19 AM	99	19	18	19	9.4E-07
10:08:20 AM	99	18	18	18	9.3E-07
10:08:21 AM	99	19	18	18	9.3E-07
10:08:22 AM	99	18	18	18	9.3E-07
10:08:23 AM	99	18	18	19	9.5E-07
Averages ->	**99**	**18**	**18**	**18**	**9.9E-07**
			Maximum ->		**1.3E-06**

Fugitive Emission Test Report

VDI 2440 Test Standard

Performed for

Fluoroseal Specialty Valves

www.fluorosealvalves.com

6" Class 600 Fluoroseal Plug Valve
EZ Seal Configuration
Model 602F
Ambient Temperature
Project Number: 210036

February 2010

Performed by

YARMOUTH RESEARCH AND TECHNOLOGY, LLC

434 Walnut Hill Road
N. Yarmouth, ME 04097 USA
(207) 829-5359
info@yarmouthresearch.com
www.yarmouthresearch.com

Yarmouth Research and Technology

VDI 2440 Fugitive Emission Test Summary Sheet

Customer:	**Fluoroseal Specialty Valves**	**Date:**	1-Feb-10
Project Number:	210036		
Product Description:	6 inch Class 600 Fluoroseal Plug Valve		
	EZ Seal, Model 602F, S/N 10/012313S		
	CF8M Body, CF8M Plug, 1440 psig		
Packing Description:	Hi-Temp Sleeve		
Stem Diameter (mm):	51.0	**Circumference:**	0.160 meter
Mean Bonnet Diameter (mm):	122.0	**Circumference:**	0.383 meter

Test Temperature:	Ambient	**Test Pressure (bar):**	99
Cycling Rate:	once per 50 seconds		
Leakage Device:	Pfeiffer HLT-560		
Pressure Gauge:	PG-2000-1	**Thermocouple Type:**	K

Maximum Allowable Leakage: 10-4 mbar-l/sec per mean seal circumference (m) for < 250C

Calculated Values: Stem Seal: 1.6E-05 mbar-l/sec
Bonnet Seal: 3.8E-05 mbar-l/sec

Test Results:

Bonnet Gasket Leakage:	Leakage Reading:	1.1E-06 mbar-l/sec
	Allowable:	3.8E-05 mbar-l/sec
	Was Leakage Below Allowable:	**Yes**
Stem Seal Leakage:		
	Leakage Reading at 0 Cycles:	4.6E-07 mbar-l/sec
	Leakage Reading at 25,000 Cycles:	7.5E-06 mbar-l/sec
	Allowable:	1.6E-05 mbar-l/sec
	Were Leakages Below Allowable:	**Yes**

Valves passes requirements of VDI2440 at ambient temperature for 25,000 mechanical cycles.

Witness

President, Yarmouth Research and Technology

STATE OF MAINE
MATTHEW
J
WASIELEWSKI
No. 7437
LICENSED
PROFESSIONAL ENGINEER