3285H-8-013

U.S. EPA Contract Laboratory Program
Sample Management Office
P.O. Box 818 - Alexanderia, VA 22313
703/557-2490 FTS: 8-557-2490

Date: 11-3-87

COVER PAGE

INORGANIC ANALYSES DATA PACKAGE

Lab Name.. WEYERHAEUSER

Case No..... 3285H-1

SOW No..... 784

Q.C. Report No.. 161221

Sample Numbers

EPA No.	Lab ID No.	EPA No.	Lab ID No.
01A-001	99268	02B-001	99271
01A-002	99276	02B-002	99279
01B-001	99269	04A-001	99272
01B-001L	99275	04A-002	99280
01B-001M	99304	04B-001	99273
01B-002	99277	04B-002	99281
02A-001	99270	04C-001	99274
02A-002	99278	E1A-003	99282
02A-003L	99303	E1A-005	99296

Comment:

ICP Interelement and background corrections applied ? Yes: X No :

If yes, corrections applied before: X or after: generation of raw data.

Footnotes:

NR - not required by contract at this time
Form I:
Value - If the result is a value greater than or equal to the instrument detection limit but less than the contract required detection limit, report the value in brackets (i.e., [10]). Indicate the analytical method used with P (for ICP/Flame), F (for furnace), or C (for flameless AA).
U - Indicates element was analyzed for but not detected. Report with the detection limit value (e.g. 10U).
E - Indicates a value estimated or not reported due to the presence of interference. Explanatory note included on cover page.
s - Indicates value determined by Method of Standard Addition.
R - Indicates spike sample recovery is not within control limits.
* - Indicates duplicate analysis is not within control limits.
+ - Indicates the correlation coefficient for method of standard addition is less than 0.995

w - As per SOW 787 1
(Note: No MSA on samples <CRDL)

U.S. EPA Contract Laboratory Program
Sample Management Office
P.O. Box 818 - Alexanderia, VA 22313
703/557-2490 FTS: 8-557-2490 Date: 11-3-87

COVER PAGE

INORGANIC ANALYSES DATA PACKAGE

Lab Name.. WEYERHAEUSER Case No..... 3285H-1

SOW No..... 784 Q.C. Report No.. 161221

Sample Numbers

EPA No.	Lab ID No.	EPA No.	Lab ID No.
E1B-003	99283	E4B-005	99301
E1B-005	99297	E4C-003	99288
E2A-003	99284	E4C-005	99302
E2A-005	99298		
E2B-003	99285		
E2B-005	99299		
E4A-003	99286		
E4A-005	99300		
E4B-003	99287		

Comment:

ICP Interelement and background corrections applied ? Yes: X No :

If yes, corrections applied before: X or after: generation of raw data.

Footnotes:

NR - not required by contract at this time
Form I:
Value - If the result is a value greater than or equal to the instrument detection limit but less than the contract required detection limit, report the value in brackets (i.e., [10]). Indicate the analytical method used with P (for ICP/Flame), F (for furnace), or C (for flameless AA).
U - Indicates element was analyzed for but not detected. Report with the detection limit value (e.g. 10U).
E - Indicates a value estimated or not reported due to the presence of interference. Explanatory note included on cover page.
s - Indicates value determined by Method of Standard Addition.
R - Indicates spike sample recovery is not within control limits.
* - Indicates duplicate analysis is not within control limits.
+ - Indicates the correlation coefficient for method of standard addition is less than 0.995

Form II - 1

Q. C. Report No... 161221

INITIAL AND CONTINUING CALIBRATION VERIFICATION[3]

LAB NAME.. WEYERHAEUSER

CASE NO.. 3285H-1
SOW NO... 784

DATE..... 11-3-87

UNITS.... ug/l

Compound	Initial Calib.[1]			Continuing Calibration[2]					
Metals:	True Value	Found	%R	True Value	Found	%R	Found	%R	Meth[4]
1 Aluminum	1980								P
2 Antimony	807			10000					P
3 Arsenic	409	395	97	10000	10100	101	10100	101	P
4 Barium	1980			10000					P
5 Beryllium	481	485	101	1000	995	99	988	99	P
6 Cadmium	489	494	101	1000	1030	103	1040	104	P
7 Calcium	49800			10000					P
8 Chromium	506	496	98	1000	1010	101	1020	102	P
9 Cobalt	474	491	104	1000	1010	101	1020	102	P
10 Copper	542	518	96	1000	1000	100	993	99	P
11 Iron	1990			10000					P
12 Lead	4510	4360	97	10000	9980	100	10100	101	P
13 Magnesium	25000			10000					P
14 Manganese	513	507	99	1000	1020	102	1020	102	P
15 Mercury				1					
16 Nickel	496	490	99	10000	10100	101	10300	103	P
17 Potassium	50200			50000					P
18 Selenium	864	873	101	10000	9600	96	9570	96	P
19 Silver	509			1000					P
20 Sodium	50700			10000					P
21 Thallium				10000					
22 Tin	1000								P
23 Vanadium	511	517	101	1000	1010	101	1010	101	P
24 Zinc	3100	2990	96	1000	1030	103	1030	103	P
Other:									
*Magnesium				10000					P
*Iron				10000					P
Cyanide									

1 -Initial Calibration Source-> EPA 2 -Continuing Calibration Source-> Inorganic Ventures or Baker

3 - Control Limits: Mercury and Tin -> 80-120; All Other Compounds -> 90-110

4 - Indicate Analytical Method Used: P - ICP/Flame AA; F - Furnace

* - alternate lines used for high levels:
Magnesium>40000 ug/l and Iron>100000 ug/l

Form II - 2

Q. C. Report No... 161221

INITIAL AND CONTINUING CALIBRATION VERIFICATION[3]

LAB NAME.. WEYERHAEUSER

DATE..... 11-3-87

CASE NO.. 3285H-1
SOW NO... 784
UNITS.... ug/l

Compound	1 Initial Calib.			2 Continuing Calibration					4
Metals:	True Value	Found	%R	True Value	Found	%R	Found	%R	Meth
1 Aluminum									P
2 Antimony				10000					P
3 Arsenic	41	42	102	35	33	94	33	94	F
4 Barium				10000					P
5 Beryllium				1000			977	98	P
6 Cadmium				1000			1040	104	P
7 Calcium				10000					P
8 Chromium				1000			1020	102	P
9 Cobalt				1000			1010	101	P
10 Copper				1000			981	98	P
11 Iron				10000					P
12 Lead				10000			10100	101	P
13 Magnesium				10000					P
14 Manganese				1000			1010	101	P
15 Mercury				1					
16 Nickel				10000			10200	102	P
17 Potassium				50000					P
18 Selenium	43	44	102	35	34	97	—	—	F
19 Silver				1000					P
20 Sodium				10000					P
21 Thallium				10000					
22 Tin									P
23 Vanadium				1000			1000	100	P
24 Zinc				1000			1040	104	P
Other:									
*Magnesium				10000					P
*Iron				10000					P
Cyanide									

1 -Initial Calibration Source-> EPA 2 -Continuing Calibration Source-> Inorganic Ventures or Baker

3 - Control Limits: Mercury and Tin -> 80-120; All Other Compounds -> 90-110

4 - Indicate Analytical Method Used: P - ICP/Flame AA; F - Furnace

* - alternate lines used for high levels:
Magnesium>40000 ug/l and Iron>100000 ug/l

Form II - 3

Q. C. Report No... 161221

INITIAL AND CONTINUING CALIBRATION VERIFICATION[3]

LAB NAME.. WEYERHAEUSER
DATE..... 11-3-87

CASE NO.. 3285H-1
SOW NO... 784
UNITS.... ug/l

Compound	Initial Calib.[1]			Continuing Calibration[2]					
Metals:	True Value	Found	%R	True Value	Found	%R	Found	%R	Meth[4]
1 Aluminum									P
2 Antimony				10000					P
3 Arsenic				35	33	94	–	–	F
4 Barium				10000					P
5 Beryllium				1000	961	96	939	94	P
6 Cadmium				1000	1050	105	1050	105	P
7 Calcium				10000					P
8 Chromium				1000	1010	101	1000	100	P
9 Cobalt				1000	1010	101	996	100	P
10 Copper				1000	958	96	930	93	P
11 Iron				10000					P
12 Lead				10000	10100	101	10100	101	P
13 Magnesium				10000					P
14 Manganese				1000	1010	101	998	100	P
15 Mercury				1					
16 Nickel				10000	10300	103	10200	102	P
17 Potassium				50000					P
18 Selenium	43	47	109	35	35	100	36	103	F
19 Silver				1000					P
20 Sodium				10000					P
21 Thallium				10000					
22 Tin									P
23 Vanadium				1000	996	100	979	98	P
24 Zinc				1000	1050	105	1040	104	P
Other:									
*Magnesium				10000					P
*Iron				10000					P
Cyanide									

1 -Initial Calibration Source-> EPA 2 -Continuing Calibration Source-> Inorganic Ventures or Baker

3 - Control Limits: Mercury and Tin -> 80-120; All Other Compounds -> 90-110

4 - Indicate Analytical Method Used: P - ICP/Flame AA; F - Furnace

* - alternate lines used for high levels:
Magnesium>40000 ug/l and Iron>100000 ug/l

Form II - 4

Q. C. Report No. 16122-1

INITIAL AND CONTINUING CALIBRATION VERIFICATION[3]

LAB NAME Weyerhaeuser

CASE NO. SAS 32854-1

SOW NO. 784

DATE 11-3-87

UNITS ug/L

Compound	Initial Calib.[1]			Continuing Calibration[2]					
Metals:	True Value	Found	%R	True Value	Found	%R	Found	%R	Method[4]
1. Aluminum									
2. Antimony									
3. Arsenic	41	40	98	35	33	94	–	–	F
4. Barium									
5. Beryllium									
6. Cadmium									
7. Calcium									
8. Chromium									
9. Cobalt									
10. Copper									
11. Iron									
12. Lead	46	49	107	35	35	100	35	100	F
13. Magnesium									
14. Manganese									
15. Mercury									
16. Nickel									
17. Potassium									
18. Selenium	43	44	102	35	34	97	34	97	F
19. Silver									
20. Sodium									
21. Thallium									
22. Tin									
23. Vanadium									
24. Zinc									
Other:									
Cyanide									

[1] Initial Calibration Source EPA [2] Continuing Calibration Source Baker

[3] Control Limits: Mercury and Tin 80-120; All Other Compounds 90-110

[4] Indicate Analytical Method Used: P - ICP/Flame AA; F - Furnace

Form II - 5

Q. C. Report No. 16122-1

INITIAL AND CONTINUING CALIBRATION VERIFICATION[3]

LAB NAME Weyerhaeuser

CASE NO. SAS 3285H-1

SOW NO. 284

DATE 11-3-87

UNITS µg/L

Compound	Initial Calib.[1]			Continuing Calibration[2]					
Metals:	True Value	Found	%R	True Value	Found	%R	Found	%R	Method[4]
1. Aluminum									
2. Antimony									
3. Arsenic	41	43	105	35	35	100	35	100	F
4. Barium									
5. Beryllium									
6. Cadmium									
7. Calcium									
8. Chromium									
9. Cobalt									
10. Copper									
11. Iron									
12. Lead	46	49	107	35	35	100	–	–	F
13. Magnesium									
14. Manganese									
15. Mercury									
16. Nickel									
17. Potassium									
18. Selenium				35	33	94	33	94	F
19. Silver									
20. Sodium									
21. Thallium									
22. Tin									
23. Vanadium									
24. Zinc									
Other:									
Cyanide									

[1] Initial Calibration Source EPA [2] Continuing Calibration Source Baker

[3] Control Limits: Mercury and Tin 80-120; All Other Compounds 90-110

[4] Indicate Analytical Method Used: P - ICP/Flame AA; F - Furnace

Form II

Q. C. Report No. 16122-1

INITIAL AND CONTINUING CALIBRATION VERIFICATION[3]

LAB NAME Weyerhaeuser

CASE NO. SAS 3285H-1

SOW NO. 784

DATE 11-3-87

UNITS ug/L

Compound	Initial Calib.[1]			Continuing Calibration[2]					
Metals:	True Value	Found	%R	True Value	Found	%R	Found	%R	Method[4]
1. Aluminum									
2. Antimony									
3. Arsenic				35	37	106	36	103	F
4. Barium									
5. Beryllium									
6. Cadmium									
7. Calcium									
8. Chromium									
9. Cobalt									
10. Copper									
11. Iron									
12. Lead	46	48	104	35	35	100	—	—	F
13. Magnesium									
14. Manganese									
15. Mercury									
16. Nickel									
17. Potassium									
18. Selenium	43	46	107	35	36	103	37	106	F
19. Silver									
20. Sodium									
21. Thallium									
22. Tin									
23. Vanadium									
24. Zinc									
Other:									
Cyanide									

[1] Initial Calibration Source EPA [2] Continuing Calibration Source Baker

[3] Control Limits: Mercury and Tin 80-120; All Other Compounds 90-110

[4] Indicate Analytical Method Used: P - ICP/Flame AA; F - Furnace

Form III - 1

Q. C. Report No.. 161221
BLANKS

LAB NAME.. WEYERHAEUSER
DATE..... 11-3-87

CASE NO.. 3285H-1
UNITS.... ug/l
MATRIX... WATER

Preparation Compound	Initial Cal.	Continuing Calibration Blank Value 1	2	3	4	Preparation Blank 1	2
Metals:							
1 Aluminum	10U	10U	10U	10U	10U		
2 Antimony	60U	60U	60U	60U	60U		
3 Arsenic	30U	30U					
4 Barium	2.0U	2.0U					
5 Beryllium	2.0U	2.0U	2.0U	2.0U	2.0U		
6 Cadmium	3.0U	3.0U	3.0U	3.0U	3.0U		
7 Calcium	6.0U	6.0U	6.0U	6.0U	6.0U		
8 Chromium	3.0U	3.0U	3.0U	3.0U	3.0U		
9 Cobalt	3.0U	3.0U	3.0U	3.0U	3.0U		
10 Copper	3.0U	3.0U	3.0U	3.0U	3.0U		
11 Iron	4.0U	4.0U	4.0U	4.0U	4.0U		
12 Lead	60U	60U	60U	60U	60U		
13 Magnesium	3.0U	3.0U	3.0U	3.0U	3.0U		
14 Manganese	2.0U	2.0U	2.0U	2.0U	2.0U		
15 Mercury							
16 Nickel	15U	15U	15U	15U	15U		
17 Potassium	200U	200U	200U	200U	200U		
18 Selenium	40U	40U					
19 Silver	6.0U	6.0U	6.0U	6.0U	6.0U		
20 Sodium	10U	10U	10U	10U	10U		
21 Thallium	40U	40U	40U	40U	40U		
22 Tin	30U	30U	30U	30U	30U		
23 Vanadium	3.4	2.6	3.2	3.4	3.4		
24 Zinc	2.0U	2.0U	2.0U	2.0U	2.0U		
Other:							
*Magnesium	300U	300U	300U	300U	300U		
*Iron	100U	100U	100U	100U	100U		
Cyanide							

* - alternate lines used for high levels:
Magnesium>40000 ug/l and Iron>100000 ug/l

Form III - 2

Q. C. Report No.. 161221
BLANKS

LAB NAME.. WEYERHAEUSER
DATE..... 11-3-87

CASE NO.. 3285H-1
UNITS.... ug/l
MATRIX... WATER

Preparation Compound	Initial Cal.	Continuing Calibration Blank Value 1	2	3	4	Preparation Blank 1	2
Metals:							
1 Aluminum		10U					
2 Antimony		60U					
3 Arsenic	4u	4u	4u	4u			
4 Barium		2.0U					
5 Beryllium		2.0U					
6 Cadmium		3.0U					
7 Calcium		6.0U					
8 Chromium		3.0U					
9 Cobalt		3.0U					
10 Copper		3.0U					
11 Iron		4.0U					
12 Lead		60U					
13 Magnesium		3.0U					
14 Manganese		2.0U					
15 Mercury							
16 Nickel		15U					
17 Potassium		200U					
18 Selenium	3u	3u					
19 Silver		6.0U					
20 Sodium		10U					
21 Thallium		40U					
22 Tin		30U					
23 Vanadium		8.4					
24 Zinc		2.0U					
Other:							
*Magnesium		300U					
*Iron		100U					
Cyanide							

* - alternate lines used for high levels:
Magnesium>40000 ug/l and Iron>100000 ug/l

Form III - 3

Q. C. Report No. 16122-1

BLANKS

LAB NAME Weyerhaeuser CASE NO. SAS 32854-1

DATE 11-3-87 UNITS ug/L

Matrix Water

Preparation Compound	Initial Calibration Blank Value	Continuing Calibration Blank Value 1	2	3	4	Preparation Blank 1	2
Metals:							
1. Aluminum							
2. Antimony							
3. Arsenic	4U	4U	–	–	–		
4. Barium							
5. Beryllium							
6. Cadmium							
7. Calcium							
8. Chromium							
9. Cobalt							
10. Copper							
11. Iron							
12. Lead	3U	3U	3U	–	–		
13. Magnesium							
14. Manganese							
15. Mercury							
16. Nickel							
17. Potassium							
18. Selenium	3U	3U	3U	–	–		
19. Silver							
20. Sodium							
21. Thallium							
22. Tin							
23. Vanadium							
24. Zinc							
Other:							
Cyanide							

Form III - 4

Q. C. Report No. 16122-1

BLANKS

LAB NAME Weyerhaeuser CASE NO. 3285H-1

DATE 11-3-87 UNITS µg/L

Matrix Water

Preparation Compound	Initial Calibration Blank Value	Continuing Calibration Blank Value 1	2	3	4	Preparation Blank 1	2
Metals:							
1. Aluminum							
2. Antimony							
3. Arsenic	4U	4U	4U	4U	4U		
4. Barium							
5. Beryllium							
6. Cadmium							
7. Calcium							
8. Chromium							
9. Cobalt							
10. Copper							
11. Iron							
12. Lead	3U	3U	-	-	-		
13. Magnesium							
14. Manganese							
15. Mercury							
16. Nickel							
17. Potassium							
18. Selenium	3U	3U	3U	3U	3U		
19. Silver							
20. Sodium							
21. Thallium							
22. Tin							
23. Vanadium							
24. Zinc							
Other:							
Cyanide							

Form III - 5

Q. C. Report No. 16122-1

BLANKS

LAB NAME Weyerhaeuser CASE NO. SAS 3285H-1

DATE 11-3-87 UNITS ~~µg/L~~

Matrix Water

Preparation Compound	Initial Calibration Blank Value	Continuing Calibration Blank Value 1	2	3	4	Preparation Blank 1	2
Metals:							
1. Aluminum							
2. Antimony							
3. Arsenic							
4. Barium							
5. Beryllium							
6. Cadmium							
7. Calcium							
8. Chromium							
9. Cobalt							
10. Copper							
11. Iron							
12. Lead	3u	3u	–	–	–		
13. Magnesium							
14. Manganese							
15. Mercury							
16. Nickel							
17. Potassium							
18. Selenium	3u	3u	3u	–	–		
19. Silver							
20. Sodium							
21. Thallium							
22. Tin							
23. Vanadium							
24. Zinc							
Other:							
Cyanide							

SAS-3285H

Blanks (Filter + Reagent)

WEYERHAEUSER TECHNOLOGY CENTER
Analytical Laboratories
Tacoma, Washington

REPORT

Service Request 16122-1

Page _____ of _____

SAMPLE DESCRIPTION	ANALYTICAL LAB CODE	As	Be	Cd	Cr	Co	Cu	Pb	Ni	Se	V	Zn
Filt. Blk	1	4u	2u	3u	[7]	3u	[8]	3u	15u	3u	[8]	[5]
↓	2	4u	2u	3u	[7]	3u	[5]	[3]	15u	3u	[8]	[2]
↓	3	4u	2u	3u	[6]	3u	[6]	3u	15u	3u	[9]	[3]
Reagent Blk.	1	4u	2u	3u	3u	3u	3u	3u	15u	3u	[8]	2u
↓	2	4u	2u	3u	3u	3u	3u	3u	15u	3u	[8]	2u
↓	3	4u	2u	3u	3u	3u	3u	3u	15u	3u	[7]	2u

Approved _____ Date _____ Page Number _____ Notebook _____

050

FORM 4700-1 2/86 PRINTING SERVICES/TACOMA

Form IV

Q. C. Report No.. 161221
ICP INTERFERENCE CHECK SAMPLE

LAB NAME.. WEYERHAEUSER
DATE..... 11-3-87

CASE NO..... 3285H-1
Check Sample ID..... ICS
Check Sample Source...
Units..... ug/l

Compound Metals:	Control Limits Mean	StdDev	1 2 True	Initial Observed	%R	Final Observed	%R
1 Aluminum			508000	-	-	-	-
2 Antimony			-	-	-	-	-
3 Arsenic			-	30u	-	30u	-
4 Barium			483	-	-	-	-
5 Beryllium			474	460	97	440	93
6 Cadmium			909	920	101	974	107
7 Calcium			516000	-	-	-	-
8 Chromium			513	491	96	492	96
9 Cobalt			478	473	99	482	101
10 Copper			534	520	97	494	93
11 Iron			203000	-	-	-	-
12 Lead			4850	4670	96	4670	96
13 Magnesium			509000	-	-	-	-
14 Manganese			531	538	101	546	103
15 Mercury			-	-	-	-	-
16 Nickel			916	874	95	902	99
17 Potassium			-	-	-	-	-
18 Selenium			-	40u	-	40u	-
19 Silver			993	-	-	-	-
20 Sodium			-	-	-	-	-
21 Thallium			-	-	-	-	-
22 Tin			-	-	-	-	-
23 Vanadium			475	508	107	512	108
24 Zinc			973	948	97	988	102
Other:							

Form VI

Q. C. Report No... 161221
DUPLICATES

LAB NAME... WEYERHAEUSER
DATE..... 11-3-87

CASE NO... 3285H-1
EPA Sample No..... 01A-001
Lab Sample ID No.... 99268
Units.. ug/l

MATRIX... WATER

Compound	Control Limit[1]	Sample	Duplicate	RPD[2]
Metals:				
1 Aluminum				NC
2 Antimony				NC
3 Arsenic		22	23	4.4
4 Barium				NC
5 Beryllium		2.0 U	2.0 U	NC
6 Cadmium		3.0 U	[3.0]	NC
7 Calcium				NC
8 Chromium		18	17	6.2
9 Cobalt		[4.0]	[3.8]	NC
10 Copper		555	579	4.2
11 Iron				NC
12 Lead		512	534	4.3
13 Magnesium				NC
14 Manganese		210	217	3.2
15 Mercury				NC
16 Nickel		15U	[18]	NC
17 Potassium				NC
18 Selenium		[4]	[5]	22
19 Silver				NC
20 Sodium				NC
21 Thallium				NC
22 Tin				NC
23 Vanadium		[13]	[13]	0.61
24 Zinc		378	388	2.7
Other:				
Cyanide				

* Out of Control
1 to be added at a later date.
2 RPD =[|S-D|/((S+D)/2)] x 100
NC - Non calculable RPD due to value(s) less than CRDL

Form VI

Q. C. Report No... 161221
DUPLICATES

LAB NAME... WEYERHAEUSER
DATE..... 11-3-87

CASE NO... 3285H-1
EPA Sample No..... 02A-002
Lab Sample ID No.... 99278
Units.. ug/l

MATRIX... WATER

Compound	Control Limit[1]	Sample	Duplicate	RPD[2]
Metals:				
1 Aluminum				NC
2 Antimony				NC
3 Arsenic		58	56	3.5
4 Barium				NC
5 Beryllium		2.0 U	2.0 U	NC
6 Cadmium	[ ]	3.7	3.7	NC
7 Calcium				NC
8 Chromium		35	34	2.0
9 Cobalt	[ ]	4.5	5.2	NC
10 Copper		574	635	10
11 Iron				NC
12 Lead		659	642	2.5
13 Magnesium				NC
14 Manganese		333	317	4.9
15 Mercury				NC
16 Nickel	[ ]	16	21	NC
17 Potassium				NC
18 Selenium		[8 w]	[9 w]	12
19 Silver				NC
20 Sodium				NC
21 Thallium				NC
22 Tin				NC
23 Vanadium		[19]	[20]	3.0
24 Zinc		590	571	3.3
Other:				
Cyanide				

* Out of Control
1 to be added at a later date.
2 RPD =[|S-D|/((S+D)/2)] x 100
NC - Non calculable RPD due to value(s) less than CRDL

Form VI

Q. C. Report No... 161221
DUPLICATES

LAB NAME... WEYERHAEUSER
DATE..... 11-3-87

CASE NO... 3285H-1
EPA Sample No..... E2A-005
Lab Sample ID No.... 99298
Units.. ug/l

MATRIX... WATER

Compound	Control Limit[1]	Sample	Duplicate	RPD[2]
Metals:				
1 Aluminum				NC
2 Antimony				NC
3 Arsenic		[8]	[9]	12
4 Barium				NC
5 Beryllium		2.0 U	2.0 U	NC
6 Cadmium		3.0 U	3.0 U	NC
7 Calcium				NC
8 Chromium		[6.1]	[7.6]	NC
9 Cobalt		3.0 U	3.0 U	NC
10 Copper		84	65	26
11 Iron				NC
12 Lead		174	153	13
13 Magnesium				NC
14 Manganese		51	45	12
15 Mercury				NC
16 Nickel		15U	15U	NC
17 Potassium				NC
18 Selenium		3U	3U w	NC
19 Silver				NC
20 Sodium				NC
21 Thallium				NC
22 Tin				NC
23 Vanadium		[11]	[12]	12
24 Zinc		174	137 *	23
Other:				
Cyanide				

* Out of Control
1 to be added at a later date.
2 RPD =[|S-D|/((S+D)/2)] x 100
NC - Non calculable RPD due to value(s) less than CRDL

Form VII

Q.C. Report No. 16122-1

INSTRUMENT DETECTION LIMITS AND

Method CONTROL SAMPLE - 1

LAB NAME Weyerhaeuser CASE NO. SAS-3285H

DATE 11-3-87 LCS UNITS ug/L mg/kg

(Circle One)

Compound	Required Detection Limits (CRDL)-ug/l	Instrument Detection Limits (IDL)-ug/l ICP/AA	Furnace	Method Control Sample True	Found	%R
Metals:						
1. Aluminum						
2. Antimony						
3. Arsenic	10	30	4	100	96	96
4. Barium						
5. Beryllium	5	2		50	50	100
6. Cadmium	5	3		50	50	100
7. Calcium						
8. Chromium	10	3		100	108	108
9. Cobalt	50	3		500	540	108
10. Copper	25	3		250	264	106
11. Iron						
12. Lead	10	60	3	1000	1000	100
13. Magnesium						
14. Manganese						
15. Mercury						
16. Nickel	40	15		400	418	105
17. Potassium						
18. Selenium	10	40	3	250	269	108
19. Silver						
20. Sodium						
21. Thallium						
22. Tin						
23. Vanadium	50	2		500	526	105
24. Zinc	20	2		200	214	107
Other:						
Cyanide						

Form VII

Q.C. Report No. 16122-1

INSTRUMENT DETECTION LIMITS AND

Method CONTROL SAMPLE - 2

LAB NAME Weyerhaeuser CASE NO. SAS-3285H

DATE 11-3-87 LCS UNITS ug/L mg/kg

(Circle One)

Compound	Required Detection Limits (CRDL)-ug/l	Instrument Detection Limits (IDL)-ug/l ICP/AA	Furnace	Method Control Sample True	Found	%R
Metals:						
1. Aluminum						
2. Antimony						
3. Arsenic	10	30	4	100	90	90
4. Barium						
5. Beryllium	5	2		50	49	98
6. Cadmium	5	3		50	51	102
7. Calcium						
8. Chromium	10	3		100	113	113
9. Cobalt	50	3		500	536	107
10. Copper	25	3		250	260	104
11. Iron						
12. Lead	10	60	3	1000	1020	102
13. Magnesium						
14. Manganese						
15. Mercury						
16. Nickel	40	15		400	422	105
17. Potassium						
18. Selenium	10	40	3	250	291	116
19. Silver						
20. Sodium						
21. Thallium						
22. Tin						
23. Vanadium	50	2		500	522	104
24. Zinc	20	2		200	210	105
Other:						
Cyanide						

Form VII

Q.C. Report No. 16122-1

INSTRUMENT DETECTION LIMITS AND

Method CONTROL SAMPLE -3

LAB NAME Weyerhaeuser CASE NO. SAS-3285H

DATE 11-3-87 LCS UNITS ug/L mg/kg

(Circle One)

Compound	Required Detection Limits (CRDL)-ug/l	Instrument Detection Limits (IDL)-ug/l ICP/AA	Furnace	Method Control Sample True	Found	%R
Metals:						
1. Aluminum						
2. Antimony						
3. Arsenic	10	30	4	100	95	95
4. Barium						
5. Beryllium	5	2		50	49	98
6. Cadmium	5	3		50	49	98
7. Calcium						
8. Chromium	10	3		100	109	109
9. Cobalt	50	3		500	538	108
10. Copper	25	3		250	261	104
11. Iron						
12. Lead	10	60	3	1000	1000	100
13. Magnesium						
14. Manganese						
15. Mercury						
16. Nickel	40	15		400	431	108
17. Potassium						
18. Selenium	10	40	3	250	276	110
19. Silver						
20. Sodium						
21. Thallium						
22. Tin						
23. Vanadium	50	2		500	524	105
24. Zinc	20	2		200	214	107
Other:						
Cyanide						

WEYERHAEUSER TECHNOLOGY CENTER
Analytical Laboratories
Tacoma, Washington

REPORT

Service Request 16122

Page ____ of ____

Pb by Flame AAS

Sample I.D.	Date	Spike Level	Found	% Rec.		Filter Blank
		µg/L	→			µg/L
Microquartz	10-19-87	1000	900	90		200u
Glass	⊥	1000	1100	110		200u
Microquartz	10-21-87	1000	1000	100		200u
Glass	⊥	1000	1000	100		200u
Microquartz	10-23-87	1000	1000	100		200u
Glass	⊥	1000	1000	100		200u

Approved Kaid Dorsee Date 11-6-87 Notebook ____

Page Number 058

FORM 4700-2 10/79 PRINT SHOP/TACOMA

U.S. EPA Contract Laboratory Program
Sample Management Office
P.O. Box 818 - Alexanderia, VA 22313
703/557-2490 FTS: 8-557-2490 Date: 11-20-87

COVER PAGE

INORGANIC ANALYSES DATA PACKAGE

Lab Name.. WEYERHAEUSER Case No..... 3285H-2

SOW No..... 784 Q.C. Report No.. 161222

Sample Numbers

EPA No.	Lab ID No.	EPA No.	Lab ID No.
01A-006	99305	04A-006	99309
01A-009	99327	04A-009	99331
01B-006	99306	04B-006	99310
01B-009	99328	04B-006L	99326
02A-006	99307	04B-009	99332
02A-009	99329	04C-009K	99333
02B-002M	99334	E1A-004L	99311
02B-006	99308	E1A-007	99312
02B-009	99330	E1B-007	99313

Comment:

ICP Interelement and background corrections applied ? Yes: X No :

If yes, corrections applied before: X or after: generation of raw data.

Footnotes:

NR - not required by contract at this time
Form I:
Value - If the result is a value greater than or equal to the instrument detection limit but less than the contract required detection limit, report the value in brackets (i.e., [10]). Indicate the analytical method used with P (for ICP/Flame), F (for furnace), or C (for flameless AA).
U - Indicates element was analyzed for but not detected. Report with the detection limit value (e.g. 10U).
E - Indicates a value estimated or not reported due to the presence of interference. Explanatory note included on cover page.
s - Indicates value determined by Method of Standard Addition.
R - Indicates spike sample recovery is not within control limits.
* - Indicates duplicate analysis is not within control limits.
+ - Indicates the correlation coefficient for method of standard addition is less than 0.995

U.S. EPA Contract Laboratory Program
Sample Management Office
P.O. Box 818 - Alexanderia, VA 22313
703/557-2490 FTS: 8-557-2490 Date: 11-20-87

COVER PAGE

INORGANIC ANALYSES DATA PACKAGE

Lab Name.. WEYERHAEUSER Case No..... 3285H-2

SOW No..... 784 Q.C. Report No.. 161222

Sample Numbers

EPA No.	Lab ID No.	EPA No.	Lab ID No.
E2A-007	99314		
E2B-007	99315		
E4A-007	99316		
E4B-007	99317		
E4C-007L	99318		

Comment:

ICP Interelement and background corrections applied ? Yes: X No :

If yes, corrections applied before: X or after: generation of raw data.

Footnotes:

NR - not required by contract at this time
Form I:
Value - If the result is a value greater than or equal to the instrument detection limit but less than the contract required detection limit, report the value in brackets (i.e., [10]). Indicate the analytical method used with P (for ICP/Flame), F (for furnace), or C (for flameless AA).
U - Indicates element was analyzed for but not detected. Report with the detection limit value (e.g. 10U).
E - Indicates a value estimated or not reported due to the presence of interference. Explanatory note included on cover page.
s - Indicates value determined by Method of Standard Addition.
R - Indicates spike sample recovery is not within control limits.
* - Indicates duplicate analysis is not within control limits.
+ - Indicates the correlation coefficient for method of standard addition is less than 0.995

Form II - 1

Q. C. Report No... 161222

INITIAL AND CONTINUING CALIBRATION VERIFICATION[3]

LAB NAME.. WEYERHAEUSER

DATE..... 11-20-87

CASE NO.. 3285H-2
SOW NO... 784
UNITS.... ug/l

Compound	Initial Calib.[1] True Value	Found	%R	Continuing Calibration[2] True Value	Found	%R	Found	%R	Meth[4]
Metals:									
1 Aluminum	1980								P
2 Antimony	807			10000					P
3 Arsenic	470	452	96	10000	10100	101	10200	102	P
4 Barium	1980			10000					P
5 Beryllium	481	471	98	1000	999	100	1010	101	P
6 Cadmium	489	475	97	1000	1020	102	1030	103	P
7 Calcium	49800			10000					P
8 Chromium	506	493	97	1000	1010	101	1020	102	P
9 Cobalt	474	477	101	1000	1010	101	1010	101	P
10 Copper	542	513	95	1000	996	100	1000	100	P
11 Iron	1990			10000					P
12 Lead	46	4260	9260	10000	10100	101	10100	101	P
13 Magnesium	25000			10000					P
14 Manganese	513			1000					P
15 Mercury				1					
16 Nickel	496	469	95	10000	10100	101	10200	102	P
17 Potassium	50200			50000					P
18 Selenium	1040	941	90	10000	10100	101	10200	102	P
19 Silver	509			1000					P
20 Sodium	50700			10000					P
21 Thallium				10000					
22 Tin	1000								P
23 Vanadium	511	506	99	1000	1010	101	1010	101	P
24 Zinc	3100	2900	94	1000	1020	102	1020	102	P
Other:									
*Magnesium				10000					P
*Iron				10000					P
Cyanide									

1 -Initial Calibration Source-> EPA 2 -Continuing Calibration Source-> Inorganic Ventures or Baker

3 - Control Limits: Mercury and Tin -> 80-120; All Other Compounds -> 90-110

4 - Indicate Analytical Method Used: P - ICP/Flame AA; F - Furnace

* - alternate lines used for high levels:
Magnesium>40000 ug/l and Iron>100000 ug/l

Form II - 2

Q. C. Report No... 161222

INITIAL AND CONTINUING CALIBRATION VERIFICATION[3]

LAB NAME.. WEYERHAEUSER
DATE..... 11-20-87

CASE NO.. 3285H-2
SOW NO... 784
UNITS.... ug/l

Compound	Initial Calib.[1] True Value	Found	%R	Continuing Calibration[2] True Value	Found	%R	Found	%R	Meth[4]
Metals:									
1 Aluminum									P
2 Antimony				10000					P
3 Arsenic				10000	10200	102	10100	101	P
4 Barium				10000					P
5 Beryllium				1000	1010	101	1010	101	P
6 Cadmium				1000	1030	103	1030	103	P
7 Calcium				10000					P
8 Chromium				1000	1020	102	1010	101	P
9 Cobalt				1000	1020	102	1010	101	P
10 Copper				1000	1010	101	1000	100	P
11 Iron				10000					P
12 Lead				10000	10000	100	9990	100	P
13 Magnesium				10000					P
14 Manganese				1000					P
15 Mercury				1					
16 Nickel				10000	10200	102	10200	102	P
17 Potassium				50000					P
18 Selenium				10000	10300	103	10100	101	P
19 Silver				1000					P
20 Sodium				10000					P
21 Thallium				10000					
22 Tin									P
23 Vanadium				1000	1020	102	1010	101	P
24 Zinc				1000	1020	102	1020	102	P
Other:									
*Magnesium				10000					P
*Iron				10000					P
Cyanide									

1 -Initial Calibration Source-> EPA 2 -Continuing Calibration Source-> Inorganic Ventures or Baker

3 - Control Limits: Mercury and Tin -> 80-120; All Other Compounds -> 90-110

4 - Indicate Analytical Method Used: P - ICP/Flame AA; F - Furnace

* - alternate lines used for high levels:
Magnesium>40000 ug/l and Iron>100000 ug/l

Form II -3

Q. C. Report No. 16122-2

INITIAL AND CONTINUING CALIBRATION VERIFICATION[3]

LAB NAME Weyerhaeuser

CASE NO. 3285H-2

SOW NO. 784

DATE 11-20-87

UNITS µg/L

Compound	Initial Calib.[1]			Continuing Calibration[2]					
Metals:	True Value	Found	%R	True Value	Found	%R	Found	%R	Method[4]
1. Aluminum									
2. Antimony									
3. Arsenic	41	41	100	35	32	91	32	91	F
4. Barium									
5. Beryllium									
6. Cadmium									
7. Calcium									
8. Chromium									
9. Cobalt									
10. Copper									
11. Iron									
12. Lead	46	49	107	35	37	106			F
13. Magnesium									
14. Manganese									
15. Mercury									
16. Nickel									
17. Potassium									
18. Selenium	43	47	109	35	35	100	36	103	F
19. Silver									
20. Sodium									
21. Thallium									
22. Tin									
23. Vanadium									
24. Zinc									
Other:									
Cyanide									

[1] Initial Calibration Source EPA [2] Continuing Calibration Source Baker

[3] Control Limits: Mercury and Tin 80-120; All Other Compounds 90-110

[4] Indicate Analytical Method Used: P - ICP/Flame AA; F - Furnace

Form II-4

Q. C. Report No. 16122-2

INITIAL AND CONTINUING CALIBRATION VERIFICATION[3]

LAB NAME Weyerhaeuser

CASE NO. 32854-2

SOW NO. 784

DATE 11-20-87

UNITS µg/L

Compound	Initial Calib.[1]			Continuing Calibration[2]					
Metals:	True Value	Found	%R	True Value	Found	%R	Found	%R	Method[4]
1. Aluminum									
2. Antimony									
3. Arsenic				35	34	97			F
4. Barium									
5. Beryllium									
6. Cadmium									
7. Calcium									
8. Chromium									
9. Cobalt									
10. Copper									
11. Iron									
12. Lead	46	49	107	35	34	97			F
13. Magnesium									
14. Manganese									
15. Mercury									
16. Nickel									
17. Potassium									
18. Selenium	43	47	109	35	32	91			F
19. Silver									
20. Sodium									
21. Thallium									
22. Tin									
23. Vanadium									
24. Zinc									
Other:									
Cyanide									

[1] Initial Calibration Source EPA [2] Continuing Calibration Source Baker

[3] Control Limits: Mercury and Tin 80-120; All Other Compounds 90-110

[4] Indicate Analytical Method Used: P - ICP/Flame AA; F - Furnace

Form II -5

Q. C. Report No. 16122-2

INITIAL AND CONTINUING CALIBRATION VERIFICATION[3]

LAB NAME Weyerhaeuser

CASE NO. 32854-2

SOW NO. 784

DATE 11-20-87

UNITS µg/L

Compound	Initial Calib.[1]			Continuing Calibration[2]					
Metals:	True Value	Found	%R	True Value	Found	%R	Found	%R	Method[4]
1. Aluminum									
2. Antimony									
3. Arsenic	41	44	107	35	34	97	34	97	F
4. Barium									
5. Beryllium									
6. Cadmium									
7. Calcium									
8. Chromium									
9. Cobalt									
10. Copper									
11. Iron									
12. Lead									
13. Magnesium									
14. Manganese									
15. Mercury									
16. Nickel									
17. Potassium									
18. Selenium	43	47	109	35	32	91	34	97	F
19. Silver									
20. Sodium									
21. Thallium									
22. Tin									
23. Vanadium									
24. Zinc									
Other:									
Cyanide									

[1] Initial Calibration Source EPA [2] Continuing Calibration Source Baker

[3] Control Limits: Mercury and Tin 80-120; All Other Compounds 90-110

[4] Indicate Analytical Method Used: P - ICP/Flame AA; F - Furnace

Form II-6

Q. C. Report No. 16122-2

INITIAL AND CONTINUING CALIBRATION VERIFICATION[3]

LAB NAME Weyerhaeuser

CASE NO. 3285H-2

SOW NO. 784

DATE 11-20-87

UNITS µg/L

Compound	Initial Calib.[1]			Continuing Calibration[2]					
Metals[1]	True Value	Found	%R	True Value	Found	%R	Found	%R	Method[4]
1. Aluminum									
2. Antimony									
3. Arsenic				35	34	97	36	103	F
4. Barium									
5. Beryllium									
6. Cadmium									
7. Calcium									
8. Chromium									
9. Cobalt									
10. Copper									
11. Iron									
12. Lead									
13. Magnesium									
14. Manganese									
15. Mercury									
16. Nickel									
17. Potassium									
18. Selenium				35	33	94	33	94	F
19. Silver									
20. Sodium									
21. Thallium									
22. Tin									
23. Vanadium									
24. Zinc									
Other:									
Cyanide									

[1] Initial Calibration Source EPA [2] Continuing Calibration Source Baker

[3] Control Limits: Mercury and Tin 80-120; All Other Compounds 90-110

[4] Indicate Analytical Method Used: P - ICP/Flame AA; F - Furnace

Form II - 7

Q. C. Report No. 16122-2

INITIAL AND CONTINUING CALIBRATION VERIFICATION[3]

LAB NAME Weyerhaeuser

CASE NO. 32854-2

SOW NO. 784

DATE 11-20-87

UNITS µg/L

Compound	Initial Calib.[1]			Continuing Calibration[2]					
Metals:	True Value	Found	%R	True Value	Found	%R	Found	%R	Method[4]
1. Aluminum									
2. Antimony									
3. Arsenic									
4. Barium									
5. Beryllium									
6. Cadmium									
7. Calcium									
8. Chromium									
9. Cobalt									
10. Copper									
11. Iron									
12. Lead									
13. Magnesium									
14. Manganese									
15. Mercury									
16. Nickel									
17. Potassium									
18. Selenium	43	46	107	35	37	106			F
19. Silver									
20. Sodium									
21. Thallium									
22. Tin									
23. Vanadium									
24. Zinc									
Other:									
Cyanide									

[1] Initial Calibration Source EPA [2] Continuing Calibration Source Baker

[3] Control Limits: Mercury and Tin 80-120; All Other Compounds 90-110

[4] Indicate Analytical Method Used: P - ICP/Flame AA; F - Furnace

Form III - 1

Q. C. Report No.. 161222
BLANKS

LAB NAME.. WEYERHAEUSER
DATE..... 11-20-87

CASE NO.. 3285H-2
UNITS.... ug/l
MATRIX... WATER

Preparation Compound	Initial Cal.	Continuing Calibration Blank Value 1	2	3	4	Preparation Blank 1	2
Metals:							
1 Aluminum	10U	10U	10U	10U	10U		
2 Antimony	60U	60U	60U	60U	60U		
3 Arsenic	30U	30U	30U	30U	30U		
4 Barium	2.0U	2.0U	2.0U	2.0U	2.0U		
5 Beryllium	2.0U	2.0U	2.0U	2.0U	2.0U		
6 Cadmium	3.0U	3.0U	3.0U	3.0U	3.0U		
7 Calcium	6.0U	6.0U	6.0U	6.0U	6.0U		
8 Chromium	3.0U	3.0U	3.0U	3.0U	3.0U		
9 Cobalt	3.0U	3.0U	3.0U	3.0U	3.0U		
10 Copper	3.0U	3.0U	3.0U	3.0U	3.0U		
11 Iron	4.0U	4.0U	4.0U	4.0U	4.0U		
12 Lead	60U	60U	60U	60U	60U		
13 Magnesium	3.0U	3.0U	3.0U	3.0U	3.0U		
14 Manganese	2.0U	2.0U	2.0U	2.0U	2.0U		
15 Mercury							
16 Nickel	15U	15U	15U	15U	15U		
17 Potassium	200U	200U	200U	200U	200U		
18 Selenium	40U	40U	40U	40U	40U		
19 Silver	6.0U	6.0U	6.0U	6.0U	6.0U		
20 Sodium	10U	10U	10U	10U	10U		
21 Thallium	40U	40U	40U	40U	40U		
22 Tin	30U	30U	30U	30U	30U		
23 Vanadium	2.0U	2.0U	2.0U	2.0U	2.0U		
24 Zinc	2.0U	2.0U	2.0U	2.0U	2.0U		
Other:							
*Magnesium	300U	300U	300U	300U	300U		
*Iron	100U	100U	100U	100U	100U		
Cyanide							

* - alternate lines used for high levels:
Magnesium>40000 ug/l and Iron>100000 ug/l

Form III -2

Q. C. Report No. 16122-2

BLANKS

LAB NAME Weyerhaeuser

CASE NO. 3285H-2

DATE 11-20-87

UNITS ug/L

Matrix Water

Preparation Compound	Initial Calibration Blank Value	Continuing Calibration Blank Value 1	2	3	4	Preparation Blank 1	2
Metals:							
1. Aluminum							
2. Antimony							
3. Arsenic	2U	2U	2U	2U			
4. Barium							
5. Beryllium							
6. Cadmium							
7. Calcium							
8. Chromium							
9. Cobalt							
10. Copper							
11. Iron							
12. Lead	3U	3U					
13. Magnesium							
14. Manganese							
15. Mercury							
16. Nickel							
17. Potassium							
18. Selenium	3U	3U	3U				
19. Silver							
20. Sodium							
21. Thallium							
22. Tin							
23. Vanadium							
24. Zinc							
Other:							
Cyanide							

Form III - 3

Q. C. Report No. 16122-2

BLANKS

LAB NAME Weyerhaeuser CASE NO. 3285H-2

DATE 11-20-87 UNITS µg/L

Matrix Water

Preparation Compound	Initial Calibration Blank Value	Continuing Calibration Blank Value 1	2	3	4	Preparation Blank 1	2
Metals:							
1. Aluminum							
2. Antimony							
3. Arsenic	24	24	24				
4. Barium							
5. Beryllium							
6. Cadmium							
7. Calcium							
8. Chromium							
9. Cobalt							
10. Copper							
11. Iron							
12. Lead	34	34					
13. Magnesium							
14. Manganese							
15. Mercury							
16. Nickel							
17. Potassium							
18. Selenium	34	34	34	34			
19. Silver							
20. Sodium							
21. Thallium							
22. Tin							
23. Vanadium							
24. Zinc							
Other:							
Cyanide							

Form III - 4

Q. C. Report No. 16122-2

BLANKS

LAB NAME Weyerhaeuser

CASE NO. 3285H-2

DATE 11-20-87

UNITS µg/L

Matrix Water

Preparation Compound	Initial Calibration Blank Value	Continuing Calibration Blank Value 1	2	3	4	Preparation Blank 1	2
Metals:							
1. Aluminum							
2. Antimony							
3. Arsenic							
4. Barium							
5. Beryllium							
6. Cadmium							
7. Calcium							
8. Chromium							
9. Cobalt							
10. Copper							
11. Iron							
12. Lead							
13. Magnesium							
14. Manganese							
15. Mercury							
16. Nickel							
17. Potassium							
18. Selenium	34	34	34	34	34		
19. Silver							
20. Sodium							
21. Thallium							
22. Tin							
23. Vanadium							
24. Zinc							
Other:							
Cyanide							

Form III - 5

Q. C. Report No. 16122-2

BLANKS

LAB NAME Weyerhaeuser CASE NO. 3285H-2

DATE 11-20-87 UNITS ug/L

Matrix Water

Preparation Compound	Initial Calibration Blank Value	Continuing Calibration Blank Value 1	2	3	4	Preparation Blank 1	2
Metals:							
1. Aluminum							
2. Antimony							
3. Arsenic							
4. Barium							
5. Beryllium							
6. Cadmium							
7. Calcium							
8. Chromium							
9. Cobalt							
10. Copper							
11. Iron							
12. Lead							
13. Magnesium							
14. Manganese							
15. Mercury							
16. Nickel							
17. Potassium							
18. Selenium	34	34					
19. Silver							
20. Sodium							
21. Thallium							
22. Tin							
23. Vanadium							
24. Zinc							
Other:							
Cyanide							

WEYERHAEUSER TECHNOLOGY CENTER
Analytical Laboratories
Tacoma, Washington

REPORT

SAS-3285H
Blanks (Filter + Reagent)

Service Request 16122-2
Page _____ of _____

SAMPLE DESCRIPTION	ANALYTICAL LAB CODE	As	Be	Cd	Cr	Co	Cu	Pb	Ni	Se	V	Zn
Rgt. Blk.	1	2u	2u	3u	[3]	3u	3u	[7]	15u	3u	2u	[2]
	2	2u	2u	3u	[3]	3u	3u	3u	15u	3u	2u	2u
	3	2u	2u	3u	3u	3u	[3]	3u	15u	3u	2u	2u
Filt. Blk.	1	2u	2u	3u	[8]	3u	[4]	[6]	15u	3u	2u	[10]
	2	2u	2u	3u	11	3u	[12]	[4]	15u	3u	2u	[8]
	3	2u	2u	3u	[4]	3u	[3]	3u	15u	3u	2u	[8]

Approved Kim Dotson
Date 11-18-87
Notebook
Page Number 042

FORM 4700-1 2/86 PRINTING SERVICES/TACOMA

Form IV

Q. C. Report No.. 161222
ICP INTERFERENCE CHECK SAMPLE

LAB NAME.. WEYERHAEUSER
DATE..... 11-20-87

CASE NO..... 3285H-2
Check Sample ID..... ICS 0387
Check Sample Source... EPA
Units..... ug/l

Compound Metals:	Control Limits Mean	1 StdDev	2 True	Initial Observed	%R	Final Observed	%R
1 Aluminum			508000				
2 Antimony							
3 Arsenic			—	30u	—	30u	—
4 Barium			483				
5 Beryllium			474	446	94	447	94
6 Cadmium			909	883	97	889	98
7 Calcium			516000				
8 Chromium			513	491	96	496	97
9 Cobalt			478	459	96	463	97
10 Copper			534	515	96	517	97
11 Iron			203000				
12 Lead			4850	4550	94	4560	94
13 Magnesium			509000				
14 Manganese			531				
15 Mercury							
16 Nickel			916	873	95	857	94
17 Potassium							
18 Selenium			—	40u	—	40u	—
19 Silver			993				
20 Sodium							
21 Thallium							
22 Tin							
23 Vanadium			475	502	106	504	106
24 Zinc			973	920	95	924	95
Other:							

Form VI

Q. C. Report No... 161222
DUPLICATES

LAB NAME... WEYERHAEUSER
DATE..... 11-20-87

CASE NO... 3285H-2
EPA Sample No..... 01A-006
Lab Sample ID No.... 99305
Units.. ug/l

MATRIX... FILTER

Compound	Control Limit[1]	Sample	Duplicate	RPD[2]
Metals:				
1 Aluminum				NC
2 Antimony				NC
3 Arsenic		44	38	15
4 Barium				NC
5 Beryllium		2.0 U	2.0 U	NC
6 Cadmium	[	3.3]	3.0 U	NC
7 Calcium				NC
8 Chromium		21	20	5.2
9 Cobalt	[	3.8]	3.0 U	NC
10 Copper		650	652	0.26
11 Iron				NC
12 Lead		555	550	1.1
13 Magnesium				NC
14 Manganese				NC
15 Mercury				NC
16 Nickel	[	17][	20]	NC
17 Potassium				NC
18 Selenium		\\	\\	0
19 Silver				NC
20 Sodium				NC
21 Thallium				NC
22 Tin				NC
23 Vanadium		11	10	7.9
24 Zinc		355	342	4.0

Other:

Cyanide

* Out of Control

1 to be added at a later date.

2 RPD =[|S-D|/((S+D)/2)] x 100

NC - Non calculable RPD due to value(s) less than CRDL

Form VI

Q. C. Report No... 161222
DUPLICATES

LAB NAME... WEYERHAEUSER
DATE..... 11-20-87

CASE NO... 3285H-2
EPA Sample No..... E2B-007
Lab Sample ID No.... 99315
Units.. ug/l

MATRIX... FILTER

Compound	Control Limit	1 Sample	Duplicate	2 RPD
Metals:				
1 Aluminum				NC
2 Antimony				NC
3 Arsenic		[7]	[5]	NC
4 Barium				NC
5 Beryllium		2.0 U	2.0 U	NC
6 Cadmium		3.0 U	3.0 U	NC
7 Calcium				NC
8 Chromium		11	14	19
9 Cobalt		3.0 U	3.0 U	NC
10 Copper		39	30	25
11 Iron				NC
12 Lead		111	98	13
13 Magnesium				NC
14 Manganese				NC
15 Mercury				NC
16 Nickel		15U	15U	NC
17 Potassium				NC
18 Selenium		3u	[4]	NC
19 Silver				NC
20 Sodium				NC
21 Thallium				NC
22 Tin				NC
23 Vanadium		2.0 U	2.0 U	
24 Zinc		102	92	11
Other:				
Cyanide				

* Out of Control
1 to be added at a later date.
2 RPD =[|S-D|/((S+D)/2)] x 100
NC - Non calculable RPD due to value(s) less than CRDL

Form VI

Q. C. Report No... 161222
DUPLICATES

LAB NAME... WEYERHAEUSER
DATE..... 11-20-87

CASE NO... 3285H-2
EPA Sample No..... 04C-009K
Lab Sample ID No.... 99333
Units.. ug/l

MATRIX... FILTER

Compound	Control Limit[1]	Sample	Duplicate	RPD[2]
Metals:				
1 Aluminum				NC
2 Antimony				NC
3 Arsenic		31	31	0
4 Barium				NC
5 Beryllium		2.0 U	2.0 U	NC
6 Cadmium		3.0 U	3.0 U	NC
7 Calcium				NC
8 Chromium		18	13	34
9 Cobalt		[3.1]	3.0 U	NC
10 Copper		178	194	8.5
11 Iron				NC
12 Lead		450	456	1.3
13 Magnesium				NC
14 Manganese				NC
15 Mercury				NC
16 Nickel		[18]	15U	NC
17 Potassium				NC
18 Selenium		[4]	[6]	NC
19 Silver				NC
20 Sodium				NC
21 Thallium				NC
22 Tin				NC
23 Vanadium		5.6	5.3	6.9
24 Zinc		217	222	2.3
Other:				
Cyanide				

* Out of Control
1 to be added at a later date.
2 RPD =[|S-D|/((S+D)/2)] x 100
NC - Non calculable RPD due to value(s) less than CRDL

Form VII

Q.C. Report No. 16122-2

INSTRUMENT DETECTION LIMITS AND

Method **CONTROL SAMPLE** - 1

LAB NAME Weyerhaeuser **CASE NO.** SAS-3285H

DATE _____ **LCS UNITS** (ug/L) mg/kg

(Circle One)

Compound	Required Detection Limits (CRDL)-ug/l	Instrument Detection Limits (IDL)-ug/l ICP/AA	Instrument Detection Limits (IDL)-ug/l Furnace	Method Control Sample True	Method Control Sample Found	Method Control Sample %R
Metals:						
1. Aluminum						
2. Antimony						
3. Arsenic	10	30	2	100	101	101
4. Barium						
5. Beryllium	5	2		50	49	98
6. Cadmium	5	3		50	49	98
7. Calcium						
8. Chromium	10	3		100	110	110
9. Cobalt	50	3		500	521	104
10. Copper	25	3		250	255	102
11. Iron						
12. Lead	10	60	3	1000	1030	103
13. Magnesium						
14. Manganese						
15. Mercury						
16. Nickel	40	15		400	410	103
17. Potassium						
18. Selenium	10	40	3	250	253	101
19. Silver						
20. Sodium						
21. Thallium						
22. Tin						
23. Vanadium	50	2		500	516	103
24. Zinc	20	2		200	211	106
Other:						
Cyanide						

047

Form VII

Q.C. Report No. 16122-2

INSTRUMENT DETECTION LIMITS AND

Method CONTROL SAMPLE - 2

LAB NAME Weyerhaeuser CASE NO. SAS-3285H

DATE _____ LCS UNITS ug/L mg/kg

(Circle One)

Compound	Required Detection Limits (CRDL)-ug/l	Instrument Detection Limits (IDL)-ug/l ICP/AA	Furnace	Method Control Sample True	Found	%R
Metals:						
1. Aluminum						
2. Antimony						
3. Arsenic	10	30	2	100	91	91
4. Barium						
5. Beryllium	5	2		50	49	98
6. Cadmium	5	3		50	49	98
7. Calcium						
8. Chromium	10	3		100	112	112
9. Cobalt	50	3		500	524	105
10. Copper	25	3		250	257	103
11. Iron						
12. Lead	10	60	3	1000	1020	102
13. Magnesium						
14. Manganese						
15. Mercury						
16. Nickel	40	15		400	417	104
17. Potassium						
18. Selenium	10	40	3	250	276	110
19. Silver						
20. Sodium						
21. Thallium						
22. Tin						
23. Vanadium	50	2		500	516	103
24. Zinc	20	2		200	212	106
Other:						
Cyanide						

Form VII

Q.C. Report No. 16122-2

INSTRUMENT DETECTION LIMITS AND

Method **CONTROL SAMPLE** -3

LAB NAME Weyerhaeuser **CASE NO.** SAS-3285H

DATE _____ **LCS UNITS** (ug/L) mg/kg

(Circle One)

Compound	Required Detection Limits (CRDL)-ug/l	Instrument Detection Limits (IDL)-ug/l ICP/AA	Instrument Detection Limits (IDL)-ug/l Furnace	Method Control Sample True	Method Control Sample Found	Method Control Sample %R
Metals:						
1. Aluminum						
2. Antimony						
3. Arsenic	10	30	2	100	106	106
4. Barium						
5. Beryllium	5	2		50	49	98
6. Cadmium	5	3		50	49	98
7. Calcium						
8. Chromium	10	3		100	108	108
9. Cobalt	50	3		500	519	104
10. Copper	25	3		250	257	103
11. Iron						
12. Lead	10	60	3	1000	1000	100
13. Magnesium						
14. Manganese						
15. Mercury						
16. Nickel	40	15		400	423	106
17. Potassium						
18. Selenium	10	40	3	250	272	109
19. Silver						
20. Sodium						
21. Thallium						
22. Tin						
23. Vanadium	50	2		500	514	103
24. Zinc	20	2		200	211	106
Other:						
Cyanide						

U.S. EPA Contract Laboratory Program
Sample Management Office
P.O. Box 818 - Alexandria, VA 22313
703/557-2490 FTS: 8-557-2490

Date 11-20-87

COVER PAGE - 1
INORGANIC ANALYSES DATA PACKAGE

Lab Name Weyerhaeuser

Case No. 32854

SOW No. 784

Q.C. Report No. 16122

Sample Numbers

EPA No.	Lab ID No.	EPA No.	Lab ID No.
01A-010	99335	02A-012	99344
01B-010	99336	02B-012	99345
02A-010	99337	04A-012	99346
02B-010	99338	04B-012	99347
04A-010	99339	E1B-009L	99348
04B-010	99340	E1A-013	99349
04C-008L	99341	E1B-013	99350
01A-012	99342	E2A-013	99351
01B-012	99343	E2B-013	99352

Comments:

ICP Interelement and background corrections applied? Yes X No ___.

If yes, corrections applied before X or after ___ generation of raw data.

Footnotes:

NR - not required by contract at this time

Form I:

Value - If the result is a value greater than or equal to the instrument detection limit but less than the contract required detection limit, report the value in brackets (i.e., [10]). Indicate the analytical method used with P (for ICP/Flame AA) or F (for furnace).

U - Indicates element was analyzed for but not detected. Report with the detection limit value (e.g., 10U).

E - Indicates a value estimated or not reported due to the presence of interference. Explanatory note included on cover page.

s - Indicates value determined by Method of Standard Addition.

R - Indicates spike sample recovery is not within control limits.

* - Indicates duplicate analysis is not within control limits.

\+ - Indicates the correlation coefficient for method of standard addition is less than 0.995

W - As per SOW 787

U.S. EPA Contract Laboratory Program
Sample Management Office
P.O. Box 818 - Alexandria, VA 22313
703/557-2490 FTS: 8-557-2490

Date 11-20-87

COVER PAGE - 2
INORGANIC ANALYSES DATA PACKAGE

Lab Name Weyerhaeuser Case No. 3285H

SOW No. 784 Q.C. Report No. 16122

Sample Numbers

EPA No.	Lab ID No.	EPA No.	Lab ID No.
E4A-013	99353		
E4B-013	99354		
E4C-013K	99355		

Comments:

ICP Interelement and background corrections applied? Yes X No ___.

If yes, corrections applied before X or after ___ generation of raw data.

Footnotes:

NR - not required by contract at this time

Form I:

Value - If the result is a value greater than or equal to the instrument detection limit but less than the contract required detection limit, report the value in brackets (i.e., [10]). Indicate the analytical method used with P (for ICP/Flame AA) or F (for furnace).

U - Indicates element was analyzed for but not detected. Report with the detection limit value (e.g., 10U).

E - Indicates a value estimated or not reported due to the presence of interference. Explanatory note included on cover page.

s - Indicates value determined by Method of Standard Addition.

R - Indicates spike sample recovery is not within control limits.

* - Indicates duplicate analysis is not within control limits.

+ - Indicates the correlation coefficient for method of standard addition is less than 0.995

Form II - 1

Q. C. Report No. 16122

INITIAL AND CONTINUING CALIBRATION VERIFICATION[3]

LAB NAME Weyerhaeuser

CASE NO. 3285H

SOW NO. 784

DATE 11-20-87

UNITS µg/L

Compound	Initial Calib.[1]			Continuing Calibration[2]					
Metals:	True Value	Found	%R	True Value	Found	%R	Found	%R	Method[4]
1. Aluminum									
2. Antimony									
3. Arsenic	470	434	92	10000	9800	98	9760	98	P
4. Barium									
5. Beryllium	481	479	100	1000	982	98	975	98	P
6. Cadmium	489	484	99	1000	1010	101	1010	101	P
7. Calcium									
8. Chromium	506	494	98	1000	987	99	986	99	P
9. Cobalt	474	476	100	1000	992	99	985	99	P
10. Copper	542	516	95	1000	990	99	983	98	P
11. Iron									
12. Lead	4510	4270	95	10000	9940	99	9930	99	P
13. Magnesium									
14. Manganese									
15. Mercury									
16. Nickel	496	478	96	10000	9900	99	9990	100	P
17. Potassium									
18. Selenium	1040	981	94	10000	9790	98	9850	99	P
19. Silver									
20. Sodium									
21. Thallium									
22. Tin									
23. Vanadium	511	510	100	1000	992	99	989	99	P
24. Zinc	3100	2930	95	1000	995	99	996	100	P
Other:									
Cyanide									

[1] Initial Calibration Source EPA [2] Continuing Calibration Source Inorganic Ventures or Baker

[3] Control Limits: Mercury and Tin 80-120; All Other Compounds 90-110

[4] Indicate Analytical Method Used: P - ICP/Flame AA; F - Furnace

Form II - 2

Q. C. Report No. 16122

INITIAL AND CONTINUING CALIBRATION VERIFICATION[3]

LAB NAME Weyerhaeuser

CASE NO. 3285H

SOW NO. 784

DATE 11-20-87

UNITS µg/L

Compound	Initial Calib.[1]			Continuing Calibration[2]					
Metals[4]	True Value	Found	%R	True Value	Found	%R	Found	%R	Method[4]
1. Aluminum									
2. Antimony									
3. Arsenic				10000	9720	97	9730	97	P
4. Barium									
5. Beryllium				1000	971	97	960	96	P
6. Cadmium				1000	1020	102	1020	102	P
7. Calcium									
8. Chromium				1000	991	99	986	99	P
9. Cobalt				1000	993	99	985	99	P
10. Copper				1000	979	98	975	98	P
11. Iron									
12. Lead				10000	9880	99	9820	98	P
13. Magnesium									
14. Manganese									
15. Mercury									
16. Nickel				10000	9940	99	9910	99	P
17. Potassium									
18. Selenium				10000	9860	99	9780	98	P
19. Silver									
20. Sodium									
21. Thallium									
22. Tin									
23. Vanadium				1000	990	99	985	99	P
24. Zinc				1000	1010	101	998	100	P
Other:									
Cyanide									

[1] Initial Calibration Source EPA [2] Continuing Calibration Source Inorganic Ventures for Baker

[3] Control Limits: Mercury and Tin 80-120; All Other Compounds 90-110

[4] Indicate Analytical Method Used: P - ICP/Flame AA; F - Furnace

Form II -3

Q. C. Report No. 16122

INITIAL AND CONTINUING CALIBRATION VERIFICATION[3]

LAB NAME Weyerhaeuser

CASE NO. 3285H

SOW NO. 784

DATE 11-20-87

UNITS µg/L

Compound	Initial Calib.[1]			Continuing Calibration[2]					
Metals:	True Value	Found	%R	True Value	Found	%R	Found	%R	Method[4]
1. Aluminum									
2. Antimony									
3. Arsenic	41	40	98	35	33	94	32	91	F
4. Barium									
5. Beryllium									
6. Cadmium									
7. Calcium									
8. Chromium									
9. Cobalt									
10. Copper									
11. Iron									
12. Lead	46	50	109	35	35	100			F
13. Magnesium									
14. Manganese									
15. Mercury									
16. Nickel									
17. Potassium									
18. Selenium									
19. Silver									
20. Sodium									
21. Thallium									
22. Tin									
23. Vanadium									
24. Zinc									
Other:									
Cyanide									

[1] Initial Calibration Source EPA [2] Continuing Calibration Source Inorganic Ventures or Baker

[3] Control Limits: Mercury and Tin 80-120; All Other Compounds 90-110

[4] Indicate Analytical Method Used: P - ICP/Flame AA; F - Furnace

Form II - 4

Q. C. Report No. 16122

INITIAL AND CONTINUING CALIBRATION VERIFICATION[3]

LAB NAME Weyerhaeuser

CASE NO. 3285H

SOW NO. 784

DATE 11-20-87

UNITS µg/L

Compound	Initial Calib.[1]			Continuing Calibration[2]					
Metals:	True Value	Found	%R	True Value	Found	%R	Found	%R	Method[4]
1. Aluminum									
2. Antimony									
3. Arsenic	41	42	102	35	36	103	34	97	F
4. Barium									
5. Beryllium									
6. Cadmium									
7. Calcium									
8. Chromium									
9. Cobalt									
10. Copper									
11. Iron									
12. Lead	46	48	104	35	37	106	38	109	F
13. Magnesium									
14. Manganese									
15. Mercury									
16. Nickel									
17. Potassium									
18. Selenium	43	46	107	35	37	106	34	97	F
19. Silver									
20. Sodium									
21. Thallium									
22. Tin									
23. Vanadium									
24. Zinc									
Other:									
Cyanide									

[1] Initial Calibration Source EPA [2] Continuing Calibration Source Inorganic Ventures or Baker

[3] Control Limits: Mercury and Tin 80-120; All Other Compounds 90-110

[4] Indicate Analytical Method Used: P - ICP/Flame AA; F - Furnace

Form II - 5

Q. C. Report No. 16122

INITIAL AND CONTINUING CALIBRATION VERIFICATION[3]

LAB NAME Weyerhaeuser

CASE NO. 3285H

SOW NO. 784

DATE 11-20-87

UNITS µg/L

Compound	Initial Calib.[1]			Continuing Calibration[2]					
Metals[1]	True Value	Found	%R	True Value	Found	%R	Found	%R	Method[4]
1. Aluminum									
2. Antimony									
3. Arsenic				35	35	100			F
4. Barium									
5. Beryllium									
6. Cadmium									
7. Calcium									
8. Chromium									
9. Cobalt									
10. Copper									
11. Iron									
12. Lead									
13. Magnesium									
14. Manganese									
15. Mercury									
16. Nickel									
17. Potassium									
18. Selenium	43	45	105	35	33	94			F
19. Silver									
20. Sodium									
21. Thallium									
22. Tin									
23. Vanadium									
24. Zinc									
Other:									
Cyanide									

[1] Initial Calibration Source EPA [2] Continuing Calibration Source Inorganic Ventures or Baker

[3] Control Limits: Mercury and Tin 80-120; All Other Compounds 90-110

[4] Indicate Analytical Method Used: P - ICP/Flame AA; F - Furnace

Form II - 6

Q. C. Report No. 16122

INITIAL AND CONTINUING CALIBRATION VERIFICATION[3]

LAB NAME Weyerhaeuser

CASE NO. 3285H

SOW NO. 784

DATE 11-20-87

UNITS µg/L

Compound	Initial Calib.[1]			Continuing Calibration[2]					
Metals[6]:	True Value	Found	%R	True Value	Found	%R	Found	%R	Method[4]
1. Aluminum									
2. Antimony									
3. Arsenic	41	42	102	35	35	100	35	100	F
4. Barium									
5. Beryllium									
6. Cadmium									
7. Calcium									
8. Chromium									
9. Cobalt									
10. Copper									
11. Iron									
12. Lead									
13. Magnesium									
14. Manganese									
15. Mercury									
16. Nickel									
17. Potassium									
18. Selenium	43	43	100	35	36	103			F
19. Silver									
20. Sodium									
21. Thallium									
22. Tin									
23. Vanadium									
24. Zinc									
Other:									
Cyanide									

[1] Initial Calibration Source EPA [2] Continuing Calibration Source Inorganic Ventures for Baker

[3] Control Limits: Mercury and Tin 80-120; All Other Compounds 90-110

[4] Indicate Analytical Method Used: P - ICP/Flame AA; F - Furnace

Form II - 7

Q. C. Report No. 16122

INITIAL AND CONTINUING CALIBRATION VERIFICATION[3]

LAB NAME Weyerhaeuser

CASE NO. 3285H

SOW NO. 784

DATE 11-20-87

UNITS µg/L

Compound	Initial Calib.[1]			Continuing Calibration[2]					
Metals:	True Value	Found	%R	True Value	Found	%R	Found	%R	Method[4]
1. Aluminum									
2. Antimony									
3. Arsenic									
4. Barium									
5. Beryllium									
6. Cadmium									
7. Calcium									
8. Chromium									
9. Cobalt									
10. Copper									
11. Iron									
12. Lead									
13. Magnesium									
14. Manganese									
15. Mercury									
16. Nickel									
17. Potassium									
18. Selenium	43	44	102	35	37	106	37	106	F
19. Silver									
20. Sodium									
21. Thallium									
22. Tin									
23. Vanadium									
24. Zinc									
Other:									
Cyanide									

[1] Initial Calibration Source EPA [2] Continuing Calibration Source Inorganic Ventures or Baker

[3] Control Limits: Mercury and Tin 80-120; All Other Compounds 90-110

[4] Indicate Analytical Method Used: P - ICP/Flame AA; F - Furnace

Form II - 8

Q. C. Report No. 16122

INITIAL AND CONTINUING CALIBRATION VERIFICATION[3]

LAB NAME Weyerhaeuser

CASE NO. 3285H

SOW NO. 784

DATE 11-20-87

UNITS µg/L

Compound	Initial Calib.[1]			Continuing Calibration[2]					
Metals[4]	True Value	Found	%R	True Value	Found	%R	Found	%R	Method[4]
1. Aluminum									
2. Antimony									
3. Arsenic									
4. Barium									
5. Beryllium									
6. Cadmium									
7. Calcium									
8. Chromium									
9. Cobalt									
10. Copper									
11. Iron									
12. Lead									
13. Magnesium									
14. Manganese									
15. Mercury									
16. Nickel									
17. Potassium									
18. Selenium				35	37	106	37	106	F
19. Silver									
20. Sodium									
21. Thallium									
22. Tin									
23. Vanadium									
24. Zinc									
Other:									
Cyanide									

[1] Initial Calibration Source EPA [2] Continuing Calibration Source Inorganic Ventures or Baker

[3] Control Limits: Mercury and Tin 80-120; All Other Compounds 90-110

[4] Indicate Analytical Method Used: P - ICP/Flame AA; F - Furnace

Form II - 9

Q. C. Report No. 16122

INITIAL AND CONTINUING CALIBRATION VERIFICATION[3]

LAB NAME Weyerhaeuser

CASE NO. 3285H

SOW NO. 784

DATE 11-20-87

UNITS µg/L

Compound	Initial Calib.[1]			Continuing Calibration[2]					
Metals:	True Value	Found	%R	True Value	Found	%R	Found	%R	Method[4]
1. Aluminum									
2. Antimony									
3. Arsenic									
4. Barium									
5. Beryllium									
6. Cadmium									
7. Calcium									
8. Chromium									
9. Cobalt									
10. Copper									
11. Iron									
12. Lead									
13. Magnesium									
14. Manganese									
15. Mercury									
16. Nickel									
17. Potassium									
18. Selenium				35	36	103			F
19. Silver									
20. Sodium									
21. Thallium									
22. Tin									
23. Vanadium									
24. Zinc									
Other:									
Cyanide									

[1] Initial Calibration Source EPA [2] Continuing Calibration Source Inorganic Ventures or Baker

[3] Control Limits: Mercury and Tin 80-120; All Other Compounds 90-110

[4] Indicate Analytical Method Used: P - ICP/Flame AA; F - Furnace

Form III - 1

Q. C. Report No. 16122

BLANKS

LAB NAME Weyerhaeuser CASE NO. 3285H

DATE 11-20-87 UNITS µg/L

Matrix Water

Preparation Compound	Initial Calibration Blank Value	Continuing Calibration Blank Value 1	2	3	4	Preparation Blank 1	2
Metals:							
1. Aluminum							
2. Antimony							
3. Arsenic	30U	30U	30U	30U	30U		
4. Barium							
5. Beryllium	2U	2U	2U	2U	2U		
6. Cadmium	3U	3U	3U	3U	3U		
7. Calcium							
8. Chromium	3U	3U	3U	3U	3U		
9. Cobalt	3U	3U	3U	3U	3U		
10. Copper	3U	3U	3U	3U	3U		
11. Iron							
12. Lead	60U	60U	60U	60U	60U		
13. Magnesium							
14. Manganese							
15. Mercury							
16. Nickel	15U	15U	15U	15U	15U		
17. Potassium							
18. Selenium	40U	40U	40U	40U	40U		
19. Silver							
20. Sodium							
21. Thallium							
22. Tin							
23. Vanadium	2U	2U	2U	2U	2U		
24. Zinc	2U	2U	2U	2U	2U		
Other:							
Cyanide							

Form III - 2

Q. C. Report No. 16122

BLANKS

LAB NAME Weyerhaeuser CASE NO. 3285H

DATE 11-20-87 UNITS ug/L

Matrix Water

Preparation Compound	Initial Calibration Blank Value	Continuing Calibration Blank Value 1	2	3	4	Preparation Blank 1	2
Metals:							
1. Aluminum							
2. Antimony							
3. Arsenic	4u	4u	4u				
4. Barium							
5. Beryllium							
6. Cadmium							
7. Calcium							
8. Chromium							
9. Cobalt							
10. Copper							
11. Iron							
12. Lead	3u	3u					
13. Magnesium							
14. Manganese							
15. Mercury							
16. Nickel							
17. Potassium							
18. Selenium	3u	3u	3u				
19. Silver							
20. Sodium							
21. Thallium							
22. Tin							
23. Vanadium							
24. Zinc							
Other:							
Cyanide							

Form III-3

Q. C. Report No. 16122

BLANKS

LAB NAME Weyerhaeuser CASE NO. 3285H

DATE 11-20-87 UNITS ug/L

Matrix Water

Preparation Compound	Initial Calibration Blank Value	Continuing Calibration Blank Value 1	2	3	4	Preparation Blank 1	2
Metals:							
1. Aluminum							
2. Antimony							
3. Arsenic	4U	4U	4U	4U			
4. Barium							
5. Beryllium							
6. Cadmium							
7. Calcium							
8. Chromium							
9. Cobalt							
10. Copper							
11. Iron							
12. Lead	3U	3U	3U				
13. Magnesium							
14. Manganese							
15. Mercury							
16. Nickel							
17. Potassium							
18. Selenium	3U	3U					
19. Silver							
20. Sodium							
21. Thallium							
22. Tin							
23. Vanadium							
24. Zinc							
Other:							
Cyanide							

Form III -4

Q. C. Report No. 16122

BLANKS

LAB NAME Weyerhaeuser CASE NO. 3285H

DATE 11-20-87 UNITS ug/L

Matrix Water

Preparation Compound	Initial Calibration Blank Value	Continuing Calibration Blank Value 1	2	3	4	Preparation Blank 1	2
Metals:							
1. Aluminum							
2. Antimony							
3. Arsenic	4U	4U	4U				
4. Barium							
5. Beryllium							
6. Cadmium							
7. Calcium							
8. Chromium							
9. Cobalt							
10. Copper							
11. Iron							
12. Lead							
13. Magnesium							
14. Manganese							
15. Mercury							
16. Nickel							
17. Potassium							
18. Selenium	3U	3U					
19. Silver							
20. Sodium							
21. Thallium							
22. Tin							
23. Vanadium							
24. Zinc							
Other:							
Cyanide							

Form III - 5

Q. C. Report No. 16122

BLANKS

LAB NAME Weyerhaeuser CASE NO. 3285H

DATE 11-20-87 UNITS ug/L

Matrix Water

Preparation Compound	Initial Calibration Blank Value	Continuing Calibration Blank Value 1	2	3	4	Preparation Blank 1	2
Metals:							
1. Aluminum							
2. Antimony							
3. Arsenic							
4. Barium							
5. Beryllium							
6. Cadmium							
7. Calcium							
8. Chromium							
9. Cobalt							
10. Copper							
11. Iron							
12. Lead							
13. Magnesium							
14. Manganese							
15. Mercury							
16. Nickel							
17. Potassium							
18. Selenium	3u	3u	3u	3u	3u		
19. Silver							
20. Sodium							
21. Thallium							
22. Tin							
23. Vanadium							
24. Zinc							
Other:							
Cyanide							

Form III - 6

Q. C. Report No. 16122

BLANKS

LAB NAME Weyerhaeuser CASE NO. 3285H

DATE 11-20-87 UNITS ug/L

Matrix Water

Preparation Compound	Initial Calibration Blank Value	Continuing Calibration Blank Value 1	2	3	4	Preparation Blank 1	2
Metals:							
1. Aluminum							
2. Antimony							
3. Arsenic							
4. Barium							
5. Beryllium							
6. Cadmium							
7. Calcium							
8. Chromium							
9. Cobalt							
10. Copper							
11. Iron							
12. Lead							
13. Magnesium							
14. Manganese							
15. Mercury							
16. Nickel							
17. Potassium							
18. Selenium		34					
19. Silver							
20. Sodium							
21. Thallium							
22. Tin							
23. Vanadium							
24. Zinc							
Other:							
Cyanide							

SAS-3285H
Blanks (Reagent + Filter)

WEYERHAEUSER TECHNOLOGY CENTER
Analytical Laboratories
Tacoma, Washington

REPORT

Service Request 16122
Page _____ of _____

SAMPLE DESCRIPTION	ANALYTICAL LAB CODE	As	Be	Cd	Cr	Co	Cu	Pb	Ni	Se	V	Zn
		µg/L →										
Rgt. Blk.	1	4u	2u	3u	3u	3u	3u	3u	15u	3u	2u	[4]
⊥	2	4u	2u	3u	3u	3u	3u	3u	15u	3u	2u	[3]
⊥	3	4u	2u	3u	3u	3u	3u	3u	15u	3u	2u	[2]
Filt. Blk.	1	4u	2u	3u	[3]	3u	3u	3u	15u	3u	2u	[11]
⊥	2	4u	2u	3u	[4]	3u	[4]	3u	15u	3u	2u	[9]
⊥	3	4u	2u	3u	[5]	3u	3u	3u	15u	3u	2u	[5]

Approved Lori Dolsee
Date 11-23-87
Notebook
Page Number 044

FORM 4700-1 2/86 PRINTING SERVICES/TACOMA

Form IV

Q. C. Report No. _____

ICP INTERFERENCE CHECK SAMPLE

LAB NAME Weyerhaeuser

DATE _____

CASE NO. _____

Check Sample I.D. (0387)

Check Sample Source EPA

Units ug/L

Compound	Control Limits[1] Mean	Control Limits[1] Std. Dev.	True[2]	Initial Observed	Initial %R	Final Observed	Final %R
Metals:							
1. Aluminum			508000				
2. Antimony			—		—		—
3. Arsenic			—	60u	—	60u	—
4. Barium			483				
5. Beryllium			474	446	94	436	92
6. Cadmium			909	880	97	882	97
7. Calcium			516000				
8. Chromium			513	480	93	482	94
9. Cobalt			478	450	94	448	94
10. Copper			534	524	98	506	95
11. Iron			203000				
12. Lead			4850	4540	94	4460	92
13. Magnesium			509000				
14. Manganese			531				
15. Mercury			—	—	—	—	—
16. Nickel			916	830	91	834	91
17. Potassium			—		—		—
18. Selenium			—	80u	—	80u	—
19. Silver			993				
20. Sodium			—		—		—
21. Thallium			921				
22. Tin			—		—		—
23. Vanadium			475	494	104	494	104
24. Zinc			973	916	94	912	94
Other:							

[1] Mean value based on n = _____.

[2] True value of EPA ICP Interference Check Sample or contractor standard.

Form VI-1

QC Report No. 16122

DUPLICATES

Lab Name Weyerhaeuser

Case No. 3285 H
EPA Sample ID 01B-010
Lab Sample ID No. 99336
Units µg/L

Date 11-20-87

Matrix other

Compound	Control Limit[1]	Sample(S)	Duplicate(D)	RPD[2]
Metals:				
1. Aluminum				
2. Antimony				
3. Arsenic		40	34	16
4. Barium				
5. Beryllium		2U	2U	NC
6. Cadmium		3U	3U	NC
7. Calcium				
8. Chromium		11	11	0
9. Cobalt		3U	[4]	NC
10. Copper		190	186	2.1
11. Iron				
12. Lead		409	393	4.0
13. Magnesium				
14. Manganese				
15. Mercury				
16. Nickel		15U	15U	NC
17. Potassium				
18. Selenium		15	12	22
19. Silver				
20. Sodium				
21. Thallium				
22. Tin				
23. Vanadium		[6]	[8]	NC
24. Zinc		228	226	0.9

Other:

Cyanide

* Out of Control

1 To be added at a later date.

2 RPD = [|S - D|/((S + D)/2)] x 100

NC - Non-calculable RPD due to value(s) less than CRDL

lt22/1107/d10

Form VI - 2

QC Report No. 16122

DUPLICATES

Lab Name Weyerhaeuser

Date 11-20-87

Case No. 3285H

EPA Sample ID 04A-012

Lab Sample ID No. 99346

Units ug/L

Matrix other

Compound	Control Limit[1]	Sample(S)	Duplicate(D)	RPD[2]
Metals:				
1. Aluminum				
2. Antimony				
3. Arsenic		85	80	6.1
4. Barium				
5. Beryllium		2u	2u	NC
6. Cadmium		[4]	[3]	NC
7. Calcium				
8. Chromium		14	13	7.4
9. Cobalt		[5]	[4]	NC
10. Copper		897	829	7.9
11. Iron				
12. Lead		540	542	0.4
13. Magnesium				
14. Manganese				
15. Mercury				
16. Nickel		15u	15u	NC
17. Potassium				
18. Selenium		44	42	4.7
19. Silver				
20. Sodium				
21. Thallium				
22. Tin				
23. Vanadium		[12]	[11]	NC
24. Zinc		400	378	5.7

Other:

Cyanide

* Out of Control

1 To be added at a later date.

2 RPD = [|S - D|/((S + D)/2)] x 100

NC - Non-calculable RPD due to value(s) less than CRDL

lt22/1107/d10

Form VI -3

QC Report No. 16122

DUPLICATES

Lab Name Weyerhaeuser

Case No. 3285H

EPA Sample ID E4C-013K

Lab Sample ID No. 99355

Units µg/L

Date 11-20-87

Matrix Other

Compound	Control Limit[1]	Sample(S)	Duplicate(D)	RPD[2]
Metals:				
1. Aluminum				
2. Antimony				
3. Arsenic		[9]	10	NC
4. Barium				
5. Beryllium		2U	2U	NC
6. Cadmium		3U	3U	NC
7. Calcium				
8. Chromium		[6]	[4]	NC
9. Cobalt		3U	3U	NC
10. Copper		51	53	3.8
11. Iron				
12. Lead		83	75	10
13. Magnesium				
14. Manganese				
15. Mercury				
16. Nickel		15U	15U	NC
17. Potassium				
18. Selenium		[6]	[8]	NC
19. Silver				
20. Sodium				
21. Thallium				
22. Tin				
23. Vanadium		2U	2U	NC
24. Zinc		55	54	1.8

Other:

Cyanide

* Out of Control

1 To be added at a later date.

2 RPD = [|S - D|/((S + D)/2)] x 100

NC - Non-calculable RPD due to value(s) less than CRDL

lt22/1107/d10

Form VII - 1

Q.C. Report No. 16122

INSTRUMENT DETECTION LIMITS AND

Method CONTROL SAMPLE - 1

LAB NAME Weyerhaeuser CASE NO. SAS-3285H

DATE 11-20-87 LCS UNITS ug/L mg/kg

(Circle One)

Compound	Required Detection Limits (CRDL)-ug/l	Instrument Detection Limits (IDL)-ug/l ICP/AA	Furnace	Method Control Sample True	Found	%R
Metals:						
1. Aluminum						
2. Antimony						
3. Arsenic	10	30	4	100	86	86
4. Barium						
5. Beryllium	5	2		50	49	98
6. Cadmium	5	3		50	47	94
7. Calcium						
8. Chromium	10	3		100	103	103
9. Cobalt	50	3		500	505	101
10. Copper	25	3		250	253	101
11. Iron						
12. Lead	10	60	3	1000	991	99
13. Magnesium						
14. Manganese						
15. Mercury						
16. Nickel	40	15		400	406	102
17. Potassium						
18. Selenium	10	40	3	250	257	103
19. Silver						
20. Sodium						
21. Thallium						
22. Tin						
23. Vanadium	50	2		500	503	101
24. Zinc	20	2		200	209	105
Other:						
Cyanide						

Form VII - 2

Q.C. Report No. 16122

INSTRUMENT DETECTION LIMITS AND

Method CONTROL SAMPLE - 2

LAB NAME Weyerhaeuser CASE NO. SAS-3285H

DATE 11-20-87 LCS UNITS ug/L mg/kg

(Circle One)

Compound	Required Detection Limits (CRDL)-ug/l	Instrument Detection Limits (IDL)-ug/l ICP/AA	Furnace	Method Control Sample True	Found	%R
Metals:						
1. Aluminum						
2. Antimony						
3. Arsenic	10	30	4	100	91	91
4. Barium						
5. Beryllium	5	2		50	49	98
6. Cadmium	5	3		50	49	98
7. Calcium						
8. Chromium	10	3		100	106	106
9. Cobalt	50	3		500	509	102
10. Copper	25	3		250	253	101
11. Iron						
12. Lead	10	60	3	1000	985	99
13. Magnesium						
14. Manganese						
15. Mercury						
16. Nickel	40	15		400	400	100
17. Potassium						
18. Selenium	10	40	3	250	273	109
19. Silver						
20. Sodium						
21. Thallium						
22. Tin						
23. Vanadium	50	2		500	506	101
24. Zinc	20	2		200	212	106
Other:						
Cyanide						

Form VII - 3

Q.C. Report No. 16122

INSTRUMENT DETECTION LIMITS AND

Method CONTROL SAMPLE - 3

LAB NAME Weyerhaeuser CASE NO. SAS-3285H

DATE 11-20-87 LCS UNITS (ug/L) mg/kg

(Circle One)

Compound	Required Detection Limits (CRDL)-ug/l	Instrument Detection Limits (IDL)-ug/l ICP/AA	Furnace	Method Control Sample True	Found	%R
Metals:						
1. Aluminum						
2. Antimony						
3. Arsenic	10	30	4	100	92	92
4. Barium						
5. Beryllium	5	2		50	49	98
6. Cadmium	5	3		50	47	94
7. Calcium						
8. Chromium	10	3		100	104	104
9. Cobalt	50	3		500	501	100
10. Copper	25	3		250	251	100
11. Iron						
12. Lead	10	60	3	1000	973	97
13. Magnesium						
14. Manganese						
15. Mercury						
16. Nickel	40	15		400	390	98
17. Potassium						
18. Selenium	10	40	3	250	235	94
19. Silver						
20. Sodium						
21. Thallium						
22. Tin						
23. Vanadium	50	2		500	495	99
24. Zinc	20	2		200	204	102
Other:						
Cyanide						

Form VIII

Q.C. Report No. 16122

STANDARD ADDITION RESULTS

LAB NAME Weyerhaeuser CASE NO. 3285H

DATE 11-20-87 UNITS ug/L

Sample #	Element	0 ADD ABS.	1 ADD CON./ABS[1]	2 ADD CON./ABS.[1]	3 ADD CON./ABS.[1]	FINAL CON.[2]	r*
	Not		Done				

[1] CON is the concentration added, ABS. is the instrument readout in absorbance or concentration.

[2] Concentration as determined by MSA

*"r" is the correlation coefficient.

+ - correlation coefficient is outside of control window of 0.995.

U.S. EPA Contract Laboratory Program
Sample Management Office
P.O. Box 818 - Alexanderia, VA 22313
703/557-2490 FTS: 8-557-2490 Date: 11-20-87

COVER PAGE

INORGANIC ANALYSES DATA PACKAGE

Lab Name.. WEYERHAEUSER Case No..... 3285H-4

SOW No..... 784 Q.C. Report No.. 161223

Sample Numbers

EPA No.	Lab ID No.	EPA No.	Lab ID No.
01A-004M	99401	02A-018	99395
01A-014	99365	02B-014	99368
01A-017	99386	02B-017	99389
01A-018	99393	02B-018	99396
01B-014	99366	04A-011L	99392
01B-017	99387	04A-014	99369
01B-018	99394	04A-017	99390
02A-014	99367	04A-018	99397
02A-017	99388	04B-014	99370

Comment:

ICP Interelement and background corrections applied ? Yes: X No :

If yes, corrections applied before: X or after: generation of raw data.

Footnotes:

NR - not required by contract at this time
Form I:
Value - If the result is a value greater than or equal to the instrument detection limit but less than the contract required detection limit, report the value in brackets (i.e., [10]). Indicate the analytical method used with P (for ICP/Flame), F (for furnace), or C (for flameless AA).
U - Indicates element was analyzed for but not detected. Report with the detection limit value (e.g. 10U).
E - Indicates a value estimated or not reported due to the presence of interference. Explanatory note included on cover page.
s - Indicates value determined by Method of Standard Addition.
R - Indicates spike sample recovery is not within control limits.
* - Indicates duplicate analysis is not within control limits.
+ - Indicates the correlation coefficient for method of standard addition is less than 0.995

U.S. EPA Contract Laboratory Program
Sample Management Office
P.O. Box 818 - Alexanderia, VA 22313
703/557-2490 FTS: 8-557-2490 Date: 11-20-87

COVER PAGE

INORGANIC ANALYSES DATA PACKAGE

Lab Name.. WEYERHAEUSER Case No..... 3285H-4

SOW No..... 784 Q.C. Report No.. 161223

Sample Numbers

EPA No.	Lab ID No.	EPA No.	Lab ID No.
04B-017	99391	E4A-016	99383
04B-018	99398	E4B-016	99384
04C-014	99371	E4C-016K	99385
04C-018K	99399		
E1A-016	99379		
E1B-016	99380		
E2A-016	99381		
E2B-010L	99378		
E2B-016	99382		

Comment:

ICP Interelement and background corrections applied ? Yes: X No :

If yes, corrections applied before: X or after: generation of raw data.

Footnotes:

NR - not required by contract at this time
Form I:
Value - If the result is a value greater than or equal to the instrument detection limit but less than the contract required detection limit, report the value in brackets (i.e., [10]). Indicate the analytical method used with P (for ICP/Flame), F (for furnace), or C (for flameless AA).
U - Indicates element was analyzed for but not detected. Report with the detection limit value (e.g. 10U).
E - Indicates a value estimated or not reported due to the presence of interference. Explanatory note included on cover page.
s - Indicates value determined by Method of Standard Addition.
R - Indicates spike sample recovery is not within control limits.
* - Indicates duplicate analysis is not within control limits.
+ - Indicates the correlation coefficient for method of standard addition is less than 0.995

Form II - 1

Q. C. Report No... 161223

INITIAL AND CONTINUING CALIBRATION VERIFICATION[3]

LAB NAME.. WEYERHAEUSER

CASE NO.. 3285H-4
SOW NO... 784

DATE..... 11-20-87

UNITS.... ug/l

Compound	Initial Calib.[1]			Continuing Calibration[2]					
Metals:	True Value	Found	%R	True Value	Found	%R	Found	%R	Meth[4]
1 Aluminum	1980								P
2 Antimony	807			10000					P
3 Arsenic	470	460	98	10000	10100	101	9830	98	P
4 Barium	1980			10000					P
5 Beryllium	481	484	101	1000	1000	100	1010	101	P
6 Cadmium	489	480	98	1000	992	99	1000	100	P
7 Calcium	49800			10000					P
8 Chromium	506	499	99	1000	1000	100	1000	100	P
9 Cobalt	474	481	101	1000	997	100	1000	100	P
10 Copper	542	522	96	1000	1000	100	1010	101	P
11 Iron	1990			10000					P
12 Lead	4510	4310	96	10000	9970	100	10000	100	P
13 Magnesium	25000			10000					P
14 Manganese	513			1000					P
15 Mercury				1					
16 Nickel	496	465	94	10000	9920	99	9970	100	P
17 Potassium	50200			50000					P
18 Selenium	1040	972	93	10000	10100	101	10200	102	P
19 Silver	509			1000					P
20 Sodium	50700			10000					P
21 Thallium									
22 Tin	1000								P
23 Vanadium	511	513	100	1000	1000	100	1000	100	P
24 Zinc	3100	2930	95	1000	993	99	1000	100	P
Other:									
*Magnesium				10000					P
*Iron				10000					P
Cyanide									

1 -Initial Calibration Source-> EPA

2 -Continuing Calibration Source-> INORGANIC VENTURES OR BAKER

3 - Control Limits: Mercury and Tin -> 80-120; All Other Compounds -> 90-110

4 - Indicate Analytical Method Used: P - ICP/Flame AA; F - Furnace

* - alternate lines used for high levels:
Magnesium>40000 ug/l and Iron>100000 ug/l

Form II - 2

Q. C. Report No... 161223

INITIAL AND CONTINUING CALIBRATION VERIFICATION[3]

LAB NAME.. WEYERHAEUSER
DATE..... 11-20-87

CASE NO.. 3285H-4
SOW NO... 784
UNITS.... ug/l

Compound	Initial Calib.[1] True Value	Initial Calib.[1] Found	Initial Calib.[1] %R	Continuing Calibration[2] True Value	Continuing Calibration[2] Found	Continuing Calibration[2] %R	Continuing Calibration[2] Found	Continuing Calibration[2] %R	Meth[4]
Metals:									
1 Aluminum									P
2 Antimony				10000					P
3 Arsenic				10000	10100	101	10100	101	P
4 Barium				10000					P
5 Beryllium				1000	1010	101	1010	101	P
6 Cadmium				1000	1010	101	1010	101	P
7 Calcium				10000					P
8 Chromium				1000	1010	101	1010	101	P
9 Cobalt				1000	1010	101	1010	101	P
10 Copper				1000	1010	101	1010	101	P
11 Iron				10000					P
12 Lead				10000	9830	98	9820	98	P
13 Magnesium				10000					P
14 Manganese				1000					P
15 Mercury				1					
16 Nickel				10000	10000	100	10000	100	P
17 Potassium				50000					P
18 Selenium				10000	10100	101	10200	102	P
19 Silver				1000					P
20 Sodium				10000					P
21 Thallium									
22 Tin									P
23 Vanadium				1000	1010	101	1000	100	P
24 Zinc				1000	1010	101	1010	101	P
Other:									
*Magnesium				10000					P
*Iron				10000					P
Cyanide									

1 -Initial Calibration Source-> EPA

2 -Continuing Calibration Source-> INORGANIC VENTURES OR BAKER

3 - Control Limits: Mercury and Tin -> 80-120; All Other Compounds -> 90-110

4 - Indicate Analytical Method Used: P - ICP/Flame AA; F - Furnace

* - alternate lines used for high levels:
Magnesium>40000 ug/l and Iron>100000 ug/l

Form II - 3

Q. C. Report No... 161223

INITIAL AND CONTINUING CALIBRATION VERIFICATION[3]

LAB NAME.. WEYERHAEUSER
DATE..... 11-20-87

CASE NO.. 3285H-4
SOW NO... 784
UNITS.... ug/l

Compound	1 Initial Calib. True Value	Found	%R	2 Continuing Calibration True Value	Found	%R	Found	%R	4 Meth
Metals:									
1 Aluminum									P
2 Antimony				10000					P
3 Arsenic				10000	10100	101			P
4 Barium				10000					P
5 Beryllium				1000	1010	101			P
6 Cadmium				1000	1010	101			P
7 Calcium				10000					P
8 Chromium				1000	1000	100			P
9 Cobalt				1000	1000	100			P
10 Copper				1000	1010	101			P
11 Iron				10000					P
12 Lead				10000	9930	99			P
13 Magnesium				10000					P
14 Manganese				1000					P
15 Mercury				1					
16 Nickel				10000	9970	100			P
17 Potassium				50000					P
18 Selenium				10000	10100	101			P
19 Silver				1000					P
20 Sodium				10000					P
21 Thallium									
22 Tin									P
23 Vanadium				1000	1000	100			P
24 Zinc				1000	1010	101			P
Other:									
*Magnesium				10000					P
*Iron				10000					P
Cyanide									

1 -Initial Calibration Source-> EPA

2 -Continuing Calibration Source-> INORGANIC VENTURES OR BAKER

3 - Control Limits: Mercury and Tin -> 80-120; All Other Compounds -> 90-110

4 - Indicate Analytical Method Used: P - ICP/Flame AA; F - Furnace

* - alternate lines used for high levels:
Magnesium>40000 ug/l and Iron>100000 ug/l

Form II-4

Q. C. Report No. 16122-4

INITIAL AND CONTINUING CALIBRATION VERIFICATION[3]

LAB NAME Weyerhaeuser

CASE NO. 3285H

SOW NO. 784

DATE 11-20-87

UNITS µg/L

Compound	Initial Calib.[1]			Continuing Calibration[2]					
Metals:	True Value	Found	%R	True Value	Found	%R	Found	%R	Method[4]
1. Aluminum									
2. Antimony									
3. Arsenic	41	44	107	35	36	103	36	103	F
4. Barium									
5. Beryllium									
6. Cadmium									
7. Calcium									
8. Chromium									
9. Cobalt									
10. Copper									
11. Iron									
12. Lead	46	50	109	35	37	106	38	109	F
13. Magnesium									
14. Manganese									
15. Mercury									
16. Nickel									
17. Potassium									
18. Selenium	43	47	109	35	36	103	36	103	F
19. Silver									
20. Sodium									
21. Thallium									
22. Tin									
23. Vanadium									
24. Zinc									
Other:									
Cyanide									

[1] Initial Calibration Source EPA [2] Continuing Calibration Source Inorganic Ventures or Baker

[3] Control Limits: Mercury and Tin 80-120; All Other Compounds 90-110

[4] Indicate Analytical Method Used: P - ICP/Flame AA; F - Furnace

Form II -5

Q. C. Report No. 16122-4

INITIAL AND CONTINUING CALIBRATION VERIFICATION[3]

LAB NAME Weyerhaeuser

CASE NO. 3285H

SOW NO. 784

DATE 11-20-87

UNITS µg/L

Compound	Initial Calib.[1]			Continuing Calibration[2]					
Metals[1]	True Value	Found	%R	True Value	Found	%R	Found	%R	Method[4]
1. Aluminum									
2. Antimony									
3. Arsenic				35	36	103	36	103	F
4. Barium									
5. Beryllium									
6. Cadmium									
7. Calcium									
8. Chromium									
9. Cobalt									
10. Copper									
11. Iron									
12. Lead	46	48	104	35	36	103			F
13. Magnesium									
14. Manganese									
15. Mercury									
16. Nickel									
17. Potassium									
18. Selenium				35	35	100	36	103	F
19. Silver									
20. Sodium									
21. Thallium									
22. Tin									
23. Vanadium									
24. Zinc									
Other:									
Cyanide									

[1] Initial Calibration Source EPA [2] Continuing Calibration Source Inorganic Ventures for Baker

[3] Control Limits: Mercury and Tin 80-120; All Other Compounds 90-110

[4] Indicate Analytical Method Used: P - ICP/Flame AA; F - Furnace

Form II - 6

Q. C. Report No. 16122-4

INITIAL AND CONTINUING CALIBRATION VERIFICATION[3]

LAB NAME Weyerhaeuser

CASE NO. 3285H

SOW NO. 784

DATE 11-20-87

UNITS µg/L

Compound	Initial Calib.[1]			Continuing Calibration[2]					
Metals	True Value	Found	%R	True Value	Found	%R	Found	%R	Method[4]
1. Aluminum									
2. Antimony									
3. Arsenic				35	34	97	32	91	F
4. Barium									
5. Beryllium									
6. Cadmium									
7. Calcium									
8. Chromium									
9. Cobalt									
10. Copper									
11. Iron									
12. Lead									
13. Magnesium									
14. Manganese									
15. Mercury									
16. Nickel									
17. Potassium									
18. Selenium				35	37	106	36	103	F
19. Silver									
20. Sodium									
21. Thallium									
22. Tin									
23. Vanadium									
24. Zinc									
Other:									
Cyanide									

[1] Initial Calibration Source EPA [2] Continuing Calibration Source Inorganic Ventures or Baker

[3] Control Limits: Mercury and Tin 80-120; All Other Compounds 90-110

[4] Indicate Analytical Method Used: P - ICP/Flame AA; F - Furnace

Form II - 7

Q. C. Report No. 16122-4

INITIAL AND CONTINUING CALIBRATION VERIFICATION[3]

LAB NAME Weyerhaeuser

CASE NO. 3285H

SOW NO. 784

DATE 11-20-87

UNITS µg/L

Compound	Initial Calib.[1]			Continuing Calibration[2]					
Metals[1]	True Value	Found	%R	True Value	Found	%R	Found	%R	Method[4]
1. Aluminum									
2. Antimony									
3. Arsenic	41	42	102	35	34	97	36	103	F
4. Barium									
5. Beryllium									
6. Cadmium									
7. Calcium									
8. Chromium									
9. Cobalt									
10. Copper									
11. Iron									
12. Lead									
13. Magnesium									
14. Manganese									
15. Mercury									
16. Nickel									
17. Potassium									
18. Selenium	43	40	93	35	36	103	36	103	F
19. Silver									
20. Sodium									
21. Thallium									
22. Tin									
23. Vanadium									
24. Zinc									
Other:									
Cyanide									

[1] Initial Calibration Source EPA [2] Continuing Calibration Source Inorganic Ventures or Baker

[3] Control Limits: Mercury and Tin 80-120; All Other Compounds 90-110

[4] Indicate Analytical Method Used: P - ICP/Flame AA; F - Furnace

Form II - 8

Q. C. Report No. 16122-4

INITIAL AND CONTINUING CALIBRATION VERIFICATION[3]

LAB NAME Weyerhaeuser

CASE NO. 3285H

SOW NO. 784

DATE 11-20-87

UNITS ug/L

Compound	Initial Calib.[1]			Continuing Calibration[2]					
Metals[1]	True Value	Found	%R	True Value	Found	%R	Found	%R	Method[4]
1. Aluminum									
2. Antimony									
3. Arsenic				35	35	100			F
4. Barium									
5. Beryllium									
6. Cadmium									
7. Calcium									
8. Chromium									
9. Cobalt									
10. Copper									
11. Iron									
12. Lead									
13. Magnesium									
14. Manganese									
15. Mercury									
16. Nickel									
17. Potassium									
18. Selenium	43	45	105	35	34	97			F
19. Silver									
20. Sodium									
21. Thallium									
22. Tin									
23. Vanadium									
24. Zinc									
Other:									
Cyanide									

[1] Initial Calibration Source EPA [2] Continuing Calibration Source Inorganic Ventures or Baker

[3] Control Limits: Mercury and Tin 80-120; All Other Compounds 90-110

[4] Indicate Analytical Method Used: F - ICP/Flame AA; F - Furnace

Form II-9

Q. C. Report No. 16122-4

INITIAL AND CONTINUING CALIBRATION VERIFICATION[3]

LAB NAME Weyerhaeuser

CASE NO. 3285H

SOW NO. 784

DATE 11-20-87

UNITS µg/L

Compound	Initial Calib.[1]			Continuing Calibration[2]					
Metals:	True Value	Found	%R	True Value	Found	%R	Found	%R	Method[4]
1. Aluminum									
2. Antimony									
3. Arsenic	41	44	107	35	32	91			F
4. Barium									
5. Beryllium									
6. Cadmium									
7. Calcium									
8. Chromium									
9. Cobalt									
10. Copper									
11. Iron									
12. Lead									
13. Magnesium									
14. Manganese									
15. Mercury									
16. Nickel									
17. Potassium									
18. Selenium									
19. Silver									
20. Sodium									
21. Thallium									
22. Tin									
23. Vanadium									
24. Zinc									
Other:									
Cyanide									

[1] Initial Calibration Source EPA [2] Continuing Calibration Source Inorganic Ventures or Baker

[3] Control Limits: Mercury and Tin 80-120; All Other Compounds 90-110

[4] Indicate Analytical Method Used: P - ICP/Flame AA; F - Furnace

Form II -10

Q. C. Report No. 16122-4

INITIAL AND CONTINUING CALIBRATION VERIFICATION[3]

LAB NAME Weyerhaeuser

CASE NO. 3285H

SOW NO. 784

DATE 11-20-87

UNITS µg/L

Compound	Initial Calib.[1]			Continuing Calibration[2]					
Metals[1]	True Value	Found	%R	True Value	Found	%R	Found	%R	Method[4]
1. Aluminum									
2. Antimony									
3. Arsenic	41	40	98	35	34	97			F
4. Barium									
5. Beryllium									
6. Cadmium									
7. Calcium									
8. Chromium									
9. Cobalt									
10. Copper									
11. Iron									
12. Lead									
13. Magnesium									
14. Manganese									
15. Mercury									
16. Nickel									
17. Potassium									
18. Selenium									
19. Silver									
20. Sodium									
21. Thallium									
22. Tin									
23. Vanadium									
24. Zinc									
Other:									
Cyanide									

[1] Initial Calibration Source EPA [2] Continuing Calibration Source Inorganic Ventures or Baker

[3] Control Limits: Mercury and Tin 80-120; All Other Compounds 90-110

[4] Indicate Analytical Method Used: P - ICP/Flame AA; F - Furnace

Form III - 1

Q. C. Report No.. 161223
BLANKS

LAB NAME.. WEYERHAEUSER
DATE..... 11-20-87

CASE NO.. 3285H-4
UNITS.... ug/l
MATRIX... WATER

Preparation Compound	Initial Cal.	Continuing Calibration Blank Value 1	2	3	4	Preparation Blank 1	2
Metals:							
1 Aluminum	10U	10U	10U	10U	10U		
2 Antimony	60U	60U	60U	60U	60U		
3 Arsenic	30U	30U	30U	30U	30U		
4 Barium	2.0U	2.0U	2.0U	2.0U	2.0U		
5 Beryllium	2.0U	2.0U	2.0U	2.0U	2.0U		
6 Cadmium	3.0U	3.0U	3.0U	3.0U	3.0U		
7 Calcium	6.0U	6.0U	6.0U	6.0U	6.0U		
8 Chromium	3.0U	3.0U	3.0U	3.0U	3.0U		
9 Cobalt	3.0U	3.0U	3.0U	3.0U	3.0U		
10 Copper	3.0U	3.0U	3.0U	3.0U	3.0U		
11 Iron	4.0U	4.0U	4.0U	4.0U	4.0U		
12 Lead	60U	60U	60U	60U	60U		
13 Magnesium	3.0U	3.0U	3.0U	3.0U	3.0U		
14 Manganese	2.0U	2.0U	2.0U	2.0U	2.0U		
15 Mercury							
16 Nickel	15U	15U	15U	15U	15U		
17 Potassium	200U	200U	200U	200U	200U		
18 Selenium	40U	40U	40U	40U	40U		
19 Silver	6.0U	6.0U	6.0U	6.0U	6.0U		
20 Sodium	10U	10U	10U	10U	10U		
21 Thallium	40U	40U	40U	40U	40U		
22 Tin	30U	30U	30U	30U	30U		
23 Vanadium	2.0U	2.0U	2.0U	2.0U	2.0U		
24 Zinc	2.0U	2.0U	2.0U	2.0U	2.0U		
Other:							
*Magnesium	300U	300U	300U	300U	300U		
*Iron	100U	100U	100U	100U	100U		
Cyanide							

* - alternate lines used for high levels:
Magnesium>40000 ug/l and Iron>100000 ug/l

Form III - 2

Q. C. Report No.. 161223
BLANKS

LAB NAME.. WEYERHAEUSER
DATE..... 11-20-87

CASE NO.. 3285H-4
UNITS.... ug/l
MATRIX... WATER

Preparation Compound	Initial Cal.	Continuing Calibration Blank Value 1	2	3	4	Preparation Blank 1	2
Metals:							
1 Aluminum		10U					
2 Antimony		60U					
3 Arsenic		30U					
4 Barium		2.0U					
5 Beryllium		2.0U					
6 Cadmium		3.0U					
7 Calcium		6.0U					
8 Chromium		3.0U					
9 Cobalt		3.0U					
10 Copper		3.0U					
11 Iron		4.0U					
12 Lead		60U					
13 Magnesium		3.0U					
14 Manganese		2.0U					
15 Mercury							
16 Nickel		15U					
17 Potassium		200U					
18 Selenium		40U					
19 Silver		6.0U					
20 Sodium		10U					
21 Thallium		40U					
22 Tin		30U					
23 Vanadium		2.0U					
24 Zinc		2.0U					
Other:							
*Magnesium		300U					
*Iron		100U					
Cyanide							

* - alternate lines used for high levels:
Magnesium>40000 ug/l and Iron>100000 ug/l

SAS-3285H

Blanks (Reagent & Filter)

WEYERHAEUSER TECHNOLOGY CENTER
Analytical Laboratories
Tacoma, Washington

REPORT

Service Request 16122-4

Page _____ of _____

SAMPLE DESCRIPTION	ANALYTICAL LAB CODE	As	Be	Cd	Cr	Co	Cu	Pb	Ni	Se	V	Zn
		µg/L →										
Rgt. Blk.	1	2u	2u	3u	3u	3u	3u	[4]	15u	3u	2u	[3]
	2	2u	2u	3u	3u	3u	3u	2u	15u	3u	2u	[2]
	3	2u	2u	3u	3u	3u	3u	[2]	15u	3u	2u	[5]
Filt. Blk.	1	2u	2u	3u	[4]	3u	[4]	[3]	15u	3u	2u	[8]
	2	2u	2u	3u	[4]	3u	[5]	[3]	15u	3u	2u	[13]
	3	2u	2u	3u	[4]	3u	3u	[4]	15u	3u	2u	[7]

Approved Kim Dotson

Date 11-24-87

Notebook

Page Number 050

FORM 4700-1 2/86 PRINTING SERVICES/TACOMA

Form III-3

Q. C. Report No. 16122-4

BLANKS

LAB NAME Weyerhaeuser CASE NO. 3285H

DATE 11-20-87 UNITS ug/L

Matrix Water

Preparation Compound	Initial Calibration Blank Value	Continuing Calibration Blank Value 1	2	3	4	Preparation Blank 1	2
Metals:							
1. Aluminum							
2. Antimony							
3. Arsenic	2u	2u	2u	2u	2u		
4. Barium							
5. Beryllium							
6. Cadmium							
7. Calcium							
8. Chromium							
9. Cobalt							
10. Copper							
11. Iron							
12. Lead	2u	2u	2u				
13. Magnesium							
14. Manganese							
15. Mercury							
16. Nickel							
17. Potassium							
18. Selenium	3u	3u	3u	3u	3u		
19. Silver							
20. Sodium							
21. Thallium							
22. Tin							
23. Vanadium							
24. Zinc							
Other:							
Cyanide							

Form III-4

Q. C. Report No. 16122-4

BLANKS

LAB NAME Weyerhaeuser CASE NO. 3285H

DATE 11-20-87 UNITS ug/L

Matrix Water

Preparation Compound	Initial Calibration Blank Value	Continuing Calibration Blank Value 1	2	3	4	Preparation Blank 1	2
Metals:							
1. Aluminum							
2. Antimony							
3. Arsenic		2u	2u				
4. Barium							
5. Beryllium							
6. Cadmium							
7. Calcium							
8. Chromium							
9. Cobalt							
10. Copper							
11. Iron							
12. Lead	2u	2u					
13. Magnesium							
14. Manganese							
15. Mercury							
16. Nickel							
17. Potassium							
18. Selenium		3u	3u				
19. Silver							
20. Sodium							
21. Thallium							
22. Tin							
23. Vanadium							
24. Zinc							
Other:							
Cyanide							

Form III - 5

Q. C. Report No. 16122-4

BLANKS

LAB NAME Weyerhaeuser CASE NO. 3285H

DATE 11-20-87 UNITS ug/L

Matrix Water

Preparation Compound	Initial Calibration Blank Value	Continuing Calibration Blank Value 1	2	3	4	Preparation Blank 1	2
Metals:							
1. Aluminum							
2. Antimony							
3. Arsenic	2u	2u	[4]	2u			
4. Barium							
5. Beryllium							
6. Cadmium							
7. Calcium							
8. Chromium							
9. Cobalt							
10. Copper							
11. Iron							
12. Lead							
13. Magnesium							
14. Manganese							
15. Mercury							
16. Nickel							
17. Potassium							
18. Selenium	3u	3u	3u				
19. Silver							
20. Sodium							
21. Thallium							
22. Tin							
23. Vanadium							
24. Zinc							
Other:							
Cyanide							

Form III - 6

Q. C. Report No. 16122-4

BLANKS

LAB NAME Weyerhaeuser CASE NO. 3285H

DATE 11-20-87 UNITS ug/L

Matrix Water

Preparation Compound	Initial Calibration Blank Value	Continuing Calibration Blank Value 1	2	3	4	Preparation Blank 1	2
Metals:							
1. Aluminum							
2. Antimony							
3. Arsenic	2u	2u					
4. Barium							
5. Beryllium							
6. Cadmium							
7. Calcium							
8. Chromium							
9. Cobalt							
10. Copper							
11. Iron							
12. Lead							
13. Magnesium							
14. Manganese							
15. Mercury							
16. Nickel							
17. Potassium							
18. Selenium	3u	3u					
19. Silver							
20. Sodium							
21. Thallium							
22. Tin							
23. Vanadium							
24. Zinc							
Other:							
Cyanide							

Form III - 7

Q. C. Report No. 16122-4

BLANKS

LAB NAME Weyerhaeuser CASE NO. 3285H

DATE 11-20-87 UNITS ug/L

Matrix Water

Preparation Compound	Initial Calibration Blank Value	Continuing Calibration Blank Value 1	2	3	4	Preparation Blank 1	2
Metals:							
1. Aluminum							
2. Antimony							
3. Arsenic	2u	2u					
4. Barium							
5. Beryllium							
6. Cadmium							
7. Calcium							
8. Chromium							
9. Cobalt							
10. Copper							
11. Iron							
12. Lead							
13. Magnesium							
14. Manganese							
15. Mercury							
16. Nickel							
17. Potassium							
18. Selenium							
19. Silver							
20. Sodium							
21. Thallium							
22. Tin							
23. Vanadium							
24. Zinc							
Other:							
Cyanide							

Form IV

Q. C. Report No.. 161223
ICP INTERFERENCE CHECK SAMPLE

LAB NAME.. WEYERHAEUSER
DATE..... 11-20-87

CASE NO..... 3285H-4
Check Sample ID..... ICS 0387
Check Sample Source... EPA
Units..... ug/l

Compound Metals:	Control Limits 1 Mean	StdDev	2 True	Initial Observed	%R	Final Observed	%R
1 Aluminum			508000				
2 Antimony			-				
3 Arsenic			-	60U	-	60U	-
4 Barium			483				
5 Beryllium			474	458	97	455	96
6 Cadmium			909	878	97	882	97
7 Calcium			516000				
8 Chromium			513	493	96	492	96
9 Cobalt			478	462	97	461	96
10 Copper			534	519	97	520	97
11 Iron			203000				
12 Lead			4850	4570	94	4530	93
13 Magnesium			509000				
14 Manganese			531				
15 Mercury			-				
16 Nickel			916	851	93	855	93
17 Potassium			-				
18 Selenium			-	80U	-	80U	-
19 Silver			993				
20 Sodium			-				
21 Thallium			921				
22 Tin			-				
23 Vanadium			475	502	105	500	105
24 Zinc			973	925	95	927	95
Other:							

Form VI

Q. C. Report No... 161223
DUPLICATES

LAB NAME... WEYERHAEUSER
DATE..... 11-20-87

CASE NO... 3285H-4
EPA Sample No..... 01A-014
Lab Sample ID No.... 99365
Units.. ug/l

MATRIX... WATER

Compound	Control Limit	Sample [1]	Duplicate	RPD [2]
Metals:				
1 Aluminum				NC
2 Antimony				NC
3 Arsenic		32	30	3.2
4 Barium				NC
5 Beryllium		2.0 U	2.0 U	NC
6 Cadmium		3.0 U	3.0 U	NC
7 Calcium				NC
8 Chromium		23	21	8.1
9 Cobalt		[3.9]	3.0 U	NC
10 Copper		482	420	14
11 Iron				NC
12 Lead		615	597	3.1
13 Magnesium				NC
14 Manganese				NC
15 Mercury				NC
16 Nickel		15U	[17]	NC
17 Potassium				NC
18 Selenium		10	12	18
19 Silver				NC
20 Sodium				NC
21 Thallium				NC
22 Tin				NC
23 Vanadium		[12]	[11]	8.2
24 Zinc		444	421	5.3
Other:				
Cyanide				

* Out of Control
1 to be added at a later date.
2 RPD =[|S-D|/((S+D)/2)] x 100
NC - Non calculable RPD due to value(s) less than CRDL

Form VI

Q. C. Report No... 161223
DUPLICATES

LAB NAME... WEYERHAEUSER
DATE..... 11-20-87

CASE NO... 3285H-4
EPA Sample No..... E4C-016K
Lab Sample ID No.... 99385
Units.. ug/l

MATRIX... WATER

Compound	Control Limit	1 Sample	Duplicate	2 RPD
Metals:				
1 Aluminum				NC
2 Antimony				NC
3 Arsenic		[4]	[4]	NC
4 Barium				NC
5 Beryllium		2.0 U	2.0 U	NC
6 Cadmium		3.0 U	3.0 U	NC
7 Calcium				NC
8 Chromium		[9.5]	[4.4]	NC
9 Cobalt		3.0 U	3.0 U	NC
10 Copper		[17]	[19]	NC
11 Iron				NC
12 Lead		36	35	2.8
13 Magnesium				NC
14 Manganese				NC
15 Mercury				NC
16 Nickel		15U	15U	NC
17 Potassium				NC
18 Selenium		3u	3u	NC
19 Silver				NC
20 Sodium				NC
21 Thallium				NC
22 Tin				NC
23 Vanadium		2.0 U	2.0 U	NC
24 Zinc		38	43	11
Other:				
Cyanide				

* Out of Control
1 to be added at a later date. 2 RPD =[|S-D|/((S+D)/2)] x 100
NC - Non calculable RPD due to value(s) less than CRDL

Form VI

Q. C. Report No... 161223
DUPLICATES

LAB NAME... WEYERHAEUSER
DATE..... 11-20-87

CASE NO... 3285H-4
EPA Sample No..... 02A-018
Lab Sample ID No.... 99395
Units.. ug/l

MATRIX... WATER

Compound	Control Limit[1]	Sample	Duplicate	RPD[2]
Metals:				
1 Aluminum				NC
2 Antimony				NC
3 Arsenic		23	28	20
4 Barium				NC
5 Beryllium		2.0 U	2.0 U	NC
6 Cadmium		3.0 U	3.0 U	NC
7 Calcium				NC
8 Chromium		[7.1]	[6.7]	NC
9 Cobalt		3.0 U	3.0 U	NC
10 Copper		362	341	6.0
11 Iron				NC
12 Lead		386	408	5.6
13 Magnesium				NC
14 Manganese				NC
15 Mercury				NC
16 Nickel		15U	15U	NC
17 Potassium				NC
18 Selenium		[5]	[4]	NC
19 Silver				NC
20 Sodium				NC
21 Thallium				NC
22 Tin				NC
23 Vanadium		[3.6]	[3.8]	4.7
24 Zinc		157	153	2.5
Other:				
Cyanide				

* Out of Control
1 to be added at a later date.
2 RPD =[|S-D|/((S+D)/2)] x 100
NC - Non calculable RPD due to value(s) less than CRDL

Form VII - 1

Q.C. Report No. 16122-4

INSTRUMENT DETECTION LIMITS AND

Method CONTROL SAMPLE - 1

LAB NAME Weyerhaeuser CASE NO. SAS-3285H

DATE 11-20-87 LCS UNITS ug/L mg/kg

(Circle One)

Compound	Required Detection Limits (CRDL)-ug/l	Instrument Detection Limits (IDL)-ug/l ICP/AA	Furnace	Method Control Sample True	Found	%R
Metals:						
1. Aluminum						
2. Antimony						
3. Arsenic	10	30	2	100	108	108
4. Barium						
5. Beryllium	5	2		50	48	96
6. Cadmium	5	3		50	47	94
7. Calcium						
8. Chromium	10	3		100	105	105
9. Cobalt	50	3		500	503	100
10. Copper	25	3		250	254	102
11. Iron						
12. Lead	10	60	2	1000	1000	100
13. Magnesium						
14. Manganese						
15. Mercury						
16. Nickel	40	15		400	393	98
17. Potassium						
18. Selenium	10	40	3	250	269	108
19. Silver						
20. Sodium						
21. Thallium						
22. Tin						
23. Vanadium	50	2		500	498	100
24. Zinc	20	2		200	218	109
Other:						
Cyanide						

Form VII -2

Q.C. Report No. 16122-4

INSTRUMENT DETECTION LIMITS AND

Method CONTROL SAMPLE -2

LAB NAME Weyerhaeuser CASE NO. SAS-3285H

DATE 11-20-87 LCS UNITS ug/L mg/kg

(Circle One)

Compound	Required Detection Limits (CRDL)-ug/l	Instrument Detection Limits (IDL)-ug/l ICP/AA	Furnace	Method Control Sample True	Found	%R
Metals:						
1. Aluminum						
2. Antimony						
3. Arsenic	10	30	2	100	109	109
4. Barium						
5. Beryllium	5	2		50	49	98
6. Cadmium	5	3		50	46	92
7. Calcium						
8. Chromium	10	3		100	104	104
9. Cobalt	50	3		500	505	101
10. Copper	25	3		250	253	101
11. Iron						
12. Lead	10	60	2	1000	1010	101
13. Magnesium						
14. Manganese						
15. Mercury						
16. Nickel	40	15		400	388	97
17. Potassium						
18. Selenium	10	40	3	250	250	100
19. Silver						
20. Sodium						
21. Thallium						
22. Tin						
23. Vanadium	50	2		500	499	100
24. Zinc	20	2		200	209	105
Other:						
Cyanide						

Form VII -3

Q.C. Report No. 16122-4

INSTRUMENT DETECTION LIMITS AND

Method CONTROL SAMPLE -3

LAB NAME Weyerhaeuser CASE NO. SAS-3285H

DATE 11-20-87 LCS UNITS ug/L mg/kg

(Circle One)

Compound	Required Detection Limits (CRDL)-ug/l	Instrument Detection Limits (IDL)-ug/l ICP/AA	Furnace	Method Control Sample True	Found	%R
Metals:						
1. Aluminum						
2. Antimony						
3. Arsenic	10	30	2	100	107	107
4. Barium						
5. Beryllium	5	2		50	49	98
6. Cadmium	5	3		50	47	94
7. Calcium						
8. Chromium	10	3		100	103	103
9. Cobalt	50	3		500	505	101
10. Copper	25	3		250	253	101
11. Iron						
12. Lead	10	60	2	1000	986	99
13. Magnesium						
14. Manganese						
15. Mercury						
16. Nickel	40	15		400	392	98
17. Potassium						
18. Selenium	10	40	3	250	253	101
19. Silver						
20. Sodium						
21. Thallium						
22. Tin						
23. Vanadium	50	2		500	501	100
24. Zinc	20	2		200	204	102
Other:						
Cyanide						

U.S. EPA Contract Laboratory Program
Sample Management Office
P.O. Box 818 - Alexanderia, VA 22313
703/557-2490 FTS: 8-557-2490 Date: 12-7-87

COVER PAGE

INORGANIC ANALYSES DATA PACKAGE

Lab Name.. WEYERHAEUSER Case No..... 3285H-5

SOW No..... 784 Q.C. Report No.. 16122

Sample Numbers

EPA No.	Lab ID No.	EPA No.	Lab ID No.
01A-020	99410	02B-021	01867
01A-021	99416	04A-020	99414
01B-020	99411	04A-021	01868
01B-021	99417	04B-020	99415
02A-005M	01871	04B-021	01869
02A-013L	99409	04C-021K	01870
02A-020	99412		
02A-021	01866		
02B-020	99413		

Comment:

ICP Interelement and background corrections applied ? Yes: X No :

If yes, corrections applied before: X or after: generation of raw data.

Footnotes:

NR - not required by contract at this time
Form I:
Value - If the result is a value greater than or equal to the instrument detection limit but less than the contract required detection limit, report the value in brackets (i.e., [10]). Indicate the analytical method used with P (for ICP/Flame), F (for furnace), or C (for flameless AA).
U - Indicates element was analyzed for but not detected. Report with the detection limit value (e.g. 10U).
E - Indicates a value estimated or not reported due to the presence of interference. Explanatory note included on cover page.
s - Indicates value determined by Method of Standard Addition.
R - Indicates spike sample recovery is not within control limits.
* - Indicates duplicate analysis is not within control limits.
+ - Indicates the correlation coefficient for method of standard addition is less than 0.995

Form II - 1

Q. C. Report No... 16122

INITIAL AND CONTINUING CALIBRATION VERIFICATION[3]

LAB NAME.. WEYERHAEUSER

CASE NO.. 3285H-5
SOW NO... 784

DATE..... 12-7-87

UNITS.... ug/l

Compound	Initial Calib.[1]			Continuing Calibration[2]					
Metals:	True Value	Found	%R	True Value	Found	%R	Found	%R	Meth[4]
1 Aluminum	1980								P
2 Antimony	807			10000					P
3 Arsenic	470	463	99	10000	9860	99	9860	99	P
4 Barium	1980			10000	9900	99	9900	99	P
5 Beryllium	481	467	97	1000	957	96	957	96	P
6 Cadmium	489	476	97	1000	1000	100	1000	100	P
7 Calcium	49800			10000	1010	10	1010	10	P
8 Chromium	506	484	96	1000	971	97	971	97	P
9 Cobalt	474	466	98	1000	975	98	975	98	P
10 Copper	542	502	93	1000	962	96	962	96	P
11 Iron	1990			10000					P
12 Lead	4510	4350	96	10000	10000	100	10000	100	P
13 Magnesium	25000			10000					P
14 Manganese	513			1000					P
15 Mercury				1					
16 Nickel	496	468	94	10000	9860	99	9860	99	P
17 Potassium	50200			50000					P
18 Selenium	1040	955	92	10000	9890	99	9990	100	P
19 Silver	509			1000					P
20 Sodium	50700			10000					P
21 Thallium									P
22 Tin	1000								P
23 Vanadium	511	498	97	1000	969	97	969	97	P
24 Zinc	3100	2910	94	1000	1000	100	1000	100	P
Other:									
*Magnesium				10000					P
*Iron				10000					P
Cyanide									

1 -Initial Calibration Source-> EPA

2 -Continuing Calibration Source-> INORGANIC VENTURES OR BAKER

3 - Control Limits: Mercury and Tin -> 80-120; All Other Compounds -> 90-110

4 - Indicate Analytical Method Used: P - ICP/Flame AA; F - Furnace

* - alternate lines used for high levels:
Magnesium>40000 ug/l and Iron>100000 ug/l

Form II - 2

Q. C. Report No... 16122

INITIAL AND CONTINUING CALIBRATION VERIFICATION[3]

LAB NAME.. WEYERHAEUSER

CASE NO.. 3285H-5
SOW NO... 784
UNITS.... ug/l

DATE..... 12-7-87

Compound	Initial Calib.[1] True Value	Initial Calib.[1] Found	Initial Calib.[1] %R	Continuing Calibration[2] True Value	Continuing Calibration[2] Found	Continuing Calibration[2] %R	Continuing Calibration[2] Found	Continuing Calibration[2] %R	Meth[4]
Metals:									
1 Aluminum									P
2 Antimony				10000					P
3 Arsenic				10000	9860	99			P
4 Barium				10000					P
5 Beryllium				1000	957	96			P
6 Cadmium				1000	1000	100			P
7 Calcium				10000					P
8 Chromium				1000	971	97			P
9 Cobalt				1000	974	97			P
10 Copper				1000	962	96			P
11 Iron				10000					P
12 Lead				10000	10000	100			P
13 Magnesium				10000					P
14 Manganese				1000					P
15 Mercury				1					
16 Nickel				10000	9860	99			P
17 Potassium				50000					P
18 Selenium				10000	9950	99			P
19 Silver				1000					P
20 Sodium				10000					P
21 Thallium									
22 Tin									P
23 Vanadium				1000	969	97			P
24 Zinc				1000	1000	100			P
Other:									
*Magnesium				10000					P
*Iron				10000					P
Cyanide									

1 -Initial Calibration Source-> EPA

2 -Continuing Calibration Source-> INORGANIC VENTURES OR BAKER

3 - Control Limits: Mercury and Tin -> 80-120; All Other Compounds -> 90-110

4 - Indicate Analytical Method Used: P - ICP/Flame AA; F - Furnace

* - alternate lines used for high levels:
Magnesium>40000 ug/l and Iron>100000 ug/l

Form II -3

Q. C. Report No. 16122

INITIAL AND CONTINUING CALIBRATION VERIFICATION[3]

LAB NAME Weyerhaeuser

CASE NO. 3285H

SOW NO. 784

DATE 12-7-87

UNITS ug/L

Compound	Initial Calib.[1]			Continuing Calibration[2]					
Metals:	True Value	Found	%R	True Value	Found	%R	Found	%R	Method[4]
1. Aluminum									
2. Antimony									
3. Arsenic	41	43	105	35	34	97	34	97	F
4. Barium									
5. Beryllium									
6. Cadmium									
7. Calcium									
8. Chromium									
9. Cobalt									
10. Copper									
11. Iron									
12. Lead	46	48	104	35	35	100	36	103	F
13. Magnesium									
14. Manganese									
15. Mercury									
16. Nickel									
17. Potassium									
18. Selenium	43	44	102	35	32	91			F
19. Silver									
20. Sodium									
21. Thallium									
22. Tin									
23. Vanadium									
24. Zinc									
Other:									
Cyanide									

[1] Initial Calibration Source EPA [2] Continuing Calibration Source Baker

[3] Control Limits: Mercury and Tin 80-120; All Other Compounds 90-110

[4] Indicate Analytical Method Used: P - ICP/Flame AA; F - Furnace

Form II-4

Q. C. Report No. 16122

INITIAL AND CONTINUING CALIBRATION VERIFICATION[3]

LAB NAME Weyerhaeuser

CASE NO. 3285H

SOW NO. 784

DATE 12-7-87

UNITS ug/L

Compound	Initial Calib.[1]			Continuing Calibration[2]					
Metals:	True Value	Found	%R	True Value	Found	%R	Found	%R	Method[4]
1. Aluminum									
2. Antimony									
3. Arsenic				35	34	97	33	94	F
4. Barium									
5. Beryllium									
6. Cadmium									
7. Calcium									
8. Chromium									
9. Cobalt									
10. Copper									
11. Iron									
12. Lead				35	36	103			F
13. Magnesium									
14. Manganese									
15. Mercury									
16. Nickel									
17. Potassium									
18. Selenium	43	44	102	35	36	103	36	103	F
19. Silver									
20. Sodium									
21. Thallium									
22. Tin									
23. Vanadium									
24. Zinc									
Other:									
Cyanide									

[1] Initial Calibration Source EPA [2] Continuing Calibration Source Baker

[3] Control Limits: Mercury and Tin 80-120; All Other Compounds 90-110

[4] Indicate Analytical Method Used: P - ICP/Flame AA; F - Furnace

Form II - 5

Q. C. Report No. 16122

INITIAL AND CONTINUING CALIBRATION VERIFICATION[3]

LAB NAME Weyerhaeuser

CASE NO. 3285H

SOW NO. 784

DATE 12-7-87

UNITS µg/L

Compound	Initial Calib.[1]			Continuing Calibration[2]					
Metals:	True Value	Found	%R	True Value	Found	%R	Found	%R	Method[4]
1. Aluminum									
2. Antimony									
3. Arsenic				35	33	94	32	91	F
4. Barium									
5. Beryllium									
6. Cadmium									
7. Calcium									
8. Chromium									
9. Cobalt									
10. Copper									
11. Iron									
12. Lead									
13. Magnesium									
14. Manganese									
15. Mercury									
16. Nickel									
17. Potassium									
18. Selenium	43	45	105	35	36	103	35	100	F
19. Silver									
20. Sodium									
21. Thallium									
22. Tin									
23. Vanadium									
24. Zinc									
Other:									
Cyanide									

[1] Initial Calibration Source EPA [2] Continuing Calibration Source Baker

[3] Control Limits: Mercury and Tin 80-120; All Other Compounds 90-110

[4] Indicate Analytical Method Used: P - ICP/Flame AA; F - Furnace

Form III - 1

Q. C. Report No.. 16122
BLANKS

LAB NAME.. WEYERHAEUSER
DATE..... 12-7-87

CASE NO.. 3285H-5
UNITS.... ug/l
MATRIX... WATER

Preparation Compound	Initial Cal.	Continuing Calibration Blank Value 1	2	3	4	Preparation Blank 1	2
Metals:							
1 Aluminum	10U	10U	10U	10U	10U		
2 Antimony	60U	60U	60U	60U	60U		
3 Arsenic	30U	30U	30U	30U	30U		
4 Barium	2.0U	2.0U	2.0U	2.0U	2.0U		
5 Beryllium	2.0U	2.0U	2.0U	2.0U	2.0U		
6 Cadmium	3.0U	3.0U	3.0U	3.0U	3.0U		
7 Calcium	6.0U	6.0U	6.0U	6.0U	6.0U		
8 Chromium	3.0U	3.0U	3.0U	3.0U	3.0U		
9 Cobalt	3.0U	3.0U	3.0U	3.0U	3.0U		
10 Copper	3.0U	3.0U	3.0U	3.0U	3.0U		
11 Iron	4.0U	4.0U	4.0U	4.0U	4.0U		
12 Lead	60U	60U	60U	60U	60U		
13 Magnesium	3.0U	3.0U	3.0U	3.0U	3.0U		
14 Manganese	2.0U	2.0U	2.0U	2.0U	2.0U		
15 Mercury							
16 Nickel	15U	15U	15U	15U	15U		
17 Potassium	200U	200U	200U	200U	200U		
18 Selenium	40U	40U	40U	40U	40U		
19 Silver	6.0U	6.0U	6.0U	6.0U	6.0U		
20 Sodium	10U	10U	10U	10U	10U		
21 Thallium	40U	40U	40U	40U	40U		
22 Tin	30U	30U	30U	30U	30U		
23 Vanadium	2.0U	2.0U	2.0U	2.0U	2.0U		
24 Zinc	2.0U	2.0U	2.0U	2.0U	2.0U		
Other:							
*Magnesium	300U	300U	300U	300U	300U		
*Iron	100U	109	109	100U	100U		
Cyanide							

* - alternate lines used for high levels:
Magnesium>40000 ug/l and Iron>100000 ug/l

Form III-2

Q. C. Report No. 16122

BLANKS

LAB NAME Weyerhaeuser CASE NO. 3285H

DATE 12-7-87 UNITS µg/L

Matrix Water

Preparation Compound	Initial Calibration Blank Value	Continuing Calibration Blank Value 1	2	3	4	Preparation Blank 1	2
Metals:							
1. Aluminum							
2. Antimony							
3. Arsenic	2u	2u	2u	2u	2u		
4. Barium							
5. Beryllium							
6. Cadmium							
7. Calcium							
8. Chromium							
9. Cobalt							
10. Copper							
11. Iron							
12. Lead	3u	3u	3u	3u			
13. Magnesium							
14. Manganese							
15. Mercury							
16. Nickel							
17. Potassium							
18. Selenium	3u	3u					
19. Silver							
20. Sodium							
21. Thallium							
22. Tin							
23. Vanadium							
24. Zinc							
Other:							
Cyanide							

Form III-3

Q. C. Report No. 16122

BLANKS

LAB NAME Weyerhaeuser CASE NO. 3285H

DATE 12-7-87 UNITS µg/L

Matrix Water

Preparation Compound	Initial Calibration Blank Value	Continuing Calibration Blank Value 1	2	3	4	Preparation Blank 1	2
Metals:							
1. Aluminum							
2. Antimony							
3. Arsenic		24	24				
4. Barium							
5. Beryllium							
6. Cadmium							
7. Calcium							
8. Chromium							
9. Cobalt							
10. Copper							
11. Iron							
12. Lead							
13. Magnesium							
14. Manganese							
15. Mercury							
16. Nickel							
17. Potassium							
18. Selenium	34	34	34				
19. Silver							
20. Sodium							
21. Thallium							
22. Tin							
23. Vanadium							
24. Zinc							
Other:							
Cyanide							

Form III - 4

Q. C. Report No. 16122

BLANKS

LAB NAME Weyerhaeuser CASE NO. 3285H

DATE 12-7-87 UNITS ug/L

Matrix Water

Preparation Compound	Initial Calibration Blank Value	Continuing Calibration Blank Value 1	2	3	4	Preparation Blank 1	2
Metals:							
1. Aluminum							
2. Antimony							
3. Arsenic							
4. Barium							
5. Beryllium							
6. Cadmium							
7. Calcium							
8. Chromium							
9. Cobalt							
10. Copper							
11. Iron							
12. Lead							
13. Magnesium							
14. Manganese							
15. Mercury							
16. Nickel							
17. Potassium							
18. Selenium	3u	3u	3u				
19. Silver							
20. Sodium							
21. Thallium							
22. Tin							
23. Vanadium							
24. Zinc							
Other:							
Cyanide							

WEYERHAEUSER TECHNOLOGY CENTER
Analytical Laboratories
Tacoma, Washington

REPORT

SAS-3285H
Blanks (Filter + Reagent)

Service Request 16122
Page ____ of ____

SAMPLE DESCRIPTION	ANALYTICAL LAB CODE	As	Be	Cd	Cr	Co	Cu	Pb	Ni	Se	V	Zn
		µg/L										
Filt. Blk.	1	2u	2u	3u	[4]	3u	3u	3u	15u	3u	2u	[10]
--	2	2u	2u	3u	[4]	3u	3u	3u	15u	3u	2u	[10]
Reagent Blk.	1	2u	2u	3u	3u	3u	3u	3u	15u	3u	2u	[6]
	2	2u	2u	3u	3u	3u	3u	3u	[17]	3u	2u	[3]

Approved [signature]
Date 12-8-87
Notebook
Page Number 029

FORM 4700-1 2/86 PRINTING SERVICES/TACOMA

Form IV

Q. C. Report No.. 16122
ICP INTERFERENCE CHECK SAMPLE

LAB NAME.. WEYERHAEUSER
DATE..... 12-7-87

CASE NO..... 3285H-5
Check Sample ID..... ICS 0387
Check Sample Source... EPA
Units..... ug/l

Compound Metals:	Control Limits[1] Mean	StdDev	2 True	Initial Observed	%R	Final Observed	%R
1 Aluminum			508000				
2 Antimony			-				
3 Arsenic			-	60U	-	60U	-
4 Barium			483				
5 Beryllium			474	435	92	432	91
6 Cadmium			909	894	98	885	97
7 Calcium			516000				
8 Chromium			513	471	92	473	92
9 Cobalt			478	443	93	444	93
10 Copper			534	491	92	490	92
11 Iron			203000				
12 Lead			4850	4490	93	4470	92
13 Magnesium			509000				
14 Manganese			531				
15 Mercury			-				
16 Nickel			916	848	93	827	90
17 Potassium			-				
18 Selenium			-	80U	-	80U	-
19 Silver			993				
20 Sodium			-				
21 Thallium			921				
22 Tin			-				
23 Vanadium			475	482	101	482	101
24 Zinc			973	931	96	935	96
Other:							

Form VI

Q. C. Report No... 16122
DUPLICATES

LAB NAME... WEYERHAEUSER
DATE..... 12-7-87

CASE NO... 3285H-5
EPA Sample No..... 01A-020
Lab Sample ID No.... 99410
Units.. ug/l

MATRIX... OTHER

Compound	Control Limit [1]	Sample	Duplicate	RPD [2]
Metals:				
1 Aluminum				NC
2 Antimony				NC
3 Arsenic		34	34	0
4 Barium				NC
5 Beryllium		2.0 U	2.0 U	NC
6 Cadmium		3.0 U	3.0 U	NC
7 Calcium				NC
8 Chromium		18	18	3.5
9 Cobalt		3.0 U	[3.7]	NC
10 Copper		558	593	6.0
11 Iron				NC
12 Lead		777	756	2.8
13 Magnesium				NC
14 Manganese				NC
15 Mercury				NC
16 Nickel		15U	[31]	NC
17 Potassium				NC
18 Selenium		13	13	0
19 Silver				NC
20 Sodium				NC
21 Thallium				NC
22 Tin				NC
23 Vanadium		12	12	1.2
24 Zinc		465	472	1.5
Other:				
Cyanide				

* Out of Control
1 to be added at a later date.
2 RPD =[|S-D|/((S+D)/2)] x 100
NC - Non calculable RPD due to value(s) less than CRDL

Form VI

Q. C. Report No... 16122
DUPLICATES

LAB NAME... WEYERHAEUSER
DATE..... 12-7-87

CASE NO... 3285H-5
EPA Sample No..... 02A-021
Lab Sample ID No.... 01866
Units.. ug/l

MATRIX... OTHER

Compound	Control Limit	Sample [1]	Duplicate	RPD [2]
Metals:				
1 Aluminum				NC
2 Antimony				NC
3 Arsenic		15	17	13
4 Barium				NC
5 Beryllium		2.0 U	2.0 U	NC
6 Cadmium		3.0 U	3.0 U	NC
7 Calcium				NC
8 Chromium		[6.1]	[9.3]	NC
9 Cobalt		3.0 U	3.0 U	NC
10 Copper		365	311	16
11 Iron				NC
12 Lead		449	465	3.5
13 Magnesium				NC
14 Manganese				NC
15 Mercury				NC
16 Nickel		15U	15U	NC
17 Potassium				NC
18 Selenium		[7]	[7]	NC
19 Silver				NC
20 Sodium				NC
21 Thallium				NC
22 Tin				NC
23 Vanadium		2.0 U	2.0 U	NC
24 Zinc		264	264	0
Other:				
Cyanide				

* Out of Control
1 to be added at a later date.
2 RPD =[|S-D|/((S+D)/2)] x 100
NC - Non calculable RPD due to value(s) less than CRDL

Form VII

Q.C. Report No. 16122

INSTRUMENT DETECTION LIMITS AND

Method CONTROL SAMPLE - 1

LAB NAME Weyerhaeuser CASE NO. SAS-3285H

DATE 12-7-87 LCS UNITS ug/L mg/kg

(Circle One)

Compound	Required Detection Limits (CRDL)-ug/l	Instrument Detection Limits (IDL)-ug/l ICP/AA	Furnace	Method Control Sample True	Found	%R
Metals:						
1. Aluminum						
2. Antimony						
3. Arsenic	10	30	4	100	104	104
4. Barium						
5. Beryllium	5	2		50	47	94
6. Cadmium	5	3		50	46	92
7. Calcium						
8. Chromium	10	3		100	101	101
9. Cobalt	50	3		500	495	99
10. Copper	25	3		250	243	97
11. Iron						
12. Lead	10	60	3	1000	982	98
13. Magnesium						
14. Manganese						
15. Mercury						
16. Nickel	40	15		400	385	96
17. Potassium						
18. Selenium	10	40	3	250	216	86
19. Silver						
20. Sodium						
21. Thallium						
22. Tin						
23. Vanadium	50	2		500	487	97
24. Zinc	20	2		200	206	103
Other:						
Cyanide						

Form VII

Q.C. Report No. 16122

INSTRUMENT DETECTION LIMITS AND

Method CONTROL SAMPLE-2

LAB NAME Weyerhaeuser CASE NO. SAS-3285H

DATE 12-7-87 LCS UNITS (ug/L) mg/kg

(Circle One)

Compound	Required Detection Limits (CRDL)-ug/l	Instrument Detection Limits (IDL)-ug/l ICP/AA	Furnace	Method Control Sample True	Found	%R
Metals:						
1. Aluminum						
2. Antimony						
3. Arsenic	10	30	4	100	105	105
4. Barium						
5. Beryllium	5	2		50	47	94
6. Cadmium	5	3		50	45	90
7. Calcium						
8. Chromium	10	3		100	102	102
9. Cobalt	50	3		500	497	99
10. Copper	25	3		250	243	97
11. Iron						
12. Lead	10	60	3	1000	1030	103
13. Magnesium						
14. Manganese						
15. Mercury						
16. Nickel	40	15		400	397	99
17. Potassium						
18. Selenium	10	40	3	250	226	90
19. Silver						
20. Sodium						
21. Thallium						
22. Tin						
23. Vanadium	50	2		500	488	98
24. Zinc	20	2		200	208	104
Other:						
Cyanide						

3285H-8-014

U.S. ENVIRONMENTAL PROTECTION AGENCY
Contract Laboratory Program

SAMPLE MANAGEMENT OFFICE

Bids due on Tues, Sept 8, 5:00 PM EDT

MEMORANDUM

DATE: September 1, 1987

TO: SAS Candidate Laboratories

FROM: Lynn Riddick
SMO Analytical Services Group

SUBJECT: SAS Solicitation for SAS No. 3285-H

Please Review the enclosed SAS Solicitation package for the subject SAS. Listed below are several clarifications and highlights of the enclosed package.

1) Please note that Task I, preweighing of filters, shall be grouped into batches of 40, in a 3:1 ratio of Microquartz to Glass Fiber air filters. Therefore, bids for Task I should be priced on a per 40 filters basis.

2) Please note that Item 8(e) requires that all metals be analyzed by ICP first. Then, any metals not meeting the detection limit criteria of the Inorganic SOW must be analyzed by GFAA. Because this could figure heavily in the cost of this project, LABs must place a per metal per sample cost for GFAA analysis. For purposes of price comparison and contract awards, SMO will assume that all samples will require GFAA analysis of 3 metals. This cost will be used in evaluating bids, but does not mean that each sample will, in reality require the analysis of 3 metals by GFAA.

3) Please place bids according to the attached bid calculation worksheet.

If you should have any further questions concerning SAS No. 3285-H, please do not hesitate to contact me.

P.O. Box 818, Alexandria, Virginia 22313. Phone: (703) 557-2490/FTS-8-557-2490

SAMPLE MANAGEMENT OFFICE

BIDS ARE DUE ON TUESDAY, SEPTEMBER 8, 1987 AT 5:00 PM, EASTERN TIME

NOTE: Award of this SAS contract is subject to the review and approval of Viar and Company's Project/Contract Officer(s) under EPA Contract 68-01-7253.

Please have a safe and pleasant holiday!

U.S. ENVIRONMENTAL PROTECTION AGENCY
Contract Laboratory Program

SAMPLE MANAGEMENT OFFICE

DATE: [illegible]

SAS NUMBER: 3285 H CASE NUMBER: [illegible]

1) Prewighed filters to be sent upon lab assignment
2) Exposed filters to be sent 30 days later at a
ESTIMATED SHIPPING DATE(S): rate of ~30/week (See Item 5 for details)
over 14 wks.

TASK I - 7% per 40 per day
PENALTY: TASKS II, III, and IV - %

QA/QC FREQUENCY: 1 duplicate per 10 per week (Mon-Sat)
See Item 13 for details of other QC requirements

DATA TURNAROUND: 30 DAYS FROM LAST DATE OF SAMPLE RECEIPT EACH WEEK

SAMPLES:

I. Re-weighing of 327 Microquartz air filters (8x10) & 117 Glass fiber air filters (8x10) to be grouped in batches of ~10 to be returned to samplers at a 3:1 ratio

II. Analysis of 327 Microquartz air filters for Metals & Microquartz filters for Polynuclear Aromatics & Microquartz filters & Unsuspended Glass fiber filters for Polynuclear Aromatics

III. Analysis of 327 Microquartz air filters for Metals & gravimetric total suspended particulates

IV. Analysis of 117 Glass fiber air filters for gravimetric total suspended particulates

SUPERFUND? yes PURPOSE? Enforcement

P.O. Box 818, Alexandria, Virginia 22313. Phone: (703) 557-2490/FTS-8-557-2490

SMO-SAS BID CALCULATION WORKSHEET

SAS NO. 3285-H

PAGE ____ of ____

LAB NAME _____

	PARAMETER	# FIELD SMPLS	# STD QC SMPLS MS	D	LCS	# OTHER QC SMPLS			TOTAL # SMPLS	COST / SMPL	TOTAL COST for PARAMETER
										$	$
I.	Preweighing (in batches of 40)	327+117 / 40							12		
II	Microquartz (spiked) for Pb	3							3		
	Glass Fiber (spiked) for Pb	3							3		
	Unspiked Microquartz for Pb	3							3		
	Unspiked Glass fiber for Pb	3							3		
III	Microquartz for Metals	327		33					360		
	Microquartz for particulates	327		—					327		
IV.	Glass Fiber for particulates	117		—					117		
*	per Metal per sample cost for GFAA	981		99					1080		

TOTAL BID AMOUNT $ _____

ALI 28, 25, 150, 15, 25
Versar 121, 46, 280, 5, 26

D.C.#340-PP1-EP-EZLU

A. EPA Region/Client: VIII

B. RSCC (Representative)

C. Telephone Number:

D. Date of Request:

E. Site Name:

F. EPA REM Program:

1. General description of analytical service requested:

Micro-quartz air filters for total suspended particulates (gravimetric) and metals analysis. Glass fiber air filters for total suspended particulates only.

a) All filters and blanks for total suspended particulates to be pre-weighed at laboratory then shipped for sampling.

b) Metals by ICP and/or GFAA and Flame AA (see Table 1). Sample preparation and extraction using attached methods.

063

2. Definition and number of work units involved:

   a) Approximately 327 Micro-quartz air filters (8" x 10") for metals (see Tables 1 and 2) and gravimetric total suspended particulates.

   b) Approximately 117 glass fiber air filters (8" x 10") for gravimetric total suspended particulates.

   c) Six air filters (3 of each type material), lab spiked for Pb by Flame Atomic Absorption and six air filters (3 of each type material) unspiked, for Pb by Flame Atomic Absorption.

   d) Forty additional Micro-quartz filters shipped to use for laboratory QC (i.e., laboratory filter blanks and MCS preparations). LAB will retain these filters for QC purposes. If it becomes evident that additional filters are necessary, LAB must contact SMO to arrange for additional filters.

3. Purpose of analysis:

   Superfund enforcement

4. Estimated date(s) of collection:

   Over 14 weeks, beginning 7 days after LAB receives unweighed air filters. (i.e. ~ 8-10 days after LAB is awarded this SAS).

5. Estimated date(s) and method of shipment:

   a) All filters for gravimetric analysis (sample sets A & B) will initially be shipped to the laboratory upon lab assignment for pre-sampling (tare) weights. These tared filters will then be shipped by the lab to the sampling location (address and Federal Express account for shipping to be provided). A minimum of 40 pre-weighed (tared) filters must be received at sampling location within 7 days after receipt of unweighed filters at LAB. All remaining filters may be divided into batches of at least 40 + sent to the samplers a maximum of 14 days apart. Each batch must contain a mixture of filter types.

   b) Samples will be collected upon receipt of preweighed filters, and will be shipped via Federal Express approximately 2-3 times/week at a schedule of ~ 20-21 samples/wk for Set A + 8-10/week for Set B.

6. Number of days analysis and data required after laboratory receipt of samples:

   30 days from the last date of sample receipt each week (Mon-Sat).

7. Analytical protocol required:

   See Table 1 and 2, and Attachments A, B, and D as well as 8a through 8j (Attachment C is provided as reference information for ICP analysis of these types of samples).

064

8. Special technical instruction:

a) Sample sets A & B (Table 1) for gravimetric analysis of total suspended particulates will be numbered by the lab. These sample numbers, the initial tare weight, gross weight, net weight and analysts signatures/dates will be recorded on copies of the Form shown in attached Figure 1. (See Attachment A.)

b) Attachment B specifies the extraction procedure for metals analysis for sample set A (Table 1).

c) Forty of the micro-quartz type filters are to be kept at the laboratory for the purpose of preparing spiked blanks to use as method control samples (MCS). These forty filters will also be used for laboratory filter blanks. For each QC group, the MCS and lab filter blank strips used must be from the same filter. See item 13 for definitions of MCS and blanks. These filters will be separately packaged and labeled for this purpose.

d) For Sample Set A the extract analyses for metals are to follow CLP Inorganics SOW protocols for extract QC (see Item 13) and analysis QC (initial and continuing calibration check frequencies using alternate source standards, interference check samples and serial dilution analyses). All analytes requiring Graphite Furnace AA must follow the same MSA decision process and analysis procedures as described in the CLP Inorganic SOW.

e) For Sample Set A all metals must be analyzed by ICP even though required detection limits may not be met. (Perform detection limit studies, if necessary, for any elements not typically run by ICP. (per CLP Inorganics SOW) Determine and report IDL's following procedures described in the CLP Inorganics SOW.) In addition, GFAA analysis will be necessary for elements not meeting the required detection limit by ICP (see Table 2).

f) Post-digest spike recoveries for all elements requiring GFAA are to be verified as being within ±15% for laboratory filter and reagent blank(s) prepared by the attached extraction procedure prior to starting any sample analysis. If this criteria cannot be met, contact ~~Item 11 (by way of~~ SMO) before any sample analysis. The post-digest spike levels for analytes requiring GFAA are to be two times (2X) the required detection limits shown in Table 2.

g) For Sample Set C (see Table 1) the blanks and spiked blanks analyzed by Flame AA for Pb only are to be extracted using Step 7.2.2 "Ultrasonic Extraction Procedure" as shown in Attachment D (Appendix G Reference Method).

1. The laboratory must prepare and analyze one filter blank and one spiked blank of each type of filter material using the procedure from (g) above on three non-consecutive days. (The two types of filter material are Microquartz and Glass fiber). The results of these analyses must be reported to ~~Item 11 contact (by way of~~ SMO) before Set A field sample analysis begins.

065

2. As with all other preparations prepare and analyze a reagent blank with each set of preparations.
3. Initial and continuing calibration verification using standards from alternate sources and appropriate background correction are required for Flame AA analysis in accordance with CLP Inorganics SOW protocols.
4. The spike level used for these Pb analyses is to be 10 times the Flame AA instrument detection limit or 1000 ppb, whichever is lower. (Spike level is the "in solution" level after extraction and dilution and must be the same regardless of final dilution volume). The same spiking level for Pb will be used to prepare the MCS for all ICP/GFAA analysis. (See Item 13.)

h) Use the same filter strip size for both Set A and Set C extraction procedures. Accurately measure and record the measurement of all strips extracted. Note any size deviations in the case narrative.

i) All samples must be analyzed concurrently with lab QC samples. ~~and~~ Lab shall analyze QC at a frequency of one per ten per week (Mon-Sat). If any sample submitted is designated for use as a laboratory QC sample it is to be used for duplicate preparation requirements as defined in Item 13 below. However, in no instance will lab QC be performed less frequently than one per 10 or one per week.

j) All unused and/or remaining sample material and extracts must be retained for 180 days from VTSR unless prior authorization for disposal is received from Region 8 RSCC (through SMO). All records and data associated with the case must be retained by the lab for six months after regional receipt of data.

9. Analytical results required:

a) For total suspended particulates data use format provided in Figure 1 (see Attachment A).
b) Consistent with SAS methods referenced herein, and applicable CLP analysis protocols.
c) In addition, all samples must be run concurrently with lab QC samples (see Item 8i).
d) SAS data package format and deliverables must be consistent with and equivalent to CLP RAS format (including submission of all deliverables, all methods used from prep/digestion through analysis, digestion logs, all calibrations, all raw data (analysis and re-analysis, undiluted and diluted sample data) and reduced data for all analyses of the field and lab QC samples, all detection limits and calculation methods for all analyses, all QA/QC data presented in summary form, and all data reduction procedures.

066

e) A narrative summary of all procedures actually used for sample preparation and analyses, including: a) specific identification of all instrumentation used; b) discussion of all factors affecting the analyses and of all corrective actions taken; c) justification for dilution(s) of all sample extracts and/or digestates; d) a summary of the source and reasons for variance from this request (e.g., methods changes).

NOTE: All deviations from methodology provided herein must be approved prior to the laboratory making these changes. Contact Item 11 (by way of SMO) for approval of method change.

10. Other (use additional sheets or attach supplementary information, as needed):

See Tables and Attachments.

11. Name of sampling/shipping contact:
Phone:

12. Data Requirements:

See attached Table 2.

13. QC Requirements:

Audits Required	Frequency of Audits	(Percent or Concentration)
Reagent Blank *	Minimum: 1/10**	Less than MDL shown in Table 2
Lab Filter Blank	Minimum: 1/10**	See Item 13b
Duplicate	Minimum: 1/10**	See Table 2
Method Control Sample	Minimum: 1/10**	See Table 2

NOTE: * See Item 14 - Action Required for Blanks
** Or as stated in Item 8, whichever is more frequent.

NOTE: ONLY THE DUPLICATE QC SAMPLE IS BILLABLE

067

Definitions

a) The reagent blank consists of the extraction reagents carried through the entire procedure.
b) The laboratory filter blank consists of the extraction reagents and an identical size strip of blank (unused) filter material carried through the entire procedure. Contaminants found in this blank may need to be considered when determining the spike recovery in the MCS (see 13f).
c) A Method Control Sample (MCS) is hereby defined as a known standard solution that is carried along with the samples through the entire sample prep/analysis sequence. The MCS is to be prepared by spiking (before extraction) a blank air filter of the same type and size (strip) as was used for the exposed samples. The spike levels for each element in the MCS are to be such that the final concentration is at 10 times (10x) the amounts shown as the required detection limits in Table 2. Exceptions to this spiking level requirement are Selenium (Se) which is to be at 25 times (25x) the detection limit amount and Lead (Pb) which is to be at the same level as the amount used for spiking as specified in Item 8(g).

e) The duplicate is to be prepared (at the specified frequency) from a second strip on the opposite side of the exposed filter.
f) If the filter blank associated with the MCS contains levels of any analyte which are greater than 2x the required IDL (in solution) report both the uncorrected MCS recovery and the blank corrected $\left(\frac{\text{found MCS Value - found Blank Value}}{\text{Expected MCS Value}} \times 100\right)$, placing the blank corrected value in parentheses (e.g. 112 (105)).

14. Action Required if Limits are Exceeded

Blanks

1. Prior to analysis of field samples, the laboratory must demonstrate (and document) the absence of reagent blank contamination by preparing and analyzing one or more reagent blanks (i.e., reagent carried through the entire sample prep/analysis sequence) using the identical equipment and reagents and reagent water that will be used for the prep and analysis of field and lab QC samples. Appropriate corrective action must be taken to identify and correct any source of contamination prior to the analysis of field and lab QC samples.

2. For reagent blanks analyzed with field samples, flag all data associated with an out of control blank with a "B".

3. Do not blank correct any sample values.

068

Duplicates

1. Report RPD value and flag "out-of-control" data with "*".

Method Control Sample

1. Re-analyze an additional aliquot of the MCS extract and all sample extract associated with that out of control MCS.

2. If this re-analysis of the MCS is acceptable, then re-analyze all the samples with the acceptable MCS and report the sample results associated with the re-analysis (but still include both analyses in the raw data and report need for second analysis on narrative summary).
3. If the re-analysis of the MCS is unacceptable, report and qualify the affected parameters for all sample results associated with the "best" deficient MCS and qualify with an "M".

069

Table 1

Sample Set A: 327 Micro-quartz (8"x10") Air Filters*

- o Total Suspended Particulates (Attachment A)
- o Metals (see Table 2 and Attachment B)

Sample Set B: 117 Glass fiber (8"x10") Air Filters

- o Total Suspended Particulates (Attachment A)

Sample Set C: 12 Filters (6 Micro-quartz & 6 Glass Fiber)

- o Pb for blanks and spiked filters (Attachment D)

*This quantity does not include filters designated for laboratory QC purposes. (See Items 2(d) and 13).

TABLE 2 - Summary of Parameter Measurement Objectives for Analytical Laboratories

Parameter	Matrix	Det. Limit	(a) Duplicate Control Limits (RPD)	(b) Method Control Sample (%R)
Arsenic	Air Filter	10 ug/l	±20	80-120
Beryllium	Air Filter	5 ug/l	±20	80-120
Cadmium	Air Filter	5 ug/l	±20	80-120
Chromium	Air Filter	10 ug/l	±20	80-120
Cobalt	Air Filter	50 ug/l	±20	80-120
Copper	Air Filter	25 ug/l	±20	80-120
Lead	Air Filter	10 ug/l	±20	80-120
Nickel	Air Filter	40 ug/l	±20	80-120
Selenium	Air Filter	10 ug/l	±20	80-120
Vanadium	Air Filter	50 ug/l	±20	80-120
Zinc	Air Filter	20 ug/l	±20	80-120

(a) - ±20% of concentration for sample if greater than 5x the Method Detection Limits or ±MDL if concentration is less than 5x the Method Detection Limit.

(b) For sample set C, there are no recovery requirements. Report results obtained for the analysis.

071

Attachment A

3.0 FILTER SELECTION AND PREPARATION

Suppliers of glass fiber filters for the measurement of TSP have available two grades of filter materials, the normal or traditional filter grade, which has been in use for over 20 years, and a spectro-quality grade. The spectro-quality grade contains less organic and inorganic contaminants. Spectro-quality grade filters are recommended for use in those applications where additional chemical analyses are anticipated. A filter with low surface alkalinity is recommended to avoid positive interferences from absorption of acid gases while sampling. Ideally, surface alkalinity should be between pH 6.5 and 7.5. However, most glass fiber filters commercially available at the present time have a pH greater than 7.5. An activity matrix for filter selection and preparation is presented in Table 3.1 at the end of the section.

3.1 Filter Selection

Each filter must be visually inspected with the aid of a light table. Discard or return to the supplier filters with pinholes and other defects such as tears, creases or lumps. Remove loose particles with a soft brush.

3.2 Filter Identification

Assign a serial number to each filter. Stamp this number on two diagonally opposite corners, one stamp on each side of the filter. Apply gentle pressure to avoid damaging the filter.

3.3 Filter Equilibrium

Equilibriate the filter in the conditioning environment for 24 hours prior to weighing to minimize errors in measuring the weight; longer periods of equilibrium will not affect

accuracy. The conditioning environment should have an average temperature between 20° and 25°C and vary not more than ±3°C, and a relative humidity (RH) below 50 percent and vary not more than ±5 percent. A convenient working RH is 40 percent.

3.4 Filter Weighing

Clean filters are usually processed in lots, that is, several at one time. Before weighing the first filter, perform a balance check by weighing a standard Class "S" weight of between 3 and 5 grams. Record the actual and measured weights, the date, and the operator's initials, as shown in Figure 2.1. If the actual and measured values differ by more than ±0.5 mg (0.0005 g), report it to the supervisor before proceeding.

If the actual and measured values agree to within ±0.5 mg, weigh each filter to the nearest mg. Weigh each filter within 30 seconds after removal from the equilibration chamber, record the tare weight and serial number of each filter in the Laboratory Data Log, Figure 1

Clean filters must not be folded or creased prior to weighing or use.

3.5 Filter Handling

It is recommended that a quantity of filters sufficient for at least a three (3) month period for each sampler be numbered and weighed at one time. Pack the filters in their original container or a box of similar size such that each filter is separated by a sheet of 8 1/2- by 11-inch tracing paper. Be sure that the filters are stacked in the box in numerical order so that the operator will use the proper filter first. In addition to the filters, supply the field operator with pre-addressed return envelopes to protect the filters during mailing. These folders can also be printed front and back to serve as a sample record data sheet as

page missing

5.0 ANALYSIS OF SAMPLES

An activity matrix summarizing the major quality control related functions for sample analyses is presented in Table 5.1 at the end of this section.

5.1 Verify Documentation and Inspect Sample

1. Upon receipt of the sample from the field, remove the filter folder from its shipping envelope and examine the hi vol field data sheet, to determine whether all data necessary to verify the sample for analysis

Note in Remarks if sampler malfunction is evident, e.g., obvious faceplate gasket leakage.

2. Record the filter number on the hi vol field data sheet and on the laboratory data log, Figure 1.

3. Examine the shipping envelope for sample material that may have become dislodged from the filter. If such material is observed, recover as much as possible by brushing it from the envelope to the deposit on the filter with a soft camel hair brush.

4. Examine the filter for insects embedded in the sample deposit and if found, remove them with Teflon tipped tweezers, using care to avoid disturbing more of the sample deposit than is necessary. If more than 10 insects are observed refer the sample to the supervisor for a determination whether to accept or reject it.

5. Record data verification, sample inspection, and removal of insects under Remarks in the laboratory data log, Figure 1.

5.2 Filter Equilibration

Equilibrate exposed filters in a conditioning environment for 24 hours, additional equilibration time up to 48 hours may be necessary for very damp filters. An equilibration

chamber, employing a saturated chemical solution that will result in a relative humidity of less than 50 percent at a temperature of approximately 20 to 25°C is recommended in lieu of a controlled temperature/humidity weighing room.

An air conditioned room may be used for equilibration. A relative humidity less than 50 percent and constant within ±5 percent, and an air temperature constant within ±3°C must be maintained in the room while filters are equilibrating. A conveniently working relative humidity is 40 percent. A hygrometer is maintained in the room and the relative humidity must be checked daily.

Record hygrometer readings and any equilibration chamber malfunction, discrepancies, or maintenance in the laboratory data log, Figure 1.

5.3 Gravimetric Analysis

Perform a balance check as specified in Section 3.4 Weigh exposed filters to the nearest milligram on the analytical balance within 30 seconds after removal from the equilibration chamber. The weighing location should be in the conditioning environment if practicable, otherwise the analytical balance should be as close as possible to the conditioning chamber in a location that is relatively free of air currents and is at or near the temperature of the chamber. Record the weight in the laboratory data log and on the hi vol field data sheet.

Figure 1: Laboratory log for total suspended particulate data

FILTER NUMBER	GROSS WGT.	TARE WGT.	NET WGT.	REMARKS

LABORATORY FUNCTIONS

FILTER PREPARATION

- FILTER MUST BE FREE OF PIN-HOLES, TEARS, CREASES, LUMPS, ETC.
- FILTER MUST BE PROPERLY EQUILIBRATED (20 hrs < TIME < 28 hrs; HUMIDITY < 50%) (Δ HUMIDITY $\pm$ 5%; Δ TEMP $\pm$ 3°C)
- BALANCE MUST BE CHECKED BEFORE WEIGHING (STD. WGT. 3 to 5 g $\pm$ 0.0005 g)

ALL SAMPLES WERE HANDLED IN ACCORDANCE WITH THE ABOVE GUIDELINES

SIGNATURE/DATE

SAMPLING ANALYSIS

- SAMPLE MUST BE FREE OF EVIDENCE OF MALFUNCTION; TEN OR FEWER INSECTS IN SAMPLE
- FILTER MUST BE PROPERLY EQUILIBRATED (SEE ABOVE)
- BALANCE MUST BE CHECKED BEFORE WEIGHING (SEE ABOVE)

ALL SAMPLES WERE HANDLED IN ACCORDANCE WITH THE ABOVE GUIDELINES

SIGNATURE/DATE

Attachment B

EMSL/RTP-SOP-EMD-003
November 1981
Revision 0

TITLE: Standard Operating Procedure for Acid Extraction of Glass-Fiber Filters (Equivalent Method EQL-0380-043 for Lead)

DISCLAIMER

This Standard Operating Procedure has been prepared for the sole use of the Environmental Monitoring Systems Laboratory of EPA at Research Triangle Park, North Carolina, and may not be specifically applicable to the activities of other organizations.

AUTHOR: Sharon Harper

APPROVALS:

J. F. Walling, Chief, PAB/EMD — 12/1/81 (Date)

John B. Clements — 12/2/81 (Date)
J. B. Clements, Director, EMD/EMSL

EFFECTIVE DATE: 1/78

ULTRASONIC EXTRACTION OF HI VOL FILTERS FOR TRACE ELEMENTS

1. Principle and Applicability

Ambient air suspended particulate matter is collected on a glass fiber filter for 24 hours using a High Volume sampler.

Trace elements in the particulate matter collected on the glass fiber filter are solubilized in a mixture of nitric acid and hydrochloric acids with the aid of heat and ultrasonication. The trace element concentration of the nitric acid hydrochloric acid mixture is determined after an appropriate dilution of the acid extract.

2. Reagents and Equipment

Hydrochloric Acid, ACS reagent grade, concentrated (11.7N). (Fisher A-144 or equivalent).

Nitric Acid, Redistilled Spectrographic grade (16N). For preparing samples. (Calvert Chemical spectrographic grade or equivalent).

Distilled Deionized Water. Distilled building water supply passed through a deionizer system. (Millipore Corporation Milli-Q or equivalent).

Centrifuge Tubes. Polypropylene tube with screw tops of polypropylene, 50 ml volume (Nalgene 3119-0050).

Pipette Automatic Dispensing with accuracy of setting of 0.1 ml or better and repeatability of 20 µl (Grumman Automatic Dispensing Pipette, model ADP-30DT, or equivalent).

Ultrasonic Bath (Heat Systems, Ultrasonic, Inc. Model B92H or equivalent). Cleaning Power, 425 watts, Heating Power, 400 watts.

Note: Before use, all labware should be scrupulously cleaned. The following procedure is recommended. Wash with laboratory detergent or

ultrasonicate 30 minutes with laboratory detergent, rinse, soak a minimum of 4 hours in 20% V/V nitric acid, rinse three times with distilled deionized water, and oven dry.

3. Extracting Acid. (2.23 M HCl, 1.03 M HNO_3)

In a 1 liter volumetric flask, combine in order and mix well: 500 ml distilled deionized water, 64.6 ml concentrated (16 M) redistilled spectrographic grade nitric acid and 182.0 ml of ACS grade concentrated hydrochloric acid. Cool and dilute to 1 liter with distilled deionized water.

Caution: Nitric Acid Fumes are Toxic. Prepare in a well ventilated fume hood.

4. Extraction

Cut a 1 inch by 8 inch strip from the folded particulate bearing filter using a template and a pizza cutter as described in The Federal Reference Method for Lead. (See Attachment D) Using vinyl gloves or plastic forceps accordion fold or tightly roll the filter strip and place it on its edge in a 50.0 ml screw top polypropylene centrifuge tube. Add 12.0 ml of extracting acid using pre-set calibrated automatic dispensing pipette or with a regular pipette. (The acid should cover the strip completely.) Cap the tube loosely to prevent pressure build-up during the ultrasonication step. Place tube in a sample rack. Note: the sequence of adding the filter strip and acid to the centrifuge tube may be reversed, if more convenient, without affecting the results. Identify the sample by affixing a sample identification label to the centrifuge tube with tape.

Put enough water, with a temperature of 100°C, in a clean ultrasonic bath so that the water level is slightly above the acid level of the

centrifuge tubes in the rack. This water depth is well below the centrifuge tube caps and therefore prevents possible contamination of samples during ultrasonication. Set the loosely capped centrifuge tubes containing the samples and the extracting acid upright in the rack in the ultrasonic bath. It is important for the vials to be upright during the ultrasonication to prevent possible sample contamination. Ultrasonicate the samples 50 minutes. Remove the centrifuge tubes containing the samples from the ultrasonic bath and blot the tubes dry.

Uncap the centrifuge tube and add 28.0 ml of distilled deionized water to the tube using a calibrated automatic dispensing pipette, or with a regular pipette. Cap the centrifuge tube tightly and shake well.

Place the tube in the centrifuge and centrifuge 20 minutes at 2500 rpm. Decant the clear solution from the centrifuge tube into an acid cleaned 30 ml polypropylene bottle (bearing sample ID label), taking care not to disturb the solids in the bottom of the tube. The sample is now ready for analysis. It has a 0.31 M nitric acid and a 0.67 M hydrochloric acid matrix and a volume of 40 ml.

Attachment C

STANDARD OPERATING PROCEDURE FOR THE ICP-OES DETERMINATION OF TRACE ELEMENTS IN SUSPENDED PARTICULATE MATTER COLLECTED ON GLASS-FIBER FILTERS

by

S. L. Cummings, S. L. Harper,
W. A. Loseke, and L. J. Pranger
Environmental Monitoring Division
Environmental Monitoring Systems Laboratory
U. S. Environmental Protection Agency
Research Triangle Park, North Carolina 27711

ENVIRONMENTAL MONITORING SYSTEMS LABORATORY
OFFICE OF RESEARCH AND DEVELOPMENT
U. S. ENVIRONMENTAL PROTECTION AGENCY
RESEARCH TRIANGLE PARK, NORTH CAROLINA 27711

EMSL/RTP-SOP-EMD-002
October 1983
Revision 1
This document contains 65 pages

Standard Operating Procedure for the ICP-OES Determination of Trace Elements in Suspended Particulate Matter Collected on Glass-Fiber Filters

DISCLAIMER

This Standard Operating Procedure (SOP) has been reviewed in accordance with the U. S. Environmental Protection Agency's peer review and administrative review policies. The SOP is a statement of a procedure used within the Environmental Monitoring Systems Laboratory/RTP on the approval date, is subject to revision, and must not be construed as an EPA-approved procedure generally applicable to the activities of other organizations. Mention of trade names or commercial products does not constitute endorsement or recommendation for use.

S. L. Cummings, S. L. Harper,
W. A. Loseke, and L. J. Pranger

APPROVALS:

J. F. Walling, Chief, PAB/EMD	3/2/84 Date
John B. Clements	3/5/84
J. B. Clements, Director, EMD/EMSL	Date

082

CONTENTS

1. Operating Characteristics 1
   1.1 Principle and applicability 1
   1.2 Ranges, sensitivities, and lower detectable limits 1
   1.3 Interferences 3
   1.4 Precision and accuracy 4

2. Apparatus and Materials 6
   2.1 Apparatus 6
   2.2 Reagents 7
   2.3 Instrument configuration 8

3. Operating Procedure 11
   3.1 Method of operation 11
   3.2 Initial start-up procedure. 12
   3.3 Daily operation 19
   3.4 Data processing 21

4. Quality Assurance 23
   4.1 Instrument tuning and standardization 23
   4.2 Calibration 23
   4.3 Daily QA check and analytical run sequence 23
   4.4 Corrective actions 24
   4.5 Data and record keeping 25
   4.6 Routine maintenance 26

5. References 27

Appendices
   A. Preparation of Single-Element Stock Standards 28
   B. Quarterly Transmittal of Routine TEAS ICP Project Data to DMAD 44

083

SECTION 1

OPERATING CHARACTERISTICS

1.1 PRINCIPLE AND APPLICABILITY

This method is applicable to samples originating from the operation of the National Air Monitoring System (NAMS), the Inhalable Particulate Network (IPN), and other studies wherein suspended particulate matter in ambient air is collected on a glass-fiber filter using a Hi-Vol sampler equipped with either a size-selective inlet (SSI) or a standard inlet. Trace elements in the particulate matter collected on the glass-fiber filter are solubilized in a mixture of nitric acid and hydrochloric acid with the aid of heat and ultrasonication. The trace element concentration of this mixture is determined after dilution to the analytical instrument's working range.

The analytical instrument used by this Laboratory is an inductively coupled plasma emission spectrometer (ICP). The operating parameters recommended by the instrument's manufacturer are followed. The data output from the analytical instrument is processed by computer into micrograms of trace metals per cubic meter of air sampled. The data for Ba, Be, Cd, Cu, Fe, Mn, Mo, Ni, Pb, V, and Zn are transmitted to the Data Management Analysis Division (DMAD) for inclusion in the National Air Data Bank (NADB).

The method described herein has been judged to be an equivalent method for the determination of Pb on glass fiber filters as set forth in EQL-0380-045, published in the Federal Register, Vol. 45, p. 14648, dated 03/06/80. Use of this procedure as an equivalent method is limited to this Laboratory.

1.2 RANGES, SENSITIVITIES, AND LOWER DETECTABLE LIMITS

Typical maximum expected concentrations for the ICP spectrometer used by this Laboratory are given in Table 1.

Calibration sensitivities depend on spectral line intensities. Typical sensitivities for the ICP spectrometer used in this Laboratory are given in Table 1. Typical instrumental detection limits achievable by the ICP spectrometer are also given in Table 1. These are computed as 3.3 times the standard deviation of the distribution of outputs for the repeated measurement of Standard. no. 1, which contains no metals and is used as the zero point for the two-point instrument standardization described in Section 3.3. The acid concentrations of this standard match the acid concentrations of blanks and samples.

TABLE 1. CONCENTRATIONS OF THE MOST CONCENTRATED WORKING STANDARD*, TYPICAL ICP CALIBRATING SENSITIVITIES, AND TYPICAL INSTRUMENTAL DETECTION LIMITS±

Element	Most Conc. Working Std. (mg/l)	Calibrating Sensitivity (counts/μg metal)	Detection Limit (mg/l)
Al	50.0	4,887	0.061
As	5.0	5,063	0.025
Au	5.0	11,683	0.009
B	10.0	42,892	0.030
Ba	10.0	13,430	0.003
Be	2.0	57,457	0.002
Bi	10.0	467	1.030
Ca	40.0	52,787	0.103
Cd	4.0	37,438	0.005
Ce	5.0	13,859	0.048
Co	5.0	2,787	0.015
Cr	4.0	76,772	0.012
Cu	20.0	159,213	0.010
Fe	50.0	16,985	0.034
Ge	5.0	1,645	0.079
Hg	5.0	9,031	0.055
In	5.0	520	0.081
K	20.0	253	0.205
La	2.0	44,468	0.007
Li	2.0	12,500	0.003
Mg	40.0	70,951	0.024
Mn	10.0	108,751	0.004
Mo	5.0	5,266	0.009
Na	80.0	186	inoperative
Nb	2.0	59,859	0.011
Ni	5.0	4,306	0.014
P	20.0	2,941	0.104
Pb	25.0	10,324	0.032
Pd	5.0	7,996	0.130
Pt	5.0	847	0.107
Re	10.0	288	0.150
Rh	5.0	32,421	2.000
Ru	10.0	5,227	0.187
Sb	5.0	4,246	0.025
Se	5.0	930	0.156
Si	50.0	9,152	0.172
Sm	5.0	52,532	0.024
Sn	5.0	469	0.042
Sr	5.0	55,091	0.001
Ta	5.0	21,030	0.145
Te	5.0	4,676	0.021
Ti	5.0	58,777	0.003
Tl	5.0	3,063	0.152
V	5.0	107,250	0.007
W	5.0	1,170	0.057
Y	5.0	35,800	0.004
Zn	20.0	478	0.120
Zr	5.0	18,010	0.008

* The least concentrated working standard contains no metals.

† Data source is 1982 NAMS standards (05/11/83); net values, background corrected; pump rate = 1.86 ml/min, 10-s exposure.

± Data source is 48 determinations of standard no. 1 made from 01/26/83 -- 03/22/83 during analysis of 1982 NAMS filters.

1.3 INTERFERENCES

Spectral interferences result when spectrally pure solutions of one element produce a finite output on channels assigned to other elements. When the quantitative correction is made, the order of correction is arranged so that only "true" (that is, interference-free or previously corrected) values are used in any quantitative correction of another element. Table 2 lists the quantitative correction factors in the order in which they are applied in the data-processing step. The correction relation for any affected element is "true" conc. = apparent conc. minus the correction factor multiplied by the "true" conc. of the affecting element.

Matrix interferences do exist. This problem has been minimized by matrix matching of standards and samples.

TABLE 2. CORRECTION FACTORS FOR SPECTRAL INTERFERENCES

Affected Element	Factor	Affecting Element	Affected Element	Factor	Affecting Element
Ta	0.0166	Co	Bi	0.0268	Rh
Ta	0.0026	Fe	Bi	0.0116	Se
Al	0.0141	Ta	Bi	0.0041	Si
Al	0.0375	V	Bi	0.0125	Sr
B	0.0181	Zr	Ge	0.0071	Al
Be	0.0020	Nb	Ge	0.0015	Be
Be	0.0025	V	Ge	0.0085	Mo
Ce	0.2313	V	Ge	0.0293	Nb
Mg	0.0574	Co	Ge	0.1489	Ta
Mg	0.0151	Fe	P	0.0017	Al
La	0.0028	Fe	P	0.0265	Cu
La	0.0122	V	P	0.0016	Fe
Pb	0.1104	Nb	P	0.0032	Mg
Pd	0.0247	Nb	P	0.0100	Nb
Pd	0.1649	Sm	P	0.0017	Si
Pd	0.0125	Ti	P	0.0010	Zn
Pt	0.0600	Cr	Re	0.0240	Al
Pt	0.0175	Nb	Re	0.0110	B
Pt	0.1300	Ta	Re	0.1609	Mn
Pt	0.0210	V	Re	1.2400	Mo
Si	0.0281	Nb	Re	0.0556	Pd
Si	0.1300	Ta	Re	0.0044	Si
Si	0.2495	Zr	Re	0.2146	V
Te	0.0254	V	Ru	0.0141	Fe
Tl	0.0607	Ce	Ru	0.0843	Mn
Tl	0.0229	Zr	Ru	0.0233	Mo
Zn	0.0132	Ta	Ru	0.0827	Nb
As	0.0119	Al	Ru	0.2531	Ta
As	0.1736	Pt	Ru	0.0364	Ti
As	0.0125	V	Ru	5.5170	V
Bi	0.0083	Al	Ru	0.4996	Zr
Bi	0.0212	Cr	W	0.0021	Al
Bi	0.0065	Fe	W	0.0039	Mg
Bi	0.0326	La	W	0.0027	Zn
Bi	0.0155	Mg	As	0.0218	Ge
Bi	0.0312	Mn			

SECTION 2

APPARATUS AND MATERIALS

2.1 APPARATUS

2.1.1 Hi-Vol Sampler

Use and calibrate the Hi-Vol sampler as described in the Code of Federal Regulations (1975). The sampler may be fitted with the SSI head when required by experimental design.

2.1.2 Analysis

A. Acid digestion bomb. (Parr 4745).

B. Centrifuge. (IEC Model K), equipped with 12-place rotor and 30.2-x 100-mm shields.

C. Desiccator, for cooling oven-dried chemicals.

D. Gravity convection type drying oven (Precision Scientific 31281), for drying chemicals and glassware.

E. Mechanical convection type drying oven (Blue Island Electric OV 510A-2), for drying plasticware.

F. Gloves, examination-type, vinyl, disposable, prepowdered, not sterilized (Oak Medical Supply Company, Ravenna, OH), for safety of personnel handling particulate-bearing glass-fiber filters.

G. Hot plate (Corning 679535).

H. Hot plate/stirrer (Corning 6795351).

I. Inductively coupled plasma emission spectrometer (Jarrell-Ash Model 975 Plasma AtomComp). The instrument uses a Plasma-Therm HFS 2000D RF Generator as the power supply for the plasma. The excitation source is a three-turn inductively coupled plasma torch with a cross-flow pneumatic nebulizer for sample introduction. Samples are pumped to the nebulizer with a Gilson Minipuls II single-channel peristaltic pump. The instrument is equipped to read 48 elements and an electronic internal standard. A dedicated PDP-8E (Digital Equipment Corporation) minicomputer controls the instrument and yields concentration printout. For data storage, the PDP-8 has been interfaced with a PDP-11/34.

J. Bottles, linear polyethylene or polypropylene with leakproof caps, for storing samples; Teflon bottles for storing multielement standards (500 ml, 125 ml, and 30 ml).

K. Centrifuge tubes. Polypropylene tube with screw tops of polypropylene, 50 ml (Nalgene 3119-0050).

L. Pipettes. Volumetric 50 ml, 25 ml, 20 ml, 15 ml, 10 ml, 9 ml, 8 ml, 7 ml, 6 ml, 5 ml, 4 ml, 3 ml, and 2 ml, class A borosilicate glass.

M. Pipette, graduated 10 ml, class A borosilicate glass.

N. Pipette, automatic dispensing with an accuracy of setting of 0.1 ml or better and repeatability of 20 µl (Grumman Automatic Dispensing Pipette, Model ADP-30DT).

O. Magnetic stirrer with 25-mm Teflon-coated magnet (Corning 6795-353).

P. Pizza cutter, thin wheel, thickness less than 1 mm (Ecko).

Q. Rack, wire (Fisher 14-793-1) or polypropylene (Fisher 14-8090), for holding centrifuge tubes during ultrasonication.

R. Template, to aid in sectioning the glass-fiber filter; see Federal Register 1978, Figures 1 and 2, for dimensions.

S. Ultrasonic bath (Blackstone Ultrasonics Inc., Model HT 11.2 with Model SU-8 W/PC controller); cleaning power, 750 W; heating power 2000 W; ultrasonic frequency, 50 KHz; capacity, 11.2 gal.

T. Weighing balance, accurate to 0.1 mg or less.

U. Particle mask (3M, No. 8500), to be worn while cutting and handling glass-fiber filters.

2.2 REAGENTS

2.2.1 Glass-Fiber Filters for the Hi-Vol Sampler

The absolute trace metals content of blank filters is not critical, but low values are desirable. It is important that the variation in extractable trace metals between filters within a batch be small.

2.2.2 Analysis

A. Hydrochloric acid, American Chemical Society (ACS) reagent grade, concentrated (11.7 M) (Fisher A-144), for preparing samples.

B. Hydrochloric acid, Ultrex grade (12.12 M) (Baker 1-4800), for preparing standards.

C. Nitric acid, ACS reagent grade, concentrated (16 M), for preparing 20% v/v nitric acid, to clean labware only (Fisher A-200). This acid is not for sample preparation; it contains excessive metals. (Fisher A-200).

D. Nitric acid, redistilled spectrographic grade (16 M) (Calvet Chemical spectrographic grade), for preparing samples.

E. Nitric acid, Ultrex grade (15.95 M) (Baker 1-4801), for preparing standards.

F. Stock calibration standards. Multielement concentrated calibration standards are obtained commercially (Spex Industries). When properly diluted, these produce the working standards described in Section 3.2.1.

Alternatively, single-element stock standards, prepared as directed in Appendix A, may be used to produce the working standards. Preparation of the latter is described in Section 3.2.1.

G. High quality control (QC) solution. A multielement solution of 48 metals at approximately 80% the concentration of working standards. It is prepared from single-element master stock standards described in Appendix A, according to instructions in Section 3.2.1. It may be obtained commercially if the source is different from the source for stock calibration standards (item F, above).

H. Low quality control solution. A dilution of one part high QC solution (item G, above) and four parts standard no. 1 (item I, below).

I. Standard No. 1. The acid matrix blank solution (no metals) used as the zero point during instrument standardization.

J. Compressed argon in cylinders and liquid argon in tanks, purity 99.95%.

2.3 INSTRUMENT CONFIGURATION

2.3.1 Components

A. Jarrell-Ash Model 975 inductively coupled plasma spectrometer with 48 element slits, shown in Table 5.

B. Plasma-Therm type HFS 2000D R.F. generator power supply.

C. Gilsen Minipuls II peristaltic sample-delivery pump.

D. Teletype, ASR-33.

E. Tylan RO-20-A two-channel mass flow controller for argon flows of 2 and 20 l/mm.

SECTION 3

OPERATING PROCEDURE

3.1 METHOD OF OPERATION

3.1.1 Sampling

Collect samples with glass-fiber filters for 24 h by the procedure described in 40 CFR Part 50 App. B (1975). Transport collected samples to the laboratory, taking care to minimize contamination and loss of sample.

3.1.2 Sample Preparation

Cut a 1-in. by 8-in. strip from the 8-in. dimension of the folded particulate-bearing filter, using a template and a pizza cutter, as described in the Federal Register (1968). Using vinyl gloves or plastic forceps, accordian-fold or tightly roll the filter strip and place it on its edge in a 50.0-ml screw-top polypropylene centrifuge tube.

WARNING

> A breathing mask and vinyl gloves (described in Section 2.1.2) are required for safety of personnel handling dry glass-fiber filters. The breathing mask prevents the inhalation of minute glass shards and particulate material. The gloves protect the skin from the same materials and also prevent contamination of the sample by skin secretions.

Add 12.0 ml of extracting acid, using channel A on the preset calibrated automatic dispensing pipette or using a regular pipette. (The acid should cover the strip completely.) Cap the tube loosely to prevent pressure build-up during the ultrasonication step. Place tube in a sample rack. The sequence of adding the filter strip and acid to the centrifuge tube may be reversed, if more convenient, without affecting the results. Identify the sample by affixing a computer-printed sample identification label to the centrifuge tube with tape.

Put enough water, at 100°C, in a clean ultrasonic bath so that the water level is slightly above the acid level of the centrifuge tubes in the rack. This water depth is well below the centrifuge tube caps, so that samples are not contaminated during ultrasonication. Set the loosely capped centrifuge tubes containing the samples and the extracting acid upright in the rack in the ultrasonic bath. It is important for the tubes

to be upright during ultrasonication to prevent possible sample contamination. Ultrasonicate the samples 50 min. Remove the centrifuge tubes containing the samples from the ultrasonic bath, allow to cool, and blot the tubes dry.

Uncap the centrifuge tube and add 28.0 ml of deionized distilled water to the tube, using channel B on the preset calibrated automatic dispensing pipette (two passes at 14.0 ml each) or using a regular pipette. Cap the centrifuge tube tightly and shake well after each 14.0-ml addition. Place the tube in the centrifuge and operate for 20 min. at 2500 rpm. Decant the clear supernatant from the centrifuge tube into an acid-cleaned 30-ml polypropylene bottle (bearing sample ID label), taking care not to disturb the solids in the bottom of the tube. The matrix is 0.31 M nitric acid, 0.67 M hydrochloric acid, and deionized distilled water. The sample is now ready for analysis.

3.2 INITIAL START-UP PROCEDURE

3.2.1 Chemical Preparations

A. Cleaning. All labware should be scrupulously cleaned. The following procedure is recommended: Wash with laboratory detergent or ultrasonicate 30 min. with laboratory detergent, rinse, soak a minimum of 4 h in 20% v/v nitric acid, rinse three times with deionized distilled water, and oven dry.

B. Deionized distilled water. Distilled building water supply passed through a deionizer system (Millipore Corporation Milli-Q).

C. Extracting acid (2.23 M HCl, 1.03 M HNO_3). In a one-liter volumetric flask, combine in order and mix well 500 ml of deionized distilled water, 64.6 ml of concentrated (16 M) redistilled spectrographic-grade nitric acid, and 182.0 ml of ACS reagent-grade concentrated hydrochloric acid. Cool and dilute to one liter with deionized distilled water.

WARNING

Nitric and hydrochloric acid fumes are toxic. Prepare in a well-ventilated fume hood. Mixing results in an exothermic reaction. Stir slowly.

D. 1.34 M HCl Solution. Add about 250 ml of deionized distilled water to a clean 500-ml volumetric flask. Add 55.48 ml of Ultrex-grade hydrochloric acid (12.12 M). Dilute to 500 ml with deionized distilled water. Shake and store in a 500-ml Teflon bottle.

E. Working Standard No. 1 (EPA 1). This acid matrix blank (no metals) solution is used as the zero point during instrument standardization. Add about 500 ml of deionized distilled water to a clean one-liter volumetric flask. Add 55.2 ml of Ultrex-grade hydrochloric acid (12.12 M) and 19.5 ml of Ultrex-grade nitric acid (15.95 M). Dilute to one-liter with deionized distilled water. Shake and store in a one-liter Teflon bottle.

F. Working Standard No. 2 (EPA 2). This standard is prepared from the stock calibration standard designated EPA NC-2 by the supplier. (Spex Industries). Composition and concentration of the stock and the diluted working standard are given in Table 6A. Add about 50 ml of deionized distilled water to a clean 100-ml volumetric flask. Add 5.52 ml of Ultrex-grade hydrochloric acid (12.12 M), 1.85 ml of Ultrex-grade nitric acid (15.95 M) and 5.0 ml of the stock EPA NC-2 standard. Dilute to volume with deionized distilled water. Shake thoroughly and transfer to a 100-ml Teflon bottle. Fresh working standards should be prepared at least once every two weeks.

Alternatively, Working Standard No. 2 may be prepared from in-house single-element stock standards described in Appendix A. Table 7A lists the elements, acids, and aliquots required to prepare a 500-ml volume.

TABLE 6A. PREPARATION OF WORKING STANDARD NO. 2 (EPA 2) FROM COMMERCIALLY PREPARED MULTIELEMENT STOCK

Component	Stock Conc. (mg/l)	Aliquot (ml)	Working Std. Conc. (mg/l)
D.I. water	--	ca.50	--
HCl, 12.12 M		5.52	0.67 M
HNO_3, 15.95 M		1.85	0.33 M
EPA NC-2 containing		5.0	--
Ca	800	--	40
Cd	80	--	4
Co	100	--	5
Cu	400	--	20
Mg	800	--	40
Mn	200	--	10
Pb	500	--	25
Zn	400	--	20
D.I. water	--	dilute to 100	--

G. Working Standard No. 3 (EPA 3). This standard is prepared from the stock calibration standard designated EPA NC-3 by the supplier. Composition and concentration of the stock and the diluted working standards are shown in Table 6B. Add about 50 ml of deionized distilled water to a clean 100-ml volumetric flask. Add 4.52 ml of Ultrex-grade hydrochloric acid (12.12 M), 1.95 ml of Ultrex-grade nitric acid (15.95 M) and 5.0 ml of the stock EPA NC-3 standard. Dilute to volume with deionized distilled water. Shake thoroughly and transfer to a 100-ml Teflon bottle.

Alternatively, Working Standard No. 3 may be prepared from in-house single-element stock standards described in Appendix A. Table 7B lists the elements, acids, and aliquots required to prepare a 500-ml volume.

H. Working Standard No. 4 (EPA 4). This standard is prepared from the stock calibration standards designated EPA NC-4A and EPA NC-4B by the supplier. Compositions and concentrations of the stocks and the diluted working standard are shown in Table 6C. Add about 50 ml of deionized

TABLE 6B. PREPARATION OF WORKING STANDARD NO. 3 (EPA 3) FROM COMMERCIALLY PREPARED MULTIELEMENT STOCK

Component	Stock Conc. (mg/l)	Aliquot (ml)	Working Std. Conc. (mg/l)
D.I. water	--	ca.50	--
HCl, 12.12 M		4.52	0.67 M
HNO_3, 15.95 M		1.95	0.33 M
EPA NC-3 containing		5.0	--
Al	1000	--	50
Ba	200	--	10
Be	40	--	2
Fe	1000	--	50
Li	40	--	2
Mo	100	--	5
Na	1600	--	80
Ni	100	--	5
Sb	100	--	5
Sn	100	--	5
Sr	100	--	5
Ti	100	--	5
Tl	100	--	5
V	100	--	5
Zr	100	--	5
D.I. water	--	dilute to 100	--

TABLE 6C. PREPARATION OF WORKING STANDARD NO. 4 (EPA 4) FROM COMMERCIALLY PREPARED MULTIELEMENT STOCK

Component	Stock Conc. (mg/l)	Aliquot (ml)	Working Std. Conc. (mg/l)
D.I. water	--	ca.50	--
HCl, 12.12 M		5.52	0.67 M
HNO_3, 15.95 M		1.70	0.33 M
EPA NC-4A containing		5.0	--
Cr	80	--	4
Se	100	--	5
Te	100	--	5
EPA NC-4B containing		5.0	
As	100	--	5
B	200	--	10
Ge	100	--	5
P	400	--	20
Si	1000	--	50
D.I. water	--	dilute to 100	--

distilled water to a clean 100-ml volumetric flask. Add 5.52 ml of Ultrex-grade hydrochloric acid (12.12 M), 1.70 ml of Ultrex-grade nitric acid (15.95 M), 5.0 ml of the stock EPA NC-4A standard, and 5.0 ml of the stock EPA NC-4B standard. Dilute to volume with deionized distilled water. Shake thoroughly and transfer to a 100-ml Teflon bottle.

Alternatively, Working Standard No. 4 may be prepared from in-house single-element stock standards described in Appendix A. Table 7C lists the elements, acids, and aliquots required to prepare a 500-ml volume.

I. Working Standard No. 5 (EPA 5). This standard is prepared from the stock calibration standards designated EPA NC-5A and EPA NC-5B by the supplier. Composition and concentration of the stocks and the diluted working standard are shown in Table 6D. Add about 50 ml of deionized distilled water to a clean 100-ml volumetric flask. Add 4.52 ml of Ultrex-grade hydrochloric acid (12.12 M), 1.95 ml of Ultrex-grade nitric acid (15.95 M), 5.0 ml of the stock EPA NC-5A standard, and 5.0 ml of the stock EPA NC-5B standard. Shake thoroughly and transfer to a 100-ml Teflon bottle.

Alternatively, Working Standard No. 5 may be prepared from in-house single-element stock standards described in Appendix A. Table 7D lists the elements, acids, and aliquots required to prepare a 500-ml volume.

TABLE 6D. PREPARATION OF WORKING STANDARD NO. 5 (EPA 5) FROM COMMERCIALLY PREPARED MULTIELEMENT STOCK

Component	Stock Conc. (mg/l)	Aliquot (ml)	Working Std. Conc. (mg/l)
D.I. water	--	ca.50	--
HCl, 12.12 M		4.52	0.67 M
HNO_3, 15.95 M		1.95	0.33 M
EPA NC-5A containing		5.0	--
Nb	40	--	2
Te	100	--	5
W	100	--	5
EPA NC-5B containing		5.0	
Au	100	--	5
Bi	200	--	10
Ce	100	--	5
Hg	100	--	5
In	100	--	5
K	400	--	20
La	40	--	2
Pd	100	--	5
Pt	100	--	5
Re	200	--	10
Rh	100	--	5
Ru	200	--	10
Sm	100	--	5
Y	100	--	5
D.I. water	--	dilute to 100	--

J. High Quality Control (QC) Solution. This solution is prepared by adding about 500 ml of working standard no. 1 (EPA 1) to a clean one-liter flask. Add 32 ml of 1.34 M Ultrex-grade hydrochloric acid prepared as directed in Section 3.2.1,D. Refer to Table 8 and pipette indicated aliquots of the single-element stock standards described in Appendix A into the same flask. Swirl the flask after each addition. Dilute to one-liter with additional working standard no. 1. Shake thoroughly and transfer to a one-liter Teflon bottle.

TABLE 7A. PREPARATION OF WORKING STANDARD NO. 2 (EPA 2) FROM SINGLE-ELEMENT IN-HOUSE PREPARED STOCKS

Element	Stock Conc. (mg/l)	Aliquot (ml)	Working Std. Conc. (mg/l)
Std. no. 1	--	ca.200	--
HCl, 1.34 M		5	--
Ca	4,000	5	40
Cd	400	5	4
Co	500	5	5
Cu	2,000	5	20
Mg	4,000	5	40
Mn	1,000	5	10
Pb	2,500	5	25
Zn	2,000	5	20
Std. no. 1	--	dilute to 500	--

TABLE 7B. PREPARATION OF WORKING STANDARD NO. 3 (EPA 3) FROM SINGLE-ELEMENT IN-HOUSE PREPARED STOCKS

Element	Stock Conc. (mg/l)	Aliquot (ml)	Working Std. Conc. (mg/l)
Std. no. 1	--	ca.200	--
Al	5,000	5	50
Ba	1,000	5	10
Be	500	2	2
Fe	5,000	5	50
Li	500	2	2
Mo	500	5	5
Na	10,000	4	80
Ni	500	5	5
Sb	500	5	5
Sn	500	5	5
Sr	500	5	5
Ti	500	5	5
Tl	500	5	5
V	500	5	5
Zr	500	5	5
Std. no. 1	--	dilute to 500	--

CAUTION

Niobium, Tantalum, and Tungsten slowly precipitate from this solution. A faint precipitate is observed in about one month. If these elements are analytically important, it will be necessary to prepare a fresh solution of a smaller quantity.

K. Low Quality Control Solution. This solution is prepared by dilution of the high QC solution. Add about 200 ml of working standard no. 1 (EPA 1) to a clean 500-ml volumetric flask. Pipette a 125-ml aliquot of

TABLE 7C. PREPARATION OF WORKING STANDARD NO. 4 (EPA 4) FROM SINGLE-ELEMENT IN-HOUSE PREPARED STOCKS

Element	Stock Conc. (mg/l)	Aliquot (ml)	Working Std. Conc. (mg/l)
Std. no. 1	--	ca.200	--
As	500	5	5
B	1,000	5	10
Cr	500	4	4
Ge	500	5	5
P	2,000	5	20
Se	500	5	5
Si	5,000	5	50
Te	500	5	5
Std. no. 1	--	dilute to 500	--

TABLE 7D. PREPARATION OF WORKING STANDARD NO. 5 (EPA 5) FROM SINGLE-ELEMENT IN-HOUSE PREPARED STOCKS

Element	Stock Conc. (mg/l)	Aliquot (ml)	Working Std. Conc. (mg/l)
Std. no. 1	--	ca.200	--
HCl, 1.34 M	--	15	--
Au	500	5	5
Bi	1,000	5	10
Ce	500	5	5
Hg	500	5	5
In	500	5	5
K	2,000	5	20
La	500	2	2
Nb	500	2	2
Pd	500	5	5
Pt	500	5	5
Re	1,000	5	10
Rh	500	5	5
Ru	1,000	5	10
Sm	500	5	5
Ta	500	5	5
W	500	5	5
Y	500	5	5
Std. no. 1	--	dilute to 500	--

the high QC solution into the flask. Dilute to volume with additional working standard no. 1. Shake thoroughly and transfer to a 500-ml Teflon bottle.

CAUTION

Niobium, Tantalum, and Tungsten slowly precipitate from this solution. A faint precipitate is observed in about one month. If these elements are analytically important, it will be necessary to prepare a fresh solution of a smaller quantity.

TABLE 8. HIGH QUALITY CONTROL SOLUTION: ALIQUOTS FROM SINGLE-ELEMENT STOCK STANDARDS (SEE APPENDIX A)

Element	Mixed Conc. (mg/l)	Stock Aliquot (ml)	Element	Mixed Conc. (mg/l)	Aliquot (ml)
Std. no. 1	--	ca.400			
HCl, 1.34 M	--	32	Na	60	= 6
Al	40	8	Nb	1.5	3
As	4	8	Ni	4	8
Au	4	8	P	16	8
B	8	8	Pb	20	8
Ba	8	8	Pd	4	8
Be	1.5	3	Pt	4	8
Bi	8	8	Re	8	8
Ca	32	8	Rh	4	8
Cd	3	6	Ru	8	8
Ce	4	8	Sb	4	8
Co	4	8	Se	4	8
Cr	3	6	Si	40	8
Cu	16	8	Sm	4	8
Fe	40	8	Sn	4	8
Ge	4	8	Sr	4	8
Hg	4	8	Ta	4	8
In	4	8	Te	4	8
K	16	8	Ti	4	8
La	1.5	3	Tl	4	8
Li	1.5	3	V	4	8
Mg	32	8	W	4	8
Mn	8	8	Y	4	8
Mo	4	8	Zn	16	8
			Zr	4	8
			Std. no. 1	--	dilute to one-liter

L. Reagent Blanks. Reagent blanks are not prepared separately. A centrifuge tube with 12.0 ml of extracting acid is chosen at random from the set to be used with real samples. A filter strip is not added; however, the tube is subjected to all processing steps with the real sample set. The running frequency of reagent blanks is about 1 for every 40 real samples.

M. Filter blanks are interspersed with real samples during the extraction step. The Quality Assurance Division (QAD) selects at random 30 unexposed filters from the batch of filters used. Cut one 1-in. by 8-in. strip from each filter anywhere in the filter. Analyze each strip, separately, according to the procedure in Section 3.1.2.

3.2.2 Instrumental Preparations

A. Calibration Curve Linearity. ICP spectrometers are generally considered to yield a linear response over wide concentration ranges. However, it is prudent to investigate for linearity for elements expected to exceed concentrations of about 25 mg/l. Linearity may vary among manufacturers and according to operating parameters. The method and conditions described in this procedure have imposed the following limitations:

SECTION 4

QUALITY ASSURANCE

4.1 INSTRUMENTAL TUNING AND STANDARDIZATION

The instrument was tuned by the manufacturer at installation. However, it is prudent to check periodically that element lines have maintained their positions relative to the mercury profile line. Follow the manufacturer's instructions.

The Jarrell-Ash Company publishes directions for performing instrument diagnostic checks and pertinent acceptable data limits (Ward, 1978, 1979 a,b, 1980 a,b). Diagnostic checks should be run periodically at a frequency dictated by the "goodness" of instrumental QC checks.

The instrument does not require an initial calibration except as noted in Section 3.2. Daily standardization is described in Section 3.3.

4.2 CALIBRATION FOR QUANTITATIVE ANALYSIS

See Sections 3.2 and 3.3.

4.3 DAILY QA CHECK AND ANALYTICAL RUN SEQUENCE

CAUTION

> Data validation steps described in this section are primarily instrumental in nature and do not guarantee extraction efficiency. Review Section 1.4.

4.3.1 Real-Time Judgments: Standards, Gains, Offsets

This system requires virtually no data computations by the operator. However, the operator is required at several points to judge, based on historical experience, the validity of numbers generated and to decide whether to continue or stop. During the standardization, the operator must observe element response to determine if values obtained are normal. The operator must watch for computer-generated messages reporting gains or offsets that exceed the tolerance limits. Proper corrective action is based on operator experience and is discussed in Section 4.4.

4.3.2 Quality Control Solutions

Two quality control solutions are analyzed alternately every tenth burn. Each of these two solutions contains all elements observed by the spectrometer. The PDP-11 stores expected values and a bandwidth determined by experience and makes the relevant comparison immediately upon receipt of the QC data. Any out-of-control response is immediately indicated on the CRT display. If all values are within the tolerance band, the computer simply calls for the next sample. If some elements are out of control, the operator must use judgment in determining a course of action. If nearly all elements or NADB-reported elements are out of control, the cause must be located. Usually, this condition is caused by a partially plugged nebulizer. Unreported elements slightly out of control are usually ignored. When the sources of error have been found and corrected, the instrument is either rechallenged with the QC solution or restandardized, and the 10 samples preceding the error are rerun. The original 10 sample analyses are later deleted from the PDP-11 by an editing routine.

4.4 CORRECTIVE ACTIONS

It is absolutely imperative that the plasma operate in a stable mode with a uniform sample feed rate. Failure to reproduce standards responses or QC values usually is caused by a partially or totally plugged nebulizer. This condition may be verified by observing a decrease in the pump rate or the absence of a fog in the nebulizer spray chamber. A similar effect will be observed if the argon supply pressure or the RF power should change. Experience with the sample pump and the RF power supply has been excellent, and both appear to be very stable electronically.

Intermittent failure of QC solutions to fall within the tolerance band may be due to an intermittent failure in a spectrometer circuit or to a broken nebulizer needle. Both are difficult to detect without extensive testing or dismantling of equipment. Leaks in the argon supply lines are also likely causes of such problems. Leaks in the ground-glass joints of the torch-spray chamber can be eliminated by the light use of a good grade stopcock grease (not silicone-base) (See Section 4.6).

One intended purpose of the repeated analysis of QC solutions was to detect and correct instrument drift occurring within any one day. Experience has shown that drift is not a problem when the instrument is standardized twice daily. When drift has been detected it has been attributed to thermal drift and corrected by reprofiling (i.e., adjusting the optical alignment). It is mandatory to restandardize the instrument after profiling.

Long-term drift is more difficult to detect. A gradual increase in the gains of short-wavelength elements over a period of weeks or months is probably due to degradation of mirror coatings. Washing the mirrors may help in the short term, but usually they must be replaced. Mirrors may be ruined if washed improperly; manufacturer-approved procedures should be followed. Gradual degradation of electronic circuits will also cause long-term drift.

4.5 DATA AND RECORD KEEPING

4.5.1 General Information

The PDP-8 of the Jarrell-Ash ICP spectrometer outputs elemental concentrations in micrograms per milliliter to the PDP-11 for storage and data analysis following each sample analysis made during a project analysis period. Project analysis periods may last from several days to a month or more, depending on the number of samples to analyze. Virtually all computations are performed by programs available on the PDP-11. The following sections describe the various check samples and solutions analyzed during an analysis period to provide results against which to judge the validity of the real sample results. Anomalous data are studied for occurrence patterns or related events. Historical data, past experience, and additional statistical tests, as needed, contribute to the decision-making process.

Project data are transmitted to DMAD quarterly. Detailed instructions for these transmittals are given in Appendix B. Interactive computer commands and sample printouts are supplied that enable the transmittal process to be performed, producing the data necessary for the validation procedures described in the remainder of this section.

4.5.2 Standard No. 1

All determinations of standard no. 1 made during the analysis period are retrieved by the PDP-11 and the mean and standard deviation computed for each element. The latter is multiplied by 3.3 to determine the instrumental detection limit for each element. The detection limits are then compared with previous values to evaluate instrument performance.

4.5.3 QC Solutions

The PDP-11 is used to compute the mean, standard deviation, and coefficient of variation for each element, with the high and low QC solutions each serving as an individual set. Recoveries are computed from these data by hand, and all results examined and compared with previous results. Recoveries of NADB-reportable elements are usually 97 to 103%.

4.5.4 Blank Filter Analysis Results

Blank filter strips are analyzed at random during the analysis period. The PDP-11 uses these data to produce files of mean blank values and discrimination limits for each element. These values should agree with values obtained during acceptance testing.

4.5.5 Sample-Replicate Data

Throughout an analysis period, blind replicates are interspersed with the real samples by the Environmental Monitoring Division (EMD) QC officer. Following analysis, the identities of the blinds are disclosed, and the PDP-11 compares the sample and replicate data. Typical precision values

for some elements are shown in Table 4. (Section 1.4). Summaries are made available to the EMD QC officer and to DMAD (See Appendix B).

4.5.6 Quality Assurance Division Quality Control Strips

Single or multi-element-spiked 1" x 8" strips submitted by QAD are analyzed at least once a day. Their analyses are retrieved and the results furnished to QAD for further evaluation. (See Section 1.4, Table 3).

4.5.7 Operating Parameters

It is also very important to maintain a daily instrument operating parameters log described in Section 2.3.2. Such a record is invaluable for verifying past instrument performance if data are questioned. It is also potentially useful in investigating long-term instrument drift.

4.6 ROUTINE MAINTENANCE

The torch and spray chambers occasionally must be cleaned. Frequency of cleaning must be determined through experience, as a schedule and criteria have not been established. Ultrasonicate the chambers in hot detergent for at least 30 minutes, soak in aqua regia overnight, and rinse in deionized distilled water.

WARNING

> Aqua regia is a strong oxidizing agent. Wear protective clothing and a face shield.

The ground-glass joints of the torch-spray chamber should be greased with a good grade of non-silicone base stopcock grease. After reassembly, the torch must be optimized for maximum flux throughput according to manufacturer's instructions.

Should the plasma be extinguished during an analysis session, the session must be ended. Restandardization is necessary after the plasma is reignited. Restandardization must be delayed until the reflected power has been at a minimum for approximately 10 min.

SECTION 5

REFERENCES

1. Federal Register. 1978. Reference Method for the Determination of Lead in Suspended Particulate Matter Collected from Ambient Air. Fed. Reg. 43 (194): 46262-3.

2. Rhodes, R. C. 1981. Special Extractability Study of Whatman and Schleicher and Schuell Hi-Vol Filters. Memo to file, August 5, 1981, Quality Assurance Division, Environmental Monitoring Systems Laboratory, U. S. Environmental Protection Agency, Research Triangle Park, NC.

3. Code of Federal Regulations. 1975. Reference Method for the Determination of Suspended Particulates in the Atmosphere (High Volume Method). Code of Federal Regulations, Title 40, Part 50, Appendix B, pp. 12-16 (July 1, 1975).

4. Ward, A. F. 1978. The Jarrell-Ash Plasma Newsletter. Vol. 1, No. 4, pp. 14-17.

5. Ward, A. F. 1979a. Ibid. Vol. 2, No. 1, pp. 14-15.

6. Ward, A. F. 1979b. Ibid. Vol. 2, No. 3, pp. 10-11.

7. Ward, A. F. 1980a. Ibid. Vol. 3, No. 2, pp. 8-9.

8. Ward, A. F. 1980b. Ibid. Vol. 3, No. 3, pp. 9-10.

Attachment D

. North Carolina 27711.
600/4-77-027a.

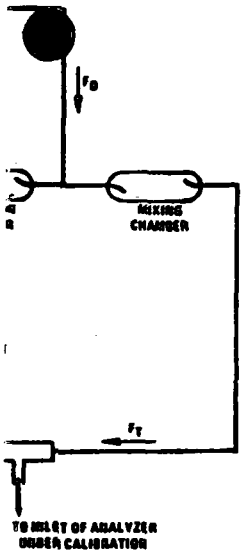

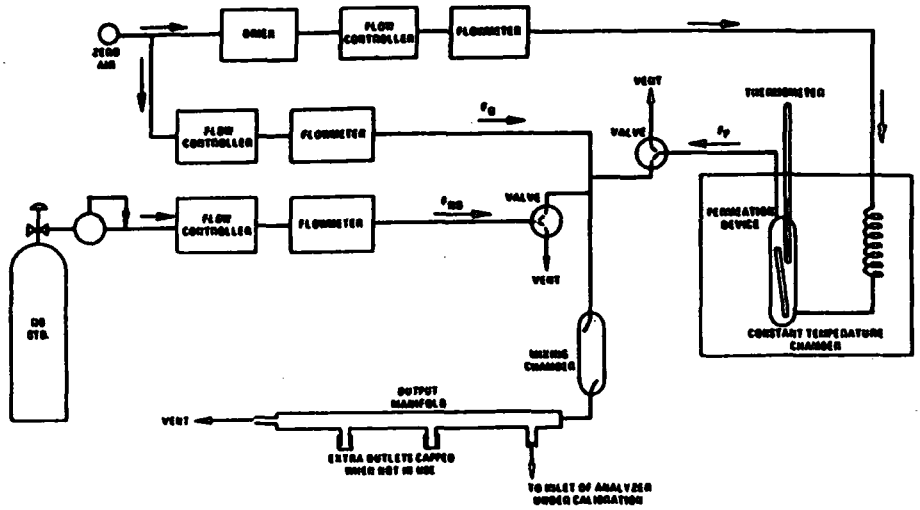

Figure 2. Schematic diagram of a typical calibration apparatus using an NO_2 permeation device.

[41 FR 52688, Dec. 1, 1976, as amended at 48 FR 2529, Jan 20, 1983]

Appendix G—Reference Method for the Determination of Lead in Suspended Particulate Matter Collected From Ambient Air

1. *Principle and applicability.*

1.1 Ambient air suspended particulate matter is collected on a glass-fiber filter for 24 hours using a high volume air sampler. The analysis of the 24-hour samples may be performed for either individual samples or composites of the samples collected over a calendar month or quarter, provided that the compositing procedure has been approved in accordance with section 2.8 of Appendix C to Part 58 of this chapter—*Modifications of methods by users.* (Guidance or assistance in requesting approval under Section 2.8 can be obtained from the address given in section 2.7 of Appendix C to Part 58 of this chapter.)

1.2 Lead in the particulate matter is solubilized by extraction with nitric acid (HNO_3), facilitated by heat or by a mixture of HNO_3 and hydrochloric acid (HCl) facilitated by ultrasonication.

1.3 The lead content of the sample is analyzed by atomic absorption spectrometry using an air-acetylene flame, the 283.3 or 217.0 nm lead absorption line, and the optimum instrumental conditions recommended by the manufacturer.

1.4 The ultrasonication extraction with HNO_3/HCl will extract metals other than lead from ambient particulate matter.

2. *Range, sensitivity, and lower detectable limit.* The values given below are typical of the methods capabilities. Absolute values will vary for individual situations depending on the type of instrument used, the lead line, and operating conditions.

2.1 *Range.* The typical range of the method is 0.07 to 7.5 μg Pb/m³ assuming an upper linear range of analysis of 15 μg/ml and an air volume of 2,400 m³.

2.2 *Sensitivity.* Typical sensitivities for a 1 percent change in absorption (0.0044 absorbance units) are 0.2 and 0.5 μg Pb/ml for the 217.0 and 283.3 nm lines, respectively.

2.3 *Lower detectable limit (LDL).* A typical LDL is 0.07 μg Pb/m³. The above value was calculated by doubling the between-laboratory standard deviation obtained for the lowest measurable lead concentration in a collaborative test of the method.(*15*) An air volume of 2,400 m³ was assumed.

3. *Interferences.* Two types of interferences are possible: chemical and light scattering.

3.1 *Chemical.* Reports on the absence (*1, 2, 3, 4, 5*) of chemical interferences far outweigh those reporting their presence, (*6*) therefore, no correction for chemical interferences is given here. If the analyst suspects that the sample matrix is causing a

chemical interference, the interference can be verified and corrected for by carrying out the analysis with and without the method of standard additions.(7)

3.2 *Light scattering.* Nonatomic absorption or light scattering, produced by high concentrations of dissolved solids in the sample, can produce a significant interference, especially at low lead concentrations. (2) The interference is greater at the 217.0 nm line than at the 283.3 nm line. No interference was observed using the 283.3 nm line with a similar method.(1)

Light scattering interferences can, however, be corrected for instrumentally. Since the dissolved solids can vary depending on the origin of the sample, the correction may be necessary, especially when using the 217.0 nm line. Dual beam instruments with a continuum source give the most accurate correction. A less accurate correction can be obtained by using a nonabsorbing lead line that is near the lead analytical line. Information on use of these correction techniques can be obtained from instrument manufacturers' manuals.

If instrumental correction is not feasible, the interference can be eliminated by use of the ammonium pyrrolidinecarbodithioate-methylisobutyl ketone, chelation-solvent extraction technique of sample preparation.(8)

4. *Precision and bias.*

4.1 The high-volume sampling procedure used to collect ambient air particulate matter has a between-laboratory relative standard deviation of 3.7 percent over the range 80 to 125 $\mu g/m^3$.(9) The combined extraction-analysis procedure has an average within-laboratory relative standard deviation of 5 to 6 percent over the range 1.5 to 15 μg Pb/ml, and an average between laboratory relative standard deviation of 7 to 9 percent over the same range. These values include use of either extraction procedure.

4.2 Single laboratory experiments and collaborative testing indicate that there is no significant difference in lead recovery between the hot and ultrasonic extraction procedures.(15)

5. *Apparatus.*

5.1 *Sampling.*

5.1.1 *High-volume sampler.* Use and calibrate the sampler as described in reference 10.

5.2 *Analysis.*

5.2.1 *Atomic absorption spectrophotometer.* Equipped with lead hollow cathode or electrodeless discharge lamp.

5.2.1.1 *Acetylene.* The grade recommended by the instrument manufacturer should be used. Change cylinder when pressure drops below 50-100 psig.

5.2.1.2 *Air.* Filtered to remove particulate, oil, and water.

5.2.2 *Glassware.* Class A borosilicate glassware should be used throughout the analysis.

5.2.2.1 *Beakers.* 30 and 150 ml, graduated, Pyrex.

5.2.2.2 *Volumetric flasks.* 100-ml.

5.2.2.3 *Pipettes.* To deliver 50, 30, 15, 8, 4, 2, 1 ml.

5.2.2.4 *Cleaning.* All glassware should be scrupulously cleaned. The following procedure is suggested. Wash with laboratory detergent, rinse, soak for 4 hours in 20 percent (w/w) HNO_3, rinse 3 times with distilled-deionized water, and dry in a dust free manner.

5.2.3 *Hot plate.*

5.2.4. *Ultrasonication water bath, unheated.* Commercially available laboratory ultrasonic cleaning baths of 450 watts or higher "cleaning power," i.e., actual ultrasonic power output to the bath have been found satisfactory.

5.2.5 *Template.* To aid in sectioning the glass-fiber filter. See figure 1 for dimensions.

5.2.6 *Pizza cutter.* Thin wheel. Thickness 1mm.

5.2.7 *Watch glass.*

5.2.8 *Polyethylene bottles.* For storage of samples. Linear polyethylene gives better storage stability than other polyethylenes and is preferred.

5.2.9 Parafilm "M".[1] American Can Co., Marathon Products, Neenah, Wis., or equivalent.

6. *Reagents.*

6.1 *Sampling.*

6.1.1 *Glass fiber filters.* The specifications given below are intended to aid the user in obtaining high quality filters with reproducible properties. These specifications have been met by EPA contractors.

6.1.1.1 *Lead content.* The absolute lead content of filters is not critical, but low values are, of course, desirable. EPA typically obtains filters with a lead content of 75 μg/filter.

It is important that the variation in lead content from filter to filter, within a given batch, be small.

6.1.1.2 *Testing.*

6.1.1.2.1 For large batches of filters (>500 filters) select at random 20 to 30 filters from a given batch. For small batches (>500 filters) a lesser number of filters may be taken. Cut one ¾"x8" strip from each filter anywhere in the filter. Analyze all strips, separately, according to the directions in sections 7 and 8.

6.1.1.2.2 Calculate the total lead in each filter as

[1] Mention of commercial products does not imply endorsement by the U.S. Environmental Protection Agency.

where:

F_s=Amount of l
of filter, μg.

6.1.1.2.3 Calcula
values and the rel
(standard deviation
ative standard dev
that, in the analys
F_b, (section 10.3) m
error in the μg Pb
rejected.

6.1.1.2.4 For acc
value of F_s to corr
tion 10.3) of part
using that batch c
are below the LDI
tion is necessary.

6.2 *Analysis.*

6.2.1 Concentrat
reagent grade HNC
able redistilled HN
ficiently low lead c

6.2.2 Concentrat
agent grade.

6.2.3 *Distilled-d*
water).

6.2.4 3 *M* HNO,
the hot extractio
add 192 ml of co
water in a 1 *l* volu
cool, and dilute to
Caution: Nitric a
pare in a well vent

6.2.5 0.45 *M* HI
as the matrix f
when using the l
To prepare, add
HNO, to D.I. wate
Shake well, cool,
D.I. water.

6.2.6 2.6 *M* HN
solution is used in
procedure. The co
varied from 0 to (
for preparation of
solution. Place 16'
into a 1 *l* volumet
concentrated HCl
to nearly 1 *l* with
temperature, and

6.2.7 0.40 *M* HI
tion is used as t
standards when u
tion procedure. T
concentrated HN
quired, to a 1 *l* v
nearly 1 *l* with D.
perature, and dil
HCl required ca
following equatio

$$F_b = \mu g\ Pb/ml \times \frac{100\,ml}{strip} \times \frac{12\,strips}{filter}$$

where:

F_b = Amount of lead per 72 square inches of filter, μg.

6.1.1.2.3 Calculate the mean, F_b, of the values and the relative standard deviation (standard deviation/mean × 100). If the relative standard deviation is high enough so that, in the analysts opinion, subtraction of F_b (section 10.3) may result in a significant error in the μg Pb/m³ the batch should be rejected.

6.1.1.2.4 For acceptable batches, use the value of F_b to correct all lead analyses (section 10.3) of particulate matter collected using that batch of filters. If the analyses are below the LDL (section 2.3) no correction is necessary.

6.2 *Analysis.*

6.2.1 Concentrated (15.6 *M*) HNO_3. ACS reagent grade HNO_3 and commercially available redistilled HNO_3 has found to have sufficiently low lead concentrations.

6.2.2 Concentrated (11.7 *M*) HCl. ACS reagent grade.

6.2.3 *Distilled-deionized water.* (D.I. water).

6.2.4 3 *M* HNO_3. This solution is used in the hot extraction procedure. To prepare, add 192 ml of concentrated HNO_3 to D.I. water in a 1 *l* volumetric flask. Shake well, cool, and dilute to volume with D.I. water. *Caution:* Nitric acid fumes are toxic. Prepare in a well ventilated fume hood.

6.2.5 0.45 *M* HNO_3. This solution is used as the matrix for calibration standards when using the hot extraction procedure. To prepare, add 29 ml of concentrated HNO_3 to D.I. water in a 1 *l* volumetric flask. Shake well, cool, and dilute to volume with D.I. water.

6.2.6 2.6 *M* HNO_3+0 to 0.9 *M* HCl. This solution is used in the ultrasonic extraction procedure. The concentration of HCl can be varied from 0 to 0.9 *M*. Directions are given for preparation of a 2.6 *M* HNO_3+0.9 *M* HCl solution. Place 167 ml of concentrated HNO_3 into a 1 *l* volumetric flask and add 77 ml of concentrated HCl. Stir 4 to 6 hours, dilute to nearly 1 *l* with D.I. water, cool to room temperature, and dilute to 1 *l*.

6.2.7 0.40 *M* HNO_3 + X *M* HCl. This solution is used as the matrix for calibration standards when using the ultrasonic extraction procedure. To prepare, add 26 ml of concentrated HNO_3, plus the ml of HCl required, to a 1 *l* volumetric flask. Dilute to nearly 1 *l* with D.I. water, cool to room temperature, and dilute to 1 *l*. The amount of HCl required can be determined from the following equation:

$$y = \frac{77\,ml \times 0.15 \times}{0.9\,M}$$

where:

y = ml of concentrated HCl required.
x = molarity of HCl in 6.2.6.
0.15 = dilution factor in 7.2.2.

6.2.8 Lead nitrate, $Pb(NO_3)_2$. ACS reagent grade, purity 99.0 percent. Heat for 4 hours at 120° C and cool in a desiccator.

6.3 *Calibration standards.*

6.3.1 Master standard, 1000 μg Pb/ml in HNO_3. Dissolve 1.598 g of $Pb(NO_3)_2$ in 0.45 *M* HNO_3 contained in a 1 *l* volumetric flask and dilute to volume with 0.45 *M* HNO_3.

6.3.2 Master standard, 1000 μg Pb/ml in HNO_3/HCl. Prepare as in section 6.3.1 except use the HNO_3/HCl solution in section 6.2.7.

Store standards in a polyethylene bottle. Commercially available certified lead standard solutions may also be used.

7. *Procedure.*

7.1 *Sampling.* Collect samples for 24 hours using the procedure described in reference *10* with glass-fiber filters meeting the specifications in section 6.1.1. Transport collected samples to the laboratory taking care to minimize contamination and loss of sample. (*16*).

7.2 *Sample preparation.*

7.2.1 *Hot extraction procedure.*

7.2.1.1 Cut a ¾" x 8" strip from the exposed filter using a template and a pizza cutter as described in Figures 1 and 2. Other cutting procedures may be used.

Lead in ambient particulate matter collected on glass fiber filters has been shown to be uniformly distributed across the filter.[1, 2, 11] Another study [12] has shown that when sampling near a roadway, strip position contributes significantly to the overall variability associated with lead analyses. Therefore, when sampling near a roadway, additional strips should be analyzed to minimize this variability.

7.2.1.2 Fold the strip in half twice and place in a 150-ml beaker. Add 15 ml of 3 *M* HNO_3 to cover the sample. The acid should completely cover the sample. Cover the beaker with a watch glass.

7.2.1.3 Place beaker on the hot-plate, contained in a fume hood, and boil gently for 30 min. Do not let the sample evaporate to dryness. *Caution:* Nitric acid fumes are toxic.

105

n be analyzed directly
lask, or an appropriate
ounted into a sample
er case, care should be
he settled solids.
les, calibr tion stand-
lo[illegible]) in.o the flame
ri[illegible]bsorbance.
lead concentration in
calibration curve, sec-

exceed the linear cali-
be diluted with acid of
ion as the calibration
zed.

ard, 20 μg Pb/ml. Pre-
.0 ml of the master
.1 if the hot acid ex-
section 6.3.2 if the ul-
rocedure was used) to
he same concentration
he master standard.
ndards. Prepare daily
ing standard, with the
indicated below. Other
ay be used.

g	Final volume, ml	Concentration μg Pb/ml
.....	100	0
.....	200	0.1
.....	200	0.2
.....	100	0.4
.....	100	0.8
.....	100	1.6
.....	100	3.0
.....	100	6.0
.....	100	10.0
.....	100	20.0

/ [illegible]libration curve.
[illegible] of analysis will
hich lead line is used
ument, no one set of in-
ation of a calibration
Select standards (plus
the same acid concen-
es, to cover the linear
licated by the instru-
Measure the absor-
nd standards as in sec-
good agreement is ob-
cates. Plot absorbance
ntration in μg Pb/ml
mpute) a straight line
ortion of the curve. Do
ration curve through
on procedures may be

lity of the calibration
ternately—one of the
standards for every
l: Concentration ≤ 1μg

Pb/ml; concentration ≤ 10 μg Pb/ml. If either standard deviates by more than 5 percent from the value predicted by the calibration curve, recalibrate and repeat the previous 10 analyses.

10. *Calculation.*

10.1 *Measured air volume.* Calculate the measured air volume at Standard Temperature and Pressure as described in Reference 10.

10.2 *Lead concentration.* Calculate lead concentration in the air sample.

$$C = \frac{(\mu g\ Pb/ml \times 100\ ml/strip \times 12\ strips/filter) - F_b}{V_{STP}}$$

where:

C = Concentration, μg Pb/sm³.

μg Pb/ml = Lead concentration determined from section 8.

100 ml/strip = Total sample volume.

12 strips = Total useable filter area, 8" × 9". Exposed area of one strip, ¾" × 7".

Filter = Total area of one strip, ¾" × 8".

F_b = Lead concentration of blank filter, μg, from section 6.1.1.2.3.

V_{STP} = Air volume from section 10.2.

11. *Quality control.*

¾" × 8" glass fiber filter strips containing 80 to 2000 μg Pb/strip (as lead salts) and blank strips with zero Pb content should be used to determine if the method—as being used—has any bias. Quality control charts should be established to monitor differences between measured and true values. The frequency of such checks will depend on the local quality control program.

To minimize the possibility of generating unreliable data, the user should follow practices established for assuring the quality of air pollution data, (*13*) and take part in EPA's semiannual audit program for lead analyses.

12. *Trouble shooting.*

1. During extraction of lead by the hot extraction procedure, it is important to keep the sample covered so that corrosion products—formed on fume hood surfaces which may contain lead—are not deposited in the extract.

2. The sample acid concentration should minimize corrosion of the nebulizer. However, different nebulizers may require lower acid concentrations. Lower concentrations can be used provided samples and standards have the same acid concentration.

3. Ashing of particulate samples has been found, by EPA and contractor laboratories, to be unnecessary in lead analyses by atomic absorption. Therefore, this step was omitted from the method.

4. Filtration of extracted samples, to remove particulate matter, was specifically excluded from sample preparation, because some analysts have observed losses of lead due to filtration.

5. If suspended solids should clog the nebulizer during analysis of samples, centrifuge the sample to remove the solids.

13. *Authority.*

(Secs. 109 and 301(a), Clean Air Act, as amended (42 U.S.C. 7409, 7601(a)))

14. *References.*

1. Scott, D. R. et al. "Atomic Absorption and Optical Emission Analysis of NASN Atmospheric Particulate Samples for Lead." *Envir. Sci. and Tech., 10,* 877-880 (1976).

2. Skogerboe, R. K. et al. "Monitoring for Lead in the Environment." pp. 57-66, Department of Chemistry, Colorado State University, Fort Collins, Colo. 80523. Submitted to National Science Foundation for publications, 1976.

3. Zdrojewski, A. et al. "The Accurate Measurement of Lead in Airborne Particulates." *Inter. J. Environ. Anal. Chem., 2,* 63-77 (1972).

4. Slavin, W., "Atomic Absorption Spectroscopy." Published by Interscience Company, New York, N.Y. (1968).

5. Kirkbright, G. F., and Sargent, M., "Atomic Absorption and Fluorescence Spectroscopy." Published by Academic Press, New York, N.Y. 1974.

6. Burnham, C. D. et al., "Determination of Lead in Airborne Particulates in Chicago and Cook County, Ill. by Atomic Absorption Spectroscopy." Envir. Sci. and Tech., 3, 472-475 (1969).

7. "Proposed Recommended Practices for Atomic Absorption Spectrometry." *ASTM Book of Standards,* part 30, pp. 1596-1608 (July 1973).

8. Koirttyohann, S. R. and Wen, J. W., "Critical Study of the APCD-MIBK Extraction System for Atomic Absorption." *Anal. Chem., 45,* 1986-1989 (1973).

9. *Collaborative Study of Reference Method for the Determination of Suspended Particulates in the Atmosphere (High Volume Method).* Obtainable from National Technical Information Service, Department

of Commerce, Port Royal Road, Springfield, Va. 22151, as PB-205-891.

10. "Reference Method for the Determination of Suspended Particulates in the Atmosphere (High Volume Method)." Code of Federal Regulations, Title 40, Part 50, Appendix B, pp. 12-16 (July 1, 1975).

11. Dubois, L., et al., "The Metal Content of Urban Air." JAPCA, *16*, 77-78 (1966).

12. EPA Report No. 600/4-77-034, June 1977, "Los Angeles Catalyst Study Symposium." Page 223.

13. *Quality Assurance Handbook for Air Pollution Measurement System. Volume 1—Principles.* EPA-600/9-76-005, March 1976.

14. Thompson, R. J. et al., "Analysis of Selected Elements in Atmospheric Particulate Matter by Atomic Absorption." *Atomic Absorption Newsletter, 9*, No. 3, May-June 1970.

15. To be published. EPA, QAB, EMSL, RTP, N.C. 27711

16. *Quality Assurance Handbook for Air Pollution Measurement Systems. Volume II—Ambient Air Specific Methods.* EPA-600/4-77/027a, May 1977.

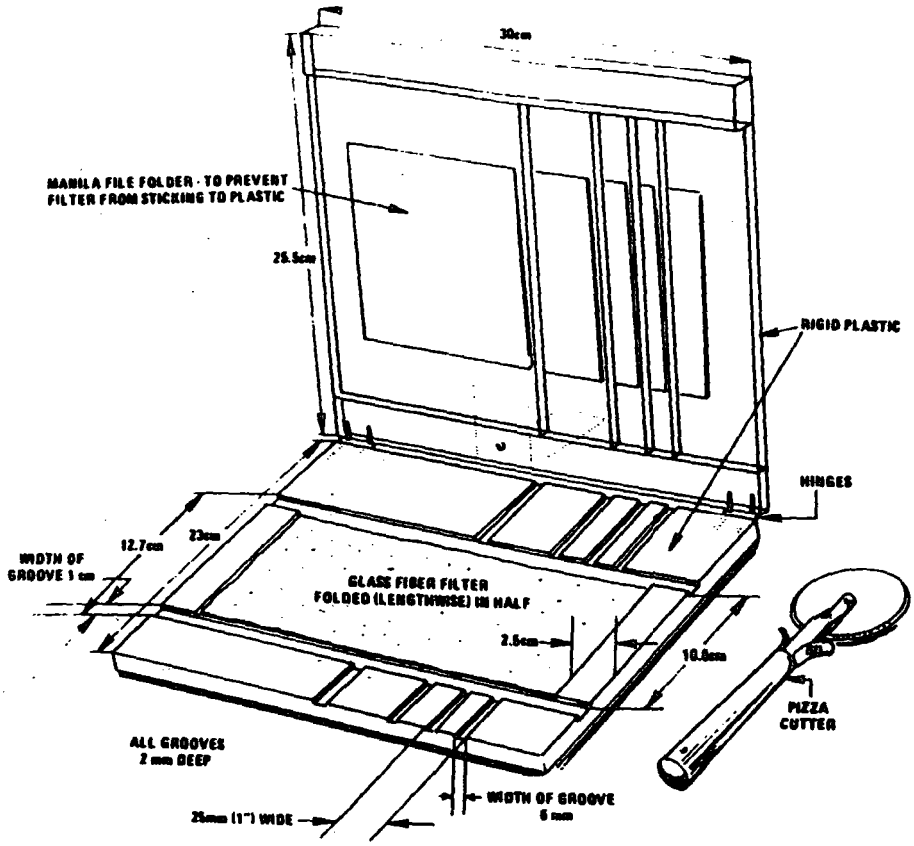

Figure 1

108

al., "Analysis of Se-
spheric Particulate
ption." *Atomic Ab-*
No. 3, May-June

EPA, [illegible]B, EMSL,

Handbook for Air
Systems. Volume
Methods. EPA-600/

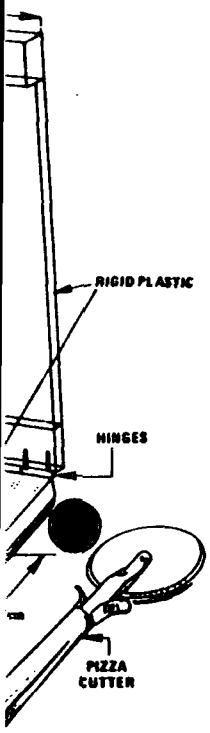

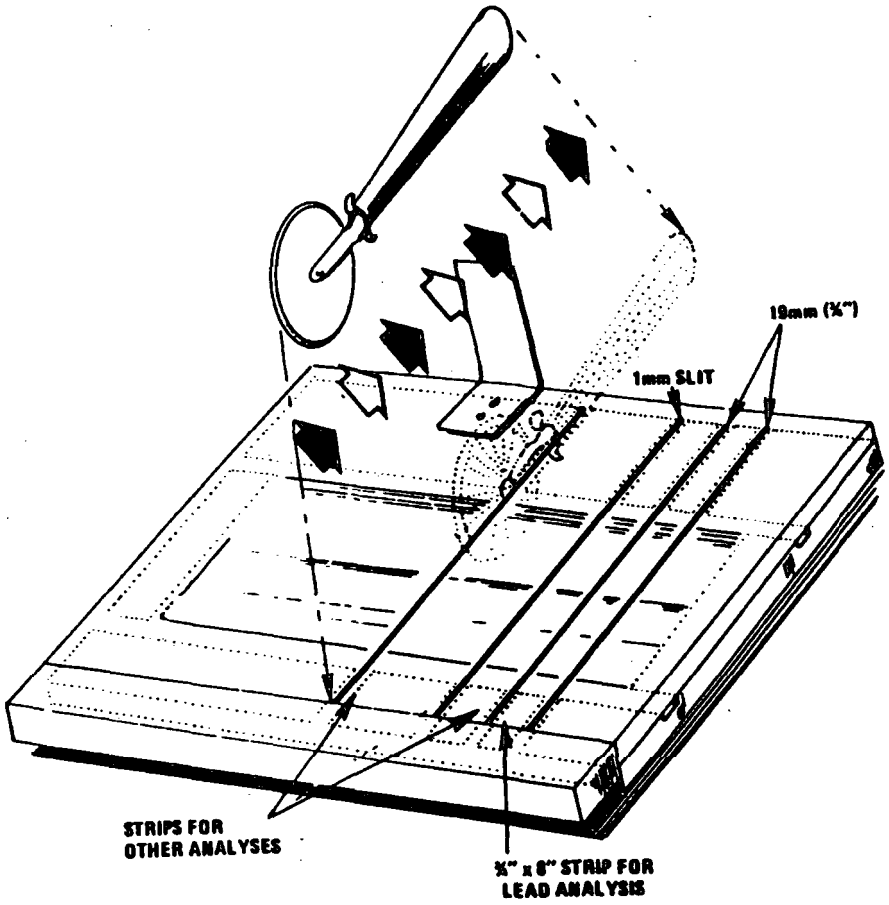

Figure 2

(Secs. 109, 301(a) of the Clean Air Act, as amended (42 U.S.C. 7409, 7601(a)); secs. 110, 301(a) and 319 of the Clean Air Act (42 U.S.C. 7410, 7601(a), 7619))

[43 FR 46258, Oct. 5, 1978; 44 FR 37915, June 29, 1979, as amended at 46 FR 44163, Sept. 3, 1981]

Appendix H—Interpretation of the National Ambient Air Quality Standards for Ozone

1. *General*

This appendix explains how to determine when the expected number of days per calendar year with maximum hourly average concentrations above 0.12 ppm (235 $\mu g/m^3$) is equal to or less than 1. An expanded discussion of these procedures and associated examples are contained in the "Guideline for Interpretation of Ozone Air Quality Standards." For purposes of clarity in the following discussion, it is convenient to use the term "exceedance" to describe a daily maximum hourly average ozone measurement that is greater than the level of the standard. Therefore, the phrase "expected

3285H-8-015

Mr. Shelton,

Please return the yellow copy of the chain-of-custody and the pink copy of the SAS Packing List to:

CLP Sample Management Office
P.O. Box 818 - Alexandria, Virginia 22313
(703) 557-2490 Attn: Lyn Riddich.

Thanks
Mike R. Young

Michael Shelton
Weyerhauser Technology Center
32901 32nd Drive South
Federal Way, WA
98003

Nicole Blase
Camp Dresser & McKee
177 W Lennox
Midvale, UT 84047
(801) 562-1776

Dear Mr. Shelton

Enclosed is package # 007 lot # 63272 25 Quartz mircofilters that were missing out of shipment # 002 Air bill # 3284737234. Please weigh these filters & send back with the previous filters already sent to you. Please ship under custody to

Nicole Blase
177 West Lennox ST
Midvale, UT 84047

Thank-you & sorry for the inconvenience.

Nicole Blase

PLEASE RETURN YELLOW COPY OF CHAIN OF CUSTODY TO:

CAMP DRESSER & McKEE
2300 15th STREET
DENVER, CO
80202
ATTN MIKE YOUNG

Michael Shelton
Weyerhauser Technology Center
32901 32nd Drive South
Federal Way, WA 98003

Mike R. Young
CAMP Dresser & McKee, Inc
177 West Lennox St.
Midvale, UT 84047
(801) 562-1776

Dear Mr. Shelton

Please weigh 30 quartz microfiber filters (Packages #002 + 003) and 10 glass fiber filters (Package #001) and return by no later than Saturday September 19, 1987. Included in this shipment are 100 'zip-loc' bags and manilla folders which are to be used for shipping the weighed filters. (i.e. one filter per bag inside a manilla folder). Please ship all filters under custody to Nicole [(801) 562-1776] → Blase @ 177 West Lennox St, Midvale, UT 84047.

Additional filters for pre-sampling weighing will be sent to you by Tuesday September 15th 1987. We will include more 'zip-loc' bags and manilla folders for the return shipping.

Thanks for your cooperation,

Mike R. Young

Mike R Young

P.S.: Our Fed-EX charge code for return shipping is 0802-0543-0

Michael Shelton
Weyerhauser Technology Center
32901 32ND Drive South
Federal Way, WA 98003

Mike R. Young
Camp Dresser & McKee, Inc
177 W. Lennox St.
Midvale, UT 84047

Dear Mr. Shelton,

Please set aside 40 microquartz filters for lab QC (i.e. lab filter blanks and MCS prep.) Also set aside 6 micro-quartz and 6 glass fiber filters for Pb blanks and spiked filters. Please note that the SAS outlines the number of filters to be retained by the Lab as well. Please ship all weighed Filters to:

Nicole Blase / Mike Young
177 W. Lennox St.
Midvale, UT 84047
(801) 562-1776

It was indicated to me that I need not send zip loc bags and manilla folders. For return shipping our Fed. Ex. code is 0802-0543-0.

Thanks for your cooperation,
Mike R. Young
Mike R Young

(As) SR16122 11-2-87 * 3285H-8-012

Element File: AS_CLP
Date: 11/02/87
Data Storage File: As_data
Technique: HGA

Element: As
Time: 14:37
ID/Weight File:
Calibration Type: Linear

~~~~~~

Sample ID: Blank   Sequence No.: 00001   Sampler Position: 1

Peak Area (A-s): 0.008   Peak Height (A): 0.015
Background Pk Area (A-s): 0.012   Background Pk Height (A): 0.016
Blank Corrected Pk Area (A-s): 0.008

Peak Area (A-s): 0.001   Peak Height (A): 0.012
Background Pk Area (A-s): 0.017   Background Pk Height (A): 0.019
Blank Corrected Pk Area (A-s): 0.001

Mean Pk Area (A-s): 0.005   SD: 0.0048   RSD(%): 104.6

Auto-zero performed.

~~~~~~

Sample ID: Standard 1   Sequence No.: 00002   Sampler Position: 2

Peak Area (A-s): 0.095   Peak Height (A): 0.139

* Note: Standards prepared with HCl/HNO_3 matrix the same as the sample preparation

Background Pk Area (A-s): 0.026 Background Pk Height (A): 0.021
Blank Corrected Pk Area (A-s): 0.090

Peak Area (A-s): 0.090 Peak Height (A): 0.144
Background Pk Area (A-s): 0.028 Background Pk Height (A): 0.022
Blank Corrected Pk Area (A-s): 0.085

Mean Pk Area (A-s): 0.087 SD: 0.0036 RSD(%): 4.2

Standard number 1 applied. [20.0]

~~~~~~

Sample ID: Standard 2 Sequence No.: 00003 Sampler Position: 3

Peak Area (A-s): 0.160 Peak Height (A): 0.248
Background Pk Area (A-s): 0.030 Background Pk Height (A): 0.028
Blank Corrected Pk Area (A-s): 0.156
Concentration (ug/L): 35.5

Peak Area (A-s): 0.157 Peak Height (A): 0.244
Background Pk Area (A-s): 0.031 Background Pk Height (A): 0.029
Blank Corrected Pk Area (A-s): 0.153
Concentration (ug/L): 34.9

Mean Conc (ug/L): 35.2 SD: 0.48 RSD(%): 1.4

Standard number 2 applied. [35.0]

~~~~~~

Sample ID: Standard 3 Sequence No.: 00004 Sampler Position: 4

Peak Area (A-s): 0.220 Peak Height (A): 0.355
Background Pk Area (A-s): 0.033 Background Pk Height (A): 0.034
Blank Corrected Pk Area (A-s): 0.216
Concentration (ug/L): 49.1

Peak Area (A-s): 0.220 Peak Height (A): 0.356
Background Pk Area (A-s): 0.037 Background Pk Height (A): 0.034
Blank Corrected Pk Area (A-s): 0.215
Concentration (ug/L): 49.0

Mean Conc (ug/L): 49.0 SD: 0.05 RSD(%): 0.1

Standard number 3 applied. [50.0]

~~~~~~

Sample ID: 5 Sequence No.: 00005 Sampler Position: 5

Peak Area (A-s): -0.004 Peak Height (A): 0.012
Background Pk Area (A-s): 0.024 Background Pk Height (A): 0.020
Blank Corrected Pk Area (A-s): -0.009
Concentration (ug/L): -2.1

Peak Area (A-s): 0.003 Peak Height (A): 0.011
Background Pk Area (A-s): 0.020 Background Pk Height (A): 0.019
Blank Corrected Pk Area (A-s): -0.002
Concentration (ug/L): -0.5 <4 Cont. Cal. Blk. (0)

Mean Conc (ug/L): -1.3 SD: 1.14 RSD(%): 89.5
~~~~~~

~~~~~~

Sample ID: 6   Sequence No.: 00006   Sampler Position: 6

Peak Area (A-s): 0.188   Peak Height (A): 0.250
Background Pk Area (A-s): 0.038   Background Pk Height (A): 0.033
Blank Corrected Pk Area (A-s): 0.183
Concentration (ug/L): 42.2

Peak Area (A-s): 0.186   Peak Height (A): 0.281
Background Pk Area (A-s): 0.037   Background Pk Height (A): 0.036
Blank Corrected Pk Area (A-s): 0.181
Concentration (ug/L): 41.8   42   ICV 2 (41)

Mean Conc (ug/L): 42.0   SD: 0.28   RSD(%): 0.7

~~~~~~

Sample ID: 7   Sequence No.: 00007   Sampler Position: 7

Peak Area (A-s): -0.000   Peak Height (A): 0.009
Background Pk Area (A-s): 0.025   Background Pk Height (A): 0.018
Blank Corrected Pk Area (A-s): -0.005
Concentration (ug/L): -1.2

Peak Area (A-s): -0.001   Peak Height (A): 0.013
Background Pk Area (A-s): 0.026   Background Pk Height (A): 0.017
Blank Corrected Pk Area (A-s): -0.006
Concentration (ug/L): -1.3   <4   RGT Blk1

Mean Conc (ug/L): -1.2   SD: 0.09   RSD(%): 7.0

~~~~~~

Sample ID: 8   Sequence No.: 00008   Sampler Position: 8

Peak Area (A-s): 0.002   Peak Height (A): 0.015
Background Pk Area (A-s): 0.024   Background Pk Height (A): 0.018
Blank Corrected Pk Area (A-s): -0.003
Concentration (ug/L): -0.7

Peak Area (A-s): 0.002   Peak Height (A): 0.013
Background Pk Area (A-s): 0.024   Background Pk Height (A): 0.020
Blank Corrected Pk Area (A-s): -0.003
Concentration (ug/L): -0.6   <4   RGT Blk 2

Mean Conc (ug/L): -0.6   SD: 0.05   RSD(%): 8.3

~~~~~~

Sample ID: 9   Sequence No.: 00009   Sampler Position: 9

Peak Area (A-s): -0.007   Peak Height (A): 0.010
Background Pk Area (A-s): 0.030   Background Pk Height (A): 0.020
Blank Corrected Pk Area (A-s): -0.012
Concentration (ug/L): -2.7

Peak Area (A-s): -0.001   Peak Height (A): 0.013
Background Pk Area (A-s): 0.022   Background Pk Height (A): 0.017
Blank Corrected Pk Area (A-s): -0.005
Concentration (ug/L): -1.2

RGT Blk 3

Mean Conc (ug/L): -2.0 <4 SD: 1.03 RSD(%): 52.2

~~~~~~

Sample ID: 10 Sequence No.: 00010 Sampler Position: 10

Peak Area (A-s): -0.000 Peak Height (A): 0.010
Background Pk Area (A-s): 0.031 Background Pk Height (A): 0.022
Blank Corrected Pk Area (A-s): -0.005
Concentration (ug/L): -1.1

Peak Area (A-s): -0.004 Peak Height (A): 0.008
Background Pk Area (A-s): 0.032 Background Pk Height (A): 0.021
Blank Corrected Pk Area (A-s): -0.008
Concentration (ug/L): -1.9

BlkQ1 (Filter)

Mean Conc (ug/L): -1.5 <4 SD: 0.57 RSD(%): 37.2

~~~~~~

Sample ID: 11 Sequence No.: 00011 Sampler Position: 11

Peak Area (A-s): 0.002 Peak Height (A): 0.015
Background Pk Area (A-s): 0.030 Background Pk Height (A): 0.020
Blank Corrected Pk Area (A-s): -0.003
Concentration (ug/L): -0.6

Peak Area (A-s): 0.002 Peak Height (A): 0.011
Background Pk Area (A-s): 0.031 Background Pk Height (A): 0.021
Blank Corrected Pk Area (A-s): -0.003
Concentration (ug/L): -0.7

BlkQ2 (Filter)

Mean Conc (ug/L): -0.7 <4 SD: 0.06 RSD(%): 8.8

~~~~~~

Sample ID: 12 Sequence No.: 00012 Sampler Position: 12

Peak Area (A-s): 0.005 Peak Height (A): 0.010
Background Pk Area (A-s): 0.027 Background Pk Height (A): 0.018
Blank Corrected Pk Area (A-s): 0.000
Concentration (ug/L): 0.1

Peak Area (A-s): 0.000 Peak Height (A): 0.011
Background Pk Area (A-s): 0.034 Background Pk Height (A): 0.022
Blank Corrected Pk Area (A-s): -0.004
Concentration (ug/L): -1.0

BlkQ3 (Filter)

Mean Conc (ug/L): -0.5 <4 SD: 0.79 RSD(%): 172.7

~~~~~~

Sample ID: 13 Sequence No.: 00013 Sampler Position: 13

Peak Area (A-s): 0.095 Peak Height (A): 0.127
Background Pk Area (A-s): 0.089 Background Pk Height (A): 0.086
Blank Corrected Pk Area (A-s): 0.090
Concentration (ug/L): 20.8

Peak Area (A-s): 0.102 Peak Height (A): 0.144
Background Pk Area (A-s): 0.083 Background Pk Height (A): 0.087
Blank Corrected Pk Area (A-s): 0.097
Concentration (ug/L): 22.4

22 268A

Mean Conc (ug/L): 21.6 SD: 1.15 RSD(%): 5.3

~~~~~~

Sample ID: 14 Sequence No.: 00014 Sampler Position: 14

Peak Area (A-s): 0.182 Peak Height (A): 0.252
Background Pk Area (A-s): 0.095 Background Pk Height (A): 0.098
Blank Corrected Pk Area (A-s): 0.177
Concentration (ug/L): 40.8

Peak Area (A-s): 0.189 Peak Height (A): 0.239
Background Pk Area (A-s): 0.093 Background Pk Height (A): 0.094
Blank Corrected Pk Area (A-s): 0.185
Concentration (ug/L): 42.5

100% 268A +20

Mean Conc (ug/L): 41.6 SD: 1.25 RSD(%): 3.0

~~~~~~

Sample ID: 15 Sequence No.: 00015 Sampler Position: 15

Peak Area (A-s): 0.104 Peak Height (A): 0.131
Background Pk Area (A-s): 0.089 Background Pk Height (A): 0.088
Blank Corrected Pk Area (A-s): 0.100
Concentration (ug/L): 22.9

Peak Area (A-s): 0.106 Peak Height (A): 0.127
Background Pk Area (A-s): 0.091 Background Pk Height (A): 0.087
Blank Corrected Pk Area (A-s): 0.101
Concentration (ug/L): 23.3

23 268B

Mean Conc (ug/L): 23.1 SD: 0.26 RSD(%): 1.1

~~~~~~

Sample ID: 16 Sequence No.: 00016 Sampler Position: 16

Peak Area (A-s): 0.181 Peak Height (A): 0.236
Background Pk Area (A-s): 0.089 Background Pk Height (A): 0.091
Blank Corrected Pk Area (A-s): 0.177
Concentration (ug/L): 40.7

Peak Area (A-s): 0.182 Peak Height (A): 0.233
Background Pk Area (A-s): 0.093 Background Pk Height (A): 0.090
Blank Corrected Pk Area (A-s): 0.177
Concentration (ug/L): 40.8

88% 268B +20

Mean Conc (ug/L): 40.7 SD: 0.11 RSD(%): 0.3

~~~~~~

Sample ID: 17 Sequence No.: 00017 Sampler Position: 17

Peak Area (A-s): -0.002 Peak Height (A): 0.011
Background Pk Area (A-s): 0.027 Background Pk Height (A): 0.020
Blank Corrected Pk Area (A-s): -0.007
Concentration (ug/L): -1.6

Peak Area (A-s): 0.007 Peak Height (A): 0.013
Background Pk Area (A-s): 0.023 Background Pk Height (A): 0.020
Blank Corrected Pk Area (A-s): 0.002

Concentration (ug/L): 0.5 <4 Cont. Cal. Blk. (0)

Mean Conc (ug/L): -0.6 SD: 1.46 RSD(%): 260.9

~~~~~~

Sample ID: 18 Sequence No.: 00018 Sampler Position: 18

Peak Area (A-s): 0.145 Peak Height (A): 0.200
Background Pk Area (A-s): 0.037 Background Pk Height (A): 0.026
Blank Corrected Pk Area (A-s): 0.140
Concentration (ug/L): 32.3

Peak Area (A-s): 0.149 Peak Height (A): 0.203
Background Pk Area (A-s): 0.035 Background Pk Height (A): 0.025
Blank Corrected Pk Area (A-s): 0.144
Concentration (ug/L): 33.2 33 Cont. Cal. Std. (35)

Mean Conc (ug/L): 32.8 SD: 0.60 RSD(%): 1.8

~~~~~~

Sample ID: 19 Sequence No.: 00019 Sampler Position: 19

Peak Area (A-s): 0.086 Peak Height (A): 0.105
Background Pk Area (A-s): 0.060 Background Pk Height (A): 0.059
Blank Corrected Pk Area (A-s): 0.082
Concentration (ug/L): 18.8

Peak Area (A-s): 0.082 Peak Height (A): 0.109
Background Pk Area (A-s): 0.064 Background Pk Height (A): 0.059
Blank Corrected Pk Area (A-s): 0.077
Concentration (ug/L): 17.8 18 269

Mean Conc (ug/L): 18.3 SD: 0.70 RSD(%): 3.8

~~~~~~

Sample ID: 20 Sequence No.: 00020 Sampler Position: 20

Peak Area (A-s): 0.171 Peak Height (A): 0.228
Background Pk Area (A-s): 0.072 Background Pk Height (A): 0.069
Blank Corrected Pk Area (A-s): 0.167
Concentration (ug/L): 38.4

Peak Area (A-s): 0.168 Peak Height (A): 0.234
Background Pk Area (A-s): 0.076 Background Pk Height (A): 0.069
Blank Corrected Pk Area (A-s): 0.164
Concentration (ug/L): 37.7 99% 269 +20

Mean Conc (ug/L): 38.1 SD: 0.47 RSD(%): 1.2

~~~~~~

Sample ID: 21 Sequence No.: 00021 Sampler Position: 21

Peak Area (A-s): 0.154 Peak Height (A): 0.193
Background Pk Area (A-s): 0.095 Background Pk Height (A): 0.102
Blank Corrected Pk Area (A-s): 0.150
Concentration (ug/L): 34.5 Sf dilute 1/2

Peak Area (A-s): 0.153 Peak Height (A): 0.195
Background Pk Area (A-s): 0.099 Background Pk Height (A): 0.100

sf

Blank Corrected Pk Area (A-s): 0.149
Concentration (ug/L): 34.2

270

Mean Conc (ug/L): 34.4 SD: 0.20 RSD(%): 0.6

~~~~~~

Sample ID: 22 Sequence No.: 00022 Sampler Position: 22

The sample absorbance is greater than that of the highest standard.
Peak Area (A-s): 0.242 Peak Height (A): 0.296
Background Pk Area (A-s): 0.098 Background Pk Height (A): 0.094
Blank Corrected Pk Area (A-s): 0.237 sf
Concentration (ug/L): 54.7

over-cal.

Peak Area (A-s): 0.241 Peak Height (A): 0.305
Background Pk Area (A-s): 0.114 Background Pk Height (A): 0.105
Blank Corrected Pk Area (A-s): 0.236
Concentration (ug/L): 54.3

270+20

Mean Conc (ug/L): 54.5 SD: 0.24 RSD(%): 0.4

~~~~~~

Sample ID: 23 Sequence No.: 00023 Sampler Position: 23

Peak Area (A-s): 0.118 Peak Height (A): 0.157
Background Pk Area (A-s): 0.086 Background Pk Height (A): 0.078
Blank Corrected Pk Area (A-s): 0.114
Concentration (ug/L): 26.2

Peak Area (A-s): 0.123 Peak Height (A): 0.166
Background Pk Area (A-s): 0.080 Background Pk Height (A): 0.079
Blank Corrected Pk Area (A-s): 0.119
Concentration (ug/L): 27.3 27

271

Mean Conc (ug/L): 26.8 SD: 0.77 RSD(%): 2.9

~~~~~~

Sample ID: 24 Sequence No.: 00024 Sampler Position: 24

Peak Area (A-s): 0.208 Peak Height (A): 0.278
Background Pk Area (A-s): 0.084 Background Pk Height (A): 0.082
Blank Corrected Pk Area (A-s): 0.204
Concentration (ug/L): 46.9

Peak Area (A-s): 0.204 Peak Height (A): 0.278
Background Pk Area (A-s): 0.085 Background Pk Height (A): 0.084
Blank Corrected Pk Area (A-s): 0.199
Concentration (ug/L): 45.9 98%

271+20

Mean Conc (ug/L): 46.4 SD: 0.74 RSD(%): 1.6

~~~~~~

Sample ID: 25 Sequence No.: 00025 Sampler Position: 25

Peak Area (A-s): 0.189 Peak Height (A): 0.242
Background Pk Area (A-s): 0.101 Background Pk Height (A): 0.100
Blank Corrected Pk Area (A-s): 0.184 sf
Concentration (ug/L): 42.4

Peak Area (A-s): 0.192 Peak Height (A): 0.238
Background Pk Area (A-s): 0.107 Background Pk Height (A): 0.105
Blank Corrected Pk Area (A-s): 0.188
Concentration (ug/L): 43.2

SF dilute 1/2

272

Mean Conc (ug/L): 42.8 SD: 0.53 RSD(%): 1.2

~~~~~~

Sample ID: 26 Sequence No.: 00026 Sampler Position: 26

The sample absorbance is greater than that of the highest standard.
Peak Area (A-s): 0.272 Peak Height (A): 0.331
Background Pk Area (A-s): 0.119 Background Pk Height (A): 0.107
Blank Corrected Pk Area (A-s): 0.268
Concentration (ug/L): 61.6

The sample absorbance is greater than that of the highest standard.
Peak Area (A-s): 0.276 Peak Height (A): 0.334
Background Pk Area (A-s): 0.105 Background Pk Height (A): 0.106
Blank Corrected Pk Area (A-s): 0.272
Concentration (ug/L): 62.6

SF over-cal

272+20

The sample absorbance is greater than that of the highest standard.
Mean Conc (ug/L): 62.1 SD: 0.67 RSD(%): 1.1

~~~~~~

Sample ID: 27 Sequence No.: 00027 Sampler Position: 27

Peak Area (A-s): 0.111 Peak Height (A): 0.154
Background Pk Area (A-s): 0.101 Background Pk Height (A): 0.118
Blank Corrected Pk Area (A-s): 0.107
Concentration (ug/L): 24.6

Peak Area (A-s): 0.115 Peak Height (A): 0.155
Background Pk Area (A-s): 0.072 Background Pk Height (A): 0.066
Blank Corrected Pk Area (A-s): 0.110
Concentration (ug/L): 25.3

25

273

Mean Conc (ug/L): 25.0 SD: 0.54 RSD(%): 2.2

~~~~~~

Sample ID: 28 Sequence No.: 00028 Sampler Position: 28

Peak Area (A-s): 0.201 Peak Height (A): 0.274
Background Pk Area (A-s): 0.078 Background Pk Height (A): 0.074
Blank Corrected Pk Area (A-s): 0.197
Concentration (ug/L): 45.3

Peak Area (A-s): 0.204 Peak Height (A): 0.270
Background Pk Area (A-s): 0.079 Background Pk Height (A): 0.076
Blank Corrected Pk Area (A-s): 0.200
Concentration (ug/L): 46.0

103%

273+20

Mean Conc (ug/L): 45.6 SD: 0.49 RSD(%): 1.1

~~~~~~

Sample ID: 29 Sequence No.: 00029 Sampler Position: 29

Peak Area (A-s): -0.002 Peak Height (A): 0.009

Background Pk Area (A-s): 0.030 Background Pk Height (A): 0.021
Blank Corrected Pk Area (A-s): -0.006
Concentration (ug/L): -1.5

Peak Area (A-s): -0.001 Peak Height (A): 0.011
Background Pk Area (A-s): 0.027 Background Pk Height (A): 0.019
Blank Corrected Pk Area (A-s): -0.005
Concentration (ug/L): -1.3 <4 Cont. Cal. Blk. (0)

Mean Conc (ug/L): -1.4 SD: 0.16 RSD(%): 11.8

~~~~~~

Sample ID: 30 Sequence No.: 00030 Sampler Position: 30

Peak Area (A-s): 0.147 Peak Height (A): 0.194
Background Pk Area (A-s): 0.034 Background Pk Height (A): 0.021
Blank Corrected Pk Area (A-s): 0.142
Concentration (ug/L): 32.7

Peak Area (A-s): 0.150 Peak Height (A): 0.202
Background Pk Area (A-s): 0.038 Background Pk Height (A): 0.024
Blank Corrected Pk Area (A-s): 0.145
Concentration (ug/L): 33.4 33 Cont. Cal. Std. (35)

Mean Conc (ug/L): 33.0 SD: 0.50 RSD(%): 1.5

~~~~~~

Sample ID: 31 Sequence No.: 00031 Sampler Position: 31

Peak Area (A-s): 0.117 Peak Height (A): 0.141
Background Pk Area (A-s): 0.076 Background Pk Height (A): 0.060
Blank Corrected Pk Area (A-s): 0.112
Concentration (ug/L): 25.9

Peak Area (A-s): 0.128 Peak Height (A): 0.149
Background Pk Area (A-s): 0.069 Background Pk Height (A): 0.064
Blank Corrected Pk Area (A-s): 0.124
Concentration (ug/L): 28.5 27 274

Mean Conc (ug/L): 27.2 SD: 1.85 RSD(%): 6.8

~~~~~~

Sample ID: 32 Sequence No.: 00032 Sampler Position: 32

Peak Area (A-s): 0.202 Peak Height (A): 0.267
Background Pk Area (A-s): 0.079 Background Pk Height (A): 0.074
Blank Corrected Pk Area (A-s): 0.197
Concentration (ug/L): 45.5

Peak Area (A-s): 0.205 Peak Height (A): 0.279
Background Pk Area (A-s): 0.081 Background Pk Height (A): 0.080
Blank Corrected Pk Area (A-s): 0.200
Concentration (ug/L): 46.1 93% 274+20

Mean Conc (ug/L): 45.8 SD: 0.47 RSD(%): 1.0

~~~~~~

Sample ID: 33 Sequence No.: 00033 Sampler Position: 33

Peak Area (A-s): -0.002 Peak Height (A): 0.011
Background Pk Area (A-s): 0.033 Background Pk Height (A): 0.025
Blank Corrected Pk Area (A-s): -0.007
Concentration (ug/L): -1.6

Peak Area (A-s): -0.002 Peak Height (A): 0.012
Background Pk Area (A-s): 0.034 Background Pk Height (A): 0.023
Blank Corrected Pk Area (A-s): -0.006
Concentration (ug/L): -1.5 <4 275

Mean Conc (ug/L): -1.5 SD: 0.05 RSD(%): 3.3

~~~~~~

Sample ID: 34 Sequence No.: 00034 Sampler Position: 34

Peak Area (A-s): 0.085 Peak Height (A): 0.139
Background Pk Area (A-s): 0.040 Background Pk Height (A): 0.026
Blank Corrected Pk Area (A-s): 0.080
Concentration (ug/L): 18.4

Peak Area (A-s): 0.090 Peak Height (A): 0.144
Background Pk Area (A-s): 0.035 Background Pk Height (A): 0.025
Blank Corrected Pk Area (A-s): 0.085
Concentration (ug/L): 19.5 95% 275+20

Mean Conc (ug/L): 19.0 SD: 0.81 RSD(%): 4.2

~~~~~~

Sample ID: 35 Sequence No.: 00035 Sampler Position: 35

Peak Area (A-s): 0.203 Peak Height (A): 0.236
Background Pk Area (A-s): 0.121 Background Pk Height (A): 0.113
Blank Corrected Pk Area (A-s): 0.198
Concentration (ug/L): 45.7 Sf dilute ½

Peak Area (A-s): 0.202 Peak Height (A): 0.246
Background Pk Area (A-s): 0.122 Background Pk Height (A): 0.115
Blank Corrected Pk Area (A-s): 0.197
Concentration (ug/L): 45.4 276

Mean Conc (ug/L): 45.5 SD: 0.24 RSD(%): 0.5

~~~~~~

Sample ID: 36 Sequence No.: 00036 Sampler Position: 36

The sample absorbance is greater than that of the highest standard.
Peak Area (A-s): 0.288 Peak Height (A): 0.317
Background Pk Area (A-s): 0.138 Background Pk Height (A): 0.128
Blank Corrected Pk Area (A-s): 0.284
Concentration (ug/L): 65.3

The sample absorbance is greater than that of the highest standard.
Peak Area (A-s): 0.284 Peak Height (A): 0.352
Background Pk Area (A-s): 0.134 Background Pk Height (A): 0.126
Blank Corrected Pk Area (A-s): 0.279
Concentration (ug/L): 64.3 Sf 276+20

The sample absorbance is greater than that of the highest standard.
Mean Conc (ug/L): 64.8 SD: 0.74 RSD(%): 1.1
~~~~~~