TETRA TECH

September 9, 2021

Ms. Shari Kolak
Task Order Contracting Officer's Representative
U.S. Environmental Protection Agency
77 West Jackson Boulevard
Chicago, IL 60604-3507

Subject: **Quality Assurance Project Plan, Revision 1 and Response to Comments on the Draft Quality Assurance Project Plan East Troy Contaminated Aquifer Superfund Site Troy, Miami County, Ohio DES Contract 68HE0318D0014 Task Order 68HE0521F0054**

Dear Ms. Kolak:

Tetra Tech, Inc. is submitting Revision 1 of the quality assurance project plan (QAPP) for the East Troy Contaminated Aquifer (ETCA) Superfund site, in Troy, Miami County, Ohio, under the U.S. Environmental Protection Agency (EPA) CLIN2 Contract for Region 5, Contract No. 68HE0318D0014, Task Order (TO) No. 68HE0521F0054. The QAPP was revised to address comments provided by EPA and Ohio EPA on the draft QAPP submitted by Tetra Tech on June 14, 2021. To facilitate EPA and OEPA's review of the revised QAPP, Tetra Tech prepared responses to comments, which are also enclosed.

If you have any questions regarding this submittal, please call me at (312) 201-7748.

Sincerely,

R. Mastrolonardo

Ray Mastrolonardo
Project Manager

Enclosures

cc: Shelia Dolan, EPA Task Order Contracting Officer
Natalie Topp, EPA Contract Specialist
Linda Martin, EPA Project Officer
Mindy Gould, Tetra Tech, Inc. Regional Coordinator

Tetra Tech, Inc.
1 S. Wacker Drive, 37th Floor, Chicago, IL 60606
Tel 312-201-7700 Fax 312-201-0031 tetratech.com

RESPONSES TO COMMENTS ON THE
DRAFT QUALITY ASSURANCE PROJECT PLAN
EAST TROY CONTAMINATED AQUIFER SUPERFUND SITE

Tetra Tech submitted the draft quality assurance project plan (QAPP) to the U.S. Environmental Protection Agency (EPA) and the Ohio Environmental Protection Agency (Ohio EPA) on June 14, 2021. Tetra Tech received comments on the draft QAPP from EPA and Ohio EPA on August 12, 2021 and July 28, 2021, respectively and participated on a conference call with EPA on August 31, 2021, to discuss EPA's comments. EPA and Ohio EPA comments are presented below followed by Tetra Tech's responses in italics immediately after each comment.

Responses to EPA Comments

1. QAPP Worksheet #3 and 5: Project Organization & QAPP Distribution List.

   - Organizational chart must show lines of authority and reporting responsibilities.
     Response: Based on discussions with EPA and additional examples provided, the organization chart has been revised to add lines of communication and lines of authority with directional arrows indicating authority and reporting responsibilities.
   - Indicate project QA Manager position's independence from unit generating data.
     Response: The organization chart revisions clarify the independence of the QA manager from the unit generating the data (field team leader and field staff). In addition, Worksheet #6 has been revised to clarify the QA Manager's independence.

2. QAPP Worksheet #10 Conceptual Site Model. Please identify data gaps and uncertainties associated with the CSM as applicable.

   Response: Uncertainties regarding the residential plume source areas are specified in the text including clarifications such as "It is unknown if contaminated soil remains in the vadose zone at that location" and "…may have originated from a different source than the main Residential Plume. This, however, may also simply represent a small pocket of contamination that was pulled away from the main plume by groundwater pumping." However, the following uncertainty clarification was added regarding the East Water Street plume. One of the source areas of the East Water Street plume is the subject of the soil investigation detailed in this QAPP. "Although areas of soil contamination have been identified, uncertainty remains regarding the volume of soil contamination present." In addition, the following statement was added regarding the uncertainty associated with the vapor intrusion (VI) pathway "In addition, the proposed VI mitigation area also includes "buffer" zones extending beyond the identified plume boundaries to account for potential uncertainties associated with delineation of the VI impacted area."

3. QAPP Worksheet #12 Measurement Performance Criteria Table.

   - Discuss representativeness and comparability as applicable.
     Response: As discussed with EPA, these criteria are discussed in Worksheet #37. The following note was added to this worksheet: " The representativeness and comparability measurement performance criteria are discussed in Worksheet #37."

- Reconcile sulfide, pH, geotechnical parameters across this worksheet, #28, #19/30.
  Response: Notes were added to Worksheet #12 that clarify that pH and geotechnical parameters are not included in Worksheet #12 because they are qualitative tests that do not include measurement performance criteria. Also, added pH to Worksheet #28 for completeness with reference to calibration requirements in Worksheet #24. Finally, the completeness of Worksheet #19/30 was verified.

4. QAPP Worksheet #14 and 16 Summary of Project Tasks, QAPP Worksheet #16 Project Schedule/Timeline Table. Update to reflect most recent changes.

   Response: Final documents dates updated from TBD to start and submittal dates.

5. QAPP Worksheet #15 Project Action Limits. Include all analytical parameters for waste characterization, as applicable.

   Response: As discussed with EPA, project action limits for waste characterization parameters such as reactive sulfide and reactive cyanide will vary based on the disposal facility available to accept the investigation derived waste at the time of disposal. A note was added to Worksheet #15.

6. QAPP Worksheet #17 Sampling Design and Rationale. Please specify:

   - The time-period being represented by the collected data.
     Response: The QAPP was revised to expand fall 2021 to fall 2021/winter 2021.
   - The basis for the number and placement of samples within sampling areas.
     Response: The QAPP was revised to state: "The sampling design was established during the RI and further refined for this investigation using a judgmental or authoritative sampling design approach (EPA 2002 and 2006b). A judgmental or authoritative sampling design is deemed appropriate and efficient because it uses all available prior information, and a statistical evaluation of the data is not anticipated."

7. QAPP Worksheet #18 Sampling Locations and Methods. Identify sources of variability and how this variability should be reconciled with project information.

   Response: The QAPP was revised to include the following statement: "Sample variability will be reduced by following field and laboratory standard operating procedures (SOP). Worksheet #37 discusses variability in both field and lab systems, including evaluation of such variability."

8. QAPP Worksheet #19, & 30 Analytical SOP Requirements, Analytical Services Table. Include data package around time.

   Response: Data package turn-around time (TAT) added. Standard CLP, ASB, and private laboratory TAT will be requested for this project. Standard TATs vary by laboratory and typically, unless rush TAT is requested, specific TAT timeframes are not provided by CLP or ASB in advance of sample submittal.

9. QAPP Worksheet #21 Project Sampling SOP References Table. Address actions to be taken when problems occur, identifying individual(s) responsible for corrective action and how this should be documented.

Response: As discussed with EPA, the requested information is provided in Worksheet #31, 32, & 33. Therefore, the following note was added: "Field audits and field note audits assess field procedures and the need for corrective action (see Worksheets #31, 32, & 33)."

10. QAPP Worksheet #22 Field Equipment Calibration, Maintenance, Testing, and Inspection Table.
    - Identify critical supplies and consumables for field and laboratory, noting supply source, acceptance criteria, and procedures for tracking, storing, and retrieving these materials.
      Response: No critical supplies are required for this project.
    - Title or position of responsible person must be identified.
      Response: The QAPP was revised to include this information.

11. QAPP Worksheet #23 Analytical SOP References Table. Describe "various".

    Response: Analytical instruments have been added.

12. QAPP Worksheet #24: Analytical Instrument Calibration. SOP references cannot be found.

    Response: ASB SOPs have been included in Appendix C and note referencing Appendix C was added to this worksheet.

13. QAPP Worksheet #25: Analytical Instrument and Equipment Maintenance, Testing, and Inspection.

    - Testing activity is not listed.
      Response: Updated Maintenance Activity column header to Maintenance/Testing Activity.
    - SOP references cannot be found.
      Response: ASB SOPs have been included in Appendix C and note referencing Appendix C was added to this worksheet.

14. QAPP Worksheet #26 & 27: Sample Handling, Custody, and Disposal.

    - Need to identify labs. Please provide exact details of labs.
      Response: Laboratories have been listed in this worksheet.
    - SOP references cannot be found.
      Response: ASB SOPs have been included in Appendix C and note referencing Appendix C was added to this worksheet.
    - Need to update for most recent changes.
      Response: No recent changes.

15. QAPP Worksheet #28: Analytical Quality Control and Corrective Action. Method/SOP Acceptance Criteria is not listed.

    Response: As discussed with EPA, acceptance criteria column references Worksheet #12 to avoid duplication. Also, method and SOP details are included in each worksheet header.

16. QAPP Worksheet #29 Project Documents and Records Table.

    - Include language that states the validated EDDs will be uploaded to the R5 electronic data submission site: https://www.epa.gov/superfund/region-5-superfund-electronic-data-submission
      Response: A note specifying this requirement was add to this worksheet.

- Lab records and data deliverable will include narrative, COC, summary results, QC results, chromatograms, tentatively identified compounds, as applicable.
  Response: As discussed with EPA, laboratory reports and data validations reports were added to this worksheet.
- Sample Collection and Field Records will include Chain-of-Custody Forms, Air Bills, Contractor Daily QC Reports, Deviations, and any other Correspondence.
  Response: As discussed with EPA, laboratory reports and data validations reports were added to this worksheet. Chain of custody forms, relevant air bills, QC reports, deviations, etc. are included in the data package.
- Project Assessments will include Data verification checklists, Data validation report and Data usability assessment report.
  Response: As discussed with EPA, a note was added referencing Worksheets #31 through 37 for project assessments.

17. <u>QAPP Worksheet #31 Planned Project Assessments Table, Worksheet #32 Assessment Findings and Corrective Response Actions, Worksheet #33 Quality Assurance Management Reports Table.</u>

    - Assessment types can also include Readiness Review, On-site analytical Technical System Audits, and Management Review. Update the worksheet if any of these will be performed.
      Response: As discussed with EPA, management review is presented in this worksheet. Also, a note was added regarding readiness review and analytical technical systems audits.

18. <u>QAPP Worksheet #34: Data Verification and Validation Inputs</u>
    - Planning Documents/Records such as Approved QAPP, Contract, Field and Laboratory SOPs will need to be verified.
      Response: As discussed with EPA, the QAPP was added to this worksheet and other required information is included in the QAPP.
    - Field records must be verified and validated. Field records can also include Equipment calibration records, Sampling diagrams/surveys, Drilling logs, Geophysics reports, Relevant Correspondence, Change orders/deviations, Field audit reports, and Field corrective action reports.
      Response: As discussed with EPA, verification of field notes and data is included in the worksheet and additional description was added to the worksheet to include sample location diagrams, drilling logs and other information. As discussed with EPA geophysics reports are laboratory reports. Also, added a note to the worksheet indicating "Worksheets #31, 32, & 33 contain information regarding assessments and corrective action."

    - Analytical data package must be verified and validated. Analytical data package generally includes Cover sheet (laboratory identifying information), Case narrative, Internal laboratory chain-of-custody, Sample receipt records, Sample chronology (i.e. dates and times of receipt, preparation, & analysis), Communication records, Project-specific PT sample results, LOD/LOQ establishment and verification, Standards Traceability, Instrument calibration records, Definition of laboratory qualifiers, Results reporting forms, QC sample results, Corrective action reports, Raw data and Electronic data deliverable.

Response: As discussed with EPA, only change required includes identifying data package levels required.

19. QAPP Worksheet #36 Data Validation Procedures Table. Worksheet needs to include Data deliverable requirements, Percent of raw data reviewed, and Electronic validation program/version (if any).

    Response: Laboratory data deliverable requirements were added to Worksheet #34. Also, a note was added to this worksheet referencing additional data validation requirements in Worksheet #37. Finally, data validation procedures were documented by adding relevant manual validation codes.

Responses to Ohio EPA Comments

1. QAPP Worksheets #3 and #5, Page 5. Ohio EPA is not listed as a QAPP recipient on the QAPP Distribution List. Please add Scott Glum, Site Coordinator, Ohio EPA (937) 285-6065, Scott.Glum@epa.ohio.gov.

   Response: The worksheets were revised to add Scott Glum.

2. QAPP Worksheet #17, Sampling Design and Rationale, page 38. The text states that soil samples will be collected in a grid using approximately 20-foot spacing between each boring. This conflicts with QAPP Worksheet#11, Project/Data Quality Objectives, on Page 20 which states that soil samples will be collected in a grid using approximately 25-foot spacing between each boring. Figure 5, Predesign Investigation Sampling Locations, also shows approximately 25-foot spacing between each soil boring. The text in QAPP Worksheet #17 should be revised to state that soil samples will be collected in a grid using approximately 25-foot spacing between each boring.

   Response: The text in Worksheet #17 will be revised to state that soil samples will be collected in a grid using approximately 25-foot spacing between each boring.

3. Figure 4, Hobart Area Soil Sampling Results, shows two locations near the middle of the Hobart loading dock, boring IDs SB324 and SB325, where previous soil samples exceeded remedial action levels for tetrachloroethene (44 ug/kg) and trichloroethene (34 ug/kg). However, the sampling grid on Figure 5, Predesign Investigation Sampling Locations, does not include geophysical surveying or soil sampling locations in the grids corresponding with locations SB324 and SB325. According to Figure 5, grid F# corresponds with SB324 and grid F4 corresponds with SB325. It is recommended that predesign investigation soil sampling locations be added for grids F3 and F4 to further delineate the area to be excavated and excavation depths. Also, the estimated area of geophysical survey should be expanded to include grids F3 and F4. Figure 5 should be revised accordingly.

   Response: Soil sampling locations SB324 and SB325 are located inside of the Hobart garage. Soil samples were collected at these locations by drilling through the garage floor. RI data shows that soil concentrations beneath the garage exceed remedial action levels; however, because the garage essentially "caps" the soil beneath it, the remedial design will not include demolishing the garage and excavating soil under it. Therefore, the predesign investigation does not include geophysics and soil sampling inside the garage in grids F3 and F4.

DESIGN AND ENGINEERING SERVICES
CONTRACT LINE ITEM NUMBER 2 (CLIN2)

QUALITY ASSURANCE PROJECT PLAN
REVISION 1
EAST TROY CONTAMINATED AQUIFER SITE
TROY, MIAMI COUNTY, OHIO

Prepared for
United States Environmental Protection Agency
Region 5
77 West Jackson Boulevard
Chicago, IL 60604

Date Submitted:	September 9, 2021
US EPA Region:	5
Task Order No:	68HE0521F0054
Contract No:	68HE0318D0014
Prepared by:	Tetra Tech, Inc.
Project Manager:	Ray Mastrolonardo
Telephone No:	(312) 201-7748
EPA Task Order	
Contractor Officer Representative:	Shari Kolak
Telephone No:	(312) 886-6151

Table of Contents

LIST OF ACRONYMS AND ABBREVIATIONS iii
INTRODUCTION 1
QAPP WORKSHEET #1 & #2 Title and Approval Page 2
QAPP WORKSHEETS #3 & #5 Project Organization & QAPP Distribution List 4
QAPP WORKSHEETS #4, 7, & 8 Personnel Qualifications & Sign-Off Sheet 6
QAPP WORKSHEET #9 Project Planning Session Summary 10
QAPP WORKSHEET #10 Conceptual Site Model 14
QAPP WORKSHEET #11 Project/Data Quality Objectives 17
QAPP WORKSHEET #12 Measurement Performance Criteria 21
QAPP WORKSHEET #13 Secondary Data Uses and Limitations 32
QAPP WORKSHEETS #14 & 16 Project Tasks and Schedule 33
QAPP WORKSHEET #15 Project Action Limits and Laboratory-Specific Detection/Quantitation Limits 35
QAPP WORKSHEET #17 Sampling Design and Rationale 39
QAPP WORKSHEET #18 Sampling Locations and Methods 40
QAPP WORKSHEET #19 & 30 Sample Containers, Preservation, and Hold Times 43
QAPP WORKSHEET #20 Field QC Summary 46
QAPP WORKSHEET #21 Field SOPs 47
QAPP WORKSHEET #22 Field Equipment Calibration, Maintenance, Testing, and Inspection 48
QAPP WORKSHEET #23 Analytical SOPs 49
QAPP WORKSHEET #24 Analytical Instrument Calibration 50
QAPP WORKSHEET #25 Analytical Instrument and Equipment Maintenance, Testing, and Inspection 54
QAPP WORKSHEET #26 & 27 Sample Handling, Custody, and Disposal 55
QAPP WORKSHEET #28 Analytical Quality Control and Corrective Action 56
QAPP WORKSHEET #29 Project Documents and Records 66
QAPP WORKSHEETS #31, 32, & 33 Assessment Response and Corrective Action 67
QAPP WORKSHEET #34 Data Verification and Validation Inputs 71
QAPP WORKSHEET #35 Data Verification Procedures 72
QAPP WORKSHEET #36 Data Validation Procedures 74
QAPP WORKSHEET #37 Data Usability Assessment 78
REFERENCES 83

APPENDICES

APPENDIX A FIGURES

APPENDIX B TETRA TECH STANDARD OPERATING PROCEDURES

APPENDIX C LABORATORY STANDARD OPERATING PROCEDURES

APPENDIX D FIELD AUDIT CHECKLIST

APPENDIX E LABORATORY CERTIFICATIONS

APPENDIX F STAGE 2A, 3, AND 4 DATA VALIDATION CHECKLISTS

APPENDIX G STAGE 3 AND STAGE 4 DATA VALIDATION CHECKLIST FOR RECALCULATIONS

LIST OF ACRONYMS AND ABBREVIATIONS

bgs	Below ground surface
B.S.	Bachelor of Science
CA	Corrective action
cDCE	cis-1,2-dichoroethene
CEM	Certified Energy Manager
CERCLA	Comprehensive Environmental Response, Compensation, and Liability Act
CI	Community involvement
CLP	Contract laboratory program
COPC	Chemicals of potential concern
CPR	Cardiopulmonary resuscitation
CRQL	Contract-required quantitation limit
CVAA	Cold vapor atomic adsorption
DQI	Data quality indicator
DQO	Data quality objectives
ETCA	East Troy Contaminated Aquifer
EPA	U.S. Environmental Protection Agency
FS	Feasibility study
GC/MS	Gas chromatography/mass spectrometry
GMR	Great Miami River
HASP	Health and safety plan
HAZWOPER	Hazardous Waste Operations and Emergency Response
ICP-AES	Inductively coupled plasma/atomic emission spectrometry
IDW	Investigation-derived waste
IA	Interim action
LEED	Leadership in Energy and Environmental Design
LPST	Leaking petroleum storage tank
MDL	Method Detection Limit
mg/L	Milligram per liter
MS	Matrix spike
MSD	Matrix spike duplicate
MPC	Measurement performance criteria
M.S.	Master of Science
NA	Not applicable
No.	Number
NPDES	National Pollutant Discharge Elimination System
OSHA	Occupational Safety and Health Administration

LIST OF ACRONYMS AND ABBREVIATIONS (Continued)

PCE	Tetrachloroethene
PDI	Pre-design investigation
PE	Professional Engineer
PID	Photoionization detector
ppm	Part per million
PG	Professional Geologist
PMP	Project management plan
POC	Point of contact
QA	Quality assurance
QAPP	Quality assurance project plan
QC	Quality control
QCC	Quality control coordinator
QL	Quantitation limit
QMP	Quality management plan
RA	Remedial action
RAO	Remedial action objective
RCRA	Resource Conservation and Recovery Act
RD	Remedial design
RI	Remedial investigation
RL	Reporting limit
ROD	Record of Decision
RPD	Relative percent difference
SOP	Standard operating procedure
SVOC	Semi-volatile organic compound
TBD	To be determined
TCE	Trichloroethene
TCLP	Toxicity characteristic leaching procedure
TO	Task order
TOCO	Task order contract officer
TOCOR	Task order contract officer's representative
TOT	Time of travel
UFP	Uniform Federal Policy
µg/L	Microgram per liter
µg/kg	Microgram per kilogram
VI	Vapor intrusion
VOC	Volatile organic compound

INTRODUCTION

Tetra Tech, Inc. (Tetra Tech) has prepared this quality assurance project plan (QAPP) for the East Troy Contamination Aquifer (ETCA) Superfund site, in the City of Troy, in Miami County, Ohio, under the U.S. Environmental Protection Agency (EPA) Design and Engineering Services Contract for EPA Region 5, Contract No. 68HE0318D0014, Task Order (TO) No. 68HE0521F0054. Under this Task Order (TO), Tetra Tech is performing a predesign investigation, development of two design packages, supporting the EPA in acquiring access to install a sub-slab remediation system and to provide technical support during remedial action implementation.

This QAPP is prepared in accordance with the Uniform Federal Policy for Quality Assurance Project Plans (UFP-QAPP) optimized worksheets (EPA 2012) and is consistent with EPA's existing QAPP guidance, *Requirements for Quality Assurance Project Plans*, QA/R-5 (EPA 2001), and the *EPA Uniform Federal Policy for Quality Assurance Project Plans: Evaluating, Assessing, and Documenting Environmental Data Collection and Use Programs, EPA-505-B-04-900A* (EPA 2001, 2005). Tetra Tech will annually review the QAPP, including any attachments, and revise the QAPP whenever necessary during the task order. These modifications may include, but are not limited to, overall program changes, quality assurance/quality control (QA/QC) improvements, the addition of any new or modified sampling or instrument Standard Operating Procedures (SOP), and the addition of any new or modified analytical methods or procedures. Any QA documents must be approved by the EPA Region 5 Quality Assurance Manager.

The purpose of the task order is to provide remedial design and remedial action support for the ETCA site. The intent of this QAPP is to provide a framework for environmental data collection activities and other project activities that may occur under the task order. These procedures are identified in appropriate sections of this QAPP and will be followed to meet environmental data collection requirements and data and project quality objectives (DQO). This UFP-QAPP supports the following tasks to be conducted by Tetra Tech.

- Predesign soil investigation at the East Water Street Hobart Cabinet property.
- Analytical support and data validation, management, and evaluation.
- Structural analysis of the East Water Street building (optional line item).
- Prepare remedial design package for the East Water Street Hobart Cabinet property soil remediation.
- Prepare a conceptual remedial design package for two types of building vapor mitigation systems
    - Submembrane de-pressurization system for buildings with dirt foundations and
    - Sub-slab de-pressurization system for buildings with slab foundations.
- Support EPA in gaining access for the vapor mitigation remedial action work for residences and commercial properties in the installation area and track progress.
- Technical assistance and meeting support
- Community involvement (optional line item)

Quality requirements specific to EPA Region 5 have been incorporated into this QAPP to satisfy project-specific needs related to the ETCA Site Statement of Work (SOW) with the goal of providing the highest quality services and deliverables to the EPA. This QAPP was developed to ensure that all data, information, and/or services generated by Tetra Tech fulfill their intended use and are adequately documented. EPA policy requires that all environmental data used in decision-making be supported by an agency-approved QAPP developed from a systematic planning process. The QAPP documents how environmental data collection operations are planned and implemented and how the results are assessed. In addition, the QAPP defines the specific QA/QC activities that will be applied to ensure that the environmental data collected are of the type and quality needed for a specific decision or use and that other project tasks meet project quality objectives.

QAPP WORKSHEET #1 & #2
Title and Approval Page

Document Title: Uniform Federal Policy Quality Assurance Project Plan (UFP-QAPP)
East Troy Contaminated Aquifer Superfund Site
Troy, Ohio

Lead Organization: Tetra Tech, Inc.
1 South Wacker Drive, Suite 3700
Chicago, IL 60606

EPA Contract No.: 68HE0318D0014
Task Order No.: 68HE0521F0054

Preparation Date: September 9, 2021, Revision 1

Lead Organization Project Manager

R. Mastrolonardo 09/09/2021

Ray Mastrolonardo, Project Manager — Date

Lead Organization QA Manager

Kristine K. Schnoes 09/09/2021

Kristine Schnoes, Quality Assurance Manager — Date

Federal Regulatory Agency U.S. Environmental Protection Agency (EPA):

Michelle Kerr, EPA Quality Assurance Contact — Date

Shari Kolak, EPA Task Order Contract Officer's Representative (TOCOR) — Date

List plans and reports from previous investigations relevant to this project

Work Plan for Remedial Investigation/Feasibility Study (RI/FS) East Troy Contaminated Aquifer Site, Troy, Miami County, Ohio, June 24, 2009.

Revised Sampling and Analysis Plan, East Troy Contaminated Aquifer Site Troy, Miami County, Ohio, January 20, 2010.

Sampling and Analysis Plan Addendum: Vapor Intrusion Monitoring Program, East Troy Contaminated Aquifer Site Troy, Miami County, Ohio, December 9, 2011.

Membrane Interface Probe Sampling Plan, East Troy Contaminated Aquifer Site Troy, Miami County, Ohio, September 13, 2013.

Expanded Phase II Sampling and Analysis Plan, East Troy Contaminated Aquifer Site Troy, Miami County, Ohio, November 6, 2013.

Final Remedial Investigation Report and Risk Assessment, East Troy Contaminated Aquifer Site, Troy, Miami County, Ohio, January 21, 2015.

Final Focused Feasibility Study Report, East Troy Contaminated Aquifer Site, Troy, Miami County, Ohio, August 31, 2017.

East Troy Contaminated Aquifer Superfund Site, Record of Decision for Source Area Cleanup, Troy, Miami County, Ohio, September 2018.

East Troy Contaminated Aquifer Superfund Site, Design and Engineering Services (DES) Contract, Revised Scope Statement of Work, Troy, Miami County, Ohio, April 26, 2021.

QAPP WORKSHEETS #3 & #5 Project Organization & QAPP Distribution List

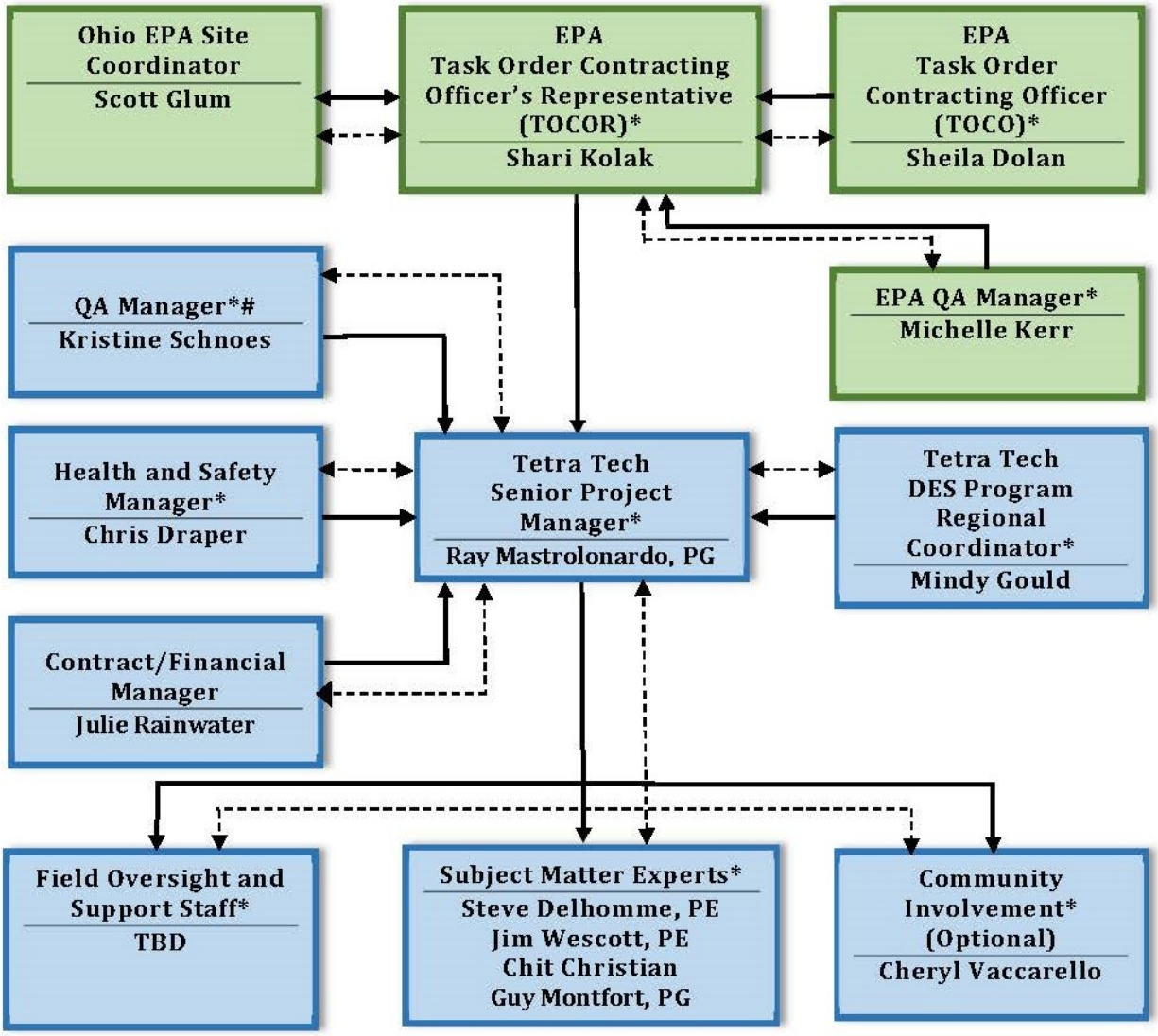

Notes: * QAPP recipient
Individual responsible for maintaining the official approved QAPP
◄- - -► Lines of communication
◄——► Lines of authority
EPA U.S. Environmental Protection Agency
TBD To be determined
QA Quality assurance

QAPP WORKSHEETS #3 & #5 (continued)
Project Organization & QAPP Distribution List

QAPP Recipients	Title	Organization	Telephone	Email Address
Natalie Topp	Contracting Specialist	EPA Region 5	(312) 353-2058	Topp.Natalie@epa.gov
Shari Kolak	TOCOR	EPA Region 5	(312) 886-6151	Kolak.Shari@epa.gov
Michelle Kerr	Quality Assurance Manager	EPA Region 5	(312) 886-8961	Kerr.Michelle@epa.gov
Sheila Dolan	TOCO	EPA Region 5	(312) 886-6675	Dolan.Sheila@epa.gov
Scott Glum	Site Coordinator	Ohio EPA	(937) 285-6065	Scott.Glum@epa.ohio.gov
Ray Mastrolonardo, PG	Point of Contact	Tetra Tech	(312) 201-7748	Ray.Mastrolonardo@tetratech.com
Julie Rainwater	Financial Manager	Tetra Tech	(510) 302-6230	Julie.Rainwater@tetratech.com
Mindy Gould	Program Manager	Tetra Tech	(312) 201-7460	Mindy.Gould@tetratech.com
Chris Draper	Health and Safety Manager	Tetra Tech	(615) 969-1334	Chris.Draper@tetratech.com
Kristine Schnoes	Quality Assurance Manager	Tetra Tech	(312) 201-7480	Kris.Schnoes@tetratech.com
Steve DelHomme, PE	Senior Engineering Director	Tetra Tech	(832) 251-5163	Stephen.Delhomme@tetratech.com
Jim Wescott, PE	Lead Soil RD Engineer	Tetra Tech	(312) 201-7781	Jim.Wescott@tetratech.com
Chit Christian	Lead VI RD Engineer	Tetra Tech	(303) 312-8863	Chit.Christian@tetratech.com
Guy Montfort, PG	Predesign Field Coordinator	Tetra Tech	(513) 333-3669	Guy.Montfort@tetratech.com
Cheryl Vaccarello	CI Specialist	Tetra Tech	(312) 201-7791	Cheryl.Vaccarello@tetratech.com
Field Team Lead	Environmental Scientist	Tetra Tech	TBD	TBD
Field Staff	Environmental Scientist	Tetra Tech	TBD	TBD
Subcontract Laboratory	Subcontract Laboratory	Bowser-Morner	TBD	TBD
Subcontract Laboratory	Subcontract Laboratory	ALS Environmental	TBD	TBD

Notes:

CI Community involvement
EPA U.S. Environmental Protection Agency
PE Professional Engineer
PG Professional Geologist
QAPP Quality assurance project plan
QC Quality control
RD Remedial design
TBD To be determined
TOCO Task Order Contracting Officer
TOCOR Task Order Contracting Officer's Representative
VI Vapor intrusion

QAPP WORKSHEETS #4, 7, & 8
Personnel Qualifications & Sign-Off Sheet

Name	Project Title/Role	Education and Experience Qualifications	Specialized Training/Certifications	Signature	Date Reviewed
Mindy Gould	DES Program Manager / Point of contact with EPA TOCOR. Ensures compliance with task order requirements and regional consistency. Supports/supervises project manager.	M.S. in Environmental Engineering; 36 years of experience	• Certified Energy Manager (CEM) • LEED Accredited Professional		
Ray Mastrolonardo, PG	Project Manager / Point of contact with TOCO and TOCOR. Manages experts, field staff, and financial and task order administration. Responsible for schedule, quality, cost control, document control, and health and safety compliance.	M.S. in Earth Science; 34 years of experience	• PG • OSHA 40-Hr, OSHA 8-Hr		
Chris Draper	Task order Health and Safety Officer / Approves the Health and Safety Plan and guides Tetra Tech field personnel on health and safety issues.	B.S. in Environmental Science; 25 years of experience.	• Health and Safety Manager		
Kristine Schnoes	Task Order QA Management / Provides QA/QC review of documents. Supports project manager. Maintains QAPP procedures.	B.S, in Environmental Science; 28 years of experience.	• OSHA 40-Hr, OSHA 8 Hr • Project Management Training		
Steve DelHomme, PE	Engineering Director / Oversees Soil and VI Mitigation Designs	B.S. in Civil Engineering; 37 years of experience	• PE • Registered LPST Corrective Action Project Manager • OSHA 40-Hr, OSHA 8 Hr • Hazardous Substance/Waste Health and Safety Training • Radiation Health and Safety Training NPDES Stormwater Permitting Course		

QAPP WORKSHEETS #4, 7, & 8 (Continued)
Personnel Qualifications & Sign-Off Sheet

Name	Project Title/Role	Education and Experience Qualifications	Specialized Training/Certifications	Signature	Date Reviewed
Jim Wescott, PE	Remedial Design Engineer / Soil RD Engineer	M.S. in Environmental Engineering and Management; 31 years of experience	• PE • OSHA 40-Hr, OSHA 8 Hr • OSHA 30-Hr Construction Training		
Chit Christian	Remedial Design Engineer / VI Mitigation RD Engineer	M.S. in Civil Engineering; 21 years of experience	• OSHA 40-Hr, OSHA 8 Hr		
Guy Montfort, PG	Project Geologist / Field Investigation Coordinator	B.S. in Geophysical Engineering; 34 years of experience	• PG • OSHA 40-Hr, OSHA 8 Hr		
Cheryl Vaccarello	Community Involvement Specialist / Provide community involvement support to project manager in preparation of technical memoranda, site fact sheets, poster boards, and other documents	M.S. in Training and Development; 37 years of experience	• Project Management • Community meeting organization and lead • Community involvement document production		
Field Staff (TBD)	Environmental Scientist	B.S. in Environmental Science, Engineering, Geology, or related field	• OSHA 40-hr Hazardous Waste Operations • OSHA 8-hr Refresher • First Aid CPR		

Notes:
Signatures indicate personnel has read and agree to implement this Quality Assurance Project Plan as written.
The Senior Project Manager shall ensure all field staff have received proper training.
All OSHA training records are maintained by the Health and Safety Department.
The Health and Safety Managers or their designees administer all OSHA training.

B.S.	Bachelor of Science	OSHA	Occupational Safety and Health Administration
CPR	Cardiopulmonary resuscitation	PE	Professional Engineer
EPA	U.S. Environmental Protection Agency	PG	Professional Geologist
LEED	Leadership in energy and environmental design	QA	Quality assurance
LPST	Leaking petroleum storage tank	RD	Remedial design
M.S.	Master of Science	TOCO	Task order contract officer
NPDES	National Pollutant Discharge Elimination System	TOCOR	Task order contract officer's representative

QAPP WORKSHEET #6
Communication Pathways

Communication Drivers	Organization	Responsible Entity	Name	Contact Information	Procedure (Timing, Pathways, Documentation, etc.)
Point of contact with EPA TOCOR and TOCO	Tetra Tech	Project Manager	Ray Mastrolonardo	Ray.Mastrolonardo@tetratech.com (312) 201-7748	Forwards all materials and information about the project to the EPA TOCOR. Communicates information to the project team (including subcontractors) on a timely basis. Notifies EPA TOCOR by telephone or e-mail of any project nonconformances or corrective actions. Ensures the project is appropriately staffed. Ensures field staff is HAZWOPER trained.
Point of contact with EPA TOCO	Tetra Tech	Program Manager	Mindy Gould	Mindy.Gould@tetratech.com (312) 201-7460	Supports the project manager.
Daily field progress report	Tetra Tech	Field Staff	TBD	TBD	Conduct specific field activities and provide daily communication with the project manager and sample custodian.
Health and safety plan	Tetra Tech	Health and Safety Manager	Chris Draper	Chris.Draper@tetratech.com (615) 969-1334	Communicates safety information to the project team and ensures compliance with the site-specific health and safety plan. Arranges for OSHA training of staff. Maintains records of staff OSHA training.
Engineering designs	Tetra Tech	Subject Matter Experts	Steve DelHomme Jim Wescott Chit Christian Guy Montfort	Stephen.Delhomme@tetratech.com (832) 251-5163 Jim.Wescott@tetratech.com (312) 201-7781 Chit.Christian@tetratech.com (303) 312-8863 Guy.Montfort@tetratech.com (513) 333-3669	Support the review of designs, treatability studies, and work plans. Communicate with the project manager.

QAPP WORKSHEET #6
Communication Pathways

Communication Drivers	Organization	Responsible Entity	Name	Contact Information	Procedure (Timing, Pathways, Documentation, etc.)
Track project costs	Tetra Tech	Task order/financial Manager	Julie Rainwater	Julie.Rainwater@tetratech.com (510) 302-6230	Communicates project costs with the project manager.
QA management	Tetra Tech	Task Order QA Manager	Kristine Schnoes	Kris.Schnoes@tetratech.com (312) 201-7480	Monitors the technical, editorial, and QC review process. Communicates with the project manager. Maintains independence from the field team generating the data.
Community relations	Tetra Tech	Community Involvement Specialist	Cheryl Vaccarello	Cheryl.Vaccarello@tetratech.com (312) 201-7791	If needed, provides support to the project manager with technical assistance for community outreach and involvement.
Daily field progress report	Tetra Tech	Field Staff	TBD	TBD	Conduct specific field investigation tasks, direct field activities, and provide daily communication with the project manager and laboratory sample custodian.

Notes:

EPA U.S. Environmental Protection Agency
QA Quality assurance
QC Quality control
TBD To be determined
TOCO Task Order Contracting Officer
TOCOR Task Order Contracting Officer Representative

QAPP WORKSHEET #9
Project Planning Session Summary

Project Name	East Troy Contaminated Aquifer Superfund Site	**Site Name**	East Troy Contaminated Aquifer Superfund Site
Projected Date(s) of Field Work	TBD	**Site Location**	City of Troy, Miami County, Ohio
Project Manager	Ray Mastrolonardo		
Date of Session	April 15, 2021 at 15:00 Central		
Scoping Session Purpose:	Kick-off meeting to discuss project scope and requirements.		

Name	Title	Affiliation	Phone #	E-Mail Address	Project Role
Shari Kolak	TOCOR	EPA Region 5	(312) 886-6151	Kolak.Shari@epa.gov	TOCOR
Linda Martin	TOCOR	EPA Region 5	(312) 886-3854	Martin.Linda@epa.gov	TOCOR
Natalie Topp	Contracting Specialist	EPA Region 5	(312) 353-2058	Topp.Natalie.@epa.gov	Contracting Specialist
Ray Mastrolonardo	Project Manager	Tetra Tech	(312) 201-7748	Ray.Mastrolonardo@tetratech.com	Project Manager, Point of Contact
Mindy Gould	Program Manager	Tetra Tech	(312) 201-7460	Mindy.Gould@tetratech.com	Program Manager
Guy Montfort	Subject Matter Expert	Tetra Tech	(513) 333-3669	Guy.Montfort@tetratech.com	Subject Matter Expert
Julie Rainwater	Task order financial Manager	Tetra Tech	(510) 302-6230	Julie.Rainwater@tetratech.com	Task order financial Manager
Chit Christian	Subject Matter Expert	Tetra Tech	(303) 312-8863	Chit.Christian@tetratech.com	Subject Matter Expert
Jim Wescott	Subject Matter Expert	Tetra Tech	(312) 201-7781	Jim.Wescott@tetratech.com	Subject Matter Expert

Comments/Decisions: Linda and Natalie stated that the formal notice to proceed (NTP) will not occur until after the QAPP is approved and signature pages need to be in before NTP. EPA expects other site-specific plans to be submitted with the QAPP. EPA is estimating that it could take 60-90 days for QAPP approval, but this timeframe is variable. The VI preliminary design deadline should be revised from 60 days after award to 60 days after NTP. After EPA issues a revised SOW, Tetra Tech will contact EPA with a timeframe for submitting a revised project management plan (PMP). To implement the pre-design investigation (PDI), access agreements will be needed for Hobart, the City of Troy, and Miami Conservancy District. Shari indicated that this was a priority and she would begin facilitating these activities. The second part of the kickoff meeting focused on financials, planning, and reporting. EPA will have internal discussions with Sheila Dolan to answer questions. A follow-up call focusing on reporting/invoicing topics may occur.

Action Items: After EPA issues a revised SOW, Tetra Tech will contact EPA with a timeframe for submitting a revised PMP.

QAPP WORKSHEET #9 (Continued)
Project Planning Session Summary

Project Name	East Troy Contaminated Aquifer Superfund Site	**Site Name**	East Troy Contaminated Aquifer Superfund Site
Projected Date(s) of Field Work	TBD	**Site Location**	City of Troy, Miami County, Ohio
Project Manager	Ray Mastrolonardo		
Date of Session	April 19, 2021 09:30 Central		
Scoping Session Purpose:	Kick-off meeting to discuss site work and QAPP scope.		

Name	Title	Affiliation	Phone #	E-Mail Address	Project Role
Shari Kolak	TOCOR	EPA Region 5	(312) 886-6151	Kolak.Shari@epa.gov	TOCOR
Natalie Topp	Contracting Specialist	EPA Region 5	(312) 353-2058	Topp.Natalie.@epa.gov	Contracting Specialist
Michelle Kerr	QA Manager	EPA Region 5	(312) 886-8961	Kerr.Michelle@epa.gov	QA Manager
Ray Mastrolonardo	Project Manager	Tetra Tech	(312) 201-7748	Ray.Mastrolonardo@tetratech.com	Project Manager, Point of Contact
Mindy Gould	Program Manager	Tetra Tech	(312) 201-7460	Mindy.Gould@tetratech.com	Program Manager
Guy Montfort	Subject Matter Expert	Tetra Tech	(513) 333-3669	Guy.Montfort@tetratech.com	Subject Matter Expert
Kristine Schnoes	QA Manager	Tetra Tech	(312) 201-7430	Kris.Schnoes@tetratech.com	QA Manager
Bruce Welch	Environmental Scientist	Tetra Tech	(312)201-7480	Bruce.Welch@tetratech.com	Chemist

QAPP WORKSHEET #9 (Continued)
Project Planning Session Summary

Comments/Decisions:
Tetra Tech will conduct a pre-design investigation at one source area (Hobart). Soil samples will be collected for VOC analysis to further delineate the area to be excavated. Tetra Tech will also collect soil samples for geotechnical analyses to help determine bank slope stability and assess any structural stability issues near the Hobart building. Tetra Tech will collect soil samples for waste characterization purposes to determine whether excavated soil will be disposed of as hazardous or non-hazardous waste. Tetra Tech will sample investigation-derived waste (IDW) for characterization/ disposal purposes.

Current QA document inventory/other applicable QAPPs
Tetra Tech conducted the RI/FS at this site under the RAC contract and prepared the previous QAPPs:
Phase I RI/FS QAPP (2010)
Phase I addendum to cover VI sampling (2011)
SAP for Membrane Interface Probe work in the residential plume source area (2013)
Expanded Phase II SAP addendum for Waterloo and a few other activities (2013)

Development of this QAPP
Tetra Tech will prepare a new QAPP with a sampling component for soil routine analyses. Assume CLP for analysis of VOCs and waste characterization.
The quantity of VOC soil samples will likely be too many for the EPA Regional lab and will be analyzed by CLP. Tetra Tech needs to determine whether to analyze samples for the full TCL VOCs or for just PCE and TCE.
Geotechnical samples will be sent to a Tier 4 (Subcontracted) lab.
Waste Characterization samples will be sent to Tier 1 (Regional/CLP) or possibly Tier 4 (Sub) for any analyses that cannot be done by Tier 1 labs.
Tetra Tech will include a discussion of VI mitigation design in early worksheets (such as WS #11 for DQOs) and later worksheets such as assessment sheets # 31-37.
Revised analytical SOWs and the updated field sampler's guide will be referenced in the QAPP.

Action Items: Plans due 30 days after EPA approval of the final PMP. EPA will submit initial QAPP review comments 90 days from receipt.

QAPP WORKSHEET #9 (Continued)
Project Planning Session Summary

Consensus decisions made:

Action Items:

Action	Responsible Party	Due Date
Kick-off meeting minutes	Tetra Tech	April 16, 2021
Tetra Tech Final PMP	Tetra Tech	May 11, 2021
Draft - SMP, HASP, DMP, WMP, QAPP	Tetra Tech	30 days after approval of Final PMP
Review Comments - SMP, HASP, DMP, WMP, QAPP	EPA	90 days from receipt
Final - SMP, HASP, DMP, WMP, QAPP	Tetra Tech	15 days from receipt of review comments

Notes:

DMP Data Management Plan
EPA U.S. Environmental Protection Agency
HASP Health and Safety Plan
PMP Project Management Plan
QAPP Quality Assurance Project Plan
SMP Site Management Plan
WMP Waste Management Plan

QAPP WORKSHEET #10
Conceptual Site Model

The East Troy Contaminated Aquifer (ETCA) Superfund site is located in the City of Troy, Miami County, Ohio (see Figure 1, in Appendix A). The site contains contaminated groundwater, which has impaired water quality in the local sand and gravel aquifer. The ETCA site includes an area west of the Great Miami River (GMR), where volatile organic compounds (VOCs) have been identified in groundwater, soil, or indoor air of residential, public, and commercial properties. The site overlies a prolific sand and gravel aquifer that is considered a sole source aquifer system. The term "sole-source aquifer" is a federal designation used to protect drinking water supplies in areas with few or no alternative sources of drinking water. The City of Troy obtains its public water supply, which serves approximately 25,000 residents, from two wellfields that draw from this aquifer, located on the east side of the GMR (the West wellfield is located about 0.75 mile north of the ETCA site and is not part of the ETCA site). The East wellfield is located at the southeastern boundary of the ETCA site and includes five production wells. The chlorinated VOC, cis-1,2-dichoroethene (cDCE), has been detected at low concentrations (below the EPA maximum contaminant level [MCL]) in water samples collected from several wells in the East wellfield. The origin of the cDCE is suspected to be from the breakdown of low concentrations of tetrachloroethene (PCE) and trichloroethene (TCE) from an area west of the river, which are then being drawn beneath the GMR through deeper portions of the aquifer near the East wellfield. The overall direction of groundwater flow is to the southeast (generally parallel to the GMR) but is locally affected by pumping in the East wellfield. The entire ETCA site lies within the 5-year time of travel (TOT) for the East wellfield production wells. Some local residents in Troy and on the ETCA site also use non-potable water from private wells installed in the aquifer; however, a City of Troy ordinance restricts the use of private potable water supply wells within the city.

A remedial investigation (RI) was completed for this site in January 2015. The RI determined that contamination is present in two separate plumes that have originated from different sources and co-mingled in some areas (see Figure 2, in Appendix A). The RI also determined that there are multiple exposure pathways and the site has a complex hydrogeologic setting. The groundwater contamination has also impaired indoor air quality in structures above the groundwater contaminant plumes, through vapor intrusion (VI).

One groundwater contaminant plume, referred to as the Residential Plume, is located within a predominantly residential area southwest of East Main Street. This plume primarily contains PCE at concentrations greater than 1,000 micrograms per liter (µg/L) in the source area, with TCE and cDCE occasionally detected at lower concentrations. This plume appears to originate immediately northwest of South Walnut Street, roughly mid-block between East Main and East Franklin Streets. This area was the former location of a dry-cleaning operation identified as "Troy One-Hour Cleaners" that operated at 10 East Main Street, and possibly in portions

of adjacent structures behind it. The dry cleaner building and adjacent structures were demolished after a fire that occurred in September 1979. The original sources of the Residential Plume no longer exists, and the source area has been extensively reworked and is covered by more recent construction. It is unknown if contaminated soil remains in the vadose zone at that location. Groundwater in the saturated zone in the vicinity of the Residential Plume source area contains PCE concentrations in part per million (ppm) levels, with the highest concentrations approximately 20 to 40 feet below the water table, suggesting that DNAPL and/or sorbed PCE may be present in the saturated zone and is acting as a secondary, ongoing source of contamination. The Residential Plume flows beneath an area of mainly older, single-family residences mixed with a few businesses, churches, and schools. Groundwater data collected to date have indicated that this plume extends downgradient (southeastward) from the source area to the vicinity of Floral Avenue. A subarea of the Residential Plume is located along South Union Street between East Main and East Franklin Streets and may have originated from a different source than the main Residential Plume. This, however, may also simply represent a small pocket of contamination that was pulled away from the main plume by groundwater pumping.

The second primary area of contamination, referred to as the East Water Street plume, extends from behind the former Hobart Cabinet Company (Hobart) building at 301 East Water Street, extends beneath the Hobart building (which remains), and then continues to the southeast beneath and parallel to East Water Street. The area above the plume is a mixed industrial, residential, and institutional use area. PCE, TCE, and cDCE are present in this plume. Total VOC concentrations in this plume are generally lower than those detected in the Residential Plume. The specific compounds and concentrations vary spatially and, in some cases, temporally at individual locations within the East Water Street plume. Soil and groundwater contamination have been detected on the Hobart property, with the highest VOC concentrations in soil detected in an apparent source area in the rear of the property in an open area between the building and the GMR. Adjacent to and downgradient of the Hobart facility is a second industrial facility, formerly Brown-Bridge Industries (now owned and operated by Spinnaker Coatings LLC [Spinnaker]), where chlorinated VOCs, including the same VOCs present on the Hobart property, have also been detected in both soil and groundwater. Although areas of soil contamination have been identified, uncertainty remains regarding the volume of soil contamination present.

During each phase of the RI, sub-slab vapor and indoor air samples were collected at various locations overlying the groundwater plumes. The RI determined that the site contained multiple contaminant sources, two groundwater contaminant plumes (the Residential plume and East Water Street plume), and multiple exposure pathways, in a complex hydrogeologic setting. The risk assessment evaluated potential site risks and hazards to receptors. VI was evaluated using sub-slab and indoor air samples as well as groundwater concentrations from the plume beneath the structures. For sub-slab and indoor air sampling, not all buildings were actually sampled. Thus, the potentially impacted area is based on a compilation of actual air sample results (where

available) and modeled VI concentrations from GW results (see Figure 2, in Appendix A). In addition, the proposed VI mitigation area also includes "buffer" zones extending beyond the identified plume boundaries to account for potential uncertainties associated with delineation of the VI impacted area.

Surface water and sediment samples collected from the GMR did not indicate the presence of detectable concentrations of site-related chemicals of potential concern (COPC). Horizontal and vertical distribution of groundwater contaminants, near the levee between Frank and Williams Streets, indicate that low concentrations of chlorinated VOCs are migrating at depths below 50 feet below ground surface (bgs) toward the East wellfield and are currently being captured by pumping in the East wellfield. By the time the chlorinated VOCs reach the East wellfield, only cDCE was detected.

Figure 3 in Appendix A presents the conceptual site model.

QAPP WORKSHEET #11
Project/Data Quality Objectives

This UFP-QAPP supports the remedial design (RD) and remedial action (RA) support being conducted by Tetra Tech. The seven-step data quality objective (DQO) process is presented below.

Step 1 – State the Problem

1. The interim action (IA) record of decision (ROD) was issued by EPA in 2018, and specifically addressed (1) areas of soil contamination that exceed human health risk standards and that coincide with apparent groundwater contaminant source areas, (2) the Residential Plume groundwater source area and (3) potential vapor intrusion (VI) to structures in areas overlying the Residential Plume.
2. This RD specifically addresses the East Water Street soil source area to be excavated at the Hobart property and the area requiring VI mitigation systems. The RD does not address the Residential Plume groundwater source area (not within the RD scope).
3. Soil at the East Water Street Hobart property contains trichloroethene (TCE) and tetrachloroethene (PCE) at concentrations exceeding human health risk standards (see Figure 4, Appendix A) and appears to be the source of the East Water Street plume. Additional delineation of the contamination extent and geotechnical soil analysis are required as part of a predesign investigation (PDI) to support the RD.
4. A structural analysis of the East Water Street building may be necessary if soil excavation may undermine the building structure (optional line item).
5. Once the PDI is complete, RD drawings and specifications are required for excavating soil from the East Water Street soil source area.
6. VI mitigation for structures overlying the Residential Plume is necessary.
7. The proposed VI mitigation area identified on Figure 2 in Appendix A was determined through discussion with the Ohio Environmental Protection Agency and is based on a combination of past site VI data, the groundwater contaminant plume boundaries and concentrations, the conceptual targeted groundwater treatment area identified in the FFS, and designated "buffer" zones extending beyond the identified plume boundaries.
8. A preliminary RD package is required for two types of building vapor mitigation systems: (1) submembrane de-pressurization system for buildings with dirt foundations and (2) sub-slab de-pressurization system for buildings with slab foundations. These drawings and specifications will be adapted to building-specific installation requirements during a future RA (not within this scope).
9. EPA requires support in gaining access for the vapor mitigation RA work for residences and commercial properties in the installation area and assistance in tracking progress obtaining access agreements.
10. Technical assistance and meeting support may be required as determined by EPA.
11. Community involvement support may be required as determined by EPA (optional line item).

Step 2 - Goals of the Study

1. The goal of the RD is to develop design drawings and specifications for excavating soil from the East Water Street soil source area and for the construction of VI mitigation systems.

2. The PDI and East Water Street building structural analysis, if requested, will generate additional data to be used in the RD.
3. The goal of providing EPA support in obtaining property access agreements for installation of VI mitigation systems, if requested, is to facilitate timely acquisition of access agreements to support the future VI mitigation RA and to track progress.

Step 3 – Identify Information Inputs

1. To support the RD, a PDI is needed to collect additional information in the East Water Street soil source area. The PDI will consist of a geophysical survey and soil sampling activities. The geophysical survey will use ground-penetrating radar (GPR) and electromagnetic methods to locate utilities, buried objects, and subsurface anomalies prior to soil sampling. Soil sampling will be conducted using a combination of direct-push and hollow-stem auger drilling methods to collect samples at multiple depths from locations in an established grid. PDI results will be used to (1) further define the area to be excavated (where PCE and TCE exceed remedial action levels) in the East Water Street soil source area, (2) obtain geotechnical results to support the development of excavation sloping or shoring specifications, and (3) obtain waste characterization information to determine proper disposal of excavated soil and PDI investigation-derived waste (IDW). Ultimately, PDI results will be used to prepare the East Water Street RD, which in turn will provide remediation specifications to potential RA contractors.
2. If the optional line item is funded, Tetra Tech will conduct a structural stability analysis of the Hobart Cabinet building to support the soil design and prepare a stability analysis report to be included as an appendix to the soil design. The report will include: a summary of the stability analysis, an evaluation of potential building stabilization approaches before, during, or after the soil excavation activities, and, if necessary, a recommendation for building stabilization approach.
3. Analytical results from the previous remedial investigation (RI) conducted by Tetra Tech will be considered in developing the RDs. Tetra Tech and EPA have previously evaluated the data.
4. Analytical results obtained during the PDI will be verified, validated, and evaluated in accordance with requirements identified in Worksheets #34 through 37.
5. Any information obtained during visual observations of structures during a site visit will be used to develop design specifications for VI mitigation systems.
6. To support property access agreement acquisition, Tetra Tech may obtain property ownership information from public sources.

Step 4 – Define the Boundaries

1. The East Water Street soil source area was identified in the IA ROD based on results from the RI/FS. This area consists of the northwest portion of the Hobart property located at 301 East Water Street. The PDI will occur in the area bounded by Clay Street to the northwest, the Great Miami River levee to the northeast, the Hobart loading dock to the east-southeast, and the Hobart building to the west-southwest (see Figure 5, Appendix A). The PDI is a singular event that will focus on the soil matrix. It is anticipated that field mobilization and PDI sampling will occur in the fall of 2021.
2. Visual observations of structures potentially requiring VI mitigation systems will be documented in field notes and photographs. This type of information is qualitative and may be obtained in one or more visual inspections throughout the residential and business district overlying the Residential Plume. The VI mitigation area is outlined in Figure 2 in Appendix A. It is anticipated that visual inspections could occur periodically from the fall of 2021 through the fall of 2022.

Step 5 – Develop the Analytic Approach and Decision Rules

1. The IA ROD establishes remedial action levels (cleanup goals) for PCE and TCE in soil. Additional soil samples will be collected during the PDI and analyzed for these compounds to further delineate the area to be excavated and excavation depths. Geotechnical samples will be collected and analyzed for Atterberg limits using American Society for Testing Materials (ASTM) methods (ASTM D-4318), particle size (ASTM D-6913), moisture (ASTM 2216), and Consolidated Undrained Triaxial Compression Test for Soils (ASTM D 4767). Waste characterization soil samples will be collected and analyzed for TCLP VOCs, TCLP SVOC, TCLP metals (including mercury), reactive cyanide, reactive sulfide, and corrosivity (pH). Waste characterization water samples will be collected, as necessary, and analyzed for VOCs and metals (including mercury).
2. If analytical results meet the data verification, validation and evaluation criteria outlined in Worksheets #34 through 37, then the results will be evaluated as part of the RD.
3. If soil concentrations exceed PCE and TCE remedial action levels of 44 micrograms per kilogram [µg/kg]) and 34 µg/kg, respectively, then the areas of exceedances will be included in the excavation plan for the East Water Street Hobart RD package.
4. The VI mitigation systems will be designed to reduce PCE and TCE indoor air concentration to below the remedial action levels identified in the IA ROD. The remedial action levels are identified below:

Contaminant	Residential VI Remedial Action Level (micrograms per cubic meter [µg/m^3])	Industrial/Commercial VI Remedial Action Level (µg/m^3)
PCE	42	180
TCE	2.1	8.8

5. If waste characterization results of IDW exceed the hazardous waste criteria identified in Worksheet #15, then the soil or water will be managed as hazardous waste. If not, it will be disposed as non-hazardous waste.

Step 6 – Specify Performance or Acceptance Criteria

1. The RD will use information from the RI/FS as well as additional information obtained during the PDI. The acceptance criteria for RI/FS data were established in the RI/FS QAPP and QAPP addenda for the site and the data have previously been evaluated by Tetra Tech and EPA. Performance criteria for PDI data are the remedial action levels established for PCE (44 µg/kg) and TCE (34 µg/kg). Soil sample results will be compared to these criteria to identify excavation boundaries and depths. Performance criteria for waste characterization samples are the established threshold levels used to identify wastes as hazardous or non-hazardous (see Worksheet #15). Performance criteria do not apply to geotechnical samples and visual (qualitative) inspections of structures for VI mitigation systems. This type of information will simply be used to better inform the RD.
2. The PDI will be conducted in accordance with EPA's *Guidance for Conducting Remedial Investigations and Feasibility Studies Under CERCLA* (EPA 1988).
3. If requested, the building structural evaluation will be conducted in accordance with U.S. Army Corps of Engineer's (USACE) *Slope Stability, Engineer Manual* (USACE 2003).
4. The RDs will be conducted in accordance with EPA's *Remedial Design/Remedial Action Handbook* and *OSWER Technical Guide for Assessing and Mitigating the Vapor Intrusion Pathway from Subsurface Vapor Sources to Indoor Air* (EPA 1995 and 2015).
5. EPA's Scribe software tool will be used to manage laboratory data.

6. Electronic data deliverables for any analytical results, excluding IDW characterization, not analyzed by CLP or ASB will be uploaded to EPA Region 5's EQuIS database before project close out.
7. Community involvement tasks, if requested, will be conducted in accordance with EPA's *Superfund Community Involvement Handbook* (EPA 2020e).
8. All work will be conducted in accordance with the project-specific EPA scope of work.
9. Data validation will be conducted in accordance with requirements presented in Worksheets #34 through 37.

Step 7 – Develop the Detailed Plan for Obtaining Data

1. The area to be investigated during the PDI was initially characterized during the RI. To further refine the estimated extent of soil requiring excavation, soil samples will be collected in a grid using approximately 25-foot spacing between each boring. Additionally, soil samples will be collected at four depth intervals from the ground surface to the water table (estimated depth of 15 feet) to provide a vertical definition of impacted soil. A detailed discussion regarding sampling design and rationale is provided in Worksheet #17.
2. Visual observations of structures potentially requiring VI mitigation systems will inform the RD. Information to be obtained in support of the VI mitigation RD includes building square footage, number of floors, types of building additions present, number and types of tenant space, and other building features.
3. If requested, a structural evaluation of the East Water Street Hobart building will be conducted in accordance with standard engineering practices.
4. If requested, Tetra Tech will obtain publicly available property ownership information from public sources to facilitate obtaining property access agreements for the VI mitigation RA.

QAPP WORKSHEET #12
Measurement Performance Criteria for Volatile Organic Compounds (VOCs) by GC/MS

Matrix	Water/TCLP Leachate
Analytical Group	VOCs, TCLP VOCs
Concentration Level[a]	Low/Medium and TCLP Leachate

Sampling Procedure[b]	**Analytical Method SOP[c]**	**DQIs**	**Measurement Performance Criteria[d]**	**QC Sample and/or Activity Used to Assess Measurement Performance**	**QC Sample Assesses Error for Sampling (S), Analytical (A), or both (S&A)**
Various, See Worksheet #21	SFAM01.1, MS023 v7	Precision	RPD ≤ 50%	Field duplicate	S & A
Various, See Worksheet #21	SFAM01.1, MS023 v7	Accuracy/Bias-Contamination	VOCs < QL	Trip blank	S & A
Various, See Worksheet #21	SFAM01.1, MS023 v7	Accuracy/Bias-Contamination	VOCs < QL	Rinsate blank	S & A
Various, See Worksheet #21	SFAM01.1, MS023 v7	Accuracy/Bias	1,1-Dichloroethene: 61-145 %R Trichloroethene: 71-120 %R Benzene: 76-127 %R Toluene: 76-125 %R Chlorobenzene: 75-130 %R	MS/MSD	S & A
Various, See Worksheet #21	SFAM01.1, MS023 v7	Precision	1,1-Dichloroethene: 14% RPD Trichloroethene: 14% RPD Benzene: 11% RPD Toluene: 13% RPD Chlorobenzene: 13% RPD	MS/MSD	S & A

QAPP WORKSHEET #12
Measurement Performance Criteria for Volatile Organic Compounds (VOCs) by GC/MS

Matrix	Water/TCLP Leachate
Analytical Group	VOCs, TCLP VOCs
Concentration Level[a]	Low/Medium and TCLP Leachate

Sampling Procedure[b]	**Analytical Method SOP[c]**	**DQIs**	**Measurement Performance Criteria[d]**	**QC Sample and/or Activity Used to Assess Measurement Performance**	**QC Sample Assesses Error for Sampling (S), Analytical (A), or both (S&A)**
Various, See Worksheet #21	SFAM01.1, MS023 v7	Accuracy/Bias-Contamination	VOCs < QL	Method blank	A
Various, See Worksheet #21	SFAM01.1, MS023 v7	Completeness	≥ 90%	Data completeness defined as data not qualified as rejected after validation	S & A
Various, See Worksheet #21	SFAM01.1, MS023 v7	Accuracy	Vinyl chloride-d_3: 60-135 %R Chloroethane-d_5: 70-130 %R 1,1-Dichloroethene-d_2: 60-125 %R 2-Butanone-d_5: 40-130 %R Chloroform-d: 70-125 %R 1,2-Dichloroethane-d_4: 70-125 %R Benzene-d_6: 70-125 %R 1,2-Dichloropropane-d_6: 70-120 %R Toluene-d_8: 80-120 %R Trans-1,3-Dichloropropene-d_4: 60-125 %R 2-Hexanone-d_5: 45-130 %R 1,1,2,2-Tetrachloroethane-d_2: 65-120 %R 1,2-Dichlorobenzene-d_4: 80-120 %R	Deuterated monitoring compounds (surrogates)	A

QAPP WORKSHEET #12
Measurement Performance Criteria for Semi-Volatile Organic Compounds (SVOCs) by GC/MS

Matrix	TCLP Leachate
Analytical Group	TCLP SVOCs
Concentration Level[a]	Low/Medium

Sampling Procedure[b]	**Analytical Method SOP[c]**	**DQIs**	**Measurement Performance Criteria[d]**	**QC Sample and/or Activity Used to Assess Measurement Performance**	**QC Sample Assesses Error for Sampling (S), Analytical (A), or both (S&A)**
Various, See Worksheet #21	SFAM01.1, MS026 v3	Precision	RPD ≤ 50%	Field Duplicate	S & A
Various, See Worksheet #21	SFAM01.1, MS026 v3	Accuracy/Bias	Phenol: 12-110 %R 2-Chlorophenol: 27-123 %R N-Nitroso-di-n-propylamine: 41-116 %R 4-Chloro-3-methylphenol: 23-97 %R Acenaphthene: 46-118 %R 4-Nitrophenol: 10-80 %R 2,4-Dinitrotoluene: 24-96 %R Pentachlorophenol: 9-103 %R Pyrene: 26-127 %R 1,4-Dioxane: 15-120 %R	MS/MSD	S & A
Various, See Worksheet #21	SFAM01.1, MS026 v3	Precision	Phenol: 42% RPD 2-Chlorophenol: 40% RPD N-Nitroso-di-n-propylamine: 38% RPD 4-Chloro-3-methylphenol: 42% RPD Acenaphthene: 31% RPD 4-Nitrophenol: 50% RPD 2,4-Dinitrotoluene: 38% RPD Pentachlorophenol: 50% RPD Pyrene: 31% RPD 1,4-Dioxane: 50% RPD	MS/MSD	S & A

QAPP WORKSHEET #12
Measurement Performance Criteria for Semi-Volatile Organic Compounds (SVOCs) by GC/MS

Matrix	TCLP Leachate
Analytical Group	TCLP SVOCs
Concentration Level[a]	Low/Medium

Sampling Procedure[b]	**Analytical Method SOP[c]**	**DQIs**	**Measurement Performance Criteria[d]**	**QC Sample and/or Activity Used to Assess Measurement Performance**	**QC Sample Assesses Error for Sampling (S), Analytical (A), or both (S&A)**
Various, See Worksheet #21	SFAM01.1, MS026 v3	Accuracy	1,4-Dioxane-d_8: 15-120 %R Phenol-d_5: 10-130 %R Bis(2-chloroethyl)ether-d_8: 25-120 %R 2-Chlorophenol-d_4: 20-130 %R 4-Methylphenol-d_8: 25-125 %R Nitrobenzene-d_5: 20-125 %R 2-Nitrophenol-d_4: 20-130 %R 2,4-Dichlorophenol-d_3: 20-120 %R Dimethylphthalate-d_6: 25-130 %R Acenaphthylene-d_8: 10-130 %R 4-Nitrophenol-d_4: 10-150 %R Fluorene-d_{10}: 25-125 %R 4,6-Dinitro-2-methylphenol-d_2: 10-130 %R Anthracene-d_{10}: 25-130 %R Pyrene-d_{10}: 15-130 %R Benzo(a)pyrene-d_{12}: 20-130 %R	Deuterated monitoring compounds (surrogates)	A
Various, See Worksheet #21	SFAM01.1, MS026 v3	Accuracy/Bias-Contamination	SVOCs < QL	Method blank	A
Various, See Worksheet #21	SFAM01.1, MS026 v3	Completeness	≥ 90%	Data completeness defined as data not qualified as rejected after validation	S & A

QAPP WORKSHEET #12
Measurement Performance Criteria for Metals and Mercury

Matrix	Water/TCLP Leachate
Analytical Group	Metals, Mercury, TCLP Metals, TCLP Mercury
Concentration Level[a]	Low/Medium

Sampling Procedure[b]	**Analytical Method SOP[c]**	**DQIs**	**Measurement Performance Criteria[d]**	**QC Sample and/or Activity Used to Assess Measurement Performance**	**QC Sample Assesses Error for Sampling (S), Analytical (A), or both (S&A)**
Various, See Worksheet #21	SFAM01.1 Metals003A AIG044E v10	Precision	RPD ≤ 50%	Field duplicate	S & A
Various, See Worksheet #21	SFAM01.1 Metals003A AIG044E v10	Accuracy/Bias-Contamination	Metals < QL	Rinsate blank	S & A
Various, See Worksheet #21	SFAM01.1 Metals003A AIG044E v10	Accuracy	All metals: 75-125 %R	MS/MSD	S & A
Various, See Worksheet #21	SFAM01.1 Metals003A AIG044E v10	Precision	All metals: < 20% RPD	Laboratory duplicate	A
Various, See Worksheet #21	SFAM01.1 Metals003A AIG044E v10	Sensitivity/ Contamination	Metals < QL	Method blank	A

QAPP WORKSHEET #12
Measurement Performance Criteria for Metals and Mercury

Matrix	Water/TCLP Leachate
Analytical Group	Metals, Mercury, TCLP Metals, TCLP Mercury
Concentration Level[a]	Low/Medium

Sampling Procedure[b]	**Analytical Method SOP[c]**	**DQIs**	**Measurement Performance Criteria[d]**	**QC Sample and/or Activity Used to Assess Measurement Performance**	**QC Sample Assesses Error for Sampling (S), Analytical (A), or both (S&A)**
Various, See Worksheet #21	SFAM01.1 Metals003A AIG044E v10	Completeness	≥ 90%	Data completeness defined as data not qualified as rejected after validation	S & A

QAPP WORKSHEET #12
Measurement Performance Criteria for Volatile Organic Compounds (VOCs) by GC/MS

Matrix	Soil
Analytical Group	VOCs
Concentration Level[a]	Low/Medium

Sampling Procedure[b]	**Analytical Method SOP[c]**	**DQIs**	**Measurement Performance Criteria[d]**	**QC Sample and/or Activity Used to Assess Measurement Performance**	**QC Sample Assesses Error for Sampling (S), Analytical (A), or both (S&A)**
Various, See Worksheet #21	SFAM01.1, MS001 v5	Precision	RPD ≤ 70%	Field duplicate	S & A
Various, See Worksheet #21	SFAM01.1, MS001 v5	Accuracy/Bias-Contamination	VOCs < QL	Rinsate blank	S & A
Various, See Worksheet #21	SFAM01.1, MS001 v5	Accuracy/Bias	1,1-Dichloroethene: 59-172 %R Trichloroethene: 62-137 %R Benzene: 66-142 %R Toluene: 59-139 %R Chlorobenzene: 60-133 %R	MS/MSD	S & A
Various, See Worksheet #21	SFAM01.1, MS001 v5	Precision	1,1-Dichloroethene: 22% RPD Trichloroethene: 24% RPD Benzene: 21% RPD Toluene: 21% RPD Chlorobenzene: 21% RPD	MS/MSD	S & A

QAPP WORKSHEET #12
Measurement Performance Criteria for Volatile Organic Compounds (VOCs) by GC/MS

Matrix	Soil
Analytical Group	VOCs
Concentration Level[a]	Low/Medium

Sampling Procedure[b]	**Analytical Method SOP[c]**	**DQIs**	**Measurement Performance Criteria[d]**	**QC Sample and/or Activity Used to Assess Measurement Performance**	**QC Sample Assesses Error for Sampling (S), Analytical (A), or both (S&A)**
Various, See Worksheet #21	SFAM01.1, MS001 v5	Accuracy	Vinyl chloride-d_3: 30-150 %R Chloroethane-d_5: 30-150 %R 1,1-Dichloroethene-d_2: 45-110 %R 2-Butanone-d_5: 20-135 %R Chloroform-d: 40-150 %R 1,2-Dichloroethane-d_4: 70-130 %R Benzene-d_6: 20-135 %R 1,2-Dichloropropane-d_6: 70-120 %R Toluene-d_8: 30-130 %R 1,1,2,2-Tetrachloroethane-d_2: 45-120 %R Trans-1,3-Dichloropropene-d_4: 35-135 %R 2-Hexanone-d_5: 20-135 %R 1,2-Dichlorobenzene-d_4: 75-120 %R	Deuterated monitoring compounds (surrogates)	A
Various, See Worksheet #21	SFAM01.1, MS001 v5	Accuracy/Bias-Contamination	VOCs < QL	Method blank	A
Various, See Worksheet #21	SFAM01.1, MS001 v5	Completeness	≥ 90%	Data completeness defined as data not qualified as rejected after validation	S & A

QAPP WORKSHEET #12
Measurement Performance Criteria for Reactive Cyanide

Matrix	Soil
Analytical Group	Reactive Cyanide
Concentration Level	Low/Medium

Sampling Procedure[a]	**Analytical Method SOP[b]**	**DQIs**	**Measurement Performance Criteria[c]**	**QC Sample and/or Activity Used to Assess Measurement Performance**	**QC Sample Assesses Error for Sampling (S), Analytical (A), or both (S&A)**
Various, See Worksheet #21	HN-WC-015-R7	Accuracy/Bias-Contamination	< 1/2 Reporting limit < 5% Sample result < 5% Regulatory limit	Method blank	S & A
Various, See Worksheet #21	HN-WC-015-R7	Accuracy/Precision	In-house laboratory control limits	MS/MSD	S & A
Various, See Worksheet #21	HN-WC-015-R7	Accuracy/Bias-Contamination	In-house laboratory control limits	Laboratory control sample	A
Various, See Worksheet #21	HN-WC-015-R7	Completeness	≥ 90%	Data completeness defined as data not qualified as rejected after validation	S & A

QAPP WORKSHEET #12
Measurement Performance Criteria for Reactive Sulfide

Matrix	Soil
Analytical Group	Reactive Sulfide
Concentration Level[a]	Low/Medium

Sampling Procedure[b]	**Analytical Method SOP[c]**	**DQIs**	**Measurement Performance Criteria[d]**	**QC Sample and/or Activity Used to Assess Measurement Performance**	**QC Sample Assesses Error for Sampling (S), Analytical (A), or both (S&A)**
Various, See Worksheet #21	HN-WC-026-R07	Accuracy/Bias-Contamination	< Reporting limit	Method blank	S & A
Various, See Worksheet #21	HN-WC-026-R07	Accuracy/Precision	In-house laboratory control limits	MS/MSD	S & A
Various, See Worksheet #21	HN-WC-026-R07	Accuracy/Bias-Contamination	In-house laboratory control limits	Laboratory control sample	A
Various, See Worksheet #21	HN-WC-026-R07	Completeness	≥ 90%	Data completeness defined as data not qualified as rejected after validation	S & A

Notes:

a Concentration levels refer to specific contract-required quantitation limits defined by EPA's Contract Laboratory Program (CLP). See the CLP website for additional information: Superfund CLP Analytical Statements of Work (SOWs) | Superfund Analytical Services and Contract Laboratory Program | US EPA. EPA CLP will be the primary laboratory for this project. EPA Region 5's Analytical Services Branch laboratory will be the secondary laboratory.

b Sampling SOPs are listed in QAPP Worksheet #21.

c Analytical method SOPs are listed in QAPP Worksheet #23 and subcontracted laboratory certifications are provided in Appendix E.

d The measurement performance criteria listed are from EPA CLP statements of work for all methods except reactive cyanide and sulfide, which are from ALS SOP. EPA Region 5's Analytical Services Branch laboratory may have different laboratory-specific measurement performance criteria.

The representativeness and comparability measurement performance criteria are discussed in Worksheet #37.

The geotechnical methods do not have data quality indicators; therefore, Worksheet #12 does not contain DQI's for geotechnical methods.
The pH methods do not have data quality indicators; therefore, Worksheet #12 does not contain DQI's for pH methods.

%R = Percent recovery
CLP = Contract Laboratory Program
CRQL = Contract-required quantitation limit
DQI = Data quality indicator
MDL = Method detection limit
MS = Matrix spike
MSD = Matrix spike duplicate
QL = Quantitation limit
RL = Reporting limit
RPD = Relative percent difference
SOP = Standard operating procedure

QAPP WORKSHEET #13
Secondary Data Uses and Limitations

Data type	Source	Data uses relative to current project	Factors affecting the reliability of data and limitations on data use
Soil chemical data	EPA-approved RI report	Soil sample data were used to identify the area to be addressed in the RD	Data were obtained per EPA-approved RI QAPP and accepted per EPA-approved RI report
Soil boring logs	EPA-approved RI report	Soil boring logs were used to identify soil types to be encountered in the area requiring further delineation	Data were obtained per EPA-approved RI QAPP and accepted per EPA-approved RI report
Groundwater chemical data	EPA-approved RI report	Groundwater data were used in conjunction with air data to identify the VI mitigation area to be addressed in the RD	Data were obtained per EPA-approved RI QAPP and accepted per EPA-approved RI report
Air (sub-slab and indoor air) chemical data	EPA-approved RI report	Air data were used in conjunction with groundwater data to identify the VI mitigation area to be addressed in the RD	Data were obtained per EPA-approved RI QAPP and accepted per EPA-approved RI report

Notes:
EPA U.S. Environmental Protection Agency
RI Remedial investigation
RD Remedial design

QAPP WORKSHEETS #14 & 16
Project Tasks and Schedule

Task	Responsible Party	Planned Start Date	Planned Completion Date	Comment
Tetra Tech Planning Documents				
Meeting Minutes	Tetra Tech	TBD	TBD	Due 5 calendar days from planning meeting
Monthly progress reports	Tetra Tech	TBD	TBD	By the 15th of each month
Draft PMP	Tetra Tech	With bid	With bid	Due with task order offer
Final PMP	Tetra Tech	4/26/21	05/10/21	15 calendar days after the receipt of EPA's comments on the draft and discussed as part of the kickoff meeting
Draft UFP-QAPP, SMP, HASP, DMP, WMP	Tetra Tech	05/11/21	6/14/21	30 calendar days after the approval of the final PMP. EPA approval received on 05/17/21
Final UFP-QAPP, SMP, DMP, WMP	Tetra Tech	08/13/21	09/09/21	Due 15 days from receipt of EPA comments; submitted less than 15 days after EPA conference call to discuss and clarify QAPP comments
Data Validation				
Draft Data Validation Report	Tetra Tech	Task Order Year 1	Task Order Year 1	30 calendar days after receipt of analytical results from the laboratory
Final Data Validation Report	Tetra Tech	Task Order Year 1	Task Order Year 1	15 calendar days after receipt of EPA comments
Field Work and Analytical Support				
Draft Data Evaluation Report (DER)	Tetra Tech	Task Order Year 1	Task Order Year 1	30 calendar days after submittal of Final Data Validation Report
Final DER	Tetra Tech	Task Order Year 1	Task Order Year 1	15 calendar days after receipt of EPA comments on draft DER
Remedial Design Support Vapor Intrusion				
Preliminary Design Report	Tetra Tech	Task Order Year 1	Task Order Year 1	60 calendar days after approval of Final DER
Revised Preliminary Design Report	Tetra Tech	Task Order Year 1	Task Order Year 1	14 calendar days after preliminary design teleconference
Pre-Final Design Report	Tetra Tech	Task Order Year 1	Task Order Year 1	45 calendar days after approval of Preliminary Design
Revised Pre-Final Design Report	Tetra Tech	Task Order Year 1	Task Order Year 1	14 calendar days after pre-final design teleconference
Final Design Report	Tetra Tech	Task Order Year 1	Task Order Year 1	15 calendar days after approval of Pre-Final Design

Task	Responsible Party	Planned Start Date	Planned Completion Date	Comment
Remedial Design Implementation Support	Tetra Tech	Task Order Option Years 2 and 3	Task Order Option Years 2 and 3	As requested by TOCOR
Remedial Design Support Soil Excavation				
Preliminary Design Report	Tetra Tech	Task Order Year 1	Task Order Year 1	60 calendar days after approval of Final DER
Revised Preliminary Design Report	Tetra Tech	Task Order Year 1	Task Order Year 1	14 calendar days after preliminary design teleconference
Pre-Final Design Report	Tetra Tech	Task Order Year 1	Task Order Year 1	45 calendar days after approval of Preliminary Design
Revised Pre-Final Design Report	Tetra Tech	Task Order Year 1	Task Order Year 1	14 calendar days after pre-final design teleconference
Final Design Report	Tetra Tech	Task Order Year 1	Task Order Year 1	15 calendar days after approval of Pre-Final Design
Remedial Design Implementation Support	Tetra Tech	Task Order Option Years 2 and 3	Task Order Option Years 2 and 3	As requested by TOCOR
General Technical Assistance				
EPA-lead Remedial Action Support	Tetra Tech	Task Order Option Years 1, 2, and 3	Task Order Option Years 1, 2, and 3	As requested by TOCOR
Records Management and Administrative Support	Tetra Tech	Task Order Option Years 1, 2, and 3	Task Order Option Years 1, 2, and 3	As requested by TOCOR
Community Involvement (Optional)				
Community Involvement	Tetra Tech	Task Order Years 1, 2 and 3	Task Order Years 1, 2 and 3	If this optional line item is funded, there would be one per Task Order Year. Tetra Tech will support EPA by participating in community availability sessions and public meetings throughout the task order.

Notes:

DMP Data Management Plan
EPA U.S. Environmental Protection Agency
HASP Health and Safety Plan
PMP Project Management Plan
QAPP Quality Assurance Project Plan
RA Remedial action
RD Remedial design
SMP Site Management Plan
TOCOR Task Order Contracting Officer's Representative
WMP Waste Management Plan

QAPP WORKSHEET #15
Project Action Limits and Laboratory-Specific Detection/Quantitation Limits

Matrix: Soil
Analytical Method: VOCs/SFAM01.1, MS001
Concentration Level (if applicable): Low

Analyte	CAS Number	Project Action Limits (µg/kg)[a]	CLP CRQL (µg/kg)[b]	EPA Region 5 ASB RL (µg/kg)[c]
			Low Level	Low Level
Trichloroethene	79-01-6	34	5.0	1.0
Tetrachloroethene	127-18-4	44	5.0	1.0

Notes:

ASB = Analytical Services Branch
CAS = Chemical Abstracts Service
CLP = Contract Laboratory Program
CRQL = Contract Required Quantitation Limit
EPA = U.S. Environmental Protection Agency
µg/kg = Micrograms per kilogram
RL = Reporting limit

[a] Project action limits soil remedial action levels from Table 8 of the East Troy Contaminated Aquifer Superfund Site, EPA Interim Record of Decision for Source Area Cleanup, Troy, Miami County, Ohio, September 2018.
[b] CLP CRQLs retrieved from the EPA Contract Laboratory Program Statement of Work for Superfund Analytical Methods (Multi-Media, Multi-Concentration) SFAM01.1 November 2020.
[c] Region 5 ASB RLs provided by ASB.

QAPP WORKSHEET #15 (Continued)
Project Action Limits and Laboratory-Specific Detection/Quantitation Limits

Matrix: TCLP Leachate
Analytical Method: TCLP VOCs/ SFAM01.1, MS023 v7
Concentration Level (if applicable): Low

Analyte	CAS Number	Project Action Limit (mg/L)[a]	CLP CRQL (mg/L)[b]	EPA Region 5 ASB RL (mg/L)[c]
		TCLP Leachate (mg/L)	TCLP Leachate	Low Level
Vinyl chloride	75-01-4	0.2	0.05	0.002
1,1-Dichloroethene	75-35-4	0.7	0.05	0.002
2-Butanone	78-93-3	200.0	0.10	0.0125
Carbon tetrachloride	56-23-5	0.5	0.05	0.002
Benzene	71-43-2	0.5	0.05	0.002
1,2-Dichloroethane	107-06-2	0.5	0.05	0.002
Trichloroethene	79-01-6	0.5	0.05	0.002
Tetrachloroethene	127-18-4	0.7	0.05	0.002
Chlorobenzene	108-90-7	100.0	0.05	0.002
1,4-Dichlorobenzene	106-46-7	7.5	0.05	0.002

Notes:
a Land Disposal Regulations 40 CFR Part 261.24 Toxicity Characteristic
b CLP CRQLs retrieved from the EPA Contract Laboratory Program Statement of Work for Superfund Analytical Methods (Multi-Media, Multi-Concentration) SFAM01.1 November 2020
c Region 5 ASB RLs provided by ASB

ASB = Analytical Services Branch
CAS = Chemical Abstracts Service
CLP = Contract Laboratory Program
CRQL = Contract Required Quantitation Limit
EPA = U.S. Environmental Protection Agency
mg/L = Milligrams per liter
RL = Reporting limit
TCLP = Toxicity characteristic leaching procedure

QAPP WORKSHEET #15 (Continued)
Project Action Limits and Laboratory-Specific Detection/Quantitation Limits

Matrix: TCLP Leachate
Analytical Method: TCLP SVOCs/ SFAM01.1, MS026 v3
Concentration Level (if applicable): Low

Analyte	CAS Number	Project Action Limit (mg/L)[a]	CLP CRQL (mg/L)[b]	EPA Region 5 ASB RL (mg/L)[c]
		TCLP Leachate (mg/L)	TCLP Leachate	Low Level
Pyridine	110-86-1	5.0	0.10	0.005
2-Methylphenol	95-48-7	200.0	0.10	0.005
3,4-Methylphenol	108-39-4	200.0	0.10	0.005
Total cresol	NA	200.0	0.10	0.005
Hexachloroethane	67-72-1	3.0	0.050	0.005
Nitrobenzene	98-95-3	2.0	0.050	0.005
Hexachlorobutadiene	87-68-3	0.5	0.050	0.005
2,4,6-Trichlorophenol	88-06-2	2.0	0.050	0.005
2,4,5-Trichlorophenol	95-95-4	400.0	0.050	0.005
2,4-Dinitrotoluene	121-14-2	0.13	0.050	0.005
Hexachlorobenzene	118-74-1	0.13	0.050	0.005
Pentachlorophenol	87-86-5	100.0	0.10	0.005

Notes:
a Land Disposal Regulations 40 CFR Part 261.24 Toxicity Characteristic
b CLP CRQLs retrieved from the EPA Contract Laboratory Program Statement of Work for Superfund Analytical Methods (Multi-Media, Multi-Concentration) SFAM01.1 November 2020
c Region 5 ASB RLs provided by ASB

ASB = Analytical Services Branch
CAS = Chemical Abstracts Service
CLP = Contract Laboratory Program
CRQL = Contract Required Quantitation Limit

QAPP WORKSHEET #15 (Continued)
Project Action Limits and Laboratory-Specific Detection/Quantitation Limits

Matrix: TCLP Leachate
Analytical Method: Metals/ SFAM01.1, Metals003A, AIG044E v10
Concentration Level (if applicable): Low

Analyte	CAS Number	Project Action Limit (mg/L)[a]	CLP CRQL (mg/L)[b]	EPA Region 5 ASB RL (mg/L)[c]
		TCLP Leachate (mg/L)	TCLP Leachate	Low Level
Arsenic	7440-38-2	5.0	0.010	0.040
Barium	7440-39-3	100.0	0.200	0.003
Cadmium	7440-43-9	1.0	0.005	0.002
Chromium	7440-47-3	5.0	0.010	0.005
Lead	7439-92-1	5.0	0.010	0.030
Selenium	7782-49-2	1.0	0.035	0.050
Silver	7440-22-4	5.0	0.010	0.010
Mercury	7439-97-6	0.2	0.0002	0.0005

Notes:
a Land Disposal Regulations 40 CFR Part 261.24 Toxicity Characteristic
b CLP CRQLs retrieved from the EPA Contract Laboratory Program Statement of Work for Superfund Analytical Methods (Multi-Media, Multi-Concentration) SFAM01.1 November 2020
c EPA Region 5 ASB RLs provided by ASB

Project action limits for reactive sulfide and reactive cyanide are not included because limits for these parameters will vary based on the disposal facility.

ASB = Analytical Services Branch
CAS = Chemical Abstracts Service
CLP = Contract Laboratory Program
CRQL = Contract Required Quantitation Limit
EPA = U.S. Environmental Protection Agency
mg/L = Milligrams per liter
RL = Reporting limit
TCLP = Toxicity characteristic leaching procedure

QAPP WORKSHEET #17
Sampling Design and Rationale

This worksheet provides the sampling design and rationale for the predesign investigation (PDI) to be conducted at the East Water Street soil source area (Hobart property). The PDI will use a judgmental sampling design to confirm and build upon information obtained during the remedial investigation (RI).

1. The investigation area is in the northwest portion of the Hobart property at 301 East Water Street. The area is bound by Clay Street to the northwest, the Great Miami River levee to the northeast, the Hobart loading dock to the east-southeast, and the Hobart building to the south-southwest (see Figure 1).

2. It is anticipated that field mobilization and sampling will occur in the fall of 2021/winter of 2021.

3. The investigation area is based on results of the RI which indicated that a source area of impacted soil exists in the northwest portion of the Hobart property.

4. The area to be investigated was initially characterized during the RI. To further refine the estimated extent of soil requiring excavation, soil samples will be collected in a grid using approximately 25-foot spacing between each boring. Additionally, soil samples will be collected at four depth intervals from the ground surface to the water table (estimated depth of 15 feet) to provide a vertical definition of impacted soil.

5. The geophysical survey and soil boring locations are shown in Figure 5. The area selected for the geophysical survey and the soil boring locations will be identified in the field using GPS and soil boring locations will be marked with stakes or pin flags.

6. If a boring cannot be advanced at a planned location because of drilling refusal or the presence of buried utilities, an alternate step-out location will be chosen. The alternate location will be as close as safely possible to the original location but at a safe distance from utilities.

7. If borings cannot be advanced because of refusal or the presence of utilities, up to two step-outs will be attempted before moving to the next grid location. Step-out locations will be as close as possible to the planned location and geophysical survey results will be used to guide the placement of any step-outs.

8. Because this area was sampled during the RI, it is accessible for PDI sampling. Severe weather, river flooding, and subsurface refusal during drilling could affect sampling at all planned locations. Because the general area to be excavated is known from the RI results and confirmation sampling will be required during actual soil excavation, the inability to collect some soil samples will not seriously hinder the completion of the RD. If, for some reason, 50 percent of the samples cannot be collected during the PDI, Tetra Tech will evaluate the data collected and discuss with EPA whether an additional field mobilization is needed.

9. The sampling design was established during the RI and further refined for this investigation using a judgmental or authoritative sampling design approach (EPA 2002 and 2006b). A judgmental or authoritative sampling design is deemed appropriate and efficient because it uses all available prior information, and a statistical evaluation of the data is not anticipated.

QAPP WORKSHEET #18
Sampling Locations and Methods

This worksheet provides the sampling locations and methods for the pre-design investigation (PDI) to be conducted at the East Water Street soil source area (Hobart property). This worksheet identifies the types of samples to be collected and contains information for all samples to be collected during the PDI. Sample variability will be reduced by following field and laboratory standard operating procedures (SOP). Worksheet #37 discusses variability in both field and lab systems, including evaluation of such variability.

Before soil sampling, soil boring locations will be marked in the field with stakes, pin flags, or paint and cleared for utilities. The Ohio Utility Protection Service (OUPS) will be contacted to check for the presence of public utilities. Additionally, a geophysical survey will be conducted in the sampling area to (1) evaluate the potential presence of features, such as underground storage tanks, sewer lines, or other features that may be contaminant sources; (2) confirm that areas proposed for drilling activities are free of utilities, and (3) confirm and document the locations of on-site utilities such as water and sewer lines so that this information can be incorporated into the RD. The geophysical services subcontractor will conduct ground-penetrating radar (GPR) and electromagnetic (EM) surveys, mark anomalies detected, process all GPR and EM data, and prepare a report of findings, and include GIS\Shape files of the survey area and anomalies with the final deliverable. The surveys will be conducted over the planned sampling area identified by Tetra Tech, which encompasses about 17,000 square feet (Figure 5). The spacing of individual survey lines will be at the discretion of the geophysical survey contractor to provide the resolution necessary to meet the survey objectives, based on the capabilities of the specific equipment selected. Instrumentation will consist of a Geophex GEM-2 EM instrument and Noggin 250 MHz GPR system, or similar. Data will be collected in continuous reading mode over the entire grid area.

VOC (PCE and TCE) Sampling

The objective of VOC sampling is to gather information needed for the RD to refine the estimated volume of soil to be excavated. Soil borings will be advanced using a direct-push rig (Geoprobe) on a grid covering the proposed excavation areas (see Figure 5). Drilling will proceed using either a MacroCore sampler or a dual tube sampling system. If a refusal is encountered at a given location, up to two off-set step-outs will be attempted before moving to the next grid location. Each boring will be continuously logged from the ground surface to the water table which is estimated to be encountered at approximately 15 feet bgs. The soil will be visually inspected and logged using the Unified Soil Classification System. Areas containing fill and zones of staining, discoloration, or odor will also be noted on the logs. At each boring location, samples will be collected at four depths for laboratory analysis of PCE and TCE following procedures in Tetra Tech SOP005-3. All soil samples for PCE and TCE analysis will be shipped daily to the EPA Regional Laboratory or a CLP laboratory for

analysis using EPA Method 5035 and 8260. At each location, soil samples will be collected at 0-2 feet, 4-6 feet, 8-10 feet, and 12-14 feet below ground surface (bgs) using dedicated or disposable equipment. The general sample identification scheme for PCE and TCE analyses of soil samples is as follows:

Site Name	Matrix	Sample Number/Location	Sample Depth or Interval (Feet)	Example Identification
ETCA	Soil – S	Grid location (ex. A1)	0-2	ETCA-A1-02-MMDDYY*
	Soil – S	Grid location (ex. A1 field duplicate)	0-2	ETCA-A1-02D-MMDDYY*
	Soil – S	Grid location (ex. A1 matrix spike/matrix spike duplicate)	0-2	ETCA-A1-02MS/MSD-MMDDYY*

Notes:
* Month/Day/Year format (ex. 100121 = October 1, 2021)

Geotechnical Sampling

The objective of geotechnical sampling is to gather information needed for the RD to assess soil stability and design proper sloping of sidewalls. Geotechnical borings will be drilled using hollow-stem augers at the three locations shown in Figure 5. At each boring location, blow counts will be recorded in the field and soil will be continuously logged from the ground surface to the water table, which is estimated to be encountered at approximately 15 feet bgs. The soil will be visually inspected and logged using the Unified Soil Classification System. Areas containing fill and zones of staining, discoloration, or odor will also be noted on the logs. At each boring location, samples will be collected at two depths for Atterberg limits (ASTM D-4318), particle size (ASTM D-6913), moisture (ASTM 2216), Consolidated Undrained Triaxial Compression Test for Soils (ASTM D 4767). Soil sampling depths will be determined in the field based on the soil types encountered. Based on logs of borings drilled in the excavation area during the RI, samples from up to two soil types will be collected at each boring. These soil types are (1) sand and gravel and (2) clay or silty clay. Geotechnical samples will be analyzed by Bowser-Morner, Inc. in Dayton, Ohio. The general sample identification scheme for geotechnical soil samples is as follows:

Site Name	Matrix	Sample Number/Location	Sample Depth or Interval (Feet)	Example Identification
ETCA	Soil – S	Boring location (ex. GT1)	6-8	ETCA-GT1-68-MMDDYY*

Notes:

* Month/Day/Year format (ex. 100121 = October 1, 2021)

Waste Characterization Sampling

The objectives of waste characterization sampling are to (1) gather information needed for the RD to refine the estimated volume of soil to be disposed of as hazardous or nonhazardous waste and (2) to determine proper disposal of IDW generated during the PDI. Waste characterization samples will be collected at the same three locations and depths discussed above for geotechnical sampling for a total of six samples. Soil samples will be analyzed for a suite of waste characterization parameters including:

1. TCLP VOCs by EPA CLP or ASB methods equivalent to EPA SW-846 1311/8260
2. TCLP SVOCs by EPA CLP or ASB methods equivalent to EPA SW-846 1311/8270
3. TCLP Metals by EPA CLP or ASB methods equivalent to EPA SW-846 1311/6010/6020/7470
4. Corrosivity (pH) by EPA CLP or ASB methods equivalent to EPA SW-846 Method 9040C/9045D
5. Reactive Cyanide/Sulfide by SW-846 Chapter 7.3.3/7.3.4 by ALS Laboratory in Holland, Michigan

Additionally, soil samples will be collected from drummed soil cuttings to determine the proper disposal of IDW. It is anticipated that up to two composite samples will be collected from the drummed soil and one sample will be collected from drummed water. Water IDW samples will be analyzed for:

1. Total VOCs by EPA CLP or ASB methods equivalent to EPA SW-846 8260
2. Total Metals by EPA CLP or ASB methods equivalent to EPA SW-846 6010 or 6020 and 7471
3. Corrosivity (pH) by EPA CLP or ASB methods equivalent to EPA SW-846 Method 9040C/9045D

Site Name	Matrix	Sample Number/Location	Sample Depth or Interval (Feet)	Example Identification
ETCA	Soil – S	Boring location (ex. WC1)	6-8	ETCA-WC1-68-MMDDYY*
	Soil – S	Drummed IDW (ex. IDW-S1)	NA	ETCA-IDW-S1-MDDYY*
	Water – W	Drummed IDW (ex. IDW-W1)	NA	ETCA-IDW-W1-MDDYY*

Notes:
* Month/Day/Year format (ex. 100121 = October 1, 2021)

NA Not applicable

QAPP WORKSHEET #19 & 30
Sample Containers, Preservation, and Hold Times

Laboratory: Various
List any required accreditations/certifications: Various
Back-up laboratory: Various
Sample Delivery Method: FedEx Priority

Analyte/ Analyte Group	Matrix	Method/ SOP[a]	Container(s) (number, size & type per sample)	Preservation Requirements (chemical, temperature, light protected)	Preparation Holding Time	Analytical Holding Time	Data Package Turnaround
VOCs	Soil	SFAM01.1 MS001 v5	Three coring tool samplers (EnCore™ or equivalent) containing 5 grams of soil (eight additional samplers, 11 total, for MS/MSD samples) plus one 40-mL glass vial or other approved container with a Teflon-lined cap (filled, no headspace).	Store at ≤ 6ºC, but not frozen	48 hours	14 days	Standard
TCLP SVOCs	Soil	SFAM01.1 MS026 v3	SFAM01.1: Two 8 oz. short, wide-mouth, straight-sided, glass jars, 70 mm neck finish, or four 4 oz. tall, wide-mouth, straight-sided, glass jar, 48 mm neck finish, Polypropylene or phenolic cap, 70-400 size; 0.015 inch PTFE liner or polypropylene or phenolic cap, 48-400 size; 0.015 inch PTFE liner. 450 grams minimum volume MS026 v3: Pre-cleaned glass container with PTFE-lined cap	Store at ≤ 6ºC, but not frozen	14 days	40 days	Standard
TCLP VOCs	Soil	SFAM01.1 MS023 v7	SFAM01.1: Six 40 mL amber or clear glass vial 24 mm neck finish Polypropylene or phenolic, open-top screw-cap, 1.5 cm opening, 24-400 size. 150 grams minimum volume. MS023 v7: 4 oz glass container with a PTFE-lined cap and no headspace.	Store at ≤ 6ºC	24 hours	14 days	Standard

QAPP WORKSHEET #19 & 30 (Continued)
Sample Containers, Preservation, and Hold Times

Analyte/ Analyte Group	Matrix	Method/ SOP[a]	Container(s) (number, size & type per sample)	Preservation Requirements (chemical, temperature, light protected)	Preparation Holding Time	Analytical Holding Time	Data Package Turnaround
TCLP Metals/ Mercury	Soil	SFAM01.1	Two full 8 oz. short, wide mouth, straight-sided, glass jars, 70 mm neck finish Polypropylene or phenolic cap, 70- 400 size; 0.015 in. PTFE liner.	Store at ≤ 6ºC, but not frozen	180/26 days (sampling to leachate)	180/26 days (leachate to analysis)	Standard
TCLP Metals/ Mercury	Soil	Metals003 A v9 AIG044E v10	Two full 8 oz. short, wide-mouth, straight-sided, glass jars, 70 mm neck finish Polypropylene or phenolic cap, 70- 400 size; 0.015 inch PTFE liner.	Store at ≤ 6ºC, but not frozen	None/28 days	180/28 days (leachate to analysis)	Standard
Corrosivity (pH)	Soil	SFAM01.1 AIG003 AIG008	One 8oz glass or plastic container with a Teflon-lined cap	Store at ≤ 6ºC, but not frozen	Immediately	Immediately	Standard
Reactive Cyanide/ Sulfide	Soil	SW-846 Chapter 7.3.3/7.3.4	One 8oz glass or plastic container with a Teflon-lined cap	Store at ≤ 6ºC	14 days	28 days	Standard
Corrosivity (pH)	Water	SFAM01.1 AIG003 v8	One 8 oz PTFE, plastic, or glass container	None	None	As soon as possible	Standard
VOCs	Water	SFAM01.1 MS023 v7	Three 40 mL VOA vials with PFTE-lined caps and no headspace. Five VOA vials for sampling locations for MS/MSD analysis.	Store at ≤ 6ºC and the pH < 2 with H_2SO_4 or HCl	None	14 days	Standard
Metals Mercury	Water	SFAM01.1 Metals003 A v9 AIG004E v10	One 200 mL polyethylene container	Store at ≤ 6ºC and the pH < 2 with HNO_3	Metals: None Mercury: 28 days	Metals: None Mercury: 28 days	Standard

QAPP WORKSHEET #19 & 30 (Continued)
Sample Containers, Preservation, and Hold Times

Analyte/ Analyte Group	Matrix	Method/ SOP[a]	Container(s) (number, size & type per sample)	Preservation Requirements (chemical, temperature, light protected)	Preparation Holding Time	Analytical Holding Time	Data Package Turnaround
Geotechnical	Soil	ASTM D 4767 Consolidated Undrained Triaxial Method, Atterberg limits (ASTM D-4318), Particle size (ASTM D-6913), Moisture (ASTM 2216)	5-gallon sealed container (50 pounds)	None	None	None	Standard

Notes:
[a] Laboratory SOPs are listed in Worksheet #23.

ASTM = ASTM International
ml = Mililiter
MS/MSD = Matrix Spike/Matrix Spike Duplicate
oz = Ounce
PTFE = Polytetrafluoroethylene
SVOC = Semivolatile organic compounds
TCLP = Toxicity Characteristic Leaching Procedure
VOA = Volatile organic analyte
VOC = Volatile organic compound

QAPP WORKSHEET #20
Field QC Summary

This worksheet provides a summary of the types of samples (including quality control samples) to be collected for the pre-design investigation (PDI) to be conducted at the East Water Street soil source area (Hobart property). This worksheet identifies the various types of samples to be collected and their associated quality control requirements.

Matrix	Analyte/Analyte Group	Field Samples	Field Duplicates[1]	Matrix Spikes[2]	Matrix Spike Duplicates[2]	Field Blanks	Equipment Blanks	Trip Blanks[3]	Other	Total # Analyses
Soil	VOC (PCE and TCE)	124	13	7	7	0	0	5	0	156
Soil	Geotechnical	6	0	0	0	0	0	0	0	6
Soil	Waste Characterization	6	0	0	0	0	0	0	0	6
Soil (IDW)	Waste Characterization	2	0	0	0	0	0	0	0	2
Water (IDW)	Waste Characterization	1	0	0	0	0	0	0	0	1

Notes:
1 Duplicate samples will be collected at a frequency of one for every 10 investigative samples per matrix, excluding waste characterization samples.
2 Matrix spike/matrix spike duplicate samples will be collected at a frequency of one for every 20 investigative samples per matrix, excluding waste characterization samples.
3 Trip blanks will be collected along with VOC samples at a frequency of one per day and per cooler.

IDW = Investigation-derived waste
PCE = Tetrachloroethene
QC = Quality control
TCE = Trichloroethene
VOC = Volatile Organic Compound

QAPP WORKSHEET #21
Field SOPs

Reference Number	SOP Title (and Revision Date or Number	Originating Organization	Equipment Type	Modified for Project Work? (Y/N)	Comments
SOP003-4	Organic Vapor Monitoring (2020)	Tetra Tech	Organic vapor air monitoring meter, calibration gas, calibration kits including tubing and regulators	N	No
SOP005-3	Soil Sampling (2017)	Tetra Tech	Sampling jars	N	No
SOP019-8	Packaging and Shipping Samples (2020)	Tetra Tech	Coolers, samples, packaging, ice	N	No
SOP024-3	Recording Notes in Field Logbooks (2020)	Tetra Tech	Camera, logbook, a pen with permanent ink	N	No
SOP203-1	Lab Data Verification (2019)	Tetra Tech	Analytical results, computer	N	No

Note:

Tetra Tech standard operating procedures (SOP) are included in Appendix B.

Field audits and field note audits assess field procedures and the need for corrective action (see Worksheets #31, 32, & 33).

QAPP WORKSHEET #22
Field Equipment Calibration, Maintenance, Testing, and Inspection

Field Equipment	Activity	SOP Reference	Title or position of responsible person	Frequency	Acceptance Criteria	Corrective Action
UltraRAE 3000 (*with PID detector*)	Zero calibrate unit in ambient air or with Zero value calibration gas.	SOP003-4	Tetra Tech Field Team Lead	Routine: Monthly full calibration On-site: Weekly full calibration with daily bump tests, or as indicated by a unit	Calibration acceptable within ± 2% of the true value	Replace battery or replace the unit

Notes:

PID – Photoionization detector
The UltraRAE 3000 will be equipped with a PID detector for the health and safety monitoring of organic vapors.
Tetra Tech Standard Operating Procedure (SOP) 003-4 is included in Appendix B.

QAPP WORKSHEET #23
Analytical SOPs

SOP #[1]	Title, Date, and URL (if available)	Definitive or Screening Data	Matrix/Analytical Group	SOP Option or Equipment Type	Modified for Project? Y/N
SFAM01.1	EPA CLP Statement of Work for Superfund Analytical Methods Multi-Media, Multi-Concentration, May 2019 and November 2020 Revisions	Definitive	TCLP and Soil/VOCs, SVOCs, Metals, Cyanide, pH	GC/MS ICP-AES ICP-MS CVAA Spectrophotometer pH meter	N
MS023 v7	The measurement of volatile organic analytes in water by purge % trap gas chromatography/mass spectrometry, 4/9/2020	Definitive	TCLP and water VOCs	GC/MS	N
MS001 v5	The measurement of purgeable organic compounds in soil by gas chromatography/mass spectrometry	Definitive	Soil/VOCs	GC/MS	N
MS026 v3	The measurement of acid and base/neutral organic compounds in water and soil by gas chromatography/mass spectrometry, 10/30/2019	Definitive	TCLP /SVOCs	GC/MS	N
Metals003A v9	The Analysis of Metals by ICP	Definitive	TCLP /Metals	ICP-AES ICP-MS	N
AIG003 v8	The pH of Aqueous and Multiphase Wastes – corrosivity, 4/26/2021	Definitive	Water/pH	pH meter	N
AIG008 v6	The pH of Soil and Waste, 4/26/2021	Definitive	Soil/pH	pH meter	N
AIG044E v10	Mercury in water, 3//9/2021	Definitive	TCLP/Mercury	CVAA	N
HN-WC-026-R07	Total, Reactive, and Acid-Soluble Sulfide, 10/17/2017	Definitive	Soil/Reactive Sulfide	Titration	N
HN-WC-015-R07	Reactive Cyanide, 08/31/2016	Definitive	Soil/Reactive Cyanide	Spectrophotometer	N
BMI 12-028	CU Triaxial Compression Test for Cohesive Soil	Definitive	Geotechnical	Balance	N
BMI 12-011	Moisture Content	Definitive	Geotechnical	Balance	N
BMI 12-047	Particle-Size Analysis of Soil	Definitive	Geotechnical	Balance	N
BMI 12-025	Liquid Limit and Plastic Limit (Atterberg Limits)	Definitive	Geotechnical	Balance	N

Notes:
ASB = Analytical Services Branch
CLP = Contract Laboratory Program
EPA = U.S. Environmental Protection Agency
CVAA – Cold vapor atomic absorption
ICP-AES = Inductively coupled plasma-atomic emission spectrometer
ICP-MS = Inductively coupled plasma- mass spectrometer
SOP = Standard operating procedure
SVOC = Semi-volatile organic compound
VOC = Volatile organic compound
[1]Subcontracted and ASB laboratory SOPs are presented in Appendix C. The EPA CLP SOP (EPA 2020a) is available online at Superfund CLP Analytical Statements of Work (SOWs) | Superfund Analytical Services and Contract Laboratory Program | US EPA.

QAPP WORKSHEET #24
Analytical Instrument Calibration

Instrument	Calibration Procedure	Calibration Range	Frequency	Acceptance Criteria	Corrective Action (CA)	Title/position responsible for Corrective Action	SOP Reference
GC/MS	VOCs: Run five calibration standard solutions and a blank	Low/ Medium	12-hour continuing calibration acceptance criteria	RRF ≥ 0.010 or per SOP. RSD ≤ 20% to 40%, depending on the compound. Continuing, %D ≤ 25 to 40 depending on the compound	Inspect the system for problems, clean the ion source, change the column, service the purge and trap device, and take CAs to achieve the technical acceptance criteria.	Laboratory Analyst	SFAM01.1
GC/MS	VOCs: Analyze a minimum of five calibration standard solutions SVOCs: Analyze a minimum of five calibration standard solutions	Low/ Medium	12-hour continuing calibration acceptance criteria	RSD ≤ 20% or r^2 ≥0.99 ICV, %D ≤ ±30% CCV, %D ≤ ±25%	Inspect the system for problems, clean the ion source, change the column, service the purge and trap device, and take CAs to achieve the technical acceptance criteria.	Laboratory Analyst	MS026 v3 MS023 v7 MS001 v5

QAPP WORKSHEET #24
Analytical Instrument Calibration

Instrument	Calibration Procedure	Calibration Range	Frequency	Acceptance Criteria	Corrective Action (CA)	Title/position responsible for Corrective Action	SOP Reference
ICP-AES	Daily calibration curve with at least a blank and one non-zero standard solution.	Low/ Medium	Each CCV analyzed shall reflect the conditions of analysis of all associated analytical samples (the preceding 10 analytical samples or the preceding analytical samples up to the previous CCV)	Deviation from the initial calibration verification: metals 90-110%	Inspect the system for problems, clean the system, verify operating conditions, and take CAs to achieve the technical acceptance criteria.	Laboratory Analyst	SFAM01.1 Metals003A v9
CVAA	Daily calibration curve with at least blank and five standards solutions. Curve must be linear and have a correlation coefficient of at least 0.995.	NA	Verify calibration curve at the end of each analysis batch and/or after every 10 samples using a CCB and CCV standard	CCV standard within ±10% of its true value and the CCB must not contain target analytes at or above quantitation limit	Inspect the system for problems, clean the system, verify operating conditions, and take CAs to achieve the technical acceptance criteria.	Laboratory Analyst	SFAM01.1 AIG044E v10
pH meter	Daily calibration, minimum 3 calibration standards	NA	Verify calibration curve at the beginning and end of each analysis batch, and/or after every 10 samples using a CCV standard	Slope 95-103% with Metrohm electrode. Slope 92-102% with Orion electrode. Within 0.1 pH units of true value.	Perform maintenance and correct problems. If necessary, repeat ICAL	Laboratory Analyst	AIG003 v8 AIG008 v6

QAPP WORKSHEET #24
Analytical Instrument Calibration

Instrument	Calibration Procedure	Calibration Range	Frequency	Acceptance Criteria	Corrective Action (CA)	Title/position responsible for Corrective Action	SOP Reference
Load Cell	See SOP	NA	12 months	See SOP	Perform maintenance, correct problem, or if necessary, repeat.	Laboratory Analyst	BMI 12-028
Pressure Gauge	See SOP	NA	12 months	See SOP	Perform maintenance, correct problem, or if necessary, repeat.	Laboratory Analyst	BMI 12-028
Indicator	See SOP	NA	6 months	See SOP	Perform maintenance, correct problem, or if necessary, repeat.	Laboratory Analyst	BMI 12-028
Caliper	See SOP	NA	6 months	See SOP	Perform maintenance, correct problem, or if necessary, repeat.	Laboratory Analyst	BMI 12-028
Stopwatch	See SOP	NA	12 months	See SOP	Perform maintenance, correct problem, or if necessary, repeat.	Laboratory Analyst	BMI 12-028 BMI 12-047
Balance	See SOP	NA	3 Months	See SOP	Perform maintenance, correct problem, or if necessary, repeat.	Laboratory Analyst	BMI 12-028 BMI 12-011 BMI 12-025 BMI 12-047
Thermometer	See SOP	NA	12 months	See SOP	Perform maintenance, correct problem, or if necessary, repeat.	Laboratory Analyst	BMI 12-011 BMI 12-025 BMI 12-047
Sieves	See SOP	NA	12 months	See SOP	Perform maintenance, correct problem, or if necessary, repeat.	Laboratory Analyst	BMI 12-047

QAPP WORKSHEET #24
Analytical Instrument Calibration

Instrument	Calibration Procedure	Calibration Range	Frequency	Acceptance Criteria	Corrective Action (CA)	Title/position responsible for Corrective Action	SOP Reference
Hydrometer	See SOP	NA	12 months	See SOP	Perform maintenance, correct problem, or if necessary, repeat.	Laboratory Analyst	BMI 12-047
Liquid Limit Device	See SOP	NA	12 months	See SOP	Perform maintenance, correct problem, or if necessary, repeat.	Laboratory Analyst	BMI 12-025
Grooving Tool	See SOP	NA	12 months	See SOP	Perform maintenance, correct problem, or if necessary, repeat.	Laboratory Analyst	BMI 12-025

Notes:
Subcontracted and ASB laboratory SOPs are presented in Appendix C. The EPA CLP SOP (EPA 2020a) is available online at Superfund CLP Analytical Statements of Work (SOWs) | Superfund Analytical Services and Contract Laboratory Program | US EPA.

ASB = Analytical Services Branch
CCB = Continuing calibration blank
CCV = Continuing calibration verification
CLP = Contract Laboratory Program
CVAA = Cold Vapor Atomic Absorption
GC/MS = Gas chromatography mass spectrometry
ICP-AES = Inductively Coupled Plasma-Atomic Emission Spectrometer
ICV = Initial calibration verification
NA = Not applicable
RSD = Relative standard deviation
RRF = Relative response factor
SOP = Standard Operating Procedure
SVOC = Semi-volatile Organic Compound
VOC = Volatile Organic Compound

QAPP WORKSHEET #25
Analytical Instrument and Equipment Maintenance, Testing, and Inspection

Instrument/ Equipment	Maintenance/Testing Activity	Inspection Activity	Frequency	Acceptance Criteria	Corrective Action	Title/position responsible for corrective action	SOP Reference[a]
GC/MS	Daily check, instrument tune with bromofluorobenzene (VOC) or decafluorotriphenyl-phosphine (SVOC)	Injector syringe, injector septum, injector liner/seal, injector port, guard column, column splitter, analytical column, ion source, detector, traps, and gas supply	Daily before use	See Analytical SOP	Inspect the system for problems, clean the ion source, change the column, and service the purge and trap device.	Laboratory Analyst	SFAM01.1 MS026 v3 MS023 v7 MS001 v5
ICP-AES	Daily check, calibration verification	Nebulizer, injection tube, plasma optimization, gas supply, and detector	Daily before use	See Analytical SOP	Inspect the system for problems, clean the system, verify operating conditions, and take CAs to achieve the technical acceptance criteria.	Laboratory Analyst	SFAM01.1 Metals003A v9
CVAA	Daily check, calibration verification	Nebulizer, injection tube, flame optimization, gas supply, and detector	Daily before use	See Analytical SOP	Inspect the system for problems, clean the system, verify operating conditions, and take CAs to achieve the technical acceptance criteria.	Laboratory Analyst	SFAM01.1 AIG044E v10
pH meter	Manufactures procedure to fill electrodes with proper solution	Instrument Performance and sensitivity	As needed	See Analytical SOP	Conduct additional maintenance	Laboratory Analyst	AIG003 v8 AIG008 v6

Notes:

a See Worksheet #23 for identification of analytical methods. Subcontracted and ASB laboratory SOPs are presented in Appendix C. The EPA CLP SOP (EPA 2020a) is available online at Superfund CLP Analytical Statements of Work (SOWs) | Superfund Analytical Services and Contract Laboratory Program | US EPA

CVAA Cold vapor atomic adsorption
GC/MS Gas chromatography/mass spectrometry
ICP-AES Inductively coupled plasma/atomic emission spectrometry
SOP Standard operating procedure
SVOC Semi-volatile organic compound
VOC Volatile organic compound

QAPP WORKSHEET #26 & 27
Sample Handling, Custody, and Disposal

Sampling Organization: Tetra Tech
Laboratory: CLP, ASB, ALS, Bowser Morner
Method of sample delivery (shipper/carrier): Federal Express for priority shipments.
Number of days from reporting until sample disposal: 30 Days

Activity	Organization and title or position of person responsible for the activity	SOP Reference
Sample labeling	Tetra Tech field sampling team	None - refer to the discussion below
Chain-of-custody form completion	Tetra Tech field sampling team	TT SOP019-8
Packaging	Tetra Tech field sampling team	TT SOP019-8
Shipping coordination	Tetra Tech field sampling team	TT SOP019-8
Sample receipt, inspection, & log-in	Laboratory Sample Custodian	Various: CLP, ASB, ALS, Bowser Morner
Sample custody and storage	Laboratory Sample Custodian	Various: CLP, ASB, ALS, Bowser Morner
Sample Preparation	Laboratory Sample Custodian	Various: CLP, ASB, ALS, Bowser Morner
Sample Determinative Analysis	Laboratory Sample Custodian	Various: CLP, ASB, ALS, Bowser Morner
Field Sample Storage	Laboratory Sample Custodian	Various: CLP, ASB, ALS, Bowser Morner
Sample Extract/Digestate Storage	Laboratory Sample Custodian	Various: CLP, ASB, ALS, Bowser Morner
Sample disposal	Laboratory Sample Custodian	Various: CLP, ASB, ALS, Bowser Morner

Subcontracted and ASB laboratory SOPs are presented in Appendix C. The EPA CLP SOP (EPA 2020a) is available online at Superfund CLP Analytical Statements of Work (SOWs) | Superfund Analytical Services and Contract Laboratory Program | US EPA.

Sample Identification Procedures

Sample collection procedures will be in accordance with EPA's *Sampler's Guide: Contract Laboratory Program Guidance for Field Samplers* (EPA 2020d). Samples collected at the site must be uniquely labeled. All samples will be identified with a label attached directly to the container. Sample label information will be printed or written onto labels that can be adhered to sample containers. Tetra Tech will provide the following information on CLP sample labels and sample tags:

Sample bottle labels should include the following information:

1. Regional Sample number, as applicable
2. CLP Case Number
3. Preservative(s)
4. Analysis/fraction

Additional information may be included on the label, such as the Station/Location (Sampler-assigned sample No.), date and time collected, etc.

QAPP WORKSHEET #28
Analytical Quality Control and Corrective Action for Volatile Organic Compounds (VOCs) by GC/MS

Matrix: TCLP
Analytical Group: VOC, TCLP VOC
Analytical Method/SOP: 8260 / SFAM01.1 and MS023 v7
Analytical Organization: EPA CLP (primary), EPA Region 5 ASB (secondary)

QC Sample	Number/Frequency	Corrective Action	Title/position of person responsible for corrective action	Project Specific Measurement Performance Criteria
Method Blank	1 per extraction batch samples maximum	If sufficient volume is available, extract and reanalyze samples in the affected batch. If sufficient volume is not available, reanalyze affected extracts.	Laboratory Analyst	No target compounds > QL
Matrix Spike/Matrix Spike Duplicate	1 per extraction batch samples maximum	If sufficient volume is available, extract and reanalyze samples in the affected batch. Otherwise, analyze laboratory control samples to see if the problem is analysis or sample.	Laboratory Analyst	%R and RPD as presented in Worksheet #12
Deuterated Monitoring Compounds (Surrogates)	All samples	Reanalyze sample. If on reanalysis, the monitoring compound meets criteria, report reanalysis results. If upon reanalysis, the monitoring compound does not meet the criteria, the results are reported in the narrative.	Laboratory Analyst	%R as presented in Worksheet # 12

Notes:

%R Percent recovery
ASB Analytical Services Branch
CLP Contract Laboratory Program
GC/MS Gas chromatography/mass spectrometry
QL Quantitation limit
RPD Relative percent difference
SOP Standard operating procedure
TCLP Toxicity characteristic leaching procedure
VOC Volatile organic compounds

QAPP WORKSHEET #28 (Continued)
Analytical Quality Control and Corrective Action for Semi-Volatile Organic Compounds (SVOCs) by GC/MS

Matrix: TCLP
Analytical Group: SVOC, TCLP SVOC
Analytical Method/SOP: 8270 / SFAM01.1 and MS026 v3
Analytical Organization: EPA CLP (primary), EPA Region 5 ASB (secondary)

QC Sample	Number/Frequency	Corrective Action	Title/position of person responsible for corrective action	Project Specific Measurement Performance Criteria
Method Blank	1 per extraction batch samples maximum	If sufficient volume is available, extract and reanalyze samples in the affected batch. If sufficient volume is not available, reanalyze affected extracts.	Laboratory Analyst	No target compounds > QL
Matrix Spike/Matrix Spike Duplicate	1 per extraction batch samples maximum	If sufficient volume is available, extract and reanalyze samples in the affected batch. Otherwise, analyze laboratory control samples to see if the problem is analysis or sample.	Laboratory Analyst	%R and RPD as presented in Worksheet #12
Deuterated Monitoring Compounds (Surrogates)	All samples	Reanalyze sample. If on reanalysis, the monitoring compound meets criteria, report reanalysis results. If upon reanalysis, the monitoring compound does not meet the criteria, the results are reported in the narrative.	Laboratory Analyst	%R as presented in Worksheet # 12

Notes:

%R Percent recovery
ASB Analytical Services Branch
CLP Contract Laboratory Program
GC/MS Gas chromatography/mass spectrometry
QL Quantitation limit
RPD Relative percent difference
SOP Standard operating procedure
TCLP Toxicity characteristic leaching procedure
VOC Volatile organic compounds

QAPP WORKSHEET #28 (Continued)
Analytical Quality Control and Corrective Action for Metals by ICP-AES

Matrix: TCLP
Analytical Group: Metals, Mercury, TCLP Metals/TCLP Mercury
Analytical Method/SOP: 6010, 6020, 7040 / SFAM01.1, Metals003A v9, and AIG044E v10
Analytical Organization: EPA CLP (primary), EPA Region 5 ASB (secondary)

QC Sample	Number/Frequency	Corrective Action	Title/position of person responsible for corrective action	Project Specific Measurement Performance Criteria
Method Blank	1 per extraction batch samples maximum	If sufficient volume is available, extract and reanalyze samples in the affected batch. If sufficient volume is not available, reanalyze affected extracts.	Laboratory Analyst	No target compounds > QL
Matrix Spike	1 per extraction batch of 20 samples maximum	If sufficient volume is available, extract and reanalyze samples in the affected batch. Otherwise, analyze laboratory control samples to see if the problem is analysis or sample.	Laboratory Analyst	%R as presented in Worksheet #12
Laboratory Duplicate	1 per extraction batch of 20 samples maximum	If sufficient volume is available, extract and reanalyze samples in the affected batch. Otherwise, analyze laboratory control samples to see if the problem is analysis or sample.	Laboratory Analyst	RPD as presented in Worksheet #12

Notes:

%R Percent recovery
ASB Analytical Services Branch
CLP Contract Laboratory Program
ICP-AES Inductively coupled plasma-atomic emission spectrometry
QC Quality control
QL Quantitation limit
RPD Relative percent difference
SOP Standard operating procedure
TCLP Toxicity characteristic leaching procedure

QAPP WORKSHEET #28 (Continued)
Analytical Quality Control and Corrective Action for Reactive Cyanide

Matrix: Soil
Analytical Group: Reactive Cyanide
Analytical Method/SOP: SW-846 Chapter 7 / HN-WC-015-R07
Analytical Organization: ALS Environmental

QC Sample	Number/Frequency	Corrective Action	Title/position of person responsible for corrective action	Project Specific Measurement Performance Criteria
Method Blank	1 per extraction batch samples maximum	If sufficient volume is available, extract and reanalyze samples in the affected batch. If sufficient volume is not available, reanalyze affected extracts.	Laboratory Analyst	No target compounds > QL
Laboratory Control Sample	1 per extraction batch of 20 samples maximum	If sufficient volume is available, extract and reanalyze samples in the affected batch. Otherwise, analyze laboratory control samples to see if the problem is analysis or sample.	Laboratory Analyst	%R as presented in Worksheet #12
Matrix Spike/Matrix Spike Duplicate	1 per extraction batch of 20 samples maximum	If sufficient volume is available, extract and reanalyze samples in the affected batch. Otherwise, analyze laboratory control samples to see if the problem is analysis or sample.	Laboratory Analyst	%R and RPD as presented in Worksheet #12

Notes:

%R Percent recovery
QL Quantitation limit
RPD Relative percent difference
SOP Standard operating procedure

QAPP WORKSHEET #28 (Continued)
Analytical Quality Control and Corrective Action for Reactive Sulfide

Matrix: Soil
Analytical Group: Reactive Sulfide
Analytical Method/SOP: SW-846 Chapter 7 / HN-WC-026-R07
Analytical Organization: ALS Environmental

QC Sample	Number/Frequency	Corrective Action	Title/position of person responsible for corrective action	Project Specific Measurement Performance Criteria
Method Blank	1 per extraction batch samples maximum	If sufficient volume is available, extract and reanalyze samples in the affected batch. If sufficient volume is not available, reanalyze affected extracts.	Laboratory Analyst	No target compounds > QL
Laboratory Control Sample	1 per extraction batch of 20 samples maximum	If sufficient volume is available, extract and reanalyze samples in the affected batch. Otherwise, analyze laboratory control samples to see if the problem is analysis or sample.	Laboratory Analyst	%R as presented in Worksheet #12
Matrix Spike/Matrix Spike Duplicate	1 per extraction batch of 20 samples maximum	If sufficient volume is available, extract and reanalyze samples in the affected batch. Otherwise, analyze laboratory control samples to see if the problem is analysis or sample.	Laboratory Analyst	%R and RPD as presented in Worksheet #12

Notes:

%R Percent recovery
QL Quantitation limit
RPD Relative percent difference
SOP Standard operating procedure

QAPP WORKSHEET #28 (Continued)
Analytical Quality Control and Corrective Action for Triaxial Compression Test for Cohesive Soils

Matrix: Soil
Analytical Group: Geotechnical
Analytical Method/SOP: ASTM D 4767 / BMI 12-028
Analytical Organization: Bowser-Morner

QC Sample	Number/Frequency	Corrective Action	Title/position of person responsible for corrective action	Project Specific Measurement Performance Criteria
Balance Verification	Daily	Recalibrate Balance	Laboratory Analyst	NA

Notes:

NA Not applicable
SOP Standard operating procedure

QAPP WORKSHEET #28 (Continued)
Analytical Quality Control and Corrective Action for Moisture Content

Matrix: Soil
Analytical Group: Geotechnical
Analytical Method/SOP: ASTM D 2216 / BMI 12-011
Analytical Organization: Bowser-Morner

QC Sample	Number/Frequency	Corrective Action	Title/position of person responsible for corrective action	Project Specific Measurement Performance Criteria
Balance Verification	Daily	Recalibrate Balance	Laboratory Analyst	NA
Oven Verification	Daily	Recalibrate Oven	Laboratory Analyst	NA

Notes:

NA Not applicable
SOP Standard operating procedure

QAPP WORKSHEET #28 (Continued)
Analytical Quality Control and Corrective Action for Particle Size Analysis of Soils

Matrix: Soil
Analytical Group: Geotechnical
Analytical Method/SOP: ASTM D 6913 / BMI 12-047
Analytical Organization: Bowser-Morner

QC Sample	Number/Frequency	Corrective Action	Title/position of person responsible for corrective action	Project Specific Measurement Performance Criteria
Balance Verification	Daily	Recalibrate Balance	Laboratory Analyst	NA
Oven Verification	Daily	Recalibrate Oven	Laboratory Analyst	NA

Notes:

NA Not applicable
SOP Standard operating procedure

QAPP WORKSHEET #28 (Continued)
Analytical Quality Control and Corrective Action for Liquid Limit and Plastic Limit (Atterberg Limits)

Matrix: Soil
Analytical Group: Geotechnical
Analytical Method/SOP: ASTM D 4318 / BMI 12-025
Analytical Organization: Bowser-Morner

QC Sample	Number/Frequency	Corrective Action	Title/position of person responsible for corrective action	Project Specific Measurement Performance Criteria
Balance Verification	Daily	Recalibrate Balance	Laboratory Analyst	NA
Oven Verification	Daily	Recalibrate Oven	Laboratory Analyst	NA
Verification of Drop Height	Once, before testing	Recalibrate	Laboratory Analyst	NA

Notes:

NA Not applicable
SOP Standard operating procedure

QAPP WORKSHEET #28 (Continued)
Analytical Quality Control and Corrective Action for pH

Matrix: Soil/Water/Waste
Analytical Group: pH
Analytical Method/SOP: 9040 and 9045 / SFAM01.1, AIG003, and AIG008
Analytical Organization: EPA CLP (primary), EPA Region 5 ASB (secondary)

QC Sample	Number/Frequency	Corrective Action	Title/position of person responsible for corrective action	Project Specific Measurement Performance Criteria
Verify electrode performance using control or check standards	See Worksheet #24	See Worksheet #24	Laboratory Analyst	NA

Notes:

ASB Analytical Services Branch
CLP Contract Laboratory Program
EPA U.S. Environmental Protection Agency
NA Not applicable
SOP Standard operating procedure

QAPP WORKSHEET #29
Project Documents and Records

Record	Generation	Verification	Storage Location/archival
Project Management Plans, Quality Assurance Project Plans, Health, and Safety Plans	Project Manager	Program Manager	Field office, Tetra Tech project files/10 years
Cost Tracking/Invoice, Monthly progress reports	Financial Manager	Project Manager and Program Manager	Tetra Tech files /10 years
Field notes and logbooks	Field Task Leader	Project Manager	Field office, Tetra Tech project files/10 years
Audit/assessment checklists, forms, and reports	Field Task Leader	Project Manager, Program Manager, QA Manager, Task Order QA Manager	Tetra Tech project files/10 years
Corrective action forms and reports	Project Manager,	QA Manager	Tetra Tech project files/10 years
EPA project documents	Project Manager	QA Manager	Tetra Tech project files/10 years
Technical Assistance Meeting Minutes	Project Manager	Program Manager	Tetra Tech project files/10 years
Technical field reports	Field Task Leader	Project Manager, Program Manager, Task Order QA Manager	Tetra Tech project files/10 years
Preliminary design investigation, work plans, and RD technical review documents	Project Manager	Program Manager, Task Order QA Manager	Tetra Tech project files/10 years
Community Involvement Submittals (if requested)	Community Involvement Specialist	Project Manager, Program Manager, Task Order QA Manager	Tetra Tech project files/10 years
Task order closeout	Project Manager	Program Manager	Tetra Tech project files/10 years
Laboratory data packages and electronic data deliverables	Laboratory	Laboratory	Tetra Tech project files/10 years
Data validation reports	Tetra Tech Chemist	QA Manager	Tetra Tech project files/10 years

Notes:
The Tetra Tech quality management plan (QMP) provides the report format and package information. The QMP provides details for document storage, document backup plans, record-keeping and tracking, and the document control system (Tetra Tech 2018).

The validated EDD's will be uploaded to the EPA Region 5 electronic data submission site: https://www.epa.gov/superfund/region-5-superfund-electronic-data-submission

The Senior Project Manager, Ray Mastrolonardo, will distribute the approved QAPP to the individuals identified in worksheets #3 and #5. The approved QAPP will be distributed to staff electronically and will be available in the project file.

Project assessments including data verification checklists, data validation reports, and data usability assessments reports are presented in Worksheets #31 through #37.

EDD Electronic data deliverable QA Quality assurance RD Remedial design

QAPP WORKSHEETS #31, 32, & 33
Assessments and Corrective Action

Assessment Type[a]	Responsible Party & Organization	Number/ Frequency	Estimated Dates	Assessment Deliverable	Deliverable Due Date
Project document reviews	Tetra Tech Project Manager and Task Order QA Manager	All documents for submittal	All Task Order Years	Review comments for submittal to EPA TOCOR	Per Task Order requirements
Field note reviews	Tetra Tech Project Manager and Task Order QA Manager	After the first day of field activities and periodically thereafter	All Task Order Years	Internal discussions between Tetra Tech Project Manager, Task Order QA Manager, and field staff	24 hours after collection of field notes
Project document and records storage audit	Tetra Tech Project Manager, Program Manager, and Task Order QA Manager	At the discretion of the Project, Program and QA Managers/yearly	All Task Order Years	Internal memorandum to the Tetra Tech Project Manager, Program Manager, and Task Order QA Manager	48 hours from completion of the audit
Field audit	Tetra Tech Project Manager, Program Manager, and QA Manager	One audit during field activities or additional if warranted/yearly	All Task Order Years	Field audit checklist (Provided in Appendix D) and field audit summary report submitted to EPA	48 hours from completion of the audit
Field audit	EPA	At the discretion of EPA/yearly	All Task Order Years	Field audit checklist (Provided in Appendix D)	48 hours from completion of the audit

Note:
Emergency response readiness review is not relevant to this contract. No on-site analytical technical system audits are planned for this project. Most analyses will be performed by U.S. Environmental Protection Agency Analytical Services Branch or Contract Laboratory Program laboratories.

a See requirement section below for activities typically reviewed during field audits

QAPP WORKSHEETS #31, 32, & 33 (continued)
Assessments and Corrective Action

Assessment Type	Responsibility for responding to assessment findings	Assessment Response Documentation	Timeframe for Response	Responsibility for Implementing Corrective Action	Responsible for monitoring Corrective Action
Project document reviews	Tetra Tech Project Manager and Task Order QA Manager	Written review documentation storage in the project files	Within 7 days of receipt of review comments	Tetra Tech Project Manager	Task Order QA Manager
Field notes reviews	Tetra Tech Project Manager and field staff	Memorandum in project files	Within 1 day of receipt of review comments	Tetra Tech Project Manager	Task Order QA Manager
Document and records storage audit	Tetra Tech Program Manager, QA Manager, Project Manager	Written response for the corrective actions, as required by the QMP.	Within 7 days from receipt of QA Management Report	Tetra Tech QA Manager and Program Manager. See worksheet #6.	QA Manager
Field audit	Tetra Tech Program Manager, QA Manager, Project Manager	Written response for the corrective actions, as required by the QMP.	Within 7 days from receipt of QA Management Report	Tetra Tech QA Manager and Program Manager. See worksheet #6.	QA Manager

Note:

QA Quality assurance
QMP Quality Management Plan
TO Task order

QAPP WORKSHEETS #31, 32, & 33 (Continued)
Assessment Response and Corrective Action

Requirements:

Internal performance and system audits of Tetra Tech's field activities may be conducted to verify that field procedures are properly documented by Tetra Tech to ensure that field activities are performed in accordance with the procedures and requirements established in the quality assurance project plan (QAPP) and RD/RA documentation. Yearly audits will be performed during field activities, and additional audits may be performed if warranted. Non-conforming items identified during an audit will be addressed by corrective action. This worksheet addresses basic audit requirements that apply to work conducted by Tetra Tech.

Deliverables submitted by Tetra Tech are subject to a three-level internal QC review process. This process includes a technical review by a technical staff member, independent of the project team; an editorial review completed by a technical editor; and a final review by a quality control coordinator (QCC) for overall completeness and compliance with requirements.

In addition to audits, the Tetra Tech Project Manager will review all project documents to include technical review comments and field notes to ensure these documents comply with the project objectives. Field notes will be reviewed by the Tetra Tech Project Manager following the first day of fieldwork to ensure proper documentation of activities. The field notes will then be periodically reviewed by the Tetra Tech Project Manager to ensure documentation by the field staff is thorough and concise. The Tetra Tech Project Manager will convey a review evaluation of the field notes and will maintain close communication with the field staff.

Performance (Technical Systems) and System Audits: Both internal performance (technical systems) and system audits may be conducted on Tetra Tech's field activities. The performance or technical system audits will include verification that field documentation is being conducted properly to ensure that activities are performed in accordance with the requirements of the QAPP, and any RD/RA documents. System audits involve a qualitative examination of all components of records, personnel, and QA management activities.

These worksheets describe the selection of audit personnel, the scope of field audits, audit frequencies, and typical audit reports for internal audits initiated by the Tetra Tech QA manager.

Audit Personnel: Auditors must be independent of the activities being audited. The Tetra Tech QA manager and the project manager will direct audit activities. The QA manager will select the appropriate personnel to conduct each audit and will assign responsibilities and deadlines for completing their audits. These personnel may include the Tetra Tech QA manager, QCCs for the project, or other independent auditors. When an audit team is required, the QA manager selects a lead auditor based on relevant technical expertise and audit experience. The lead auditor is responsible for selecting and preparing the audit team; preparing an audit plan; coordinating and scheduling the audit with the project team or other organization being audited; participating in the audit; coordinating the preparation and issuance of audit reports and corrective action requests; and evaluating audit responses and resulting corrective actions.

QAPP WORKSHEETS #31, 32, 33 (Continued)
Assessments and Corrective Action

Audit Frequencies: These audits may be required by EPA or planned by the Tetra Tech QA manager. Audit frequency will at minimum be yearly. Unscheduled follow-up audits may occur if any deficiencies are discovered during an audit or review. Follow-up audits verify that corrective actions have been properly implemented to address deficiencies.

Audit Reports: Audit reports will be prepared for performance and system audits of field activities. Reports will be prepared by the lead auditor responsible for coordinating the audit. Audit reports will identify audit participants, describe the activity audited, summarize audit findings, and detail any deficiencies or deviations from protocol discovered during the audits, as well as any corrective actions proposed.

Audit reports will be distributed to the Tetra Tech QA manager, program manager, and project manager. The lead auditor has primary responsibility for ensuring that audits are conducted thoroughly and properly. Tetra Tech project managers and QA managers are responsible for implementing corrective actions that result from an audit. The Tetra Tech Senior Project Manager will present nonconformances and corrective actions to the EPA TOCOR. The Tetra Tech QA manager is responsible for verifying that recommended corrective actions have been implemented.

Requirements: Rapid and thorough correction of QA problems, through an effective corrective action program, minimize the possibility of questionable data or documentation. The two types of corrective action are immediate and long-term. Immediate corrective actions include correcting procedures and correcting errors or deficiencies in documentation. Long-term corrective actions eliminate the sources of problems by correcting systematic errors in procedures, revising procedures that produce questionable results, and manipulating similar cause-and-effect relationships.

QA problems and corrective actions applied are documented to provide a complete record of QA activities. These records assist the Tetra Tech management team in identifying long-term QA problems and enable the application of long-term corrective actions such as personnel training and improvement of project communication.

QAPP WORKSHEET #34
Data Verification and Validation Inputs

Verification Input	Description	Internal/ External	Responsible for Verification (Name, Organization)
Quality Assurance Project Plan	Project-specific data verification and validation will be based on the requirements of this QAPP.	Internal	Tetra Tech project manager, field team leader, and chemist
Field notes: logbook, field data sheets	Field notes will be reviewed internally and placed in the project file. A copy of the field notes may be attached to the final report.	Internal	Tetra Tech project manager
Field data	Manual data entries will be reviewed against hard copy field forms, including sample location diagrams, drilling logs and other information, or logbook entries. Electronic uploads of field data will be checked against any available manually recorded data on field forms or in logbooks.	Internal	Tetra Tech project manager, field team leader, or assigned personnel
Chain-of-custody forms	Chain-of-custody forms will be reviewed internally upon their completion and verified against the packed sample coolers they represent. It is recommended that the shipper's signature on the chain-of-custody form be initialed by the reviewer. A copy of the chain-of-custody form should be retained in the project file, and the original and remaining copies should be taped inside the cooler for shipment.	Internal	Tetra Tech field team leader
Sample receipt	For samples shipped by a commercial carrier, Tetra Tech will confirm that samples were received by the laboratory on the date following shipment (or on the expected date of delivery)	Internal	Tetra Tech project manager, field team leader, or assigned personnel
Laboratory data packages	Laboratory data packages will be verified internally by the laboratory performing the work for completeness and technical accuracy prior to submittal.	Internal	U.S. Environmental Protection Agency (EPA) Region 5 Laboratory Services and Applied Science Division Analytical Services Branch, EPA Contract Laboratory Program (CLP) laboratory, or subcontracted laboratory project manager
Laboratory data packages	All laboratory data packages will be verified externally for completeness and will be checked for technical accuracy prior to release in accordance with the data validation procedures specified in Worksheets #35 and #36. Standard EPA Contract Laboratory Program (CLP) data packages will be provided by CLP laboratories in accordance with the CLP SOW. Level IV data packages will be provided by for all analytical results, except geotechnical results, which will consist of Level I data packages.	External	EPA Environmental Services Assistance Team (ESAT) contractor for data generated by EPA CLP laboratories and Tetra Tech chemist for laboratory data generated by EPA Region 5 Laboratory Services and Applied Science Division Analytical Services Branch, and other private laboratories

Notes: Validation of analytical results from EPA ASB or private laboratories will be conducted by Tetra Tech Chemists who are independent of sample collection efforts.

Worksheets #31, 32, & 33 contain information regarding assessments and corrective action.

QAPP WORKSHEET #35
Data Verification Procedures

This worksheet documents procedure used to verify project data and apply to both field and laboratory records. Data verification is a completeness check to confirm that all required activities were conducted, all specified records are present, and the contents of the records are complete. Verification is often performed at more than one step by more than one person.

Records Reviewed	Required Documents	Process Description	Responsible Person (Organization)
Field or Personal Logbook	QAPP, SOP024 in Appendix B	Verify that: • Daily entries are completed for each day of field activities. • All planned samples, including field QC samples, were collected. • All sample locations are documented in the logbook. • Meteorological data were included for each day of field activities. • Any changes/exceptions from the FSP are documented. • Field instruments were calibrated, and field monitoring was performed, and results are documented.	Tetra Tech Project Manager
COC/TRs Sample tag/bottle labels	CLP Sampler's Guide, November 2020	Verify that all data elements for the COCs/TRs and sample tags listed on the COC checklist are present and correct. Verify consistency with the field logbook and that appropriate sample volumes have been collected. Verify that all required signatures and dates are present, including those of reviewers. Check for transcription errors.	Tetra Tech Field Personnel
Analytical Data Packages	QAPP or CLP SOW, COC/TR	Verify that: • All applicable data elements in Worksheet 34 and/or the CLP SOW/ASB SOP data elements are included in the data package. • All field sample results are reported laboratory results are complete. • Sample condition upon receipt was noted, and any missing/broken sample containers were noted and reported. • Project Quantitation Limits are less than or equal to those presented in Worksheet #15. • Verify that necessary signatures and dates are present.	Data Validator (ESAT or Tetra Tech Chemist)
ESAT Data Validation Deliverables	QAPP, COC/TR	Verify that the report consists of the following for all field samples submitted to the laboratory: • Data validation report (PDF) • Sample Summary Report with data validation qualifiers • Excel EDD file with data validation qualifiers	Tetra Tech Project Manager
Audit reports, Corrective Action reports	QAPP	Verify that all planned audits were conducted. Examine audit reports. For any deficiencies noted, verify that corrective action was implemented according to the plan.	Tetra Tech QA and Project Managers

QAPP WORKSHEET #35 (Continued)
Data Verification Procedures

Notes:
ASB = Analytical Services Branch
CLP = Contract Laboratory Program
COC/TR = Chain-of-Custody/Traffic Report
EDD = Electronic Data Deliverable
ESAT = Environmental Services Assistance Team
PDF = Portable Data Format
QA = Quality Assurance
QAPP = Quality Assurance Project Plan
QC = Quality Control
SOP = Standard operating procedure
SOW = Statement of Work

QAPP WORKSHEET #36
Data Validation Procedures

Matrix	Analytical Group	Concentration Level	Validation Criteria	Validation Code	Data Validator (Title and Organization)
Soil	VOCs	Low/ Medium	Tetra Tech SOP No. 203; 2020 NFG for Organic Superfund Methods Data Review; Appendices F and G to this QAPP	S3VM S4VM	(1) EPA ESAT contractor for data generated by EPA CLP laboratories. (2) Stage 3 data validation conducted by Tetra Tech chemist for 90 percent of data generated by EPA Region 5 LSASD ASB, and stage 4 validation for 10 percent of data.
Soil/TCLP Leachate	TCLP VOC	Low/ Medium and TCLP Leachate	Tetra Tech SOP No. 203; 2020 NFG for Organic Superfund Methods Data Review; Appendices F and G to this QAPP	S2aVM	(1) EPA ESAT contractor for data generated by EPA CLP laboratories. (2) Stage 2A data validation conducted by Tetra Tech chemist for 100 percent of data generated by EPA Region 5 LSASD ASB.
	TCLP SVOC	Low/ Medium and TCLP Leachate	Tetra Tech SOP No. 203; 2020 NFG for Organic Superfund Methods Data Review; Appendices F and G to this QAPP	S2aVM	
	TCLP Metals (including mercury)	Low/ Medium and TCLP Leachate	Tetra Tech SOP No. 203; 2020 NFG for Inorganic Superfund Methods Data Review; Appendices F and G to this QAPP	S2aVM	
	Reactive Cyanide/ Sulfide	Low/ Medium	Tetra Tech SOP No. 203; 2020 NFG for Inorganic Superfund Methods Data Review; Appendices F and G to this QAPP	S2aVM	
	pH	Low/ Medium	Tetra Tech SOP No. 203; Appendices F and G to this QAPP	S2aVM	

QAPP WORKSHEET #36 (Continued)
Data Validation Procedures

Matrix	Analytical Group	Concentration Level	Validation Criteria	Validation Code	Data Validator (Title and Organization)
Water	VOC	Low/ Medium	Tetra Tech SOP No. 203; 2020 NFG for Organic Superfund Methods Data Review; Appendices F and G to this QAPP	S2aVM	(1) EPA ESAT contractor for data generated by EPA CLP laboratories. (2) Stage 2A data validation conducted by Tetra Tech chemist for 100 percent of data generated by EPA Region 5 LSASD ASB.
	Metals (including mercury)	Low/ Medium	Tetra Tech SOP No. 203; 2020 NFG for Inorganic Superfund Methods Data Review; Appendices F and G to this QAPP	S2aVM	
	pH	Low/ Medium	Tetra Tech SOP No. 203; Appendices F and G to this QAPP	S2aVM	
Geotechnical	Triaxial Compression Test for Cohesive Soil	NA	Tetra Tech SOP No. 203; Appendices F and G to this QAPP	S1VM	Stage 1 data verification will be conducted by Tetra Tech chemist for 100 percent of geotechnical data.
	Moisture Content	NA	Tetra Tech SOP No. 203; Appendices F and G to this QAPP	S1VM	
	Particle-Size Analysis of Soil	NA	Tetra Tech SOP No. 203; Appendices F and G to this QAPP	S1VM	
	Liquid Limit and Plastic Limit (Atterberg Limits)	NA	Tetra Tech SOP No. 203; Appendices F and G to this QAPP	S1VM	

Notes:
ASB = Analytical Services Branch
CLP = Contract Laboratory Program
ESAT = Environmental Services Assistance Team
LSASD = Laboratory Services and Applied Science Division
NA = Not applicable
NFG = National Functional Guidelines
QAPP = Quality Assurance Project Plan
SOP = Standard operating procedure
SVOC = Semivolitile organic compound
TCLP = Toxicity characteristic leaching procedure
VOC = Volatile organic compound

Additional data validation requirements are provided in Worksheet #37.

QAPP WORKSHEET #36 (Continued)
Data Validation Procedures

Requirements:

All laboratory analytical data generated under the East Troy Contamination Aquifer (ETCA) Superfund site quality assurance project plan will be validated. Data generated by the U.S. Environmental Protection Agency (EPA) Contract Laboratory Program (CLP) will be validated by EPA's Environmental Services Assistance Team (ESAT) contractor. Data generated by the EPA Region 5 Analytical Services Branch (ASB) and subcontracted laboratories will be validated by Tetra Tech. Tetra Tech will conduct Stage 1, 2A, 3, or 4 validation, as defined in the following EPA data validation guidance document for externally validated laboratory analytical data: *Guidance for Labeling Externally Validated Laboratory Analytical Data for Superfund Use*, EPA 540-R-08-005, January 2009 (EPA 2009).

Tetra Tech will follow the most current EPA guidelines for completing data validation, although general procedures in the EPA guidelines will be modified as necessary to fit the specific analytical method used to produce the data.

General data verification and validation guidance are provided in EPA's *Guidance on Environmental Data Verification and Data Validation* (EPA 2002).

Specific guidance and standard operating procedures followed by Tetra Tech for conducting data verification and validation include the following and additional project requirements outlined on Worksheet #36.

- Tetra Tech's SOP No. 203, *Laboratory Analytical Data Verification – Minimum Requirements*, January 2019 (see Appendix B) provides guidance for conducting data verification.
- Stage 2A, 3, and 4 data verification and validation (Stage 2B is incorporated into these higher stages and is generally not chosen as an end-stage) conducted by Tetra Tech on EPA Region 5 ASB or subcontract laboratory data are guided by the standard operating procedures provided in the following EPA documents:
    - EPA *National Functional Guidelines for Organic Superfund Methods Data Review* (EPA 2020b).
    - EPA *National Functional Guidelines for Inorganic Superfund Methods Data Review* (EPA 2020c).

When using these data validation guidance documents, the quality control limits provided in this QAPP will take precedence over those provided in the guidance documents (NFGs). In accordance with Stage 3 validation requirements, Tetra Tech will also verify 10 percent of laboratory calculations by manually completed the calculations.

- Tetra Tech has developed standard data validation templates and worksheets to conduct and record the results of data verifications and validations. These are provided as Appendices B and C.

Tetra Tech will prepare data validation reports (see Appendix F) to document the results of the data validation process. Data validation reports will undergo a technical review and Quality Control Coordinator review before being submitted to the Tetra Tech project manager. Each data validation report will include the following information:

- A summary of the analytical data that were validated
- The data validation guidelines that were used

- The specific criteria that were evaluated (such as instrument performance checks, initial and continuing calibration results, blank results, laboratory and field duplicate results, internal standards, target analyte identification, analyte quantitation, etc.)
- Qualifiers that were applied to the data, and the reasons for application
- An overall assessment of data usability

The report will also include (as an attachment) a summary table of the analytical results showing any data validation qualifiers that were applied. If there are significant issues with the data, the project manager, with support from the data validator and Tetra Tech QA Manager, will contact the laboratory to resolve the issues.

QAPP WORKSHEET #37
Data Usability Assessment

Data usability assessments will be performed in general accordance with EPA guidance QA/G-9R, *Data Quality Assessment, A Reviewer's Guide* (EPA/240/B-06/002) (EPA 2006), and Tetra Tech's SOP SOP203-1, as appropriate. This worksheet documents procedures that will be used to perform the data usability assessment (DUA). The DUA is performed at the conclusion of data collection activities using the outputs from data verification and data validation (i.e., data of known and documented quality). It is the data interpretation phase, which involves a qualitative and quantitative evaluation of environmental data to determine if the site data are of the right type, quality, and quantity to support the decisions that need to be made. It involves a retrospective evaluation of the systematic planning process and participation by key members of the project team. The DUA evaluates whether underlying assumptions used during systematic planning are supported, sources of uncertainty have been accounted for and are acceptable, data are representative of the population of interest, and the results can be used as intended, with the acceptable level of confidence.

Tetra Tech personnel who may be involved with the TO include the Project Manager, QA Manager, Remedial Design Engineer, and Field Team leader. An overview of steps included in the DUA is as follows:

- **Step 1: Review the project's objectives and sampling design**: This includes reviewing the data quality objective (DQO) and measurement performance criteria (MPC) to make sure they are still applicable. The sampling design should be consistent with stated DQOs.
- **Step 2: Review the data verification and data validation reports**: Graphs, maps, and tables can be prepared to summarize the data. Deviations from sampling activities planned in this quality assurance project plan (QAPP) should be considered including samples not collected (potential data gaps), holding time exceedances, damaged samples, and SOP deviations. The implications of unacceptable quality control (QC) sample results should be assessed.
- **Step 3**: **Verify the assumptions of the selected statistical method**: Verify whether underlying assumptions for the selected statistical methods are valid. Common assumptions include the distributional form of the data, independence of the data, dispersion characteristics, homogeneity, etc. Depending on the robustness of the statistical method, minor deviations form assumptions usually are not critical to statistical analysis and data interpretation. If serious deviations from assumptions are discovered, then another statistical method may need to be selected.
- **Step 4**: **Implement the statistical method**: Implement the statistical procedures, if specified, for analyzing the data and review underlying assumptions. For decision projects that involve hypothesis testing (e.g., "concentrations of lead in groundwater are below the action level") consider the consequences for selecting the incorrect alternative; for estimation projects (e.g., establishing a boundary for surface soil contamination), consider the tolerance for uncertainty in measurements.
- **Step 5**: **Document data usability and conclude**: Determine whether the data can be used as intended, considering any deviations and corrective actions. Discuss whether DQOs were achieved based on comparison with the site data quality indicators (DQI). Assess the performance of the sampling design and identify limitations on data use. Update the conceptual site model and document conclusions. Prepare a DUA report or include the data usability summary in the final site report. The DUA can be in the form of text and/or a table.

DQIs and DUAs are described in more detail below.

DQIs are commonly referred to as "PARCCS parameters" and include measurements of precision, accuracy, representativeness, comparability, completeness, and sensitivity. The MPCs in this QAPP establish minimum

limits for some of these PARCC parameters. The DUA will reconcile site-specific DQOs established in the QAPP with the results of the data collection including validated analytical results. DQIs aid in the evaluation process and are described in the following subsections.

Precision and Accuracy: Precision is a measure of the variability of a measurement system. Precision is typically estimated by means of duplicate and replicate measurements and is expressed in terms of relative percent difference (RPD) or percent difference (%D). For field sampling, precision is increased by following standard operating procedures (SOP) and by collecting samples consistently, using the same sampling procedures. Field quality control (QC) samples collected to measure precision include field duplicate samples, the field split samples, and collocated samples. Field measurement precision is monitored by taking replicate measurements and is increased through proper operation and maintenance of field equipment. Precision for laboratory analyses will be measured by collecting and analyzing the following types of samples: matrix spike (MS) and matrix spike duplicate (MSD) samples, laboratory duplicate samples, and laboratory control samples (LCS) and LCS duplicate (LCSD) samples.

RPD is calculated from two measurements as follows:

$$\text{RPD} = \frac{(C_1 - C_2) \times 100}{(C_1 + C_2)/2}$$

where:
- RPD = Relative percent difference
- C_1 = Larger of the two observed measurement values
- C_2 = Smaller of the two observed measurement values

%D between a primary value and a secondary value as follows:

$$\%\text{D} = \frac{(C_1 - C_2) \times 100}{(C_1)}$$

where:
- %D = Percent difference
- C_1 = Primary observed measurement value
- C_2 = Secondary observed measurement value

For field measurements such as pH, where the absolute variation is more appropriate, precision is often reported as the absolute range (D) of duplicate measurements:

$$D = \lceil m_1 - m_2 \rceil$$

where:
- D = Absolute range
- m_1 = First measurement value
- m_2 = Second measurement value

Accuracy is the degree of agreement between an observed value and an accepted reference value. Accuracy is typically expressed as percent recovery (%R) from spiked samples or bias with respect to a reference standard. The use of spiked samples permits a check on method accuracy and helps evaluate whether the sample matrix affects analytical results. Accuracy for field sampling will be increased by establishing a sound sampling strategy and following appropriate SOPs. Field QC samples collected to measure accuracy include trip blanks, field blanks, and equipment rinsate blanks. In general, the accuracy of field measurements will be increased by following appropriate SOPs and through proper calibration and maintenance of equipment. QC measures used

to monitor the accuracy of field measurements include checking instrument responses against calibration standards. Accuracy for laboratory analyses will be assessed by analyzing MS/MSD samples that are collected in the field. Other QC check samples used to assess accuracy are prepared in the laboratory and may include post digestion spike samples for metals analyses, blank spikes, surrogate spikes, method blanks, reagent blanks, instrument blanks, calibration blanks, LCS/LCSD samples, standard reference materials (SRM), and independent check standards.
For measurements where spikes are used, %R is often calculated as a measure of accuracy:

$$\%R = 100 \times \left[\frac{(S - U)}{C_{sa}} \right]$$

where:	$\%R$	=	Percent recovery
	S	=	Measured concentration in spiked aliquot
	U	=	Measured concentration in unspiked aliquot (usually equals zero for surrogate spikes)
	C_{sa}	=	Actual concentration of spike added

When a blank spike, LCS, LCSD, or SRM is used, the following equation is often used to calculate %R:

$$\%R = 100 \times \left[\frac{C_m}{C_{srm}} \right]$$

where:	$\%R$	=	Percent recovery
	C_m	=	Measured concentration of spike sample
	C_{srm}	=	Actual concentration of spike sample

For field measurements such as pH, accuracy is often expressed in terms of bias (B) and is calculated as follows:

B = M-A

where:	M	=	Measured value
	A	=	Actual value

<u>Representativeness, Completeness, and Comparability</u>: Representativeness expresses the degree to which data accurately and precisely represent a characteristic of a population, parameter variations at a sampling point, a process condition, or an environmental condition. Representativeness is a parameter that depends on the proper design of the sampling program and proper laboratory protocol. The sampling network for each investigation will be designed to provide data representative of environmental conditions. Representativeness can also be affected by the time, place, and manner by which the samples are collected. Project planners may account for the difficulty in knowing when, where, and how to collect representative samples by developing statistical or random sampling networks; collecting more samples than would otherwise be needed; collecting samples at several different phases of natural or anthropogenic cycles; sampling at different locations within the project area; collecting composite samples as opposed to grab samples; collecting and processing incremental sampling methodology (ISM) samples; and verifying and validating the sampling techniques in separate studies. The site-specific SAP and/or QAPP will identify specific methods for achieving and demonstrating the representativeness of the samples to be collected. Refer to Worksheet #17 for further details regarding sampling design and its influence on data representativeness.

Completeness is a measure of the amount of valid data obtained from a measurement system compared to the total number of measurements necessary to achieve DQOs at a specified level of confidence. Following completion of data validation, the percent completeness will be calculated from the number of measurements judged valid and the number of measurements originally planned:

$$\%C = 100 \times \left[\frac{V}{n} \right]$$

where:	$\%C$	=	Percent completeness
	V	=	Actual number of measurements judged valid (the validity of a measurement result is determined by judging its suitability for its intended use)
	n	=	Total number of measurements planned to achieve a specified level of confidence in decision making

QA objectives for completeness are directly related to DQOs and will be documented and explained in site-specific SAP and/or QAPP.
Comparability expresses the confidence with which one data set can be compared with another. Generally, comparability will be attained by achieving the QA objectives for accuracy, precision, completeness, representativeness, and analytical sensitivity (see below) in the site-specific SAP and/or QAPP. Comparability of data will also be achieved by following field and laboratory procedures consistently for individual investigations and for the contract. EPA-approved field and laboratory procedures, such as those listed in Worksheets #21 and 23 will be used to the extent possible.

Sensitivity and Quantitation Limits: Sensitivity is the capability of an analytical method or instrument to discriminate between signals or measurement responses of different magnitudes for a measurement parameter of interest. Sensitivity is particularly important near the low end of a method's or instrument's ability to detect a measurement response. Determinations of sensitivity in this realm involve identifying either the lowest concentration of the desired parameter reliably discernable from signal noise, or, the lowest concentration of the desired parameter both reliably discernable from signal noise and where specified limits for bias and precision are met. Quantitation limits (or reporting limits) for an analytical method or instrument typically represent the lowest measurement response for each parameter of interest that meets method requirements for analytical accuracy and precision. QC measures for determining sensitivity and quantitation limits may include laboratory blanks, method detection limit studies, determinations of lower limit of quantitation (LLOQ) and quantitation limits/reporting limits, instrument calibrations, and the use of calibration standards at the quantitation limit. QA objectives and procedures for sensitivity and quantitation limits are directly related to DQOs and will be documented and explained in site-specific SAP and/or QAPP.

Reconciliation with User Requirements: The primary purpose of a quality system is to define a process for collecting data that is of known quality, is scientifically valid, is legally defensible, and fully supports any decisions that will be based on the data. To achieve this purpose, this QAPP requires that DQOs be fully defined as describe in Worksheets #10 and 11. All other parts of the quality system must then be planned and implemented in a manner consistent with the DQOs. Quality system components that follow directly from the DQOs include documentation and sample network design (Worksheet #17), sampling methods (Worksheet #21), analytical methods (Worksheet #23); field QC requirements (Worksheet #20); laboratory QC requirements (Worksheets #12 and 28), and data review, verification, and, validation methods (Worksheets #34, 35, and 36). Once environmental data have been collected, reviewed, and validated, the data must be further evaluated to determine whether the DQOs identified in the site-specific SAP and/or QAPP have been met. Tetra Tech will follow EPA's data quality assessment (DQA) process to verify that the type, quality, and quantity of data collected are appropriate for their intended use. The DQA process involves first verifying that the assumptions

under which the data collection design and DQOs were developed have been met or taking appropriate corrective action if the assumptions have not been met. The DQA process then evaluates how well the data collected to support the decision that must be made so that scientifically valid and meaningful conclusions can be drawn from the data. To the extent possible, Tetra Tech will follow methods and procedures outlined in EPA's DQA guidance – *Data Quality Assessment: A Reviewer's Guide (EPA QA/G-9R)* and *Data Quality Assessment: Statistical Methods for Practitioners (EPA QA/G-9S)* (EPA 2006a and 2006b).
If data quality indicators do not meet the project's requirements as outlined in this QAPP or in the site-specific SAP/QAPP, the data may be rejected, and re-sampling and/or re-analysis may be required.

Identify the personnel responsible for performing the usability assessment:
Tetra Tech project managers and field team leaders have primary responsibility for the review and verification of field data.

Tetra Tech will typically validate laboratory data produced by subcontractor laboratories or EPA Region 5 Laboratory Services and Applied Science Division Analytical Services Branch and subcontract laboratories. Data validation will be completed by one or more experienced data reviewers (typically a Tetra Tech chemist). Data produced by EPA CLP laboratories will be validated by the Region 5 Environmental Services Assistance Team (ESAT) contractor. Validation will include a review of the precision, accuracy, sensitivity, and quantitation limits of the data.

Tetra Tech project managers and project team members have primary responsibility for the final data usability assessment. This includes evaluating the completeness, representativeness, comparability, sensitivity, and quantitation limits (relative to action levels) of the data and whether the quantity and quality of data collected are sufficient to meet DQOs.

REFERENCES

Tetra Tech. 2018. *Quality Management Plan, Environmental Services and Operations, Revision 2*. November.

U.S. Army Corps of Engineers. 2003. *Slope Stability, Engineer Manual*. EM 1110-2-1902. October 31. On-line address: EM_1110-2-1902.pdf (army.mil)

U.S Environmental Protection Agency (EPA). 1988. *Guidance for Conducting Remedial Investigations and Feasibility Studies Under CERCLA.* OSWER Directive 9355.3-01. October.

EPA. 1995. *Remedial Design/Remedial Action Handbook* Office of Emergency and Remedial Response. Washington, DC. (EPA 540/R-95/059. June. On-line address: https://www.semspub.epa.gov/work/HQ/156935.pdf

EPA. 2001. *EPA Requirements for Quality Assurance Project Plans (EPA QA/R-5).* Office of Environmental Information. Washington, DC. EPA/240/B-01/003. March, Reissued May 31, 2006. On-line address: https://www.epa.gov/sites/production/files/2016-06/documents/r5-final_0.pdf

EPA. 2002. *Guidance on Choosing a Sampling Design for Environmental Data Collection, for Use in Developing a Quality Assurance Project Plan (* EPA QA/G-5S). EPA Office of Environmental Information. EPA/240/R-02/005. December.

EPA. 2005. *Uniform Federal Policy for Quality Assurance Project Plans: Evaluating, Assessing, and Documenting Environmental Data Collection and Use Programs.* EPA505B04-900A. Version 1, Final. March. Online address: https://www.epa.gov/sites/production/files/documents/ufp_qapp_v1_0305.pdf

EPA. 2006a. *Guidance on Systematic Planning Using the Data Quality Objectives Process (EPA QA/G-4).* Office of Environmental Information. Washington, DC. EPA/240/B-06/001. February.

EPA. 2006b. *Data Quality Assessment: A Reviewer's Guide (EPA QA/G-9R).* Office of Environmental Information. Washington, DC. EPA/240/B-06/002. February. On-line address: https://www.epa.gov/sites/production/files/2015-08/documents/g9r-final.pdf

EPA. 2009. *Guidance for Labeling Externally Validated Laboratory Analytical Data for Superfund Use.* Office of Solid Waste and Emergency Response (OSWER), Washington, DC. OSWER No. 9200.1-85. EPA 540-R-08-005. January 13. On-line address: https://www.epa.gov/clp/superfund-clp-analytical-services-guidance-documents

EPA. 2012. *Uniform Federal Policy for Quality Assurance Project Plans, Optimized UFP-QAPP Worksheets*. March. https://www.epa.gov/sites/production/files/documents/ufp_qapp_worksheets.pdf

EPA. 2015. *OSWER Technical Guide for Assessing and Mitigating the Vapor Intrusion Pathway from Subsurface Vapor Sources to Indoor Air*. OSWER Publication 9200.2-154. June. On-line address: OSWER Technical Guide for Assessing and Mitigating the Vapor Intrusion Pathway from Subsurface Vapor Sources to Indoor Air (epa.gov).

EPA. 2018. *East Troy Contaminated Aquifer Superfund Site, Record of Decision for Source Area Cleanup, Troy, Miami County, Ohio.* September.

EPA. 2020a. *EPA Contract Laboratory Program Statement of Work for Superfund Analytical Methods (Multi-Media, Multi-Concentration).* SFAM01.1. November. On-line address: EPA Contract Laboratory Program Statement of Work for Superfund Analytical Methods (Multi-Media, Multi-Concentration) SFAM01.1 November 2020 | Superfund Analytical Services and Contract Laboratory Program | US EPA

EPA. 2020b. *National Functional Guidelines for Organic Superfund Methods Data Review.* Washington, DC. OLEM 9240.0-51. EPA-540-R-20-005. November. On-line address: https://www.epa.gov/clp/superfund-clp-national-functional-guidelines-data-review

EPA. 2020c. *National Functional Guidelines for Inorganic Superfund Methods Data Review.* Washington, DC. OLEM 9240.1-66. EPA-540-R-20-006. November. On-line address: https://www.epa.gov/clp/superfund-clp-national-functional-guidelines-data-review

EPA. 2020d. *Sampler's Guide: Contract Laboratory Program Guidance for Field Samplers.* Office of Superfund Remediation and Technology Innovation. Washington, DC. OLEM 9240.0-51. EPA-540-R-20-005. November. On-line address: https://www.epa.gov/sites/production/files/2021-03/documents/samplers_guide_clp_guidance_for_field_samplers_november_2020.pdf

EPA. 2020e. *Superfund Community Involvement Handbook*. OLEM 9230.0-51. March.

EPA. 2002d. *Guidance on Choosing a Sampling Design for Environmental Data Collection, for Use in Developing a Quality Assurance Project Plan (* EPA QA/G-5S). EPA Office of Environmental Information. EPA/240/R-02/005. December.

APPENDIX A

FIGURES

1 Site Location Map
2 Area Considered for Vapor Intrusion Mitigation Systems
3 Conceptual Site Model
4 Hobart Area Soil Sampling Results
5 Predesign Investigation Sampling Locations

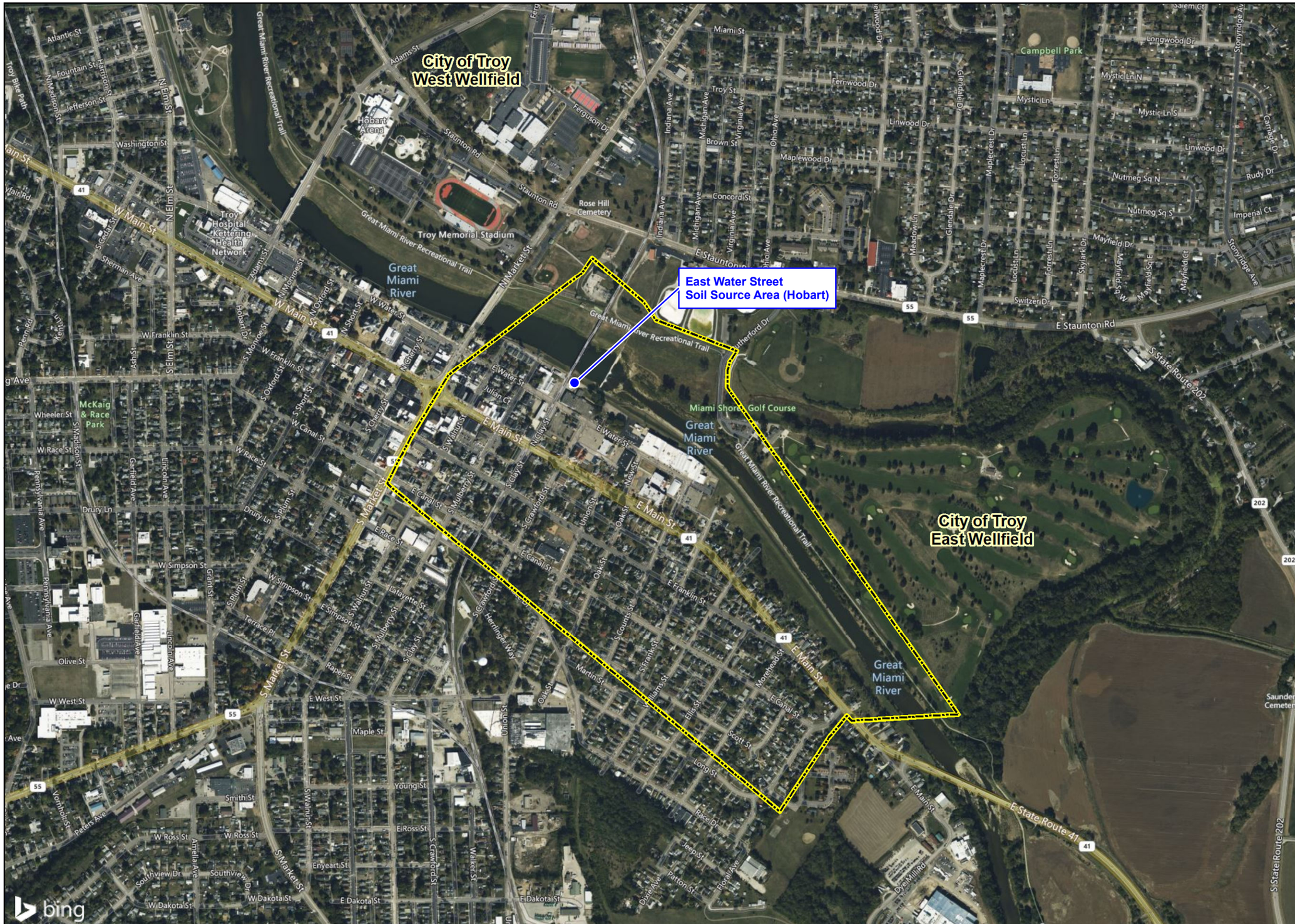

Legend

Remedial Investigation Study Area

N

0 500 1,000

Feet

Source: Bing Maps Hybrid 2018

Reference Map

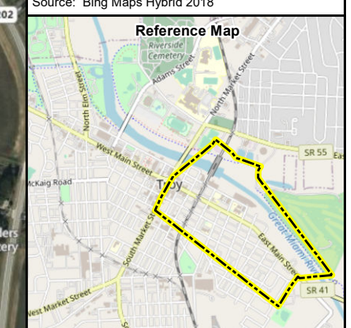

EAST TROY CONTAMINATED AQUIFER SITE
TROY, OHIO

FIGURE 1
SITE LOCATION MAP

TETRA TECH

6/14/2021 G:\G\103G6401001 East Troy\mxd\Fig1-SiteLocation.mxd

Legend

Estimated Area for Sub-slab Depressurization Systems

Total Chlorinated VOCs

- 5 (ppb)
- 100 (ppb)
- 500 (ppb)
- 1,000 (ppb)

ppb - Parts per billion
VOC - Volatile Organic Compound

N

0 200 400
Feet

EAST TROY CONTAMINATED AQUIFER SITE
TROY, OHIO

FIGURE 2
AREA CONSIDERED FOR VAPOR INTRUSION MITIGATION SYSTEMS

TETRA TECH

6/14/2021 G:\G\103G6401001 East Troy\mxd\Fig2-EstiamtedVIMitigationArea.mxd

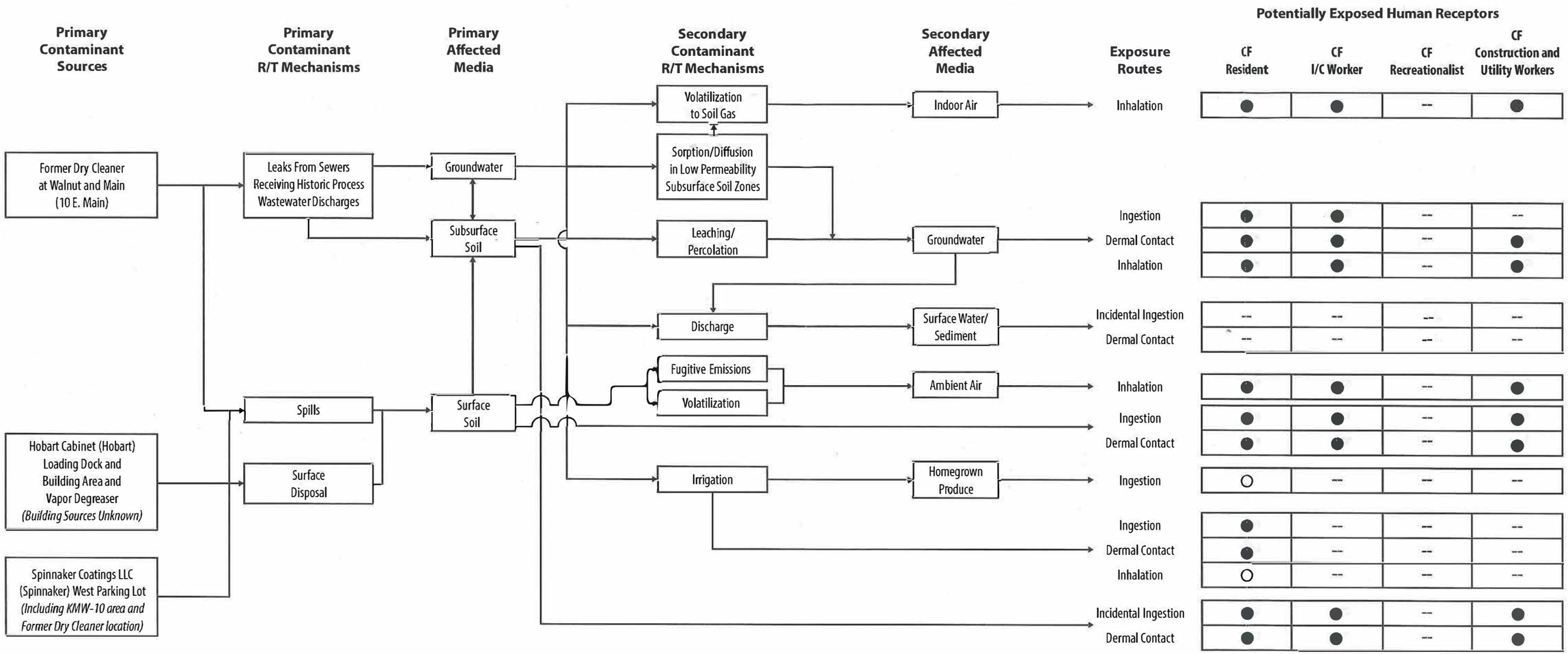

Notes:

R/T = Release/transport
○ = Potentially complete, but insignificant exposure pathway - will not be retained for quantitative analysis
● = Potentially complete exposure pathway - retain for quantitative analysis
-- = Incomplete exposure pathway; will not be retained.
bgs = Below ground surface
C = Current
F = Future
I/C = Industrial - Commercial

EAST TROY CONTAMINATED AQUIFER SITE REMEDIAL INVESTIGATION TROY, OHIO

FIGURE 3
CONCEPTUAL SITE MODEL

TETRA TECH

Legend

- Phase I Soil Sample (May-June 2012)
- Phase II Soil Sample (February 2013)
- Additional Phase II Soil Sample (December 2013 and January 2014)
- Approximate Extent of Soil Exceeding Industrial Screening Levels
- Approximate Extent of Soil Exceeding Residential Screening Levels

Soil sample concentrations in micrograms per kilogram (µg/kg).

Sampling locations shown without associated analytical results indicate that samples were collected; however, all results were below site screening levels.

N

0 30 60
Feet

Notes:
1,1,2-TCA - 1,1,2-Trichloroethane
cis-1,2-DCE - cis-1,2-Dichloroethene
HOB - Hobart
J - Estimated value
PCE - Tetrachloroethene
SB - Soil Boring
SS - Surface Soil
STP - St. Patrick Parking Lot
TCE - Trichloroethene

EAST TROY CONTAMINATED AQUIFER SITE
TROY, OHIO

FIGURE 4

HOBART AREA
SOIL SAMPLING RESULTS

TETRA TECH

Date Saved: 2/12/2015 5:47:25 PM User: dale.vonbusch Path: L:\CinciProjects\Troy\Remedial_Alt_Tech_Memo\MXDs\Phase_I_and_II_Soil_Hobart_021215.mxd

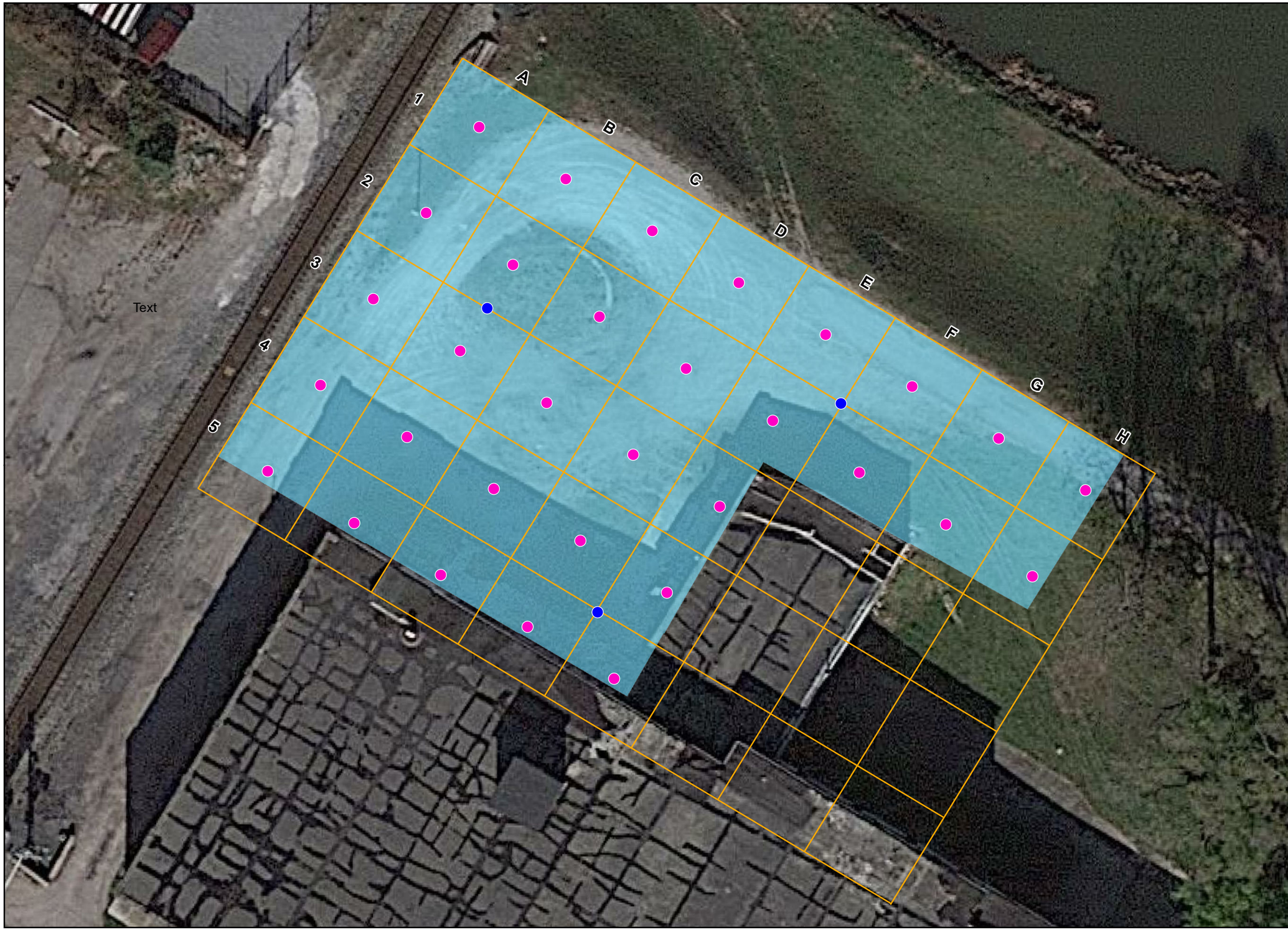

Legend

- Soil Sampling Locations for Tetrachloroethene and Trichloroethene Analysis
- Soil Sampling Locations for Waster Characterization and Geotechnical Analyses
- 25' x 25' Grid
- Estimated Area of Geophysical Survey

N

0 20 40
Feet

EAST TROY CONTAMINATED AQUIFER SITE
TROY, OHIO

FIGURE 5
PREDESIGN INVESTIGATION SAMPLING LOCATIONS

TETRA TECH

Date Saved: 6/14/2021 11:13:57 AM User: maggie.banh Path: G:\G\103G6401001 East Troy\mxd\Fig5-PredesignInvestigationSampleLocations.mxd

APPENDIX B

TETRA TECH STANDARD OPERATING PROCEDURES

SOP APPROVAL FORM

TETRA TECH, INC.

EMI OPERATING UNIT

ENVIRONMENTAL STANDARD OPERATING PROCEDURE

ORGANIC VAPOR AIR MONITORING

SOP NO. 003

REVISION NO. 4

Last Reviewed: May 2020

Quality Assurance Approved	*May 2020* Date

1.0 BACKGROUND

Exposure to airborne organic contaminants can present a significant threat to worker health and safety. Identifying and quantifying these contaminants through air monitoring is essential for reconnaissance activities. Reliable measurements of airborne organic contaminants are necessary for selecting or upgrading personal protective equipment (PPE), delineating areas where protection is needed, assessing the potential health effects of exposure, and evaluating the need for specific medical monitoring. Organic vapor air monitoring is also commonly used as a screening tool to identify relatively impacted environmental media and to provide a real-time basis for selecting samples for chemical analysis.

Various types of air monitoring instruments are available to measure organic vapors. Common organic vapor monitoring instruments used by Tetra Tech include photoionization detectors (PID), organic vapor analyzer (OVA), flame ionization detectors (FID), and multigas meters that combine organic and inorganic vapor monitoring. It should be noted that this standard operating procedure (SOP) discusses only some of the air monitoring instruments available to field personnel. The particular type of meter or monitoring system to be used should be identified in the project work plan or field sampling plan and selected on a site-specific basis depending on the data collection needs, the types of organic vapors to be monitored, and the sampling procedures to be used.

1.1 PURPOSE

This SOP establishes the general requirements and procedures for using various instruments to conduct organic vapor air monitoring in the field. It also discusses general factors to consider when conducting organic vapor air monitoring.

1.2 SCOPE

This SOP applies to general procedures for calibrating and operating organic vapor air monitoring instruments in the field. The project work plan or field sampling plan should identify the types of instruments to be used and the actual project-specific field parameters to be measured. The project-specific health and safety plan should identify chemical-specific action levels for health and safety purposes. For each type of air monitoring instrument, the manufacturer's manual should be consulted for specific operating instructions.

1.3 DEFINITIONS

Flame ionization: A process by which a sample gas is ionized with a flame, allowing a count of carbon atoms to measure organic vapor concentration.

Flame ionization detector (FID): A portable instrument used to detect, measure, and provide a direct reading of organic vapor concentrations in a gas sample that is ionized with a flame.

Ionization potential: The amount of energy needed to strip an electron from the orbit of its resident molecule, expressed in electron volts.

Organic vapor: Airborne compounds composed of carbon, hydrogen, and other elements with chain or ring structures.

Organic vapor analyzer (OVA): A portable instrument used to detect, measure, and provide a direct reading of the concentration of a variety of trace organic gases in the atmosphere through flame ionization.

Photoionization: A process involving the absorption of ultraviolet light by a gaseous molecule, leading to ionization.

Photoionization detector (PID): A portable instrument used to detect, measure, and provide a direct reading of the concentrations of a variety of trace organic gases in the atmosphere through photoionization.

Breathing zone: The area where field workers would be inhaling potentially impacted air, generally from about 3 to 5 feet above the ground surface. The breathing zone will vary depending on the types of work activities being performed. Air monitoring is conducted in this zone to ensure that it is representative of the air being breathed by field team members.

Head space: The vapor mixture trapped above a solid or liquid in a sealed vessel.

1.4 REFERENCES

National Institute for Occupational Safety and Health (NIOSH). 2007. "Pocket Guide to Chemical Hazards." Department of Health and Human Services, Centers for Disease Control and Prevention. Publication 2005-149. September.

1.5 REQUIREMENTS AND RESOURCES

The following items are typically required to monitor organic vapors in air using this SOP:

- Organic vapor air monitoring meter
- Manufacturer-supplied calibration gas
- Manufacturer-supplied calibration kits including tubing and regulators

- Resealable plastic bags for conducting soil head space measurements (if applicable)
- Sample jars for conducting water head space measurements (if applicable)
- Sharpie or similar type of permanent marker
- Container to collect soil or water used for head space measurements (if applicable)
- Logbook or field data sheets (may be in an electronic format)

2.0 APPLICATIONS, DETECTION METHODS, AND LIMITATIONS

All direct-reading instruments have inherent constraints in their ability to detect gaseous organic compounds. They usually detect or measure only specific classes of chemicals. Generally, they are not designed to measure or detect airborne concentrations below 1 part per million (ppm). Finally, many direct-reading instruments that have been designed to detect one particular substance also detect other substances, causing interference and possibly resulting in false readings. The following subsections discuss general application, detection methods, and limitations when using a PID and an OVA FID.

2.1 APPLICATION

The PID can be used to detect total concentrations of many organic and some inorganic gases and vapors. It can also be used in conjunction with other detection devices such as colorimetric indicator detector tubes to identify specific compounds (see SOP No. 065, Colorimetric Indicator Detectors [Dräeger Tubes]).

When set in the survey mode, the OVA FID can detect the total concentration of many organic gases and vapors. In the gas chromatography (GC) mode, the OVA FID can identify and measure the concentrations of specific compounds. In the survey mode, all organic compounds are ionized and detected at the same time. In the GC mode, volatile species are ionized and detected separately.

Each type of unit (PID or FID) has some limitations in the detection of various categories of compounds or for specific organic compounds. Examples are described below in Section 2.2. The user manual for the specific instrument should be used to confirm its applicability for measurements of the organic vapors of concern at the site.

2.2 DETECTION METHODS

The PID ionizes molecules using ultraviolet (UV) radiation and can be used with a variety of electron voltage lamps best matched to the compound of concern at a site. The UV radiation strips electrons from the molecules, producing ions that produce a current proportional to the number of ions generated. The PID is more sensitive to aromatic and unsaturated compounds than the OVA FID. The PID is nonspecific for gas and vapor detection for organic and some inorganic compounds. The PID is also sensitive to 0.1 ppm of benzene. Sensitivity is related to the ionization potential of the compound being monitored. PIDs will only detect compounds that have ionization energies similar to the energy of the photons the detector uses. Gases with ionization potential values below the electron volt (eV) output of the lamp will be detected. The most common PID lamp used is the 10.6 eV lamp because it detects most volatile organic compounds; however, 9.5 eV and 11.7 eV lamps are also commonly available. It is recommended that

the ionization potential of the chemicals of concern be known in order to select the most appropriate lamp for a specific project. Ionization potential information can be obtained from the vendor, in the manufacturer's manual, or on line.

Organic gases and vapors are flame-ionized in the OVA FID. The ions produce a current that is proportional to the number of carbon atoms present. The current is interpreted by a deflection on the instrument's meter. In the survey mode, the OVA FID functions as a nonspecific total hydrocarbon analyzer. In the GC mode, the OVA FID can provide a tentative qualitative and quantitative identification of gases and vapors. The OVA FID is most sensitive to saturated hydrocarbons (alkanes), unsaturated hydrocarbons (alkenes), and aromatic hydrocarbons. The OVA FID is not suitable for inorganic gases such as chlorine, hydrogen cyanide, and ammonia. The OVA FID is also less sensitive to aromatics and unsaturated compounds than the PID. However, the OVA FID is less sensitive to high humidity than the PID. Gases and vapors that contain substituted function groups such as hydroxide (OH-) reduce the detector's sensitivity. Finally, if the operator monitors for a specific gas or vapor, the operator should use a calibration standard and GC column specific to that particular gas or vapor.

2.3 LIMITATIONS

The PID cannot be used to:

- Detect methane
- Detect a compound that has a higher energy level than the ionization potential of the PID light source
- Respond accurately to a mixture of gases or vapors
- Respond accurately in high humidity or very cold weather
- Respond accurately when interference from other sources is present

The OVA FID cannot be used to:

- Detect organic vapors at temperatures below 40ºF (4ºC)
- Identify specific organic vapors when operated in the survey mode; results must be reported relative to the calibration standard used (for example, as methane equivalents).
- Detect inorganic gases and vapors; the instrument also gives a lower response to oxygen-containing organic compounds (such as alcohols, ethers, and aldehydes) and nitrogen-containing organic compounds (such as amines, amides, and nitriles).
- Detect high organic contaminant concentrations or detect contaminants in oxygen-deficient atmospheres; operation in these conditions requires system modification.

3.0 PROCEDURES

The procedures outlined in this SOP are general and typically apply to various types of monitoring instruments used to measure organic vapors in air. General procedures for testing and calibrating the instruments are presented first, followed by procedures for using the instruments and making field measurements, guidelines for recording information accurately, and a discussion of variables that may affect outdoor air monitoring. The particular monitoring instrument should be identified in the project work plan or field sampling plan and should be operated in accordance with the manufacturer's instruction manual.

3.1 TESTING AND CALIBRATION PROCEDURES

Each air monitoring instrument should be calibrated according to manufacturer's specifications. General procedures applicable to most equipment are as follows:

- Equipment should be thoroughly cleaned, and then calibrated and tested before the startup of sampling at each site.
- Equipment should be calibrated and tested using manufacturer-provided calibration gas and calibration connector kits.
- Batteries should be charged before startup of field work, and the battery charge level should be checked at the start of each day. The battery charge life will vary depending on the particular monitoring instrument used, the application, and environmental conditions such as temperature. Some instruments are equipped with an adapter that will allow the unit to be plugged into a car charger.
- It is recommended that extra batteries be kept on hand when conducting field work.
- The PID can typically run continuously on a fully charged battery for at least 8 hours. The PID battery should be recharged for 14 hours.
- The OVA FID can typically run continuously on a fully charged battery for 8 hours alone or for 3 hours with a strip chart recorder. The OVA FID battery must be recharged every 8 hours or replaced, as needed.
- Calibration and testing of field equipment should be documented every time it is performed. Calibration and testing information should be recorded in field logbooks (or field data sheets, if applicable).
- If testing and calibration measurements are out of tolerance, the instrument must be serviced or repaired.

3.2 FIELD MEASUREMENT PROCEDURES

Each air monitoring instrument should be operated according to manufacturer's specifications. The actual field procedures will vary depending on the type of air monitoring to be conducted. Almost all PIDs and

OVA FIDs have a recommended warm-up period (see the manufacturer's operations manual for the specific type of meter to be used). Similarly, many instruments are affected by moisture, humidity, and dust. The use of an external filter on the probe tip is recommended in these situations. Finally, many instruments include a data logging option that can be used, if desired. A general procedural summary for air monitoring associated with health and safety and field screening applications is presented below.

3.2.1 Health and Safety Monitoring

The site-specific health and safety plan will specify the types of contaminants of concern, health and safety related action levels, and the types of PPE necessary. The goal of air monitoring for health and safety purposes is to ensure that field work is conducted in accordance with the health and safety plan and to identify conditions where upgrading the level of PPE may be necessary. General procedures for conducting health and safety air monitoring for organic vapors are as follows:

- Following the instrument manual, calibrate and test air monitoring equipment.
- Approach the sampling location from the upwind direction.
- Monitor organic vapors in the breathing zone (multiple levels of monitoring may be required depending on the work being performed).
- Monitor down-hole vapor concentrations, if drilling.
- Take readings at a frequency appropriate for the types of tasks being conducted, the types of organic vapors expected, and the levels of organic vapors being detected (monitor at a more frequent rate if organic vapors are detected and they are near the site-specific action levels specified in the health and safety plan).
- Record information in a field logbook, on field data sheets, or on an air monitoring log sheet (record site name, date and time, sampling location, PID or FID readings, and pertinent weather information). A negative (non-detect) result should also be recorded to demonstrate that the measurement was taken.
- Upgrade the level of PPE, implement engineering controls, or stop work if organic vapors are sustained in the breathing zone above action levels specified in the site-specific health and safety plan.

3.2.2 Field Screening

The site-specific work plan or field sampling plan will specify the media to be sampled, the sampling methods and procedures to be used, and field screening requirements. Typically, the goals of air monitoring for field screening purposes are to identify relatively higher organic vapor concentrations in soil, groundwater, or other media to select subsequent sampling locations, or to select environmental samples to send to a laboratory for chemical analysis. General procedures for conducting field screening air monitoring for organic vapors are as follows:

- Following the instrument manual, calibrate and test air monitoring equipment.
- Work from the upwind direction, when possible.
- If samples are collected at low temperatures, they may require some warming to allow organic compounds to volatilize. Care must be taken for samples not to be overheated, allowing any organic vapors to escape.
- Directly screen soil cores or drill cuttings by running the tip of the meter along the soil surface while taking care not to get soil into the probe.
- Depending on sampling protocol, dig into or freshly "break" the soil and measure vapors at the newly exposed surface.
- When collecting soil samples for head space measurements, place soil in a resealable plastic bag, record the sampling location and depth on the bag with a Sharpie or other type of permanent marker, wait at least 5 minutes for vapors to accumulate (the bag may be placed in direct sunlight or in a warm area while waiting), shake the bag vigorously, and then insert the probe into the bag without placing the tip directly in the soil (while taking care not to let vapors escape).
- Directly screen purged well water (or surface water) by running the tip of the meter along the water surface while taking care not to get water into the probe.
- When collecting water samples for head space measurements, place water in a jar and tightly close the lid, record the sampling location and depth on the jar with a Sharpie or other type of permanent marker, wait at least 5 minutes for vapors to accumulate (the jar may be placed in direct sunlight or in a warm area while waiting), shake the jar vigorously, and then slightly open the lid and insert the probe into the jar without placing the tip directly in the water (while taking care not to let vapors escape).
- Record information in a field logbook, on field data sheets, or on an air monitoring log sheet (record site name, date and time, sampling location, PID or FID readings, and pertinent weather information). A negative (non-detect) result should also be recorded to demonstrate that the measurement was taken.

3.3 ACCURATE RECORDING AND INTERPRETATION

Direct-reading instruments must be operated and the data interpreted by individuals who understand the operating principles and limitations of the instruments. At hazardous waste sites, where unknown and multiple contaminants are frequently encountered, instrument readings should be interpreted conservatively.

The following guidelines promote accurate recording and interpretation:

- Calibrate instruments in accordance with the manufacturer's instructions before and after every use.
- Conduct additional monitoring at any location where a positive response occurs.
- Report a reading of zero as nondetectable (ND) rather than as "clean." Quantities of chemicals

may be present but at concentrations that are not detectable by the instrument.

- Repeat the air monitoring survey using other detection devices.

3.4 VARIABLES AFFECTING OUTDOOR AIR MONITORING

Complex environments containing many substances, such as those associated with hazardous waste sites, pose significant challenges to accurately and safely assess airborne contaminants. Several independent and uncontrollable variables (most notably temperature and weather conditions) can affect airborne concentrations. These factors must be considered when conducting air monitoring and interpreting data. The following environmental variables must be considered:

- **Temperature:** An increase in temperature increases the vapor pressure of most chemicals.
- **Wind speed:** An increase in wind speed can affect vapor concentration near a free-standing liquid surface. Dust and particulate-bound contaminants are also affected.
- **Rainfall:** Water from rainfall can essentially cap or plug vapor emission routes from open or closed containers, saturated soil, or lagoons, thereby reducing airborne emissions of certain substances.
- **Moisture:** Dusts, including finely divided hazardous solids, are highly sensitive to moisture. Moisture can vary significantly with respect to location and time and can also affect the accuracy of many sampling results.
- **Background vapor emissions:** Vapor emission from other activities in the area of the field investigations can also affect readings. Operations such as vehicle maintenance or fueling facilities can affect readings associated with perimeter monitoring. Permanent markers can also influence instrument responses, so pens should be tightly capped and stored away from instruments.
- **Work activities:** Work activities often require the mechanical disturbance of contaminated materials, which may change the concentration and composition of airborne contaminants and contribute to airborne emissions. Organic air emissions at a work site can also occur from operation of gasoline or diesel engines.

These conditions should be reported with organic vapor readings to provide a more accurate interpretation of monitoring results.

SOP APPROVAL FORM

TETRA TECH, INC.
EMI OPERATING UNIT

ENVIRONMENTAL STANDARD OPERATING PROCEDURE

SOIL SAMPLING

SOP NO. 005

REVISION NO. 3

Last Reviewed: February 2017

February 13, 2017

Quality Assurance Approved

Date

1.0 BACKGROUND

Soil is sampled for three main reasons: (1) for chemical analysis in the laboratory, (2) for physical analysis in the laboratory, or (3) for evaluation in the field (for example, visual classification, assessment of staining, and field screening). These three sampling objectives can be achieved separately or in combination. Sampling locations are typically chosen to provide information in both the horizontal and vertical directions. A sampling and analysis plan or a site-specific quality assurance project plan (QAPP) is used to outline sampling methods and to provide a preliminary rationale for sampling locations. Sampling locations may be adjusted in the field based on the screening or sampling methods used and the physical features of the area.

1.1 PURPOSE

This standard operating procedure (SOP) establishes the requirements and procedures for soil sampling. Soil is sampled to evaluate the chemical and physical characteristics of surface and subsurface soils.

1.2 SCOPE

This SOP describes procedures for soil sampling in different areas using various implements. It includes procedures for test pit, surface soil, and subsurface soil sampling and describes a variety of soil sampling devices.

1.3 DEFINITIONS

Bucket Auger: A type of auger that consists of a cylindrical bucket 10 to 72 inches in diameter with teeth arranged at the bottom.

Composite Sample: A sample that consists of soil combined from more than one discrete location. Typically, composite samples consist of soil obtained from several locations and homogenized in a stainless steel or Teflon bowl, tray, or plastic bag.

Core Sampler: A thin-walled cylindrical metal tube with diameter of 0.5 to 3 inches, a tapered nosepiece, a "T" handle to facilitate sampler deployment and retrieval, and a check valve (flutter valve) in the headpiece.

Direct-push technology (DPT): Investigation tools that drive or push small-diameter rods and tools (typically not exceeding 4 inches in diameter) into the subsurface by hydraulic or percussive methods. Geoprobe Systems is a manufacturer of DPT equipment, and its brand name is often used interchangeably with "DPT."

EnCore Sampler: A disposable volumetric sampling device. It comes in sample sizes of 5 and 25 grams. It is a hermetically sealed, single-use soil sampler made from a high-tech, inert polymer. EnCore samplers are used to collect soil samples with zero headspace, as required for volatile organic compound (VOC) analysis (including purgeable total petroleum hydrocarbons). Each sample is collected using a reusable "T" handle.

Grab Sample: A sample collected from a discrete location or depth.

Hand Auger: An instrument attached to the bottom of a length of pipe that has a crossarm or "T" handle at the top. The auger can be closed-spiral or open-spiral.

Spatulas or Spoons: Stainless steel or disposable instruments for collecting loose unconsolidated material.

Split-Spoon (or Split-Barrel) Sampler: A thick-walled steel tube that is split lengthwise. A cutting shoe is attached to the lower end; the upper end contains a check valve and is connected to drill rods.

Terra Core Sampler: A disposable volumetric sampling device. It comes in sample sizes of 5 and 10 grams and is part of a sampling kit. It is a single-use sampler used to collect soil samples with zero headspace, as required for VOCs. Each sample is collected with the disposable coring device. However, unlike the EnCore sampler, the sample is placed directly into a 40-milliliter (mL) glass volatile organics analysis (VOA) vial after the soil is collected. The VOA vial is included in the sampling kit.

Thin-Wall Tube Sampler: A steel tube (1 to 3 millimeters thick) with a tapered bottom edge for cutting. The upper end is fastened to a check valve that is attached to drill rods.

Trier: A tube cut in half lengthwise with a sharpened tip that allows for collecting sticky solids or loosening cohesive soils.

Trowel: A metal or disposable tool with a scooped blade 4 to 8 inches long and 2 to 3 inches wide with a handle.

VOA Plunger: A disposable, plastic, single-use soil device to collect samples for analysis of VOCs.

1.4 REFERENCES

ASTM International (ASTM). D1452-09, Standard Practice for Soil Exploration and Sampling by Auger Borings, West Conshohocken, PA. 2009.

ASTM D1586-11, Standard Test Method for Standard Penetration Test (SPT) and Split-Barrel Sampling of Soils, ASTM International, West Conshohocken, PA. 2011.

ASTM D1587-08, Standard Practice for Thin-Walled Tube Sampling of Fine-Grained Soils for Geotechnical Purposes, ASTM International, West Conshohocken, PA. 2012.

ASTM D2488-09a, Standard Practice for Description and Identification of Soils (Visual-Manual Procedure), ASTM International, West Conshohocken, PA. 2009.

ASTM D4220 / D4220M-14, Standard Practices for Preserving and Transporting Soil Samples, ASTM International, West Conshohocken, PA. 2014.

ASTM D4700-91, Standard Guide for Soil Sampling from the Vadose Zone, West Conshohocken, PA. 2006.

ASTM D6151-08, Standard Practice for Using Hollow-Stem Augers for Geotechnical Exploration and Soil Sampling, ASTM International, West Conshohocken, PA. 2008.

ASTM D6286-12, Standard Guide for Selection of Drilling Methods for Environmental Site Characterization, ASTM International, West Conshohocken, PA. 2012.

ASTM D6282 / D6282M-14, Standard Guide for Direct Push Soil Sampling for Environmental Site Characterizations, ASTM International, West Conshohocken, PA. 2014.

ASTM D6640-01 (2015), Standard Practice for Collection and Handling of Soils Obtained in Core Barrel Samplers for Environmental Investigations, ASTM International, West Conshohocken, PA. 2015.

ASTM D6907-05 (2010), Standard Practice for Sampling Soils and Contaminated Media with Hand-Operated Bucket Augers, ASTM International, West Conshohocken, PA. 2010.

U.S. Environmental Protection Agency (EPA). 1980. Samplers and Sampling Procedures for Hazardous Waste Streams. EPA/600/2-80/018. January.

EPA. 1987. A Compendium of Superfund Field Operations Methods. OSWER Directive 9355.0-14 EPA/540/P-87/001.

EPA. 1989. Soil Sampling Quality Assurance Users Guide; Second Edition. EPA/600/8-89/046. March.

EPA. 1991. Handbook of Suggested Practices for the Design and Installation of Ground-Water Monitoring Wells. EPA/600/4-89/034. March.

EPA. 1992. Preparation of Soil Sampling Protocol: Techniques and Strategies. EPA/600/SR-92/128.

EPA. 2001a. Soil Sampling. Environmental Response Team SOP #2012 (Rev. #1.0, 07/11/01) https://response.epa.gov/sites/2107/files/2012-r10.pdf

EPA. 2001b. Environmental Investigations Standard Operating Procedures and Quality Assurance Manual. November. https://www.orau.org/ptp/PTP%20Library/library/EPA/samplings/eisopqam.pdf

EPA. 2002. Method 5035A (SW-846): Closed-System Purge-and-Trap and Extraction for Volatile Organics in Soil and Waste Samples, Draft Revision 1. https://www.epa.gov/sites/production/files/2015-12/documents/5035a_r1.pdf

EPA. 2014. Sampler's Guide, Contract Laboratory Program Guidance for Field Samplers. EPA/540/R-104/013. October. https://www.epa.gov/sites/production/files/2015-03/documents/samplers_guide.pdf

1.5 REQUIREMENTS AND RESOURCES

Soil sampling requires the use of one or more of the following types of equipment:

- Spoon and spatula
- Trowel
- Shovel or spade
- Trier
- Core sampler
- EnCore sampler

- Terra Core sampler
- VOA plunger
- Hand auger
- Bucket auger
- Split-spoon
- Thin-wall tube

In addition, the following equipment may also be needed for various methods:

- Sample containers, labels, and chain-of-custody forms
- Logbook and field forms
- Stakes or flags for marking sample locations
- Tape for measuring recovery
- Soil classification information
- Wax or caps for sealing ends of thin-wall tube
- "T" Handles
- Stainless steel or Teflon bowls, aluminum pans, or other vessels for composite sampling (made from material that will not interfere with the planned analyses)
- Plastic sheeting
- Decontamination equipment
- Drilling equipment
- Backhoe
- Health and safety equipment

2.0 SOIL SAMPLING PROCEDURES

This SOP presents procedures for collecting test pit, surface soil, and subsurface soil samples. The site sampling plan will specify which of the following procedures will be used.

Soil samples for chemical analysis should be collected in order of decreasing volatility, typically in the following order: (1) volatile organics, (2) semivolatile organics, and (3) metals. Samples for physical analysis can be containerized after the chemical samples have been containerized. Typical physical analyses conducted include (1) grain size distribution, (2) moisture content, (3) saturated permeability, (4) unsaturated permeability, and (5) Atterberg limits. Additionally, visual descriptions of samples, using the

Unified Soil Classification System (USCS, ASTM D2488-09a), should be recorded. Field tests such as head-space analysis can also be conducted using a photoionization detector or a flame ionization detector before samples are collected for chemical or physical analysis.

Soil samples for chemical analysis can be collected either as grab samples or as composite samples. A grab sample is collected from a discrete location or depth. A composite sample consists of soil combined from more than one discrete location. Typically, composite samples consist of soil obtained from several locations and homogenized in a stainless steel or Teflon bowl, tray, or plastic bag. Refer to the site-specific QAPP for the methodology for composite sample collection. Samples for VOC analysis should not be composited.

All non-disposable equipment used for soil sampling should be decontaminated between sampling locations in accordance with SOP 002, General Equipment Decontamination.

2.1 SOIL SAMPLE COLLECTION PROCEDURES

Soil samples can be collected as discrete samples for VOC analysis using specialized equipment for preservation in the laboratory or in the field. Samples for VOC analysis should not be composited. Soil samples collected for non-VOC analysis can be collected as either grab or composite samples using standard equipment.

2.1.1 Procedure for Preserving and Collecting Soil Samples for VOC Analysis

Samples collected for VOC analysis using traditional methods, such as collection in a jar with no preservation, are shown to yield nonrepresentative results based on loss of VOCs. Samples can be preserved with methanol or sodium bisulfite to reduce volatilization and biodegradation to minimize loss of VOCs. However, these preservatives are not compatible with all VOCs; refer to the unique requirements in the project-specific QAPP or work plan. Preservatives may be added to containers by the laboratory before samples are collected, or preservatives may be added in the field. Alternatively, samples may be collected directly using devices like the EnCore sampler, which minimizes soil contact with the atmosphere. The specific sampling methodology will be identified in the project-specific QAPP or work

plan. Be aware that other methods of sample preservation (such as freezing) are available (EPA 2014), but are not detailed in this SOP.

Soil samples to be preserved in the laboratory are collected using SW-846 Method 5035A (EPA 2002). For samples preserved in the field, laboratories may perform low-level analysis (sodium bisulfate preservation) or high- to medium-level analysis (methanol preservation), depending on the project-specific QAPP.

The following procedures outline the steps necessary for collecting soil samples to be preserved at the laboratory and for collecting soil samples to be preserved in the field with methanol or sodium bisulfate.

2.1.1.1 Soil Samples to be Preserved at the Laboratory

EnCore Sampler

Soil samples collected for VOC analysis that are to be preserved at the laboratory may be obtained using a hand-operated, hermetically sealed sample vial such as an EnCore sampler. Each sample is collected using a reusable sampling handle ("T" handle) that can be provided with the EnCore sampler when it is requested and purchased. Collect the soil sample in the following manner for each EnCore sampler.

The EnCore sampler is loaded into the "T" handle with the plunger fully depressed. Press the "T" handle into the soil to be sampled. The plunger will be forced upward as the cavity fills with soil. When the sampler is full, rotate the plunger and lock it into place using the "T" handle. If the plunger does not lock, then it is not filled with soil. Soft soil may require several plunges or soil may be forced against a hard surface such as a decontaminated sample trowel to ensure headspace has been eliminated. Remove soil from the outside of the sampler so a tight seal can be made between the sample cap and the O-ring. With soil slightly piled above the rim of the sampler, force the cap on until the catches hook the side of the sampler. Remove any surface soil from outside of the sampler and place the sampler in the foil bag provided with the sampler. Seal the bag and label it with sample location information. Typically, collect three EnCore samplers per sample location. Decontaminate the "T" handle between sample locations.

Using the EnCore sampler eliminates the need for field preservation and the shipping restrictions associated with preservatives. A complete set of instructions is included with each EnCore sampler.

After the EnCore samples are collected, they should be placed on ice immediately and delivered to the laboratory within 48 hours. The samples must be preserved by the laboratory within 48 hours after they are collected.

Terra Core Sampler

New sampling collection equipment such as Terra Core have been developed to compete with EnCore when samples are collected for VOC analysis. Depending on the laboratory conducting the analysis, one of these two common VOC sampling devices may be used. In the case that Terra Core samplers are provided, collect the soil sample in the following manner.

Each Terra Core sampling kit comes with one Terra Core sampler that collects either a 5- or a 10-gram aliquot into multiple containers: one methanol-preserved 40 mL VOA vial for high-level analysis, two 40-mL VOA vials containing stir bars for undiluted/low-level analysis, and one 60-gram sample jar for percent moisture analysis. To collect a sample, with the plunger seated in the handle, push the sampler into freshly exposed soil until the sample chamber is filled. Wipe any excess soil and debris from the exterior of the sampler and remove any soil that extends beyond the mouth of the sampler. Then, rotate the plunger that was seated in the handler top 90 degrees until it aligns with the slots in the body. Place the mouth of the sampler into the desired 40 mL VOA vial and extrude the sample by pushing the plunger down. Quickly place the lid back on the VOA vial. After all vials provided have been filled, the sampler is now contaminated and must be disposed of unless additional, bulk sampling will be conducted.

After the Terra Core samples are collected, they should be placed on ice immediately and delivered to the laboratory within 48 hours. The samples must be preserved by the laboratory within 48 hours after they are collected. Because the vials are pre-weighed, no additional labels should be added. Sampling information should be written directly on the label already on the vial.

2.1.1.2 Soil Samples to be Preserved in the Field

Soil samples preserved in the field may be prepared for analysis using both the low-level (sodium bisulfate preservation) and the high- to medium-level (methanol preservation) methods. If samples effervesce when they are placed in preservative, it is necessary to collect a sample unpreserved, in deionized water. In

addition, an unpreserved sample for determination of moisture content must also be collected when soil samples to be preserved in the field are collected.

Methanol Preservation (High to Medium Level). Bottles may be pre-spiked with methanol in the laboratory or prepared in the field. Use 40- to 60-mL glass vials with septum-lined lids for soil samples to be preserved in the field with methanol. Fill each sample bottle with 25 mL of demonstrated analyte-free purge-and-trap grade 3 methanol. The preferred method for adding methanol to the sample bottle is by removing the lid and using a pipette or scaled syringe to add the methanol directly to the bottle.

Use a decontaminated (or disposable), small-diameter coring device such as a disposable VOA plunger to collect the soil. The outside diameter of the coring device must be smaller than the inside of the sample bottle neck. To collect the sample, pull the plunger back to the required location, insert it into the soil to be sampled, push the coring device into the soil, extrude the soil sample into the methanol-preserved sample bottle, and cap the bottle tightly. Swirl the sample (do not shake) in the methanol to break up the soil such that all of the soil is covered with methanol. After the samples are collected, place them on ice immediately and deliver to the laboratory within 48 hours.

Sodium Bisulfate Preservation (Low Level). Bottles may be prepared in the laboratory or in the field with sodium bisulfate solution. Samples to be preserved in the field using sodium bisulfate are collected using the same procedures described for methanol preservation.

2.1.2 Procedure for Collecting Soil Samples for Non-VOC Analysis

Samples collected for non-VOC analysis may be either grab or composite samples as follows. When collecting a grab sample, transfer a portion of soil to be analyzed to a stainless-steel or Teflon bowl, disposable inert plastic tray, or plastic bag. Avoid or remove vegetation and small stones. When a composite sample is collected, collect four to five discrete soil samples of roughly equal volume, based on the sample design in the QAPP. Remove roots, vegetation, sticks, and stones larger than the size of pea gravel (about ¼- to ½-inch diameter). Thoroughly mix the soil with a stainless-steel spoon to obtain as uniform a texture and color as practicable. Transfer the mixed soil to the appropriate sample containers and close the containers. Label the sample containers and immediately place on ice.

2.2 TEST PIT AND TRENCH SOIL SAMPLING

Test pit and trench soil samples are collected when a complete soil profile is required or as a means of locating visually detectable contamination. This type of sampling provides a detailed description of the soil profile and allows for multiple samples to be collected from specific soil horizons. The sampling team should ensure that the sampling area is clear of utility lines, subsurface pipes, and poles before any test pit or trench is excavated with a backhoe.

A test pit or trench is excavated by incrementally removing soil with a backhoe bucket. The excavated soil is placed on plastic sheeting well away from the edge of the test pit. A test pit should not be excavated to depths greater than 4 feet unless its walls are properly sloped or stabilized. No personnel may enter any test pit or trench excavation more than 4 feet deep; such action would constitute confined space entry and must conform with Occupational Safety and Health Administration (OSHA) regulations at Title 29 of the *Code of Federal Regulations* § 1910.

Personnel entering the test pit may be exposed to toxic or explosive gases and oxygen deficient environments. Air monitoring is required before they may enter the test pit, and use of appropriate respiratory gear and protective clothing is mandatory. At least two persons must be present at the test pit before sampling personnel may enter the excavation and begin soil sampling. Refer to project-specific health and safety plans for required safety procedures for excavations.

Soil samples can also be obtained directly from the backhoe bucket or from the excavated material after it has been removed and deposited on plastic sheeting. The sampling personnel may direct the backhoe excavator to obtain material from the selected depth and location within the excavation. The backhoe operator will set the backhoe bucket on the ground in a designated location, at a sufficient distance from the excavation to allow the sampler safe access to the bucket. The backhoe operator must disengage the controls and signal to the sampler that it is safe to approach the bucket. Collect the soil sample from the center of the backhoe bucket to reduce the potential for cross-contamination of the sample.

Test pits are not practical for sampling at depths greater than 15 feet. If soil samples are required from depths greater than 15 feet, samples should be obtained using test borings instead of test pits. Test pits are

also usually limited to a few feet below the water table. In some cases, a pumping system may be required to control the water level within the pits.

Access to open test pits should be restricted by flagging, tape, or fencing. If a fence is used, it should be erected at least 6 feet from the perimeter of the test pit. The test pit should be backfilled as soon as possible after sampling is completed.

Various equipment may be used to collect soil samples from the walls or bottom of a test pit. A hand auger, bucket auger, or core sampler can be used to obtain samples from various depths. A trier, trowel, EnCore sampler, Terra Core sampler, VOA plunger, or spoon can be used to obtain samples from the walls or pit bottom surface.

2.3 SURFACE SOIL SAMPLING

Surface soil samples can be used to investigate contaminants that exist in the near-surface environment. Contaminants detected in the near-surface environment may extend to considerable depths, potentially migrating to groundwater, surface water, the atmosphere, or biological systems. Sampling depths for surface soil are typically those that can be reached without use of a drill rig, DPT, or other mechanized equipment. Sample depths typically extend up to 1 foot below ground surface (bgs). However, the definition of “surface soil” and the resultant sample depths may vary based on risk assessment or other project requirements. Be aware of these site-specific constraints and follow the requirements of the QAPP to select the depths for surface soil samples.

2.3.1 Surface Soil Sampling Equipment

The surface soil sampling equipment presented in this SOP is best suited for sampling to depths of 0 to 6 feet bgs. The sample depth, analytical suite, soil type, and soil moisture will also dictate the most suitable sampling equipment. The sampling locations should be cleared of any surface debris such as twigs, rocks, and litter before samples are collected. The following table presents various surface soil sampling equipment and their effective depth ranges, operating means (manual or power), and sample types collected (disturbed or undisturbed).

Sampling Equipment	Effective Depth Range (feet below ground surface)	Operating Means	Sample Type
Hand Auger	0 to 6	Manual	Disturbed
Bucket Auger	0 to 4	Power	Disturbed
Core Sampler	0 to 4	Manual or Power	Undisturbed
EnCore or Terra Core Sampler	Not Applicable	Manual	Disturbed
Spoon/Spatula	0 to 0.5	Manual	Disturbed
Trowel	0 to 1	Manual	Disturbed
Volatile Organic Analysis (VOA) Plunger	Not Applicable	Manual	Disturbed

The procedures for using these various types of sampling equipment are discussed below.

2.3.1.1 Hand Auger

A hand auger equipped with extensions and a “T” handle is used to obtain samples from depths of up to 6 feet bgs. It is possible to hand auger deeper than 6 feet. However, hand-augering below this depth is uncommon because of the time, effort, and cost effectiveness when sampling to depths greater than 6 feet bgs. If necessary, a shovel may be used to excavate the topsoil to reach the desired subsoil level. If topsoil is removed, its thickness should be recorded. Samples obtained using a hand auger are disturbed in their collection; establishing the exact depth where samples are obtained is difficult.

The hand auger is screwed into the soil at an angle of 45 to 90 degrees from horizontal. When the entire auger blade has penetrated the soil, the auger is removed from the soil by lifting it straight up without turning it, if possible. If the desired sampling depth has not been reached, the soil is removed from the auger and deposited onto plastic sheeting. This procedure is repeated until the desired depth is reached and the soil sample is obtained. The auger is then removed from the boring and the soil sample is collected directly from the auger into an appropriate sample container.

2.3.1.2 Bucket Auger

A bucket auger, similar to the hand auger, is used to obtain disturbed samples from depths of up to 4 feet bgs. A bucket auger should be used when stony or dense soil is sampled that prohibits the use of a hand-operated core or screw auger. A bucket auger with closed blades is used in soil that cannot generally be penetrated or retrieved by a core sampler.

The bucket auger is rotated while downward pressure is exerted until the bucket is full. The bucket is then removed from the boring, the soil collected is placed on plastic sheeting, and this procedure is repeated until the appropriate depth is reached and a sample is obtained. The bucket is then removed from the boring and the soil sample is transferred from the bucket to an appropriate sample container.

2.3.1.3 Core Sampler

A hand-operated core sampler (Figure 1), similar to the hand auger, is used to obtain samples from depths of up to 4 feet bgs in uncompacted soil. The core sampler is capable of retrieving undisturbed soil samples and is appropriate when low concentrations of metals or organics are of concern. The core sampler should be constructed of stainless steel. A polypropylene core sampler is generally not suitable for sampling dense soils or sampling at greater depths.

The core sampler is pressed or driven (for example, using a slide hammer) into the soil at an angle of 45 to 90 degrees from horizontal and is rotated when the desired depth is reached. The core is then removed, and the sample is placed into an appropriate sample container.

2.3.1.4 Shovel

A shovel or spade may be used to obtain large quantities of soil that are not readily obtained with a trowel. A shovel is used when soil samples from depths of up to 6 feet bgs are to be collected by hand excavation; a tiling spade (sharpshooter) is recommended for excavation and sampling. A standard steel shovel may be used for excavation; either a stainless-steel or polypropylene shovel may be used for sampling. Soil excavated from above the desired sampling depth should be stockpiled on plastic sheeting. Soil samples should be collected from the shovel and placed into the sample container using a stainless-steel scoop, plastic spoon, or other appropriate tool.

2.3.1.5 Trier

A trier (Figure 2) is used to sample soil from depths up to 1 foot bgs. A trier should be made of stainless steel or polypropylene. A chrome-plated steel trier may be suitable when samples are to be analyzed for organics and heavy metal content is not a concern.

Samples are obtained by inserting the trier into soil at an angle of up to 45 degrees from horizontal. The trier is rotated to cut a core and is then pulled from the soil being sampled. The sample is then transferred to an appropriate sample container.

2.3.1.6 Trowel

A trowel is used to obtain surface soil samples that do not require excavation beyond a depth of 1 foot. A trowel may also be used to collect soil subsamples from profiles exposed in test pits. Use of a trowel is practical when sample volumes of approximately 1 pint (0.5 liter) or less are to be obtained. Excess soil should be placed on plastic sheeting until sampling is completed. A trowel should be made of stainless or galvanized steel. It can be purchased from a hardware or garden store. Soil samples to be analyzed for organics should be collected using a stainless-steel trowel. Samples may be placed directly from the trowel into sample containers.

2.4 SUBSURFACE SOIL SAMPLING

Subsurface soil sampling is accomplished in conjunction with borehole drilling for depths greater than approximately 6 feet bgs. Subsurface soil sampling is frequently coupled with exploratory boreholes or monitoring well installation. As described above for surface soil, the definition of “subsurface soil” may vary based on risk assessment or other project requirements. Be aware of site-specific constraints and follow the requirements of the QAPP to select the depths for subsurface soil samples.

2.4.1 Subsurface Soil Sampling Equipment and Methods

Subsurface soil may be sampled using a drilling rig, power auger, or DPT. Selection of sampling equipment depends on geologic conditions and the scope of the sampling program. Two types of samplers

used with machine-driven augers — the split-spoon sampler and the thin-wall tube sampler — are discussed below. All sampling tools should be cleaned before and after each use in accordance with SOP 002, General Equipment Decontamination. Both the split-spoon sampler and the thin-wall tube sampler can be used to collect undisturbed samples from unconsolidated soils. The procedures for DPT sampling are also presented below.

2.4.1.1 Split-Spoon Sampler

Split-spoon samplers are available in a variety of types and sizes. Site conditions and project needs, such as large sample volume for multiple analyses, dictate the specific type of split-spoon sampler to be used. Figure 3 shows a generic split-spoon sampler.

The split-spoon sampler is advanced into the undisturbed soil beneath the bottom of the casing or borehole using a weighted hammer and a drill rod. The relationship between hammer weight, hammer drop, and number of blows required to advance the split-spoon sampler in 6-inch increments indicates the density or consistency of the subsurface soil. After the split-spoon sampler has been driven to its intended depth, it should be removed carefully to avoid loss of sample material. A catcher or basket should be used to help retain the sample in noncohesive or saturated soil.

After the split-spoon sampler is removed from the casing, it is detached from the drill rod and opened. If VOA samples are to be collected, EnCore samplers, Terra Core samplers, or VOA plungers should be filled with soil taken directly from the split-spoon sampler. Samples for other specific chemical analyses should be taken as soon as the VOA sample has been collected. The remainder of the soil recovered can then be used for visual classification of the sample and containerized for physical analysis. The entire sample (except for the top several inches of possibly disturbed material) is retained for analysis or disposal.

2.4.1.2 Thin-Wall Tube Sampler

A thin-wall tube sampler, sometimes called the Shelby tube (Figure 4), is used to collect soil samples for geophysical analysis. Tube samplers are best suited for collecting cohesive soils such as clays and silts. The tube sampler may be pressed or driven into soil inside a hollow-stem auger flight, wash bore casing, or uncased borehole. The tube sampler is pressed into the soil, without rotation, to the desired depth or until

it meets refusal. If the tube cannot be advanced by pushing, it may be necessary to drive it into the soil without rotation using a hammer and drill rod. The tube sampler is then rotated to collect the sample from the soil and removed from the borehole.

After the tube sampler is removed from the drilling equipment, the tube sampler should be inspected for adequate sample recovery. The sampling procedure should be repeated until an adequate soil core is obtained (if the tube sampler can retain the sample material). The soil core obtained should be documented in the logbook. Any disturbed soil is removed from each end of the tube sampler. If chemical analysis is required, VOA samples must be collected immediately after the tube sampler is withdrawn. EnCore samplers, Terra Core samplers, or VOA plungers should be filled with soil taken directly from the tube sampler. Before use, and during storage and transport, the tube sampler should be capped with a nonreactive material. The tube is sealed using plastic caps for physical sampling parameters. The top and bottom of the tube sampler should be labeled and the tube sampler should be stored accordingly.

2.4.1.3 Direct-Push Technology Methods

In many cases, DPT is less expensive and faster than collecting soil samples with a standard drilling rig. In addition, the use of DPT causes minimal disturbance to the ground surface and generates little to no soil cuttings. DPT drill rigs, as well as traditional drill rigs, often use acetate or clear polyvinyl chloride sleeves or brass liners inside of split-spoon or thin-wall tube samplers for collecting soil samples.

The sample sleeve is extruded from the sampling rod when the sampling rod is retrieved from the ground. The sleeve is sliced lengthwise twice to open the sleeve. Soil samples can be collected directly from the opened sleeve. EnCore samplers, Terra Core samplers, or VOA plungers should be filled with soil taken directly from the opened DPT sampler if VOA samples are to be collected. Samples for other specific chemical analysis should be collected after the VOA sample. The remainder of the recovered soil can then be used for visual classification of the sample and containerized for physical analysis. The entire sample is retained for analysis or disposal.

FIGURE 1

HAND-OPERATED CORE SAMPLER

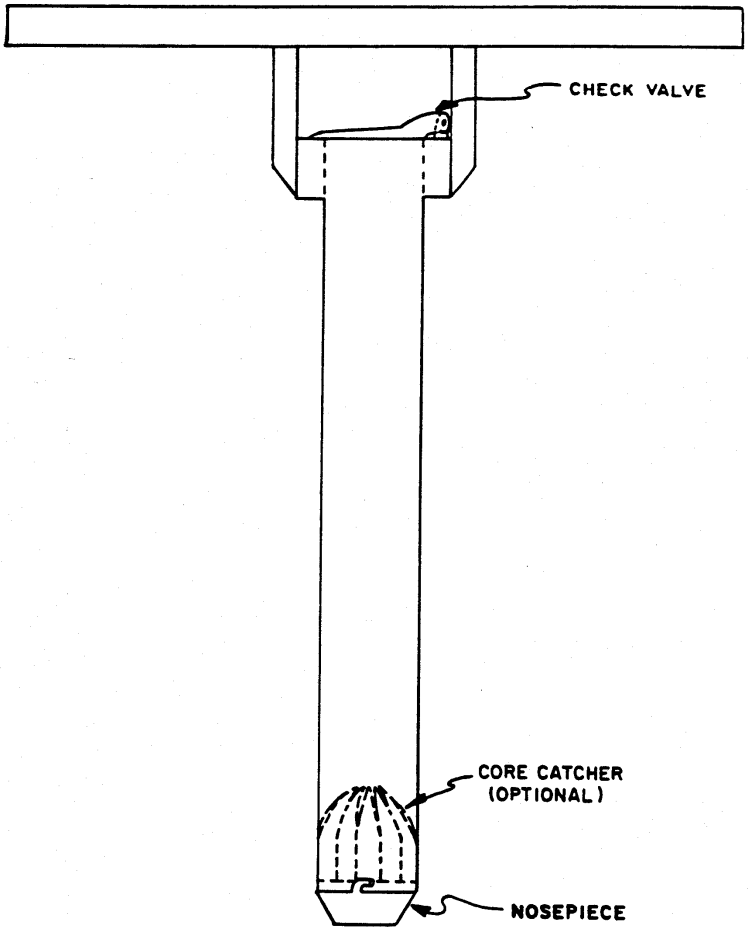

FIGURE 2

TRIER

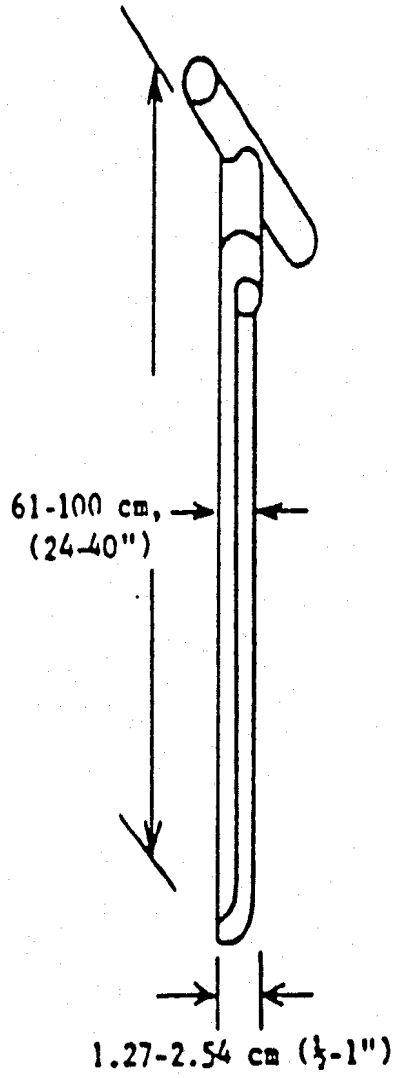

FIGURE 3

GENERIC SPLIT-SPOON SAMPLER

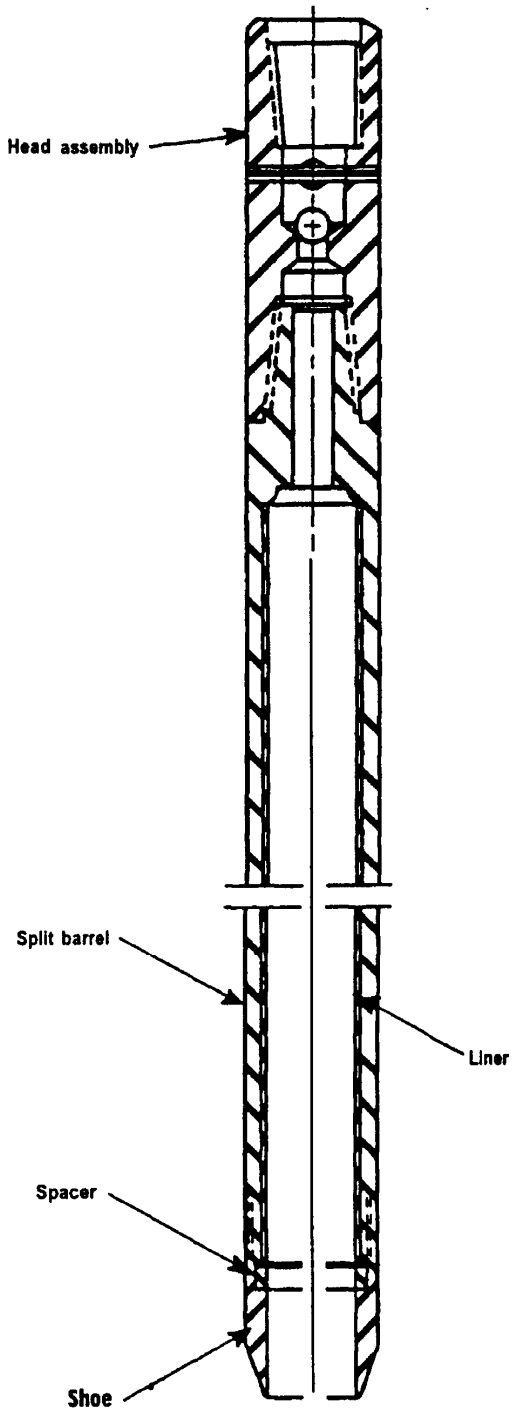

FIGURE 4

THIN-WALL TUBE SAMPLER

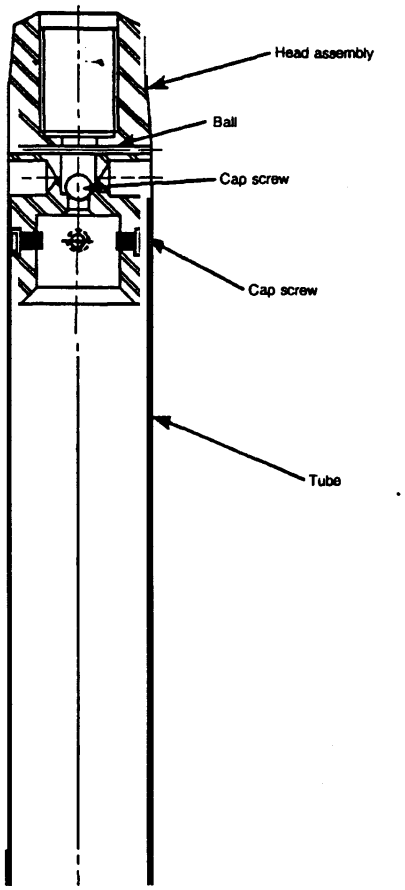

SOP APPROVAL FORM

TETRA TECH, INC.

EMI OPERATING UNIT

ENVIRONMENTAL STANDARD OPERATING PROCEDURE

PACKAGING AND SHIPPING SAMPLES

SOP NO. 019

REVISION NO. 8

Last Reviewed: August 2020

Quality Assurance Approved	August 11, 2020 Date

1.0 BACKGROUND

In any sampling program, the integrity of a sample must be ensured from its point of collection to its final disposition. This standard operating procedure (SOP) describes procedures for packaging and shipping samples. Steps in the procedures should be followed to ensure sample integrity and to protect the welfare of persons involved in shipping and receiving samples.

1.1 PURPOSE

This SOP establishes the requirements and procedures for packaging and shipping nonhazardous environmental samples. It has been prepared in accordance with the U.S. Environmental Protection Agency (EPA) "Contract Laboratory Program Guidance for Field Samplers." Procedures described in this SOP should be followed for all routine sample packaging and shipping of nonhazardous samples. If procedures are to be modified for particular contract- or laboratory-specific requirements, modified procedures should be clearly described in site-specific plans such as work plans, field sampling plans (FSP), or quality assurance project plans (QAPP). Deviations from the procedures in this SOP must be documented in a field logbook. This SOP assumes that samples are already in the appropriate sample jars and that the sample jars are labeled.

This SOP does not cover the packaging and shipment of Dangerous Goods or Hazardous Materials. The shipment of Dangerous Goods (by air) and Hazardous Materials (by ground) requires specialized training. If you have NOT received this training in the last 2 years, you are NOT qualified to package or ship these materials and may be personally liable for any damages or fines. Contact one of Tetra Tech's shipping experts for assistance. Instructions to access the training course, shipping experts, and health and safety (H&S) contacts, and general information on packaging and shipping hazardous substances and dangerous goods can be obtained by checking the links provided in Section 1.4 (References) and communicating with appropriate Tetra Tech H&S contacts listed on the EMI Operating unit internal H&S web site.

1.2 SCOPE

This SOP applies to packaging and shipping of environmental and nonhazardous samples. This SOP does not address shipping dangerous goods or hazardous materials.

1.3 DEFINITIONS

Airbill: An airbill is a shipping form (such as a FedEx shipping form) acquired from the commercial shipper and is used to document shipment of the samples from the sampler to the designated analytical laboratory (see Figure 1).

Blank: A blank is any sample that is used to assess cross-contamination from sampling and sample management procedures. A typical blank sample will consist of distilled or deionized (DI) water (water sampling) or an air filter cartridge (air sampling) that is then analyzed by the laboratory to evaluate whether cross-contamination has been introduced. Each blank is assigned its own unique sample number. Blanks collected in the field include trip blanks, field blanks, and equipment blanks, all intended to assess potential cross-contamination. For example, a trip blank checks for contamination during sample handling, storage, and shipment from the field to the laboratory. Field blanks assess the contamination of water or soil from ambient air. Equipment blanks (also known as rinse blanks) assess contamination from incomplete decontamination procedures.

Chain-of-Custody form: A chain-of-custody form is used to document the transfer of custody of samples from the field to the designated analytical laboratory (see Figure 2). The chain-of-custody form is critical to the chain-of-custody process and is used to identify the samples in each shipping container to be shipped or delivered to the laboratory for chemical or physical (geotechnical) analysis. A copy of the chain-of-custody form is shipped with the samples and accompanies them from sampler to laboratory (see Figure 3).

Custody seal: A custody seal is a tape-like seal and is used to indicate that samples are intact and have not been disturbed during shipping or transport after the samples have been released from the sampler to the shipper (see Figure 4). The custody seal is part of the chain-of-custody process and is used to prevent tampering with samples after they have been packaged for shipping (see Figure 5).

Environmental samples: Environmental samples include drinking water, groundwater, surface water, soil, sediment, treated municipal and industrial wastewater effluent, indoor and ambient air, nonhazardous bulk materials, soil gas, dust, asbestos, and biological specimens. Environmental samples typically contain low concentrations of contaminants and, when handled, require only limited precautionary procedures.

Nonhazardous samples: Nonhazardous samples are those samples that do not meet the definition of a hazardous sample AND do not need to be packaged and shipped in accordance with the International Air Travel Association's (IATA) "Dangerous Goods Regulations" (DGR) or U.S. Department of Transportation's "Hazardous Materials Regulations" defined in Title 49 *Code of Federal Regulations* (CFR).

The following definitions are provided to further distinguish environmental and nonhazardous samples from dangerous goods and hazardous samples:

Dangerous goods: Dangerous goods are articles or substances that can pose a significant risk to health, safety, or property when transported by air; they are classified as defined in Section 3 of the DGR (IATA 2020).

Hazardous samples: Hazardous samples include dangerous goods and hazardous substances. Hazardous samples shipped by air should be packaged and labeled in accordance with procedures specified by the DGR; ground shipments should be packaged and labeled in accordance with the Hazardous Material Regulations.

Hazardous substance: A hazardous substance is any material, including its mixtures and solutions, that is listed in 49 CFR 172.101 and its quantity, in one package, equals or exceeds the reportable quantity listed in Table 1 to Appendix A of 49 CFR 172.101.

1.4 REFERENCES

General Awareness, H&S Contacts, and Course Training Information (Tetra Tech, Inc., EMI Operating Unit. Intranet) On-line address: https://int.tetratech.com/sites/EMI/hs/Pages/Dangerous-Goods-Shipping.aspx

International Air Transport Association (IATA). 2020. "Dangerous Goods Regulations. 2020." For sale at: https://www.iata.org/en/publications/dgr/. Updated annually, with new edition available late in year.

U.S. Environmental Protection Agency (EPA). 40 CFR, 763 Subpart F, Asbestos Hazards Emergency Response Act (AHERA).

EPA. 2014. "Contract Laboratory Program Guidance for Field Samplers." EPA 540-R-014-013. October. On-line address: https://www.epa.gov/sites/production/files/2015-03/documents/samplers_guide.pdf.

EPA. 2020. "Packing, Marking, Labeling and Shipping of Environmental and Waste Samples." EPA Region 4, LSASDPROC-209-R4. February 23. On-line address: https://www.epa.gov/sites/production/files/2015-06/documents/Shipping-Environmental-and-Waste-Samples.pdf

1.5 REQUIREMENTS AND RESOURCES

The procedures for packaging and shipping samples require the following:

- Coolers (insulated ice chest) or other shipping containers appropriate to sample type
- Ice
- Bubble wrap or similar cushioning material
- Chain-of-custody forms and seals
- Airbills

- Resealable plastic bags for sample jars and ice
- Tape (strapping and clear)
- Large plastic garbage bags for lining the cooler
- Temperature blank sample bottle filled with distilled water can be included in the cooler if appropriate to sample type
- Trip blank samples used to check for volatile contamination during sample handling in the field should accompany sample containers during shipment from laboratory to field (empty containers) and from field to laboratory (filled containers). It should remain in the cooler with sample containers during the sampling event. Trip blanks should be requested from the laboratory when containers are initially ordered.

2.0 PROCEDURES

The following procedures apply to packaging and shipping nonhazardous and environmental samples.

2.1 PACKAGING SAMPLES

After they have been appropriately containerized and labeled, environmental samples should be packaged as described in this section. This section covers procedures for packing samples for delivery by commercial carrier (air or ground) and hand delivery of environmental samples (by employee or courier), as well as shipping asbestos and air quality samples. Note that these instructions are general; samplers also should be aware of client-specific requirements concerning the placement of custody seals or other packaging provisions.

2.1.1 Packaging Samples for Delivery by Commercial Carrier (Air or Ground)

Samples shipped by commercial carriers should be packed for shipment using the following procedures and in compliance with all carrier requirements:

Preparing the sample:

1. Allow a small amount of headspace in all bottles, or as instructed by the laboratory (except volatile organic compound [VOC] containers with a septum seal) to compensate for any changes in pressure and temperature during transfer.
2. Be sure the lids on all bottles are tight (will not leak). Lids maybe taped or sealed with custody seals as added protection or as required. For any sample containers that are not marked with a tare weight by the laboratory, cover the completed sample label on the container with clear tape to protect the label.
3. Place sample containers in resealable plastic bags.

Preparing the cooler:

1. Secure and tape the drain plug of the cooler with fiber or duct tape.
2. Line the cooler with a large plastic garbage bag before samples, ice, and absorbent packing material are placed in the cooler.
3. Wrap the sample containers in bubble wrap or line the cooler (bottom and sides) with a cushioning material to prevent breakage of bottles or jars during shipment.
4. If required by the laboratory for the analytical method, add a sufficient quantity of ice to the cooler to cool samples to 4 °C (± 2 °C). Ice should be double bagged in resealable plastic bags to prevent the melted ice from leaking out. If required, include one temperature blank (a sample bottle filled with distilled water) per cooler.

5. For VOC samples only, include one trip blank for VOC analysis per shipment matrix in each cooler.

6. Fill all remaining space between the bottles or jars with bubble wrap.

7. As each container is placed in the cooler, verify the sample information on the chain-of-custody form. The samples listed on the chain-of-custody form must match exactly with the contents of the cooler.

8. Securely fasten the top of the large garbage bag with tape (preferably plastic electrical tape).

9. If more than one cooler is being shipped, mark each cooler as “1 of 2,” “2 of 2,” and so forth.

10. Place the chain-of-custody forms (see Figure 2) into a resealable plastic bag, and tape the bag to the inner side of the cooler lid (see Figure 3). If you are shipping more than one cooler, copy the chain-of-custody form so that there is one copy of all forms in each cooler. The samples listed on the chain-of-custody form must match exactly with the contents of the cooler. Tape any instructions for returning the cooler to the inside of the lid.

11. Close the lid of the cooler and tape it shut by wrapping strapping tape around both ends and hinges of the cooler at least once.

12. Place two signed custody seals (see Figure 4) on opposite sides of the cooler, ensuring that each one covers the cooler lid and side of the cooler (see Figure 5; note that in contrast to the figure, the seals should be placed on the opposite sides of the cooler and offset from each other, rather than directly across from each other as shown in Figure 5). Place clear plastic tape over the custody seals so that the cooler cannot be opened without breaking the seal.

13. Shipping containers should be marked "THIS END UP.” Arrow labels, which indicate the proper upward position of the container, may also be affixed to the container. As appropriate, the containers should also be labeled for Saturday delivery or other special requirements.

14. Ship samples overnight using a commercial carrier such as FedEx. As a best practice, electronic sample shipping labels should be prepared by the shipping agency’s employees, at the direction of Tetra Tech employees or sampling personnel. This allows the sampling personnel to confirm special shipping requirements, such as Saturday delivery, and verify that samples will be shipped that day (that is, the last shipment of the day has not already occurred). If this is not possible, the airbill can be prepared by hand (see Figure 1), but samples should still be handed over directly to shipping agency employees and shipping details should be verified. The shipping label should be placed on the outside of the container.

15. A copy of the receipt with sample tracking number should be retained by the sampling personnel and delivery should be verified the next day.

2.1.2 Hand Delivery of Environmental Samples (by Employee or Courier)

Samples hand-delivered to the laboratory should be packed for shipment using the following procedures:

Preparing the sample:

1. Bottles can be filled completely with sample (required for VOC containers with a septum seal).

2. Be sure the lids on all bottles are tight (will not leak).

Preparing the cooler:

1. Secure and tape the drain plug of the cooler with fiber or duct tape.

2. Wrap the sample containers in bubble wrap or line the cooler (bottom and sides) with a cushioning material to prevent breakage of bottles or jars during shipment.

3. As each container is placed in the cooler, verify the sample information on the chain-of-custody form. The samples listed on the chain-of-custody form must match exactly with the contents of the cooler.

4. If required for by the laboratory for the analytical method, add a sufficient quantity of ice to the cooler to cool samples to 4 °C. Ice should be double bagged in resealable plastic bags to prevent the melted ice from leaking out. If required, include one temperature blank (a sample bottle filled with distilled water) per cooler.

5. For VOC samples only, include one trip blank for VOC analysis per shipment matrix in each cooler.

6. If more than one cooler is being shipped, mark each cooler as “1 of 2,” “2 of 2,” and so forth.

7. Place the chain-of-custody form (see Figure 2) in a resealable plastic bag and tape to the inside of the cooler lid (see Figure 3), close the lid, and seal with custody seals (see Figure 5; note that in contrast to the figure, the seals should be placed on the opposite sides of the cooler and offset from each other, rather than directly across from each other as shown in Figure 5). Place clear plastic tape over the custody seals so that the cooler cannot be opened without breaking the seal. Transfer the cooler to the courier. When samples will be delivered directly to the laboratory, it is sufficient to close the cooler and hand-deliver it with the chain-of-custody form.

8. Include any instructions for returning the cooler to the inside of the lid.

9. If the cooler is being transferred to a courier, the shipping containers should be marked “THIS END UP,” and arrow labels, which indicate the proper upward position of the container should be affixed to the container.

2.1.3 Shipping Asbestos Samples

Asbestos samples shipped by commercial carriers should be packed for shipment using the following procedures and in compliance with all carrier requirements:

1. Place each asbestos sample in a small resealable plastic bag or Whirl-pak sealable bag. Seal the bags carefully and place the sample bags in a larger resealable plastic bag.

2. Select a rigid shipping container and pack the samples upright in a noncontaminating, nonfibrous medium such as a bubble pack to minimize excessive movement during shipping.

3. Avoid using expanded polystyrene because of its static charge potential. Also avoid using particle-based packaging materials because of possible contamination.

4. Affix custody seals to the samples or outer sample bag so that the bags cannot be opened without breaking the seal.

5. Insert the chain-of-custody form in the box. Include a shipping bill and a detailed listing of samples shipped, their descriptions and all identifying numbers or marks, sampling data, shipper's name, and contact information.

6. Ship bulk samples in a separate container from air samples. Bulk samples and air samples delivered to the analytical laboratory in the same container will be rejected.

7. For each sample set, designate which are the ambient samples, which are the abatement area samples, which are the field blanks, and which is the sealed blank if sequential analysis is to be performed.

8. Hand-carry samples to the laboratory in an upright position if possible; otherwise, choose that mode of transportation least likely to shake the samples in transit.

9. Address the package to the laboratory sample coordinator by name when known and alert him or her of the package description, shipment mode, and anticipated arrival as part of the chain-of-custody and sample tracking procedures. This information will also help the laboratory schedule timely analysis for the samples when they are received.

2.1.4 Shipping Air Samples

Packaging and shipping requirements for air samples vary depending on the media used to collect the samples and the analyses required. Sampling media typically include Summa canisters and Tedlar bags for whole air samples, filters for metals and particulate matter, and sorbent tubes for organic contaminants. This section of the SOP provides general guidelines for packaging and shipping air samples collected using these media. The project FSP or QAPP should also be reviewed for any additional project-specific requirements or instructions.

Summa Canister Samples

1. Close the canister valve by tightening the knob clockwise or flipping the toggle switch. Replace the brass cap on the canister inlet.

2. If a flow controller was used to collect the air sample over a specified time interval, the flow controller should be removed before replacing the brass cap.

3. Fill out the sample tag on the canister with the sample number and the date and time of collection. Include the identification number of the flow controller on the sample tag if one was used. Make sure the information on the sample tag matches the chain-of-custody form.

4. Complete the chain-of-custody form. In addition to the information normally included, the form should include the following data: sample start and stop dates and times; initial and final Summa canister vacuum readings; Summa canister identification number; and flow controller identification number.

5. Package the Summa canister (and flow controller) in its original shipping box with the original packaging material. Tape the box shut and apply custody seals if required. Note: Summa canisters should never be packaged with ice.

6. Summa canister shipments typically include several canisters, and may include more than one shipping box. The chain-of-custody form for the shipment should be sealed within one of the shipping boxes. If more than one box is being shipped, mark each box as “1 of 2,” “2 of 2,” and so forth.

7. Ship the samples by a method that will meet the holding time. Summa canister samples should be analyzed within 30 days of sample collection.

Tedlar Bag Samples

1. Before removing it from the sample port, close the Tedlar bag by tightening the valve clockwise. The bag should only be approximately half-full to allow for pressure changes during shipping and handling of the sample. Keep the Tedlar bag out of direct sunlight to preserve the sample.

2. Fill out the label on the bag with the sample number and the date and time of sample collection. Make sure the information on the label matches the chain-of-custody form.

3. Complete the chain-of-custody form.

4. Package the Tedlar bag in a shipping box with appropriate packing material to prevent the bag from being punctured or damaged. Multiple bags can be packaged in the same box. Tape the box shut and apply custody seals if required. Note: Tedlar bag samples should not be cooled or packaged with ice, although they can be shipped in an ice chest to protect the samples.

5. Tedlar bag shipments may include more than one shipping box. The chain-of-custody form for the shipment should be sealed within one of the shipping boxes. If more than one box is being shipped, mark each box as “1 of 2,” “2 of 2,” and so forth.

6. Ship the samples using priority overnight delivery. Tedlar bag samples should be analyzed within 3 days of sample collection.

Filter Cassette Samples

1. Disconnect the filter cassette from the air sampling pump and replace the plastic caps on the inlet and outlet openings.

2. Attach a label to the sample that includes the sample number and the date and time of sample collection. Make sure the information on the label matches the chain-of-custody form.

3. Complete the chain-of-custody form. In addition to the information normally included, the form should include the following data: sample start and stop dates and times; initial and final air flow rates (or average flow rate); volume of air sampled; and sampling pump identification number.

4. Package the filter cassettes in a shipping box (such as a FedEx box). Use an appropriate packing material (such as bubble wrap) to separate the samples and prevent damage.

5. Place the chain-of-custody form within the box, seal the box, and apply custody seals if required. Filter cassette samples typically do not need to be cooled, but check the field sampling plan (FSP) or Quality Assurance Project Plan (QAPP) for project-specific requirements.

6. Ship the samples by a method that will meet the holding time.

Sorbent Tube Samples

1. Disconnect the sample tube from the air sampling pump and seal both ends of the tube with plastic caps.

2. Complete a sample label that includes the sample number and the date and time of sample collection. Make sure the information on the label matches the chain-of-custody form.

3. If the tube is small and the label cannot be attached to the tube, the tube can be placed in a small resealable plastic bag and the label can be attached to the bag or placed inside the bag with the tube.

4. Complete the chain-of-custody form. In addition to the information normally included, the form should include the following data: sample start and stop dates and times; initial and final air flow rates (or average flow rate); volume of air sampled; and sampling pump identification number.

5. Packaging requirements for the sample tubes will depend on the analysis required, and the sampler should check the FSP or QAPP for project-specific requirements (for example, tubes may need to be wrapped in aluminum foil to prevent exposure to light). Packaging containers and methods include (1) shipping boxes (as described under filter cassette samples), (2) small sample coolers filled with double-bagged ice, and (3) small sample coolers filled with blue (reusable) ice.

6. Place the chain-of-custody form within the box or container, seal the box or container, and apply a custody seal if required.

7. If coolers are used for shipping, tape instructions for returning the cooler to the inside of the lid.

8. Ship the samples by a method that will meet the holding time.

Polyurethane Foam (PUF) Tube Samples

1. Disconnect the PUF tube from the air sampling pump and wrap the tube in aluminum foil.

2. Attach a label to the wrapped sample tube that includes the sample number and the date and time of sample collection. Make sure the information on the label matches the chain-of-custody form.

3. Wrap the PUF tube in bubble wrap and place the tube in a glass shipping jar.

4. Complete the chain-of-custody form. In addition to the information normally included, the form should include the following data: sample start and stop dates and times; initial and final air flow rates (or average flow rate); volume of air sampled; and sampling pump identification number.

5. Package the PUF tube jars in a cooler that is filled with double-bagged ice. Use bubble wrap or other cushioning material to separate the samples and prevent breakage.

6. Place the chain-of-custody form within the cooler, seal the cooler, and apply a custody seal if required.

7. If coolers are used for shipping, tape instructions for returning the cooler to the inside of the lid.

8. Ship the samples by a method that will meet the holding time. Samples collected in PUF tubes typically must be extracted within 7 days of collection.

2.2 SHIPPING DOCUMENTATION FOR SAMPLES

Airbills, chain-of-custody forms, and custody seals must be completed for each shipment of nonhazardous environmental samples.

Field staff collecting samples should also review their field work plans to confirm what documentation must be completed during each sampling event, including client-specific requirements. For example, some EPA programs have a specific requirement to use Scribe software, an environmental data management system, to create sample documentation, electronically input information into Traffic Report or chain-of-custody forms, and enter other data.

- The Scribe software can be accessed from the EPA Environmental Response Team (ERT) at the following address: http://www.ertsupport.org/scribe_home.htm
- The ERT User Manual for Scribe, reference, and training materials can be accessed from the Scribe Support Web site at the following address: http://www.epaosc.org/scribe

Note that some laboratories must routinely return sample shipping coolers within 14 calendar days after the shipment has been received. Therefore, the sampler should also include instructions for returning the cooler with each shipment, when possible. The sampler (not the laboratory) is responsible for paying for return of the cooler and should include shipping airbills bearing the sampler's shipping account number, as well as a return address to allow for return of the cooler. Samplers should use the least expensive option possible for returning coolers.

2.3 SHIPMENT DELIVERY AND NOTIFICATION

A member of the field sampling team must contact the laboratory to confirm it accepts deliveries on any given day, especially Saturdays. In addition, samplers should ensure the laboratory has been notified in advance of the pending shipment and notify any additional parties as required. The sampler needs to know the laboratory's contact name, address, and telephone number and be aware of the laboratory's requirements for receiving samples.

In addition, samplers should be aware of the sample holding times, shipping company's hours of operation, shipping schedule, and pick-up and drop-off requirements to avoid delays in analytical testing.

Priority Overnight Delivery

Priority overnight delivery is typically the best method for shipment. Delays caused by longer shipment times may cause the sample temperature to rise above the acceptable range of 4° C (± 2 ° C) and technical holding time may expire, which in turn may compromise sample integrity and require recollection of

samples. If sample delivery procedures are to be modified for particular contract- or laboratory-specific requirements, the procedures should be clearly described in site-specific plans such as work plans, FSPs, or QAPPs.

Saturday Delivery

If planning to ship samples for Saturday delivery, the laboratory must be contacted in advance to confirm it will accept deliveries on Saturdays or arrange for them to be accepted. In addition, samplers should ensure the laboratory has been notified in advance of the pending shipment and notify any additional parties as required.

2.4 HEALTH AND SAFETY CONSIDERATIONS

In addition to the procedures outlined in this SOP, all field staff must be aware of and follow the health and safety practices that result from the Activity Hazard Analyses (AHA) for the project. The AHAs include critical safety procedures, required controls, and minimum personal protective equipment necessary to address potential hazards. The hazards specific to project tasks must be identified and controlled to the extent practicable and communicated to all project personnel via the approved, project-specific health and safety plan (HASP).

3.0 POTENTIAL PROBLEMS

The following potential problems may occur during sample shipment:

- Leaking package. If a package leaks (either from broken sample containers or melting ice), the carrier may open the package and return the package. Special care should be taken during sample packaging to minimize potential leaks.

- Improper labeling and marking of package. If mistakes are made in labeling and marking the package, the carrier will most likely notice the mistakes and return the package to the shipper, thus delaying sample shipment. A good practice is to have labels, forms, and container markings double checked by a member of the field team.

- Bulk samples and air samples delivered to the analytical laboratory in the same container. If samples are combined in this way, they will be rejected. Always ship bulk samples in separate containers from air samples.

- Issues in packing asbestos samples. When asbestos samples are shipped, avoid using expanded polystyrene because of its static charge potential. Also avoid using particle-based packaging materials with asbestos samples because of possible contamination.

- Improper, misspelled, or missing information on the shipper's declaration. The carrier will most likely notice these errors as well and return the package to the shipper. A good practice is to have another field team member double check this information.

- Missed drop off time or wrong location. Missing the drop off time or having the wrong location identified for drop off will delay delivery to the laboratory and may cause technical holding times to expire. Establish the time requirements in advance of completing the field effort and be sure and provide some contingency time for potential delays such as traffic or checking and redoing paperwork.

- Incorrectly packaging samples for analysis at multiple laboratories. For example, inorganic samples may be shipped to one laboratory for analysis, while organic samples may need to be shipped to another laboratory. All field staff should be aware which samples are to be shipped to which laboratory when they package samples for multiple types of analysis.

- Holidays or weather-related delays. Be aware of holidays and weather forecasts that could cause delays in delivery. Delays caused by longer shipping times may cause technical holding times to expire, which in turn may compromise sample integrity or require recollection of samples.

- Not noting field variances in field logbook. Field variances should be noted in the field logbook and the project manager notified. Common field variances include:

  - Less sample volume collected than planned. Notify appropriate staff and the laboratory to ensure there is an adequate amount for analysis.

  - Sample collected into incorrect jar because of broken or missing bottle-ware. Notify appropriate laboratory staff to ensure there is no confusion regarding the analysis of the sample.

FIGURE 1

EXAMPLE OF A FEDEX US AIRBILL FOR LOW-LEVEL ENVIRONMENTAL SAMPLES

Filling Out the FedEx US Airbill

- The sender *must complete* the following fields on the pre-printed airbill:
  - Section 1: Date
  - Section 1: Sender's FedEx Account Number (available from your office administrator)
  - Section 1: Sender's Name, Company, Address, and Phone Number
  - Section 2: Internal Billing Reference (Project Number) (this field may not be present on newer airbills)
  - Section 3: Recipient's Name, Company, Address, and Phone Number
  - Section 4: Express Package or Freight Services (Priority Overnight)
  - Section 5: Packaging (usually "Other," your own packaging)
  - Section 6: Special Handling (Saturday delivery if prearranged with receiving laboratory; "No" dangerous goods contained in shipment)
  - Section 7: Payment ("Bill to Sender")
  - Section 7: Total Number of Packages
  - Section 7: Total Weight (completed by FedEx employee)
  - Section 8: Delivery Signature Options ("No Signature Required")

Completing a Sample Chain-of-Custody Form (See Also Section 2.2 on SCRIBE for Forms)

After samples have been collected, they will be maintained under chain-of-custody procedures. These procedures are used to document the transfer of custody of the samples from the field to the designated

analytical laboratory. The same chain-of-custody procedures will be used for the transfer of samples from one laboratory to another, if required.

The field sampling personnel will complete a Chain-of-Custody and Request for Analysis (CC/RA) form for each separate container of samples to be shipped or delivered to the laboratory for chemical or physical (geotechnical) analysis. These forms are often triplicate, carbonless forms. Care should be taken when completing the form that all copies are legible—PRESS FIRMLY WHEN WRITING. Information on the form will include:

1. Project identification (ID) (for example, contract and task order number);
2. Project Contract Task Order (CTO) number;
3. Laboratory Project Order (PO) number;
4. Tetra Tech Technical Contact;
5. Tetra Tech Project Manager;
6. Laboratory name;
7. Field sampler names;
8. Field sampler signature;
9. Sample ID;
10. Date and time of sampling;
11. Sample matrix type;
12. Sample preservation method; note “NONE” if no preservatives;
13. Number and types of containers per sample;
14. Sample hazards (if any);
15. Requested analysis;
16. Requested sample turnaround time or any special remarks (for example, possible presence of free product or high screening concentrations);
17. Page __ of __;
18. Method of shipment;
19. Carrier/waybill number (if any);
20. Signature, name, and company of the person relinquishing the samples and the person receiving the samples when custody is transferred;

21. Date and time of sample custody transfer;
22. Condition of samples when they are received by the laboratory.

The sample collector will cross out any blank space on the CC/RA form below the last sample number listed on the part of the form where samples are listed.

The sampling personnel whose signature appears on the CC/RA form is responsible for the custody of a sample from time the sample is collected until the custody of the sample is transferred to a designated laboratory, a courier, or to another Tetra Tech employee for transporting a sample to the designated laboratory. A sample is considered to be in custody when the custodian: (1) has direct possession of it; (2) has plain view of it; or (3) has securely locked it in a restricted access area.

Custody is transferred when both parties to the transfer complete the portion of the CC/RA form under "Relinquished by" and "Received by" or a sample is left at a FedEx facility pending shipment. Signatures, printed names, company names, and date and time of custody transfer are required. When custody is transferred, the Tetra Tech sampling personnel who relinquished the samples will retain the third sheet (pink copy) of the CC/RA form. When the samples are shipped by a common carrier, a Bill of Lading supplied by the carrier will be used to document the sample custody, and its identification number will be entered on the CC/RA form. Receipts of Bills of Lading will be retained as part of the permanent documentation in the Tetra Tech project file.

FIGURE 2

EXAMPLE OF A CHAIN-OF-CUSTODY FORM (WHITE COPY)

Tetra Tech EM Inc.
Oakland Office
1999 Harrison Street, Suite 500
Oakland, CA 94612
510.302.6300 Phone
510.433.0830 Fax

Chain of Custody Record No. 9814 13G175 Page 1 of 1

Lab PO#: 13OAK27
Lab: EMAX
Project name: Concord PA PNI
TtEMI technical contact: Sara Woolley
Field samplers: Sandy Jack, Rebecca Johnson
Project (CTO) number: 1036 A59029
TtEMI project manager: Steve Dellhomme
Field samplers' signatures:

Preservative Added: NONE, NONE, NONE

	Sample ID	Point ID/Depth	Date	Time	Matrix	MS / MSD	40 ml VOA	1 liter Amber	500 ml Poly	Sleeve	Glass Jar 8 oz	250 ml Poly	Encore	VOA	SVOA	Pest	Metals	TPH Purgeables	TPH Extractables	PCB
1	029SRE SS01		7/22/13	1240	Soil						2				X		X		X	X
2	029SRE SS02		7/22/13	1245							2				X		X		X	X
3	029PBC3DSS01		7/24/13	1200							1				X		X		X	
4	029C3DSS02			1215							1				X		X		X	
5	029C3DSS03			1230							1				X		X		X	
6	029C3DSS04			1245							1				X		X		X	

	Name (print)	Company Name	Date	Time
Relinquished by:	Rebecca Johnson	TtEMI	7/26/13	1630
Received by:	Cecilia Chavez	EMAX	7/30/13	09:30
Relinquished by:				
Received by:				
Relinquished by:				
Received by:				

Turnaround time/remarks: Standard TAT Temp – 20°C
Prioritize: SVOCs, TPH-e on 029C3DSS01 → 04 thermometals
Fed Ex #: 8612 4667 7215

WHITE-Laboratory Copy YELLOW-Sample Tracker PINK-File Copy

FIGURE 3

EXAMPLE OF A SAMPLE COOLER WITH ATTACHED DOCUMENTATION

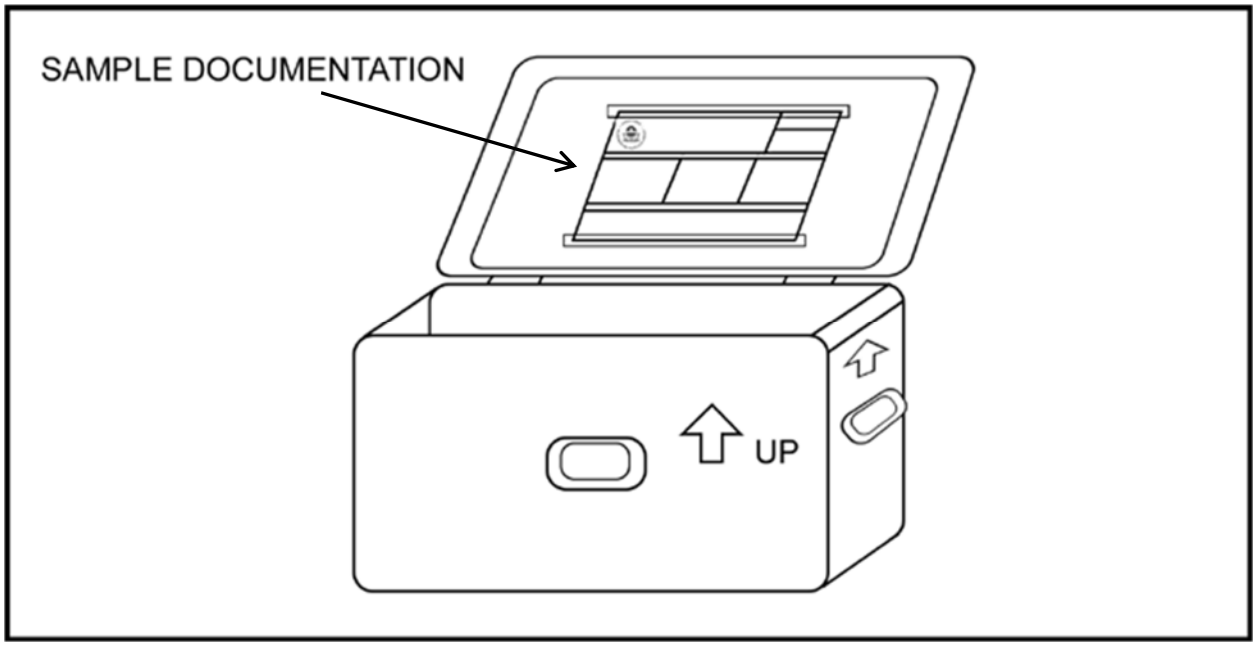

Source: U.S. Environmental Protection Agency. 2014.

Place the necessary paperwork (chain-of-custody form, cooler return instructions, and associated paperwork) in the shipping cooler or acceptable container. All paperwork must be placed in a plastic bag or pouch and then secured to the underside of the shipping container lid.

FIGURE 4

EXAMPLE OF A CUSTODY SEAL

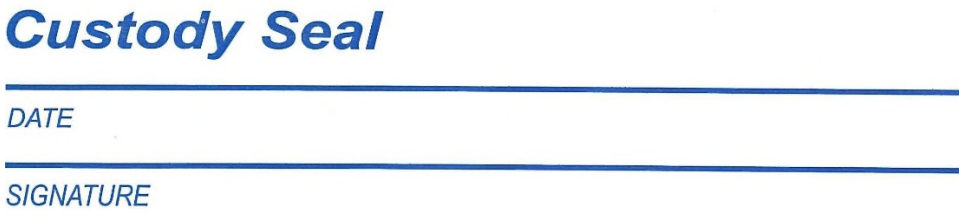

FIGURE 5

EXAMPLE OF SHIPPING COOLER WITH CUSTODY SEALS

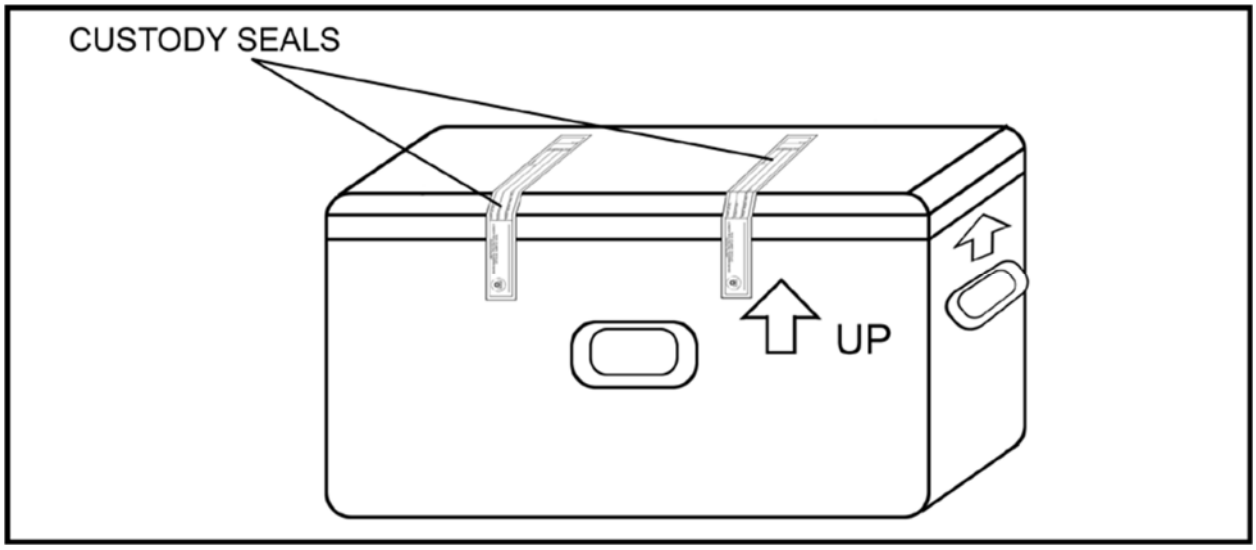

Source: U.S. Environmental Protection Agency. 2014.

Please note that the two seals typically are affixed to opposite sides of the cooler and offset from each other, although the offset is not depicted on the EPA figure above.

SOP APPROVAL FORM

TETRA TECH, INC.

EMI OPERATING UNIT

ENVIRONMENTAL STANDARD OPERATING PROCEDURE

RECORDING NOTES IN FIELD LOGBOOKS

SOP NO. 024

REVISION NO. 3

Last Reviewed: July 2020

Quality Assurance Approved	*July 2, 2020* Date

1.0 BACKGROUND

Complete and accurate field documentation is critical to a successful project and the field logbook is an important tool to support field documentation needs. The field logbook should include detailed records of all field activities, document interviews with people, and record observations of conditions at a site. Entries should be described in a level of detail to allow personnel to reconstruct, after the fact, activities and events that occurred during their field assignments. Furthermore, entries should be limited to facts. Avoid speculation related to field events and do not record hearsay or unfounded information that may be presented by other parties during field activities. For example, do not record theories regarding the presence or absence of contamination when you are collecting field screening data or speculation regarding the reasons for a property owner's refusal to grant access for sampling.

Field logbooks are considered accountable documents in enforcement proceedings and may be subject to review. Therefore, the entries in the logbook must be accurate and detailed, but should not contain speculative information that could conflict with information presented in subsequent project deliverables and correspondence. Also be aware that the field logbooks for a site may be a primary source of information for depositions and other legal proceedings that may occur months or years after field work is complete and long after our memories have faded. The accuracy, neatness, and completeness of field logbooks are essential for recreating a meaningful account of events.

Field notes may also be recorded digitally, using a variety of software programs. The requirements and use of digital recording programs is not addressed in this standard operating procedure (SOP) because many items are unique to the selected software system. However, many of the principles discussed in this SOP will apply to the digital recording of field notes.

1.1 PURPOSE

The purpose of this SOP is to provide guidance to ensure that field logbook documentation collected during field activities meets all requirements for its later use. Among other things, field logbooks may be used for:

- Identifying, locating, labeling, and tracking samples
- Recording site activities and the whereabouts of field personnel throughout the day
- Documenting any deviations from the project approach, work plans, quality assurance project plans, health and safety plans, sampling plans, and any changes in project personnel
- Recording arrival and departure times for field personnel each morning and evening and weather conditions each day

- Describing photographs taken during the project.

In addition, the data recorded in the field logbook may later assist in the interpretation of analytical results. A complete and accurate logbook also aids in maintaining quality control, because it can verify adherence to project scope and requirements.

1.2 SCOPE

This SOP establishes the general requirements and procedures for documenting site activities in the field logbook.

1.3 DEFINITIONS

None.

1.4 REFERENCES

Compton, R.R. 1985. *Geology in the Field*. John Wiley and Sons. New York, NY.

1.5 REQUIREMENTS AND RESOURCES

The following items are required for field notation:

- Bound (sewn) notebooks
- Ballpoint pens or Sharpies with permanent waterproof ink
- 6-inch ruler (optional)

Field logbooks should be bound (sewn) with water-resistant and acid-proof covers, and each page should have preprinted lines or grids and numbered pages. They should be approximately $7^1/_2$ by $4^1/_2$ inches or $8^1/_2$ by 11 inches in size. Loose-leaf sheets are not acceptable for use as a field logbook, although logs and field forms used to record field measurements and data are acceptable as loose-leaf sheets maintained in a three-ring binder with numbered pages, as a supplement to the logbook. If notes are written on loose paper, they must be transcribed as soon as possible into a bound field logbook by the same person who recorded the notes originally.

Ideally, distribution of logbooks should be controlled by a designated person in each office. This person assigns a document control number to each logbook, and records the assignment of each logbook distributed (name of person, date distributed, and project number). The purpose of this procedure is to ensure the integrity of the logbook before its use in the field, and to document each logbook assigned to a

project. In the event that more than one logbook is assigned to a project, this process will ensure that all logbooks are accounted for at project closeout.

2.0 PROCEDURES

The following subsections provide general guidelines and formatting requirements for field logbooks, and detailed procedures for completing field logbooks.

2.1 GENERAL GUIDELINES

- A separate field logbook must be maintained for each project. If a site consists of multiple subsites (or operable units), designate a separate field logbook for each subsite. Similarly, if multiple activities are occurring simultaneously requiring more than one task leader (for example, well installation, private well sampling, or geophysical survey), each task leader should maintain a separate field logbook to ensure that each activity is documented in sufficient detail.

- At larger sites, a general field log may be kept at the site trailer or designated field office to track site visitors, document daily safety meetings, and record overall site issues or occurrences.

- Data from multiple subsites may be entered into one logbook that contains only one type of information for special tasks, such as periodic well water-level measurements.

- All logbooks must be bound and contain consecutively numbered pages. If the pages are not pre-numbered, the sequential page number should be written at the top of each page.

- No pages can be removed from the logbook for any purpose.

- All information must be entered using permanent, waterproof ink, either a traditional ballpoint pen or a permanent marker. Do not use pens with water-based ink (typically identified as rollerball or gel ink pens) because the ink may wash out if the paper gets wet. Pencils are not permissible for field notes because information can be erased. The entries should be written dark enough so that the logbook can be easily photocopied.

- Be sure that all entries are legible. Use print rather than cursive writing and keep the logbook pages free of dirt and moisture to the extent possible.

- Set apart critical information such as sample numbers by circling or drawing a box around the critical data.

- Do not enter information in the logbook that is not related to the project. The language used in the logbook should be factual and objective. Avoid speculation that could conflict with information presented in subsequent project deliverables and correspondence (see Section 1.0 above).

- Use military time, unless otherwise specified by the client. If a logbook entry is not related to a specific event, set it aside with the identification as a “NOTE.”

- Include site sketches, as appropriate.

- Begin a new page for each day’s notes.

- Include the date, project number, and location (if the project has multiple locations) at the top of each page.

- At the end of a day, draw a single diagonal line through any unused lines on the page, and sign at the bottom of the page. Note and implement any client-specific requirements (for example, some clients require each logbook page to be signed).
- Write notes on every line of the logbook. Do not skip any pages or parts of pages unless a day's activity ends in the middle of a page.
- If a line is left blank for some reason, cross it out (with a single line) and initial to prevent unauthorized entries.
- Cross out (with a single line) and initial any edits to the logbook entries. Note and implement any client-specific requirements (for example, some clients also require that edits be dated). Edits should only be made if the initial entry is illegible or erroneous. Do not make corrections for grammar or style.

2.2 LOGBOOK FORMAT

The layout and organization of each field logbook should be consistent and generally follow the format guidelines presented below. Some clients or contracts may have specific formatting guidelines that differ somewhat from this SOP; review client requirements at the start of the project to help ensure any client-specific guidelines are integrated.

2.2.1 Logbook Cover

Spaces are usually provided on the inside front cover (or the opening page in some logbooks) for the company name, address, contact names, and telephone numbers. If preprinted spaces for this information are not provided in the logbook, write the information on the first available page. Information to be included on the inside front cover or first page includes:

- Logbook document control number (assigned by issuer)
- "Book # of #" (determined by the project manager if there is more than one logbook for the project)
- Contract and task order numbers
- Name of the site and site location (city and state)
- Name of subsite (or operable unit), if applicable
- Type of activity, if the logbook is for a specific activity, such as well installation or indoor air sampling
- Beginning and ending dates of activities entered into the logbook

2.2.2 Inside Cover or First Page

Spaces are usually provided on the inside front cover (or the opening page in some logbooks) for the company name, address, contact names, and telephone numbers. If preprinted spaces for this information are not provided in the logbook, write the information on the first available page. Information to be included on the inside front cover or first page includes:

- Tetra Tech project manager and site manager names and telephone numbers
- Tetra Tech office address
- Client contact and telephone number
- Site safety officer and telephone number
- Emergency contact telephone number (911, if applicable, or nearest hospital)
- Subcontractor contacts and telephone numbers
- Site property owner or property manager contact information

Note—some clients prohibit the inclusion of personally identifiable information such as personal mobile telephone numbers on official project records.

2.3 ENTERING INFORMATION IN THE LOGBOOK

The following lists provide guidance on the types of information to be included in a typical field logbook. This guidance is general and is not intended to be all-inclusive. Certain projects or clients may specify logbook requirements that are beyond the elements presented in this SOP.

2.3.1 General Daily Entries

- Document what time field personnel depart the Tetra Tech office and arrive at the hotel or site. If permitted by the client to charge travel time for site work, document what time personnel leave and arrive at the hotel each day. (This information may be needed at remote sites where hotel accommodations are not near the site.)
- Indicate when all subcontractors arrive and depart the site.
- Note weather conditions at the time of arrival on site and any changes to the weather that might affect completion of project tasks during the day.
- Include the date and project number at the top of each page.
- Document that a site safety meeting was held and include the basic contents of the meeting.
- List the level of personal protection to be used for health and safety.

- Summarize the day's planned activities.
- Summarize which activities each field team member will be doing.

2.3.2 Field Activity Entries

- Refer to field data collection forms for details about field data collection activities (for example time, date, depth of samples, and field measurements). If separate field sampling sheets are not used, see Section 2.3.3 regarding logbook entries for sampling activities.
- Refer to well purge forms, well construction logs, and other activity-specific forms as applicable rather than including this type of information in the field logbook. These other forms allow the information to be more accessible at a later date.
- List any air monitoring instrumentation used, with readings and locations.
- Refer to instrument field logs for equipment calibration information.
- Summarize pertinent conversations with site visitors (agency representatives, property owners, client contacts, and local citizens).
- Summarize any problems or deviations from the quality assurance project plan (QAPP) or field sampling plan.
- Document the activities and whereabouts of each team member. (As indicated in Section 2.1, multiple logbooks may be required to ensure sufficient detail for contemporaneous activities).
- Indicate when utility clearances are completed, including which companies participated.
- Indicate when verbal access to a property is obtained.
- Include names, addresses, and telephone numbers of any pertinent site contacts, property owners, and any other relevant personnel.
- Document when lunch breaks or other work stoppages occur.
- Include approximate scale for all diagrams. If a scale is not available, write "not to scale" on the diagram. Indicate the north direction on all maps and cross-sections, and label features on each diagram.

2.3.3 Sampling Activity Entries

The following information should typically be on a sample collection log and referenced in the logbook. If the project does not use sample sheets as a result of project-specific requirements, this information should be included in the logbook.

- Location description
- Names of samplers
- Collection time

- Designation of sample as a grab or composite sample
- Identification of blind duplicates or split samples
- Type of sample (water, sediment, soil gas, or other medium)
- On-site measurement data (such as pH, temperature, and specific conductivity)
- Field observations (odors, colors, weather)
- Preliminary sample description
- Type of preservative used
- Instrument readings, if applicable

2.3.4 Closing Daily Entries

- Describe decontamination procedures (personnel and equipment).
- Describe handling and disposition of any investigation-derived wastes.
- Summarize which planned activities were completed and which ones were not.
- Note the times that personnel depart the site for the day.
- Summarize any activities conducted after departing the site (paperwork, sample packaging, etc.). This may be required to document billable time incurred after field activities were completed for the day.

2.3.5 Photographic Log Entries

- Before using a digital camera, ensure that the system date and time are correct. Verify whether the timestamp is being recorded on the image, if required.
- Indicate in the text that photographs were taken and the location where the photographs can be found (for example, in the project file) and identify the photographer.
- Begin a new photolog page for each new field day.
- Record the time of photograph so that the image can be generally identified when reviewing the digital files.
- Note the direction in which the photograph was taken, along with any relevant details that might not be understood when looking at the photograph.
- In the event that a film camera is used, the sequential number of the image should also be recorded, and the time from the logbook will be the recorded time for the photograph.

2.4 LOGBOOK STORAGE

Custody of logbooks must be maintained at all times. During field activities, field personnel must keep the logbooks in a secure place (locked car, trailer, or field office) when the logbook is not in personal possession. When the field work is over, the logbook should be included in the project file, which should be in a secured file cabinet; in addition, if directed by the project manager, scan logbook pages for electronic file management upon returning to the office. The logbook may be referenced in preparing subsequent reports and scanned logbook pages may be included as an appendix to a report. However, it is advisable to obtain direction directly from the client before including the logbook as a report appendix, because its inclusion may not be appropriate in all cases.

2.5 HEALTH AND SAFETY CONSIDERATIONS

In addition to the procedures outlined in this SOP, all field staff must be aware of and follow the health and safety practices that result from the Activity Hazard Analyses (AHA) for a project. The AHAs include critical safety procedures, required controls, and minimum personal protective equipment necessary to address potential hazards. The hazards specific to project tasks must be identified and controlled to the extent practicable and communicated to all project personnel via the approved, project-specific health and safety plan.

SOP APPROVAL FORM

TETRA TECH, INC.

EMI OPERATING UNIT

LABORATORY ANALYTICAL DATA STANDARD OPERATING PROCEDURE

LABORATORY ANALYTICAL DATA VERIFICATION –
MINIMUM REQUIREMENTS

SOP NO. 203

REVISION NO. 1

Last Reviewed: January 2019

Quality Assurance Approved

January 2019
Date

1.0 BACKGROUND

Data quality assurance (QA) is necessary for every project. It is the total integrated process for assuring reliability and defensibility of decisions based on data—including analytical data. In particular, the appropriate level and accurate review of data resulting from chemical and physical analysis are essential to ensure these data are of sufficient quality to support the project's technical requirements.

1.1 PURPOSE

The purpose of this standard operating procedure (SOP) is to ensure laboratory data used by Tetra Tech to make project decisions are of the quality required and provide the level of confidence needed to make the appropriate project decisions. This SOP specifies data verification guidelines for ensuring achievement of a minimum level of project data QA.

1.2 SCOPE

Analytical data generated for Tetra Tech projects must receive the appropriate level of data review. The level of detail and stringency of data verification or data validation depends on the needs of the project and program. This SOP specifies guidance for data verification procedures when program-specific or regulatory requirements are not defined contractually or by program procedures and regulations (for example, Phase II Environmental Site Assessments, emissions monitoring, and compliance reporting data for permit applications).

1.3 DEFINITIONS

This subsection defines key terms used in the text.

Data package – A hard copy or electronic report from an analytical laboratory for a set of chemical or physical analyses performed on a group of samples (sometimes referred to as a sample delivery group). The data package should contain sufficient QA documentation to complete data verification and determine data usability (as discussed in Section 1.5 of this SOP).

Data usability – A qualitative decision process whereby a qualified person determines whether the data may be used for the intended purpose. Data should be classified into one of the following two categories: usable or rejected (unusable).

Data verification – The act of determining and documenting whether data conform to specified requirements. The determination may involve processes such as reviewing, inspecting, testing, checking, recalculating, and auditing (EPA 2002).

Rejected data – Data that do not conform to some or all requirements considered critical to assuring and confirming the quality of the data. Nonconformances may include: (1) critical quality control (QC) criteria are not met (see Table 1); (2) appropriate methods were not followed or the methods used involved significant deviations that might impact data quality or meaning; and (3) critical documentation is missing or incomplete.

Sample delivery group – A unit (group) of samples received by the laboratory during a field sampling event. A "sample delivery group" (SDG) is typically composed of 20 or fewer samples and is grouped based on the number of samples and not the analytical testing requested. An SDG may be defined based on the number of samples received by the laboratory on a given day or over a period of up to 7 calendar days.

Qualified person – A chemist or other person who has received training in or has demonstrated skills and knowledge of laboratory procedures and QC. The qualified person involved in data verification should understand the data generation procedures and know project documentation and data quality requirements. Although data validation is beyond the scope of this SOP, a qualified person should be capable of providing the necessary level of professional judgment (which requires familiarity with data validation procedures). Examples of data validation guidance can be found in EPA's *National Functional Guidelines for Superfund Methods Data Review* (EPA 2016, 2017a, 2017b), though some projects may rely on guidance from other sources.

Usable data – Data conforming to most or all requirements considered critical to assuring and confirming the quality of the data. Conformances important to achieve usability include: (1) critical QC criteria are met (see Table 1); (2) appropriate methods were followed, or only minor deviations to the methods were made that would not impact data quality or meaning; and (3) critical documentation is complete. Professional judgment by a qualified person should be used to determine data usability.

1.4 REFERENCES

U.S. Environmental Protection Agency (EPA). 2002. *Guidance on Environmental Data Verification and Data Validation (EPA QA/G-8)*. Office of Environmental Information. Washington, DC. EPA/240/R-02/004. November. Reissued January 2008. On-line address: https://www.epa.gov/sites/production/files/2015-06/documents/g8-final.pdf

EPA. 2016. *National Functional Guidelines for High Resolution Superfund Methods Data Review*. Office of Superfund Remediation and Technology Innovation (OSRTI). Washington, DC. EPA-542-B-16-001. April. On-line address: https://www.epa.gov/sites/production/files/2016-05/documents/hrsm_nfg.pdf

EPA. 2017a. *National Functional Guidelines for Organic Superfund Methods Data Review*. OSRTI. Washington, DC. EPA-540-R-2017-002. January. On-line address: https://www.epa.gov/sites/production/files/2017-01/documents/national_functional_guidelines_for_organic_superfund_methods_data_review_013072017.pdf

EPA. 2017b. *National Functional Guidelines for Inorganic Superfund Methods Data Review*. OSRTI. Washington, DC. EPA-540-R-2017-001. January. On-line address: https://www.epa.gov/sites/production/files/2017-01/documents/national_functional_guidelines_for_inorganic_superfund_methods_data_review_01302017.pdf

1.5 REQUIREMENTS AND RESOURCES

The following are required for laboratory data verification as described in this SOP:

- Laboratory data package(s)
- Project-specific information for data use (that is, work plan, sampling and analysis plan [SAP], quality assurance project plan [QAPP], proposal, or purchase order)
- Qualified person, familiar with laboratory procedures and capable of determining data usability.

Laboratory data package(s) should include the following to allow for data verification:

- Cover letter or case narrative, including the laboratory name and address, that certifies analytical results via signature of the project chemist, QA manager, or laboratory manager
- Signed field chain-of-custody form(s)
- Sample receipt and log-in forms, which include general comments and specify temperature, holding time, bottle breakages, and any nonconformances or discrepancies (Note: this information is sometimes included on the chain-of-custody form)
- Laboratory log-in summary, including laboratory sample ID, field sample ID, list of analyses performed, and analytical methods employed (Note: this information is occasionally included on the analytical results forms and not on a separate summary)
- Analytical results
- Applicable analytical batch QC results (for example, method and field blanks, surrogate spikes, matrix spike/matrix spike duplicates [MS/MSD], and laboratory control sample/laboratory control sample duplicates [LCS/LCSD])
- List of laboratory data qualifier definitions.

Time required for laboratory data verification can vary greatly depending on the number and type of analyses per data package, and the number of samples per data package. The following rules of thumb, including producing a record of the type found in Attachment A, may be useful for planning purposes:

- 30 minutes for an SDG with one major analysis (for example, metals or volatiles)
- 90 minutes to 2 hours for an SDG with a common suite of analyses (for example, metals, volatiles, semivolatiles, pesticides, polychlorinated biphenyls, and total petroleum hydrocarbons)
- 30 minutes for an SDG with a common suite of wet chemistry analyses (for example, alkalinity, pH, major anions, total organic carbon, total dissolved solids, and total suspended solids).

The times noted are estimates only. Involving a qualified person in the planning process will help ensure proper budget for data verification.

2.0 PROCEDURES

Step 1 – The project manager identifies a qualified person with an understanding of laboratory data generation and usability to review and verify the data. If the data are released to the client prior to verification, the client should be advised that the data are preliminary pending this review. It is possible that more than one qualified person may be assigned; for example, one person to review the samples analyzed by the laboratory for completeness against the SAP, and another to verify the data quality.

Step 2 – The qualified person identifies the project analytical QA/QC needs for documentation and technical specifications as these apply to data content and quality. A work plan, SAP, QAPP, regulatory guidance, laboratory analytical method, client contract, or project scope of work may identify the technical specifications and QA/QC requirements.

Step 3 – The qualified person reviews the data and documents the review findings based on the requirements for data quality needed to achieve project objectives. Serious issues regarding data usability are immediately brought to the project manager's attention for further discussion and resolution. Table 1 describes the elements of data verification.

In all cases, the laboratory chain-of-custody form indicating sample IDs, matrices, and analytical methods—and perhaps frequency of collection and submittal of QA/QC samples (such as field duplicates, trip blanks, field blanks, equipment rinsate blanks, and MS/MSDs)—should be cross-checked with the SAP or the contracted scope of work.

In each case, professional judgment should be used to determine data usability. Ultimately, the project manager's responsibility is to ensure a qualified person has reviewed the laboratory data package and has deemed the data usable for the data's intended purpose.

Step 4 – The qualified person reviews and compares the analytical method detection limits (MDL), reporting limits (RL), and practical quantitation limits (PQL) for compliance with project requirements. Explicit definition and clarification of MDLs, RLs, and PQLs should be established before field activities begin.

Step 5 – The qualified person communicates findings. The deliverable from the qualified person includes at least one of the following:

- An e-mail indicating data usability
- A memorandum summarizing the evaluated results
- A table of data showing data considered biased or outside acceptance criteria for various data quality indicators by a large enough factor that use of the data might affect environmental decisions.

Some written form of communication should be provided for the project file. An example of a minimum data verification deliverable is included as Attachment A.

3.0 DATA VERIFICATION RESULTS

As described above, potential data verification issues involving the following designations may be encountered during this process:

Rejected data – During verification, the qualified person may reject some or all of the data (that is, consider the data unusable). If laboratory data are rejected based on poor quality, the project manager may ask the laboratory to re-analyze the extract, or re-digest and re-extract the original sample if enough volume remains. If reanalysis or re-digestion and re-extraction of samples are not viable options, re-collection of the samples may be required.

Inadequate data – The qualified person may find the data inadequate for the intended purpose, even if all QC criteria were met—for example, a case in which laboratory reporting limits are not adequate to meet the comparison or screening values established during the project planning process.

Incomplete data packages – The data package provided by the laboratory may not be complete. If the laboratory data package does not include the minimum contents defined in Section 1.5, the laboratory should be notified and required to issue a revised data package.

If any of the above data designations are assigned by the data verifier, the situation should be addressed immediately and corrected to minimize effects on future project deliverables. Further discussion with the analytical laboratory may help in the effort to address each of the above situations. The data verifier and the project manager should discuss potential remedies or corrective measures to minimize impact(s) of the above situations on project analytical data and decisions based on those data.

Table 1
Elements of Laboratory Data Verification

Data Report Element	Minimum Required Review	Actions
Chain-of-custody form	Review laboratory log-in information against chain-of-custody forms and the contracted scope of work or planning documents for: accuracy and completeness of documentation, sample quantity and IDs, proper signatures attesting to chain of custody, sample condition upon receipt (breakage, temperature, etc.), sample preservation (see below), and analytical method selection.	Discrepancies regarding log-in, chain of custody, analytical method selection, or related issues should be immediately addressed. If discrepancies are identified, the laboratory should be contacted immediately, and corrective actions implemented. Improper sample handling and preservation should be investigated to determine sample adequacy (see "Sample preservation, storage, and holding times" below).
Data package completeness	Review data package to make sure that all requested analytical procedures have occurred and required corresponding data are reported.	Analytical results that lack supporting data and information may be considered invalid and not usable for the purpose intended. Such conditions should be immediately addressed with the project team and laboratory.
Sample preservation, storage, and holding times	Review sample preservation, storage, and holding times in compliance with selected analytical method and matrix.	Analytical results of samples not properly preserved and stored or digested/extracted or analyzed outside the appropriate holding time, may be considered invalid and not usable for the purpose intended. Such conditions should be immediately addressed with the project team.
Method and field blanks	Review blank data for positive results that may indicate possible field or laboratory contamination.	If blank contamination is found in either the laboratory method blanks or the field QC blanks (that is, equipment rinsate blanks, source or field blanks, or trip blanks), associated sample results should be reviewed. Detections in the associated environmental samples may be attributed to laboratory or field contamination, and qualifications of the data may be necessary.
Precision and accuracy* (may include surrogate spikes, MS/MSDs, and LCS/LCSDs, as well as additional QC elements)	Review QC data summaries for the analytical method used. Use project-required, method-required, or laboratory-provided control limits. Review laboratory-assigned data quality flags and notations, and revise if necessary.	In general, recoveries and relative percent difference values for surrogate spikes, MS/MSDs, LCS/LCSDs, or other reviewed QC elements that fall outside of the specified control limits may indicate problems with the laboratory analysis.*

Notes:

*	The type and amount of QC information available for review will depend upon the analytical method and level of data package requested.
QC	Quality control
LCS/LCSD	Laboratory control sample/laboratory control sample duplicate
MS/MSD	Matrix spike/matrix spike duplicate

ATTACHMENT A
EXAMPLE DATA VERIFICATION REPORT

Prepared by: _____

Date: _____

Site Name/Job Number: _____

Laboratory: _____

Data Package or SDG Number: _____

Sample Designations/Names (ID): _____

Matrices: _____

Analytical Parameters: _____

Data Package Element	Usable	Rejected	NA	Description of Affected Data (note specific samples and analytical parameters affected)
Chain-of-custody form				
Data package completeness				
Sample preservation, storage, and holding times				
Method and field blank contamination				
Surrogate spikes				
Matrix spikes/matrix spike duplicates (MS/MSD)				
Laboratory control samples/laboratory control sample duplicates (LCS/LCSD)				
Other				
Summary				

Notes:

NA Not applicable
SDG Sample delivery group

APPENDIX C

LABORATORY STANDARD OPERATING PROCEDURES

ALS Standard Operating Procedure

DOCUMENT TITLE:	REACTIVE CYANIDE
REFERENCED METHOD:	SW846 - 7.3.3.2
SOP ID:	HN-WC-015
REV. NUMBER:	R07
EFFECTIVE DATE:	08/31/2016

ALS Environmental

REACTIVE CYANIDE

SW846 - 7.3.3.2

SOPID:	HN-WC-015	Rev. Number:	R07	Effective Date:	08/31/2016

Approved By: _____ Date: 8-1-16
Department Supervisor

Approved By: _____ Date: 8/4/16
Operations Manager

Approved By: _____ Date: 7/29/16
QA Manager

Approved By: _____ Date: 8/1/16
Laboratory Director

Archival Date:	_____	Doc Control ID#:	_____	Editor:	_____

PROCEDURAL REVIEW

SIGNATURES BELOW INDICATE NO PROCEDURAL CHANGES HAVE BEEN MADE TO THE SOP SINCE THE APPROVAL DATE ABOVE. THIS SOP IS VALID FOR 24 ADDITIONAL MONTHS FROM DATE OF THE LAST SIGNATURE UNLESS INACTIVATED OR REPLACED BY SUBSEQUENT REVISIONS.

Signature	Title	Date
	QA Manager	9/27/2018

TABLE OF CONTENTS

1) Scope and Applicability 1
2) Summary of Procedure 1
3) Definitions 1
4) Health and Safety Warnings 2
5) Cautions 2
6) Interferences 2
7) Personnel Qualifications and Responsibilities 3
8) Sample Collection, Handling, and Preservation 4
9) Equipment and Supplies 4
10) Standards and Reagents 4
11) Method Calibration 5
12) Sample Preparation/Analysis 6
13) Troubleshooting 6
14) Data Acquisition 6
15) Calculation, and Data Reduction Requirements 7
16) Quality Control, Acceptance Criteria and Corrective Action 8
17) Data Records Management 9
18) Contingencies for Handling Out of Control Data 10
19) Method Performance 10
20) Summary of Changes 10
21) References and Related Documents 10

REACTIVE CYANIDE

1) Scope and Applicability

1.1 The method determines the concentration of reactive cyanide in soils or wastes and measures only the hydrocyanic acid (HCN) evolved in the presence of dilute sulfuric acid. It is not intended to measure forms of cyanide other than those that evolve under the test conditions. Any HCN produced by the sample can be captured and measured in an aqueous sodium hydroxide solution. This titrimetric procedure is used for concentrations greater than 2.936 mg/L of cyanide.

2) Summary of Procedure

2.1 An aliquot of sulfuric acid solution is added to a fixed weight of waste in a closed system. In the presence of reactive cyanide, the acid causes a release of hydrocyanic acid (HCN) in a gaseous form. Any HCN released by the sample is swept into a scrubber containing a NaOH solution. The NaOH solution captures the HCN and an aliquot is then titrated with $AgNO_3$ in the presence of a silver sensitive indicator. The cyanide concentration is then calculated based on the volume of titrant used with respect to the amount used for a blank.

3) Definitions

3.1 DI: Deionized reagent water meeting purity characteristics of ASTM Type II laboratory distilled water (daily conductivity <1.0 umhos/cm).

3.2 Batch: A group of 20 or less field samples processed during the same working shift (8 hours).

3.3 Laboratory Control Sample (LCS): An analyte-free matrix spiked with known concentrations of all target analytes. This is used to evaluate and document laboratory method performance.

3.4 Matrix: The component or substrate (e.g., surface water, groundwater, soil) which contains the analyte of interest.

3.5 Matrix Spike (MS): An aliquot of background sample spiked with a known concentrations of all target analytes. The spiking occurs prior to sample preparation and analysis. A matrix spike is used to assess the bias of a method in a given sample matrix.

3.6 Matrix Spike Duplicate (MSD): A duplicate aliquot of the background sample spiked with a known concentrations of all target analytes. Spiking occurs prior to sample preparation and analysis. The MS/MSD pair are used to assess precision and bias of a method in a given sample matrix.

3.7 Method Blank: An analyte-free matrix to which all reagents are added in the same volumes or proportions as used in sample processing. The method blank is carried through the complete sample preparation and analytical procedure. The method blank is used to document contamination resulting from the analytical process.

3.8 Limit of Quantitation (LOQ): The minimum levels, concentrations, or quantities of a target variable (e.g., target analyte) that can be reported with a specified degree of confidence. The LOQ is also referred to as the method quantitation limit (MQL) or the reporting limit (RL).

3.9 Limit of Detection (LOD): an estimate of the minimum amount of a substance that an analytical process can reliably detect. An LOD is analyte- and matrix-specific and may

be laboratory-dependent.

3.10 Method Detection Limit (MDL) study: the procedure, as described in 40CFR part 136, for determining the LOD based on statistical analysis of 7 low-level replicate spikes.

4) Health and Safety Warnings

4.1 Lab Safety: Due to various hazards in the laboratory, safety glasses and laboratory coats or aprons must be worn at all times while in the laboratory. In addition, gloves and a face shield should be worn when dealing with toxic, caustic, and/or flammable chemicals.

4.2 Chemical Hygiene: The toxicity or carcinogenicity of each reagent used has not been precisely defined; however, each chemical used should be treated as a potential health hazard. Exposure to laboratory reagents should be reduced to the lowest possible level. The laboratory maintains a current awareness file of OSHA regulations regarding the safe handling of the chemicals specified in this method. A reference file of data handling sheets (MSDS) is available to all personnel involved in these analyses.

4.3 Waste Management: The principal wastes generated by this procedure are the method-required chemicals and standards. It is the laboratory's responsibility to comply with all federal, state, and local regulations governing waste management by minimizing and controlling all releases from fume hoods and bench operations. Compliance with all sewage discharge permits and regulations is required. Laboratory procedures in SOP HN-SAF-001, Waste Disposal Procedures, must be followed.

4.4 Pollution Prevention: The materials used in this method pose little threat to the environment when recycled and managed properly. The quantities of chemicals purchased should be based on the expected usage during its shelf life. Standards and reagents should be prepared in volumes consistent with laboratory use to minimize the volume of expired standards or reagents to be disposed.

5) Cautions

5.1 ***WARNING - NEVER MIX CYANIDE SAMPLES WITH ACIDS*** without proper precautions set in place. The result is potentially lethal HCN gas.

5.2 Primary standards of cyanide compounds should be prepared in a hood. All acidification should be done in closed system or a hood. All work should be conducted in a well-ventilated work area to minimize respiratory exposure.

6) Interferences

6.1 Sulfides: Acidification of samples containing reactive sulfide will result in the release of hydrogen sulfide gas (H_2S). The H_2S will be trapped in the NaOH scrubber as sulfide. Reduced and oxidized products of sulfide convert CN^- to SCN^- rapidly, especially at high pH. This reaction is also enhanced by the distillation step as well, yielding an almost complete conversion of all available sulfides to thiocyanate if any cyanide is present. Ideally, the sample should be tested for sulfide prior to acidification for this procedure. Samples known to contain sulfide may require standard distillation of the solid matrix rather than a reactive determination where the release of sulfide can be controlled by adding an excess of bismuth nitrate prior to distillation to precipitate the sulfide. Samples suspected to contain sulfide should be tested with 1:1 HCl and lead acetate test paper to detect any H_2S.

6.2 Organic Interferences: If any volatile organics are present in the sample, the acidification process used for reactive cyanide may preferentially decompose or release

some of these compounds. These organics may either polymerize in the generating flask or may distill over into the NaOH scrubber solution producing turbidity. If the organics contain nitrogen-carbon bonds the acidification process may actually form cyanide that was not present in the original sample.

6.3 Aldehydes: Aldehydes (such as formaldehyde) convert cyanide to cyanohydrin. Long contact times between cyanide and the aldehyde and/or a high ratio of aldehyde to cyanide can result in increasing losses of cyanide.

6.4 pH Dependency: The rapidity of the decomposition process for cyanides is affected by the pH and water content of the sample. If the sample pH (1:1) is below 7, the sample will possibly generate highly toxic hydrogen cyanide.

6.5 Thiocyanate: Thiocyanate at very high levels is a reported interference.

6.6 In the instance of a titration interfering compound, the sample aliquot may be alternatively quantified using flow injection determination as outlined in the SOP HN-WC-014, Cyanide.

7) Personnel Qualifications and Responsibilities

7.1 General Responsibilities - This method is restricted to use by or under the supervision of analysts experienced in the method.

7.2 Analyst - It is the responsibility of the analyst(s) to:

7.2.1 Each must read and understand this SOP and follow it as written. Any deviations or non-conformances must be documented and submitted to the QA Manager for approval.
7.2.2 Produce method compliant data that meets all quality requirements using this procedure and the Data Reduction, Review and Validation SOP (HN-QS-009).
7.2.3 Complete the required initial demonstration of proficiency before performing this procedure without supervision.
7.2.4 Complete an ongoing demonstration of proficiency annually when continuing to perform the procedure.
7.2.5 The analysts must submit data for peer or supervisor review.

7.3 Section Supervisor - It is the responsibility of the section supervisor to:

7.3.1 Ensure that all analysts have the technical ability and have received adequate training required to perform this procedure.
7.3.2 Ensure analysts have completed the required initial demonstration of proficiency before performing this procedure without supervision.
7.3.3 Ensure analysts complete an ongoing demonstration of proficiency annually when continuing to perform the procedure.
7.3.4 Ensure analysts produce method compliant data that meet all quality requirements using this procedure and the Data Reduction, Review and Validation SOP.

7.4 Project Manager - It is the responsibility of the Project Manager to ensure that all method requirements for a client requesting this procedure are understood by the laboratory prior to initiating this procedure for a given set of samples.

7.5 QA Manager: The QA Manager is responsible for

7.5.1 Approving deviations and non-conformances

7.5.2 Ensuring that this procedure is compliant with method and regulatory requirements,

7.5.3 Ensuring that the analytical method and SOP are followed as written through internal method and system audits.

8) Sample Collection, Handling, and Preservation

8.1 Solid waste and soil samples are collected in 4 oz. wide-mouth jars. Samples containing, or suspected of containing cyanide wastes should be collected with a minimum of aeration. The sample bottle should be filled completely, excluding all headspace, and sealed.

8.2 Analysis should commence as soon as possible, and the sample should be kept in a cool, dark area until analysis begins. It is suggested that samples of cyanide wastes be tested as quickly as possible. Adjusting the sample pH to 12 with a strong base can preserve some wastes. However, this will cause dilution of the sample, increase the ionic strength, and possibly change other physical or chemical characteristics of the waste. Storage of samples should be under refrigeration and in the dark. Testing should be performed in a ventilated hood. Samples should be analyzed within 14 days of collection and must be analyzed within 28 days.

9) Equipment and Supplies

9.1 Analytical balance, Sartorious ED124S, or equivalent.

9.2 Automatic pipettes, 0.5 mL and 5 mL

9.3 Various Class A volumetric flasks

9.4 Round-Bottom Flask - 250 mL, two-neck, with 24/40 ground glass joints.

9.5 Stirring Apparatus – Capable of achieving approximately 30 rpm.

9.6 Addition Funnel - With pressure equalizing tube and 24/40-ground glass joint.

9.7 Flexible Tubing - For connection of nitrogen supply to apparatus.

9.8 Regulator - Two-stage regulator for use with nitrogen.

9.9 Rotometer - For monitoring nitrogen gas flow rate.

9.10 Gas scrubber and 30 mL collection tube.

9.11 125 mL disposable plastic cups

10) Standards and Reagents

10.1 ASTM Type II or higher water (DI water)

10.2 Sulfuric Acid, Reagent Grade, concentrated (36*N*).

10.2.1 Sulfuric Acid Stock Solution (0.1*N*): Carefully add 2.8 ml of conc. Sulfuric Acid to 500 ml of DI water and dilute to 1L.

10.2.2 Sulfuric Acid Working Solution (0.01*N*): Add 50ml of 0.1*N* Sulfuric Acid Solution to 300 ml of DI water and dilute to 500 ml.

10.3 Cyanide Standard Solution (1250 mg/L):

10.3.1 Place 300 mL of DI water into a 1000 mL Class A Volumetric flask.

10.3.2 Weigh out 2.5g of potassium hydroxide (KOH) and add to the flask. Stopper

and swirl the contents of the flask to dissolve the KOH.

10.3.3 Weigh out 3.129 g of KCN into a plastic weighing dish. **Handle this reagent with extreme caution.** The use of gloves, safety glasses, and a lab coat is required when working with this chemical. If any KCN reagent is spilled during weighing, alert others to stay away from the area and be meticulous in cleaning up the affected area. Read the MSDS sheet prior to beginning this procedure.

10.3.4 Carefully transfer the KCN to the 1000-mL volumetric flask. Stopper and swirl the contents of the flask to dissolve the KCN.

10.3.5 Dilute to the mark on the flask with reagent water. Transfer the solution into a 1 liter amber bottle and label the bottle appropriately.

10.3.6 The concentration of CN^- in the flask is approximately 1250 mg/L.

10.3.7 Standardize by titration with 0.0141*N* $AgNO_3$ to accurately determine the concentration.

10.3.8 Prepare annually or when degradation is noted.

10.4 Sodium Hydroxide Solution (0.25*N*)

10.4.1 Weigh out 10.0 grams of NaOH into a plastic weighing dish and quantitatively transfer the reagent to a 1 L container containing approximately 500 mL of DI water. Swirl or mix to dissolve the reagent. Use caution, as this will generate considerable heat.

10.4.2 Bring to volume with DI water and transfer the solution to an appropriately labeled 1L bottle. Prepare annually or as needed.

10.5 Sodium Hydroxide Solution (12.5N) – purchased as a certified reagent from an approved supplier.

10.6 Sodium Hydroxide Solution (0.04*N*)

10.6.1 Add 64mL of 12.5N NaOH into ~1L DI in a 2L volumetric flask.

10.6.2 Bring to a final volume of 2L with DI.

10.6.3 Take a 100mL aliquot of the solution from 10.6.2 and bring to a final volume of 1L in a volumetric flask.

10.6.4 Alternatively, dissolve 1.6g of NaOH in approximately 600 mL of reagent water. Cool to room temperature and bring to a final volume of 1L with reagent water.

10.6.5 Prepare annually or as needed.

10.7 Silver Nitrate Solution (0.0141*N* $AgNO_3$): purchased as a certified solution from an approved supplier.

10.8 Rhodanine indicator (400 mg/L)

10.8.1 Dissolve 40 mg of p-dimethylaminobenzal-rhodanine, $C_{12}H_{12}N_2OS_2$, in 100 mL of acetone. Prepare annually or as needed.

11) Method Calibration

11.1 1250 mg/L Cyanide Standardization:

11.1.1 Using a Class A volumetric pipette, transfer 20 mL of 1250 mg/L standard to a 100 mL beaker. Add 1 ml of the rhodanine indicator solution.

11.1.2 Titrate using 0.0141N $AgNO_3$.

11.1.3 Titrate to the first change in color from yellow to salmon-colored hue.

11.1.4 Titrate a blank using 20 mL of reagent water.

11.1.5 Blank subtract the amount of titrant used for each standard titration.
11.1.6 Process at a minimum one duplicate sample for each standard.
11.1.7 Average the observed concentrations to obtain a final concentration for the standard.

12) Sample Preparation/Analysis

12.1 Generation and Collection of HCN in NaOH Scrubber Solution:

12.1.1 Add 25 mL of 0.25*N* NaOH solution to a calibrated scrubber.
12.1.2 Assemble the system and adjust the flow rate of nitrogen using the rotometer. Flow should be 60 mL/minute or adequate enough for a stream of 5 bubbles per second.
12.1.3 Add 5.0g of the waste sample to the system. Record the weight of waste in the method logbook to the nearest 0.01g.
12.1.4 With the nitrogen flowing, add 100 mL of 0.01N sulfuric acid and start the 30 minute test period.
12.1.5 Begin stirring while the acid is entering the round-bottom flask. Stirring should not create a vortex and must remain constant throughout the test.
12.1.6 After 30 minutes, close off the nitrogen and disconnect the scrubber.
12.1.7 Bring the 25 mL of scrubber solution up to 100 mL with DI water in a 125 mL disposable plastic cup.

12.1.7.1 A 50 mL aliquot of this solution will be used in Reactive Cyanide determination, while the remaining 50 mL aliquot will be used in Reactive Sulfide determination.

12.2 Determine the amount of cyanide in the 50 mL aliquot by using the titrimetric determination procedure (section 14).

13) Troubleshooting

13.1 N/A

14) Data Acquisition

14.1 Titrimetric Determination of Cyanide

14.1.1 Titration Blank

14.1.1.1 Add 50 mL of 0.04N NaOH to a clean 250 mL beaker equipped with a stirring bar.
14.1.1.2 Add 50 mL aliquot of blank sample from the HCN generation step.
14.1.1.3 Add 0.5 mL of indicator solution.
14.1.1.4 Record the beginning volume of silver nitrate titrant.
14.1.1.5 Titrate drop-wise until the indicator solution changes from yellow to a salmon-colored hue. Note: *This should only take 1 drop of titrant. Greater quantities indicate system contamination.*
14.1.1.6 Record the ending volume of silver nitrate titrant.
14.1.1.7 Subtract the ending volume of titrant from the beginning volume and record the difference as the “titration blank” value.

14.1.2 Sample Titration

14.1.2.1 Add 50 mL of 0.04M NaOH to a clean 250 mL beaker equipped with a stirring bar.
14.1.2.2 Add the 50 mL aliquot of the diluted scrubber solution. (Section 12.1.7.1)
14.1.2.3 Add 0.5 mL of indicator solution.
14.1.2.4 Record the beginning volume of silver nitrate titrant.
14.1.2.5 Titrate drop-wise until the indicator solution changes from yellow to a salmon-colored hue.
14.1.2.6 Record the ending volume of silver nitrate titrant.
14.1.2.7 Subtract the ending volume of titrant from the beginning volume and record the difference as the "Volume of Titrant" value.
14.1.2.8 Blank subtract to find the "Net Volume Used" of titrant and use that value to calculate the "Initial Concentration" of cyanide. (Section 15.2.1)
14.1.2.9 Convert the "Initial Concentration" to a "Reported Concentration", taking into account the sample weight used in the HCN generation process. (Section 15.2.2)

15) Calculation, and Data Reduction Requirements

15.1 All data must be recorded in the Reactive Cyanide logbook and input into LIMS.

15.2 Cyanide Concentration Calculation:

15.2.1 Initial Concentration

15.2.1.1 $$Initial\ Concentration\,(mg/L) = \frac{(Net\ Volume_{Titrant}) \times 0.734 \times 1000}{Sample\ Volume\ Titrated\,(mL)}$$

15.2.2 Reported Concentration

15.2.2.1 $$Final\ Concentration(mg/Kg) = \frac{(Initial\ Conc. \times 0.100L) \times 1000}{Sample\ Wt.(g)}$$

15.3 QC Calculations: LIMS calculates the percent recovery for various QC samples (MS, MSD, LCS) according to the following equations:

15.3.1 % Recovery, %R (for MS and MSD Samples)

$$\%R = \frac{(SSR - SR)}{SA} \times 100$$

Where:
SSR = Spiked Sample Result (mg/L or mg/kg).
SR = Sample Result (unspiked).
SA = Spike Amount Added (mg/L or mg/kg).

15.3.2 % Recovery, %R (for standards and LCS)

$$\%R = \frac{(SSR)}{SA} \times 100$$

Where:

SSR = Spiked Sample Result (mg/L or mg/kg).
SA = Spike Amount Added (mg/L or mg/kg).

15.3.3 RPD (for precision or duplicate evaluation)

$$RPD = \frac{|SR_1 - SR_2|}{½(SR_1 + SR_2)} \times 100$$

Where:
SR_1 = Sample result for duplicate 1.
SR_2 = Sample result for duplicate 2.

16) Quality Control, Acceptance Criteria and Corrective Action

16.1 Method Blank

16.1.1 Each batch of 20 samples (or less), analyzed within an 8-hour period must include a Method Blank.
16.1.2 The method blank must be:

16.1.2.1 < ½ the PQL, or
16.1.2.2 < 5% the sample concentration, or
16.1.2.3 < 5% the regulatory limit.

16.1.3 All samples associated with a failed method blank must be reprocessed. If there is insufficient sample volume available to re-extract, reported values must be flagged with a "B" and narrated as to possible bias.

16.2 Laboratory Control Standard (LCS) @ 125 mg/Kg

16.2.1 Each batch of 20 samples (or less) processed within an 8-hour period must include a LCS.
16.2.2 The LCS result must meet the accuracy performance criteria as outlined in the applicable LIMS test code.
16.2.3 If outside acceptance criteria, perform corrective action to solve the source of the error, re-prepare, and re-analyze the sample batch. If the LCS fails high and samples are non-detect, the data may be reported, but must be narrated.
16.2.4 LCS Preparation

16.2.4.1 Add 0.5 ml of 1250 mg/L cyanide standard directly into the 25 ml scrubber solution.
16.2.4.2 Bring to a final volume of 100 ml.
16.2.4.3 Titrate according to section 14.1.2

16.3 Matrix Spike Sample (MS) @ 250 mg/Kg

16.3.1 Matrix spikes should be analyzed on a frequency of one spike for each 20 samples analyzed (or less) processed within an 8-hour period. If fewer than 20 samples are in a batch, one spike will be analyzed sample volume permitting.
16.3.2 The MS results must meet accuracy and precision performance criteria as outlined in the applicable LIMS test code.
16.3.3 If spike results are outside recovery acceptance criteria, first determine if the

cause is a systemic error. If so, correct the problem and repeat the MS. If not, the LCS must fall within the acceptance criteria in order for the data to be accepted and reported. (Sample results must be flagged for matrix interference.) If both the MS and LCS fail to achieve acceptance criteria, all associated samples in the batch must be reprocessed and re-analyzed. If insufficient sample volume is available to re-distill, reported values must be flagged as "Estimated" and narrated accordingly.

16.3.4 MS/MSD Preparation

16.3.4.1 5.0 g of sample matrix is reacted according to this procedure.
16.3.4.2 The resulting 25 ml NaOH solution is brought to a final volume of 100 ml.
16.3.4.3 The 100 ml aliquot is divided into (2) 50 ml aliquots.
16.3.4.4 Add 0.5 ml of 1250 mg/L cyanide standard into each 50 ml aliquot. Use one aliquot for MS and the other for MSD.
16.3.4.5 Titrate according to section 14.1.2.

16.4 Matrix Spike Duplicate Sample (MSD) @ 250 mg/Kg

16.4.1 Duplicates must be analyzed on a frequency of one duplicate for each 20 samples analyzed or samples analyzed within an 8-hour period. If fewer than 20 samples are in a batch, one duplicate will be analyzed.
16.4.2 The MSD results must meet accuracy and precision performance criteria as outlined in the applicable LIMS test code.
16.4.3 If matrix duplicate results are outside the acceptance limits for relative percent deviation, first determine if the cause is a system error. If so, correct the problem and repeat the matrix duplicate. If not, the LCS must fall within the acceptance criteria in order for the data to be accepted. (Sample results must be flagged for matrix interference.) If both the matrix duplicate and LCS results fail to achieve acceptance criteria, all associated samples must be reprocessed and reanalyzed. If insufficient sample volume is available for re-analysis, reported results must be flagged as "Estimated" and narrated.

16.5 Deviations and non-conforming events must be documented using a Nonconformance Corrective Action Report (NCAR) or as an Exception Report item on the laboratory review checklist. For mandatory QC failures (e.g. LCS), the NCAR must be submitted to the QA Manager via the NCAR database.

17) Data Records Management

17.1 All data is stored both electronically and hard copy for 10 years.

17.2 All analytical sequence IDs and standard preparation information must be recorded in the Run logbook. Hardcopy computer printouts of analytical sequences and raw data must be retained and initialed by the analyst (electronic initials are acceptable). To simplify standard tracking, analyst must attempt to use one lot of reagents and standards with each batch.

17.3 Complete all pertinent sections in the respective logbooks. If not-applicable then line out the section. "Z" out or "X" out all large sections of the worksheet that are not used. Make all corrections with single line through, date and initial. Make NO obliterations when manually recording data.

17.4 Logbooks are controlled. Never remove a page from a logbook. Completed logbooks are returned to the QA department when filled and no longer needed in the work area.

17.5 The effective date of this SOP is the date in the header or last signature date, whichever is most recent.

17.6 Logbooks must be reviewed by the department supervisor monthly.

17.7 Logbooks must be reviewed by the QA staff quarterly.

18) Contingencies for Handling Out of Control Data

18.1 When method required QC exceedances occur, in every case where sample data quality are affected, the source of the QC exceedance must be determined, corrected and sample reanalysis carried out when possible.

18.2 When affected sample analysis can not be repeated due to limitations (i.e. sample availability, or if reanalysis can only be performed after expiration of a sample hold time), the reporting of data associated with exceeded QC data must be appropriately flagged and narrated. This documentation is necessary to define for the data user the effect of the error has upon the data quality of the results reported (e.g. E flag data indicate the result to be only an estimate).

18.3 All analysts must report sufficient comments in laboratory data review checklist for exceeded QC associated with sample results so that project management can further narrate and ensure data qualifiers (flags) are properly assigned to the reported data. NCARs must be issued for QC system exceedances. Matrix interferences are reported using the analyte reporting comment section in LIMS or using the Laboratory Data review checklist.

19) Method Performance

19.1 Initial Demonstration of Proficiency- Each analyst must perform an initial demonstration of proficiency on a method and matrix basis with a successful analysis of four LCS where acceptable precision and accuracy are generated. The accuracy component must fall within LCS criteria. The precision component must be less than 20% for duplicate RPD data.

19.2 Method Detection Limits (MDLs) must be determined on an annual basis (at minimum) or whenever major modifications are performed.

20) Summary of Changes

Table 20.1 Summary of Changes

Revision Number	Effective Date	Document Editor	Description of Changes
R05	7/1/12	CES	Formatting
R06	9/1/13	CES	Formatting; Update LCS concentration, update calculations for initial and reported concentrations.
R07	8/31/16	CES	Updated document revision and record retention criteria.

21) References and Related Documents

21.1 Method 7.3.3.2, *Test Method to Determine Hydrogen Cyanide Released from Wastes*, Test Methods for Evaluating Solid Waste, Physical/Chemical Methods (SW-846), USEPA, OWSER, Third Edition With Final Updates I, II, IIA, IIB and III, June 1997.

21.2 Method 9014, *Titrimetric and Manual Spectrophotometric Determinative Methods for Cyanide*, Test Methods for Evaluating Solid Waste, Physical/Chemical Methods (SW-846), Third Edition With Final Updates I, II, IIA, IIB and III, June 1997.

21.3 ALS Environmental Quality Assurance Manual Revision (most current)

TOTAL, REACTIVE, AND ACID-SOLUBLE SULFIDE

EPA 376.1 / SM4500S2-F-11 / SW846 9034 / SW846 9030B / SW846 7.3.4.2

SOPID:	HN-WC-026	Rev. Number:	R07	Effective Date:	10/15/2017

Approved By: _____ Date: 10-3-17
Department Supervisor

Approved By: _____ Date: _____
Laboratory Director

Prepared By: _____ Date: 10/2/17
QA Manager

Archival Date:	_____	Doc Control ID#:	_____	Editor:	_____

PROCEDURAL REVIEW

SIGNATURES BELOW INDICATE NO PROCEDURAL CHANGES HAVE BEEN MADE TO THE SOP SINCE THE APPROVAL DATE ABOVE. THIS SOP IS VALID FOR 24 ADDITIONAL MONTHS FROM DATE OF THE LAST SIGNATURE UNLESS INACTIVATED OR REPLACED BY SUBSEQUENT REVISIONS.

Signature	Title	Date
Signature	Title	Date
Signature	Title	Date

TABLE OF CONTENTS

1) Scope and Applicability 3
2) Summary of Procedure 3
3) Definitions 3
4) Health and Safety Warnings 4
5) Cautions 4
6) Interferences 4
7) Personnel Qualifications and Responsibilities 5
8) Sample Collection, Handling, and Preservation 5
9) Equipment and Supplies 6
10) Standards and Reagents 6
11) Method Calibration 8
12) Sample Preparation/Analysis 8
13) Troubleshooting 9
14) Data Acquisition 9
15) Calculation, and Data Reduction Requirements 10
16) Quality Control, Acceptance Criteria and Corrective Action 11
17) Data Records Management 13
18) Contingencies for Handling Out of Control Data 13
19) Method Performance 13
20) Summary of Changes 14
21) References and Related Documents 14

1) Scope and Applicability

1.1 This method is applicable to the measurement of total and dissolved sulfides in drinking, surface, and saline waters, as well as domestic and industrial wastes.

1.2 Total sulfide is usually defined as acid-soluble sulfides. If knowledge of the waste sample indicates potential for metallic sulfides (CuS and SnS_2), then total sulfide is defined as both acid-soluble and acid-insoluble sulfides.

1.3 This method is suitable for the measurement of sulfide in concentrations above 1 mg/L.

1.4 This method is in accordance with EPA 376.1, SM4500S_2-F-11, and SW846-9034 for the determination of sulfides.

1.5 The distillation procedure for acid-soluble and acid-insoluble sulfides is in accordance with SW846-9030B.

1.6 The procedure for reactive sulfide is in accordance with SW846 Section 7.3.4.2.

2) Summary of Procedure

2.1 A sample is treated with zinc acetate to produce zinc sulfide. Excess iodine is then added. The iodine oxidizes the sulfide to sulfur under acidic conditions. The excess iodine is back titrated with sodium thiosulfate.

2.2 The treatment with zinc acetate is omitted for reactive sulfide analysis. Reactive Sulfide is evolved upon the addition of a dilute acid and is captured in a Sodium Hydroxide solution. Excess iodine is then added to the solution and is back titrated in the same manner as that for the Sulfide analysis.

3) Definitions

3.1 Laboratory Control Sample (LCS): An analyte-free matrix spiked with known concentrations of all target analytes. This is used to evaluate and document laboratory method performance.

3.2 Matrix: The component or substrate (e.g., surface water, groundwater, soil) which contains the analyte of interest.

3.3 Matrix Spike (MS): An aliquot of background sample spiked with a known concentrations of all target analytes. The spiking occurs prior to sample preparation and analysis. A matrix spike is used to assess the bias of a method in a given sample matrix.

3.4 Matrix Spike Duplicate (MSD): A duplicate aliquot of the background sample spiked with a known concentrations of all target analytes. Spiking occurs prior to sample preparation and analysis. The MS/MSD pair are used to assess precision and bias of a method in a given sample matrix.

3.5 Method Blank: An analyte-free matrix to which all reagents are added in the same volumes or proportions as used in sample processing. The method blank is carried through the complete sample preparation and analytical procedure. The method blank is used to document contamination resulting from the analytical process.

3.6 Limit of Quantitation (LOQ): The minimum levels, concentrations, or quantities of a target variable (e.g., target analyte) that can be reported with a specified degree of

confidence. The LOQ is also referred to as the method quantitation limit (MQL) or the reporting limit (RL).

3.7 Limit of Detection (LOD): an estimate of the minimum amount of a substance that an analytical process can reliably detect. An LOD is analyte- and matrix-specific and may be laboratory-dependent.

3.8 Method Detection Limit (MDL) study: the procedure, as described in 40CFR part 136, for determining the LOD based on statistical analysis of 7 low-level replicate spikes.

4) Health and Safety Warnings

4.1 Lab Safety: Due to various hazards in the laboratory, safety glasses and laboratory coats or aprons must be worn at all times while in the laboratory. In addition, gloves and a face shield should be worn when dealing with toxic, caustic, and/or flammable chemicals.

4.2 Chemical Hygiene: The toxicity or carcinogenicity of each reagent used has not been precisely defined; however, each chemical used should be treated as a potential health hazard. Exposure to laboratory reagents should be reduced to the lowest possible level. The laboratory maintains a current awareness file of OSHA regulations regarding the safe handling of the chemicals specified in this method. A reference file of data handling sheets (MSDS) is available to all personnel involved in these analyses.

4.3 Waste Management: The principal wastes generated by this procedure are the method-required chemicals and standards. It is the laboratory's responsibility to comply with all federal, state, and local regulations governing waste management by minimizing and controlling all releases from fume hoods and bench operations. Compliance with all sewage discharge permits and regulations is required. Laboratory procedures in SOP HN-SAF-001, Waste Disposal Procedures, must be followed.

4.4 Pollution Prevention: The materials used in this method pose little threat to the environment when recycled and managed properly. The quantities of chemicals purchased should be based on the expected usage during its shelf life. Standards and reagents should be prepared in volumes consistent with laboratory use to minimize the volume of expired standards or reagents to be disposed.

5) Cautions

5.1 Formaldehyde has been determined to be carcinogenic. Take necessary precautions to limit exposure to both skin and lungs.

5.2 Hydrogen Sulfide gas is produced when acid is added to samples containing sulfide. This gas is toxic and exposure should be limited. The gas has the notable smell of rotten eggs.

5.3 There is a risk of severe burns when handling concentrated acids. Use proper precautions when handing these chemicals.

6) Interferences

6.1 Reduced sulfur compounds, such as sulfite, thiosulfite, and hydrosulfite, which decompose in acid, may yield erratic results. Also, volatile iodine-consuming substances will yield high results.

6.2 Samples must be taken with a minimum of aeration. Sulfide may be volatized by

aeration and any oxygen inadvertently added to the sample my convert the sulfide to an immeasurable form.

6.3 If the sample is not preserved with zinc acetate and NaOH, the analysis must be started immediately.

7) Personnel Qualifications and Responsibilities

7.1 General Responsibilities - This method is restricted to use by or under the supervision of analysts experienced in the method.

7.2 Analyst - It is the responsibility of the analyst(s) to:

7.2.1 Each must read and understand this SOP and follow it as written. Any deviations or non-conformances must be documented and submitted to the QA Manager for approval.
7.2.2 Produce method compliant data that meets all quality requirements using this procedure and the Data Reduction, Review and Validation SOP (HN-QS-009).
7.2.3 Complete the required initial demonstration of proficiency before performing this procedure without supervision.
7.2.4 Complete an ongoing demonstration of proficiency annually when continuing to perform the procedure.
7.2.5 The analysts must submit data for peer or supervisor review.

7.3 Section Supervisor - It is the responsibility of the section supervisor to:

7.3.1 Ensure that all analysts have the technical ability and have received adequate training required to perform this procedure.
7.3.2 Ensure analysts have completed the required initial demonstration of proficiency before performing this procedure without supervision.
7.3.3 Ensure analysts complete an ongoing demonstration of proficiency annually when continuing to perform the procedure.
7.3.4 Ensure analysts produce method compliant data that meet all quality requirements using this procedure and the Data Reduction, Review and Validation SOP.

7.4 Project Manager - It is the responsibility of the Project Manager to ensure that all method requirements for a client requesting this procedure are understood by the laboratory prior to initiating this procedure for a given set of samples.

7.5 QA Manager: The QA Manager is responsible for

7.5.1 Approving deviations and non-conformances
7.5.2 Ensuring that this procedure is compliant with method and regulatory requirements,
7.5.3 Ensuring that the analytical method and SOP are followed as written through internal method and system audits.

8) Sample Collection, Handling, and Preservation

8.1 Solid waste and soil samples are collected in 4 oz. wide-mouth jars. Samples containing, or suspected of containing, sulfide waste should be collected with a minimum of aeration. The sample bottle should be filled completely, excluding all headspace, and sealed. Analysis should commence as soon as possible and the sample should be stored under refrigeration, protected from light, until analysis begins.

8.2 Samples must be taken with a minimum of aeration. Sulfide may be volatized by aeration and any oxygen inadvertently added to the sample may convert the sulfide to an immeasurable form.

8.3 If the sulfide water sample is not preserved with zinc acetate and NaOH, the analysis should be started immediately. This is not necessary for reactive and sulfide soil samples.

8.4 Waste Disposal: The primary chemical waste generated by this procedure is spent acid. It is the laboratory's responsibility to comply with all federal, state, and local regulations governing waste management by minimizing and controlling all releases from fume hoods and bench operations. Compliance with all sewage discharge permits and regulations is required.

8.5 Preserved aqueous sulfide samples must be analyzed within 7 days of collection.

8.6 Solid and waste samples must undergo distillation within 40 days of collection.

9) Equipment and Supplies

9.1 50 mL Burette

9.2 Class A Volumetric Pipettes

9.3 Beakers (200mL and 1L)

9.4 Stir plate with stir bar

9.5 Automatic Pipette (1-5 mL)

9.6 Two neck Round Bottom flask

9.7 500mL addition funnel

9.8 Air-line tubing with various connecting stoppers.

9.9 Gas scrubber

9.10 30 ml Collection Tube

9.11 Nitrogen Source with Rotometer Flow controller

9.12 Pyrex Cooking Dish

9.13 Long stemmed glass funnel

10) Standards and Reagents

10.1 Sodium Sulfide Nonahydrate: Commercially Available. Volatilizes in air. Store desiccated, away from light.

10.2 Stock Sodium Sulfide Standard (214.9 mg/L)

10.2.1 Dissolve 1.61g sodium sulfide nonahydrate ($Na_2S \cdot 9H_2O$) into 900mL DI water with 1 ml of 0.25N NaOH for a pH of 10 +/- 1.
10.2.2 Bring to a final volume of 1000mL with DI.
10.2.3 Transfer to an appropriately labeled amber container with applicable BPL number and expiration date.
10.2.4 This standard must be stored refrigerated and protected from light, as sodium sulfide is light sensitive.
10.2.5 Prepare every 2 weeks or if degradation is apparent.

10.3 Sulfuric Acid, Reagent Grade, concentrated (36N)

10.4 Sulfuric Acid stock solution (0.1 N):

10.4.1 Add 2.8mL conc. H_2SO_4 to 500 mL DI.
10.4.2 Bring to a final volume of 1L with DI water and transfer to an appropriately labeled bottle.
10.4.3 Solution is stable for 1 year.

10.5 Sulfuric Acid working solution (0.01 N):

10.5.1 Add 100mL of 0.1 N H_2SO_4 to 500 mL DI in a 1L volumetric flask.
10.5.2 Dilute to final volume of 1L with DI water and transfer to an appropriately labeled bottle.
10.5.3 Solution is stable for 1 year.

10.6 Hydrochloric Acid (6N):
10.6.1 Prepare a 1:1 solution adding concentrated HCl to DI.
10.6.2 Transfer to an appropriately labeled bottle.
10.6.3 Solution is stable for 1 year.

10.7 Hydrochloric Acid (9.8N):

10.7.1 Add 150ml of DI water to a 1L volumetric flask.
10.7.2 Slowly add 800ml of concentrated HCl.
10.7.3 Bring to a final volume of 1L with DI water and transfer to an appropriately labeled bottle.
10.7.4 Solution is stable for 1 year.

10.8 Standard Iodine Solution (~0.0250N):

10.8.1 Dissolve 25g KI in a 1L volumetric flask and add 3.2g Iodine Sublimed.
10.8.2 Dilute to 1L and Standardize against 0.0375N Sodium Thiosulfate using starch indicator. (Same as titrating a blank)
10.8.3 Store in a 1L amber glass bottle to minimize exposure to light.
10.8.4 Replace every 6 months.

10.9 Starch Indicator: Commercially Available

10.10 Sodium Thiosulfate (0.0375N): Commercially Available

10.11 Formaldehyde (37%): Commercially Available

10.12 Zinc Acetate Solution for acid-soluble sulfides:

10.12.1 Add 1mL concentrated HCl to a 1L volumetric flask containing ~500mL of DI water.
10.12.2 Add 110g zinc acetate dihydrate to the same 1L volumetric flask and mix thoroughly. Bring to final volume with DI water and transfer the solution to an appropriately labeled 1L bottle. Solution is good for 1 year.

10.13 Zinc Acetate/Sodium Acetate Solution for acid-insoluble sulfides:

10.13.1 Add 1mL concentrated HCl to a 1L volumetric flask containing ~500mL of DI water.
10.13.2 Add 100g sodium acetate and 11g of zinc acetate dihydrate and mix thoroughly.
10.13.3 Bring to a final volume of 1L and transfer to an appropriately labeld 1L bottle. The solution is good for 1 year.
10.13.4 The resulting pH of this solution should be checked and verified to be 6.8.

10.14 Sodium Hydroxide (0.25N):

10.14.1 Weigh out 10.0 grams of NaOH into a plastic weighing dish and quantitatively transfer the reagent to a 1L volumetric flask containing approximately 500 mL of DI water.
10.14.2 Swirl or mix to dissolve the reagent. Use caution, as this will generate considerable heat.
10.14.3 Bring to volume with DI water and transfer the solution to an appropriately labeled 1L bottle. Shelf life is 1 year.
10.14.4 Alternatively, purchase as a certified solution from an approved supplier.

11) Method Calibration

11.1 No specific calibration is required for titrimetric determination. However, the titrant normality must be known.

11.2 The titrant is purchased as a certified solution from an approved supplier.

11.3 The normality of the Iodine solution is standardized each time through the titration of a method blank. All results are blank corrected due to this standardization.

12) Sample Preparation/Analysis

12.1 For Reactive Sulfides in waste materials (Method 7.3.4.2):

12.1.1 Add 25mL of 0.25N NaOH solution to a 30mL collection tube.
12.1.2 Add 100mL of 0.01N H_2SO_4 to the addition funnel.
12.1.3 Add 5.0g of the waste to be tested to a two neck round bottom flask containing a stir bar. Record the sample weight to the nearest 0.01g in the sulfide logbook.
12.1.4 Add sufficient DI water to maintain particulate suspension during the stirring process.
12.1.5 Assemble the system and adjust the flow rate of nitrogen using the rotometer. Flow should be enough to produce ~5 bubbles/second.
12.1.6 Purge the system of air for 15 minutes to remove oxygen.
12.1.7 While stirring, add 100mL 0.01N H_2SO_4 to the sample drop-wise. The 30-minute test period begins.
12.1.8 After the 30-minute test period, close off the flow of nitrogen and disconnect the scrubber. Transfer the scrubber solution from the collection tube to a disposable 125mL plastic cup.
12.1.9 Bring the final volume up to 100mL with DI water. (50 mL will be used for Reactive Sulfide and 50mL will be used for Reactive Cyanide)

12.2 For Sulfide Soils and Acid Soluble Sulfides (Method 9030B)

12.2.1 Prepare a hot water bath in a Pyrex dish. Maintain a temperature range of 150-160 degrees Fahrenheit throughout the test period.
12.2.2 Assemble the 2-neck flask (containing a stir bar), addition funnel, and 2 gas scrubbing collection tubes in series.
12.2.3 Add 5mL of 37% formaldehyde (Section 10.11) and 10mL of zinc acetate solution (Section 10.12) solution to each collection tube. Bring up to 25mL mark with DI water.
12.2.4 Add 50mL concentrated H_2SO_4 to the addition funnel.
12.2.5 Place 5.0g of sample into the two-necked flask, recording the weight to the nearest 0.01g in the sulfide logbook. Connect all joints and fittings assuring

secure connections.

12.2.6 Add 50ml of water (sufficient to make a slurry). Adjust stirrer to maintain a constant rate.

12.2.7 Turn on nitrogen flow and adjust the flow rate to ~25 ml/min using the rotometer. Flow should be enough to produce ~5 bubbles/second. Purge the system of air for 15 minutes to remove oxygen.

12.2.8 While stirring, adjust the stopcock of the addition funnel allowing for the steady addition of the acid. The 90-minute test period begins upon completion of the acid addition.

12.2.9 Turn off nitrogen and <u>disconnect</u> gas scrubbers <u>before</u> removing the heat.

12.2.10 Collect both scrubber solutions quantitatively, combing them in a 125mL plastic cup. Rinse scrubbers thoroughly and add to the cup. Bring the solution to a final volume of 100mL with DI water.

12.2.11 Proceed to sample analysis.

12.3 For Acid Insoluble Sulfides

12.3.1 Prepare a hot water bath but **<u>do not</u>** heat. (This will be used later in the procedure.)

12.3.2 Assemble the 2-neck flask (containing a stir bar), addition funnel, and 2 gas scrubbing collection tubes in series.

12.3.3 Add 5ml of 37% Formaldehyde and 10mL of the 0.5M Zinc Acetate/Sodium acetate buffer solution to each collection tube. Bring up to 25mL mark with DI water.

12.3.4 Weigh 5.0g of sample and 5.0g $SnCl_2$ into the flask and add 50ml of DI water.

12.3.5 Add 100ml of the 9.8N HCl to the dropping funnel.

12.3.6 Turn on nitrogen flow and adjust the flow rate to ~25 ml/min using the rotometer. Flow should be enough to produce ~5 bubbles/second. Purge the system of air for 15 minutes to remove oxygen.

12.3.7 Turn on the magnetic stirrer. Set the stirring speed to as fast as possible. A vortex should be formed to help prevent poor recovery.

12.3.8 Add the HCl solution from the dropping funnel in a steady stream.

12.3.9 Heat the water bath to a temperature of 100^0 C. The sample may or may not boil.

12.3.10 Allow the purged distillation to proceed for 90 minutes at 100^0 C.

12.3.11 Collect both scrubber solutions quantitatively, combing them in a 125mL plastic cup. Rinse scrubbers thoroughly and add to the cup. Bring the solution to a final volume of 100mL with DI water.

12.3.12 Proceed to sample analysis.

12.4 For Sulfide Waters (Method EPA 376.1, SM 4500S2 F-11, and SW 9034)

12.4.1 Sample requires no preparation. Move on to sample analysis.

13) Troubleshooting

13.1 N/A

14) Data Acquisition

14.1 Titration for Reactive Sulfides:

14.1.1 Pipette 5mL of iodine solution into 50ml DI in a 200mL beaker.

14.1.2 Add 50mL scrubber solution (sample) below the surface of the iodine solution

with a long-stemmed funnel and 2mL 6N HCl.

14.1.3 Check to ensure that the sample pH is <7.

14.1.4 Continue to add iodine until an amber color persists. Record the total amount of iodine used in the logbook.

14.1.5 Add sufficient starch indicator for the solution to turn dark blue (black).

14.1.6 Titrate the solution in the beaker with standard 0.0375N sodium thiosulfate until the blue disappears. Record the total volume of titrant used.

14.2 Titration of Acid Soluble and Acid Insoluble Sulfides

14.2.1 Pipette 5mL of iodine solution and 100mL DI water into a 500mL beaker. Add the entire 100mL of scrubber solution (sample) under the surface of the iodine solution using a long stemmed funnel.

14.2.2 Acid addition:

14.2.2.1 If analysis for acid soluble sulfides is required, add 2ml of 6N HCl.

14.2.2.2 If analysis for acid insoluble sulfides is required, add 10ml of 6N HCl.

14.2.3 Check to ensure that the sample pH is < 7.

14.2.4 Continue to add iodine until an amber color persists. Record the total amount of iodine used in the logbook.

14.2.5 Add sufficient starch indicator for the solution to turn dark blue (black).

14.2.6 Titrate the solution in the beaker with standard 0.0375N sodium thiosulfate until the blue disappears. Record the total volume of titrant used.

14.3 Titration of Sulfide Waters

14.3.1 Pipette 10mL of iodine solution and 100mL DI water into a 1L beaker.

14.3.2 Add a thoroughly homogenized aliquot of sample (usually 200mL) under the surface of the iodine solution with a long stemmed funnel and between 2 and 5mL of 6N HCl.

14.3.3 Check to ensure that the sample pH is <7.

14.3.4 Continue to add iodine until an amber color persists. Record the total amount of iodine used in the sulfide logbook.

14.3.5 Add sufficient starch indicator for the solution to turn dark blue (black).

14.3.6 Titrate the solution in the beaker with standard 0.0375N sodium thiosulfate until the blue disappears. Record the total volume of titrant used.

15) Calculation, and Data Reduction Requirements

15.1 All data must be recorded in the Sulfide logbook.

15.2 Each batch must contain the analyst, sample identity, concentration and comments.

15.3 Calculations:

15.3.1 To calculate the normality of the iodine solution (N_{iodine}):

$$N_{iodine} = \frac{(N_{titrant}) * (\text{mL of titrant used for Blank})}{(\text{mL of iodine used for Blank})}$$

15.3.2 To calculate sulfide titration concentration:

$$\text{Sulfide (mg/L or mg/kg)} = \frac{((\text{mL Iodine used} * N_{iodine}) - (\text{mL titrant used} * N_{titrant})) * 16000}{\text{Sample Amount Used (in mL or g)}}$$

15.3.3 To calculate the reactive sulfide concentration:

$$\text{Reactive Sulfide (mg/Kg)} = \frac{(A * B)}{C}$$

Where: A = Concentration from titration (mg/L)
B = Final Volume of Scrubber Solution (L)
C = Weight of sample distilled (Kg)

15.4 QC Calculations: LIMS calculates the percent recovery for various QC samples (MS, MSD, LCS) according to the following equations:

15.4.1 % Recovery, %R (for MS and MSD Samples)

$$\%R = \frac{(SSR - SR)}{SA} \times 100$$

Where:
SSR = Spiked Sample Result (mg/L or mg/kg).
SR = Sample Result (unspiked).
SA = Spike Amount Added (mg/L or mg/kg).

15.4.2 % Recovery, %R (for standards and LCS)

$$\%R = \frac{(SSR)}{SA} \times 100$$

Where:
SSR = Spiked Sample Result (mg/L or mg/kg).
SA = Spike Amount Added (mg/L or mg/kg).

15.4.3 RPD (for precision or duplicate evaluation)

$$RPD = \frac{|SR_1 - SR_2|}{½(SR_1 + SR_2)} \times 100$$

Where:
SR_1 = Sample result for duplicate 1.
SR_2 = Sample result for duplicate 2.

16) Quality Control, Acceptance Criteria and Corrective Action

16.1 Method Blank

16.1.1 Analyze a method blank with each analytical batch (12 hrs.) or 20 samples.

16.1.2 The analyzed concentration of analyte in the method blank must be less than the detection limit. The blank must be subject to the same procedural steps as a sample.

16.1.3 Preparation:

16.1.3.1 Soil: Add 5g Ottawa sand to the two-neck round bottom flask.
16.1.3.2 Aqueous: Use 500 mL DI water.
16.1.3.3 Reactive Sulfide: Use 50mL of 0.25N NaOH.

16.1.3.4 Process the same as a normal sample.

16.1.4 Since the sample concentration is standardized against the blank, the blank will always be reported with a concentration of 0.

16.2 Laboratory Control Standard (LCS)

16.2.1 Analyze a LCS with each analytical batch of 20 or fewer samples.
16.2.2 The analyzed concentration of the LCS must meet accuracy performance criteria as outlined in the applicable LIMS test code.
16.2.3 For acid soluble and acid insoluble sulfide soils, add 5g DI to the two-neck round bottom flask. Add 25 mL Sodium Sulfide standard (section 10.2) to the same flask. Immediately stopper flask and proceed with analysis.

16.2.3.1 Theoretical concentration for a 5.0g sample is 1075mg/kg.

16.2.4 For Reactive Sulfide, add 25 mL Sodium Sulfide standard (section 10.2) and 50 mL 0.25N NaOH to the 500mL beaker.

16.2.4.1 Theoretical concentration for the titration of a 50mL aliquot of scrubber solution is 107.5 mg/L.
16.2.4.2 Theoretical concentration for a 5.0g distilled sample is 2049 mg/kg.

16.2.5 For sulfide waters, add 25 mL Sodium Sulfide standard (section 10.2) to the 1L beaker and proceed with analysis.

16.2.5.1 Theoretical concentration for a 500mL sample is 10.75 mg/L.

16.2.6 If outside acceptance criteria, perform corrective action to solve the source of the error, re-prepare, and re-analyze the sample batch. If the LCS fails high and samples are non-detect, the data may be reported, but must be narrated.

16.3 Matrix Spike Sample (MS/MSD)

16.3.1 Analyze a MS/MSD with each analytical batch of 20 or fewer samples.
16.3.2 The analyzed concentration of the MS/MSD must meet accuracy and precision performance criteria as outlined in the applicable LIMS test code.
16.3.3 Soils: Add 5.0g of sample to the two-neck round bottom flask. Add 25 mL Sodium Sulfide standard (section 10.2) to the same flask. Immediately stopper flask and proceed with analysis.
16.3.4 Aqueous: use a separate 200ml aliquot, if provided.

16.3.4.1 Add 25mL Sodium Sulfide standard to the sample in the beaker and proceed with analysis.

16.3.5 Reactive Sulfide: No MS/MSD is performed.
16.3.6 Theoretical concentrations are the same as an LCS.
16.3.7 If spike results are outside recovery acceptance criteria, first determine if the cause is a system error. If so, correct the problem and repeat the MS. If not, the LCS must fall within the acceptance criteria in order for the data to be accepted and reported. (Sample results must be flagged for matrix interference.) If both the MS and LCS fail to achieve acceptance criteria, all associated samples in the batch must be reprocessed and reanalyzed. If insufficient sample volume is available to re-extract; reported values must be

flagged as "Estimated" and narrated accordingly.

16.4 Deviations and non-conforming events must be documented using a Nonconformance Corrective Action Report (NCAR) or as an Exception Report item on the laboratory review checklist. For mandatory QC failures (e.g. LCS), the NCAR must be submitted to the QA Manager via the NCAR database.

17) Data Records Management

17.1 All data is stored both electronically and hard copy for 10 years.

17.2 All analytical sequence IDs and standard preparation information must be recorded in the Run logbook. Hardcopy computer printouts of analytical sequences and raw data must be retained and initialed by the analyst (electronic initials are acceptable). To simplify standard tracking, analyst must attempt to use one lot of reagents and standards with each batch.

17.3 Complete all pertinent sections in the respective logbooks. If not-applicable then line out the section. "Z" out or "X" out all large sections of the worksheet that are not used. Make all corrections with single line through, date and initial. Make NO obliterations when manually recording data.

17.4 Logbooks are controlled. Never remove a page from a logbook. Completed logbooks are returned to the QA department when filled and no longer needed in the work area.

17.5 The effective date of this SOP is the date in the header or last signature date, whichever is most recent.

17.6 Logbooks must be reviewed by the department supervisor monthly.

17.7 Logbooks must be reviewed by the QA staff quarterly.

18) Contingencies for Handling Out of Control Data

18.1 When method required QC exceedances occur, in every case where sample data quality are affected, the source of the QC exceedance must be determined, corrected and sample reanalysis carried out when possible.

18.2 When affected sample analysis can not be repeated due to limitations (i.e. sample availability, or if reanalysis can only be performed after expiration of a sample hold time), the reporting of data associated with exceeded QC data must be appropriately flagged and narrated. This documentation is necessary to define for the data user the effect of the error has upon the data quality of the results reported (e.g. E flag data indicate the result to be only an estimate).

18.3 All analysts must report sufficient comments in laboratory data review checklist for exceeded QC associated with sample results so that project management can further narrate and ensure data qualifiers (flags) are properly assigned to the reported data.

18.4 NCARs must be issued for QC system exceedances. Matrix interferences are reported using the analyte reporting comment section in LIMS or using the Laboratory Data review checklist.

19) Method Performance

19.1 Initial Demonstration of Proficiency- Each analyst must perform an initial demonstration of proficiency on a method and matrix basis with a successful analysis of four LCS where acceptable precision and accuracy are generated. The accuracy component must fall within LCS criteria. The precision component must be less than 20% for duplicate RPD data.

19.2 Method Detection Limits (MDLs) must be determined on an annual basis (at minimum) or whenever major modifications are performed.

20) Summary of Changes

Table 20.1 Summary of Changes

Revision Number	Effective Date	Document Editor	Description of Changes
R06	8/31/16	CES	Added section 9.13
R06	8/31/16	CES	Updated 10.2.1 for volume prepared
R06	8/31/16	CES	Updated 14.1.2, 14.2.1, and 14.3.2 for use of long stemmed funnel
R06	8/31/16	CES	Updated document retention to 10 years.
R06	8/31/16	CES	Updated document review frequency to 24 months.
R07	10/15/17	LC	Removed cover page graphics.
R07	10/15/17	LC	Updated method reference.

21) References and Related Documents

21.1 Standard Methods for the Examination of Water and Wastewater, Method 4500S2-F, Online Edition, 2011.

21.2 US EPA Method 376.1, 1978.

21.3 ALS Environmental Quality Assurance Manual, Revision (most current).

21.4 Method 9030B, Test Methods for Evaluating Solid Waste, Physical/Chemical Methods, SW-846, 3rd ed.; U.S. EPA. Office of Solid Waste and Emergency Response. U.S. Government Printing Office: Washington, DC.

21.5 Method 9034, Test Methods for Evaluating Solid Waste, Physical/Chemical Methods, SW-846, 3rd ed.; U.S. EPA. Office of Solid Waste and Emergency Response. U.S. Government Printing Office: Washington, DC.

GEOTECHNICAL LABORATORY SPECIFICATION 12-011

Moisture Content of Soil

Date: 10-6-16(20) **Rev:** 2

ASTM **D 2216**
AASHTO **T 265**
BMI SOP **NA**

Approval: Laboratory Manager _____
Quality Manager _____

CONTROLLED DOCUMENT – DO NOT COPY

Scope	Determination of the water (moisture) content of soil where the reduction in mass by drying is water loss.
Laboratories	Dayton OH [X] Springfield IL [ ] Toledo OH [X] Birmingham AL [ ]
Equipment Calibration	• Balance calibration at 3 months (BM-4010) • Thermometer calibration at 12 months (BM-4860)
Quality Control	• Daily balance verification • Daily oven verification
Proficiency Testing	• AASHTO - Soil
Procedure	The laboratory performs the procedure as specified in the current revision of the ASTM and/or AASHTO test method(s) listed in the header of this standard operating specification. Any routine variance from the consensus standard(s) has been listed in the section below.
Variance From ASTM/AASHTO	ASTM – None AASHTO - None
ASTM/AASHTO Difference	• Balance sensitive to 0.01g *(AASHTO: 0.1% of sample mass)* • Note *differences* in sample mass for each sieve fraction
Specific Instructions	• Water content containers have *matching* lids • *Remove* lid when sample is in oven / *replace* when sample is out of oven • Dried samples are cooled to room temperature before weighing
Data Forms and Software	Laboratory / Data Form / Software Dayton OH / Soil Moisture-d2216 / Moisture Content.xlt Toledo OH Springfield IL / NA / NA Birmingham AL / NA / NA
Revision Changes	Added BMI SOP reference and software reference

GEOTECHNICAL LABORATORY SPECIFICATION 12-025

Liquid Limit and Plastic Limit

Date: 4-9-18 **Rev:** 3

ASTM	**D 4318**	**Approval:**	Laboratory Manager	*Karl A. Fletcher*
AASHTO	**T 89 / T90**		Quality Manager	*Robin E. Wolfe*
BMI SOP	**NA**			

CONTROLLED DOCUMENT – DO NOT COPY

Scope	Determination of the liquid limit and the plastic limit (Atterberg Limits) of soils.
Laboratories	Dayton OH [X] Springfield IL [ ] Toledo OH [X] Birmingham AL [X] Lexington KY [X]
Equipment Calibration	• Balance calibration at 3 months (BM-4010) • Thermometer calibration at 12 months (BM-4860) • Liquid Limit Device calibration at 12 months (BM-5024) • Grooving Tool calibration at 12 months (BM-5025)
Quality Control	• Daily balance verification • Daily oven verification • Verification of drop height before testing
Proficiency Testing	• AASHTO - Soil
Procedure	The laboratory performs the procedure as specified in the current revision of the ASTM and/or AASHTO test method(s) listed in the header of this standard operating specification. Any routine variance from the consensus standard(s) has been listed in the section below.
Variance From ASTM/AASHTO	ASTM – None AASHTO – None
ASTM/AASHTO Difference	• ASTM – Straight, plastic grooving tool • AASHTO – Curved, metal grooving tool
Specific Instructions	• Do *not* hold the base of the liquid limit device while turning the crank • Test portions for plastic limit must be 1.5 to 2 grams • Prior to testing, the drop height of the cup ***must*** be verified *(AASHTO)* • Plastic limit specimens ***must*** be tested in 1.5 to 2.0 gram portions *(AASHTO)* • During liquid limit test, unused soil *must* be covered to retain moisture *(AASHTO)* • Liquid limit test portions must be covered with lids when weighing (for water content determinations); include lid weight in tare *(AASHTO)* • During plastic limit test, the mass of the plastic limit specimen, taken from the liquid limit material, must be 10 g (AASHTO T 90) or 20 g (ASTM D 4318) *(AASHTO)* • Check width and depth of cutting tip of the flat grooving tool prior to use *(AASHTO)*
Data Forms and Software	Laboratory / Data Form / Software Dayton OH / limits-d4318 / None Toledo OH / limits-d4318 / None Lexington KY / limits-d4318 / None Springfield IL / NA / NA Birmingham AL / limits-d4318 / None
Revision Changes	Revised/updated Specific Instructions section

GEOTECHNICAL LABORATORY SPECIFICATION 12-028

CU Triaxial Compression Test for Cohesive Soils

Date: 11-23-16 **Rev:** 0

ASTM **D 4767**
AASHTO **T 297**
BMI SOP **NA**

Approval: Laboratory Manager *Karl Fletcher*
Quality Manager *Robin Wolfe*

CONTROLLED DOCUMENT – DO NOT COPY

Scope	Determination of strength and stress-strain relationships of cylindrical specimens of soil
Laboratories	Dayton OH [X] Springfield IL [ ] Toledo OH [ ] Birmingham AL [ ] Lexington KY [ ]
Equipment Calibration	• Load Cell calibration at 12 months (BM-1825) • Pressure Gauge calibration at 12 months (BM-5352) • Indicator calibration at 6 months (BM-2043) • Caliper calibration at 6 months (BM-2016) • Stopwatch calibration at 12 months (BM-0211) • Balance calibration at 3 months (BM-4010)
Quality Control	• Daily balance verification
Proficiency Testing	• None
Procedure	The laboratory performs the procedure as specified in the current revision of the ASTM and/or AASHTO test method(s) listed in the header of this standard operating specification. Any routine variance from the consensus standard(s) has been listed in the section below.
Variance From ASTM/AASHTO	ASTM – None AASHTO - None
ASTM/AASHTO Difference	• None
Specific Instructions	• The piston must be coupled with the specimen and deformation readings versus time are to be recorded *(AASHTO)* • For reconstituted specimens, if water is added to the soil, store the material covered for at least 16 hours • For reconstituted specimens, compact the material in at least six (6) layers. The top of each layer shall be scarified prior to addition of material for the next layer
Data Forms and Software	Laboratory / Data Form / Software Dayton OH / Triax Compression-d4767 / Geo Tech Toledo OH / NA / NA Lexington KY / NA / NA Springfield IL / NA / NA Birmingham AL / NA / NA
Revision Changes	Original

GEOTECHNICAL LABORATORY SPECIFICATION 12-047

Particle-Size Distribution of Soils - Sieve

Date: 3-4-19 **Rev:** 0

ASTM	**D 6913**	**Approval:**	Laboratory Manager	*Karl A. Fletcher*
AASHTO	**NA**		Quality Manager	*Robin E. Wolfe*
BMI SOP	**NA**			

CONTROLLED DOCUMENT – DO NOT COPY

Scope	Quantitative determination of the distribution of particle sizes of soils using a square opening sieve criterion between the 3-inch and No. 200 sieves.
Laboratories	Dayton OH [X] Springfield IL [ ] Toledo OH [ ] Birmingham AL [ ]
Equipment Calibration	• Sieve calibration at 12 months (BM-5165) • Mechanical sieve shaker calibrated at 12 months (BM-5155) • Balance calibration at 3 months (BM-4010) • Thermometer/Thermocouple calibration at 12 months (BM-4860)
Quality Control	• Daily balance mass verification • Daily oven/cabinet temperature verification
Proficiency Testing	• None
Procedure	The laboratory performs the procedure as specified in the current revision of the ASTM and/or AASHTO test method(s) listed in the header of this standard operating specification. Any routine variance from the consensus standard(s) has been listed in the section below.
Variance From ASTM/AASHTO	ASTM – None AASHTO - NA
ASTM/AASHTO Difference	• NA
Specific Instructions	• Use sodium hexametaphosphate dispersing agent solution at 40 g per liter of deionized water which is *less than one week old* and the container *is dated* • Determine the mass of the specimens to a minimum of three significant digits for Method A or a minimum of four significant digits for Method B
Data Forms and Software	Laboratory: Dayton OH; Data Form: Sieve d6913; Software: Geo System
Revision Changes	Original

APPENDIX D

FIELD AUDIT CHECKLIST

EHS DAILY/WEEKLY/MONTHLY CHECKLIST AND ACTION ITEM REPORT

Inspection Type: ☐ Daily ☐ Weekly ☐ Monthly

Project/Location:	**Inspector/s:**	**Time/Date:**
TOPIC	**OBSERVATIONS**	**FINDING (Y/N)**
Weather Conditions at time of Inspection _____.		
Work Conditions		
1. Housekeeping		
2. Walking/Working Surfaces		
3. Aisles and Passageways		
4. Platforms/Scaffolding		
5. Ladders		
6. Stairs, Guardrails, Toe-boards		
7. Exits/Egress		
8. Roadways		
9. Ventilation.		
10. Lighting		
11. Noise Exposure		
12. Ergonomics (EHS 3-1, Attachment B)		
13. Site Perimeter and Control Zones Identified		
14. Adherence to APP and SSHP Procedures		
15. Promotion of and adherence to Safe Work behaviors		
Equipment		
16. Hand/Portable Tool Condition, Storage and Use		
17. Machine, Conditions/Guarding		
18. Mobile/Heavy Equipment a. Physical inspection of equipment b. Review of daily inspection reports c. Review of equipment deficiency corrections logs/records		
Material Handling Equipment		
19. Hoisting and Rigging		
20. Lifting Aids Used When Possible		
21. Proper Lifting Techniques Used		
Electrical Safety		
22. Power Cords		
23. GFCI		
24. Generators		
25. Breaker Box Access/Clearance		

EHS DAILY/WEEKLY/MONTHLY CHECKLIST AND ACTION ITEM REPORT

Inspection Type: ☐ **Dailly** ☐ **Weekly** ☐ **Monthly**

Project/Location:	**Inspector/s:**	**Time/Date:**
TOPIC	**OBSERVATIONS**	**FINDING (Y/N)**
Hazardous Materials		
26. Hazardous Chemical List Current		
27. MSDS		
28. Labeling		
29. Signs/Postings/Color Coding		
30. Proper Storage and Segregation of Hazardous Materials		
31. Compressed Gas Storage and Use		
Emergency Systems		
32. Emergency phone numbers posted		
33. Evacuation routes, rally points shown on site map		
34. Fire extinguishers inspected monthly		
35. Eyewashes periodically inspected, units flushed, and fluids periodically changed		
36. First Aid Kits/Stations		
Protective Equipment		
37. PPE used, stored, and maintained in accordance with EHS plan		
38. Respirator use, storage, and maintenance		
Waste Storage Area (WSA)		
38. If HWSA are present, they are being inspected and documented weekly.		
39. Findings are being corrected.		
40. Wastes stored in designated, secured area.		
41. Containers of hazardous waste marked with the words "hazardous waste"		
42. Wastes accumulated onsite are within allowed time limits (e.g., < 90 days for large quantity generators) - check accumulation start dates on containers in HWSA and compare to tracking log.		
43. Waste Container Standards:		
i. DOT-spec. containers (for wastes to go off-site only)		
ii. Intact/in good condition		
iii. Waste compatible with containers		

EHS DAILY/WEEKLY/MONTHLY CHECKLIST AND ACTION ITEM REPORT

Inspection Type: ☐ Dailly ☐ Weekly ☐ Monthly

Project/Location:	**Inspector/s:**	**Time/Date:**
TOPIC	**OBSERVATIONS**	**FINDING (Y/N)**
(e.g., no evidence of corrosion, softening, bulging)		
iv. Securely closed and stored to prevent rupture/leaking, except when add/remove waste.		
44. Reactive/ignitable wastes stored at least fifty (50) feet from property.		
45. Liquid wastes within secondary containment (BMP, check WMP to determine state requirements).		
46. Incompatible wastes separated by a dike, wall, berm or other device.		
47. In HWSA, containers are separated by minimum 36 inch aisle space. Labels and markings are visible and legible on all containers.		
Spill Prevention and Preparedness		
48. Outside of containers or tanks (as applicable) show no signs of deterioration, leaks, or discharges at seams, gaskets, piping, pumps, valves, rivets, or bolts.		
49. Appropriate containment materials are available and accessible, which may include: drip pans, dikes, berms, retaining walls, curbing, other barriers, spill diversion ponds, retention ponds, or integrated secondary containment structures.		
50. Spill control and response materials are available, which may include: designated spill response kits, drip pans, sorbent materials, oil retention booms (floating or sorbent), sand bags/temporary curbing devices, fuel recovery pumps/collection hoses, fuel recovery tank trucks, and tools.		
51. Is there any evidence of a sheen or discoloration on the ground? Are hazardous materials stored properly in a manner that minimizes potential for spills?		
52. Emergency Contact Lists are current and posted.		
53. People have received training.		
54. Does the project have a Spill		

EHS DAILY/WEEKLY/MONTHLY CHECKLIST AND ACTION ITEM REPORT

Inspection Type: ☐ Dailly ☐ Weekly ☐ Monthly

Project/Location:	**Inspector/s:**	**Time/Date:**
TOPIC	**OBSERVATIONS**	**FINDING (Y/N)**
Response, Control, and Countermeasures (SPCC) Plan? If yes, are inspections being performed and documented as required in the plan? Has the plan been updated as required?		
Stormwater Pollution Prevention and Erosion Controls		
55. Are site activities causing land disturbance being performed (grading, excavating, clearing and grubbing, demolition and foundation removal, etc?		
58. Are there surface waters present on or adjacent to the site that could be impacted by runoff from the site? Is there any evidence of runoff from the project site to these areas?		
59. Are there storm drains, catch basins or other conveyances that collect stormwater? Are there activities occurring that could cause oil, contaminants, or sediments to enter these conveyances? If yes, are there measures in place or needed to protect stormwater quality?		
60. Are there signs of erosion on recently disturbed soils (channelization, rivulets, siltation runoff, etc.)? Can the erosion lead to sediment or runoff to surface water or conveyances? If yes, are erosion control BMPs necessary or recommended?		
61. Are BMPs being implemented per the environmental project plans? For instance, preventative maintenance, good housekeeping practices, proper waste storage and storage of hazardous materials, etc.?		
62. Does the project have a total land disturbance = or > 1 acre or is the project part of a larger or common plan of development that could exceed an acre of disturbance?		
63. Does the project have a Stormwater Pollution Prevention Plan (SWPPP)? If yes, are inspections being performed		

EHS DAILY/WEEKLY/MONTHLY CHECKLIST AND ACTION ITEM REPORT

Inspection Type: ☐ Dailly ☐ Weekly ☐ Monthly

Project/Location:	**Inspector/s:**	**Time/Date:**
TOPIC	**OBSERVATIONS**	**FINDING (Y/N)**
and documented as required in the plan?		
64. Fugitive Dust – Appropriate BMPs are instituted for fugitive dust emissions.		
Other Conditions or Work Practices		
65.		
66.		
67.		
68.		

EHS DAILY/WEEKLY/MONTHLY CHECKLIST AND ACTION ITEM REPORT

Project/Location:	Inspector/s:		Time/Date:
ACTION ITEM	**RESPONSIBLE PARTY**	**SCHEDULE**	**DATE COMPLETED**
1.			
2.			
3.			
4.			
5.			
6.			
7.			
8.			
9.			
10.			
11.			

Reviewed by: _____ _____
Site Superintendent/ Site Manager Date

cc: Project Manager (monthly only)
PESM (monthly only)

APPENDIX E

LABORATORY CERTIFICATIONS

Minnesota Department of Health
Environmental Laboratory Accreditation Program

Issues accreditation to

State Laboratory ID: 026-999-449

EPA Lab Code: MI00028

ALS Environmental
3352 128th Avenue
Holland, MI 49424-9263

for fields of accreditation listed on the laboratory's accompanying Scope of Certification in accordance with the provisions in Minnesota Laws and Rules.

Continued accreditation is contingent upon successful on-going compliance with Minnesota Statutes 144.97 to 144.98, 2009 TNI Standard and applicable Minnesota Rules 4740.2010 to 4740.2120. The laboratory's Scope of Certification cites the specific programs, methods, analytes and matrices for which MDH issues this accreditation.

This certificate is valid proof of accreditation only when associated with its accompanying Scope of Certification.

The Scope of Certification and reports of on-site assessments are on file at the Minnesota Department of Health, 601 Robert Street North, Saint Paul, Minnesota. Customers may verify the laboratory's accreditation status in Minnesota by contacting MNELAP at (651) 201-5324.

Effective Date: 02/19/2021
Expires: 12/31/2021
Certificate Number: 2034707

Issued under the authority delegated by the Commissioner of Health, State of Minnesota

Environmental Laboratory Accreditation Program
Scope of Certification

THIS LISTING OF FIELDS OF ACCREDITATION MUST BE ACCOMPANIED BY CERTIFICATE NUMBER: 2034707

State Laboratory ID: 026-999-449 EPA Lab Code: MI00028 Issue Date: 2/19/2021
Expiration Date: 12/31/2021

ALS Environmental
3352 128th Avenue
Holland, MI 49424-9263

Clean Water Program

ASTM D7511-09

Preparation Techniques: Digestion, In-Line UV;

Program	Method	Analyte	Matrix	Primary	SOP
CWP	ASTM D7511-09	Total Cyanide	NPW	MN	

EPA 120.1

Preparation Techniques: N/A

Program	Method	Analyte	Matrix	Primary	SOP
CWP	EPA 120.1	Conductivity	NPW	MN	

EPA 160.4

Preparation Techniques: N/A

Program	Method	Analyte	Matrix	Primary	SOP
CWP	EPA 160.4	Residue-volatile	NPW	MN	

EPA 1664A (HEM)

Preparation Techniques: Extraction, solid phase (SPE);

Program	Method	Analyte	Matrix	Primary	SOP
CWP	EPA 1664A (HEM)	Oil & Grease	NPW	MN	

EPA 1664A (SGT-HEM)

Preparation Techniques: Extraction, solid phase (SPE);

Program	Method	Analyte	Matrix	Primary	SOP
CWP	EPA 1664A (SGT-HEM)	Oil & Grease	NPW	MN	

EPA 300.0

Preparation Techniques: N/A

Program	Method	Analyte	Matrix	Primary	SOP
CWP	EPA 300.0	Bromide	NPW	MN	
CWP	EPA 300.0	Chloride	NPW	MN	
CWP	EPA 300.0	Fluoride	NPW	MN	
CWP	EPA 300.0	Nitrate as N	NPW	MN	
CWP	EPA 300.0	Nitrate-nitrite as N	NPW	MN	
CWP	EPA 300.0	Nitrite as N	NPW	MN	
CWP	EPA 300.0	Sulfate	NPW	MN	

EPA 335.4

Preparation Techniques: Distillation, micro;

Program	Method	Analyte	Matrix	Primary	SOP
CWP	EPA 335.4	Total Cyanide	NPW	MN	

EPA 350.1

Preparation Techniques: Distillation, micro;

Program	Method	Analyte	Matrix	Primary	SOP
CWP	EPA 350.1	Ammonia as N	NPW	MN	

EPA 353.2

Preparation Techniques: N/A

Program	Method	Analyte	Matrix	Primary	SOP
CWP	EPA 353.2	Nitrate-nitrite as N	NPW	MN	
CWP	EPA 353.2	Nitrite as N	NPW	MN	

EPA 353.2 (calc.)

Preparation Techniques: N/A

Program	Method	Analyte	Matrix	Primary	SOP
CWP	EPA 353.2 (calc.)	Nitrate as N	NPW	MN	

EPA 365.1

Preparation Techniques: N/A

Program	Method	Analyte	Matrix	Primary	SOP
CWP	EPA 365.1	Orthophosphate as P	NPW	MN	
CWP	EPA 365.1	Total Phosphorus	NPW	MN	

EPA 410.4

Preparation Techniques: Digestion, hotplate or HotBlock;

Program	Method	Analyte	Matrix	Primary	SOP
CWP	EPA 410.4	Chemical oxygen demand	NPW	MN	

EPA 420.4

Preparation Techniques: Distillation, MIDI;

Program	Method	Analyte	Matrix	Primary	SOP
CWP	EPA 420.4	Total Phenolics	NPW	MN	

Hach 10360

Preparation Techniques: N/A

Program	Method	Analyte	Matrix	Primary	SOP
CWP	Hach 10360	Biochemical oxygen demand	NPW	MN	
CWP	Hach 10360	Carbonaceous BOD, CBOD	NPW	MN	

Kelada 01

Preparation Techniques: N/A

Program	Method	Analyte	Matrix	Primary	SOP
CWP	Kelada 01	Total Cyanide	NPW	MN	

OIA 1677-09

Preparation Techniques: Distillation, micro;

Program	Method	Analyte	Matrix	Primary	SOP
CWP	OIA 1677-09	Available Cyanide	NPW	MN	
CWP	OIA 1677-09	Free cyanide	NPW	MN	

SM 2130 B-2011

Preparation Techniques: N/A

Program	Method	Analyte	Matrix	Primary	SOP
CWP	SM 2130 B-2011	Turbidity	NPW	MN	

SM 2310 B-2011

Preparation Techniques: N/A

Program	Method	Analyte	Matrix	Primary	SOP
CWP	SM 2310 B-2011	Acidity, as CaCO3	NPW	MN	

SM 2320 B-2011

Preparation Techniques: N/A

Program	Method	Analyte	Matrix	Primary	SOP
CWP	SM 2320 B-2011	Alkalinity as CaCO3	NPW	MN	

SM 2340 C-2011

Preparation Techniques: N/A

Program	Method	Analyte	Matrix	Primary	SOP
CWP	SM 2340 C-2011	Total hardness as CaCO3	NPW	MN	

SM 2510 B-2011

Preparation Techniques: N/A

Program	Method	Analyte	Matrix	Primary	SOP
CWP	SM 2510 B-2011	Conductivity	NPW	MN	

SM 2540 B-2011

Preparation Techniques: N/A

Program	Method	Analyte	Matrix	Primary	SOP
CWP	SM 2540 B-2011	Residue-total	NPW	MN	

SM 2540 C-2011

Preparation Techniques: N/A

Program	Method	Analyte	Matrix	Primary	SOP
CWP	SM 2540 C-2011	Residue-filterable (TDS)	NPW	MN	

SM 2540 D-2011

Preparation Techniques: N/A

Program	Method	Analyte	Matrix	Primary	SOP
CWP	SM 2540 D-2011	Residue-nonfilterable (TSS)	NPW	MN	

SM 2540 E-2011

Preparation Techniques: N/A

Program	Method	Analyte	Matrix	Primary	SOP
CWP	SM 2540 E-2011	Residue-volatile	NPW	MN	

SM 2540 F-2011

Preparation Techniques: N/A

Program	Method	Analyte	Matrix	Primary	SOP
CWP	SM 2540 F-2011	Residue-settleable	NPW	MN	

SM 4500-Cl G-2011

Preparation Techniques: N/A

Program	Method	Analyte	Matrix	Primary	SOP
CWP	SM 4500-Cl G-2011	Total residual chlorine	NPW	MN	

SM 4500-Cl^- C-2011

Preparation Techniques: N/A

Program	Method	Analyte	Matrix	Primary	SOP
CWP	SM 4500-Cl^- C-2011	Chloride	NPW	MN	

SM 4500-Cl^- E-2011

Preparation Techniques: N/A

Program	Method	Analyte	Matrix	Primary	SOP
CWP	SM 4500-Cl^- E-2011	Chloride	NPW	MN	

SM 4500-CN^- E-2011

Preparation Techniques: Distillation, micro;

Program	Method	Analyte	Matrix	Primary	SOP
CWP	SM 4500-CN^- E-2011	Total Cyanide	NPW	MN	

SM 4500-CN^- G-2011

Preparation Techniques: Distillation, micro;

Program	Method	Analyte	Matrix	Primary	SOP
CWP	SM 4500-CN^- G-2011	Amenable cyanide	NPW	MN	

SM 4500-H+ B-2011

Preparation Techniques: N/A

Program	Method	Analyte	Matrix	Primary	SOP
CWP	SM 4500-H+ B-2011	pH	NPW	MN	

SM 4500-NH3 G-2011

Preparation Techniques: Distillation, micro;

Program	Method	Analyte	Matrix	Primary	SOP
CWP	SM 4500-NH3 G-2011	Ammonia as N	NPW	MN	
CWP	SM 4500-NH3 G-2011	Kjeldahl nitrogen - total	NPW	MN	

SM 4500-$NO2^-$ B-2011

Preparation Techniques: N/A

Program	Method	Analyte	Matrix	Primary	SOP
CWP	SM 4500-$NO2^-$ B-2011	Nitrite as N	NPW	MN	

SM 4500-$NO3^-$ F-2011

Preparation Techniques: N/A

Program	Method	Analyte	Matrix	Primary	SOP
CWP	SM 4500-$NO3^-$ F-2011	Nitrate as N	NPW	MN	
CWP	SM 4500-$NO3^-$ F-2011	Nitrate-nitrite as N	NPW	MN	

SM 4500-P E-2011

Preparation Techniques: N/A

Program	Method	Analyte	Matrix	Primary	SOP
CWP	SM 4500-P E-2011	Orthophosphate as P	NPW	MN	
CWP	SM 4500-P E-2011	Total Phosphorus	NPW	MN	

SM 4500-$S2^{-}$ F-2011

Preparation Techniques: N/A

Program	Method	Analyte	Matrix	Primary	SOP
CWP	SM 4500-$S2^{-}$ F-2011	Sulfide	NPW	MN	

SM 4500-$SO4^{-}$ E-2011

Preparation Techniques: N/A

Program	Method	Analyte	Matrix	Primary	SOP
CWP	SM 4500-$SO4^{-}$ E-2011	Sulfate	NPW	MN	

SM 5210 B-2011

Preparation Techniques: N/A

Program	Method	Analyte	Matrix	Primary	SOP
CWP	SM 5210 B-2011	Biochemical oxygen demand	NPW	MN	
CWP	SM 5210 B-2011	Carbonaceous BOD, CBOD	NPW	MN	

SM 5310 C-2011

Preparation Techniques: N/A

Program	Method	Analyte	Matrix	Primary	SOP
CWP	SM 5310 C-2011	Total Organic Carbon	NPW	MN	

SM 5540 C-2011

Preparation Techniques: N/A

Program	Method	Analyte	Matrix	Primary	SOP
CWP	SM 5540 C-2011	Surfactants - MBAS	NPW	MN	

EPA 1631E

Preparation Techniques: N/A

Program	Method	Analyte	Matrix	Primary	SOP
CWP	EPA 1631E	Mercury	NPW	MN	

EPA 200.7

Preparation Techniques: Digestion, microwave-assisted; Digestion, hotplate or HotBlock;

Program	Method	Analyte	Matrix	Primary	SOP
CWP	EPA 200.7	Aluminum	NPW	MN	
CWP	EPA 200.7	Antimony	NPW	MN	
CWP	EPA 200.7	Arsenic	NPW	MN	
CWP	EPA 200.7	Barium	NPW	MN	
CWP	EPA 200.7	Beryllium	NPW	MN	
CWP	EPA 200.7	Boron	NPW	MN	
CWP	EPA 200.7	Cadmium	NPW	MN	
CWP	EPA 200.7	Calcium	NPW	MN	
CWP	EPA 200.7	Chromium	NPW	MN	
CWP	EPA 200.7	Cobalt	NPW	MN	
CWP	EPA 200.7	Copper	NPW	MN	
CWP	EPA 200.7	Iron	NPW	MN	
CWP	EPA 200.7	Lead	NPW	MN	
CWP	EPA 200.7	Magnesium	NPW	MN	
CWP	EPA 200.7	Manganese	NPW	MN	
CWP	EPA 200.7	Molybdenum	NPW	MN	
CWP	EPA 200.7	Nickel	NPW	MN	
CWP	EPA 200.7	Potassium	NPW	MN	
CWP	EPA 200.7	Selenium	NPW	MN	
CWP	EPA 200.7	Silver	NPW	MN	
CWP	EPA 200.7	Sodium	NPW	MN	

Program	Method	Analyte	Matrix	Primary	SOP
CWP	EPA 200.7	Thallium	NPW	MN	
CWP	EPA 200.7	Tin	NPW	MN	
CWP	EPA 200.7	Titanium	NPW	MN	
CWP	EPA 200.7	Total chromium	NPW	MN	
CWP	EPA 200.7	Total hardness as CaCO3	NPW	MN	
CWP	EPA 200.7	Vanadium	NPW	MN	
CWP	EPA 200.7	Zinc	NPW	MN	

EPA 200.8

Preparation Techniques: Digestion, microwave-assisted; Digestion, hotplate or HotBlock;

Program	Method	Analyte	Matrix	Primary	SOP
CWP	EPA 200.8	Aluminum	NPW	MN	
CWP	EPA 200.8	Antimony	NPW	MN	
CWP	EPA 200.8	Arsenic	NPW	MN	
CWP	EPA 200.8	Barium	NPW	MN	
CWP	EPA 200.8	Beryllium	NPW	MN	
CWP	EPA 200.8	Boron	NPW	MN	
CWP	EPA 200.8	Cadmium	NPW	MN	
CWP	EPA 200.8	Calcium	NPW	MN	
CWP	EPA 200.8	Chromium	NPW	MN	
CWP	EPA 200.8	Cobalt	NPW	MN	
CWP	EPA 200.8	Copper	NPW	MN	
CWP	EPA 200.8	Iron	NPW	MN	
CWP	EPA 200.8	Lead	NPW	MN	
CWP	EPA 200.8	Magnesium	NPW	MN	
CWP	EPA 200.8	Manganese	NPW	MN	
CWP	EPA 200.8	Molybdenum	NPW	MN	
CWP	EPA 200.8	Nickel	NPW	MN	
CWP	EPA 200.8	Potassium	NPW	MN	
CWP	EPA 200.8	Selenium	NPW	MN	
CWP	EPA 200.8	Silver	NPW	MN	
CWP	EPA 200.8	Sodium	NPW	MN	
CWP	EPA 200.8	Strontium	NPW	MN	
CWP	EPA 200.8	Thallium	NPW	MN	

Program	Method	Analyte	Matrix	Primary	SOP
CWP	EPA 200.8	Tin	NPW	MN	
CWP	EPA 200.8	Titanium	NPW	MN	
CWP	EPA 200.8	Vanadium	NPW	MN	
CWP	EPA 200.8	Zinc	NPW	MN	

EPA 245.1

Preparation Techniques: N/A

Program	Method	Analyte	Matrix	Primary	SOP
CWP	EPA 245.1	Mercury	NPW	MN	

SM 2340 B-2011

Preparation Techniques: N/A

Program	Method	Analyte	Matrix	Primary	SOP
CWP	SM 2340 B-2011	Total hardness as CaCO3	NPW	MN	

SM 3500-Cr B-2011

Preparation Techniques: N/A

Program	Method	Analyte	Matrix	Primary	SOP
CWP	SM 3500-Cr B-2011	Chromium VI	NPW	MN	

EPA 608

Preparation Techniques: Extraction, separatory funnel liquid-liquid (LLE);

Program	Method	Analyte	Matrix	Primary	SOP
CWP	EPA 608	4,4'-DDD	NPW	MN	
CWP	EPA 608	4,4'-DDE	NPW	MN	
CWP	EPA 608	4,4'-DDT	NPW	MN	
CWP	EPA 608	Aldrin	NPW	MN	
CWP	EPA 608	alpha-BHC (alpha-Hexachlorocyclohexane)	NPW	MN	
CWP	EPA 608	Aroclor-1016 (PCB-1016)	NPW	MN	

Program	Method	Analyte	Matrix	Primary	SOP
CWP	EPA 608	Aroclor-1221 (PCB-1221)	NPW	MN	
CWP	EPA 608	Aroclor-1232 (PCB-1232)	NPW	MN	
CWP	EPA 608	Aroclor-1242 (PCB-1242)	NPW	MN	
CWP	EPA 608	Aroclor-1248 (PCB-1248)	NPW	MN	
CWP	EPA 608	Aroclor-1254 (PCB-1254)	NPW	MN	
CWP	EPA 608	Aroclor-1260 (PCB-1260)	NPW	MN	
CWP	EPA 608	beta-BHC (beta-Hexachlorocyclohexane)	NPW	MN	
CWP	EPA 608	Chlordane (tech.)	NPW	MN	
CWP	EPA 608	delta-BHC	NPW	MN	
CWP	EPA 608	Dieldrin	NPW	MN	
CWP	EPA 608	Endosulfan I	NPW	MN	
CWP	EPA 608	Endosulfan II	NPW	MN	
CWP	EPA 608	Endosulfan sulfate	NPW	MN	
CWP	EPA 608	Endrin	NPW	MN	
CWP	EPA 608	Endrin aldehyde	NPW	MN	
CWP	EPA 608	gamma-BHC (Lindane, gamma-Hexachlorocyclohexane)	NPW	MN	
CWP	EPA 608	Heptachlor	NPW	MN	
CWP	EPA 608	Heptachlor epoxide	NPW	MN	
CWP	EPA 608	Toxaphene (Chlorinated camphene)	NPW	MN	

EPA 608.3 GC-ECD

Preparation Techniques: Extraction, separatory funnel liquid-liquid (LLE); Extraction, Micro;

Program	Method	Analyte	Matrix	Primary	SOP
CWP	EPA 608.3 GC-ECD	4,4'-DDD	NPW	MN	
CWP	EPA 608.3 GC-ECD	4,4'-DDE	NPW	MN	
CWP	EPA 608.3 GC-ECD	4,4'-DDT	NPW	MN	
CWP	EPA 608.3 GC-ECD	Aldrin	NPW	MN	
CWP	EPA 608.3 GC-ECD	alpha-BHC (alpha-Hexachlorocyclohexane)	NPW	MN	
CWP	EPA 608.3 GC-ECD	Aroclor-1016 (PCB-1016)	NPW	MN	
CWP	EPA 608.3 GC-ECD	Aroclor-1221 (PCB-1221)	NPW	MN	
CWP	EPA 608.3 GC-ECD	Aroclor-1232 (PCB-1232)	NPW	MN	
CWP	EPA 608.3 GC-ECD	Aroclor-1242 (PCB-1242)	NPW	MN	
CWP	EPA 608.3 GC-ECD	Aroclor-1248 (PCB-1248)	NPW	MN	
CWP	EPA 608.3 GC-ECD	Aroclor-1254 (PCB-1254)	NPW	MN	

Program	Method	Analyte	Matrix	Primary	SOP
CWP	EPA 608.3 GC-ECD	Aroclor-1260 (PCB-1260)	NPW	MN	
CWP	EPA 608.3 GC-ECD	beta-BHC (beta-Hexachlorocyclohexane)	NPW	MN	
CWP	EPA 608.3 GC-ECD	Chlordane (tech.)	NPW	MN	
CWP	EPA 608.3 GC-ECD	delta-BHC	NPW	MN	
CWP	EPA 608.3 GC-ECD	Dieldrin	NPW	MN	
CWP	EPA 608.3 GC-ECD	Endosulfan I	NPW	MN	
CWP	EPA 608.3 GC-ECD	Endosulfan II	NPW	MN	
CWP	EPA 608.3 GC-ECD	Endosulfan sulfate	NPW	MN	
CWP	EPA 608.3 GC-ECD	Endrin	NPW	MN	
CWP	EPA 608.3 GC-ECD	Endrin aldehyde	NPW	MN	
CWP	EPA 608.3 GC-ECD	gamma-BHC (Lindane, gamma-Hexachlorocyclohexane)	NPW	MN	
CWP	EPA 608.3 GC-ECD	Heptachlor	NPW	MN	
CWP	EPA 608.3 GC-ECD	Heptachlor epoxide	NPW	MN	
CWP	EPA 608.3 GC-ECD	Toxaphene (Chlorinated camphene)	NPW	MN	

EPA 612

Preparation Techniques: Extraction, separatory funnel liquid-liquid (LLE);

Program	Method	Analyte	Matrix	Primary	SOP
CWP	EPA 612	Hexachlorobenzene	NPW	MN	
CWP	EPA 612	Hexachlorobutadiene	NPW	MN	
CWP	EPA 612	Hexachlorocyclopentadiene	NPW	MN	

EPA 625

Preparation Techniques: Extraction, separatory funnel liquid-liquid (LLE);

Program	Method	Analyte	Matrix	Primary	SOP
CWP	EPA 625	1,2,4-Trichlorobenzene	NPW	MN	
CWP	EPA 625	2,4,5-Trichlorophenol	NPW	MN	
CWP	EPA 625	2,4,6-Trichlorophenol	NPW	MN	
CWP	EPA 625	2,4-Dichlorophenol	NPW	MN	
CWP	EPA 625	2,4-Dimethylphenol	NPW	MN	
CWP	EPA 625	2,4-Dinitrophenol	NPW	MN	
CWP	EPA 625	2,4-Dinitrotoluene (2,4-DNT)	NPW	MN	

Program	Method	Analyte	Matrix	Primary	SOP
CWP	EPA 625	2,6-Dinitrotoluene (2,6-DNT)	NPW	MN	
CWP	EPA 625	2-Chloronaphthalene	NPW	MN	
CWP	EPA 625	2-Chlorophenol	NPW	MN	
CWP	EPA 625	2-Methyl-4,6-dinitrophenol (4,6-Dinitro-2-methylphenol)	NPW	MN	
CWP	EPA 625	2-Nitrophenol	NPW	MN	
CWP	EPA 625	3,3'-Dichlorobenzidine	NPW	MN	
CWP	EPA 625	4-Bromophenyl phenyl ether	NPW	MN	
CWP	EPA 625	4-Chloro-3-methylphenol	NPW	MN	
CWP	EPA 625	4-Chlorophenyl phenylether	NPW	MN	
CWP	EPA 625	4-Nitrophenol	NPW	MN	
CWP	EPA 625	Acenaphthene	NPW	MN	
CWP	EPA 625	Acenaphthylene	NPW	MN	
CWP	EPA 625	Anthracene	NPW	MN	
CWP	EPA 625	Benzidine	NPW	MN	
CWP	EPA 625	Benzo(a)anthracene	NPW	MN	
CWP	EPA 625	Benzo(a)pyrene	NPW	MN	
CWP	EPA 625	Benzo(g,h,i)perylene	NPW	MN	
CWP	EPA 625	Benzo(k)fluoranthene	NPW	MN	
CWP	EPA 625	Benzo[b]fluoranthene	NPW	MN	
CWP	EPA 625	bis(2-Chloroethoxy)methane	NPW	MN	
CWP	EPA 625	bis(2-Chloroethyl) ether	NPW	MN	
CWP	EPA 625	bis(2-Chloroisopropyl) ether	NPW	MN	
CWP	EPA 625	Butyl benzyl phthalate	NPW	MN	
CWP	EPA 625	Chrysene	NPW	MN	
CWP	EPA 625	Di(2-ethylhexyl) phthalate (bis(2-Ethylhexyl)phthalate, DEHP)	NPW	MN	
CWP	EPA 625	Di-n-butyl phthalate	NPW	MN	
CWP	EPA 625	Di-n-octyl phthalate	NPW	MN	
CWP	EPA 625	Dibenz(a,h) anthracene	NPW	MN	
CWP	EPA 625	Diethyl phthalate	NPW	MN	
CWP	EPA 625	Dimethyl phthalate	NPW	MN	
CWP	EPA 625	Fluoranthene	NPW	MN	
CWP	EPA 625	Fluorene	NPW	MN	
CWP	EPA 625	Hexachlorobenzene	NPW	MN	
CWP	EPA 625	Hexachlorobutadiene	NPW	MN	
CWP	EPA 625	Hexachlorocyclopentadiene	NPW	MN	

Program	Method	Analyte	Matrix	Primary	SOP
CWP	EPA 625	Hexachloroethane	NPW	MN	
CWP	EPA 625	Indeno(1,2,3-cd) pyrene	NPW	MN	
CWP	EPA 625	Isophorone	NPW	MN	
CWP	EPA 625	n-Nitrosodi-n-propylamine	NPW	MN	
CWP	EPA 625	n-Nitrosodimethylamine	NPW	MN	
CWP	EPA 625	n-Nitrosodiphenylamine	NPW	MN	
CWP	EPA 625	Naphthalene	NPW	MN	
CWP	EPA 625	Nitrobenzene	NPW	MN	
CWP	EPA 625	Pentachlorophenol	NPW	MN	
CWP	EPA 625	Phenanthrene	NPW	MN	
CWP	EPA 625	Phenol	NPW	MN	
CWP	EPA 625	Pyrene	NPW	MN	

EPA 625.1

Preparation Techniques: Extraction, separatory funnel liquid-liquid (LLE);

Program	Method	Analyte	Matrix	Primary	SOP
CWP	EPA 625.1	1,2,4-Trichlorobenzene	NPW	MN	
CWP	EPA 625.1	2,2'-Oxybis(1-chloropropane),bis(2-Chloro-1-methylethyl)ether	NPW	MN	
CWP	EPA 625.1	2,4,5-Trichlorophenol	NPW	MN	
CWP	EPA 625.1	2,4,6-Trichlorophenol	NPW	MN	
CWP	EPA 625.1	2,4-Dichlorophenol	NPW	MN	
CWP	EPA 625.1	2,4-Dimethylphenol	NPW	MN	
CWP	EPA 625.1	2,4-Dinitrophenol	NPW	MN	
CWP	EPA 625.1	2,4-Dinitrotoluene (2,4-DNT)	NPW	MN	
CWP	EPA 625.1	2,6-Dinitrotoluene (2,6-DNT)	NPW	MN	
CWP	EPA 625.1	2-Chloronaphthalene	NPW	MN	
CWP	EPA 625.1	2-Chlorophenol	NPW	MN	
CWP	EPA 625.1	2-Methyl-4,6-dinitrophenol (4,6-Dinitro-2-methylphenol)	NPW	MN	
CWP	EPA 625.1	2-Nitrophenol	NPW	MN	
CWP	EPA 625.1	3,3'-Dichlorobenzidine	NPW	MN	
CWP	EPA 625.1	4-Bromophenyl phenyl ether	NPW	MN	
CWP	EPA 625.1	4-Chloro-3-methylphenol	NPW	MN	
CWP	EPA 625.1	4-Chlorophenyl phenylether	NPW	MN	
CWP	EPA 625.1	4-Nitrophenol	NPW	MN	

Program	Method	Analyte	Matrix	Primary	SOP
CWP	EPA 625.1	Acenaphthene	NPW	MN	
CWP	EPA 625.1	Acenaphthylene	NPW	MN	
CWP	EPA 625.1	Anthracene	NPW	MN	
CWP	EPA 625.1	Benzo(a)anthracene	NPW	MN	
CWP	EPA 625.1	Benzo(a)pyrene	NPW	MN	
CWP	EPA 625.1	Benzo(g,h,i)perylene	NPW	MN	
CWP	EPA 625.1	Benzo(k)fluoranthene	NPW	MN	
CWP	EPA 625.1	Benzo[b]fluoranthene	NPW	MN	
CWP	EPA 625.1	bis(2-Chloroethoxy)methane	NPW	MN	
CWP	EPA 625.1	bis(2-Chloroethyl) ether	NPW	MN	
CWP	EPA 625.1	Butyl benzyl phthalate	NPW	MN	
CWP	EPA 625.1	Chrysene	NPW	MN	
CWP	EPA 625.1	Di(2-ethylhexyl) phthalate (bis(2-Ethylhexyl)phthalate, DEHP)	NPW	MN	
CWP	EPA 625.1	Di-n-butyl phthalate	NPW	MN	
CWP	EPA 625.1	Di-n-octyl phthalate	NPW	MN	
CWP	EPA 625.1	Dibenz(a,h) anthracene	NPW	MN	
CWP	EPA 625.1	Diethyl phthalate	NPW	MN	
CWP	EPA 625.1	Dimethyl phthalate	NPW	MN	
CWP	EPA 625.1	Fluoranthene	NPW	MN	
CWP	EPA 625.1	Fluorene	NPW	MN	
CWP	EPA 625.1	Hexachlorobenzene	NPW	MN	
CWP	EPA 625.1	Hexachlorobutadiene	NPW	MN	
CWP	EPA 625.1	Hexachlorocyclopentadiene	NPW	MN	
CWP	EPA 625.1	Hexachloroethane	NPW	MN	
CWP	EPA 625.1	Indeno(1,2,3-cd) pyrene	NPW	MN	
CWP	EPA 625.1	Isophorone	NPW	MN	
CWP	EPA 625.1	n-Nitrosodi-n-propylamine	NPW	MN	
CWP	EPA 625.1	n-Nitrosodimethylamine	NPW	MN	
CWP	EPA 625.1	n-Nitrosodiphenylamine	NPW	MN	
CWP	EPA 625.1	Naphthalene	NPW	MN	
CWP	EPA 625.1	Nitrobenzene	NPW	MN	
CWP	EPA 625.1	Pentachlorophenol	NPW	MN	
CWP	EPA 625.1	Phenanthrene	NPW	MN	
CWP	EPA 625.1	Phenol	NPW	MN	
CWP	EPA 625.1	Pyrene	NPW	MN	

EPA 624

Preparation Techniques: Purge and trap;

Program	Method	Analyte	Matrix	Primary	SOP
CWP	EPA 624	1,1,1-Trichloroethane	NPW	MN	
CWP	EPA 624	1,1,2,2-Tetrachloroethane	NPW	MN	
CWP	EPA 624	1,1,2-Trichloroethane	NPW	MN	
CWP	EPA 624	1,1-Dichloroethane	NPW	MN	
CWP	EPA 624	1,1-Dichloroethylene	NPW	MN	
CWP	EPA 624	1,2-Dichlorobenzene	NPW	MN	
CWP	EPA 624	1,2-Dichloroethane (Ethylene dichloride)	NPW	MN	
CWP	EPA 624	1,2-Dichloropropane	NPW	MN	
CWP	EPA 624	1,3-Dichlorobenzene	NPW	MN	
CWP	EPA 624	1,4-Dichlorobenzene	NPW	MN	
CWP	EPA 624	1,4-Dioxane (1,4- Diethyleneoxide)	NPW	MN	
CWP	EPA 624	2-Chloroethyl vinyl ether	NPW	MN	
CWP	EPA 624	Acrylonitrile	NPW	MN	
CWP	EPA 624	Benzene	NPW	MN	
CWP	EPA 624	Bromodichloromethane	NPW	MN	
CWP	EPA 624	Bromoform	NPW	MN	
CWP	EPA 624	Carbon tetrachloride	NPW	MN	
CWP	EPA 624	Chlorobenzene	NPW	MN	
CWP	EPA 624	Chlorodibromomethane	NPW	MN	
CWP	EPA 624	Chloroethane (Ethyl chloride)	NPW	MN	
CWP	EPA 624	Chloroform	NPW	MN	
CWP	EPA 624	cis-1,3-Dichloropropene	NPW	MN	
CWP	EPA 624	Ethylbenzene	NPW	MN	
CWP	EPA 624	Methyl bromide (Bromomethane)	NPW	MN	
CWP	EPA 624	Methyl chloride (Chloromethane)	NPW	MN	
CWP	EPA 624	Methylene chloride (Dichloromethane)	NPW	MN	
CWP	EPA 624	Tetrachloroethylene (Perchloroethylene)	NPW	MN	
CWP	EPA 624	Toluene	NPW	MN	
CWP	EPA 624	trans-1,2-Dichloroethylene	NPW	MN	
CWP	EPA 624	trans-1,3-Dichloropropylene	NPW	MN	
CWP	EPA 624	Trichloroethene (Trichloroethylene)	NPW	MN	
CWP	EPA 624	Trichlorofluoromethane (Fluorotrichloromethane, Freon 11)	NPW	MN	
CWP	EPA 624	Vinyl chloride	NPW	MN	

EPA 624.1

Preparation Techniques: Purge and trap;

Program	Method	Analyte	Matrix	Primary	SOP
CWP	EPA 624.1	1,1,1-Trichloroethane	NPW	MN	
CWP	EPA 624.1	1,1,2,2-Tetrachloroethane	NPW	MN	
CWP	EPA 624.1	1,1,2-Trichloroethane	NPW	MN	
CWP	EPA 624.1	1,1-Dichloroethane	NPW	MN	
CWP	EPA 624.1	1,1-Dichloroethylene	NPW	MN	
CWP	EPA 624.1	1,2,4-Trichlorobenzene	NPW	MN	
CWP	EPA 624.1	1,2-Dibromo-3-chloropropane (DBCP)	NPW	MN	User Defined HN-VMS-001 Rev. 10
CWP	EPA 624.1	1,2-Dichlorobenzene	NPW	MN	
CWP	EPA 624.1	1,2-Dichloroethane (Ethylene dichloride)	NPW	MN	
CWP	EPA 624.1	1,2-Dichloropropane	NPW	MN	
CWP	EPA 624.1	1,3-Dichlorobenzene	NPW	MN	
CWP	EPA 624.1	1,4-Dichlorobenzene	NPW	MN	
CWP	EPA 624.1	1,4-Dioxane (1,4- Diethyleneoxide)	NPW	MN	
CWP	EPA 624.1	2-Butanone (Methyl ethyl ketone, MEK)	NPW	MN	
CWP	EPA 624.1	2-Chloroethyl vinyl ether	NPW	MN	
CWP	EPA 624.1	4-Methyl-2-pentanone (MIBK)	NPW	MN	
CWP	EPA 624.1	Acetone	NPW	MN	
CWP	EPA 624.1	Acrolein (Propenal)	NPW	MN	
CWP	EPA 624.1	Acrylonitrile	NPW	MN	
CWP	EPA 624.1	Benzene	NPW	MN	
CWP	EPA 624.1	Bromodichloromethane	NPW	MN	
CWP	EPA 624.1	Bromoform	NPW	MN	
CWP	EPA 624.1	Carbon tetrachloride	NPW	MN	
CWP	EPA 624.1	Chlorobenzene	NPW	MN	
CWP	EPA 624.1	Chlorodibromomethane	NPW	MN	
CWP	EPA 624.1	Chloroethane (Ethyl chloride)	NPW	MN	
CWP	EPA 624.1	Chloroform	NPW	MN	
CWP	EPA 624.1	cis-1,3-Dichloropropene	NPW	MN	
CWP	EPA 624.1	Ethyl acetate	NPW	MN	
CWP	EPA 624.1	Ethylbenzene	NPW	MN	
CWP	EPA 624.1	Isopropylbenzene	NPW	MN	
CWP	EPA 624.1	m+p-xylene	NPW	MN	
CWP	EPA 624.1	Methyl bromide (Bromomethane)	NPW	MN	

Program	Method	Analyte	Matrix	Primary	SOP
CWP	EPA 624.1	Methyl chloride (Chloromethane)	NPW	MN	
CWP	EPA 624.1	Methylene chloride (Dichloromethane)	NPW	MN	
CWP	EPA 624.1	o-Xylene	NPW	MN	
CWP	EPA 624.1	tert-Butyl alcohol	NPW	MN	
CWP	EPA 624.1	Tetrachloroethylene (Perchloroethylene)	NPW	MN	
CWP	EPA 624.1	Tetrahydrofuran (THF)	NPW	MN	
CWP	EPA 624.1	Toluene	NPW	MN	
CWP	EPA 624.1	trans-1,2-Dichloroethylene	NPW	MN	
CWP	EPA 624.1	trans-1,3-Dichloropropylene	NPW	MN	
CWP	EPA 624.1	Trichloroethene (Trichloroethylene)	NPW	MN	
CWP	EPA 624.1	Trichlorofluoromethane (Fluorotrichloromethane, Freon 11)	NPW	MN	
CWP	EPA 624.1	Vinyl chloride	NPW	MN	
CWP	EPA 624.1	Xylene (total)	NPW	MN	

NCASI DI/MEOH-94.03

Preparation Techniques: N/A

Program	Method	Analyte	Matrix	Primary	SOP
CWP	NCASI DI/MEOH-94.03	Methanol	NPW	MN	

Resource Conservation Recovery Program

MPCA Guidance PFAS

Preparation Techniques: N/A

Program	Method	Analyte	Matrix	Primary	SOP
RCRP	MPCA Guidance PFAS	1H, 1H, 2H, 2H-Perfluorohexanesulfonic acid (4:2 FTS)	SCM	MN	
RCRP	MPCA Guidance PFAS	1H, 1H, 2H, 2H-Perfluorohexanesulfonic acid (4:2 FTS)	NPW	MN	
RCRP	MPCA Guidance PFAS	1H, 1H, 2H, 2H-Perfluorodecanesulfonic acid (8:2 FTS)	SCM	MN	
RCRP	MPCA Guidance PFAS	1H, 1H, 2H, 2H-Perfluorodecanesulfonic acid (8:2 FTS)	NPW	MN	
RCRP	MPCA Guidance PFAS	1H, 1H, 2H, 2H-Perfluorooctanesulfonic acid (6:2 FTS)	NPW	MN	
RCRP	MPCA Guidance PFAS	1H, 1H, 2H, 2H-Perfluorooctanesulfonic acid (6:2 FTS)	SCM	MN	

Program	Method	Analyte	Matrix	Primary	SOP
RCRP	MPCA Guidance PFAS	Hexafluoropropyleneoxide dimer acid (HFPO-DA) (GenX)	SCM	MN	
RCRP	MPCA Guidance PFAS	Hexafluoropropyleneoxide dimer acid (HFPO-DA) (GenX)	NPW	MN	
RCRP	MPCA Guidance PFAS	N-Ethylperfluorooctane sufonamido acetic acid NEtFOSAA)	NPW	MN	
RCRP	MPCA Guidance PFAS	N-Ethylperfluorooctane sufonamido acetic acid NEtFOSAA)	SCM	MN	
RCRP	MPCA Guidance PFAS	N-Ethylperfluorooctane sulfonamide (EtFOSAm)	NPW	MN	
RCRP	MPCA Guidance PFAS	N-Ethylperfluorooctane sulfonamido ethanol (EtFOSE)	NPW	MN	
RCRP	MPCA Guidance PFAS	N-Methylperfluorooctane sulfonamide (MeFOSA)	NPW	MN	
RCRP	MPCA Guidance PFAS	N-Methylperfluorooctane sulfonamido acetic acid (N-MeFOSAA)	NPW	MN	
RCRP	MPCA Guidance PFAS	N-Methylperfluorooctane sulfonamido acetic acid (N-MeFOSAA)	SCM	MN	
RCRP	MPCA Guidance PFAS	N-Methylperfluorooctane sulfonamido ethanol (N_MeFOSE)	NPW	MN	
RCRP	MPCA Guidance PFAS	Perfluorobutane sulfonic acid (PFBS)	SCM	MN	
RCRP	MPCA Guidance PFAS	Perfluorobutane sulfonic acid (PFBS)	NPW	MN	
RCRP	MPCA Guidance PFAS	Perfluorobutanoic acid (PFBA)	NPW	MN	
RCRP	MPCA Guidance PFAS	Perfluorobutanoic acid (PFBA)	SCM	MN	
RCRP	MPCA Guidance PFAS	Perfluorodecane sulfonate (PFDS)	NPW	MN	
RCRP	MPCA Guidance PFAS	Perfluorodecane sulfonate (PFDS)	SCM	MN	
RCRP	MPCA Guidance PFAS	Perfluorodecanoic acid (PFDA)	SCM	MN	
RCRP	MPCA Guidance PFAS	Perfluorodecanoic acid (PFDA)	NPW	MN	
RCRP	MPCA Guidance PFAS	Perfluorododecane sulfonic acid (PFDoS)	NPW	MN	
RCRP	MPCA Guidance PFAS	Perfluorododecanoic acid (PFDOA)	SCM	MN	
RCRP	MPCA Guidance PFAS	Perfluorododecanoic acid (PFDOA)	NPW	MN	
RCRP	MPCA Guidance PFAS	Perfluoroheptane sulfonate (PFHpS)	SCM	MN	
RCRP	MPCA Guidance PFAS	Perfluoroheptane sulfonic acid (PFHpS)	NPW	MN	
RCRP	MPCA Guidance PFAS	Perfluoroheptanoic acid (PFHpA)	NPW	MN	
RCRP	MPCA Guidance PFAS	Perfluoroheptanoic acid (PFHpA)	SCM	MN	
RCRP	MPCA Guidance PFAS	Perfluorohexadecanoic acid (PFHXDA)	NPW	MN	
RCRP	MPCA Guidance PFAS	Perfluorohexane sulfonic acid (PFHxS)	NPW	MN	
RCRP	MPCA Guidance PFAS	Perfluorohexane sulfonic acid (PFHxS)	SCM	MN	
RCRP	MPCA Guidance PFAS	Perfluorohexanoic acid (PFHxA)	SCM	MN	
RCRP	MPCA Guidance PFAS	Perfluorohexanoic acid (PFHxA)	NPW	MN	
RCRP	MPCA Guidance PFAS	Perfluorononane sulfonic acid (PFNS)	NPW	MN	
RCRP	MPCA Guidance PFAS	Perfluorononane sulfonic acid (PFNS)	SCM	MN	

Program	Method	Analyte	Matrix	Primary	SOP
RCRP	MPCA Guidance PFAS	Perfluorononanoic acid (PFNA)	SCM	MN	
RCRP	MPCA Guidance PFAS	Perfluorononanoic acid (PFNA)	NPW	MN	
RCRP	MPCA Guidance PFAS	Perfluorooctadecanoic acid (PFODA)	NPW	MN	
RCRP	MPCA Guidance PFAS	Perfluorooctane sulfonamide (PFOSAm)	NPW	MN	
RCRP	MPCA Guidance PFAS	Perfluorooctane sulfonamide (PFOSAm)	SCM	MN	
RCRP	MPCA Guidance PFAS	Perfluorooctane sulfonic acid (PFOS)	SCM	MN	
RCRP	MPCA Guidance PFAS	Perfluorooctane sulfonic acid (PFOS)	NPW	MN	
RCRP	MPCA Guidance PFAS	Perfluorooctanoic acid (PFOA)	SCM	MN	
RCRP	MPCA Guidance PFAS	Perfluorooctanoic acid (PFOA)	NPW	MN	
RCRP	MPCA Guidance PFAS	Perfluoropentane sulfonic acid (PFPeS)	SCM	MN	
RCRP	MPCA Guidance PFAS	Perfluoropentane sulfonic acid (PFPeS)	NPW	MN	
RCRP	MPCA Guidance PFAS	Perfluoropentanoic acid (PFPeA)	NPW	MN	
RCRP	MPCA Guidance PFAS	Perfluoropentanoic acid (PFPeA)	SCM	MN	
RCRP	MPCA Guidance PFAS	Perfluorotetradecanoic acid (PFTDA)	NPW	MN	
RCRP	MPCA Guidance PFAS	Perfluorotetradecanoic acid (PFTDA)	SCM	MN	
RCRP	MPCA Guidance PFAS	Perfluorotridecanoic acid (PFTrDA)	NPW	MN	
RCRP	MPCA Guidance PFAS	Perfluorotridecanoic acid (PFTrDA)	SCM	MN	
RCRP	MPCA Guidance PFAS	Perfluoroundecanoic acid (PFUDA)	NPW	MN	
RCRP	MPCA Guidance PFAS	Perfluoroundecanoic acid (PFUDA)	SCM	MN	

EPA 7.3.3.2

Preparation Techniques: N/A

Program	Method	Analyte	Matrix	Primary	SOP
RCRP	EPA 7.3.3.2	Reactive Cyanide	SCM	MN	

EPA 7.3.4.2

Preparation Techniques: N/A

Program	Method	Analyte	Matrix	Primary	SOP
RCRP	EPA 7.3.4.2	Reactive sulfide	SCM	MN	

EPA 7196A

Preparation Techniques: N/A

Program	Method	Analyte	Matrix	Primary	SOP
RCRP	EPA 7196A	Chromium VI	SCM	MN	
RCRP	EPA 7196A	Chromium VI	NPW	MN	

EPA 9012B

Preparation Techniques: N/A

Program	Method	Analyte	Matrix	Primary	SOP
RCRP	EPA 9012B	Amenable cyanide	SCM	MN	
RCRP	EPA 9012B	Amenable cyanide	NPW	MN	
RCRP	EPA 9012B	Cyanide	NPW	MN	
RCRP	EPA 9012B	Cyanide	SCM	MN	

EPA 9014

Preparation Techniques: N/A

Program	Method	Analyte	Matrix	Primary	SOP
RCRP	EPA 9014	Free cyanide	NPW	MN	

EPA 9030B

Preparation Techniques: N/A

Program	Method	Analyte	Matrix	Primary	SOP
RCRP	EPA 9030B	Sulfide	NPW	MN	
RCRP	EPA 9030B	Sulfide	SCM	MN	

EPA 9034

Preparation Techniques: N/A

Program	Method	Analyte	Matrix	Primary	SOP
RCRP	EPA 9034	Sulfide	SCM	MN	

EPA 9040C

Preparation Techniques: N/A

Program	Method	Analyte	Matrix	Primary	SOP
RCRP	EPA 9040C	pH	NPW	MN	

EPA 9045D

Preparation Techniques: N/A

Program	Method	Analyte	Matrix	Primary	SOP
RCRP	EPA 9045D	pH	NPW	MN	
RCRP	EPA 9045D	pH	SCM	MN	

EPA 9050A

Preparation Techniques: N/A

Program	Method	Analyte	Matrix	Primary	SOP
RCRP	EPA 9050A	Conductivity	NPW	MN	

EPA 9056A

Preparation Techniques: N/A

Program	Method	Analyte	Matrix	Primary	SOP
RCRP	EPA 9056A	Bromide	NPW	MN	
RCRP	EPA 9056A	Bromide	SCM	MN	
RCRP	EPA 9056A	Chloride	NPW	MN	
RCRP	EPA 9056A	Chloride	SCM	MN	
RCRP	EPA 9056A	Fluoride	NPW	MN	
RCRP	EPA 9056A	Fluoride	SCM	MN	
RCRP	EPA 9056A	Nitrate	SCM	MN	
RCRP	EPA 9056A	Nitrate	NPW	MN	
RCRP	EPA 9056A	Nitrite	NPW	MN	
RCRP	EPA 9056A	Nitrite	SCM	MN	
RCRP	EPA 9056A	Sulfate	NPW	MN	
RCRP	EPA 9056A	Sulfate	SCM	MN	

EPA 9060A

Preparation Techniques: N/A

Program	Method	Analyte	Matrix	Primary	SOP
RCRP	EPA 9060A	Total Organic Carbon	NPW	MN	

EPA 9066

Preparation Techniques: N/A

Program	Method	Analyte	Matrix	Primary	SOP
RCRP	EPA 9066	Total Phenolics	SCM	MN	
RCRP	EPA 9066	Total Phenolics	NPW	MN	

EPA 9071B

Preparation Techniques: N/A

Program	Method	Analyte	Matrix	Primary	SOP
RCRP	EPA 9071B	Oil & Grease	SCM	MN	

Kelada 01

Preparation Techniques: N/A

Program	Method	Analyte	Matrix	Primary	SOP
RCRP	Kelada 01	Free cyanide	NPW	MN	

SM 2540 G-2011

Preparation Techniques: N/A

Program	Method	Analyte	Matrix	Primary	SOP
RCRP	SM 2540 G-2011	Residue-total	SCM	MN	
RCRP	SM 2540 G-2011	Residue-volatile	SCM	MN	

SM 4500-NH3 G-2011

Preparation Techniques: Distillation, micro;

Program	Method	Analyte	Matrix	Primary	SOP
RCRP	SM 4500-NH3 G-2011	Ammonia as N	SCM	MN	

EPA 6010C

Preparation Techniques: Extraction, EPA 1311 TCLP, non-volatiles; Digestion, microwave-assisted; Digestion, hotplate or HotBlock; Extraction, EPA 1312 SPLP, non-volatiles;

Program	Method	Analyte	Matrix	Primary	SOP
RCRP	EPA 6010C	Aluminum	SCM	MN	
RCRP	EPA 6010C	Aluminum	NPW	MN	
RCRP	EPA 6010C	Antimony	NPW	MN	
RCRP	EPA 6010C	Antimony	SCM	MN	
RCRP	EPA 6010C	Arsenic	SCM	MN	
RCRP	EPA 6010C	Arsenic	NPW	MN	
RCRP	EPA 6010C	Barium	SCM	MN	
RCRP	EPA 6010C	Barium	NPW	MN	
RCRP	EPA 6010C	Beryllium	NPW	MN	
RCRP	EPA 6010C	Beryllium	SCM	MN	
RCRP	EPA 6010C	Boron	NPW	MN	
RCRP	EPA 6010C	Boron	SCM	MN	
RCRP	EPA 6010C	Cadmium	SCM	MN	
RCRP	EPA 6010C	Cadmium	NPW	MN	
RCRP	EPA 6010C	Calcium	NPW	MN	
RCRP	EPA 6010C	Calcium	SCM	MN	
RCRP	EPA 6010C	Chromium	NPW	MN	
RCRP	EPA 6010C	Chromium	SCM	MN	
RCRP	EPA 6010C	Cobalt	NPW	MN	
RCRP	EPA 6010C	Cobalt	SCM	MN	
RCRP	EPA 6010C	Copper	SCM	MN	
RCRP	EPA 6010C	Copper	NPW	MN	
RCRP	EPA 6010C	Iron	SCM	MN	
RCRP	EPA 6010C	Iron	NPW	MN	
RCRP	EPA 6010C	Lead	SCM	MN	
RCRP	EPA 6010C	Lead	NPW	MN	
RCRP	EPA 6010C	Lithium	NPW	MN	

Program	Method	Analyte	Matrix	Primary	SOP
RCRP	EPA 6010C	Lithium	SCM	MN	
RCRP	EPA 6010C	Magnesium	SCM	MN	
RCRP	EPA 6010C	Magnesium	NPW	MN	
RCRP	EPA 6010C	Manganese	SCM	MN	
RCRP	EPA 6010C	Manganese	NPW	MN	
RCRP	EPA 6010C	Molybdenum	NPW	MN	
RCRP	EPA 6010C	Molybdenum	SCM	MN	
RCRP	EPA 6010C	Nickel	NPW	MN	
RCRP	EPA 6010C	Nickel	SCM	MN	
RCRP	EPA 6010C	Potassium	SCM	MN	
RCRP	EPA 6010C	Potassium	NPW	MN	
RCRP	EPA 6010C	Selenium	NPW	MN	
RCRP	EPA 6010C	Selenium	SCM	MN	
RCRP	EPA 6010C	Silver	SCM	MN	
RCRP	EPA 6010C	Silver	NPW	MN	
RCRP	EPA 6010C	Sodium	SCM	MN	
RCRP	EPA 6010C	Sodium	NPW	MN	
RCRP	EPA 6010C	Strontium	NPW	MN	
RCRP	EPA 6010C	Strontium	SCM	MN	
RCRP	EPA 6010C	Thallium	NPW	MN	
RCRP	EPA 6010C	Thallium	SCM	MN	
RCRP	EPA 6010C	Tin	SCM	MN	
RCRP	EPA 6010C	Tin	NPW	MN	
RCRP	EPA 6010C	Titanium	SCM	MN	
RCRP	EPA 6010C	Titanium	NPW	MN	
RCRP	EPA 6010C	Vanadium	SCM	MN	
RCRP	EPA 6010C	Vanadium	NPW	MN	
RCRP	EPA 6010C	Zinc	SCM	MN	
RCRP	EPA 6010C	Zinc	NPW	MN	

EPA 6010D (Rev 2014)

Preparation Techniques: Extraction, EPA 1311 TCLP, non-volatiles; Digestion, microwave-assisted; Digestion, hotplate or HotBlock; Extraction, EPA 1312 SPLP, non-volatiles;

Program	Method	Analyte	Matrix	Primary	SOP
RCRP	EPA 6010D (Rev 2014)	Aluminum	NPW	MN	

Program	Method	Analyte	Matrix	Primary	SOP
RCRP	EPA 6010D (Rev 2014)	Aluminum	SCM	MN	
RCRP	EPA 6010D (Rev 2014)	Antimony	NPW	MN	
RCRP	EPA 6010D (Rev 2014)	Antimony	SCM	MN	
RCRP	EPA 6010D (Rev 2014)	Arsenic	NPW	MN	
RCRP	EPA 6010D (Rev 2014)	Arsenic	SCM	MN	
RCRP	EPA 6010D (Rev 2014)	Barium	SCM	MN	
RCRP	EPA 6010D (Rev 2014)	Barium	NPW	MN	
RCRP	EPA 6010D (Rev 2014)	Beryllium	NPW	MN	
RCRP	EPA 6010D (Rev 2014)	Beryllium	SCM	MN	
RCRP	EPA 6010D (Rev 2014)	Boron	NPW	MN	
RCRP	EPA 6010D (Rev 2014)	Boron	SCM	MN	
RCRP	EPA 6010D (Rev 2014)	Cadmium	SCM	MN	
RCRP	EPA 6010D (Rev 2014)	Cadmium	NPW	MN	
RCRP	EPA 6010D (Rev 2014)	Calcium	SCM	MN	
RCRP	EPA 6010D (Rev 2014)	Calcium	NPW	MN	
RCRP	EPA 6010D (Rev 2014)	Chromium	NPW	MN	
RCRP	EPA 6010D (Rev 2014)	Chromium	SCM	MN	
RCRP	EPA 6010D (Rev 2014)	Cobalt	SCM	MN	
RCRP	EPA 6010D (Rev 2014)	Cobalt	NPW	MN	
RCRP	EPA 6010D (Rev 2014)	Copper	NPW	MN	
RCRP	EPA 6010D (Rev 2014)	Copper	SCM	MN	
RCRP	EPA 6010D (Rev 2014)	Iron	NPW	MN	
RCRP	EPA 6010D (Rev 2014)	Iron	SCM	MN	
RCRP	EPA 6010D (Rev 2014)	Lead	NPW	MN	
RCRP	EPA 6010D (Rev 2014)	Lead	SCM	MN	
RCRP	EPA 6010D (Rev 2014)	Lithium	NPW	MN	
RCRP	EPA 6010D (Rev 2014)	Lithium	SCM	MN	
RCRP	EPA 6010D (Rev 2014)	Magnesium	NPW	MN	
RCRP	EPA 6010D (Rev 2014)	Magnesium	SCM	MN	
RCRP	EPA 6010D (Rev 2014)	Manganese	SCM	MN	
RCRP	EPA 6010D (Rev 2014)	Manganese	NPW	MN	
RCRP	EPA 6010D (Rev 2014)	Molybdenum	SCM	MN	
RCRP	EPA 6010D (Rev 2014)	Molybdenum	NPW	MN	
RCRP	EPA 6010D (Rev 2014)	Nickel	NPW	MN	
RCRP	EPA 6010D (Rev 2014)	Nickel	SCM	MN	
RCRP	EPA 6010D (Rev 2014)	Potassium	SCM	MN	

Program	Method	Analyte	Matrix	Primary	SOP
RCRP	EPA 6010D (Rev 2014)	Potassium	NPW	MN	
RCRP	EPA 6010D (Rev 2014)	Selenium	SCM	MN	
RCRP	EPA 6010D (Rev 2014)	Selenium	NPW	MN	
RCRP	EPA 6010D (Rev 2014)	Silver	NPW	MN	
RCRP	EPA 6010D (Rev 2014)	Silver	SCM	MN	
RCRP	EPA 6010D (Rev 2014)	Sodium	SCM	MN	
RCRP	EPA 6010D (Rev 2014)	Sodium	NPW	MN	
RCRP	EPA 6010D (Rev 2014)	Strontium	NPW	MN	
RCRP	EPA 6010D (Rev 2014)	Strontium	SCM	MN	
RCRP	EPA 6010D (Rev 2014)	Thallium	NPW	MN	
RCRP	EPA 6010D (Rev 2014)	Thallium	SCM	MN	
RCRP	EPA 6010D (Rev 2014)	Tin	NPW	MN	
RCRP	EPA 6010D (Rev 2014)	Tin	SCM	MN	
RCRP	EPA 6010D (Rev 2014)	Titanium	NPW	MN	
RCRP	EPA 6010D (Rev 2014)	Titanium	SCM	MN	
RCRP	EPA 6010D (Rev 2014)	Vanadium	SCM	MN	
RCRP	EPA 6010D (Rev 2014)	Vanadium	NPW	MN	
RCRP	EPA 6010D (Rev 2014)	Zinc	SCM	MN	
RCRP	EPA 6010D (Rev 2014)	Zinc	NPW	MN	

EPA 6020A

Preparation Techniques: Extraction, EPA 1311 TCLP, non-volatiles; Digestion, microwave-assisted; Digestion, hotplate or HotBlock; Extraction, EPA 1312 SPLP, non-volatiles;

Program	Method	Analyte	Matrix	Primary	SOP
RCRP	EPA 6020A	Aluminum	NPW	MN	
RCRP	EPA 6020A	Aluminum	SCM	MN	
RCRP	EPA 6020A	Antimony	SCM	MN	
RCRP	EPA 6020A	Antimony	NPW	MN	
RCRP	EPA 6020A	Arsenic	SCM	MN	
RCRP	EPA 6020A	Arsenic	NPW	MN	
RCRP	EPA 6020A	Barium	SCM	MN	
RCRP	EPA 6020A	Barium	NPW	MN	
RCRP	EPA 6020A	Beryllium	NPW	MN	
RCRP	EPA 6020A	Beryllium	SCM	MN	
RCRP	EPA 6020A	Boron	SCM	MN	

Program	Method	Analyte	Matrix	Primary	SOP
RCRP	EPA 6020A	Boron	NPW	MN	
RCRP	EPA 6020A	Cadmium	SCM	MN	
RCRP	EPA 6020A	Cadmium	NPW	MN	
RCRP	EPA 6020A	Calcium	NPW	MN	
RCRP	EPA 6020A	Calcium	SCM	MN	
RCRP	EPA 6020A	Chromium	NPW	MN	
RCRP	EPA 6020A	Chromium	SCM	MN	
RCRP	EPA 6020A	Cobalt	NPW	MN	
RCRP	EPA 6020A	Cobalt	SCM	MN	
RCRP	EPA 6020A	Copper	SCM	MN	
RCRP	EPA 6020A	Copper	NPW	MN	
RCRP	EPA 6020A	Iron	NPW	MN	
RCRP	EPA 6020A	Iron	SCM	MN	
RCRP	EPA 6020A	Lead	SCM	MN	
RCRP	EPA 6020A	Lead	NPW	MN	
RCRP	EPA 6020A	Magnesium	SCM	MN	
RCRP	EPA 6020A	Magnesium	NPW	MN	
RCRP	EPA 6020A	Manganese	NPW	MN	
RCRP	EPA 6020A	Manganese	SCM	MN	
RCRP	EPA 6020A	Molybdenum	SCM	MN	
RCRP	EPA 6020A	Molybdenum	NPW	MN	
RCRP	EPA 6020A	Nickel	SCM	MN	
RCRP	EPA 6020A	Nickel	NPW	MN	
RCRP	EPA 6020A	Potassium	NPW	MN	
RCRP	EPA 6020A	Potassium	SCM	MN	
RCRP	EPA 6020A	Selenium	NPW	MN	
RCRP	EPA 6020A	Selenium	SCM	MN	
RCRP	EPA 6020A	Silver	SCM	MN	
RCRP	EPA 6020A	Silver	NPW	MN	
RCRP	EPA 6020A	Sodium	SCM	MN	
RCRP	EPA 6020A	Sodium	NPW	MN	
RCRP	EPA 6020A	Strontium	SCM	MN	
RCRP	EPA 6020A	Strontium	NPW	MN	
RCRP	EPA 6020A	Thallium	SCM	MN	
RCRP	EPA 6020A	Thallium	NPW	MN	
RCRP	EPA 6020A	Tin	SCM	MN	

Program	Method	Analyte	Matrix	Primary	SOP
RCRP	EPA 6020A	Tin	NPW	MN	
RCRP	EPA 6020A	Titanium	NPW	MN	
RCRP	EPA 6020A	Titanium	SCM	MN	
RCRP	EPA 6020A	Vanadium	SCM	MN	
RCRP	EPA 6020A	Vanadium	NPW	MN	
RCRP	EPA 6020A	Zinc	SCM	MN	
RCRP	EPA 6020A	Zinc	NPW	MN	

EPA 6020B (Rev 2014)

Preparation Techniques: Extraction, EPA 1311 TCLP, non-volatiles; Digestion, microwave-assisted; Digestion, hotplate or HotBlock; Extraction, EPA 1312 SPLP, non-volatiles;

Program	Method	Analyte	Matrix	Primary	SOP
RCRP	EPA 6020B (Rev 2014)	Aluminum	SCM	MN	
RCRP	EPA 6020B (Rev 2014)	Aluminum	NPW	MN	
RCRP	EPA 6020B (Rev 2014)	Antimony	NPW	MN	
RCRP	EPA 6020B (Rev 2014)	Antimony	SCM	MN	
RCRP	EPA 6020B (Rev 2014)	Arsenic	NPW	MN	
RCRP	EPA 6020B (Rev 2014)	Arsenic	SCM	MN	
RCRP	EPA 6020B (Rev 2014)	Barium	SCM	MN	
RCRP	EPA 6020B (Rev 2014)	Barium	NPW	MN	
RCRP	EPA 6020B (Rev 2014)	Beryllium	NPW	MN	
RCRP	EPA 6020B (Rev 2014)	Beryllium	SCM	MN	
RCRP	EPA 6020B (Rev 2014)	Boron	NPW	MN	
RCRP	EPA 6020B (Rev 2014)	Boron	SCM	MN	
RCRP	EPA 6020B (Rev 2014)	Cadmium	NPW	MN	
RCRP	EPA 6020B (Rev 2014)	Cadmium	SCM	MN	
RCRP	EPA 6020B (Rev 2014)	Calcium	SCM	MN	
RCRP	EPA 6020B (Rev 2014)	Calcium	NPW	MN	
RCRP	EPA 6020B (Rev 2014)	Chromium	NPW	MN	
RCRP	EPA 6020B (Rev 2014)	Chromium	SCM	MN	
RCRP	EPA 6020B (Rev 2014)	Cobalt	SCM	MN	
RCRP	EPA 6020B (Rev 2014)	Cobalt	NPW	MN	
RCRP	EPA 6020B (Rev 2014)	Copper	NPW	MN	
RCRP	EPA 6020B (Rev 2014)	Copper	SCM	MN	
RCRP	EPA 6020B (Rev 2014)	Iron	SCM	MN	

Program	Method	Analyte	Matrix	Primary	SOP
RCRP	EPA 6020B (Rev 2014)	Iron	NPW	MN	
RCRP	EPA 6020B (Rev 2014)	Lead	SCM	MN	
RCRP	EPA 6020B (Rev 2014)	Lead	NPW	MN	
RCRP	EPA 6020B (Rev 2014)	Lithium	NPW	MN	
RCRP	EPA 6020B (Rev 2014)	Lithium	SCM	MN	
RCRP	EPA 6020B (Rev 2014)	Magnesium	NPW	MN	
RCRP	EPA 6020B (Rev 2014)	Magnesium	SCM	MN	
RCRP	EPA 6020B (Rev 2014)	Manganese	SCM	MN	
RCRP	EPA 6020B (Rev 2014)	Manganese	NPW	MN	
RCRP	EPA 6020B (Rev 2014)	Molybdenum	NPW	MN	
RCRP	EPA 6020B (Rev 2014)	Molybdenum	SCM	MN	
RCRP	EPA 6020B (Rev 2014)	Nickel	NPW	MN	
RCRP	EPA 6020B (Rev 2014)	Nickel	SCM	MN	
RCRP	EPA 6020B (Rev 2014)	Potassium	NPW	MN	
RCRP	EPA 6020B (Rev 2014)	Potassium	SCM	MN	
RCRP	EPA 6020B (Rev 2014)	Selenium	SCM	MN	
RCRP	EPA 6020B (Rev 2014)	Selenium	NPW	MN	
RCRP	EPA 6020B (Rev 2014)	Silver	NPW	MN	
RCRP	EPA 6020B (Rev 2014)	Silver	SCM	MN	
RCRP	EPA 6020B (Rev 2014)	Sodium	SCM	MN	
RCRP	EPA 6020B (Rev 2014)	Sodium	NPW	MN	
RCRP	EPA 6020B (Rev 2014)	Strontium	NPW	MN	
RCRP	EPA 6020B (Rev 2014)	Strontium	SCM	MN	
RCRP	EPA 6020B (Rev 2014)	Thallium	SCM	MN	
RCRP	EPA 6020B (Rev 2014)	Thallium	NPW	MN	
RCRP	EPA 6020B (Rev 2014)	Thorium	NPW	MN	
RCRP	EPA 6020B (Rev 2014)	Tin	NPW	MN	
RCRP	EPA 6020B (Rev 2014)	Tin	SCM	MN	
RCRP	EPA 6020B (Rev 2014)	Titanium	NPW	MN	
RCRP	EPA 6020B (Rev 2014)	Titanium	SCM	MN	
RCRP	EPA 6020B (Rev 2014)	Uranium	SCM	MN	
RCRP	EPA 6020B (Rev 2014)	Uranium	NPW	MN	
RCRP	EPA 6020B (Rev 2014)	Vanadium	SCM	MN	
RCRP	EPA 6020B (Rev 2014)	Vanadium	NPW	MN	
RCRP	EPA 6020B (Rev 2014)	Zinc	SCM	MN	
RCRP	EPA 6020B (Rev 2014)	Zinc	NPW	MN	

EPA 7470A

Preparation Techniques: N/A

Program	Method	Analyte	Matrix	Primary	SOP
RCRP	EPA 7470A	Mercury	NPW	MN	

EPA 7471B

Preparation Techniques: N/A

Program	Method	Analyte	Matrix	Primary	SOP
RCRP	EPA 7471B	Mercury	SCM	MN	

EPA 8011

Preparation Techniques: Extraction, micro;

Program	Method	Analyte	Matrix	Primary	SOP
RCRP	EPA 8011	1,2-Dibromo-3-chloropropane (DBCP)	NPW	MN	
RCRP	EPA 8011	1,2-Dibromoethane (EDB, Ethylene dibromide)	NPW	MN	

EPA 8081A

Preparation Techniques: Extraction, ultrasonic; Extraction, EPA 1311 TCLP, non-volatiles; Extraction, pressurized fluid (PFE); Extraction, microwave; Extraction, separatory funnel liquid-liquid (LLE); Extraction, soxhlet; Extraction, EPA 1312 SPLP, non-volatiles; Extraction, Micro;

Program	Method	Analyte	Matrix	Primary	SOP
RCRP	EPA 8081A	4,4'-DDD	SCM	MN	
RCRP	EPA 8081A	4,4'-DDD	NPW	MN	
RCRP	EPA 8081A	4,4'-DDE	SCM	MN	
RCRP	EPA 8081A	4,4'-DDE	NPW	MN	
RCRP	EPA 8081A	4,4'-DDT	NPW	MN	
RCRP	EPA 8081A	4,4'-DDT	SCM	MN	
RCRP	EPA 8081A	Aldrin	SCM	MN	
RCRP	EPA 8081A	Aldrin	NPW	MN	
RCRP	EPA 8081A	alpha-BHC (alpha-Hexachlorocyclohexane)	SCM	MN	

Program	Method	Analyte	Matrix	Primary	SOP
RCRP	EPA 8081A	alpha-BHC (alpha-Hexachlorocyclohexane)	NPW	MN	
RCRP	EPA 8081A	alpha-Chlordane	SCM	MN	
RCRP	EPA 8081A	alpha-Chlordane	NPW	MN	
RCRP	EPA 8081A	beta-BHC (beta-Hexachlorocyclohexane)	SCM	MN	
RCRP	EPA 8081A	beta-BHC (beta-Hexachlorocyclohexane)	NPW	MN	
RCRP	EPA 8081A	Chlordane (tech.)	NPW	MN	
RCRP	EPA 8081A	Chlordane (tech.)	SCM	MN	
RCRP	EPA 8081A	delta-BHC	NPW	MN	
RCRP	EPA 8081A	delta-BHC	SCM	MN	
RCRP	EPA 8081A	Dieldrin	NPW	MN	
RCRP	EPA 8081A	Dieldrin	SCM	MN	
RCRP	EPA 8081A	Endosulfan I	SCM	MN	
RCRP	EPA 8081A	Endosulfan I	NPW	MN	
RCRP	EPA 8081A	Endosulfan II	SCM	MN	
RCRP	EPA 8081A	Endosulfan II	NPW	MN	
RCRP	EPA 8081A	Endosulfan sulfate	NPW	MN	
RCRP	EPA 8081A	Endosulfan sulfate	SCM	MN	
RCRP	EPA 8081A	Endrin	SCM	MN	
RCRP	EPA 8081A	Endrin	NPW	MN	
RCRP	EPA 8081A	Endrin aldehyde	NPW	MN	
RCRP	EPA 8081A	Endrin aldehyde	SCM	MN	
RCRP	EPA 8081A	Endrin ketone	SCM	MN	
RCRP	EPA 8081A	Endrin ketone	NPW	MN	
RCRP	EPA 8081A	gamma-BHC (Lindane, gamma-Hexachlorocyclohexane)	SCM	MN	
RCRP	EPA 8081A	gamma-BHC (Lindane, gamma-Hexachlorocyclohexane)	NPW	MN	
RCRP	EPA 8081A	gamma-Chlordane	NPW	MN	
RCRP	EPA 8081A	gamma-Chlordane	SCM	MN	
RCRP	EPA 8081A	Heptachlor	SCM	MN	
RCRP	EPA 8081A	Heptachlor	NPW	MN	
RCRP	EPA 8081A	Heptachlor epoxide	SCM	MN	
RCRP	EPA 8081A	Heptachlor epoxide	NPW	MN	
RCRP	EPA 8081A	Methoxychlor	NPW	MN	
RCRP	EPA 8081A	Methoxychlor	SCM	MN	
RCRP	EPA 8081A	Toxaphene (Chlorinated camphene)	SCM	MN	
RCRP	EPA 8081A	Toxaphene (Chlorinated camphene)	NPW	MN	

EPA 8081B

Preparation Techniques: Extraction, ultrasonic; Extraction, micro; Extraction, EPA 1311 TCLP, non-volatiles; Extraction, pressurized fluid (PFE); Extraction, microwave; Extraction, separatory funnel liquid-liquid (LLE); Extraction, soxhlet; Extraction, EPA 1312 SPLP, non-volatiles;

Program	Method	Analyte	Matrix	Primary	SOP
RCRP	EPA 8081B	4,4'-DDD	SCM	MN	
RCRP	EPA 8081B	4,4'-DDD	NPW	MN	
RCRP	EPA 8081B	4,4'-DDE	SCM	MN	
RCRP	EPA 8081B	4,4'-DDE	NPW	MN	
RCRP	EPA 8081B	4,4'-DDT	NPW	MN	
RCRP	EPA 8081B	4,4'-DDT	SCM	MN	
RCRP	EPA 8081B	alpha-BHC (alpha-Hexachlorocyclohexane)	NPW	MN	
RCRP	EPA 8081B	alpha-BHC (alpha-Hexachlorocyclohexane)	SCM	MN	
RCRP	EPA 8081B	alpha-Chlordane	NPW	MN	
RCRP	EPA 8081B	alpha-Chlordane	SCM	MN	
RCRP	EPA 8081B	beta-BHC (beta-Hexachlorocyclohexane)	SCM	MN	
RCRP	EPA 8081B	beta-BHC (beta-Hexachlorocyclohexane)	NPW	MN	
RCRP	EPA 8081B	Chlordane (tech.)	SCM	MN	
RCRP	EPA 8081B	Chlordane (tech.)	NPW	MN	
RCRP	EPA 8081B	delta-BHC	SCM	MN	
RCRP	EPA 8081B	delta-BHC	NPW	MN	
RCRP	EPA 8081B	Dieldrin	NPW	MN	
RCRP	EPA 8081B	Dieldrin	SCM	MN	
RCRP	EPA 8081B	Endosulfan I	NPW	MN	
RCRP	EPA 8081B	Endosulfan I	SCM	MN	
RCRP	EPA 8081B	Endosulfan II	SCM	MN	
RCRP	EPA 8081B	Endosulfan II	NPW	MN	
RCRP	EPA 8081B	Endosulfan sulfate	SCM	MN	
RCRP	EPA 8081B	Endosulfan sulfate	NPW	MN	
RCRP	EPA 8081B	Endrin	NPW	MN	
RCRP	EPA 8081B	Endrin	SCM	MN	
RCRP	EPA 8081B	Endrin aldehyde	SCM	MN	
RCRP	EPA 8081B	Endrin aldehyde	NPW	MN	
RCRP	EPA 8081B	Endrin ketone	SCM	MN	
RCRP	EPA 8081B	Endrin ketone	NPW	MN	

Program	Method	Analyte	Matrix	Primary	SOP
RCRP	EPA 8081B	gamma-BHC (Lindane, gamma-Hexachlorocyclohexane)	SCM	MN	
RCRP	EPA 8081B	gamma-BHC (Lindane, gamma-Hexachlorocyclohexane)	NPW	MN	
RCRP	EPA 8081B	gamma-Chlordane	SCM	MN	
RCRP	EPA 8081B	gamma-Chlordane	NPW	MN	
RCRP	EPA 8081B	Heptachlor	SCM	MN	
RCRP	EPA 8081B	Heptachlor	NPW	MN	
RCRP	EPA 8081B	Heptachlor epoxide	NPW	MN	
RCRP	EPA 8081B	Heptachlor epoxide	SCM	MN	
RCRP	EPA 8081B	Methoxychlor	NPW	MN	
RCRP	EPA 8081B	Methoxychlor	SCM	MN	
RCRP	EPA 8081B	Toxaphene (Chlorinated camphene)	NPW	MN	
RCRP	EPA 8081B	Toxaphene (Chlorinated camphene)	SCM	MN	

EPA 8082

Preparation Techniques: Extraction, ultrasonic; Extraction, EPA 1311 TCLP, non-volatiles; Extraction, pressurized fluid (PFE); Extraction, microwave; Extraction, separatory funnel liquid-liquid (LLE); Extraction, soxhlet; Extraction, EPA 1312 SPLP, non-volatiles; Extraction, Micro;

Program	Method	Analyte	Matrix	Primary	SOP
RCRP	EPA 8082	Aroclor-1016 (PCB-1016)	SCM	MN	
RCRP	EPA 8082	Aroclor-1016 (PCB-1016)	NPW	MN	
RCRP	EPA 8082	Aroclor-1221 (PCB-1221)	SCM	MN	
RCRP	EPA 8082	Aroclor-1221 (PCB-1221)	NPW	MN	
RCRP	EPA 8082	Aroclor-1232 (PCB-1232)	NPW	MN	
RCRP	EPA 8082	Aroclor-1232 (PCB-1232)	SCM	MN	
RCRP	EPA 8082	Aroclor-1242 (PCB-1242)	NPW	MN	
RCRP	EPA 8082	Aroclor-1242 (PCB-1242)	SCM	MN	
RCRP	EPA 8082	Aroclor-1248 (PCB-1248)	SCM	MN	
RCRP	EPA 8082	Aroclor-1248 (PCB-1248)	NPW	MN	
RCRP	EPA 8082	Aroclor-1254 (PCB-1254)	NPW	MN	
RCRP	EPA 8082	Aroclor-1254 (PCB-1254)	SCM	MN	
RCRP	EPA 8082	Aroclor-1260 (PCB-1260)	SCM	MN	
RCRP	EPA 8082	Aroclor-1260 (PCB-1260)	NPW	MN	
RCRP	EPA 8082	Aroclor-1262 (PCB-1262)	NPW	MN	
RCRP	EPA 8082	Aroclor-1262 (PCB-1262)	SCM	MN	

Program	Method	Analyte	Matrix	Primary	SOP
RCRP	EPA 8082	Aroclor-1268 (PCB-1268)	NPW	MN	
RCRP	EPA 8082	Aroclor-1268 (PCB-1268)	SCM	MN	

EPA 8082A

Preparation Techniques: Extraction, ultrasonic; Extraction, micro; Extraction, EPA 1311 TCLP, non-volatiles; Waste Dilution (EPA 3580A); Extraction, pressurized fluid (PFE); Extraction, microwave; Extraction, separatory funnel liquid-liquid (LLE); Extraction, soxhlet; Extraction, EPA 1312 SPLP, non-volatiles;

Program	Method	Analyte	Matrix	Primary	SOP
RCRP	EPA 8082A	Aroclor-1016 (PCB-1016)	NPW	MN	
RCRP	EPA 8082A	Aroclor-1016 (PCB-1016)	SCM	MN	
RCRP	EPA 8082A	Aroclor-1221 (PCB-1221)	NPW	MN	
RCRP	EPA 8082A	Aroclor-1221 (PCB-1221)	SCM	MN	
RCRP	EPA 8082A	Aroclor-1232 (PCB-1232)	SCM	MN	
RCRP	EPA 8082A	Aroclor-1232 (PCB-1232)	NPW	MN	
RCRP	EPA 8082A	Aroclor-1242 (PCB-1242)	NPW	MN	
RCRP	EPA 8082A	Aroclor-1242 (PCB-1242)	SCM	MN	
RCRP	EPA 8082A	Aroclor-1248 (PCB-1248)	SCM	MN	
RCRP	EPA 8082A	Aroclor-1248 (PCB-1248)	NPW	MN	
RCRP	EPA 8082A	Aroclor-1254 (PCB-1254)	SCM	MN	
RCRP	EPA 8082A	Aroclor-1254 (PCB-1254)	NPW	MN	
RCRP	EPA 8082A	Aroclor-1260 (PCB-1260)	SCM	MN	
RCRP	EPA 8082A	Aroclor-1260 (PCB-1260)	NPW	MN	

EPA 8082A (Rev 2007)

Preparation Techniques: Extraction, ultrasonic; Extraction, micro; Waste Dilution (EPA 3580A); Extraction, pressurized fluid (PFE); Extraction, microwave; Extraction, separatory funnel liquid-liquid (LLE); Extraction, soxhlet; Extraction, EPA 1312 SPLP, non-volatiles;

Program	Method	Analyte	Matrix	Primary	SOP
RCRP	EPA 8082A (Rev 2007)	Aroclor-1262 (PCB-1262)	NPW	MN	
RCRP	EPA 8082A (Rev 2007)	Aroclor-1262 (PCB-1262)	SCM	MN	
RCRP	EPA 8082A (Rev 2007)	Aroclor-1268 (PCB-1268)	SCM	MN	
RCRP	EPA 8082A (Rev 2007)	Aroclor-1268 (PCB-1268)	NPW	MN	

EPA 8151A

Preparation Techniques: Extraction, ultrasonic; Extraction, EPA 1311 TCLP, non-volatiles; Extraction, separatory funnel liquid-liquid (LLE); Extraction, EPA 1312 SPLP, non-volatiles;

Program	Method	Analyte	Matrix	Primary	SOP
RCRP	EPA 8151A	2,4,5-T	SCM	MN	
RCRP	EPA 8151A	2,4,5-T	NPW	MN	
RCRP	EPA 8151A	2,4-D	SCM	MN	
RCRP	EPA 8151A	2,4-D	NPW	MN	
RCRP	EPA 8151A	Silvex (2,4,5-TP)	SCM	MN	
RCRP	EPA 8151A	Silvex (2,4,5-TP)	NPW	MN	

EPA 8270C

Preparation Techniques: Extraction, EPA 1311 TCLP, non-volatiles; Extraction, pressurized fluid (PFE); Extraction, microwave; Extraction, separatory funnel liquid-liquid (LLE); Extraction, soxhlet; Extraction, EPA 1312 SPLP, non-volatiles;

Program	Method	Analyte	Matrix	Primary	SOP
RCRP	EPA 8270C	1,2,4-Trichlorobenzene	SCM	MN	
RCRP	EPA 8270C	1,2,4-Trichlorobenzene	NPW	MN	
RCRP	EPA 8270C	1,2-Dichlorobenzene	NPW	MN	
RCRP	EPA 8270C	1,2-Dichlorobenzene	SCM	MN	
RCRP	EPA 8270C	1,3-Dichlorobenzene	NPW	MN	
RCRP	EPA 8270C	1,3-Dichlorobenzene	SCM	MN	
RCRP	EPA 8270C	1,4-Dichlorobenzene	SCM	MN	
RCRP	EPA 8270C	1,4-Dichlorobenzene	NPW	MN	
RCRP	EPA 8270C	1,4-Dioxane (1,4- Diethyleneoxide)	NPW	MN	
RCRP	EPA 8270C	1,4-Dioxane (1,4- Diethyleneoxide)	SCM	MN	
RCRP	EPA 8270C	2,4,5-Trichlorophenol	SCM	MN	
RCRP	EPA 8270C	2,4,5-Trichlorophenol	NPW	MN	
RCRP	EPA 8270C	2,4,6-Trichlorophenol	NPW	MN	
RCRP	EPA 8270C	2,4,6-Trichlorophenol	SCM	MN	
RCRP	EPA 8270C	2,4-Dichlorophenol	SCM	MN	
RCRP	EPA 8270C	2,4-Dichlorophenol	NPW	MN	
RCRP	EPA 8270C	2,4-Dimethylphenol	SCM	MN	
RCRP	EPA 8270C	2,4-Dimethylphenol	NPW	MN	
RCRP	EPA 8270C	2,4-Dinitrophenol	SCM	MN	
RCRP	EPA 8270C	2,4-Dinitrophenol	NPW	MN	

Program	Method	Analyte	Matrix	Primary	SOP
RCRP	EPA 8270C	2,4-Dinitrotoluene (2,4-DNT)	NPW	MN	
RCRP	EPA 8270C	2,4-Dinitrotoluene (2,4-DNT)	SCM	MN	
RCRP	EPA 8270C	2,6-Dichlorophenol	SCM	MN	
RCRP	EPA 8270C	2,6-Dichlorophenol	NPW	MN	
RCRP	EPA 8270C	2,6-Dinitrotoluene (2,6-DNT)	SCM	MN	
RCRP	EPA 8270C	2,6-Dinitrotoluene (2,6-DNT)	NPW	MN	
RCRP	EPA 8270C	2-Chloronaphthalene	NPW	MN	
RCRP	EPA 8270C	2-Chloronaphthalene	SCM	MN	
RCRP	EPA 8270C	2-Chlorophenol	NPW	MN	
RCRP	EPA 8270C	2-Chlorophenol	SCM	MN	
RCRP	EPA 8270C	2-Methyl-4,6-dinitrophenol (4,6-Dinitro-2-methylphenol)	NPW	MN	
RCRP	EPA 8270C	2-Methyl-4,6-dinitrophenol (4,6-Dinitro-2-methylphenol)	SCM	MN	
RCRP	EPA 8270C	2-Methylaniline (o-Toluidine)	NPW	MN	
RCRP	EPA 8270C	2-Methylnaphthalene	SCM	MN	
RCRP	EPA 8270C	2-Methylnaphthalene	NPW	MN	
RCRP	EPA 8270C	2-Methylphenol (o-Cresol)	NPW	MN	
RCRP	EPA 8270C	2-Methylphenol (o-Cresol)	SCM	MN	
RCRP	EPA 8270C	2-Nitroaniline	SCM	MN	
RCRP	EPA 8270C	2-Nitroaniline	NPW	MN	
RCRP	EPA 8270C	2-Nitrophenol	SCM	MN	
RCRP	EPA 8270C	2-Nitrophenol	NPW	MN	
RCRP	EPA 8270C	3,3'-Dichlorobenzidine	SCM	MN	
RCRP	EPA 8270C	3,3'-Dichlorobenzidine	NPW	MN	
RCRP	EPA 8270C	3-Methylphenol (m-Cresol)	NPW	MN	
RCRP	EPA 8270C	3-Methylphenol (m-Cresol)	SCM	MN	
RCRP	EPA 8270C	3-Nitroaniline	NPW	MN	
RCRP	EPA 8270C	3-Nitroaniline	SCM	MN	
RCRP	EPA 8270C	4-Bromophenyl phenyl ether	NPW	MN	
RCRP	EPA 8270C	4-Bromophenyl phenyl ether	SCM	MN	
RCRP	EPA 8270C	4-Chloro-3-methylphenol	NPW	MN	
RCRP	EPA 8270C	4-Chloro-3-methylphenol	SCM	MN	
RCRP	EPA 8270C	4-Chloroaniline	SCM	MN	
RCRP	EPA 8270C	4-Chloroaniline	NPW	MN	
RCRP	EPA 8270C	4-Chlorophenyl phenylether	NPW	MN	
RCRP	EPA 8270C	4-Chlorophenyl phenylether	SCM	MN	

Program	Method	Analyte	Matrix	Primary	SOP
RCRP	EPA 8270C	4-Methylphenol (p-Cresol)	NPW	MN	
RCRP	EPA 8270C	4-Methylphenol (p-Cresol)	SCM	MN	
RCRP	EPA 8270C	4-Nitroaniline	SCM	MN	
RCRP	EPA 8270C	4-Nitroaniline	NPW	MN	
RCRP	EPA 8270C	4-Nitrophenol	SCM	MN	
RCRP	EPA 8270C	4-Nitrophenol	NPW	MN	
RCRP	EPA 8270C	Acenaphthene	SCM	MN	
RCRP	EPA 8270C	Acenaphthene	NPW	MN	
RCRP	EPA 8270C	Acenaphthylene	SCM	MN	
RCRP	EPA 8270C	Acenaphthylene	NPW	MN	
RCRP	EPA 8270C	Aniline	SCM	MN	
RCRP	EPA 8270C	Aniline	NPW	MN	
RCRP	EPA 8270C	Anthracene	NPW	MN	
RCRP	EPA 8270C	Anthracene	SCM	MN	
RCRP	EPA 8270C	Benzo(a)anthracene	SCM	MN	
RCRP	EPA 8270C	Benzo(a)anthracene	NPW	MN	
RCRP	EPA 8270C	Benzo(a)pyrene	NPW	MN	
RCRP	EPA 8270C	Benzo(a)pyrene	SCM	MN	
RCRP	EPA 8270C	Benzo(g,h,i)perylene	SCM	MN	
RCRP	EPA 8270C	Benzo(g,h,i)perylene	NPW	MN	
RCRP	EPA 8270C	Benzo(k)fluoranthene	NPW	MN	
RCRP	EPA 8270C	Benzo(k)fluoranthene	SCM	MN	
RCRP	EPA 8270C	Benzo[b]fluoranthene	NPW	MN	
RCRP	EPA 8270C	Benzo[b]fluoranthene	SCM	MN	
RCRP	EPA 8270C	bis(2-Chloroethoxy)methane	SCM	MN	
RCRP	EPA 8270C	bis(2-Chloroethoxy)methane	NPW	MN	
RCRP	EPA 8270C	bis(2-Chloroethyl) ether	NPW	MN	
RCRP	EPA 8270C	bis(2-Chloroethyl) ether	SCM	MN	
RCRP	EPA 8270C	bis(2-Chloroisopropyl) ether	SCM	MN	
RCRP	EPA 8270C	bis(2-Chloroisopropyl) ether	NPW	MN	
RCRP	EPA 8270C	Butyl benzyl phthalate	SCM	MN	
RCRP	EPA 8270C	Butyl benzyl phthalate	NPW	MN	
RCRP	EPA 8270C	Chrysene	SCM	MN	
RCRP	EPA 8270C	Chrysene	NPW	MN	
RCRP	EPA 8270C	Di(2-ethylhexyl) phthalate (bis(2-Ethylhexyl)phthalate, DEHP)	NPW	MN	

Program	Method	Analyte	Matrix	Primary	SOP
RCRP	EPA 8270C	Di(2-ethylhexyl) phthalate (bis(2-Ethylhexyl)phthalate, DEHP)	SCM	MN	
RCRP	EPA 8270C	Di-n-butyl phthalate	NPW	MN	
RCRP	EPA 8270C	Di-n-butyl phthalate	SCM	MN	
RCRP	EPA 8270C	Di-n-octyl phthalate	SCM	MN	
RCRP	EPA 8270C	Di-n-octyl phthalate	NPW	MN	
RCRP	EPA 8270C	Dibenz(a,h) anthracene	SCM	MN	
RCRP	EPA 8270C	Dibenz(a,h) anthracene	NPW	MN	
RCRP	EPA 8270C	Dibenzofuran	SCM	MN	
RCRP	EPA 8270C	Dibenzofuran	NPW	MN	
RCRP	EPA 8270C	Diethyl phthalate	NPW	MN	
RCRP	EPA 8270C	Diethyl phthalate	SCM	MN	
RCRP	EPA 8270C	Dimethyl phthalate	NPW	MN	
RCRP	EPA 8270C	Dimethyl phthalate	SCM	MN	
RCRP	EPA 8270C	Fluoranthene	SCM	MN	
RCRP	EPA 8270C	Fluoranthene	NPW	MN	
RCRP	EPA 8270C	Fluorene	SCM	MN	
RCRP	EPA 8270C	Fluorene	NPW	MN	
RCRP	EPA 8270C	Hexachlorobenzene	NPW	MN	
RCRP	EPA 8270C	Hexachlorobenzene	SCM	MN	
RCRP	EPA 8270C	Hexachlorobutadiene	NPW	MN	
RCRP	EPA 8270C	Hexachlorobutadiene	SCM	MN	
RCRP	EPA 8270C	Hexachlorocyclopentadiene	NPW	MN	
RCRP	EPA 8270C	Hexachlorocyclopentadiene	SCM	MN	
RCRP	EPA 8270C	Hexachloroethane	SCM	MN	
RCRP	EPA 8270C	Hexachloroethane	NPW	MN	
RCRP	EPA 8270C	Indeno(1,2,3-cd) pyrene	NPW	MN	
RCRP	EPA 8270C	Indeno(1,2,3-cd) pyrene	SCM	MN	
RCRP	EPA 8270C	Isophorone	SCM	MN	
RCRP	EPA 8270C	Isophorone	NPW	MN	
RCRP	EPA 8270C	n-Nitrosodi-n-propylamine	NPW	MN	
RCRP	EPA 8270C	n-Nitrosodi-n-propylamine	SCM	MN	
RCRP	EPA 8270C	n-Nitrosodimethylamine	SCM	MN	
RCRP	EPA 8270C	n-Nitrosodimethylamine	NPW	MN	
RCRP	EPA 8270C	n-Nitrosodiphenylamine	SCM	MN	
RCRP	EPA 8270C	n-Nitrosodiphenylamine	NPW	MN	
RCRP	EPA 8270C	Naphthalene	NPW	MN	

Program	Method	Analyte	Matrix	Primary	SOP
RCRP	EPA 8270C	Naphthalene	SCM	MN	
RCRP	EPA 8270C	Nitrobenzene	SCM	MN	
RCRP	EPA 8270C	Nitrobenzene	NPW	MN	
RCRP	EPA 8270C	Pentachlorophenol	NPW	MN	
RCRP	EPA 8270C	Pentachlorophenol	SCM	MN	
RCRP	EPA 8270C	Phenanthrene	SCM	MN	
RCRP	EPA 8270C	Phenanthrene	NPW	MN	
RCRP	EPA 8270C	Phenol	NPW	MN	
RCRP	EPA 8270C	Phenol	SCM	MN	
RCRP	EPA 8270C	Pyrene	NPW	MN	
RCRP	EPA 8270C	Pyrene	SCM	MN	
RCRP	EPA 8270C	Pyridine	NPW	MN	
RCRP	EPA 8270C	Pyridine	SCM	MN	

EPA 8270C SIM

Preparation Techniques: Extraction, ultrasonic; Extraction, pressurized fluid (PFE); Extraction, microwave; Extraction, separatory funnel liquid-liquid (LLE);

Program	Method	Analyte	Matrix	Primary	SOP
RCRP	EPA 8270C SIM	2-Methylnaphthalene	SCM	MN	
RCRP	EPA 8270C SIM	2-Methylnaphthalene	NPW	MN	
RCRP	EPA 8270C SIM	Acenaphthene	SCM	MN	
RCRP	EPA 8270C SIM	Acenaphthene	NPW	MN	
RCRP	EPA 8270C SIM	Acenaphthylene	SCM	MN	
RCRP	EPA 8270C SIM	Acenaphthylene	NPW	MN	
RCRP	EPA 8270C SIM	Anthracene	NPW	MN	
RCRP	EPA 8270C SIM	Anthracene	SCM	MN	
RCRP	EPA 8270C SIM	Benzo(a)anthracene	NPW	MN	
RCRP	EPA 8270C SIM	Benzo(a)anthracene	SCM	MN	
RCRP	EPA 8270C SIM	Benzo(a)pyrene	NPW	MN	
RCRP	EPA 8270C SIM	Benzo(a)pyrene	SCM	MN	
RCRP	EPA 8270C SIM	Benzo(g,h,i)perylene	SCM	MN	
RCRP	EPA 8270C SIM	Benzo(g,h,i)perylene	NPW	MN	
RCRP	EPA 8270C SIM	Benzo(k)fluoranthene	SCM	MN	
RCRP	EPA 8270C SIM	Benzo(k)fluoranthene	NPW	MN	
RCRP	EPA 8270C SIM	Benzo[b]fluoranthene	NPW	MN	

Program	Method	Analyte	Matrix	Primary	SOP
RCRP	EPA 8270C SIM	Benzo[b]fluoranthene	SCM	MN	
RCRP	EPA 8270C SIM	Chrysene	SCM	MN	
RCRP	EPA 8270C SIM	Chrysene	NPW	MN	
RCRP	EPA 8270C SIM	Dibenz(a,h) anthracene	NPW	MN	
RCRP	EPA 8270C SIM	Dibenz(a,h) anthracene	SCM	MN	
RCRP	EPA 8270C SIM	Fluoranthene	SCM	MN	
RCRP	EPA 8270C SIM	Fluoranthene	NPW	MN	
RCRP	EPA 8270C SIM	Fluorene	SCM	MN	
RCRP	EPA 8270C SIM	Fluorene	NPW	MN	
RCRP	EPA 8270C SIM	Indeno(1,2,3-cd) pyrene	NPW	MN	
RCRP	EPA 8270C SIM	Indeno(1,2,3-cd) pyrene	SCM	MN	
RCRP	EPA 8270C SIM	Naphthalene	NPW	MN	
RCRP	EPA 8270C SIM	Naphthalene	SCM	MN	
RCRP	EPA 8270C SIM	Phenanthrene	SCM	MN	
RCRP	EPA 8270C SIM	Phenanthrene	NPW	MN	
RCRP	EPA 8270C SIM	Pyrene	NPW	MN	
RCRP	EPA 8270C SIM	Pyrene	SCM	MN	

EPA 8270D

Preparation Techniques: Extraction, ultrasonic; Extraction, micro; Extraction, EPA 1311 TCLP, non-volatiles; Extraction, pressurized fluid (PFE); Extraction, microwave; Extraction, separatory funnel liquid-liquid (LLE); Extraction, soxhlet; Extraction, EPA 1312 SPLP, non-volatiles;

Program	Method	Analyte	Matrix	Primary	SOP
RCRP	EPA 8270D	1,1'-Biphenyl (BZ-0)	SCM	MN	
RCRP	EPA 8270D	1,1'-Biphenyl (BZ-0)	NPW	MN	
RCRP	EPA 8270D	1,2,4,5-Tetrachlorobenzene	SCM	MN	
RCRP	EPA 8270D	1,2,4,5-Tetrachlorobenzene	NPW	MN	
RCRP	EPA 8270D	1,2,4-Trichlorobenzene	SCM	MN	
RCRP	EPA 8270D	1,2,4-Trichlorobenzene	NPW	MN	
RCRP	EPA 8270D	1,2-Dichlorobenzene	NPW	MN	
RCRP	EPA 8270D	1,2-Dichlorobenzene	SCM	MN	
RCRP	EPA 8270D	1,2-Dinitrobenzene	NPW	MN	
RCRP	EPA 8270D	1,2-Dinitrobenzene	SCM	MN	
RCRP	EPA 8270D	1,2-Diphenylhydrazine	SCM	MN	
RCRP	EPA 8270D	1,2-Diphenylhydrazine	NPW	MN	

Program	Method	Analyte	Matrix	Primary	SOP
RCRP	EPA 8270D	1,3,5-Trinitrobenzene (1,3,5-TNB)	SCM	MN	
RCRP	EPA 8270D	1,3,5-Trinitrobenzene (1,3,5-TNB)	NPW	MN	
RCRP	EPA 8270D	1,3-Dichlorobenzene	NPW	MN	
RCRP	EPA 8270D	1,3-Dichlorobenzene	SCM	MN	
RCRP	EPA 8270D	1,3-Dinitrobenzene (1,3-DNB)	NPW	MN	
RCRP	EPA 8270D	1,3-Dinitrobenzene (1,3-DNB)	SCM	MN	
RCRP	EPA 8270D	1,4-Dichlorobenzene	NPW	MN	
RCRP	EPA 8270D	1,4-Dichlorobenzene	SCM	MN	
RCRP	EPA 8270D	1,4-Dinitrobenzene	NPW	MN	
RCRP	EPA 8270D	1,4-Dinitrobenzene	SCM	MN	
RCRP	EPA 8270D	1,4-Dioxane (1,4- Diethyleneoxide)	SCM	MN	
RCRP	EPA 8270D	1,4-Dioxane (1,4- Diethyleneoxide)	NPW	MN	
RCRP	EPA 8270D	1,4-Naphthoquinone	NPW	MN	
RCRP	EPA 8270D	1,4-Naphthoquinone	SCM	MN	
RCRP	EPA 8270D	1-Methylnaphthalene	SCM	MN	
RCRP	EPA 8270D	1-Methylnaphthalene	NPW	MN	
RCRP	EPA 8270D	1-Naphthylamine	SCM	MN	
RCRP	EPA 8270D	1-Naphthylamine	NPW	MN	
RCRP	EPA 8270D	2,2'-Oxybis(1-chloropropane),bis(2-Chloro-1-methylethyl)ether	SCM	MN	
RCRP	EPA 8270D	2,3,4,6-Tetrachlorophenol	NPW	MN	
RCRP	EPA 8270D	2,3,4,6-Tetrachlorophenol	SCM	MN	
RCRP	EPA 8270D	2,3,5,6-Tetrachlorophenol	SCM	MN	
RCRP	EPA 8270D	2,3,5,6-Tetrachlorophenol	NPW	MN	
RCRP	EPA 8270D	2,4,5-Trichlorophenol	SCM	MN	
RCRP	EPA 8270D	2,4,5-Trichlorophenol	NPW	MN	
RCRP	EPA 8270D	2,4,6-Trichlorophenol	NPW	MN	
RCRP	EPA 8270D	2,4,6-Trichlorophenol	SCM	MN	
RCRP	EPA 8270D	2,4-Dichlorophenol	NPW	MN	
RCRP	EPA 8270D	2,4-Dichlorophenol	SCM	MN	
RCRP	EPA 8270D	2,4-Dimethylphenol	NPW	MN	
RCRP	EPA 8270D	2,4-Dimethylphenol	SCM	MN	
RCRP	EPA 8270D	2,4-Dinitrophenol	NPW	MN	
RCRP	EPA 8270D	2,4-Dinitrophenol	SCM	MN	
RCRP	EPA 8270D	2,4-Dinitrotoluene (2,4-DNT)	NPW	MN	
RCRP	EPA 8270D	2,4-Dinitrotoluene (2,4-DNT)	SCM	MN	
RCRP	EPA 8270D	2,6-Dichlorophenol	NPW	MN	

Program	Method	Analyte	Matrix	Primary	SOP
RCRP	EPA 8270D	2,6-Dichlorophenol	SCM	MN	
RCRP	EPA 8270D	2,6-Dinitrotoluene (2,6-DNT)	SCM	MN	
RCRP	EPA 8270D	2,6-Dinitrotoluene (2,6-DNT)	NPW	MN	
RCRP	EPA 8270D	2-Acetylaminofluorene	NPW	MN	
RCRP	EPA 8270D	2-Acetylaminofluorene	SCM	MN	
RCRP	EPA 8270D	2-Chloronaphthalene	NPW	MN	
RCRP	EPA 8270D	2-Chloronaphthalene	SCM	MN	
RCRP	EPA 8270D	2-Chlorophenol	NPW	MN	
RCRP	EPA 8270D	2-Chlorophenol	SCM	MN	
RCRP	EPA 8270D	2-Methyl-4,6-dinitrophenol (4,6-Dinitro-2-methylphenol)	NPW	MN	
RCRP	EPA 8270D	2-Methyl-4,6-dinitrophenol (4,6-Dinitro-2-methylphenol)	SCM	MN	
RCRP	EPA 8270D	2-Methylaniline (o-Toluidine)	SCM	MN	
RCRP	EPA 8270D	2-Methylnaphthalene	SCM	MN	
RCRP	EPA 8270D	2-Methylnaphthalene	NPW	MN	
RCRP	EPA 8270D	2-Methylphenol (o-Cresol)	SCM	MN	
RCRP	EPA 8270D	2-Methylphenol (o-Cresol)	NPW	MN	
RCRP	EPA 8270D	2-Naphthylamine	SCM	MN	
RCRP	EPA 8270D	2-Naphthylamine	NPW	MN	
RCRP	EPA 8270D	2-Nitroaniline	NPW	MN	
RCRP	EPA 8270D	2-Nitroaniline	SCM	MN	
RCRP	EPA 8270D	2-Nitrophenol	NPW	MN	
RCRP	EPA 8270D	2-Nitrophenol	SCM	MN	
RCRP	EPA 8270D	2-Picoline (2-Methylpyridine)	NPW	MN	
RCRP	EPA 8270D	2-Picoline (2-Methylpyridine)	SCM	MN	
RCRP	EPA 8270D	3,3'-Dichlorobenzidine	SCM	MN	
RCRP	EPA 8270D	3,3'-Dichlorobenzidine	NPW	MN	
RCRP	EPA 8270D	3,3'-Dimethylbenzidine	NPW	MN	
RCRP	EPA 8270D	3,3'-Dimethylbenzidine	SCM	MN	
RCRP	EPA 8270D	3-Methylcholanthrene	SCM	MN	
RCRP	EPA 8270D	3-Methylcholanthrene	NPW	MN	
RCRP	EPA 8270D	3-Methylphenol (m-Cresol)	SCM	MN	
RCRP	EPA 8270D	3-Methylphenol (m-Cresol)	NPW	MN	
RCRP	EPA 8270D	3-Nitroaniline	SCM	MN	
RCRP	EPA 8270D	3-Nitroaniline	NPW	MN	
RCRP	EPA 8270D	4,6-Dinitro-2-methylphenol	SCM	MN	

Program	Method	Analyte	Matrix	Primary	SOP
RCRP	EPA 8270D	4,6-Dinitro-2-methylphenol	NPW	MN	
RCRP	EPA 8270D	4-Aminobiphenyl	SCM	MN	
RCRP	EPA 8270D	4-Aminobiphenyl	NPW	MN	
RCRP	EPA 8270D	4-Bromophenyl phenyl ether	SCM	MN	
RCRP	EPA 8270D	4-Bromophenyl phenyl ether	NPW	MN	
RCRP	EPA 8270D	4-Chloro-3-methylphenol	SCM	MN	
RCRP	EPA 8270D	4-Chloro-3-methylphenol	NPW	MN	
RCRP	EPA 8270D	4-Chloroaniline	NPW	MN	
RCRP	EPA 8270D	4-Chloroaniline	SCM	MN	
RCRP	EPA 8270D	4-Chlorophenyl phenylether	NPW	MN	
RCRP	EPA 8270D	4-Chlorophenyl phenylether	SCM	MN	
RCRP	EPA 8270D	4-Dimethyl aminoazobenzene	SCM	MN	
RCRP	EPA 8270D	4-Dimethyl aminoazobenzene	NPW	MN	
RCRP	EPA 8270D	4-Methylphenol (p-Cresol)	NPW	MN	
RCRP	EPA 8270D	4-Methylphenol (p-Cresol)	SCM	MN	
RCRP	EPA 8270D	4-Nitroaniline	NPW	MN	
RCRP	EPA 8270D	4-Nitroaniline	SCM	MN	
RCRP	EPA 8270D	4-Nitrophenol	NPW	MN	
RCRP	EPA 8270D	4-Nitrophenol	SCM	MN	
RCRP	EPA 8270D	4-Nitroquinoline 1-oxide	SCM	MN	
RCRP	EPA 8270D	5-Nitro-o-toluidine	SCM	MN	
RCRP	EPA 8270D	5-Nitro-o-toluidine	NPW	MN	
RCRP	EPA 8270D	7,12-Dimethylbenz(a) anthracene	SCM	MN	
RCRP	EPA 8270D	7,12-Dimethylbenz(a) anthracene	NPW	MN	
RCRP	EPA 8270D	a-a-Dimethylphenethylamine	NPW	MN	
RCRP	EPA 8270D	a-a-Dimethylphenethylamine	SCM	MN	
RCRP	EPA 8270D	Acenaphthene	NPW	MN	
RCRP	EPA 8270D	Acenaphthene	SCM	MN	
RCRP	EPA 8270D	Acenaphthylene	SCM	MN	
RCRP	EPA 8270D	Acenaphthylene	NPW	MN	
RCRP	EPA 8270D	Acetophenone	SCM	MN	
RCRP	EPA 8270D	Acetophenone	NPW	MN	
RCRP	EPA 8270D	Aniline	SCM	MN	
RCRP	EPA 8270D	Aniline	NPW	MN	
RCRP	EPA 8270D	Anthracene	SCM	MN	
RCRP	EPA 8270D	Anthracene	NPW	MN	

Program	Method	Analyte	Matrix	Primary	SOP
RCRP	EPA 8270D	Aramite	NPW	MN	
RCRP	EPA 8270D	Aramite	SCM	MN	
RCRP	EPA 8270D	Atrazine	SCM	MN	
RCRP	EPA 8270D	Atrazine	NPW	MN	
RCRP	EPA 8270D	Benzal chloride	SCM	MN	
RCRP	EPA 8270D	Benzaldehyde	SCM	MN	
RCRP	EPA 8270D	Benzaldehyde	NPW	MN	
RCRP	EPA 8270D	Benzidine	SCM	MN	
RCRP	EPA 8270D	Benzidine	NPW	MN	
RCRP	EPA 8270D	Benzo(a)anthracene	SCM	MN	
RCRP	EPA 8270D	Benzo(a)anthracene	NPW	MN	
RCRP	EPA 8270D	Benzo(a)pyrene	NPW	MN	
RCRP	EPA 8270D	Benzo(a)pyrene	SCM	MN	
RCRP	EPA 8270D	Benzo(g,h,i)perylene	NPW	MN	
RCRP	EPA 8270D	Benzo(g,h,i)perylene	SCM	MN	
RCRP	EPA 8270D	Benzo(k)fluoranthene	SCM	MN	
RCRP	EPA 8270D	Benzo(k)fluoranthene	NPW	MN	
RCRP	EPA 8270D	Benzo[b]fluoranthene	NPW	MN	
RCRP	EPA 8270D	Benzo[b]fluoranthene	SCM	MN	
RCRP	EPA 8270D	Benzoic acid	NPW	MN	
RCRP	EPA 8270D	Benzoic acid	SCM	MN	
RCRP	EPA 8270D	Benzyl alcohol	SCM	MN	
RCRP	EPA 8270D	Benzyl alcohol	NPW	MN	
RCRP	EPA 8270D	bis(2-Chloroethoxy)methane	SCM	MN	
RCRP	EPA 8270D	bis(2-Chloroethoxy)methane	NPW	MN	
RCRP	EPA 8270D	bis(2-Chloroethyl) ether	SCM	MN	
RCRP	EPA 8270D	bis(2-Chloroethyl) ether	NPW	MN	
RCRP	EPA 8270D	bis(2-Chloroisopropyl) ether	NPW	MN	
RCRP	EPA 8270D	bis(2-Chloroisopropyl) ether	SCM	MN	
RCRP	EPA 8270D	Butyl benzyl phthalate	SCM	MN	
RCRP	EPA 8270D	Butyl benzyl phthalate	NPW	MN	
RCRP	EPA 8270D	Caprolactam	NPW	MN	
RCRP	EPA 8270D	Caprolactam	SCM	MN	
RCRP	EPA 8270D	Carbazole	SCM	MN	
RCRP	EPA 8270D	Carbazole	NPW	MN	
RCRP	EPA 8270D	Chlorobenzilate	SCM	MN	

Program	Method	Analyte	Matrix	Primary	SOP
RCRP	EPA 8270D	Chlorobenzilate	NPW	MN	
RCRP	EPA 8270D	Chrysene	NPW	MN	
RCRP	EPA 8270D	Chrysene	SCM	MN	
RCRP	EPA 8270D	Di(2-ethylhexyl) phthalate (bis(2-Ethylhexyl)phthalate, DEHP)	NPW	MN	
RCRP	EPA 8270D	Di(2-ethylhexyl) phthalate (bis(2-Ethylhexyl)phthalate, DEHP)	SCM	MN	
RCRP	EPA 8270D	Di-n-butyl phthalate	NPW	MN	
RCRP	EPA 8270D	Di-n-butyl phthalate	SCM	MN	
RCRP	EPA 8270D	Di-n-octyl phthalate	SCM	MN	
RCRP	EPA 8270D	Di-n-octyl phthalate	NPW	MN	
RCRP	EPA 8270D	Diallate	NPW	MN	
RCRP	EPA 8270D	Diallate	SCM	MN	
RCRP	EPA 8270D	Dibenz(a, h) acridine	SCM	MN	
RCRP	EPA 8270D	Dibenz(a,h) anthracene	SCM	MN	
RCRP	EPA 8270D	Dibenz(a,h) anthracene	NPW	MN	
RCRP	EPA 8270D	Dibenzofuran	SCM	MN	
RCRP	EPA 8270D	Dibenzofuran	NPW	MN	
RCRP	EPA 8270D	Diethyl phthalate	NPW	MN	
RCRP	EPA 8270D	Diethyl phthalate	SCM	MN	
RCRP	EPA 8270D	Dimethyl phthalate	NPW	MN	
RCRP	EPA 8270D	Dimethyl phthalate	SCM	MN	
RCRP	EPA 8270D	Dinoseb (2-sec-butyl-4,6-dinitrophenol, DNBP)	NPW	MN	
RCRP	EPA 8270D	Dinoseb (2-sec-butyl-4,6-dinitrophenol, DNBP)	SCM	MN	
RCRP	EPA 8270D	Diphenylamine	SCM	MN	
RCRP	EPA 8270D	Diphenylamine	NPW	MN	
RCRP	EPA 8270D	Ethyl methanesulfonate	SCM	MN	
RCRP	EPA 8270D	Ethyl methanesulfonate	NPW	MN	
RCRP	EPA 8270D	Fluoranthene	NPW	MN	
RCRP	EPA 8270D	Fluoranthene	SCM	MN	
RCRP	EPA 8270D	Fluorene	NPW	MN	
RCRP	EPA 8270D	Fluorene	SCM	MN	
RCRP	EPA 8270D	Hexachlorobenzene	NPW	MN	
RCRP	EPA 8270D	Hexachlorobenzene	SCM	MN	
RCRP	EPA 8270D	Hexachlorobutadiene	SCM	MN	
RCRP	EPA 8270D	Hexachlorobutadiene	NPW	MN	

Program	Method	Analyte	Matrix	Primary	SOP
RCRP	EPA 8270D	Hexachlorocyclopentadiene	SCM	MN	
RCRP	EPA 8270D	Hexachlorocyclopentadiene	NPW	MN	
RCRP	EPA 8270D	Hexachloroethane	SCM	MN	
RCRP	EPA 8270D	Hexachloroethane	NPW	MN	
RCRP	EPA 8270D	Hexachloropropene	NPW	MN	
RCRP	EPA 8270D	Hexachloropropene	SCM	MN	
RCRP	EPA 8270D	Indeno(1,2,3-cd) pyrene	SCM	MN	
RCRP	EPA 8270D	Indeno(1,2,3-cd) pyrene	NPW	MN	
RCRP	EPA 8270D	Isodrin	NPW	MN	
RCRP	EPA 8270D	Isodrin	SCM	MN	
RCRP	EPA 8270D	Isophorone	NPW	MN	
RCRP	EPA 8270D	Isophorone	SCM	MN	
RCRP	EPA 8270D	Isosafrole	SCM	MN	
RCRP	EPA 8270D	Isosafrole	NPW	MN	
RCRP	EPA 8270D	Kepone	SCM	MN	
RCRP	EPA 8270D	Kepone	NPW	MN	
RCRP	EPA 8270D	Methapyrilene	SCM	MN	
RCRP	EPA 8270D	Methapyrilene	NPW	MN	
RCRP	EPA 8270D	Methyl methanesulfonate	SCM	MN	
RCRP	EPA 8270D	Methyl methanesulfonate	NPW	MN	
RCRP	EPA 8270D	n-Nitroso-di-n-butylamine	NPW	MN	
RCRP	EPA 8270D	n-Nitroso-di-n-butylamine	SCM	MN	
RCRP	EPA 8270D	n-Nitrosodi-n-propylamine	SCM	MN	
RCRP	EPA 8270D	n-Nitrosodi-n-propylamine	NPW	MN	
RCRP	EPA 8270D	n-Nitrosodiethylamine	NPW	MN	
RCRP	EPA 8270D	n-Nitrosodiethylamine	SCM	MN	
RCRP	EPA 8270D	n-Nitrosodimethylamine	SCM	MN	
RCRP	EPA 8270D	n-Nitrosodimethylamine	NPW	MN	
RCRP	EPA 8270D	n-Nitrosodiphenylamine	NPW	MN	
RCRP	EPA 8270D	n-Nitrosodiphenylamine	SCM	MN	
RCRP	EPA 8270D	n-Nitrosomethylethalamine	NPW	MN	
RCRP	EPA 8270D	n-Nitrosomethylethalamine	SCM	MN	
RCRP	EPA 8270D	n-Nitrosomorpholine	NPW	MN	
RCRP	EPA 8270D	n-Nitrosomorpholine	SCM	MN	
RCRP	EPA 8270D	n-Nitrosopiperidine	NPW	MN	
RCRP	EPA 8270D	n-Nitrosopiperidine	SCM	MN	

Program	Method	Analyte	Matrix	Primary	SOP
RCRP	EPA 8270D	n-Nitrosopyrrolidine	SCM	MN	
RCRP	EPA 8270D	n-Nitrosopyrrolidine	NPW	MN	
RCRP	EPA 8270D	Naphthalene	SCM	MN	
RCRP	EPA 8270D	Naphthalene	NPW	MN	
RCRP	EPA 8270D	Nitrobenzene	NPW	MN	
RCRP	EPA 8270D	Nitrobenzene	SCM	MN	
RCRP	EPA 8270D	Pentachlorobenzene	NPW	MN	
RCRP	EPA 8270D	Pentachlorobenzene	SCM	MN	
RCRP	EPA 8270D	Pentachloroethane	NPW	MN	
RCRP	EPA 8270D	Pentachloroethane	SCM	MN	
RCRP	EPA 8270D	Pentachloronitrobenzene	NPW	MN	
RCRP	EPA 8270D	Pentachloronitrobenzene	SCM	MN	
RCRP	EPA 8270D	Pentachlorophenol	SCM	MN	
RCRP	EPA 8270D	Pentachlorophenol	NPW	MN	
RCRP	EPA 8270D	Phenacetin	NPW	MN	
RCRP	EPA 8270D	Phenacetin	SCM	MN	
RCRP	EPA 8270D	Phenanthrene	SCM	MN	
RCRP	EPA 8270D	Phenanthrene	NPW	MN	
RCRP	EPA 8270D	Phenol	SCM	MN	
RCRP	EPA 8270D	Phenol	NPW	MN	
RCRP	EPA 8270D	Pronamide (Kerb)	SCM	MN	
RCRP	EPA 8270D	Pronamide (Kerb)	NPW	MN	
RCRP	EPA 8270D	Pyrene	SCM	MN	
RCRP	EPA 8270D	Pyrene	NPW	MN	
RCRP	EPA 8270D	Pyridine	NPW	MN	
RCRP	EPA 8270D	Pyridine	SCM	MN	
RCRP	EPA 8270D	Quinoline	NPW	MN	
RCRP	EPA 8270D	Quinoline	SCM	MN	
RCRP	EPA 8270D	Safrole	NPW	MN	
RCRP	EPA 8270D	Safrole	SCM	MN	

EPA 8270D SIM

Preparation Techniques: Extraction, ultrasonic; Extraction, pressurized fluid (PFE); Extraction, microwave; Extraction, separatory funnel liquid-liquid (LLE);

Program	Method	Analyte	Matrix	Primary	SOP
RCRP	EPA 8270D SIM	1-Methylnaphthalene	NPW	MN	
RCRP	EPA 8270D SIM	1-Methylnaphthalene	SCM	MN	
RCRP	EPA 8270D SIM	2-Methylnaphthalene	NPW	MN	
RCRP	EPA 8270D SIM	2-Methylnaphthalene	SCM	MN	
RCRP	EPA 8270D SIM	Acenaphthene	SCM	MN	
RCRP	EPA 8270D SIM	Acenaphthene	NPW	MN	
RCRP	EPA 8270D SIM	Acenaphthylene	SCM	MN	
RCRP	EPA 8270D SIM	Acenaphthylene	NPW	MN	
RCRP	EPA 8270D SIM	Anthracene	NPW	MN	
RCRP	EPA 8270D SIM	Anthracene	SCM	MN	
RCRP	EPA 8270D SIM	Benzo(a)anthracene	SCM	MN	
RCRP	EPA 8270D SIM	Benzo(a)anthracene	NPW	MN	
RCRP	EPA 8270D SIM	Benzo(a)pyrene	NPW	MN	
RCRP	EPA 8270D SIM	Benzo(a)pyrene	SCM	MN	
RCRP	EPA 8270D SIM	Benzo(g,h,i)perylene	SCM	MN	
RCRP	EPA 8270D SIM	Benzo(g,h,i)perylene	NPW	MN	
RCRP	EPA 8270D SIM	Benzo(k)fluoranthene	NPW	MN	
RCRP	EPA 8270D SIM	Benzo(k)fluoranthene	SCM	MN	
RCRP	EPA 8270D SIM	Benzo[b]fluoranthene	NPW	MN	
RCRP	EPA 8270D SIM	Benzo[b]fluoranthene	SCM	MN	
RCRP	EPA 8270D SIM	Chrysene	NPW	MN	
RCRP	EPA 8270D SIM	Chrysene	SCM	MN	
RCRP	EPA 8270D SIM	Dibenz(a,h) anthracene	SCM	MN	
RCRP	EPA 8270D SIM	Dibenz(a,h) anthracene	NPW	MN	
RCRP	EPA 8270D SIM	Fluoranthene	NPW	MN	
RCRP	EPA 8270D SIM	Fluoranthene	SCM	MN	
RCRP	EPA 8270D SIM	Fluorene	SCM	MN	
RCRP	EPA 8270D SIM	Fluorene	NPW	MN	
RCRP	EPA 8270D SIM	Indeno(1,2,3-cd) pyrene	SCM	MN	
RCRP	EPA 8270D SIM	Indeno(1,2,3-cd) pyrene	NPW	MN	
RCRP	EPA 8270D SIM	Naphthalene	NPW	MN	
RCRP	EPA 8270D SIM	Naphthalene	SCM	MN	
RCRP	EPA 8270D SIM	Phenanthrene	SCM	MN	
RCRP	EPA 8270D SIM	Phenanthrene	NPW	MN	
RCRP	EPA 8270D SIM	Pyrene	SCM	MN	
RCRP	EPA 8270D SIM	Pyrene	NPW	MN	

EPA 8270E

Preparation Techniques: Extraction, ultrasonic; Extraction, micro; Extraction, EPA 1311 TCLP, non-volatiles; Waste Dilution (EPA 3580A); Extraction, pressurized fluid (PFE); Extraction, microwave; Extraction, separatory funnel liquid-liquid (LLE); Extraction, EPA 1312 SPLP, non-volatiles;

Program	Method	Analyte	Matrix	Primary	SOP
RCRP	EPA 8270E	1,1'-Biphenyl (BZ-0)	NPW	MN	
RCRP	EPA 8270E	1,1'-Biphenyl (BZ-0)	SCM	MN	
RCRP	EPA 8270E	1,2,4,5-Tetrachlorobenzene	NPW	MN	
RCRP	EPA 8270E	1,2,4,5-Tetrachlorobenzene	SCM	MN	
RCRP	EPA 8270E	1,2,4-Trichlorobenzene	SCM	MN	
RCRP	EPA 8270E	1,2,4-Trichlorobenzene	NPW	MN	
RCRP	EPA 8270E	1,2-Dichlorobenzene	NPW	MN	
RCRP	EPA 8270E	1,2-Dichlorobenzene	SCM	MN	
RCRP	EPA 8270E	1,2-Dinitrobenzene	NPW	MN	
RCRP	EPA 8270E	1,2-Dinitrobenzene	SCM	MN	
RCRP	EPA 8270E	1,2-Diphenylhydrazine	SCM	MN	
RCRP	EPA 8270E	1,2-Diphenylhydrazine	NPW	MN	
RCRP	EPA 8270E	1,3,5-Trinitrobenzene (1,3,5-TNB)	SCM	MN	
RCRP	EPA 8270E	1,3,5-Trinitrobenzene (1,3,5-TNB)	NPW	MN	
RCRP	EPA 8270E	1,3-Dichlorobenzene	SCM	MN	
RCRP	EPA 8270E	1,3-Dichlorobenzene	NPW	MN	
RCRP	EPA 8270E	1,3-Dinitrobenzene (1,3-DNB)	NPW	MN	
RCRP	EPA 8270E	1,3-Dinitrobenzene (1,3-DNB)	SCM	MN	
RCRP	EPA 8270E	1,4-Dichlorobenzene	NPW	MN	
RCRP	EPA 8270E	1,4-Dichlorobenzene	SCM	MN	
RCRP	EPA 8270E	1,4-Dinitrobenzene	SCM	MN	
RCRP	EPA 8270E	1,4-Dinitrobenzene	NPW	MN	
RCRP	EPA 8270E	1,4-Dioxane (1,4- Diethyleneoxide)	SCM	MN	
RCRP	EPA 8270E	1,4-Dioxane (1,4- Diethyleneoxide)	NPW	MN	
RCRP	EPA 8270E	1,4-Naphthoquinone	SCM	MN	
RCRP	EPA 8270E	1,4-Naphthoquinone	NPW	MN	
RCRP	EPA 8270E	1-Methylnaphthalene	NPW	MN	
RCRP	EPA 8270E	1-Methylnaphthalene	SCM	MN	
RCRP	EPA 8270E	1-Naphthylamine	SCM	MN	
RCRP	EPA 8270E	1-Naphthylamine	NPW	MN	
RCRP	EPA 8270E	2,2'-Oxybis(1-chloropropane),bis(2-Chloro-1-methylethyl)ether	SCM	MN	

Program	Method	Analyte	Matrix	Primary	SOP
RCRP	EPA 8270E	2,2'-Oxybis(1-chloropropane),bis(2-Chloro-1-methylethyl)ether	NPW	MN	
RCRP	EPA 8270E	2,3,4,6-Tetrachlorophenol	NPW	MN	
RCRP	EPA 8270E	2,3,4,6-Tetrachlorophenol	SCM	MN	
RCRP	EPA 8270E	2,3,5,6-Tetrachlorophenol	SCM	MN	
RCRP	EPA 8270E	2,3,5,6-Tetrachlorophenol	NPW	MN	
RCRP	EPA 8270E	2,4,5-Trichlorophenol	NPW	MN	
RCRP	EPA 8270E	2,4,5-Trichlorophenol	SCM	MN	
RCRP	EPA 8270E	2,4,6-Trichlorophenol	SCM	MN	
RCRP	EPA 8270E	2,4,6-Trichlorophenol	NPW	MN	
RCRP	EPA 8270E	2,4-Dichlorophenol	SCM	MN	
RCRP	EPA 8270E	2,4-Dichlorophenol	NPW	MN	
RCRP	EPA 8270E	2,4-Dimethylphenol	NPW	MN	
RCRP	EPA 8270E	2,4-Dimethylphenol	SCM	MN	
RCRP	EPA 8270E	2,4-Dinitrophenol	NPW	MN	
RCRP	EPA 8270E	2,4-Dinitrophenol	SCM	MN	
RCRP	EPA 8270E	2,4-Dinitrotoluene (2,4-DNT)	NPW	MN	
RCRP	EPA 8270E	2,4-Dinitrotoluene (2,4-DNT)	SCM	MN	
RCRP	EPA 8270E	2,6-Dichlorophenol	SCM	MN	
RCRP	EPA 8270E	2,6-Dichlorophenol	NPW	MN	
RCRP	EPA 8270E	2,6-Dinitrotoluene (2,6-DNT)	SCM	MN	
RCRP	EPA 8270E	2,6-Dinitrotoluene (2,6-DNT)	NPW	MN	
RCRP	EPA 8270E	2-Acetylaminofluorene	SCM	MN	
RCRP	EPA 8270E	2-Acetylaminofluorene	NPW	MN	
RCRP	EPA 8270E	2-Chloronaphthalene	NPW	MN	
RCRP	EPA 8270E	2-Chloronaphthalene	SCM	MN	
RCRP	EPA 8270E	2-Chlorophenol	SCM	MN	
RCRP	EPA 8270E	2-Chlorophenol	NPW	MN	
RCRP	EPA 8270E	2-Methyl-4,6-dinitrophenol (4,6-Dinitro-2-methylphenol)	NPW	MN	
RCRP	EPA 8270E	2-Methyl-4,6-dinitrophenol (4,6-Dinitro-2-methylphenol)	SCM	MN	
RCRP	EPA 8270E	2-Methylaniline (o-Toluidine)	SCM	MN	
RCRP	EPA 8270E	2-Methylaniline (o-Toluidine)	NPW	MN	
RCRP	EPA 8270E	2-Methylnaphthalene	NPW	MN	
RCRP	EPA 8270E	2-Methylnaphthalene	SCM	MN	
RCRP	EPA 8270E	2-Methylphenol (o-Cresol)	NPW	MN	
RCRP	EPA 8270E	2-Methylphenol (o-Cresol)	SCM	MN	

Program	Method	Analyte	Matrix	Primary	SOP
RCRP	EPA 8270E	2-Naphthylamine	NPW	MN	
RCRP	EPA 8270E	2-Naphthylamine	SCM	MN	
RCRP	EPA 8270E	2-Nitroaniline	SCM	MN	
RCRP	EPA 8270E	2-Nitroaniline	NPW	MN	
RCRP	EPA 8270E	2-Nitrophenol	SCM	MN	
RCRP	EPA 8270E	2-Nitrophenol	NPW	MN	
RCRP	EPA 8270E	2-Picoline (2-Methylpyridine)	SCM	MN	
RCRP	EPA 8270E	2-Picoline (2-Methylpyridine)	NPW	MN	
RCRP	EPA 8270E	3,3'-Dichlorobenzidine	NPW	MN	
RCRP	EPA 8270E	3,3'-Dichlorobenzidine	SCM	MN	
RCRP	EPA 8270E	3,3'-Dimethylbenzidine	NPW	MN	
RCRP	EPA 8270E	3,3'-Dimethylbenzidine	SCM	MN	
RCRP	EPA 8270E	3-Methylcholanthrene	SCM	MN	
RCRP	EPA 8270E	3-Methylcholanthrene	NPW	MN	
RCRP	EPA 8270E	3-Methylphenol (m-Cresol)	SCM	MN	
RCRP	EPA 8270E	3-Methylphenol (m-Cresol)	NPW	MN	
RCRP	EPA 8270E	3-Nitroaniline	NPW	MN	
RCRP	EPA 8270E	3-Nitroaniline	SCM	MN	
RCRP	EPA 8270E	4-Aminobiphenyl	NPW	MN	
RCRP	EPA 8270E	4-Aminobiphenyl	SCM	MN	
RCRP	EPA 8270E	4-Bromophenyl phenyl ether	NPW	MN	
RCRP	EPA 8270E	4-Bromophenyl phenyl ether	SCM	MN	
RCRP	EPA 8270E	4-Chloro-3-methylphenol	SCM	MN	
RCRP	EPA 8270E	4-Chloro-3-methylphenol	NPW	MN	
RCRP	EPA 8270E	4-Chloroaniline	NPW	MN	
RCRP	EPA 8270E	4-Chloroaniline	SCM	MN	
RCRP	EPA 8270E	4-Chlorophenyl phenylether	NPW	MN	
RCRP	EPA 8270E	4-Chlorophenyl phenylether	SCM	MN	
RCRP	EPA 8270E	4-Dimethyl aminoazobenzene	SCM	MN	
RCRP	EPA 8270E	4-Dimethyl aminoazobenzene	NPW	MN	
RCRP	EPA 8270E	4-Methylphenol (p-Cresol)	SCM	MN	
RCRP	EPA 8270E	4-Methylphenol (p-Cresol)	NPW	MN	
RCRP	EPA 8270E	4-Nitroaniline	NPW	MN	
RCRP	EPA 8270E	4-Nitroaniline	SCM	MN	
RCRP	EPA 8270E	4-Nitrophenol	NPW	MN	
RCRP	EPA 8270E	4-Nitrophenol	SCM	MN	

Program	Method	Analyte	Matrix	Primary	SOP
RCRP	EPA 8270E	4-Nitroquinoline 1-oxide	SCM	MN	
RCRP	EPA 8270E	5-Nitro-o-toluidine	SCM	MN	
RCRP	EPA 8270E	5-Nitro-o-toluidine	NPW	MN	
RCRP	EPA 8270E	7,12-Dimethylbenz(a) anthracene	NPW	MN	
RCRP	EPA 8270E	7,12-Dimethylbenz(a) anthracene	SCM	MN	
RCRP	EPA 8270E	a-a-Dimethylphenethylamine	NPW	MN	
RCRP	EPA 8270E	a-a-Dimethylphenethylamine	SCM	MN	
RCRP	EPA 8270E	Acenaphthene	SCM	MN	
RCRP	EPA 8270E	Acenaphthene	NPW	MN	
RCRP	EPA 8270E	Acenaphthylene	NPW	MN	
RCRP	EPA 8270E	Acenaphthylene	SCM	MN	
RCRP	EPA 8270E	Acetophenone	NPW	MN	
RCRP	EPA 8270E	Acetophenone	SCM	MN	
RCRP	EPA 8270E	Aniline	NPW	MN	
RCRP	EPA 8270E	Aniline	SCM	MN	
RCRP	EPA 8270E	Anthracene	SCM	MN	
RCRP	EPA 8270E	Anthracene	NPW	MN	
RCRP	EPA 8270E	Aramite	SCM	MN	
RCRP	EPA 8270E	Aramite	NPW	MN	
RCRP	EPA 8270E	Atrazine	SCM	MN	
RCRP	EPA 8270E	Atrazine	NPW	MN	
RCRP	EPA 8270E	Benzal chloride	SCM	MN	
RCRP	EPA 8270E	Benzaldehyde	NPW	MN	
RCRP	EPA 8270E	Benzaldehyde	SCM	MN	
RCRP	EPA 8270E	Benzidine	NPW	MN	
RCRP	EPA 8270E	Benzidine	SCM	MN	
RCRP	EPA 8270E	Benzo(a)anthracene	NPW	MN	
RCRP	EPA 8270E	Benzo(a)anthracene	SCM	MN	
RCRP	EPA 8270E	Benzo(a)pyrene	NPW	MN	
RCRP	EPA 8270E	Benzo(a)pyrene	SCM	MN	
RCRP	EPA 8270E	Benzo(g,h,i)perylene	NPW	MN	
RCRP	EPA 8270E	Benzo(g,h,i)perylene	SCM	MN	
RCRP	EPA 8270E	Benzo(k)fluoranthene	SCM	MN	
RCRP	EPA 8270E	Benzo(k)fluoranthene	NPW	MN	
RCRP	EPA 8270E	Benzo[b]fluoranthene	NPW	MN	
RCRP	EPA 8270E	Benzo[b]fluoranthene	SCM	MN	

Program	Method	Analyte	Matrix	Primary	SOP
RCRP	EPA 8270E	Benzoic acid	NPW	MN	
RCRP	EPA 8270E	Benzoic acid	SCM	MN	
RCRP	EPA 8270E	Benzyl alcohol	SCM	MN	
RCRP	EPA 8270E	Benzyl alcohol	NPW	MN	
RCRP	EPA 8270E	bis(2-Chloroethoxy)methane	SCM	MN	
RCRP	EPA 8270E	bis(2-Chloroethoxy)methane	NPW	MN	
RCRP	EPA 8270E	bis(2-Chloroethyl) ether	NPW	MN	
RCRP	EPA 8270E	bis(2-Chloroethyl) ether	SCM	MN	
RCRP	EPA 8270E	bis(2-Chloroisopropyl) ether	NPW	MN	
RCRP	EPA 8270E	bis(2-Chloroisopropyl) ether	SCM	MN	
RCRP	EPA 8270E	Butyl benzyl phthalate	NPW	MN	
RCRP	EPA 8270E	Butyl benzyl phthalate	SCM	MN	
RCRP	EPA 8270E	Caprolactam	NPW	MN	
RCRP	EPA 8270E	Caprolactam	SCM	MN	
RCRP	EPA 8270E	Carbazole	SCM	MN	
RCRP	EPA 8270E	Carbazole	NPW	MN	
RCRP	EPA 8270E	Chlorobenzilate	NPW	MN	
RCRP	EPA 8270E	Chlorobenzilate	SCM	MN	
RCRP	EPA 8270E	Chrysene	SCM	MN	
RCRP	EPA 8270E	Chrysene	NPW	MN	
RCRP	EPA 8270E	Di(2-ethylhexyl) phthalate (bis(2-Ethylhexyl)phthalate, DEHP)	SCM	MN	
RCRP	EPA 8270E	Di(2-ethylhexyl) phthalate (bis(2-Ethylhexyl)phthalate, DEHP)	NPW	MN	
RCRP	EPA 8270E	Di-n-butyl phthalate	SCM	MN	
RCRP	EPA 8270E	Di-n-butyl phthalate	NPW	MN	
RCRP	EPA 8270E	Di-n-octyl phthalate	SCM	MN	
RCRP	EPA 8270E	Di-n-octyl phthalate	NPW	MN	
RCRP	EPA 8270E	Diallate	NPW	MN	
RCRP	EPA 8270E	Diallate	SCM	MN	
RCRP	EPA 8270E	Dibenz(a, h) acridine	SCM	MN	
RCRP	EPA 8270E	Dibenz(a,h) anthracene	SCM	MN	
RCRP	EPA 8270E	Dibenz(a,h) anthracene	NPW	MN	
RCRP	EPA 8270E	Dibenzofuran	SCM	MN	
RCRP	EPA 8270E	Dibenzofuran	NPW	MN	
RCRP	EPA 8270E	Diethyl phthalate	SCM	MN	
RCRP	EPA 8270E	Diethyl phthalate	NPW	MN	

Program	Method	Analyte	Matrix	Primary	SOP
RCRP	EPA 8270E	Dimethyl phthalate	NPW	MN	
RCRP	EPA 8270E	Dimethyl phthalate	SCM	MN	
RCRP	EPA 8270E	Dinoseb (2-sec-butyl-4,6-dinitrophenol, DNBP)	NPW	MN	
RCRP	EPA 8270E	Dinoseb (2-sec-butyl-4,6-dinitrophenol, DNBP)	SCM	MN	
RCRP	EPA 8270E	Diphenylamine	NPW	MN	
RCRP	EPA 8270E	Diphenylamine	SCM	MN	
RCRP	EPA 8270E	Ethyl methanesulfonate	NPW	MN	
RCRP	EPA 8270E	Ethyl methanesulfonate	SCM	MN	
RCRP	EPA 8270E	Fluoranthene	SCM	MN	
RCRP	EPA 8270E	Fluoranthene	NPW	MN	
RCRP	EPA 8270E	Fluorene	NPW	MN	
RCRP	EPA 8270E	Fluorene	SCM	MN	
RCRP	EPA 8270E	Hexachlorobenzene	NPW	MN	
RCRP	EPA 8270E	Hexachlorobenzene	SCM	MN	
RCRP	EPA 8270E	Hexachlorobutadiene	NPW	MN	
RCRP	EPA 8270E	Hexachlorobutadiene	SCM	MN	
RCRP	EPA 8270E	Hexachlorocyclopentadiene	NPW	MN	
RCRP	EPA 8270E	Hexachlorocyclopentadiene	SCM	MN	
RCRP	EPA 8270E	Hexachloroethane	SCM	MN	
RCRP	EPA 8270E	Hexachloroethane	NPW	MN	
RCRP	EPA 8270E	Hexachloropropene	NPW	MN	
RCRP	EPA 8270E	Hexachloropropene	SCM	MN	
RCRP	EPA 8270E	Indeno(1,2,3-cd) pyrene	NPW	MN	
RCRP	EPA 8270E	Indeno(1,2,3-cd) pyrene	SCM	MN	
RCRP	EPA 8270E	Isodrin	NPW	MN	
RCRP	EPA 8270E	Isodrin	SCM	MN	
RCRP	EPA 8270E	Isophorone	SCM	MN	
RCRP	EPA 8270E	Isophorone	NPW	MN	
RCRP	EPA 8270E	Isosafrole	SCM	MN	
RCRP	EPA 8270E	Isosafrole	NPW	MN	
RCRP	EPA 8270E	Kepone	NPW	MN	
RCRP	EPA 8270E	Kepone	SCM	MN	
RCRP	EPA 8270E	Methapyrilene	NPW	MN	
RCRP	EPA 8270E	Methapyrilene	SCM	MN	
RCRP	EPA 8270E	Methyl methanesulfonate	NPW	MN	

Program	Method	Analyte	Matrix	Primary	SOP
RCRP	EPA 8270E	Methyl methanesulfonate	SCM	MN	
RCRP	EPA 8270E	n-Nitroso-di-n-butylamine	NPW	MN	
RCRP	EPA 8270E	n-Nitroso-di-n-butylamine	SCM	MN	
RCRP	EPA 8270E	n-Nitrosodi-n-propylamine	NPW	MN	
RCRP	EPA 8270E	n-Nitrosodi-n-propylamine	SCM	MN	
RCRP	EPA 8270E	n-Nitrosodiethylamine	SCM	MN	
RCRP	EPA 8270E	n-Nitrosodiethylamine	NPW	MN	
RCRP	EPA 8270E	n-Nitrosodimethylamine	SCM	MN	
RCRP	EPA 8270E	n-Nitrosodimethylamine	NPW	MN	
RCRP	EPA 8270E	n-Nitrosodiphenylamine	SCM	MN	
RCRP	EPA 8270E	n-Nitrosodiphenylamine	NPW	MN	
RCRP	EPA 8270E	n-Nitrosomethylethalamine	SCM	MN	
RCRP	EPA 8270E	n-Nitrosomethylethalamine	NPW	MN	
RCRP	EPA 8270E	n-Nitrosomorpholine	NPW	MN	
RCRP	EPA 8270E	n-Nitrosomorpholine	SCM	MN	
RCRP	EPA 8270E	n-Nitrosopiperidine	NPW	MN	
RCRP	EPA 8270E	n-Nitrosopiperidine	SCM	MN	
RCRP	EPA 8270E	n-Nitrosopyrrolidine	NPW	MN	
RCRP	EPA 8270E	n-Nitrosopyrrolidine	SCM	MN	
RCRP	EPA 8270E	Naphthalene	SCM	MN	
RCRP	EPA 8270E	Naphthalene	NPW	MN	
RCRP	EPA 8270E	Nitrobenzene	SCM	MN	
RCRP	EPA 8270E	Nitrobenzene	NPW	MN	
RCRP	EPA 8270E	Pentachlorobenzene	SCM	MN	
RCRP	EPA 8270E	Pentachlorobenzene	NPW	MN	
RCRP	EPA 8270E	Pentachloroethane	NPW	MN	
RCRP	EPA 8270E	Pentachloroethane	SCM	MN	
RCRP	EPA 8270E	Pentachloronitrobenzene	NPW	MN	
RCRP	EPA 8270E	Pentachloronitrobenzene	SCM	MN	
RCRP	EPA 8270E	Pentachlorophenol	NPW	MN	
RCRP	EPA 8270E	Pentachlorophenol	SCM	MN	
RCRP	EPA 8270E	Phenacetin	NPW	MN	
RCRP	EPA 8270E	Phenacetin	SCM	MN	
RCRP	EPA 8270E	Phenanthrene	SCM	MN	
RCRP	EPA 8270E	Phenanthrene	NPW	MN	
RCRP	EPA 8270E	Phenol	SCM	MN	

Program	Method	Analyte	Matrix	Primary	SOP
RCRP	EPA 8270E	Phenol	NPW	MN	
RCRP	EPA 8270E	Pronamide (Kerb)	NPW	MN	
RCRP	EPA 8270E	Pronamide (Kerb)	SCM	MN	
RCRP	EPA 8270E	Pyrene	SCM	MN	
RCRP	EPA 8270E	Pyrene	NPW	MN	
RCRP	EPA 8270E	Pyridine	NPW	MN	
RCRP	EPA 8270E	Pyridine	SCM	MN	
RCRP	EPA 8270E	Quinoline	NPW	MN	
RCRP	EPA 8270E	Quinoline	SCM	MN	
RCRP	EPA 8270E	Safrole	NPW	MN	
RCRP	EPA 8270E	Safrole	SCM	MN	

EPA 1010A

Preparation Techniques: N/A

Program	Method	Analyte	Matrix	Primary	SOP
RCRP	EPA 1010A	Ignitability	SCM	MN	

EPA 9095B

Preparation Techniques: N/A

Program	Method	Analyte	Matrix	Primary	SOP
RCRP	EPA 9095B	Paint Filter Liquids Test	SCM	MN	

EPA 8015C

Preparation Techniques: Extraction, ultrasonic; Extraction, micro; Extraction, pressurized fluid (PFE); Extraction, separatory funnel liquid-liquid (LLE);

Program	Method	Analyte	Matrix	Primary	SOP
RCRP	EPA 8015C	Ethanol	NPW	MN	
RCRP	EPA 8015C	Isobutyl alcohol (2-Methyl-1-propanol)	NPW	MN	
RCRP	EPA 8015C	Isopropyl alcohol (2-Propanol, Isopropanol)	NPW	MN	
RCRP	EPA 8015C	Methanol	NPW	MN	
RCRP	EPA 8015C	n-Butyl alcohol (1-Butanol, n-Butanol)	NPW	MN	

Program	Method	Analyte	Matrix	Primary	SOP
RCRP	EPA 8015C	tert-Butyl alcohol	NPW	MN	

EPA 8015D

Preparation Techniques: Extraction, ultrasonic; Extraction, micro; Extraction, pressurized fluid (PFE); Extraction, separatory funnel liquid-liquid (LLE); Purge and trap; Extraction, soxhlet; Extraction, Microwave;

Program	Method	Analyte	Matrix	Primary	SOP
RCRP	EPA 8015D	Diesel range organics (DRO)	SCM	MN	
RCRP	EPA 8015D	Diesel range organics (DRO)	NPW	MN	
RCRP	EPA 8015D	Ethylene glycol	NPW	MN	
RCRP	EPA 8015D	Gasoline range organics (GRO)	SCM	MN	
RCRP	EPA 8015D	Gasoline range organics (GRO)	NPW	MN	
RCRP	EPA 8015D	Propylene Glycol	NPW	MN	

EPA 8260B

Preparation Techniques: Extraction, EPA 1312 SPLP, zero headspace (ZHE); Extraction, EPA 1311 TCLP, zero headspace (ZHE); Purge and trap;

Program	Method	Analyte	Matrix	Primary	SOP
RCRP	EPA 8260B	1,1,1,2-Tetrachloroethane	SCM	MN	
RCRP	EPA 8260B	1,1,1,2-Tetrachloroethane	NPW	MN	
RCRP	EPA 8260B	1,1,1-Trichloroethane	SCM	MN	
RCRP	EPA 8260B	1,1,1-Trichloroethane	NPW	MN	
RCRP	EPA 8260B	1,1,2,2-Tetrachloroethane	SCM	MN	
RCRP	EPA 8260B	1,1,2,2-Tetrachloroethane	NPW	MN	
RCRP	EPA 8260B	1,1,2-Trichloro-1,2,2-trifluoroethane (Freon 113)	SCM	MN	
RCRP	EPA 8260B	1,1,2-Trichloro-1,2,2-trifluoroethane (Freon 113)	NPW	MN	
RCRP	EPA 8260B	1,1,2-Trichloroethane	NPW	MN	
RCRP	EPA 8260B	1,1,2-Trichloroethane	SCM	MN	
RCRP	EPA 8260B	1,1-Dichloroethane	SCM	MN	
RCRP	EPA 8260B	1,1-Dichloroethane	NPW	MN	
RCRP	EPA 8260B	1,1-Dichloroethylene	SCM	MN	
RCRP	EPA 8260B	1,1-Dichloroethylene	NPW	MN	
RCRP	EPA 8260B	1,1-Dichloropropene	SCM	MN	

Program	Method	Analyte	Matrix	Primary	SOP
RCRP	EPA 8260B	1,1-Dichloropropene	NPW	MN	
RCRP	EPA 8260B	1,2,3-Trichlorobenzene	SCM	MN	
RCRP	EPA 8260B	1,2,3-Trichlorobenzene	NPW	MN	
RCRP	EPA 8260B	1,2,3-Trichloropropane	SCM	MN	
RCRP	EPA 8260B	1,2,3-Trichloropropane	NPW	MN	
RCRP	EPA 8260B	1,2,3-Trimethylbenzene	NPW	MN	
RCRP	EPA 8260B	1,2,3-Trimethylbenzene	SCM	MN	
RCRP	EPA 8260B	1,2,4-Trichlorobenzene	NPW	MN	
RCRP	EPA 8260B	1,2,4-Trichlorobenzene	SCM	MN	
RCRP	EPA 8260B	1,2,4-Trimethylbenzene	NPW	MN	
RCRP	EPA 8260B	1,2,4-Trimethylbenzene	SCM	MN	
RCRP	EPA 8260B	1,2-Dibromo-3-chloropropane (DBCP)	SCM	MN	
RCRP	EPA 8260B	1,2-Dibromo-3-chloropropane (DBCP)	NPW	MN	
RCRP	EPA 8260B	1,2-Dibromoethane (EDB, Ethylene dibromide)	NPW	MN	
RCRP	EPA 8260B	1,2-Dibromoethane (EDB, Ethylene dibromide)	SCM	MN	
RCRP	EPA 8260B	1,2-Dichlorobenzene	NPW	MN	
RCRP	EPA 8260B	1,2-Dichlorobenzene	SCM	MN	
RCRP	EPA 8260B	1,2-Dichloroethane (Ethylene dichloride)	SCM	MN	
RCRP	EPA 8260B	1,2-Dichloroethane (Ethylene dichloride)	NPW	MN	
RCRP	EPA 8260B	1,2-Dichloropropane	SCM	MN	
RCRP	EPA 8260B	1,2-Dichloropropane	NPW	MN	
RCRP	EPA 8260B	1,3,5-Trichlorobenzene	SCM	MN	
RCRP	EPA 8260B	1,3,5-Trimethylbenzene	NPW	MN	
RCRP	EPA 8260B	1,3,5-Trimethylbenzene	SCM	MN	
RCRP	EPA 8260B	1,3-Dichlorobenzene	NPW	MN	
RCRP	EPA 8260B	1,3-Dichlorobenzene	SCM	MN	
RCRP	EPA 8260B	1,3-Dichloropropane	SCM	MN	
RCRP	EPA 8260B	1,3-Dichloropropane	NPW	MN	
RCRP	EPA 8260B	1,4-Dichlorobenzene	NPW	MN	
RCRP	EPA 8260B	1,4-Dichlorobenzene	SCM	MN	
RCRP	EPA 8260B	1,4-Dioxane (1,4- Diethyleneoxide)	NPW	MN	
RCRP	EPA 8260B	1,4-Dioxane (1,4- Diethyleneoxide)	SCM	MN	
RCRP	EPA 8260B	2,2-Dichloropropane	NPW	MN	
RCRP	EPA 8260B	2,2-Dichloropropane	SCM	MN	
RCRP	EPA 8260B	2-Butanone (Methyl ethyl ketone, MEK)	SCM	MN	

Program	Method	Analyte	Matrix	Primary	SOP
RCRP	EPA 8260B	2-Butanone (Methyl ethyl ketone, MEK)	NPW	MN	
RCRP	EPA 8260B	2-Chloroethyl vinyl ether	NPW	MN	
RCRP	EPA 8260B	2-Chloroethyl vinyl ether	SCM	MN	
RCRP	EPA 8260B	2-Chlorotoluene	SCM	MN	
RCRP	EPA 8260B	2-Chlorotoluene	NPW	MN	
RCRP	EPA 8260B	2-Hexanone	NPW	MN	
RCRP	EPA 8260B	2-Hexanone	SCM	MN	
RCRP	EPA 8260B	2-Methylnaphthalene	NPW	MN	
RCRP	EPA 8260B	2-Methylnaphthalene	SCM	MN	
RCRP	EPA 8260B	4-Chlorotoluene	NPW	MN	
RCRP	EPA 8260B	4-Chlorotoluene	SCM	MN	
RCRP	EPA 8260B	4-Isopropyltoluene (p-Cymene)	SCM	MN	
RCRP	EPA 8260B	4-Isopropyltoluene (p-Cymene)	NPW	MN	
RCRP	EPA 8260B	4-Methyl-2-pentanone (MIBK)	NPW	MN	
RCRP	EPA 8260B	4-Methyl-2-pentanone (MIBK)	SCM	MN	
RCRP	EPA 8260B	Acetone	NPW	MN	
RCRP	EPA 8260B	Acetone	SCM	MN	
RCRP	EPA 8260B	Acetonitrile	SCM	MN	
RCRP	EPA 8260B	Acetonitrile	NPW	MN	
RCRP	EPA 8260B	Acrolein (Propenal)	SCM	MN	
RCRP	EPA 8260B	Acrolein (Propenal)	NPW	MN	
RCRP	EPA 8260B	Acrylonitrile	NPW	MN	
RCRP	EPA 8260B	Acrylonitrile	SCM	MN	
RCRP	EPA 8260B	Allyl chloride (3-Chloropropene)	NPW	MN	
RCRP	EPA 8260B	Allyl chloride (3-Chloropropene)	SCM	MN	
RCRP	EPA 8260B	Benzene	SCM	MN	
RCRP	EPA 8260B	Benzene	NPW	MN	
RCRP	EPA 8260B	Benzyl chloride	SCM	MN	
RCRP	EPA 8260B	Benzyl chloride	NPW	MN	
RCRP	EPA 8260B	Bromobenzene	SCM	MN	
RCRP	EPA 8260B	Bromobenzene	NPW	MN	
RCRP	EPA 8260B	Bromochloromethane	SCM	MN	
RCRP	EPA 8260B	Bromochloromethane	NPW	MN	
RCRP	EPA 8260B	Bromodichloromethane	NPW	MN	
RCRP	EPA 8260B	Bromodichloromethane	SCM	MN	
RCRP	EPA 8260B	Bromoform	SCM	MN	

Program	Method	Analyte	Matrix	Primary	SOP
RCRP	EPA 8260B	Bromoform	NPW	MN	
RCRP	EPA 8260B	Carbon disulfide	NPW	MN	
RCRP	EPA 8260B	Carbon disulfide	SCM	MN	
RCRP	EPA 8260B	Carbon tetrachloride	NPW	MN	
RCRP	EPA 8260B	Carbon tetrachloride	SCM	MN	
RCRP	EPA 8260B	Chlorobenzene	NPW	MN	
RCRP	EPA 8260B	Chlorobenzene	SCM	MN	
RCRP	EPA 8260B	Chlorodibromomethane	SCM	MN	
RCRP	EPA 8260B	Chlorodibromomethane	NPW	MN	
RCRP	EPA 8260B	Chloroethane (Ethyl chloride)	NPW	MN	
RCRP	EPA 8260B	Chloroethane (Ethyl chloride)	SCM	MN	
RCRP	EPA 8260B	Chloroform	SCM	MN	
RCRP	EPA 8260B	Chloroform	NPW	MN	
RCRP	EPA 8260B	Chloroprene (2-Chloro-1,3-butadiene)	NPW	MN	
RCRP	EPA 8260B	Chloroprene (2-Chloro-1,3-butadiene)	SCM	MN	
RCRP	EPA 8260B	cis-1,2-Dichloroethylene	NPW	MN	
RCRP	EPA 8260B	cis-1,2-Dichloroethylene	SCM	MN	
RCRP	EPA 8260B	cis-1,3-Dichloropropene	NPW	MN	
RCRP	EPA 8260B	cis-1,3-Dichloropropene	SCM	MN	
RCRP	EPA 8260B	Cyclohexane	NPW	MN	
RCRP	EPA 8260B	Cyclohexane	SCM	MN	
RCRP	EPA 8260B	Di-isopropylether (DIPE)	NPW	MN	
RCRP	EPA 8260B	Di-isopropylether (DIPE)	SCM	MN	
RCRP	EPA 8260B	Dibromomethane (Methylene bromide)	SCM	MN	
RCRP	EPA 8260B	Dibromomethane (Methylene bromide)	NPW	MN	
RCRP	EPA 8260B	Dichlorodifluoromethane (Freon-12)	NPW	MN	
RCRP	EPA 8260B	Dichlorodifluoromethane (Freon-12)	SCM	MN	
RCRP	EPA 8260B	Diethyl ether	NPW	MN	
RCRP	EPA 8260B	Diethyl ether	SCM	MN	
RCRP	EPA 8260B	Ethyl acetate	NPW	MN	
RCRP	EPA 8260B	Ethyl acetate	SCM	MN	
RCRP	EPA 8260B	Ethyl methacrylate	SCM	MN	
RCRP	EPA 8260B	Ethyl methacrylate	NPW	MN	
RCRP	EPA 8260B	Ethylbenzene	NPW	MN	
RCRP	EPA 8260B	Ethylbenzene	SCM	MN	
RCRP	EPA 8260B	Hexachlorobutadiene	NPW	MN	

Program	Method	Analyte	Matrix	Primary	SOP
RCRP	EPA 8260B	Hexachlorobutadiene	SCM	MN	
RCRP	EPA 8260B	Hexachloroethane	NPW	MN	
RCRP	EPA 8260B	Hexachloroethane	SCM	MN	
RCRP	EPA 8260B	Iodomethane (Methyl iodide)	NPW	MN	
RCRP	EPA 8260B	Iodomethane (Methyl iodide)	SCM	MN	
RCRP	EPA 8260B	Isobutyl alcohol (2-Methyl-1-propanol)	SCM	MN	
RCRP	EPA 8260B	Isobutyl alcohol (2-Methyl-1-propanol)	NPW	MN	
RCRP	EPA 8260B	Isopropylbenzene	NPW	MN	
RCRP	EPA 8260B	Isopropylbenzene	SCM	MN	
RCRP	EPA 8260B	m+p-xylene	SCM	MN	
RCRP	EPA 8260B	m+p-xylene	NPW	MN	
RCRP	EPA 8260B	Methacrylonitrile	NPW	MN	
RCRP	EPA 8260B	Methacrylonitrile	SCM	MN	
RCRP	EPA 8260B	Methyl acetate	SCM	MN	
RCRP	EPA 8260B	Methyl acetate	NPW	MN	
RCRP	EPA 8260B	Methyl bromide (Bromomethane)	SCM	MN	
RCRP	EPA 8260B	Methyl bromide (Bromomethane)	NPW	MN	
RCRP	EPA 8260B	Methyl chloride (Chloromethane)	NPW	MN	
RCRP	EPA 8260B	Methyl chloride (Chloromethane)	SCM	MN	
RCRP	EPA 8260B	Methyl methacrylate	SCM	MN	
RCRP	EPA 8260B	Methyl methacrylate	NPW	MN	
RCRP	EPA 8260B	Methyl tert-butyl ether (MTBE)	NPW	MN	
RCRP	EPA 8260B	Methyl tert-butyl ether (MTBE)	SCM	MN	
RCRP	EPA 8260B	Methylcyclohexane	NPW	MN	
RCRP	EPA 8260B	Methylcyclohexane	SCM	MN	
RCRP	EPA 8260B	Methylene chloride (Dichloromethane)	NPW	MN	
RCRP	EPA 8260B	Methylene chloride (Dichloromethane)	SCM	MN	
RCRP	EPA 8260B	n-Butyl alcohol (1-Butanol, n-Butanol)	SCM	MN	
RCRP	EPA 8260B	n-Butyl alcohol (1-Butanol, n-Butanol)	NPW	MN	
RCRP	EPA 8260B	n-Butylbenzene	NPW	MN	
RCRP	EPA 8260B	n-Butylbenzene	SCM	MN	
RCRP	EPA 8260B	n-Heptane	NPW	MN	
RCRP	EPA 8260B	n-Heptane	SCM	MN	
RCRP	EPA 8260B	n-Hexane	NPW	MN	
RCRP	EPA 8260B	n-Hexane	SCM	MN	
RCRP	EPA 8260B	n-Propylbenzene	SCM	MN	

Program	Method	Analyte	Matrix	Primary	SOP
RCRP	EPA 8260B	n-Propylbenzene	NPW	MN	
RCRP	EPA 8260B	Naphthalene	NPW	MN	
RCRP	EPA 8260B	Naphthalene	SCM	MN	
RCRP	EPA 8260B	o-Xylene	NPW	MN	
RCRP	EPA 8260B	o-Xylene	SCM	MN	
RCRP	EPA 8260B	sec-Butylbenzene	NPW	MN	
RCRP	EPA 8260B	sec-Butylbenzene	SCM	MN	
RCRP	EPA 8260B	Styrene	NPW	MN	
RCRP	EPA 8260B	Styrene	SCM	MN	
RCRP	EPA 8260B	T-amylmethylether (TAME)	SCM	MN	
RCRP	EPA 8260B	T-amylmethylether (TAME)	NPW	MN	
RCRP	EPA 8260B	tert-Butyl alcohol	SCM	MN	
RCRP	EPA 8260B	tert-Butyl alcohol	NPW	MN	
RCRP	EPA 8260B	tert-Butylbenzene	SCM	MN	
RCRP	EPA 8260B	tert-Butylbenzene	NPW	MN	
RCRP	EPA 8260B	Tetrachloroethylene (Perchloroethylene)	SCM	MN	
RCRP	EPA 8260B	Tetrachloroethylene (Perchloroethylene)	NPW	MN	
RCRP	EPA 8260B	Tetrahydrofuran (THF)	SCM	MN	
RCRP	EPA 8260B	Tetrahydrofuran (THF)	NPW	MN	
RCRP	EPA 8260B	Toluene	NPW	MN	
RCRP	EPA 8260B	Toluene	SCM	MN	
RCRP	EPA 8260B	trans-1,2-Dichloroethylene	SCM	MN	
RCRP	EPA 8260B	trans-1,2-Dichloroethylene	NPW	MN	
RCRP	EPA 8260B	trans-1,3-Dichloropropylene	SCM	MN	
RCRP	EPA 8260B	trans-1,3-Dichloropropylene	NPW	MN	
RCRP	EPA 8260B	trans-1,4-Dichloro-2-butene	SCM	MN	
RCRP	EPA 8260B	trans-1,4-Dichloro-2-butene	NPW	MN	
RCRP	EPA 8260B	Trichloroethene (Trichloroethylene)	NPW	MN	
RCRP	EPA 8260B	Trichloroethene (Trichloroethylene)	SCM	MN	
RCRP	EPA 8260B	Trichlorofluoromethane (Fluorotrichloromethane, Freon 11)	SCM	MN	
RCRP	EPA 8260B	Trichlorofluoromethane (Fluorotrichloromethane, Freon 11)	NPW	MN	
RCRP	EPA 8260B	Vinyl acetate	SCM	MN	
RCRP	EPA 8260B	Vinyl acetate	NPW	MN	
RCRP	EPA 8260B	Vinyl chloride	NPW	MN	
RCRP	EPA 8260B	Vinyl chloride	SCM	MN	

Program	Method	Analyte	Matrix	Primary	SOP
RCRP	EPA 8260B	Xylene (total)	SCM	MN	
RCRP	EPA 8260B	Xylene (total)	NPW	MN	

EPA 8260C

Preparation Techniques: Extraction, EPA 1312 SPLP, zero headspace (ZHE); Extraction, EPA 1311 TCLP, zero headspace (ZHE); Purge and trap;

Program	Method	Analyte	Matrix	Primary	SOP
RCRP	EPA 8260C	1,1,1,2-Tetrachloroethane	SCM	MN	
RCRP	EPA 8260C	1,1,1,2-Tetrachloroethane	NPW	MN	
RCRP	EPA 8260C	1,1,1-Trichloroethane	SCM	MN	
RCRP	EPA 8260C	1,1,1-Trichloroethane	NPW	MN	
RCRP	EPA 8260C	1,1,2,2-Tetrachloroethane	SCM	MN	
RCRP	EPA 8260C	1,1,2,2-Tetrachloroethane	NPW	MN	
RCRP	EPA 8260C	1,1,2-Trichloro-1,2,2-trifluoroethane (Freon 113)	NPW	MN	
RCRP	EPA 8260C	1,1,2-Trichloro-1,2,2-trifluoroethane (Freon 113)	SCM	MN	
RCRP	EPA 8260C	1,1,2-Trichloroethane	NPW	MN	
RCRP	EPA 8260C	1,1,2-Trichloroethane	SCM	MN	
RCRP	EPA 8260C	1,1-Dichloroethane	SCM	MN	
RCRP	EPA 8260C	1,1-Dichloroethane	NPW	MN	
RCRP	EPA 8260C	1,1-Dichloroethylene	SCM	MN	
RCRP	EPA 8260C	1,1-Dichloroethylene	NPW	MN	
RCRP	EPA 8260C	1,1-Dichloropropene	SCM	MN	
RCRP	EPA 8260C	1,1-Dichloropropene	NPW	MN	
RCRP	EPA 8260C	1,2,3-Trichlorobenzene	NPW	MN	
RCRP	EPA 8260C	1,2,3-Trichlorobenzene	SCM	MN	
RCRP	EPA 8260C	1,2,3-Trichloropropane	NPW	MN	
RCRP	EPA 8260C	1,2,3-Trichloropropane	SCM	MN	
RCRP	EPA 8260C	1,2,3-Trimethylbenzene	NPW	MN	
RCRP	EPA 8260C	1,2,3-Trimethylbenzene	SCM	MN	
RCRP	EPA 8260C	1,2,4-Trichlorobenzene	SCM	MN	
RCRP	EPA 8260C	1,2,4-Trichlorobenzene	NPW	MN	
RCRP	EPA 8260C	1,2,4-Trimethylbenzene	NPW	MN	
RCRP	EPA 8260C	1,2,4-Trimethylbenzene	SCM	MN	
RCRP	EPA 8260C	1,2-Dibromo-3-chloropropane (DBCP)	SCM	MN	

Program	Method	Analyte	Matrix	Primary	SOP
RCRP	EPA 8260C	1,2-Dibromo-3-chloropropane (DBCP)	NPW	MN	
RCRP	EPA 8260C	1,2-Dibromoethane (EDB, Ethylene dibromide)	NPW	MN	
RCRP	EPA 8260C	1,2-Dibromoethane (EDB, Ethylene dibromide)	SCM	MN	
RCRP	EPA 8260C	1,2-Dichlorobenzene	NPW	MN	
RCRP	EPA 8260C	1,2-Dichlorobenzene	SCM	MN	
RCRP	EPA 8260C	1,2-Dichloroethane (Ethylene dichloride)	SCM	MN	
RCRP	EPA 8260C	1,2-Dichloroethane (Ethylene dichloride)	NPW	MN	
RCRP	EPA 8260C	1,2-Dichloropropane	SCM	MN	
RCRP	EPA 8260C	1,2-Dichloropropane	NPW	MN	
RCRP	EPA 8260C	1,3,5-Trimethylbenzene	SCM	MN	
RCRP	EPA 8260C	1,3,5-Trimethylbenzene	NPW	MN	
RCRP	EPA 8260C	1,3-Dichlorobenzene	NPW	MN	
RCRP	EPA 8260C	1,3-Dichlorobenzene	SCM	MN	
RCRP	EPA 8260C	1,3-Dichloropropane	NPW	MN	
RCRP	EPA 8260C	1,3-Dichloropropane	SCM	MN	
RCRP	EPA 8260C	1,4-Dichlorobenzene	SCM	MN	
RCRP	EPA 8260C	1,4-Dichlorobenzene	NPW	MN	
RCRP	EPA 8260C	1,4-Dioxane (1,4- Diethyleneoxide)	NPW	MN	
RCRP	EPA 8260C	1,4-Dioxane (1,4- Diethyleneoxide)	SCM	MN	
RCRP	EPA 8260C	2,2-Dichloropropane	SCM	MN	
RCRP	EPA 8260C	2,2-Dichloropropane	NPW	MN	
RCRP	EPA 8260C	2-Butanone (Methyl ethyl ketone, MEK)	NPW	MN	
RCRP	EPA 8260C	2-Butanone (Methyl ethyl ketone, MEK)	SCM	MN	
RCRP	EPA 8260C	2-Chloroethyl vinyl ether	SCM	MN	
RCRP	EPA 8260C	2-Chloroethyl vinyl ether	NPW	MN	
RCRP	EPA 8260C	2-Chlorotoluene	NPW	MN	
RCRP	EPA 8260C	2-Chlorotoluene	SCM	MN	
RCRP	EPA 8260C	2-Hexanone	NPW	MN	
RCRP	EPA 8260C	2-Hexanone	SCM	MN	
RCRP	EPA 8260C	2-Methylnaphthalene	SCM	MN	
RCRP	EPA 8260C	2-Methylnaphthalene	NPW	MN	
RCRP	EPA 8260C	2-Nitropropane	SCM	MN	
RCRP	EPA 8260C	2-Nitropropane	NPW	MN	
RCRP	EPA 8260C	4-Chlorotoluene	NPW	MN	
RCRP	EPA 8260C	4-Chlorotoluene	SCM	MN	

Program	Method	Analyte	Matrix	Primary	SOP
RCRP	EPA 8260C	4-Isopropyltoluene (p-Cymene)	NPW	MN	
RCRP	EPA 8260C	4-Isopropyltoluene (p-Cymene)	SCM	MN	
RCRP	EPA 8260C	4-Methyl-2-pentanone (MIBK)	SCM	MN	
RCRP	EPA 8260C	4-Methyl-2-pentanone (MIBK)	NPW	MN	
RCRP	EPA 8260C	Acetone	NPW	MN	
RCRP	EPA 8260C	Acetone	SCM	MN	
RCRP	EPA 8260C	Acetonitrile	NPW	MN	
RCRP	EPA 8260C	Acetonitrile	SCM	MN	
RCRP	EPA 8260C	Acrolein (Propenal)	SCM	MN	
RCRP	EPA 8260C	Acrolein (Propenal)	NPW	MN	
RCRP	EPA 8260C	Acrylonitrile	NPW	MN	
RCRP	EPA 8260C	Acrylonitrile	SCM	MN	
RCRP	EPA 8260C	Allyl chloride (3-Chloropropene)	NPW	MN	
RCRP	EPA 8260C	Allyl chloride (3-Chloropropene)	SCM	MN	
RCRP	EPA 8260C	Benzene	SCM	MN	
RCRP	EPA 8260C	Benzene	NPW	MN	
RCRP	EPA 8260C	Benzyl chloride	SCM	MN	
RCRP	EPA 8260C	Benzyl chloride	NPW	MN	
RCRP	EPA 8260C	Bromobenzene	NPW	MN	
RCRP	EPA 8260C	Bromobenzene	SCM	MN	
RCRP	EPA 8260C	Bromochloromethane	NPW	MN	
RCRP	EPA 8260C	Bromochloromethane	SCM	MN	
RCRP	EPA 8260C	Bromodichloromethane	NPW	MN	
RCRP	EPA 8260C	Bromodichloromethane	SCM	MN	
RCRP	EPA 8260C	Bromoform	SCM	MN	
RCRP	EPA 8260C	Bromoform	NPW	MN	
RCRP	EPA 8260C	Carbon disulfide	SCM	MN	
RCRP	EPA 8260C	Carbon disulfide	NPW	MN	
RCRP	EPA 8260C	Carbon tetrachloride	NPW	MN	
RCRP	EPA 8260C	Carbon tetrachloride	SCM	MN	
RCRP	EPA 8260C	Chlorobenzene	SCM	MN	
RCRP	EPA 8260C	Chlorobenzene	NPW	MN	
RCRP	EPA 8260C	Chlorodibromomethane	NPW	MN	
RCRP	EPA 8260C	Chlorodibromomethane	SCM	MN	
RCRP	EPA 8260C	Chloroethane (Ethyl chloride)	SCM	MN	
RCRP	EPA 8260C	Chloroethane (Ethyl chloride)	NPW	MN	

Program	Method	Analyte	Matrix	Primary	SOP
RCRP	EPA 8260C	Chloroform	SCM	MN	
RCRP	EPA 8260C	Chloroform	NPW	MN	
RCRP	EPA 8260C	Chloroprene (2-Chloro-1,3-butadiene)	NPW	MN	
RCRP	EPA 8260C	Chloroprene (2-Chloro-1,3-butadiene)	SCM	MN	
RCRP	EPA 8260C	cis-1,2-Dichloroethylene	NPW	MN	
RCRP	EPA 8260C	cis-1,2-Dichloroethylene	SCM	MN	
RCRP	EPA 8260C	cis-1,3-Dichloropropene	SCM	MN	
RCRP	EPA 8260C	cis-1,3-Dichloropropene	NPW	MN	
RCRP	EPA 8260C	Di-isopropylether (DIPE)	SCM	MN	
RCRP	EPA 8260C	Di-isopropylether (DIPE)	NPW	MN	
RCRP	EPA 8260C	Dibromochloromethane	SCM	MN	
RCRP	EPA 8260C	Dibromochloromethane	NPW	MN	
RCRP	EPA 8260C	Dibromomethane (Methylene bromide)	NPW	MN	
RCRP	EPA 8260C	Dibromomethane (Methylene bromide)	SCM	MN	
RCRP	EPA 8260C	Dichlorodifluoromethane (Freon-12)	SCM	MN	
RCRP	EPA 8260C	Dichlorodifluoromethane (Freon-12)	NPW	MN	
RCRP	EPA 8260C	Diethyl ether	NPW	MN	
RCRP	EPA 8260C	Diethyl ether	SCM	MN	
RCRP	EPA 8260C	Ethyl acetate	SCM	MN	
RCRP	EPA 8260C	Ethyl acetate	NPW	MN	
RCRP	EPA 8260C	Ethyl methacrylate	NPW	MN	
RCRP	EPA 8260C	Ethyl methacrylate	SCM	MN	
RCRP	EPA 8260C	Ethyl-t-butylether (ETBE) (2-Ethoxy-2-methylpropane)	SCM	MN	
RCRP	EPA 8260C	Ethylbenzene	NPW	MN	
RCRP	EPA 8260C	Ethylbenzene	SCM	MN	
RCRP	EPA 8260C	Hexachlorobutadiene	NPW	MN	
RCRP	EPA 8260C	Hexachlorobutadiene	SCM	MN	
RCRP	EPA 8260C	Hexachloroethane	NPW	MN	
RCRP	EPA 8260C	Hexachloroethane	SCM	MN	
RCRP	EPA 8260C	Iodomethane (Methyl iodide)	NPW	MN	
RCRP	EPA 8260C	Iodomethane (Methyl iodide)	SCM	MN	
RCRP	EPA 8260C	Isobutyl alcohol (2-Methyl-1-propanol)	SCM	MN	
RCRP	EPA 8260C	Isobutyl alcohol (2-Methyl-1-propanol)	NPW	MN	
RCRP	EPA 8260C	Isopropylbenzene	SCM	MN	
RCRP	EPA 8260C	Isopropylbenzene	NPW	MN	
RCRP	EPA 8260C	m+p-xylene	SCM	MN	

Program	Method	Analyte	Matrix	Primary	SOP
RCRP	EPA 8260C	m+p-xylene	NPW	MN	
RCRP	EPA 8260C	Methacrylonitrile	NPW	MN	
RCRP	EPA 8260C	Methacrylonitrile	SCM	MN	
RCRP	EPA 8260C	Methyl bromide (Bromomethane)	NPW	MN	
RCRP	EPA 8260C	Methyl bromide (Bromomethane)	SCM	MN	
RCRP	EPA 8260C	Methyl chloride (Chloromethane)	SCM	MN	
RCRP	EPA 8260C	Methyl chloride (Chloromethane)	NPW	MN	
RCRP	EPA 8260C	Methyl methacrylate	NPW	MN	
RCRP	EPA 8260C	Methyl methacrylate	SCM	MN	
RCRP	EPA 8260C	Methyl tert-butyl ether (MTBE)	NPW	MN	
RCRP	EPA 8260C	Methyl tert-butyl ether (MTBE)	SCM	MN	
RCRP	EPA 8260C	Methylcyclohexane	SCM	MN	
RCRP	EPA 8260C	Methylcyclohexane	NPW	MN	
RCRP	EPA 8260C	Methylene chloride (Dichloromethane)	NPW	MN	
RCRP	EPA 8260C	Methylene chloride (Dichloromethane)	SCM	MN	
RCRP	EPA 8260C	n-Butylbenzene	NPW	MN	
RCRP	EPA 8260C	n-Butylbenzene	SCM	MN	
RCRP	EPA 8260C	n-Heptane	SCM	MN	
RCRP	EPA 8260C	n-Heptane	NPW	MN	
RCRP	EPA 8260C	n-Hexane	NPW	MN	
RCRP	EPA 8260C	n-Hexane	SCM	MN	
RCRP	EPA 8260C	n-Propylbenzene	NPW	MN	
RCRP	EPA 8260C	n-Propylbenzene	SCM	MN	
RCRP	EPA 8260C	Naphthalene	SCM	MN	
RCRP	EPA 8260C	Naphthalene	NPW	MN	
RCRP	EPA 8260C	o-Xylene	NPW	MN	
RCRP	EPA 8260C	o-Xylene	SCM	MN	
RCRP	EPA 8260C	p-Isopropyltoluene	SCM	MN	
RCRP	EPA 8260C	p-Isopropyltoluene	NPW	MN	
RCRP	EPA 8260C	Propionitrile (Ethyl cyanide)	SCM	MN	
RCRP	EPA 8260C	Propionitrile (Ethyl cyanide)	NPW	MN	
RCRP	EPA 8260C	sec-Butylbenzene	NPW	MN	
RCRP	EPA 8260C	sec-Butylbenzene	SCM	MN	
RCRP	EPA 8260C	Styrene	NPW	MN	
RCRP	EPA 8260C	Styrene	SCM	MN	
RCRP	EPA 8260C	T-amylmethylether (TAME)	SCM	MN	

Program	Method	Analyte	Matrix	Primary	SOP
RCRP	EPA 8260C	T-amylmethylether (TAME)	NPW	MN	
RCRP	EPA 8260C	tert-Butyl alcohol	NPW	MN	
RCRP	EPA 8260C	tert-Butyl alcohol	SCM	MN	
RCRP	EPA 8260C	tert-Butylbenzene	NPW	MN	
RCRP	EPA 8260C	tert-Butylbenzene	SCM	MN	
RCRP	EPA 8260C	Tetrachloroethylene (Perchloroethylene)	NPW	MN	
RCRP	EPA 8260C	Tetrachloroethylene (Perchloroethylene)	SCM	MN	
RCRP	EPA 8260C	Tetrahydrofuran (THF)	SCM	MN	
RCRP	EPA 8260C	Tetrahydrofuran (THF)	NPW	MN	
RCRP	EPA 8260C	Toluene	NPW	MN	
RCRP	EPA 8260C	Toluene	SCM	MN	
RCRP	EPA 8260C	trans-1,2-Dichloroethylene	NPW	MN	
RCRP	EPA 8260C	trans-1,2-Dichloroethylene	SCM	MN	
RCRP	EPA 8260C	trans-1,3-Dichloropropylene	NPW	MN	
RCRP	EPA 8260C	trans-1,3-Dichloropropylene	SCM	MN	
RCRP	EPA 8260C	trans-1,4-Dichloro-2-butene	SCM	MN	
RCRP	EPA 8260C	trans-1,4-Dichloro-2-butene	NPW	MN	
RCRP	EPA 8260C	Trichloroethene (Trichloroethylene)	SCM	MN	
RCRP	EPA 8260C	Trichloroethene (Trichloroethylene)	NPW	MN	
RCRP	EPA 8260C	Trichlorofluoromethane (Fluorotrichloromethane, Freon 11)	NPW	MN	
RCRP	EPA 8260C	Trichlorofluoromethane (Fluorotrichloromethane, Freon 11)	SCM	MN	
RCRP	EPA 8260C	Vinyl acetate	SCM	MN	
RCRP	EPA 8260C	Vinyl acetate	NPW	MN	
RCRP	EPA 8260C	Vinyl chloride	SCM	MN	
RCRP	EPA 8260C	Vinyl chloride	NPW	MN	
RCRP	EPA 8260C	Xylene (total)	NPW	MN	
RCRP	EPA 8260C	Xylene (total)	SCM	MN	

EPA 8260D

Preparation Techniques: Extraction, EPA 1312 SPLP, zero headspace (ZHE); Extraction, EPA 1311 TCLP, zero headspace (ZHE); Purge and trap;

Program	Method	Analyte	Matrix	Primary	SOP
RCRP	EPA 8260D	1,1,1,2-Tetrachloroethane	SCM	MN	
RCRP	EPA 8260D	1,1,1,2-Tetrachloroethane	NPW	MN	

Program	Method	Analyte	Matrix	Primary	SOP
RCRP	EPA 8260D	1,1,1-Trichloroethane	SCM	MN	
RCRP	EPA 8260D	1,1,1-Trichloroethane	NPW	MN	
RCRP	EPA 8260D	1,1,2,2-Tetrachloroethane	NPW	MN	
RCRP	EPA 8260D	1,1,2,2-Tetrachloroethane	SCM	MN	
RCRP	EPA 8260D	1,1,2-Trichloro-1,2,2-trifluoroethane (Freon 113)	NPW	MN	
RCRP	EPA 8260D	1,1,2-Trichloro-1,2,2-trifluoroethane (Freon 113)	SCM	MN	
RCRP	EPA 8260D	1,1,2-Trichloroethane	SCM	MN	
RCRP	EPA 8260D	1,1,2-Trichloroethane	NPW	MN	
RCRP	EPA 8260D	1,1-Dichloroethane	NPW	MN	
RCRP	EPA 8260D	1,1-Dichloroethane	SCM	MN	
RCRP	EPA 8260D	1,1-Dichloroethylene	NPW	MN	
RCRP	EPA 8260D	1,1-Dichloroethylene	SCM	MN	
RCRP	EPA 8260D	1,1-Dichloropropene	NPW	MN	
RCRP	EPA 8260D	1,1-Dichloropropene	SCM	MN	
RCRP	EPA 8260D	1,2,3-Trichlorobenzene	SCM	MN	
RCRP	EPA 8260D	1,2,3-Trichlorobenzene	NPW	MN	
RCRP	EPA 8260D	1,2,3-Trichloropropane	SCM	MN	
RCRP	EPA 8260D	1,2,3-Trichloropropane	NPW	MN	
RCRP	EPA 8260D	1,2,3-Trimethylbenzene	SCM	MN	
RCRP	EPA 8260D	1,2,3-Trimethylbenzene	NPW	MN	
RCRP	EPA 8260D	1,2,4-Trichlorobenzene	SCM	MN	
RCRP	EPA 8260D	1,2,4-Trichlorobenzene	NPW	MN	
RCRP	EPA 8260D	1,2,4-Trimethylbenzene	SCM	MN	
RCRP	EPA 8260D	1,2,4-Trimethylbenzene	NPW	MN	
RCRP	EPA 8260D	1,2-Dibromo-3-chloropropane (DBCP)	NPW	MN	
RCRP	EPA 8260D	1,2-Dibromo-3-chloropropane (DBCP)	SCM	MN	
RCRP	EPA 8260D	1,2-Dibromoethane (EDB, Ethylene dibromide)	NPW	MN	
RCRP	EPA 8260D	1,2-Dibromoethane (EDB, Ethylene dibromide)	SCM	MN	
RCRP	EPA 8260D	1,2-Dichlorobenzene	SCM	MN	
RCRP	EPA 8260D	1,2-Dichlorobenzene	NPW	MN	
RCRP	EPA 8260D	1,2-Dichloroethane (Ethylene dichloride)	SCM	MN	
RCRP	EPA 8260D	1,2-Dichloroethane (Ethylene dichloride)	NPW	MN	
RCRP	EPA 8260D	1,2-Dichloropropane	NPW	MN	
RCRP	EPA 8260D	1,2-Dichloropropane	SCM	MN	

Program	Method	Analyte	Matrix	Primary	SOP
RCRP	EPA 8260D	1,3,5-Trimethylbenzene	NPW	MN	
RCRP	EPA 8260D	1,3,5-Trimethylbenzene	SCM	MN	
RCRP	EPA 8260D	1,3-Dichlorobenzene	NPW	MN	
RCRP	EPA 8260D	1,3-Dichlorobenzene	SCM	MN	
RCRP	EPA 8260D	1,3-Dichloropropane	NPW	MN	
RCRP	EPA 8260D	1,3-Dichloropropane	SCM	MN	
RCRP	EPA 8260D	1,4-Dichlorobenzene	NPW	MN	
RCRP	EPA 8260D	1,4-Dichlorobenzene	SCM	MN	
RCRP	EPA 8260D	1,4-Dioxane (1,4- Diethyleneoxide)	SCM	MN	
RCRP	EPA 8260D	1,4-Dioxane (1,4- Diethyleneoxide)	NPW	MN	
RCRP	EPA 8260D	2,2-Dichloropropane	SCM	MN	
RCRP	EPA 8260D	2,2-Dichloropropane	NPW	MN	
RCRP	EPA 8260D	2-Butanone (Methyl ethyl ketone, MEK)	NPW	MN	
RCRP	EPA 8260D	2-Butanone (Methyl ethyl ketone, MEK)	SCM	MN	
RCRP	EPA 8260D	2-Chloroethyl vinyl ether	SCM	MN	
RCRP	EPA 8260D	2-Chloroethyl vinyl ether	NPW	MN	
RCRP	EPA 8260D	2-Chlorotoluene	NPW	MN	
RCRP	EPA 8260D	2-Chlorotoluene	SCM	MN	
RCRP	EPA 8260D	2-Hexanone	SCM	MN	
RCRP	EPA 8260D	2-Hexanone	NPW	MN	
RCRP	EPA 8260D	2-Methylnaphthalene	SCM	MN	
RCRP	EPA 8260D	2-Methylnaphthalene	NPW	MN	
RCRP	EPA 8260D	2-Nitropropane	NPW	MN	
RCRP	EPA 8260D	2-Nitropropane	SCM	MN	
RCRP	EPA 8260D	4-Chlorotoluene	SCM	MN	
RCRP	EPA 8260D	4-Chlorotoluene	NPW	MN	
RCRP	EPA 8260D	4-Isopropyltoluene (p-Cymene)	NPW	MN	
RCRP	EPA 8260D	4-Isopropyltoluene (p-Cymene)	SCM	MN	
RCRP	EPA 8260D	4-Methyl-2-pentanone (MIBK)	SCM	MN	
RCRP	EPA 8260D	4-Methyl-2-pentanone (MIBK)	NPW	MN	
RCRP	EPA 8260D	Acetone	NPW	MN	
RCRP	EPA 8260D	Acetone	SCM	MN	
RCRP	EPA 8260D	Acetonitrile	SCM	MN	
RCRP	EPA 8260D	Acetonitrile	NPW	MN	
RCRP	EPA 8260D	Acrolein (Propenal)	SCM	MN	
RCRP	EPA 8260D	Acrolein (Propenal)	NPW	MN	

Program	Method	Analyte	Matrix	Primary	SOP
RCRP	EPA 8260D	Acrylonitrile	NPW	MN	
RCRP	EPA 8260D	Acrylonitrile	SCM	MN	
RCRP	EPA 8260D	Allyl chloride (3-Chloropropene)	SCM	MN	
RCRP	EPA 8260D	Allyl chloride (3-Chloropropene)	NPW	MN	
RCRP	EPA 8260D	Benzene	SCM	MN	
RCRP	EPA 8260D	Benzene	NPW	MN	
RCRP	EPA 8260D	Benzyl chloride	SCM	MN	
RCRP	EPA 8260D	Benzyl chloride	NPW	MN	
RCRP	EPA 8260D	Bromobenzene	SCM	MN	
RCRP	EPA 8260D	Bromobenzene	NPW	MN	
RCRP	EPA 8260D	Bromochloromethane	SCM	MN	
RCRP	EPA 8260D	Bromochloromethane	NPW	MN	
RCRP	EPA 8260D	Bromodichloromethane	NPW	MN	
RCRP	EPA 8260D	Bromodichloromethane	SCM	MN	
RCRP	EPA 8260D	Bromoform	NPW	MN	
RCRP	EPA 8260D	Bromoform	SCM	MN	
RCRP	EPA 8260D	Carbon disulfide	SCM	MN	
RCRP	EPA 8260D	Carbon disulfide	NPW	MN	
RCRP	EPA 8260D	Carbon tetrachloride	SCM	MN	
RCRP	EPA 8260D	Carbon tetrachloride	NPW	MN	
RCRP	EPA 8260D	Chlorobenzene	NPW	MN	
RCRP	EPA 8260D	Chlorobenzene	SCM	MN	
RCRP	EPA 8260D	Chlorodibromomethane	SCM	MN	
RCRP	EPA 8260D	Chlorodibromomethane	NPW	MN	
RCRP	EPA 8260D	Chloroethane (Ethyl chloride)	SCM	MN	
RCRP	EPA 8260D	Chloroethane (Ethyl chloride)	NPW	MN	
RCRP	EPA 8260D	Chloroform	NPW	MN	
RCRP	EPA 8260D	Chloroform	SCM	MN	
RCRP	EPA 8260D	Chloroprene (2-Chloro-1,3-butadiene)	SCM	MN	
RCRP	EPA 8260D	Chloroprene (2-Chloro-1,3-butadiene)	NPW	MN	
RCRP	EPA 8260D	cis-1,2-Dichloroethylene	NPW	MN	
RCRP	EPA 8260D	cis-1,2-Dichloroethylene	SCM	MN	
RCRP	EPA 8260D	cis-1,3-Dichloropropene	SCM	MN	
RCRP	EPA 8260D	cis-1,3-Dichloropropene	NPW	MN	
RCRP	EPA 8260D	Di-isopropylether (DIPE)	NPW	MN	
RCRP	EPA 8260D	Di-isopropylether (DIPE)	SCM	MN	

Program	Method	Analyte	Matrix	Primary	SOP
RCRP	EPA 8260D	Dibromomethane (Methylene bromide)	NPW	MN	
RCRP	EPA 8260D	Dibromomethane (Methylene bromide)	SCM	MN	
RCRP	EPA 8260D	Dichlorodifluoromethane (Freon-12)	SCM	MN	
RCRP	EPA 8260D	Dichlorodifluoromethane (Freon-12)	NPW	MN	
RCRP	EPA 8260D	Diethyl ether	NPW	MN	
RCRP	EPA 8260D	Diethyl ether	SCM	MN	
RCRP	EPA 8260D	Ethyl acetate	SCM	MN	
RCRP	EPA 8260D	Ethyl acetate	NPW	MN	
RCRP	EPA 8260D	Ethyl methacrylate	NPW	MN	
RCRP	EPA 8260D	Ethyl methacrylate	SCM	MN	
RCRP	EPA 8260D	Ethyl-t-butylether (ETBE) (2-Ethoxy-2-methylpropane)	SCM	MN	
RCRP	EPA 8260D	Ethylbenzene	NPW	MN	
RCRP	EPA 8260D	Ethylbenzene	SCM	MN	
RCRP	EPA 8260D	Hexachlorobutadiene	SCM	MN	
RCRP	EPA 8260D	Hexachlorobutadiene	NPW	MN	
RCRP	EPA 8260D	Hexachloroethane	SCM	MN	
RCRP	EPA 8260D	Hexachloroethane	NPW	MN	
RCRP	EPA 8260D	Iodomethane (Methyl iodide)	SCM	MN	
RCRP	EPA 8260D	Iodomethane (Methyl iodide)	NPW	MN	
RCRP	EPA 8260D	Isobutyl alcohol (2-Methyl-1-propanol)	SCM	MN	
RCRP	EPA 8260D	Isobutyl alcohol (2-Methyl-1-propanol)	NPW	MN	
RCRP	EPA 8260D	Isopropylbenzene	NPW	MN	
RCRP	EPA 8260D	Isopropylbenzene	SCM	MN	
RCRP	EPA 8260D	m+p-xylene	NPW	MN	
RCRP	EPA 8260D	m+p-xylene	SCM	MN	
RCRP	EPA 8260D	Methacrylonitrile	NPW	MN	
RCRP	EPA 8260D	Methacrylonitrile	SCM	MN	
RCRP	EPA 8260D	Methyl bromide (Bromomethane)	NPW	MN	
RCRP	EPA 8260D	Methyl bromide (Bromomethane)	SCM	MN	
RCRP	EPA 8260D	Methyl chloride (Chloromethane)	NPW	MN	
RCRP	EPA 8260D	Methyl chloride (Chloromethane)	SCM	MN	
RCRP	EPA 8260D	Methyl methacrylate	NPW	MN	
RCRP	EPA 8260D	Methyl methacrylate	SCM	MN	
RCRP	EPA 8260D	Methyl tert-butyl ether (MTBE)	SCM	MN	
RCRP	EPA 8260D	Methyl tert-butyl ether (MTBE)	NPW	MN	
RCRP	EPA 8260D	Methylcyclohexane	SCM	MN	

Program	Method	Analyte	Matrix	Primary	SOP
RCRP	EPA 8260D	Methylcyclohexane	NPW	MN	
RCRP	EPA 8260D	Methylene chloride (Dichloromethane)	NPW	MN	
RCRP	EPA 8260D	Methylene chloride (Dichloromethane)	SCM	MN	
RCRP	EPA 8260D	n-Butylbenzene	NPW	MN	
RCRP	EPA 8260D	n-Butylbenzene	SCM	MN	
RCRP	EPA 8260D	n-Heptane	SCM	MN	
RCRP	EPA 8260D	n-Heptane	NPW	MN	
RCRP	EPA 8260D	n-Hexane	SCM	MN	
RCRP	EPA 8260D	n-Hexane	NPW	MN	
RCRP	EPA 8260D	n-Propylbenzene	SCM	MN	
RCRP	EPA 8260D	n-Propylbenzene	NPW	MN	
RCRP	EPA 8260D	Naphthalene	NPW	MN	
RCRP	EPA 8260D	Naphthalene	SCM	MN	
RCRP	EPA 8260D	o-Xylene	SCM	MN	
RCRP	EPA 8260D	o-Xylene	NPW	MN	
RCRP	EPA 8260D	Propionitrile (Ethyl cyanide)	NPW	MN	
RCRP	EPA 8260D	Propionitrile (Ethyl cyanide)	SCM	MN	
RCRP	EPA 8260D	sec-Butylbenzene	SCM	MN	
RCRP	EPA 8260D	sec-Butylbenzene	NPW	MN	
RCRP	EPA 8260D	Styrene	NPW	MN	
RCRP	EPA 8260D	Styrene	SCM	MN	
RCRP	EPA 8260D	T-amylmethylether (TAME)	NPW	MN	
RCRP	EPA 8260D	T-amylmethylether (TAME)	SCM	MN	
RCRP	EPA 8260D	tert-Butyl alcohol	NPW	MN	
RCRP	EPA 8260D	tert-Butyl alcohol	SCM	MN	
RCRP	EPA 8260D	tert-Butylbenzene	NPW	MN	
RCRP	EPA 8260D	tert-Butylbenzene	SCM	MN	
RCRP	EPA 8260D	Tetrachloroethylene (Perchloroethylene)	SCM	MN	
RCRP	EPA 8260D	Tetrachloroethylene (Perchloroethylene)	NPW	MN	
RCRP	EPA 8260D	Tetrahydrofuran (THF)	NPW	MN	
RCRP	EPA 8260D	Tetrahydrofuran (THF)	SCM	MN	
RCRP	EPA 8260D	Toluene	SCM	MN	
RCRP	EPA 8260D	Toluene	NPW	MN	
RCRP	EPA 8260D	trans-1,2-Dichloroethylene	SCM	MN	
RCRP	EPA 8260D	trans-1,2-Dichloroethylene	NPW	MN	
RCRP	EPA 8260D	trans-1,3-Dichloropropylene	SCM	MN	

Program	Method	Analyte	Matrix	Primary	SOP
RCRP	EPA 8260D	trans-1,3-Dichloropropylene	NPW	MN	
RCRP	EPA 8260D	trans-1,4-Dichloro-2-butene	NPW	MN	
RCRP	EPA 8260D	trans-1,4-Dichloro-2-butene	SCM	MN	
RCRP	EPA 8260D	Trichloroethene (Trichloroethylene)	NPW	MN	
RCRP	EPA 8260D	Trichloroethene (Trichloroethylene)	SCM	MN	
RCRP	EPA 8260D	Trichlorofluoromethane (Fluorotrichloromethane, Freon 11)	SCM	MN	
RCRP	EPA 8260D	Trichlorofluoromethane (Fluorotrichloromethane, Freon 11)	NPW	MN	
RCRP	EPA 8260D	Vinyl acetate	NPW	MN	
RCRP	EPA 8260D	Vinyl acetate	SCM	MN	
RCRP	EPA 8260D	Vinyl chloride	SCM	MN	
RCRP	EPA 8260D	Vinyl chloride	NPW	MN	
RCRP	EPA 8260D	Xylene (total)	SCM	MN	
RCRP	EPA 8260D	Xylene (total)	NPW	MN	

EPA RSK-175 (GC/FID)

Preparation Techniques: N/A

Program	Method	Analyte	Matrix	Primary	SOP
RCRP	EPA RSK-175 (GC/FID)	Ethane	NPW	MN	
RCRP	EPA RSK-175 (GC/FID)	Ethene	NPW	MN	
RCRP	EPA RSK-175 (GC/FID)	Methane	NPW	MN	

NCASI DI/MEOH-94.03

Preparation Techniques: N/A

Program	Method	Analyte	Matrix	Primary	SOP
RCRP	NCASI DI/MEOH-94.03	Methanol	NPW	MN	

Safe Drinking Water Program

EPA 537.1

Preparation Techniques: Extraction, solid phase (SPE);

Program	Method	Analyte	Matrix	Primary	SOP
SDWP	EPA 537.1	N-Ethylperfluorooctane sufonamido acetic acid NEtFOSAA)	DW	MN	
SDWP	EPA 537.1	N-Methylperfluorooctane sulfonamido acetic acid (N-MeFOSAA)	DW	MN	
SDWP	EPA 537.1	Perfluorobutane sulfonic acid (PFBS)	DW	MN	
SDWP	EPA 537.1	Perfluorodecanoic acid (PFDA)	DW	MN	
SDWP	EPA 537.1	Perfluorododecanoic acid (PFDOA)	DW	MN	
SDWP	EPA 537.1	Perfluoroheptanoic acid (PFHpA)	DW	MN	
SDWP	EPA 537.1	Perfluorohexane sulfonic acid (PFHxS)	DW	MN	
SDWP	EPA 537.1	Perfluorohexanoic acid (PFHxA)	DW	MN	
SDWP	EPA 537.1	Perfluorononanoic acid (PFNA)	DW	MN	
SDWP	EPA 537.1	Perfluorooctane sulfonic acid (PFOS)	DW	MN	
SDWP	EPA 537.1	Perfluorooctanoic acid (PFOA)	DW	MN	
SDWP	EPA 537.1	Perfluorotetradecanoic acid (PFTDA)	DW	MN	
SDWP	EPA 537.1	Perfluorotridecanoic acid (PFTrDA)	DW	MN	
SDWP	EPA 537.1	Perfluoroundecanoic acid (PFUDA)	DW	MN	

Underground Storage Tank Program

WI(95) DRO

Preparation Techniques: N/A

Program	Method	Analyte	Matrix	Primary	SOP
USTP	WI(95) DRO	Diesel range organics (DRO)	NPW	MN	
USTP	WI(95) DRO	Diesel range organics (DRO)	SCM	MN	

WI(95) GRO

Preparation Techniques: N/A

Program	Method	Analyte	Matrix	Primary	SOP
USTP	WI(95) GRO	Gasoline range organics (GRO)	SCM	MN	
USTP	WI(95) GRO	Gasoline range organics (GRO)	NPW	MN	

WI(95) GRO

Preparation Techniques: N/A

Program	Method	Analyte	Matrix	Primary	SOP
USTP	WI(95) GRO	Petroleum Volatile Organic Compounds (PVOC)	SCM	MN	
USTP	WI(95) GRO	Petroleum Volatile Organic Compounds (PVOC)	NPW	MN	

Note: Method beginning with "SM" refer to the approved editions of Standard methods for the Examination of Water and Wastes. Approved methods are listed in the applicable parts of Title 40 of the Code of Federal Regulations (including its subsequent Federal Register updates), MN Statutes and Rules, and state-issued permits.

AASHTO ACCREDITED

Certificate of Accreditation

American Association of State Highway and Transportation Officials
AASHTO

Bowser-Morner, Inc.

in

Dayton, Ohio, USA

has demonstrated proficiency for the testing of construction materials and has conformed to the requirements established in AASHTO R 18 and the AASHTO Accreditation policies established by the AASHTO Committee on Materials and Pavements.

The scope of accreditation can be viewed on the Directory of AASHTO Accredited Laboratories (aashtoresource.org).

Jim Tymon,
AASHTO Executive Director

Moe Jamshidi,
AASHTO COMP Chair

This certificate was generated on 08/08/2019 at 3:48 PM Eastern Time. Please confirm the current accreditation status of this laboratory at aashtoresource.org/aap/accreditation-directory

Scope of AASHTO Accreditation for:

Bowser-Morner, Inc.

in Dayton, Ohio, USA

Quality Management System

Standard:		Accredited Since:
R18	Establishing and Implementing a Quality System for Construction Materials Testing Laboratories	11/15/1995
ISO/IEC 17025	General Requirements for the Competence of Testing and Calibration Laboratories	11/15/2000
C1077 (Aggregate)	Laboratories Testing Concrete and Concrete Aggregates	11/17/2011
C1077 (Concrete)	Laboratories Testing Concrete and Concrete Aggregates	12/20/2011
C1093 (Masonry)	Accreditation of Testing Agencies for Unit Masonry	01/10/2011
D3666 (Aggregate)	Minimum Requirements for Agencies Testing and Inspecting Road and Paving Materials	01/10/2011
D3666 (Asphalt Mixture)	Minimum Requirements for Agencies Testing and Inspecting Road and Paving Materials	06/25/2018
D3740 (Soil)	Minimum Requirements for Agencies Engaged in Testing and/or Inspection of Soil and Rock as Used in Engineering Design and Construction	01/10/2011
E329 (Aggregate)	Standard Specification for Agencies Engaged in the Testing and/or Inspection of Materials Used in Construction	01/10/2011
E329 (Asphalt Mixture)	Standard Specification for Agencies Engaged in the Testing and/or Inspection of Materials Used in Construction	06/25/2018
E329 (Concrete)	Standard Specification for Agencies Engaged in the Testing and/or Inspection of Materials Used in Construction	02/23/2012

This certificate was generated on 08/08/2019 at 3:48 PM Eastern Time. Please confirm the current accreditation status of this laboratory at aashtoresource.org/aap/accreditation-directory

Scope of AASHTO Accreditation for:

Bowser-Morner, Inc.

in Dayton, Ohio, USA

Asphalt Mixture

Standard:		Accredited Since:
R68	Preparation of Asphalt Mixtures by Means of the Marshall Apparatus	03/10/2016
T30	Mechanical Analysis of Extracted Aggregate	11/15/1995
T164	Quantitative Extraction of Asphalt Binder from Hot Mix Asphalt (HMA)	11/15/1995
T166	Bulk Specific Gravity of Compacted Hot Mix Asphalt Using Saturated Surface-Dry Specimens	11/15/1995
T209	Maximum Specific Gravity of Hot Mix Asphalt Paving Mixtures	11/15/1995
T245	Resistance to Plastic Flow of Asphalt Mixtures Using Marshall Apparatus	11/15/1995
T269	Percent Air Voids in Compacted Dense and Open Bituminous Paving Mixtures	11/15/1995
T275	Bulk Specific Gravity of Compacted Bituminous Mixtures Using Paraffin-Coated Specimens	11/15/1995
D1188	Bulk Specific Gravity of Compacted Bituminous Mixtures Using Paraffin-Coated Specimens	11/15/1995
D2041	Maximum Specific Gravity of Hot Mix Asphalt Paving Mixtures	11/15/1995
D2172	Quantitative Extraction of Asphalt Binder from Hot Mix Asphalt (HMA)	11/15/1995
D2726	Bulk Specific Gravity of Compacted Hot Mix Asphalt Using Saturated Surface-Dry Specimens	11/15/1995
D3203	Percent Air Voids in Compacted Dense and Open Bituminous Paving Mixtures	11/15/1995
D5444	Mechanical Analysis of Extracted Aggregate	11/15/1995
D6926	Preparation of Asphalt Mixtures by Means of the Marshall Apparatus	03/10/2016
D6927	Resistance to Plastic Flow of Asphalt Mixtures Using Marshall Apparatus	11/15/1995

This certificate was generated on 08/08/2019 at 3:48 PM Eastern Time. Please confirm the current accreditation status of this laboratory at aashtoresource.org/aap/accreditation-directory

Scope of AASHTO Accreditation for:

Bowser-Morner, Inc.

in Dayton, Ohio, USA

Soil

Standard:		Accredited Since:
R58	Dry Preparation of Disturbed Soil and Soil Aggregate Samples for Test	11/15/1995
T88	Particle Size Analysis of Soils by Hydrometer	11/15/1995
T89	Determining the Liquid Limit of Soils (Atterberg Limits)	11/15/1995
T90	Plastic Limit of Soils (Atterberg Limits)	11/15/1995
T99	The Moisture-Density Relations of Soils Using a 5.5 lb [2.5 kg] Rammer and a 12 in. [305 mm] Drop	11/15/1995
T100	Specific Gravity of Soils	11/15/1995
T134	Moisture-Density Relations of Soil-Cement Mixtures	11/15/1995
T135	Wetting-and-Drying Test of Compacted Soil-Cement Mixtures	11/15/1995
T136	Freezing-and-Thawing Tests of Compacted Soil-Cement Mixtures	11/15/1995
T180	Moisture-Density Relations of Soils Using a 10 lb [4.54 kg] Rammer and an 18 in. [457 mm] Drop	11/15/1995
T193	The California Bearing Ratio	11/15/1995
T208	Unconfined Compressive Strength of Cohesive Soil	11/15/1995
T215	Permeability of Granular Soils (Constant Head)	11/15/1995
T216	One-Dimensional Consolidation Properties of Soils Using Incremental Loading	11/15/1995
T236	Direct Shear Test of Soils Under Consolidated Drained Conditions	11/15/1995
T265	Laboratory Determination of Moisture Content of Soils	11/15/1995
T267	Determination of Organic Content in Soils by Loss on Ignition	11/15/1995
T288	Minimum Soil Resistivity	05/10/2013
T289	pH of Soils for Corrosion Testing	05/10/2013
T296	Unconsolidated, Undrained Compressive Strength of Cohesive Soils in Triaxial Compression	11/15/1995
T297	Consolidated-Undrained Triaxial Compression Test on Cohesive Soils	11/15/1995
T310	In-Place Density and Moisture Content of Soil and Soil-Aggregate by Nuclear Methods (Shallow Depth)	11/15/1995
T311	Grain-Size Analysis of Granular Soil Materials	11/15/1995

This certificate was generated on 08/08/2019 at 3:48 PM Eastern Time. Please confirm the current accreditation status of this laboratory at aashtoresource.org/aap/accreditation-directory

Scope of AASHTO Accreditation for:

Bowser-Morner, Inc.

in Dayton, Ohio, USA

Soil (Continued)

Standard:	Accredited Since:
D421 Dry Preparation of Disturbed Soil and Soil Aggregate Samples for Test	11/15/1995
D422 Particle Size Analysis of Soils by Hydrometer	11/15/1995
D558 Moisture-Density Relations of Soil-Cement Mixtures	11/15/1995
D559 Wetting-and-Drying Test of Compacted Soil-Cement Mixtures	11/15/1995
D560 Freezing-and-Thawing Tests of Compacted Soil-Cement Mixtures	11/15/1995
D698 The Moisture-Density Relations of Soils Using a 5.5 lb [2.5 kg] Rammer and a 12 in. [305 mm] Drop	11/15/1995
D854 Specific Gravity of Soils	11/15/1995
D1140 Amount of Material in Soils Finer than the No. 200 (75-µm) Sieve	11/15/1995
D1557 Moisture-Density Relations of Soils Using a 10 lb [4.54 kg] Rammer and an 18 in. [457 mm] Drop	11/15/1995
D1883 The California Bearing Ratio	11/15/1995
D2166 Unconfined Compressive Strength of Cohesive Soil	11/15/1995
D2216 Laboratory Determination of Moisture Content of Soils	11/15/1995
D2434 Permeability of Granular Soils (Constant Head)	11/15/1995
D2435 One-Dimensional Consolidation Properties of Soils Using Incremental Loading	11/15/1995
D2487 Classification of Soils for Engineering Purposes (Unified Soil Classification System)	11/15/1995
D2488 Description and Identification of Soils (Visual-Manual Procedure)	11/15/1995
D2850 Unconsolidated, Undrained Compressive Strength of Cohesive Soils in Triaxial Compression	11/15/1995
D2974 Determination of Organic Content in Soils by Loss on Ignition	09/22/2011
D3080 Direct Shear Test of Soils Under Consolidated Drained Conditions	03/10/2016
D4318 Determining the Liquid Limit of Soils (Atterberg Limits)	11/15/1995
D4318 Plastic Limit of Soils (Atterberg Limits)	11/15/1995
D4546 One-Dimensional Swell or Settlement Potential of Cohesive Soils	11/15/1995
D4767 Consolidated-Undrained Triaxial Compression Test on Cohesive Soils	11/15/1995

This certificate was generated on 08/08/2019 at 3:48 PM Eastern Time. Please confirm the current accreditation status of this laboratory at aashtoresource.org/aap/accreditation-directory

Scope of AASHTO Accreditation for:

Bowser-Morner, Inc.

in Dayton, Ohio, USA

Soil (Continued)

Standard:	Accredited Since:
D4972 pH Testing of Soils	09/22/2011
D5084 Hydraulic Conductivity of Saturated Porous Materials Using a Flexible Wall Permeameter	11/15/1995
D6913 Particle-Size Distribution (Gradation) of Soils Using Sieve Analysis	05/10/2013
D6938 In-Place Density and Moisture Content of Soil and Soil-Aggregate by Nuclear Methods (Shallow Depth)	11/15/1995
D7928 Particle-Size Distribution (Gradation) of Fine-Grained Soils Using the Sedimentation (Hydrometer) Analysis	05/15/2018
G187 Soil Resistivity Using the Two-Electrode Soil Box	05/15/2018

This certificate was generated on 08/08/2019 at 3:48 PM Eastern Time. Please confirm the current accreditation status of this laboratory at aashtoresource.org/aap/accreditation-directory

Scope of AASHTO Accreditation for:

Bowser-Morner, Inc.

in Dayton, Ohio, USA

Rock

Standard:	Accredited Since:
D4543 Preparing Rock Core as Cylindrical Test Specimens and Verifying Conformance to Dimensional and Shape Tolerances	05/15/2018
D4644 Slake Durability of Shales and Weak Rocks	09/22/2011
D5731 Point Load Strength Index of Rock	05/10/2013
D7012 Compressive Strength of Rock Core Specimens (Method C)	09/22/2011

This certificate was generated on 08/08/2019 at 3:48 PM Eastern Time. Please confirm the current accreditation status of this laboratory at aashtoresource.org/aap/accreditation-directory

Scope of AASHTO Accreditation for:

Bowser-Morner, Inc.

in Dayton, Ohio, USA

Aggregate

Standard:		Accredited Since:
R76	Reducing Samples of Aggregate to Testing Size	11/15/1995
R90	Sampling Aggregate	09/26/2013
T11	Materials Finer Than 75-µm (No. 200) Sieve in Mineral Aggregates by Washing	11/15/1995
T19	Bulk Density (“Unit Weight”) and Voids in Aggregate	11/15/1995
T21	Organic Impurities in Fine Aggregates for Concrete	11/15/1995
T27	Sieve Analysis of Fine and Coarse Aggregates	11/15/1995
T37	Sieve Analysis of Mineral Filler for Road and Paving Materials	11/15/1995
T84	Specific Gravity (Relative Density) and Absorption of Fine Aggregate	11/15/1995
T85	Specific Gravity and Absorption of Coarse Aggregate	11/15/1995
T96	Resistance to Abrasion of Small-Size Coarse Aggregate by Abrasion and Impact in the Los Angeles Machine	11/15/1995
T104	Soundness of Aggregate by Use of Sodium Sulfate or Magnesium Sulfate	11/15/1995
T112	Clay Lumps and Friable Particles in Aggregate	11/15/1995
T113	Lightweight Pieces in Aggregate	11/15/1995
T176	Plastic Fines in Graded Aggregates and Soils by Use of the Sand Equivalent Test	11/15/1995
T210	Aggregate Durability Index	11/15/1995
T255	Total Moisture Content of Aggregate by Drying	11/15/1995
T303	Potential Alkali Reactivity of Aggregates (Mortar-Bar Method)	10/15/2014
T304	Uncompacted Void Content of Fine Aggregate (Influenced by Shape, Texture, and Grading)	11/15/1995
T327	Resistance to Abrasion by Micro-Deval (Coarse Aggregate)	11/15/1995
T335	Determining the Percentage of Fractured Particles in Coarse Aggregate	05/10/2013
C29	Bulk Density (“Unit Weight”) and Voids in Aggregate	11/15/1995
C40	Organic Impurities in Fine Aggregates for Concrete	11/15/1995
C87	Effect of Organic Impurities in Fine Aggregate on Strength of Mortar	11/27/2017

This certificate was generated on 08/08/2019 at 3:48 PM Eastern Time. Please confirm the current accreditation status of this laboratory at aashtoresource.org/aap/accreditation-directory

Scope of AASHTO Accreditation for:

Bowser-Morner, Inc.

in Dayton, Ohio, USA

Aggregate (Continued)

Standard:		Accredited Since:
C88	Soundness of Aggregate by Use of Sodium Sulfate or Magnesium Sulfate	11/15/1995
C117	Materials Finer Than 75-µm (No. 200) Sieve in Mineral Aggregates by Washing	11/15/1995
C123	Lightweight Pieces in Aggregate	11/15/1995
C127	Specific Gravity and Absorption of Coarse Aggregate	11/15/1995
C128	Specific Gravity (Relative Density) and Absorption of Fine Aggregate	11/15/1995
C131	Resistance to Abrasion of Small-Size Coarse Aggregate by Abrasion and Impact in the Los Angeles Machine	11/15/1995
C136	Sieve Analysis of Fine and Coarse Aggregates	11/15/1995
C142	Clay Lumps and Friable Particles in Aggregate	11/15/1995
C227	Potential Alkali Reactivity of Cement-Aggregate Combinations (Mortar-Bar Method)	11/15/1995
C289	Potential Alkali-Silica Reactivity of Aggregates (Chemical Method)	03/18/2005
C535	Resistance to Degradation of Large-Size Coarse Aggregate by Abrasion and Impact in the Los Angeles Machine	11/15/1995
C566	Total Moisture Content of Aggregate by Drying	11/15/1995
C586	Potential Alkali Reactivity of Carbonate Rocks for Concrete Aggregates (Rock Cylinder Method)	01/28/2010
C702	Reducing Samples of Aggregate to Testing Size	11/15/1995
C1252	Uncompacted Void Content of Fine Aggregate (Influenced by Shape, Texture, and Grading)	11/15/1995
C1260	Potential Alkali Reactivity of Aggregates (Mortar-Bar Method)	11/15/1995
C1567	Determining the Potential Alkali-Silica Reactivity of Combinations of Cementitious Materials and Aggregate (Accelerated Mortar-Bar Method)	10/15/2014
D75	Sampling Aggregate	09/26/2013
D546	Sieve Analysis of Mineral Filler for Road and Paving Materials	11/15/1995
D2419	Plastic Fines in Graded Aggregates and Soils by Use of the Sand Equivalent Test	11/15/1995
D3744	Aggregate Durability Index	11/15/1995
D4791	Flat Particles, Elongated Particles, or Flat and Elongated Particles in Coarse Aggregate	11/15/1995
D5821	Determining the Percentage of Fractured Particles in Coarse Aggregate	05/10/2013

This certificate was generated on 08/08/2019 at 3:48 PM Eastern Time. Please confirm the current accreditation status of this laboratory at aashtoresource.org/aap/accreditation-directory

Scope of AASHTO Accreditation for:

Bowser-Morner, Inc.

in Dayton, Ohio, USA

Aggregate (Continued)

Standard:		Accredited Since:
D6928	Resistance to Abrasion by Micro-Deval (Coarse Aggregate)	11/15/1995
D7428	Resistance to Abrasion by Micro-Deval (Fine Aggregate)	02/25/2014
CRD-C130	Estimating Scratch Test Hardness of Coarse Aggregate Particles	05/15/2018

This certificate was generated on 08/08/2019 at 3:48 PM Eastern Time. Please confirm the current accreditation status of this laboratory at aashtoresource.org/aap/accreditation-directory

Scope of AASHTO Accreditation for:

Bowser-Morner, Inc.

in Dayton, Ohio, USA

Concrete

Standard:		Accredited Since:
M201	Moist Cabinets, Moist Rooms, and Water Storage Tanks Used in the testing of Hydraulic Cements and Concretes	10/15/2014
R39	Making and Curing Concrete Test Specimens in the Laboratory	09/01/1996
R60	Sampling Freshly Mixed Concrete	09/01/1996
T22	Compressive Strength of Cylindrical Concrete Specimens	09/01/1996
T23	Making and Curing Concrete Test Specimens in the Field	09/01/1996
T24	Obtaining and Testing Drilled Cores and Sawed Beams of Concrete	09/01/1996
T97	Flexural Strength of Concrete (Using Simple Beam with Third-Point Loading)	09/01/1996
T119	Slump of Hydraulic Cement Concrete	09/01/1996
T121	Density (Unit Weight), Yield, and Air Content of Concrete	09/01/1996
T148	Measuring Thickness of Concrete Elements Using Drilled Concrete Cores	09/01/1996
T152	Air Content of Freshly Mixed Concrete by the Pressure Method	09/01/1996
T160	Length Change of Hardened Hydraulic-Cement, Mortar, and Concrete	09/01/1996
T161	Resistance of Concrete to Rapid Freezing and Thawing	09/01/1996
T177	Flexural Strength of Concrete (Using Simple Beam With Center-Point Loading)	09/01/1996
T196	Air Content of Freshly Mixed Concrete by the Volumetric Method	09/01/1996
T197	Time of Setting of Concrete Mixtures by Penetration Resistance	09/01/1996
T198	Splitting Tensile Strength of Cylindrical Concrete Specimens	09/01/1996
T231 (7000 psi and below)	Capping Cylindrical Concrete Specimens	05/10/2013
T303	Potential Alkali Reactivity of Aggregates (Mortar-Bar Method)	10/15/2014
T309	Temperature of Freshly Mixed Portland Cement Concrete	09/01/1996
C31	Making and Curing Concrete Test Specimens in the Field	09/01/1996
C39	Compressive Strength of Cylindrical Concrete Specimens	09/01/1996
C42	Obtaining and Testing Drilled Cores and Sawed Beams of Concrete	09/01/1996

This certificate was generated on 08/08/2019 at 3:48 PM Eastern Time. Please confirm the current accreditation status of this laboratory at aashtoresource.org/aap/accreditation-directory

Scope of AASHTO Accreditation for:

Bowser-Morner, Inc.

in Dayton, Ohio, USA

Concrete (Continued)

Standard:		Accredited Since:
C78	Flexural Strength of Concrete (Using Simple Beam with Third-Point Loading)	09/01/1996
C138	Density (Unit Weight), Yield, and Air Content of Concrete	09/01/1996
C143	Slump of Hydraulic Cement Concrete	09/01/1996
C157	Length Change of Hardened Hydraulic-Cement, Mortar, and Concrete	09/01/1996
C172	Sampling Freshly Mixed Concrete	09/01/1996
C173	Air Content of Freshly Mixed Concrete by the Volumetric Method	09/01/1996
C174	Measuring Thickness of Concrete Elements Using Drilled Concrete Cores	09/01/1996
C192	Making and Curing Concrete Test Specimens in the Laboratory	09/01/1996
C215	Fundamental Transverse, Longitudinal and Torsional Frequencies of Concrete Specimens	09/01/1996
C227	Potential Alkali Reactivity of Cement-Aggregate Combinations (Mortar-Bar Method)	09/01/1996
C231	Air Content of Freshly Mixed Concrete by the Pressure Method	09/01/1996
C293	Flexural Strength of Concrete (Using Simple Beam With Center-Point Loading)	09/01/1996
C403	Time of Setting of Concrete Mixtures by Penetration Resistance	09/01/1996
C418	Abrasion Resistance of Concrete by Sandblasting	09/01/1996
C469	Static Modulus of Elasticity and Poisson's Ratio of Concrete in Compression	09/01/1996
C496	Splitting Tensile Strength of Cylindrical Concrete Specimens	09/01/1996
C511	Moist Cabinets, Moist Rooms, and Water Storage Tanks Used in the testing of Hydraulic Cements and Concretes	02/23/2012
C512	Creep of Concrete in Compression	09/01/1996
C617 (7000 psi and below)	Capping Cylindrical Concrete Specimens	02/23/2012
C642	Density, Absorption, and Voids in Hardened Concrete	09/01/1996
C666	Resistance of Concrete to Rapid Freezing and Thawing	09/01/1996
C672	Scaling Resistance of Concrete Surfaces Exposed to De-icing Chemicals	01/13/2015
C803	Penetration Resistance of Hardened Concrete	09/01/1996

This certificate was generated on 08/08/2019 at 3:48 PM Eastern Time. Please confirm the current accreditation status of this laboratory at aashtoresource.org/aap/accreditation-directory

Scope of AASHTO Accreditation for:

Bowser-Morner, Inc.

in Dayton, Ohio, USA

Concrete (Continued)

Standard:		Accredited Since:
C805	Rebound Number of Hardened Concrete	09/01/1996
C1064	Temperature of Freshly Mixed Portland Cement Concrete	09/01/1996
C1105	Length Change of Concrete Due to Alkali-Carbonate Rock Reaction	09/01/1996
C1152	Acid-Soluble Chloride in Mortar and Concrete	09/01/1996
C1218	Water-Soluble Chloride in Mortar and Concrete	09/01/1996
C1231 (7000 psi and below)	Use of Unbonded Caps in Determination of Compressive Strength of Hardened Concrete Cylinders	02/23/2012
C1260	Potential Alkali Reactivity of Aggregates (Mortar-Bar Method)	09/01/1996
C1293	Determination of Length Change of Concrete Due to Alkali-Silica Reaction	09/01/1996
C1542	Measuring Length of Concrete Cores	10/15/2014
C1567	Determining the Potential Alkali-Silica Reactivity of Combinations of Cementitious Materials and Aggregate (Accelerated Mortar-Bar Method)	09/01/1996

This certificate was generated on 08/08/2019 at 3:48 PM Eastern Time. Please confirm the current accreditation status of this laboratory at aashtoresource.org/aap/accreditation-directory

Scope of AASHTO Accreditation for:

Bowser-Morner, Inc.

in Dayton, Ohio, USA

Masonry

Standard:		Accredited Since:
M201	Moist Cabinets, Moist Rooms, and Water Storage Tanks Used in the testing of Hydraulic Cements and Concretes	04/13/2017
T32	Brick: Absorption	04/13/2017
T32	Brick: Capping	04/13/2017
T32	Brick: Compressive Strength	04/13/2017
T32	Brick: Initial Rate of Absorption	04/13/2017
T32	Brick: Measurement	04/13/2017
T32	Brick: Specimen Preparation	04/13/2017
C67	Brick: Absorption	01/01/2011
C67	Brick: Capping	02/02/2010
C67	Brick: Compressive Strength	01/01/2011
C67	Brick: Initial Rate of Absorption	04/13/2017
C67	Brick: Measurement	01/01/2011
C67	Brick: Specimen Preparation	02/02/2010
C109	Compressive Strength of Hydraulic Cement Mortars (Using 2-in. Cube Specimens)	02/02/2010
C140 (Concrete Masonry Units)	Sampling and Testing Concrete Masonry Units and Related Units	02/02/2010
C185	Air Content of Hydraulic Cement Mortar	02/02/2010
C270	Standard Specification for Mortar for Unit Masonry	02/02/2010
C305	Mechanical Mixing of Hydraulic Cement Pastes and Mortars of Plastic Consistency	02/02/2010
C426	Linear Drying Shrinkage of Concrete Masonry Units	07/23/2019
C511	Moist Cabinets, Moist Rooms, and Water Storage Tanks Used in the testing of Hydraulic Cements and Concretes	02/23/2012
C1019	Sampling and Testing Grout	02/02/2010
C1314	Compressive Strength of Masonry Prisms	10/15/2014
C1437	Flow of Hydraulic Cement Mortar	02/02/2010

This certificate was generated on 08/08/2019 at 3:48 PM Eastern Time. Please confirm the current accreditation status of this laboratory at aashtoresource.org/aap/accreditation-directory

Scope of AASHTO Accreditation for:

Bowser-Morner, Inc.

in Dayton, Ohio, USA

Masonry (Continued)

Standard:		Accredited Since:
C1506	Water Retention of Hydraulic Cement-Based Mortars and Plasters	02/02/2010
C1552	Capping Concrete Masonry Units, Related Units and Masonry Prisms for Compression Testing	02/02/2010

This certificate was generated on 08/08/2019 at 3:48 PM Eastern Time. Please confirm the current accreditation status of this laboratory at aashtoresource.org/aap/accreditation-directory

MTC
MATERIALS TESTING CENTER

USACE CERTIFICATE OF LABORATORY VALIDATION

ERDC
ENGINEER RESEARCH & DEVELOPMENT CENTER

Bowser-Morner, Inc.

4518 Taylorsville Road
Dayton, OH, United States
Ms. Robin E. Wolfe
(937) 236-8805

has demonstrated, by abbreviated audit of its AASHTO accreditation, or by inspection of required records, equipment, procedures, facilities, and/or final reports, its proficiency to perform testing of construction materials, as established by the quality standards of AASHTO R 18 guidance and the requirements of the applicable ASTM standards.

THIS USACE CERTIFICATE OF LABORATORY VALIDATION IS ACCURATE AS OF ITS DATE AND TIME OF GENERATION:

21 JAN 2020 AT 11:36 HOURS

ALL METHODS LISTED ON THIS CERTIFICATE OF VALIDATION WILL EXPIRE ON 12/18/2021

PLEASE CONFIRM THE CURRENT VALIDATION STATUS OF THIS LABORATORY USING THE SEARCH FEATURE ON OUR PUBLIC WEBSITE: https://mtc.erdc.dren.mil

Chad A. Gartrell, PE, Director
USACE Materials Testing Center
Vicksburg, Mississippi, USA

AGGREGATE

Aggregate - T 11 - Opt - AASHTO - No. 200 Wash Sieve for Mineral Aggregates
Aggregate - T 27 - Opt - AASHTO - Sieve Analysis of Aggregates
Aggregate - C 29 - Opt - Unit Weight and Voids in Aggregate

Aggregate - C 40 - Opt - Organic Impurities
Aggregate - D 75 - Opt - Sampling
Aggregate - T 84 - Opt - AASHTO - Specific Gravity and Absorption of Fine Agg
Aggregate - T 85 - Opt - AASHTO - Specific Gravity and Absorption of Course Agg
Aggregate - C 87 - Opt - Effects of Organic Impurities on Mortar Strength
Aggregate - C 88 - Opt - Sulfate Soundness
Aggregate - C 117 - Req - Material Finer than 75 µm (No. 200) Sieve
Aggregate - C 123 - Opt - Lightweight Particles
Aggregate - C 127 - Req - Specific Gravity & Absorption in Coarse Aggregate
Aggregate - C 128 - Req - Specific Gravity & Absorption in Fine Aggregate
Aggregate - CRD 130 - Opt - Scratch Hardness
Aggregate - C 131 - Opt - Los Angeles Abrasion Resistance on Small-Size Coarse Aggregate
Aggregate - C 136 - Req - Sieve Analysis of Aggregates
Aggregate - C 142 - Opt - Clay Lumps
Aggregate - C 227 - Opt - Alkali Reactivity of Cement-Aggregate Combinations (Mortar-Bar)
Aggregate - C 289 - Opt - Potential Alkali-Silica Reactivity of Aggregates (Chemical Method) (Withdrawn 2016)
Aggregate - C 295 - Opt - Petrographic Examination
Aggregate - E 329 - Opt - Standard Specification for Agencies Engaged in Construction Inspection, Testing, or Special Inspection
Aggregate - C 535 - Opt - Los Angeles Abrasion Resistance on Large Size Coarse Aggregate
Aggregate - D 546 - Opt - Sieve Analysis of Mineral Filler
Aggregate - C 566 - Opt - Total Moisture Content
Aggregate - C 586 - Opt - Alkali Reactivity of Carbonate Rocks (Rock Cylinder Method)
Aggregate - C 702 - Opt - Reducing Samples to Testing Size
Aggregate - C 1077 - Opt - Concrete and Concrete Aggregate Testing Standards (Quality Standards)
Aggregate - C 1105 - Opt - Length Change Due to Alkali-Carbonate Reaction
Aggregate - C 1252 - Opt - Uncompacted Void Content of Fine Aggregate (as influenced by particle shape, surface texture, and grading)
Aggregate - C 1260 - Opt - Potential Alkali Reactivity of Aggregates (Mortar-Bar Method)
Aggregate - C 1293 - Opt - Length Change Alkali-Silica Reaction
Aggregate - D 2419 - Opt - Sand Equivalent Value
Aggregate - D 3666 - Opt - Minimum Requirements for Agencies Testing and Inspecting Road and Paving Materials
Aggregate - D 3744 - Opt - Aggregate Durability Index
Aggregate - D 4791 - Opt - Flat and Elongated Particles in Course Aggregate
Aggregate - D 5821 - Opt - Percentage of Fractured Particles in Coarse Aggregate
Aggregate - D 6928 - Opt - Resistance of Coarse Agg to Degradation by Abrasion in the Micro-Deval Apparatus
Aggregate - D 7428 - Opt - Resistance of Fine Aggregate to Degradation by Abrasion in the Micro-Deval Apparatus

BITUMINOUS

Bituminous - T 30 - Opt - AASHTO - Sieve Analysis of Extracted Aggregates
Bituminous - R 68 - Opt - AASHTO R68 - Preparation of Asphalt Mixes by Marshall Apparatus
Bituminous - T 166 - Opt - AASHTO - Bulk SG Using SSD (Cores)
Bituminous - T 209 - Opt - AASHTO - Theoretical Max SG of Asphalt
Bituminous - T 245 - Opt - AASHTO - Marshall Stability and Flow
Bituminous - T 269 - Opt - AASHTO - Perxcent Air Voids
Bituminous - T 275 - Opt - AASHTO - Bulk SG of Asphalt Using Paraffin-Coated Cores
Bituminous - E 329 - Opt - Standard Specification for Agencies Engaged in Construction Inspection, Testing, or Special Inspection
Bituminous - D 1188 - Req - Bulk Specific Gravity & Density Using Coated Samples
Bituminous - D 2041 - Req - Theoretical Maximum Specific Gravity & Density (Rice)
Bituminous - D 2172 - Req - Quantitative Extraction
Bituminous - D 2726 - Req - Bulk Specific Gravity and Density

Bituminous - D 3203 - Req - Percent Air Voids
Bituminous - D 3666 - Opt - Minimum Requirements for Agencies Testing and Inspecting Road and Paving Materials
Bituminous - D 5444 - Req - Mechanical Size Analysis of Extracted Aggregate
Bituminous - D 6926 - Req - Preparation of Bituminous Specimens using Marshall
Bituminous - D 6927 - Req - Marshall Stability and Flow of Bituminous Mixtures

CONCRETE

Concrete - C 31 - Req - Making and Curing Test Specimens in the Field
Concrete - C 39 - Req - Compressive Strength of Cylindrical Specimens
Concrete - C 42 - Opt - Drilled Cores and Sawed Beams
Concrete - C 78 - Opt - Flexural Strength by Third Point Loading
Concrete - C 138 - Req - Unit Weight and Air Content by Gravimetric
Concrete - C 143 - Req - Slump
Concrete - C 157 - Opt - Length Change of Concrete and Mortars
Concrete - C 172 - Req - Sampling
Concrete - C 173 - Req - Air Content by Volumetric ***required if C231 not performed***
Concrete - C 174 - Opt - Concrete Thickness by Drilled Cores
Concrete - C 192 - Opt - Making and Curing Test Specimens in Laboratory
Concrete - C 215 - Opt - Fundamental Frequencies of Concrete
Concrete - C 231 - Req - Air Content by Pressure ***required if C173 not performed***
Concrete - C 293 - Opt - Flexural Strength by Center Point Loading
Concrete - E 329 - Opt - Standard Specification for Agencies Engaged in Construction Inspection, Testing, or Special Inspection
Concrete - C 403 - Opt - Time of Setting by Penetration Resistance
Concrete - C 418 - Opt - Abrasion Resistance by Sand Blasting
Concrete - C 469 - Opt - Static Modulus of Elasticity and Poisson’s Ratio
Concrete - C 496 - Opt - Splitting Tensile Strength
Concrete - C 511 - Opt - Moist Cabinets, Moist Rooms, Water Storage Tanks
Concrete - C 512 - Opt - Creep of Concrete in Compression
Concrete - C 617 - Opt - Capping Cylindrical Specimens
Concrete - C 642 - Opt - Density, Absorption, and Voids
Concrete - C 666 - Opt - Freezing & Thawing Concrete Specimens
Concrete - C 672 - Opt - Scaling Resistance by Deicing Chemicals
Concrete - C 803 - Opt - Penetration Resistance of Hardened Concrete
Concrete - C 805 - Opt - Rebound Number of Hardened Concrete
Concrete - C 1064 - Req - Temperature of Concrete
Concrete - C 1077 - Opt - Concrete and Concrete Aggregate Testing Standards (Quality Standards)
Concrete - C 1152 - Opt - Acid-Soluble Chloride in Concrete
Concrete - C 1218 - Opt - Water-Soluble Chloride in Concrete
Concrete - C 1231 - Opt - Unbonded Caps
Concrete - C 1542 - Opt - Measuring Length of Concrete Cores
Concrete - C 1567 - Opt - Potential Alkali Silica Reactivity Cementitious Materials and Aggregate Accelerated Mortar Bar Method

MASONRY

Masonry - C 67 - Opt - Sampling and Testing Brick and Structural Clay Tile
Masonry - C 109 - Req - Compressive Strength of Cement Mortars Using Cube Specimens
Masonry - C 140 - Req - Sampling and Testing Concrete Masonry and Related Units

Masonry - C 185 - Req - Air Content of Hydraulic Cement Mortar
Masonry - C 270 - Opt - Mortar for Unit Masonry
Masonry - C 305 - Req - Mechanical Mixing of Cement Pastes & Mortars of Plastic Consistency
Masonry - C 426 - Opt - Linear Drying Shrinkage of Concrete Masonry Units
Masonry - C 511 - Opt - Mixing Rooms, Moist Cabinets, Cure Tanks
Masonry - C 1019 - Req - Sampling and Testing Grout
Masonry - C 1093 - Opt - Masonry Testing Standard (Quality Standards)
Masonry - C 1314 - Opt - Compressive Strength of Masonry Prisms
Masonry - C 1437 - Opt - Flow of Hydraulic Cement Mortar
Masonry - C 1437 - Opt - Flow of Hydraulic Cement Mortar
Masonry - C 1506 - Opt - Water Retention of Hydraulic Cement-Based Mortars and Plasters
Masonry - C 1552 - Opt - Capping Concrete Masonry Units and Related for Compression Testing

ROCK

Rock - CRD 144 - Req - Resistance of Rock to Freezing and Thawing
Rock - CRD 169 - Req - Resistance of Rock to Wetting and Drying
Rock - D 4543 - Req - Preparing Rock Core Specimens and Determining Tolerances
Rock - D 4644 - Req - Slake Durability of Shales and Weak Rocks
Rock - D 5312 - Req - Durability of Rock to Freezing and Thawing
Rock - D 5313 - Req - Durability of Rock to Wetting and Drying
Rock - D 5731 - Req - Point Load Index
Rock - D 6473 - Opt - Specific Gravity and Absorption of Rock for Erosion Control
Rock - D 7012 - Req - Compressive Strength & Elastic Moduli of Rock Core Specimens

SOILS

Soils - T 100 - Opt - AASHTO - Specific Gravity of Soils
Soils - G 187 - Opt - Measurement of Soil Resistivity Using the Two-Electrode Soil Box Method
Soils - D 421 - Req - Dry Preparation for Particle Size Distribution & Soil Constants
Soils - D 422 - Req - Particle Size Analysis
Soils - D 558 - Req - Moisture-Density of Soil-Cement
Soils - D 559 - Req - Wetting & Drying Soil-Cement
Soils - D 560 - Req - Freezing & Thawing Soil-Cement
Soils - D 698 - Req - Compaction Characteristics by Standard Effort
Soils - D 854 - Req - Specific Gravity of Soils
Soils - D 1140 - Req - Material Finer than 75 μm (No. 200) Sieve
Soils - D 1557 - Req - Compaction Characteristics by Modified Effort
Soils - D 1633 - Opt - Compressive Strength of Molded Soil-Cement Cylinders
Soils - D 1883 - Req - CA Bearing Ratio (CBR)
Soils - D 2166 - Req - Unconfined Compressive Strength
Soils - D 2216 - Req - Water Content
Soils - D 2419 - Opt - Sand Equivalent Value of Soils and Fine Aggregate
Soils - D 2434 - Opt - Permeability of Granular Soils (Constant Head Method) (Withdrawn 2015)
Soils - D 2435 - Req - One-Dimensional Consolidation Properties
Soils - D 2487 - Req - Classification of Soils
Soils - D 2488 - Req - Description & Identification of Soils (Visual-Manual Procedure)
Soils - D 2850 - Req - Unconsolidated, Undrained Strength in Triaxial Compression

Soils - D 2974 - Req - Moisture, Ash, & Organic Matter of Peat & Other Organic Soils
Soils - D 3080 - Req - Direct Shear Test in Consolidated Drained Conditions
Soils - D 3740 - Opt - Soil and Rock Testing Standards (Quality Standard)
Soils - D 4318 - Req - Liquid & Plastic Limits & Plasticity Index
Soils - D 4546 - Req - One-Dimensional Swell or Settlement Potential
Soils - D 4767 - Req - Consolidated-Undrained Triaxial Compression
Soils - D 4972 - Opt - pH of Soils
Soils - D 5084 - Req - Hydraulic Conductivity using a Flexible Wall Permeameter
Soils - D 6913 - Req - Particle-Size Distribution of Soils Using Sieve Analysis
Soils - D 6938 - Req - Density and Water Content by Shallow Depth Nuclear Method
Soils - D 7928 - Opt - Fine Grain Distribution with Hydrometer

APPENDIX F

STAGE 2A, 3, AND 4 DATA VALIDATION CHECKLISTS

DATA VALIDATION CHECKLIST – STAGE 2A

Site Name		**Contract No.**	
Data Reviewer (signature and date)		**Technical Reviewer (signature and date)**	
Laboratory Report No.		**Laboratory**	
Analyses			
Samples and Matrix			
Field Duplicate Pairs			
Field Blanks			

INTRODUCTION

This checklist summarizes the Stage A validation performed on the subject laboratory report, in accordance with the U.S. Environmental Protection Agency (EPA) *Guidance for Labeling Externally Validated Laboratory Analytical Data for Superfund Use* (January 2009). Analytical data were evaluated in general accordance with the Tetra Tech project QAPP, the EPA National Functional Guidelines (NFG) for Organic Superfund Methods Data Review (November 2020), and the EPA NFGs for Inorganic Superfund Methods Data Review (November 2020).

OVERALL EVALUATION

[Insert short paragraph describing the overall results of the data validation and any restrictions on use of the data.]

Data completeness:

Within Criteria	Exceedance/Notes

Sample preservation, receipt, and holding times:

Within Criteria	Exceedance/Notes

DATA VALIDATION CHECKLIST – STAGE 2A

Method blanks:

Within Criteria	Exceedance/Notes

Field blanks:

Within Criteria	Exceedance/Notes

System monitoring compounds (surrogates and labeled compounds):

Within Criteria	Exceedance/Notes

MS/MSD:

Within Criteria	Exceedance/Notes

Laboratory duplicates:

Within Criteria	Exceedance/Notes

Field duplicates:

Within Criteria	Exceedance/Notes

DATA VALIDATION CHECKLIST – STAGE 2A

LCSs/LCSDs:

Within Criteria	Exceedance/Notes

Sample dilutions:

Within Criteria	Exceedance/Notes

Re-extraction and reanalysis:

Within Criteria	Exceedance/Notes

MDLs/RLs:

Within Criteria	Exceedance/Notes

Tentatively identified compounds:

Within Criteria	Exceedance/Notes

Other [specify]:

Within Criteria	Exceedance/Notes

DATA VALIDATION CHECKLIST – STAGE 2A

Overall Qualifications:

See results summary pages attached for changes to the laboratory qualifiers based upon this validation. The following is a list of qualifiers and definitions that may be used for the validation of this data package:

J	The analyte was positively identified; the associated value is the approximate concentration of the analyte in the sample.
J+	The analyte was positively identified; the associated value is the approximate concentration of the analyte in the sample and may be biased high.
J-	The analyte was positively identified; the associated value is the approximate concentration of the analyte in the sample and may be biased low.
NJ	The analysis indicates the presence of an analyte that has been "tentatively identified" and the associated value is the approximate concentration of the analyte in the sample.
R	The sample result is rejected as unusable due to serious deficiencies in one or more quality control criteria. The analyte may or may not be present in the sample.
U	The analyte was analyzed for, but was not detected at or above the associated value (reporting limit).
UJ	The analyte was analyzed for, but was not detected at or above the associated value (reporting limit), which is considered approximate due to deficiencies in one or more quality control criteria.

DATA VALIDATION CHECKLIST – STAGE 3

Site Name		**Contract No.**	
Data Reviewer (signature and date)		**Technical Reviewer (signature and date)**	
Laboratory Report No.		**Laboratory**	
Analyses			
Samples and Matrix			
Field Duplicate Pairs			
Field Blanks			

INTRODUCTION

This checklist summarizes the Stage 3 validation performed on the subject laboratory report, in accordance with the U.S. Environmental Protection Agency (EPA) *Guidance for Labeling Externally Validated Laboratory Analytical Data for Superfund Use* (January 2009). Analytical data were evaluated in general accordance with the Tetra Tech project QAPP, the EPA National Functional Guidelines (NFG) for Organic Superfund Methods Data Review (November 2020), and the EPA NFGs for Inorganic Superfund Methods Data Review (November 2020).

OVERALL EVALUATION

[Insert short paragraph describing the overall results of the data validation and any restrictions on use of the data.]

Data completeness:

Within Criteria	Exceedance/Notes

Sample preservation, receipt, and holding times:

Within Criteria	Exceedance/Notes

DATA VALIDATION CHECKLIST – STAGE 3

Instrument Performance Checks:

Within Criteria	Exceedance/Notes

Initial Calibration:

Within Criteria	Exceedance/Notes

Continuing Calibration:

Within Criteria	Exceedance/Notes

Calibration Verification:

Within Criteria	Exceedance/Notes

Method blanks:

Within Criteria	Exceedance/Notes

Field blanks:

Within Criteria	Exceedance/Notes

DATA VALIDATION CHECKLIST – STAGE 3

Interference Check Samples (ICS) (ICP metals only):

Within Criteria	Exceedance/Notes

System monitoring compounds (surrogates and labeled compounds):

Within Criteria	Exceedance/Notes

MS/MSD:

Within Criteria	Exceedance/Notes

Post digestion spikes:

Within Criteria	Exceedance/Notes

Serial dilutions:

Within Criteria	Exceedance/Notes

Laboratory duplicates:

Within Criteria	Exceedance/Notes

DATA VALIDATION CHECKLIST – STAGE 3

Field duplicates:

Within Criteria	Exceedance/Notes

LCSs/LCSDs:

Within Criteria	Exceedance/Notes

Sample dilutions:

Within Criteria	Exceedance/Notes

Re-extraction and reanalysis:

Within Criteria	Exceedance/Notes

Second column confirmation (GC and HPLC analyses only):

Within Criteria	Exceedance/Notes

Internal Standards:

Within Criteria	Exceedance/Notes

DATA VALIDATION CHECKLIST – STAGE 3

Target analyte identification:

Within Criteria	Exceedance/Notes

Analyte quantitation and MDLs/RLs:

Within Criteria	Exceedance/Notes

Tentatively identified compounds:

Within Criteria	Exceedance/Notes

System performance and instrument stability:

Within Criteria	Exceedance/Notes

Other [specify]:

Within Criteria	Exceedance/Notes

DATA VALIDATION CHECKLIST – STAGE 3

Overall Qualifications:

See results summary pages attached for changes to the laboratory qualifiers based upon this validation. The following is a list of qualifiers and definitions that may be used for the validation of this data package:

J	The analyte was positively identified; the associated value is the approximate concentration of the analyte in the sample.
J+	The analyte was positively identified; the associated value is the approximate concentration of the analyte in the sample and may be biased high.
J-	The analyte was positively identified; the associated value is the approximate concentration of the analyte in the sample and may be biased low.
NJ	The analysis indicates the presence of an analyte that has been "tentatively identified" and the associated value is the approximate concentration of the analyte in the sample.
R	The sample result is rejected as unusable due to serious deficiencies in one or more quality control criteria. The analyte may or may not be present in the sample.
U	The analyte was analyzed for, but was not detected at or above the associated value (reporting limit).
UJ	The analyte was analyzed for, but was not detected at or above the associated value (reporting limit), which is considered approximate due to deficiencies in one or more quality control criteria.

DATA VALIDATION CHECKLIST – STAGE 4

Site Name		**Contract No.**	
Data Reviewer (signature and date)		**Technical Reviewer (signature and date)**	
Laboratory Report No.		**Laboratory**	
Analyses			
Samples and Matrix			
Field Duplicate Pairs			
Field Blanks			

INTRODUCTION

This checklist summarizes the Stage 4 validation performed on the subject laboratory report, in accordance with the U.S. Environmental Protection Agency (EPA) *Guidance for Labeling Externally Validated Laboratory Analytical Data for Superfund Use* (January 2009). Analytical data were evaluated in general accordance with the Tetra Tech project QAPP, the EPA National Functional Guidelines (NFG) for Organic Superfund Methods Data Review (November 2020), and the EPA NFGs for Inorganic Superfund Methods Data Review (November 2020).

OVERALL EVALUATION

[Insert short paragraph describing the overall results of the data validation and any restrictions on use of the data.]

Data completeness:

Within Criteria	Exceedance/Notes

Sample preservation, receipt, and holding times:

Within Criteria	Exceedance/Notes

DATA VALIDATION CHECKLIST – STAGE 4

Instrument Performance Checks:

Within Criteria	Exceedance/Notes

Initial Calibration:

Within Criteria	Exceedance/Notes

Continuing Calibration:

Within Criteria	Exceedance/Notes

Calibration Verification:

Within Criteria	Exceedance/Notes

Method blanks:

Within Criteria	Exceedance/Notes

Field blanks:

Within Criteria	Exceedance/Notes

DATA VALIDATION CHECKLIST – STAGE 4

Interference Check Samples (ICS) (ICP metals only):

Within Criteria	Exceedance/Notes

System monitoring compounds (surrogates and labeled compounds):

Within Criteria	Exceedance/Notes

MS/MSD:

Within Criteria	Exceedance/Notes

Post digestion spikes:

Within Criteria	Exceedance/Notes

Serial dilutions:

Within Criteria	Exceedance/Notes

Laboratory duplicates:

Within Criteria	Exceedance/Notes

DATA VALIDATION CHECKLIST – STAGE 4

Field duplicates:

Within Criteria	Exceedance/Notes

LCSs/LCSDs:

Within Criteria	Exceedance/Notes

Sample dilutions:

Within Criteria	Exceedance/Notes

Re-extraction and reanalysis:

Within Criteria	Exceedance/Notes

Second column confirmation (GC and HPLC analyses only):

Within Criteria	Exceedance/Notes

Internal Standards:

Within Criteria	Exceedance/Notes

DATA VALIDATION CHECKLIST – STAGE 4

Target analyte identification:

Within Criteria	Exceedance/Notes

Analyte quantitation and MDLs/RLs:

Within Criteria	Exceedance/Notes

Tentatively identified compounds:

Within Criteria	Exceedance/Notes

System performance and instrument stability:

Within Criteria	Exceedance/Notes

Other [specify]:

Within Criteria	Exceedance/Notes

DATA VALIDATION CHECKLIST – STAGE 4

Overall Qualifications:

See results summary pages attached for changes to the laboratory qualifiers based upon this validation. The following is a list of qualifiers and definitions that may be used for the validation of this data package:

J	The analyte was positively identified; the associated value is the approximate concentration of the analyte in the sample.
J+	The analyte was positively identified; the associated value is the approximate concentration of the analyte in the sample and may be biased high.
J-	The analyte was positively identified; the associated value is the approximate concentration of the analyte in the sample and may be biased low.
NJ	The analysis indicates the presence of an analyte that has been “tentatively identified” and the associated value is the approximate concentration of the analyte in the sample.
R	The sample result is rejected as unusable due to serious deficiencies in one or more quality control criteria. The analyte may or may not be present in the sample.
U	The analyte was analyzed for, but was not detected at or above the associated value (reporting limit).
UJ	The analyte was analyzed for, but was not detected at or above the associated value (reporting limit), which is considered approximate due to deficiencies in one or more quality control criteria.

APPENDIX G

STAGE 3 AND STAGE 4 DATA VALIDATION CHECKLIST FOR RECALCULATIONS

STAGE 3/4 DATA VALIDATION CHECKLIST FOR RECALCULATIONS

Data Package Number: _____

Validation Element	Objective	Sample ID, Run Date, and Run Time	Results (include units) and Notes (Use check mark to indicate correct result; include hand-calculated result if performed)
Initial Calibration	Confirm (in raw data) that an initial calibration begins each analytical sequence, before all QC or env. samples are analyzed, using the correct number of standards (and calibration blank, if required).		
	Confirm (in raw data) that an initial calibration occurs at the required frequency.		
	Confirm that initial calibration criteria are met. Spot-recalculate initial calibration results.		**Calculated RRF:**
			Calculated $\overline{RRF}$:
			Calculated %RSD

Recalculate at least one result (and %R or %D values, as appropriate) from each of the following QC samples and environmental samples, and compare your calculated results with the results the laboratory reports on their summary forms found earlier in the data package. They should agree. If they do not, then there may be problems with the package and further review is required. Note that for some QC samples, your comparison may mean simply confirming that the result reported in the summary form matches the result in the raw data – there may not be any calculation.

SHOW ALL WORK FOR RECALCULATIONS

STAGE 3/4 DATA VALIDATION CHECKLIST FOR RECALCULATIONS

Data Package Number: _____

Validation Element	Objective	Sample ID, Run Date, and Run Time	Results (include units) and Notes (Use check mark to indicate correct result; include hand-calculated result if performed)
Tune	Confirm BFB Percent Relative Abundance		
ICV	Check result		
	Recalculate one RRF		
	Recalculate one %R		
A CCV applicable to our samples	Check result		
	Recalculate one RRF		
	Recalculate one %D		
Method Blank	Check result		
Surrogate	Recalculate one %R		
MS	Check result		
	Recalculate one %R		
MSD	Check result		
	Recalculate one %R		
	Recalculate one RPD value between MS and MSD		

STAGE 3/4 DATA VALIDATION CHECKLIST FOR RECALCULATIONS

Data Package Number: _____

Validation Element	Objective	Sample ID, Run Date, and Run Time	Results (include units) and Notes (Use check mark to indicate correct result; include hand-calculated result if performed)
LCS	Check result		
	Recalculate one %R		
LCSD	Check result		
	Recalculate one %R		
	Recalculate one RPD value between LCS and LCSD		
Internal Standards	Recalculate one %R		
	Recalculate one delta RT		
Sample Result for _____	Check result		
MDL for _____	Check result		
RL for _____	Check result		
Convert µg/m^3 to ppbV (air only) for _____	Check result		

Formulas:

* Conc. (mg/kg) = {(Raw Conc. in ug/L) x (Vol. in L) x DF} / {(Sample mass in kg) x (fractional solids) x (1000)}

** Serial dilution conc. (ug/L) = (Raw Conc. in ug/L) x (DF, typically 5)

*** %R = [(Measured Value) / (True Value)] x 100

**** %R = {(Spike sample result) - (Sample result)} / (Spike added)} x 100

RPD = [(A-B) / {(A + B)/2}] x 100

Percent difference = [(Original Result - Diluted Result) / Original Result] x 100

STAGE 3/4 DATA VALIDATION CHECKLIST FOR RECALCULATIONS

Data Package Number: _____

Validation Element	Objective	Sample ID, Run Date, and Run Time	Results (include units) and Notes (Use check mark to indicate correct result; include hand-calculated result if performed)
Initial Calibration	Confirm (in ICP raw data) that an initial calibration (blank (CAL 0) and standard (CAL 1)) begins each analytical sequence, before all QC or env. samples are analyzed.	NA	
	Confirm (in ICP raw data) that an initial calibration occurs for every 24-hour sequence of analytical runs.	NA	

Recalculate at least one result (and %R or %D values, as appropriate) from each of the following QC samples and environmental samples, and compare your calculated results with the results the laboratory reports on their summary forms found earlier in the data package. They should agree. If they do not, then there may be problems with the package and further review is required. Note that for some QC samples, your comparison may mean simply confirming that the result reported in the summary form matches the result in the raw data – there may not be any calculation.

SHOW ALL WORK FOR RECALCULATIONS

ICV	Check result		
	Recalculate one %R		**Calculated result:*** **
ICB	Check result		
CRDL Check Standard	Check result		
	Recalculate one %R		**Calculated result:*** **
An opening CCV applicable to our samples	Check result		
	Recalculate one %R		**Calculated result:*** **
A closing CCV applicable to our samples	Check result		
	Recalculate one %R		**Calculated result:*** **
An opening CCB applicable to our samples	Check result		

STAGE 3/4 DATA VALIDATION CHECKLIST FOR RECALCULATIONS

Data Package Number: _____

Validation Element	Objective	Sample ID, Run Date, and Run Time	Results (include units) and Notes (Use check mark to indicate correct result; include hand-calculated result if performed)
A closing CCB applicable to our samples	Check result		
Method blank	Check result		**Calculated result:***
ICSA sample	Check result		
	Recalculate one %R		**Calculated result:*****
ICSAB sample	Check result		
	Recalculate one %R		**Calculated result:*****
MS	Check result		**Calculated result:***
	Recalculate one %R		**Calculated result:******
MSD	Check result		**Calculated result:***
	Recalculate one %R		**Calculated result:******
	Recalculate one RPD value between MS and MSD		**Calculated result:**
Post-digestion spike	Check result		
	Recalculate one %R		**Calculated result:******
LCS	Check result		**Calculated result:***
	Recalculate one %R		**Calculated result:*****
Serial Dilution	Check result		**Calculated result:****
	Recalculate one percent difference value		**Calculated result:**
Sample result for As	Check result	(Use different sample for each analyte)	**Calculated result:***
Sample result for Cd	Check result		**Calculated result:***
Sample result for Pb	Check result		**Calculated result:***
Sample result for Mn	Check result		**Calculated result:***

Formulas:

* Conc. (mg/kg) = {(Raw Conc. in ug/L) x (Vol. in L) x DF} / {(Sample mass in kg) x (fractional solids) x (1000)}

** Serial dilution conc. (ug/L) = (Raw Conc. in ug/L) x (DF, typically 5)

*** %R = [(Measured Value) / (True Value)] x 100

**** %R = {(Spike sample result) - (Sample result)} / (Spike added)} x 100

RPD = [(A-B) / {(A + B)/2}] x 100

Percent difference = [(Original Result - Diluted Result) / Original Result] x 100