SDMS Document ID
2002562

CDM

Memorandum

To: *Peter J. Borowiec, Jr., P.E., CDM*
Demetrios Klerides, P.E., CDM

From: *Randal L. Huffsmith, P.E.*
Jeanne M. Riley, P.E.

Date: *May 2, 2002*

Subject: *Proposed Class IV Landfill Construction and Operational Plan Memorandum One, Lincoln County Landfill, Libby, Montana*

This memo describes a construction sequencing and operational approach for the proposed Lincoln County Class IV landfill. The landfill is currently in the design phase. The plan consists of the phased excavation and filling of individual trenched cells within the proposed landfill footprint. This approach incorporates Lincoln County's comment on the Draft Conceptual Landfill Cell Design Report (CDM, January 25, 2001) and Proposed Class IV Landfill Construction and Operational Plan Draft Memorandum One (CDM, April 22, 2002). At the County's request, the Class IV Cell will be designed with a cross section 20 feet below the existing grade, rather than the conceptual design consisting of excavation to ten feet below grade with a ten-foot berm above grade. The approach also includes the requested "Phased Construction" Plan, in which EPA can begin disposing of asbestos containing materials from the residential removals program prior to construction of the entire landfill.

Plan Overview

After the landfill site has been prepared, individual trenched cells will be excavated. A trenched cell will be excavated west to east along the north end of the landfill site. Each truck that arrives to dump waste materials will back up to the cell and dump the load. Using an excavator bucket, an operator will adjust the position of the waste within the cell and compact the materials. At the end of each day, six inches of daily cover will be placed on top of the waste materials. Once the trenched cell is approximately 75 percent full, the next trenched cell will be excavated, separated from the first cell by a berm. This construction/operations plan was designed using the following assumptions:

- Waste materials to be disposed of in the Lincoln County Class IV landfill will be bagged vermiculite asbestos, bulk vermiculite asbestos, asbestos containing soils, and general asbestos-contaminated debris generated from EPA's emergency response actions and residential removals program;

- The waste material will be delivered to the Class IV landfill in end dump trucks, vacuum trucks, or roll off boxes;

- The approximate total asbestos waste material is 150,000 cy. This figure is based on an estimated volume of 100,000 cy (based on information from the EPA's removal project) plus a 20 percent contingency for future disposal needs, plus an allowance of 25 percent for daily cover soil and berms between cells;

- The Government's removal Contractor will have an excavator (capable of an excavation depth of 20 feet and a reach of 30 feet) and operator onsite available for the excavation of landfill cells, adjustment and compaction of waste materials, and placement of daily cover material; and

- Although the Class IV landfill will be open to accept asbestos waste materials year-round, landfill operations will slow during the winter months.

Landfill Construction and Operation

Several elements of the landfill design will be constructed before the landfill can begin accepting waste. The new weigh station, haul road, and stockpile area (for the storage of cleared topsoil and excavated soils from the cells) will be constructed, as well as the decontamination (decon) pad. As the haul trucks will not drive over the asbestos waste in the landfill, decon of truck wheels will not be required; however, the decon pad will be necessary for the cleaning of truck beds and rolloffs, as well as construction equipment used during operation. All fencing and signage, and erosion and stormwater control features will be in place prior to the acceptance of waste materials to the landfill. These items will be provided as part of the design documents. Once the landfill is in operation, all work will be performed in modified Level C personal protective equipment (PPE). Only OSHA Hazwoper trained personnel will be permitted within the active disposal area of the landfill.

The details of the proposed landfill construction, specifically related to the sequencing of the landfill cells, are shown on the attached figures. Figure 1 depicts a plan view and location of the proposed Class IV landfill. The proposed landfill footprint is approximately 540 feet wide by 840 feet long (approximately 10.4 acres) and 20 feet deep. Site preparation will consist of clearing an area of the landfill footprint to two feet below grade, as shown in Figure 2.

Initially, only the required area for one-year's worth of waste material, an area of 540 feet by 200 feet, will be cleared. According to the requirements of the Administrative Rules of Montana (ARM) 17.50.530 Section 3, the final cover system must be designed with a minimum eighteen-inch soil infiltration layer (permeability no greater than 1×10^{-5} cm/sec) and a minimum six-inch seed bed layer capable of sustaining native plant growth, protecting the infiltration layer from frost effects, and rooting damage. If the geotechnical investigation results indicate that the two-feet of cleared material is suitable for use in the final cover system, the soils will be stockpiled for this purpose. If the soils do not meet the requirements for the final cover material, the removed soils will be stockpiled and used as daily cover, and another borrow source will be identified for final cover material. The stockpile area will be located in the approximately two-acre cleared parcel of land between the existing Lincoln County Class II landfill and the proposed Class IV landfill.

Once the site has been cleared and a two-foot depth of soil removed, the first year of landfill cells will be staked out. Then, the first trenched cell will be excavated, soil required for daily cover use will be stockpiled adjacent to the cell, the remaining soil stockpiled at the storage area, and the Class IV landfill can begin accepting asbestos containing waste materials. The layout and sequencing of the excavation of the landfill cells are depicted in Figure 3.

The typical dimensions of each cell will be 54 feet wide, 540 feet long, and 20 feet deep (18 feet of waste material and 2 feet of final cover). A plan view of a typical cell is shown in Figure 4. Two cross sections are also included on Figure 4: west-east (A'-A) and north-south (B'-B). As shown on the Figure 4 cross sections, the sides of the cells will be excavated at a 1:1 slope. The slopes of the north and south cell sidewalls may be reduced based on the results of the geotechnical investigation. The landfill footprint naturally slopes to the southeast, therefore the bottom of the cells will be slightly sloped to the southeast, which will allow for the collection of rainwater. Significant accumulations of water will be pumped, if necessary.

The excavator and haul trucks will not enter the cells. The haul trucks will access the cell to dump their load at the south side of the cells. Water will be applied to the waste during dumping of the load if necessary to control dust and other particulate matter. From the ground surface, the excavator will adjust the position of the waste in the cell to keep lifts uniform (working from either the north or south side of the trench) and compact the waste with the bucket. A minimum of once per day, the excavator will be used to apply a six-inch layer of daily cover soil (obtained from the soil stockpile located adjacent to the trenched cell) over the waste materials. According to the County, excavation, while more difficult than in the summer, is feasible during the winter months in Libby. However, soil stockpiles generally freeze. Several borrow areas on the Lincoln County property are available for daily cover soil use if the stockpiles are not available.

Native soil berms will remain in place between each trenched cell to prevent the exposure of waste materials when excavating the adjacent cell. The berms will be approximately ten-feet wide between the cells. The cells will be excavated and filled starting at the west side and moving to the east. When one cell is approximately 75 percent completed, a new cell will be started, continuing north to south. Within the 540-foot by 840-foot landfill footprint, thirteen trenched cells can be utilized.

The total volume of waste material used for this design is 150,000 cy. Assuming the removal actions will generate asbestos material for five years, approximately 30,000 cy per year will be disposed of in the landfill. The asbestos removal program is planned for six days per week, twelve months per year. Therefore, approximately 100 cy of asbestos waste material (including daily cover) will be disposed of in the landfill per day.

The volume of each cell is approximately 12,600 cy. The required capacity for the first year of asbestos waste disposal is three cells (30,000 cy/12,600 cy). Therefore, an area of 540 feet by 200 feet, space for three cells, will be prepared for the first year of operation. The total landfill capacity is 163,800 cy (13 cells X 12,600 cy/cell). This capacity is greater than the anticipated asbestos waste generated from the removal actions (150,000 cy).

Summary

The phased cell design and landfill operation plan provides several advantages over traditional open excavation, filling, and daily cover placement. The phased approach allows the Lincoln County Landfill to begin accepting asbestos waste relatively soon following the onset of construction, rather than waiting for the excavation of the entire landfill cell. The proposed operation plan also offers flexibility with regard to closure. Once the residential asbestos removal program is completed, landfill operation can cease immediately, and proceed directly into the closure phase. The landfill cover system can be installed over only the cells used, potentially reducing the size of the Class IV landfill footprint and leaving additional unused capacity for Lincoln County use.

Phased construction and operation will reduce exposure to asbestos materials, both for the haul truck drivers and landfill operators. Driving over the waste materials will not be required, thus eliminating the need to decontaminate each truck's wheels, and eliminating any safety concern associated with driving over construction/demolition materials. Traditional bulldozing to move and compact the waste and apply daily cover would cause the vermiculite bags to burst, increasing the exposure for the drivers and operators and increasing the risk of asbestos particles becoming airborne. On windy days, operation of the landfill would not be possible using traditional open excavation/dozing techniques. However, using this proposed approach, the waste material will be dumped directly into each cell, with water applied via water truck if necessary. The asbestos waste materials will be compacted and covered with an excavator, and bull dozing will not be required.

Please review this plan and attached drawings and provide comments so that we may continue to proceed with subsequent design drawing and specification tasks.

cc: John Kotson, CDM
Karin Mainzhausen, CDM
Dave Swanson, CDM
Paul Peronard, EPA
John McGuiggin, Volpe
Julie Borgesi, Volpe

Attachments:
Figure 1 Site Plan
Figure 2 Site Preparation
Figure 3 Landfill Construction and Sequencing
Figure 4 Typical Landfill Cell – Plan View and Cross Sections

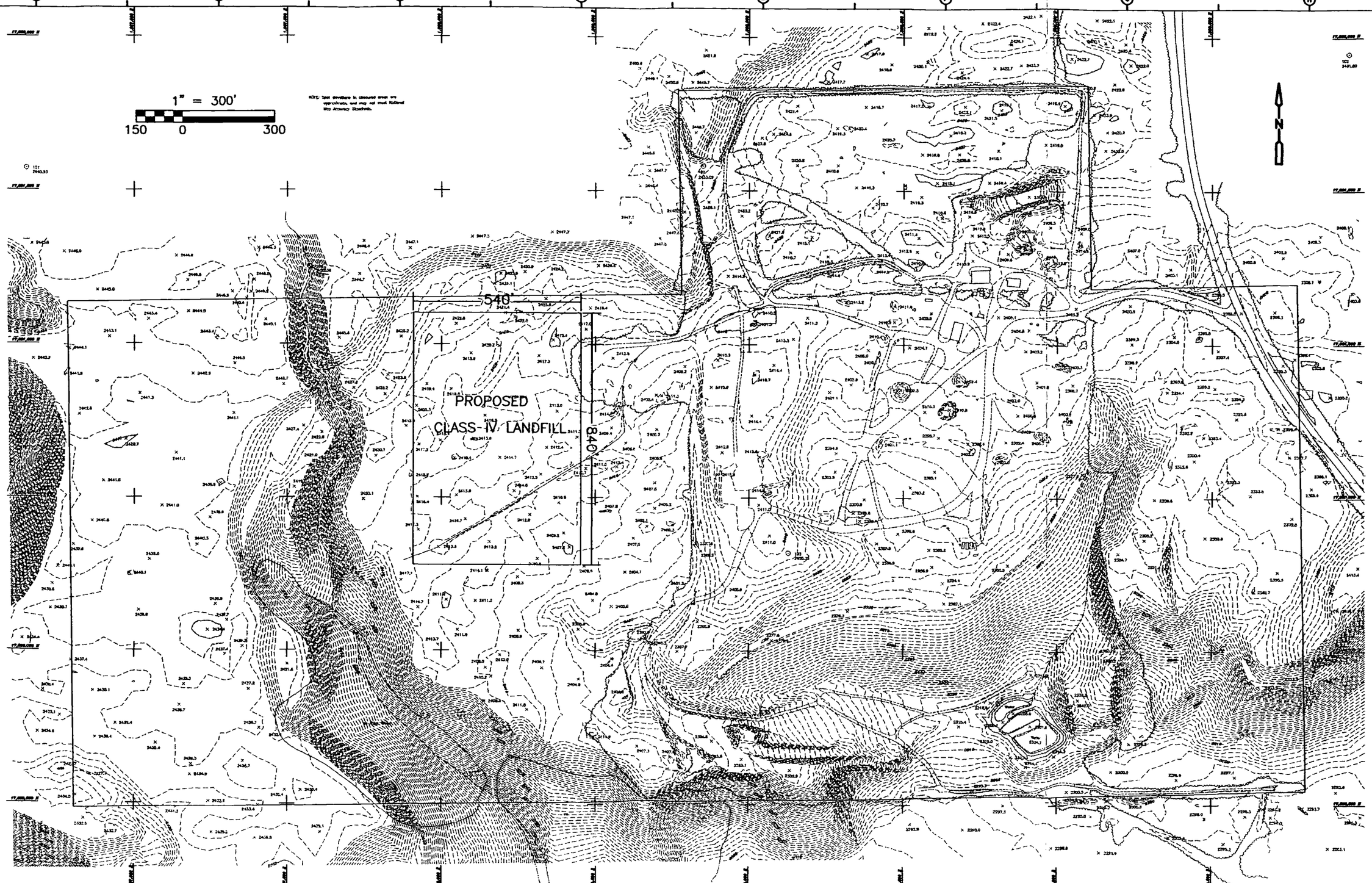

REV. NO.	DATE	DRWN	CHKD	REMARKS
1	12/28	MC	PB	ADDED ACCEPTANCE BLOCK

DESIGNED BY: J.B.
DRAWN BY: J.F.K.
SHEET CHK'D BY: P.J.B.
CROSS CHK'D BY: P.J.B.
APPROVED BY: P.J.B.
DATE: APRIL 2002

CDM Federal Programs Corporation

ASBESTOS REMOVAL PROJECT
LINCOLN COUNTY, MONTANA

SITE PLAN
PROPOSED LINCOLN COUNTY
CLASS IV LANDFILL

PROJECT NO. 34369
FILE NAME: SITEPLAN

SHEET NO.
FIG. 1

N:\Land Projects(2002)\34369(LIBBY)\dwg\SITEPLAN.dwg 04/22/2002 03:16:46 PM MDT

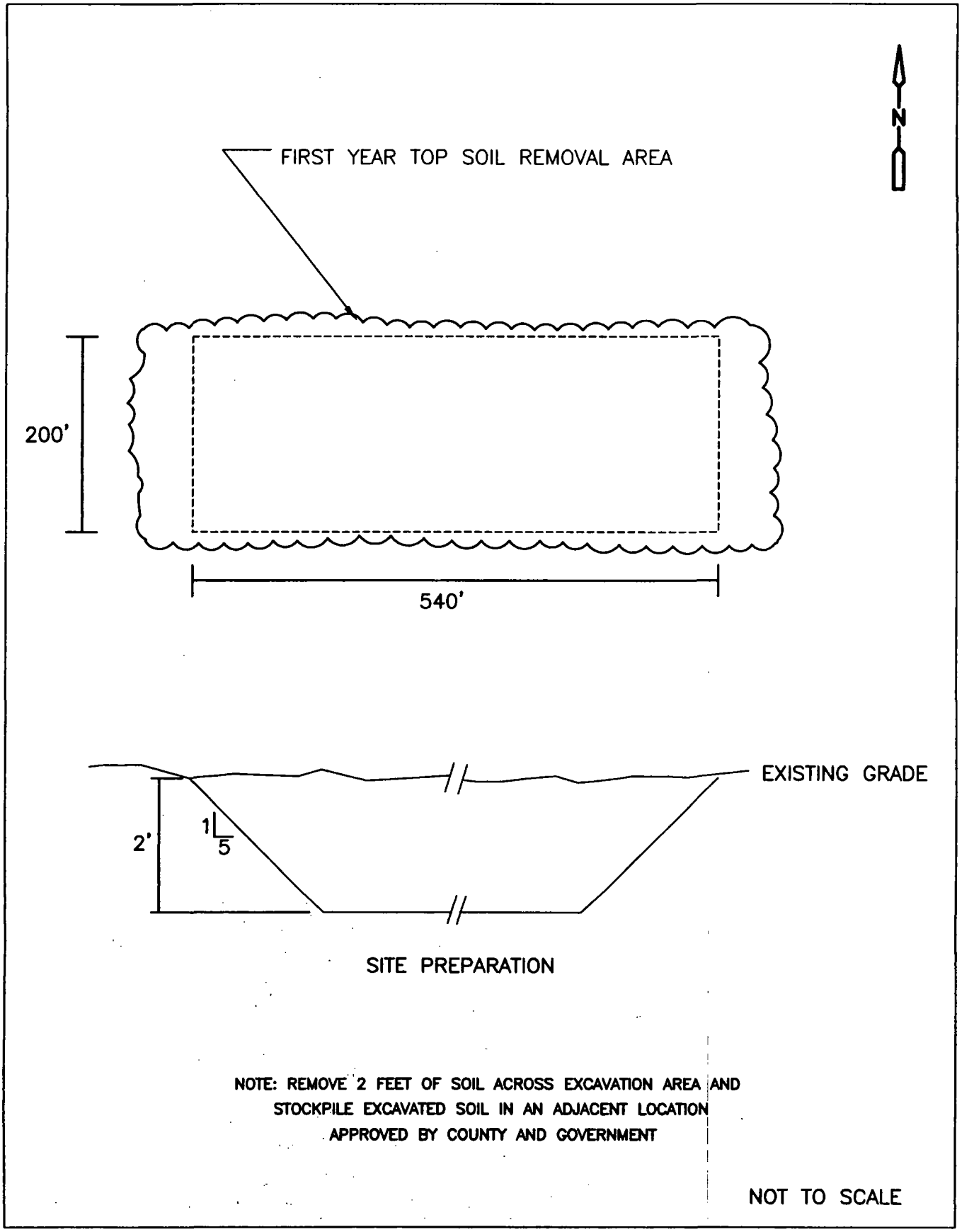

N:\Land Projects(2002)\34369(LIBBY)\DWG\figure2.dwg 04/22/2002 01:11:42 PM MDT

CDM Federal Programs Corporation

Figure No. 2
SITE PREPARATION

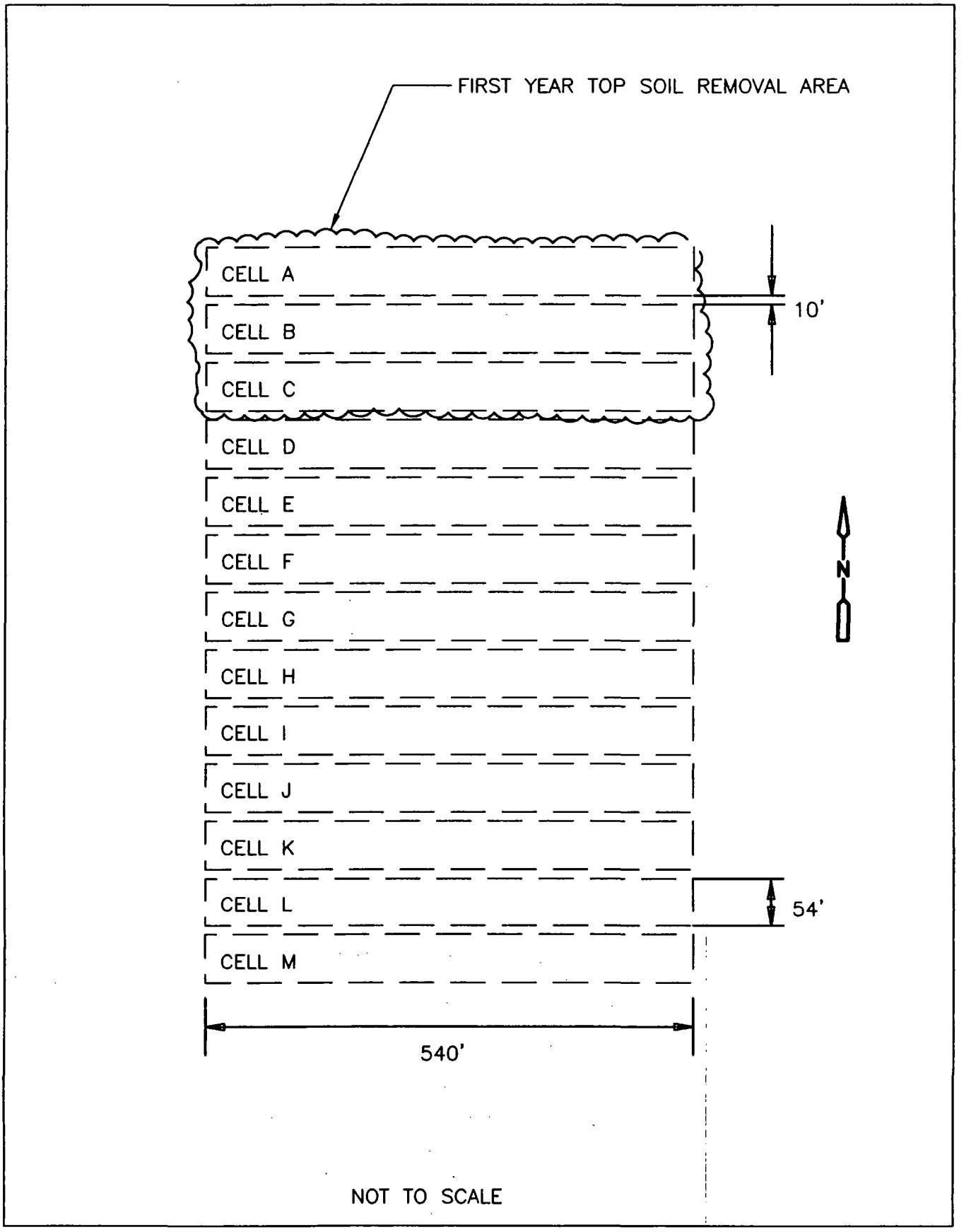

N:\Land Projects(2002)\34369(LIBBY)\dwg\figure23.dwg 05/01/2002 09:16:37 AM MDT

CDM Federal Programs Corporation

Figure No. 3
LAND FILL CONSTRUCTION AND SEQUENCING

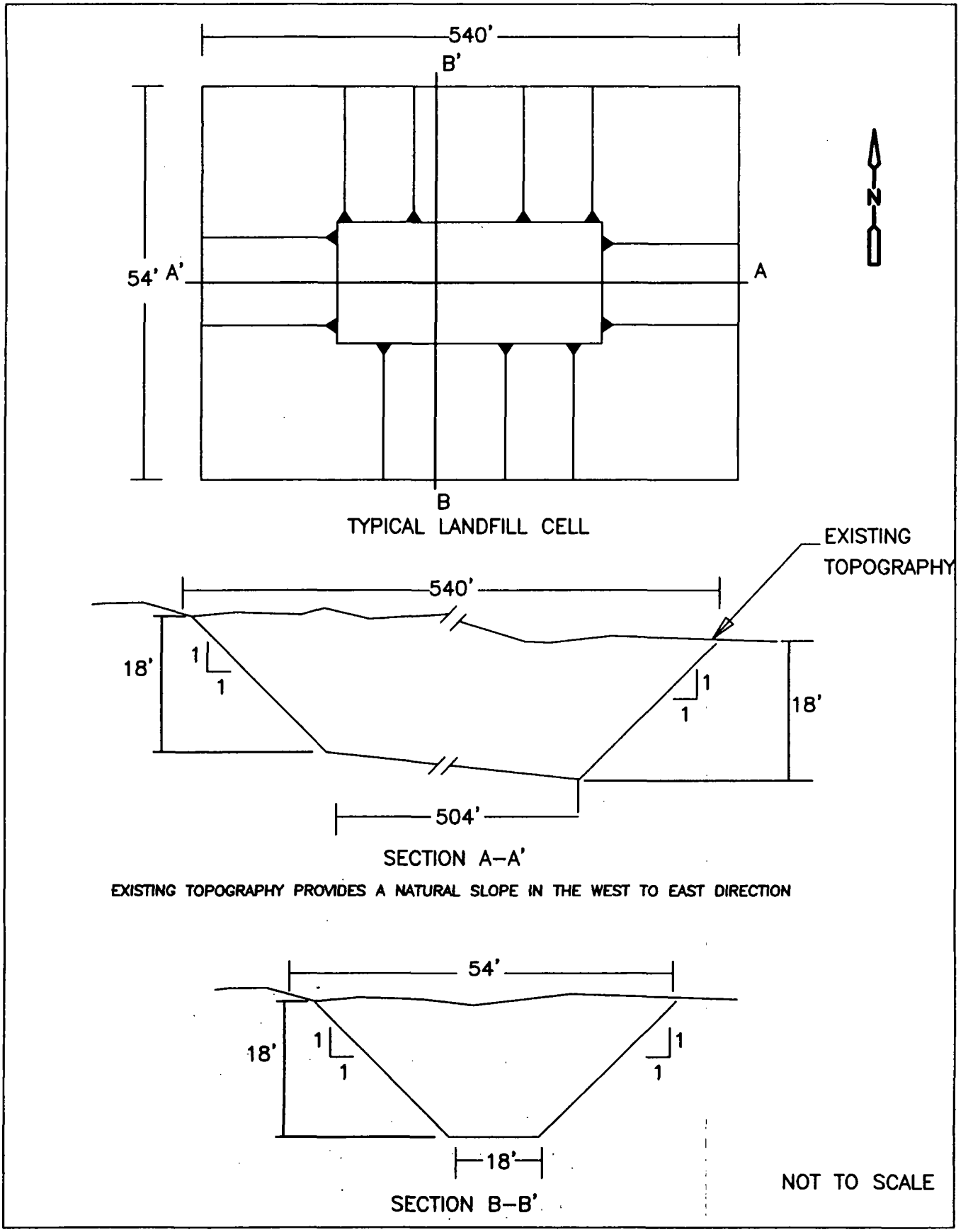

N:\Land Projects(2002)\34369(LIBBY)\DWG\figure3.dwg 04/22/2002 02:00:25 PM MDT

CDM Federal Programs Corporation

Figure No. 4
TYPICAL LANDFILL CELL