Appendix E-7

Soil and Groundwater
Investigation of the OMS
(ARCADIS 2002)

ARCADIS GERAGHTY&MILLER

Table 2. Summary of PCB Analytical Results for Water Samples Collected in the Monroe Ditch Area during December 1997, AK Steel Property, Middletown, Ohio.

Sample Location	Date	Lab	Aroclor						
			1016	1221	1232	1242	1248	1254	1260
Upstream from Seep	12/15/97	NET	ND	ND	ND	ND	ND	ND	ND
	12/15/97	BEL	ND	ND	ND	ND	ND	ND	ND
	12/16/97	NET	ND	ND	ND	ND	ND	ND	ND
	12/16/97	BEL	ND	ND	ND	ND	ND	ND	ND
Seep	12/15/97	NET	ND	ND	ND	**3.33**	ND	ND	ND
	12/15/97	BEL	ND	ND	ND	**3.6**	ND	ND	ND
	12/16/97	NET	ND	ND	ND	**3.15**	ND	ND	ND
	12/16/97	BEL	ND	ND	ND	**2.8**	ND	ND	ND
Downstream from Seep	12/15/97	NET	ND	ND	ND	**0.69**	ND	ND	ND
	12/15/97	BEL	ND	ND	ND	ND	ND	ND	ND
	12/16/97	NET	ND	ND	ND	**0.57**	ND	ND	ND
	12/16/97	BEL	ND	ND	ND	ND	ND	ND	ND
Mouth of Tributary at Dick's Creek	12/15/97	NET	ND	ND	ND	**0.35**	ND	ND	ND
	12/15/97	BEL	ND	ND	ND	ND	ND	ND	ND
	12/16/97	NET	ND	ND	ND	**0.39**	ND	ND	ND
	12/16/97	BEL	ND	ND	ND	ND	ND	ND	ND

Notes:
ND - Not Detected
Results reported in micrograms per liter (ug/L).
NET = National Environmental Testing, Inc., Dayton, Ohio.
BEL = Belmonte Park Environmental Laboratories, Dayton, Ohio.
Samples Analyzed using U.S. EPA Method 608.

C:\akstel\mdr\plan\ir\interim\table1.xls

ARCADIS GERAGHTY & MILLER

Table 3. Summary of PCB Analytical Results for Soils and Waste Oil Collected in the Monroe Ditch Area during December 1997, AK Steel Property, Middletown, Ohio.

Sample Location	Date	Aroclor						
		1016	1221	1232	1242	1248	1254	1260
Transformers								
Conveyor Transformer	12/12/97	ND	ND	ND	ND	**0.98**	ND	ND
Conveyor Transformer 2.5 ft - 3 ft	12/24/97	ND	ND	ND	ND	**1.66**	ND	ND
Skull Cracker Pole Mounted Transformer	12/12/97	ND	ND	ND	ND	ND	ND	ND
Skull Cracker Pad Mounted Transformer	12/12/97	ND	ND	ND	ND	ND	ND	ND
Sub 18A Transformer	12/12/97	ND	ND	ND	ND	ND	ND	ND
Other								
Mill Scale	12/12/97	ND	ND	ND	ND	ND	ND	ND
Old Stock Pile	12/12/97	ND	ND	ND	ND	ND	ND	ND
Waste Oil	12/12/97	ND	ND	ND	ND	ND	ND	ND

Notes:
ND - Not Detected
Results reported in milligrams per kilogram (mg/kg).
ft = Feet.
All samples analyzed by National Environmental Testing, Inc. Dayton, Ohio.
Samples Anaylzed using Analytical Method 8080

ARCADIS GERAGHTY&MILLER

Table 4. Percent Homologues versus Aroclors, Polychlorinated Biphenyls

HOMOLOGUES	AROCLOR 1016	AROCLOR 1221	AROCLOR 1232	AROCLOR 1242	AROCLOR 1248	AROCLOR 1254	AROCLOR 1260
Monochlorobiphenyl	12.2	92.2	NA	3	0	0	0
Dichlorobiphenyl	30.9	6.6	NA	13	2	0	0
Trichlorobiphenyl	36.3	0.9	NA	28	18	0	0
Tetrachlorobiphenyl	20.6	0.3	NA	30	40	11	0
Pentachlorobiphenyl	0	0	NA	22	36	49	12
Hexachlorobiphenyl	0	0	NA	4	4	34	38
Heptachlorobiphenyl	0	0	NA	0	0	6	41
Octachlorobiphenyl	0	0	NA	0	0	0	8
Nonachlorobiphenyl	0	0	NA	0	0	0	1
Decachlorobiphenyl	0	0	NA	0	0	0	0

NA Not Available

Reference: Verschueren, K. 1983. Handbook of Environmental Data on Organic Chemicals , Second Edition. Van Nostrand Reinhold. NY, NY. 1310p.

ARCADIS

Table 5. Summary of Polychlorinated Biphenyl Concentrations in Groundwater, Analytical Method 8080, June and July 1998, OMS Operations Area, AK Steel Property, Middletown, Ohio.

Sample ID	Aroclor 1248
Seep	
SD10-SEEP	**21J[1]**
Perched Zone	
MDA-01P	ND
MDA-03P	**0.63**
MDA-08P	**13.1**
MDA-09P	ND
MDA-19P	ND
MDA-22P	ND
MDA-23P	ND
MDA-24P	ND
MDA-25P	**19.5 J[1]**
BH05-GW	ND
BH07-GW	**22.0 J[1]**
BH10-GW	ND
BH11-GW	**1.82**
BH12-GW	**2.88**
BH13-GW	**49.4**
BH21-GW	ND
Upper Aquifer	
MDA-01S	ND
MDA-02S	ND
MDA-03S	ND
MDA-08S	**0.73**
MDA-09S	ND
MDA-14S	ND
MDA-15S	ND
MDA-16S	ND
MDA-17S	ND
MDA-18S	ND
GM-29S	ND
GM-30S	ND
GM-35S	**0.58 J[1,2]**
GM-36S	ND
GM-45S	ND
GM-46SR	ND
Intermediate Aquifer	
GM-46D	ND

Aroclor 1016, 1221, 1232, 1242, 1254 and 1260 were not detected.

ID - Identification.

Results reported in micrograms per liter (ug/L).

SD10-SEEP is a groundwater seep sample collected at location SD10 along the west bank of Monroe Ditch.

J(1) - estimated due to high laboratory control sample recovery.

J(2) - estimated due to poor peak resolution.

ND Not Detected.

Table 6. Summary of Polychlorinated Biphenyl Concentrations in Surficial Soil, Analytical Method 8080, June and July 1998, Monroe Ditch Area, AK Steel Property, Middletown, Ohio.

Sample ID	Depth (feet)	Aroclor 1248
SS-01	0-2	**39.0**
	2-2.5	**78.7**
SS-02	0-2	ND
	2.5-3	ND
SS03	0-2	ND
	2-4	**0.76 J[1]**
SS04	0-0.5	ND
SS05	0-0.5	**0.94**
	0.5-1	ND
SS06	0-0.5	**1.05**
	1-2	ND
WIPE01	Surface Wipe	ND

Notes:
Aroclor 1016, 1221, 1232, 1242, 1254, and 1260 were not detected.
Results report in milligrams per kilogram (mg/kg).
ID - Identification.
J[1] - estimated due to high laboratory control sample recovery.
WIPE01 is a surface wipe sample collected on the compressor building floor, and is reported in micrograms per wipe (ug/ft2).
ND Not Detected.

ARCADIS

Table 7. Homologue Polychlorinated Biphenyl Results, Analytical Method 680, October and November 1998, Monroe Ditch Area, AK Steel Property, Middletown, Ohio.

SOIL

Parameter	Unit	BH13b	BH15b	BH26SL	SD10SL15W	SS01b	CPMT
Monochlorobiphenyl	mg/kg	ND	ND	ND	ND	ND	ND
Dichlorobiphenyl	mg/kg	**0.14**	**1.3**	**0.01**	**0.079**	ND	ND
Trichlorobiphenyl	mg/kg	**0.38**	**22**	**0.072**	**0.39**	**10**	ND
Tetrachlorobiphenyl	mg/kg	**0.14**	**45**	**0.14**	**0.4**	**100**	**0.099**
Pentachlorobiphenyl	mg/kg	**0.021**	**25**	**0.022**	ND	**44**	ND
Hexachlorobiphenyl	mg/kg	ND	**5.1**	ND	ND	**3.3**	ND
Heptachlorobiphyenyl	mg/kg	ND	ND	ND	ND	ND	ND
Octachlorobiphenyl	mg/kg	ND	ND	ND	ND	ND	ND
Nonachlorobiphenyl	mg/kg	ND	ND	ND	ND	ND	ND
Decachlorobiphenyl	mg/kg	ND	ND	ND	ND	ND	ND
TOTAL PCBs	mg/kg	**1**	**98.4**	**0.244**	**0.869**	**157.3**	**0.099**

GROUNDWATER

Parameter	Unit	MDA08P	MDA08S	MDA22P	SUMP
Monochlorobiphenyl	ug/L	ND	ND	ND	ND
Dichlorobiphenyl	ug/L	ND	ND	ND	ND
Trichlorobiphenyl	ug/L	**0.26**	ND	ND	**1**
Tetrachlorobiphenyl	ug/L	**2.1**	**0.25**	ND	**1.2**
Pentachlorobiphenyl	ug/L	**0.69**	ND	ND	ND
Hexachlorobiphenyl	ug/L	ND	ND	ND	ND
Heptachlorobiphyenyl	ug/L	ND	ND	ND	ND
Octachlorobiphenyl	ug/L	ND	ND	ND	ND
Nonachlorobiphenyl	ug/L	ND	ND	ND	ND
Decachlorobiphenyl	ug/L	ND	ND	ND	ND
TOTAL PCBs	ug/L	**3.05**	**0.25**	**0**	**2.2**

mg/kg Micorgrams per Kilogram
ug/L Micrograms per Liter

f:\akstel\mda\phase1\interimtables.xls

ARCADIS

Table 8. Summary of Polychlorinated Biphenyl Concentrations in Soil Collected from Borings, Analytical Method 8080, June and July 1998, Monroe Ditch Area, AK Steel Property, Middletown, Ohio.

Sample ID	Depth (feet)	Aroclor 1248
BH-01	0-2	ND
	6-8	**0.898**
	16-18	ND
BH-02	0-2	**1.37**
	6-8	**1.44**
	11-13	ND
BH-03	0-2	ND
	6-8	ND
	13-15	ND
BH-04	0-2	ND
	6-8	**4.60**
	13-15	ND
BH-05	0-2	ND
	6-8	**0.884 J[3]**
	12-14	ND
BH-06	0-2	ND
	6-8	ND
	15-17	ND
BH-07	0-2	ND
	6-8	**9.95 J[3]**
	14-16	ND
BH-08	0-2	ND
	6-8	**288**
	15-17	ND
BH09	0-2	ND
	6-8	ND
	14-16	ND
BH10	0-2	ND
	6-8	ND
	21-22	ND
BH11	0-2	ND
	6-8	ND
	23-24	ND

Notes provided on Page 3.

ARCADIS

Table 8. Summary of Polychlorinated Biphenyl Concentrations in Soil Collected from Borings, Analytical Method 8080, June and July 1998, Monroe Ditch Area, AK Steel Property, Middletown, Ohio.

Sample ID	Depth (feet)	Aroclor 1248
BH12	0-2	ND
	6-8	ND
	22-24	ND
BH13	0-2	ND
	6-8	**8.04**
	21-23	ND
BH14	0-2	ND
	6-8	ND
	10-12	ND
BH15	0-2	ND
	6-8	**1.86**
	10-12	**1.20**
BH16	0-2	ND
	6-8	ND
BH17	0-2	ND
	6-8	ND
	12-14	ND
BH19	0-2	ND
	6-8	ND
BH20	0-2	ND
	6-8	ND
	8-9	ND
BH21	0-2	ND
	6-8	ND
	17-19	ND
BH22	0-2	ND
	6-8	ND
	9-10	ND
BH25	6-8	ND

Notes provided on Page 3.

ARCADIS

Table 8. Summary of Polychlorinated Biphenyl Concentrations in Soil Collected from Borings. Analytical Method 8080, June and July 1998, Monroe Ditch Area, AK Steel Property, Middletown, Ohio.

Notes:
Aroclor 1016, 1221, 1232, 1242, 1254 and 1260 were not detected.
Results report in milligrams per kilogram (mg/kg).
Note: Soil samples were not collected from BH-18, BH-23, and BH-24.
$J^{(3)}$ - estimated due to high surrogate recovery.
ND Not Detected.

ARCADIS

Table 9. Summary of Polychlorinated Biphenyl Concentrations in Groundwater, Analytical Method 8080, June and July 1998, Monroe Ditch Area, AK Steel Property, Middletown, Ohio.

Sample ID	Aroclor 1248
Seep	
SD10-SEEP	**21J[1]**
Perched Zone	
01P	ND
03P	**0.63**
08P	**13.1**
09P	ND
14P	ND
15P	ND
16P	ND
17P	ND
19P	ND
22P	ND
23P	ND
24P	ND
25P	**19.5 J[1]**
BH05-GW	ND
BH07-GW	**22.0 J[1]**
BH10-GW	ND
BH11-GW	**1.82**
BH12-GW	**2.88**
BH13-GW	**49.4**
BH21-GW	ND
Upper Aquifer	
01S	ND
02S	ND
03S	ND
08S	**0.73**
09S	ND
18S	ND
GM-29S	ND
GM-30S	ND
GM-35S	**0.58 J[1,2]**
GM-36S	ND
GM-45S	ND
GM-46SR	ND
Intermediate Aquifer	
GM-46D	ND

Notes are provided on Page 2.

Table 9. Summary of Polychlorinated Biphenyl Concentrations in Groundwater, Analytical Method 8080, June and July 1998, Monroe Ditch Area, AK Steel Property, Middletown, Ohio.

Notes:

Aroclor 1016, 1221, 1232, 1242, 1254 and 1260 were not detected.

ID - Identification.

Results reported in micrograms per liter (ug/L).

SD10-SEEP is a groundwater seep sample collected at location SD10 along the west of Monroe Ditch.

$J^{(1)}$ - estimated due to high laboratory control sample recovery.

$J^{(2)}$ - estimated due to poor peak resolution.

ND Not Detected.

Table 10. Summary of Polychlorinated Biphenyl Concentrations in Surface Soil Samples Collected in the Vicinity of Sample SS01, Analytical Method 8080, Monroe Ditch Area AK Steel Property, Property, Middletown, Ohio.

Sample ID	Depth (feet)	Aroclor 1248
SS01 E 70	2-4	**2.1**
SS01 E 210	2-4	ND
SS01 E 280	0-2	ND
SS01 E 350	2-4	**1.45**
SS01 E 420	0-2	ND
SS01 E 490	2-4	**0.55**
SS01 E 610	2-4	**2.04**
SS01 E 680	0-2	**0.85**
SS01 N 50	2-4	ND
SS01 N 75	0-2	ND
SS01 N100	2-4	ND
SS01 N125	0-2	ND

Notes:
Aroclor 1016, 1221, 1232, 1242, 1254, and 1260 were not detected.
Results report in milligrams per kilogram (mg/kg).
ID - Indentifidation.
PCBs - Polychlorinated Biphenyls
No PCBs were detected in equipment blank EB-SS01 E.

ARCADIS

Table 11. Summary of Polychlorinated Biphenyl Concentrations in Sediment, Analytical Method 8080, June and July 1998,Monroe Ditch Area, AK Steel Property, Middletown, Ohio.

Sample ID	Depth (feet)	Aroclor 1248
SD01	0-2	ND
	2-4	ND
SD02	0-2	ND
	2-4	ND
SD03	0-2	**2.79**
	2-4	**2.58J(1)**
SD04	0-2	ND
	2-4	ND
SD05	0-2	ND
	2-4	ND
SD06	0-2	ND
	2-4	**2.30J(1)**
SD07	0-2	**1.29J(1)**
	2-4	ND
SD08	0-2	ND
	2-4	ND
SD09	0-2	**5.13J(1)**
	2-4	**1.69J(1)**
SD10	0-2	**4.36J(1)**
	2-4	**1.93J(1)**
SD11	0-2	ND
	2-4	**0.950J(1)**

Notes:
Aroclor 1016, 1221, 1232, 1254 and 1260 were not detected.
Results report in milligrams per kilogram (mg/kg).
ID - Identification.
J(1) - estimated due to high laboratory control sample recovery.
ND Not Detected.

ARCADIS

Table 12. Summary of Polychlorinated Biphenyl Concentrations in Sediment, Analytical Method 8080A, Dick's Creek and Nearby Tributaries, March and April 1999, AK Steel, Middletown, Ohio.

Sample ID	Aroclor 1242
DC-01	ND
DC-02	ND
DC-03	ND
DC-04	ND
DC-05	ND
DC-06	ND
DC-07	ND
DC-08	ND
DC-09	**1.86**
DC-10	**1.40**
DC-11	**2.01**
MD-01	ND
MD-02	ND
MD-03	ND
SC-01	ND
SC-02	ND
NB-01	ND
OF3-01	ND
OF3-02	ND
OF3-03	ND
OF3-04	ND
Duplicates	
DC12	ND
DC13	**2.89**
Blanks	
EB-01	ND
EB-02	ND

ND - Not Detected
ID - Identification.
Results report in milligrams per kilogram (mg/kg).
Aroclor 1016, 1221, 1232, 1248, 1254, and 1260 were not detected.

Sample DC12 is a duplicate of DC07.
Sample DC13 is a duplicate of DC09.

Table 13. Summary of Polychlorinated Biphenyls in Dick's Creek and Monroe Ditch, Analytical Method 680, April 1999, Monroe Ditch Area, AK Steel Property, Middletown, Ohio.

DICK'S CREEK

Parameter	Unit	DC-05	DC-06	DC-07	DC-08	DC-09	DC-10	DC-11
Monochlorobiphenyl	mg/kg	ND	ND	ND	ND	**0.056**	ND	ND
Dichlorobiphenyl	mg/kg	ND	ND	ND	ND	**0.59**	**0.14**	**0.088**
Trichlorobiphenyl	mg/kg	ND	ND	ND	ND	**0.81**	**0.45**	**0.37**
Tetrachlorobiphenyl	mg/kg	ND	ND	ND	ND	**0.92**	**0.59**	**0.56**
Pentachlorobiphenyl	mg/kg	ND	ND	ND	ND	**0.32**	**0.14**	**0.17**
Hexachlorobiphenyl	mg/kg	ND	ND	ND	ND	ND	ND	ND
Heptachlorobiphyenyl	mg/kg	ND	ND	ND	ND	ND	ND	ND
Octachlorobiphenyl	mg/kg	ND	ND	ND	ND	ND	ND	ND
Nonachlorobiphenyl	mg/kg	ND	ND	ND	ND	ND	ND	ND
Decachlorobiphenyl	mg/kg	ND	ND	ND	ND	ND	ND	ND
TOTAL PCBs	mg/kg	ND	ND	ND	ND	**2.696**	**1.32**	**1.188**

MONROE DITCH

Parameter	Unit	MD-01	MD-02	MD-03
Monochlorobiphenyl	mg/kg	ND	ND	ND
Dichlorobiphenyl	mg/kg	ND	ND	ND
Trichlorobiphenyl	mg/kg	ND	ND	ND
Tetrachlorobiphenyl	mg/kg	ND	ND	ND
Pentachlorobiphenyl	mg/kg	ND	ND	ND
Hexachlorobiphenyl	mg/kg	ND	ND	ND
Heptachlorobiphyenyl	mg/kg	ND	ND	ND
Octachlorobiphenyl	mg/kg	ND	ND	ND
Nonachlorobiphenyl	mg/kg	ND	ND	ND
Decachlorobiphenyl	mg/kg	ND	ND	ND
TOTAL PCBs	mg/kg	ND	ND	ND

mg/kg Milligrams per Kilogram
ND Not Detected

ARCADIS

Table 14. Percent Grain Size Analyses Results for Sediment, Analytical Method ASTM D422, March and April 1999, AK Steel, Middletown, Ohio.

Sample ID	Gravel	Sand	Silt	Clay	Silt/Clay Total
DC-01	0	56	29	15	44
DC-02	0	11	67	22	89
DC-03	17	79	2	2	4
DC-04	0	4	60	36	96
DC-05	0	62	26	12	38
DC-06	0	67	24	9	33
DC-07	7	45	35	13	48
DC-08	0	5	74	21	95
DC-09	0	50	37	13	50
DC-10	0	70	18	12	30
DC-11	0	42	41	17	58
MD-01	6	15	47	32	79
MD-02	3	52	28	17	45
MD-03	19	57	13	11	24
SC-01	1	51	33	15	48
SC-02	0	28	51	21	72
NB-01	0	49	36	15	51
OF3-01	1	28	48	23	71
OF3-02	0	79	11	10	21
OF3-03	1	58	26	15	41
OF3-04	0	29	61	10	71
Duplicates					
DC12	3	45	38	14	52
DC13	0	54	34	12	46

ND - Not Detected
ID - Identification.

Sample DC12 is a duplicate of DC07.
Sample DC13 is a duplicate of DC09.

ARCADIS

Table 1. Chronology of Environmental Investigations in OMS Area, Soil and Groundwater Investigation Report, Olympic Mill Services Operations Area, AK Steel Corporation, Middletown, Ohio.

Date	Activity Description
June 1988	GM-series monitoring wells are installed within and immediately southwest of OMS Area during development of sitewide groundwater model.
June 1996	PCBs were not detected in water samples collected at the mouth of Monroe Ditch by USEPA.
October 1997	Ohio EPA observed a white substance entering Dick's Creek from Monroe Ditch.
November 1997	Ohio EPA identified a seep on the east bank of Monroe Ditch as the source of the white substance detected in Dick's Creek in October 1997. Ohio EPA collected water samples in the seep area and along Monroe Ditch.
December 1997	Ohio EPA notified AK Steel that the seep to Monroe Ditch must be eliminated. An interim remedial measure was implemented by construction of a groundwater interception trench and treatment system. A phased investigation of potential PCB source areas in the OMS Area was undertaken. AK Steel collected water samples in Monroe Ditch and Dick's Creek, and collected soil samples east of Monroe Ditch near transformers, former stockpiles, mill scale areas, and waste oil storage areas.
January 1998	Construction of the groundwater interception trench and treatment system was completed. The groundwater seep to Monroe Ditch was eliminated.
Feb.-Apr. 1998	A site reconnaissance, interviews with AK Steel personnel, and aerial photographs reviews were completed. Ten potential PCB source areas were identified in the OMS Area.
May 1998	A plan to investigate each potential PCB source area in the OMS Area was prepared.
June - Nov. 1998	A multimedia, sitewide field investigation was completed (June - July 1998), and a focused investigation of Former Drainage Path and Mill Scale Area 3 completed. Two of the ten potential PCB source areas were determined to be significant sources of PCBs.
January 1999	The groundwater interception trench was extended to the south, and a trench lateral was constructed to the west to eliminate a seep observed during a low-water condition in Monroe Ditch.
Mar. - Apr. 1999	Sediment samples were collected along Dick's Creek, North Branch Dick's Creek, AK Steel Outfall 003, Shaker Creek, and Monroe Ditch. PCB homologue data were generated.
Aug. - Sep. 2000	A focused soil investigation was completed along the Former Drainage Path and in Mill Scale Area 3, and a focused groundwater investigation was completed in the north portion of the OMS Area.
July - Dec. 2001	A second multimedia, sitewide field investigation was completed

PCB - Polychlorinated biphenyl.

Ohio EPA - Ohio Environmental Protection Agency.

USEPA - United States Environmental Protection Agency.

ARCADIS

Table 2. Soil Boring and Groundwater Monitoring Well Construction Details, Soil and Groundwater Investigation Report, Olympic Mill Services Operations Area, AK Steel Corporation, Middletown, Ohio.

Boring/Well ID	Hydrostratigraphic Unit Monitored	Date Completed	Northing	Easting	Reference Elevations		Perched Groundwater Zone		Top of Clay		Upper Aquifer		Bottom of Boring		Wellscreen Interval		Approx. WL During Drilling	
					Ground Surf. (ft. NGVD)	Top-of-Riser (ft. NGVD)	Depth (ft. bgs)	Elev. (ft. NGVD)	Depth (ft. bgs)	Elev. (ft. NGVD)	Depth (ft. bgs)	Elev. (ft. NGVD)	Depth (ft. bgs)	Elev. (ft. NGVD)	Depth (ft. bgs)	Elev. (ft. NGVD)	Depth (ft. bgs)	Elev. (ft. NGVD)
Soil Borings Completed in 2001																		
BH-02S-S (MS1-01)	Boring	09/17/01	541534.03	1435293.17	655.46	No Well	Not Present	Not Present	12.00	643.46	Not Reached	Not Reached	14.00	641.46	No Well	No Well	NE	NA
BH-02S-W (MS1-02)	Boring	09/17/01	541744.07	1435288.98	653.97	No Well	Not Present	Not Present	7.50	646.47	Not Reached	Not Reached	10.00	643.97	No Well	No Well	NE	NA
BH-02S-N (MS1-03)	Boring	09/17/01	541826.48	1435392.13	651.60	No Well	Not Present	Not Present	5.00	646.60	Not Reached	Not Reached	8.00	643.60	No Well	No Well	NE	NA
BH-02S-E (MS1-04)	Boring	09/18/01	541811.24	1435584.98	651.35	No Well	Not Present	Not Present	6.00	645.35	Not Reached	Not Reached	8.00	643.35	No Well	No Well	NE	NA
BH-BLDG-W (COMP-1)	Boring	09/20/01	540272.26	1436724.38	664.73	No Well	Not Present	Not Present	Not Reached	Not Reached	Not Reached	Not Reached	4.00	660.73	No Well	No Well	NE	NA
BH-BLDG-E (COMP-2)	Boring	09/20/01	540264.21	1436788.76	664.49	No Well	Not Present	Not Present	Not Reached	Not Reached	Not Reached	Not Reached	4.00	660.49	No Well	No Well	NE	NA
BH-BH07-N (BH07-01)	Boring	09/19/01	540226.76	1435229.43	657.18	No Well	Not Present	Not Present	14.00	643.18	Not Reached	Not Reached	16.00	641.18	No Well	No Well	NE	NA
BH-BH07S50-SW (BH07-02)	Boring	09/25/01	540173.82	1435199.64	651.56	No Well	Not Present	Not Present	7.50	644.06	Not Reached	Not Reached	10.00	641.56	No Well	No Well	NE	NA
BH-BH08-N (BH08-01)	Boring	09/18/01	540459.36	1435252.66	656.59	No Well	Not Present	Not Present	Not Reached	Not Reached	Not Reached	Not Reached	8.00	648.59	No Well	No Well	NE	NA
BH-BH08-N (BH08-01A)	Boring	09/18/01	540467.59	1435252.70	656.46	No Well	Not Present	Not Present	16.00	640.46	Not Reached	Not Reached	18.00	638.46	No Well	No Well	NE	NA
BH-BH08-S (BH08-02)	Boring	09/18/01	540403.55	1435249.73	656.95	No Well	Not Present	Not Present	16.00	640.95	Not Reached	Not Reached	18.00	638.95	No Well	No Well	NE	NA
BH-BH08-W (BH08-03)	Boring	09/25/01	540428.28	1435220.18	651.80	No Well	Not Present	Not Present	12.00	639.80	Not Reached	Not Reached	14.00	637.80	No Well	No Well	NE	NA
BH-BH13-W (BH13-01)	Boring	09/20/01	540176.26	1436162.34	667.50	No Well	18.00 - 22.00	649.50 - 645.50	22.00	645.50	Not Reached	Not Reached	24.00	643.50	No Well	No Well	18.0	649.5
BH-BH13S50-N (BH13-02)	Boring	09/20/01	540174.86	1436197.99	666.10	No Well	16.00 - 20.00	650.10 - 646.10	20.00	646.10	Not Reached	Not Reached	22.00	644.10	No Well	No Well	16.0	650.1
BH-BH13S50-W (BH13-03)	Boring	09/21/01	540140.09	1436179.02	666.55	No Well	14.00 - 19.50	652.55 - 647.05	19.50	647.05	Not Reached	Not Reached	22.00	644.55	No Well	No Well	14.0	652.6
BH-BH13-N (BH13-04)	Boring	09/25/01	540226.90	1436170.43	676.65	No Well	12.00 - 16.00	664.65 - 660.65	16.00	660.65	Not Reached	Not Reached	18.00	658.65	No Well	No Well	12.0	664.7
BH-BH15-W (BH15-01)	Boring	09/13/01	540166.51	1436944.30	666.72	No Well	Not Present	Not Present	Not Reached	Not Reached	Not Reached	Not Reached	14.30	652.42	No Well	No Well	NE	NA
BH-EPOND (BH15-02)	Boring	09/13/01	540235.98	1437402.11	678.13	No Well	Not Present	Not Present	9.00	669.13	Not Reached	Not Reached	16.00	662.13	No Well	No Well	NE	NA
BH-CTRPOND(BH15-03)	Boring	09/13/01	540198.09	1437251.80	672.38	No Well	11.00 - 14.00	661.38 - 658.38	14.00	658.38	Not Reached	Not Reached	16.00	656.38	No Well	No Well	11.0	661.4
BH-BH15-NW (BH15-04)	Boring	09/14/01	540299.54	1436990.39	666.52	No Well	6.00 - 9.50	660.52 - 657.02	9.50	657.02	Not Reached	Not Reached	14.00	652.52	No Well	No Well	6.0	660.5
BH-FDP-E (BH15-05)	Boring	09/21/01	540077.25	1437077.44	664.02	No Well	Not Present	Not Present	Not Reached	Not Reached	Not Reached	Not Reached	4.00	660.02	No Well	No Well	NE	NA
BH-FDP-W (BH15-06)	Boring	09/21/01	540028.88	1437015.51	663.54	No Well	Not Present	Not Present	Not Reached	Not Reached	Not Reached	Not Reached	4.00	659.54	No Well	No Well	2.5	661.0
BH-BH15-NE (BH15-07)	Boring	10/05/01	540290.61	1437148.34	667.44	No Well	Not Present	Not Present	9.50	657.94	Not Reached	Not Reached	14.00	653.44	No Well	No Well	NE	NA
BH-SS01-W (SS01-01)	Boring	09/20/01	539970.64	1436041.71	653.17	No Well	4.00 - 7.00	649.17 - 646.17	7.00	646.17	Not Reached	Not Reached	8.00	645.17	No Well	No Well	4.0	649.2
BH-SS01-S (SS01-02)	Boring	09/20/01	539959.93	1436050.23	653.92	No Well	4.00 - 7.00	649.92 - 646.92	7.00	646.92	Not Reached	Not Reached	8.00	645.92	No Well	No Well	4.0	649.9
BH-SS01-E (SS01-03)	Boring	09/20/01	539972.54	1436060.61	653.59	No Well	4.00 - 7.00	649.59 - 646.59	7.00	646.59	Not Reached	Not Reached	8.00	645.59	No Well	No Well	4.0	649.6
Perched Groundwater Zone Wells																		
MDA-01P	Perched GW Zone	06/11/98	541243.51	1435168.27	653.75	656.14	11.00 - 16.00	642.75 - 637.75	16.00	637.75	20.00 - 25.00	633.75 - 628.75	16.00	637.75	6.00 - 16.00	647.75 - 637.75	11.0	642.8
MDA-03P	Perched GW Zone	06/15/98	540683.68	1435235.12	654.41	656.57	10.00 - 13.00	644.41 - 641.41	13.00	641.41	22.00 - 25.00	632.41 - 629.41	16.00	638.41	6.00 - 16.00	648.41 - 638.41	NE	NA
MDA-08P	Perched GW Zone	06/17/98	540427.75	1435245.30	656.98	659.19	6.00 - 11.00	650.98 - 645.98	11.00	645.98	22.00 - 25.00	634.98 - 631.98	19.00	637.98	9.00 - 19.00	647.98 - 637.98	15.0	642.0
MDA-09P	Perched GW Zone	06/22/98	539977.42	1435198.14	653.26	655.64	NA - 11.00	NA - 642.26	11.00	642.26	16.00 - 21.00	637.26 - 632.26	11.00	642.26	6.00 - 11.00	647.26 - 642.26	18.0	635.3
MDA-19P	Perched GW Zone	06/26/98	540316.78	1436718.50	666.67	668.19	1.50 - 7.00	665.17 - 659.67	7.00	659.67	Not Reached	Not Reached	8.00	658.67	2.00 - 7.00	664.67 - 659.67	1.5	665.2
MDA-22PR	Perched GW Zone	10/23/01	541198.85	1435775.99	658.25	660.89	Unknown	Unknown	13.00	645.25	Not Reached	Not Reached	14.00	644.25	4.00 - 12.00	654.25 - 646.25	NE	NA
MDA-23P	Perched GW Zone	06/29/98	540982.68	1435313.40	650.84	652.91	NA - 10.00	NA - 640.84	10.00	640.84	Not Reached	Not Reached	13.00	637.84	7.66 - 12.66	643.18 - 638.18	11.0	639.8
MDA-24PR	Perched GW Zone	10/23/01	540322.85	1435985.12	666.19	668.67	Unknown	Unknown	10.00	656.19	Not Reached	Not Reached	13.00	653.19	5.00 - 10.00	661.19 - 656.19	NE	NA
MDA-25P	Perched GW Zone	06/30/98	539965.19	1436080.11	653.75	656.36	5.00 - 7.50	648.75 - 646.25	7.50	646.25	Not Reached	Not Reached	9.00	644.75	3.50 - 8.50	650.25 - 645.25	5.0	648.8
MDA-27P	Perched GW Zone	07/03/01	541905.15	1436391.82	651.76	654.77	Not Present	Not Present	10.00	641.76	Not Reached	Not Reached	14.00	637.76	4.00 - 9.00	647.76 - 642.76	NE	NA
MDA-34P	Perched GW Zone	10/01/01	540954.77	1435135.34	643.33	645.69	3.50 - 4.00	639.83 - 639.33	4.00	639.33	Not Reached	Not Reached	8.00	635.33	2.00 - 4.00	641.33 - 639.33	3.5	639.8
Shallow Groundwater Zone Monitoring Wells																		
MDA-14S	Shallow GW Zone	06/24/98	540100.97	1436854.62	663.88	666.15	Not Present	Not Present	6.00	657.88	12.50 - 17.00	651.38 - 646.88	19.00	644.88	12.00 - 17.00	651.88 - 646.88	12.5	651.4
MDA-16SR	Shallow GW Zone	10/08/01	540364.72	1437375.79	667.08	669.46	Not Present	Not Present	8.00	659.08	17.30 - 17.70	649.78 - 649.38	19.50	647.58	13.00 - 19.00	654.08 - 648.08	17.0	650.1
MDA-17S	Shallow GW Zone	06/25/98	540129.78	1437175.67	671.29	673.64	Not Present	Not Present	6.00	665.29	13.50 - 23.00	657.79 - 648.29	23.00	648.29	13.00 - 23.00	658.29 - 648.29	14.0	657.3
MDA-30S	Shallow GW Zone	10/02/01	540736.17	1434043.68	655.82	658.17	Not Present	Not Present	1.00	654.82	5.00 - 7.00	650.82 - 648.82	14.00	641.82	4.00 - 7.00	651.82 - 648.82	6.0	649.8
MDA-32S	Shallow GW Zone	09/14/01	540140.05	1437088.62	669.05	671.69	Not Present	Not Present	7.50	661.55	14.00 - 19.50	655.05 - 649.55	20.00	649.05	10.00 - 20.00	659.05 - 649.05	14.0	655.1
Upper Aquifer Monitoring Wells																		
MDA-01S	Upper Aquifer	06/11/98	541249.38	1435161.26	653.58	655.94	11.00 - 16.00	642.58 - 637.58	16.00	637.58	20.00 - 25.00	633.58 - 628.58	26.00	627.58	21.00 - 26.00	632.58 - 627.58	11.0	642.6
MDA-02S	Upper Aquifer	06/15/98	541729.78	1435374.18	653.81	655.41	Not Present	Not Present	11.00	642.81	13.00 - 17.00	640.81 - 636.81	19.00	634.81	13.00 - 18.00	640.81 - 635.81	NE	NA
MDA-03S	Upper Aquifer	06/15/98	540695.07	1435235.51	654.56	656.70	10.00 - 13.00	644.56 - 641.56	13.00	641.56	22.00 - 25.00	632.56 - 629.56	29.00	625.56	20.00 - 25.00	634.56 - 629.56	NE	NA
MDA-08S	Upper Aquifer	06/17/98	540434.00	1435245.73	656.89	659.12	6.00 - 11.00	650.89 - 645.89	11.00	645.89	22.00 - 25.00	634.89 - 631.89	27.00	629.89	21.00 - 26.00	635.89 - 630.89	15.0	641.9
MDA-09S	Upper Aquifer	06/22/98	539978.11	1435191.39	653.01	655.40	NA - 11.00	NA - 642.01	11.00	642.01	16.00 - 21.00	637.01 - 632.01	22.00	631.01	16.00 - 21.00	637.01 - 632.01	18.0	635.0
MDA-15S	Upper Aquifer	06/24/98	540247.60	1437088.26	667.39	669.45	Not Present	Not Present	7.00	660.39	23.00 - 25.00	644.39 - 642.39	26.00	641.39	16.00 - 26.00	651.39 - 641.39	23.0	644.4
MDA-18S	Upper Aquifer	06/25/98	540967.24	1437177.64	652.21	654.35	Not Present	Not Present	6.50	645.71	22.00 - 30.00	630.21 - 622.21	32.00	620.21	20.00 - 30.00	632.21 - 622.21	24.0	628.2
MDA-23S	Upper Aquifer	09/26/01	540988.20	1435312.53	650.91	653.19	Not Present	Not Present	7.20	643.71	15.00 - 19.50	635.91 - 631.41	20.00	630.91	14.50 - 19.50	636.41 - 631.41	15.0	635.9

ARCADIS

Table 2. Soil Boring and Groundwater Monitoring Well Construction Details, Soil and Groundwater Investigation Report, Olympic Mill Services Operations Area, AK Steel Corporation, Middletown, Ohio.

Boring/Well ID	Hydrostratigraphic Unit Monitored	Date Completed	Northing	Easting	Reference Elevations		Perched Groundwater Zone		Top of Clay		Upper Aquifer		Bottom of Boring		Wellscreen Interval		Approx. WL During Drilling	
					Ground Surf. (ft. NGVD)	Top-of-Riser (ft. NGVD)	Depth (ft. bgs)	Elev. (ft. NGVD)	Depth (ft. bgs)	Elev. (ft. NGVD)	Depth (ft. bgs)	Elev. (ft. NGVD)	Depth (ft. bgs)	Elev. (ft. NGVD)	Depth (ft. bgs)	Elev. (ft. NGVD)	Depth (ft. bgs)	Elev. (ft. NGVD)
Upper Aquifer Monitoring Wells																		
MDA-33S	Upper Aquifer	10/01/01	540600.41	1435113.15	641.83	644.92	8.00 - 11.00	633.83 - 630.83	11.00	630.83	Not Reached	Not Reached	16.00	625.83	8.00 - 11.00	633.83 - 630.83	8.0	633.8
MDA-26S	Upper Aquifer	08/28/00	542020.92	1435684.77	647.25	650.12	Not Present	Not Present	6.00	641.25	8.00 - 10.00	639.25 - 637.25	16.00	631.25	5.00 - 15.00	642.25 - 632.25	8.5	638.8
MDA-27S	Upper Aquifer	08/28/00	541966.90	1436234.05	651.12	653.96	Not Present	Not Present	5.50	645.62	14.00 - 20.00	637.12 - 631.12	25.00	626.12	15.00 - 25.00	636.12 - 626.12	18.0	633.1
MDA-28S	Upper Aquifer	08/28/00	541617.64	1436776.02	651.66	651.28	Not Present	Not Present	4.00	647.66	14.50 - 16.00	637.16 - 635.66	20.00	631.66	10.00 - 20.00	641.66 - 631.66	14.0	637.7
GM-29S	Upper Aquifer	06/21/88	539769.29	1434454.04	651.97	653.51	Not Present	Not Present	5.00	646.97	6.00 - 16.00	645.97 - 635.97	18.00	633.97	6.00 - 16.00	645.97 - 635.97	10.0	642.0
MDA-29S	Upper Aquifer	07/02/01	542059.88	1436110.87	650.80	653.69	Not Present	Not Present	12.00	638.80	19.00 - 21.00	631.80 - 629.80	24.00	626.80	13.50 - 23.50	637.30 - 627.30	18.0	632.8
GM-30S	Upper Aquifer	06/22/88	541108.82	1438322.21	654.05	655.71	Not Present	Not Present	12.00	642.05	19.00 - 33.00	635.05 - 621.05	35.00	619.05	21.80 - 31.80	632.25 - 622.25	20.0	634.1
MDA-31S	Upper Aquifer	Pending	Pending	Pending	Pending	Pending	Not Present	Not Present	6.00	Pending	16.00 - 20.00	Pending	20.00	Pending	Pending	Pending	16.0	Pending
GM-35S	Upper Aquifer	06/28/88	539969.58	1436047.99	653.92	654.81	5.00 - 7.00	648.92 - 646.92	7.00	646.92	19.00 - 24.00	634.92 - 629.92	25.00	628.92	14.40 - 24.40	639.52 - 629.52	20.0	633.9
MDA-35S/MDA-35SR	Upper Aquifer	09/28/01	541591.15	1434188.64	651.53	654.18	Not Present	Not Present	16.00	635.53	22.00 - 28.00	629.53 - 623.53	37.00	614.53	22.00 - 28.00	629.53 - 623.53	22.0	629.5
GM-36S	Upper Aquifer	06/28/88	541071.31	1434051.24	654.46	656.64	Not Present	Not Present	8.00	646.46	34.00 - 38.00	620.46 - 616.46	40.00	614.46	33.90 - 38.90	620.56 - 615.56	34.0	620.5
MDA-36S	Upper Aquifer	10/04/01	542251.73	1434247.72	648.65	651.39	Not Present	Not Present	15.00	633.65	19.00 - 22.50	629.65 - 626.15	24.00	624.65	17.00 - 22.00	631.65 - 626.65	19.0	629.7
GM-45S	Upper Aquifer	07/11/88	541519.54	1434991.09	647.56	649.63	Not Present	Not Present	10.00	637.56	15.00 - 22.00	632.56 - 625.56	24.00	623.56	16.60 - 21.60	630.96 - 625.96	15.0	632.6
GM-46SR	Upper Aquifer	10/29/97	541968.70	1436225.90	650.98	654.79	Not Present	Not Present	3.00	647.98	12.00 - 17.00	638.98 - 633.98	26.00	624.98	15.00 - 25.00	635.98 - 625.98	15.4	635.6

Abbreviations: WL = water level; ft. NGVD = elevation in feet, relative to National Geodetic Vertical Datum; ft. bgs = elevation in feet, relative to ground surface; NA = not applicable; NE = not encountered.
Northing, easting, and elevation data obtained from survey performed October-November 2001 by Van Atta Engineering of Centerville, Ohio.
"Perched Groundwater Zone" refers to saturated fill. "Not Present" indicates Perched Groundwater Zone not encountered (no fill, or fill present but not saturated).
"Clay" refers to the uppermost natural soil horizon beneath the fill.
"Upper Aquifer" refers to the first saturated sand/gravel horizon within the clay layer.
"Shallow Groundwater Zone" refers to the localized areas of groundwater at a higher elevation than the "Upper Aquifer".
"Approx. WL During Drilling" refers to groundwater depth based on visual examination of recovered soil samples, and should be considered accurate only to the extent implied by the method used.
All wells were constructed of 2"-diameter, Schedule 40 wellscreen (10-slot) and solid riser pipe. All connections were threaded.
At locations MDA-09P, MDA-09S, and MDA-23P, saturated soil was not encountered above the clay during drilling.
The phrase "Not Reached" indicates the drilling was terminated at a depth above the top of either the native clay or the Upper Aquifer.
At locations MDA-22PR and MDA-24PR, the depth interval for the Perched Groundwater Zone (if present) could not be determined because cable-tool drilling methods were used to complete the borings. Water is introduced into the borehole during cable-tool drilling.
Drilling and well installation could not be completed at location MDA-31S because landfill gas was encountered.

ARCADIS GERAGHTY&MILLER

Table 3. Water-Level Measurements and Groundwater Elevations in OMS Area Wells from March 1999 through December 2001, Soil and Groundwater Investigation Report, Olympic Mill Services Operations Area, AK Steel Corporation, Middletown, Ohio

Well ID	Reference Elev.	March 1999		September 2000		October 2000		July 2001		August 2001		October 2001		December 4, 2001	
		GW Depth	GW Elev.	GW Depth	GW Elev.	GW Depth	GW Elev.	GW Depth	GW Elev.	GW Depth	GW Elev.	GW Depth	GW Elev.	GW Depth	GW Elev.
Perched Groundwater Zone Wells															
MDA01P	656.14	17.35	638.79	17.93	638.21	16.88	639.26	NM (1)	NM	16.74	639.40	NM	NM	16.58	639.56
MDA03P	656.57	12.74	643.83	17.37	639.20	16.25	640.32	NM	NM	14.00	642.57	NM	NM	14.30	642.27
MDA08P	659.19	13.50	645.69	13.64	645.55	13.73	645.46	NM	NM	13.47	645.72	NM	NM	13.63	645.56
MDA09P	655.64	7.47	648.17	8.39	647.25	7.79	647.85	NM	NM	8.14	647.50	NM	NM	7.70	647.94
MDA19P	668.19	4.73	663.46	4.02	664.17	4.60	663.59	NM	NM	4.29	663.90	NM	NM	4.16	664.03
MDA22P	DNF	10.85	NA	NA	NA	NA	NA	DNF	DNF	DNF	DNF	DNF	DNF	NA	NA
MDA22PR	660.83	DNF	DNE	DNE	DNE	DNE	DNE	DNE	DNE	DNE	DNE	13.16	647.73	13.53	647.36
MDA23P	652.91	8.83	644.08	8.54	644.37	8.74	644.17	NM	NM	8.77	644.14	11.93	640.98	8.51	644.40
MDA24P	DNF	NA	NA	NA	NA	NA	NA	DNF	DNF	DNF	DNF	DNF	DNF	NA	NA
MDA24PR	668.67	DNE	DNE	DNE	DNE	DNE	DNE	DNE	DNE	DNE	DNE	6.68	661.99	8.42	660.25
MDA25P	656.36	4.85	651.51	5.67	650.69	5.50	650.86	NM	NM	4.54	651.82	NM	NM	4.77	651.59
MDA27P	654.77	DNE	DNE	DNE	DNE	DNE	DNE	DNE	DNE	DNE	DNE	Dry	Dry	Dry	Dry
MDA34P	645.69	DNE	DNE	DNE	DNE	DNE	DNE	DNE	DNE	DNE	DNE	5.94	639.75	5.82	639.87
Shallow Groundwater Zone Wells															
MDA14S	666.15	11.11	655.04	16.64	649.51	16.05	650.10	NM	NM	11.91	654.24	NM	NM	10.93	655.22
MDA16SR	669.46	DNE	DNE	DNE	DNE	DNE	DNE	DNE	DNE	DNE	DNE	15.00	654.46	13.88	655.58
MDA17S	673.64	8.25	665.39	14.74	658.90	14.37	659.27	NM	NM	10.26	663.38	NM	NM	8.13	665.51
MDA30S	658.12	DNE	DNE	DNE	DNE	DNE	DNE	DNE	DNE	DNE	DNE	7.44	650.73	4.82	653.35
MDA32S	671.69	DNE	DNE	DNE	DNE	DNE	DNE	DNE	DNE	DNE	DNE	10.81	660.88	9.02	662.67
Upper Aquifer Wells															
MDA01S	655.94	20.63	635.31	21.11	634.83	24.70	631.24	NM	NM	12.16	643.78	NM	NM	20.31	635.63
MDA02S	655.41	21.29	634.12	Dry	Dry	Dry	Dry	NM	NM	Dry	Dry	NM	NM	Dry	Dry
MDA03S	656.70	17.21	639.49	18.22	638.48	17.77	638.93	NM	NM	17.57	639.13	NM	NM	17.30	639.40
MDA06S	659.12	21.54	637.58	23.08	636.04	22.52	636.60	NM	NM	22.54	636.58	NM	NM	21.85	637.27
MDA09S	655.40	15.99	639.50	18.05	637.35	17.08	638.32	NM	NM	17.26	638.14	NM	NM	15.71	639.69
MDA15S	669.45	14.24	655.21	17.69	651.76	16.75	652.70	NM	NM	15.23	654.22	NM	NM	14.84	654.61
MDA16S	DNF	NA	NA	NA	NA	NA	NA	DNF	DNF	DNF	DNF	DNF	DNF	NA	NA
MDA18S	654.35	8.51	645.84	NA	NA	9.42	644.93	NM	NM	8.17	646.18	NM	NM	8.14	646.21
MDA23S	653.19	DNE	DNE	DNE	DNE	DNE	DNE	DNE	DNE	DNE	DNE	11.81	641.38	12.14	641.05
MDA26S	650.12	DNE	DNE	14.95	635.17	NA	NA	NM	NM	NM	NM	13.26	636.86	9.33	640.79
MDA27S	653.96	DNE	DNE	9.75	644.21	8.78	645.18	NM	NM	13.97	639.99	15.81	638.15	14.48	639.48
MDA28S	651.28	DNE	DNE	11.82	639.46	15.46	635.82	NM	NM	8.23	643.05	NM	NM	8.59	642.69
GM-29S	653.51	4.61	648.90	11.73	641.78	10.63	642.88	NM	NM	NM	NM	NM	NM	3.73	649.78
MDA29S	653.51	DNE	DNE	DNE	DNE	DNE	DNE	15.22	638.29	NM	NM	NM	NM	15.17	638.34
GM-30S	655.71	NM	NM	NM	NM	NM	NM	NM	NM	NM	NM	NM	NM	8.82	646.89
MDA33S	644.92	DNE	DNE	DNE	DNE	DNE	DNE	DNE	DNE	DNE	DNE	8.15	636.77	8.79	636.13
GM-35S	654.81	7.52	647.29	11.56	643.25	10.35	644.46	NM	NM	8.72	646.09	NM	NM	7.86	646.95
MDA35SR	654.18	DNE	DNE	DNE	DNE	DNE	DNE	DNE	DNE	DNE	DNE	19.05	635.13	18.83	635.35
MDA36S	651.39	DNE	DNE	DNE	DNE	DNE	DNE	DNE	DNE	DNE	DNE	21.19	630.20	18.95	632.44
GM-45S	656.64	3.24	653.40	7.32	649.32	6.79	649.85	NM	NM	5.74	650.90	NM	NM	3.85	652.79
GM-46S	649.63	15.40	634.23	17.15	632.48	16.75	632.88	NM	NM	16.61	633.02	NM	NM	15.80	633.83
GM-46SR	654.79	14.25	640.54	21.42	633.37	15.90	638.89	NM	NM	13.93	640.86	15.66	639.13	14.59	640.20

"Ref. Elev." refers to top of well riser pipe elevations, based on survey performed by Van Atta Engineering of Centerville, Ohio in October-November 2001.
Where there were more than one "GW Depth" measurement in same month, most recent measurement is recorded in this table
Abbreviations: NM=not measured; GW=groundwater, Elev.=elevation, DNF=did not find, DNE=did not exist, NA=not available or not applicable
Wells MDA-16S and MDA-24P could not be found after 1998. Well MDA-22P could not be found after March 1999. It is assumed these wells were destroyed. They were replaced by Wells MDA-16SR, MDA-22PR, and MDA-24PR in October 2001.

ARCADIS GERAGHTY&MILLER

Table 4. Field Parameter Measurements, Soil and Groundwater Investigation Report, Olympic Mill Services Operations Area, AK Steel Corporation, Middletown, Ohio.

Well ID	Date	pH (Standard Units)					Conductivity (milliSiemens/centimeter)					Temperature (degrees Celsius)					Turbidity (Nephelometric Turbidity Units)			
		Vol. 1	Vol. 2	Vol. 3	Vol. 4	Vol. 5	Vol. 1	Vol. 2	Vol. 3	Vol. 4	Vol. 5	Vol. 1	Vol. 2	Vol. 3	Vol. 4	Vol. 5	Vol. 1	Vol. 2	Vol. 3	Vol. 4
Perched Groundwater Zone Wells																				
MDA-01P	08/07-08/08/01	7.61	6.93	7.14	7.13	7.14	2.58	2.63	2.56	2.60	2.60	21.70	22.10	22.30	22.30	22.30	12.10	NR	NR	NR
MDA-03P	08/07-08/08/01	12.23	12.13	12.39	NA	NA	12.23	3.67	3.95	4.12	NA	20.80	20.40	20.00	NA	NA	82.00	82.00	50.10	NA
MDA-08P	08/09/01	9.73	9.88	9.91	9.96	NA	0.62	0.63	0.65	0.66	NA	21.00	21.00	20.70	21.10	NA	19.80	15.50	16.30	16.20
MDA-09P	08/09-08/10/01	10.75	10.69	11.01	10.73	NA	0.38	0.39	0.42	0.49	NA	23.20	22.80	22.10	22.10	NA	9.70	9.40	8.50	2.70
MDA-19P	08/13/01	9.10	10.88	11.02	11.09	NA	0.84	0.84	0.85	0.87	NA	22.80	23.00	23.30	23.40	NA	10.60	6.50	3.20	[illegible]
MDA-22PR	10/25/01	11.96	12.23	12.20	12.28	NA	7.99	8.32	9.60	8.46	NA	14.43	14.51	15.69	16.18	NA	4.78	3.70	23.40	[illegible]
MDA-22PR	12/07/01	11.97	12.55	12.61	12.64	NA	8.25	8.08	7.80	7.74	NA	14.78	14.70	14.34	14.30	NA	78.80	21.50	12.80	[illegible]
MDA-23P	08/07/01	11.20	11.29	11.26	11.26	NA	1.26	1.36	1.51	1.53	NA	22.90	23.20	22.60	23.00	NA	82.00	77.00	62.00	[illegible]
MDA-24PR	10/25/01	11.58	11.23	11.44	11.42	NA	2.21	1.89	1.82	1.93	NA	14.82	15.76	17.26	17.21	NA	8.20	114.00	675.00	[illegible]
MDA-25P	08/13/01	10.26	10.35	10.44	10.36	NA	0.60	0.58	0.58	0.57	NA	25.30	24.10	23.80	23.80	NA	6.30	6.00	5.80	[illegible]
MDA-27P	08/13/01	9.32	9.46	NA	NA	NA	1.52	1.46	NA	NA	NA	22.40	26.30	NA	NA	NA	264.00	691.00	NA	NA
MDA-34P	10/18/01	7.90	7.90	7.80	7.80	NA	2.40	2.50	2.60	2.60	NA	17.63	17.23	17.15	17.94	NA	110.00	33.00	[illegible]	[illegible]
Shallow Groundwater Zone Wells																				
MDA-14S	08/13/01	7.30	7.26	7.16	6.94	NA	1.26	0.97	0.97	0.91	NA	18.50	18.00	17.40	16.90	NA	92.60	21.90	20.00	[illegible]
MDA-16SR	10/19/01	7.10	7.10	7.10	7.20	NA	4.20	1.00	1.00	1.10	NA	14.74	14.27	13.98	14.44	NA	8.00	17.00	[illegible]	[illegible]
MDA-17S	08/13/01	8.03	7.27	6.98	6.96	NA	0.86	0.85	0.83	0.85	NA	18.30	17.50	17.20	16.90	NA	6.90	6.25	7.80	[illegible]
MDA-30S	10/18/01	11.90	12.10	12.10	12.20	NA	7.10	6.50	6.10	5.80	NA	13.40	13.85	14.45	14.21	NA	1.00	0.90	1.00	[illegible]
MDA-32S	10/18/01	8.00	7.00	7.10	6.90	NA	1.10	1.10	1.10	1.10	NA	15.65	15.22	14.92	15.23	NA	50.00	8.00	[illegible]	[illegible]
Upper Aquifer Wells																				
MDA-01S	08/08/01	9.99	9.97	9.74	9.65	NA	0.78	0.79	0.73	0.69	NA	18.40	17.90	17.70	18.10	NA	2.17	1.27	0.64	[illegible]
MDA-02S	08/14/01	Dry	Dry	Dry	Dry	Dry	Dry	Dry	Dry	Dry	Dry	Dry	Dry	Dry	Dry	Dry	Dry	Dry	Dry	Dry
MDA-03S	08/07-08/09/01	9.65	8.90	9.10	NA	NA	0.99	0.99	1.00	NA	NA	20.00	20.00	20.00	NA	NA	NR	NR	NR	NR
MDA-05S	08/09/01	7.57	7.44	7.42	7.50	NA	1.36	1.38	1.37	1.37	NA	18.40	17.40	17.90	17.30	NA	46.00	24.50	14.50	[illegible]
MDA-02S	08/09/01	8.19	7.81	7.71	7.64	NA	0.80	0.80	0.78	0.75	NA	18.90	18.40	18.90	19.10	NA	22.10	16.00	8.60	[illegible]
MDA-15S	08/10/01	7.96	7.82	7.78	7.60	NA	0.56	0.57	0.56	0.57	NA	17.20	17.40	17.50	17.00	NA	452.00	171.00	24.60	[illegible]
MDA-18S	08/14/01	7.32	7.28	7.21	7.17	NA	0.85	0.81	0.86	0.86	NA	17.40	16.30	15.90	15.70	NA	123.00	33.90	27.60	[illegible]
MDA-23S	10/18/01	11.30	11.30	11.30	11.20	NA	1.80	1.10	1.10	1.10	NA	17.36	17.09	16.75	16.60	NA	320.00	94.00	47.00	[illegible]
MDA-26S	08/08/01	12.53	12.52	12.54	12.55	NA	8.10	7.98	8.05	8.11	NA	24.30	24.70	24.60	24.50	NA	NR	NR	NR	NR
MDA-26S	10/01/01	12.33	12.38	12.40	12.43	NA	5.82	5.61	5.58	5.55	NA	21.00	21.40	21.00	20.90	NA	17.30	11.80	5.80	[illegible]
MDA-26S	10/18/01	11.90	12.10	12.10	12.20	NA	7.10	6.50	6.10	5.80	NA	13.40	13.85	14.45	14.21	NA	1.00	0.90	[illegible]	[illegible]
MDA-27S	08/09/01	12.25	12.29	12.26	12.26	NA	4.96	5.48	5.44	5.65	NA	21.30	20.90	21.70	21.80	NA	38.20	14.10	[illegible]	[illegible]
MDA-27S	10/01/01	12.12	12.24	12.27	12.28	NA	3.70	4.65	4.85	5.27	NA	21.50	20.90	20.70	20.50	NA	13.70	2.60	[illegible]	NA
MDA-27S	10/17/01	12.30	12.30	12.30	12.30	NA	4.40	4.60	4.70	4.80	NA	18.15	18.47	17.73	17.52	NA	8.00	[illegible]	[illegible]	[illegible]
MDA-28S	08/14/01	11.59	11.95	11.94	12.00	NA	2.05	2.16	2.13	2.14	NA	17.60	17.70	17.50	17.20	NA	384.00	[illegible]	[illegible]	[illegible]
MDA-28S	10/02/01	11.15	11.75	11.94	11.97	11.92	1.55	1.72	1.72	1.78	1.82	20.10	19.10	19.60	18.70	19.30	854.00	367.00	[illegible]	[illegible]
MDA-29S	07/10/01	13.60	13.60	14.22	14.33	NA	1.95	1.89	1.89	1.89	NA	17.20	18.50	16.80	16.40	NA	NR	NR	NR	NR

ARCADIS GERAGHTY & MILLER

Table 4. Field Parameter Measurements, Soil and Groundwater Investigation Report, Olympic Mill Services Operations Area, AK Steel Corporation, Middletown, Ohio.

Well ID	Date	pH (Standard Units)					Conductivity (milliSiemens/centimeter)					Temperature (degrees Celsius)					Turbidity (Nephelometric Turbidity Units)			
		Vol. 1	Vol. 2	Vol. 3	Vol. 4	Vol. 5	Vol. 1	Vol. 2	Vol. 3	Vol. 4	Vol. 5	Vol. 1	Vol. 2	Vol. 3	Vol. 4	Vol. 5	Vol. 1	Vol. 2	Vol. 3	Vol. 4
Upper Aquifer Wells																				
MDA-33S	10/18/01	7.00	7.10	6.20	6.90	NA	2.90	2.90	2.90	2.80	NA	17.99	17.08	12.56	13.45	NA	30.00	22.00	360.00	NA
MDA-10SR	10/30/01	8.42	8.82	8.98	9.03	NA	0.53	0.44	0.43	0.43	NA	14.82	14.36	14.16	14.14	NA	9.50	5.10	2.29	0.30
MDA-36S	10/18/01	7.70	7.50	7.20	7.20	NA	1.00	0.98	0.96	0.97	NA	14.89	14.22	14.18	13.92	NA	14.00	8.00	2.00	[illegible]
GM-25S	08/13/01	10.51	10.58	NA	NA	NA	0.00	0.65	NA	NA	NA	19.10	20.00	NA	NA	NA	92.80	34.10	NA	NA
GM-36S	08/14/01	7.27	7.56	7.45	7.41	NA	0.67	0.71	0.77	0.73	NA	16.40	14.80	14.50	14.30	NA	31.80	13.20	17.00	14.00
GM-45S	08/09/01	6.78	7.01	7.05	7.21	NA	2.39	2.64	2.50	2.54	NA	15.70	14.90	15.00	14.90	NA	62.90	6.80	6.10	4.80
GM-46SR	08/09/01	12.28	12.33	12.29	12.31	NA	5.78	5.90	5.94	5.96	NA	22.20	20.70	20.90	20.60	NA	6.30	3.60	3.90	4.00
GM-46SR	10/01/01	12.29	12.37	12.38	12.28	NA	4.99	5.41	5.46	5.47	NA	24.00	22.20	22.00	21.90	NA	15.80	5.80	5.20	1.20
GM-46SR	10/23/01	12.30	12.30	12.30	12.30	NA	4.40	4.50	4.60	4.60	NA	17.20	17.68	17.81	18.41	NA	1.40	0.60	5.20	0.90
GM-46SR	10/17/01	11.89	12.03	12.06	12.08	NA	11.89	12.03	12.06	12.08	NA	20.25	20.30	20.21	19.89	NA	16.00	10.00	12.00	10.00

Field parameters were measured using a Horiba U-22 portable meter

Abbreviations: NR=no reading (meter malfunction); NA=not available or not applicable

ARCADIS GERAGHTY&MILLER

Table 5. Groundwater Interaction Measuring Point Inventory, Soil and Groundwater Investigation Report, Olympic Mill Services Operations Area, AK Steel Corporation, Middletown, Ohio.

Point	ID No.	Type	Location	Purpose	Construction	Construction Date/Remarks
Monroe Ditch						
1	N/A	Staff Stream Gauge	Mounted on 4x4 treated timber attached to culvert pipe at railroad berm over ditch.	Provide for manual measurement of ditch stage for comparison to stage in instrumented stream gauge. Provide for calculation of water elevation	Steel scale graduated in hundredths of feet Screwed to downstream face of timber Timber bolted to 2 cross-pieces Cross-pieces bolted to culvert pipe.	Constructed 8/23/01
2	MDSG-01	Instrumented Stream Gauge	Same as Point 1	Provide measurement of ditch water elevation every 5 minutes, for comparison to groundwater elevations measured at Monitoring Well MDA-09P	In-Situ, Inc mini-Troll standard pressure datalogger set flush with ditch bottom inside solid 2" Sch 40 PVC pipe Pipe attached to east face of treated 4x4 timber with screw clamps. Tip of datalogger cable accessed from top of culvert pipe	Constructed 10/24/01
3	MDSG-02	Instrumented Stream Gauge	Aligned with Monitoring Well MDA-33S	Provide measurement of ditch water elevation every 5 minutes, for comparison to groundwater elevations measured at Monitoring Well MDA-33S.	In-Situ, Inc mini-Troll standard pressure datalogger set flush with ditch bottom inside solid 2" Sch 40 PVC pipe Pipe run along bottom of ditch and up west bank Water-tight, flexible pipe connections Pipes attached to 3/4" x 6' galv steel support pipes with C-clamps Tip of datalogger cable accessed at MDA-33S	Constructed 10/24/01 Damaged by flood of 12/16/02 Repaired the stream gauge 12/20/01 In addition, the datalogger was removed due to malfunctioning. Datalogger was replaced in stream gauge and resurveyed on 1/3/02
4	MDA-33S	Instrumented Monitoring Well	Approx 20 ft west of Monroe Ditch, approx. 800 ft north of MDSG-01.	Provide measurement of groundwater elevation every hour, for comparison to surface water elevations measured at Stream Gauge MDSG-02	Refer to Well Construction log	Well installed 10/01/01 Instrumented 10/24/01
Dick's Creek						
5	DCSG-01	Instrumented Stream Gauge	Location #1 -- approximately 200 ft downstream of OMS Road bridge	Provide measurement of creek water elevation every 5 minutes, for comparison to groundwater elevations measured at Well Point DCWP-01	In-Situ, Inc mini-Troll standard pressure datalogger set flush with creek bottom inside solid 2" Sch 40 PVC pipe Pipe run along bottom of creek and up south bank Water-tight, flexible pipe connections. Pipes attached to 3/4" x 6' galv steel support pipes with C-clamps Tip of datalogger cable accessed from south floodplain	Constructed 8/31/01 Destroyed during flood of 10/22/01 Reconstructed 11/6/01 Damaged during flood of 12/16/01 Reconstructed 12/20/01
6	DCWP-01	Well Point	Same as DCSG-01	Provide manual measurement of groundwater elevation beneath creek for comparison to creek water elevations measured at Stream Gauge DCSG-01	1.25" x 42" long stainless-steel drivepoint with 12"-long, 10-slot screen section Attached to 1.25" x 3' long galv steel blank pipe with male NPT, both ends Galv steel connections 1.25"x2" galv steel reducer and 2" PVC adapter to 2" Sch 40 PVC pipe 2" PVC pipe cap with weepholes	Installed 3-foot well screen in the stream bed on 8/31/01 Constructed PVC [illegible] point and installed datalogger on [illegible] Destroyed during flood of 10/22/01 [illegible] foot well screen in the stream bed on 11/1/01 Screen section approx. 2-3 ft below creek bottom
7	DCSG-02	Staff Stream Gauge	Location #2 -- opposite B Scrap Area, midway between Locs 1 and 3	Provide for manual measurement of creek stage for comparison to stage in wellpoint Provide for calculation of water elevation.	Steel scale graduated in hundredths of feet Attached to wellpoint riser pipe with C-clamps	Same as Stream Gauge DCSG-01

ARCADIS GERAGHTY&MILLER

Table 5. Groundwater Interaction Measuring Point Inventory, Soil and Groundwater Investigation Report, Olympic Mill Services Operations Area, AK Steel Corporation, Middletown, Ohio.

Point	ID No.	Type	Location	Purpose	Construction	Construction Date/Remarks
8	DCWP-02	Well Point	Same as Stream Gauge DCSG-02	Provide manual measurement of groundwater elevation beneath creek for comparison to creek water elevations measured at Stream Gauge DCSG-02.	1.25" x 42" long stainless-steel drivepoint with 12"-long, 10-slot screen section. Attached to 1.25" x 3' long galv steel blank pipe with male NPT, both ends. Galv steel connectors 1.25"x2" galv steel reducer and 2" PVC adapter to 2" Sch 40 PVC pipe 2" PVC pipe cap with weepholes	Same as Well Point DCWP-01
9	DCSG-03	Instrumented Stream Gauge	Location #3 -- approximately 80 ft. downstream of Outfall 002	Provide measurement of creek water elevation every 5 minutes, for comparison to groundwater elevations measured at Well Point DCWP-03	Same as Stream Gauge DCSG-01	Same as Stream Gauge DCSG-01
10	DCWP-03	Well Point	Same as Stream Gauge DCSG-03.	Provide manual measurement of groundwater elevation beneath creek for comparison to creek water elevations measured at Stream Gauge DCSG-03.	Same as Well Point DCWP-01	Same as Well Point DCWP-01
11	DCSG-04	Instrumented Stream Gauge	Location #4 -- approximately 100 ft. upstream of mouth of Monroe Ditch	Provide measurement of creek water elevation every 5 minutes, for comparison to groundwater elevations measured at Well Point DCWP-04	Same as Stream Gauge DCSG-01	Same as Stream Gauge DCSG-01
12	DCWP-04	Well Point	Same as Stream Gauge DCSG-04.	Provide manual measurement of groundwater elevation beneath creek for comparison to creek water elevations measured at Stream Gauge DCSG-04	Same as Well Point DCWP-01	Same as Well Point DCWP-01
OMS Area						
13	MDA-01P	Instrumented Monitoring Well	Approx. 150 ft. east of Monroe Ditch and approx. 800 ft. north of Stream Gauge MDSG-02	Provide measurement of perched groundwater zone water level every hour, for comparison to groundwater elevations measured at Monitoring Well MDA-01S.	Refer to Well Construction log	Well installed 6/12/98. Instrumented 10/08/01
14	MDA-01S	Instrumented Monitoring Well	Same as Monitoring Well MDA-01P	Provide measurement of upper aquifer groundwater water level every hour, for comparison to groundwater elevations measured at Monitoring Well MDA-01P.	Refer to Well Construction log.	Well installed 6/11/98. Instrumented 10/08/01
15	MDA-09P	Instrumented Monitoring Well	Approx. 150 ft. east of Monroe Ditch and approx. 50 ft. north of Stream Gauge MDSG-01.	Provide measurement of perched groundwater zone water level every hour, for comparison to groundwater elevations measured at Stream Gauge MDSG-01	Refer to Well Construction log	Well installed 6/22/98. Instrumented 10/08/01

PVC - Polyvinyl chloride
NPT - National Pipe Thread

Table 6. Permeability Test Results, Soil and Groundwater Investigation Report, Olympic Mill Services Operations Area, AK Steel Corporation, Middletown, Ohio.

Well	Well Type	Bouwer-Rice Method Falling Head K (cm/sec)	Bouwer-Rice Method Rising Head K (cm/sec)	Hvorslev Method Falling Head K (cm/sec)	Hvorslev Method Rising Head K (cm/sec)	Average K (cm/sec)	Soil Type in Screened Interval
MDA-03P	Perched GW Zone	---	1.6×10^{-3}	---	3.8×10^{-3}	2.7×10^{-3}	Silt/Clay (70%) with Sand (20%) and Gravel (10%)
MDA-23P	Perched GW Zone	3.0×10^{-2}	4.5×10^{-2}	4.4×10^{-2}	8.4×10^{-2}	5.1×10^{-2}	Sand 60%; Gravel 30% and Silt/Clay 80%; Sand 10%; Gravel 10%
MDA-25P	Perched GW Zone	1.2×10^{-1}	1.0×10^{-1}	1.3×10^{-1}	1.1×10^{-1}	1.1×10^{-1}	Gravel (60%) with Fine-Med. Sand (30%) and Silt/Clay (10%)
Geometric mean						2.5×10^{-2}	
MDA-08S	Upper Aquifer	8.217×10^{-3}	9.797×10^{-3}	1.135×10^{-2}	1.4×10^{-2}	2.1×10^{-2}	Fine-Coarse Gravel (60%) with Fine-Med. Sand (30%) and Silt/Clay (10%)
MDA-15S	Upper Aquifer	4.348×10^{-3}	3.777×10^{-3}	4.245×10^{-3}	4.1×10^{-3}	4.1×10^{-3}	Fine-Med. Sand (50%) with Fine-Med. Gravel (30%) and Silt/Clay (20%)
Geometric mean						9.2×10^{-3}	

Testing performed on October 22, 2001.
Falling Head Test could not be conducted at Monitoring Well MDA-03P because static water level below top of screened interval.
K (cm/sec) - hydraulic conductivity, in centimeters per second.

Table 7. Data from Surveys Performed October 2001 through January 2002, Soil and Groundwater Investigation Report, Olympic Mill Services Operations Area, AK Steel Corporation, Middletown, Ohio.

Location No.	Location ID (Surveyor)	Location ID (ARCADIS)	Location Description	Northing	Easting	G.S. Elev.	Ref. Pt. Elev.	Remarks
1	MDA-01P	MDA-01P	Existing Perched Zone Well	541243.51	1435168.27	653.75	656.14	Installed 6/11/98
2	---	---	Tip of Datalogger in Existing Well MDA-01P	541243.51	1435168.27	653.75	637.64	---
3	MDA-01S	MDA-01S	Existing Upper Aquifer Well	541249.38	1435161.26	653.58	655.94	Installed 6/11/98
4	---	---	Tip of Datalogger in Existing Well MDA-01S	541249.38	1435161.26	653.58	627.94	---
5	MDA-02S	MDA-02S	Existing Upper Aquifer Well	541729.78	1435374.18	653.81	655.41	Installed 6/15/98
6	MDA-03P	MDA-03P	Existing Perched Zone Well	540683.68	1435235.12	654.41	656.57	Installed 6/15/98
7	MDA-03S	MDA-03S	Existing Upper Aquifer Well	540695.07	1435235.51	654.56	656.70	Installed 6/15/98
8	MDA-08P	MDA-08P	Existing Perched Zone Well	540427.75	1435245.30	656.98	659.19	Installed 6/17/98
9	MDA-08S	MDA-08S	Existing Upper Aquifer Well	540434.00	1435245.73	656.89	659.12	Installed 6/17/98
10	MDA-09P	MDA-09P	Existing Perched Zone Well	539977.42	1435198.14	653.26	655.64	Installed 6/22/98
11	---	---	Tip of Datalogger in Existing Well MDA-09P	539977.42	1435198.14	653.26	643.14	---
12	MDA-09S	MDA-09S	Existing Upper Aquifer Well	539978.11	1435191.39	653.01	655.40	Installed 6/22/98
13	MDA-14S	MDA-14S	Existing Shallow Groundwater Zone Well	540100.97	1436854.62	663.88	666.15	Installed 6/24/98
14	MDA-15S	MDA-15S	Existing Upper Aquifer Well	540247.60	1437088.26	667.39	669.45	Installed 6/24/98
15	MDA-16SR	MDA-16SR	New Replacement Shallow Groundwater Zone Well	540364.72	1437375.79	667.08	669.46	Original well MDA-16S installed in 6/98. Damaged at unknown date. Abandoned and replaced with MDA-16SR on 10/8/01.
16	MDA-17S	MDA-17S	New Shallow Groundwater Zone Well	540129.78	1437175.67	671.29	673.64	Installed 6/25/98
17	MDA-18S	MDA-18S	Existing Upper Aquifer Well	540967.24	1437177.64	652.21	654.35	Installed 6/25/98
18	MDA-19P	MDA-19P	Existing Perched Zone Well	540316.78	1436718.50	666.67	668.19	Installed 6/26/98
19	MDA-22PR	MDA-22PR	Replacement Perched Zone Well	541198.85	1435775.99	658.25	660.89	Original well MDA-22P installed in 6/98. Could not be found in 2001. Reportedly destroyed. Replaced with MDA-22PR on 10/23/01.
20	MDA-23P	MDA-23P	New Perched Zone Well	540982.68	1435313.4	650.84	652.91	Installed 6/29/98
21	MDA-23S	MDA-23S	New Upper Aquifer Well	540988.2	1435312.53	650.91	653.19	Installed 9/26/01
22	MDA-24PR	MDA-24PR	Replacement Perched Zone Well	540322.85	1435985.12	666.19	668.67	Original well MDA-24P installed in 6/98. Could not be found in 2001. Reportedly destroyed. Replaced with MDA-24PR on 10/23/01.
23	MDA-25P	MDA-25P	Existing Perched Zone Well	539965.19	1436080.11	653.75	656.36	Installed 6/30/98
24	MDA-26S	MDA-26S	Existing Upper Aquifer Well	542020.92	1435684.77	647.25	650.12	Installed 8/28/00
25	MDA-27P	MDA-27P	New Perched Zone Well	541905.15	1436391.82	651.76	654.77	Installed 7/3/01
26	MDA-27S	MDA-27S	Existing Upper Aquifer Well	541966.90	1436234.05	651.12	653.96	Installed 8/28/00
27	MDA-28S	MDA-28S	Existing Upper Aquifer Well	541617.64	1436776.02	651.66	651.28	Installed 8/28/00
28	GM-29S	GM-29S	Existing Upper Aquifer Well	539769.29	1434454.04	651.97	653.51	Installed 6/21/88
29	MDA-29S	MDA-29S	New Upper Aquifer Well	542059.88	1436110.87	650.80	653.69	Installed 7/2/01
30	MDA-30S	MDA-30S	New Shallow Groundwater Zone Well	540736.17	1434043.68	655.82	658.17	Installed 10/2/01
31	GM-30S	GM-30S	Existing Upper Aquifer Well	541102.82	1438322.21	654.05	655.71	Installed 6/22/88
32	MDA-31S	MDA-31S	New Upper Aquifer Well	Pending	Pending	Pending	Pending	Well not yet installed because of presence of explosive gases in borehole. Well will be installed when LEL and CH4 levels are safe.
33	MDA-32S	MDA-32S	New Shallow Groundwater Zone Well	540140.05	1437088.62	669.05	671.69	Installed 9/14/01
34	MDA-33S	MDA-33S	New Upper Aquifer Well	540600.41	1435113.15	641.83	644.92	Installed 10/1/01
35	---	---	Tip of Datalogger in New Well MDA-33P	540600.41	1435113.15	641.83	632.40	Datalogger relocated to this well when landfill gas encountered at MDA-35SR
36	MDA-34P	MDA-34P	New Perched Zone Well	540954.77	1435135.34	643.33	645.69	Installed 10/1/01
37	MDA-35SR	MDA-35SR	New Upper Aquifer Well	541591.15	1434188.64	651.53	654.18	Installed 9/28/01
38	GM-35S	GM-35S	Existing Upper Aquifer Well	539969.58	1436047.99	653.92	654.81	Installed 6/28/88
39	MDA-36S	MDA-36S	New Upper Aquifer Well	542251.73	1434247.72	648.65	651.39	Installed 10/4/01
40	GM-36S	GM-36S	Existing Upper Aquifer Well	541071.31	1434051.24	654.46	656.64	Installed 6/28/88
41	GM-45S	GM-45S	Existing Upper Aquifer Well	541519.54	1434991.09	647.56	649.63	Installed 7/11/88
42	GM-46SR	GM-46SR	Existing Upper Aquifer Well	541968.70	1436225.90	650.98	654.79	Installed 10/29/97
43	BH-02S-N	MS1-03	New Boring	541826.48	1435392.13	651.60		Completed 9/17/01. Abandoned on day of completion. Borehole filled with grout. Location surveyed by Van Atta Engineering.
44	BH-02S-F	MS1-04	New Boring	541811.24	1435584.98	651.35		Completed 9/18/01. Abandoned on day of completion. Borehole filled with grout. Location surveyed by Van Atta Engineering.
45	BH-02S-S	MS1-01	New Boring	541534.03	1435293.17	655.46		Completed 9/17/01. Abandoned on day of completion. Borehole filled with grout. Location surveyed by Van Atta Engineering.

Table 7. Data from Surveys Performed October 2001 through January 2002, Soil and Groundwater Investigation Report, Olympic Mill Services Operations Area, AK Steel Corporation, Middletown, Ohio.

Location No.	Location ID (Surveyor)	Location ID (ARCADIS)	Location Description	Northing	Easting	G.S. Elev.	Ref. Pt. Elev.	Remarks
46	BH-02S-W	M51-02	New Boring	541744.07	1435288.98	653.97		Completed 9/17/01. Abandoned on day of completion. Borehole filled with grout. Location surveyed by Van Atta Engineering.
47	BH-CTRPOND	BH15-03	New Boring	540198.09	1437251.80	672.38		Completed 9/13/01. Abandoned on day of completion. Borehole filled with grout. Location surveyed by Van Atta Engineering.
48	BH-EFOND	BH15-02	New Boring	540235.98	1437402.11	678.13		Completed 9/13/01. Abandoned on day of completion. Borehole filled with grout. Location surveyed by Van Atta Engineering.
49	BH-BLDG-W	COMP-1	New Boring	540272.26	1436724.38	664.73		Completed 9/20/01. Abandoned on day of completion. Borehole filled with grout. Location surveyed by Van Atta Engineering.
50	BH-BLDG-E	COMP-2	New Boring	540264.21	1436788.76	664.49		Completed 9/20/01. Abandoned on day of completion. Borehole filled with grout. Location surveyed by Van Atta Engineering.
51	BH-FDP-W	BH15-06	New Boring	540028.88	1437015.51	663.54		Completed 9/21/01. Abandoned on day of completion. Borehole filled with grout. Location surveyed by Van Atta Engineering.
52	BH-FDP-E	BH15-05	New Boring	540077.25	1437077.44	664.02		Completed 9/21/01. Abandoned on day of completion. Borehole filled with grout. Location surveyed by Van Atta Engineering.
53	BH-BH13-N	BH13-04	New Boring	540226.90	1436170.43	676.65		Completed 9/25/01. Abandoned on day of completion. Borehole filled with grout. Location surveyed by Van Atta Engineering.
54	BH-BH13-W	BH13-01	New Boring	540176.26	1436162.34	667.5		Completed 9/20/01. Abandoned on day of completion. Borehole filled with grout. Location surveyed by Van Atta Engineering.
55	BH-BH13SSO-N	BH13-02	New Boring	540174.86	1436197.99	666.10		Completed 9/20/01. Abandoned on day of completion. Borehole filled with grout. Location surveyed by Van Atta Engineering.
56	BH-BH13SSO-W	BH13-03	New Boring	540140.09	1436179.02	666.55		Completed 9/21/01. Abandoned on day of completion. Borehole filled with grout. Location surveyed by Van Atta Engineering.
57	BH-BH07-N	BH07-01	New Boring	540226.76	1435229.43	657.18		Completed 9/19/01. Abandoned on day of completion. Borehole filled with grout. Location surveyed by Van Atta Engineering.
58	BH-BH07SSO-SW	BH07-02	New Boring	540173.82	1435199.64	651.56		Completed 9/25/01. Abandoned on day of completion. Borehole filled with grout. Location surveyed by Van Atta Engineering.
59	BH-BH08-N	BH08-01	New Boring	540459.36	1435252.66	656.59		Completed 9/18/01. Abandoned on day of completion. Borehole filled with grout. Location surveyed by Van Atta Engineering.
60	BH-BH08-A	BH08-01A	New Boring	540467.59	1435252.70	656.46		Completed 9/18/01. Abandoned on day of completion. Borehole filled with grout. Location surveyed by Van Atta Engineering.
61	BH-BH08-W	BH08-03	New Boring	540428.28	1435220.18	651.80		Completed 9/25/01. Abandoned on day of completion. Borehole filled with grout. Location surveyed by Van Atta Engineering.
62	BH-BH08-S	BH08-02	New Boring	540403.55	1435249.73	656.95		Completed 9/18/01. Abandoned on day of completion. Borehole filled with grout. Location surveyed by Van Atta Engineering.
63	BH-BH15-W	BH15-01	New Boring	540166.51	1436944.30	666.72		Completed 9/13/01. Abandoned on day of completion. Borehole filled with grout. Location surveyed by Van Atta Engineering.
64	BH-BH15-NW	BH15-04	New Boring	540299.54	1436990.39	666.52		Completed 9/14/01. Abandoned on day of completion. Borehole filled with grout. Location surveyed by Van Atta Engineering.
65	BH-BH15-NE	BH15-07	New Boring	540290.61	1437148.34	667.44		Completed 10/5/01. Abandoned on day of completion. Borehole filled with grout. Location surveyed by Van Atta Engineering.
66	BH-SS01-W	SS01-01	New Boring	539970.64	1436041.71	653.17		Completed 9/20/01. Abandoned on day of completion. Borehole filled with grout. Location surveyed by Van Atta Engineering.
67	BH-SS01-S	SS01-02	New Boring	539959.93	1436050.23	653.92		Completed 9/20/01. Abandoned on day of completion. Borehole filled with grout. Location surveyed by Van Atta Engineering.
68	BH-SS01-E	SS01-03	New Boring	539972.54	1436060.61	653.59		Completed 9/20/01. Abandoned on day of completion. Borehole filled with grout. Location surveyed by Van Atta Engineering.
69	PH-PUMP BASE	PH-Pump Base	Pumphouse -- Lower Level -- Pump Base	542074.03	1436030.16	634.20		Surveyed by Van Atta Engineering. Survey location only. Not an exploration location.
70	PH-TOP GRATE	PH-Top Grate	Pumphouse -- Lower Level -- Top of Btm Grate	542077.03	1436036.80	639.80		Surveyed by Van Atta Engineering. Survey location only. Not an exploration location.
71	PH-TOP SLAB	PH-Top Slab	Pumphouse -- 1st Floor Slab	542071.07	1436026.50	648.33		Surveyed by Van Atta Engineering. Survey location only. Not an exploration location.
72	Terrace-DC1-Top	Terrace-DC1-Top	Top of Stake -- DC#1 Terrace	541991.40	1438778.50		637.28	Stake set by ARCADIS on floodplain for future re-surveying of stream gauge and/or wellpoint at this location. Top of stake surveyed by Van Atta Engineering.

Table 7. Data from Surveys Performed October 2001 through January 2002, Soil and Groundwater Investigation Report, Olympic Mill Services Operations Area, AK Steel Corporation, Middletown, Ohio.

Location No.	Location ID (Surveyor)	Location ID (ARCADIS)	Location Description	Northing	Easting	G.S. Elev.	Ref. Pt. Elev.	Remarks
73	Terrace-DC1-GS	Terrace-DC1-GS	GS -- Stake at DC#1 Terrace	541991.46	1438778.57	635.11		Stake set by ARCADIS on floodplain for future re-surveying of stream gauge and/or wellpoint at this location. Ground surface adjacent to stake surveyed by Van Atta Engineering
74	Bank @ DC-1-Top	Bank @ DC-1-Top	Top of Stake -- DC#1 Bank	541933.49	1438799.78		645.67	Stake set by ARCADIS on road along north bank of creek for future re-surveying of stream gauge and/or wellpoint at this location. Top of stake surveyed by Van Atta Engineering
75	Bank @ DC-1-GS	Bank @ DC-1-GS	GS -- Stake at DC#1 Bank	541933.78	1438799.69	642.50		Stake set by ARCADIS on road along north bank of creek for future re-surveying of stream gauge and/or wellpoint at this location. Ground surface adjacent to stake surveyed by Van Atta Engineering.
76	Terrace-DC2-Top	Terrace-DC2-Top	Top of Stake -- DC#2 Terrace	541676.26	1436963.97		634.25	Stake set by ARCADIS on floodplain for future re-surveying of stream gauge and/or wellpoint at this location. Top of stake surveyed by Van Atta Engineering.
77	Terrace-DC2-GS	Terrace-DC2-GS	GS -- Stake at DC#2 Terrace	541676.35	1436964.03	632.13		Stake set by ARCADIS on floodplain for future re-surveying of stream gauge and/or wellpoint at this location. Ground surface adjacent to stake surveyed by Van Atta Engineering.
78	Bank @ DC-2-Top	Bank @ DC-2-Top	Top of Stake -- DC#2 Bank	541731.78	1436999.25		645.57	Stake set by ARCADIS on road along north bank of creek for future re-surveying of stream gauge and/or wellpoint at this location. Top of stake surveyed by Van Atta Engineering
79	Bank @ DC-2-GS	Bank @ DC-2-GS	GS -- Stake at DC#2 Bank	541731.81	1436999.34	643.05		Stake set by ARCADIS on road along north bank of creek for future re-surveying of stream gauge and/or wellpoint at this location. Ground surface adjacent to stake surveyed by Van Atta Engineering.
80	Terrace-DC3-Top	Terrace-DC3-Top	Top of Stake -- DC#3 Terrace	542253.98	1435932.65		633.77	Stake set by ARCADIS on floodplain for future re-surveying of stream gauge and/or wellpoint at this location. Top of stake surveyed by Van Atta Engineering
81	Terrace-DC3-GS	Terrace-DC3-GS	GS -- Stake at DC#3 Terrace	542254.14	1435932.64	631.38		Stake set by ARCADIS on floodplain for future re-surveying of stream gauge and/or wellpoint at this location. Ground surface adjacent to stake surveyed by Van Atta Engineering
82	Bank @ DC-3-Top	Bank @ DC-3-Top	Top of Stake -- DC#3 Bank	542307.65	1435941.23		640.84	Stake set by ARCADIS on road along north bank of creek for future re-surveying of stream gauge and/or wellpoint at this location. Top of stake surveyed by Van Atta Engineering
83	Bank @ DC-3-GS	Bank @ DC-3-GS	GS -- Stake at DC#3 Bank	542307.87	1435941.29	637.79		Stake set by ARCADIS on road along north bank of creek for future re-surveying of stream gauge and/or wellpoint at this location. Ground surface adjacent to stake surveyed by Van Atta Engineering.
84	Terrace-DC4-Top	Terrace-DC4-Top	Top of Stake -- DC#4 Terrace	542441.53	1434117.49		632.38	Stake set by ARCADIS on floodplain for future re-surveying of stream gauge and/or wellpoint at this location. Top of stake surveyed by Van Atta Engineering
85	Terrace-DC4-GS	Terrace-DC4-GS	GS -- Stake at DC#4 Terrace	542441.61	1434117.70	630.07		Stake set by ARCADIS on floodplain for future re-surveying of stream gauge and/or wellpoint at this location. Ground surface adjacent to stake surveyed by Van Atta Engineering
86	Bank @ DC-4-Top	Bank @ DC-4-Top	Top of Stake -- DC#4 Bank	542470.00	1434107.5		638.37	Stake set by ARCADIS on road along north bank of creek for future re-surveying of stream gauge and/or wellpoint at this location. Top of stake surveyed by Van Atta Engineering
87	Bank @ DC-4-GS	Bank @ DC-4-GS	GS -- Stake at DC#4 Bank	542469.90	1434107.71	635.12		Stake set by ARCADIS on road along north bank of creek for future re-surveying of stream gauge and/or wellpoint at this location. Ground surface adjacent to stake surveyed by Van Atta Engineering.
88	MD1-B	MDSG-01-B	Top of Bracket at MDSG-01	539966.20	1435060.50		642.14	Bracket set at 5.00 ft. mark on staff gauge mounted to 4x4 timber
89	MD1-PVC-INV	MDSG-01	Tip of Datalogger at MDSG-01	539966.36	1435060.80		637.18	Datalogger inside 2" PVC pipe mounted to side of 4x4 timber
90	MD2-PVC-INV	MDSG-02	Tip of Datalogger at MDSG-02	540598.04	1435136.40		634.80	Stream gauge relocated to this location when landfill gas encountered at MDA-355R
91	DC-1-WP	DCWP-01	Top of 2" PVC Pipe (cap off)	542049.89	1438766.69		633.01	X, Y originally surveyed by Van Atta Engineering. Wellpoint then destroyed by flood on 10/22/01. Reconstructed later within 3 ft. of original -- therefore, X,Y not re-surveyed. Z later surveyed by ARCADIS on reconstructed wellpoint, relative to "Terrace-DC1-Top". Z later re-surveyed after flood of 12/16-18/01 relative to "Terrace-DC1-Top".

Table 7. Data from Surveys Performed October 2001 through January 2002, Soil and Groundwater Investigation Report, Olympic Mill Services Operations Area, AK Steel Corporation, Middletown, Ohio.

Location No.	Location ID (Surveyor)	Location ID (ARCADIS)	Location Description	Northing	Easting	G.S. Elev.	Ref. Pt. Elev.	Remarks
92	DC-1-SG	DCSG-01	Tip of Datalogger at DCSG-01	542052.26	1438766.08		629.10	X, Y originally surveyed by Van Atta Engineering. Wellpoint then destroyed by flood on 10/22/01. Reconstructed later within 3 ft. of original -- therefore, X,Y not re-surveyed. Z later surveyed by ARCADIS on reconstructed wellpoint, relative to "Terrace-DC1-Top". Z later re-surveyed after flood of 12/16-18/01 relative to "Terrace-DC1-Top".
93	DC-2-WP	DCWP-02	Top of 2" PVC Pipe (cap off)	541620.64	1436927.29		630.69	Same as DCWP-01, but surveyed by ARCADIS relative to "Terrace-DC2-Top"
94	DC-2-SG	DCSG-02	Staff Stream Gauge at DC#2 (same as Location 93)	541620.64	1436927.29		630.69	At this location, stream gauge is a staff gauge mounted to DCWP-02. Thus, same X,Y,Z for DCWP-02 and DCSG-02. Piping destroyed by flood of 10/22/01 and reconstructed in 11/01 at same location. Piping re-surveyed following flood of 12/16-18/01
95	DC-3-WP	DCWP-03	Top of 2" PVC Pipe (cap off)	542187.65	1435928.31		631.32	Same as DCWP-01, but re-surveyed by ARCADIS relative to "Terrace-DC3-Top"
96	DC-3-SG	DCSG-03	Tip of Datalogger at DCSG-03	542192.85	1435929.57		626.99	Same as DCSG-01, but re-surveyed by ARCADIS relative to "Terrace-DC3-Top"
97	DC-4-WP	DCWP-04	Top of 2" PVC Pipe (cap off)	542399.47	143142.05		630.80	Same as DCWP-01, but re-surveyed by ARCADIS relative to "Terrace-DC4-Top"
98	DC-4-SG	DCSG-04	Tip of Datalogger at DCSG-04	542401.79	1434142.36		626.46	Same as DCSG-01, but re-surveyed by ARCADIS relative to "Terrace-DC4-Top"

All points surveyed by Van Atta Engineering, Inc. of Centerville, Ohio in October-November, 2001. Coordinate System = 1983 State Plane Lambert. Datum = NAD 83. Benchmarks = Warren Co. GPS 104 (elev. 675.22) and GPS 107 (elev. 765.66). Points 95 through 100 were subsequently re-surveyed by ARCADIS in December 2001 and January 2002.

Table 8. Vertical Gradient Calculations, Soil and Groundwater Investigation Report, Olympic Mill Services Operations Area, AK Steel Corporation, Middletown, Ohio.

Input Data

Upper Aquifer Wells					Perched Groundwater Zone Wells				
Well ID	(1) Elevation of Top of Screen (ft.)	(2) Elevation of Bottom of Screen (ft.)	(3) Groundwater Elevation (ft.)	(4) Elevation of Midpoint of Saturated Portion of Screen (ft.)	Well ID	(5) Elevation of Top of Screen (ft.)	(6) Elevation of Bottom of Screen (ft.)	(7) Groundwater Elevation (ft.)	(8) Elevation of Midpoint of Saturated Portion of Screen (ft.)
MDA-01S	632.58	627.58	635.63	630.08	MDA-01P	647.75	637.75	639.56	638.66
MDA-03S	634.56	629.56	639.40	632.06	MDA-03P	648.41	638.41	642.27	640.34
MDA-08S	635.89	630.89	637.27	633.39	MDA-08P	647.98	637.98	645.56	641.77
MDA-09S	637.01	632.01	639.69	635.85	MDA-09P	647.26	642.26	647.94	644.76
MDA-23S	636.41	631.41	641.05	633.91	MDA-23P	643.18	638.18	644.40	640.68
MDA-27S	636.12	626.12	639.48	631.12	MDA-27P	---	---	Dry	---
GM-35S	639.52	629.52	646.95	634.52	MDA-25P	650.25	645.25	651.59	647.75

Calculations

Formula: i_v = (3) - (7) / (4) - (8)

Interpretation: Positive value indicates downward vertical gradient.
Negative value indicates upward vertical gradient.

Well Cluster ID	(3) - (7)	(4) - (8)	i_v	Interpretation
MDA-01S / 01P	-3.93	-8.57	0.46	Downward i_v
MDA-03S / 03P	-2.87	-8.28	0.35	Downward i_v
MDA-08S / 08P	-8.29	-8.38	0.99	Downward i_v
MDA-09S / 09P	-8.25	-8.91	0.93	Downward i_v
MDA-23S / 23P	-3.35	-6.77	0.49	Downward i_v
GM-35S / 25P	-4.64	-13.23	0.35	Downward i_v

Water-level measurements collected December 4, 2001.
i_v=vertical hydraulic graident.

Table 9. Summary of Data Qualifiers, Soil and Groundwater Investigation Report, Olympic Mill Services Operations Area, AK Steel Corporation, Middletown, Ohio.

Qualifier	Description
D	Result is from a secondary dilution.
DJ	Validated estimate, result if from a secondary dilution.
J	Estimated value.
N	Presumptive evidence of a compound.
NJ	Validated estimate, presumptive evidence of a compound.
P	The Relative Percent Difference is greater than 40% for detected concentrations between the two High Performance Liquid Chromatography detectors.
R	The result is validated as unusable.
U	Indicates the compound was analyzed but not detected.
UJ	Validated estimate, indicates the compound was analyzed but not detected.
UR	Indicates the compound was analyzed but not detected, validated as unusable.
UYZ	Indicates the compound was analyzed but not detected with laboratory defined flags.
UY	Indicates the compound was analyzed but not detected with a laboratory defined flag.
UZ	Indicates the compound was analyzed but not detected with a laboratory defined flag.

ARCADIS

Table 10. Summary Statistics for Pre-2001 Surface Soil Samples, Soil and Groundwater Investigation Report, Olympic Mill Services Operations Area, AK Steel Corporation, Middletown, Ohio.

Compound Name	Range of Detects	Arithmetic Mean	Standard Deviation	Frequency of Detection	Frequency of Detection %
Total Metals					
Aluminum, Total	2570 - 19300	10658.24	4089.2	34 / 34	100%
Cadmium, Total	0.14 - 6.41	0.63	1.05	30 / 34	88%
Chromium, Total	18.8 - 1090	426.29	344.24	34 / 34	100%
Copper, Total	15.3 - 108	40.15	22.22	34 / 34	100%
Iron, Total	14800 - 496000	145141.18	129724.2	34 / 34	100%
Lead, Total	5.26 - 522	49.70	89.01	34 / 34	100%
Nickel, Total	13.5 - 201	40.29	36.13	34 / 34	100%
Silver, Total	0.06 - 3.15	0.51	0.64	34 / 34	100%
Zinc, Total	58 - 3930	360.83	651.83	34 / 34	100%
PAHs					
2-Methylnaphthalene	0.043 - 2.1	0.532	0.64	3 / 32	9%
Acenaphthene	-	0.502	0.60	0 / 34	0%
Acenaphthylene	0.028 - 0.19	0.451	0.62	9 / 34	26%
Anthracene	0.027 - 0.32	0.453	0.62	11 / 34	32%
Benzo(a)anthracene	0.035 - 1.2	0.459	0.52	22 / 34	65%
Benzo(a)pyrene	0.032 - 1.2	0.579	0.61	21 / 34	62%
Benzo(b)fluoranthene	0.033 - 1.5	0.564	0.58	22 / 34	65%
Benzo(g,h,i)perylene	0.03 - 1.2	0.579	0.60	20 / 34	59%
Benzo(k)fluoranthene	0.03 - 1.2	0.557	0.61	17 / 34	50%
Chrysene	0.03 - 1.4	0.425	0.45	25 / 34	74%
Dibenzo(a,h)anthracene	0.067 - 0.3	0.500	0.60	8 / 34	24%
Fluoranthene	0.049 - 2.5	0.572	0.61	22 / 34	65%
Fluorene	-	0.504	0.60	0 / 34	0%
Indeno(1,2,3-cd)pyrene	0.091 - 1.5	0.593	0.60	13 / 34	38%
Naphthalene	0.029 - 0.19	0.481	0.61	6 / 34	18%
Phenanthrene	0.036 - 1.7	0.409	0.54	23 / 34	68%
Pyrene	0.092 - 2.6	0.667	0.69	17 / 34	50%
PCBs					
Aroclor-1016	-	0.138	0.11	0 / 71	0%
Aroclor-1221	-	0.157	0.11	0 / 71	0%
Aroclor-1232	-	0.138	0.11	0 / 71	0%
Aroclor-1242	0.17 - 0.17	0.141	0.11	1 / 71	1%
Aroclor-1248	0.031 - 39	1.105	4.73	31 / 71	44%
Aroclor-1254	0.03 - 4.2	0.291	0.63	11 / 71	15%
Aroclor-1260	0.019 - 1.5	0.181	0.22	7 / 71	10%
Aroclor-1268	0.81 - 0.81	0.062	0.14	1 / 32	3%
Decachlorobiphenyl	-	0.010	0.00	0 / 3	0%
Dichlorobiphenyl	0.00089 - 0.0068	0.003	0.00	2 / 3	67%
Heptachlorobiphenyl	0.0021 - 0.0021	0.005	0.00	1 / 3	33%
Hexachlorobiphenyl	0.0027 - 0.01	0.006	0.00	2 / 3	67%
Monochlorobiphenyl	-	0.002	0.00	0 / 3	0%
Nonachlorobiphenyl	-	0.010	0.00	0 / 3	0%
Octachlorobiphenyl	-	0.006	0.00	0 / 3	0%
Pentachlorobiphenyl	0.077 - 0.18	0.087	0.09	2 / 3	67%
Tetrachlorobiphenyl	0.0099 - 0.29	0.143	0.14	3 / 3	100%
Trichlorobiphenyl	0.027 - 0.11	0.046	0.06	2 / 3	67%
Total PCBs	0.031 - 39	1.270	4.90	34 / 72	47%
Total Organic Carbon (TOC)					
Total Organic Carbon	4900 - 130000	21755.26	21156.02	38 / 38	100%

Units are milligrams per kilogram (mg/kg).
J - Estimated.
PCBs - Polychlorinated Biphenyl
PAHs - Polycyclic Aromatic Hydrocarbon

ARCADIS

Table 11. Summary Statistics for PCBs in 2001 Surface Soil Samples, Soil and Groundwater Investigation Report, Olympic Mill Services Operations Area, AK Steel Corporation, Middletown, Ohio.

Compound Name	Range of Detects	Arithmetic Mean	Standard Deviation	Frequency of Detection	Frequency of Detection %
PCBs					
Aroclor-1016	-	0.038	0.05	0 / 34	0%
Aroclor-1221	-	0.078	0.10	0 / 34	0%
Aroclor-1232	-	0.038	0.05	0 / 34	0%
Aroclor-1242	0.17 - 0.17	0.043	0.05	1 / 34	3%
Aroclor-1248	0.06 - 8	0.762	1.78	20 / 34	59%
Aroclor-1254	0.03 - 4.2	0.357	0.91	11 / 34	32%
Aroclor-1260	0.062 - 1.5	0.128	0.30	6 / 34	18%
Aroclor-1268	0.81 - 0.81	0.0621	0.14	1 / 32	3%
Decachlorobiphenyl	-	0.0093	0.00	0 / 2	0%
Dichlorobiphenyl	0.00089 - 0.0068	0.0038	0.00	2 / 2	100%
Heptachlorobiphenyl	0.0021 - 0.0021	0.0038	0.00	1 / 2	50%
Hexachlorobiphenyl	0.0027 - 0.01	0.0064	0.01	2 / 2	100%
Monochlorobiphenyl	-	0.0019	0.00	0 / 2	0%
Nonachlorobiphenyl	-	0.0093	0.00	0 / 2	0%
Octachlorobiphenyl	-	0.0055	0.00	0 / 2	0%
Pentachlorobiphenyl	0.077 - 0.18	0.129	0.07	2 / 2	100%
Tetrachlorobiphenyl	0.13 - 0.29	0.21	0.11	2 / 2	100%
Trichlorobiphenyl	0.027 - 0.11	0.069	0.06	2 / 2	100%
Total PCBs	0.065 - 11.57	1.16	2.75	22 / 34	65%

Units are milligrams per kilograms (mg/kg).
PCBs - Polychlorinated Biphenyl.

ARCADIS

Table 12. Summary Statistics for Subsurface Soil Samples, Soil and Groundwater Investigation Report, Olympic Mill Services Operations Area, AK Steel Corporation, Middletown, Ohio.

Compound Name	Range of Detects	Arithmetic Mean	Standard Deviation	Frequency of Detection	Frequency of Detection %
Total Metals					
Aluminum, Total	598 - 19900	10530.91	4301.80	80 / 80	100%
Cadmium, Total	0.07 - 54.5	1.18	6.14	76 / 80	95%
Chromium, Total	3.4 - 1480	244.94	378.46	80 / 80	100%
Copper, Total	6.8 - 539	30.67	60.53	80 / 80	100%
Iron, Total	7490 - 345000	55900.50	61154.05	80 / 80	100%
Lead, Total	3.56 - 2710	84.96	341.09	80 / 80	100%
Nickel, Total	8.4 - 181	20.89	19.48	80 / 80	100%
Silver, Total	0.02 - 10.9	0.35	1.27	78 / 80	98%
Zinc, Total	20.6 - 87700	1409.82	9819.78	80 / 80	100%
PAHs					
2-Methylnaphthalene	0.042 - 52	1.513	6.23	28 / 74	38%
Acenaphthene	0.058 - 6.4	0.477	1.04	18 / 80	23%
Acenaphthylene	0.033 - 14	0.702	1.81	22 / 80	28%
Anthracene	0.036 - 17	0.814	2.35	31 / 80	39%
Benzo(a)anthracene	0.024 - 13	0.902	1.99	36 / 80	45%
Benzo(a)pyrene	0.037 - 8.7	0.821	1.57	37 / 80	46%
Benzo(b)fluoranthene	0.029 - 7.7	0.761	1.36	36 / 80	45%
Benzo(g,h,i)perylene	0.032 - 6.5	0.598	1.06	41 / 80	51%
Benzo(k)fluoranthene	0.039 - 7.5	0.723	1.31	36 / 80	45%
Chrysene	0.028 - 12	0.902	1.89	40 / 80	50%
Dibenzo(a,h)anthracene	0.079 - 1.7	0.503	0.90	16 / 80	20%
Fluoranthene	0.042 - 46	2.054	6.40	39 / 80	49%
Fluorene	0.065 - 170	3.885	19.37	31 / 80	39%
Indeno(1,2,3-cd)pyrene	0.09 - 6	0.719	1.21	26 / 80	33%
Naphthalene	0.03 - 77	2.302	10.26	33 / 80	41%
Phenanthrene	0.023 - 76	2.723	10.15	47 / 80	59%
Pyrene	0.086 - 30	1.634	4.50	35 / 80	44%
PCBs					
Aroclor-1016	-	0.243	0.91	0 / 151	0%
Aroclor-1221	-	0.287	0.93	0 / 151	0%
Aroclor-1232	-	0.243	0.91	0 / 151	0%
Aroclor-1242	0.012 - 49	1.025	4.73	19 / 151	13%
Aroclor-1248	0.01 - 288	4.001	24.68	62 / 151	41%
Aroclor-1254	0.011 - 8.4	0.335	1.15	12 / 151	8%
Aroclor-1260	0.011 - 2.1	0.296	0.94	26 / 151	17%
Aroclor-1268	-	0.086	0.18	0 / 74	0%
Decachlorobiphenyl	-	0.373	0.88	0 / 10	0%
Dichlorobiphenyl	0.01 - 1.3	0.165	0.40	3 / 10	30%
Heptachlorobiphenyl	-	0.225	0.53	0 / 10	0%
Hexachlorobiphenyl	0.0011 - 5.1	0.842	1.82	6 / 10	60%
Monochlorobiphenyl	-	0.075	0.18	0 / 10	0%
Nonachlorobiphenyl	-	0.373	0.88	0 / 10	0%
Octachlorobiphenyl	-	0.225	0.53	0 / 10	0%
Pentachlorobiphenyl	0.005 - 44	6.923	15.21	10 / 10	100%
Tetrachlorobiphenyl	0.009 - 100	14.569	33.17	10 / 10	100%
Trichlorobiphenyl	0.0072 - 22	3.259	7.29	10 / 10	100%
Total PCBs	0.01 - 288	6.525	28.91	85 / 155	55%

Units are milligrams per kilogram (mg/kg).
PCBs - Polychlorinated Biphenyl
PAHs - Polycyclic Aromatic Hydrocarbon

Table 13. Percent Homologue Composition of PCBs in Commercial Aroclors, Soil and Groundwater Investigation Report, Olympic Mill Services Area, AK Steel Corporation, Middletown, Ohio.

	Commercial Aroclors					
Homologue	**1016**	**1221**	**1242**	**1248**	**1254**	**1260**
Monochlorobiphenyl	12.2	92.2	3	0	0	0
Dichlorobiphenyl	30.9	6.6	13	2	0	0
Trichlorobiphenyl	36.3	0.9	28	18	0	0
Tetrachlorobiphenyl	20.6	0.3	30	40	11	0
Pentachlorobiphenyl	0	0	22	36	49	12
Hexachlorobiphenyl	0	0	4	4	34	38
Heptachlorobiphenyl	0	0	0	0	6	41
Octachlorobiphenyl	0	0	0	0	0	8
Nonachlorobiphenyl	0	0	0	0	0	1
Decachlorobiphenyl	0	0	0	0	0	0

Aroclor composition is from Verscheuren (1983).
PCBs - Polychlorinated Biphenyl.

ARCADIS

Table 14. Total PCB Analytical Results for Soil Samples, Soil and Groundwater Investigation Report, Olympic Mill Services Operations Area, AK Steel Corporation, Middletown, Ohio.

Sample Location	Sample Depth	Date Sampled	Total PCBs (mg/kg)
BH01	0-2	6/11/98	0.25 U
BH01	16-18	6/11/98	0.25 U
BH01	6-8	6/11/98	0.898
BH02	0-2	6/15/98	1.37
BH02	11-13	6/15/98	0.25 U
BH02	6-8	6/15/98	1.44
BH03	0-2	6/15/98	0.25 U
BH03	13-15	6/15/98	0.25 U
BH03	6-8	6/15/98	0.25 U
BH04	0-2	6/16/98	0.25 U
BH04	13-15	6/16/98	0.25 U
BH04	6-8	6/16/98	4.6
BH05	0-2	6/16/98	0.25 U
BH05	12-14	6/16/98	0.25 U
BH05	6-8	6/16/98	0.884
BH06	0-2	6/16/98	0.25 U
BH06	15-17	6/16/98	0.25 U
BH06	6-8	6/16/98	0.25 U
BH07	0-2	6/17/98	0.25 U
BH07	14-16	6/17/98	0.25 U
BH07	6-8	6/17/98	9.95
BH07-01	0-2	9/19/01	0.037 U
BH07-01	10-12	9/19/01	17
BH07-01	14-16	9/19/01	0.041 U
BH07-01	6-8	9/19/01	1.1
BH07-E50	6-8	8/28/00	0.45 U
BH07-S50	6-8	8/28/00	3.08
BH07-SE25	6-8	9/7/00	0.52
BH07-W50	2-4	8/28/00	0.11
BH08	0-2	6/17/98	0.25 U
BH08	15-17	6/17/98	1.97
BH08	6-8	6/17/98	288
BH08-01	0-2	9/18/01	0.109 J
BH08-01	6-8	9/18/01	6.29
BH08-01A	14-16	9/18/01	0.28
BH08-01A	16-18	9/18/01	0.0425 U
BH08-02	0-2	9/18/01	0.066
BH08-02	14-16	9/18/01	1.2
BH08-02	16-18	9/18/01	0.0425 U
BH08-02	6-8	9/18/01	0.041 U
BH08-E50	6-8	8/28/00	0.061
BH08-W50N	0-2	11/8/00	0.043
BH08-W50S	0-2	11/8/00	0.249
BH08-W60	0-2	11/8/00	0.031
BH08-W65	2-4	8/28/00	25.6
BH09	0-2	6/22/98	1.02
BH09	14-16	6/22/98	0.25 U
BH09	6-8	6/22/98	0.63
BH10	0-2	6/23/98	0.25 U
BH10	21-22	6/23/98	0.25 U

ARCADIS

Table 14. Total PCB Analytical Results for Soil Samples, Soil and Groundwater Investigation Report, Olympic Mill Services Operations Area, AK Steel Corporation, Middletown, Ohio.

Sample Location	Sample Depth	Date Sampled	Total PCBs (mg/kg)
BH10	6-8	6/23/98	0.25 U
BH11	0-2	6/23/98	0.25 U
BH11	23-24	6/23/98	0.25 U
BH11	6-8	6/23/98	0.25 U
BH12	0-2	6/23/98	0.25 U
BH12	22-24	6/23/98	0.25 U
BH12	6-8	6/23/98	0.25 U
BH13	0-2	6/23/98	0.25 U
BH13	21-23	6/23/98	0.25 U
BH13	6-8	6/23/98	8.04
BH13-01	0-2	9/20/01	0.035 U
BH13-01	18-20	9/20/01	1 J
BH13-01	22-24	9/20/01	0.012 J
BH13-01	6-8	9/20/01	16.3
BH13-02	0-2	9/20/01	0.21 J
BH13-02	16-18	9/20/01	0.14 J
BH13-02	20-22	9/20/01	0.278
BH13-02	6-8	9/20/01	1.2 J
BH13-03	0-2	9/21/01	0.035 U
BH13-03	16-18	9/21/01	9.3
BH13-03	20-22	9/21/01	0.05 U
BH13-03	6-8	9/21/01	0.4 U
BH13-04	0-2	9/25/01	0.65
BH13-04	14-16	9/25/01	0.58
BH13-04	16-18	9/25/01	0.0485 U
BH13-04	6-8	9/25/01	0.121
BH13b	6-8	11/11/98	0.7154
BH13-E50	6-8	8/28/00	0.158
BH13-N50	6-8	8/28/00	0.064
BH13-S50	6-8	8/28/00	12.7
BH14	0-2	6/24/98	0.25 U
BH14	10-12	6/24/98	0.25 U
BH14	6-8	6/24/98	0.25 U
BH15	0-2	6/24/98	0.25 U
BH15	10-12	6/24/98	1.2
BH15	6-8	6/24/98	1.86
BH15-01	0-2	9/13/01	10.5 J
BH15-01	6-8	9/13/01	8.3
BH15-01	8-10	9/13/01	2.4
BH15-02	0-2	9/13/01	0.036 U
BH15-02	12-14	9/13/01	0.0405 U
BH15-02	4-6	9/13/01	0.048
BH15-02	6-8	9/13/01	0.01 J
BH15-03	0-2	9/13/01	0.259
BH15-03	12-14	9/13/01	5.8 NJ
BH15-03	14-16	9/13/01	0.037 UJ
BH15-03	6-8	9/13/01	0.27
BH15-04	0-2	9/14/01	0.55
BH15-04	10-12	9/14/01	2.3
BH15-04	6-8	9/14/01	23

ARCADIS

Table 14. Total PCB Analytical Results for Soil Samples, Soil and Groundwater Investigation Report, Olympic Mill Services Operations Area, AK Steel Corporation, Middletown, Ohio.

Sample Location	Sample Depth	Date Sampled	Total PCBs (mg/kg)
BH15-04	8-10	9/14/01	49
BH15-05	0-2	9/21/01	0.0415 U
BH15-05	2-4	9/21/01	0.05 U
BH15-06	0-2	9/21/01	0.041 U
BH15-06	2-4	9/21/01	0.0465 U
BH15-07	6-8	10/5/01	0.043 U
BH15-07	8-10	10/5/01	0.0385 U
BH15-07	0-2	10/5/01	0.065
BH15b	6-8	11/11/98	107.75
BH15-E50	6-8	8/29/00	0.98
BH15-N50	6-8	8/29/00	48.72
BH15-W50	6-8	8/29/00	3.16
BH16	0-2	6/25/98	0.25 U
BH16	6-8	6/25/98	0.25 U
BH17	0-2	6/25/98	1.135
BH17	12-14	6/25/98	0.25 U
BH17	6-8	6/25/98	0.25 U
BH19	0-2	6/26/98	0.25 U
BH19	6-8	6/26/98	0.25 U
BH20	0-2	6/26/98	0.25 U
BH20	6-8	6/26/98	0.5
BH20	8-9	6/26/98	0.25 U
BH21	0-2	6/26/98	0.25 U
BH21	17-19	6/26/98	0.25 U
BH21	6-8	6/26/98	3.92
BH22	0-2	6/29/98	0.38
BH22	6-8	6/29/98	0.25 U
BH22	9-10	6/29/98	0.25 U
BH25	6-8	6/30/98	0.25 U
BH26SL	12-24	11/11/98	0.2854
COMP-1	0-2	9/20/01	0.039 U
COMP-1	2-4	9/20/01	0.037 U
COMP-2	0-2	9/20/01	0.038 U
COMP-2	2-4	9/20/01	0.0375 U
CPMT	0-0.5	10/21/98	0.05725
MDA-16SR	0-2	10/9/01	0.22 U
MDA-16SR	2-4	10/9/01	0.04 U
MDA-16SR	6-8	10/9/01	0.0385 U
MDA-16SR	8-10	10/9/01	0.0435 U
MDA-23S	0-2	9/26/01	0.11
MDA-23S	6-8	9/26/01	0.041 U
MDA-23S	8-10	9/26/01	0.0435 U
MDA-27P	0-1	7/3/01	0.606 J
MDA-27P	4-5	7/3/01	0.2449 J
MDA-27P	6-7	7/3/01	0.2262 J
MDA-29S	0-1	7/2/01	0.25044 J
MDA-29S	12-13	7/2/01	0.2981 J
MDA-29S	2-3	7/2/01	0.1038
MDA-29S	4-5	7/2/01	0.0524 J
MDA-29S	6-7	7/2/01	0.0421 J

ARCADIS

Table 14. Total PCB Analytical Results for Soil Samples, Soil and Groundwater Investigation Report, Olympic Mill Services Operations Area, AK Steel Corporation, Middletown, Ohio.

Sample Location	Sample Depth	Date Sampled	Total PCBs (mg/kg)
MDA-30S	0-2	10/2/01	0.04 U
MDA-30S	2-4	10/2/01	0.043 J
MDA-30S	6-8	10/2/01	0.04 U
MDA-30S	8-10	10/2/01	0.037 U
MDA-31S	0-2	10/3/01	0.041 U
MDA-31S	16-18	10/3/01	0.037 U
MDA-31S	19-20	10/3/01	0.0365 U
MDA-31S	6-8	10/3/01	0.037 U
MDA-32S	0-2	9/14/01	0.198 J
MDA-32S	10-12	9/14/01	1.4
MDA-32S	6-8	9/14/01	1.5 NJ
MDA-32S	8-10	9/14/01	3 NJ
MDA-33P	0-2	10/1/01	0.16
MDA-33P	10-12	10/2/01	1.402
MDA-33P	12-14	10/3/01	0.022 J
MDA-33P	6-8	10/1/01	0.0415 U
MDA-34P	0-2	10/1/01	0.4
MDA-34P	6-8	10/1/01	0.043 U
MDA-35SR	0-2	9/27/01	0.071 J
MDA-35SR	10-12	9/27/01	0.32
MDA-35SR	16-18	9/28/01	0.0425 U
MDA-35SR	6-8	9/27/01	25.4
MDA-36S	0-2	10/4/01	0.0405 U
MDA-36S	10-12	10/4/01	2.15
MDA-36S	4-6	10/4/01	0.49
MS1-01	0-2	9/17/01	0.1 J
MS1-01	12-14	9/17/01	0.0415 U
MS1-01	6-8	9/17/01	1.14
MS1-02	0-2	9/17/01	0.26
MS1-02	6-8	9/17/01	0.031 J
MS1-02	8-10	9/17/01	0.04 U
MS1-03	0-2	9/17/01	1.23
MS1-03	2-4	9/17/01	0.56
MS1-03	6-8	9/17/01	0.0425 U
MS1-04	0-2	9/18/01	2.31 J
MS1-04	4-6	9/18/01	0.04 U
MS1-04	6-8	9/18/01	0.041 U
SD04	0-2	6/18/98	0.25 U
SD04	2-4	6/18/98	0.25 U
SS01	0-2	6/10/98	39
SS01	2-2.5	6/11/98	78.7
SS01-01	0-2	9/20/01	4.11
SS01-01	6-8	9/20/01	0.043 U
SS01-02	0-2	9/20/01	11.57 J
SS01-02	2-4	9/20/01	1.781 J
SS01-02	6-8	9/20/01	7.2 J
SS01-03	0-2	9/20/01	5.01 J
SS01-03	2-4	9/20/01	0.683 J
SS01-03	6-8	9/20/01	0.044 U
SS01b	2-4	11/11/98	160.6

ARCADIS

Table 14. Total PCB Analytical Results for Soil Samples, Soil and Groundwater Investigation Report, Olympic Mill Services Operations Area, AK Steel Corporation, Middletown, Ohio.

Sample Location	Sample Depth	Date Sampled	Total PCBs (mg/kg)
SS01E210	2-4	11/11/98	0.25 U
SS01E25	2-4	8/29/00	0.704
SS01E280	0-2	11/11/98	0.25 U
SS01E350	2-4	11/11/98	1.45
SS01E420	0-2	11/11/98	0.25 U
SS01E490	2-4	11/11/98	0.55
SS01E610	2-4	11/11/98	2.04
SS01E680	0-2	11/11/98	0.85
SS01E70	2-4	11/11/98	2.63
SS01N100	0-2	11/11/98	0.25 U
SS01N125	0-2	11/11/98	0.25 U
SS01N20	2-4	8/29/00	0.141
SS01N50	2-4	11/11/98	0.25 U
SS01N75	0-2	11/11/98	0.25 U
SS01S14	3	8/29/00	30.1
SS01W100	2-4	8/29/00	0.769
SS01W25	2-4	8/29/00	0.058
SS01W50	2-4	8/29/00	0.357
SS02	0-2	6/10/98	0.25 U
SS02	2.5-3	6/11/98	0.25 U
SS03	0-2	6/19/98	0.25 U
SS03	2-4	6/19/98	0.76
SS04	0-0.5	6/19/98	0.25 U
SS05	0.5-1	6/19/98	0.25 U
SS05	0-0.5	6/19/98	0.94
SS06	0-0.5	6/19/98	1.05
SS06	1-2	6/19/98	0.25 U

U- The compound was not detected

J- Estimated value.

N- The lab found presumptive evidence of the compound.

PCBs - Polychlorinated Biphenyl.

mg/kg - Milligrams per kilogram.

ARCADIS

Table 15. Summary Statistics for Perched Groundwater Samples, Soil and Groundwater Investigation Report, Olympic Mill Services Operations Area, AK Steel Corporation, Middletown, Ohio.

Compound Name	Range of Detects	Arithmetic Mean	Standard Deviation	Frequency of Detection	Frequency of Detection %
Total Metals					
Aluminum, Total	15 - 9000	994	2814	8 / 10	80%
Cadmium, Total	0.05 - 0.6	0.26	0.190	9 / 10	90%
Chromium, Total	0.5 - 59.5	11.2	20.0	7 / 10	70%
Copper, Total	0.9 - 14.3	4.19	4.87	8 / 10	80%
Iron, Total	50.8 - 25700	3603	8295	8 / 10	80%
Lead, Total	0.21 - 9.18	1.92	2.97	8 / 10	80%
Nickel, Total	13.6 - 52.2	21.3	16.5	5 / 10	50%
Silver, Total	0.05 - 0.16	0.039	0.0461	2 / 10	20%
Zinc, Total	0.7 - 49.4	12.1	18.9	8 / 10	80%
Dissolved Metals					
Aluminum, Dissolved	35.9 - 1140	317	464	5 / 5	100%
Cadmium, Dissolved	0.73 - 0.73	0.251	0.323	1 / 4	25%
Chromium, Dissolved	1.8 - 36	14.6	14.5	4 / 5	80%
Copper, Dissolved	1.2 - 11.7	4.5	4.22	5 / 5	100%
Iron, Dissolved	52.9 - 114	46.7	49.2	2 / 4	50%
Lead, Dissolved	0.02 - 4.36	1.43	1.77	5 / 5	100%
Nickel, Dissolved	1.3 - 62.7	18.7	29.5	4 / 4	100%
Silver, Dissolved	-	0.04	0.02	0 / 4	0%
Zinc, Dissolved	2.5 - 49.4	13.2	20.4	4 / 5	80%
PAHs					
2-Methylnaphthalene	7 - 7	5.5	1.08	1 / 10	10%
Acenaphthene	6.3 - 6.3	5.43	0.99	1 / 10	10%
Acenaphthylene	6.3 - 6.3	5.43	0.99	1 / 10	10%
Anthracene	0.5 - 4.3	4.78	1.80	2 / 10	20%
Benzo(a)anthracene	-	5.4	0.97	0 / 10	0%
Benzo(a)pyrene	-	5.4	0.97	0 / 10	0%
Benzo(b)fluoranthene	-	5.4	0.97	0 / 10	0%
Benzo(g,h,i)perylene	-	5.4	0.97	0 / 10	0%
Benzo(k)fluoranthene	-	5.4	0.97	0 / 10	0%
Chrysene	-	5.4	0.97	0 / 10	0%
Dibenzo(a,h)anthracene	-	5.4	0.97	0 / 10	0%
Fluoranthene	4.1 - 4.1	5.21	1.02	1 / 10	10%
Fluorene	9.1 - 9.1	5.71	1.52	1 / 10	10%
Indeno(1,2,3-cd)pyrene	-	5.4	0.97	0 / 10	0%
Naphthalene	0.48 - 170	21.4	52.3	4 / 10	40%
Phenanthrene	0.97 - 14	5.80	3.33	2 / 10	20%
Pyrene	2.5 - 2.5	5.05	1.30	1 / 10	10%
PCBs					
Aroclor-1016	-	0.55	0.085	0 / 10	0%
Aroclor-1221	-	1.105	0.174	0 / 10	0%
Aroclor-1232	-	0.55	0.085	0 / 10	0%
Aroclor-1242	2.2 - 2.2	0.72	0.527	1 / 10	10%
Aroclor-1248	-	0.55	0.085	0 / 10	0%
Aroclor-1254	-	0.55	0.085	0 / 10	0%
Aroclor-1260	-	0.55	0.085	0 / 10	0%
Aroclor-1268	-	0.55	0.085	0 / 10	0%

ARCADIS

Table 15. Summary Statistics for Perched Groundwater Samples, Soil and Groundwater Investigation Report, Olympic Mill Services Operations Area, AK Steel Corporation, Middletown, Ohio.

Compound Name	Range of Detects	Arithmetic Mean	Standard Deviation	Frequency of Detection	Frequency of Detection %
PCBs (continued)					
Decachlorobiphenyl	-	0.25		0 / 1	0%
Dichlorobiphenyl	0.13 - 0.13	0.13		1 / 1	100%
Heptachlorobiphenyl	-	0.15		0 / 1	0%
Hexachlorobiphenyl	-	0.1		0 / 1	0%
Monochlorobiphenyl	-	0.05		0 / 1	0%
Nonachlorobiphenyl	-	0.25		0 / 1	0%
Octachlorobiphenyl	-	0.15		0 / 1	0%
Pentachlorobiphenyl	-	0.1		0 / 1	0%
Tetrachlorobiphenyl	-	0.1		0 / 1	0%
Trichlorobiphenyl	0.43 - 0.43	0.43		1 / 1	100%
Total PCBs	1.71 - 1.71	1.18	0.253	1 / 10	10%

Units are micrograms/ liter (ug/L).
PCBs - Polychlorinated Biphenyl.
PAHs - Polycyclic Aromatic Hydrocarbon.

ARCADIS

Table 16. Total PCB Analytical Results for Groundwater Samples, Soil and Groundwater Investigation Report, Olympic Mill Services Operations Area, AK Steel Corporation, Middletown, Ohio.

Sample Location	Date Sampled	PCB Type	Total PCBs (ug/L)	pH
Perched Groundwater Zone Samples				
MDA-01P	8/8/01	Aroclors	1.4 UJ	7.14
MDA-03P	8/8/01	Aroclors	1 UJ	12.39
MDA-08P	8/9/01	Aroclors	1.25 UJ	9.96
MDA-09P	8/10/01	Aroclors	1 UJ	10.73
MDA-19P	8/13/01	Aroclors	1 UJ	11.09
MDA-22PR	12/7/01	Homologues	1.71	12.64
MDA-23P	8/7/01	Aroclors	1 UJ	11.26
MDA-24PR	10/25/01	Aroclors	1 U	11.42
MDA-25P	8/13/01	Aroclors	1 UJ	10.36
MDA-34P	10/18/01	Aroclors	1.4 U	7.8
Shallow Groundwater Zone and Upper Aquifer Samples				
GM-35S	8/14/01	Aroclors	1 UJ	10.58
GM-36S	8/13/01	Aroclors	1 U	7.41
GM-45S	8/9/01	Aroclors	1 UJ	7.21
GM-46SR	10/23/01	Homologues	2.65	12.08
MDA-01S	8/8/01	Aroclors	1 UJ	9.65
MDA-03S	8/7/01	Aroclors	1 UJ	9.1
MDA-08S	8/9/01	Aroclors	1 U	7.5
MDA-09S	8/9/01	Aroclors	1 U	7.64
MDA-14S	8/13/01	Aroclors	1 UJ	6.94
MDA-15S	8/10/01	Aroclors	1 UJ	7.6
MDA-16SR	10/19/01	Aroclors	1 U	7.2
MDA-17S	8/13/01	Aroclors	1 UJ	6.96
MDA-18S	8/14/01	Aroclors	1 UJ	7.17
MDA-23S	10/18/01	Aroclors	1 U	11.2
MDA-26S	10/18/01	Homologues	1.418	12.2
MDA-27S	10/17/01	Homologues	1.38	12.3
MDA-28S	8/13/01	Aroclors	1 UJ	12
MDA-29S	7/10/01	Aroclors	2 R	14
MDA-30S	10/17/01	Aroclors	1 U	12.2
MDA-32S	10/18/01	Aroclors	1 U	6.9
MDA-33S	10/19/01	Aroclors	2.9 J	6.9
MDA-35SR	10/30/01	Aroclors	1 U	9.03
MDA-36S	10/18/01	Aroclors	1 U	7.2

U- The compound was not detected.
J- Estimated value
R- Value was validated as unusable.
PCBs - Polychlorinated Biphenyl
ug/L - Micrograms per liter.

ARCADIS

Table 17. Summary Statistics for Shallow Groundwater Zone and Upper Aquifier Groundwater Samples, Soil and Groundwater Investigation Report, Olympic Mill Services, Operations Area, AK Steel Corporation, Middletown, Ohio.

Compound Name	Range of Detects	Arithmetic Mean	Standard Deviation	Frequency of Detection	Frequency of Detection %
Total Metals					
Aluminum, Total	2.4 - 53800	2719	11169	17 / 23	74%
Cadmium, Total	0.06 - 1.51	0.194	0.314	19 / 23	83%
Chromium, Total	0.3 - 76.9	6.85	20.0	12 / 23	52%
Copper, Total	0.45 - 98.65	6.04	20.4	13 / 23	57%
Iron, Total	83.3 - 111950	6944	23123	21 / 23	91%
Lead, Total	0.15 - 73.1	4.14	15.1	17 / 23	74%
Nickel, Total	8.1 - 116.5	18.2	22.9	10 / 23	43%
Silver, Total	0.12 - 0.36	0.045	0.077	3 / 23	13%
Zinc, Total	0.6 - 250	13.4	52.0	13 / 23	57%
Dissolved Metals					
Aluminum, Dissolved	3 - 2440	556	977	6 / 6	100%
Cadmium, Dissolved	0.08 - 0.51	0.142	0.184	4 / 6	67%
Chromium, Dissolved	0.4 - 14.8	3.64	5.74	6 / 6	100%
Copper, Dissolved	0.4 - 4.2	2.08	1.87	6 / 7	86%
Iron, Dissolved	52.6 - 7260	2140	3066	5 / 5	100%
Lead, Dissolved	0.05 - 3.08	0.803	1.17	6 / 6	100%
Nickel, Dissolved	4.7 - 28.8	11.0	10.0	5 / 5	100%
Silver, Dissolved	0.07 - 0.07	0.038	0.0268	1 / 5	20%
Zinc, Dissolved	0.8 - 16.9	3.99	6.40	5 / 6	83%
PAHs					
2-Methylnaphthalene	0.42 - 3.8	5.62	4.34	2 / 23	9%
Acenaphthene	0.37 - 0.4	5.47	4.46	2 / 23	9%
Acenaphthylene	3.2 - 3.2	5.79	4.20	1 / 23	4%
Anthracene	0.91 - 0.91	5.69	4.29	1 / 23	4%
Benzo(a)anthracene	-	5.87	4.17	0 / 23	0%
Benzo(a)pyrene	-	5.87	4.17	0 / 23	0%
Benzo(b)fluoranthene	-	5.87	4.17	0 / 23	0%
Benzo(g,h,i)perylene	0.96 - 0.96	5.69	4.29	1 / 23	4%
Benzo(k)fluoranthene	-	5.87	4.17	0 / 23	0%
Chrysene	-	5.87	4.17	0 / 23	0%
Dibenzo(a,h)anthracene	-	5.87	4.17	0 / 23	0%
Fluoranthene	1.9 - 1.9	5.73	4.25	1 / 23	4%
Fluorene	25 - 25	6.74	5.76	1 / 23	4%
Indeno(1,2,3-cd)pyrene	-	5.87	4.17	0 / 23	0%
Naphthalene	0.6 - 310	18.4	63.7	6 / 23	26%
Phenanthrene	0.46 - 5	5.48	4.45	3 / 23	13%
Pyrene	1.1 - 1.1	5.7	4.285	1 / 23	4%
PCBs					
Aroclor-1016	-	0.5	0	0 / 25	0%
Aroclor-1221	-	1	0	0 / 25	0%
Aroclor-1232	-	0.5	0	0 / 25	0%
Aroclor-1242	1.9 - 4.8	1.056	1.138	6 / 25	24%
Aroclor-1248	2.9 - 2.9	0.596	0.48	1 / 25	4%
Aroclor-1254	-	0.5	0	0 / 25	0%
Aroclor-1260	-	0.5	0	0 / 25	0%
Aroclor-1268	-	0.5	0	0 / 25	0%

ARCADIS

Table 17. Summary Statistics for Shallow Groundwater Zone and Upper Aquifier Groundwater Samples, Soil and Groundwater Investigation Report, Olympic Mill Services, Operations Area, AK Steel Corporation, Middletown, Ohio.

Compound Name	Range of Detects	Arithmetic Mean	Standard Deviation	Frequency of Detection	Frequency of Detection %
PCBs (continued)					
Decachlorobiphenyl	-	0.25	0	0 / 3	0%
Dichlorobiphenyl	0.068 - 0.13	0.106	0.033	3 / 3	100%
Heptachlorobiphenyl	-	0.15	0	0 / 3	0%
Hexachlorobiphenyl	-	0.1	0	0 / 3	0%
Monochlorobiphenyl	-	0.05	0	0 / 3	0%
Nonachlorobiphenyl	-	0.25	0	0 / 3	0%
Octachlorobiphenyl	-	0.15	0	0 / 3	0%
Pentachlorobiphenyl	-	0.1	0	0 / 3	0%
Tetrachlorobiphenyl	0.17 - 0.17	0.123	0.0404	1 / 3	33%
Trichlorobiphenyl	0.11 - 1.3	0.537	0.663	3 / 3	100%
Total PCBs	1.38 - 2.9	1.198	0.525	4 / 22	18%

Units are micrograms per liter (ug/L).
PCBs - Polychlorinated Biphenyl.
PAHs - Polycyclic Aromatic Hydrocarbon.

ARCADIS

Table 18. Summary of Dick's Creek and Monroe Ditch Groundwater Seep Initial Monitoring Events, Soil and Groundwater Investigation Report, Olympic Mill Services Operations Area, AK Steel Corporation, Middletown, Ohio.

Groundwater Seep ID No.	Sample Date	Location	Seep Depth (inches)	Seep Width (inches)	Seep Flow (L/min)
1	November 3, 2000	Dick's Creek	0.13	3.50	0.80
2	November 3, 2000	Dick's Creek	0.06	5.00	0.68
3	November 3, 2000	Dick's Creek	0.13	2.00	1.50
4	February 6, 2001	Monroe Ditch	0.13	4.00	2.00
5	February 6, 2001	Monroe Ditch	0.13	2.50	2.00
6	February 6, 2001	Monroe Ditch	0.13	1.50	2.00
7	February 6, 2001	Dick's Creek	0.13	4.00	1.50
8	February 6, 2001	Dick's Creek	0.13	0.50	0.31
9	February 6, 2001	Dick's Creek	0.13	0.50	0.36
10	February 6, 2001	Dick's Creek	0.13	1.50	1.33
11	February 9, 2001	Monroe Ditch	0.06	2.00	0.25
12	February 9, 2001	Monroe Ditch	0.13	4.25	0.37
13	February 22, 2001	Dick's Creek	0.13	1.50	0.06
14	February 22, 2001	Dick's Creek	0.13	0.75	0.20
15	February 22, 2001	Dick's Creek	0.13	1.50	0.28
16	March 21, 2001	Dick's Creek	0.13	2.00	0.12
17	March 21, 2001	Dick's Creek	0.06	1.00	0.09
18	April 19, 2001	Dick's Creek	0.13	0.50	0.33
19	April 19, 2001	Dick's Creek	0.13	0.50	0.33
20	May 31, 2001	Dick's Creek	0.13	0.75	0.50
21	May 31, 2001	Dick's Creek	0.13	1.00	0.70
22	May 31, 2001	Dick's Creek	0.13	1.00	0.33
23	June 28, 2001	Dick's Creek	0.13	0.25	0.08
24	June 28, 2001	Dick's Creek	0.13	1.00	0.28
25	June 28, 2001	Dick's Creek	0.13	0.75	0.37
26	June 28, 2001	Dick's Creek	0.13	1.00	0.66
27	June 28, 2001	Dick's Creek	0.13	1.50	1.50
28	June 28, 2001	Dick's Creek	0.13	0.50	0.28
29	July 26, 2001	Dick's Creek	0.13	0.75	0.54
30	July 26, 2001	Dick's Creek	0.25	2.00	1.82
31	July 26, 2001	Dick's Creek	0.13	1.00	0.48
32	August 9, 2001	Dick's Creek	0.13	0.25	0.13
33	August 9, 2001	Dick's Creek	0.13	1.00	0.31
34	August 9, 2001	Dick's Creek	0.13	0.50	2.00
35	September 6, 2001	Dick's Creek	0.13	0.25	0.19
36	October 4, 2001	Dick's Creek	0.13	0.25	0.25

ARCADIS

Table 19. Summary Groundwater Seep Samples, Soil and Groundwater Investigation Report, Olympic Mill Services Operations Area, AK Steel Corporation, Middletown, Ohio.

Compound Name	Range of Detects	Arithmetic Mean	Standard Deviation	Frequency of Detection	Frequency of Detection %
Metals					
Arsenic, Total	-	50	0	0 / 36	0%
Barium, Total	32 - 629	127	120	35 / 36	97%
Cadmium, Total	-	15	0	0 / 36	0%
Chromium, Total	50 - 102	24.3	15.9	3 / 36	8%
Lead, Total	102 - 189	48.1	29.3	3 / 36	8%
Mercury, Total	0.3 - 0.3	0.106	0.0333	1 / 36	3%
Selenium, Total	-	50	0	0 / 36	0%
Silver, Total	-	20	0	0 / 36	0%
PAHs					
2-Methylnaphthalene	-	2.65	0.519	0 / 36	0%
Acenaphthene	-	2.65	0.519	0 / 36	0%
Acenaphthylene	-	2.65	0.519	0 / 36	0%
Anthracene	-	2.65	0.519	0 / 36	0%
Benzo(a)anthracene	-	2.65	0.519	0 / 36	0%
Benzo(a)pyrene	-	2.65	0.519	0 / 36	0%
Benzo(b)fluoranthene	-	2.65	0.519	0 / 36	0%
Benzo(g,h,i)perylene	-	2.65	0.519	0 / 36	0%
Benzo(k)fluoranthene	-	2.65	0.519	0 / 36	0%
Chrysene	-	2.65	0.519	0 / 36	0%
Dibenzo(a,h)anthracene	-	2.65	0.519	0 / 36	0%
Fluoranthene	-	2.65	0.519	0 / 36	0%
Fluorene	-	2.65	0.519	0 / 36	0%
Indeno(1,2,3-cd)pyrene	-	2.65	0.519	0 / 36	0%
Naphthalene	-	2.65	0.519	0 / 36	0%
Phenanthrene	-	2.65	0.519	0 / 36	0%
Pyrene	-	2.65	0.519	0 / 36	0%
PCBs					
Aroclor-1016	-	0.153	0.209	0 / 36	0%
Aroclor-1221	-	0.153	0.209	0 / 36	0%
Aroclor-1232	-	0.153	0.209	0 / 36	0%
Aroclor-1242	0.7 - 8.89	0.567	1.76	4 / 36	11%
Aroclor-1248	-	0.153	0.209	0 / 36	0%
Aroclor-1254	-	0.153	0.209	0 / 36	0%
Aroclor-1260	-	0.153	0.209	0 / 36	0%
Total PCBs	0.7 - 8.89	0.567	1.76	4 / 36	11%

Units are micrograms per liter.
PCBs - Polychlorinated Biphenyl
PAHs - Polycyclic Aromatic Hydrocarbon.

ARCADIS GERAGHTY&MILLER

Table 20. Summary of Cancer Risks and Noncancer Hazards, Soil and Groundwater Investigation Report, Olympic Mill Services Operation Area, AK Steel Corporation, Middletown, Ohio.

Exposure Scenario	Central Tendency		High End	
	Cancer Risk	Noncancer Hazard Index	Cancer Risk	Noncancer Hazard Index
Child trespasser (6-12)	0.00000008 (8E-08)	0.03	0.0000002 (2E-07)	0.08
Adolescent trespasser (12-18)	0.00000005 (5E-08)	0.01	0.0000002 (2E-07)	0.05
Adult site worker (>16)	0.0000001 (1E-07)	0.05	0.000001 (1E-06)	0.1
Acceptable risk or hazard	0.00001 (1E-05)	1	0.00001 (1E-05)	1

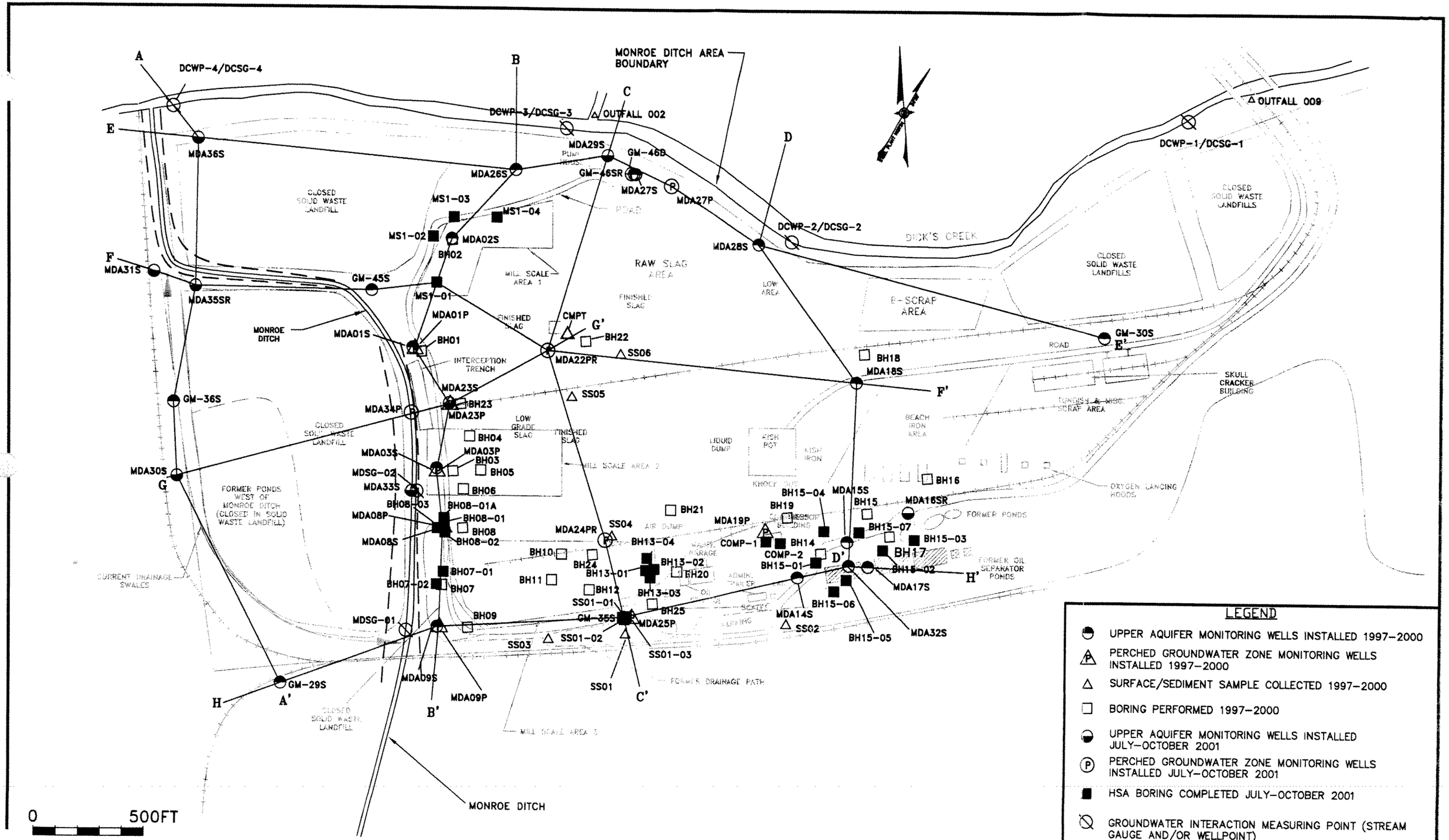

LEGEND

- UPPER AQUIFER MONITORING WELLS INSTALLED 1997–2000
- PERCHED GROUNDWATER ZONE MONITORING WELLS INSTALLED 1997–2000
- SURFACE/SEDIMENT SAMPLE COLLECTED 1997–2000
- BORING PERFORMED 1997–2000
- UPPER AQUIFER MONITORING WELLS INSTALLED JULY–OCTOBER 2001
- PERCHED GROUNDWATER ZONE MONITORING WELLS INSTALLED JULY–OCTOBER 2001
- HSA BORING COMPLETED JULY–OCTOBER 2001
- GROUNDWATER INTERACTION MEASURING POINT (STREAM GAUGE AND/OR WELLPOINT)

ARCADIS

LINES OF CROSS SECTIONS
SOIL AND GROUNDWATER INVESTIGATION REPORT
OLYMPIC MILL SERVICES OPERATIONS AREA
AK STEEL CORPORATION, MIDDLETOWN, OHIO

DRAWN	DATE	PROJECT MANAGER	DRAWING NAME
R. SMITH	2/2/2002	D. VICAREL	AK\GIS-BASE\SPOMS01
		LEAD DESIGN PROF. J. REID	CHECKED D. VICAREL
		PROJECT NUMBER MI000848.0021	FIGURE NUMBER 7

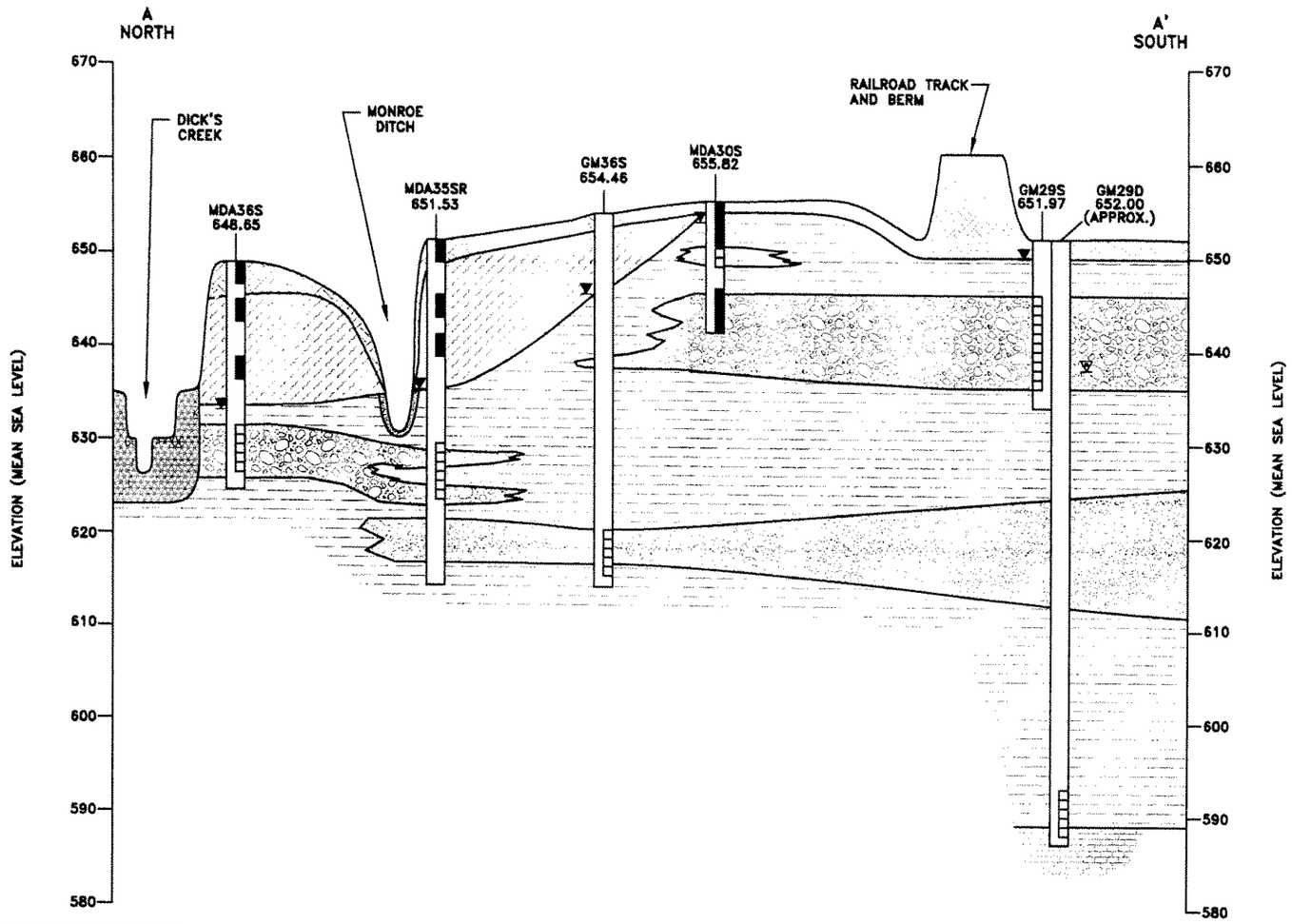

LEGEND

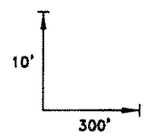

APPROXIMATE SCALE

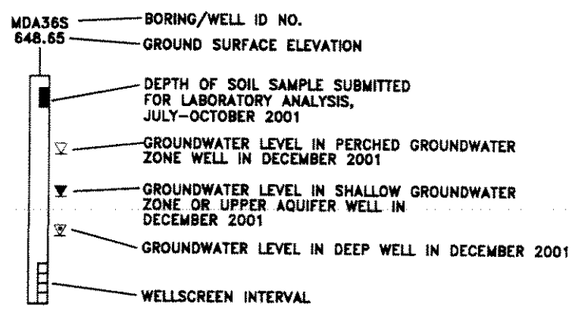

SOIL TYPES/SYMBOLS:

- TOPSOIL/FILL
- FILL
- CLAY OR SILT/CLAY
- SILT/SAND
- SAND
- SAND/GRAVEL
- GRAVEL
- BEDROCK
- FLUVIAL SEDIMENTS

NOTES:

1. REFER TO FIGURE 7 FOR CROSS SECTION LOCATIONS.
2. GROUND SURFACE ELEVATIONS ARE BASED ON SURVEYS PERFORMED BY VAN ATTA ENGINEERING, INC. OF CENTERVILLE, OHIO IN OCTOBER–NOVEMBER 2001.
3. REFER TO BORING LOGS FOR ADDITIONAL GEOLOGICAL INFORMATION. REFER TO WELL CONSTRUCTION LOGS FOR ADDITIONAL HYDROGEOLOGIC INFORMATION.
4. REPRESENTATIONS OF GROUND SURFACE TOPOGRAPHY BETWEEN BORING/WELL LOCATIONS ARE INTERPRETIVE BECAUSE BORINGS/WELLS ARE WIDELY SPACED. SURFICIAL FEATURES SUCH AS DEBRIS PILES, BUILDINGS, ROADS, RAILROADS, AND ANCILLARY STRUCTURES ARE NOT SHOWN (REFER TO SITE LAYOUT FOR LOCATIONS OF THESE FEATURES).
5. REPRESENTATIONS OF CONTACT LINES BETWEEN SOIL TYPES ARE INTERPRETIVE BECAUSE BORINGS/WELLS ARE WIDELY SPACED AND BECAUSE CONTACTS CAN BE GRADATIONAL. CONTACT LINES ARE DASHED WHERE INFERRED.

ARCADIS

CROSS SECTION A-A'
SOIL AND GROUNDWATER INVESTIGATION REPORT
OLYMPIC MILL SERVICES OPERATIONS AREA
AK STEEL CORPORATION, MIDDLETOWN, OHIO

DRAWN	DATE	PROJECT MANAGER	DRAWING NAME
R. SMITH	1/8/2002	D. VICAREL	AK\GIS\OMS-CS1
		LEAD DESIGN PROF. J. REID	CHECKED D. VICAREL
		PROJECT NUMBER MI000848.0021	FIGURE NUMBER 8

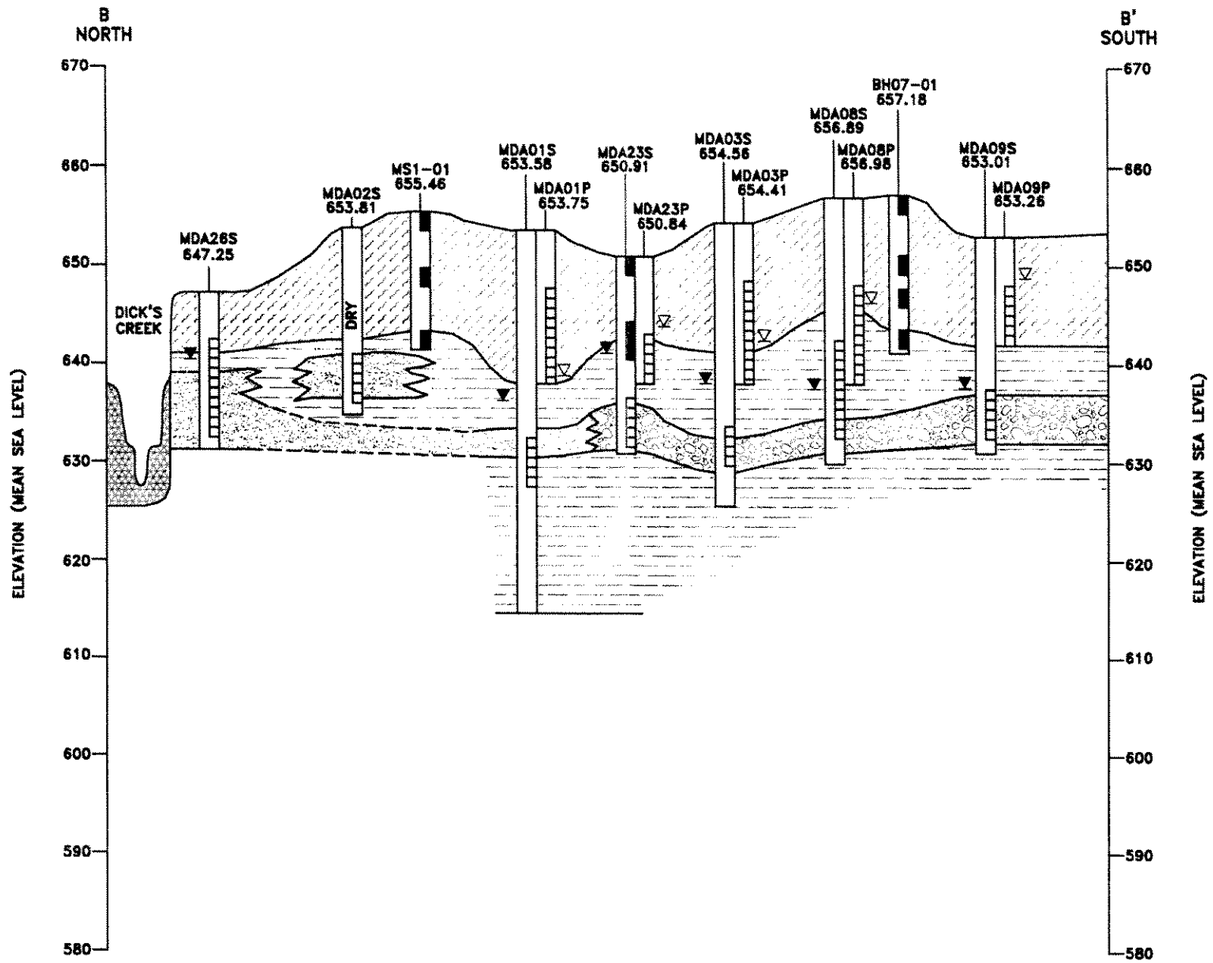

LEGEND

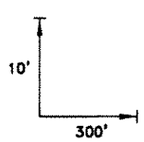

APPROXIMATE SCALE

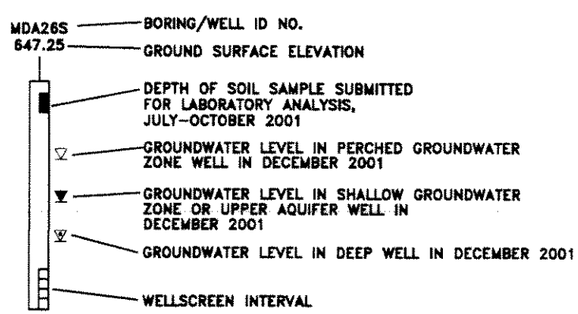

SOIL TYPES/SYMBOLS:

- TOPSOIL/FILL
- FILL
- CLAY OR SILT/CLAY
- SILT/SAND
- SAND
- SAND/GRAVEL
- GRAVEL
- BEDROCK
- FLUVIAL SEDIMENTS

NOTES:

1. REFER TO FIGURE 7 FOR CROSS SECTION LOCATIONS.
2. GROUND SURFACE ELEVATIONS ARE BASED ON SURVEYS PERFORMED BY VAN ATTA ENGINEERING, INC. OF CENTERVILLE, OHIO IN OCTOBER–NOVEMBER 2001.
3. REFER TO BORING LOGS FOR ADDITIONAL GEOLOGICAL INFORMATION. REFER TO WELL CONSTRUCTION LOGS FOR ADDITIONAL HYDROGEOLOGIC INFORMATION.
4. REPRESENTATIONS OF GROUND SURFACE TOPOGRAPHY BETWEEN BORING/WELL LOCATIONS ARE INTERPRETIVE BECAUSE BORINGS/WELLS ARE WIDELY SPACED. SURFICIAL FEATURES SUCH AS DEBRIS PILES, BUILDINGS, ROADS, RAILROADS, AND ANCILLARY STRUCTURES ARE NOT SHOWN (REFER TO SITE LAYOUT FOR LOCATIONS OF THESE FEATURES).
5. REPRESENTATIONS OF CONTACT LINES BETWEEN SOIL TYPES ARE INTERPRETIVE BECAUSE BORINGS/WELLS ARE WIDELY SPACED AND BECAUSE CONTACTS CAN BE GRADATIONAL. CONTACT LINES ARE DASHED WHERE INFERRED.

ARCADIS

CROSS SECTION B-B'
SOIL AND GROUNDWATER INVESTIGATION REPORT
OLYMPIC MILL SERVICES OPERATIONS AREA
AK STEEL CORPORATION, MIDDLETOWN, OHIO

DRAWN R. SMITH	DATE 1/8/2002	PROJECT MANAGER D. VICAREL	DRAWING NAME AK\GIS\OMS-CS2
		LEAD DESIGN PROF. J. REID	CHECKED D. VICAREL
		PROJECT NUMBER MI000848.0021	FIGURE NUMBER 9

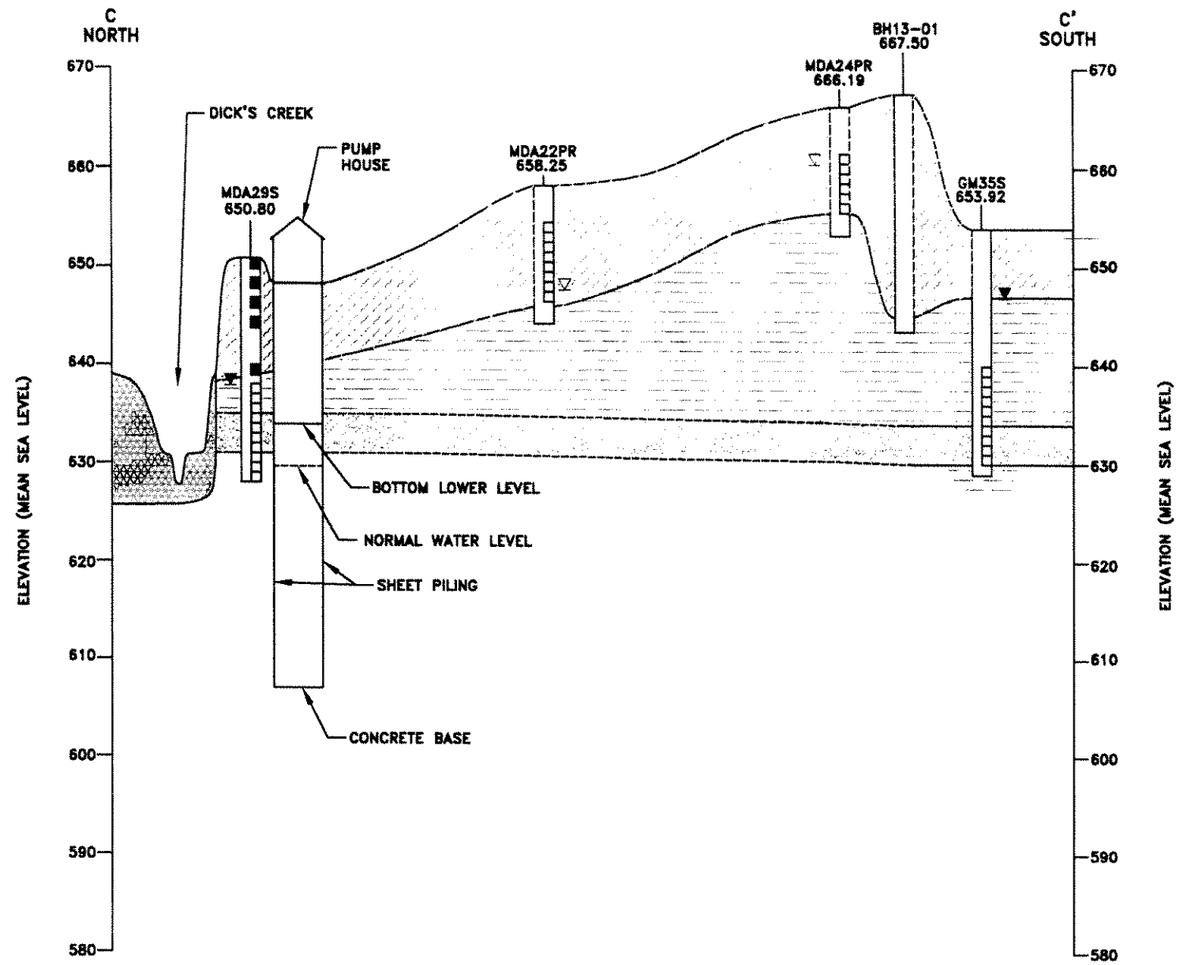

LEGEND

MDA29S — BORING/WELL ID NO.
651.97 — GROUND SURFACE ELEVATION
DEPTH OF SOIL SAMPLE SUBMITTED FOR LABORATORY ANALYSIS, JULY–OCTOBER 2001
GROUNDWATER LEVEL IN PERCHED GROUNDWATER ZONE WELL IN DECEMBER 2001
GROUNDWATER LEVEL IN SHALLOW GROUNDWATER ZONE OR UPPER AQUIFER WELL IN DECEMBER 2001
GROUNDWATER LEVEL IN DEEP WELL IN DECEMBER 2001
WELLSCREEN INTERVAL

10'
300'
APPROXIMATE SCALE

SOIL TYPES/SYMBOLS:

- TOPSOIL/FILL
- FILL
- CLAY OR SILT/CLAY
- SILT/SAND
- SAND
- SAND/GRAVEL
- GRAVEL
- BEDROCK
- FLUVIAL SEDIMENTS

NOTES:

1. REFER TO FIGURE 7 FOR CROSS SECTION LOCATIONS.
2. GROUND SURFACE ELEVATIONS ARE BASED ON SURVEYS PERFORMED BY VAN ATTA ENGINEERING, INC. OF CENTERVILLE, OHIO IN OCTOBER–NOVEMBER 2001.
3. REFER TO BORING LOGS FOR ADDITIONAL GEOLOGICAL INFORMATION. REFER TO WELL CONSTRUCTION LOGS FOR ADDITIONAL HYDROGEOLOGIC INFORMATION.
4. REPRESENTATIONS OF GROUND SURFACE TOPOGRAPHY BETWEEN BORING/WELL LOCATIONS ARE INTERPRETIVE BECAUSE BORINGS/WELLS ARE WIDELY SPACED. SURFICIAL FEATURES SUCH AS DEBRIS PILES, BUILDINGS, ROADS, RAILROADS, AND ANCILLARY STRUCTURES ARE NOT SHOWN (REFER TO SITE LAYOUT FOR LOCATIONS OF THESE FEATURES).
5. REPRESENTATIONS OF CONTACT LINES BETWEEN SOIL TYPES ARE INTERPRETIVE BECAUSE BORINGS/WELLS ARE WIDELY SPACED AND BECAUSE CONTACTS CAN BE GRADATIONAL. CONTACT LINES ARE DASHED WHERE INFERRED.

ARCADIS

CROSS SECTION C-C'
SOIL AND GROUNDWATER INVESTIGATION REPORT
OLYMPIC MILL SERVICES OPERATIONS AREA
AK STEEL CORPORATION, MIDDLETOWN, OHIO

DRAWN R. SMITH	DATE 1/8/2002	PROJECT MANAGER D. VICAREL	DRAWING NAME AK\GIS\OMS-CS3
		LEAD DESIGN PROF. J. REID	CHECKED D. VICAREL
		PROJECT NUMBER MI000848.0021	FIGURE NUMBER 10

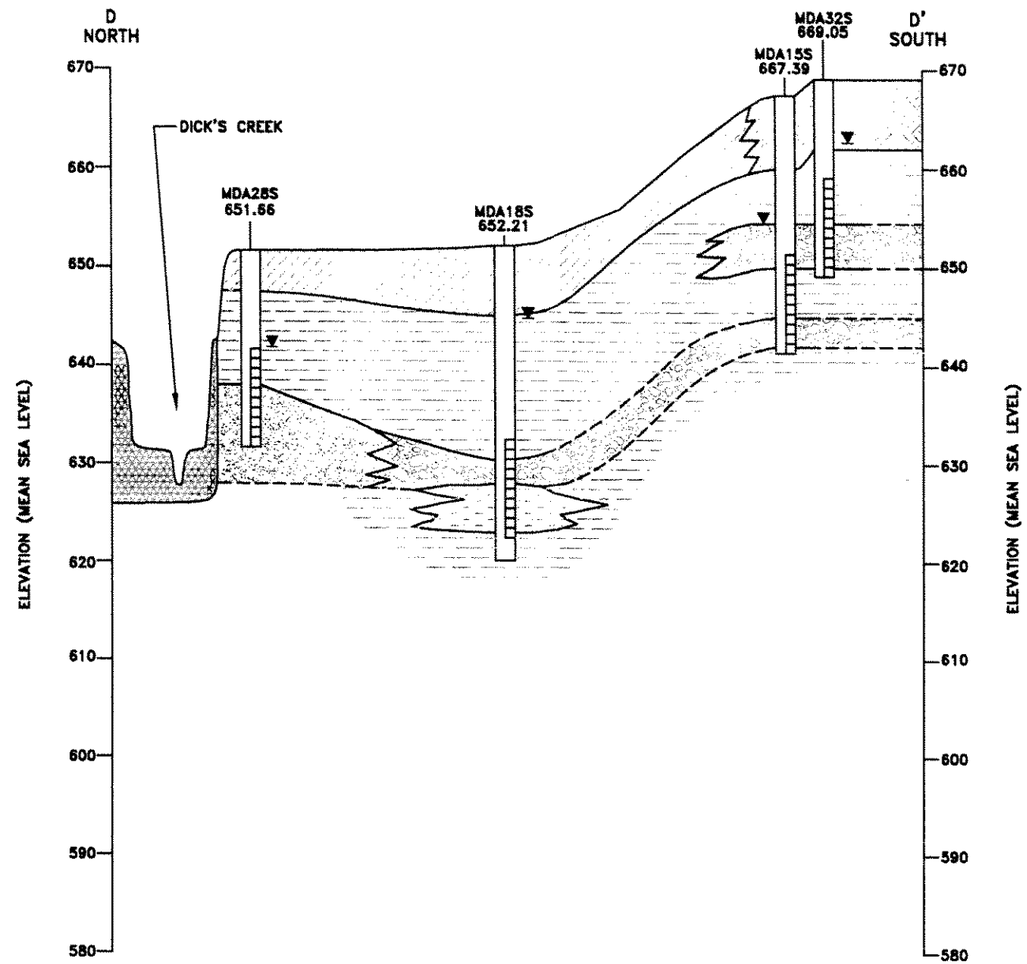

LEGEND

10'
300'
APPROXIMATE SCALE

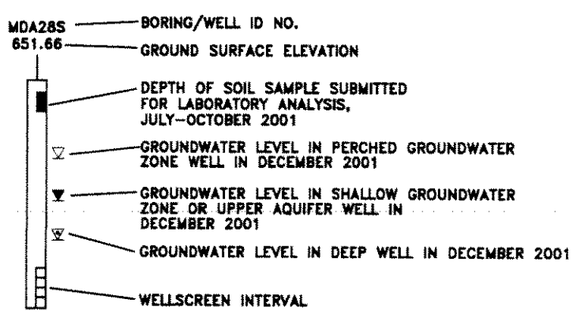

SOIL TYPES/SYMBOLS:

- TOPSOIL/FILL
- FILL
- CLAY OR SILT/CLAY
- SILT/SAND
- SAND
- SAND/GRAVEL
- GRAVEL
- BEDROCK
- FLUVIAL SEDIMENTS

NOTES:

1. REFER TO FIGURE 7 FOR CROSS SECTION LOCATIONS.
2. GROUND SURFACE ELEVATIONS ARE BASED ON SURVEYS PERFORMED BY VAN ATTA ENGINEERING, INC. OF CENTERVILLE, OHIO IN OCTOBER–NOVEMBER 2001.
3. REFER TO BORING LOGS FOR ADDITIONAL GEOLOGICAL INFORMATION. REFER TO WELL CONSTRUCTION LOGS FOR ADDITIONAL HYDROGEOLOGIC INFORMATION.
4. REPRESENTATIONS OF GROUND SURFACE TOPOGRAPHY BETWEEN BORING/WELL LOCATIONS ARE INTERPRETIVE BECAUSE BORINGS/WELLS ARE WIDELY SPACED. SURFICIAL FEATURES SUCH AS DEBRIS PILES, BUILDINGS, ROADS, RAILROADS, AND ANCILLARY STRUCTURES ARE NOT SHOWN (REFER TO SITE LAYOUT FOR LOCATIONS OF THESE FEATURES).
5. REPRESENTATIONS OF CONTACT LINES BETWEEN SOIL TYPES ARE INTERPRETIVE BECAUSE BORINGS/WELLS ARE WIDELY SPACED AND BECAUSE CONTACTS CAN BE GRADATIONAL. CONTACT LINES ARE DASHED WHERE INFERRED.

ARCADIS

CROSS SECTION D-D'
SOIL AND GROUNDWATER INVESTIGATION REPORT
OLYMPIC MILL SERVICES OPERATIONS AREA
AK STEEL CORPORATION, MIDDLETOWN, OHIO

DRAWN	DATE	PROJECT MANAGER	DRAWING NAME
R. SMITH	1/8/2002	D. VICAREL	AK\GIS\OMS-CS4
		LEAD DESIGN PROF. J. REID	CHECKED D. VICAREL
		PROJECT NUMBER MI000848.0021	FIGURE NUMBER 11

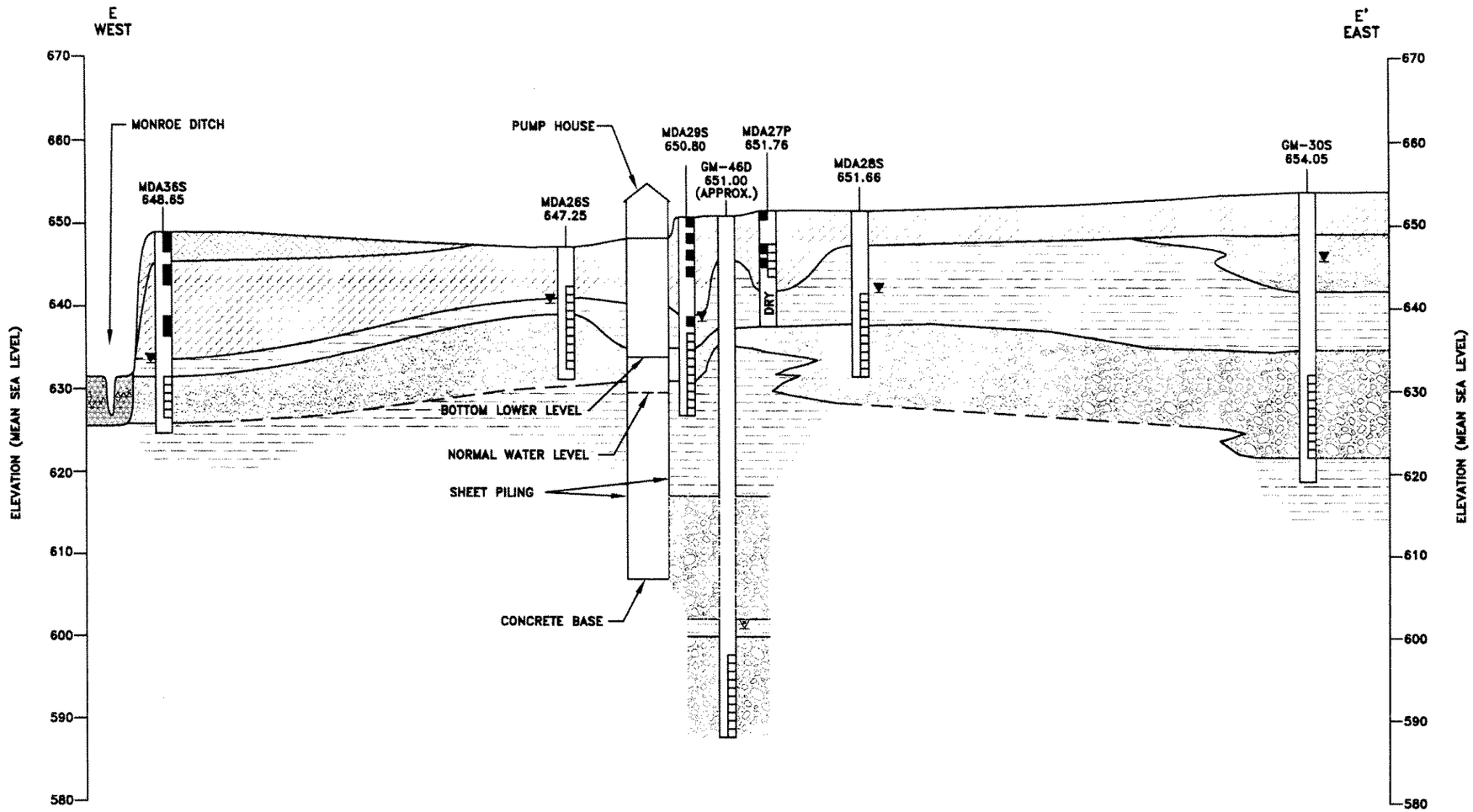

LEGEND

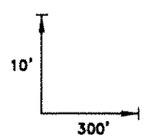

APPROXIMATE SCALE

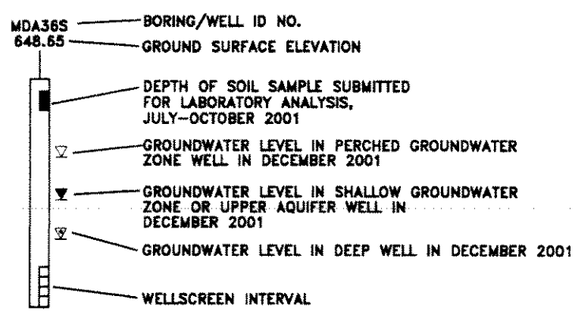

SOIL TYPES/SYMBOLS:

- TOPSOIL/FILL
- FILL
- CLAY OR SILT/CLAY
- SILT/SAND
- SAND
- SAND/GRAVEL
- GRAVEL
- BEDROCK
- FLUVIAL SEDIMENTS

NOTES:

1. REFER TO FIGURE 7 FOR CROSS SECTION LOCATIONS.
2. GROUND SURFACE ELEVATIONS ARE BASED ON SURVEYS PERFORMED BY VAN ATTA ENGINEERING, INC. OF CENTERVILLE, OHIO IN OCTOBER–NOVEMBER 2001.
3. REFER TO BORING LOGS FOR ADDITIONAL GEOLOGICAL INFORMATION. REFER TO WELL CONSTRUCTION LOGS FOR ADDITIONAL HYDROGEOLOGIC INFORMATION.
4. REPRESENTATIONS OF GROUND SURFACE TOPOGRAPHY BETWEEN BORING/WELL LOCATIONS ARE INTERPRETIVE BECAUSE BORINGS/WELLS ARE WIDELY SPACED. SURFICIAL FEATURES SUCH AS DEBRIS PILES, BUILDINGS, ROADS, RAILROADS, AND ANCILLARY STRUCTURES ARE NOT SHOWN (REFER TO SITE LAYOUT FOR LOCATIONS OF THESE FEATURES).
5. REPRESENTATIONS OF CONTACT LINES BETWEEN SOIL TYPES ARE INTERPRETIVE BECAUSE BORINGS/WELLS ARE WIDELY SPACED AND BECAUSE CONTACTS CAN BE GRADATIONAL. CONTACT LINES ARE DASHED WHERE INFERRED.

ARCADIS

CROSS SECTION E-E'
SOIL AND GROUNDWATER INVESTIGATION REPORT
OLYMPIC MILL SERVICES OPERATIONS AREA
AK STEEL CORPORATION, MIDDLETOWN, OHIO

DRAWN R. SMITH	DATE 1/8/2002	PROJECT MANAGER D. VICAREL	DRAWING NAME AK\GIS\OMS-CS5
		LEAD DESIGN PROF. J. REID	CHECKED D. VICAREL
		PROJECT NUMBER MI000848.0021	FIGURE NUMBER 12

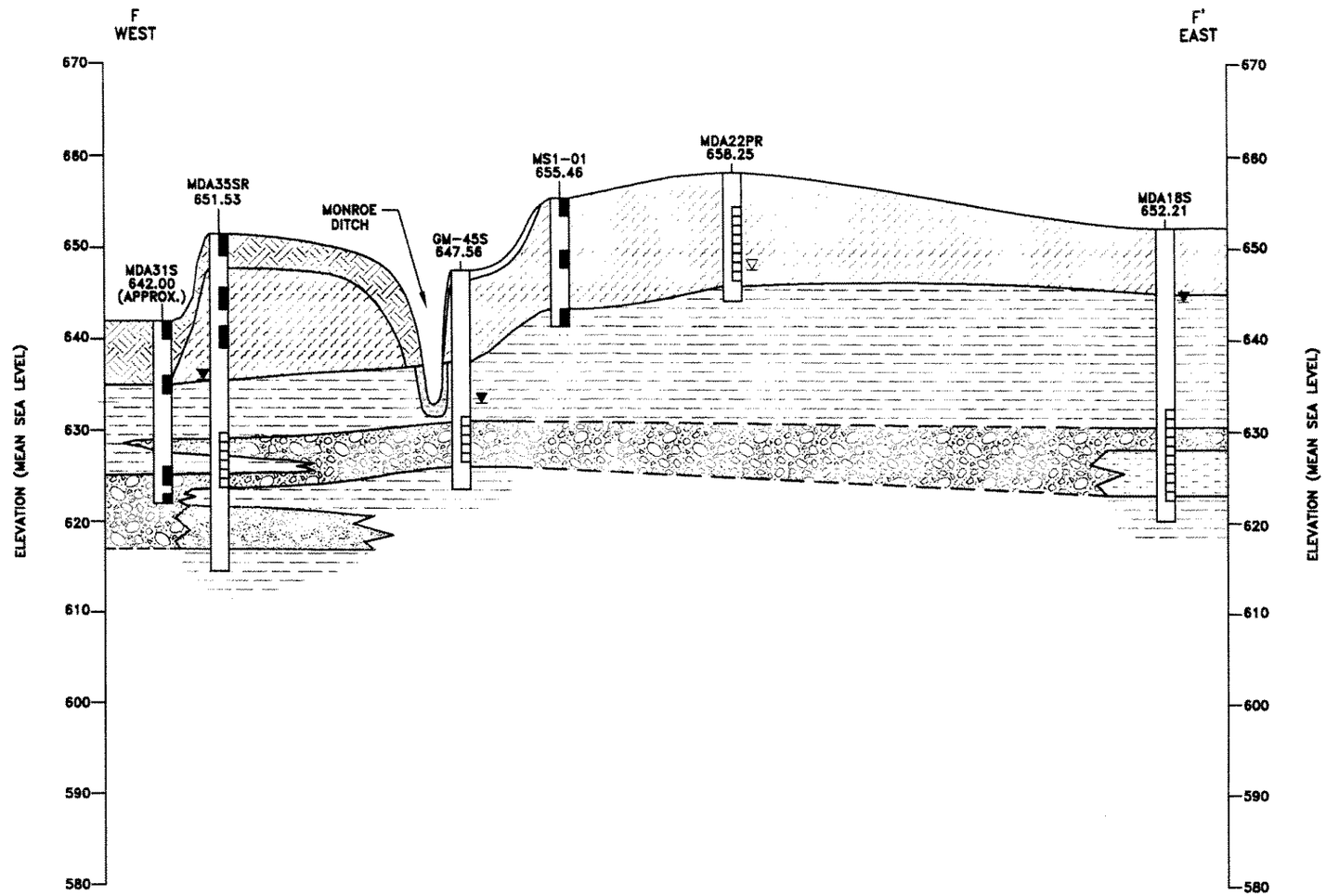

LEGEND

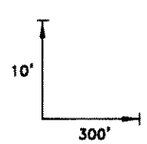

APPROXIMATE SCALE

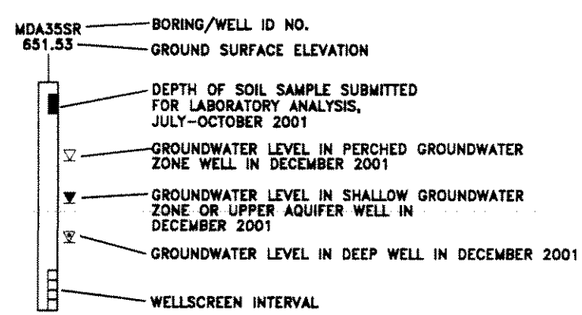

SOIL TYPES/SYMBOLS:

- TOPSOIL/FILL
- FILL
- CLAY OR SILT/CLAY
- SILT/SAND
- SAND
- SAND/GRAVEL
- GRAVEL
- BEDROCK
- FLUVIAL SEDIMENTS

NOTES:

1. REFER TO FIGURE 7 FOR CROSS SECTION LOCATIONS.
2. GROUND SURFACE ELEVATIONS ARE BASED ON SURVEYS PERFORMED BY VAN ATTA ENGINEERING, INC. OF CENTERVILLE, OHIO IN OCTOBER-NOVEMBER 2001.
3. REFER TO BORING LOGS FOR ADDITIONAL GEOLOGICAL INFORMATION. REFER TO WELL CONSTRUCTION LOGS FOR ADDITIONAL HYDROGEOLOGIC INFORMATION.
4. REPRESENTATIONS OF GROUND SURFACE TOPOGRAPHY BETWEEN BORING/WELL LOCATIONS ARE INTERPRETIVE BECAUSE BORINGS/WELLS ARE WIDELY SPACED. SURFICIAL FEATURES SUCH AS DEBRIS PILES, BUILDINGS, ROADS, RAILROADS, AND ANCILLARY STRUCTURES ARE NOT SHOWN (REFER TO SITE LAYOUT FOR LOCATIONS OF THESE FEATURES).
5. REPRESENTATIONS OF CONTACT LINES BETWEEN SOIL TYPES ARE INTERPRETIVE BECAUSE BORINGS/WELLS ARE WIDELY SPACED AND BECAUSE CONTACTS CAN BE GRADATIONAL. CONTACT LINES ARE DASHED WHERE INFERRED.

ARCADIS

CROSS SECTION F-F'
SOIL AND GROUNDWATER INVESTIGATION REPORT
OLYMPIC MILL SERVICES OPERATIONS AREA
AK STEEL CORPORATION, MIDDLETOWN, OHIO

DRAWN R. SMITH	DATE 1/8/2002	PROJECT MANAGER D. VICAREL	DRAWING NAME AK\GIS\OMS-CS6
		LEAD DESIGN PROF. J. REID	CHECKED D. VICAREL
		PROJECT NUMBER MI000848.0021	FIGURE NUMBER 13

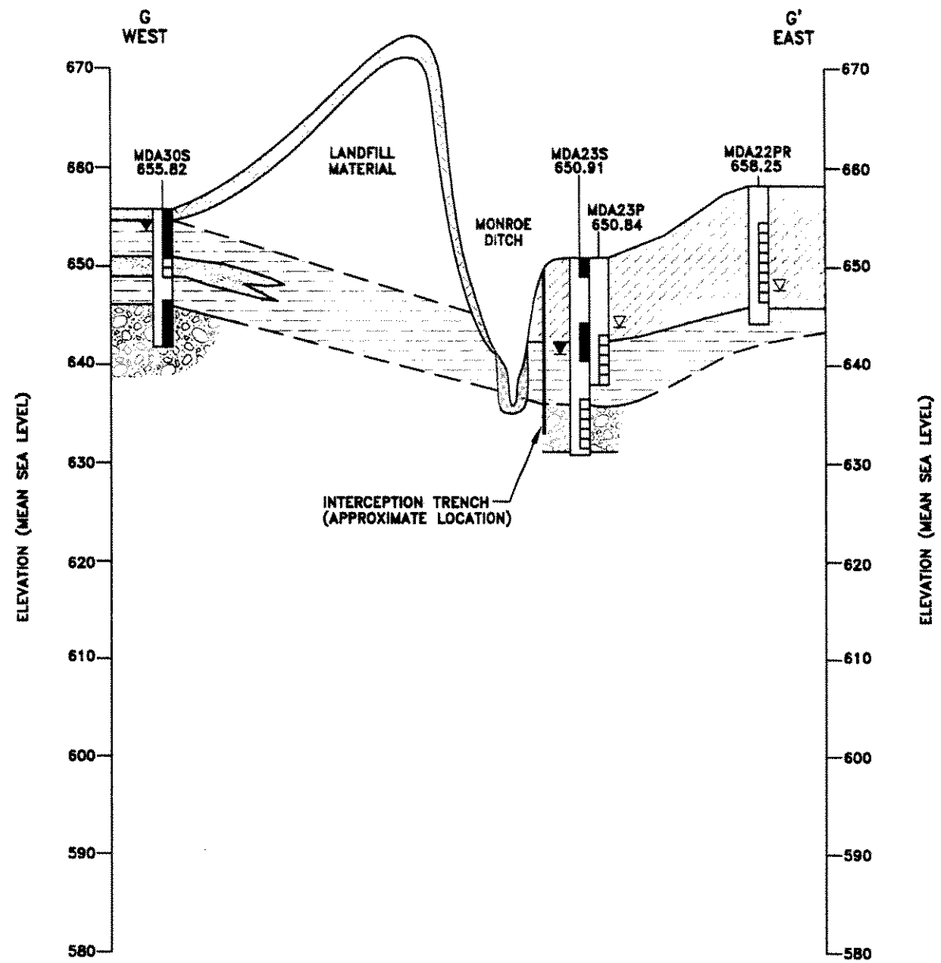

LEGEND

10'
300'
APPROXIMATE SCALE

MDA30S — BORING/WELL ID NO.
655.82 — GROUND SURFACE ELEVATION
DEPTH OF SOIL SAMPLE SUBMITTED FOR LABORATORY ANALYSIS, JULY–OCTOBER 2001
GROUNDWATER LEVEL IN PERCHED GROUNDWATER ZONE WELL IN DECEMBER 2001
GROUNDWATER LEVEL IN SHALLOW GROUNDWATER ZONE OR UPPER AQUIFER WELL IN DECEMBER 2001
GROUNDWATER LEVEL IN DEEP WELL IN DECEMBER 2001
WELLSCREEN INTERVAL

SOIL TYPES/SYMBOLS:

- TOPSOIL/FILL
- FILL
- CLAY OR SILT/CLAY
- SILT/SAND
- SAND
- SAND/GRAVEL
- GRAVEL
- BEDROCK
- FLUVIAL SEDIMENTS

NOTES:

1. REFER TO FIGURE 7 FOR CROSS SECTION LOCATIONS.
2. GROUND SURFACE ELEVATIONS ARE BASED ON SURVEYS PERFORMED BY VAN ATTA ENGINEERING, INC. OF CENTERVILLE, OHIO IN OCTOBER–NOVEMBER 2001.
3. REFER TO BORING LOGS FOR ADDITIONAL GEOLOGICAL INFORMATION. REFER TO WELL CONSTRUCTION LOGS FOR ADDITIONAL HYDROGEOLOGIC INFORMATION.
4. REPRESENTATIONS OF GROUND SURFACE TOPOGRAPHY BETWEEN BORING/WELL LOCATIONS ARE INTERPRETIVE BECAUSE BORINGS/WELLS ARE WIDELY SPACED. SURFICIAL FEATURES SUCH AS DEBRIS PILES, BUILDINGS, ROADS, RAILROADS, AND ANCILLARY STRUCTURES ARE NOT SHOWN (REFER TO SITE LAYOUT FOR LOCATIONS OF THESE FEATURES).
5. REPRESENTATIONS OF CONTACT LINES BETWEEN SOIL TYPES ARE INTERPRETIVE BECAUSE BORINGS/WELLS ARE WIDELY SPACED AND BECAUSE CONTACTS CAN BE GRADATIONAL. CONTACT LINES ARE DASHED WHERE INFERRED.

ARCADIS

CROSS SECTION G-G'
SOIL AND GROUNDWATER INVESTIGATION REPORT
OLYMPIC MILL SERVICES OPERATIONS AREA
AK STEEL CORPORATION, MIDDLETOWN, OHIO

DRAWN R. SMITH	DATE 1/8/2002	PROJECT MANAGER D. VICAREL	DRAWING NAME AK\GIS\OMS-CS7
		LEAD DESIGN PROF. J. REID	CHECKED D. VICAREL
		PROJECT NUMBER MI000848.0021	FIGURE NUMBER 14

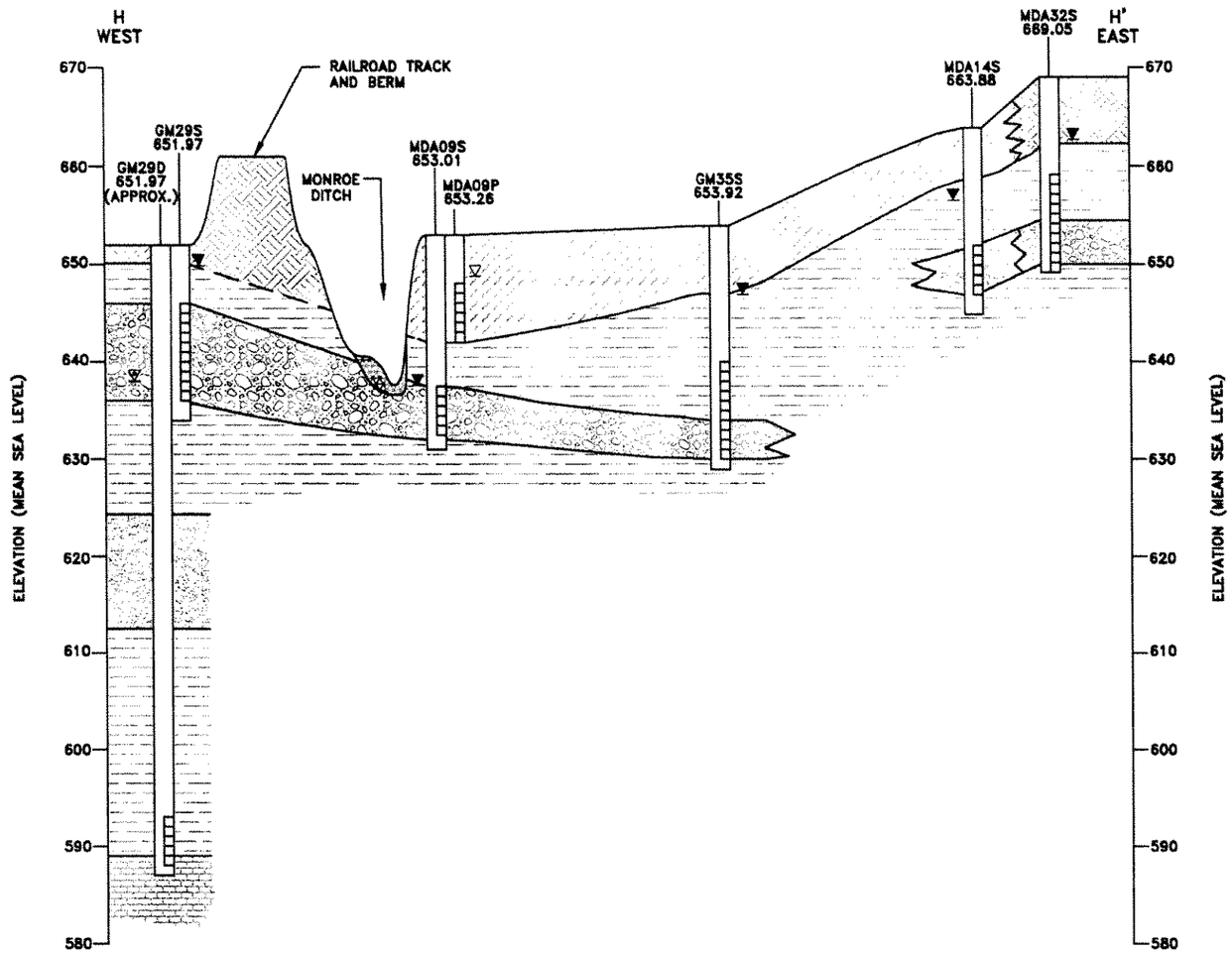

LEGEND

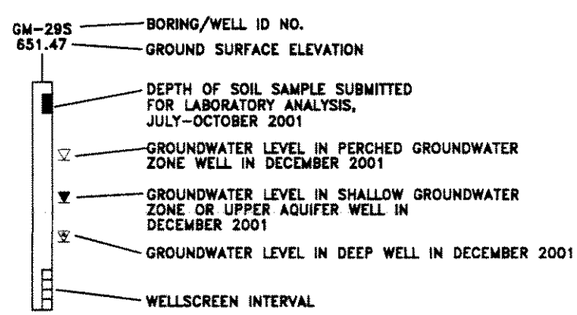

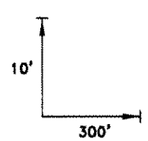

APPROXIMATE SCALE

SOIL TYPES/SYMBOLS:

- TOPSOIL/FILL
- FILL
- CLAY OR SILT/CLAY
- SILT/SAND
- SAND
- SAND/GRAVEL
- GRAVEL
- BEDROCK
- FLUVIAL SEDIMENTS

NOTES:

1. REFER TO FIGURE 7 FOR CROSS SECTION LOCATIONS.
2. GROUND SURFACE ELEVATIONS ARE BASED ON SURVEYS PERFORMED BY VAN ATTA ENGINEERING, INC. OF CENTERVILLE, OHIO IN OCTOBER-NOVEMBER 2001.
3. REFER TO BORING LOGS FOR ADDITIONAL GEOLOGICAL INFORMATION. REFER TO WELL CONSTRUCTION LOGS FOR ADDITIONAL HYDROGEOLOGIC INFORMATION.
4. REPRESENTATIONS OF GROUND SURFACE TOPOGRAPHY BETWEEN BORING/WELL LOCATIONS ARE INTERPRETIVE BECAUSE BORINGS/WELLS ARE WIDELY SPACED. SURFICIAL FEATURES SUCH AS DEBRIS PILES, BUILDINGS, ROADS, RAILROADS, AND ANCILLARY STRUCTURES ARE NOT SHOWN (REFER TO SITE LAYOUT FOR LOCATIONS OF THESE FEATURES).
5. REPRESENTATIONS OF CONTACT LINES BETWEEN SOIL TYPES ARE INTERPRETIVE BECAUSE BORINGS/WELLS ARE WIDELY SPACED AND BECAUSE CONTACTS CAN BE GRADATIONAL. CONTACT LINES ARE DASHED WHERE INFERRED.

ARCADIS

CROSS SECTION H-H'
SOIL AND GROUNDWATER INVESTIGATION REPORT
OLYMPIC MILL SERVICES OPERATIONS AREA
AK STEEL CORPORATION, MIDDLETOWN, OHIO

DRAWN	DATE	PROJECT MANAGER	DRAWING NAME
R. SMITH	1/8/2002	D. VICAREL	AK\GIS\OMS-CS8
		LEAD DESIGN PROF. J. REID	CHECKED D. VICAREL
		PROJECT NUMBER MI000848.0021	FIGURE NUMBER 15