OVERVIEW FACILITIES PLAN

August 1975

San Francisco Master Plan Wastewater Management

Department of Public Works
City & County of San Francisco

Assisted by
J. B. Gilbert & Associates

LIBRARY COPY
OFFICE SERVICES DIVISION
MANAGER, ENGINEERING SFWWP

OVERVIEW
FACILITIES PLAN
AUGUST 1975

San Francisco Master Plan
Wastewater Management

Department of Public Works
City and County of San Francisco

Assisted by
J. B. Gilbert & Associates

TABLE OF CONTENTS

INTRODUCTION . . . . . .

Summary . . . . . .
Current Plans . . . . . .

DESCRIPTION OF SCHEDULED ITEMS TO BE COMPLETED . . . . . .

CHAPTER 1
PROJECT HISTORY AND STUDY SCOPE . . . . . .

Purpose and Scope of Project Study . . . . . .
Planning Objectives . . . . . .
Background . . . . . .
Planning and Report Preparation Staffs . . . . . .

CHAPTER 2
EXISTING AND PROJECTED PLANNING AREA CHARACTERISTICS . . . . . .

Service Area Boundaries and Composition . . . . . .
Topography . . . . . .
Geology and Soils . . . . . .
Climate . . . . . .
Ocean and Bay Water Movement . . . . . .
Marine Ecology . . . . . .
Land Use . . . . . .
Population . . . . . .
Employment . . . . . .
Regional Air Quality . . . . . .
Institutions . . . . . .

CHAPTER 3
EXISTING WASTEWATER MANAGEMENT
FACILITIES AND PROCEDURES . . . . . .

Collection System . . . . . .
Bypass Facilities . . . . . .
Wastewater Treatment . . . . . .
Industrial Wastes and Source Control . . . . . .
Administration . . . . . .

CHAPTER 4
WATER AND WASTEWATER CHARACTERISTICS . . . . . .

Water Supply . . . . . .
Wastewater Quantity . . . . . .
Dry Weather Flow . . . . . .
Wastewater Quality . . . . . .

CHAPTER 5
REGULATORY REQUIREMENTS 85

Ocean Plan 85
Bays and Estuaries Policy 85
Interim Basin Plan 86
Tentative San Francisco Bay Basin 86
NPDES Permits and Cease and Desist Orders 86
Reclamation and Reuse Requirements 86

CHAPTER 6
DESCRIPTION OF ALTERNATIVE LONG-TERM PROJECTS 87

Description of Alternatives 87
Formulation of Alternatives 91

CHAPTER 7
ALTERNATIVE EVALUATION 99
Cost 100
Overflow Frequency 102
Optimum Project Capacities 102
Water Quality Considerations 102
Amount of Waste Discharged 103
System Reliability 103
Public Acceptance 104
Reclamation Potential 104

CHAPTER 8
PLAN DESCRIPTION 105

Elements of the Plan 107

CHAPTER 9
FIRST-STAGE GOALS 111

Water Quality 111
Financing 111
Property Acquisition 115
Design 115
Construction 115

CHAPTER 10
DESCRIPTION AND EVALUATION OF SHORT-TERM ALTERNATIVES 117

Dry Weather Treatment 117
Alternative Dry Weather Systems 117
Initial Wastewater Storage and Related Facilities 119
Other Initial Facilities 119
Transport Systems 119
Conclusions 120

CHAPTER 11
FIRST-STAGE PROJECT 121

First-Stage Project 121
Implementation 129

CHAPTER 12
FUTURE ADJUSTMENTS 135

Conclusions 142

CHAPTER 13
RELATED REPORTS AND STUDIES 143

Available Reports 143
Public Review 157
Future Reports 157

REFERENCES 163

INTRODUCTION

SUMMARY AND CURRENT PLANS

This report is an Overview Facilities Plan; it includes analyses of alternative methods of managing storm and sanitary wastewaters in San Francisco and a recommended program of control. Previous studies are summarized, and new data and options are considered.

This report contains an analysis of alternative long-range plans and specific first-stage projects. In addition, possible future events that would affect the recommended long-range plan are discussed.

This report is designed to provide the basis for conceptual approval by the State and EPA of the City's approach to control of water pollution. It will provide the foundation for Environmental Impact Reports and additional technical supporting data on individual projects. In addition, it satisfies both regulatory and grant funding requirements of the State.

SUMMARY

The problems faced by San Francisco are as follows:

- All three of the city's sewage treatment plants are under cease and desist orders from the San Francisco Bay Regional Water Quality Control Board. New discharge requirements have been developed by the Regional Board.

- San Francisco has a combined sewer system—that is, the same sewer system carries both storm and sanitary flows. When it rains, the sewage treatment plants' capacities are exceeded and the combined storm and sanitary flows are bypassed directly to the Bay or Ocean without treatment. As a result, fecal and other objectionable matter is deposited on the beaches around the city, which results in the posting of these beaches to protect public health.

The primary problem faced by San Francisco is to determine what to do in the next few years. Whatever is done is likely to require a considerable investment of local, State, and Federal funds, and care must be taken to see that the near-term actions are consistent with potential long-term actions.

The approach taken in this report was, first, to examine long-term alternatives, including the City's previously developed Master Plan. A reasonable long-term course of action was selected. Then, attention was given to developing a first-stage program that would accomplish the City's near-term goals and also be consistent with the long-term plan.

Chapters 1-5 present background information, including the applicable regulations set forth in Chapter 5.

Chapter 6 develops the long-term alternatives, which are evaluated in Chapter 7. Chapter 8 describes the recommended long-term plan which consists of a city-wide program to control dry and wet weather flows. The plan consists of the following elements:

- Construction of a treatment plant in the southeast section of the city. The plant would provide secondary treatment for dry weather flows for the eastern half of the city.

- Construction of a treatment facility in the southwest section of the city to treat wet weather flows for the entire city. The facility would also provide secondary treatment of dry weather flows for the western section of the city.

- An ocean outfall off the city's southwest shore through which all treated waste would ultimately be disposed.

- A crosstown tunnel to carry wet and dry weather flows from the eastern side of the city to the Southwest Treatment Plant.

- A westside tunnel to carry wet and dry weather flows from the western part of the city to the Southwest Treatment Plant.

- A facility to convey dry weather flows from the existing North Point Treatment Plant in the northeastern part of the city to the future Southeast Treatment Plant.

- City-wide storage of wet weather flows for their ultimate release into the major transport facilities and treatment at the Southwest Treatment Plant.

- A rainfall monitoring and control program to operate the entire system.

Chapter 9 set forth first-stage goals; Chapter 10 develops and evaluates short-term programs to meet these goals. The recommended first-stage project is described in Chapter 11 and consists of the following major elements:

- Interim improvements to the Richmond-Sunset Treatment Plant.
- A westside tunnel.
- The initial stage of the ocean outfall.
- Secondary treatment facilities in the Southeast part of the city to treat dry weather flows from the eastern section.
- A facility to convey dry weather flows from the North Point Plant in the northeast to this new secondary treatment plant.
- Initial storage facilities for wet weather flows.
- Several studies, data collection programs, and pilot programs to provide information for the development and refinement of the long-range plan.

Chapter 12 describes possible adjustments in the long-range plan. Chapter 13 lists relevent reports and studies. This section is included in this Facilities Plan to satisfy regulatory requirements and to provide a basis for implementation of the program.

CURRENT PLANS

A draft of the report has been under review by regulatory agencies since mid-February, 1975. After submission of the draft, three events occurred that modify portions of the report:

1) The Supreme Court ruled that the impoundment of pollution control funds by the President was unlawful. This resulted in an increase in California's allocation of construction grant funds and created a need for the State to accelerate the pace with which it allocated funds to prevent alloted funds from being lost. In addition, the Governor ordered a speed-up in the construction of pollution control facilities to alleviate unemployment. In response, the State Board implemented an "accelerated program" to expedite the construction of these facilities. San Francisco was requested to expand its first-stage program. This expansion constituted a modification of the first-stage facilities recommended in the February draft of this report.

2) Increasing concern was voiced by the Board of Supervisors over the construction of large, underground basins throughout the city for the storage of combined sewage during storms, as recommended in the February draft. In the draft, the approach to storage consisted of a combination of basin and sewer (tunnel) storage, with major reliance on basins. In response to the Board of Supervisors and in light of the accelerated program, the City engineering staff investigated the use of enlarged sewers rather than basins for storage. Based on this investigation, it was concluded that sewer storage would be more appropriate than basin storage, at least in the north shore area.

3) Public hearings were held on the Environmental Impact Report for the proposed expansion of the Southeast Treatment Plant. Considerable opposition to the plant was expressed by neighborhood groups. Therefore, the City reexamined alternative sites for all or part of the plant; at this time it appears that an additional site will be available. The site consists of the Alvord property and adjacent property near the Central Basin. Availability is still contingent on approval of the community and the San Francisco Port Commission.

The modifications to the plan caused by these events are generally acceptable to all concerned agencies. Therefore, the body of the report was not extensively modified; instead, this introduction was prepared describing the currently planned program. The description of this program, which follows, consists of four parts:

1. The long-range plan, shown on Figure I-1.
2. The first-stage facilities shown on Figure I-2.
3. Schedule of the first-stage program, including cost estimates, Figure I-3.
4. A description of the items on the schedule.

The long-range plan shown on Figure I-1 is, *in concept,* the same as the Master Plan developed by the City several years ago. It consists of a city-wide, integrated, storage-transport-treatment system for control of dry and wet weather flows. The selection of this plan was based on considerations of cost, benefits to water use and water quality, and other criteria such as public acceptability and consistency with the City's general planning goals. It is expected that this plan will be refined as the City accumulates more information about technical aspects and public goals and as regulatory agency emphasis changes. In fact, two such refinements have occurred since the completion of the analysis done for this report:

- The first is a change from reliance on large, underground basins for storage to a reliance on oversized transport facilities, including the crosstown and west side tunnels. This change resulted from the City's re-analysis of storage in response to the Board of Supervisors' concerns.

- The second is the possible change in the site of all or part of the Southeast Treatment Plant in response to public concern.

The first-stage facilities shown on Figure I-2 reflect the same two changes relative to analyses done for this report. Initial storage for the north and west portions of the city will now be provided in oversized transport facilities. The possible change in the Southeast Plant location is also shown on the figure.

Figure I-3 shows the schedule for implementation of currently planned first-stage facilities and for the conduct of studies prerequisite to the implementation. The scheduled items are described in more detail immediately following the bar chart.

In addition, much of Chapter 8, "Plan Description," and Chapter 11, "First Stage Project," are entirely consistent with current plans, specifically, the following parts of these chapters:

Chapter 8 —List of basic benefits
—Board of Supervisors' resolution
—Description of treatment, including Southwest and Southeast flow diagram
- Description of disposal
—Description of operation

Chapter 11—Description of Southeast Treatment Plant, including layout, flow diagram, design criteria, anticipated performance, and proposed capacity
—Richmond-Sunset treatment improvements

The schedules shown in Chapter 11 may be modified slightly to account for the delay in City activities caused by consideration of the Alvord site for the Southeast Treatment Plant.

FIGURE I-1
RECOMMENDED LONG-RANGE PLAN

Storage of storm runoff in large sewers designed specifically for this purpose. These sewers would discharge to the storage/conveyance tunnels which would transport the wastewater to a Southwest Treatment Plant. The operation of the storage facilities would be controlled automatically by a rainfall-actuated system.

Interception of untreated wet and dry weather flows from the west side in a west side tunnel, and transport of these flows to the Southwest Plant. This tunnel would also be used to store storm flows.

Treatment of wet and dry weather flows from the west side and, during periods of storm runoff, all flows (untreated storm runoff as well as effluent from the Southeast Plant) from the Northeast and Southeast Districts at a new large treatment plant at the Southwest site. During dry periods, this plant would provide secondary treatment for west side sewage.

Discharge of all treated effluent in an ocean outfall system, offshore of the Southwest Treatment Plant.

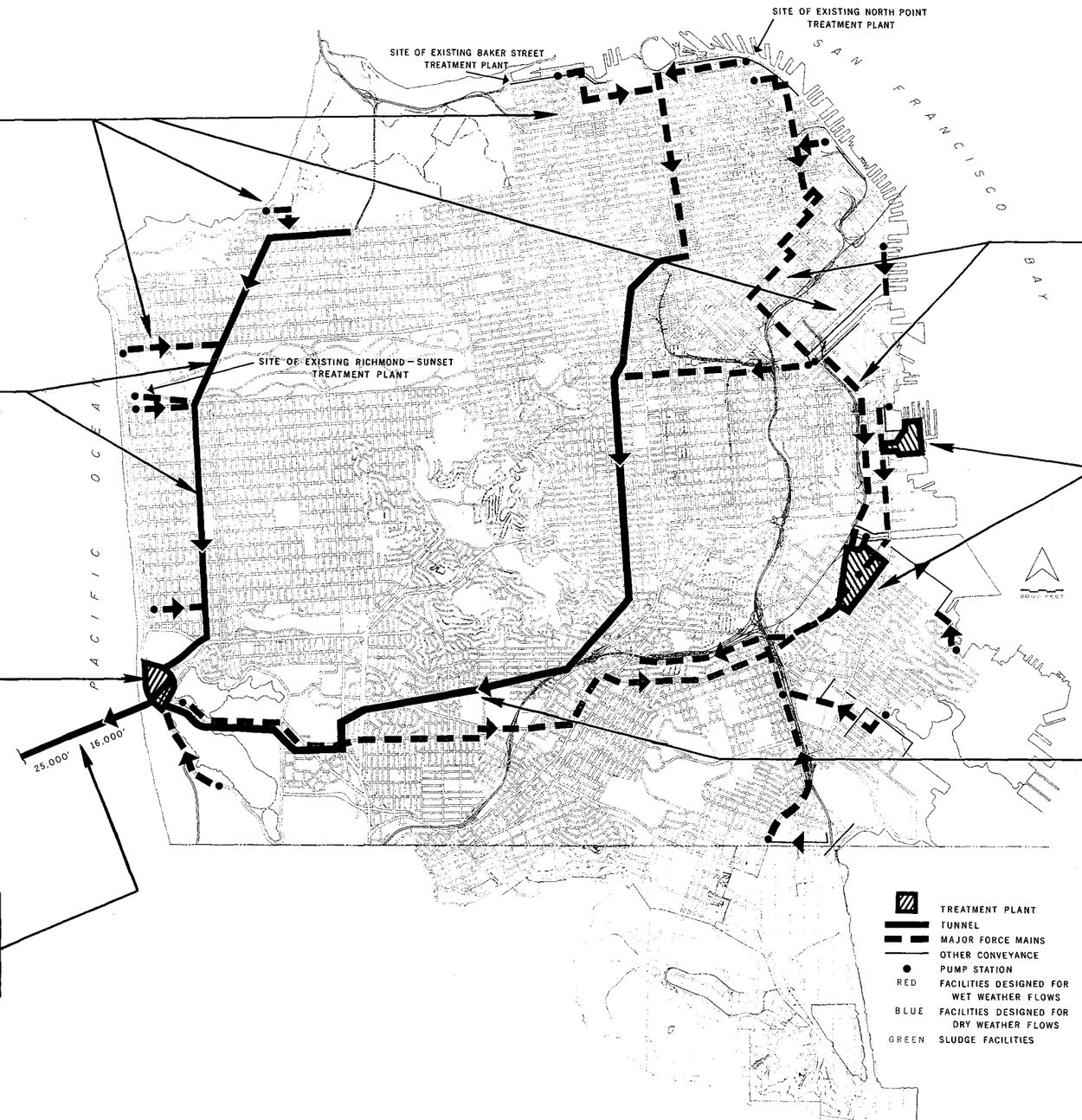

Transport of untreated dry weather flows from the North Point Plant to the Southeast Plant; the North Point Plant would be abandoned.

Secondary treatment of Northeast and Southeast Districts' dry weather flows at an expanded Southeast Plant at either one or both of these sites.* A small amount of wet weather flow would also be treated.

Transport of untreated wet weather flows from the Northeast and Southeast Districts and treated dry weather flows from the Southeast Plant to the Southwest Treatment Plant in a cross-town tunnel which would begin in the Northeast District. Segregation of treated Southeast effluent from untreated storm flows is an option. This tunnel would be designed for both transport and storage.

*At the time this report is being prepared, the northern site can only be regarded as a possibility.

FIGURE I-1
RECOMMENDED LONG-RANGE PLAN

FIGURE I-2
FIRST-STAGE FACILITIES
ACCELERATED PROGRAM

WEST SIDE

EAST SIDE

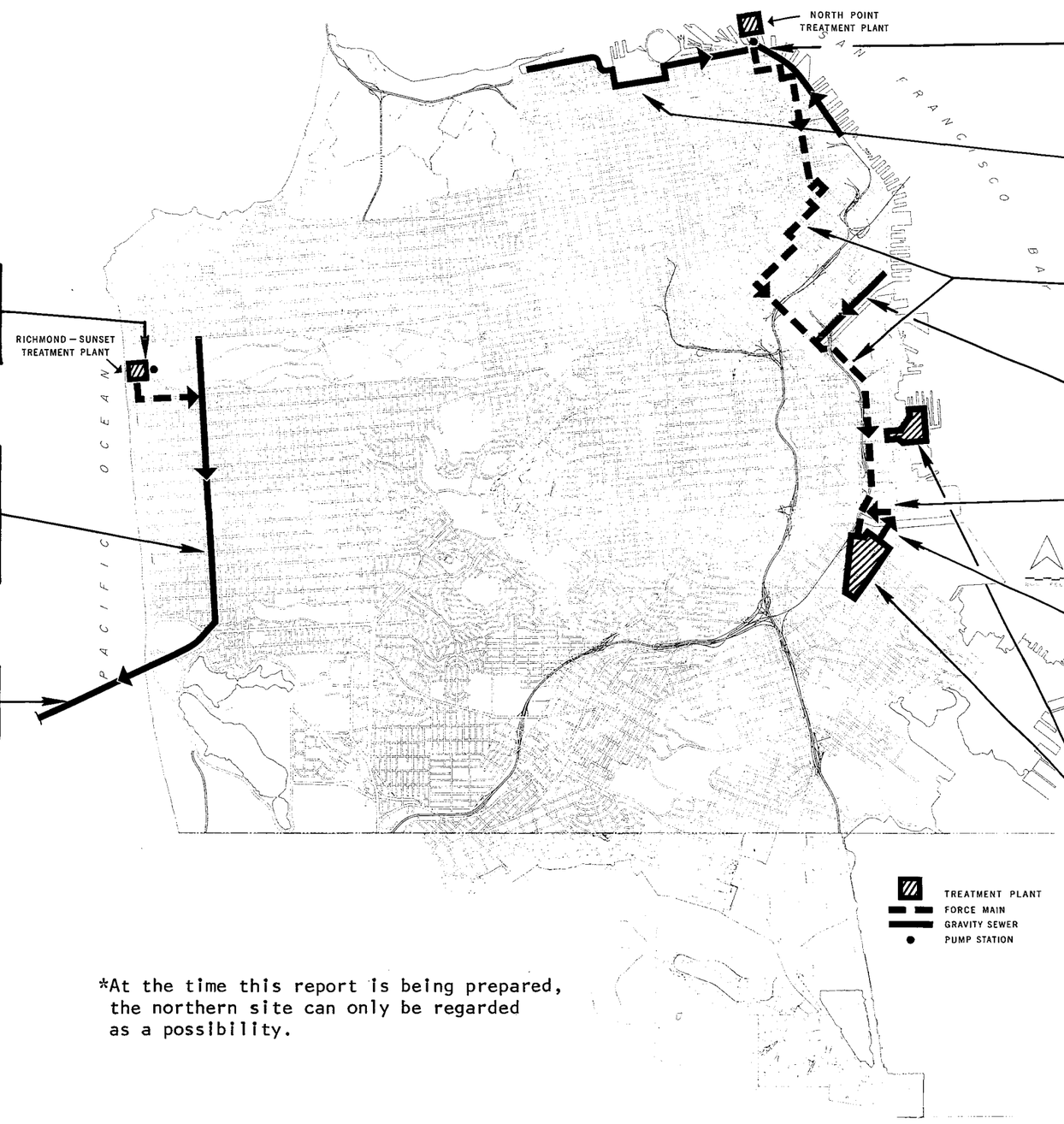

Conversion of North Point Plant for interim wet weather treatment.

Consolidation of north shore outfalls.

Construction of the North Point to Southeast transport facility for dry weather flows.

Consolidation of channel outfalls.

Consolidation of Islais Creek outfalls.

Construction of interim Islais Creek outfall for Southeast effluent during high flow periods.

Interim improvements at Southeast Plant; expansion of Southeast primary treatment facilities and construction of new secondary treatment facilities for dry weather flows from North Point and Southeast at either one or both of these sites.*

Conduct of several studies and data collection efforts to provide information for refinement of current plans.

Interim improvement of the Richmond-Sunset Plant to upgrade the quality of the primary effluent.

Construction of conveyance from Richmond-Sunset to the Southwest Treatment Plant site. This facility would be sized to provide storage for wet weather flows.

Construction of first and second phases of ocean outfall.

*At the time this report is being prepared, the northern site can only be regarded as a possibility.

FIGURE I-2
FIRST-STAGE FACILITIES
ACCELERATED PROGRAM

FIGURE I-3

SAN FRANCISCO WASTEWATER PROJECT
STAGE I SCHEDULE

	COST[1] LOCAL	COST[1] TOTAL
OVERVIEW PLANNING		
MASTER PLAN	0.174	1.391
SYSTEM DEVELOPMENT FOR STORMFLOW MANAGEMENT	1.726	3.395
MASTER PLAN EIR/S	0.019	0.149
FACILITIES PLAN	0.019	0.150
SPECIAL STUDIES		
MARINE DISPOSAL	0.098	0.785
PILOT STUDIES-DRY WEATHER TREATMENT	0.213	1.700
INFILTRATION-INFLOW	0.012	0.096
INDUSTRIAL WASTE SOURCE CONTROL	0.291	0.575
REVENUE	0.014	0.114
STORM WATER STORAGE CONTROL SYSTEM	0.480	3.841
OUTFALL SCREENING AND EXTENSION	0.250	2.00
WET-WEATHER TREATMENT	0.062	0.500
SEISMICITY, GEOLOGY, EARTHQUAKE EFFECTS	0.125	1.00
SOLIDS HANDLING	0.025	0.200
FIRST STAGE PROJECTS		
TREATMENT		
SOUTHEAST SOLIDS HANDLING, PHASE I	0.75	6.00
SOUTHEAST EXPANSION (INCLUDES PRIMARY/SEC TREATMENT & PHASE III SOLIDS HANDLING)	22.5	110
RICHMOND-SUNSET INTERIM	0.73	5.87
NORTHPOINT CONVERSION INTERIM WET WEATHER	0.18	1.40
SOUTHEAST INTERIM (INCLUDES PHASE II SOLIDS HANDLING)	0.51	4.1
CONVEYANCE (INCLUDING OUTFALL CONSOLIDATION)		
NORTHPOINT TO SOUTHEAST	3.60	28.8
NORTH SHORE CONSOLIDATION (INCLUDES NORTHPOINT PUMP STATION)	8.00	64.00
RICHMOND-SUNSET TO SOUTHWEST	4.96[2]	40.00[2]
CHANNEL ST. CONSOLIDATION	2.50	20.00
ISLAIS CR CONSOLIDATION	0.88	7.00
OUTFALLS		
OCEAN, PHASE I	2.00	16.00
OCEAN, PHASE II	4.25	34.00
SOUTHEAST INTERIM	0.15	1.20
SECOND STAGE PROJECTS[3]	54.518	354.266
SOUTHWEST TREATMENT[4]	17.5	140
CROSS-TOWN TUNNEL	7	56
NORTH-AND WEST-SIDE SHORELINE STORAGE	5	40
	84.018	590.266

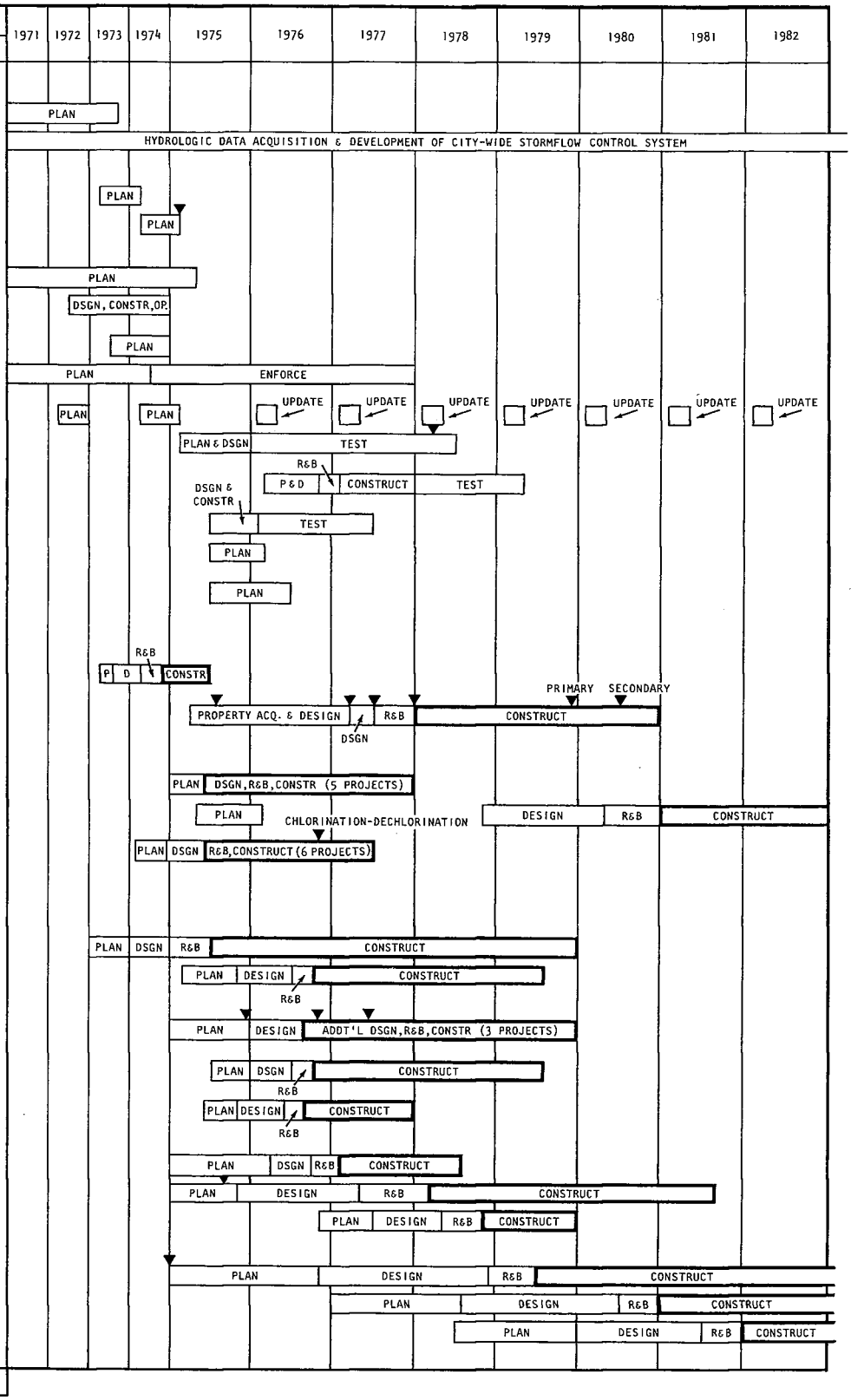

▼ Indicates regulatory deadline

[1] Costs include construction, engineering, and contingencies in millions of dollars at ENR index 2300

[2] These costs do not include capacity for storage. Cost estimates for the enlarged facility were not available at the time this report was prepared, but are being developed as part of the City's continuing planning efforts.

[3] Costs shown are only rough approximations pending selection of final control level and phasing. Approximations only through 1982.

[4] To be built in stages

DESCRIPTION OF SCHEDULED ITEMS TO BE COMPLETED

System Development for Stormflow Management

This is a long-term study. It consists of several elements:

- Continued collection of rainfall data at stations located throughout the city.
- Continued collection of sewer flow data.
- Based on these data, development of a system for controlling the storage, transport, and treatment of storm flows throughout the city.

The data collection elements have been in progress for about four years and will continue for several additional years. These data have already been used to develop mathematical models of sewer/storage system response to different patterns of rainfall.

Facilities Plan

This report is the Facilities Plan. It was completed in draft form on February 15, 1975, and then revised based on comments from the City and regulatory agencies.

Revenue

This special study accompanies the Facilities Plan. It will be updated annually as facility plans and cost estimates are refined.

Storm Water Storage Control System

This special study will collect operating data on prototype storm water storage systems, both sewers and basins. Elements of the study will include the following:

- Filling and emptying of storage facilities.
- Deposition and removal of solids, both by design and otherwise.
- Control of floating materials.
- Occurrence of septicity.
- Disinfection.
- Odor control.
- Maintenance.
- Remote control, including automatic operation actuated by rainfall data.

Outfall Screening and Extension

This special study will consist of the construction of pilot screening devices on one or more existing outfalls. The studies will cover the following:

- Clogging and cleaning of screens.
- Operation and effect on overflows of various types and sizes of screens.
- Other methods of achieving removal of larger materials if screening proves to be ineffective or infeasible.

Wet Weather Treatment

In the recently completed pilot studies, dry weather treatment was emphasized. Similar, though less extensive studies are required for treatment of wet weather flows. One or more of the existing primary treatment plants would likely be used after addition of test-scale facilities for chemical feeding. The studies would include the following:

- Type and dosage of coagulant aids.
- Chemical dosage rate control.
- Volume and treatability of sludge.
- Possibility of chemical recovery.
- Collection and handling of floatables.
- Disinfection and, possibly, removal of toxicity caused by disinfection.

Seismicity, Geology, Earthquake Effects

The purpose of this study will be to develop city-wide information concerning seismicity, geology, and earthquake effects. Such individual studies would normally be required for each pro-

ject, but because construction will eventually take place throughout most of the city, much of the basic information required for each project could be developed more efficiently in a single, city-wide study. City-wide design criteria will be developed. It is also possible that such studies could yield information on configuration and operation of the system to increase reliability in the event of an earthquake.

Solids Handling

The purpose of this study is to evaluate refinements of the proposed solids handling plans (see "Southeast Solids Handling" below). Special attention will be given to the compatibility of solids handling with the specific method of solids disposal, including availability of disposal sites and distance of these sites from the Southeast Plant. Use of digestor gas for energy will also be considered.

Southeast Solids Handling Treatment*

This project consists of improvement and expansion of solids handling facilities at the Southeast Treatment Plant. Capacity will be provided for solids from North Point and Southeast dry weather flows. The following sequence of facilities will be used:

- Thickening
- Anaerobic
- Dewatering
- Truck disposal

Facilities will be designed to accommodate their ultimate expansion to handle all dry and wet weather solids from the entire city as recommended in the long-range plan.

Southeast Primary Treatment

This project consists of expansion of the primary treatment facilities at Southeast to provide capacity for dry weather flows from North Point and Southeast. This item on the bar chart (Figure I-3) also includes property acquisition for the entire Southeast Treatment Plant, including secondary treatment and solids handling.

Southeast Secondary Treatment*

This project consists of facilities for secondary treatment of dry weather flows from North Point and Southeast. The pure oxygen activated sludge system would be used as described in Chapter 10. Disinfection of the effluent is also included.

Richmond-Sunset Interim

This item includes the following improvements at the Richmond-Sunset Plant:

- Addition of chlorination-dechlorination facilities.
- Rehabilitation of digestor dome.
- Minor increase in hydraulic capacity.
- Addition of primary treatment capacity.
- Improvements in solids handling capability.

These improvements will maintain the plant until its projected abandonment in the 1980's when the proposed Southwest Treatment Plant is completed.

North Point Conversion to Wet Weather Treatment

This project consists of minor modifications to the North Point Plant so that it can be used to treat wet weather flows from the northeastern portion of the city. The plant would be used until completion of the crosstown tunnel and Southwest (wet weather) Treatment Plant. These modifications include equipment for chemical feeding.

Southeast Interim Treatment

This item consists of improvements to the existing Southeast Treatment Plant. The following are included:

- Digestor heating and other digestor modifications.
- Provision for waste gas utilization.

*All or part of these facilities could be located at the Aivord property and adjacent property, subject to approval by the community and the San Francisco Port Commission.

- Chlorination-dechlorination facilities, including chlorine storage.

These improvements are necessary to bring the plant up to expected performance levels.

North Point to Southeast Conveyance

This project will convey dry weather flows from the North Point Plant to the Southeast Plant for treatment. It will be constructed in two sections under several contracts. The southern section consists of a pumping station and force main. This section must be completed before construction of the northern section is begun so that the existing gravity sewer, in which the northern section will be laid, will no longer be in use.

North Shore Consolidation

This project consists of a large sewer, shown on Figure I-2 that would intercept and, because of its size, store storm runoff which now overflows through seven outfalls. The sewer would be designed to accommodate flows from a five-year storm; flows in excess of that would be discharged through the existing outfalls. The western branch of the sewer would also carry dry weather flows to North Point.

This item also includes the North Point pump station at the northern end of the North Point to Southeast conveyance.

Richmond-Sunset to Southeast Conveyance

This project is a gravity-flow tunnel from the Richmond-Sunset Plant to the site of the proposed Southwest Plant. It will be designed to provide storage for wet weather flows and will serve as the major wet weather transport facility for the west side.

Channel Street Consolidation

This project consists of the initial phase of consolidation of outfalls in the vicinity of 4th to 7th Streets. The project will be comprised of a sewer used for transport and storage and a pump station. The storage sewer will temporarily discharge wet weather flows to the North Point to Southeast conveyance. Future phases of construction will extend the sewer.

CHAPTER 1

PROJECT HISTORY AND STUDY SCOPE

PURPOSE AND SCOPE OF PROJECT STUDY

This report is an Overview Facilities Plan developed in accordance with guidelines of the State Water Resources Control Board. Its purpose is to consolidate and update San Francisco's current planning program and to define and schedule what needs to be done in the future. This report will provide an overview of the City's proposed water quality management program and a framework for the orderly implementation of that program.

PLANNING OBJECTIVES

The problems faced by the City and County of San Francisco are as follows:

- All three of the city's sewage treatment plants are under cease and desist orders from the San Francisco Bay Regional Water Quality Control Board. New discharge requirements have been developed by the Regional Board.

- San Francisco has a combined sewer system—that is, the same sewer system carries both storm and sanitary flows. When it rains, the sewage treatment plants' capacities are exceeded, and the combined storm and sanitary flows are bypassed directly to the Bay or Ocean without treatment. Fecal and other objectionable matter is deposited on the beaches around the city, which results in the posting of these beaches to protect public health.

The primary problem faced by San Francisco is to determine what to do in the next few years. Whatever is done is likely to require a considerable investment of local, State, and Federal funds, and care must be taken to see that the near-term actions are consistent with potential long-term actions.

Therefore, this report has taken the following approach:

- Development of definite, short-term goals for the control of water quality in the San Francisco area.

- Evaluation of the city's long-term Master Plan, alternatives to the Master Plan, and refinements to the Master Plan in terms of their achievement of long-term benefits.

- Development of the best near-term course of action that complies with the near-term goals and that provides maximum flexibility with respect to the long-term actions evaluated in the item above.

The formulation and selection of long-term actions are covered in Chapters 7 and 8. The near-term goals are set forth in Chapter 9. Chapters 10 and 11 cover near-term actions. Possible changes in plans are discussed in Chapter 12, related studies and reports in Chapter 13.

BACKGROUND

History of Planning and Facility Construction

San Francisco's sewage system was built in several stages. The original system was designed to carry combined sanitary and stormwater flows to the shoreline, and by 1899, 150 miles of these combined sewers had been completed. At this point, the city's first real sewerage plan was developed (Grunsky, 1899). This plan recommended:

- continued use of the combined sewer system.

- that natural drainage be used to collect wastewater.

- that flow be disposed of through deep water outfalls.

These policies were followed until 1935, when another plan was developed (Eddy, 1935). By this time, San Francisco had approximately 700 miles of combined sewers. The recommendations of this new plan were:

- to divide San Francisco into three drainage basins, each with its own sewage treatment plant.

- to divert to the treatment plants all dry

weather flows and all storm runoff from storms of intensities greater than 0.02 inches of rainfall per hour.

- to continue the use of combined sewers.

The first of the recommended treatment plants, the Richmond-Sunset Plant in Golden Gate Park, was completed in 1938. It still serves the western side of the city. The construction of the North Point and Southeast Plants was delayed until 1951 by World War II. The North Point Plant, the facility for the northeastern basin, is on the shoreline north of Coit Tower. The Southeast Plant, near Islais Creek, serves the southeastern part of the city.

Between 1951 and 1965, facilities were built in the North Point and Southeast Districts to intercept the remaining dry weather sewage flows. After 1965, all dry weather flows from these areas were treated.

The present system is essentially the one recommended by the 1935 plan. San Francisco now has

- over 900 miles of combined sewers.
- 56 diversion structures.
- 35 miles of intercepting sewers.
- 22 pumping stations.
- 3 primary treatment plants.

With the present system, all sanitary sewage is treated during dry weather. When it rains, all or part of the combined sanitary sewage and storm runoff is treated, depending on the intensity of the rain. A yearly average of six billion gallons of combined wastewater is bypassed to the bay and the ocean. This is equal to about sixty days of sanitary sewage flow.

Since the early 1900's, the city has been reclaiming some of its sewage. The present reclamation system, completed in 1932, processes about one mgd of wastewater in a secondary biological treatment plant and distributes the resulting nonpotable water to Golden Gate Park for irrigation.

History of Regulatory Actions

The first major water quality control legislation in California was passed in 1949. Known as the Dickey Act, it created the water pollution control boards that have evolved into the present State and Regional Boards. Amendments to the Dickey Act, along with the Porter-Cologne Water Quality Control Act (1968) and the Federal Water Pollution Control Act and the Amendments of 1972, have increased their range of powers.

Until recently, the regulatory agencies have been more concerned about the control of dry weather discharge than about the overflows of untreated combined sewage. In the late 1950's, the San Francisco Bay Regional Board expressed some concern over this problem, but took no formal action. Then in 1967, the Board ordered the City to stop discharging sewage that did not meet bacteriological standards for salt water bathing in the northwest and west shoreline areas. This action and subsequent actions by regulatory agencies and the City are listed below:

January 19, 1967—Regional Water Quality Control Board adopts Resolution No. 67-2 prescribing *REQUIREMENTS FOR WET AND DRY WEATHER DISCHARGES* from the Richmond-Sunset Plant and Zone.

December 21, 1967—RWQCB adopts Resolution No. *67-64* calling for the San Francisco Board of Supervisors to *ADOPT A SEWERAGE MASTER PLAN* by June 1, 1971.

February 2, 1968—S.F. Board of Supervisors adopts Resolution No. 68-68 *APPROVING RWQCB RESOLUTION NO. 67-64.*

October 28, 1968—S.F. Board of Supervisors adopts Resolution No. 716-68 *DECLARING ITS INTENTION OF COMPLYING WITH RWQCB REQUIREMENTS* in accordance with the following schedule:

1. *DRY WEATHER REQUIREMENTS* on or about July 1, 1975.
2. *WET WEATHER REQUIREMENTS* for those Bay and Ocean waters *WEST OF PIER 45,* on or about July 1, *1981.*
3. Appropriate *WET WEATHER REQUIREMENTS* for those Bay waters *EAST OF PIER 45* which are mutually agreed to be water contact sports areas at *DATES TO BE ESTABLISHED.*

October 30, 1968—*RWQCB ACKNOWLEDGES* S.F. Resolution 716-68.

January 29, 1970—RWQCB adopts Resolutions No. 70-2 and 70-3 prescribing *DISCHARGE REQUIREMENTS FOR WET WEATHER DISCHARGE STRUCTURES* in the North Point and Southeast sewerage zones, respectively.

March 14, 1970—RWQCB adopts Order 70-1. a *BUILDING PERMIT BAN* for a majority of the Southeast area.

March 26, 1970—RWQCB adopts Resolution No. 70-18 *EXPANDING THE BUILDING BAN* to downtown and the majority of the remainder of the City.

May 19, 1970—RWQCB, by Resolution 70-42, *LIFTS THE BUILDING BAN.*

December 1970—*DESIGN OF NORTH POINT OUTFALL INITIATED* with Brown & Caldwell, Consulting Engineers, performing design.

September 18, 1970—*CALIFORNIA ENVIRONMENTAL QUALITY ACT ADOPTED* setting requirements for Environmental Impact Reports.

July 13, 1971—*FEDERAL GOVERNMENT ADOPTS REQUIREMENT REQUIRING 85 PERCENT REMOVAL OF 5-DAY BOD,* with a possible waiver for Ocean discharges.

September 1971—San Francisco *MASTER PLAN FOR WASTEWATER MANAGEMENT DISTRIBUTED.*

September 15, 1971—*1ST HEARING OF THE MASTER PLAN* before a joint meeting of Health and Finance Committees of the Board of Supervisors. *ACTION TABLED* for a review of the report.

November 30, 1971—*PROJECT REPORT FOR 1971-72, DRY WEATHER WASTEWATER TREATMENT AND OCEAN DISCHARGE, SUBMITTED TO SWRCB* recommending level II treatment and ocean discharge for all dry weather flows.

December 31, 1971 and January 3, 1972—*EPA REPRESENTATIVES* meet with the City staff to *SOLICIT A GRANT APPLICATION FOR DEMONSTRATION OF UPSTREAM RETENTION BASINS.*

January 26, 1972—City formally *REQUESTS A WAIVER OF THE 85 PERCENT BOD REQUIREMENT* for the North Point Treatment Plant.

February 3, 1972—*SWRCB MODIFIES 1971-72 PROJECT LIST* to allow the city to *STUDY ALTERNATIVE PROJECTS* for the North Point discharge.

August 22, 1972—*J. B. GILBERT & ASSOCIATES SELECTED TO REVIEW MASTER PLAN.*

August 1972—Army Corps of Engineers releases *INFORMATION BULLETIN ON 'TRIPLE S' STUDY.* Four fo five schemes include single wet and dry weather treatment plant at Lake Merced site.

August 30, 1972—*REVISED EIS* to reflect review of the Department of Fish and Game submitted to SWRCB.

October 5, 1972—*CONTRACT WITH STATE* for construction grants signed by the City.

October 18, 1972—*FEDERAL WATER POLLUTION CONTROL ACT AMENDMENTS OF 1972* passed over presidential veto.

October 30, 1972—*GRANT CONTRACT WITH STATE MODIFIED to include wet weather program.*

December 4, 1972—City submits to the RWQCB the anticipated five-year *PROJECT NEEDS FOR UPDATING AND EXTENDING* the Municipal Project Lists for 1973-78.

December 4, 1972—RWQCB tentatively designates *AREAS OF BIOLOGICAL SIGNIFICANCE. SEAL ROCKS* are included.

December 13, 1972—SWRCB *AMENDS GRANT CONTRACT* with City to separate phase I into two portions. *SOLIDS HANDLING PORTION IS APPROVED. TRANSPORT PORTION IS HELD* by EPA pending completion of EIS.

December 14, 1972—*RECREATION AND PARK COMMISSION* adopts Resolution No. 9204 *APPROVING THE MASTER PLAN* in principle.

Decmeber 19, 1972—AB 740 signed into law. Bill makes *PORTER-COLOGNE ACT CONSISTENT WITH 1972 FEDERAL WATER POLLUTION*

CONTROL ACT AMENDMENTS AND RAISES STATE GRANT CONTRIBUTION TO 12½%.

December 19, 1972—RWQCB presents *TENTATIVE WATER QUALITY OBJECTIVES* for San Francisco Bay Basin Plan.

December 20, 1972—*EPA DECIDES TO WRITE EIS.*

December 26, 1972—Board of Supervisors adopts resolution establishing a *CITIZENS COMMITTEE* for public participation in *WASTEWATER PROJECT EVALUATION* and continuing review of the Master Plan concepts.

January 4, 1973—SWRCB adopts 1972-73 *PRIORITY LIST FOR GRANT FUNDING* due to lack of funds to finance all proposed State projects.

January 11, 1973—RWQCB adopts orders No. 73-1 and 73-2 *AMENDING CEASE AND DESIST ORDERS FOR THE NORTH POINT AND SOUTHEAST PLANTS.*

February 1972—*MASTER PLAN PRESENTED* to members of the City's *CAPITAL IMPROVEMENT ADVISORY COMMITTEE.*

March 1, 1972—*MASTER PLAN PRESENTED* to the members of the City's *INTERDEPARTMENT COMMITTEE ON WATER POLLUTION CONTROL.*

March 10, 1972—*GRANT APPLICATION FOR UPSTREAM RETENTION BASINS SUBMITTED TO EPA.*

March 18, 1972—Second hearing by the Board of Supervisors' Joint committee on Health and Finance during which the *MASTER PLAN WAS REFERRED TO CITY PLANNING AND RECREATION AND PARK DEPARTMENTS* for their review.

March 19, 1972—*PRESENTATION OF THE MASTER PLAN TO THE RECREATION AND PARK COMMISSION,* who formed a review committee.

April 21, 1972—*EPA DENIES WAIVER* for 85 percent BOD removal for *NORTH POINT DISCHARGE.*

April 28, 1972—*DRY WEATHER PROGRAM PROJECT APPLICATION* (including first level treatment and ocean disposal) sent to SWRCB.

May 15, 1972—Letter received from the *ENVIRONMENTAL PROTECTION AGENCY WITHHOLDING GRANT FUNDS* for the City until a City plan for sewage treatment is approved by the RWQCB.

June 28, 1972—S.F. presents a recommended *DRY WEATHER PLAN TO A RWQCB HEARING* on the Interim Basin Plan.

June 29, 1972—*EIS AND PROJECT REPORT SENT TO SWRCB.* Recommended project included level II treatment for North Point and Southeast combined, abandoning North Point site, and ocean discharge of wastes from all three plants.

July 6, 1972—State Water Resources Control Board adopts a new *OCEAN DISCHARGE POLICY.*

July 11, 1972—*SWRCB CERTIFIES PHASE I OF DRY WEATHER PROGRAM.* Includes North Point to Southeast transport and solids handling improvements at Southeast.

July 13, 1972—*CITY PLANNING COMMISSION* adopts Resolution No. 6877 *APPROVING BASIC CONCEPTS OF MASTER PLAN.*

January 30, 1973—*BOARD OF SUPERVISORS ADOPTS* resolution including *TIME SCHEDULES* in RWQCB resolutions No. 73-1 73-2 *FOR BOTH INTERIM AND FUTURE FACILITIES.*

February 1, 1973—*EPA REJECTS UPSTREAM RETENTION BASIN GRANT* application due to lack of funds.

July 2, 1973—*BOARD OF SUPERVISORS APPROVES SUPPLEMENT I TO MASTER PLAN.*

August 1973—*EPA PROMULGATES SECONDARY TREATMENT REQUIREMENTS.*

August 1973—*CITY APPLIES FOR NPDES PERMIT.*

August 1974—*EPA COMPLETES EIS.*

November 1974—*PILOT PLANT STUDY COMPLETE.*

December 6, 1974—*RWQCB ISSUES NPDES PERMITS.*

February, 1975—*BOARD OF SUPERVISORS REAFFIRMS MASTER PLAN.*

The Current Planning Program

The Current planning program began in the late 1960's and has consisted of a number of reports done by or for the City. The reports, listed below, were the source of much of the information in this report.

1. SOUTHEAST WATER POLLUTION CONTROL PLANT EFFLUENT OUTFALL EXTENSION, OFFSHORE SECTION, 1966.
   J. H. Pomeroy and Co., Inc.

2. CHARACTERIZATION AND TREATMENT OF COMBINED SEWER OVERFLOWS, 1967.
   Engineering Science, Incorporated.

3. JOINT COMMITTEE ON BAY AREA REGIONAL ORGANIZATION—SAN FRANCISCO REPORT ON SOLID WASTE DISPOSAL, LIQUID WASTE DISPOSAL, 1968.
   San Francisco Department of Public Works.

4. STATUS OF POLLUTION ABATEMENT, 1968.
   San Francisco Department of Public Works.

5. SUBMARINE OUTFALL (OCEANOGRAPHIC STUDIES) PRELIMINARY DESIGN REPORT, PHASE I, SCOPE OF WORK, 1969.
   Brown and Caldwell.

6. ALTERNATE METHODS OF EFFLUENT DISPOSAL, 1969.
   Brown and Caldwell.

7. PREFEASIBILITY STUDY—SEWER TUNNEL PROJECT FOR THE CITY OF SAN FRANCISCO, 1970.
   Bechtel Incorporated.

8. CHLORINATION STUDY—SOUTHEAST PLANT DRY WEATHER FLOW, 1970.
   URS Research Company

9. HYPOCHLORITE DISINFECTION OF SAN FRANCISCO SEWAGE EFFLUENT, 1970.
   San Francisco Department of Public Works.

10. REVIEW OF BIOLOGICAL LITERATURE ON PACIFIC COAST MARINE WASTE DISPOSAL AS A GUIDE TO PREDICTION OF ECOLOGICAL EFFECTS OF A SUBMARINE OUTFALL IN THE GULF OF THE FARALLONES, 1970.
    Dr. Wheeler J. North.

11. SURVIVAL OF DUNGENESS CRAB LARVAE IN TWO CONCENTRATIONS OF SAN FRANCISCO SEWAGE EFFLUENT, 1970.
    Dr. George Schuman, Marine Associates.

12. SAN FRANCISCO COMPREHENSIVE MASTER PLAN REPORT—TEXT (PRELIMINARY), 1971.
    San Francisco Department of Public Works.

13. SAN FRANCISCO COMPREHENSIVE MASTER PLAN REPORT—BOOK OF PLATES (PRELIMINARY), 1971.
    San Francisco Department of Public Works.

14. WATERSHED MODEL AND SEWER MODEL, 1971.
    Water Resources Engineers, Incorporated.

15. WATER QUALITY TRANSPORT MODEL, 1971.
    Water Resources Engineers, Incorporated.

16. DISSOLVED AIR FLOTATION PROJECT REPORT, 1971.
    Engineering-Science, Incorporated.

17. DISSOLVED AIR FLOTATION—APPENDIX A—PRECONSTRUCTION STUDIES ON QUALITY AND QUANTITY RELATIONSHIPS OF COMBINED SEWAGE FLOWS AND RECEIVING WATER STUDIES AT OUTER MARINA BEACH, 1971.
    Engineering-Science, Incorporated.

18. DISSOLVED AIR FLOTATION—APPENDIX B—TECHNICAL OBJECTIVES FOR FIELD DEMONSTRATION OF BAKER STREET DISSOLVED AIR FLOTATION FACILITY, 1971.
    Engineering-Science, Incorporated.

19. DISSOLVED AIR FLOTATION—APPENDIX C—TREATMENT OF DILUTE RAW SEWAGE

WITH THE DISSOLVED AIR FLOTATION PROCESS—A PILOT PLANT STUDY, 1971.
Engineering-Science, Incorporated.

20. DISSOLVED AIR FLOTATION—APPENDIX D—DESIGN FACTORS FOR BAKER STREET DISSOLVED AIR FLOTATION FACILITY, 1971.
Engineering-Science, Incorporated.

21. DISSOLVED AIR FLOTATION—APPENDIX E—COST FOR DISSOLVED AIR FLOTATION FACILITIES, 1971.
Engineering-Science, Incorporated.

22. DISSOLVED AIR FLOTATION—APPENDIX F CHARACTERIZATION OF THE RECEIVING WATER, 1971.
Engineering-Science, Incorporated.

23. DISSOLVED AIR FLOTATION—APPENDIX G—PERFORMANCE EVALUATION OF BAKER STREET FACILITY WITH RAW SEWAGE, 1971.
Engineering-Science, Incorporated.

24. REPORT ON WATER POLLUTION CONTROL PLANTS—REPORT 1, PHASE I—EXISTING OPERATIONS AND PLANT PERFORMANCE, 1971.
Brown and Caldwell.

25. REPORT ON WATER POLLUTION CONTROL PLANTS—REPORT 1, PHASE II—ALTERNATIVE TREATMENT PROCESSES FOR REDUCTIONS OF TURBIDITY, COLOR, FLOATABLES, GREASE, AND SETTLEABLE MATTER, 1971.
Brown and Caldwell.

26. REPORT ON WATER POLLUTION CONTROL PLANTS—REPORT 2, PHASE I—REDUCTIONS REQUIRED FOR TURBIDITY, COLOR, FLOATABLES, GREASE, AND SETTLEABLE MATTER, 1971.
Brown and Caldwell.

27. REPORT ON WATER POLLUTION CONTROL PLANTS—REPORT 2, PHASE II—ALTERNATIVE TREATMENT PROCESSES FOR REDUCTIONS OF TOXICITY AND BIOSTIMULANTS, 1971.
Brown and Caldwell.

28. REPORT ON WATER POLLUTION CONTROL PLANTS—REPORT 3, PHASE I—REDUCTIONS REQUIRED FOR TOXICITY AND BIOSTIMULANTS, 1971.
Brown and Caldwell.

29. CITY AND COUNTY OF SAN FRANCISCO, A PREDESIGN REPORT OF MARINE WASTE DISPOSAL, OCEANOGRAPHIC AND BASE DATA ACQUISITION AND EVALUATION OF ALTERNATE LOCATIONS (three volumes), 1971.
Brown and Caldwell.

30. CITY AND COUNTY OF SAN FRANCISCO SEWERAGE SYSTEM—BASIC DATA DEVELOPMENT (LAND USE AND POPULATION), 1971.
San Francisco Department of Public Works.

31. FEASIBILITY OF THE METROPOLITAN WATER INTELLIGENCE SYSTEM CONCEPT, 1971.
M. B. McPherson, ASCE, New York City.

32. APPENDIX TO THE COMPREHENSIVE MASTER PLAN PRELIMINARY REPORT, 1971.
San Francisco Department of Public Works.

33. ENVIRONMENTAL IMPACT STATEMENT —DRY WEATHER WATER POLLUTION CONTROL PROJECT, 1972 Revision.
San Francisco Department of Public Works.

34. INDUSTRIAL WASTE PROGRAM, 1972.
San Francisco Department of Public Works.

35. EVALUATION, SAN FRANCISCO WASTEWATER MASTER PLAN, 1973.
J. B. Gilbert & Associates.

36. SAN FRANCISCO MASTER PLAN FOR WASTEWATER MANAGEMENT—SUPPLEMENT I, 1973.
San Francisco Department of Public Works.

37. SAN FRANCISCO LAND USE TABULATIONS FOR 1970, 1973.
San Francisco Department of City Planning.

38. INDUSTRIAL WASTE PROGRAM, 1973.
Department of Public Works.

39. MARINE WASTE DISPOSAL—A COMPREHENSIVE ENVIRONMENTAL APPROACH

TO PLANNING, D. P. Norris, L. E. Birke, R. T. Cockburn, D. S. Parker (members of San Francisco Department of Public Works and Brown and Caldwell staffs), *Journal of Water Pollution Control Federation,* January, 1973.

40. FINAL ENVIRONMENTAL IMPACT REPORT AND STATEMENT SAN FRANCISCO WASTEWATER MASTER PLAN, 1974. City and County of San Francisco and U.S. Environmental Protection Agency.

41. PLAN OF STUDY FOR THE SAN FRANCISCO WASTEWATER MASTER PLAN-FACILITIES PLAN, STEP 1 GRANT APPLICATION SUPPLEMENT, 1974. San Francisco Department of Public Works.

42. SAN FRANCISCO WASTEWATER TREATMENT PILOT PLANT STUDY, Three Volumes and Summary, 1974. CH_2M-Hill.

43. SEWER SYSTEM EVALUATION FOR INFILTRATION/INFLOW—PHASE I—NORTH POINT DISTRICT, 1974. San Francisco Department of Public Works.

44. SEWER SYSTEM EVALUATION FOR INFILTRATION/INFLOW—PHASE I—SOUTHEAST DISTRICT, 1974. San Francisco Department of Public Works.

45. SEWER SYSTEM EVALUATION FOR INFILTRATION/INFLOW—PHASE I—RICHMOND-SUNSET DISTRICT, 1974. San Francisco Department of Public Works.

46. DISSOLVED AIR FLOTATION TREATMENT OF COMBINED SEWAGE IN SAN FRANCISCO, 1974. Engineering-Science, Incorporated.

47. CONTROL STRATEGY DEVELOPMENT STUDY, SAN FRANCISCO WASTEWATER MASTER PLAN, 1974. Metropolitan Water Intelligence Systems, Colorado State University.

48. RAINFALL-ACTUATED SUBSTREET STORAGE IS KEY FEATURE IN PROPOSED SOLUTION TO SAN FRANCISCO WET WEATHER OVERFLOWS, W. R. Giessner, R. T. Cockburn, F. H. Moss, Jr., and M. E. Noonan (members of San Francisco Department of Public Works staff), *Journal of California Water Pollution Control Association,* July, 1974.

49. DRAFT ENVIRONMENTAL IMPACT REPORT, SAN FRANCISCO WASTEWATER MASTER PLAN, IMPLEMENTATION PROGRAM II, SOUTHEAST TREATMENT PLANT UPGRADING, 1975. San Francisco Department of Public Works.

50. ANNUAL REPORTS OF THE DEPARTMENT OF PUBLIC WORKS (Administrative, financial, technical, and facility maintenance information on wastewater management).

PLANNING AND REPORT PREPARATION STAFFS

Planning of wastewater management facilities is carried out by the Director of Public Works, City Engineer, and the Division of Sanitary Engineering, with assistance from numerous consultants. An organization chart for those involved in planning is shown in Figure 1-1.

This report has been prepared by J. B. Gilbert & Associates in cooperation with the Department of Public Works.

FIGURE 1-1

WASTEWATER MANAGEMENT
PLANNING CHART

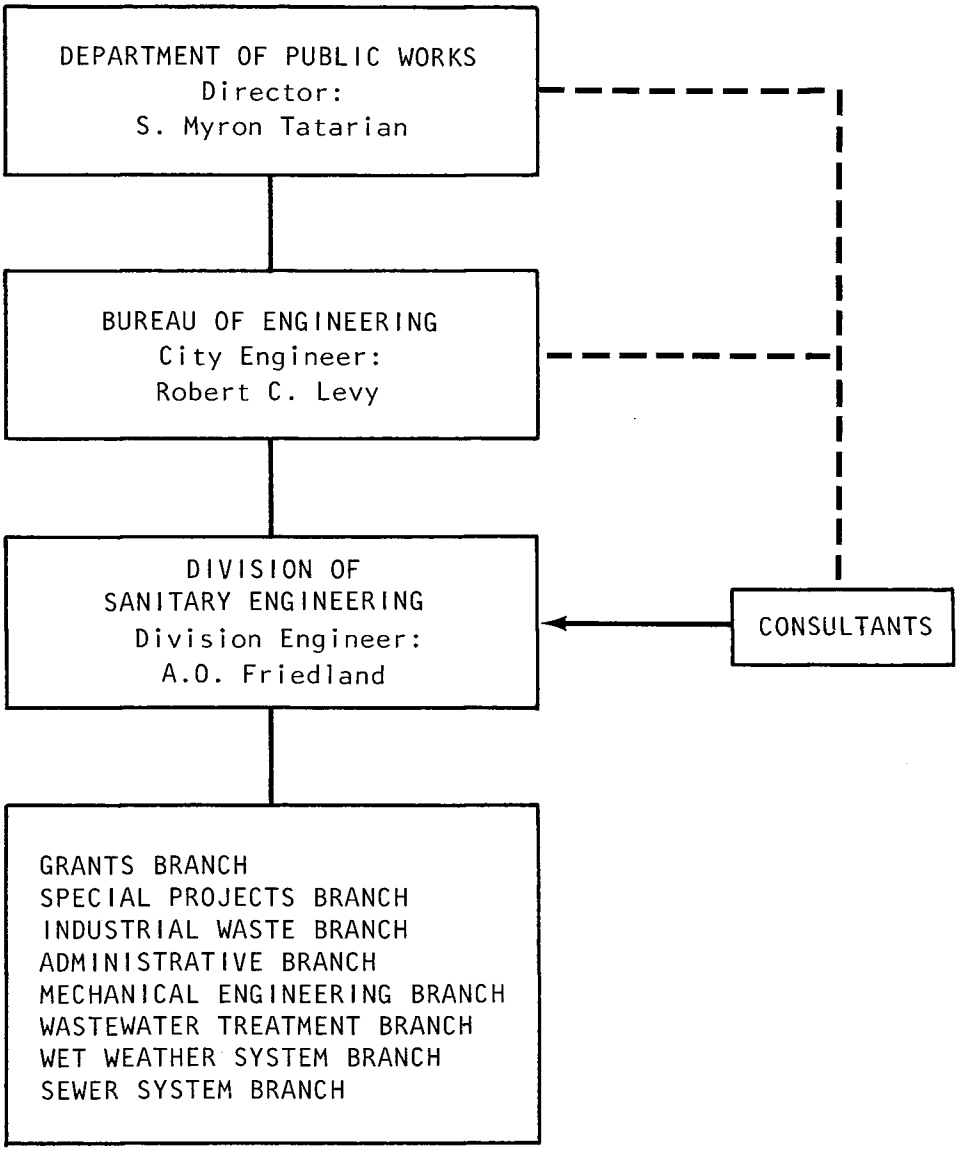

CHAPTER 2

EXISTING AND PROJECTED PLANNING AREA CHARACTERISTICS

In this chapter, the characteristics of the service area are presented. The geographical and environmental setting of the proposed project is described; the present and projected land use, economic activity, population, and air quality are discussed. Institutions within the service area are identified and discussed with reference to the proposed project.

Major conclusions from each section and the implications of each conclusion in terms of the proposed Facilities Management Plan are summarized on Table 2-1.

SERVICE AREA BOUNDARIES AND COMPOSITION

The area served by San Francisco's wastewater management system is shown in Figure 2-1. The service area encompasses all of the City and County of San Francisco and two relatively small adjacent areas in northern San Mateo County. San Francisco serves these areas through agreement with the Bayshore Sanitary District, Guadalupe Valley Municipal Improvement District, the North San Mateo County Sanitation District, and Agricultural District 1A (Cow Palace).

TOPOGRAPHY

A relief map of San Francisco is shown on Figure 2-2. The predominant topographic features are summarized below.

San Francisco is located on a cluster of hills that form part of the coastal range and is surrounded on three sides by salt water. Although it is commonly known as the city built on seven hills, it actually has dozens of peaks of various heights. The Twin Peaks, near the geographical center, are the highest points in the city, at an elevation of 922 feet above sea level. The land slopes steeply toward the water on the west and north, and toward a flat coastal strip along the east side of the business district.

The northwestern shoreline of the city is distinguished by steep headlands rising to 300 feet. The cliffs were created by the battering ocean which gouged out the soil, sand, and rocks. In contrast, parts of the northeastern shoreline are man-made; the original bay mud has been reclaimed with about 3,700 acres of fill.

The city's three major drainage basins drain to the bay on the east side and to the ocean on the west. The North Point, Southeast, and Richmond-Sunset Water Pollution Control Plants serve these basins. The basins are further divided into smaller basins, each having an outlet to the bay or ocean to discharge excess storm flows. A total of 26 basins drain to the bay and ocean.

GEOLOGY AND SOILS

San Francisco is founded on sand; its peaks are outcrops of bedrock protruding from the rolling dunes. This bedrock is part of the Franciscan formation—layers of rock which extend for hundreds of miles along the California and Oregon coasts and which reach to depths of 10,000 to 50,000 feet. Chert, a by-product of volcanic activity, and sandstone are the principal kinds of bedrock underlying the sands of San Francisco, but beds of clay, shale, serpentine, and conglomerate may also be found in the formation.

Over the Franciscan formation lie the Merced and Colma formations, dune sand, bay mud and clay, slope debris and ravine fill, beach deposits, alluvium, landslide deposits, and artificial fill. These surface deposits cover most of San Francisco's land area. There are large deposits of sand in the Sunset, Lake Merced, Lobos Creek, and Downtown areas. The east side of the city is built on fill over bay mud. In general, the surface materials are uncemented and are easily excavated. However, settling and the running of nonuniformly graded snads are potential construction problems.

San Francisco is in a seismically active area bounded by two major, active faults: the San Andreas to the west and the Hayward to the east. In addition, there are three local, inactive faults within the city limits: the San Bruno, City College, and Fort Point-Hunter's Point. These run parallel to the major, active faults.

A geologic map of San Francisco is shown on Figure 2-3. The general distribution of the formations and the location of the faults in the area are shown.

CLIMATE

San Francisco has cool, pleasant summers and mild winters. This climate results from the city's unique location on the Pacific Ocean at the southern shore of the Golden Gate. Sea fogs and the low, stratus clouds associated with them are a striking characteristic of San Francisco's climate. In the summer, the temperature of the ocean is unusually low near the coast, and the atmospheric pressure, relatively high, while the interior is characterized by high temperatures and low pressures. This intensifies the landward movement of air and makes the prevailing westerly winds brisk and persistent, especially from May to August. Thus, the fog that forms off the coast is carried inland by strong, westerly winds in the afternoon or evening. It usually evaporates during the following morning. Despite the fog, the sun shines an average of two-thirds of the daylight hours in the Downtown area.

As a result of the steady sweep of air from the Pacific, at an annual mean speed of 9 miles per hour, there are few extremes of heat or cold. During 90 years of records, temperatures have risen to 90° F or higher—an average of once a year, and dropped below freezing less than once a year. The recorded highest was 101° F, and the recorded lowest was 27° F.

The average daily temperature through the year ranges from 45° F in January to 69° F in September. As a rule, abnormally warm and cool periods last only a few days.

The hills and their geographical relationship to the ocean and bay cause several different climates to exist simultaneously in San Francisco. The most obvious example of this is the greater frequency and duration of fog along the Pacific coast.

The annual rainfall in San Francisco is about 20 inches. As shown in Table 2-2, 84 percent usually occurs during the period November to March, with 42 percent occurring during December and January.

The Bay Area and associated valleys are a well-defined coastal climate zone which is broken into subparts as a result of wind climatology. Low hills and the influence of maritime air produce well-defined wind patterns in the area.

During much of the year, winds from the ocean divide to flow northward into the Sonoma and Napa Valleys, eastward through the Carquinez Strait, and southward into the Santa Clara Valley.

There is also an air flow from the southern bay area, through canyons in the mountains, into the Livermore Valley. The flow of marine air through Carquinez Strait also has a marked influence on the climate in parts of Solano and Contra Costa Counties.

As in other coastal areas, a temperature inversion is dominant over this area most of the year. It varies, seasonally and daily, between 1,000 and 3,000 feet in elevation. Due to solar heating, there are wide variations in vertical mixing over the extreme ends of the Sonoma and Santa Clara Valleys. As a result, the inversion there may be destroyed.

Except during late September and October and during hot spells in April, May, or June, wind movements provide consistent ventilation of much of the Bay Area.

OCEAN AND BAY WATER MOVEMENT

The marine environment adjacent to San Francisco consists of the following major regions:

- Central California coast
- Gulf of Farallones
- Central bay
- South bay
- Nearshore zone

Central California Coast

San Francisco's Pacific Coast is influenced by two major currents. In the winter months, during the rainy season, the prevailing nearshore current is the northerly Davidson Current. In the spring, summer, and fall, the southerly California Current prevails.

The influence of these currents is diminished in the nearshore zone east of the Farallones. There, tidal exchange with the bay overrides the effects

TABLE 2-1

SUMMARY OF PLANNING AREA CHARACTERISTICS

ELEMENT	CONCLUSION	IMPLICATION
Topography	San Francisco is a square with a series of peaks and ridges extending up the center two-thirds of the distance from south to north, where it splits and extends to the northern corners of the city. The natural drainage is to the bay for the North Point and Southeast Districts, and to the ocean for the Richmond-Sunset District.	The peaks and ridges are a physical barrier for transport of wastewater to the ocean from areas that now naturally drain to the bay. Therefore, pumping facilities will be required to transport wastewater from the eastern side of the city to the ocean for disposal.
Geology and Soils	The geology of the Peninsula consists of a dense Franciscan shale, sandstone and chert bedrock overlain in the lower coastal areas by Quaternary dune sands and clays. Man-made fills exist along the east side of Lake Merced and the bay. These shoreline areas generally have high water tables and sandy soils.	Shoreline characteristics will cause construction difficulties and increased costs. Generally, the geology and seismic activity of the area will have a significant impact on design of project facilities.
Climate	Characterized by cool, dry summers, mild winters, and persistent, westerly winds. On the average, 84% of the total annual rainfall occurs from November to March, and 42% occurs in December and January.	Year-round mild temperatures result in lower water demands and more uniform dry weather flow than in similar areas that have large seasonal fluctuations. Prevailing winds carry the city's air emissions to other regions. Heavy rainfalls result in the discharge of untreated waste to the bay and ocean. These overflows affect water quality and beach conditions.

TABLE 2-1

ELEMENT	CONCLUSION	IMPLICATION
Ocean and Bay Water Movement	Surface movement of bay waters is generally to the west. During periods of high delta outflow, this movement is greater than at other times. Floating material discharged near Alcatraz tends to move to the ocean; some accumulates on ocean beaches. Floating material west of the Golden Gate does not enter the bay. In the southern reach of the bay, the circulation is counterclockwise; discharges on the west side tend to move south. On the ocean side of the peninsula, a nearshore "stagnate" zone exists within about 1000 feet offshore. Ocean currents are greater in the area northeast of the Farallones.	In terms of initial dilution, longterm dispersal, and protection of the bay, there would appear to be the following descending order of suitable discharge sites: • Ocean, near the southern boundary of the city. • Other ocean • Central bay • Bay, off of the southeast section of the city.
Marine Ecology	Diversity of species is greatest near the Golden Gate and decreases with distance from the Gate. Intertidal areas support the lowest diversity. The Gulf of the Farallones was once and could again be one of the most important nursery areas for finfish and shellfish on the California coast. The central and north bay systems are migration routes for anadromous fish in all seasons. Primary effluent diluted by a factor of 100 (i.e. discharged properly) appears to have no significant acute effects on marine biota.	All other factors (dilution, effluent quality, etc.) being equal, ecological response is likely to be less the further from the Golden Gate (into the south bay or the ocean) wastewater discharges occur; reduction of potential effects in the Gulf of the Farallones should be a goal of any program. These two implications lead to a conclusion that ocean discharge south is most favorable.
Population	Estimates indicate a decrease in resident population and an increase in transient population during the planning period.	The implication of these changes is considered in the section on flow projections.

ELEMENT	CONCLUSION	IMPLICATION
Land Use	Except for parks, military reservations, and mountain slopes, the city is almost 100% developed.	As no significant change in land use is expected, sewage flows from domestic, commercial, or industrial development are not expected to change significantly in the future unless more intense use is made of already developed land. The extent of development limits the possible sites for wastewater management facilities. Generally, it is undesirable to use residential or commercial lands for these facilities. Expansion at North Point and Richmond-Sunset is limited due to existing development; the Southeast Plant is better located for expansion.
Employment	San Francisco is the major economic center for Northern California. Employment is equally divided between commercial and industrial activities. Some 36% of the work force commutes in from other areas.	The economic base of the area determines wastewater characteristics. The significant influx of nonresident employees both modifies the seasonal distribution and increases the magnitude of dry weather flows.
Regional Air Quality	San Francisco has no serious air quality problems due to the low mean residence time of air in the area and the ventilation from the steady winds. The majority of the emissions originate from counties to the east or south of the bay.	Existing and anticipated air quality control programs could affect motor vehicles commuting to San Francisco. This could affect both dry and wet weather flows.
Institutions	The City and County of San Francisco is by far the most important implementing agency. The Regional and State Boards and EPA will play a significant role in reviewing and approving proposed facilities.	There should be no important local institutional problems in implementation. The major problems will likely be in the City's meeting the requirements of the regulatory/granting agencies.

FIGURE 2-1
SERVICE AREA

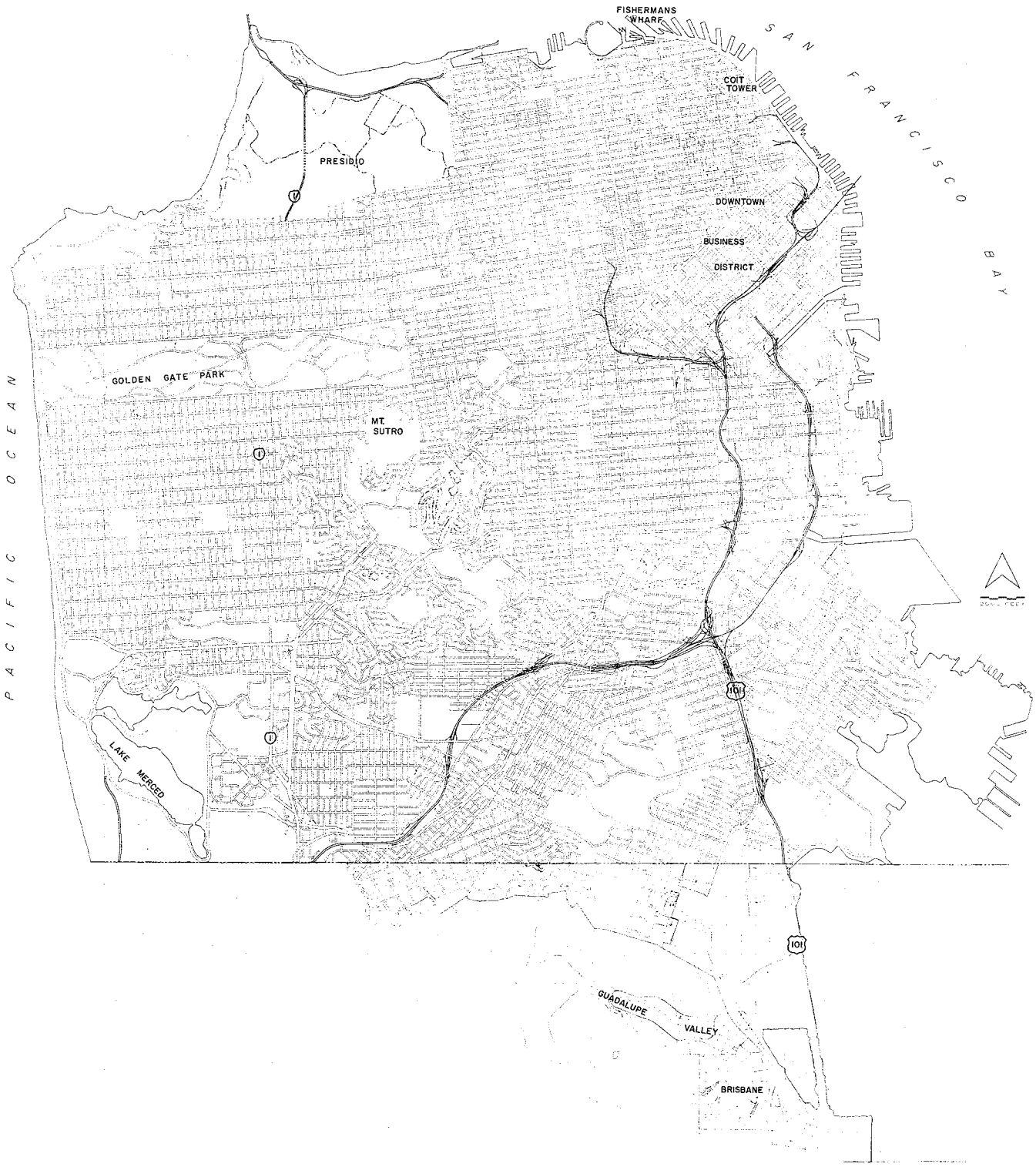

FIGURE 2-2
RELIEF MAP OF SAN FRANCISCO

FIGURE 2-3
GEOLOGIC MAP OF SAN FRANCISCO

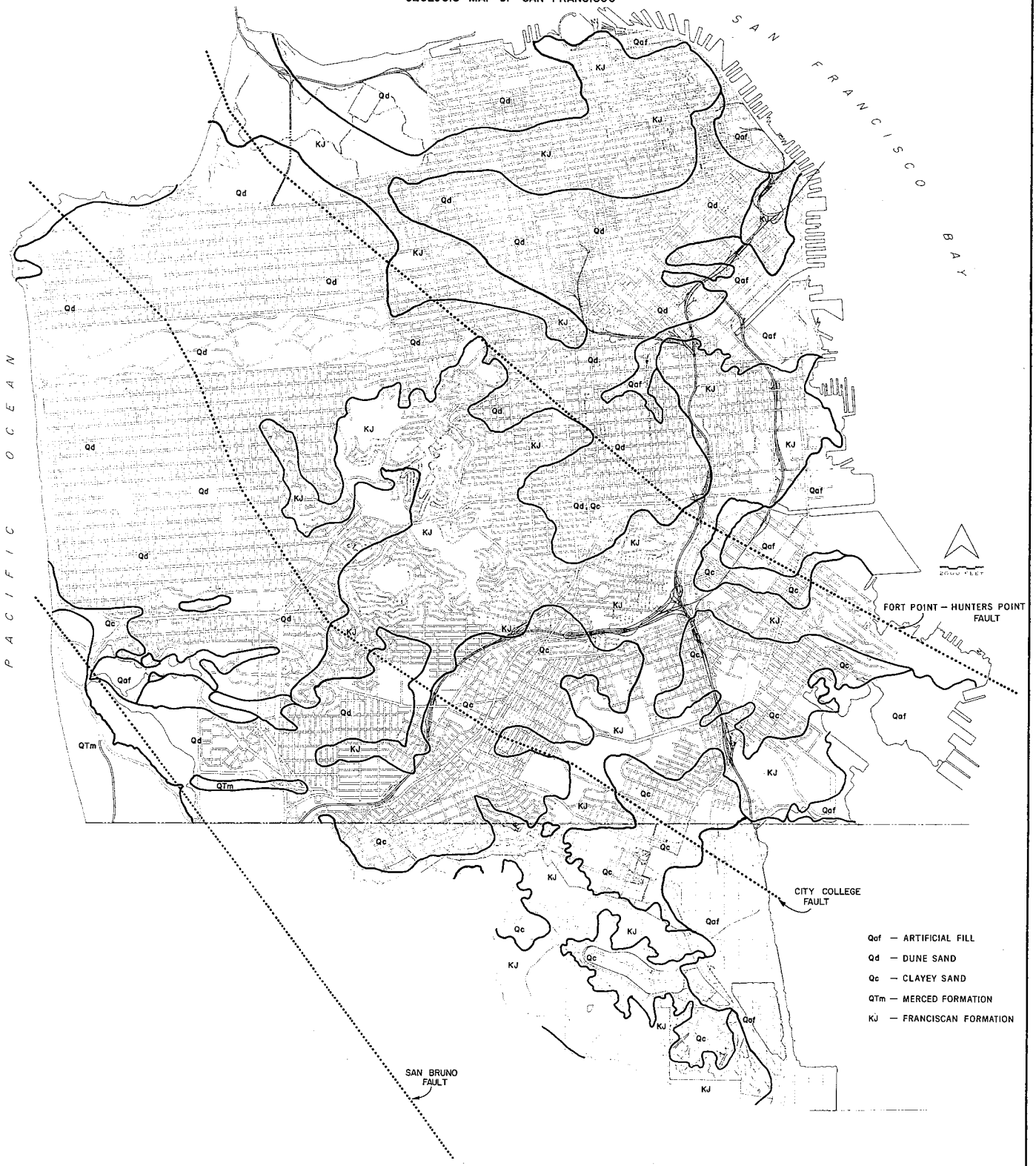

TABLE 2-2

ANNUAL AND MONTHLY RAINFALL
FEDERAL BUILDING GAUGE

	Amount Inches	% of Annual
January	4.57	22.5
February	3.36	16.5
March	2.80	13.8
April	1.43	7.0
May	0.59	2.9
June	0.14	0.7
July	0.02	0.1
August	0.02	0.1
September	0.24	1.2
October	0.89	4.4
November	2.24	11.0
December	4.03	19.8
Total	20.33	100.0

of the offshore currents. Bay waters, which move west and south from the Farallones during ebb tides, are entrained in these prevailing ocean currents and soon become intermixed with the ocean water.

Gulf of the Farallones

Oceanographic characteristics of the gulf depend on tidal exchange through the Golden Gate, which varies in magnitude with the season.

Wet Weather Mass Water Movement. During periods of high delta outflow, the less dense bay water produces a tidal outflow which occurs primarily as a surface layer. It extends up to 15 miles west and 10 miles south of the Golden Gate before becoming entrained in the ocean currents. This surface flow may ebb continuously, with surface flood tides almost nonexistent. The flooding tidal prism consists of dense bottom ocean water that enters the bay from the north through Bonita Channel and from the south around Land's End.

Wet Weather Currents. Current velocity and direction during the winter season vary dramatically with depth. A surface layer of 10 to 15 feet moves westward and southward at speeds of two to four knots. Immediately below this layer there is a more balanced pattern of ebb and flood currents of lesser speeds. Low speed flood currents predominate near the bottom.

Dry Weather Mass Water Movement. During periods of low delta outflow, tidal outflow is decreased and the net surface movement is much smaller. The ebbing tide extends westward to the shipping channel and southward to a point west of Lake Merced.

The flooding tidal prism consists primarily of low along the shore north and south of the Golden Gate. This flow moves eastward.

Dry Weather Currents. Surface currents are in phase with, but are of a greater magnitude than bottom currents during the ebb. This results in a net surface displacement away from the Golden Gate, with bayward movement predominant near the ocean bottom. Current speeds are greatest near the Golden Gate, but seldom exceed one knot outside the bar.

Nearshore Zone

This zone extends approximately 500 to 1,000 feet off the ocean shoreline of the peninsula. Current direction and speed vary markedly from the pattern described for the other marine regions. Shoreline friction and geometry produce eddies which vary in magnitude and direction with each tidal exchange and stage. This limits the exchange of water between prevailing offshore masses and those in the nearshore zone and increases the time that discharges into this zone are retained there.

Central Bay

The tidal prism is the controlling factor in this region. Its large volume results in a relatively constant monthly flow pattern.

Mass Water Movement. A net seaward displacement of the surface layer and a southerly, bayward flow of bottom waters occurs from the Bay Bridge through Alcatraz Channel. Surface displacement is much greater than that found on the bottom, indicating the shallowness of the faster moving top layer. During wet weather conditions, the surface displacement is 10 to 25 nautical miles per tidal cycle. This results in a mean bay-retention time of less than 12 hours for surface fields released near Alcatraz. During periods of low delta inflow, the net displacement drops to several nautical miles per tidal cycle.

Currents. In Alcatraz Channel, current direction for both ebb and flood tide is approximately parallel to the shoreline. Maximum velocity for surface currents commonly exceeds two knots, with occasional four-knot velocities. Greater velocities occur on the ebb tide, but they are of shorter duration than the flood tide currents. Maximum bottom velocities are generally less than two knots.

Tidal Exchange. The ratio of new ocean water entering the bay with each flood tide to the volume of the tidal prism (the tidal exchange ratio) varies with the amplitude of the flood tide. Based on an average tidal amplitude of 4.1 feet, a dry weather tidal exchange ratio at the Gate of approximately 24 percent exists. For each 24-hour tidal cycle, this means an introduction of 20 to 30 billion cubic feet (145,000-215,000 mgd) of new ocean water through the Golden Gate into the bay, with

approximately 15 to 25 billion cubic feet (110,000-180,000 mgd) passing through Alcatraz Channel south of Alcatraz and the remainder flowing into the north bay.

Durring wet weather conditions, fresh water from the delta and other tributary areas increases the magnitude of new water flowing through the bay. It is estimated that the tidal exchange ratio during periods of large fresh water inflow the tidal exchange ratio during periods of large fresh water inflow exceeds 80 percent.

Surface Drift. In the central bay, surface drift is westward from Alcatraz through the Golden Gate. Generally, floatables released at Alcatraz will accumulate primarily on ocean beaches near the Golden Gate; negligible accumulation occurs on the bay shoreline. Floatables released beyond the Golden Gate will not enter the bay.

South Bay

Mass Water Movement. There is a net seaward flow on the surface and a net flow in the opposite direction on the bottom south of the Bay Bridge to Hunter's Point. This net surface seaward displacement is substantially less than in the central bay, but amounts to several nautical miles per tidal cycle in the waters adjacent to Hunter's Point.

Tidal action in the deep navigation channel on the west side and broad shallow areas on the east side of the bay south of Hunter's Point create a net counterclockwise circulation in the south bay.

Currents. The direction of currents is similar to the pattern of mass water movement described above. During both ebb and flood tides, current direction is generally parallel to the shoreline.

Surface Drift. Drift is seaward from Yerba Buena Island through the Golden Gate.

MARINE ECOLOGY

The City and County of San Francisco is bounded on the west by the Pacific Ocean and on the north and east by San San Francisco Bay. Much of the economic and social well-being of the citizens of San Francisco is associated with the marine environment.

The geographical extent of the marine environment adjacent to San Francisco may be defined as central San Francisco Bay extending from the county boundary on the southeast to the Golden Gate on the northwest, and that portion of the Pacific Ocean known as the Gulf of the Farallones, extending from Bolinas Peninsula on the north to Point Montara on the south and from the Golden Gate to Southeast Farallon Island.

The most influential factor controlling distribution of marine life along the ocean shore is temperature. On the San Francisco coast, the range of temperature is relatively narrow. Near the Farallones, the monthly averages range from 52.4° F during April to 65.3° F in September. Northern California has some of the coldest sea temperatures for its latitude on earth. In the bay, temperatures are often higher. The cold water along the ocean coast is associated with the process known as upwelling, the movement toward the surface of cold, subsurface water. The upwelling carries nutrients from the rich, upper layer of sediment where worms, echinoderms, bacteria, and other organisms live.

San Francisco Bay is an estuary, that is, a partially enclosed body of marine water in which fresh water from land runoff mixes with high salinity water from the ocean. This mixing of water masses and the concomitant fluctuations in salinity are the main factors in determining the distribution and abundance of flora and fauna in the estuary. The adaption to these salinity stresses by a variety of specialized organisms in the estuary produces an ecosystem quite unlike the adjacent fresh or marine environments.

There are four main groups of organisms to be found in estuarine and marine environments: the intertidal organisms, which are alternately covered and exposed to the air as the tides advance and recede; the benthos or bottom-dwellers; the fish and mammals; and the plankton, consisting of small floating or swimming animals and plants.

Much of the ocean and central bay intertidal areas consist of sandy beaches that support a relatively low diversity of animals. Chief inhabitants of these areas are sand crabs, amphipods, clams, the red worm *(Pectinophelia),* and shore birds. Along the eastern and northeastern intertidal areas of the city, landfill and pier construction have limited the availability of marine habitats, and the major biota are barnacles, limpets, mussels, and shipworms *(Teredo)* on pilings.

In the central area of San Francisco Bay, the highest diversity of benthic organisms occurs near the Golden Gate, where bay and oceanic species are mixed; diversity declines as distance from the Golden Gate increases, due to the gradual loss of oceanic forms. Local fish are discussed later in this chapter.

About 0.2 percent of the energy in the sunlight that falls on the ocean is used by plants to make carbohydrates. Microscopic algae, called diatoms, are the "grass" of the ocean. They serve as food for young fish, bacteria, and larval forms of invertebrates living in the plankton, the benthos, and the intertidal areas. Diatoms and other phytoplankton (plant plankton) play a similar role in San Francisco Bay, where diatoms occasionally exceed one million cells per liter of bay water.

The phytoplankton are the "primary producers." Their chemical energy is passed largely to zooplankton (animal plantkton) and bacteria, which in turn supply protein to the filter feeders and small carnivores. Phytoplankton are also major sources of dissolved oxygen. Oxygen is produced by photosynthesis, so it is only produced during daylight. For this reason, dissolved oxygen tends to drop at night. The most common zooplankters in the bay waters are copepods (minute crustacea) of the genus *Paralabidocera.*

Sea water generally has a higher concentration of dissolved salt than the fresh water it mixes with in an estuary, while fresh water typically is higher in nutrients. The mixing of high salinity, nutrient-poor waters with low salinity, high-nutrient waters in an estuary frequently results in the formation of highly productive ecosystems.

Throughout every season of the year, the waters of the Pacific Ocean and the bay adjacent to San Francisco serve either as a habitat or as a migration route for striped bass, king and silver salmon, steelhead, and other sport fish. The shallow areas of the bay and its estuaries are a natural habitat for shellfish, and the bay at one time supported a thriving commercial oyster industry. Over the years, however, sewage discharges have contaminated the growing areas to the point where the shellfish are no longer safe for human consumption.

The California Department of Fish and Game has found that the Gulf of the Farallones is probably the most important nursery area along the California coast for both finfish and shellfish, and that San Francisco Bay is also important in this respect. Juvenile Dungeness crabs, from larvae to 140 millimeters (up to 1½ years), are predominant in the bay and nearshore shallow areas of the gulf.

Marine laboratories are at Bolinas and several locations in San Francisco Bay. Three biological reserves are located in the coastal area at Duxbury Reef, the Farallon Islands, and Moss Beach. Just recently, the State Water Resources Control Board designated the Farallon Islands as an area of special biological significance.

Ecological Data

Information concerning the diversity, distribution, and numbers of marine biota found in San Francisco Bay, the Gulf of the Farallones, and adjacent ocean, and the effect of waste discharges on these biota was obtained from studies by consultants and other researchers.

In 1969-70, under contract from the City of San Francisco, Brown and Caldwell (Brown and Caldwell, 1971) assessed the impact of primary effluent on the bay and the Gulf of the Farallones. The study concluded that:

- No significant toxic response in seven species of fish could be demonstrated after 96 hours of exposure in dilutions of San Francisco sewage effluent greater than 1:100.

- Eggs and larvae of Dungeness crabs showed a toxic effect at a dilution of 1:50, and a stimulatory response at greater dilutions.

Three sampling programs were conducted by Engineering-Science, Inc., in 1969-70, at outer Marine Beach to identify the water quality and biological characteristics of surface water, the benthos, and the beach intertidal zone. The following conclusion regarding biota in the area was derived from the study:

> "Both the concentrations of microplankton in the receiving waters and benthic animals in the sediments were low and were represented by a number of varieties. The combination of low and diverse populations is considered generally to be representative of a balanced ecology."

In 1971, Brown and Caldwell performed supplemental ecological investigations to determine the distribution of Dungeness crab zoea and adults in

the Gulf of the Farallones and the toxicity of wastewater effluents to various life stages of local crab species. This supplemental study concluded that:

- The study area (on the Golden Gate bar, offshore from Ocean Beach) could again become an important crab fishery area upon return of the Dungeness crab to past population levels in the Gulf of the Farallones, and that the area must therefore provide appropriate protection for all stages of the Dungeness crab.

- Laboratory tests conducted on adults, juveniles, larvae, and eggs of four species of crabs, with primary emphasis on the Dungeness crab, showed no statistically significant effect due to wastewater dilutions ranging from 1:400 to 1:20.

- The results of the 1971 laboratory studies generally confirmed the results of the 1970 laboratory studies.

- The 1971 laboratory work reinforced the basic finding of the 1969-70 study, which was that primary effluent discharged from the City of San Francisco at appropriate points through properly designed submarine diffusers would not adversely affect the marine environment of the central bay or the Gulf of the Farallones.

LAND USE

Except for parks, military reservations, and mountain slopes, the city is almost 100 percent developed. The west side is predominantly residential, mostly single-family houses. The North Point District includes the downtown commercial area with its large daytime work force from all over the Bay Area, a large industrial area, and a large residential area, of predominantly multifamily units. The area tributary to the Southeast Plant includes a large industrial area, but consists mostly of single-family residences.

The shoreline has also been fully developed. The east side of the city from Hunter's Point to Fisherman's Wharf consists of docks and shipping terminals. The north side of the city includes a swimming beach at Aquatic Park and recreational facilities at the Marina. Baker's Beach and Phelan Beach lie outside the Golden Gate, and Ocean Beach extends along the entire length of the western shore from the Cliff House to Fort Funston.

Land uses for the service area are summarized on Figures 2-4a-f.

POPULATION

Population projections are an important aspect of wastewater management planning because of the direct relationship of numbers of people to dry weather flows. Population projections for the service area have been made by a number of agencies, including the Department of Finance (DOF), the Association of Bay Area Governments (ABAG), and the San Francisco Department of City Planning. These projections are shown on Table 2-3. Similar projections have been made for the San Mateo County portion of the service area; they all show a population of about 18,000 by the year 2000.

In this study, the DOF 1974 E-0 estimates were used for the resident population. The 1974 DOF projections are the most recent; the City Planning Department estimates were made in 1970; the ABAG projections are based on the 1971 DOF estimates. Of the 1974 DOF estimates, the E-0 series was chosen because it is the basis of the State Board's distribution of grant funds. The E-0 projections are also consistent with (though slightly higher than) recent population trends shown in Table 2-4.

Population in areas served in San Mateo County has increased slightly over the same period. Since this represents less than 2 percent of the service area population, there is still a net decline in resident population for the total service area.

The ABAG projections are, however, the most recent distributions of population within the service area; of the ABAG projections, the LoSouth series is now considered to be the most realistic. Therefore, the proportional distribution of the ABAG LoSouth projection was used to distribute the 1974 DOF E-0 population throughout the service area. This distribution procedure is also used by the State Board. The resulting projections, used in this study, are shown in Table 2-5.

FIGURE 2-4a

LAND USED FOR INDUSTRY

SOURCE: 1970 LAND USE SURVEY

PREPARED BY THE SAN FRANCISCO DEPARTMENT OF CITY PLANNING

FIGURE 2-4b

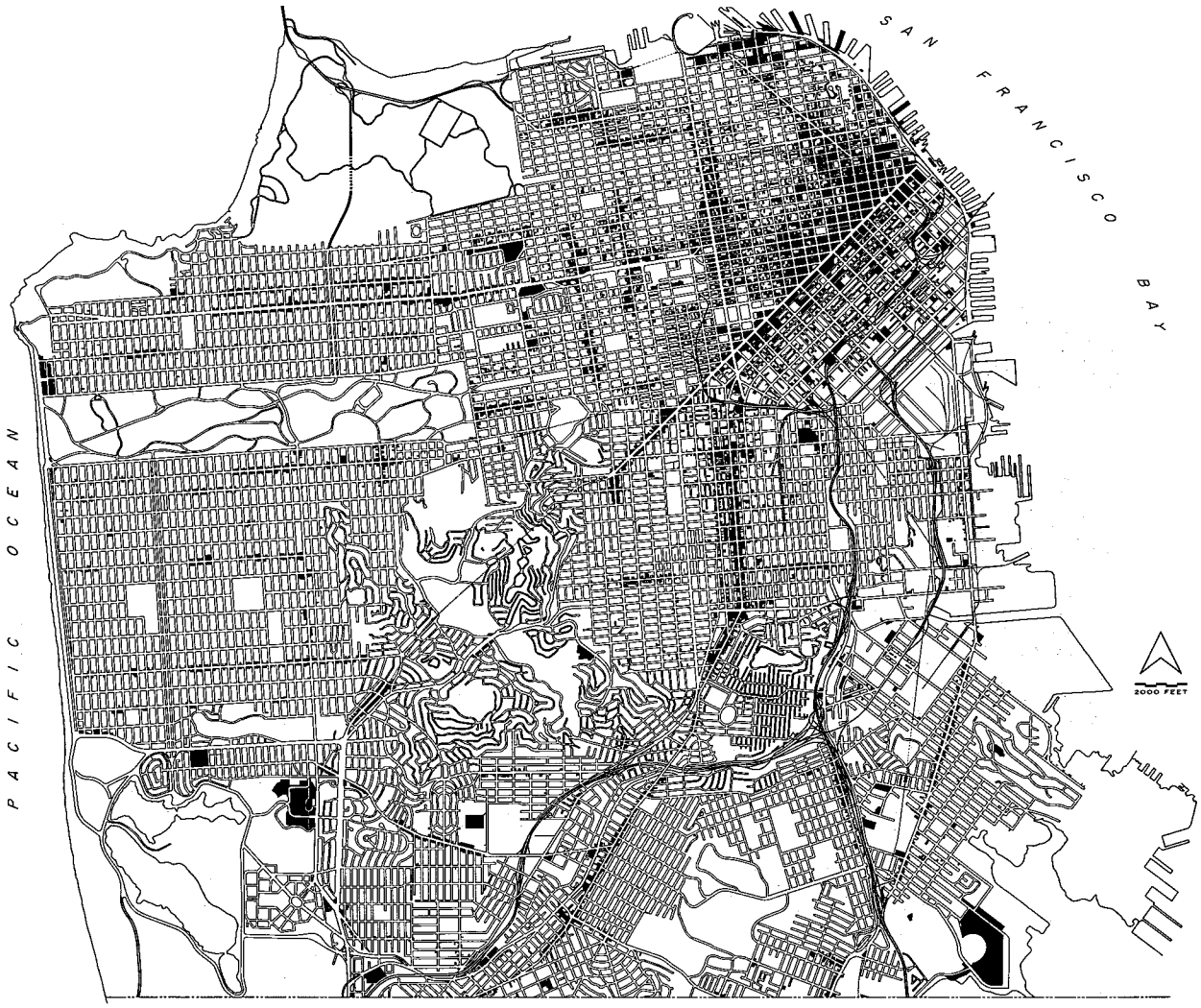

LAND USED FOR COMMERCE

SOURCE: 1970 LAND USE SURVEY

PREPARED BY THE SAN FRANCISCO DEPARTMENT OF CITY PLANNING

FIGURE 2-4c

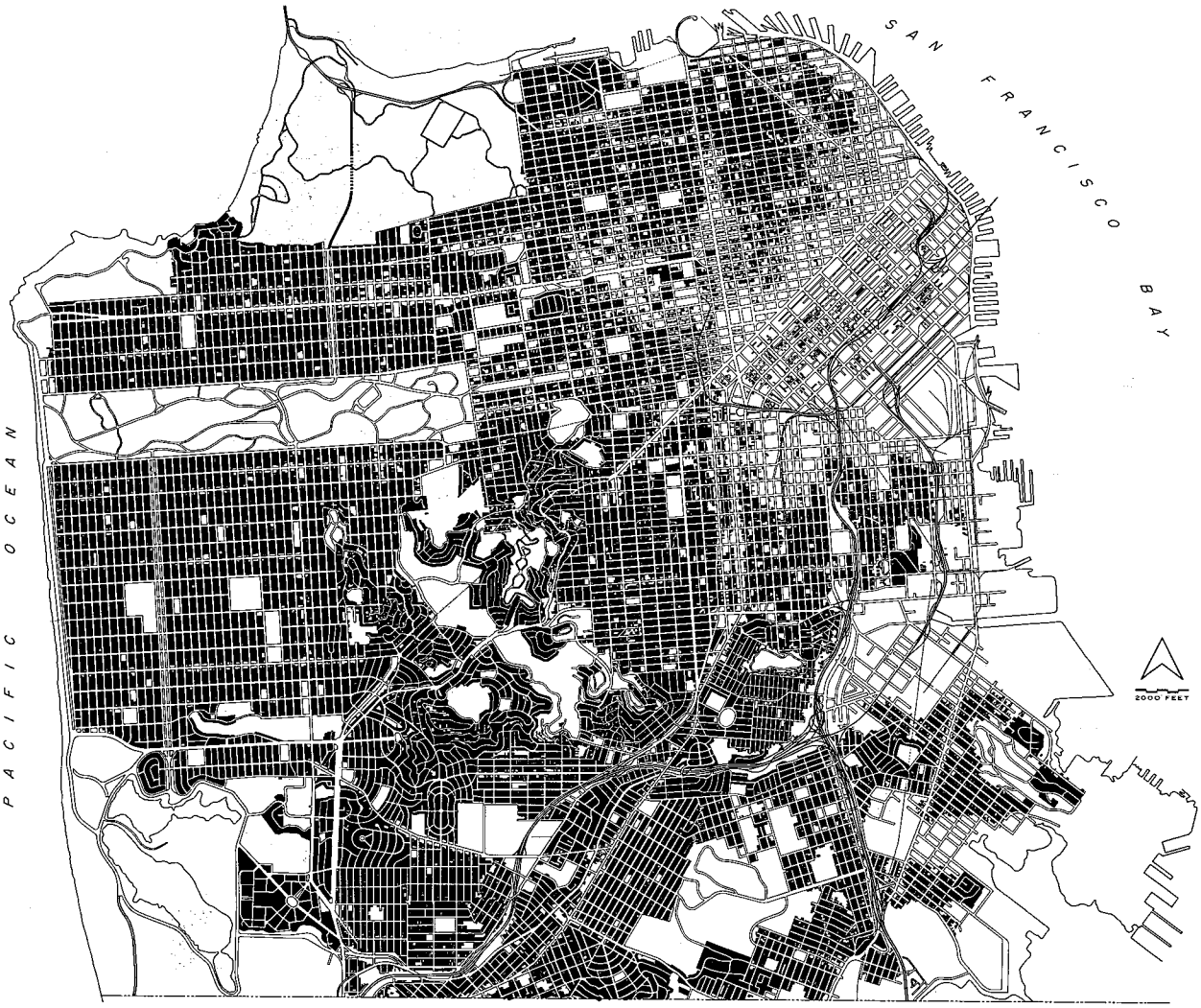

LAND USED FOR RESIDENCE

SOURCE 1970 LAND USE SURVEY

PREPARED BY THE SAN FRANCISCO DEPARTMENT OF CITY PLANNING

FIGURE 2-4d

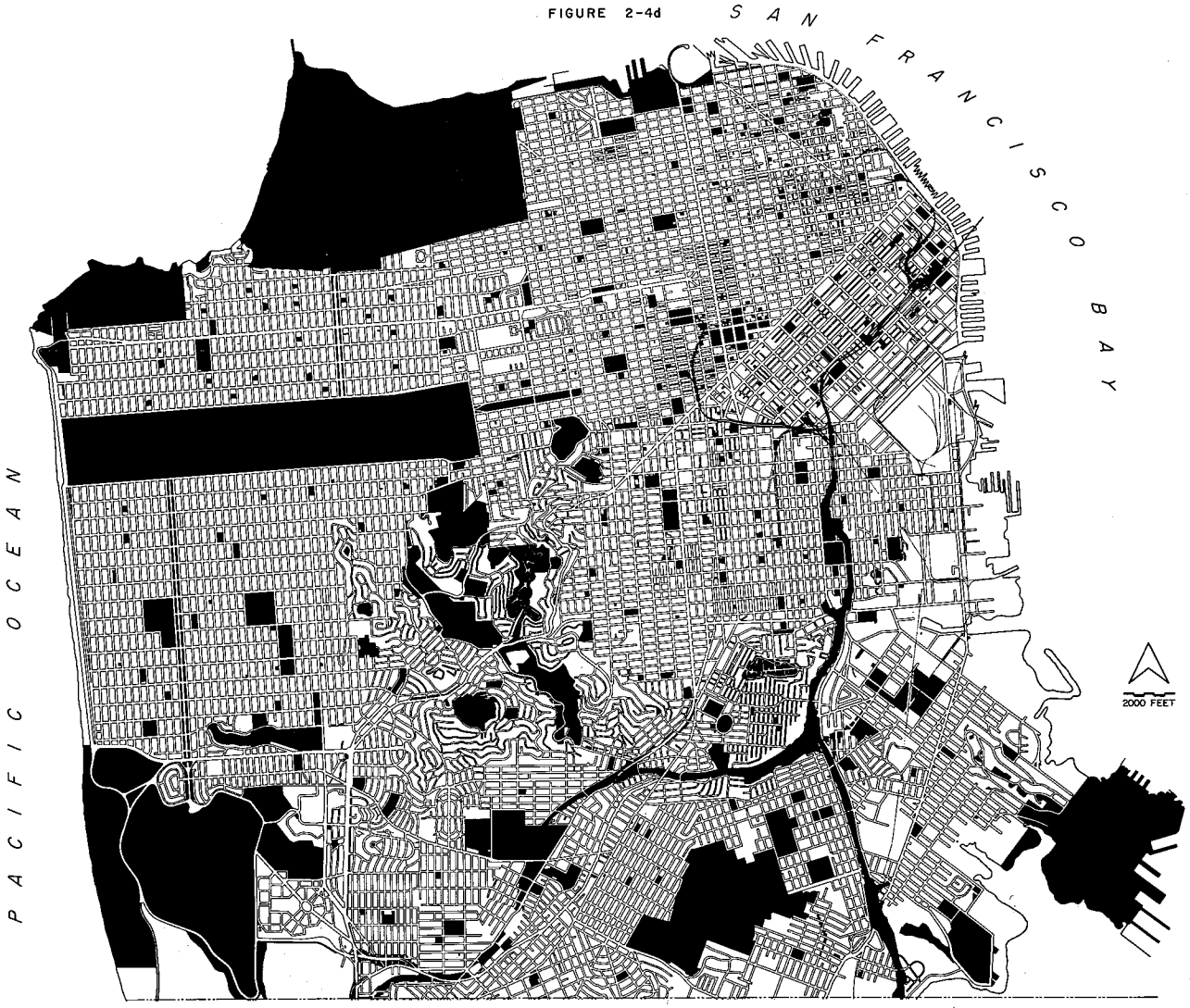

PUBLIC LAND USE

(EXCLUDING PUBLIC HOUSING)

SOURCE: 1961 - 64 LAND USE SURVEY

PREPARED BY THE SAN FRANCISCO DEPARTMENT OF CITY PLANNING · 1964

FILE 120.1-60

FIGURE 2-4e

VACANT LAND

(EXCLUDING TIDELANDS AND BEACHES)

SOURCE 1970 LAND USE SURVEY

PREPARED BY THE SAN FRANCISCO DEPARTMENT OF CITY PLANNING

FIGURE 2-4f
SAN MATEO COUNTY
LAND USE

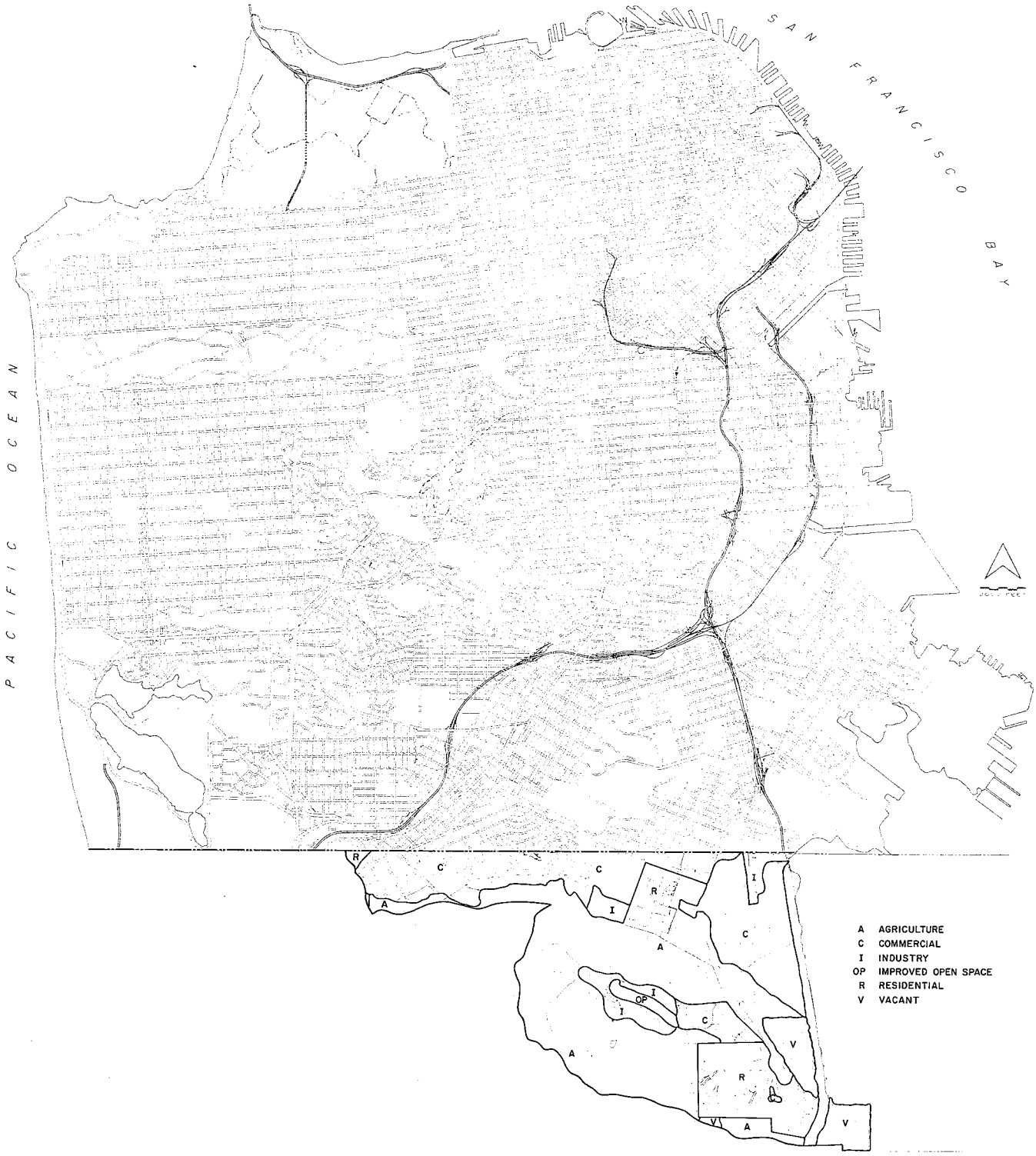

TABLE 2-3

COMPARISON OF RESIDENT POPULATION PROJECTIONS
FOR THE CITY AND COUNTY OF SAN FRANCISCO[1]

	City Dept. of Planning	State Department of Finance[2]					Assoc. of Bay Area Governments[4] (Series 2)		
		1971 Projections		1974 Projections					
		D-150	E-0	D-100	D-150	E-0[5]	Losouth	Grosouth	Gronorth
1970	714,300	714,300	714,300	714,300	714,300	714,300	715,700	715,700	715,500
1980	735,000	721,600	712,300	666,100	656,100	651,400	721,200	723,400	722,500
1990	755,000	730,000	706,400	653,700	673,900	721,900	729,600	736,700	733,200
2000	764,000	726,300	688,700	656,600	689,500	599,500	736,800	748,400	745,600
2010	772,000	728,100	672,700	670,100	719,000	580,900			
2020	780,000	722,600	650,200	691,200	757,000	564,200			

[1] Does not include San Mateo County portion of service area.

[2] "D" and "E" are different fertility rates; "0", "100," and "150" are annual net in-migrations to the state, in 1000's.

[3] (California Department of Finance, August, 1971)

[4] (Association of Bay Area Governments/Metropolitan Transit Commission, August, 1973).

[5] Used by the State Water Resources Control Board in determining grant eligible capacity for wastewater management facilities.

TABLE 2-4

ESTIMATED SAN FRANCISCO POPULATION
(DEPARTMENT OF FINANCE)
1970-1973

Date	Population
July 1, 1970	714,300
July 1, 1971	703,000
July 1, 1972	689,500
July 1, 1973	681,200

TABLE 2-5

PROJECTED RESIDENT POPULATIONS
USED IN THIS STUDY
(1000's)

	1970	1980	1990	2000
North Point	297	259	243	230
Richmond-Sunset	258	244	237	231
Southeast	176	166	161	157
Total Service Area	731	669	641	618

EMPLOYMENT

San Francisco is the business center for Northern California. Management offices for many major industries and large commercial establishments are located in the downtown district. These projections do not include the daytime commuter population, which is covered in the next section.

The large industrial area along the southeast waterfront serves as a strong employment base. Business and industry within the city provide employment for 90 percent of the working residents and attract a substantial number of commuting workers. Almost 36 percent of the city's work force commutes from other counties in the Bay Area.

Employment projections for the service area are shown on Table 2-6. The percent composition of these figures by industry and by occupation are shown on Table 2-7 and 2-8, respectively.

REGIONAL AIR QUALITY

The Bay Area air basin is shown on Figure 2-5. This basin contains approximately 5,540 square miles of land and 490 square miles of water surface. In the service area, the numerous low hills, large water areas, and marine air produce wind patterns that result in steady winds. These winds provide excellent ventilation in most parts of the basin.

In 1970, the population of the basin was 4.5 million, approximately 23 percent of the state total. Population increased 27 percent between 1960 and 1970, and the motor vehicle registration during the same period increased 60 percent to a total of 2.7 million.

Sources of Air Pollution

The average emission of contaminants into the San Francisco Bay Area air basin during 1970 is summarized on Tables 2-9 and 2-10. Breakdowns by county and by source of pollutant are shown. Typical of highly populated urban areas, mobile sources are responsible for the largest percentage of highly reactive organic gases, oxides of nitrogen, and carbon monoxide. Stationary sources emit most of the particulate matter and sulfur dioxide. Mobile sources contribute 81 percent of the total emissions into the Bay Area air basin, and of these, motor vehicles are by far the largest single source of all pollutants except sulfur dioxide and particulate matter.

The majority of the emissions originate from the more highly populated counties to the east and south of the bay, with Santa Clara having the highest emissions. San Francisco contributes about 12 percent of the total emissions into the bay basin.

Existing and Projected Air Quality

The Bay Area has one of the more serious air quality problems in the nation. San Francisco, however, has relatively pure air, as the prevailing winds carry the city's emissions to other parts of the Bay Area.

The only pollutants that violate existing air quality standards in the service area under present conditions are CO, NO_2, and particulates. Applicable air quality standards and violations occurring in San Francisco in 1972 are summarized on Table 2-11. Monthly violations for these same pollutants in San Francisco versus the entire Bay Area air basin are shown on Table 2-12.

Of these three pollutants, projections of future emissions and concentrations are appropriate only for CO and NO_2. Particulates are not considered because there is no constant source of particulates in the Bay Area; their occurrence is sporadic and random.

Projected emissions of CO and NO_x by vehicular and non-vehicular sources in San Francisco are summarized on Tables 2-13 and 2-14. The method used to develop these projections is discussed below.

Projection Methodology

The approach used to project emissions depends on the source of the pollutant. Two general sources are considered—vehicular and non-vehicular.

Vehicular Emissions. Projected emissions from motor vehicles are estimated by multiplying an emission factor by the vehicle miles traveled

TABLE 2-6

EMPLOYMENT PROJECTIONS FOR THE SERVICE AREA

	Year	Industrial	Commercial	Total	Employed Residents	Net Incoming Commuters
City of San Francisco[1]	1970	267,000	237,000	504,000	323,000	181,000
	1980	254,000	252,000	506,000	325,000	181,000
	1990	246,000	270,000	516,000	327,000	189,000
	2000	240,000	290,000	530,000	331,000	199,000
Areas Serviced in San Mateo County[2]	1970	3,000	4,000	7,000	13,000	–6,000
	1980	3,000	4,000	7,000	13,000	–6,000
	1990	4,000	4,000	8,000	15,000	–7,000
	2000	5,000	4,000	9,000	17,000	–8,000

[1] These projections are based on ABAG's LoSouth 2 Series.

[2] Projections are for ABAG Planning Zones 83 and 90. These zones include all present and anticipated areas to be serviced and some areas that will not be serviced.

TABLE 2-7

PERCENT EMPLOYMENT BY INDUSTRY IN 1970[1]

	San Francisco	Daly City[2]
Agri., Fores, & Fisheries	0.6	0.6
Mining	0.2	0.1
Construction	3.8	5.9
Manufacturing	11.7	13.1
Railroads	0.8	0.9
Trucking & warehousing	1.1	2.2
Other transport	4.7	3.9
Communications	2.3	3.5
Utility & Sanitary Sew.	2.0	2.1
Wholesale Trade	4.9	6.4
Food, bakery, dairy stores	2.0	2.9
Eating & Drinking places	4.4	3.6
General merchandise retail	2.4	3.4
Motor vehicle retail and service stations	1.0	1.9
Other retail	5.7	7.3
Banking and credit agencies	4.2	4.1
Insurance, real estate & finance	7.5	6.1
Business service	3.3	2.5
Repair service	1.5	2.3
Private households	1.5	0.4
Other personal services	4.9	3.2
Entertainment & recreation	1.2	1.1
Hospitals	5.2	3.5
Welfare, religion, nonprofit	2.3	1.7
Health services	2.3	1.9
Education	6.0	5.1
Professional services	4.5	2.6
Public Administration	8.0	7.7

[1] (U.S. Department of Commerce, April 1972).

[2] Daly City is a typical area in San Mateo County served by San Francisco's system.

TABLE 2-8

PERCENT EMPLOYMENT BY OCCUPATION IN 1970[1]

	San Francisco	Daly City
Professional, technical, and kindred workers	17.6	12.6
Managers and administrators (except farm)	7.9	7.9
Sales workers	7.1	9.5
Clerical and kindred workers	29.0	28.3
Craftsmen, foremen, and kindred workers	8.5	13.8
Operations, except transport (equip. operators)	7.3	6.1
Transport equipment operatives	2.9	4.7
Laborers, except farm	3.6	4.3
Farmers and farm managers	<0.1	0.1
Farm laborers and foremen	0.2	0.2
Service workers (not private household)	14.3	12.1
Private household workers	1.6	0.4

[1] (U.S. Department of Commerce, April 1972).

[2] Daly City is a typical area in San Mateo County.

FIGURE 2-5
SAN FRANCISCO BAY AREA
AIR BASIN

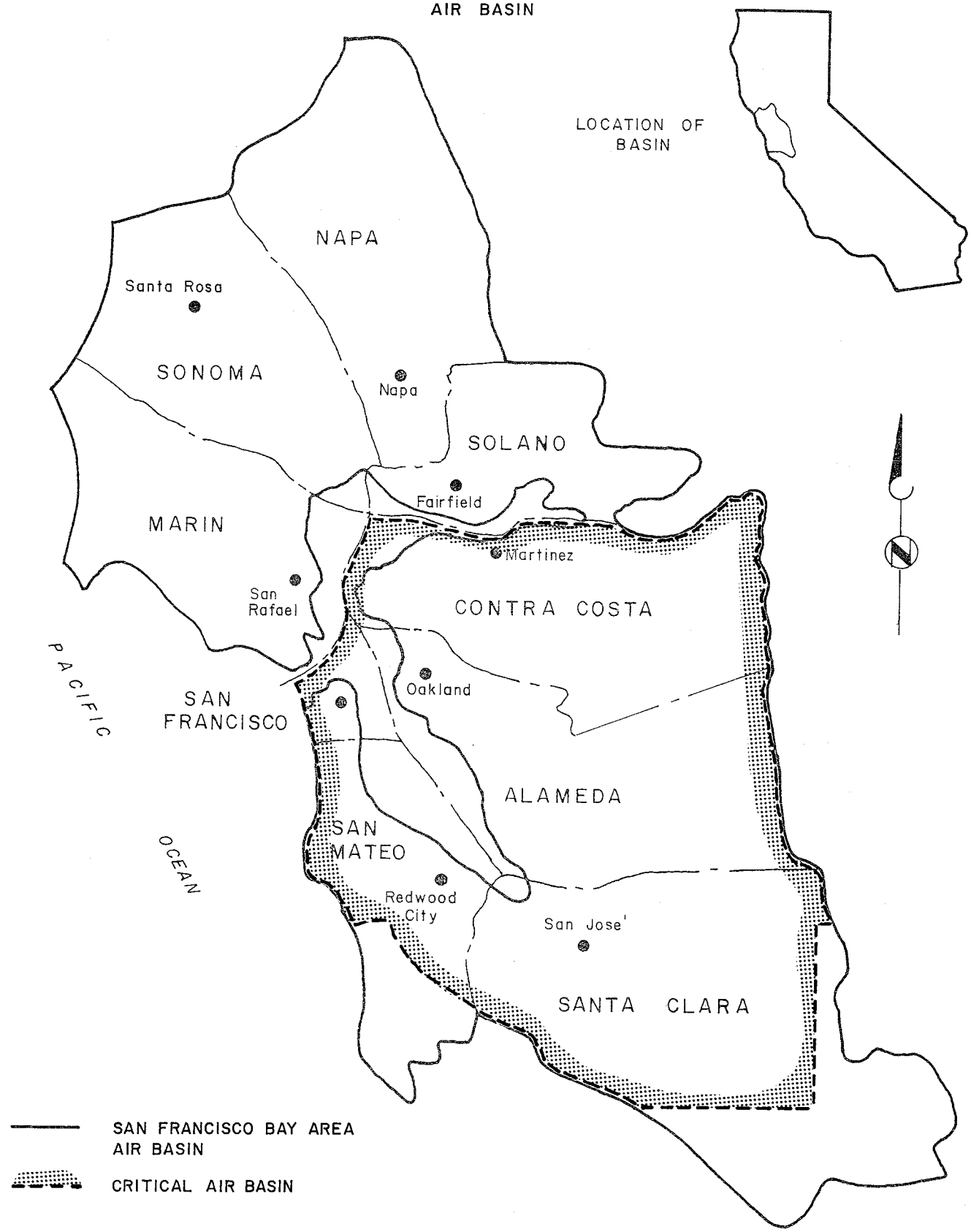

TABLE 2-9

SAN FRANCISCO BAY AREA AIR BASIN
COMPARISON OF EMISSIONS BY COUNTY[1]
(Tons per Day)
1970

County	Total Organic Gases	Particu-late Matter	Nitrogen Oxides	Sulfur Dioxide	Carbon Monoxide	Total Emissions
Alameda	408	30	140	13	1,190	1,780
Contra Costa	273	41	170	187	689	1,360
Marin	61	5	27	2	237	332
Napa	49	5	12	1	133	200
San Francisco	194	16	95	8	671	984
San Mateo	183	24	87	8	706	1,010
Santa Clara	387	33	145	11	1,320	1,900
Solano[2]	67	11	25	44	192	339
Sonoma[2]	97	9	26	2	300	434
Total	1,720	174	727	276	5,440	8,340

[1] Derived by using the County percentage breakdown of the district's jurisdiction sources obtained from the San Francisco Bay Area Implementation Plan (SFBARPCD) plus motor vehicle emissions estimated by the Air Resources Board.

[2] That portion of the county within the San Francisco Bay Area Air Basin.

TABLE 2-10

SAN FRANCISCO BAY AREA AIR BASIN
AVERAGE EMISSIONS OF CONTAMINANTS
INTO THE ATMOSPHERE, 1970
(tons per day)

Emission Source	Organic Gases		Particu-late Matter	Oxides of Nitrogen	Sulfur Dioxide	Carbon Monoxide
	High Reactivity	Total Gases				
STATIONARY SOURCES						
PETROLEUM						
Refining	6,0	60.3	5.9	19.8	72.8	16.9
Marketing	51.7	115				
Subtotal	57.7	175	5.9	19.8	72.8	16.9
ORGANIC SOLVENT USERS	70.7	354	6.5	0.2		
CHEMICAL		32.0	25.3	0.8	83.9	0.1
METALLURGICAL		2.9	28.7	1.2		3.5
MINERAL		0.2	3.7		1.0	2.3
INCINERATION	6.2	49.6	5.3	0.6	0.5	110
COMBUSTION OF FUELS						
Steam Power Plants		1.0	5.1	56.6	22.7	0.1
Other Industrial		2.3	9.5	69.9	57.7	0.7
Domestic and Commercial		0.3	5.1	26.2	0.2	0.1
Subtotal		3.6	19.7	153	80.6	0.9
LUMBER		0.3	0.9			3.1
AGRICULTURE						
Debris Burning	9.1	83.1	6.8		0.2	204
Agri. Processing		3.6	7.6			6.9
Subtotal	9.1	86.7	14.4		0.2	211
TOTAL STATIONARY SOURCES	144	704	110	176	239	348
MOBILE SOURCES						
MOTOR VEHICLES						
Gasoline Powered						
Exhaust	540	720	28.1	429	15.6	4,910
Blowby	25.8	34.4				
Evaporation	137	206				
Diesel Powered		23.1	7.3	103	7.3	99.3
Subtotal	703	984	35.4	532	22.9	5,010
AIRCRAFT						
Jet Driven	12.5	25.0	16.3	7.3	3.6	43.0
Piston Driven	2.3	4.5	0.4	1.4		21.8
Subtotal	14.8	29.5	16.7	8.7	3.6	64.8
SHIPS & RAILROADS		5.7	11.7	10.7	10.6	19.0
TOTAL MOBILE SOURCES	718	1,020	63.8	551	37.1	5,090
TOTAL	862	1,720	174	727	276	5,440

TABLE 2-11

VIOLATIONS OF THE AMBIENT AIR QUALITY STANDARDS IN SAN FRANCISCO IN 1972[1]

Pollutant	Standard	Number of Days in which Std was Exceeded	Maximum Conc.
CO	9 ppm (8-hr avg – Fed)	12	10 ppm
NO_2	0.25 ppm (1-hr avg – CA)	2	0.33 ppm
Suspended Partic.	100 micrograms/m^3 (24-hr avg – CAO	2	138 micrograms/m^3

[1] Air Resources Board, December 1972).

TABLE 2-12

OCCURRENCES OF EMISSIONS HAVING VALUES GREATER THAN THE AMBIENT AIR QUALITY STANDARDS[1]
1972

	Jan	Feb	Mar	April	May	June	July	Aug	Sept	Oct	Nov	Dec	Annual
	OCCURRENCES OF OXIDANTS HAVING A VALUE OF GREATER THAN 0.08 ppm												
San Francisco													
Hours	0	0	0	0	0	0	0	0	0	0	0	0	0
Days	0	0	0	0	0	0	0	0	0	0	0	0	0
Total Bay Area Basin													
Hours	0	5	54	60	162	214	323	254	118	100	5	0	1295
Days	0	4	28	21	58	67	86	76	58	30	1	0	429
	OCCURRENCES OF NITROGEN DIOXIDE HAVING A VALUE OF GREATER THAN 0.25 ppm												
San Francisco													
Hours	0	0	0	0	0	0	3	0	0	0	0	0	3
Days	0	0	0	0	00	0	2	0	0	0	0	0	2
Total Bay Area Basin													
Hours	0	0	0	0	0	0	3	0	0	0	0	0	3
Days	0	0	0	0	0	0	2	0	0	0	0	0	2
	OCCURRENCES OF CARBON MONOXIDE HAVING AN 8-HR MOVING AVERAGE OF GREATER THAN 9 ppm												
San Francisco													
Hours	21	0	35	0	0	0	0	0	0	12	8	8	84
Days	2	0	4	0	0	0	0	0	0	2	2	2	12
Total Bay Area Basin													
Hours	214	52	35	0	0	0	0	0	0	56	172	112	641
Days	24	9	4	0	0	0	0	0	0	9	19	13	78

[1] Data from State Air Resources Control Board and San Francisco Bay Area Air Pollution Control District

TABLE 2-13

PROJECTED NON-VEHICULAR EMISSIONS
IN SAN FRANCISCO
(tons/day)

Year	CO	NO_x				
		Industry Related	Population Related		Total	
			City	DOF[1]	City	DOF[1]
1972	20	15	14	14	29.0	29.0
1985	20.1	15.1	14.1	12.5	29.6	25.8
2005	20.2	15.2	15	11.6	30.2	24.0

[1] Department of Finance, 1974 Series, E-0

TABLE 2-14

PROJECTED VEHICULAR EMISSIONS
IN SAN FRANCISCO
(tons/day)

Year	CO		NO_x	
	City	DOF[1]	City	DOF[1]
1972	420	420	75	75
1985	191.1	168.1	55.2	47.8
2005	251.2	198.2	68.6	54.0

[1] Department of Finance, 1974 Series, E-0

TABLE 2-15

AVERAGE MOTOR VEHICLE
EMISSION FACTORS (GRAMS/MILE)

Year	Carbon Monoxide	Nitrogen Oxides (as NO_2)
1972	48.1	6.4
1985	14	2.1
2005	12	1.8

(VMT) for a given year. The emission factors for CO and NO_x (as NO_2) are shown in Table 2-15. These factors are an average value for all vehicles on the road in the given year and are weighted for deterioration and miles traveled for each model year vehicle. They are national averages and are conservatively high because of earlier adoption of emission controls in California. The VMT is sensitive to a number of factors, including the availability of fuel and materials and environmental legislation.

Based on the ratio of CO emissions, it is estimated that 10 percent of the 27.7 billion VMT in the Bay Area, or 2.77 billion VMT, occurred in San Francisco County during 1972. Future VMT's are estimated from the average miles traveled per vehicle, the average vehicles per person, and the estimated population for a given year.

Utilizing average conditions during the sixties, it is conservatively estimated that the average number of miles traveled annually per vehicle will increase 7.7 percent by 1985, and 19.5 percent by 2005.

The per capita ownership of motor vehicles in the Bay Area increased at a rate of 2.4 percent per year between 1963 and 1972. If the rate continues to increase at 2.4 percent per year (a conservative estimate), then the increase from 1972 will be 31.1 percent by 1985, and 79 percent by 2005.

Utilizing the previously discussed population projections and vehicle use, a total vehicle miles traveled can be estimated. Table 2-16 gives estimates using the largest and smallest available population projections.

Multiplying the emission factors by VMT and converting to tons/day, the average emissions shown in Table 2-14 are obtained.

Non-vehicular Emissions. This source accounts for only 4.8 percent of the total CO emissions in San Francisco. These emissions are primarily due to industrial and industry-related sources. The average annual industrial product growth rate in San Francisco through the year 2000 is expected to be 0.03 percent per year. If this increase occurs linearly, the industrial growth between 1972 and 1985 will be 0.39 percent, and between 1972 and 2005, 0.99 percent. If emissions increase in proportion to growth, the projected non-vehicular CO emissions of 20.08 and 20.2 tons/day, shown in Table 2-13, may be calculated for 1985 and 2005, respectively.

The non-vehicular NO_x emissions account for 38.7 percent of the total NO_x emissions in San Francisco. These emissions are divided about equally between population-related sources, such as domestic and commercial fuel usage, and industry-related sources. Assuming that 14 of the 29 tons of NO_x emitted by non-vehicular sources in San Francisco in 1972 were due to population related sources, emissions from these sources in 1985 and 2005 can be estimated in proportion to the population projections of the city and DOF. The remaining 15 tons/day from industry-related sources can be projected in proportion to the average annual industrial product growth rate projections.

Air Quality Projection. The "linear roll-back" model is used by the EPA to relate average emissions to maximum concentrations of oxidants. The basic assumption of the model is that changes in the maximum concentration will be linearly related to changes in the average emissions.

Based on this model, it can be seen from Table 2-17 that a reduction in CO emissions of 1 ppm/10 ppm, or 10 percent, is necessary to meet the CO standard.

Likewise, a reduction in NO_2 emissions of 0.08 ppm/-.33 ppm, or 24.3 percent is required to meet the NO_2 standard.

Table 2-17 compares projected reductions in CO and NO_x emissions based on population projections with the reduction required to meet existing standards. The CO emissions will be reduced sufficiently to meet the standards before 1985 and will continue to meet the standards through 2005. This conclusion is independent of the population projection used. NO_x emissions will be reduced sufficiently to meet the standards shortly before 1985, but should begin increasing again to a point where violations of the standards may occur before 2005. The city population projection indicates that the NO_x standard will be violated in San Francisco in the 1990's. If population trends continue to follow the E-0 projection, standards would not be violated before 2005.

TABLE 2-16

PROJECTED VEHICLE MILES TRAVELED
IN SAN FRANCISCO (Mi/Yr)

Year	City Population Projections[1]	Dept. of Finance Population Projections[2]
1972	2.8×10^9	2.8×10^9
1985	4.1×10^9	3.5×10^9
2005	6.4×10^9	4.9×10^9

[1] See Table 2.5

[2] 1974 series E-0 Projections

TABLE 2-17

PROJECTED REDUCTIONS
IN EMISSIONS AND REDUCTIONS
REQUIRED BY THE LINEAR ROLL-BACK MODEL

Year	CO			NO_x		
	Estimated Reductions		Reductions Required to Meet Standards	Estimated Reductions		Reductions Required to Meet Standards
	City	DOF		City	DOF	
1985	55%	60%	10%	26%	36%	24.3%
2005	40%	53%	10%	9%	28%	24.3%

INSTITUTIONS

Sewering institutions are shown on Figure 2-6. The relationship of various institutions to this Overview Facilities Plan is shown on Table 2-18.

Table 2-19 summarizes the agreements between San Mateo County areas and the City and County of San Francisco.

FIGURE 2-6
SEWERING INSTITUTIONS

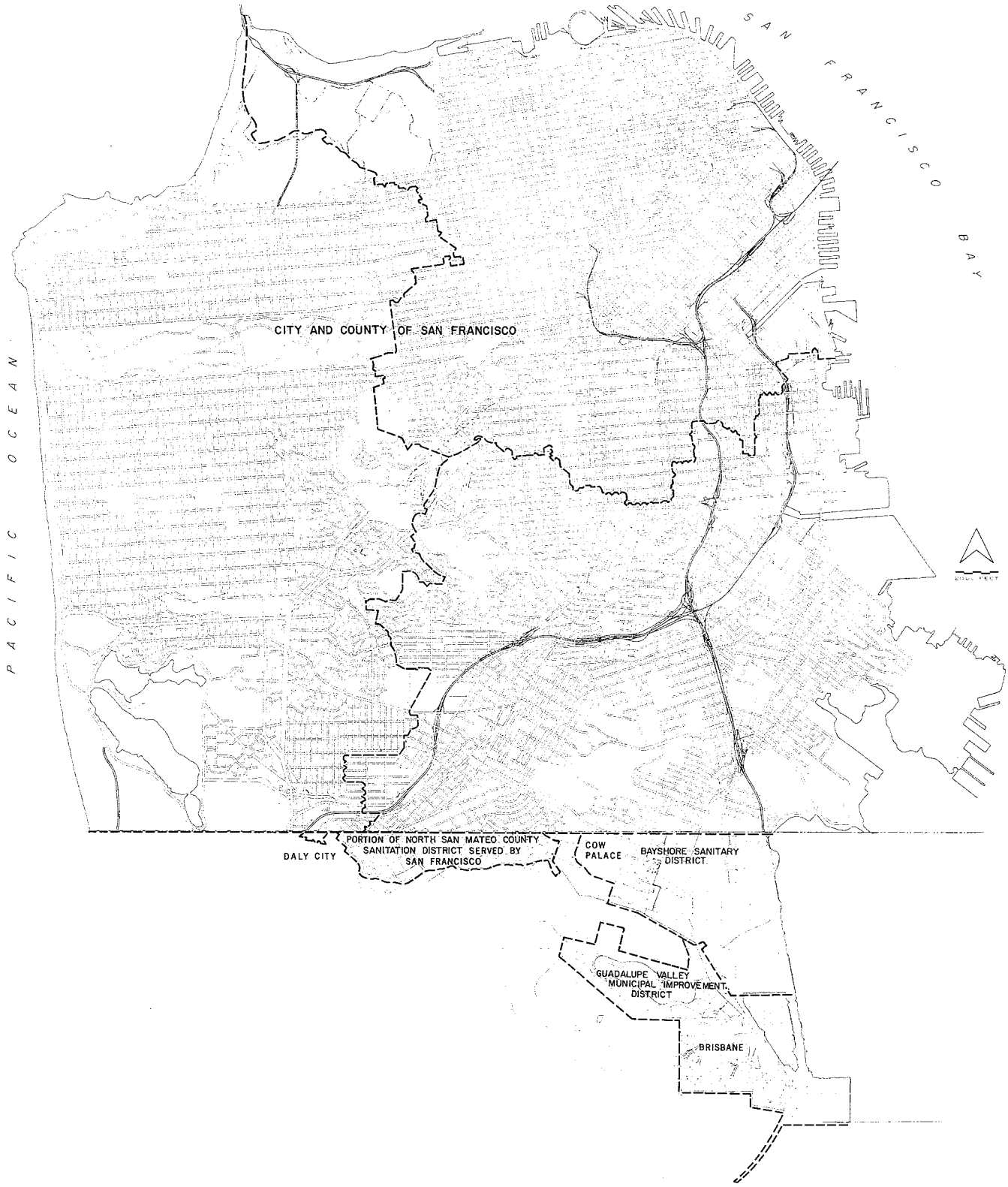

TABLE 2-18

RELATIONSHIP OF INSTITUTIONS
TO FACILITIES PLAN

City and Co. of San Francisco Dept. of Public Works	Responsible for preparation and implementation of the plan.
San Francisco City Planning Commission	Lead Planning agency for environmental review
City of Brisbane	Will be served by the plan, will review and comment on the plan.
Daly City	Portions will be served by the plan, will review and comment on the plan.
San Mateo Co.	Portions will be served by the plan, will review and comment on the plan.
Bayshore Sanitary District	Provides sewer service to portion of San Mateo Co. All of this area will be served by the plan. Will enter into agreements with San Francisco for aspects of plan implementation.
Guadalupe Valley Municipal Utility District	Same as for Bayshore Sanitary District.
North San Mateo Co. Sanitation District	Same as for Bayshore Sanitary District except not all of system is served by San Francisco.
Agricultural District 1A (Cow Palace)	Within Bayshore S.D., but has an agreement with San Francisco for service. Will enter into agreements with San Francisco for service. Will enter into agreements with San Francisco for certain aspects of plan implementation.
Association of Bay Area Governments	Must designate plan as consistent with their plans prior to grant approval by State Board and EPA.
Bay Area Sewage Services Agency	Will informally comment on plan. If San Francisco is unwilling or unable to implement a plan consistent with BASSA's plan, BASSA can construct and operate facilities for San Francisco and charge the City for the cost of this service.
San Francisco Bay Regional Water Quality Control Board	Must designate plan as consistent with their plans prior to grant approval by State Board and EPA. Will enforce compliance with plan.
State Water Resources Control Board	Must give concept approval before grant procedure can begin. Will administer grants for implementation.
Environmental Protection Agency	Must pass on plan as a condition for grants.
Naval Shipyard and Presidio	Will be served by the plan.

TABLE 2-19

SUMMARY OF AGREEMENT CONDITIONS–
TRANSPORT, TREATMENT, AND DISPOSAL OF WASTEWATER
FROM SAN MATEO COUNTY AREAS BY SAN FRANCISCO

Agency	Date of Agreement	Term of Agreement (years)	Estimated Flow at Time of Agreement (mgd)	Flow Limitations	
				Peak Daily (mgd)	Instantaneous Peak (gallons/min.)
Bayshore Sanitary District	10/13/60	30	1.5 max daily	3.0	4,000
North San Mateo Co. SD	2/1/62[1]	30	---	No limit	No limit
Guadalupe Valley MID	11/21/72	30	0.2 dry weather max daily 1.5 peak wet weather day	6.7	4,700
Agricult. Dist. 1a	3/7/39				

[1] Modifications: 1/29/65
3/21/66

CHAPTER 3

EXISTING WASTEWATER MANAGEMENT FACILITIES AND PROCEDURES

COLLECTION SYSTEM

San Francisco is presently divided into three service areas, each served by a treatment plant. Most of the sewers in these areas transport combined domestic and industrial sewage and are designed to carry a five-year storm. The system of interceptor sewers is capable of transporting the equivalent of 0.02 in/hour of rainfall, or twice the dry weather flow, to the treatment plants. When rainfall is heavier, the excess from the drainage areas is discharged through 41 overflow structures into the Pacific Ocean and San Francisco Bay.

Figure 3-1 shows the drainage basins, the collection system, and the treatment plant locations for all areas, including those in San Mateo County, that are served by San Francisco. About 4,000 acres of the city are serviced by private sewers, whose sanitary flows are discharged into the public sewer system.

Tables 3-1, 3-2, and 3-3 give the outfall name, conduit size, and tributary acreage for the outfalls shown in Figure 3-1 (J. B. Gilbert & Associates, March 1973).

Type, Condition, and Sizing of Sewers

San Francisco, In 1964, the sewers in San Francisco were inventoried. Table 3-4 gives a summary of the information collected. At that time, it was found that about 80 percent of the sewers were constructed before 1938, and that 29 percent were built prior to 1892. Table 3-5 gives the age distribution, as of 1964, of the city's sewer lines (S.F. Dept. of Public Works, September 1971). Some of these sewers have been or are being repaired. Repairs are planned for others.

Figure 3-2 gives a general picture of sewer capacity. Approximately 50 percent of San Francisco's major transport sewers cannot carry the flow from a storm with a five-year return frequency. Of these, one-third are incapable of carrying more than one-half of their design flow (J. B. Gilbert & Associates, March 1973).

Certain areas in San Francisco have suffered from subsidence. As a result, some of the sewers in these areas are now supported on piles. Sewers in these areas that are not supported on piles tend to be expensive to maintain.

In the North Point District, there are very large, flat sewers with little or no slope. They are connected at virtually every street intersection and are greatly influenced by tidal and stormwater inflow. Consequently, the flow patterns of these sewers are indistinct.

San Mateo County. The sewage in San Mateo County that is fed into the San Francisco system for treatment originates in several separate districts whose total area is about 2,000 acres. The sewers in these areas are listed in Table 3-6. The locations of these sewers and the mains connecting them with San Francisco facilities are shown in Figure 3-1.

Combined and Separated Areas

All but one percent of the 24,000-acre sewered area of San Francisco is served by a combined domestic-storm collection system. (J. B. Gilbert & Associates, March 1973). The only separated sewers in San Francisco serve a 21-acre area in the Vicente Street drainage basin. The Bayshore Sanitation District in San Mateo County has two sewer sections designed to transport combined sanitary and storm flows. Together, their length is slightly less than 8,000 feet. The remainder of the Bayshore system is separated. The sewers serving the North San Mateo County Sanitation District service area tributary to the San Francisco system are designed to accommodate combined flows (correspondence with San Mateo County districts, 1974). The City of Brisbane and the Guadalupe Valley Municipal Improvement District are served by separated storm and sanitary sewers. The sanitary sewage from these areas is pumped to San Francisco's system, and the stormwater is discharged directly into San Francisco Bay.

FIGURE 3-1
SAN FRANCISCO COLLECTION SYSTEM AND
SAN MATEO COUNTY COLLECTION SYSTEMS [9]

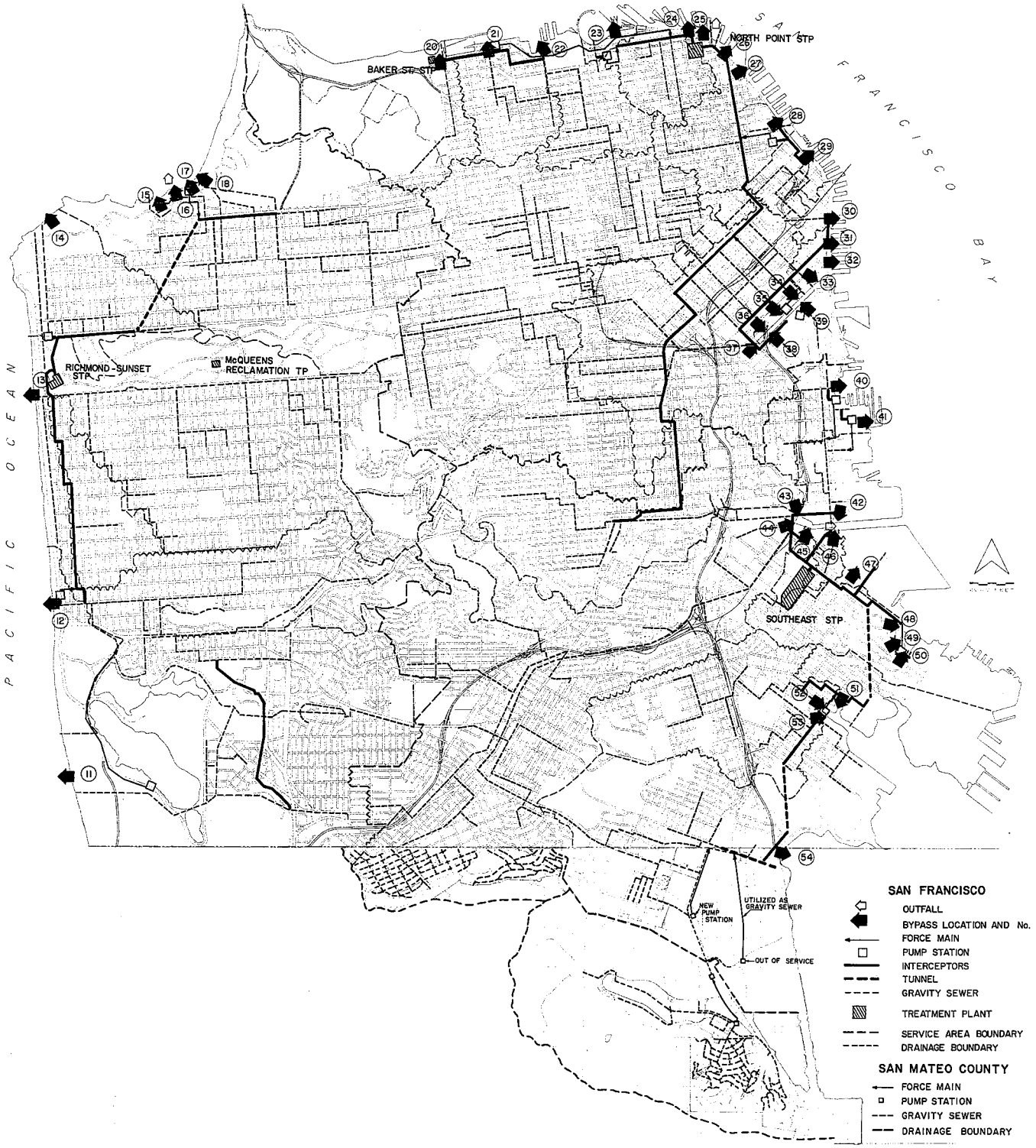

[9] Dry weather flows tributary to San Francisco collection system.

TABLE 3-1

OUTFALL INFORMATION
RICHMOND-SUNSET COLLECTION SYSTEM

Outfall #	Name	Size (diameter)	Cross-Section Area (ft^2)	Tributary Areas (Acres)	
				Sewered	Unsewered
11	Lake Merced	10'x11'3"	95.0	2,169	1,541
12	Vicente	2 @ 5'	39.2	1,731	1,577
13	Lincoln Way	3 @ 6'6"	106.5	2,853	2,853
14	Mile Rock	9'x11"	80.7	1,154	1,043
15	Sea Cliff PS#1	18"	1.8		4
16	Sea Cliff	6'	28.3	2,484	566
17	Sea Cliff PS#2	12'	0.8		8
18	Bakers Beach	7'	38.5		1,412
TOTAL			390.8	10,391	9,004

TABLE 3-2

OUTFALL INFORMATION
NORTH POINT COLLECTION SYSTEM

Outfall #	Name	Size (diameter)	Cross-Section Area (ft^2)	Tributary Areas (Acres)	
				Sewered	Unsewered
20	Baker Street	9′	63.4	1,091	241
21	Pierce	8′	50.3	447	447
22	Laguna	6′	28.3	407	357
23	Hyde	24″	3.1	38	38
24	Beach	6′x7′	41.1	314	314
25	Grant (Beach St. Relief)	36″	7.1	20	20
26	Sansome	2@5′6″ x6′6″	69.5		
27	Greenwich	6′	28.3	517	617
28	Jackson	8′x9′6″	72.3		
29	Howard	7′	38.5	225	225
30	Brannan	7′x6′6″	36.0		
34	North Side Fourth St.	6′6″	33.2		
35	Fifth Street	7′9″	47.2	5,110	5,110
36	N. Side 6th St.	6′	28.3		
37	Seventh and Division	3@8′8″ x9′6″	224.2		
31	Townsend	2′x3′	6.0		22
32	Berry	15″	1.2	59	7
33	Third Street	2′6″ x3′9″	7.3		30
38	S. Side 6th St.	3′6″ x5′3″	14.0		63
39	S. Side 4th St.	2′6″ x3′9″	7.3	188	125
TOTAL			872.3	3,416	7,516

TABLE 3-3

OUTFALL INFORMATION
SOUTHEAST COLLECTION SYSTEM

Outfall #	Name	Size (diameter)	Cross-Section Area (ft^2)	Tributary Areas (Acres)	
				Sewered	Unsewered
40	Mariposa	6′	28.3	226	226
41	20th Street	24″	3.1	45	9
42	N. Side 3rd St.	3′6″x5′3″	14.0	279	153
43	Marin	8′10″	74.7	1,410	1,410
44	Selby	3@7′x10′	209.1	3,307	3,307
45	Rankin	5′	19.6	66	66
46	S. Side 3rd St.	2′6″x3′9″	7.3	63	57
47	Mendell	4′	12.6	369	nil
48	Evans	6′	28.3		260
49	Hudson	30″	4.9	667	45
50	Griffith N.	21″	2.4		17
51	Griffith S.	5′6″	23.8	551	182
52	Yosemite	9′x7′3″ 11′6″x6′6″	52.9 69.6	1,047	1,047
53	Fitch	6′9″	35.8	350	121
54	Sunnydale	6′6″	33.2	832	594
TOTAL			619.6	9,212	7,494

TABLE 3-4

SEWER INVENTORY

Type	Diameter	Total Length (Miles)
Collecting Sewers	8" - 36"	716
Transport Sewers	36" - 60"	102
Transport Sewers	60" and larger	52

TABLE 3-5

SEWER AGE

	Total Length (Miles)	% of City Total
79 yrs and older	250	29
66 to 79 years	79	9
33 to 66 years	374	43
7 to 33 years	166	19
	870	100

FIGURE 3-2
GENERAL CAPACITY OF
MAJOR TRANSPORT SEWERS

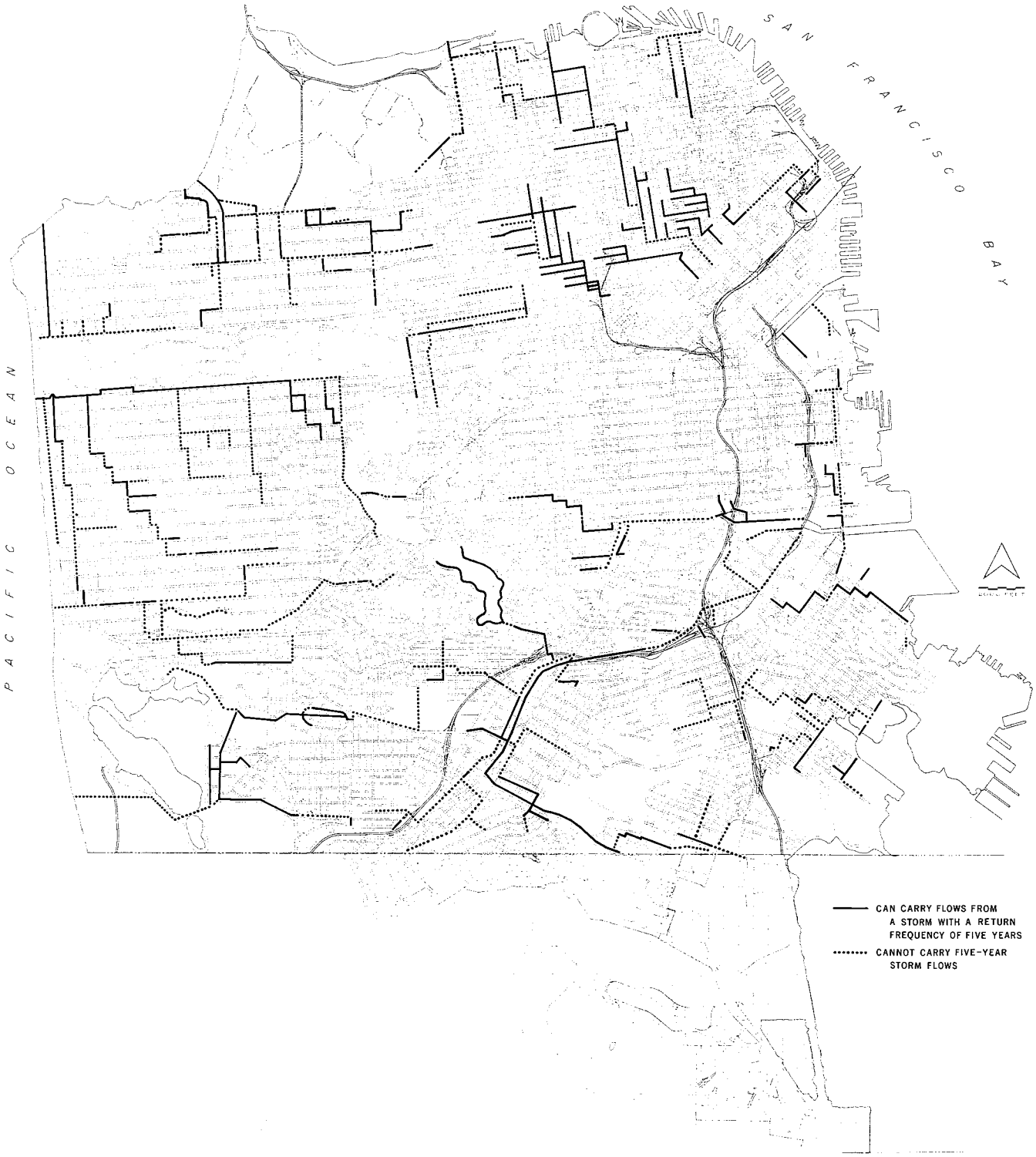

TABLE 3-6

SEWERS IN SAN MATEO COUNTY
TRIBUTARY TO SAN FRANCISCO

	Length (Feet)					Total
	4-8"	10-14"	15-20"	21-30"	Other	
North San Mateo County Sanitation District	40,380	20,410	8,400	4,200		73,390
City of Brisbane	44,116	3,561				47,677
Bayshore Sanitation District						
Sanitary	7,260	4,920	3,300	4,800	3,300[1]	23,580
Combined					7,860[2]	7,860
Guadalupe Valley Municipal Improvement District	4,060	4,780	5,340	120		14,300

[1] 14-inch force main

[2] 3180 feet of 6' x 6' and 4680 feet of 8' arch sewer

BYPASS FACILITIES

At Treatment Plants

Both the North Point and Southeast flows are bypassed into the Bay when there is excessive flow into the plants or when there is a power failure.

Bypassing at the Richmond-Sunset plant takes place at two different locations: 1) at an overflow weir at the Sunset pumping station diversion structure in the Mile Rock sewer when the flow exceeds the station capacity or upon power failure; and 2) at an overflow weir in the plant headworks bypass sturcture when the flow exceeds plant capacity (City and County of San Francisco, March 1971).

Diversion Structures

There are several kinds of diversion structures used to bypass flow from the sewer system to bypass outfalls.

The overflow (weir) type of structure functions when the water reaches a predetermined level. It allows the water to overflow into an auxiliary system or another parallel system, which then transports it to a point of discharge. The weir may be a side weir, an end weir or a leaping weir at the bottom of the structure.

The underflow type of structure can be constructed either with a fixed opening or with a gate to control the flow from one system to another. It diverts the sanitary flow and a portion of the storm flow to the nearest treatment plant via an interceptor sewer.

Outfall Structures

There are two basic kinds of outfall structures: one discharges below the tide level, the other discharges above the tide level, typically over a beach. If the outfall discharges below the tide level, there is generally a gate or weir located upstream in the diversion structure to control the entrance of bay water into the system.

Inflitration/Inflow

North Point Service Area. 82 percent of the sewers in this area can be classified as noninfiltrable. It is suspected that nine percent are subject to salt water infiltration, and the remaining nine percent, to fresh water infiltration.

Inflow and infiltration occur with both salt water and fresh water. Salt water inflow occurs when Bay water flows through the tide gates at the outfall structures. Fresh water inflow generally consists of storm runoff, but may also include groundwater interception, street flushings, and Fire Department usage. Infiltration generally occurs where there are defective pipes, pipe joints, connections, or manhole walls. Tidal action is the cause of salt water infiltration; fresh water infiltration occurs through side sewers and main sewers that are below the water table in areas where the soil is highly permeable (City and County of San Francisco, Department of Public Works, February 1974).

The quantities of inflow and infiltration are presented in Chapter 4.

WASTEWATER TREATMENT

Plant Descriptions

San Francisco has three dry weather treatment plants. There is also a water reclamation plant that treats a small portion of the waste from the Richmond-Sunset District and a wet weather, dissolved air floatation plant that treats combined waste from a drainage basin in the North Point District. The locations of these plants are shown on Figure 3-1.

North Point. The North Point Plant has a normal flow capacity of 65 mgd and serves a dry weather flow area of 9,500 acres. It is a conventional primary treatment plant supplemented with chemical treatment facilities. The treatment thus consists of prechlorination, screening, grit removal, preaeration, chemical addition, coagulation and sedimentation, and postchlorination. The plant has no sludge treatment facilities. The scum and raw sludge are piped to the Southeast Plant for treatment and disposal. The North Point treatment units are covered to control odors. The plant effluent is disposed of in San Francisco Bay through four discharge lines approximately ten feet below mean lower low water.

Richmond-Sunset. The Richmond-Sunset Plant has a normal treatment capacity of

21 mgd and serves a 10,600-acre area. Sewage treatment consists of screening, grit removal, chemical addition, coagulation and sedimentation, and effluent disinfection. Sludge is treated by a two-stage digestion process, conditioning, and dewatering. All treatment facilities are housed in one of four buildings. The plant effluent is piped to an outfall about 7,000 feet north of the plant and is discharged into the Pacific Ocean at the shoreline. Digested sludge solids are used as fill and soil conditioner in Golden Gate Park.

Southeast. The Southeast Plant serves a predominantly heavy industrial section of the city that has a normal dry weather flow of 19 mgd. The primary treatment process is essentially the same as that of the North Point Plant, although the nature of the waste treated is quite different. The treatment works are housed for odor control. The treatment of solids from this plant and from the North Point Plant consists of gravity thickening, sludge digestion, elutriation, digested sludge chemical conditioning, and dewatering. Plant effluent is discharged into the Bay through a single submarine outfall with diffusers. The 21,000 tons of filter cake produced annually from sludge treatment are trucked to a landfill site (City and County of San Francisco, March 1971).

McQueen Reclamation Plant. The McQueen Plant is operated by the Recreation and Parks Department to supplement the water supply for Golden Gate Park. The plant, designed for a flow of 1 mgd, usually treats waste flows of about 0.8 mgd. The flow is diverted from a service area adjacent to the park and consists primarily of sanitary and hospital sewage. The treatment process involves screening, flash preaeration, primary settling, aeration, final settling, and chlorination. All solids, scum, and grit are returned to the bypass, mixed with the undiverted waste flow, and treated at the Richmond-Sunset Plant (City and County of San Francisco, June 30, 1973).

Baker Street Dissolved Air Flotation Plant. The Baker Street Plant was put into operation in 1971 as an experiment in treating storm overflows. The drainage basin it was designed to serve is a residential area with combined sewers. The facility is designed to treat 24 mgd, with storm flow in excess of this being diverted to a 160 mgd outfall. The plant effluent is discharged into San Francisco Bay through the outfall, and the separated solids and liquid wastes are transferred to the Marina Pumping Station for conveyance to the North Point Plant (City and County of San Francisco, 1971).

Design Criteria

Table 3-7 gives the design parameters for the three main treatment facilities. The design data are developed from original plant design and construction drawings (City and County of San Francisco, March 1971). Table 3-8 summarizes the design components of the Baker Street facility. Design criteria for the McQueen Plant are not available.

Flow Diagrams

Flow diagrams for the North Point, Richmond-Sunset, and Southeast Plants are shown in Figures 3-3, 3-4, and 3-5, respectively (City and County of San Francisco, March 1971). Chemicals, when used, are added to the raw sewage immediately preceding its flow into the primary sedimentation tanks (J. B. Gilbert & Associates, March 1973). The flow diagrams for the McQueen Plant and the Baker Street Plant are shown in Figures 3-6 and 3-7.

Operational Procedures

Dry Weather Treatment Facility Operation. All three treatment plants are operated on a continuous basis, 24 hours a day. At each plant, four crews work in rotation to provide full operation staffing.

There is no difference between wet and dry weather operation except that the plants are operated closer to design capacity (treatment of 0.02 inches/hour rainfall) during wet weather.

McQueen Plant Operation. The McQueen Reclamation Plant is normally operated from March to November, when the demand on Golden Gate Park's three wells is the heaviest. Waste is diverted at the discretion of the plant operator from the Richmond-Sunset service area, treated, and stored in Elk Glen Lake. Water from this lake is periodically pumped to the top of Strawberry Hill where it is then allowed to cascade down into Stow Lake, thus maintaining the level of that lake.

TABLE 3-7

DESIGN PARAMETERS FOR
EXISTING TREATMENT FACILITIES

	North Point	Richmond-Sunset	Southeast
FLOW			
Mean (mgd)	65	21	19
Hydraulic capacity (mgd)	190	70	70
BAR SCREENS			
Total channel width (ft)	40	15	17
Bar thickness (in)	3/8	3/8	3/8
Clear Space (in)	3/4	3/4	3/4
GRIT CHAMBERS			
Velocity—at mean flow (ft/sec)	0.8	0.2	0.1
Detention time at mean flow (min)	2.1	4.9	6.0
PREPARATION & MIXING TANKS			
Detention time (hrs) at mean flow	0.5		
SEDIMENTATION TANKS			
Detention time (hrs) at mean flow	1.6	2.1	2.8
Overflow rate (gal/ft^2/day) at mean flow	1500	1000	760
CHLORINATION			
Chlorine contact time (min) at mean flow	5	50	
SOLIDS TREATMENT			
Digester volume (1000 ft^3)	all solids except grit pumped to southeast for treatment	430	2400

TABLE 3-8

OPERATION PARAMETERS
BAKER STREET DEMONSTRATION FACILITY[1]

HYDRAULIC CAPACITY	
Inlet system, bypass system, and outfall (5-year return interval)	160 mgd
Flotation Plant	18 mgd[2]
FLOTATION PLANT PROCESS DESIGN PARAMETERS	
Surface loading rate	4500 gpd/sq ft^2
Detention time	25 min
Recycle	100 to 20% @ 65 psi
Available air	68 SCFM @ 65 psi
CHEMICAL ADDITION FOR FLOTATION AIDS	
Soda ash feeding capacity 50 percent trade solution	15 to 150 mg/1 @ 12 mgd
Alum feeding capacity, 36° Be	30 to 300 mg/1 @ 12 mgd
Polyelectrolyte feeding capacity, 1 percent solution	0.1 to 10 mg/1 @ 24 mgd
CHEMICAL ADDITION FOR DISINFECTION	
Sodium Hypochlorite, 15 percent trade solution	15 mg/1 @ 24 mgd
SLUDGE PUMPING CAPACITY	550 gpm

[1]Subsequent evaluations have shown that some of these design capacities are too high.

[2]Actual operating value—less than original design.

FIGURE 3-3
SCHEMATIC FLOW DIAGRAM FOR
NORTH POINT TREATMENT PLANT

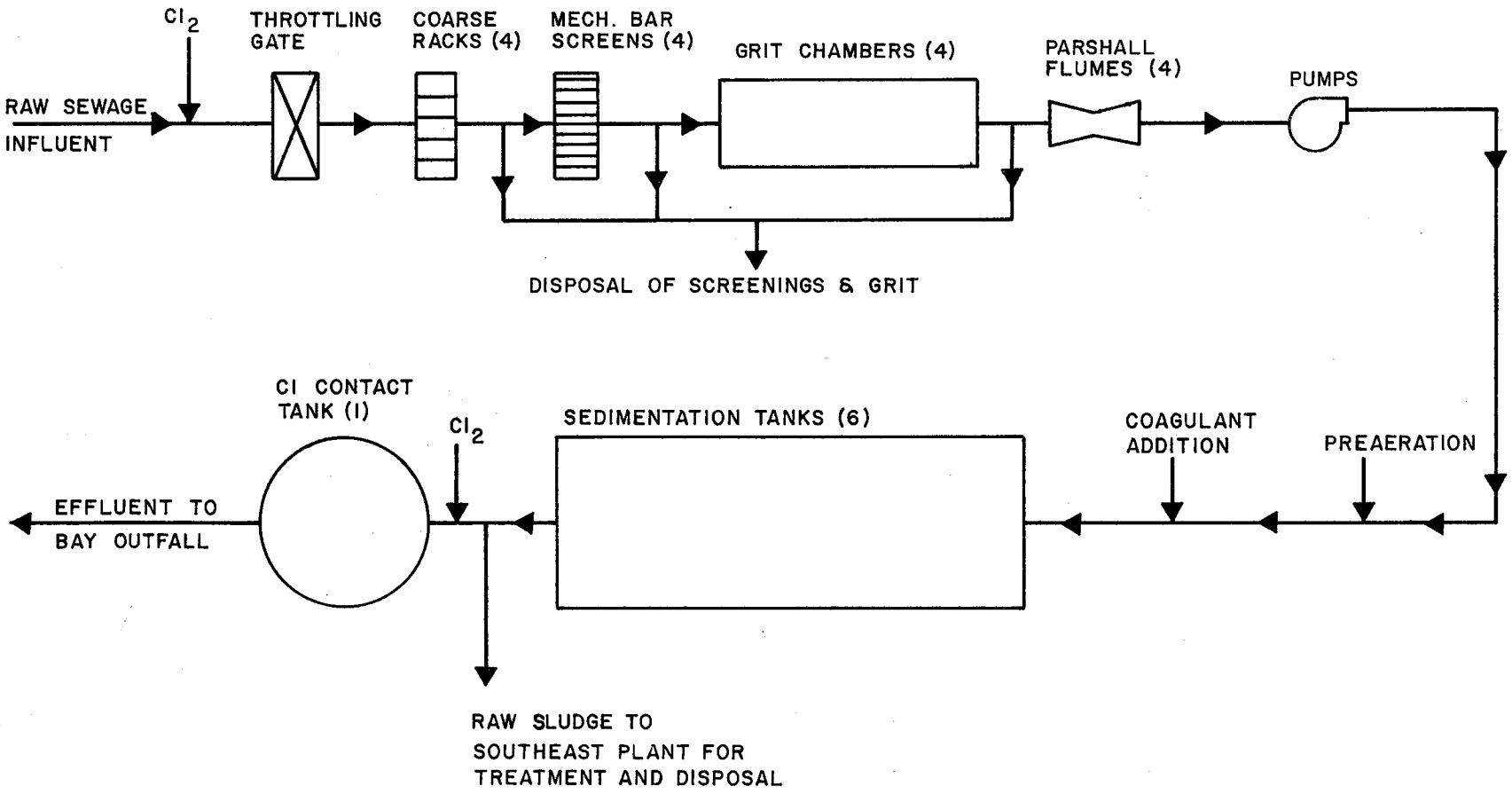

FIGURE 3-4
SCHEMATIC FLOW DIAGRAM FOR
RICHMOND-SUNSET TREATMENT PLANT

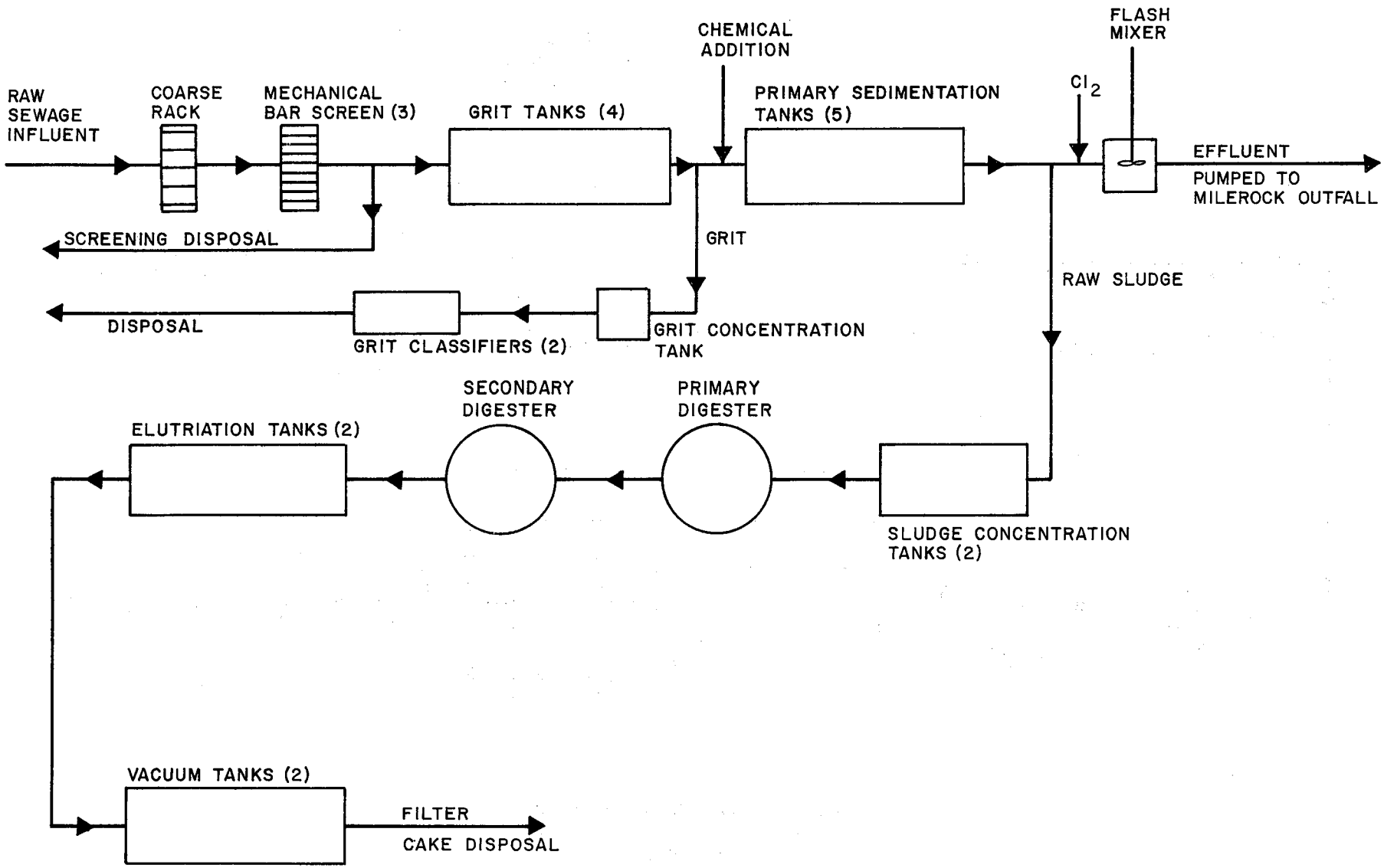

FIGURE 3-5
SCHEMATIC FLOW DIAGRAM FOR
EXISTING SOUTHEAST TREATMENT PLANT

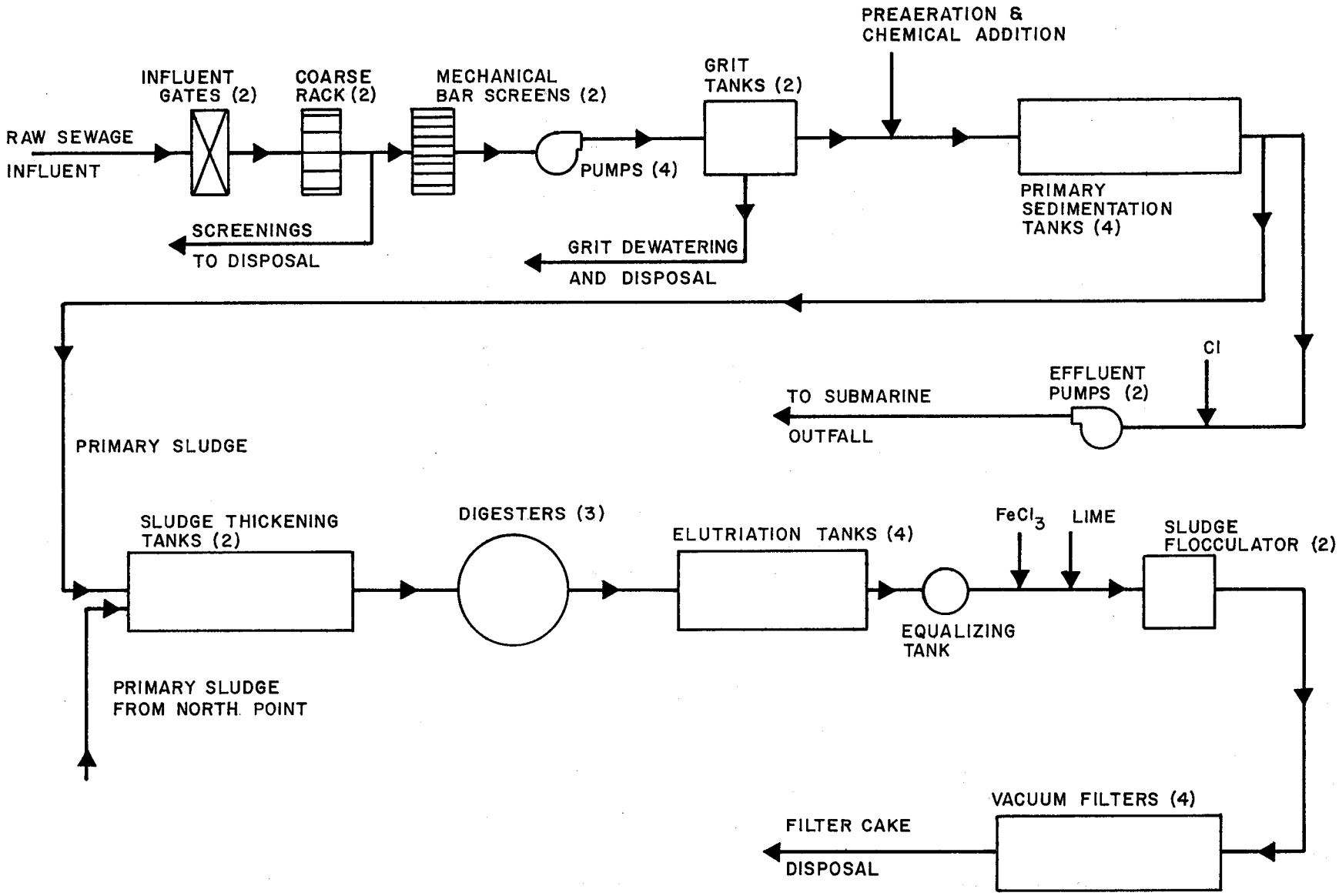

FIGURE 3-6
SCHEMATIC FLOW DIAGRAM OF THE
McQUEEN RECLAMATION PLANT

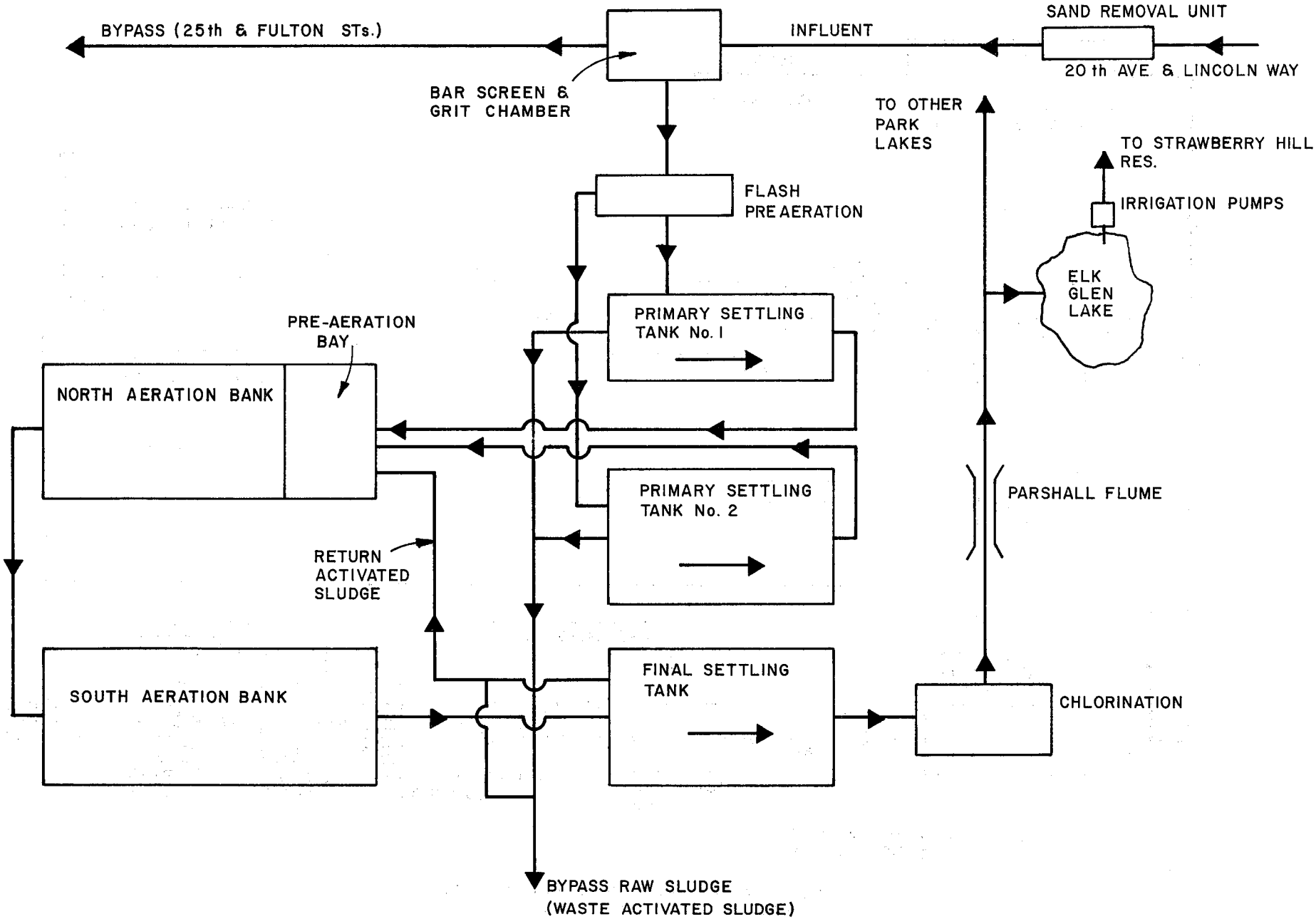

FIGURE 3-7
SCHEMATIC FLOW DIAGRAM FOR BAKER STREET
DISSOLVED AIR FLOTATION FACILITY

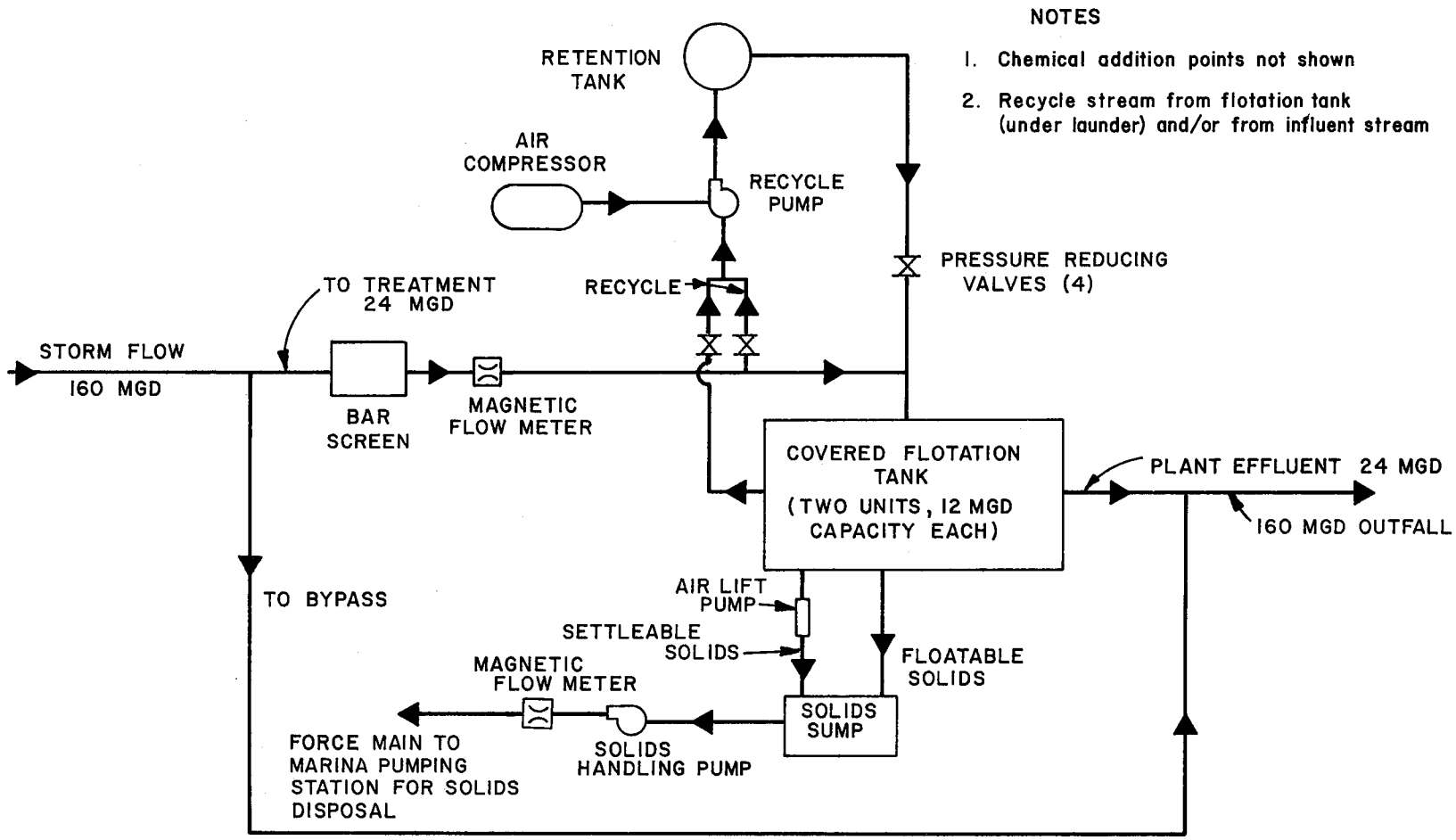

The McQueen Plant is staffed on a continuous basis when it is in operation. The personnel used to staff the McQueen Plant do plant maintenance when it is not in operation.

Baker Street Plant Operation. The Baker Street Plant was operated from October 1970 to July 1971 to test the effectiveness of treating combined sewer overflows with a dissolved air flotation process. Since then, the plant has been operated as a test facility or to actually treat wastes.

Emergency Operation. None of the three main treatment plants is presently equipped to handle emergency operations. In the case of a power failure, the flow into the plant is bypassed and discharged without treatment. Recent strikes, combined with a professional staff union and new Regional Water Quality Board requirements, have shown the need for a contingency plan for emergency operation; this is now being prepared.

The McQueen Plant has no emergency operating procedures. In an emergency, diversion of sewage to the plant can be stopped and the plant shut down.

The Baker Street Plant has automatic gates designed to bypass flow when the influent storm flow exceeds the hydraulic capacity of the facility. The plant is equipped with a standby diesel generator to supply power to the emergency lighting panel, the ventilation system, and the hydraulic oil power unit in the event of an electrical power failure. The bypass control gates open when this occurs.

Compliance with Waste Discharge Regulations

At the present time, San Francisco is in violation of both the State discharge requirements and the new Federal regulations for dry weather treatment.

INDUSTRIAL WASTES AND SOURCE CONTROL

Industrial Waste Monitoring Program

The City has developed an industrial waste program which will identify and monitor industrial dischargers. The quantity and quality of individual waste discharges will be analyzed in order to assess treatment fees and also to control the incidence of industrial flow related upsets at the treatment facilities. A "Waste Discharge Report," including a laboratory analysis of the discharger's waste stream, is required of all major waste contributors (City and County of San Francisco, Department of Public Works, May 1974). Enforcement actions have been begun by the City.

Source Control Program

The Industrial Waste Program for 1973 investigated source controls and minimum discharge levels. As of the filing of the 1973 report, this work had not been completed. It was indicated, however, that source controls would be needed for certain industrial waste constituents that could not be removed satisfactorily by normal treatment processes (City and County of San Francisco, Department of Public Works, May 1974).

There is particular concern over gross fluctuations in quality and slug loadings of the waste that flows to the Southeast Plant. It was found during the pilot plant study (North San Mateo Sanitation District, 1973) sewage varied in color from bright red to bright green, with pH ranging from 1.2 to 11.4. Slug loadings of hot grease, sulfides, chromium, and iron were also observed. The erratic nature of the flow suggests the need for a close surveillance of the industrial discharges into the Southeast Plant (City and County of San Francisco, Department of Public Works, May 1974).

ADMINISTRATION

Organization Charts and Personnel Summaries

Figure 3-8 shows the organization chart for the Department of Public Works. Figures 3-9 and 3-10 show the organization of the Bureau of Engineering and the Bureau of Water Pollution Control, respectively. Of particular interest on the former chart is the Division of Sanitary Engineering and on the latter, the Treatment Division. The distribution of personnel at the three treatment plants is given in Figure 3-10 (City and County of San Francisco, Department of Public Works, December 1973).

FIGURE 3-8

DEPARTMENT OF PUBLIC WORKS

CITY AND COUNTY OF SAN FRANCISCO
JUNE 30, 1972

ORGANIZATION CHART

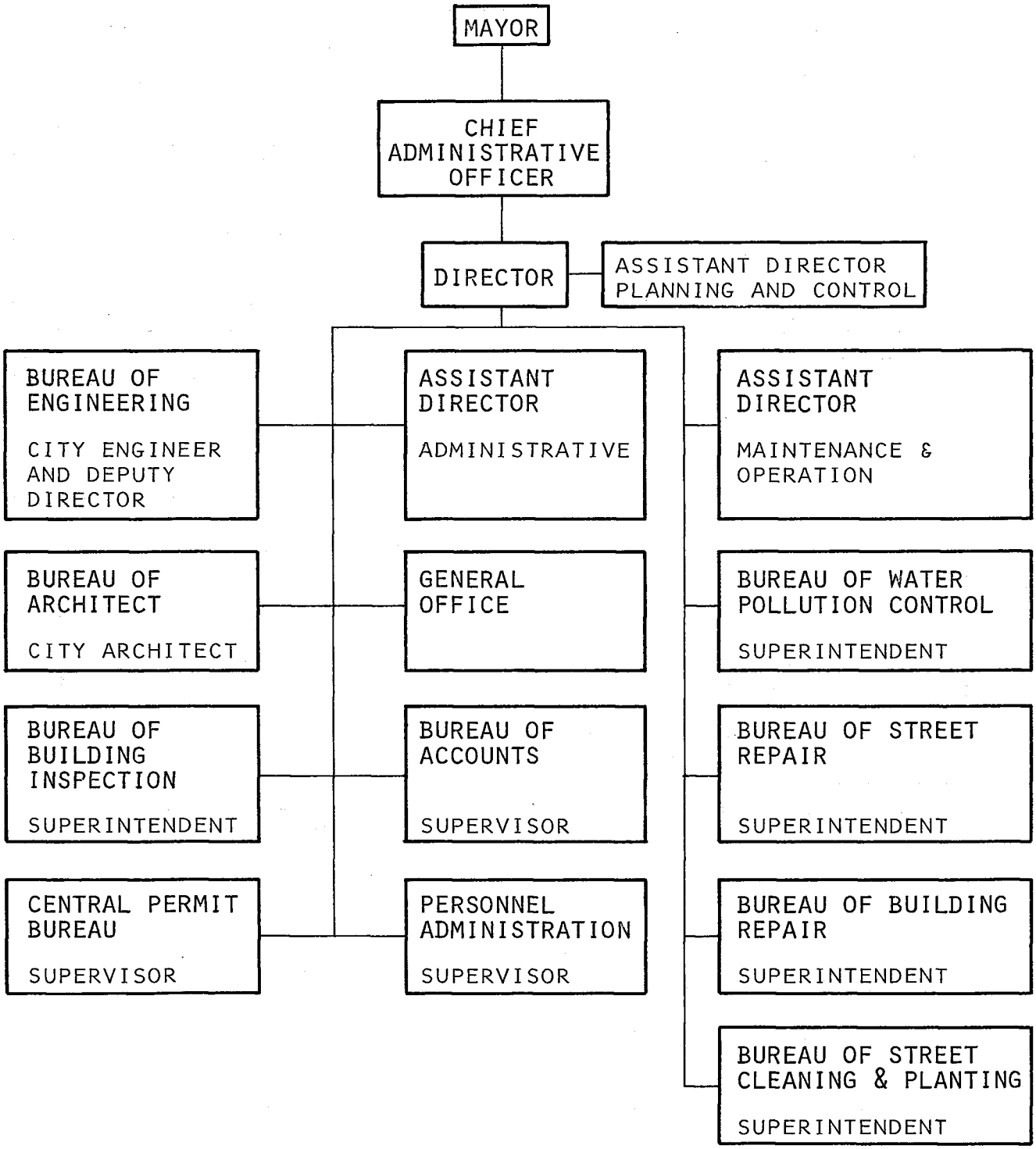

FIGURE 3-9

ORGANIZATION CHART

BUREAU OF ENGINEERING
DEPARTMENT OF PUBLIC WORKS

JUNE 30, 1973

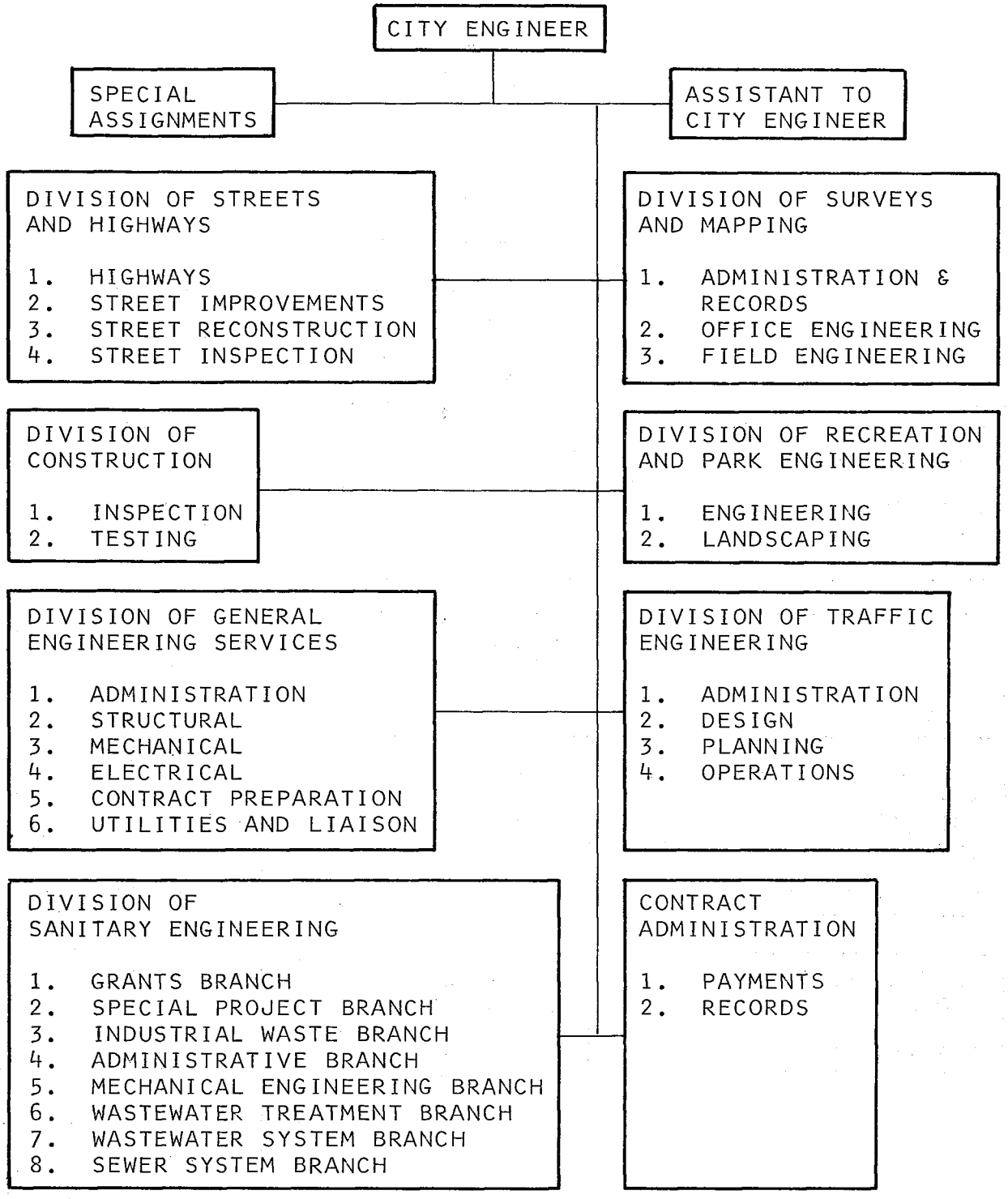

FIGURE 3-10

ORGANIZATION CHART
BUREAU OF WATER POLLUTION CONTROL
DEPARTMENT OF PUBLIC WORKS
June 30, 1973

SUPERINTENDENT

WASTEWATER PUMPING DIVISION
SUPERINTENDENT
SEN STATIONARY ENG SP 5
STATIONARY ENG SP 12

TREATMENT DIVISION
General Superintendent

SEWER REPAIR DIVISION
Superintendent

Clerk Typist

NORTH POINT PLANT
Superintendent

Sen Clerk Typist	1
Sen Sewage Chemist	1
Sewage Chemist	2
Sewage Chemist	1*
Chief Stationary Eng SP	1
Sen Stationary Eng SP	6
Stationary Engineer	15
Truck Driver	1
Laborer	4
Janitor	1

RICHMOND-SUNSET PLANT
Superintendent

Sen Clerk Typist	1
Sen Sewage Chemist	1
Sewage Chemist	2
Sewage Chemist	1*
Chief Stationary Eng SP	1
Sen Stationary Eng SP	6
Stationary Eng SP	10
Truck Driver Heavy	1
Laborer	3

SOUTHEAST PLANT
Superintendent

Management Assistant	1*
Sen Clerk Typist	1
Sen Sewage Chemist	1
Sewage Chemist	3
Sewage Chemist	6*
Chief Stationary Eng SP	1
Sen Stationary Eng SP	6
Sen Stationary Eng SP	1*
Stationary Eng SP	26
Stationary Eng SP	7*
Jr. Operating Eng	1
Laborer	4
Laborer	2*
Janitor	1

Construction
Assistant Superintendent

6 Bricklayer Crews

Bricklayer	6
Hodcarrier	10

Main Sewers
General Foreman

11 Cribber Crews

Cribber Subforeman	11
Cribber	12
Operating Eng Univ	1
Truck Driver Heavy	2
Hired Truck & Chauf	1

Side Sewers
General Foreman

4 or more Crews

Cribber Subforeman	4
Cribber	4
Hired Truck & Chauf	1

Operation
Assistant Superintendent

6 Sewer Cleaning Crews

Sewer Serviceman	6
Sewer Cleaner	6
Laborer	6
Hired Truck & Chauf	1

Gas Detection

Sewer Safety Insp	1
Asst Sewer Safety Insp	1

Miscellaneous

Laborer	1

Services
General Foreman

5 Service Crews

Sewer Serviceman	5
Truck Driver Light	5
Laborer	5

8 Catchbasin Crews

Truck Driver Heavy	8
Laborer	16

*interdepartmental

CHAPTER 4

WATER AND WASTEWATER CHARACTERISTICS

In this chapter, the quality and quantity of water supply, wastewater, and receiving waters are discussed. Listed below are conclusions drawn from this information:

Water Supply

- Water demands are projected to increase five percent by the year 2000. This increase is due to a projected percent increase in per capita water consumption, which is greater than the projected percent decrease in population.

- The per capita water consumption for San Francisco is low relative to other Bay Area communities. Significant decreases in waste flows due to increases in water use efficiency therefore seem unlikely.

Wastewater Quantity

- Total dry weather wastewater is about equal to water supply (approximately 100 mgd). Normally, wastewater flows are only 40-60 percent of water use. It can, therefore, be concluded that unsewered uses (lawn watering, car washing, etc.) are not as important as in other cities and that there is significant infiltration/inflow into the sewer system.

- Industrial waste flows are about eight percent of the total dry weather flows. They range from 5 percent for Richmond-Sunset to 15 percent for Southeast.

- Dry weather flow variations in treatment plant influent are about 30 percent (daily maximum to average) for all three plants.

- About 65 percent of the rainfall reaches the sewer system.

- On an annual basis, storm runoff is about 20 percent of total wastewater flow; one percent of the sanitary flow and 60 percent of the storm flow is bypassed.

Wastewater Quality

- The quality of treatment plant influent is generally poorest at Southeast compared to North Point and Richmond-Sunset.

- Large, short-term fluctuations occur in the pH and heavy metals concentration of the influent to the Southeast Treatment Plant.

- BOD and grease and oil concentrations are considerably lower for combined sewage than for sanitary waste.

- The quality of industrial wastewater is much poorer than the quality of sanitary waste.

- In terms of effluent quality and percent removal, the North Point Plant is generally better than the Southeast Plant, which is generally better than the Richmond-Sunset Plant.

Receiving Water Quality

- Floatables and coliform are by far the most significant water quality problems attributable to San Francisco's wastewater discharges.

- Coliform levels in bathing waters are unacceptably high during the entire wet season.

- Biostimulation in the Bay appears to be light-limited, with possibly some limiting effect due to toxicity. Future conditions will possibly reduce the limiting effect of both these factors.

- Floatables discharged in the central bay tend to accumulate on ocean beaches or be transported out of the bay-Farallones area.

- Conservative pollutants discharged by the city appear to have little significance on total conservative pollutant concentrations anywhere in the bay system.

- During periods of turbid (high) delta outflow, surface fields from the city discharges are generally not visible.

WATER SUPPLY

The City and County of San Francisco has owned and operated a water and power system for many years. The municipal system extends almost completely across the State of California, from the summit of the Sierra Nevada to the San Francisco Bay Area. This system is shown in Figure 4-1.

FIGURE 4-1
SAN FRANCISCO WATER DEPARTMENT SYSTEM

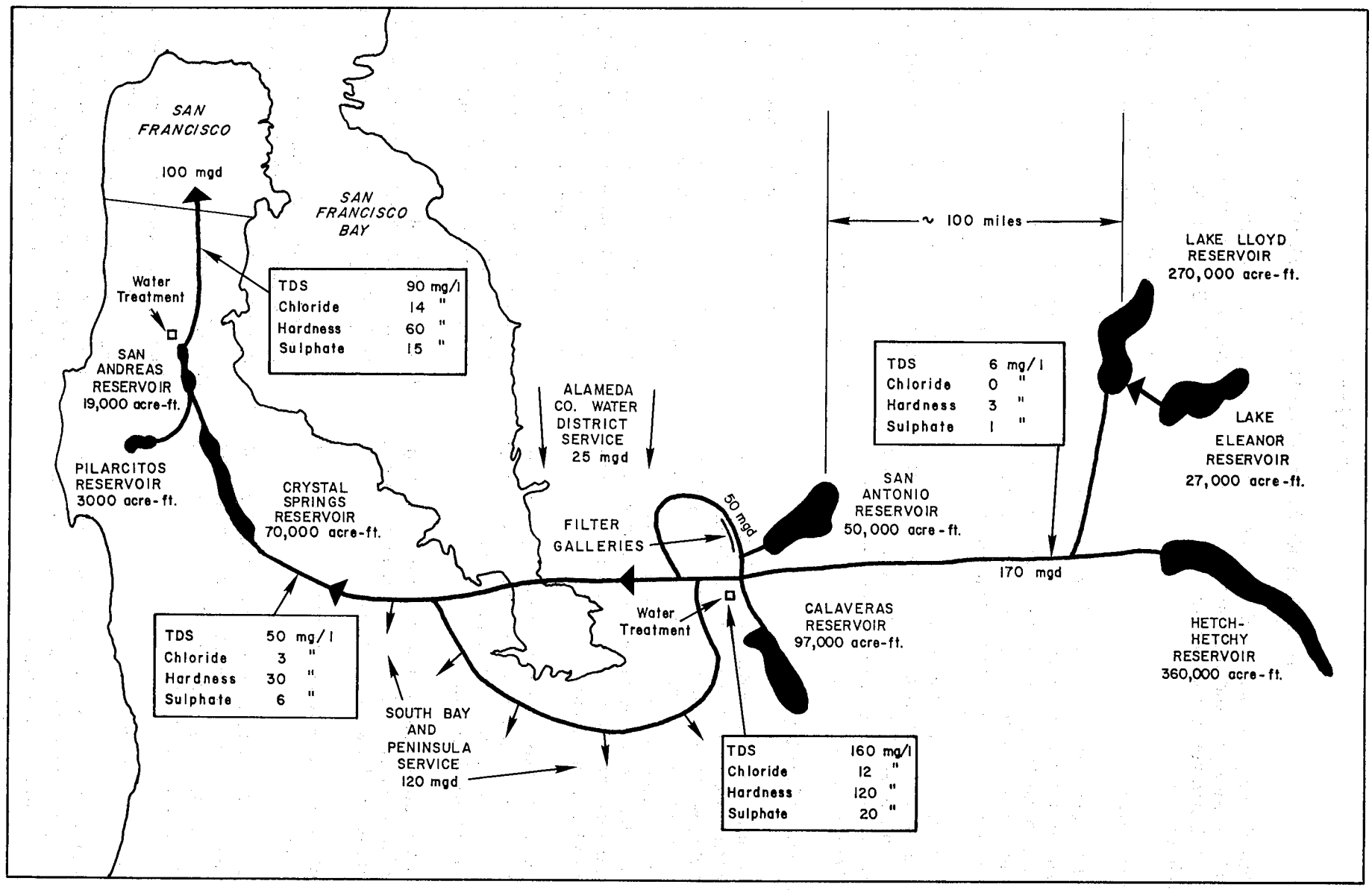

Nearly 500 million dollars have been committed to or spent on these facilities.

The Raker Act authorizing the Hetch-Hetchy project was passed by both Houses of Congress and signed into law in 1913. The Act granted San Francisco right-of-way and use of public lands in the areas concerned for the purpose of constructing, operating, and maintaining structures for the development and use of water and power.

The remainder of San Francisco's water supply system was formerly the privately owned Spring Valley Water Company system, purchased and taken over by the City in 1930.

The San Francisco water supply system draws from numerous sources across the width of California. The major source is the Hetch-Hetchy system of reservoirs in the high Sierra. Also included are the Calaveras Reservoir located between Alameda and Santa Clara Counties, the Pilarcitos and San Antonio Reservoirs, the Sunol Filter Galleries in Alameda County, and San Andreas and Crystal Springs Reservoirs in San Mateo County.

The quality of water developed from these sources varies from very high (from Hetch-Hetchy) to medium quality (from the Sunol Filter Galleries). Quality data for these sources are shown on Figure 4-1.

The City operates two water filtration plants and eighteen chlorination facilities. In addition, lime, alum, and flouride are added at various points in the system.

The Sunol Valley Water Filtration Plant treats all water from the Calaveras and San Antonio Reservoirs and the Sunol Filter Galleries. The San Andreas Filtration Plant treats all water from the San Andreas Reservoir.

The San Francisco system supplies water to many of the distributing agencies in Alameda, Santa Clara, and San Mateo counties, as well as providing all of San Francisco's water. Most outside agencies have term contracts for water service, some with quantity restrictions. Quantities are shown on Figure 4-1.

The historical per capita water consumption for San Francisco is shown on Table 4-1. It should be noted that this per capita consumption is low relative to other regions in the Bay Area. For example, Santa Clara County has a per capita consumption of over 200 gallons per capita per day. East Bay Municipal Utility District's consumption is about 200 gallons per capita per day.

The San Francisco Water Department uses a complex system of rate schedules for determining water costs to consumers. Schedules differ with the type of consumer and with the contractual arrangements. Basically, the charge consists of a service charge based on the size of the meter, an escalating cost per quantity used, which favors large users, and a minimum charge, again based on meter size. The range of service and water delivery charges are shown in Table 4-2.

Future Water Demand

The San Francisco Water Department has estimated the future water demand for San Francisco and the total water department service area. Figure 4-2 shows the historical and projected total use curves for these areas. As noted, the projections are based on Department of Finance 1974 Series D-100 population projections, which results in a somewhat higher demand projection than when the E-0 population figures are used.

WASTEWATER QUANTITY

Because San Francisco's sewer system carries both sanitary and storm flows, the quantity of wastewater in the system increases dramatically above the base dry weather flow during rainstorms. The flow in the main drainage sewers is approximately doubled by a relatively light rainfall of 0.01 inches per hour. With the existing system, the flow in these main sewers is bypassed to the treatment plants up to a rate equivalent to runoff from 0.02 inches per hour of rainfall. Flows in excess of the interceptor capacity are bypassed to the bay.

DRY WEATHER FLOW

Past and predicted flows are shown on Table 4-3 for dry weather conditions. Two basic approaches to flow predictions are used:

1. Examination of historical population and flow data.

2. Use of population, industrial productivity, and unit flow projections.

TABLE 4-1

PER CAPITA USE IN SAN FRANCISCO

	1940	1950	1960	1970	1972-73
Average Daily Consumption in SF (mgd)	47.9	68.9	80.7	98.9	98.6
SF Population	634,536	775,357	740,316	715,674	698,000 (estimate)
Average Daily Use Per Capita (gallons)	76	89	109	138	138

TABLE 4-2

APPROXIMATE WATER COSTS
SAN FRANCISCO WATER DEPARTMENT

	Water Cost for Selected Rates of Use			
Type of Use	830 gal/day		4 mgd	
	¢/1000 gal	$/10^6 gal	¢/1000 gal	$/10^6 gal
Residential, Commercial, or Industrial Uses				
Within San Francisco	40	400	19	190
Outside San Francisco	49	490	22	220
Resale Use Outside of San Francisco				
w/long-term contract	49	490	22	220
w/o long-term contract	52	520	25	250

FIGURE 4-2
HISTORICAL AND PROJECTED WATER DEMAND FOR SAN FRANCISCO

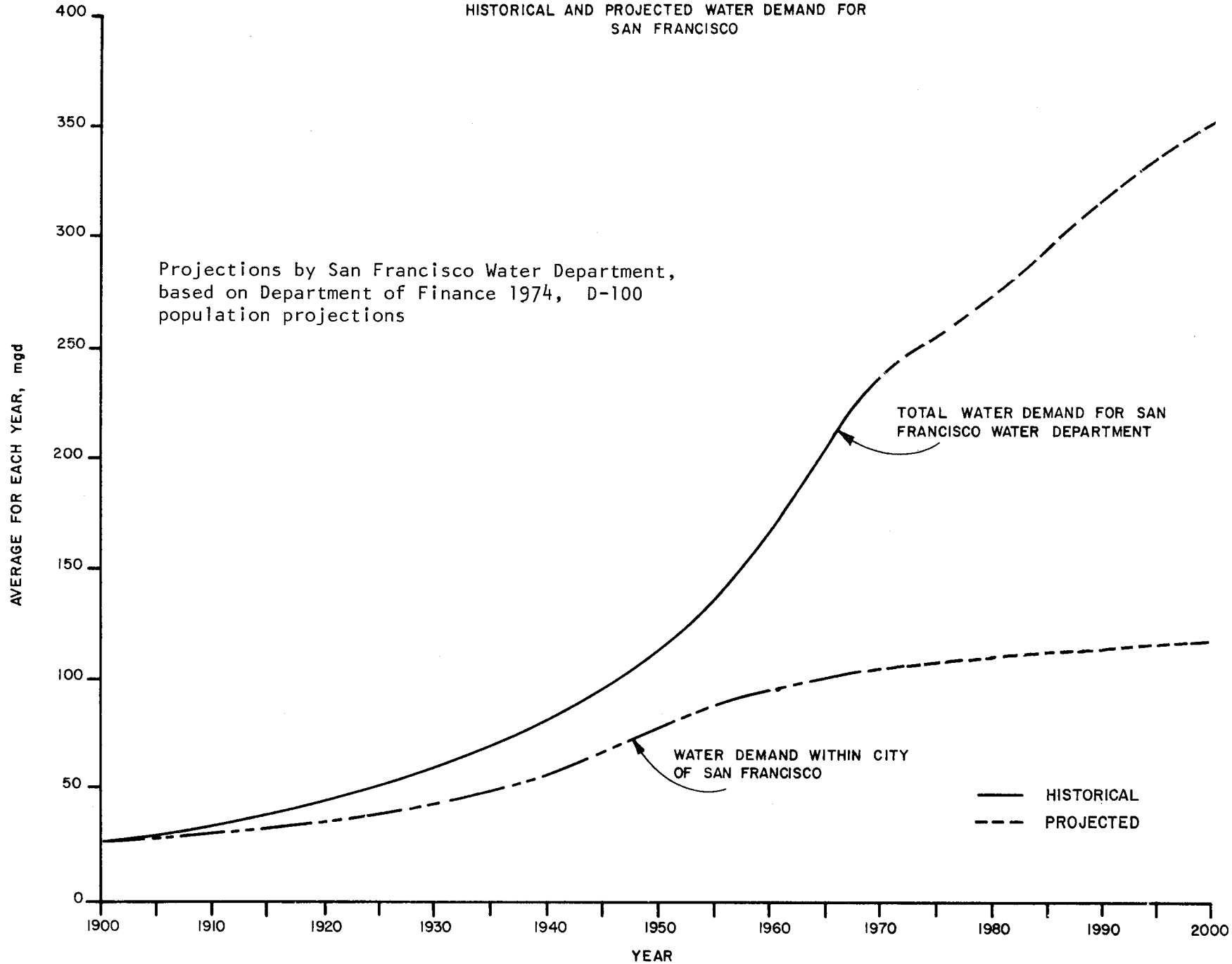

TABLE 4-3

PAST AND PREDICTED WASTEWATER FLOW RATES

	PAST				FUTURE		
	1960	1965	1970	1973	1980	1990	2000
NORTH POINT							
Residents[1]	319,000	308,000	297,000	286,000	259,000	243,000	230,000
Residential Unit Flow (gpcd)[2]	42	52	62	64	68	71	72
Residential ADWF (mgd)	13.4	16.0	18.4	18.3	17.6	17.2	16.6
Employed Residents[3]	275,000[4]	275,000	275,000[4]	275,000[4]	275,000	277,000	280,000
Commuters[5]	170,000[4]	175,000[4]	181,000	181,000	181,000	189,000	199,000
Total Employment	445,000	450,000	456,000	456,000	456,000	466,000	479,000
Commercial Unit Flow Based on Empl. (gpcd)[2]	35	42	58	60	65	69	71
Commercial ADWF (mgd)	15.6	18.9	26.4	27.4	29.6	32.2	34.0
Tourists[6]	15,000	16,000	17,000	19,000	21,000	23,000	25,000
Tourist Unit Flow (gpcd)[7]	75	75	75	75	75	75	75
Tourist ADWF (mgd)	1.1	1.2	1.3	1.4	1.6	1.7	1.9
Industry (1000 ton/yr)[8]	1600[4]	1750[4]	1850	1850	1800	1750	1700
Industrial Unit Flow (gal/ton)[8]	1000[4]	1000[4]	1000	1000	950	900	850
Industrial ADWF (mgd)	4.4	4.8	5.1	5.1	4.7	4.3	4.0
Infiltration/Inflow (mgd)[9]	10.4[4]	10.4[4]	10.4	10.4	10.4	10.4	10.4
Total ADWF (mgd)	44.9	51.3	61.6	62.6	63.9	65.8	66.9
RICHMOND-SUNSET							
Residents	261,000	260,000	258,000	252,000	244,000	237,000	231,000
Residential Unit Flow (gpcd)	42	52	62	64	68	71	72
Residential ADWF (mgd)	10.9	13.5	16.0	16.1	16.6	16.8	16.6
Employment[3]	49,000[4]	50,000	51,000[4]	52,000[4]	53,000	54,000	55,000
Commercial Unit Flow Based on Empl. (gpcd)	35	42	58	60	65	69	71
Commercial ADWF (mgd)	1.7	2.1	2.9	3.1	3.4	3.7	3.9
Industry (1000 ton/yr)	450	450	450	450	450	450	450
Industrial Unit Flow (gal/ton)	1000	1000	1000	1000	1000	1000	1000
Industrial ADWF (mgd)	1.2	1.2	1.2	1.2	1.2	1.2	1.2
Infiltration/Inflow (mgd)	1.4[2]	1.4[2]	1.4	1.4	1.4	1.4	1.4
Total ADWF (mgd)	15.2	18.2	21.5	21.8	22.6	23.1	23.1
SOUTHEAST							
Residents	174,000	175,000	176,000	173,000	166,000	161,000	157,000
Residential Unit Flow (gpcd)	42	52	62	64	68	71	72
Residential ADWF (mgd)	7.3	9.1	10.9	11.1	11.3	11.4	11.3
Employment	56,000	57,000	58,000	58,000	58,000	57,000	56,000
Commercial Unit Flow Based on Empl. (gpcd)	35	42	58	60	65	69	71
Commercial ADWF (mgd)	2.0	2.4	3.4	3.5	3.8	3.9	4.0
Industry (1000 ton/yr)	1500	1600	1700	1700	1700	1650	1600
Industrial Unit Flow (gal/ton)	1000	1000	1000	1000	950	900	850
Industrial ADWF (mgd)	4.1	4.4	4.6	4.6	4.4	4.2	4.0
Infiltration/Inflow (mgd)	2.8	2.8	2.8	2.8	2.8	2.8	2.8
Total ADWF (mgd)	16.2	18.7	21.7	22.0	22.3	22.3	22.1
TOTAL CITY							
ADWF (mgd)	76.3	88.2	104.5	106.4	108.8	111.2	112.1

[1] Past populations based on ABAG Neighborhood Profile Study. Future populations based on 1974 Department of Finance E-0 Projections.
[2] Past unit flows calculated to satisfy population, employment, and flow rate data in all three districts. Future unit flows based on projections in Figures 4-9 and 4-10.
[3] Based on data in San Francisco Master Plan for Wastewater Management, Department of Public Works, September 15, 1971.
[4] Estimate based on data in other years.
[5] Based on ABAG Losouth 2 Population Series.
[6] Past data based on Visitors and Convention Bureau statistics. Predictions based on assumption of continued rate of increase.
[7] Based on typical values in Metcalf and Eddy, Wastewater Engineering, 1972.
[8] Based on data and predictions in Tentative Water Quality Control Plan Report, San Francisco Bay Basin.
[9] Based on data in Sewer System Evaluation for Infiltration/Inflow, Department of Public Works.

Abbreviations:
gpcd: gallons per capita per day
mgd: million gallons per day
ADWF: Average Dry Weather Flow Rate

TABLE 4-3
PAST AND PREDICTED
WASTEWATER FLOW RATES

Examination of the past record indicates that residential and commercial discharges are the major sources of wastewater (75 percent), while tourists, industry, and inflow/infiltration combine to contribute the remaining 25 percent.

Projected industrial production in San Francisco is shown in Table 4-4. As can be seen, some areas of industry are expected to expand while others will be reduced, resulting in a net decrease in production of about 16 percent. The ranges of unit discharges for these industries are shown in Table 4-5. The general trend in the future will be to reduce unit discharges as more efficient processes are developed.

Residential and commercial unit flow rates have been increasing rapidly in recent years. The past and projected unit flow rates for these components are presented in Figures 4-3 and 4-4. The future projections are based on recent trends and the following considerations:

1. Table 4-1 indicates that increasing unit rates of water use have been a long-term trend in San Francisco.

2. The Water Department price schedule shown in Table 4-2 results in an average monthly water bill of about $5.00 for a family of four. It is not expected that this pricing policy will induce reductions in water use.

3. The number of water-intensive appliances such as dishwashers, clothes washers, and garbage disposals is expected to increase as these appliances become affordable to more and more residents.

The ranges of projected unit flow rates in Figures 4-3 and 4-4 indicate that there is some degree of uncertainty in these projections. If both the residential and commercial unit rates approach the upper limit of the projected range, then the expected citywide flow rate in the year 2000 would increase from 112.1 mgd to 119.4 mgd. Conversely, if both unit rates approach the lower limit, then the expected flow rate in the year 2000 would be 104.8.

The peak dry weather flow rate predictions are presented in Table 4-6. They assume that dry weather peaking factors will not change.

Combined Sewage Flow

Combined sewage is composed of stormwater runoff and sanitary sewage. The combined sewage flow rate is primarily dependent on the base sanitary flow, the rainfall intensity and duration, and the percent of rainfall entering the sewers.

Rainfall. Rainfall has been monitored at the Federal Office Building since 1906. Figures 4-5 and 4-6 show the statistical characteristics of rainfall at the Federal Office Building gauge. Table 4-7 gives general statistics on annual rainfall and seasonal variations.

In addition to the Federal Office Building rainfall gauge, rainfall data has been collected since 1947 at the Richmond-Sunset Treatment Plant and since 1971 at gauges distributed throughout the city. Data gathered with these gauges will be used to statistically define the spatial variation of rain falling on the city.

Runoff. Only a portion of the rainfall reaches the sewer system. The remainder percolates into the soil, evaporates, or reaches the surface waters by overland flow. The average percentage of rainfall reaching the sewers for each of the districts and the city as a whole is shown in Table 4-8.

Flow Variability. The flow rates from the three drainage areas vary dramatically with rainfall intensity. For example, in an average year, for about twenty hours the combined sewage flow is more than 730 mgd for North Point, 590 mgd for Southeast, and 620 mgd for Richmond-Sunset.

Inflow/Infiltration. The sewer system has been analyzed for inflow and infiltration. A summary of the quantities of salt and fresh water entering the sewers by these means is given in Table 4-9.

Control of Combined Sewage With Existing Facilities. San Francisco's present wastewater management system bypasses all runoff from rainfall in excess of 0.01 inches per hour. Table 4-10 shows the volumes of storm, sanitary, and combined wastewater that are treated or bypassed annually.

TABLE 4-4

PROJECTED INDUSTRIAL PRODUCTION IN SAN FRANCISCO[1]

Industrial Category	Units	1970	1980	1990	2000
Food	10^3 Tons	1492	1398	1341	1296
Paper	10^3 Tons	98	87	79	73
Petroleum	10^3 Tons	3	3	3	3
Chemicals	10^3 Tons	179	267	366	475
Primary Metals	10^3 Tons	1256	981	720	459
Metal Fabrication	10^3 Tons	293	360	424	487

[1] From Tentative Water Quality Control Plan Report, San Francisco Bay Basin.

TABLE 4-5

RANGES OF UNIT WASTEWATER DISCHARGES FOR INDUSTRY[1]

Industrial Category	Flow Rate, Gal/Ton of Prod.	
	1970	2000
Food	1,000 - 3,200	1,000 - 2,700
Paper	330 - 2,500	330 - 6,000
Petroleum	3,650-55,000	3,650-55,000
Chemicals	1,765-35,000	1,765 - 9,200
Primary Metals	400 - 4,060	350 - 3,000
Fabricated Metals	700 - 700	100 - 700

[1] From Tentative Water Quality Control Plan Report, San Francisco Bay Basin.

FIGURE 4-3
RESIDENTIAL UNIT FLOW

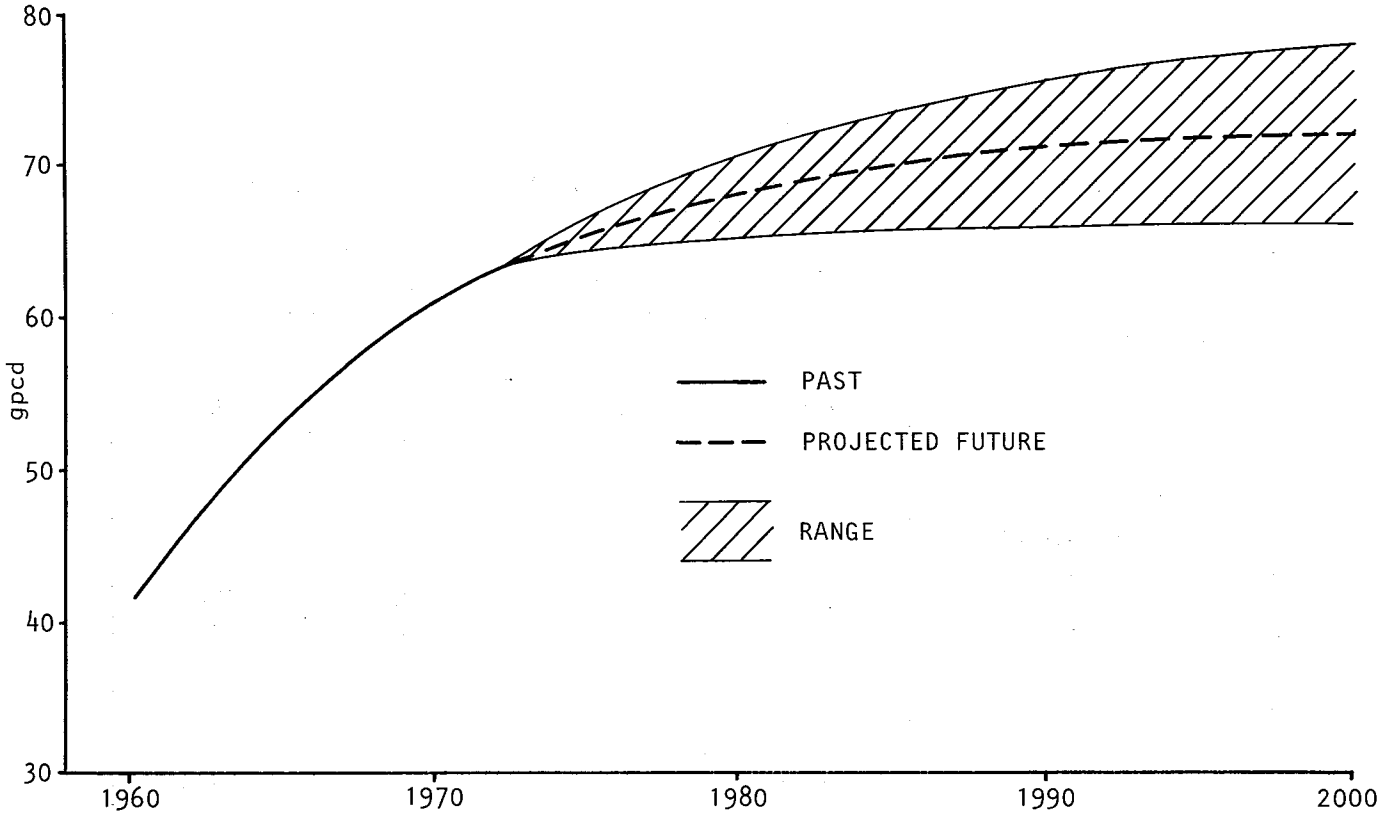

FIGURE 4-10
COMMERCIAL UNIT FLOW

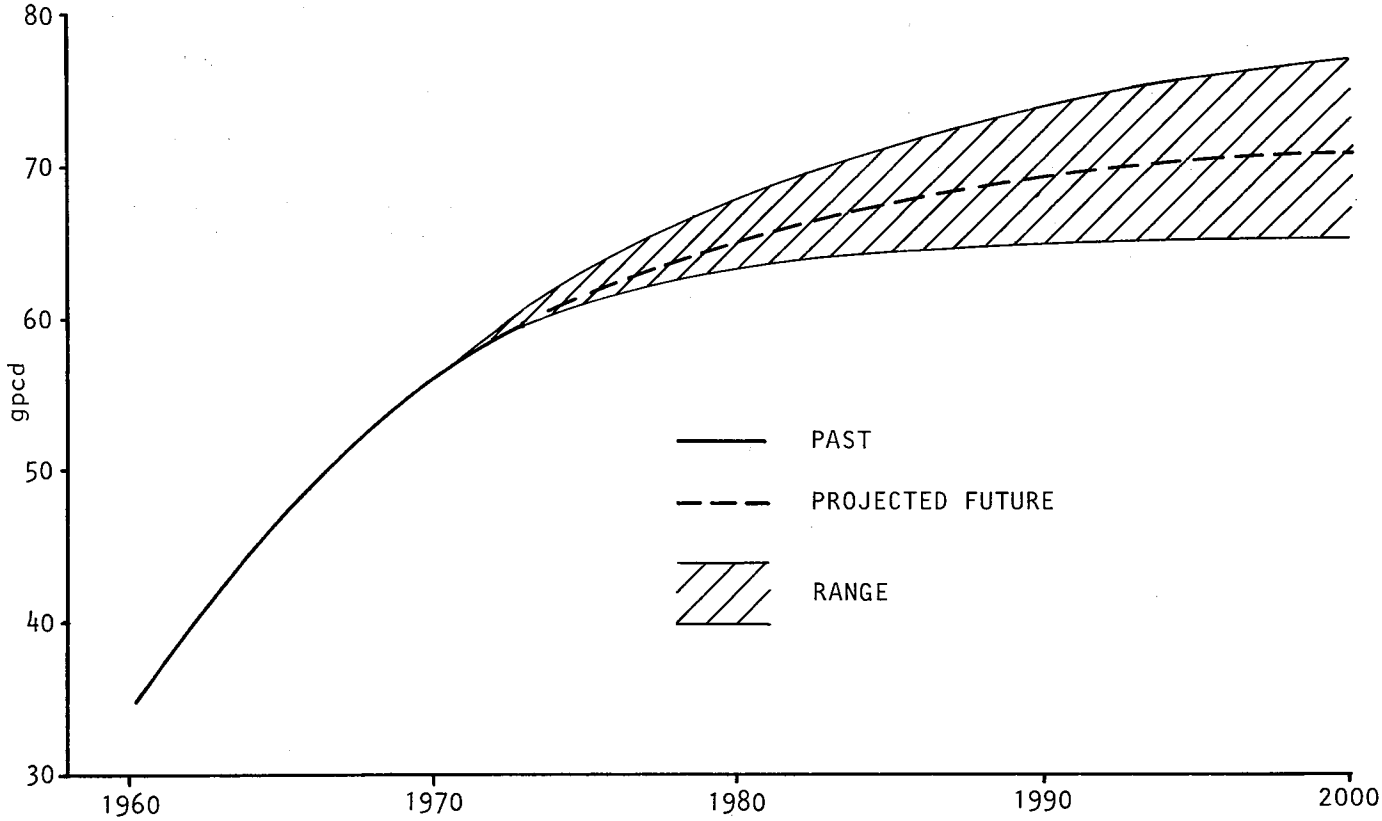

TABLE 4-6

PREDICTED PEAK DRY WEATHER WASTEWATER FLOW RATES
million gallons per day)

	1973	1980	1990	2000
North Point				
ADWF	62.6	63.9	65.8	66.9
PDWF[1]	83.9	85.6	88.2	89.6
Richmond-Sunset				
ADWF	21.8	22.6	23.1	23.1
PDWF[2]	34.0	35.3	36.0	36.0
Southeast				
ADWF	22.0	22.3	22.3	22.1
PDWF[3]	32.1	32.6	32.6	32.3
Total City				
ADWF	106.4	108.8	111.2	112.1
PDWF	150.0	153.5	156.8	157.9

[1]ADWF x 1.34 based on one-week study in 1970.

[2]ADWF x 1.56 based on one-week study in 1970.

[3]ADWF x 1.46 based on one-week study in 1970.

Abbreviations:

ADWF: Average Dry Weather Flow Rate
PDWF: Peak Dry Weather Flow Rate

FIGURE 4-5
RAINFALL INTENSITY-DURATION-FREQUENCY CURVES

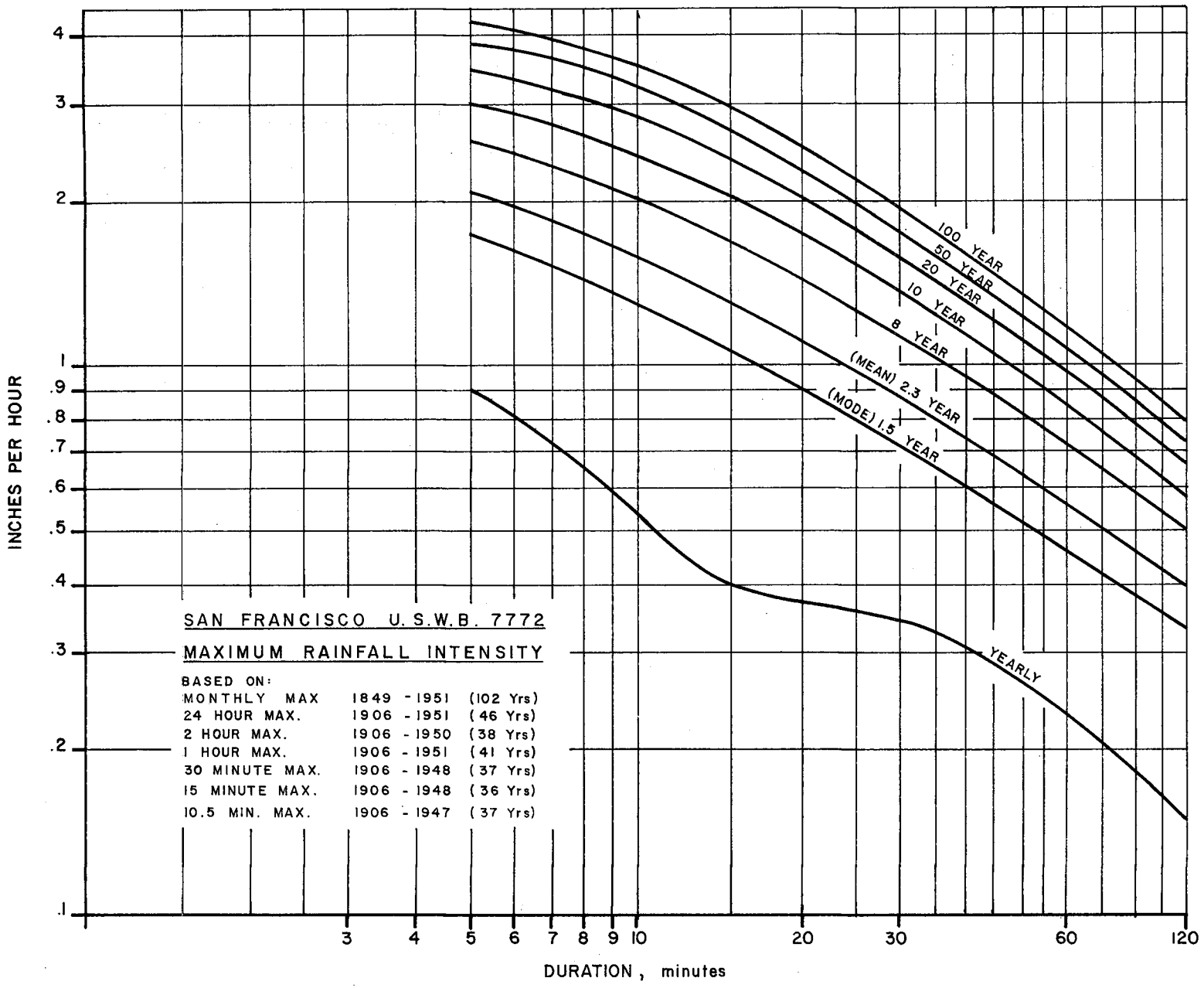

FIGURE 4-6
FREQUENCY DISTRIBUTION OF HOURLY RAINFALL
RATES IN TERMS OF RAINFALL VOLUME

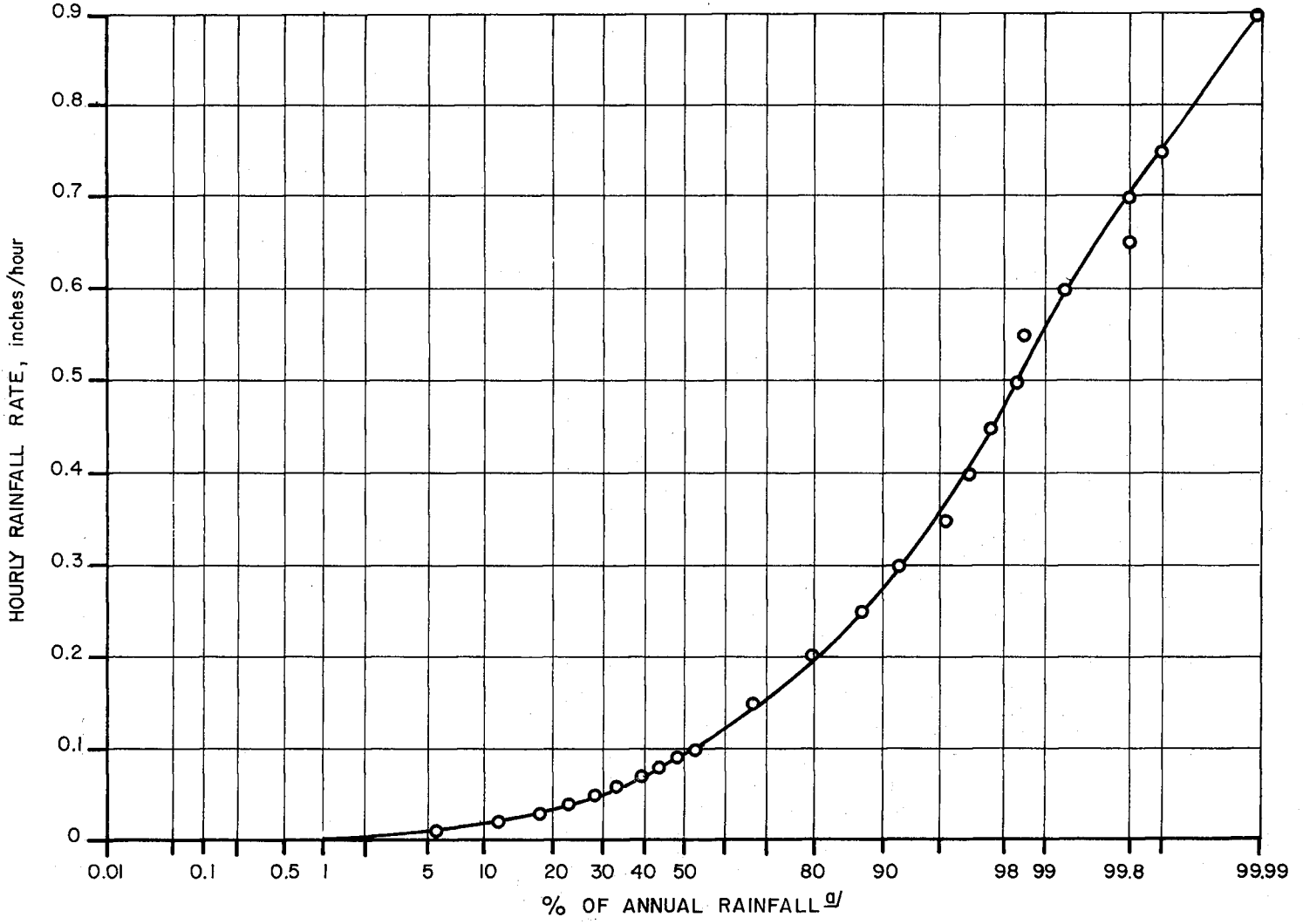

a/ Occuring at a rate K to that shown

ANNUAL AVERAGE RAINFALL - 20.33

TABLE 4-7

ANNUAL AND SEASONAL RAINFALL VARIATION
AT FEDERAL OFFICE BUILDING GAUGE

	Average (inches)	Seasonal Average (inches)
May	0.6	
June	0.2	1.1
July	0.0	
Aug.	0.0	0.2
Sept.	0.3	
Oct.	1.0	
Nov.	2.4	20.7
Dec.	4.3	
Jan.	4.9	12.8
Feb.	3.6	
Mar.	3.0	
Apr.	1.5	

TABLE 4-8

PERCENTAGE OF RAINFALL
REACHING SEWERS

North Point	Southeast	Richmond-Sunset	Total City
76%	63%	56%	65%

TABLE 4-9

INFLOW AND INFILTRATION

District	Infiltration (mgd)		Inflow (mgd)		Total (mgd)
	Salt Water	Fresh Water	Salt Water	Fresh Water	
North Point	1.2	1.9	0.3	7.0	10.4
Southeast	0.5	0.5	0.9	0.9	2.8
Richmond-Sunset	0.0	0.5	0.0	0.9	1.4

TABLE 4-10

AVERAGE ANNUAL STORM AND SANITARY FLOW

	Total (BGY[1])	Treated (BGY)	Bypassed[2] (BGY)
Sanitary	36.5	35.9	0.6
Storm	8.8	3.4	5.4
Total	45.3	39.3	6.0

[1] BGY — billion gallons per year.

[2] Assuming that, on an average annual basis, bypassed flow is 10% sanitary waste.

WASTEWATER QUALITY

Untreated Wastewater

The quality of wastewater from San Francisco varies significantly between drainage areas and with the quantity of influent stormwaters. Contributing factors are land use, industrial waste characteristics, and street and sewer cleaning methods. For comparison purposes, the available quality data are presented in five categories; dry weather flow, combined sewage, storm runoff, industrial waste, and treatment plant influent. The treatment plant influent data reflect average annual conditions; the quality during storms may be significantly different.

Dry Weather Flows. Three sources of dry weather quality data are available: a one-week intensive sampling at each plant in 1971 (see Chapter 1, The Current Planning Program, #42), the influent analyses for the pilot treatment plant study (Chapter 1, #42), and treatment plant monitoring data for June through September, 1973. Tables 4-11, 14-12, and 14-13 show the quality data for the North Point, Southeast, and Richmond-Sunset Plants, respectively. Table 4-14 compares the treatment plant monitoring data for the three plants.

The pilot plant study (Chapter 1, #42) revealed rapid, large fluctuations of pH and heavy metals content in the influent to the Southeast Treatment Plant. These fluctuations were attributed to industrial discharges. Fluctuations in pH of as much as 3 units in a 30-minute period were observed.

Combined Sewage. The quality of combined sewage varies with the characteristics of the storm. Generally, quality is poorer during the initial periods of runoff as shown for a single storm on Figure 4-7. The quality of combined sewage based on data from a number of city drainage basins is shown on Table 4-15. These data indicate that the BOD, COD, and grease and oil concentrations are considerably lower for combined sewage than for dry weather sanitary waste.

Storm Runoff. Very little is known about the quality of stormwater runoff in San Francisco since virtually all sewers carry combined waste flow. The Vicente Street basin is the only significant area in the city (about 20 acres) serviced by separated sewers. The stormwater runoff quality data are shown on Table 4-16. The quality data are for stormwater from a residential area and are not necessarily indicative of the runoff quality from other areas.

Industrial Wastes. Industrial waste quality from primary industrial groups is shown on Table 4-17. The average industrial wastewater quality from the three drainage districts is presented in Table 4-18.

Influent to Existing Facilities. San Francisco's three treatment plants are monitored on a continuous basis for a limited number of parameters. Monthly averages of quality for the period from May 1973 through April 1974, along with the average for that 12-month period, are given in Table 4-19. These data include both dry and wet weather flows. The data for wet and dry days are compared on Table 4-20.

Quality Change with Existing Treatment

Performance. Treatment plant performance data for the 12-month period from May 1973 through April 1974 are given in Table 4-21. Percent removals of BOD, COD, suspended solids, turbidity, and HEM are given for the three treatment plants. These percentages are based on monthly averages drawn from operating data of each of the treatment plants.

Effluent Quality Data. Effluent emissions are given for the three treatment plants in Table 4-22. Effluent concentrations from the McQueen Reclamation Plant are given in Table 4-23. This plant is only in operation for a limited time each year; the effluent is used as irrigation water in Golden Gate Park.

TABLE 4-11

QUALITY OF DRY WEATHER FLOWS
NORTH POINT DISTRICT

	Data Source			
	Units	Pilot Plant Study[1]	1971 Intensive Sampling	Treatment Plant Monitoring
PHYSICAL CHARACTERISTICS				
Floatables	mg/1	4.2	2.7	
Settleable solids	ml/1/hr	5.0	6.0	5.7
Suspended solids				
Total	mg/1	163	193	185
Volatile	mg/1	146	172	–
Turbidity	JTU	126	52.7	75
CHEMICAL CHARACTERISTICS				
BOD_5	mg/1	176	196	200
COD	mg/1	472	482	352
Grease and Oil	mg/1	95.5	52	61
Nitrate-N	mg/1	0.19	2.2	
Nitrite-N	mg/1	0.05	0.11	
Ammonia-N	mg/1	12.3	14.5	
Organic-N	mg/1	20.2	16.7	
Kjeldahl-N	mg/1	33.0	33.5	
Phenols	mg/1	0.043	0.055	
Phosphate (ortho)	mg/1	3.6	21.2	
Phosphorous (total)	mg/1	6.2	27.6	
Metals				
Aluminum	mg/1	2.5		
Arsenic	mg/1	0.005		
Cadmium	mg/1	0.008		
Chromium (total)	mg/1	0.148	0.08	
Copper	mg/1	0.661	0 0.17	
Iron (total)	mg/1	2.1	2.50	
Lead	mg/1	0.077	0.25	
Mercury	mg/1	0.0008		
Nickel	mg/1	0.042	0.017	
Silver	mg/1	0.048	0.008	
Zinc	mg/1	0.397	0.34	
TICH	mg/1	0.0007		
MBAS	mg/1			
BIOLOGICAL CHARACTERISTICS				
Coliform Organisms	MPN/100 ml			
Fecal coliforms	MPN/100 ml			
Toxicity				
Med. Toler. 96-hr	%			
% survival 96-hr	%			

[1] Includes some wet weather flows

TABLE 4-12

QUALITY OF DRY WEATHER FLOWS
SOUTHEAST DISTRICT

	Units	Data Source		
		Pilot Plant Study[1]	1971 Intensive Sampling	Treatment Plant Monitoring
PHYSICAL CHARACTERISTICS				
Floatables	mg/1	20.2	3.3	
Settleable solids	ml/1/hr	4.6	10.5	7.2
Suspended solids				
Total	mg/1	290	424	263
Volatile	mg/1	235	353	
Turbidity	JTU	197	77.2	
CHEMICAL CHARACTERISTICS				
BOD_5	mg/1	235	273	232
COD	mg/1	782	791	698
Grease and Oil	mg/1	70.4	100	84
Nitrate-N	mg/1	0.35	0.47	
Nitrite-N	mg/1	0.17	0.024	
Ammonia-N	mg/1	15.6	16.8	
Organic-N	mg/1	21.6	31.4	
Kjeldahl-N	mg/1	37.0	49.4	
Phenols	mg/1	0.346	0.13	
Phosphate (ortho)	mg/1	3.2	20.4	
Phosphorous (total)	mg/1	7.9	31.8	
Metals				
Aluminum	mg/1	6.15	0.89	
Arsenic	mg/1	0.005		
Cadmium	mg/1	0.003		
Chromium (total)	mg/1	2.8	1.80	
Copper	mg/1	0.207	0.35	
Iron (total)	mg/1	4.3	2.70	
Lead	mg/1	0.212	0.035	
Mercury	mg/1	0.0006		
Nickel	mg/1	0.130	0.018	
Silver	mg/1	0.030	0.004	
Zinc	mg/1	1.15	0.89	
TICH	mg/1	0.0016		
MBAS	mg/1			
BIOLOGICAL CHARACTERISTICS				
Coliform Organisms	MPN/100 ml			
Fecal coliforms	MPN/100 ml			
Toxicity				
Med. toler. 96-hr	%	89		
% survival 96-hr	%	39		

[1] Includes some wet weather flows

TABLE 4-13

QUALITY OF DRY WEATHER FLOWS
RICHMOND-SUNSET DISTRICT

	Data Source			
	Units	Pilot Plant Study[1]	1971 Intensive Sampling	Treatment Plant Monitoring
PHYSICAL CHARACTERISTICS				
Floatables	mg/1	17.5	3.1	
Settleable solids	ml/1/hr	10.2	14.4	
Suspended solids				
Total	mg/1	208	319	173
Volatile	mg/1	193	316	
Turbidity	JTU	152	49.1	71
CHEMICAL CHARACTERISTICS				
BOD_5	mg/1	161	180	236
COD	mg/1	575	504	
Grease and Oil	mg/1	63	56	51
Nitrate-N	mg/1	0.30	0.66	
Nitrite-N	mg/1	0.02	0.03	
Ammonia-N	mg/1	18.5	20.6	
Organic-N	mg/1	22.7	15.8	
Kjeldahl-N	mg/1	41.0	37.0	
Phenols	mg/1	0.082	0.10	
Phosphate (ortho)	mg/1	5.4	26.4	
Phosphorous (total)	mg/1	8.2	35.4	
Metals				
Aluminum	mg/1	1.4	0.9	
Arsenic	mg/1	0.004		
Cadmium	mg/1	0.001		
Chromium (total)	mg/1	0.026	0.06	
Copper	mg/1	0.209	0.09	
Iron (total)	mg/1	1.3	1.50	
Lead	mg/1	0.079	0.005	
Mercury	mg/1	0.0009		
Nickel	mg/1	0.018	0.006	
Silver	mg/1	0.023	0.006	
Zinc	mg/1	0.160	0.09	
TICH	mg/1	0.0007		
MBAS	mg/1			
BIOLOGICAL CHARACTERISTICS				
Coliform Organisms	MPN/100 ml	81		
Fecal coliforms	MPN/100 ml			
Toxicity				
Med. toler. 96-hr	%	81		
% survival 96-hr	%	39		

[1] Includes some wet weather flows

TABLE 4-14

QUALITY OF DRY WEATHER FLOWS
SUMMARY[1]

Parameter	Units	North Point	Southeast	Richmond-Sunset
Settleable solids	ml/1/hr	6.6	6.5	–
Suspended solids	mg/1	206	234	190
Turbidity	JTU	75	–	61
BOD^5	mg/1	252	241	246
COD	mg/1	440	736	–
Grease & Oil	mg/1	91	82	59

[1] June-September, 1974.

FIGURE 4-7
CHARACTERISTICS OF COMBINED SEWER OVERFLOW
FOR A STORM, SELBY STREET

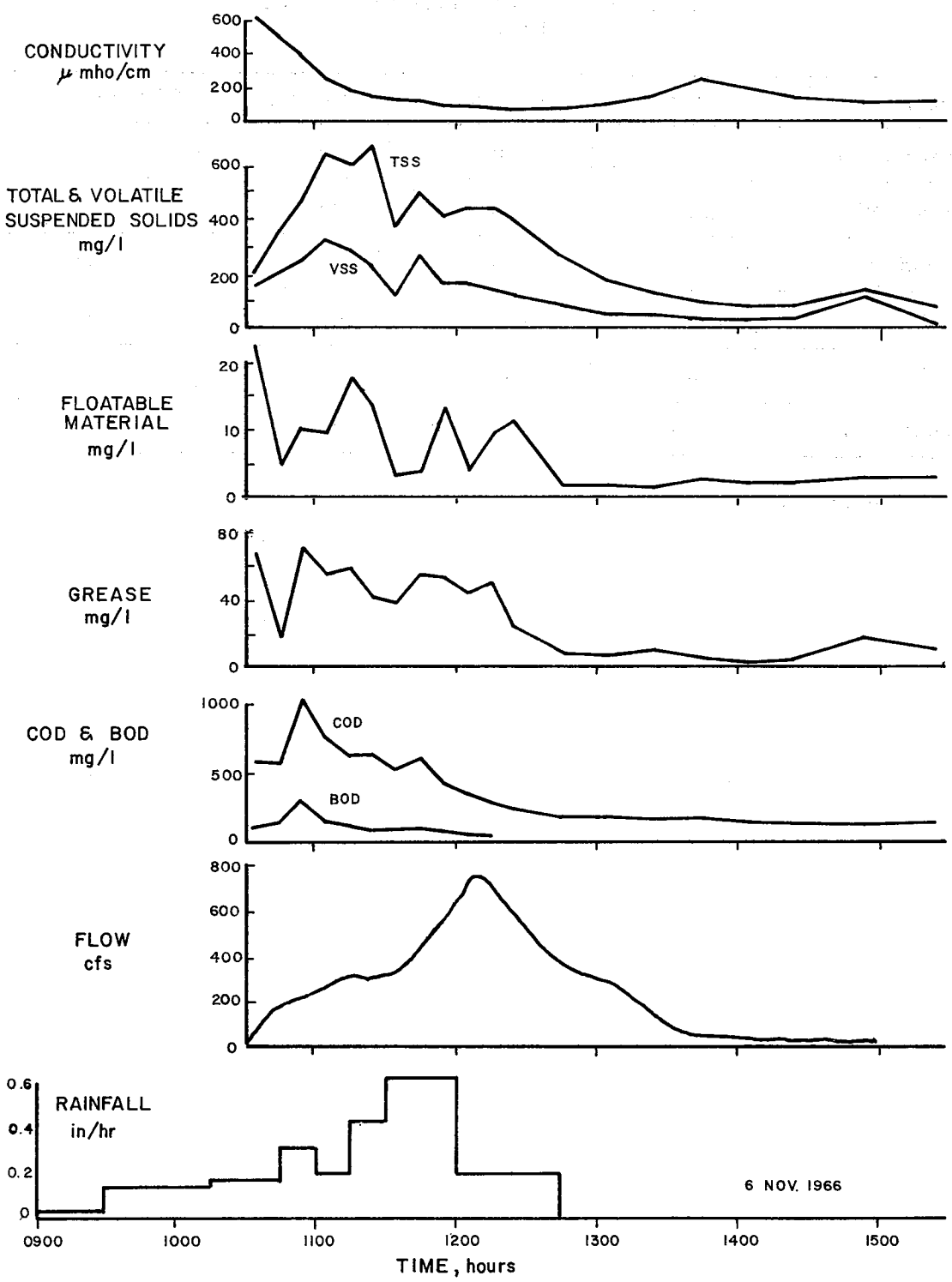

TABLE 4-15

QUALITY OF COMBINED SEWAGE FROM THE CITY OF SAN FRANCISCO[1]

Parameter	Unit	North Point[2]	Southeast[3]	Richmond-Sunset[4]
PHYSICAL CHARACTERISTICS				
Floatables	mg/1	2.6	3.8	14
Settleable solids	ml/1	4.0	4.9	2.9
Suspended solids				
Total	mg/1	105	216	504
Volatile	mg/1			
Turbidity	JTU			
CHEMICAL CHARACTERISTICS				
BOD_5	mg/1	36	60	51
COD	mg/1	146	191	151
Grease and Oil	mg/1	16	18	43
Nitrate-N	mg/1			
Nitrite-N	mg/1			
Nitrogen (Ammonia)	mg/1	4.4	3.1	2.6
Nitrogen (organic)	mg/1			
Nitrogen (total Kjeldahl)	mg/1	5.8	7.5	20
Phenols	mg/1			
Phosphate (ortho)	mg/1	0.9	2.2	2.0
Phosphorous (total)	mg/1			
Coliform organisms	MPN/100 ml			
Fecal coliform organisms	MPN/100 ml			
Toxicity				
Med. toler. 96-hr[5]	%	> 100		
% survival [5]	%	100		

[1] Volume weighted mean

[2] Based on data from Baker Street and Laguna Street Basins

[3] Based on data from Selby Street and Mariposa Street Basins

[4] Based on data from Brotherhood Way Basin

[5] Stickleback test fish

TABLE 4-16

QUALITY OF STORM RUNOFF FROM VICENTE STREET SUB-BASIN–CITY OF SAN FRANCISCO

Parameter	Unit	Median	Mean[1]	Range	Number of Samples
PHYSICAL CHARACTERISTICS					
Floatables	mg/1	3.0	3.4	1.0-7.4	16
Settleable Solids	ml/1	0.38	0.57	0.09-5.7	16
Suspended Solids					
Total	mg/1	33	49	11-210	20
Volatile	mg/1	18		5-77	20
Turbidity	JTU				
CHEMICAL CHARACTERISTICS					
BOD (5-day)	mg/1	6.2	9.1	1.4-98	16
COD	mg/1	57	67	27-428	20
Grease & Oil	mg/1	10.5	10	4.5-21.5	15
Nitrate	mg/1				
Nitrite	mg/1				
Nitrogen (Ammonia)	mg/1	0.24	0.38	<0.01-4.84	
Nitrogen (Organic)	mg/1				
Nitrogen (Total Kjeldahl)	mg/1	1.32	1.5	0.56-8.5	16
Phenols	mg/1				
Phosphate (Ortho)	mg/1	0.10	0.12	0.02-1.25	16
Phosphorous (Total)	mg/1				
BIOLOGICAL CHARACTERISTICS					
Coliform Organisms	(MPN/100 mls)	2.3×10^5		$(0.43\text{-}43) \times 10^5$	16
Fecal Coliform Organisms		6.3×10^4		$(<0.3\text{-}230) \times 10^4$	16
Toxicity					
TL_{50} 96[2]	percent				
Percent survival[2]	percent	60		0-100	

[1] Volume weighted mean

[2] Stickleback test fish

TABLE 4-17

INDUSTRIAL WASTEWATER QUALITY[1]
FOR DIFFERENT INDUSTRIES

Industry Type	COD (mg/1)	Suspended Solids (mg/1)	Grease & Oil (mg/1)
Food	1,995	360	350
Chemicals	3,750	984	89
Metals	326	208	92
Laundries	2,208	400	438
Hospitals	558	227	72
Tanning	5,640	3,440	684
Shipyards	534	32	11
Other	1,071	353	53

[1] Average quality from a number of industries of each type.

TABLE 4-18

AVERAGE QUALITY OF INDUSTRIAL
WASTE FOR DIFFERENT AREAS

Parameter	North Point	Southeast	Richmond-Sunset
Grease (mg/1)	280	150	80
Suspended Material (mg/1)	330	500	220
COD (mg/1)	1,380	1,510	620

TABLE 4-19

TREATMENT PLANT INFLUENT WASTEWATER QUALITY[1]

		1973								1974				
		May	June	July	Aug	Sept	Oct	Nov	Dec	Jan	Feb	Mar	Apr	Ave
NORTH POINT														
Settleable solids	ml/1	5.61	5.75	5.79	5.79	5.30	5.02	3.92	5.18	4.50	5.01	5.37	5.09	5.19
Suspended solids	mg/1	169	182	191	181	184	178	154	144	143	150	147	146	164
Turbidity	JTU	70	77	76	77	69	71	53	58	61	64	–	–	68
BOD^5	mg/1	175	204	214	197	186	202	164	184	182	200	195	200	192
COD	mg/1	321	321	355	352	381	346	307	295	301	340	339	324	332
HEM	mg/1	50	52	64	61	67	–	55	62	58	57	58	63	59
SOUTHEAST														
Settleable solids	ml/1	7.15	6.73	7.18	7.12	7.77	–	–	–	4.72	5.74	4.32	4.31	6.12
Suspended solids	mg/1	247	262	260	247	282	292	218	190	199	227	205	190	235
BOD^5	mg/1	238	225	212	231	261	278	196	207	190	228	226	228	227
COD	mg/1	651	730	685	642	733	768	509	574	488	721	618	475	633
HEM	mg/1	79	80	82	88	86	111	81	67	64	98	84	75	83
RICHMOND-SUNSET														
Suspended solids	mg/1	167	182	167	165	179	193	167	155	146	171	144	156	166
Turbidity	JTU	68	72	73	73	65	68	65	58	55	65	54	53	64
BOD_5	mg/1	211	226	233	225	260	238	208	214	211	231	220	219	225
HEM	mg/1	54	56	52	48	46	58	49	51	45	60	48	56	52

TABLE 4-20

COMPARISON OF INFLUENT QUALITY
DURING WET AND DRY WEATHER[1]

Treatment Plant	Parameter	Wet Weather Quality (mg/1)	Dry Weather Quality (mg/1)
North Point	BOD_5	170	225
	Suspended solids	140	215
	Grease and Oil	50	68
Southeast	BOD_5	200	240
	Suspended solids	210	265
	Grease and Oil	68	84
Richmond-Sunset	BOD_5	190	240
	Suspended solids	155	200
	Grease and Oil	47	58

[1] Analysis by the City of San Francisco; data generally apply to worst days of the month.

TABLE 4-21

SUMMARY OF PLANT PERFORMANCE
(Percent Removal)

	Units	1973								1974				Ave
		May	June	July	Aug	Sept	Oct	Nov	Dec	Jan	Feb	Mar	Apr	
NORTH POINT														
BOD	mg/1	33.1	39.7	53.8	48.2	54.4	42.6	50.2	62.1	55.8	51.9	54.5	56.0	50.2
COD	mg/1	30.2	36.1	47.3	46.3	46.2	26.6	38.8	41.7	41.5	34.1	45.4	42.6	39.7
Suspended Solids	ml/1	72.7	73.7	74.1	72.8	77.6	64.6	70.3	63.0	64.5	65.1	65.2	71.4	69.6
Turbidity	JTU	46.5	52.8	51.0	51.7	54.4	35.6	42.1	35.1	37.2	36.6	–	–	44.3
HEM	mg/1	51.5	58.6	63.0	60.1	71.5	–	58.8	56.3	57.6	59.1	64.9	66.2	60.7
SOUTHEAST														
BOD	mg/1	42.0	41.3	35.8	42.9	35.2	43.2	38.3	41.5	46.8	36.0	32.7	36.8	39.4
COD	mg/1	41.5	43.6	38.4	28.2	16.2	42.8	43.2	41.6	36.3	44.8	34.6	25.3	36.4
Suspended Solids	mg/1	71.5	71 1	70.0	66.2	55.0	62.7	62.7	57.9	64.4	69.1	52.4	57.1	63.3
HEM	mg/1	71.9	79.4	60.6	66.8	41.5	65.6	60.2	48.3	57.5	70.9	55.7	57.9	61.4
RICHMOND-SUNSET														
BOD	mg/1	28.4	24.8	27.5	33.3	46.2	33.6	36.1	29.0	37.4	28.6	34.5	37.0	33.0
Suspended Solids	ml/1	56.7	49.3	53.1	53.3	49.1	23.8	10.8	36.6	42.7	31.6	48.3	30.8	39.9
Turbidity	JTU	7.9	7.6	10.0	11.8	29.6	10.8	2.6	*	0.9	1.2	*	1.5	7.0
HEM	mg/1	12.0	21.0	5.0	11.2	30.0	44.6	44.0	8.3	22.5	27.4	16.3	36.0	23.2

[1] Increase in turbidity

TABLE 4-22

EFFLUENT QUALITY FROM EXISTING TREATMENT FACILITIES

	Units		1973							1974				
		May	June	July	Aug	Sept	Oct	Nov	Dec	Jan	Feb	Mar	Apr	Ave
NORTH POINT														
Settleable solids	ml/1	0.019	.014	.059	.049	.020	.073	.018	.015	.010	.007	–	–	.028
Suspended solids	mg/1	46.1	47.8	49.5	49.3	41.2	63.1	45.8	53.3	50.7	52.3	51.2	41.8	49.3
Turbidity	JTU	37.4	36.5	37.3	37.1	31.6	46.1	30.9	37.6	38.3	40.6	–	–	40.4
BOD_5	mg/1	117	123	99	102	85	116	82	70	81	96	89	88	104
COD	mg/1	224	205	187	189	205	254	188	172	176	224	185	186	200
HEM	mg/1	24.0	21.6	23.8	24.5	19.1	–	22.8	27.1	24.5	23.1	20.2	21.4	22.9
SOUTHEAST														
Settleable solids	ml/1	.100	.108	.173	.309	.629	–	–	–	.041	.008	.077	.142	.176
Suspended solids	mg/1	70.3	75.8	77.9	83.4	127	109	81.3	80.0	70.8	70.2	97.6	81.5	85.4
BOD_5	mg/1	138	132	136	132	169	158	121	121	101	146	97.2	144	138
COD	mg/1	381	412	422	461	614	439	289	335	311	398	404	355	380
HEM	mg/1	22.2	16.4	32.5	29.2	50.1	38.2	32.4	35.4	27.1	28.6	37.0	31.4	31.7
RICHMOND-SUNSET														
Settleable solids	ml/1	0.273	.252	.194	.179	2.31	2.25	2.82	.337	2.23	–	.350	2.19	1.21
Suspended solids	mg/1	72	92	78	77	104	147	149	98	84	117	74	108	100
Turbidity	JTU	62.2	66.4	65.9	64.3	45.5	60.6	62.8	64.8	54.9	64.2	54.9	52.2	60.0
BOD_5	mg/1	151	170	169	150	140	158	133	152	132	165	144	138	150
HEM	mg/1	47.1	44.1	49.7	42.2	32.3	32.1	27.4	46.4	34.5	43.7	40.0	35.5	38.8

TABLE 4-23

McQUEEN RECLAMATION PLANT EFFLUENT

Constituent	Units	Concentration
BOD_5	mg/1	10-15
Suspended Solids	mg/1	5-10
Nitrate Nitrogen	mg/1	2-25
Nitrite Nitrogen	mg/1	2
Ammonia Nitrogen	mg/1	25
Coliform Organisms	MPN/100 ml	<2.2

CHAPTER 5

REGULATORY REQUIREMENTS

This chapter discusses regulatory requirements. There are eight sets of these requirements that apply to San Francisco's treatment and disposal programs:

- Water Quality Control Plan for Ocean Waters of California
- Water Quality Control Policy for the Enclosed Bays and Estuaries of California
- Interim Water Quality Control Plan for the San Francisco Bay Basin
- Tentative Water Quality Control Plan (Basin Plan) for San Francisco Bay
- NPDES Permit and Cease and Desist Order for the Richmond-Sunset Treatment Plant
- NPDES Permit and Cease and Desist Order for the North Point Treatment Plant
- NPDES Permit and Cease and Desist Order for the Southeast Treatment Plant
- Reclamation and Reuse Requirements from Title 17, Group 12 of the California Administrative Code along with the State Board of Health Position Paper on Reclamation and Reuse prepared for the Basin Plans.

The requirements set forth in these documents are shown in the Appendix and are discussed below.

OCEAN PLAN

The Ocean Plan sets requirements for receiving water quality and effluent quality. A separate State Board Resolution contains a schedule for compliance with the Ocean Plan. With respect to San Francisco, the most important requirement of the Ocean Plan is the prohibition of bypassing of untreated wastes. It would be possible to meet this requirement if "treatment" were defined in very loose terms, such as screening of all outfalls. This hypothesis would not hold if "treatment" is taken to mean whatever is required to meet the effluent requirements in the Plan. The prohibition would then be impossible to meet because there will sometime be a storm causing runoff of such magnitude that the capacity of any control system would be exceeded.

It is also possible that relief from this prohibition could be obtained under Section 302(B)(2) of the Federal Water Pollution Control Act Amendments of 1972. This section states that EPA will adjust effluent limitations if a city could show that there is "no reasonable relationship between the economic and social costs and the benefits to be obtained" from the effluent limitation. It appears on the balance, then, that strict interpretation of this requirement is not warranted.

Two other features of the Ocean Plan also present particular problems to San Francisco, namely the specific constituent limits on effluent quality, especially for total chromium, and the schedule requiring secondary treatment by July 1, 1977. It appears unlikely that either of these two requirements can be met; however, the section of the Federal bill referred to above could also apply for these requirements.

BAYS AND ESTUARIES POLICY

It has been the plan of the State Water Resources Control Board to adopt a series of plans or policies pertaining to all waters of the state. The first of these was the Ocean Plan. The Bays and Estuaries Policy was the second. Presumably, policies on surface streams and groundwaters will also be developed. It is noteworthy that the Bays and Estuaries Policy is less specific than the Ocean Plan even though the Ocean Plan was adopted first. Most notably, effluent limitations for specific constituents are not included in the Bays and Estuaries Policy. While both the Ocean Plan and the Bays and Estuaries Policy remain in effect and are being enforced, the fact that the more recently adopted Bays and Estuaries Policy does not contain some of the more stringent requirements found in the Ocean Plan is certainly indicative of the further assessment of these requirements by the State Board since adoption of the Ocean Plan. It can probably be inferred that this reassessment will be reflected in the enforcement of the Ocean Plan.

It is noteworthy that the Bays and Estuaries Policy still contains a prohibition of discharge for bypassing of untreated waste, and calls for the construction of publicly owned treatment works in a staged fashion.

It can be argued that the Bays and Estuaries Policy represents a more flexible and case-by-case approach to pollution abatement than the Ocean Plan.

INTERIM BASIN PLAN

The Interim Plan was adopted to be a basis for water quality control until the Basin Plan was completed. This plan is now in effect, but is due to be modified within the next year. None of the requirements of the Interim Plan are as stringent as those discussed above for the Ocean Plan and Bays and Estuaries Policy. There is a prohibition of sewage-bearing wastewater regardless of the degree of treatment at any place inland from the Golden Gate within 200 feet offshore from the extreme low waterline, which would be significant for the 41 bypass locations around the city. However, the plan also states that exceptions will be considered to this prohibition if it results in an "inordinate financial burden on the discharger and when an equivalent level of environmental protection can be achieved by alternate means."

TENTATIVE SAN FRANCISCO BAY BASIN PLAN

The Basin Plan Final Report is now in the review stage and must still be adopted by the Regional and State Boards. Therefore, these comments should be regarded as tentative pending the outcome of the review and adoption process. As the report now stands, it contains narrative objectives for most constituents, with the exception of dissolved oxygen, turbidity, temperature, coliform, and ammonia. The objectives for dissolved oxygen and ammonia will be critical for the Islais Creek interim discharge. The coliform objectives are significant for the city.

The plan calls for secondary treatment and other effluent requirements generally consistent with secondary treatment. It also contains a prohibition of discharge at any point where wastewater does not receive a minimum initial dilution of at least 10:1, and recommends coarse screening of all overflows. It also contains a recommended approach for wet weather control procedures for the City of San Francisco.

These recommendations call for the control of wet weather discharges by San Francisco to a degree consistent with the desired beneficial uses and the cost of control. For example, it is recommended that a revised benefit-cost analysis be performed for different zones around the city that incur different recreation usage.

It can be concluded that the recommendations of the Basin Plan which are pertinent to San Francisco call for a less rigid, more case-by-case approach to control of pollution. The recommendations also appear to give considerable weight to consideration of the cost of control procedures prior to their adoption.

NPDES PERMITS AND CEASE AND DESIST ORDERS

Permits issued under the National Pollution Discharge Elimination System set forth under the Water Pollution Control Act Amendments of 1972 have been developed for all three of the city's sewage treatment plants. In addition, all three of the plants are under Cease and Desist Orders from the Regional Board. These regulations constitute the specific requirements that implement the regulations discussed above and with which the city must comply. They contain schedules for compliance. These requirements are summarized in Table 9-1 as first-stage goals.

RECLAMATION AND REUSE REQUIREMENTS

The State Board of Health has adopted requirements for reclamation and reuse of wastewaters for certain specific uses, namely irrigation and various types of recreation. These requirements have been in force for a number of years, and have been widely accepted. During the course of the basin planning process, the Board of Health developed a position paper for guidance in basin planning. It pertained primarily to reclamation and reuse of wastewaters for domestic purposes. This position paper essentially set a moratorium on such reuse pending the results of ongoing studies on the public health implications of direct and indirect domestic reuse. The implication of this position paper is, therefore, that no definite plans can be made for large-scale domestic reuse at this time; the most that can be done is to anticipate the possibility of such reuse.

CHAPTER 6

DESCRIPTION OF ALTERNATIVE LONG TERM PROJECTS

The preceeding chapters have described the background and planning information needed to develop alternative wastewater systems. This chapter includes a description of basic options and concepts. It establishes a series of specific alternatives, which will be evaluated in Chapter 7. For ease of reference, Table 6-1 summarizes these alternatives.

DESCRIPTION OF ALTERNATIVES

No Project

The existing wastewater management facilities and procedures remain unchanged under this alternative. These facilities and procedures are discussed in Chapter 3.

Dry Weather Improvements Only (D-1)

Under this alternative, whose features are illustrated in Figure 6-1, dry weather treatment is upgraded to secondary level by providing high purity oxygen activated sludge treatment. Treatment of flows from the North Point and Southeast Districts are treated at Southeast. A force main and pump station are used for conveyance between the two sites. To handle the increased flow, the Southeast Water Pollution Control Plant is expanded to 100 mgd capacity. The Richmond-Sunset Plant is abandoned and flows are transported to a new secondary plant at the Southwest site sized to handle an average dry weather flow of 25 mgd. A larger outfall with improved initial mixing is provided at Southeast. A new ocean outfall would be provided for the Southwest Plant.

Sewer Separation (SS)

This alternative calls for construction of an entirely new sanitary sewer system. New connections must be made between the new sewers and sources of sewage. Dry weather treatment and disposal facilities are the same as those in Alternative D-1.

Alternatives W&D-1 and W&D-2

Shown on Figure 6-2, these alternatives feature treatment of wet weather flows at 14 separate facilities, and dispersed storage at 15 shoreline basins and 39 upstream basins. Eleven of the plants are located at the consolidated outfall locations. The abandoned North Point Plant is used and another plant is placed adjacent to the Southeast Plant. The two bypass outfalls which straddle Golden Gate Park are served by a single plant. Wet weather solids are conveyed to the Southeast Plant and Southwest Plant from their tributary areas through the dry weather interceptors. The capacities of wet weather treatment and storage and transport facilities are not fixed since optimum sizes will be determined in the cost-effectiveness analysis.

The only differences between the facility requirements for these two alternatives are the wet weather treatment processes used and the control levels to be evaluated. Alternative W&D-1 uses primary physical/chemical treatment and is evaluated for a range of control levels, while Alternative W&D-2 uses tertiary physical/chemical treatment (see Figure 6-12) for wet weather flows and is evaluated for only the highest control level.

Dry weather facilities are the same as Alternative D-1.

Alternatives W&D-3 and W&D-4

These alternatives, shown on Figure 6-3, feature treatment of wet weather flows at three regional sites and dispersed storage. The treatment facilities are located at the existing North Point and Southeast sites and at the Southwest site. Treatment of wet weather flows at Southwest requires a transport tunnel from the Presidio area to the Southwest Plant. Wet weather solids are treated at the Southeast Plant site. Wet weather solids from the Southwest site and North Point are transported to Southeast through new force mains.

Alternative W&D-3 provides primary physical/chemical (Alum) treatment, while W&D-4 provides tertiary physical/chemical (Alum) treatment. Dry weather treatment facilities are the same as Alternative D-1. Dry weather disposal facilities are also the same.

Alternatives W&D-5 and W&D-6

These alternatives, shown on Figure 6-4, feature

TABLE 6-1

LONG-TERM ALTERNATIVES

	Project Designation	Dry Weather Facilities				Wet Weather Facilities[1]				Bypass Frequency to be analyzed			
		Treatment			Disposal Location	Treatment		Solids Treatment Location	Disposal Location				
		Location	Capacity (mgd)	Process		Process	Location[2]			1/5yr	1/yr	4/yr	8/yr
Sewer Separation	SS	Southeast	100	Biological Secondary	Bay-East Shore	–	–	–	–	–	–	–	–
		Southeast	25	Biological Secondary	Ocean								
No Project	NP	North Point	65	Primary physical/ chemical	Bay-North Shore	–	–	–	–	–	–	–	–
		Southeast	30	Primary physical/ chemical	Bay-East Shore								
		Richmond-Sunset	15	Primary physical/ chemical	Ocean								
Dry Weather Treatment Only	D-1	Southeast	100	Biological Secondary	Bay-East Shore	–	–	–	–	–	–	–	–
		Southwest	25	Biological Secondary	Ocean								
Wet Weather Treatment at Consolidated Basins and Dry Weather Treatment	W&D-1	Southeast	100	Biological Secondary	Bay-East Shore	Primary physical/ chemical	see Fig 6-2	Southwest	Ocean	x	x	x	x
		Southwest	25	Biological Secondary	Ocean		see Fig. 6-2	Southeast	Bay-North Shore				
	W&D-2	Southeast	100	Biological Secondary	Bay-East Shore	Tertiary physical/ chemical	see Fig 6-2	Southwest	Ocean	x			
		Southwest	25	Biological Secondary	Ocean		see Fig 6-2	Southeast	Bay-North Shore				
Separate Wet Weather Treatment for Existing Drainage Areas and Dry Weather Treatment	W&D-3	Southeast	100	Biological Secondary	Bay-East Shore	Primary physical/ chemical	North Point Southeast Southwest	Southeast Southeast Southeast	Bay-North Shore Bay-East Shore Ocean	x	x	x	x
		Southwest	25	Biological Secondary	Ocean								
	W&D-4	Southeast	100	Biological Secondary	Bay-East Shore	Tertiary physical/ chemical	North Point Southeast Southwest	Southeast Southeast Southeast	Bay-North Shore Bay-East Shore Ocean	x			
		Southwest	25	Biological Secondary	Ocean								
Separate Wet Weather Treatment of Bay and Ocean Drainage Areas and Dry Weather Treatment	W&D-5	Southeast	100	Biological Secondary	Bay-East Shore	Primary physical/ chemical	Southeast Southwest	Southeast Southeast	Bay-East Shore Ocean	x	x	x	x
		Southwest	25	Biological Secondary	Ocean								
	W&D-6	Southeast	100	Biological Secondary	Bay-East Shore	Tertiary physical/ chemical	Southeast Southwest	Southeast Southeast	Bay-East Shore Ocean	x			
		Southwest	25	Biological Secondary	Ocean								
Central Wet Weather Treatment and Dry Weather Treatment	W&D-7	Southeast	100	Biological Secondary	Ocean	Primary physical/ chemical	Southwest	Southeast	Ocean	x	x	x	x
		Southwest	25	Biological Secondary	Ocean								
	W&D-8	Southeast	100	Biological Secondary	Ocean	Tertiary physical/ chemical	Southwest	Southeast	Ocean	x			
		Southwest	25	Biological Secondary	Ocean								

[1]All wet weather control alternatives include dispersed storage.

[2]Wet weather treatment of all flows at Southeast was not considered because of the poor disposal location there, relative to North Point or Southwest. Wet weather treatment of all flows (or Southeast plus North Point flows) was not considered because of site limitations.

[3]Only the lowest bypass frequency was considered for those alternatives with tertiary physical/chemical treatment of wet weather flows. This frequency was chosen to give an upper limit on cost.

FIGURE 6-1
ALTERNATIVE D-1
DRY WEATHER TREATMENT ONLY

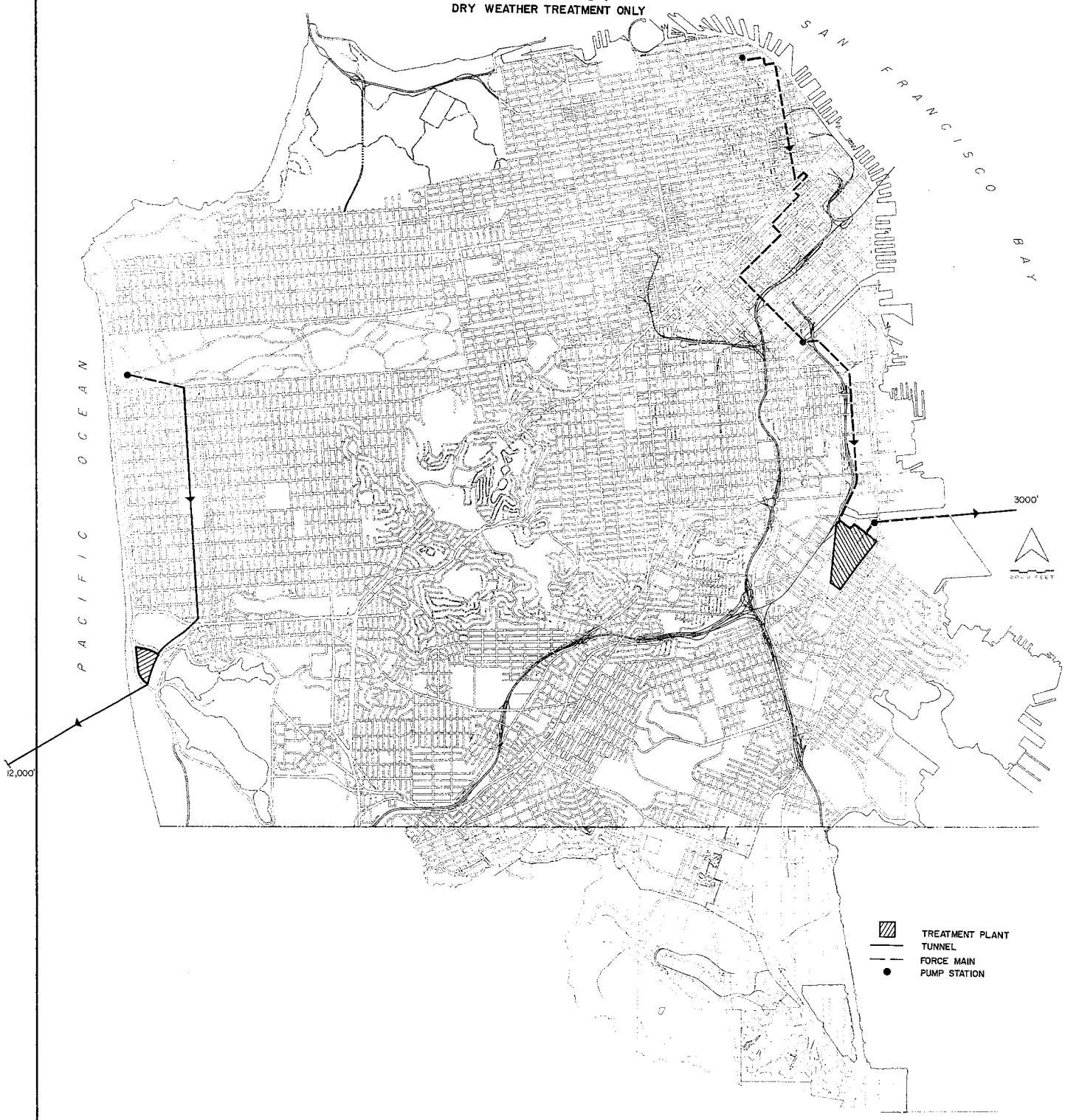

FIGURE 6-2
ALTERNATIVE W & D 1 AND W&D 2
WET WEATHER TREATMENT AT CONSOLIDATED
BASINS AND DRY WEATHER TREATMENT

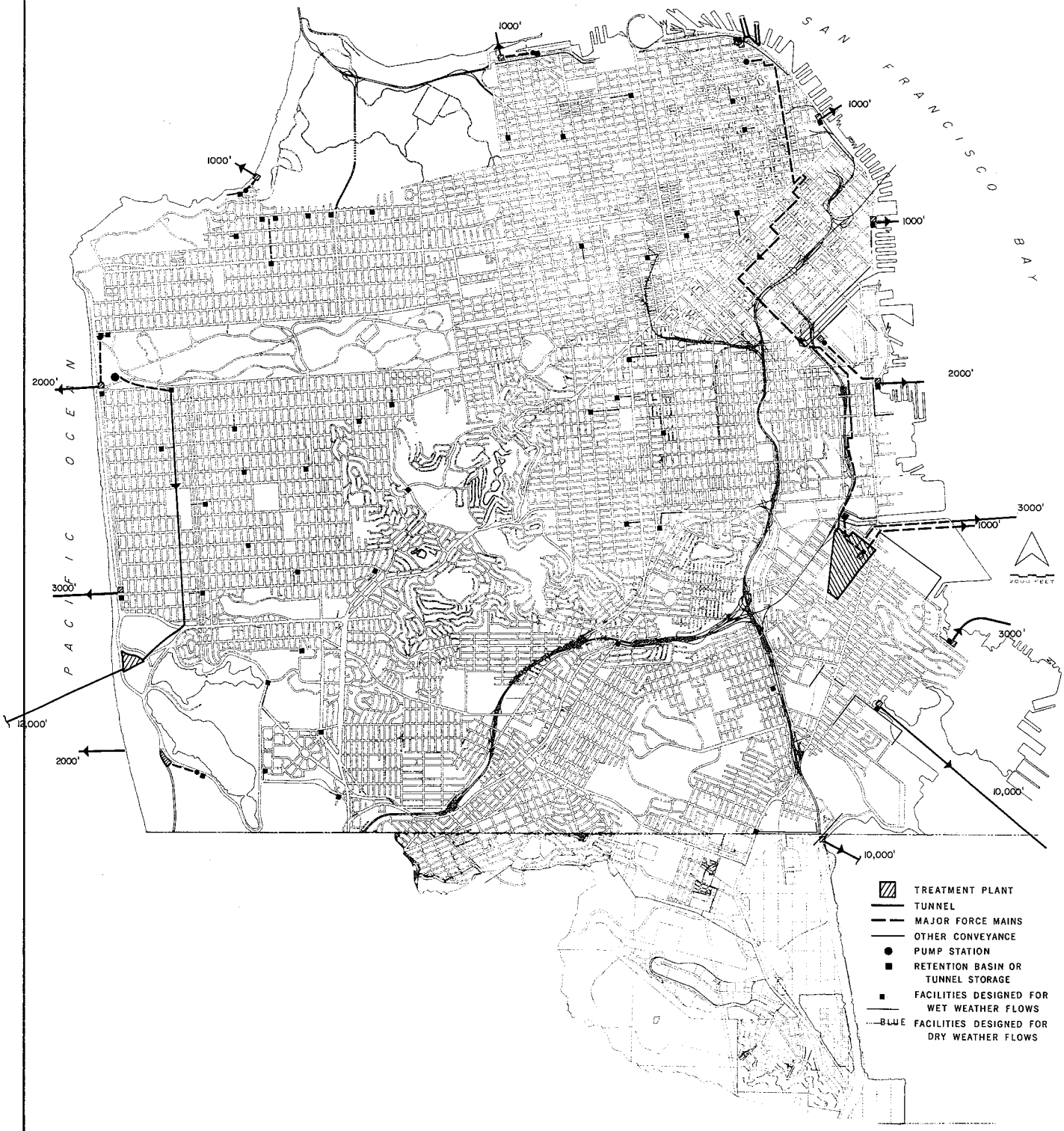

FIGURE 6-3
ALTERNATIVE W&D 3 AND W&D 4
SEPARATED WET WEATHER TREATMENT FOR EXISTING
DRAINAGE AREAS AND DRY WEATHER TREATMENT

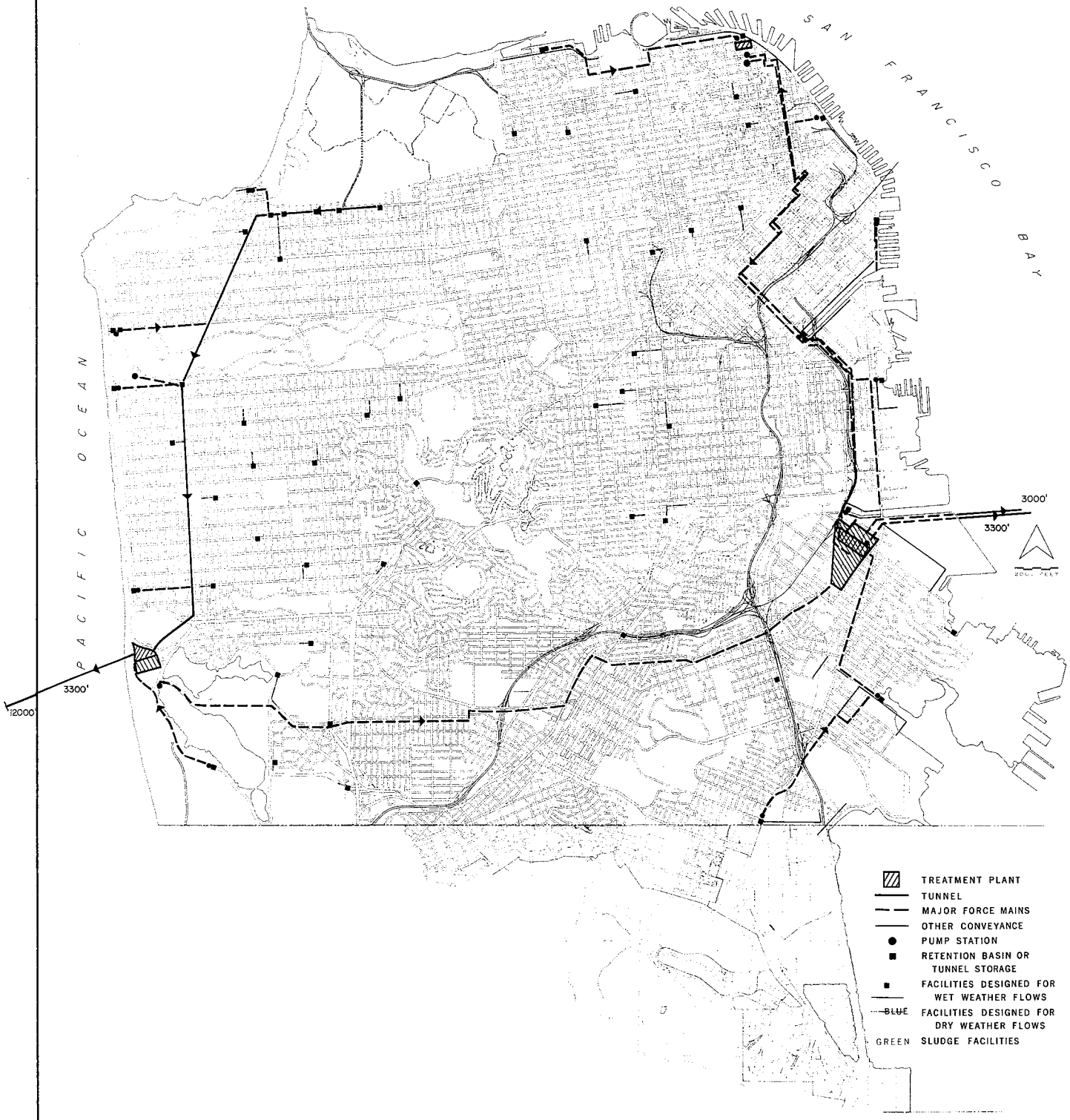

FIGURE 6-4
ALTERNATIVE W & D 5 AND W&D 6
SEPARATE WET WEATHER TREATMENT FOR BAY AND OCEAN DRAINAGE AREAS AND DRY WEATHER TREATMENT

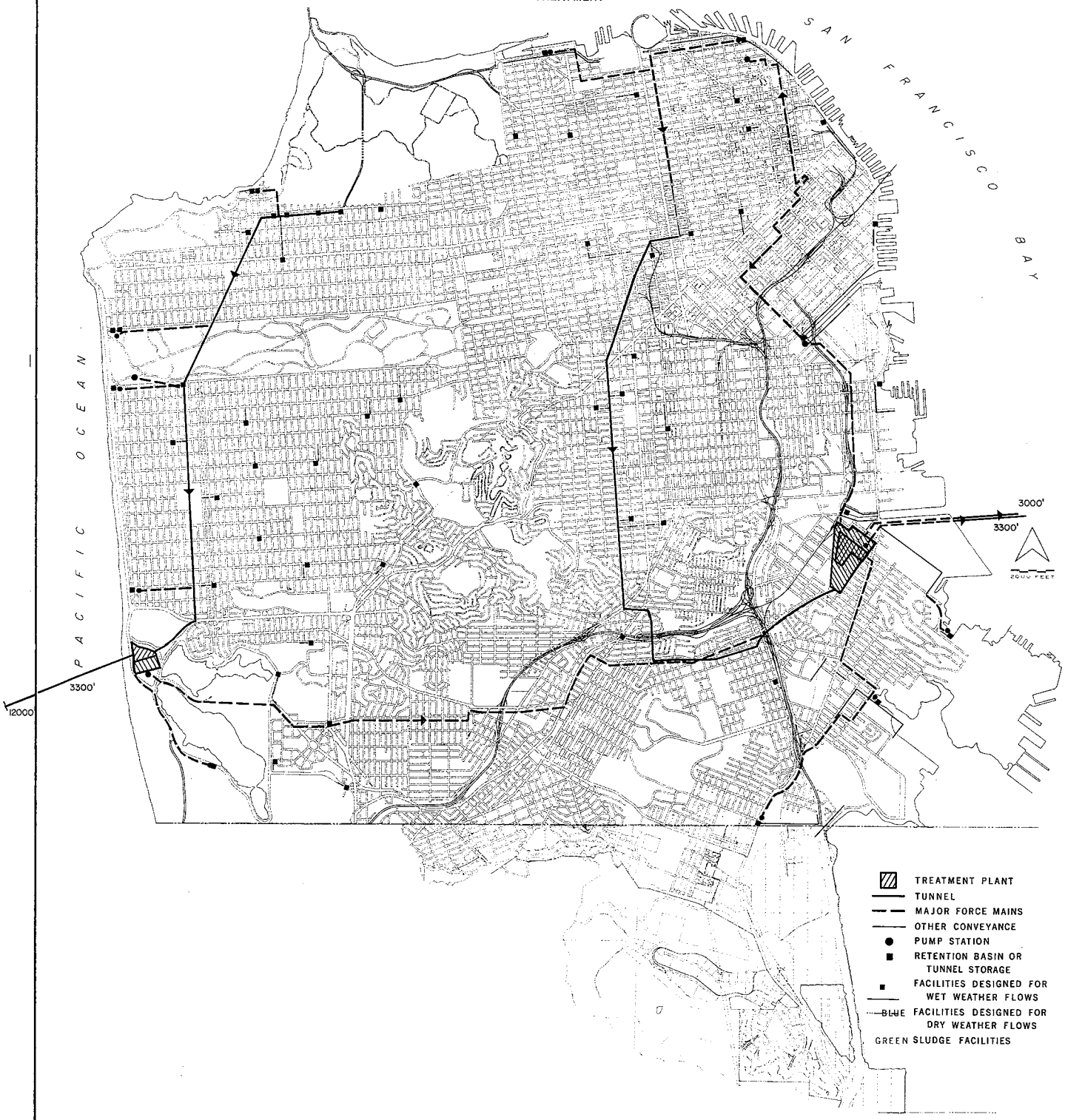

treatment of wet weather flows at two regional sites serving the bay and ocean sides of the city, and dispersed storage. The treatment facilities are located at the Southeast Water Pollution Control Plant site and at the Southwest site. Wet weather transport tunnels are required from the Presidio area to the Southwest site and from the North Point area to the Southeast site. Wet weather solids are treated at the Southeast Plant site. A sludge force main is required between the Southwest and Southeast Plants. Storage and treatment capacities are variable.

Alternative W&D-5 provides primary physical/chemical (Alum) treatment, while W&D-6 provides tertiary physical/chemical (Alum) treatment. Dry weather treatment facilities are the same as Alternative D-1. Dry weather disposal facilities are also the same.

Alternatives W&D-7 and W&D-8

Illustrated on Figure 6-5, these alternatives feature treatment of wet weather flows at a central facility near Lake Merced, ocean disposal of all treated wastewater, dispersed storage, and new wet and dry weather outfalls. All collected wet weather flows are transported to the central treatment facility in two tunnels: one on the ocean side and the other extending from the North Point to the Southeast areas and, thence, across the city to the Southwest site. Storage and treatment capacities are variable.

Alternative W&D-7 is essentially the Master Plan developed by San Francisco. Alternative W&D-7 differs from the Master Plan in that it does not have tunnel storage and does not have additional transport capacity to take advantage of rainfall variation.

It provides primary physical/chemical (Alum) treatment, while W&D-8 provides tertiary physical/chemical (Alum) treatment. Dry weather treatment facilities are the same as Alternative D-1. Disposal of dry and wet weather flows will be through a combination outfall into deep ocean waters off lake Merced. Wet weather flows will be discharged one mile offshore and dry weather flows, three miles offshore. Dry weather treated effluent will be transported through the wet weather tunnels to the outfall.

FORMULATION OF ALTERNATIVES

Project-No Project

"No project" consists of continuing the same practice, with little or no construction of new facilities. Consideration of this option is required under the State Board's Project Report guidelines. All other alternatives fall under the heading of "Project."

Sewer Separation

The major water quality problem faced by the City results from the discharge of sanitary sewage when combined sewers overflow. The separation of sewage is a logical alternative to existing practices.

Dry Weather-Wet Weather Control

Current State and Federal emphasis is on the control of what, in San Francisco's case, can be termed "dry weather discharges." One means of controlling dry weather discharges is sewer separation coupled with subsequent treatment of the sanitary sewage. With combined sewers, dry weather measures consist of upgrading treatment facilities to provide the capacity to handle dry weather flows only. Wet weather overflows would receive little attention.

Outfall Consolidation

These are logical consolidations of the 41 wet weather outfalls around the city. Consolidation is desirable where downstream storage is to be provided or where wet weather flows are to be treated.

Treatment

Considerable information has been developed on possible treatment processes for both wet and dry weather flows. The City has recently finished a pilot study of treatment processes (Chapter 1, Current Planning Program, #42). The conduct of these pilot studies is described below, followed by a list of the major conclusions.

The study scope included pilot, prototype, and bench-scale process testing, a search and review of existing data, a waste characterization program, and an evaluation of the alternative processes. The process testing phase of the study included pilot scale tests for flows from the North Point

FIGURE 6-5
ALTERNATIVE W&D 7 AND W&D 8
CENTRAL WET WEATHER TREATMENT AND
DRY WEATHER TREATMENT

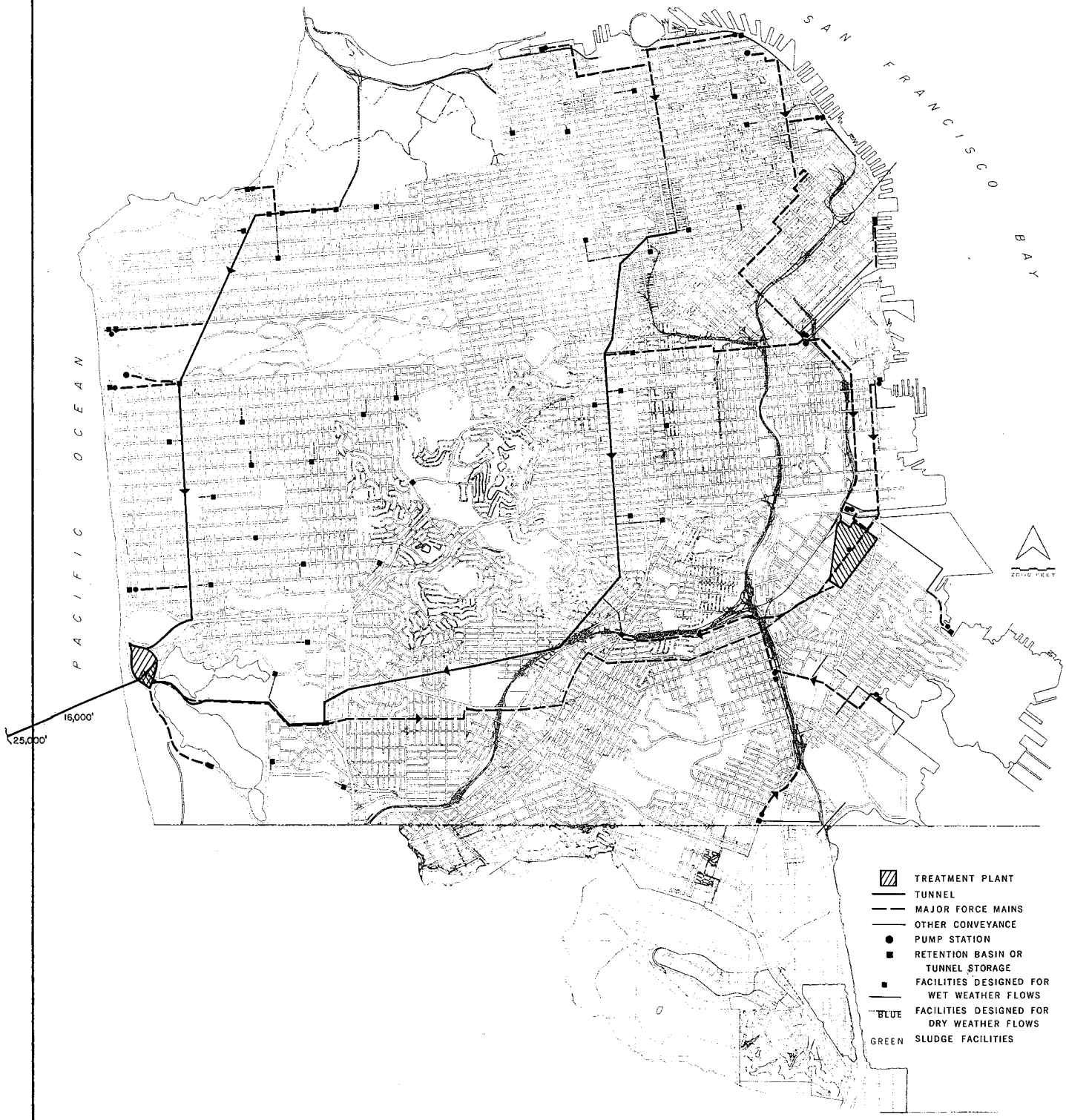

and Southeast Plants and prototype tests at Richmond-Sunset.

Southeast Pilot Plant. Three basic process trains were developed and used at the Southeast Pilot Plant. Figure 6-6 shows diagrams of these trains and shows the location of data collection points.

- *Train No. 1—Biological Treatment with Tertiary Physical/Chemical (TP/C) Treatment.* Train No. 1 consisted of screening and degritting and primary sedimentation. One half of the primary effluent was treated by conventional air activated sludge, the other by high purity oxygen activated sludge. The secondary effluents from the two biological processes were treated as follows: one received physical/chemical treatment with chemical coagulation and clarification, followed by filtration and activated carbon adsorption; the other was processed by direct filtration and activated carbon adsorption.

- *Train No. 2—Primary Physical/Chemical Iron-High Lime with TP/C Treatment.* Train No. 2 consisted of screening and degritting followed by a ferric chloride coagulation and clarification, the effluent from which was divided into two portions: one portion was treated by direct filtration and carbon, the other by high lime coagulation and clarification. The high lime effluent was passed through two-stage recarbonation, followed by filtration and activated carbon.

- *Train No. 3—TP/C Treatment.* Train No. 3 consisted of screening and degritting with alum coagulation and clarification, followed by filtration and activated carbon.

Richmond-Sunset Plant. This part of the study was limited to two physical/chemical processes. One consisted of the addition of primary coagulants and polymers to the full scale plant followed by pilot scale filtration and carbon adsorption; the other was a pilot scale polymer process. Figures 6-7 and 6-8 show these process trains. Enough information about biological treatment was obtained from the preceding pilot studies and previously developed information so that further study of this train was not necessary.

Conclusions. Major conclusions of the pilot study are as follows:

1. A stringent, rigorously enforced industrial waste discharge control program is essential to the satisfactory operation of any of the tested treatment processes.

2. None of the processes tested can meet the Ocean Plan requirements for effluent total chromium concentration of not more than 0.005 mg/1, whether treating Southeast, North Point, or Richmond-Sunset sewage.

3. Alum, ferric chloride, and lime are equally satisfactory coagulants in terms of those effluent constituents included in state and federal regulations. An anionic polymer coagulation aid is essential to satisfactory floc formation.

4. The high dose of ferric chloride or alum required to coagulate the San Francisco sewage will have a major adverse effect on anaerobic digestion of the resulting sludge. Additional study is necessary to quantify this effect.

5. For filtration to be practical, sedimentation basin effluent must contain no more than a trace of settleable solids and should have a turbidity of less than 15 FTU.

6. Automatic control of coagulant dosage is essential to the production of a filterable, settled effluent.

7. The addition of coagulant chemicals to wastewater creates a potential foaming problem that must be considered in treatment plant design.

8. At present and for the foreseeable future, there appears to be no practical potential for reuse of the effluents from plants treating the North Point and Southeast sewages due to the high dissolved solids in the sewage and the cost of reducing them to levels necessary for most types of reuse.

9. The development of a means of reducing the rate of density changes in the North Point and Southeast sewages is a prerequisite to consideration of chemical coagulation-filtration processes.

FIGURE 6-6

SOUTHEAST PILOT PLANT
PROCESS TRAINS AND DATA COLLECTION POINTS

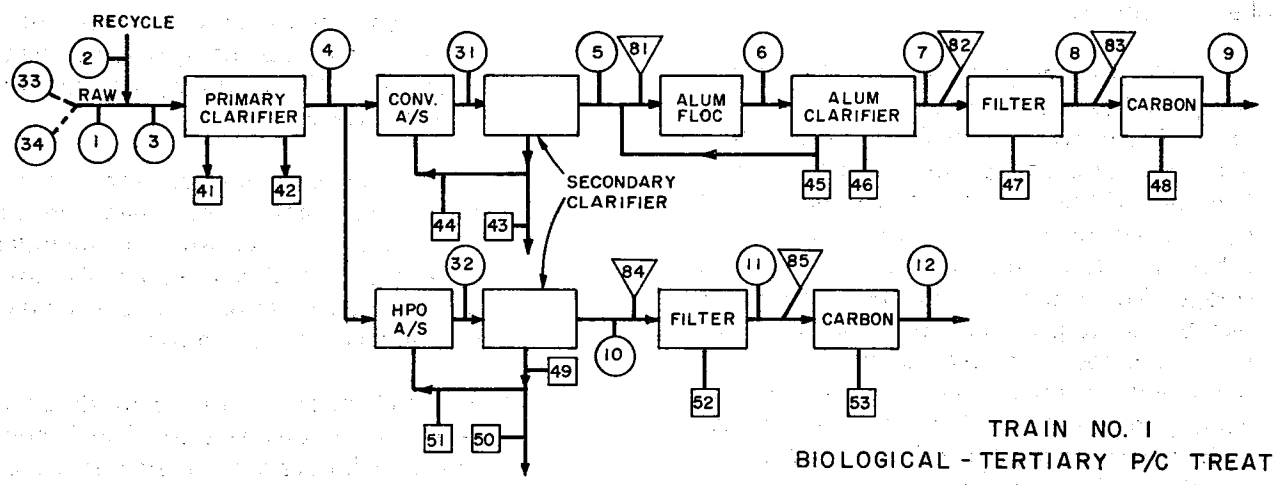

TRAIN NO. 1
BIOLOGICAL - TERTIARY P/C TREATMENT

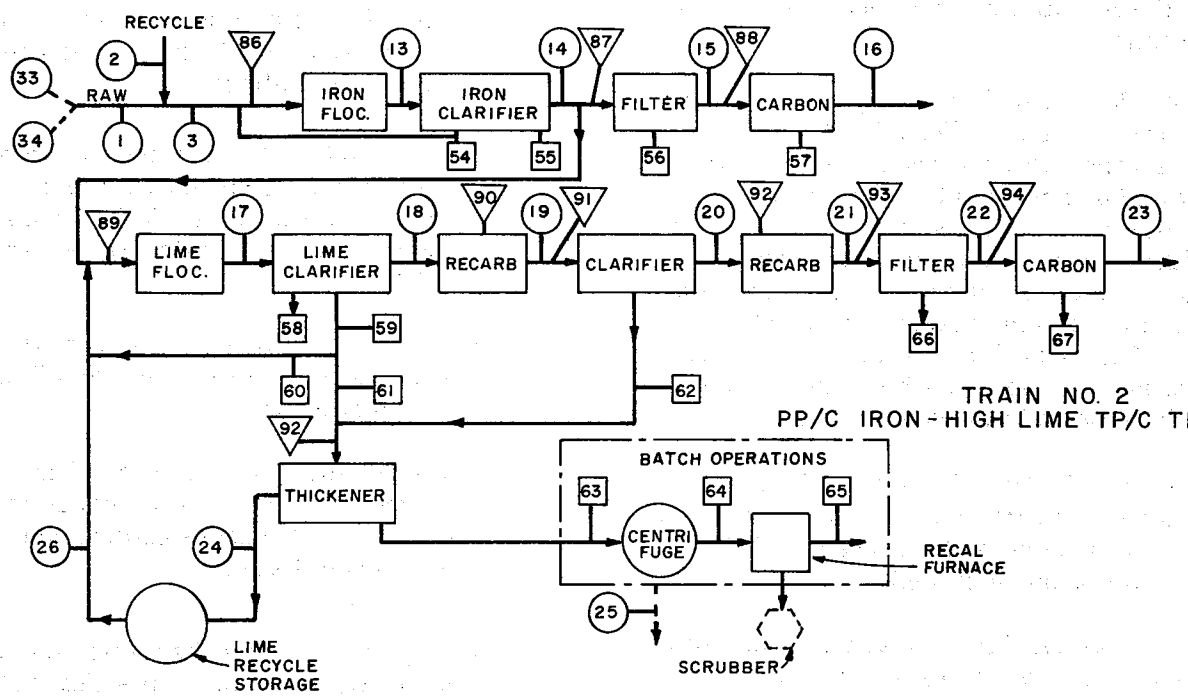

TRAIN NO. 2
PP/C IRON - HIGH LIME TP/C TREATMENT

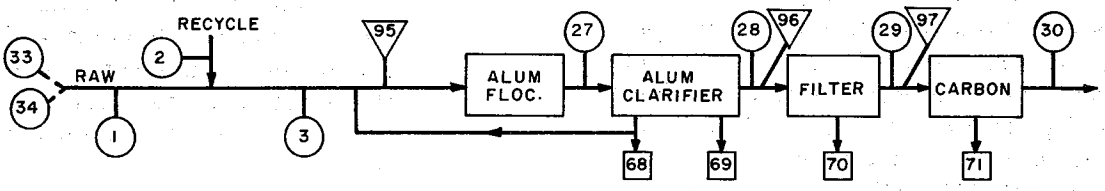

TRAIN NO. 3
TERTIARY PHYSICAL - CHEMICAL TREATMENT

NOTES:

(1) TO (34) LIQUID STREAM DATA POINTS

[41] TO [71] SOLID OR WASTE DATA POINTS

▽81 TO ▽97 CHEMICAL ADDITION POINTS

- - - - INDICATES NP + SE

(33) SE RAW

(34) NP RAW

FIGURE 6-7
RICHMOND-SUNSET PILOT PLANT PROCESS TRAIN -
FILTRATION AND CARBON ABSORPTION

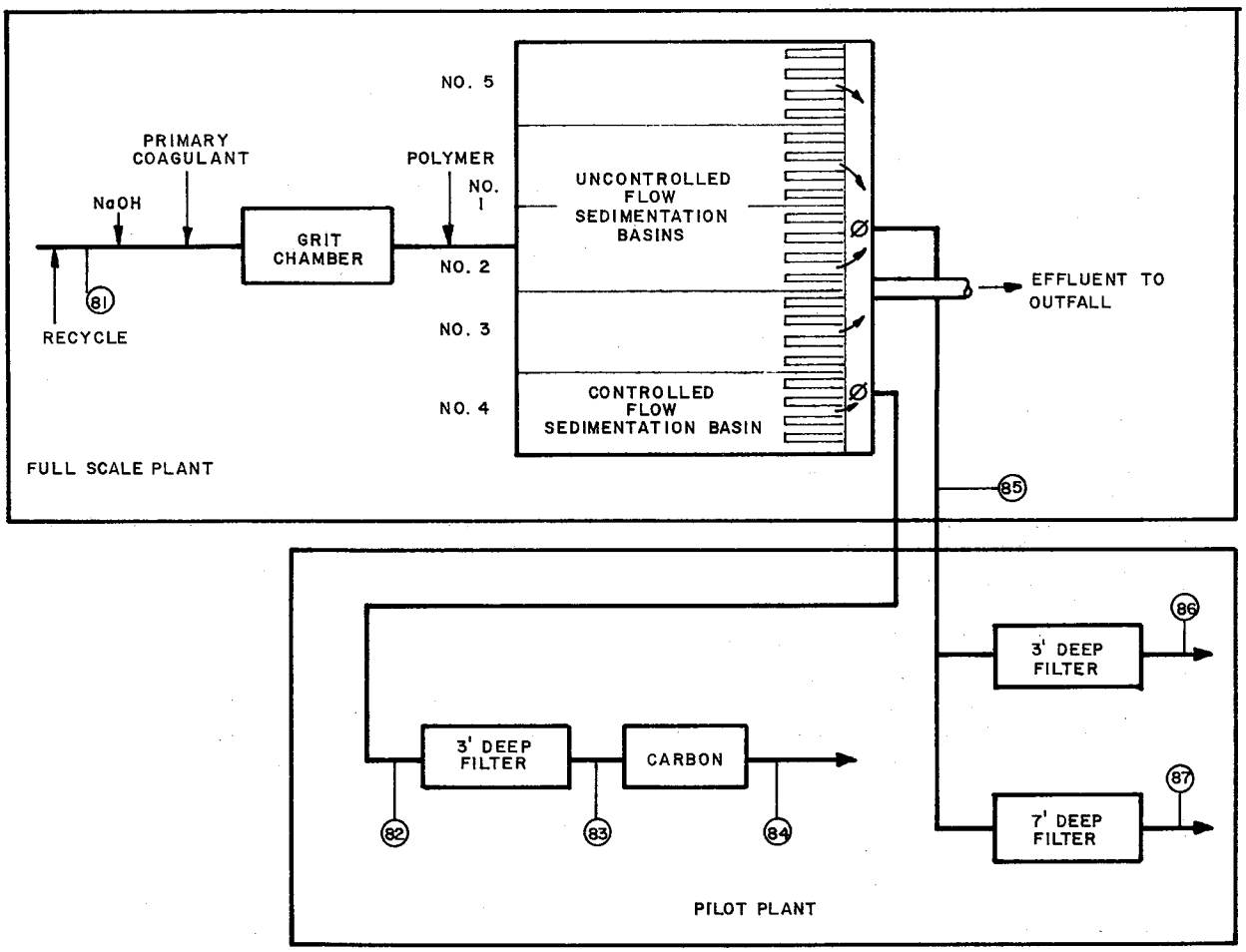

FIGURE 6-8
RICHMOND-SUNSET PILOT PLANT PROCESS TRAIN-
POLYMER TESTING PROCESS

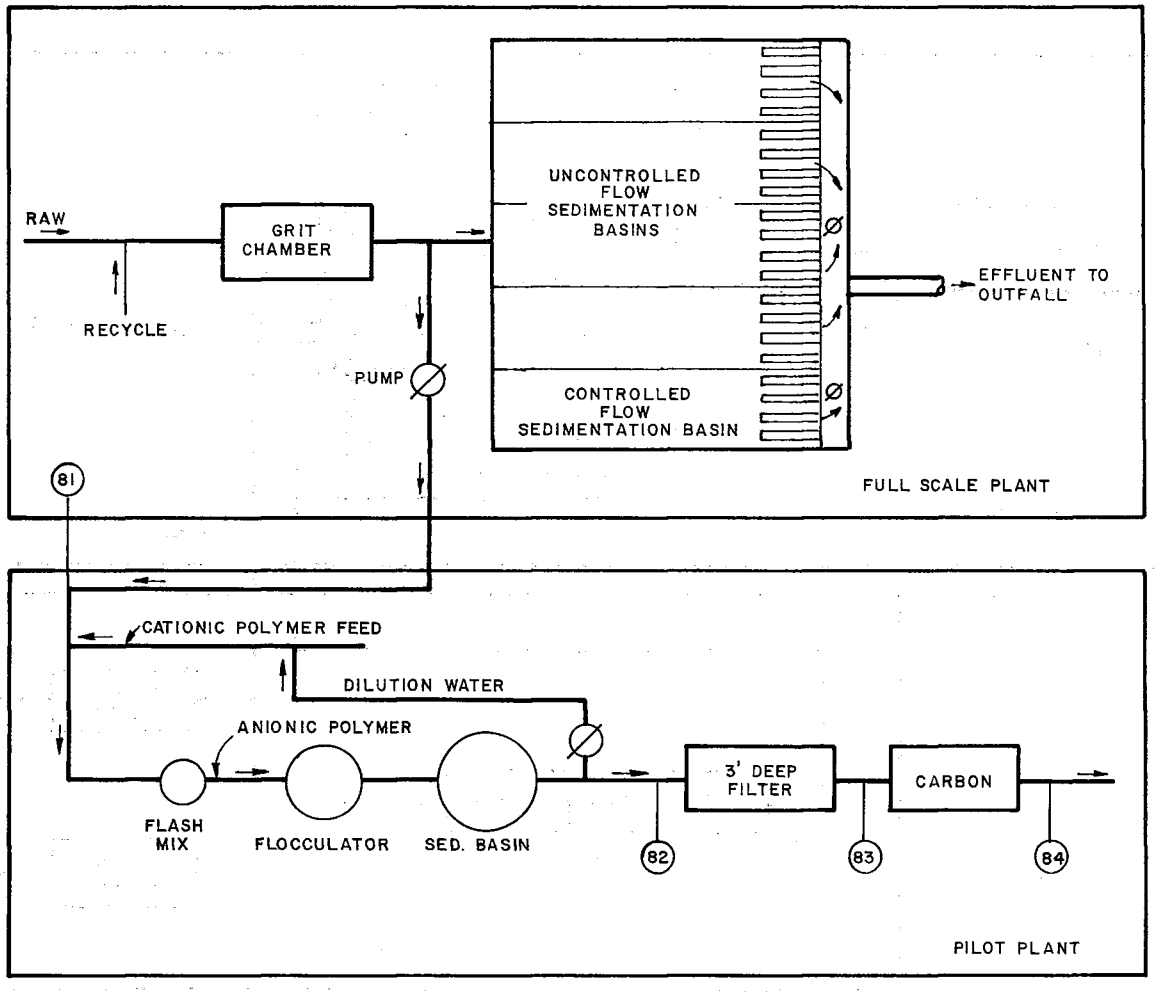

10. Tertiary physical/chemical treatment of combined North Point-Southeast sewage would be only marginally successful in meeting the EPA 30 mg/1 effluent BOD requirement.

11. Lime coagulation to pH 11.2 is an easily controlled process for North Point and Southeast sewages, producing an effluent of excellent clarity.

12. It is not economically practical to recalcine the lime sludge; therefore, no practical method of sludge reuse exists.

13. The intentional addition of San Francisco Bay water to the North Point and Southeast sewages plus the intruded saltwater broadens the range of chemical dosages which will provide satisfactory coagulation.

14. When treating the blended North Point-Southeast sewage, either the conventional activated sludge process or the high purity oxygen activated sludge process can produce an effluent meeting the EPA requirements.

15. Comparing the two biological systems tested, the conventional, air activated sludge process produces an effluent of higher pH, lower turbidity, and lower metals concentration than does the high purity, oxygen activated sludge. The high purity, oxygen activated sludge is the more stable process and produces a more compact sludge.

16. It is doubtful that tertiary physical/chemical treatment of Richmond-Sunset sewage can consistently meet the EPA 30 mg/1 effluent BOD requirement.

17. The limited area of the present Richmond-Sunset Plant site makes it impractical to consider the construction of tertiary physical/chemical treatment units within the boundaries of the site.

18. The present Richmond-Sunset site will accommodate the construction of facilities sufficient to provide primary physical/chemical treatment using either alum or Magnifloc 509-C as the primary coagulant.

19. Primary physical/chemical treatment of Richmond-Sunset sewage can produce an effluent meeting the Ocean Plan discharge requirements. When combined with an activated sludge effluent from a North Point-Southeast Plant, the resulting effluent might marginally meet the EPA effluent requirements.

20. A high purity oxygen activated sludge expansion of the Richmond-Sunset Plant could be accomplished with the acquisition of approximately 10 acres of additional adjacent land.

21. While activated sludge processes were not tested on Richmond-Sunset sewage, the results of the North Point-Southeast tests fully demonstrate the ability of this process to satisfactorily treat Richmond-Sunset sewage to consistently meet the EPA requirements.

22. The effluent from an activated sludge treatment plant at Richmond-Sunset should be suitable for irrigation since salinity is not a problem in the Richmond-Sunset sewage.

23. Ferric chloride is not considered a practical coagulant for Richmond-Sunset sewage because of the narrow range of satisfactory dosage and the potential sludge digestion problems.

Based on the results of this pilot study, the high purity oxygen-activated sludge process was selected for dry weather treatment. A process flow diagram is present on Figure 6-9.

For wet weather treatment, the primary and tertiary physical/chemical (Alum) processes were selected. The primary physical/chemical process provides more consistent and higher quality effluent than primary treatment, with few additional facilities. A process flow diagram is shown on Figure 6-10.

The tertiary physical/chemical (Alum) process meets secondary treatment requirements for wet weather flows. A process flow diagram for this process is shown on Figure 6-11. Biological treatment can also be used to meet this requirement, but the treatment capacity is severely limited by the availability of enough activated sludge from the dry weather facilities for process startup.

FIGURE 6-9
HIGH PURITY OXYGEN ACTIVATED SLUDGE
PROCESS FLOW DIAGRAM

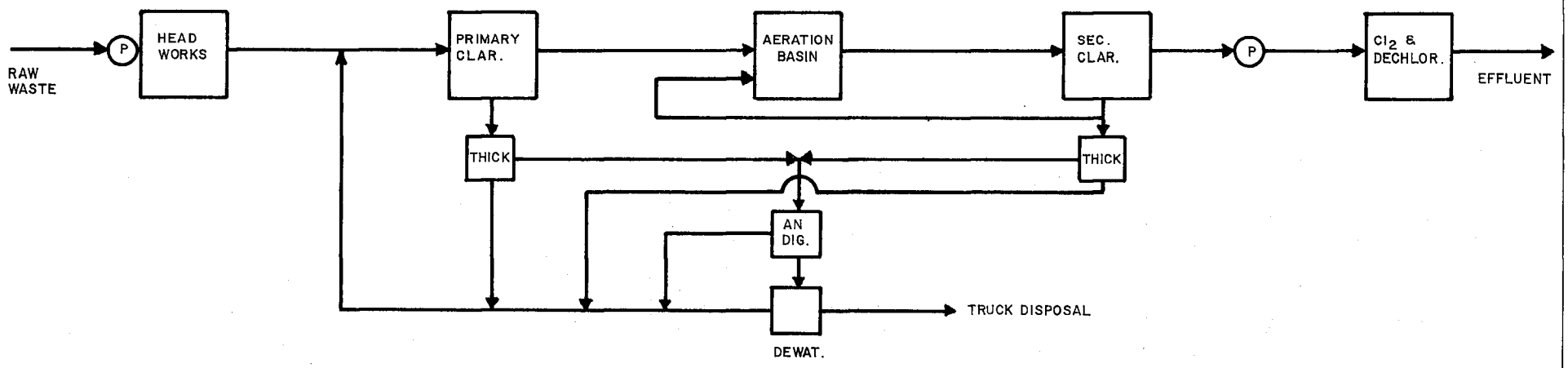

FIGURE 6-10

PRIMARY PHYSICAL-CHEMICAL (ALUM)
PROCESS FLOW DIAGRAM

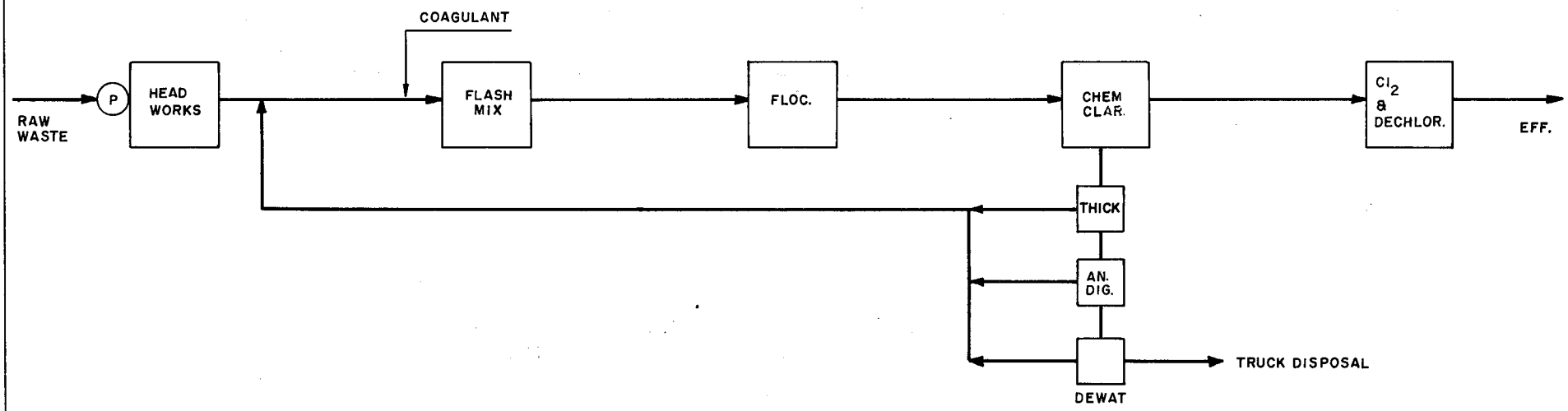

FIGURE 6-11

TERTIARY PHYSICAL - CHEMICAL TREATMENT (ALUM)
PROCESS FLOW DIAGRAM

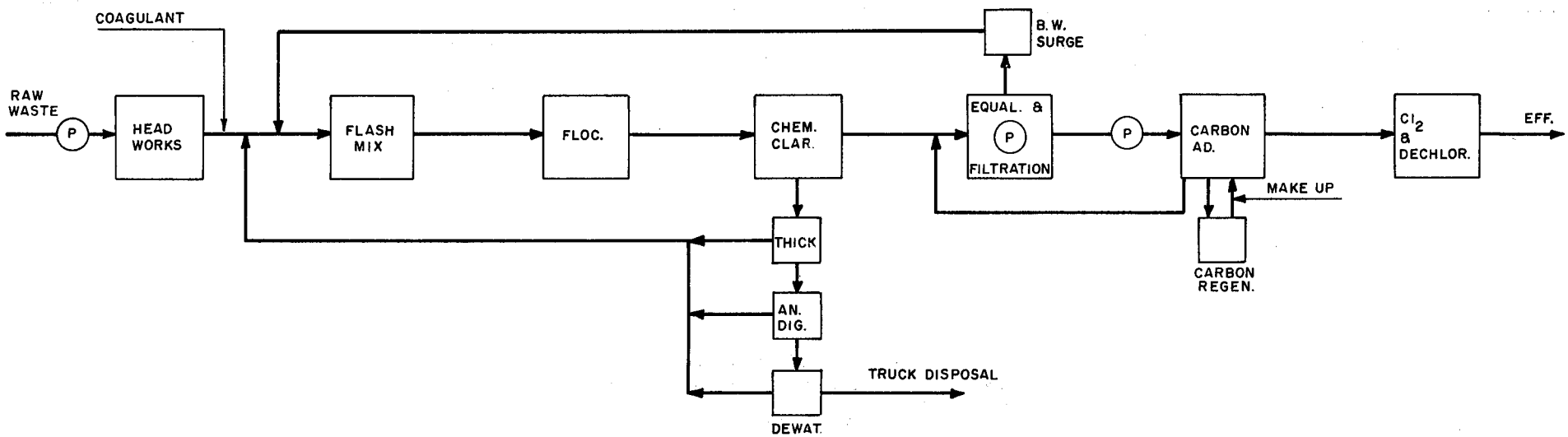

Disposal

There are five disposal locations that can logically be considered: one at each of the four treatment plant sites, as well as at existing outfalls or groups of outfalls. Because of the difference in volume of flow between dry and wet weather, it is also reasonable to consider the disposal of dry weather effluent in one location and the disposal of wet weather effluent in other locations.

Storage

The existing sewer system provides only incidental storage in sewers. The concept of dispersed storage at upstream and downstream locations was proposed in the Master Plan. There is also the possibility of more centralized storage in a fewer number of larger basins. The use of enlarged sewers, specifically designed for storage as well as transport might also be used.

Frequency of Storm Overflows

The current system overflows on the average of about 110 per year. Overflow frequencies ranging from 8 times per year to once per 5 years were considered in the development of the Master Plan. This range of overflow frequencies appears to cover a reasonable range of costs of storage. Therefore, the same range has been investigated in this facilities plan.

CHAPTER 7

ALTERNATIVE EVALUATION

The alternatives described in Chapter 6 are evaluated in this chapter. Twenty-three alternative systems are analyzed. The analysis is not necessarily intended to determine the exact configuration of the final system. Rather, the purpose is to define a long-term plan in as specific terms as are now possible. This will insure that the initially constructed facilities represent the most reasonable first steps. Table 7-1 is a comparison of the alternatives. The following conclusions can be drawn:

1. The no-project alternative is unacceptable because it does not satisfy any major regulatory requirements and provides no improvement in control of wet or dry weather sewage flows.

2. The sewer separation alternative is unacceptable because of high cost and doubtful performance in improving wet weather receiving water conditions.

3. The dry-weather-only alternative is unacceptable because little improvement of receiving water conditions is provided during wet weather.

4. The following conclusions can be reached regarding the wet and dry weather control alternatives:

   a. Project cost is not the major factor in selecting the best long-term project because costs are not significantly different for the projects at a given control level.

   b. The lower the treatment capacity, the lower the operation and maintenance costs.

   c. Alternatives providing tertiary physical/chemical treatment of wet weather flows provide no significant benefit beyond that provided by primary physical/chemical treatment with a significant additional cost. For this reason it is concluded that this advanced level of treatment is not desirable.

   d. The apparent best project is Alternative W&D-7. It does not differ appreciably from other wet and dry weather control alternatives in cost or in other criteria except that it eliminates discharge to the bay, which is desirable.

   e. The alternatives involving two and three wet weather treatment facilities should be considered as reasonable options if future events require a change in long-range plans.

   f. The wet weather treatment capacity of 1,000 mgd proposed in the Master Plan should be refined following decisions on desired control levels and development of additional technical data.

   g. The analysis shows that for a control level of eight overflows per year, the treatment capacity for only dry weather flows, coupled with adequate storage, is the optimum project. However, this combination results in large bypass volumes which may need to be reduced with additional treatment and transport capacity.

Alternative W&D-7 consists of a single, wet weather, regional wastewater treatment plant at the Southwest site. West side dry weather flows would also be treated there. Northeast and Southeast dry weather flows would be discharged to the ocean offshore of the Southwest Plant. This alternative is essentially the same as the city's Master Plan and is believed to be the most desirable concept for the City to follow. The Master Plan is a concept rather than a collection of definitive projects. It is amenable to a wide range of variations in location of facilities, sizing, and in the degree of control achieved. The principal advantages of this alternative over alternatives involving both bay and ocean disposal are:

- Ocean disposal of wet weather flows which would only be treated to a primary level is less likely to cause aesthetic and environmental problems than bay disposal.

- Ocean disposal of secondary treated dry weather flows will decrease the likelihood of environmental problems in the bay.

- The maintenance of a single wet weather treatment plant provides the most efficient use of treatment capacity as a storm travels across the city.

In addition, the cost differences between alternatives for discharge only to the ocean and the alternatives for both bay and ocean discharge are less than 10 percent of total costs.

This evaluation provides a sound basis for proceeding with implementation of the Master Plan. However, the construction period for the project is long, and additional information will be developed during implementation and initial operation; therefore, the exact nature of the long-term plan should be continually reassessed, particularly as to the level of overflow control and the sizing of wet weather storage and treatment facilities.

COST

A range of storage and treatment capacities will achieve any overflow control level. It was therefore necessary to determine the best combination of storage and treatment for a given alternative and control level. The performance of an alternative selected in this manner affects several of the other evaluation criteria, notably pollutant emissions.

To develop the costs of various project combinations, cost estimates for various facility capacities were prepared. These estimates are based on an ENR cost of index 2300 and are contained in Apendix A. The capital costs are based on data from the Master Plan Report and the San Francisco Wastewater Treatment Pilot Plant Study. Operation and maintenance costs were developed specifically for this facilities plan report. An interest factor of 7 percent was used in determining the equivalent annual cost.* A construction period of 15 years was assumed. The analysis shows that the same conclusions would be reached regarding the project configuration whether the analysis is based on equivalent annual cost or on capital costs only and whether construction periods of 15 or 30 years were used in the equivalent cost analysis.

For the alternatives involving storage and treatment, a range of average, city-wide control frequencies was analyzed varying from 8 overflows per year to 1 overflow every five years. Figures 7-1, 7-2, and 7-3 are comparisons of the costs of the alternatives. Various treatment and storage combinations are shown. The minimum cost point on the capital and equivalent annual cost curves (7-2 and 7-3) is the optimum combination of treatment and storage for that measure of cost. The optimum combinations do not vary appreciably between the two sets of curves. These optimum combinations are summarized on Table 7-1.

Figure 7-1 shows that operation and maintenance costs, which are of primary importance to the city, decrease as treatment capacity decreases. Figure 7-5 shows that the greater the treatment capacity, the less the volume of wet weather overflow for a frequency of eight overflows per year; these curves indicate that the selection of the optimum combination of storage and treatment should not be based solely on frequency of overflow, but should also consider volume.

The storage-treatment combinations associated with the lowest equivalent annual costs for the alternatives are presented on Table 7-1 as the optimum capacities. However, the fact that the operation and maintenance costs decrease with decreasing treatment capacity would suggest that somewhat less treatment than the optimum shown would be appropriate, at least with respect to the city's costs. It should be borne in mind that variations in storage can be made within each drainage basin to achieve a greater or lesser degree of control depending upon an individual analysis in each area. Conclusions regarding the basic concept would not vary appreciably.

The range of combinations indicates that the final treatment plant capacity can vary, and while the present planning for 1,000 mgd capacity would offer a high degree of control for a given storage volume, a more detailed analysis will be required after a control frequency is selected in each area of the city. The significance of this factor will be determined in studies currently underway.

The optimization curves for 8 overflows per year show continually decreasing costs as the treatment capacity approaches the existing dry weather capacity. This would indicate that dry weather treatment capacity with storage is the least-cost solution for this alternative. However, the bypass volume increases dramatically as the treatment capacity decreases so that the bypass volume becomes a significant factor for this control level. Additional study is necessary to assess the degree of control of mass emissions that is achieved by this system; costs will increase accordingly if additional control is desirable.

As shown on Table 7-1, the most expensive of all alternatives is the alternative for sewer separation.

[1] Equivalent annual cost is the amount of money which, if invested annually at 7% would be sufficient to meet all unescalated capital and operation and maintenance expenses through the end of the study period.

TABLE 7-1

EVALUATION OF ALTERNATIVES

		DESCRIPTION	CONTROL LEVEL (OVERFLOWS YEAR)	FACILITY SUMMARY: STORAGE CAPACITY (MILLION FT^3)	NUMBER OF STORAGE BASINS	MILES OF OPEN CUT SEWERS	MILES OF TUNNEL	TREATMENT CAPACITY (M&D)	NUMBER OF TREATMENT PLANTS	COST (ENR 2300): CAPITAL (MILLION $)	EQUIVALENT ANNUAL (MILLION $/YR)	OPERATION AND MAINTENANCE (MILLION $/YR)	FLOATABLE DISCHARGE 1000 lb/yr: TO BAY	TO OCEAN	COLIFORM VIOLATIONS (AVG. DAYS/YR)	AMOUNT OF WASTE DISCHARGED (MILLION GAL./YR): NO TREATMENT NO DILUTION	TREATMENT ≥ 10:1 DILUTION	NO TREATMENT NO DILUTION	TREATMENT ≥ 10:1 DILUTION	RELIABILITY	ENERGY REQUIREMENTS: PEAK: Thousand KW	AVG. ANNUAL: Million KW-hr/yr	CONTROL OF STREET FLOODING	PUBLIC ACCEPTABILITY	POTENTIAL FOR RECLAMATION & REUSE
	SS	Sewer separation. Secondary treatment at Southeast and Southwest with discharge offshore of treatment plants.	~150	0	0	2900	0	125	2	2195	105	11.9	151	91	~170	5500	29,000	3300	7500	Very reliable	22	98	Little improvement	Very poor	Best
	NP	No project	~110	0	0	0	0	105	0	0	8	7.7	127	77	~170	4700	30,000	2800	8000	Very reliable	6	23	No improvement	Poor	Poor
	D-1	Treatment of dry weather flows only, at Southeast and Southwest, with discharge offshore of treatment plants.	~110	0	0	5.5	0	125	2	180	19	7.8	127	77	~170	4700	30,000	2800	8000	Very reliable	23	98	No improvement	Poor	Poor
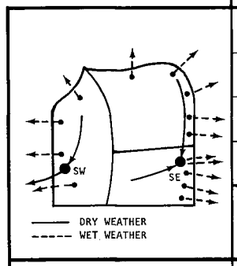	W & D-1	Secondary treatment of dry weather flows at Southeast and Southwest. Primary physical-chemical treatment of wet weather flows at 13 consolidated basin sites. Discharge offshore of treatment plants.	8	28.9	58	15.4	0	210	14	615	37	12.9	65	39	70	2100	32,000	1300	9500	Not as reliable as above alternatives	23	104	Considerable improvement	Some problems, but basically acceptable	Marginal
	W & D-1		4	28.9	58	20.3	0	700	14	695	41	13.0	20	13	25	350	34,000	210	11,000		53	109			
	W & D-1		1	39.2	58	20.3	0	1020	14	865	50	14.3	14	9	7	70	34,000	45	11,000		74	110			
	W & D-1		0.2	42.1	58	20.3	0	1610	14	1000	56	14.7	12	8	2	11	34,000	6	11,000		113	110			
	W & D-2	Same as immediately above with tertiary physical-chemical treatment of wet weather flows.	0.2	86.6	58	20.3	0	730	14	1455	77	16.7	13	18	2	28	34,000	17	11,000		23	104			
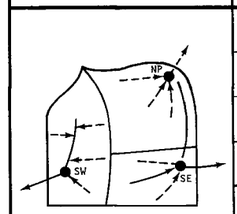	W & D-3	Secondary treatment of dry weather flows at Southeast and Southwest. Primary physical-chemical treatment of wet weather flows at North Point, Southeast and Southwest. Discharge offshore of treatment plants.	8	28.9	58	15.4	0	210	3	585	35	11.2	65	39	70	2100	32,000	1300	9500	Same as W&D 1&2	78	110			
	W & D-3		4	21.9	58	27.6	5.1	940	3	650	40	11.3	18	11	23	270	34,000	160	11,000		111	111			
	W & D-3		1	30.0	58	27.6	5.1	1370	3	810	46	12.3	12	8	8	55	34,000	30	11,000		133	111			
	W & D-3		0.2	39.8	58	27.6	5.1	1660	3	955	53	15.6	12	8	2	11	34,000	6	11,000		23	105			
	W & D-4	Same as immediately above with tertiary physical-chemical treatment of wet weather flows.	0.2	72.1	58	27.6	5.1	880	3	1325	69	13.0	13	7	2	28	34,000	17	11,000		75				
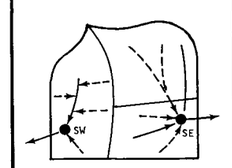	W & D-5	Secondary treatment of dry weather flows at Southeast and Southwest. Primary physical-chemical treatment of wet weather flows at the same sites. Discharge offshore of treatment plants.	8	28.9	58	15.4	0	210	2	620	37	11.1	65	39	70	2100		1300	9500	Same as W&D 1&2	97	112			
	W & D-5		4	24.8	58	29.0	10.9	840	2	710	41	11.4	19	12	23	300	34,000	180	11,000		152	112			
	W & D-5		1	36.9	58	29.0	10.9	1100	2	855	47	11.5	14	8	7	70	34,000	40	11,000		31	120			
	W & D-5		0.2	38.1	58	29.0	10.9	1760	2	995	54	12.2	12	7	2	11	34,000	6	11,000		97	127			
	W & D-6	Same as immediately above with tertiary physical-chemical treatment of wet weather flows.	0.2	68.5	58	29.0	10.9	930	2	1350	70	13.1	12	7	2	25	34,000	15	11,000		121	128			
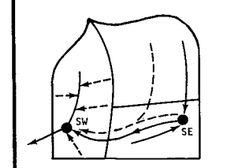	W & D-7	Secondary treatment of dry weather flows at Southeast and Southwest. Primary physical-chemical treatment of all wet weather flows at Southwest. Discharge all treated waste to ocean offshore of Southwest.	8	28.9	58	15.4	6.0	210	1	645	38	11.3	57	47	70	2100	0	1300	42,000	Somewhat less reliable than W&D 1 & 2	187	128			
	W & D-7		4	24.8	58	30.4	13.3	840	1	730	42	11.5	8	24	23	300	0	180	45,000		78	118			
	W & D-7		1	38.1	58	30.4	13.3	1070	1	875	48	11.6	2	20	7	70	0	45	45,000		102	119			
	W & D-7		0.2	39.2	58	30.4	13.3	1690	1	1020	56	12.3	0.3	20	2	11	0	6	45,000		113	120			
	W & D-8	Same as immediately above with tertiary physical-chemical treatment of wet weather flows.	0.2	60.0	58	30.4	13.3	1080	1	1305	69	12.9	1	18	2	19	0	11	45,000		160	136			

FIGURE 7-1
COMPARISON OF OPERATION AND MAINTENANCE COST OF ALTERNATIVE STORAGE AND TREATMENT PROJECTS [a]

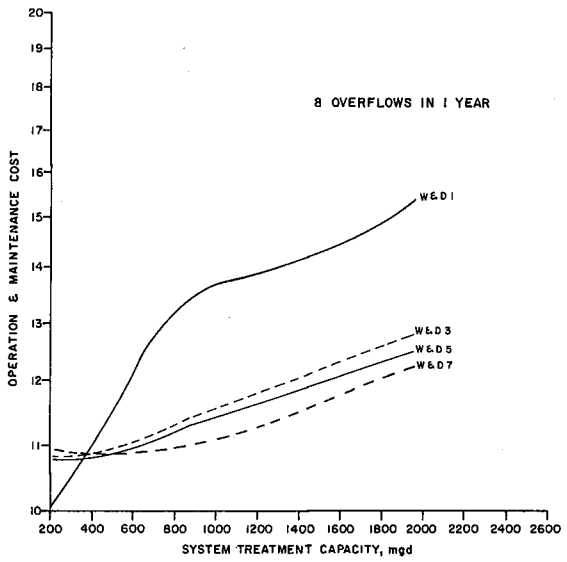

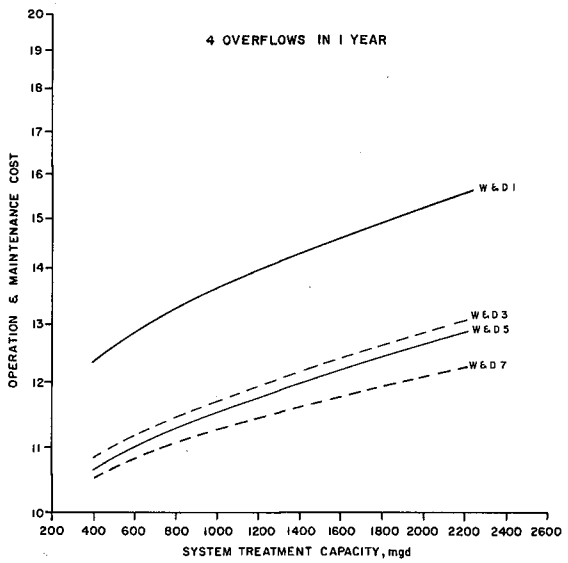

[a] These projects do not have additional transport capacity necessary to take advantage of spatial variation of rainfall.

————	W&D-1 or 2	Wet weather treatment at 14 consolidated outfalls. Primary Physical Chemical Treatment (PP/C) of wet weather flows for W&D-1 and Tertiary Physical Chemical Treatment (TP/C) for W&D-2.
————	W&D-3 or 4	Separate wet weather treatment for each of three existing drainage basins. PP/C for W&D-3 and TP/C for W&D-4.
- - - - - -	W&D-5 or 6	Separate wet weather treatment for areas draining to the Ocean and Bay sides. PP/C for W&D-5 and TP/C for W&D-6.
- - - - - -	W&D-7 or 8	Central Wet weather treatment. PP/C for W&D-7 and TP/C for W&D-8.

See Figure 7-4 for relationship of storage volume to treatment rate capacity overflow frequencies considered.

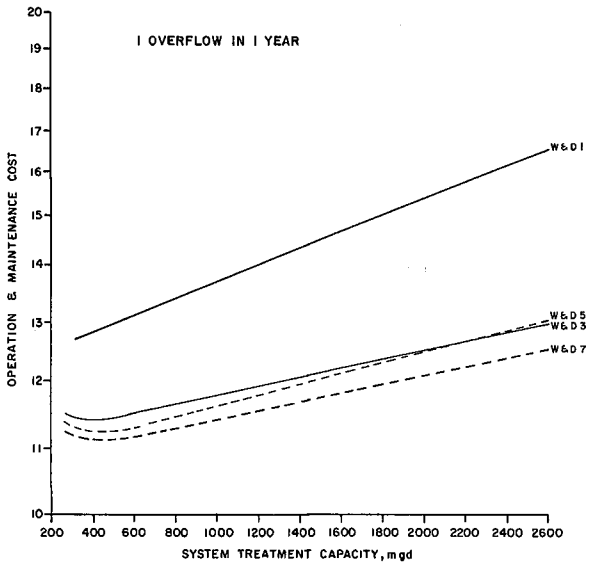

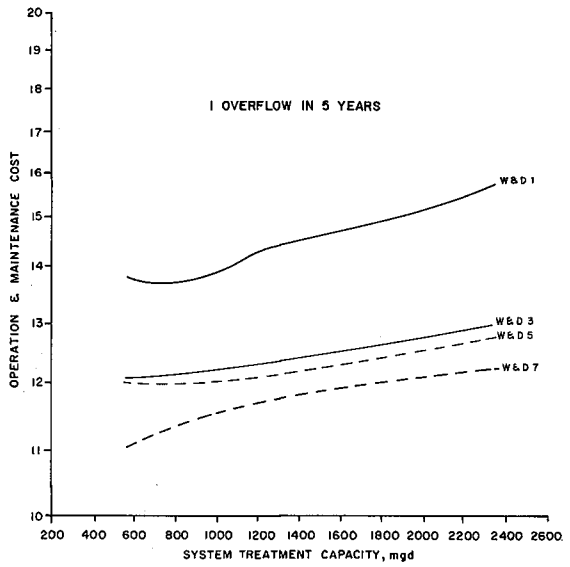

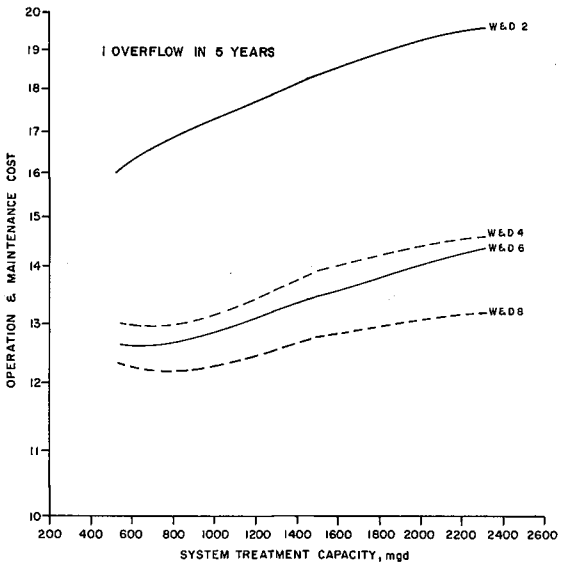

FIGURE 7-2
COMPARISON OF CAPITAL COST OF ALTERNATIVE STORAGE AND TREATMENT PROJECTS [a]

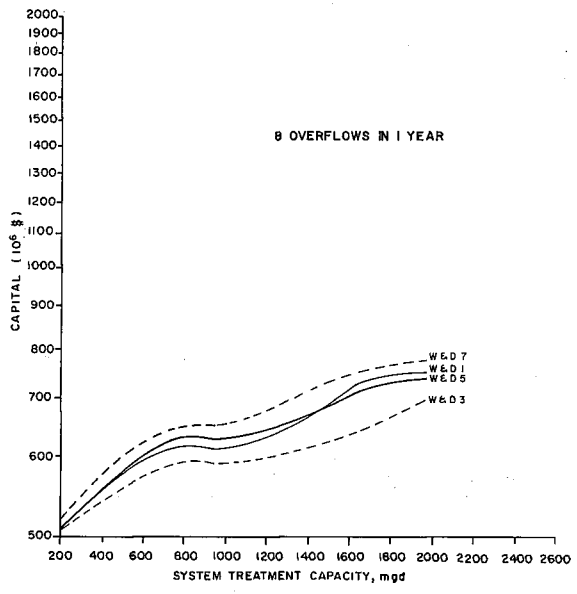

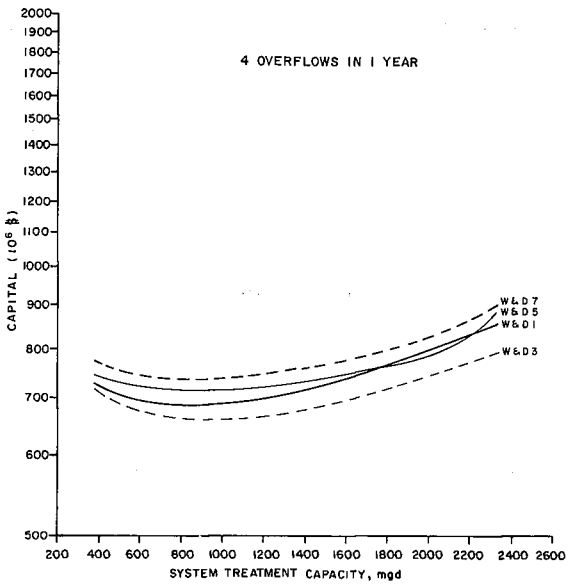

[a] These projects do not have additional transport capacity necessary to take advantage of spatial variation of rainfall.

———	W&D-1 or 2	Wet weather treatment at 14 consolidated outfalls. Primary Physical Chemical Treatment (PP/C) of wet weather flows for W&D-1 and Tertiary Physical Chemical Treatment (TP/C) for W&D-2.
———	W&D-3 or 4	Separate wet weather treatment for each of three existing drainage basins. PP/C for W&D-3 and TP/C for W&D-4.
- - - - -	W&D-5 or 6	Separate wet weather treatment for areas draining to the Ocean and Bay sides. PP/C for W&D-5 and TP/C for W&D-6.
- - - - -	W&D-7 or 8	Central wet weather treatment. PP/C for W&D-7 and TP/C for W&D-8.

See Figure 7-4 for relationship of storage volume to treatment rate capacity overflow frequencies considered.

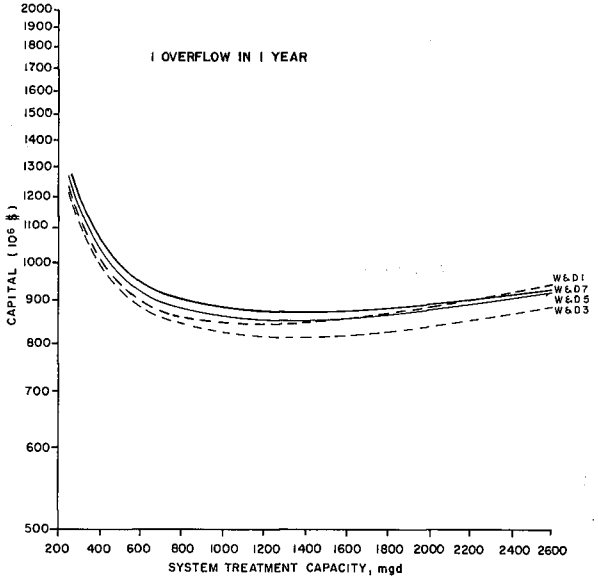

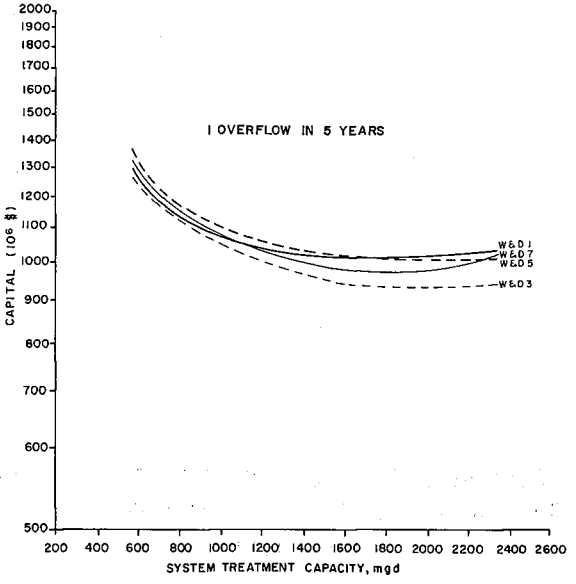

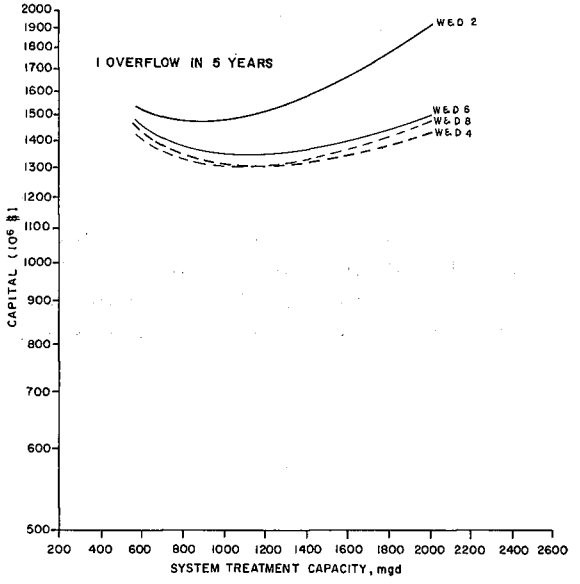

FIGURE 7-3
COMPARISON OF EQUIVALENT ANNUAL COST OF ALTERNATIVE STORAGE AND TREATMENT PROJECTS a/ b/

a/ These projects do not have additional transport capacity necessary to take advantage of spatial variation of rainfall.

b/ 7% interest, 15 year construction period.

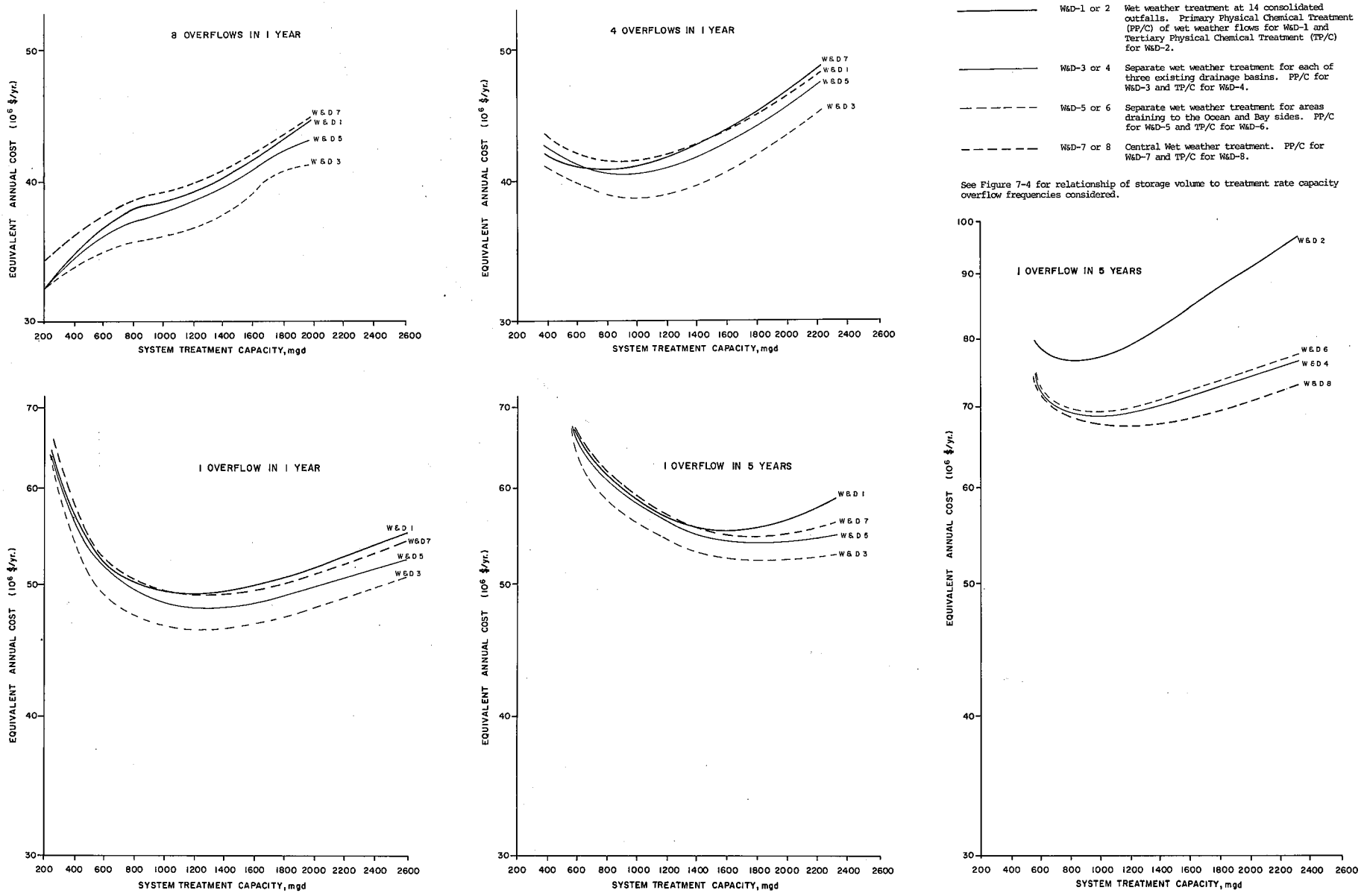

FIGURE 7-4

RELATIONSHIP OF STORAGE VOLUME TO TREATMENT RATE CAPACITY FOR OVERFLOW FREQUENCIES CONSIDERED

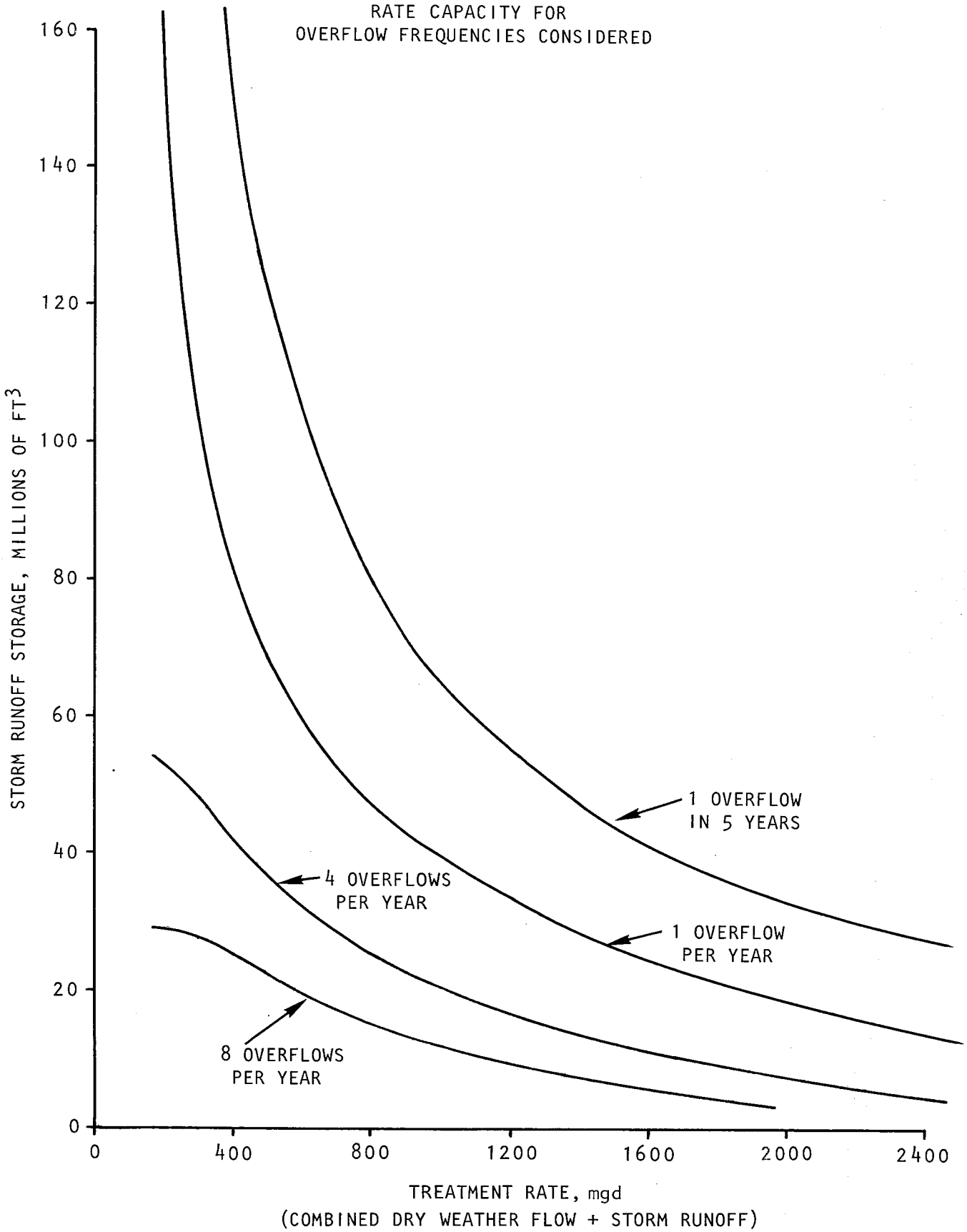

FIGURE 7-5
COMPARISON OF STORM FLOW CAPTURE AND EQUIVALENT
ANNUAL COST FOR 8 OVERFLOWS PER YEAR
FOR ALTERNATIVE W & D 7

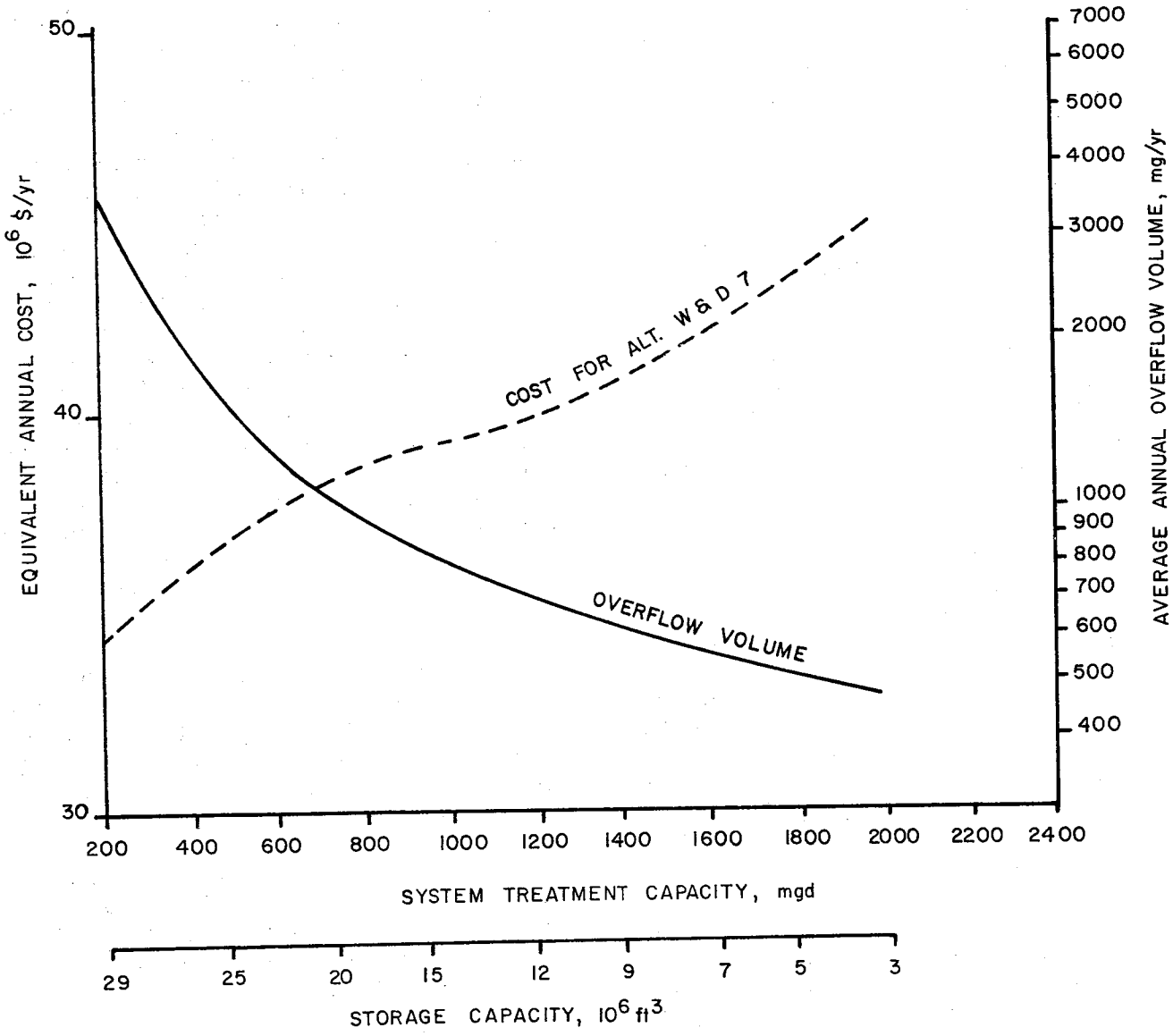

Its cost will exceed $2 billion and is so much more expensive than the other alternatives, particularly considering the benefits, that it can be ruled out as an acceptable alternative. Also unacceptable is the dry-weather-only alternative. It controls dry weather flows only and is the least costly of the action alternatives; however, it fails to meet regulatory requirements for control of discharges from combined sewers and would not improve the present, unsatisfactory quality of the water along the heavily used waterfront. The costs of the storage-treatment alternatives vary depending upon the wet weather control frequency. The differences between various alternatives for combined wet and dry weather for a given level of control are small, in most cases less than 10 percent. As a result, costs alone should not be the basis upon which alternatives are selected.

OVERFLOW FREQUENCY

The overflow frequencies are in part determined by the nature of the alternatives. For sewer separation, overflows would occur to the bay every time it rained. For the no-project and dry-weather-only alternatives, the overflow frequency would be similar to that which now occurs at each of the 41 discharge points. As discussed previously, overflow frequencies for the remaining alternatives have been selected to provide a range of control.

OPTIMUM PROJECT CAPACITIES

The optimum capacities determined from Figures 7-2 and 7-3 are shown on Table 7-1. For alternatives with primary physical/chemical wet weather treatment, storage capacities range from 29 to 42 million cubic feet. For tertiary physical/chemical treatment, the range is from 60 to 87 million cubic feet. These values compare with storage capacities of 9.4, 16.9, 35.6, and 58-0 million cubic feet for Master Plan Alternatives A, B, C, And D, respectively.

The Master Plan treatment capacity of 1,000 mgd city-wide compares with a range of 210 to 1,760 mgd for primary physical/chemical wet weather treatment and a range of 730 to 1,080 mgd for tertiary physical/chemical wet weather treatment.

WATER QUALITY CONSIDERATIONS

Sewer separation provides technical compliance with secondary treatment requirements, but fails to control a significant portion of pollutants that are discharged during the rainy season. It would put San Francisco in a position comparable to that of other communities that are providing a high degree of treatment for municipal sewage, but it would have undesirable construction impacts and a high cost. In addition, primary treatment is provided for some 35 percent of storm flow; none would be treated with separate sewers.

It has been assumed in all alternatives that secondary treatment will be provided for dry weather flows. This current regulatory requirement may be modified in the future for ocean discharges; the city's marine disposal studies and treatment pilot work indicate that an adequate degree of environmental protection can be achieved by a lower degree of treatment. The elimination of the secondary treatment requirement for ocean disposal would have the benefits of reduced capital investment, lower energy requirements, and lower long-term operation and maintenance costs. Such a change in treatment requirements would not affect the selection among the various combination systems for wet and dry weather treatment, but would clearly eliminate consideration of sewer separation and dry weather treatment only. Except for sewer separation, none of the alternatives will eliminate bypass of untreated sewage. The elimination of bypass is a requirement of the Ocean Plan and an indirect requirement of the Basin Plan (due to the requirement for screening of all outfalls). It cannot, however, be achieved because there will always be storms of such magnitude that the costs of control would not be justified.

The reason for the difference between the emission ranking and the floatable deposit potential is that Alternatives W&D-7 and W&D-8 remove the discharge of chronic pollutants from the bay, while the other alternatives continue bay discharge of dry and wet weather treated flows.

The analysis of coliform violations is based on information in the 1971 Master Plan report which relates storage volume and treatment rate to the number of days during which violation of coliform requirements would occur.

The analysis is based on two bacteriological standards now in use for water-contact sports.

- Not more than 20 percent of the samples in any 30-day period may exceed an MPN of 1,000 organisms per 100 ml.

- The median MPN of any five consecutive samples must be less than 240 organisms per 100 ml.

Studies of the city's northern shoreline have indicated that it takes as much as five days following an overflow for the receiving water coliform levels to recede to the 240/100 m. level. The analysis assumed another five days was necessary to develop a median of 240, which results in 10 days of violations per day of overflow. The curves were developed by counting the days of violation using the overflow records for the various storage-treatment combinations using sixty-two years of rainfall records.

It should be noted that when control levels fall below four per year, the degree of control of coliform is quite high; this gives some indication of the desired level of control in heavily used beach areas.

The separation of sewers would comply with State and Federal regulations; the no-project alternative would not. A dry weather treatment program would comply with the NPDES permit requirements, but not with the tentative Basin Plan since the Basin Plan requires a degree of wet weather control. All of the alternatives providing both dry and wet weather control comply with the Basin Plan, with the exception that outfalls are not screened and extended. The costs of screening to extend outfalls would favor alternatives with more storage. All wet and dry weather alternatives would also comply with the Bays and Estuaries Policy and the Ocean Plan (except for the total chromium requirements), providing the Plan is amended to consider storm magnitude and frequency. No matter what type of control system is proposed for any wet weather program, an occasional overflow of untreated waste will occur. The degree of control should ultimately be made part of the Ocean Plan. Information contained in the final Basin Plan, together with the work of the city as outlined in this Facilities Plan can provide the basis for an amendment to the Ocean Plan.

AMOUNT OF WASTE DISCHARGED

This analysis shows the difference between Alternatives W&D-1, 3, and 5, which involve bay discharge, and Alternative W&D-7, which involves ocean discharge. With a control level of four overflows per year, Alternative W&D-7 discharges an average of 8,480 million gallons per year to the ocean and only 300 million gallons to the bay. Under the other alternatives, 3,310 million gallons go to the ocean and 5,470 million gallons go to the bay.

SYSTEM RELIABILITY

The sewer separation and dry-weather-treatment-only alternatives are relatively simple systems and can be constructed with a high degree of reliability. All of the combined storage-treatment-transportation alternatives involve complex control systems, component interaction, and operational problems. These can be minimized by carefully considering power reliability and alternate power sources as well as component design.

Because of San Francisco's proximity to the San Andreas Fault and the history of seismic activity, it is essential that any system be designed to consider earthquake effects. The differences between the alternatives and their susceptibility to damage and consequent reliability are not great. Perhaps the most significant earthquake hazard has to do with the ocean outfall, which is included in W&D-7 and crosses the San Andreas Fault. As with all of the other facilities, the outfall must be carefully designed to reduce damage to a minimum. If the outfall should break, the adverse environmental effects during the period of reconstruction would be limited or nonexistent. Appendix B contains a preliminary report prepared by the firm of Woodward Lundgren, which analyzes seismic conditions and makes recommendations that should affect the design of project components.

Since all wastewater facilities must be designed to pass sewage flows in the event of power failure and since the duration of power failures is likely to be extremely short, the impact on water quality and waterfront uses will be limited. However, the fewer facilities requiring power (such as for sewer separation and dry-weather-only), the lower the risk. All of the combination alternatives have facilities that would be adversely affected by power failure; the greatest risk would be with highly centralized facilities. These have an additional disadvantage: because of the transportation requirement, they will have high power requirements during the time when demands on the power system may be high.

With respect to ease of implementation, it is obvious that construction of new sewers throughout

the city would be extremely difficult. Environmental effects, utility disruption, and traffic congestion would be very great. Conversely, if no project is constructed, there will be no implementation problems. Construction for a treatment plant for dry-weather-only would have limited implementation problems. The problems of implementation for all of the wet and dry weather alternatives would be similar since they involve the same number of retention basins; however, those alternatives with fewer miles of surface pipeline construction would have fewer problems of implementation.

PUBLIC ACCEPTANCE

System acceptability was assessed in the environmental impact review process. The primary public concerns with wet and dry weather alternatives were the location of retention basins in residential areas, the susceptability of the system to seismic damage, and foundation conditions. There was general concurrence that it was desirable for the City to proceed with a plan to control both dry and wet weather flows. Therefore, public acceptability of any alternatives that would not include wet weather treatment would be very poor. Conversely, alternatives including various degrees of wet weather control would be acceptable.

RECLAMATION POTENTIAL

As part of the preparation of the Federal EIS, an analysis was made of the potential for reclaiming wastewaters. Because of the high flow rates and high cost of treating and storing or transporting stormwater flows, reclamation of wet weather flows is not practical. The principal uses that could be served by reclamation are local irrigation, industrial use in the eastern part of the San Francisco Bay area, or irrigation in the Central Valley. The costs of making water available for the latter two uses are very high compared to alternative sources of water. This situation may change in the future. Appendix C contains a discussion of the reclamation options and includes recommendations for increasing reuse for local irrigation. Sewer separation would improve the opportunities for wastewater reclamation since the inflow of highly saline waters from the lower portions of the service area would be eliminated. Otherwise, the alternatives are similar in their effect on reclamation potential; they all include the continued operation of a major dry weather treatment facility at the Southeast location, which is closer to the potential major markets for use of reclaimed wastewater than other treatment sites.

Reclamation of sewage solids must also be considered. At present, the city's sewage solids are concentrated and hauled to land disposal sites in Mountain View or utilized in Golden Gate Park. Those alternatives that provide the highest degree of treatment, particularly biological treatment, will provide more solids that can be used to generate gas, which in turn can be used to run treatment processes or to combine with garbage as an energy source. None of the alternatives would particularly favor the use of sewage solids. Those alternatives with physical/chemical treatment would create solid residue that is less amenable to energy recovery or reuse.

CHAPTER 8

PLAN DESCRIPTION

This chapter describes the recommended long-range plan, shown on Figure 8-1. It is essentially the Master Plan developed by the City during the past several years and consists of a combination of facilities for wastewater treatment, storage, transport, and disposal. The various elements of the plan will be designed as a single program to manage dry weather flows and the flows that occur during the rainy season, as well as industrial wastes. The plan has flexibility to accommodate changes in State and Federal goals, variations in construction costs, and changes in public attitudes with regard to the level of environmental protection. The basic benefits provided include:

1. The elimination of a large percentage of raw sewage bypasses, resulting in a significant reduction in materials that float near the shore or that are deposited on the beach and a reduction in bacterial contamination on the beach and nearshore waters, including shellfish beds.

2. A 70-99 percent (depending on the level of overflow control) reduction in BOD and a 55-99 percent reduction in suspended solids currently being discharged to the bay.

3. A 50-65 percent reduction in BOD and a 30-65 percent reduction in suspended solids now being discharged to the ocean, which, together with a reduction in toxic dissolved materials, will result in a reduction of potential adverse impacts on marine biological communities.

4. Achievement of a significant factor of safety by discharging waste away from the shore in areas which are least sensitive from the standpoint of human and marine ecological protection.

5. Sufficient flexibility to allow for some degree of treatment of all waste as required in the current version of the State's Basin Plan.

In Resolution 451-73, the Board of Supervisors of the City and County of San Francisco approved the Master Plan that was developed by the City as follows:

RESOLVED, That this Board of Supervisors does hereby approve the concepts set forth in the September 15, 1971 Master Plan and as revised in the May 15, 1973 Supplement I; and be it

FURTHER RESOLVED, That the final decision on the location of the ultimate combined flow treatment plant be made after completion of current studies and evaluation of environmental, economic, and land use factors associated with alternative sites, and that the degree of control of wet weather overflows shall be finally determined on the basis of cost effectiveness analysis; and, be it

FURTHER RESOLVED, That said Stage I of the Master Plan be adopted and immediately implemented; and, be it

FURTHER RESOLVED, That the City program for implementation shall be as set forth under Schedule A in Supplement I which is based on Federal and State grants of 87½ percent (87½%) of the cost of eligible facilities and which will be modified to reflect grant availability and any unavoidable delays; and, be it

FURTHER RESOLVED, That the Department of Public Works accelerate its Industrial Waste Program including initiating budget requests sufficient to cover the expense of meeting time schedules of the regulatory agencies; and, be it

FUTHER RESOLVED, That the City continues with its flooding abatement, infiltration control and sewer replacement programs;

The Master Plan and the recommended long-range plan in this Facilities Plan are essentially the same as approved in the Resolution. Possible future variations in the Master Plan have been anticipated in Chapter 12, and decision points and the consequences of these decisions have been identified.

It is important to recognize that the Plan described in Figure 8-1 is a long-range plan. Even with unlimited funding, problems of design, construction, relocation, and environmental impact analysis will require a construction period of at least 15 years.

ELEMENTS OF THE PLAN

Treatment

The basic treatment facility will be a plant located in the southwest part of the city capable of treating about 1000 mgd. Advanced primary treatment will be provided for all wet weather flows and secondary treatment for dry weather flows originating on the west side of the city. A flowchart of this plant is shown in Figure 8-2. Dry weather flows from the east side of the city will be treated at an enlarged secondary treatment plant of 95 mgd capacity located at the present Southeast Treatment Plant site. A flow diagram of the proposed plant is shown on Figure 8-3. Pending completion of the Southwest facility, the Richmond-Sunset Plant will be improved to provide better treatment, and the North Point Plant will be used for treatment of wet weather flows.

Transportation

The transportation system consists of four major facilities and a number of other facilities. The first major facility is a pipeline from the North Point Plant to the Southeast Plant. The pipeline would be built in two sections; the first would be a 66" force main from a Channel Street pumping station to Southeast. This pipe would carry some flows now tributary to North Point and would permit construction of the second section, a 36" force main from Channel Street to North Point, inside an existing larger pipe. Together, the two sections would comprise the North Point to Southeast dry weather transport system. The average dry weather flow to be conveyed would be 60 mgd.

The second major facility is a crosstown tunnel. This tunnel would begin in the North Point District and would convey storm flows from the North Point and Southeast Districts to the Southwest Treatment Plant. As now conceived, the tunnel would transport runoff from a rainfall rate of 0.3 in/hour or 1000 mgd, whichever is less. It would also carry treated dry weather flows from the Southeast Treatment Plant, possibly in a separate pipe.

The third major facility is a group of force mains from the Southeast Treatment Plant to the crosstown tunnel. These would carry treated dry weather flows from Southeast plus some of the storm runoff from that district. It is now planned that runoff from a rainfall rate of 0.3 in/hour could be transported.

The fourth major facility is a west side tunnel which would eventually intercept all wet and dry weather flows, untreated, from the west side district and convey them to the Southwest Treatment Plant. As now conceived, this tunnel would also carry runoff from a rainfall rate of 0.3 in/hour.

The other transport facilities are the force mains from the 15 shoreline basins to the major transport facilities. As now conceived, all of these would have the capacity for flows from a rainfall rate of 0.3 in/hour on their respective tributary areas.

Disposal

An outfall will be constructed from the Southwest Treatment Plant site in two parts. The first part, extending 1-1/2 miles offshore, will convey dry and wet weather, treated wastewaters to an ocean water depth of 50 feet. The second part will convey dry weather flows an additional 2-1/2 miles to an ocean water depth of 80 feet. Specifics of the design will depend on the ocean toxicity study now in progress.

Storage

Peak flows occurring during the rainy season will be stored in a series of 40 underground concrete chambers located at various key points in the collection system. About 25 of these basins will be located under residential streets or other open spaces. The remaining 15 shoreline retention basins will be located primarily in open or street areas that are recreational, commercial, or industrial.

Operation

The above elements will be linked by a central control and operation system. During dry weather, North Point and Southeast District sanitary sewage would be treated at the Southeast Plant. The treated effluent would be transported through the crosstown tunnel to the Southwest Plant. This plant would treat west side sanitary sewage. The combined effluents would be discharged through the longer ocean outfall.

During storms, runoff would be initially stored in upstream and shoreline basins. These basins

FIGURE 8-1
RECOMMENDED LONG-RANGE PLAN

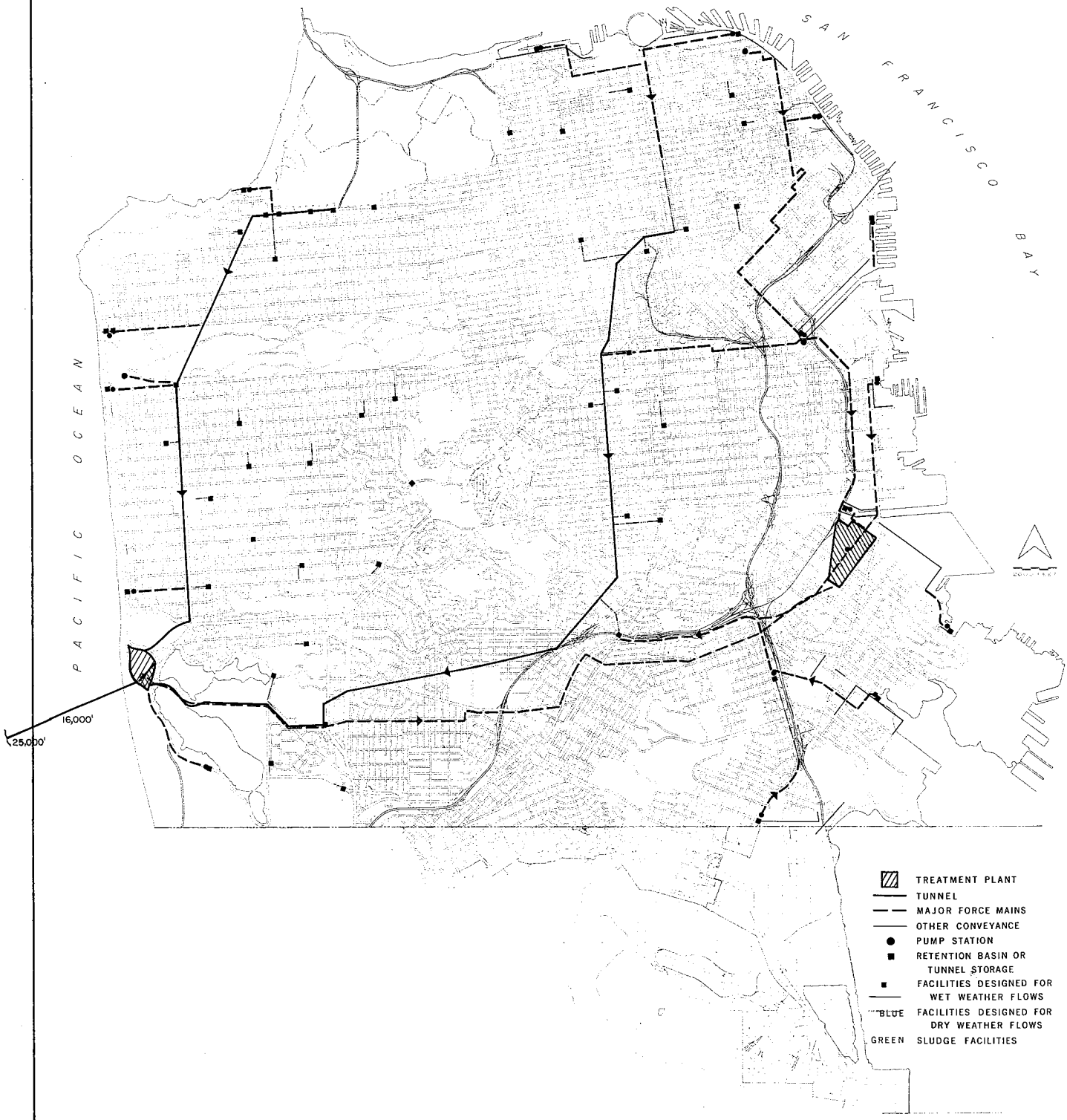

FIGURE 8-2

PROPOSED SOUTHWEST WATER POLLUTION CONTROL PLANT FLOW DIAGRAM[1]

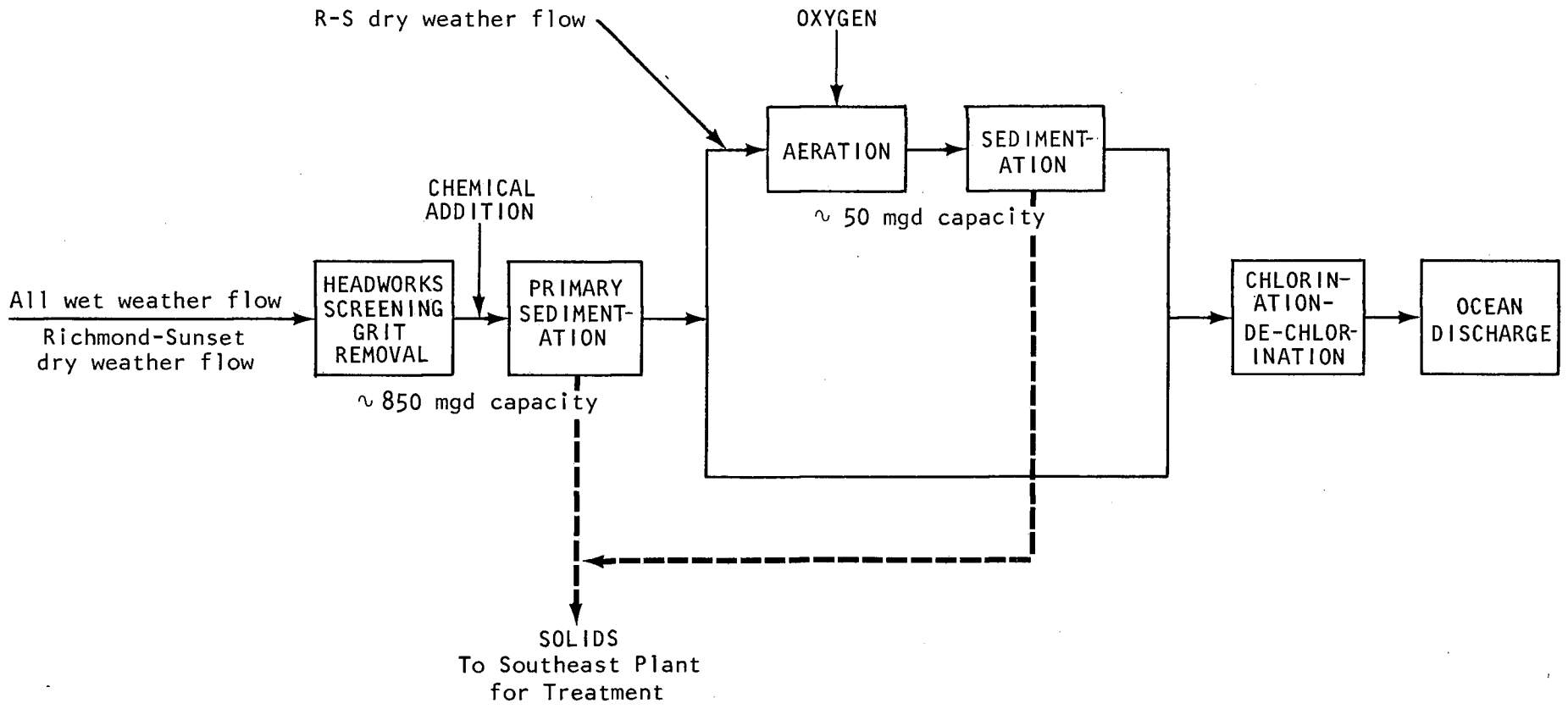

[1]This flowsheet is preliminary pending the setting of discharge requirements by the Regional Board.

FIGURE 8-3
PROPOSED SOUTHEAST PLANT FLOW DIAGRAM

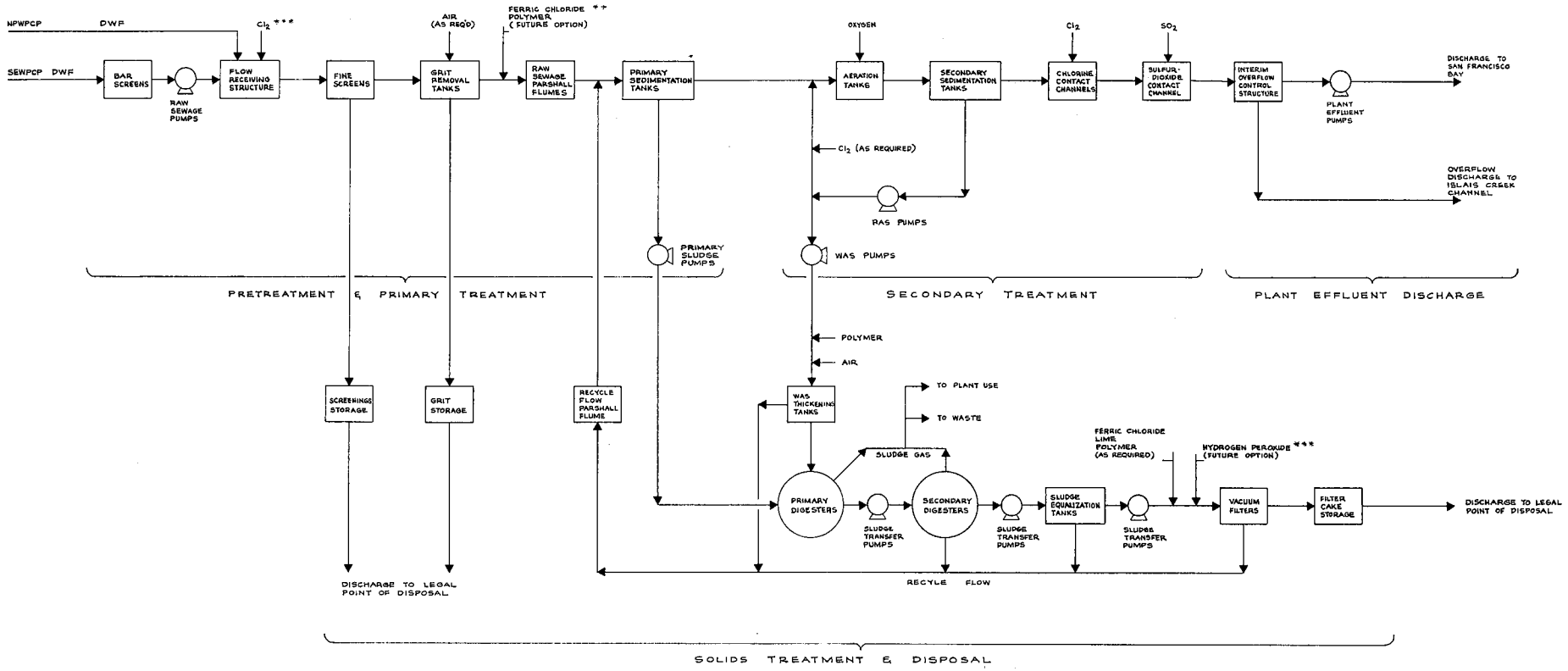

LEGEND:

SEWPCP..... SOUTHEAST WATER POLLUTION CONTROL PLANT
NPWPCP..... NORTH POINT " " " "
RAS ..... RETURN ACTIVATED SLUDGE
WAS ..... WASTE ACTIVATED SLUDGE
DWF..... DRY WEATHER FLOW

REMARKS:

* PUMPING OF DEGRITTED SEWAGE TO EXIST. PRIMARY SEDIMENTATION TANKS MAY BE REQUIRED.
** LOW DOSE FERRIC CHLORIDE TREATMENT.....15-30 MG/L
*** FOR ODOR CONTROL

would be operated by a control system activated by rain gauges located throughout the city. The shoreline basins would be emptied into the major transport facilities. The sequence and rate of emptying of the shoreline basins for each of the 15 drainage areas would be automatically controlled to minimize the number and volume of overflows throughout the city.

Wet weather flows from the North Point and Southeast Districts, as well as Southeast Treatment Plant effluent would be transported in the crosstown tunnel to the Southwest Treatment Plant. This flow would be mixed with the combined sewage from the west side, treated, and discharged through the shorter ocean outfall. The Southeast Plant effluent will likely be carried in a separate conduit within or parallel to the tunnel.

Costs

Costs have been estimated in 1974 dollars. In recent years, construction costs for wastewater facilities have escalated at an annual rate of about 7 percent. In fact, in the preceeding 12-month period, the rate has been 10 percent. If the long-range project is built in about 15 years, and if costs continue to escalate at an average annual rate of 7 percent, the total capital expended at the time of construction will be approximately 900 to 1,700 million dollars, depending on the selected overflow frequency.

It is likely that those facility costs associated with treatment and control of dry weather flows will be eligible for grants. There has, however, been much debate concerning grant priority for facilities to control wet weather flows and for combined sewerage systems. Although these facilities have been given a lower priority at the national and State levels, recent indications are that some of the wet weather facilities will be funded. The effect of the grant program on the San Francisco wastewater program and the first stage of the facilities is discussed in Chapter 11. However, it is reasonable to assume that the scheduling of the Master Plan could be altered depending on the availability of State and Federal grants and on discharge permit compliance schedules. Therefore, the Master Plan should be implemented in stages, and the schedule of implementation as well as the detailed project configurations should be adjusted to reflect changing local, State, and national priorities, new information on water quality conditions, and changing water quality and effluent standards.

Figures 8-4 through 8-8 present cost information for the Master Plan. These figures were prepared by or taken from information prepared by the City. Their cost assumptions varied slightly from those in this report, and these differences are reflected in the curves. The following conclusions can be drawn from these figures:

From Figure 8-4:

- The capital cost of the outfall and solids treatment are not sensitive to treatment capacity.
- Transportation and storage facilities are much more expensive than treatment, solids handling, and the outfall.

From Figure 8-5:

- For 8 overflows/year, the minimum equivalent annual cost occurs for the lowest possible treatment capacity, namely, the 200 mgd required for dry weather flows.
- For the other three overflow frequencies, equivalent annual cost is not sensitive to treatment capacity above certain levels (200 mgd for four/year, 700 mgd for one/year, 1000 mgd for one/five years).
- For these three overflow frequencies, minimum equivalent annual costs occur in the range of 1000 mgd treatment capacity; this implies that if control levels of between four and eight overflows per year or less are contemplated for the future, planning can proceed in the near-term for a Southwest Treatment Plant of about 1000 mgd with assurance that minimum equivalent annual cost will be achieved for the ultimate system.
- Minimum equivalent annual costs range from about 55 million dollars per year for 8 overflows per year to 94 million for one overflow per five years, an increase of about 70 percent.

From Figure 8-6:

- For eight overflows/year, minimum capital cost occurs for a treatment capacity of 200 mgd.
- For the other three overflow frequencies, capital cost is not sensitive to treatment capacity for a fairly wide range (about 500 mgd) around the minimum cost treatment rate for a given overflow frequency.

- For these three overflow frequencies, minimum capital costs occur in the range of 1000 mgd; this implies that if control levels of between four and eight overflows per year or less are contemplated for the future, planning can proceed in the near term for a Southwest Treatment Plant of about 1000 mgd with assurance that minimum capital cost will be achieved for the ultimate system.

- Minimum capital costs range from about 650 million dollars for eight overflows per year to about 1100 million for one overflow per five years.

From Figure 8-7:

- For a given overflow volume, the minimum equivalent annual cost is not sensitive to treatment capacities above 650 mgd (for 850 million gallons overflowing per year) to 1400 mgd (for 20 million gallons).

From Figure 8-8:

- For a given overflow volume, the minimum capital cost is not sensitive to treatment capacities above 700 mgd (for 850 million gallons overflowing per year) to 1200 mgd (for 20 million gallons).

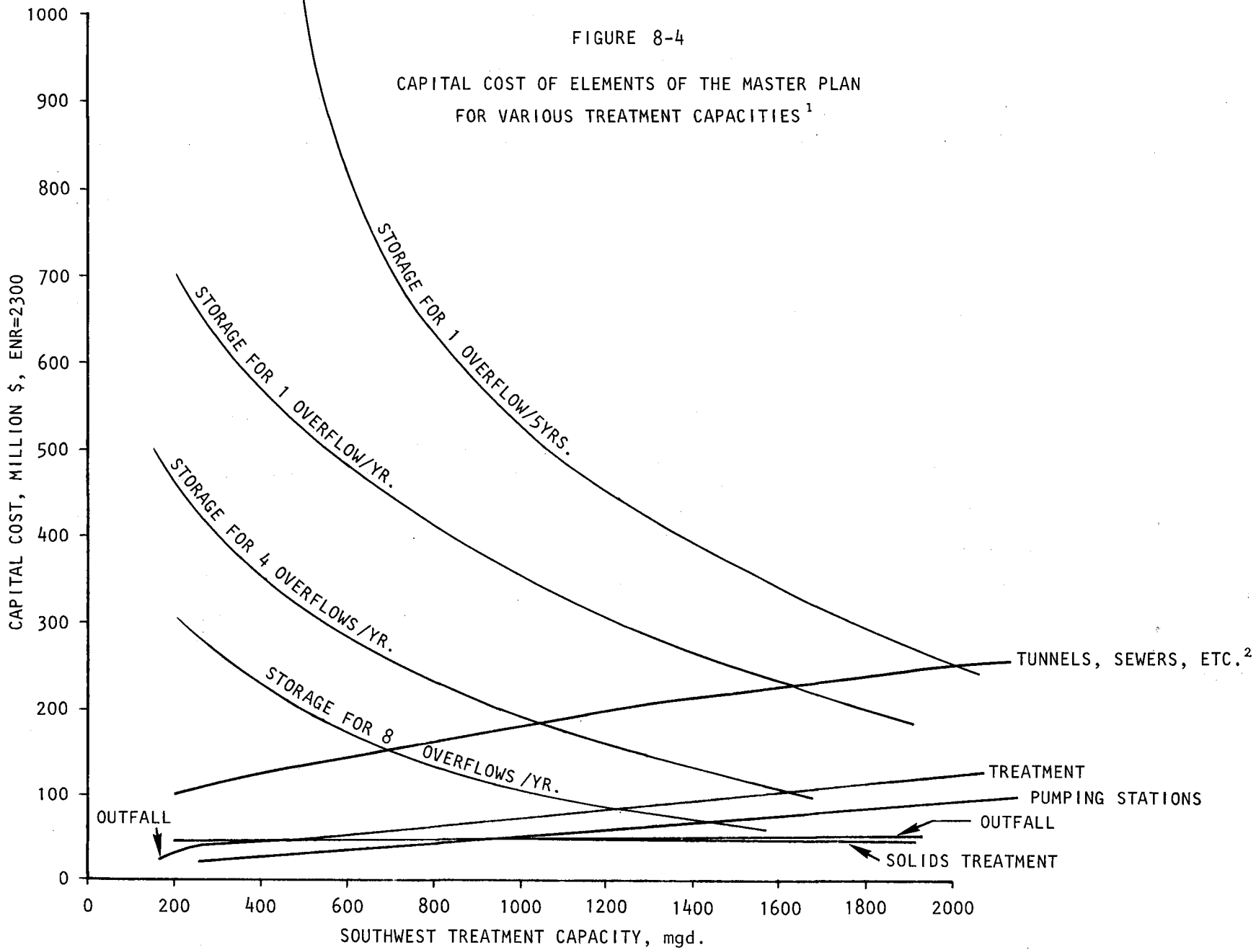

FIGURE 8-4

CAPITAL COST OF ELEMENTS OF THE MASTER PLAN FOR VARIOUS TREATMENT CAPACITIES[1]

[1]Prepared by City of San Francisco [2]Sized for runoff from 0.3 in./hr. rainfall up to a maximum capacity of 1000 mgd for crosstown and west side tunnels.

FIGURE 8-5

EQUIVALENT ANNUAL COST VS. TREATMENT CAPACITY
AND FREQUENCY OF OVERFLOW FOR THE MASTER PLAN

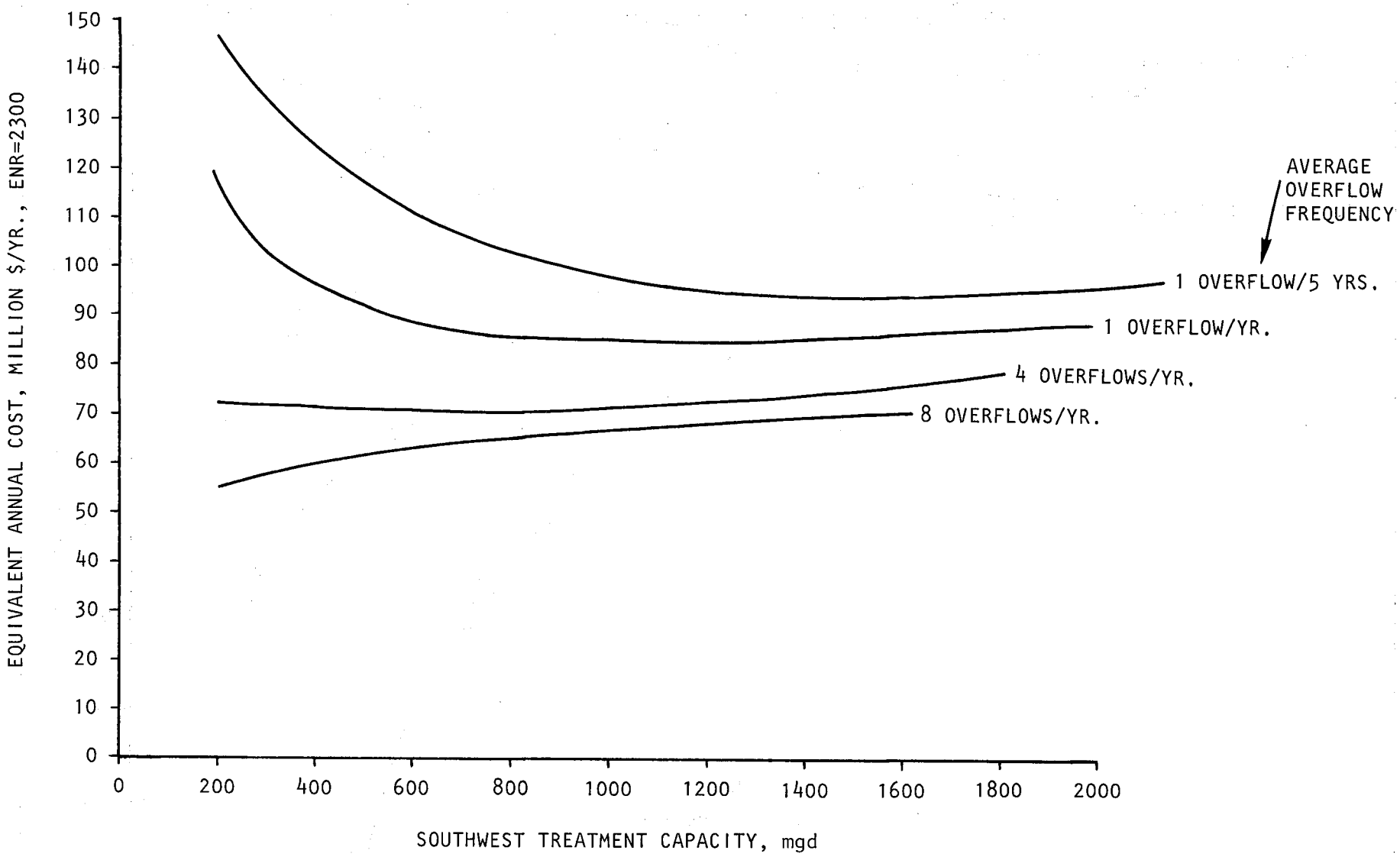

FIGURE 8-6

CAPITAL COST VS. TREATMENT CAPACITY AND FREQUENCY OF OVERFLOW FOR THE MASTER PLAN

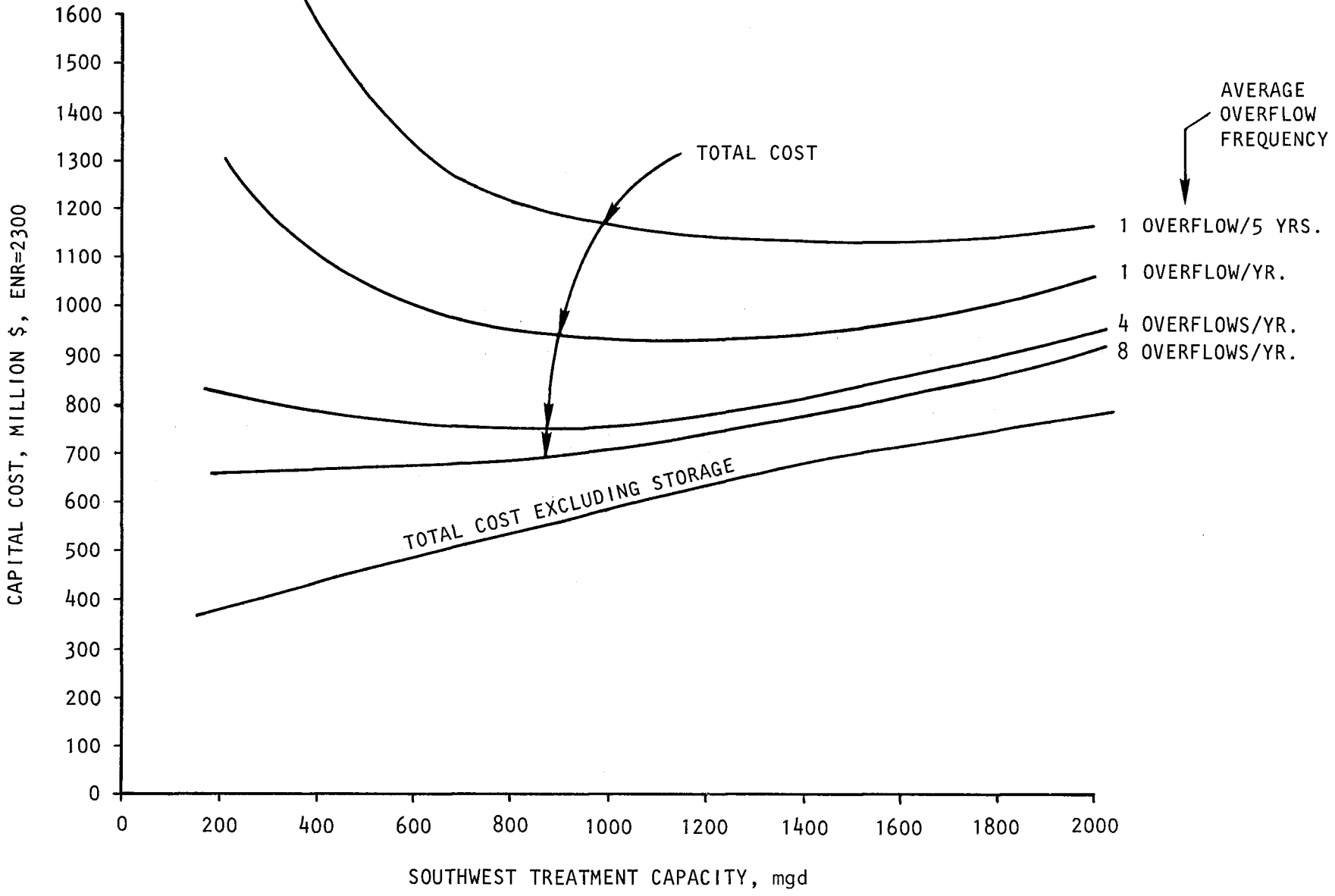

FIGURE 8-7

EQUIVALENT ANNUAL COST VS. TREATMENT CAPACITY AND VOLUME OF OVERFLOW FOR THE MASTER PLAN

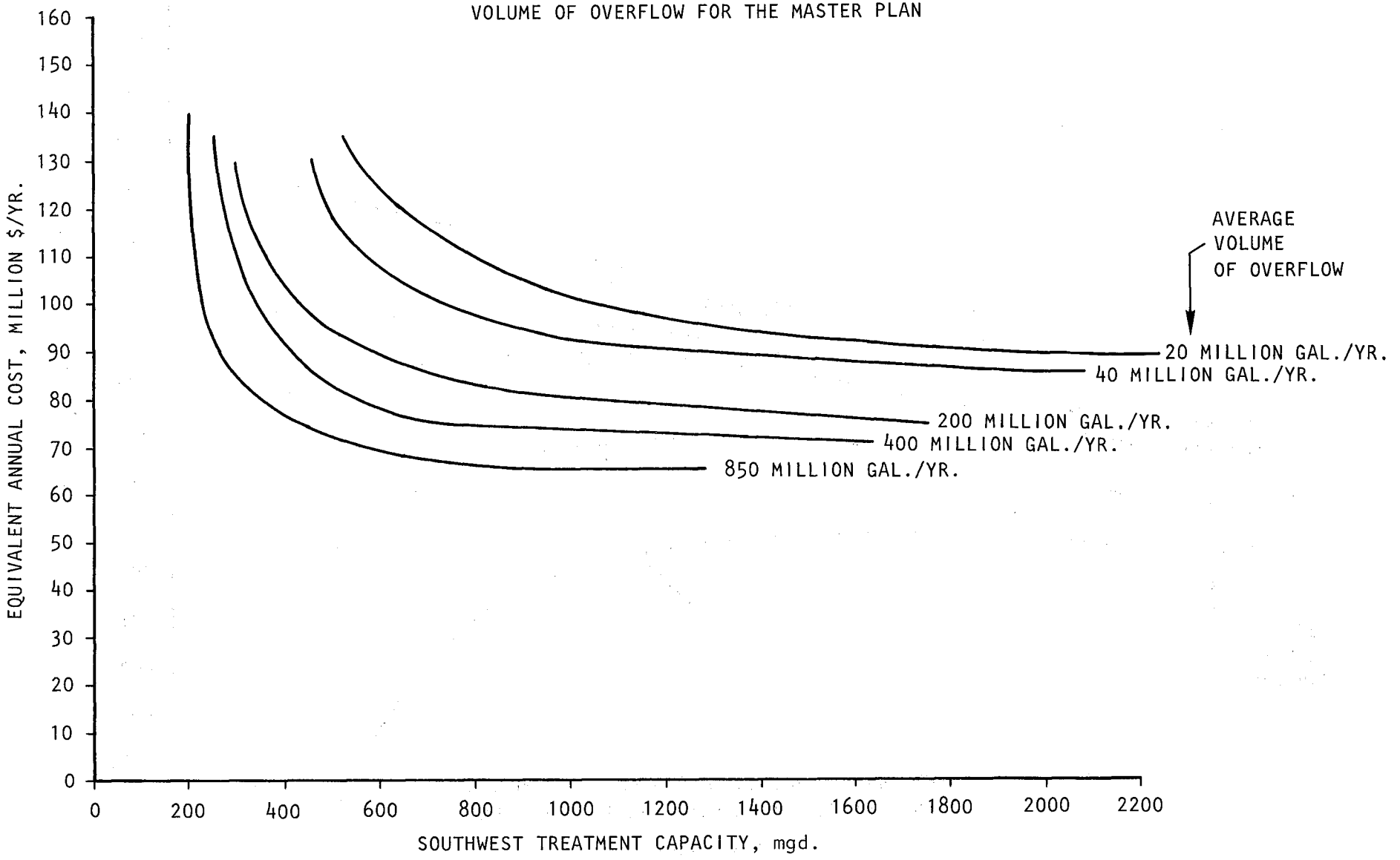

FIGURE 8-8

CAPITAL COST VS. TREATMENT CAPACITY AND VOLUME OF OVERFLOW FOR THE MASTER PLAN

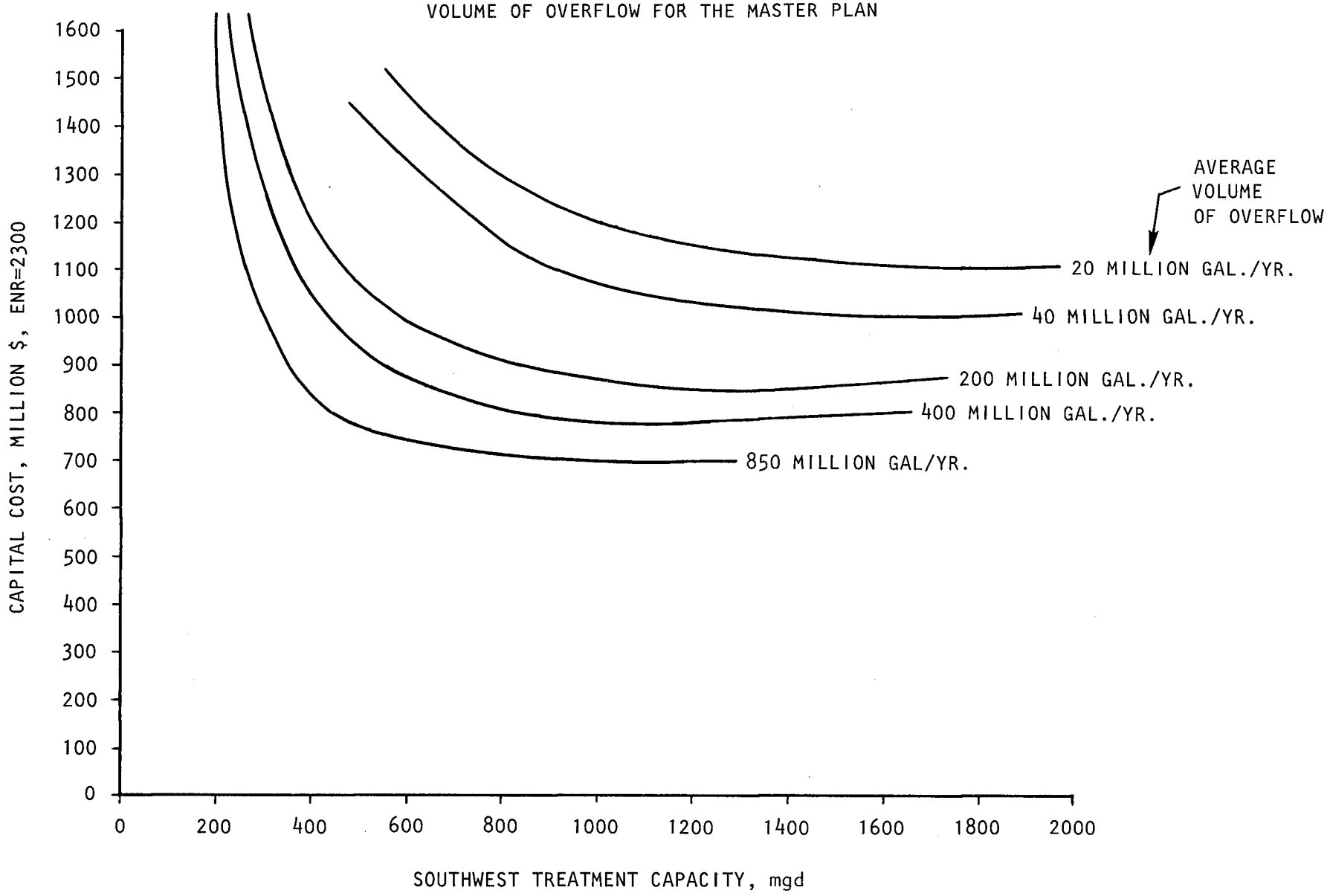

CHAPTER 9

FIRST-STAGE GOALS

Previous chapters have been concerned with long-range plans to meet the ultimate water quality goals of San Francisco. Two types of goals were implicit in the development of a long-range plan. First, there were requirements set forth by law, in particular, the Federal Water Pollution Control Act Amendments of 1972 and local agency regulations that were consistent with the 1972 Act. These requirements, however, were nationwide in scope and did not address the particular nature of the water quality problems faced by the city. The 1972 Act did address the problem of wet weather discharges, and the history of the Regional Board's requirements for wet weather control is extensive. The second goal in the development of a long-range plan was to control wet weather overflows.

WATER QUALITY

The lack of specificity also applies to first-stage water quality goals. These fall into two classes:

1. First-stage projects should conform, to the maximum degree possible, with existing regulatory requirements.

2. First-stage projects should result in maximum protection of beneficial uses of waters of San Francisco Bay.

This chapter identifies and discusses first-stage goals.

Regulatory requirements to be met in the first stage are summarized in Chapter 5 and are set forth in Table 9-1. These requirements do not call for secondary treatment by 1977, in accordance with the 1972 Federal Act. As with other dischargers, it is unlikely that compliance with the 1977 provisions can be achieved by San Francisco. However, the NPDES requirements will expire prior to 1977, and will be revised then to comply with what are anticipated to be more realistic requirements for secondary treatment.

The second class of first-stage goals are listed on Table 9-2. These goals are specific to the City and County of San Francisco and its water quality problems. In general, they call for making the waters of San Francisco Bay and the Pacific Ocean around San Francisco safe for swimming and shellfishing, as well as making the beaches aesthetically acceptable. These goals concern the city's obvious, acute problems. The solution of problems of aesthetics and of direct detrimental effects on aquatic life (shellfish, in this case) has traditionally been a first priority in water pollution abatement. Typically, control of subtler effects, especially from toxicants, is a later objective. However, the City has already begun a program to control the discharge of toxicants to sewers by industry.

In addition, these goals call for a concentration of first-state efforts in certain areas around the city, most notably the Ocean and North Beach areas. Figure 9-1 presents a summary of data that supports the selection of these areas. The figure shows the results of an actual count of waterfront users made during a flight around the periphery of the city. The count was made on a partly cloudy Saturday afternoon during the Thanksgiving holidays, 1974. It shows a concentration of use on the north and west sides and little or no use on the northwest and east sides. These data were generally confirmed by limited data from the City Parks Department, the State Department of Parks and Recreation, and the Golden Gate National Recreation Center. Although there is little recreational use on the east side, there is a shellfish bed off of the southeast shore which requires protection.

The figure also shows graphs of high concentrations of coliform (an indicator of fecal pollution) and floatables indicating a disruption of use during wet weather. The locations of bypass points and treatment plant outfalls are also included. It can be seen that in terms of intensity and degree of disruption of use, wet weather discharge from sewer bypasses should receive a high priority for initial control.

In addition to water quality goals, several other considerations bear on the selection of first-stage projects.

FINANCING

The present availability of Federal and State grant funds, primarily resulting from failure of other communities to expedite planning, design, and construction, provides an opportunity to assure

TABLE 9-1

SUMMARY OF REQUIREMENTS OF NATIONAL POLLUTION DISCHARGE ELIMINATION SYSTEM (NPDES) PERMITS

GENERAL	
Completion of Facilities Plan	February 15, 1975
RICHMOND-SUNSET TREATMENT PLANT	
Compliance with chlorine residual requirement	January 1, 1977
Compliance with source control requirements	June 1, 1978
Completion of planning for secondary treatment	February 15, 1975
Completion of planning for compliance with requirements for:	
Grease & Oil	
Floatables	
Settleable Matter	
Turbidity	
Toxicity	
Dissolved Oxygen	
pH	
Bacteriological limits	February 15, 1975
Compliance with Ocean Plan effluent requirements	July 1, 1978
Beginning of construction of transport facility from Richmond-Sunset to Southwest outfall site	May 15, 1977
NORTH POINT TREATMENT PLANT	
Compliance with Ocean Plan effluent requirements	Upon completion of secondary treatment facilities
Completion of construction of North Point to Southeast transport facilities	June 23, 1981

TABLE 9-1
(continued)

NORTH POINT TREATMENT PLANT (continued)	
Compliance with chlorine residual requirement	October 5, 1975
SOUTHEAST TREATMENT PLANT	
Compliance with chlorine residual requirement	November 1, 1976
Compliance with Ocean Plan effluent requirements	Upon completion of secondary treatment facilities
Completion of land acquisition for treatment plant expansion	March 12, 1977
Beginning of construction of enlarged primary facilities for North Point flows	December 23, 1977
Beginning of construction of secondary treatment expansion	December 23, 1977
Compliance with ammonia and dilution requirements for discharge into Islais Creek	Upon completion of permanent Bay or Ocean outfall facilities
SOUTHWEST TREATMENT SITE	
Approval of site by electorate	November 30, 1975
Completion of planning of Phase I of the Ocean outfall	October 23, 1975

funding of the City's first-stage facilities. In addition, the current high rate of inflation (EPA treatment plant cost index has shown an 18 percent increase in the last year) is another strong motivation to build as much of the first-stage facilities as rapidly as possible. However, if facilities are largely eligible for grants, the amount of local contribution will be small, and the inflationary impact, requiring major City bond issues, will be less. Therefore, from a financing point of view, construction of all stages of the City's program should be expedited as rapidly as possible.

PROPERTY ACQUISITION

In addition to complying with pollution control requirements, the City must comply with its own regulations and due process in acquiring property and rights-of-way, particularly for the Southeast Treatment Plant expansion. The schedule for this acquisition is discussed in Chapter 11. Also, the City must provide for adequate citizen input in the construction of other elements of the program, including the Richmond-Sunset Treatment Plant improvements, the Southwest Treatment Plant site, and the initial retention basins. This will require a thorough environmental review process as required by State law and City ordinance, and is further desirable to assure construction of the most compatible sewerage utility plan.

DESIGN

While much of the technology to be employed in the first-stage facilities is known or available, other features such as the wet weather control system, information system, retention basin details, watershed predictability and performance, and foundation conditions need to be studied in detail so that the design can insure the wisest investment of local, State, and Federal funds. Thus, the key first-stage goal is that design be based upon adequate technical analysis and information.

CONSTRUCTION

The City has had a policy of dividing construction contracts on large projects to insure that a greater number of contractors will submit proposals and that projects will involve the largest number of city businesses and employees. This will result in several contracts for such facilities as the North Point-Southeast Interceptor. Careful planning and coordination by the City will be required to avoid delays in construction.

TABLE 9-2

OTHER FIRST-STAGE GOALS
SPECIFIC TO SAN FRANCISCO

- Provide best possible dry weather treatment.
- Reduce coliform levels in waters off beaches.
- Reduce solids accumulations on beaches.
- Reduce settleable and floatable solids emissions.
- Reduce coliform levels at shellfish beds.

High Priority Areas

- Ocean Beach and Marina Areas
- Northwest Beaches
- Southeast shellfish

FIGURE 9-1
DISTRIBUTION OF TYPE AND INTENSITY OF WATERFRONT USE

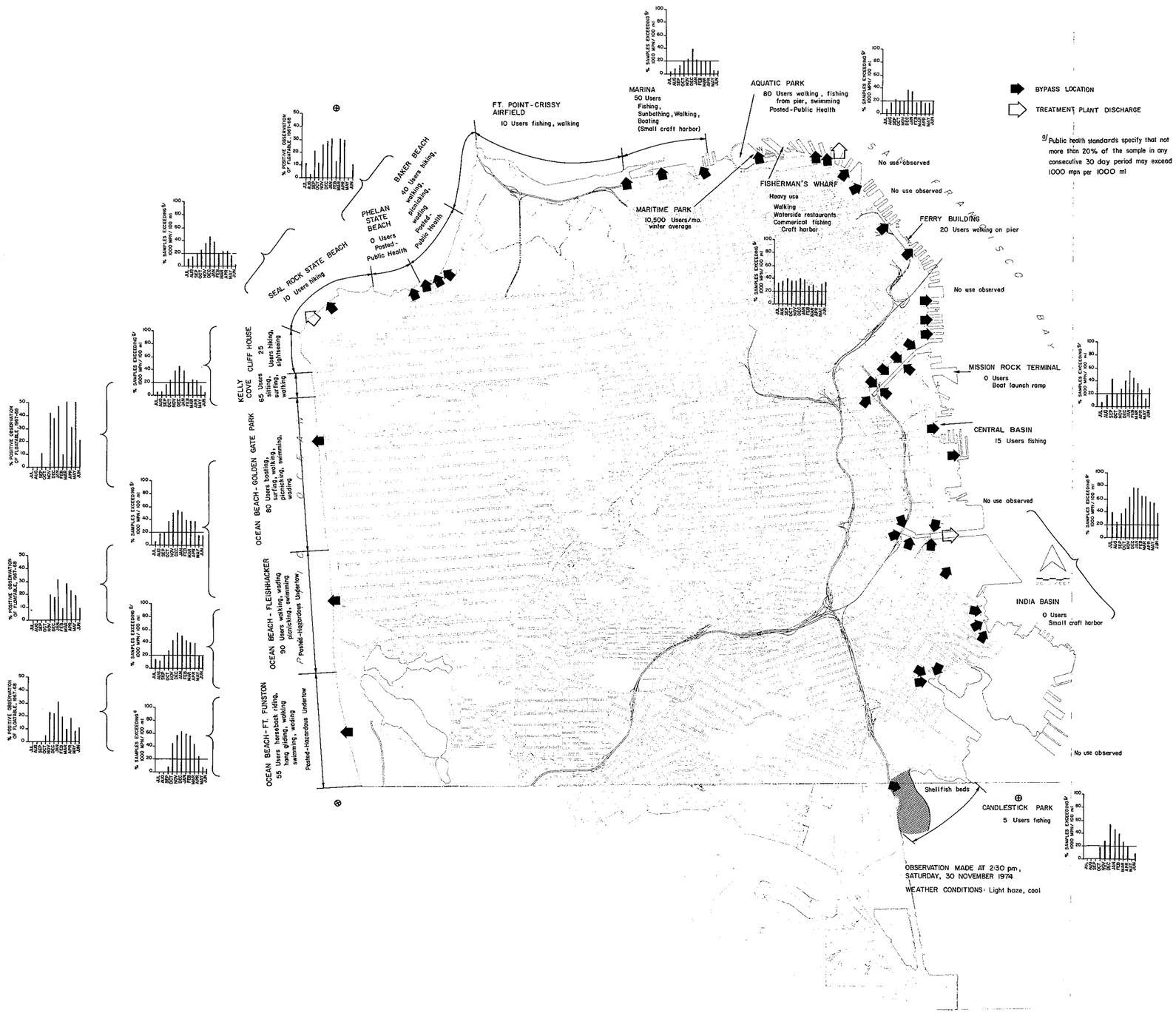

FIGURE 9-1
DISTRIBUTION OF TYPE AND INTENSITY OF WATERFRONT USE

CHAPTER 10

DESCRIPTION AND EVALUATION OF SHORT-TERM ALTERNATIVES

Chapter 9 describes short-term goals. In essence, they are to construct, as rapidly as possible, treatment facilities that will meet the Federal requirements of Public Law 92-500 for secondary treatment and to initiate the projects that will reduce coliform bacteria and floatable materials in the nearshore areas during wet weather. In addition, the short-term actions should be consistent with the best long-term solution recommended in Chapter 8.

DRY WEATHER TREATMENT

Table 10-1 shows the comparative analysis of a variety of processes that were studied in the recently completed pilot treatment program. Tests were also made of advanced physical/chemical treatment. This level of treatment proved to be unnecessary for any current or projected effluent or receiving water limitations. From Table 10-1, two general process alternatives can be selected, physical/chemical treatment using alum or ferric chloride and biological treatment using pure oxygen or air. These are shown on Figure 10-1. Table 10-2 compares the cost of treatment and regulatory compliance at the Richmond-Sunset and Southeast Plants for dry weather flows. The costs not shown in parentheses are based on the chemical dosages found to be necessary in the pilot study. The dosages were high, and to show how sensitive total costs were to chemical costs, additional numbers are shown parenthetically.

The pure oxygen activated sludge system is the apparent best process. The merits of this process as compared to alternative processes are discussed below.

The pure oxygen system produces an effluent meeting regulatory requirements for the least cost. It is not particularly sensitive to variations in industrial loadings, and its area requirements are small.

Both the secondary activated sludge systems and the tertiary physical/chemical systems would produce an effluent that (but for the salinity infiltration problem) could be reclaimed for industrial or agricultural uses.

Table 10-2 shows a major difference in sludge production between the chemical and biological processes. Solids removed in a physical/chemical process include not only sewage solids but large quantities of chemical sludge which must be disposed of to land or reconstituted for reuse in the treatment system. This creates a significant solids handling problem, which in turn involves the use of additional energy. Also, the pilot plant studies concluded that the chemical sludge did not digest as well as biological sludge; digested chemical sludge was less stable, produced less gas, had a reduced potential for reuse as fertilizer in park lands, and resulted in larger quantities of sludge for final disposal.

Power requirements vary significantly among treatment processes. The power requirements for pure oxygen treatment are greater than those for primary physical/chemical systems, but less than those for tertiary systems, not considering the power required to produce chemicals used in the systems. The high purity system can achieve a better degree of treatment than a conventional system with less power input.

The pilot plant studies also showed that the process upset potential was less for biological systems. The chemical systems were sensitive to the changes in pH caused by industrial and wet weather flows.

ALTERNATIVE DRY WEATHER SYSTEMS

Table 10-3 describes the alternatives and their evaluation. Alternative 4 is recommended.

Selection of Alternatives for Evaluation

A number of alternatives were considered. They included the five in Table 10-3 plus others consisting of rearrangements of the elements in those five. Based on a preliminary evaluation of cost, water quality benefits, and site availability, the five shown in the table were selected for a more thorough evaluation. A discussion of the reasons for not expanding the North Point Plant is included in the Appendix along with an analysis of wet weather treatment plant locations which also bears on the choice of alternatives.

Evaluation Criteria

Cost. The first three criteria are measures of cost. Capital cost is important as an indicator of potential cash flow problems. Bond elections will be necessary for the City and grant disbursement is a concern of the State. Operation and maintenance costs must be paid for by the City. Therefore, this criterion is an indicator of the City's long-term obligation. Equivalent annual cost considers both capital and operation and maintenance costs and the time value of money. It is the measure recommended by the State Board.

Time to Implement. This criterion is important because of the urgency imposed on pollution abatement programs. This urgency originates in the national compliance dates set forth in the Water Pollution Control Act Amendments of 1972. It is manifested locally in discharge permits and grant disbursement priorities. Those alternatives with a crosstown tunnel will take longer to construct.

Public Acceptability. The Environmental Impact Report process, the necessity for bond elections, and the sensitivity of the Board of Supervisors to public opinion all make public opinion an important factor in the implementation of these programs. This criterion is a subjective judgement of the opinion of the public.

Water Quality Benefits. This criterion considers the following:

- Location of discharges: Ocean discharge is preferable to bay discharge because of higher dilution.
- Amount of waste treated: The more wet weather flow that is treated, the better.
- Degree of treatment: Secondary treatment is preferred over primary treatment.

Along with cost, this is the most important criterion.

Compatibility with Best Long-Range Plan. The best long-range plan is described in Chapter 8. This criterion considers the loss in sunk investment and the additional cost of second-stage construction that would be required if the long-range plan is developed from each of the alternatives.

Flexibility. Each plan is subjectively evaluated with respect to the total cost of achieving long-range objectives, given the implementation of the alternative, if any of the listed three events occur.

Compatibility with City Planning Objectives. Relevant City planning objectives are as follows:

- Preservation of Fort Funston open space.
- No encroachment into Golden Gate Park.
- No expansion and eventual abandonment of the treatment plant at North Point.

Consistency with these objectives is the basis for evaluation under this criterion.

Evaluation by Integer Analysis

Table 10-3 also shows an integer analysis of the alternatives. The analysis was performed as follows:

1. For each criterion, each alternative was rated on a scale of ten. These ratings are shown in the table. The "best" alternative was rated at "10." The others were rated at less than "10." The "best" alternative was rated at "10" so that no judgement on the importance of the criterion would be made in this step.
2. Each criterion was weighted on a scale of ten. Several weightings were tried; these are shown at the bottom of the table. The most important criteria were given a weight of "10." Several different weightings were used to reflect different attitudes about what is important. Equivalent annual cost and water quality benefits were always rated at "10" because these two criteria comprise "cost-effectiveness," the primary criterion of the value of pollution abatement programs.
3. The overall rating of each alternative was calculated as the sum of the products of the criterion weights and the rating for that criterion. The overall ratings are shown on the right side of the table. The higher the score, the "better" the alternative.
4. The overall ratings were compared.

TABLE 10-1

RESULTS OF PILOT AND PROTOTYPE TREATMENT TESTS[1]

	Units	Standard[2]	Conventional Activated Sludge		High Purity Oxygen Activated Sludge		Ferric Chloride Coagulation				Alum Coagulation						
							Sedimentation Only		w/Filtration and Carbon		Sedimentation Only			With Filtration	w/Filtration and Carbon		
			SE	SE & NP	SE	SE & NP	SE	SE & NP	SE	SE & NP	SE	SE & NP	RS[8]	RS[8]	SE	SE & NP	RS[8]
PHYSICAL																	
Floatables	mg/1	1[3]	2.7	0.2	2.7	0.3	1.3	0.1	0.3	0.1	1.7	0.1	0.2	0.1	0.5	0.1	0.1
Settleable Solids	ml/1	0.1[3]	0.1	0.1	0.1	0.1	0.1	0.1	0.1	0.1	0.1	0.1	0.3	0.1	0.1	0.1	0.1
Suspended Solids	mg/1	30[9]	26	16	26	24	30	19.5	6.3	5	36.8	31	35	7.8	8.6	4.3	2.0
Turbidity[5]	FTU	50[9]	10	6.7	10	9.9	20	4.8	2.7	1.9	22	11	17.2	1.9	9.4	2.7	2.8
CHEMICAL																	
BOD_5	mg/1	30[4]	11.6	7	10	6.9	73	33.9	29.1	14.4[7]	62	33	34	23.5	23.7	5.6[7]	9.4
BOD_5[5]	% Remove	85[4]	94	93	95	96	70	83	88	90	76	81			89	94	
Oil & Grease	mg/1	10[9]	2.6	2	2.6	2.4	2.6	1.6	2.2	1.2	4.6	2.0	4.4	1.0	2.4	1.0	1.8
Phenol	μg/1	500[3]	24	9	30	11	310	50	1	1	300	50	50	50	1	1	4
Metals																	
Arsenic	μg/1	10[3]	1.9	2	2	1.6	1	1	1	1	1	1	1.6	1.4	1	1	1.0
Cadmium	μg/1	20[3]	1	1.2	1	1.3	1	1	1	1	1	1	1.0	1.0	1	1	1.0
Chromium(T)	μg/1	5[3]	95	94	210	140	93	54	25	40	98	71	14	12	26	40	10
Copper	μg/1	200[3]	11	14	18	20	15	8	7.5	40	15	15	16	30	8	10	6
Cyanide	μg/1	0.1[3]	0.01	0.01	0.01	0.01	0.01	0.01	0.01	0.01	0.01	0.01			0.01	0.01	
Lead	μg/1	100[3]	17	18	19	22	8	7	5	5	10	10	25	14	5	5	7.5
Mercury	μg/1	1[3]	1	1	1	1	1	1	1	1	1	1	1	1	1	1	1
Nickel	μg/1	100[3]	46	32	53	40	62	41	45	30	45	27	16	14	15	20	18
Silver	μg/1	20[3]	1.5	3	3	3.2	2.2	1	1.4	2	2.5	2.4	4	3.4	1.1	1	1.3
Zinc	μg/1	300[3]	150	290	220	320	170	200	110	34	140	100	100	130	20	37	130
Nutrients																	
Ammonia	mg/1	40[3]	8.2	0.57	14				14	13.6			13.2	12.4	13.8	13.6	11.4
TCHC	μg/1		0	0.06	0.47	12.4	0.16	0.04	0.028	0.011	0.15	0.07	0.04	0.02	0.019	0.007	0.008
BIOLOGICAL																	
Toxicity	tu	1.5[3]	0	0	0	0	0	0	0	0	0	0	0	0	0.8	0	0

[1] NP and SE data are median values, RS data are mean values.

[2] Most stringent standard.

[3] SWRCB Ocean Plan

[4] EPA secondary treatment standard.

[5] Mean values.

[6] Conventional activated sludge was initrifying.

[7] Carbon column acting as anaerobic biological filter.

[8] Tests conducted with weaker than normal sewage.

FIGURE 10-1
TREATMENT REQUIRED TO MEET
REGULATORY STANDARDS [c]

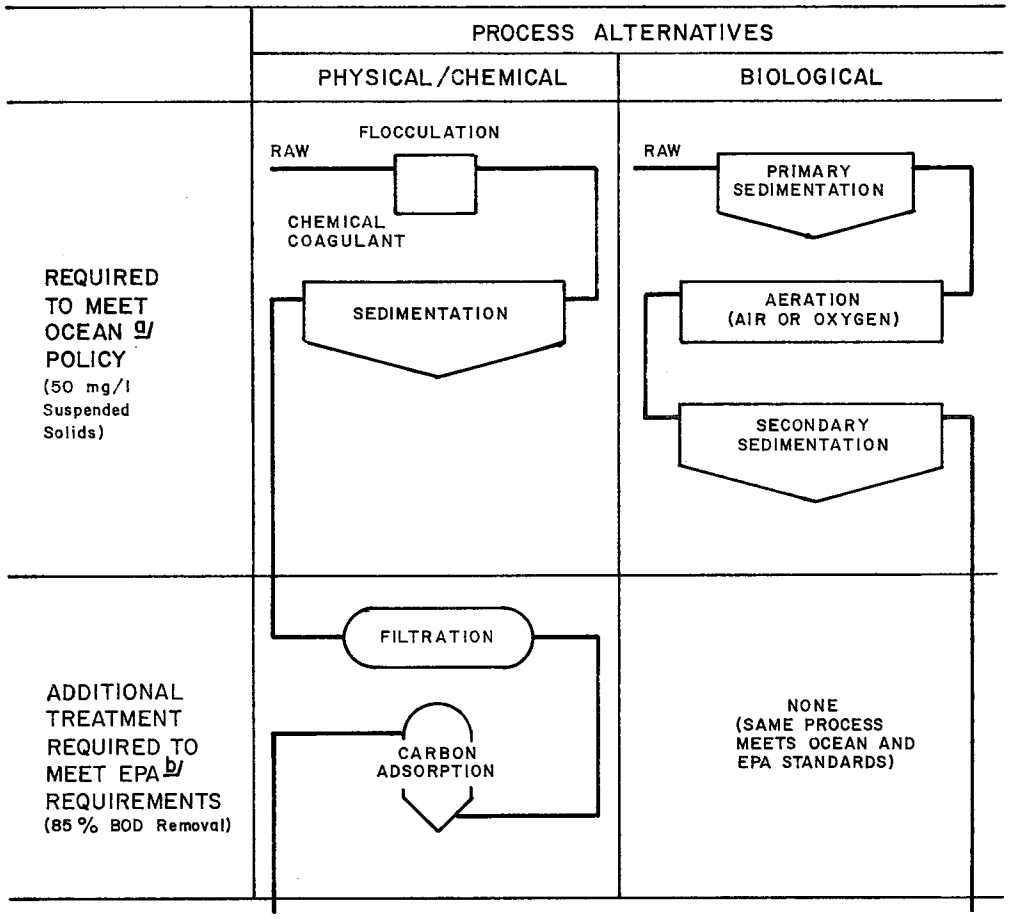

[a] CALIFORNIA STATE WATER RESOURCES CONTROL BOARD. "WATER QUALITY CONTROL PLAN OCEAN WATERS OF CALIFORNIA" JULY 6, 1972

[b] ENVIRONMENTAL PROTECTION AGENCY FEDERAL REGISTER VOL. 38., NO. 159 PART II. "WATER PROGRAMS SECONDARY TREATMENT INFORMATION"

[c] THIS FIGURE TAKEN FROM CH_2M-HILL PILOT STUDY

TABLE 10-2

TABLE 10-2

COMPARISON OF TREATMENT PROCESS ALTERNATIVES[1]

Process	Parameter	Costs (10^6 $-ENR 2300)		Regulatory Compliance		Land Area Requirement (acres/mgd)	Reclamation Potential	Operational Characteristics				
								Solids Handling		Power Requirement ($\frac{10^6 \text{ kw-hr/year}}{\text{mgd}}$)	Chemicals Required (lbs/mg)[8]	Process Upset Potential
		25 mgd @ RS	100 mgd @ SE[5]	Meets Ocean Plan[3]	Meets Sec. Treatment Standards			Quantity Produced (1000 lbs/mg)	Digestibility			
Conventional Activated Sludge	Project Cost[2] Annual O&M Equiv Annual Cost[4]		103.1 4.62 13.47	yes	yes	0.7	Good[7]	1.20	Good	0.9	0	Acceptable
High Purity Oxygen Activated Sludge	PC[2] O&M EAC[4]	23.7 1,12 3.15	94.5 4.23 12.34	yes	yes	0.6	Good[7]	1.20	Good	0.7	0	Acceptable
Primary Physical Chemical with Ferric Chloride	PC[2] O&M EAC[4]		66.3 7.19 (5.77)[6] 12.88 (11.46)[6]	yes	no	0.55	Acceptable[7]	1.95	Acceptable	0.4	2300	High
Tertiary Physical Chemical with Ferric Chloride	PC[2] O&M EAC[4]		149.3 10.96 (9.55)[6] 23.77 (22.36)[6]	yes	marginally	1.0	Good[7]	1.95	Acceptable	0.8	3600	High
Primary Physical Chemical with Alum	PC[2] O&M EAC[4]	10.8 1.81 (1.49)[6] 2.74 (2.42)[6]	69.3 6.93 (5.74)[6] 12.88 (11.69)[6]	yes	no	0.55	Acceptable[7]	2.15	Acceptable	0.5	3000	High
Tertiary Physical Chemical with Alum	PC[2] O&M EAC[4]		152.6 10.69 (9.50)[6] 23.78 (22.59)[6]	yes	marginally	1.0	Good[7]	2.15	Acceptable	0.9	4300	High

[1] Basic data from San Francisco Wastewater Treatment Pilot Plant Study, CH_2 M-Hill, 1974.

[2] [2] Includes a 50% contingency factor.

[3] With exception of total chromium

[4] 7% interest, 25-year service life.

[5] Does not allow for continued use of existing facilities.

[6] Decreased chemical dosage by one-half to determine sensitivity to chemical costs and dosage.

[7] Where salinity of influent is acceptable.

[8] Gross chemical weight excluding chlorine.

TABLE 10-3

EVALUATION OF SHORT-TERM, DRY WEATHER ALTERNATIVES[4]

	CAPITAL COST MILLION $	OPERATION/ MAINTENANCE COST MILLION $/YR.	EQUIVALENT ANNUAL COST MILLION $/YR.	TIME TO IMPLEMENT YRS.	PUBLIC ACCEPTABILITY	WATER QUALITY BENEFITS	COMPATIBILITY WITH BEST LONG-RANGE WASTE-WATER MANAGEMENT PLAN	FLEXIBILITY TO ACCOMMODATE: VOTER DISAPPROVAL OF SOUTHWEST SITE	FLEXIBILITY TO ACCOMMODATE: LESS STRINGENT OCEAN REQUIREMENTS	FLEXIBILITY TO ACCOMMODATE: LARGE-SCALE WATER REUSE[1]	COMPATIBILITY WITH CITY GENERAL PLANNING OBJECTIVES[2]	OVERALL RATING AND RANK FOR VARIOUS CRITERIA WEIGHTS						
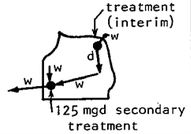	2[3] 265	8 5.8	3 26.6	7 9	5 Location of all secondary treatment at the southwest site will likely necessitate expansion outside of the zoo property; opposition could be expected.	10 Achieves the most benefits. Removes dry weather discharge from the bay, provides secondary treatment for all dry weather flows, and provides primary treatment of some wet weather flows from north area. Some reduction of near-shore, wet weather discharge on west side.	5 Compatible except for location of all secondary treatment at southwest. There would not be enough room for the future wet weather treatment plant. Minor improvements at North Point would not be needed ultimately.	2 Poor	6 Poor; would not need secondary treatment at southwest site.	3 Poor; would want dry weather flows at southeast	3 Not good; future wet weather treatment at southwest site will likely infringe on land planned for uses incompatible with wastewater treatment.	280 ⑤	263 ⑤	252 ⑤	130 ④	170 ⑤	188 ④	202 ④
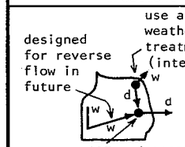	4 225	9 5.7	6 23.4	7 9	7 Expansion of the Southeast Plant will result in neighborhood objections.	3 Not as good as above. All dry weather and some west side wet weather flows would be discharged to bay instead of ocean	4 Southwest-to-southeast line would have to be designed for flow in opposite direction to avoid severe incompatibility. Location of all dry weather treatment at southeast is somewhat incompatible. Minor improvements at North Point and southeast outfall would not be needed ultimately.	10 Good	6 Poor; would want to discharge all flows to ocean without secondary treatment. Would want to treat west side flows at southwest.	10 Best; has all dry weather flow at southeast.	10 Good; Richmond-Sunset abandoned early, North Point later.	358 ④	330 ④	296 ④	90 ⑤	216 ④	168 ⑤	182 ⑤
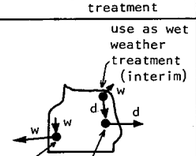	6 195	5 6.3	7 22.6	10 7	10 Slightly less objection at Southeast than for immediately above.	7 Better than immediately above because the west side wet weather flows that are intercepted would go to the ocean through a deep outfall rather than to the bay. Not as good as the first alternative because of bay discharge of some treated, dry weather flow.	9 All elements are compatible except minor improvements at North Point and southeast outfall.	6 Not good, but better than first alternative	6 Poor; secondary treatment would not be required at southwest.	8 Good	10 Good; same as immediately above.	436 ②	401 ②	367 ②	140 ③	220 ③	236 ③	256 ③
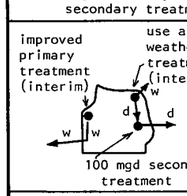	8 172	10 5.6	10 20.0	10 7	10 About the same as immediately above.	5 Not as good as immediately above because only primary treatment would be provided for west side, dry weather flows.	7 All elements are compatible except minor improvements at North Point, southeast outfall, and Richmond-Sunset improvements.	10 Good	10 Good; only primary treatment is provided for ocean discharge.	8 Good	8 Better than first alternative because expansion at Richmond-Sunset would be minor.	464 ①	427 ①	399 ①	150 ②	230 ②	258 ①	278 ①
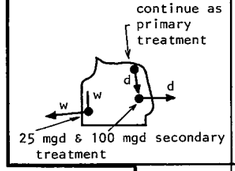	10 156	4 6.5	10 19.5	10 7	9 About the same as immediately above with the possibility of objection to continued use of North Point on a continuous, dry weather basis.	6 Not as good as other alternatives because north area wet weather flows would not be treated. Better than second because west side dry weather and some wet weather flows are discharged to bay instead of ocean.	10 All elements are compatible except southeast outfall.	6 Not good, but better than first alternative	6 Poor; same as for third alternative.	8 Good	5 Not quite as good as third alternative; implies long-term use of North Point.	421 ③	387 ③	364 ③	160 ①	232 ①	250 ②	270 ②
CRITERIA WEIGHTS MOST IMPORTANT = 10	1	2	10	2	8	10	6	6	2	0	0							
	1	2	10	2	6	10	5	5	2	1	7							
	1	2	10	0	8	10	3	4	2	1	4							
	0	0	10	0	0	10	0	0	0	0	0							
	0	0	10	0	8	10	0	0	0	0	0							
	1	2	10	0	8	10	0	0	0	0	0							
	1	2	10	2	8	10	0	0	0	0	0							

w = designed for ultimate wet weather capacity.
d = designed for dry weather capacity.

[1] Assuming reduction of salinity of dry weather flows; without reduction, water would not be reusable.

[2] These consist of no expansion at Richmond-Sunset or North Point, and generally encourage early abandonment of these facilities, especially Richmond-Sunset.

[3] Rating - The "best" alternative is rated at 10. Others receive lower ratings with the lowest possible being "0".

[4] See text for explanation of integer analysis.

TABLE 10-3
EVALUATION OF SHORT-TERM, DRY WEATHER ALTERNATIVES[4]

The integer analysis shows that the fourth alternative always has the highest or second highest overall rating. When it is second highest, it is close to the highest ranking alternative. It is therefore concluded that the fourth alternative has consistently the highest rating and is the preferred alternative.

INITIAL WASTEWATER STORAGE AND RELATED FACILITIES

The major goals to be considered in selecting the first storage facilities are as follows:

- achievement of a significant level of control of the discharge of coliform bacteria and floatable materials.
- minimization of construction and operational impacts.
- provision of the greatest compatibility with the first-stage facilities.

Table 10-4 provides the basis for narrowing the alternatives in first-stage storage facilities. An important factor is the problem of public acceptability. While there may be some objections to the location of downstream basins, these locations are preferable to the construction of upstream basins on streets with heavy traffic where construction operation impacts on commercial and residential activities may be significant. Experience with the first-stage projects should result in plans for upstream retention basins that will be acceptable; however, initial reaction of the Wastewater Citizens Advisory Committee and the public in the environmental impact process has indicated great concern over the construction of upstream retention basins. It is therefore essential that initial projects include basins that have minimum construction impact while providing a significant degree of water quality benefit.

The purpose of the Overview Facilities Plan is not to identify specific first-stage basins, but to provide the framework for a Project Report/EIR which will develop the specific initial project. The information developed from construction and operation of the first basin or basins should be added to the results of physical modeling and central control studies to provide the basis for planning future basins and related facilities.

OTHER INITIAL FACILITIES

The tentative Basin Plan which has been drafted by the Regional Board for consideration early in 1975 provides for the screening of bypassed wet weather flows and the extension of all outfalls to a point where a 10:1 dilution can be obtained. The specifics of these requirements will not be known until the final Basin Plan is adopted. However, it is possible that the Regional Board will require some degree of control of even the very infrequent overflows occurring after implementation of the long-range program; therefore, the City will undertake a planning program to determine the cost effectiveness of various types of screening processes and of extending various outfalls. These two studies are described in Chapter 13.

Beach Cleaning

The City will soon test and evaluate a beach-cleaning device for use in removing fecal matter, grease balls, and other sewage solids from beaches following sewer system overflows. If the device performs as expected, the Department of Public Works will initiate actions with respect to beach cleaning. The cost of the beach cleaners is about $30,000 per unit.

TRANSPORT SYSTEMS

There are various wastewater transportation systems that can be used in the projects shown on Table 10-3.

North Point-Southeast

This interceptor sewer is the subject of a separate Project Report and EIR and has been given State and Federal approval. It will transport dry weather flows from the North Point Plant to the Southeast Plant. The report includes a discussion of alternative routings. The proposed route is shown on Figure 10-2. This project is expected to be under construction in 1975; it will be constructed in two sections under several contracts. The southern section consists of a pumping station and force main. This section must be completed before construction of the northern section is begun so that the existing gravity sewer in which the northern section will be laid will no longer be in use.

West Side Transport and Outfall

Both dry and wet weather flows from the Rich-

mond-Sunset Treatment Plant site to the ocean outfall will be intercepted by this facility. It will be constructed as a tunnel as preliminarily shown on Figure 10-2. There are a variety of alternative routes that can be selected. Important factors bearing on the selection are:

- Location with respect to upstream drainage areas.
- Location of existing trunk sewers.
- Operation of Richmond-Sunset.
- Location of storage basins.
- Outfall configuration.

These factors, together with local environmental impacts, will be analyzed in a separate Project Report/EIR, which is shown on the Stage 1 Schedule (Figure 11-2).

In addition, the outfall should be constructed in the first stage, as discussed in earlier chapters on the long-range plan. The first portion of the outfall provides service during both dry and wet seasons and will convey wastewaters to a distance of approximately 1-1/2 miles from shore to a depth of 50 feet. This will provide for an initial dilution of approximately 16:1. This outfall facility will be the subject of a separate Project Report and EIR. Study of locations and seismic conditions, and analysis of foundation conditions will be necessary to determine the final specific alignment and design.

CONCLUSIONS

Water quality goals, regulatory requirements, site limitations, public attitudes, and design and construction constraints combine to establish criteria that result in a recommended first-stage project discussed in Chapter 11. The basic conclusions from the foregoing alternative analysis are:

- The pure oxygen activated sludge process provides the best treatment of wastewater, particularly when raw wastewater quality, site limitations, and solids handling performance are considered.
- The Southeast Treatment Plant should be expanded to provide for secondary treatment of dry weather flows from the North Point and Southeast service areas using the existing site as a basis for expanded facilities.
- Public health and aesthetic conditions require early construction of retention basins in the north and west waterfront areas, where initial basins can be built with the least impact.
- Wastewater transportation systems and, particularly, a project to intercept wastewaters on the west side and dispose of them through an ocean outfall should be constructed in anticipation of the availability of the Southwest treatment site.
- The Richmond-Sunset Plant should be upgraded to improve effluent quality and/or solids handling.
- A number of alternatives for first-stage construction should be reconsidered in the light of future changes in policy or public attitudes (see Chapter 12), but implementation should proceed rapidly on the recommended program described in Chapter 11.

TABLE 10-4

TABLE 10-4

COMPARISON OF ALTERNATIVE INITIAL STORAGE BASINS

Basin	Storage Volume (10^6 ft^3)	Master Plan Storage Alternative	Project Cost (10^6\$) ENR 2300	Initial Control						Compatibility With Long Range Plan	Flexibility		Reliability	Implementation				Compatibility With Local Planning		Construction Disruption
				Areas Benefitted	Shoreline Overflow Frequency (#/year)	Percent Reduction of Overflow Vol.	Wet Weather Treatment Site	Disposal Location of Controlled Stormwater	Days of Coliform Violation (days/yr)[4]		Upstream Basins Not Used in Future	North Point Continues to Operate as DW Facility			Construction Area Land Use	Construction Materials	Power for Operation			
21-1 In Presidio NP Treatment	0.37	B	27.0	Marina	2	98	NP	NP Outfall	20	Acceptable	Good	Poor	Acceptable	Acceptable	Government land, residential & commercial streets	Greatest	Signifi.	Acceptable	Acceptable	Greater
21-1 Webster Street Baker Street Treatment	0.37	B	9.1	Marina	24	48	Baker St.	Baker St. Outfall	110	Acceptable	Good	Acceptable	Acceptable	Acceptable	Recreation lands	Greatest	Signifi.	Acceptable	Marginally Acceptable	Moderate
21-1 Webster Street NP Treatnebt	0.37	B	18.1	Marina	2	98	NP	North Point Outfall	20	Good	Good	Poor	Acceptable	Acceptable	Recreation lands, residential & commercial streets	Greatest	Signifi.	Acceptable	Marginally Acceptable	Greater
24-1	0.28	B	7.8	Fisherman's Wharf, Aquatic Park	≅0.1	99+	NP	North Point Outfall	1	Good	Good	Poor	Acceptable	Acceptable	Commercial Street	Greatest	Signifi.	Acceptable	Acceptable	Moderate
14-1	0.14	B	5.7	Mile Rock	<0.01	99+	None	Ocean Outfall off Lk Merced	<1	Good	Good	Good	Acceptable	Acceptable	Recreation area streets	Greatest	Signifi.	Acceptable	Acceptable	Moderate
Consolidate 14-1 and 2	0.52	B[1]	9.1	Mile Rock	0.2	99	None	Ocean Outfall off Lk Merced	2	Good	Good	Good	Acceptable	Acceptable	Recreation area streets	Greatest	Signifi.	Acceptable	Acceptable	Moderate
Consolidate 14-1,2 & B-1	1.06	B[1]	17.8	Cliff House to Pacheco Street	2	99	None	Ocean Outfall off Lk Merced	20	Good	Good	Good	Acceptable	Acceptable	Recreation area streets	Greatest	Signifi.	Acceptable	Acceptable	Moderate
13-1	0.54	B	9.2	Cliff House to Pacheco Street	2	98	None	Ocean Outfall off Lk Merced	20	Good	Good	Good	Acceptable	Acceptable	Recreation area streets	Greatest	Signifi.	Acceptable	Acceptable	Moderate
12-1	0.25	B	5.9	Pacheco St to Lk Merced	2	98	None	Ocean Outfall off Lk Merced	20	Good	Good	Good	Acceptable	Acceptable	Recreation land, residential streets	Greatest	Signifi.	Acceptable	Acceptable	Moderate
11-5	0.17	B[2]	1.98	Reduced Street Flood.	≅115[3]	NA	RS	Mile Rock Outfall	≅170[3]	Good	Poor	Good	Excellent	Questionable	Commercial street	Least	Insigni.	Acceptable	Acceptable	Moderate
12-2	0.25	A	3.30	Reduced Street Flood.	≅115[3]	NA	RS	Mile Rock Outfall	≅170[3]	Good	Poor	Good	Excellent	Questionable	Residential street	Least	Insigni.	Acceptable	Unacceptable	Moderate
12-4	0.10	A	1.52	Reduced Street Flood.	≅115[3]	NA	RS	Mile Rock Outfall	≅170[3]	Good	Poor	Good	Excellent	Questionable	Residential & commercial street	Least	Insigni.	Acceptable	Unacceptable	Moderate
12-5	0.11	A	1.47	Reduced Street Flood.	≅115[3]	NA	RS	Mile Rock Outfall	≅170[3]	Good	Poor	Good	Excellent	Questionable	Residential street	Least	Insigni.	Acceptable	Unacceptable	Moderate
13-11	0.27	B[2]	3.55	Reduced Street Flood.	≅115[3]	NA	RS	Mile Rock Outfall	≅170[3]	Good	Poor	Good	Excellent	Questionable	Recreation & residendial area street	Least	Insigni.	Acceptable	Acceptable	Moderate
16-7	0.10	A	1.10	Reduced Street Flood.	≅115[3]	NA	RS	Mile Rock Outfall	≅170[3]	Good	Poor	Good	Excellent	Questionable	Residential street	Least	Insigni.	Acceptable	Unacceptable	Moderate
21-2	0.10	A	1.18	Reduced Street Flood.	≅115[3]	NA	NP	North Point Outfall	≅170[3]	Good	Poor	Poor	Excellent	Questionable	Residential street	Least	Insigni.	Acceptable	Unacceptable	Moderate
21-4	0.12	A	1.72	Reduced Street Flood.	≅115[3]	NA	NP	North Point Outfall	≅170[3]	Good	Poor	Poor	Excellent	Questionable	Residential street	Least	Insigni.	Acceptable	Unacceptable	Moderate
37-2	0.10	A	1.81	Reduced Street Flood.	≅115[3]	NA	SE	Southeast Outfall	≅170[3]	Good	Poor	Good	Excellent	Questionable	Residential commercial street	Least	Insigni.	Acceptable	Unacceptable	Moderate
52-2	0.21	A	10.96	Reduced Street Flood.	≅115[3]	NA	SE	Southeast Outfall	≅170[3]	Good	Poor	Good	Excellent	Questionable	Residential street	Least	Insigni.	Acceptable	Unacceptable	Moderate

[1] Alternative B capacity from all involved basins.

[2] No storage at this location under Alternative A.

[3] From tributary outfall.

[4] In adjacent waters as a result of bypass.

FIGURE 10-2
ALTERNATIVE TRANSPORT SYSTEMS

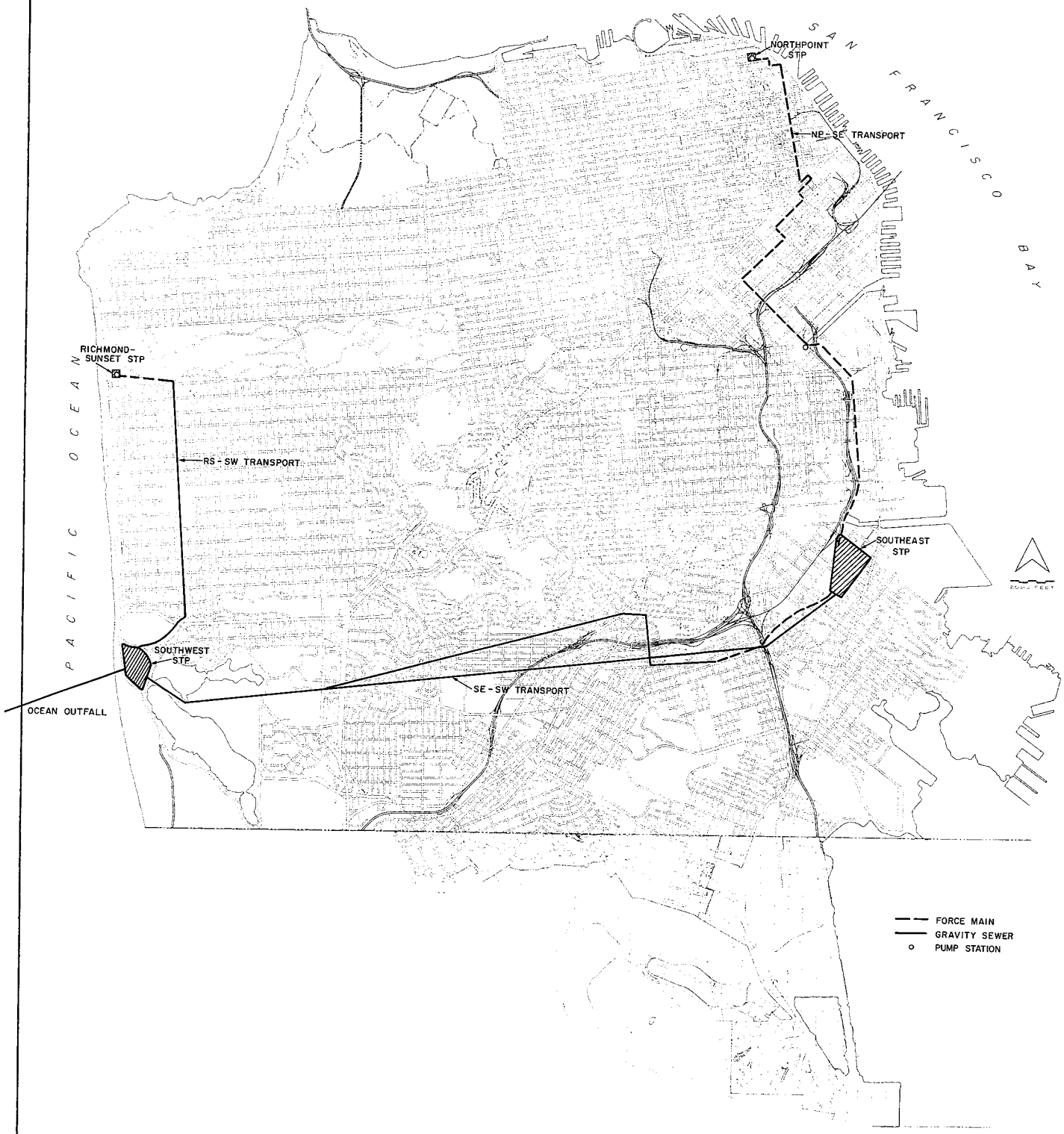

CHAPTER 11
FIRST-STAGE PROJECT

In the analyses in Chapters 7, 8, 9, and 10, the type, location, and character of water pollution control facilities have been developed. These analyses have been in part a redevelopment and consolidation of planning studies that have been underway since the mid-1960's. They also are expansions of previous analyses to include new alternatives and new information, particularly in the area of costs and alternative evaluation. The results of the analyses are outlined in this chapter.

FIRST STAGE PROJECT

The first-stage facilities are shown on Figure 11-1. Figure 11-2 shows the implementation schedule and associated costs. Project features are discussed in the following sections.

Southeast Treatment Facilities

Details of these facilities are discussed in the draft environmental impact report entitled *Implementation Program No. 2, Southeast Treatment Plant Upgrading, January 1975,* prepared by the city. Figure 11-3 shows the proposed project configuration. The process flow diagram is shown on Figure 11-4. Preliminary design criteria are shown in Table 11-1 for the present service area and the possible addition of flow from the Richmond-Sunset area. Table 11-2 shows the anticipated performance and effluent quality of the proposed facility.

Facilities Sizing

Table 11-3 shows the existing and proposed capacities at the North Point and Southeast Plants.

The proposed capacity of the Southeast Treatment Plant is 95 mgd. This is slightly more than the total existing dry weather design capacity at the North Point and Southeast Treatment Plants. Total peak capacity would be more than what is now provided. The average dry weather flow is now approximately 85 mgd; however, data from recent years show an increase in flows despite the decrease in population, and it is likely that the actual flow at the time of construction will approach the proposed design capacity.

State regulations relating to treatment plant costs that are eligible for grants require a projection of future flows. The projections are based on present flow and future growth in permanent population. The projected increase in the transient tourist contribution to wasteloads should also be addressed in the State formula. This is an important consideration for the City. If transient tourist contributions are not considered, the City will be required to treat increasing amounts of wastes generated by transients and to fund this treatment almost entirely without grant assistance. This issue should be given special consideration by the State and EPA.

Richmond-Sunset Treatment Improvement

Several types of improvements have been considered by the City. These include the following:

- Additional clarifiers and renovation of sludge handling facilities.
- Various types of screening instead of additional clarifiers.
- Microstraining of primary effluent.

An evaluation of these options is included in the final version of this facilities plan or in a separate report to follow this plan.

It is possible that these and any other options will prove not to be cost-effective in the opinion of both the City and regulatory/granting agencies. However, current regulatory requirements call for improvements, and, for the purpose of estimating the cost of the first-stage project, the first option above has been tentatively selected.

Transportation Facilities

The transportation facilities included in Stage I are shown schematically on Figure 11-1. Exact details of the facilities for the west side transportation system and outfall will depend on future studies discussed in Chapter 13. The important initial step is to complete a Project Report/EIR for these facilities.

There are also a number of piping and pumping facilities associated with the initial retention basin program and the interim outfall for the Southeast Treatment Plant. These projects also will be the subject of more detailed study.

FIGURE 11-1

FIRST-STAGE FACILITIES[1]

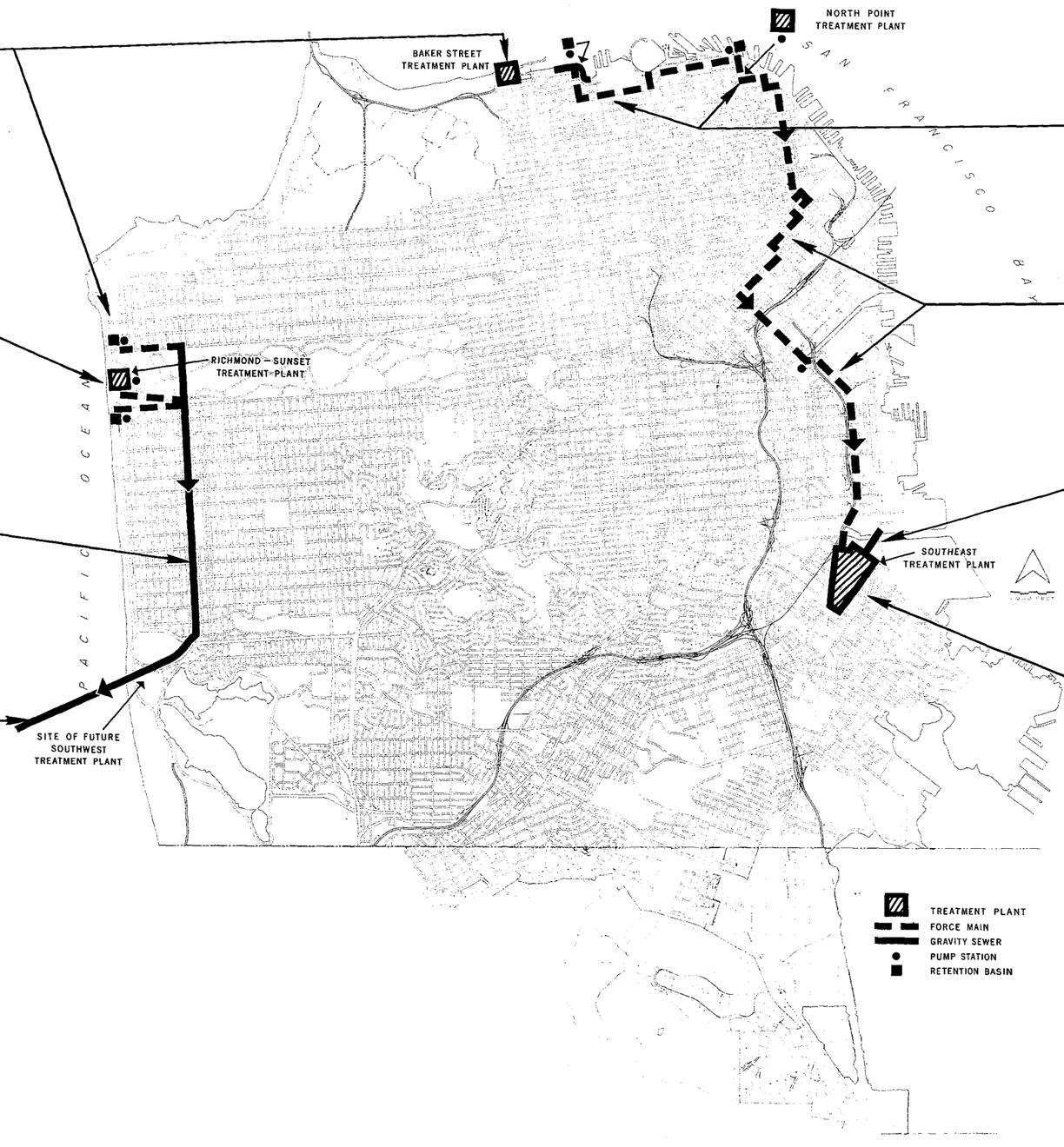

Construction of initial storage basin(s) on west side or north side of City.*

Consolidation of northern outfalls if it is decided to construct the initial storage basin(s) there.[2]

Interim improvement of the Richmond-Sunset Plant to upgrade the quality of the primary effluent.

Construction of the North Point to Southeast transport facility for dry weather flows.

Construction of conveyance from Richmond-Sunset to the Southwest Treatment Plant site. This facility would be sized for ultimate wet weather flows.

Construction of interim Islais Creek outfall for Southeast effluent during high flow periods.

Expansion of Southeast primary treatment facilities and construction of new secondary treatment facilities for dry weather flows from North Point and Southeast.

Construction of first phase of ocean outfall.

Conduct of several studies and data collection efforts to provide information for refinement of current plans.

[1]See Figure 1A-1 for recent modifications to this figure.

[2]Locations of retention basins and associated transport facilities are preliminary.

FIGURE

FIRST-STAGE FACILITIES[1]

FIGURE II-2

SAN FRANCISCO WASTEWATER PROJECT
STAGE I SCHEDULE[1]

ITEM	COST[2] LOCAL	COST[2] TOTAL
PLANNING		
MASTER PLAN	0.174	1.391
INFORMATION SYSTEM[3]	0.726	1.395
EIR/S	0.019	0.149
FACILITIES PLAN	0.016	0.125
SPECIAL STUDIES		
MARINE DISPOSAL	0.098	0.785
TREATMENT-PILOT	0.213	1.700
INFILTRATION-INFLOW[3]	0.012	0.096
INDUSTRIAL WASTE	0.291	0.575
REVENUE	0.010	0.079
INLAND RETENTION BASINS	0.480	3.841
OUTFALL SCREENS & EXTENSIONS	0.006	0.050
FIRST STAGE PROJECTS		
TREATMENT		
SE SOLIDS	0.75[5]	6.00
SE PRIMARY	15.12	32.39
SE SECONDARY	21.15[5]	80.62
RS INTERIM	0.62	4.96
NP CONVERSION[6]	0.18	1.40
INTERCEPTORS & PUMP STATIONS		
NP-SE[5]	2.78	22.20
RS-SW[6]	3.18	25.40
FOR INITIAL BASIN[6]	2.00	16.00
FOR LATER BASINS[6]	1.25	10.00
OUTFALL CONSOLIDATION		
FOR INITIAL BASIN[6]	1.00	8.00
FOR LATER BASINS[6]	2.00	15.00
STORAGE		
INITIAL BASIN[6]	0.88	7.00
LATER BASINS[6]	1.50	12.00
OUTFALLS		
OCEAN (PART 1)[6]	3.74	29.90
SE (INTERIM)	0.15	1.20
TOTAL	58[7]	282[7]

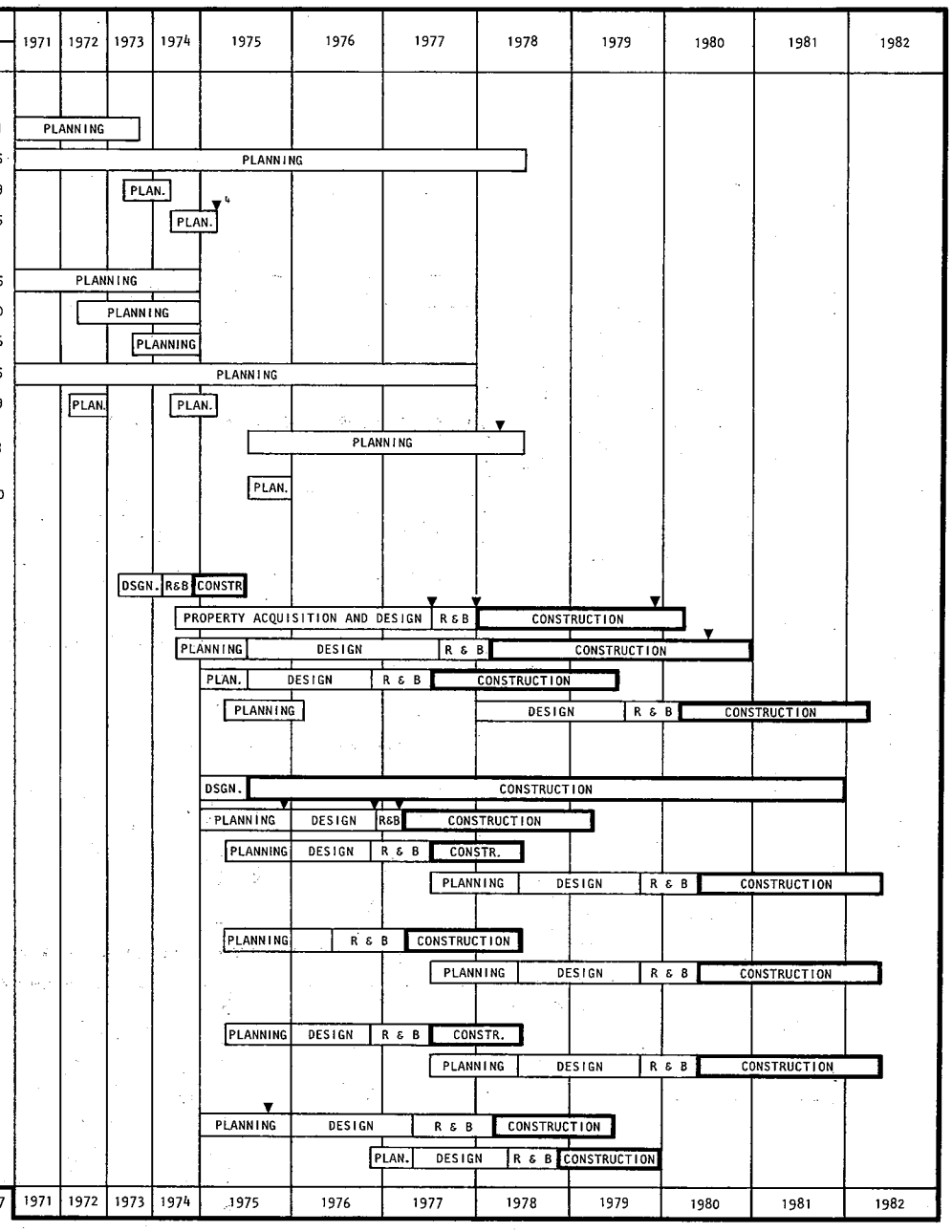

FOOTNOTES

[1] FACILITIES TO BE CONSTRUCTED IN LATER STAGES ARE NOT SHOWN: SOME ASPECTS OF THESE FACILITIES (PLANNING, DESIGN, OR CONSTRUCTION) WOULD BEGIN AROUND 1980. SEE FIGURE 1A-2 FOR RECENT MODIFICATIONS TO THIS FIGURE.

[2] COSTS INCLUDE CONSTRUCTION, ENGINEERING, AND CONTINGENCIES IN MILLIONS OF DOLLARS AT ENR INDEX 2300 (1974)

[3] COSTS THROUGH 1974

[4] INDICATES REGULATORY DEADLINE FOR PROJECT UNIT

[5] COMPLETION REQUIRES NORTH POINT OUT OF SERVICE

[6] NECESSARY FOR WET WEATHER CONTROL

[7] 1974 COSTS, NOT ESCALATED

FIGURE 11-3

SOUTHEAST TREATMENT PLANT LAYOUT

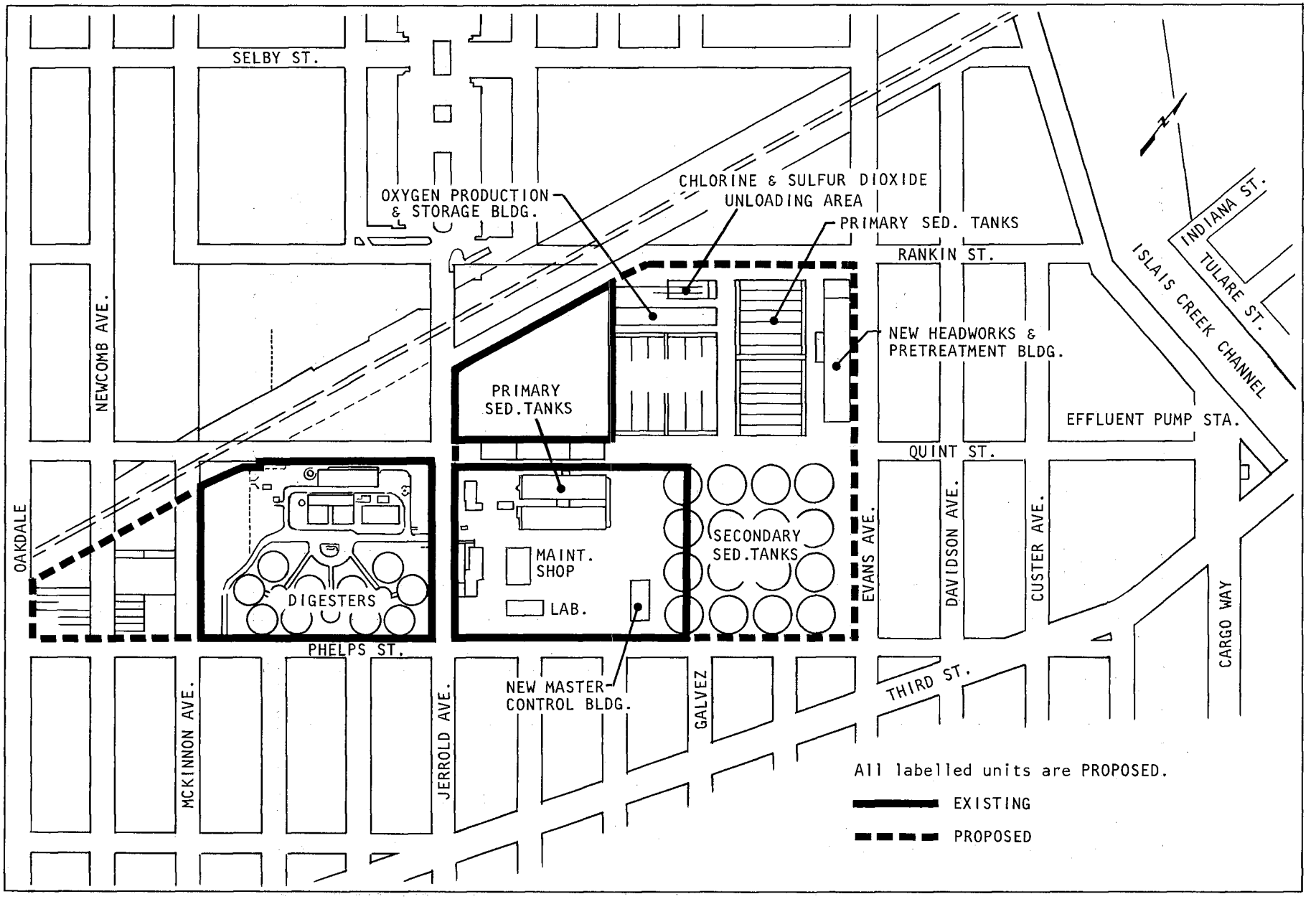

FIGURE 11-4
PROPOSED SOUTHEAST PLANT FLOW DIAGRAM

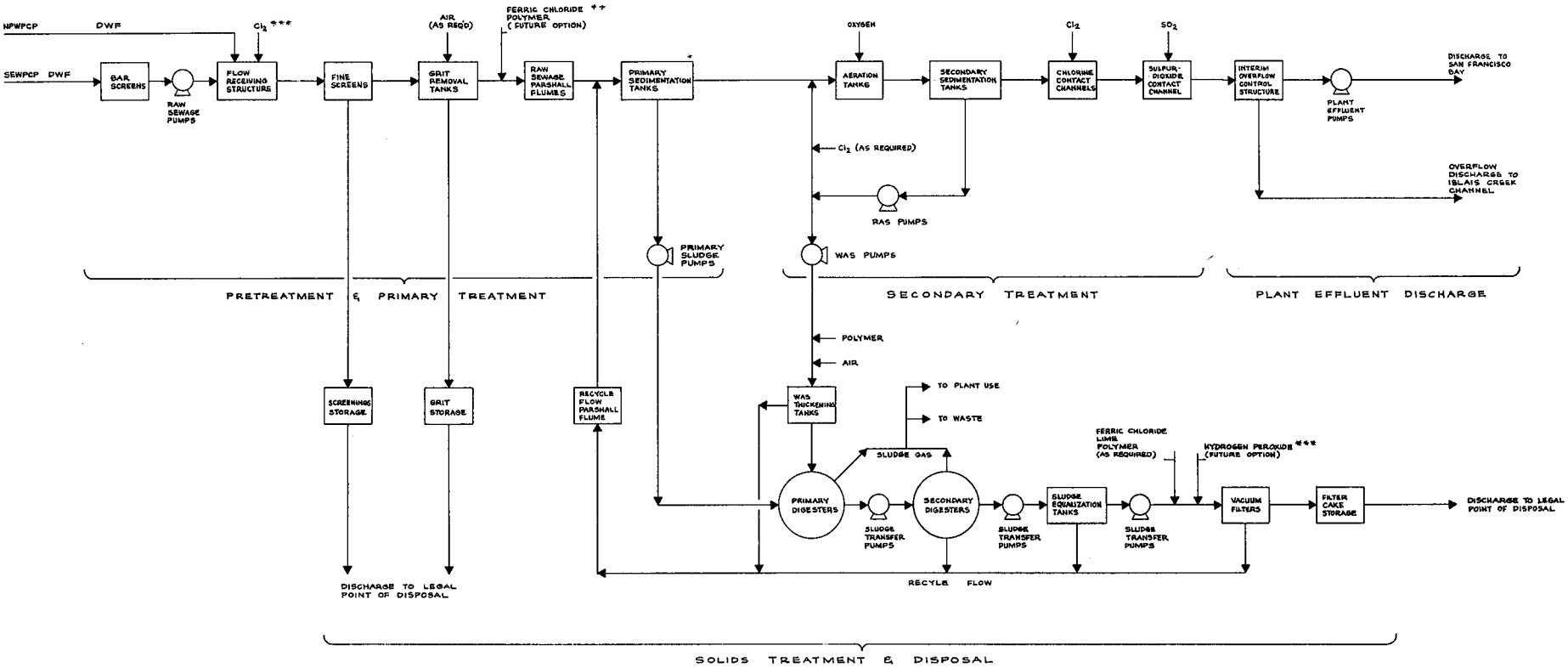

LEGEND:

SEWPCP..... SOUTHEAST WATER POLLUTION CONTROL PLANT
NPWPCP..... NORTH POINT " " " "
RAS ..... RETURN ACTIVATED SLUDGE
WAS ..... WASTE ACTIVATED SLUDGE
DWF..... DRY WEATHER FLOW

REMARKS:

* PUMPING OF DEGRITTED SEWAGE TO EXIST. PRIMARY SEDIMENTATION TANKS MAY BE REQUIRED.
** LOW DOSE FERRIC CHLORIDE TREATMENT..... 15-30 MG/L
*** FOR ODOR CONTROL

TABLE 11-1

DESIGN CRITERIA FOR SOUTHEAST TREATMENT PLANT

Design Year	1990
Design Flow	
Average Flow, MGD	
Dry Weather Season	86 (1)
Wet Weather Season	100
Peak Flow, MGD	
Dry Weather Season	155
Wet Weather Season	180 (2)
Design Loading	
Average BOD, MG/L	230
Maximum Monthly BOD, MG/L	300
Maximum Daily BOD, MB/L	430
Average SS, MG/L	220
Maximum Monthly SS, MG/L	300
Maximum Two-Week SS, MG/L	350
Maximum Daily SS, MG/L	440
Fine Screening	
Number of Screens	6
Standby Screen	1
Width, Ft.	7
Max. Water Depth at 30 MGD	5.5
Opening Between Bars, Inches	3/4
Max. Velocity through Clean bars, ft./sec.	2.0
Max. Hydraulic Capacity, each unit, MGD	36
Grit Removal	
Number of Tanks	6
Standby Tank	1
Length, Ft.	102
Width, Ft.	10
Max. Hydraulic Capacity, Each Tank, MGD	36
Raw Sewage Measurement	
Number of Parshall Flumes	6
Standby Flume	1
Throat Width, Ft.	4
Max. Hydraulic Capacity, Each Unit, MGD	36
Primary Sedimentation	
Number of Tanks	18
Standby Tank	1
Width, Ft.	4 @ 37 14 @ 38
Length, Ft.	4 @ 262 14 @ 210
Average Water Depth, Ft.	12
Overflow Rate at Average Flow Gal./sq./ft./day	
Dry Weather Season	610
Wet Weather Season	710
Overflow Rate at Peak Flow, Gal/sq./ft./day	
Dry Weather Season	1,100
Wet Weather Season	1.280

TABLE 11-1 (continued)

DESIGN CRITERIA FOR SOUTHEAST TREATMENT PLANT

Primary Sedimentation (cont.)

Detention Time at Average Flow, Hrs.	
Dry Weather Season	3.5
Wet Weather Season	3.0
Detention Time at Peak Flow, Hrs.	
Dry Weather Season	1.9
Wet Weather Season	1.6
Horizontal Forward Velocity at Average Flow, Ft./Min.	1.5
Assumed Minimum Thickened Solids Concentration, Percent	6
Maximum Hydraulic Capacity, Each Tank, MGD	15

Aeration

Number of Tanks	6
Standby Tank	1
Stage Per Tank	6
Width, Ft.	52
Length, Ft.	312
Average Water Depth, Ft.	13.5
Detention Time at Average Flow, Hrs.	
Dry Weather Season	2.3
Wet Weather Season	2.0
Design MLSS, MG/L	5000
Design MLVSS, MG/L	4000

Aeration (cont.)

Average BOD Loading, LB. BOD Per 1000 Cu. Ft. Per Day	
Dry Weather Season	95
Wet Weather Season	110
F/M Ratio At Average BOD Loading LB. BOD/Lb. MLVSS/Day	.40-.45
Average Sludge Yield, LB. Total Solids/Lb. of BOD REmoval	.70
Max. Recirculation, Per Cent	
Average Flow	100
Peak Flow	55
Max. Hydraulic Capacity, Each Tank, MGD	80

Oxygen Supply

Number of Cryogenic Units	3
Production Rate, Each Unit, Ton/Day	60
Back-up Storage Capacity, Tons	450
Storage Evaporation Rate, Ton/Day	120
Oxygen Available at Max. Monthly BOD Loading Lb. 02/LB. BOD Removal	
Two Cryogenic Units Active	1.5
Three Cryogenic Units Active	2.3
Oxygen Available at Max. Daily BOD Loading, Lb. 02/Lb. BOD Removal	
Two Cryogenic Units Active	1.0
Three Cryogenic Units Active	1.5

TABLE 11-1 (continued)

DESIGN CRITERIA FOR SOUTHEAST TREATMENT PLANT

Secondary Sedimentation

Number of Tanks	16
Standby Tank	1
Diameter, Ft.	120
Side Water Depth, Ft.	15
Detention Time at Average Dry Weather Flow, Hrs.	5.0
Overflow Rate at Average Flow, Gal./Sq. Ft./Day	
Dry Weather Season	510 (3)
Wet Weather Season	590
Overflow Rate at Peak Flow, Gal./Sq. Ft./Day	
Dry Weather Season	920
Wet Weather Season	1060
Average Solids Loading at 30% Recirculation Flow, lb./Sq. Ft./Day	
Dry Weather Season	28
Wet Weather Season	33
Max. Hydraulic Capacity, Each Tank, MGD	25

Chlorination and Dechlorination

Maximum Dosage, MG/L	
Prechlorination	12 (4)
Postchlorination	10
Activated Sludge Control	10
No. 3 Water	10
Sulfonation	5
Average Dosage, MG/L	
Prechlorination	7
Postchlorination	5
Sulfonation	3

Chlorination and Dechlorination (cont.)

Chlorinators	
Number	5-6
Capacity, Each Unit, lb./Day	8000
Sulfonators	
Number	2
Capacity, Each Unit, lb./Day	8000
Chlorine Contact Time at Average Flow, Minutes	40 5
Chlorine Storage	
Number of Storage Tanks and Tank Car Spots	3-4
Capacity, Each Unit, Tons	55
Sulfur Dioxide Storage	
Number of Storage Tanks and Tank Car Spots	2
Capacity, Each Unit, Tons	55

Waste Activated Sludge Thickening

Number of Air Floatation Tanks	8 (5)
Standby Tank	1
Width, Feet	16
Length, Feet	60
Average Water Depth, Ft.	12
Average Loading During Dry Weather Season, lb. Total Solids/ Sq. Ft./Day	10
Assumed Minimum Solids Recovery, Percent	90
Assumed Minimum Thickened Solids Concentration, Percent	4

TABLE 11-1 (Continued)

DESIGN CRITERIA FOR SOUTHEAST TREATMENT PLANT

Two-Stage Anaerobic Digestion

Number of Digesters	10*
Standby Digesters	1
Diameter, Ft.	100
Side Water Depth, Ft.	32
Volume (Each Digester), Cu. Ft.	240,000
Loading, lb. Total Solids/1000 Cu. Ft.	
Average Dry Weather Season Loading	120
Average Wet Weather Season Loading	140
Maximum Two-Week Loading	210
Solids Residence Time at 5% Solids Concentration, Days	
Average Dry Weather Season Loading	25
Average Wet Weather Season Loading	22
Maximum Two-Week Loading	15

Vacuum Filtration

Number of Filters	4*
Standby Filter	1
Diameter, Ft.	11.5
Length, Ft.	16
Area (Each Filter), Sq. Ft.	575
Loading, Total Solids/Sq. Ft./Hr.	
Average Dry Weather Season Loading	2.9
Average Wet Weather Season Loading	3.3
Maximum Two-Week Loading	5.0
Assumed Minimum Solids Recovery, Percent	90

REMARKS

(1) Designed on the basis of "Zero Growth."
(2) Approximately equal to the present peak flow.
(3) Calculated on the basis of gross surface area.
(4) Alternative ozonation for coliform control, odor control, and activated sludge bulking control is presently under investigation.
(5) The existing elutriation tanks are to be converted to waste-activated sludge thickening tanks.

*Existing treatment facilities

TABLE 11-2

SOUTHEAST TREATMENT PLANT ANTICIPATED PERFORMANCE

Design Treatment Efficiencies at Average Loading During Dry Weather Season	
PreTreatment & Primary Treatment	
BOD Reduction, Percent	35
Primary Effluent BOD, MG/L	150
SS Reduction, Percent	60
Primary Effluent, MG/L	88
Secondary Treatment	
BOD Reduction, Percent	90
Secondary Effluent BOD, MG/L	15
SS Reduction, Percent	70
Secondary Effluent SS, MG/L	26
Overall Plant Performance	
BOD Reduction, Percent	93
Plant Effluent BOD, MG/L	15
SS Reduction, Percent	88
Plant Effluent SS, MG/L	26

TABLE 11-3

PLANT CAPACITIES
(mgd)

	Existing			Proposed
	North Point	Southeast	Total	Southeast
Average Dry Weather	65	20	95	95
Peak Design	190	50	240	190

Retention Basins

Storage is a necessary element of the first-stage program for two reasons: to achieve a significant degree of control of wet weather overflows and for the design and construction of additional basins. While it is clear that the concept of retention basins is sound, numerous details must still be resolved. These include basin cleaning, removal of solids, solids deposits and their relationship to hydraulic design characteristics, and operating controls.

Initial Basin Locations. Initially, it was planned to construct a single upstream retention basin in the northeast drainage district area before proceeding with construction of others. It is now believed that the initial basin may also be placed in a shoreline area where the disruption to local land uses will be minimal. Construction and operation of a shoreline basin would provide considerable information about upstream basins as well. The preliminary sites are in the vicinity of the Marina Green, in the vicinity of Beach Street/Embarcadero, and in the vicinity of the Richmond-Sunset Plant near the intersection of Fulton Street and the Great Highway. Each of these basins would achieve a degree of control for areas that are heavily used (see Chapter 9).

Early effective improvements could be obtained by constructing a west side retention basin since it can be incorporated into the pumping and transport system that will deliver the dry weather flows from the Richmond-Sunset Plant through the west side interceptor and out the ocean outfall. The advantage of the west side location is that it obtains an early degree of control, but the disadvantage is that the wastes cannot be treated until additional treatment facilities are provided. They would, however, be discharged with considerable dilution through the initial part of the ocean outfall.

Location in the vicinity of the Marina Green is likely to create some disruption. However, this basin can function in support of the Baker Street dissolved air flotation treatment facility or as a back-up storage facility for the North Point Plant, although its most effective use with the North Point Plant would not occur until after that plant had ceased treating dry weather flows, now scheduled for 1981. In any event, some treatment of stored flows could be provided.

There are similar advantages in locating the initial basin at Beach Street/Embarcadero. The North Point Plant could be used for treatment in the early 1980's. The width of the Embarcadero would allow space for traffic routing during construction. However, the basin could interfere with future development of the port areas. It would also require an expensive pump station to operate effectively.

As shown on Figure 11-2 and discussed in Chapter 13, planning for the location and other aspects of the initial basin will be complete by late 1975.

Additional Retention Basins. After completion of the initial retention basin, design should begin on the additional retention basins that are part of the first-stage project. Experience gained in design, bidding, and construction of the initial basin can be incorporated into subsequent designs. Under the proposed schedule, one year of operating experience with the first basin can be obtained prior to completion of plans and specifications for the subsequent basins. This would still allow completion of construction of the first-stage basins by mid-1981—about the time that the North Point-Southeast interceptor and North Point treatment conversion projects are complete.

IMPLEMENTATION

Figure 11-2 shows the latest implementation schedule for the first-stage facilities.

Costs

Costs have been projected to the midpoint of construction. As a result, the total cost for the first stage is substantially higher than that previously estimated, even though the facilities remain substantially the same. Costs include planning, construction, contingencies, engineering, property acquisition, and design and have been presented to show the estimated local cost as well as the total project cost. These costs serve as the basis for preparation of the Financial Plan and Revenue Program.

Project Phases

Each of the listed projects must go through the planning, design, review, bidding, and construction phases. In the case of the Southeast Treatment Plant projects, property acquisition is also an important phase. In each of these activities,

there are a variety of procedures that must be followed to comply with local, State, and Federal regulations and to provide enough time for adequate design and proper balance between construction bid cost and the need for early completion.

Property Acquisition

Property acquisition and the subsequent relocation of owners or tenants is a critical factor in the implementation of Southeast treatment projects. Table 11-4 shows the schedule of steps to be taken by the City. The Federal Uniform Relocation Act requires these actions. City experience in acquiring land for other projects indicates that there will likely be difficulties with acquisition and, especially, relocation; for example, two of the businesses to be relocated are automobile salvage yards. The schedule in Table 11-4 must, therefore, be regarded as optimistic.

As shown on Figure 11-2, property acquisition and design will proceed concurrently. The City has requested its legislative representative to introduce legislation allowing the City to take possession of property before reaching final agreement with the land owner on the terms of purchase. Without such legislation, it is likely that the City will not be able to comply with the implementation schedule for the Southeast projects as shown on Figure 11-2.

Planning

The preparation of detailed preliminary project information is included in the planning phase. This includes local site alternatives which would be included in an EIR and subject to the State review process. Even though the City's Master Plan has been the subject of a joint Federal/State EIR, it has been anticipated that individual reports would be prepared on each project when more detailed information with regard to site characteristics and technical design are known.

Design

Each of the projects requires significant design time. Interceptor sewers are the least complicated and can be designed in from six months to a year. Storage basins are more complicated and, particularly in the initial efforts, design may take up to 18 months. Future basins could be designed in substantially less time. Design of the ocean outfall will be time-consuming due to the need to acquire field information and to anticipate oceanographic and seismic conditions. Finally, the time requirements for the design of the treatment plant will vary depending on the complexity of the works. Experience in other major waste treatment projects in Northern California indicates that the design of a secondary pure oxygen plant of the size produced at the Southeast site would require approximately 2-1/2 years. The Richmond-Sunset improvements will take about 1-1/2 years; the North Point conversion will take somewhat less time. These time estimates could be shortened if design teams were put on overtime, but the quality and consistency of design work would suffer. As yet, State and Federal time schedules have not anticipated crash program efforts as part of the assisted wastewater construction program.

Review and Bidding

State regulations require a three-month review period for plans and specifications. This period generally precedes July 1, at which time the State must certify the project in order to assure its place in the particular grant year's funding total. After State certification, there may be some time before a grant offer is made by EPA and, after that, bids must be sought. This whole process may take from six to nine months or longer, depending on the speed of review and the complexity of the project. Bid periods may vary from 30 days on a simple project to 90 days on a complex project involving many subcontractors.

Construction

There is a direct relationship between the time allotted for construction and the cost of the project. While a long construction schedule could result in cost increases due to inflation, a short schedule requiring two- or three-shift construction will substantially increase costs. The key factor in determining the construction period should be the availability of the critical components. Construction periods shown on Figure 11-2 are based on recent experience in Northern California and could be modified somewhat when more information is available, particularly after final design.

1975 Administrative Schedules

To complete the Stage I program in accordance with the regulatory and operating constraints identified on Figure 11-2, it will be necessary for the city to undertake an almost continuous series of legislative actions. Table 11-5 shows those actions necessary during the remainder of 1975.

TABLE 11-4

SCHEDULE FOR PROPERTY ACQUISITION AT SOUTHEAST TREATMENT PLANT

Task	Time to Complete	Total Elapsed Time (Weeks)	Date
Certification of Environmental Impact Report (Choice of Site)—Calif. Water Quality Act 1969			March 31, 1975
Conformity to Master Plan to be obtained concurrent with EIR-City Charter Sec. 3.526			
Public hearings for all affected owners and/or occupants after proper notice. Might require more than one hearing—Uniform Relocation Act Sec. 4.601-(a), required by policy of Board of Supervisors	8 weeks	8 weeks	May 26, 1975
Funds for overall acquisition appropriated by Ordinance of Bd. of Supervisors—City Charter Sec. 6.302, 6.303, 7.400	4 weeks	12 weeks	June 23, 1975
Order title reports. (Two weeks to encumber funds prior to ordering)—City Charter Sec. 7.100	3 weeks	15 weeks	July 14, 1975
Resolution of Public Interest and Necessity and Resolution Authorizing Eminent Domain—State Code of Civil Procedure Sec. 1241 et seq.	3 weeks	18 weeks	Aug. 4, 1975
Contract for services of independent appraisers. Four weeks concurrent with Res. Public Int. & Nec.—City Charter Secs. 7.100, 7.400	1 weel	19 weeks	Aug. 11, 1975
Make appraisals, initially accompanied by owner, if he desires, and relocation staff member (approx. 130 parcels anticipated in project)—Sec. 4.601.1 Uniform Relocation Act 1970	24 weeks	43 weeks	Jan. 26, 1976
Review appraisals then prepare and present offers to owners (presenting offers—assume overlap of 8 weeks)	24 weeks	67 weeks	July 12, 1976

TABLE 11-4 (continued)

SCHEDULE FOR PROPERTY ACQUISITION AT SOUTHEAST TREATMENT PLANT

Task	Time to Complete	Total Elapsed Time (Weeks)	Date
In the case of a reluctant owner or tenant, summons would be served after a reasonable effort to acquire by negotiation—Uniform Relocation Act Code Civil Procedure Sec. 1246.3, 1246.4 (Brathwaite Act)	16 weeks	83 weeks	Nov. 1, 1976
Defendants served with summons and complaint with 30 days to answer CCP 412.20	4 weeks	87 weeks	Nov. 29, 1976
City Attorney would make motion to advance for trial. Eminent domain has precedence (CCP 1264), but in our experience, City Attorney has been unable to bring to trial in less than 9 months. Defense attorney can effectively delay—CCP Sec. 1264	36 weeks	123 weels	Aug. 8, 1977
Preliminary hearing with judge normally 10 weeks prior to jury trial (concurrent with previous step)		123 weeks	Aug. 8, 1977
Jury trial	2 weeks	125 weeks	Aug. 22, 1977
Interlocutory judgment filed	1 week	126 weeks	Sept. 5, 1977
a. Tenants may now be given 90-day notice to vacate and Central Relocation Services may commence arrangements for moving of tenants, owner-occupants—Uniform Relocation Act 4.601-2(a)	12 weeks	138 weeks	Nov. 21, 1977
b. Defendant has 60 days to appeal (concurrent with a.)—CCP Sec. 1254			
Final Order recorded (1 week after Judgment)			
Raze improvements, formal let contract for razing—City & County Admin. Code Sec. 6.2	7 weeks	145 weeks	Jan. 9, 1978

TABLE 11-5

1975 BOARD OF SUPERVISOR'S ACTIONS

Date	Description
1. January 20, 1975	Report on alternate sites for wet weather treatment plant. (Requested by Joint Health and Environment and Finance Committee meetings on Resolution 451-73).
2. January 31, 1975	Resolution approving Wastewater Management Master Plan and North Point-Southeast Transport System Project and tentative resolution adopting Southwest site for wet weather plant.
3. February 28, 1975	Affirmative action to implement a Master Plan and conform Master Plan to such mitigation measures required by environmental impact process.
4. April 15, 1975	Resulution approving Southeast Treatment Plant Improvement Project. (Element of Master Plan; EIR presently being processed by City Planning Department with public hearings tentatively scheduled in February and March 1975).
5. June 23, 1975	Appropriation of funds for property acquisition for Southeast Treatment Plant Improvement Water Pollution Project. (1970 Water Polution Bonds are available for this purpose.)
6. July 28, 1975	Proposed Charter amendment for joint use of Southwest property. (South of existing Fleishhacker Zoo for wet weather plant and zoo parking. This assumes the selection of the Southwest site for the wet weather treatment plant.)
7. August 4, 1975	Resolution of public interest and necessity and resolution authorizing eminent domain for needed property to construct the Southeast Treatment Plant improvements.
8. September 2, 1975	Approval to place Charter Amendment issue for (Item 6) above on the ballot.

TABLE 11-5 (continued)

1975 BOARD OF SUPERVISOR'S ACTIONS

Date	Description
10. November 5, 1975	Resolution approving Richmond-Sunset Transport Project. (EIR scheduled for certification by no later than October 23, 1975.)
11. November 5, 1975	Resolution approving Southwest Ocean Outfall Phase I Project. (EIR scheduled for certification no later than October 23, 1975.)
12. December 1, 1975	Resolution approving the location of the first and possibly second retention basins.
13. December 31, 1975	If electorate does not approve the Charter Amendment (Item 8), a determination of an alternate location.
9. September 3, 1975	If the Southwest site is not selected, a determination of an alternate location.

CHAPTER 12

FUTURE ADJUSTMENTS

Water quality requirements and public attitudes toward public works projects and costs have changed greatly in recent years. It is obvious that current studies and debates may produce actions that could significantly affect the City's pollution control program. Most of the first-stage units described in Chapter 11 would be unaffected by the most probable changes. However, some first and second stage projects may require modification if certain events occur. This chapter identifies these contingencies and presents possible responses in the form of project alternatives.

Because present water quality regulations and public attitudes require immediate action by the City,it is important that work proceed based on the best current assessment of regulatory requirements and other constraints and possible changes in these as outlined on the following pages.

1. Change in Federal requirement for secondary treatment for ocean discharge. Such a change is not likely in the next several years, but could permit the use of advanced primary treatment (sedimentation plus low dose chemical addition) for municipal wastewater discharged to the ocean. Any or all of the last three strategies can be adopted.

TABLE 12-1

POSSIBLE ALTERNATIVE STRATEGIES
TO ACCOMMODATE
LESS STRINGENT OCEAN DISCHARGE REQUIREMENTS

Strategy	First Stage	Master Plan
a. Follow present plan	To continue according to present planning is a viable alternative	
b. Modify treatment level at Southeast Plant	Redesign Southeast Plant for ocean discharge if action is before 1977. Could reduce overall treatment costs. Would require accelerated planning for east-west transport. Reduced treatment level at Southeast Plant may require improved interim bay outfall. Continue North Point Plant and outfall in operation until crosstown tunnel and Southwest Plant are in operation.	Accelerate change from bay to ocean discharge. Accelerate construction schedule for east-west transport.
c. Retain Richmond-Sunset Plant	Improved primary treatment at existing Richmond-Sunset Plant could be used for a longer period.	Richmond-Sunset Plant could be retained in system indefinitely. Probably preferable to phase it out after completion of Southwest Plant.
d. Modify treatment level at Southwest Plant		Construct single dry and wet weather primary treatment plant at Southwest site. Treatment costs would be reduced, but handling of residual solids would be complicated. Possibly abandon SE Plant after completion of SW Plant. Could further reduce costs, but possibility for future water reclamation and reuse would be reduced.

2. Public rejection of treatment plant site in southwest area.

In the next several months, the Board of Supervisors will consider selection of the Southwest site as the preferred alternative location for treatment of all wet weather flows and a portion of dry weather flows. If the Board rejects the site, or if the Board submits it to the voters in the fall of 1975 and they reject it, there would be a major impact on the long-range plan, and adjustments in first-stage facilities would also be required.

TABLE 12-2

POSSIBLE ALTERNATIVE STRATEGIES
TO ACCOMMODATE
SOUTHWEST PLANT SITE REJECTION

Strategy	First Stage	Master Plan
a. Cannot follow present plan	To follow present planning throughout is *not* a viable alternative.	
Note: Items (b) through (g) are treatment strategies. (b) through (f) are alternatives, (g) can be combined with any of (b) through (f).		
b. All treatment at Southeast Plant	Expand design of SE Plant to treat all east and west side dry weather flows and to accommodate future expansion to treat wet weather flows. Redesign west side transport system to accommodate future conveyance of wet and dry weather flows to Southeast Plant.	Construct Southeast Plant expansion to treat all wet weather flows. Construct transport system from west side to Southeast Plant.
c. West side wet weather treatment at Richmond-Sunset	Redesign Southeast Plant to treat all east and west side dry weather flows. Redesign should accommodate future expansion to treat wet weather flows. Construct transport system to convey west side dry weather flows to Southeast Plant.	Use Richmond-Sunset Plant to treat west side wet weather flows. Construct Southeast Plant expansion to treat east side wet weather flows.

TABLE 12-2 (continued)

POSSIBLE ALTERNATIVE STRATEGIES
TO ACCOMMODATE
SOUTHWEST PLANT SITE REJECTION

Strategy	First Stage	Master Plan
d. All west side treat-mend at Rich-mond Sunset	Redesign Southeast Plant to accom-modate future expansion to handle wet weather flows.	Use Richmond-Sunset Plant to treat west side wet and dry weather flows. Construct Southeast Plant expansion to treat east side wet weather flows.
e. West side wet weather treat-ment at relocated South-west Plant	Same as c) above.	Possible relocated Southwest site. Same as c) above except west side plant location. Other locations are likely to be unreasonably expensive, with significant environmental prob-lems.
f. All west side treat-ment at relocated South-west Plant	Same as d) above	Possible relocated Southwest site. Same as d) above except west side plant location. Other locations are likely to be unreasonably expensive, with significant environmental prob-lems.
g. Retain North Point Plant		Use North Point Plant for treatment of Northeast wet weather flows only. Reduce Southeast Plant wet weather capacity accordingly. Discharge to Bay at North Point.
Note: Items h) through j) are alternative discharge strategies. Each may be used with any of the treatment strategies except as noted. With respect to bay discharges, see contin-gency event #3.		
h. All dis-charge to ocean	Continue with ocean outfall as cur-rently planned. Ocean discharge for all flows could allow reduction of treat-ment levels as per contingency event #1.	Continue as currently planned for full extension for dry weather flows. Con-struct crosstown transport from Southeast Plant, of capacity required by treatment strategy chosen.
Note: This item is consistent with any of b) through g). Reduce outfall capacity if treatment strategy g) is adopted.		

TABLE 12-2 (continued)

POSSIBLE ALTERNATIVE STRATEGIES
TO ACCOMMODATE
SOUTHWEST PLANT SITE REJECTION

Strategy	First Stage	Master Plan
i. West side discharge to ocean, east side to bay	Redesign ocean outfall to accommodate west side flows only. Redesign interim outfall to Islais Creek into improved permanent bay outfall to accommodate east side flows.	Construct ocean outfall only to planned wet weather length (1½ miles), for west side flows. Eliminate crosstown effluent transport.
Note: This item is inconsistent with b) above; it may be used with c) through g). Reduce bay outfall capacity if g) is adopted.		
j. All discharge to bay	Eliminate new ocean outfall. Redesign interim outfall to Islais Creek into improved bay outfall to accommodate east and west side flows.	Eliminate crosstown effluent transport.
Note: This item is consistent only with treatment option b) or b) modified by g). Reduce bay outfall capacity if g) is adopted.		

3. Increase in degree of treatment for discharge to bay.

Any effluent discharged to the bay in the vicinity of the Southeast Plant adds to the accumulation of conservative pollutants in the south bay. It is possible that future discharge requirements may include toxicant and/or nutrient removal.

TABLE 12-3

POSSIBLE ALTERNATIVE STRATEGIES
TO ACCOMMODATE
MORE STRINGENT REQUIREMENTS FOR BAY DISCHARGE

Facility	First Stage	Master Plan
a. Southeast Plant		1. Increase treatment capability at Southeast site. 2. Convey dry weather discharge to ocean outfall. 3. Convey treated flows to regional reclamation plant.
b. West side treatment facilities	This contingency decreases the desirability of treating west side flows at the Southeast Plant in the event that the Southwest site is rejected (contingency event #2). If the latter occurs, there should be an intensive review of west side treatment alternatives.	

4. Local environmental objections to retention basins.

If initial adverse reaction to possible local effects of retention basin operation, particularly in inland areas, is not resolved, changes in the initial concept should be considered.

TABLE 12-4

POSSIBLE ALTERNATIVE STRATEGIES
TO ACCOMMODATE
OBJECTIONS TO RETENTION BASINS

Facility	First Stage	Master Plan
a. Initial shore-line basin	Select north or west side site based on least local impact.	
b. Future shore-line basins		Locate entirely in present public areas.
c. Future inland basins		1. Reduce number and increase size of basins; may require increasing some storm sewer sizes. 2. Maximize use of present public areas. 3. Increase shoreline basin capacity.
d. Cross-town tunnel		Increase capacity for storage
e. South-west Plant		Increase capacity
Note:	Any or all of these alternatives can be adopted. It should be observed that these various strategies will result in altered performance of the system, particularly with regard to control of street flooding and reduced effectiveness of city-wide control of wet weather flows.	

5. Reduced or delayed level of grant funding by State or Federal Government.

Recent State approval of Step 1 and Step 2 fundings for the initial retention basin, the anticipated cost-effectiveness of first-stage wet weather control facilities, and the present status of Federal and State grant money make it likely that first-stage units can be constructed on schedule. However, it is possible that the State may decide that control of wet weather overflows should receive lower priority than other grant-eligible facilities. In this event, it will probably be preferable to schedule construction of storage and transport facilities to provide for a steady, long-term cash flow that is consistent with the following:

- the State's recent policy on the relationship between enforcement and funding.
- the City's commitments to other programs.
- the level of cost that would be accepted by the taxpayers and system users.

CONCLUSIONS

The future adjustments discussed in this chapter show the flexibility of Master Plan and first-stage facilities to accommodate future changes. The possible strategies for each contingency are based on current information. The occurrence of each or any of the events described should result in review and studies as part of the planning processes necessary to implement a program of this magnitude and complexity.

REFERENCES

Air Resources Board. *California Air Quality Data,* October, November, December, 1972

Association of Bay Area Governments/Metropolitan Transport Commission, *Population, Employment, and Land Use Projections, San Francisco Bay Region: 1970-2000 Summary of Series 2 Projections,* August 1973

Brown and Caldwell, *A Predesign Report on Marine Waste Disposal,* September 1971

California Department of Finance, *Population Estimates for California Counties,* August 1, 1974

Eddy, H. P., *Report on the Treatment and Disposal of the Sewage of San Francisco,* May 1935

J. B. Gilbert & Associates, *Evaluation: San Francisco Wastewater Master Plan,* March 1973

Grunsky, C. E. et al, *System of Sewerage for the City of San Francisco,* 1899

Benn Martin and Dan L. McNulty, *An Historical Review and Evaluation of the Water Reclamation Plant, Golden Gate Park, San Francisco*

North San Mateo County Sanitation District, Daly City, *Sewer Service Tributary to the San Francisco System,* 1973

San Francisco, City and County, *Dissolved Air Flotation: Project Report,* 1971

San Francisco, City and County, *Report on Water Pollution Control Plants, Report 1, Phase 1, Existing Operation and Plant Performance,* March 1971

San Francisco, City and County, Department of Public Works, *San Francisco Master Plan for Waste Water Management—Preliminary Comprehensive Report,* September 1971

San Francisco, City and County, *Annual Report of the Department of Public Works,* June 30, 1973

San Francisco, City and County, Department of Public Works, *Industrial Waste Program,* December 1973

San Francisco, City and County, Department of Public Works, *Sewer System Evaluation for Infiltration/Inflow—Phase I—North Point District,* February 1974

San Francisco, City and County, Department of Public Works, *San Francisco Wastewater Treatment Pilot Plant Study* (4 volumes) by CH_2M-Hill, May 1974

San Mateo County, Correspondence with Districts in San Mateo County whose wastewater is treated at San Francisco facilities, 1974.

U. S. Department of Commerce, *1970 Census of Population General Social and Economic Characteristics, California,* April 1972

CHAPTER 13

RELATED REPORTS AND STUDIES

Figure 11-2 shows the studies and reports that have recently been completed or are scheduled for completion as part of this program. This chapter discusses the reports that have been prepared and gives a schedule for reports which will be completed shortly. The relationship of each report to this Overview Facilities Plan is also included.

AVAILABLE REPORTS

Several reports which are part of the facilities planning process but which are bound separately from this document are currently available. These reports are summarized in the following section.

Southeast Secondary Treatment Improvements Project Report/EIR

A draft of the Project Report/EIR is complete. EIR public hearings are scheduled for early spring. The recommended facility is in an industrial area so that uses should not conflict with adjacent property owners. It is also an expansion of an existing treatment plant and there are major problems associated with relocation of existing businesses and associated employment. While alternative sites can and must be evaluated considering the social implications of plant expansion, alternative impacts are equal or greater and there are advantages to expansion of the existing plant particularly in the direction of Islais Creek, where interim discharge will be permitted prior to construction of crosstown transportation facilities.

Infiltration and Inflow Analyses

The City has recently completed three 1/1 analyses of the three drainage basins, namely Richmond-Sunset, Southeast, and North Point. In addition, an addendum is being prepared for the North Point region to reflect additional water consumption not included in the original report. The re-analysis will include the same methodology used in the Southeast and Richmond-Sunset reports. In general, the conclusions are that it is not cost-effective to correct what inflow and infiltration may exist in the systems with the possible exception of North Point, nor is it cost-effective to discontinue use of the combined sewer system. For ease of reference, the key conclusions including the results of the North Point addendum in each of the three reports are as follows:

SEWER SYSTEM EVALUATION
FOR INFILTRATION/INFLOW—PHASE I
NORTH POINT DISTRICT

Existing Condition

The findings to the above factors are:

A. Infiltration/Inflow Analysis:

(1) Average dry weather flow = 62 mgd
Peak dry weather flow = 99 mgd
Average wet weather flow = 232 mgd
Peak wet weather flow = 6.0 billion gal/day (5-year storm)

(2) Overflow occurs at 19 outfalls, on an average of 82 times a year, for an average total overflow time of 206 hours, and bypassing a total of 1.85 billion gallons per year. This bypassing occurs because the North Point Treatment Plant can only accommodate a maximum rate of 158 mgd of combined sewage flow.

(3) *The North Point region's resident population of 333,000 is increased to 533,000 in the daytime, due to the influx of non-resident work force and tourists. The metered daily water consumption for the North Point region was 50.2 mgd during the winter months of December 1973 to January 1974. Although population growth figures indicate a leveling of San Francisco population, San Francisco Water Department figures and projections indicate a steady rise in per capita water consumption, i.e., 1940=76 gal/capita, 1970=138 gal/capita, and 2000=150 gal/capita. The North Point region, being the hub of the financial center of the west, has few industrial dischargers. Of the 50.2 mgd of water consumed, users responsible for 10.45 mgd have been requested to submit industrial waste discharge reports. Approximately 5.37 mgd have been identified under the Standard Industrial Classification (SIC) as follows:*

SIC Division	Type	MGD	Example
A	Agriculture		—
B	Mining		—
D	Manufacturing		Food Processing
E	Transportation		Trucking
F	Wholesale Trade	0.07	
I	Services		Hospitals, Laundry

Currently, 1.54 mgd have been confirmed as industrial users discharging sewage of a strength greater than domestic sewage. These are:

Division D	1.00 mgd
Division E	0.06 mgd
Division I	0.48 mgd
Total	1.54 mgd

(4) *The topography of the North Point region is generally hilly. Its underlying geological strata are composed of five major types of material, ranging from low to high soil permeability: serpentine rock, shale and thin bedded sandstone, sandstone, beach deposits and dunesand, and artificial fill. Nine percent of the sewers in this region are located at depths subject to tidal fluctuations (below Elev. –6) and are classified as suspect sewers for saltwater infiltration. Another 9% are located at depth below groundwater elevation but higher than tidal elevation (Elev. –6'). These are classified as suspect sewers for fresh water infiltration. The remaining 82% of the sewers do not encounter groundwater and thus are classified to be non-infiltrating sewers.*

(5) *The 59 miles of brick sewers are greater than 79 years of age and are generally deteriorating. The 4.8 miles of brick sewers located at depth below tidewater and groundwater levels are considered to be the suspect sewers where infiltration may occur.*

Estimate of Wet Weather Inflow

Annual wet weather inflow has been estimated to be 2.7 billion gallons. Because San Francisco has a combined sewer system, and cost effective analyses have shown that storm water inflow other than tidal inflow into the sewer system is desirable, this volume of wet weather inflow need not be eliminated.

Estimate of Dry Weather Infiltration and Inflow

A mass balance of flow into the sewer system as compared to the dry weather treatment rate, including known infiltration and inflow indicated the following:

Salt Infiltration	*1.20 mgd*
Fresh Infiltration	*1.90 mgd*
Salt Inflow	*.30 mgd*
Unaccounted Flow (assumed inflow)	*7.00 mgd*
TOTAL	*10.40 mgd*

B. Estimated cost comparison between eliminating vs. transporting and treatment of infiltration/inflow.

Cost Analysis

Infiltration: The rate of 10,000 gallons per day per mile of sewer was selected as an arbitrary cost effect limit for control of infiltration

Option I – Sewer rehabilitation—$368,000 per year.
Option II – Transportation and Treatment—$160,900 per year

Since the cost of accommodating or treating this flow is less than the cost of eliminating the same, "excessive infiltration" as defined by the regulations is not present.

Inflow: The mass balance indicated an unaccounted flow of 7.0 mgd which was assumed to be inflow. Whether this flow, once identified, could be reduced by rehabilitation of the sewer system is debatable.

CONCLUSIONS

Based on the evidence presented in this report, the conclusions are as follows:

(1) The 6 billion gallon per day rate of inflow during a 5-year storm into the North Point sewer system cannot be eliminated, as continuation of the combined sewer system in San Francisco is the most cost-effective solution now existent.

(2) A large portion of the 7 million gallons per day rate of dry weather inflow is found in the area bounded by Market and Powell Streets on the east, Jackson Street on the north, Presidio Avenue on the west, and Fulton Street on the south. This volume of inflow has not been identified as to source and cannot be assessed at this time. The area is highly developed and, in addition to domestic waste, the sewers are utilized for disposal of inflow from dewatering of existent subsurface facilities and those under construction within the area. Estimates of possible future reduction of this inflow should be avoided until identification of the source has been accomplished or correlation of basic data is checked. This work will be done under the Sewer System program currently underway.

(3) Evidence resulting from this "desk top" analysis indicates there is not excessive infiltration in the North Point region.

(4) The City's continuing sewer improvement program, supported by the television inspection program, will continue to expend three to five million dollars in contracts annually. Accordingly, corrections to infiltration/inflow problems will be resolved as they are encountered.

SEWER SYSTEM EVALUATION
FOR INFILTRATION INFLOW–PHASE I
SOUTHEAST DISTRICT

Existing Conditions

The findings regarding the Southeast District to the above items are:

A. Infiltration/Inflow Analysis:

1. *Average dry weather flow = 22.7 mgd*
   Peak rate dry weather flow = 43 mgd
   Average wet weather flow = 171 mgd
   Peak wet weather flow rate = 3.9 mgd (billion gal/day 5-year storm)

2. *Wet-weather overflows to the bay through 14 outfalls on an average of 82 times a year, for an average total overflow time of 206 hours, bypassing a total of 1.64 billion gallons per year. This bypassing occurs because the Southeast Treatment Plant can accommodate only a maximum rate of 70 mgd of combined sewage flow.*

3. *Water consumption during the low consumption months of December 1973 and January 1974 which would exclude irrigation use was 15.6 mgd. The resident population based on the 1965 census was 166,251 persons and projected to 1990 expectations are 168,406. The 1970 total city census figure however, decreased nearly 24,000 to approximately 716,000. Industrial dischargers contributing more than one percent of the pollutant loading or a flow of more than 0.05 mgd were required to submit reports, the total of which represent a flow of 4.69 mgd. The dischargers were identified under the following Standard Industrial Classifications (SIC):*

SIC Division	Type	MGD	Example
A	Agriculture	0	—
B	Mining	0	—
D	Manufacturing	4.20	Food Processing
E	Transportation	0.40	PG & E
F	Wholesale Trade	0	—
I	Services	0.09	Hospitals
	TOTAL	4.69 mgd	

4. *The topography of the Southeast region extends from the former marsh areas along the bay to the steep mountainous areas in the central and southern part of the city. The majority of the area is a shelf-like region only slightly higher than the bay marsh areas. It is comprised of a mixture of bay mud and various types of sand while the surrounding peaks are outcroppings of a mixture of various rock types.*

   Ground water at one time supplied the water source to the city. Evidence of underground streams and water movement from hill areas are apparent throughout the region. Produce farms and, until recently, numerous green houses existed in the region utilizing this available water. The filling and development on the low level marsh areas also provided a soil media for the underground movement of salt water through the tidal cycles. Sewers are exposed to potential salt water and fresh water infiltration in some areas.

5. *There are approximately 248 miles of sewers, predominately clay pipe with mortared joints, 15 to 70 years of age. The larger transport sewers are constructed predominately of*

reinforced concrete and supported on piles in the fill areas. Approximately 7 miles of sewers are located in potential salt infiltration areas and 15 miles of sewers are located in fresh water areas.

Estimate of Wet Weather Inflow

Annual wet weather inflow has been estimated to be 2.4 billion gallons. Because San Francisco has a combined sewer system, and cost effective analyses have shown that fresh storm water inflow into the sewer system is desirable, this volume of wet weather inflow need not be eliminated.

Estimate of Dry Weather Infiltration and Inflow

A mass balance of flow into the sewer system as compared to the dry weather treatment rate indicated an unaccounted flow, assumed to be the infiltration/inflow, rate of 2.74 mgd; 1.35 mgd salt water and 1.39 mgd fresh water. If this is related to the North Point region experience ratio (35% Infiltration), approximately 1.8 mgd is inflow and 0.94 mgd is infiltration.

B. Estimated cost comparison between eliminating versus transporting and treatment of Infiltration/Inflow.

Cost Analysis

Annual Cost of rehabilitation of sewers $163,000/year Annual Cost of Treatment of Infiltration/Inflow—$156,900/year

The cost analysis indicates that the annual cost to rehabilitate ($52,000/year) the sewers in the salt areas is less than treatment ($80,000/year). However, most of the treatment costs are for inflow ($55,600). In all probability most of this inflow is an intentional discharge rather than caused by defects in the sewers. In all likelihood this type of inflow would most likely be allowed to continue even after identification is made.

CONCLUSIONS

The following conclusions are based on the evidence presented in this report:

(1) The 3.9 billion gallon per day rate of inflow during a 5-year storm into the Southeast sewer system cannot be eliminated, as continuation of the combined sewer system in San Francisco is the most cost effective solution.

(2) Evidence resulting from this "desk top" analysis indicates there is not excessive infiltration or inflow in the Southeast region.

(3) The City's continuing sewer improvement program, supported by the television inspection program, will continue to expend three to five million dollars in contracts annually. Accordingly, corrections to infiltration/inflow problems will be resolved as they are encountered.

SEWER SYSTEM EVALUATION
FOR INFILTRATION INFLOW—PHASE I
RICHMOND-SUNSET DISTRICT

Existing Conditions

The findings regarding the Richmond-Sunset District to the above items are:

A. *Infiltration/Inflow Analysis:*

1. *Average dry weather flow = 20.2 mgd*
   Peak rate dry weather flow = 41 mgd
   Average wet weather flow = 225 mgd
   Peak wet weather flow rate = 4.2 billion gal/day (5-year storm)

2. *Wet-weather overflows to the ocean through 8 outfalls on an average of 82 times a year, for an average total overflow time of 206 hours, bypassing a total of 2.26 billion gallons per year. This bypassing occurs because the Richmond-Sunset Treatment Plant can accommodate only a maximum rate of 70 mgd of combined sewage flow.*

3. *Water consumption during the low consumption months of December 1973 and January 1974, which would exclude irrigation use, was 19.25 mgd. The resident population based on the 1965 census was 220,028 persons as compared to the 1990 population estimate of 229,865. The 1970 City census figure however, decreased to approximately 716,000 Industrial dischargers contributing more than one percent of the pollutant loading or a flow of more than 0.05 mgd were required to submit reports, the total of which represent a flow of 1.12 mgd. All the discharges were identified under the Standard Industrial Classification (SIC) Division I, defined as "services" or as in the case of the Richmond-Sunset region, specifically hospitals.*

4. *The topography of the Richmond-Sunset region varies from the heights of Mount Sutro, Twin Peaks, Mount Davidson and the cliff areas at Lands End to the rolling rather flat dune areas near the beach. The major geological constituent is dune sand, offering a soil highly efficient for the movement of ground water.*

   The sewers in this region are located at an elevation so that they are not affected by tidal fluctuations or salt water infiltration from the ocean. Even though this analysis indicated no high ground water table, an unknown amount of ground water movement is known to emanate from the higher areas and can be seen along the beaches.

5. *There are approximately 337 miles of sewer, predominately clay pipe with mortered joints, 40 to 70 years of age. Most of the larger transport sewers are constructed of reinforced concrete.*

Estimate of Wet Weather Inflow

Annual wet weather inflow has been estimated to be 3.32 billion gallons. Because San Francisco has a combined sewer system, and cost effective analyses have shown that fresh storm water inflow into the sewer is desirable, this volume of wet weather inflow need not be eliminated.

Estimate of Dry Weather Infiltration and Inflow

A mass balance of flow into the sewer system as compared to the dry weather treatment rate indicated an infiltration/inflow rate of 1.32 mgd. If this is related to the North Point region experience ratio (35% Infiltration), approximately 0.5 mgd is infiltration and .82 mgd inflow.

B. *Estimated cost comparison between eliminating versus transporting and treatment of infiltration/inflow.*

Cost Analysis

It was assumed that 30% or 102 miles of the region's sewers would require examination in order to isolate the source of 1.32 mgd of infiltration/inflow. The following is a summary of the annual costs:

Treatment of I/I	*$80,000/year*
Investigate Source of I/I	*$77,700/year*

Since the cost for only locating the source is nearly as much as the cost of treating the flow, then the additional costs of repair would far exceed any savings derived from reducing treatment volumes. Thus, by definition the infiltration/inflow is not excessive.

CONCLUSIONS

Based on the evidence presented in this report, these conclusions are as follows:

(1) The 4.2 billion gallon per day rate of inflow during a 5-year storm into the Richmond-Sunset sewer system cannot be eliminated, as continuation of the combined sewer system in San Francisco is the most cost effective solution.

(2) The 1.32 mgd of infiltration/inflow would be difficult and un-economical to locate and identify when considering the large contributing area. Further, a large portion of this flow is probably intentional inflow into the system, such as hill drainage, rather than defects in the sewers. In all likelihood, this type of inflow would be allowed to continue even after identification is made.

(3) Evidence resulting from this "desk top" analysis indicates there is not excessive infiltration or inflow in the Richmond-Sunset region.

(4) The City's continuing sewer improvement program, supported by the television inspection program, will continue to expend three to five million dollars in contracts annually. Accordingly, corrections to infiltration/inflow problems will be resolved as they are encountered.

For detailed support of the preceding conclusions, reference should be made to the individual infiltration and inflow reports which have been made available by the City and are incorporated herein by reference.

Industrial Source Control and Service Charges

During the past several years, the City has undertaken a program to identify and characterize the sources of pollutants that enter the city's system from nondomestic users. This program has been the subject of a report dated December 1973 prepared by the Public Works Department. The report is essentially a progress report on the implementation of City Municipal Code Section 1.2, Chapter 10, Article 4.1 entitled Industrial Waste Discharge Regulations. Key provisions of these regulations include:

ARTICLE 4.1

INDUSTRIAL WASTE DISCHARGE REGULATIONS
DIVISION 1—GENERAL PROVISIONS

SEC. 118. Purpose of Ordinance. This Ordinanace is for the purpose of regulating and controlling the quality and quantity of discharges from producing, manufacturing, processing, commercial, or industrial operations in order that the wastes being discharged from these sources shall not adversely affect any of the following to a greater degree than would result from the discharge of sanitary sewage:

(a) the personnel employed in the operation and maintenance of the Sewerage System;
(b) the appurtenances of the Sewerage System;
(c) the cost of operation of the Sewerage System;
(d) the quality of the effluent from the City's Water Pollution Control Plants;
(e) the quality of the receiving waters with respect to any and all requirements that may be established by the Regional Water Quality Control Board for the San Francisco Bay Region, or other authorized Board or Agency.

DIVISION 2—PROHIBITED WASTE DISCHARGES

SEC. 121. Exclusion of Wastes. No person shall discharge, deposit, or throw, or cause, allow, or permit to be discharged, deposited, or thrown into the City's Sewerage System any substance of any kind whatever tending to obstruct or injure the Sewage System, or cause a nuisance; or which will in any manner interfere with the proper operation, repair, or maintenance of the Sewerage System, or will in any way render it difficult for any workmen to repair any part of the Sewage System and shall include, but not be limited to:

(a) Ashes, cinders, sand, gravel, dirt, bark, leaves, grass cuttings, and straw, metals, glass, ceramics, and plastics, or any other solid or viscous substance capable of causing obstruction to the flow in sewers.
(b) Flammabel or explosive substances or any other substances which may interact with other wastes to cause flammable or explosive conditions in the Sewerage System.
(c) Mineral oils, greases, or other products of petroleum origin.
(d) Garbage, excepting Properly Ground Garbage from dwellings and restaurants or other establishments engaged in the preparation of foods and beverages intended primarily for immediate consumption.
(e) Any toxic, noxious, or malodorous gas or substance which either singly or by interaction with other wastes, is capable of creating a nuisance or hazard to life and limb or of preventing maintenance of the Sewerage System.

DIVISION 3—LIMITATIONS ON WASTE DISCHARGES AND FEES

SEC. 122. Limitations on Discharges. The characteristics of any industrial waste discharged into the Sewerage System shall not exceed the numerical limits set forth below:

		Limiting Values
(a)	*pH*	*5.5 min; 8.5 max*
(b)	*Phenols, mg/1*	*0.5*
(c)	*Dissolved Sulfides, mg/1*	*0.5*
(d)	*Temperature (except where higher temperatures are required by law)*	*125° F*
(e)	*Turbidity (Jackson Turbidity Units)*	*70*
(f)	*Toxicity (96-hour TLM bioassay)*	*75%*

SEC. 122.1. Limitations Based on Normal Raw Sewage. Any substance in any industrial waste discharge which in accordance with Sec. 118, may adversely affect the operation or maintenance of the Sewerage System, or cause the effluent from the city's Water Pollution Control Plants to exceed state or federal regulations and for which no specific limit has been established shall not exceed the concentration of said substance in Normal Raw Sewage.

SEC. 122.2. Radioactive Waste. No person shall discharge or cause to be discharged any radioactive waste into the Sewerage System, except where:

(a) the person is authorized to use radioactive materials by the Atomic Energy Commission or other governmental agency empowered to regulate the use of radioactive materials;
(b) the waste is discharged in strict conformity with Atomic Energy Commission recommendations for safe disposal of radioactive wastes; and
(c) the person discharging the radioactive waste assumes full responsibility for any injury to maintenance or operational personnel or damage to the Sewerage System that may result from such discharge. Any person discharging a radioactive waste to the Sewerage System in accordance with the provisions of the preceding paragraph shall submit to the Director such reports as the Director may deem necessary. In the event of any accidental spill of any radioactive material into the Sewerage System, the person responsible shall immediately, and in the most expeditious manner notify the Director.

SEC. 122.3. Permissible Discharge: Fee Schedule. The following substances in the concentrations indicated may be discharged into the Sewerage System provided that industrial wastes containing permissible concentrations of these substances are discharged as set forth in the Fee Schedule and one or more composite samples collected at suitable locations over a representative period shall be used to determine the concentration of grease, suspended matter and chemical oxygen demand in the waste discharge into the Sewerage System. The concentrations of these substances shall not exceed the maximum limits set forth in the Fee Schedule, except as exempted hereinafter or unless the Discharger has made application for, and been granted a variance in accordance with the procedures set forth in the article.

The Director, at the variance hearing of the Industrial Waste Review Board on appeal, shall impose an additional charge per day to compensate for the increased cost to the city if a variance is granted.

FEE SCHEDULE

	Grease	Suspended Matter	Chemical Oxygen Demand
a. Domestic Loading Rate:	0-59 mg/1 Min. Charge	0-359 mg/1 Min. Charge	0-699 mg/1 Min. Charge
b. Light Loading Rate:	60-119 mg/1 $0.3 per lb.	360-449 mg/1 $.025 per lb.	700-899 mg/1 $.015 per lb.
c. Average Loading Rate:	120-179 mg/1 $.045 per lb.	450-529 mg/1 $.025 per lb.	900-1099 mg/1 $.015 per lb.
d. Moderate Loading Rate:	180-239 mg/1 $.045 per lb.	530-619 mg/1 $.025 per lb.	1100-1299 mg/1 $.015 per lb.
e. Heavy Loading Rate:	240-300 mg/1 $.05 per lb.	620-700 mg/1 $0.25 per lb.	1300-1500 mg/1 $.015 per lb.
f. Maximum Limit Rate:	300 mg/1 TO BE DETERMINED AT THE VARIANCE HEARING	700 mg/1	1500 mg/1

For the purpose of determining the applicable group in the fee schedule, the concentration of substances of the waste discharge will be adjusted by subtracting the domestic loading of group (a) from the Discharger's loading.

The maximum loading limits of 700 mg/1 for Suspended Matter and 1500 mg/1 for Chemical Oxygen Demand will not take effect until July 1, 1973, and thereafter will be imposed on industrial Waste Dischargers within the area tributary to a treatment plant only when the effluent from that treatment plant is, or in the opinion of the Director threatens to be in violation of any water quality requirements related to Suspended Matter and Chemical Oxygen Demand imposed on the City.

When loadings in excess of the maximum loadings contained in the foregoing schedule are permitted, surcharges shall be assessed at the same rate established for loadings below the maximum levels established herein.

DIVISION 5—FEES AND REIMBURSEMENTS

SEC. 125. Payment of Fees and Reimbursements. All fees and reimbursements shall be payable to the City and shall be delivered to the Department of Public Works, Central Permit Bureau.

SEC. 125.1. Description of Fees.

(a) Waste Discharge Report Fee. A fee, which must accompany the Waste Discharge Report, for the cost of the City's investigation and processing of the Report.
(b) Industrial Waste Review Board Filing Fee. A fee of $200 must accompany any appeal from the Director's Order.
(c) Self-Monitoring Program Review Fee. An annual fee, to be paid by those Dischargers who have been requested to maintain a self-monitoring program, to defray the administrative and other costs of reviewing the Discharger's self-monitoring reports.
(d) Industrial Waste Inspection Fee. An annual fee to be paid by all Dischargers except those who have been requested to maintain a self-monitoring program. To defray the administrative and other costs of the City's industrial waste program.

SEC. 125.2. Schedule of Fees

Type of Fee	*5,000 cu. ft. or less/month*	*30,000 cu. ft. or more/month*
(a) Waste Discharge Report Fee	*$100*	*$600*
(b) Self-Monitoring Program Review Fee	*25*	*150*
(c) Industrial Waste Inspection Fee	*10*	*60*

For any amount of monthly water consumption between 5,000 cubic feet and 30,000 cubic feet, the fee will be increased over the minimum in direct proportion to the amount of additional water consumption over 5,000 cubic feet.

On October 13, 1972, the ordinance was amended making a sewer service charge for any user whose premises were used solely for dwelling purposes a flat 85 cents per month per dwelling unit. For a user whose premises are used for other purposes, the rate was made equal to 40 percent of the user's monthly charge based on meter size as tabulated below.

Meter Size	1972 Monthly Unit Charge	1973 Monthly Unit Charge
5/8"	$ 4.00	$ 2.50
3/4"	$ 6.30	$ 5.50
1"	$ 9.60	$10.00
1-1/2"	$14.30	$18.00
2"	$16.80	$29.00
3"	$16.80	$45.00
4"	$16.80	$55.00
6"	$16.80	$70.00
8"	$16.80	$90.00

Most industrial sewer service charges are computed on this basis, however, for those accounts where a combination of dwelling and nondwelling units are serviced by a single meter service, the charge is as follows: $.85 per month for each dwelling unit contained in the residential portion of the premises plus 40 percent of the monthly charge for water delivered to the nonresidential portion of the premises and a percentage of the above monthly unit (meter) charge for nonresidential users. A fixed percentage was established for each of 2,250 mixed use accounts based on their water consumption records. The amend order went into effect January 17, 1973.

The City will complete a second progress report on its industrial waste program for the 1974 calendar year which will provide more detail concerning the inventory of number and character of industrial waste discharges to the system. Table 13-1 shows the approximate breakdown of current industrial and nonindustrial users in the San Francisco system.

Financial Plan and Revenue Program

To comply with Stateand Federal requirements and to provide the City with guidance in the financing of its wastewater program, the City in 1972 prepared its initial Revenue Program. This program was completed prior to the recent amendments to the Federal Water Pollution Control Act (Public Law 92-500) and prior to recent amendments to the state State regulations on revenue programs. In March 1973, J. B. Gilbert & Associates prepared an evaluation of San Francisco's Master Plan which contained the following recommendations:

- Existing but unsold City bonds should be used to finance the local share (12-1/2 percent) and provide working capital for the construction of the Phase I project.
- Bonds should be sold to achieve long-term repayment and to anticipate future costs if grant should be less than anticipated.
- A comprehensive revenue program should be prepared reflecting current changes in State and Federal regulations to establish long-term principles of financing and detail a specific short-term program for implementation of Phase I.

The City is implementing the third recommendation and complying with State regulations by preparing a new revenue program which will be transmitted concurrently with this Facilities Plan.

Detailed discussions have been undertaken with the City's staff and the financial plan and revenue program consultants, Stone & Youngberg.

The following assumptions will be made to assure implementation of the Facilities Plan as well as a sound financial base for compliance with State and Federal regulations.

Capital Costs. State and Federal grants will be made available for planning, design, and construction of all first-stage facilities including wet weather portions.

- Planning for full implementation of the Master Plan would proceed on the assumption that financial assistance in some form will be made available.
- If at some future date the regulations require the City to complete the wet weather control program without financial assistance, the City would develop a new Revenue Program and time schedule for completion of the program, and the size and control level of certain facilities should be re-evaluated.
- A general obligation bond issue should be presented to the voters to finance the local share of construction costs. The amount would include these assumptions: (1) that the City will approve its total share of Stage I facilities, (2) that while the City is technically eligible for 87-1/2 percent grants, technical regulations often result in grants of about 80 percent of construction costs, and (3) that there is a significant rate of inflation.

Annual Revenue. The service charge which currently produces approximately half the City's annual revenue would continue to be used along with property taxes providing adequate revenues to meet revenue needs if legislation being proposed by EPA to allow the use of user charges is successful.

TABLE 13-1

INDUSTRIAL AND NONINDUSTRIAL USERS
IN SAN FRANCISCO

	Flow (mgd)	COD (1000 lbs/day)	Suspended Solids (1000 lbs/day)
Residential & Commercial	93	310	140
Industrial	11	95	28

Long-Term Funding. Current high rates of inflation in the construction of wastewater facilities and the unusually high costs of constructing facilities in the densely developed areas like San Francisco make it essentail that the City anticipate these increases in its funding of the local share of capital costs. Bond issues should be sufficiently large to anticipate at least five years of local capital costs and cash flow needs.

Environmental Impact Report and Statement

In the spring of 1974, a Draft Environmental Impact Report was prepared jointly by the Environmental Protection Agency and the City to meet both State and Federal requirements. This report dealt with the citywide Master Plan and anticipated that detailed individual environmental impact reports would be prepared on each component project. Two public hearings were held to receive citizen comments and the Final EIR contained responses to these comments and those that were submitted in writing by various agencies and individuals. The following is a portion of the abstract from the EIR.

Description of Project:

The San Francisco Master Plan for Wastewater Management is a concept which includes a combination of pumps, pipes, storage reservoirs, treatment plants, and disposal locations which it is believed most effectively reduces the detrimental effects of waste discharges from the City and County of San Francisco. The Master Plan will be constructed in four stages during the next 20 years.

Implementation of the first stage of the Master Plan is necessary to comply with provisions of the Federal Water Pollution Control Act Amendments of 1972 and existing Cease and Desist Orders of the California Regional Water Quality Control Board, San Francisco Bay Region, which require secondary treatment of all dry weather flows by July 1, 1977.

Upon completion of the Master Plan, wastes will receive secondary treatment at the Southeast and Richmond-Sunset plants. Effluent from these plants will be transmitted through a tunnel and pipeline system to the southwest corner of the city and discharged approximately four miles offshore. During storm conditions, flows exceeding the capacity of the secondary treatment plants will be transported to the 1,000 mgd capacity Southwest Treatment Plant where it will receive Level I (low dose ferric chloride) treatment and be discharged about two miles offshore.

Implementation Plan I, North Point Transport Project, is scheduled for construction in 1974. The North Point Transport Project will convey untreated wastewater from the existing North Point Water Pollution Control Plant to the Southeast Water Pollution Control Plant which will allow conversion of the North Point plant to a wet weather treatment facility.

Summary of Environmental Impacts:

A. Construction impacts will occur in almost every area of the city—land use changes, traffic disruption, noise, dust, flora and fauna disruption, aesthetics, utility disruption, and temporary turbidity increases in the bay and ocean waters.

B. Interim discharge of combined North Point and Southeast secondary treated effluent into South San Francisco Bay.

C. Elimination of the North Point primary discharge to San Francisco Bay.

D. Control of wet weather flows along the northeast shoreline at completion of State I resulting in only five wet weather overflows per year.

E. Control of wet weather flows citywide at completion of the Master Plan resulting in only eight wet weather overflows per year.

F. Master Plan provides secondary treatment of all dry weather flow and discharge to the Pacific Ocean through a five-mile outfall.

G. Capacity of the treatment facilities will not allow for population growth beyond that compatible with the applicable air implementation plant prepared pursuant to the Clean Air Act Amendments of 1970. Secondary impacts in this area are expected to be minor.

Alternatives:

A. No Project
B. Many Individual Treatment Plants
C. Expansion of Three Existing Plants
D. One Regional Plant Without Wet Weather Storage
E. Sewer Separation
F. Reclamation

Dates Available to CEQ and the Public:

Draft: March 13, 1974
Final: May 24, 1974

The environmental impact report contained detailed appendices on the subjects of wastewater reclamation and foundation and geologic conditions. These appendices are also included as appendices to this report. It is believed that conclusions therein are still valid.

The following is a summary of the significant issues that were raised in the EIR review process.

Historic Preservation. The need for full consideration of the many historic sites in and around San Francisco was stressed. The response was that the Master Plan is still in the conceptual stage; and that during the development of specific individual projects in association with the EIR, detailed consideration would be given to historic or archaeological sites.

Construction Impacts. Concern was expressed about the construction impacts of pipelines and retention basins. The response was that these will be minimized to the greatest extent possible and that separate environmental impact reports will deal in greater detail with alternatives and mitigation measures.

Wastewater Reclamation. The desire for maximum reclamation of all of San Francisco's waste was emphasized. In response, reference was made to the reclamation report which showed that about 5 mgd of additional dry weather flow could be reclaimed, that the Master Plan would accommodate itself to future Bay Area reclamation should that become economical.

Upstream Retention Basins. Considerable concern was expressed regarding the construction, operation, and maintenance of these basins and their specific impacts on local areas. Requests were made regarding not only mitigation but local aesthetic improvements. Response was that these matters would be considered in the final system design.

Point Source Control. Toxic source control was emphasized as more important than providing removal of toxics in a treatment plant. Response was that the City's industrial waste ordinance was being implemented and should achieve this objective consistent with State regulations.

Earthquake and Seismic Problems. Earthquake and seismic problems were mentioned along with a request for an emergency operational plan in the event of a natural disaster. These problems have been given study by the City and more detailed investigations will follow as individual features are designed.

Marine Studies. The extent of marine studies was questioned as were a number of the findings in referenced reports including studies by Brown and Caldwell and Engineering Science, Inc. Response was that these studies must be considered as a whole and additional work is underway.

Summary. In summary, the EIR and EIS hearings and comments included many of the major issues that are discussed in this Facilities Plan. While much information needs to be developed regarding specific facilities and environmental factors, the information base that presently exists in the areas of economics, biology, geology, hydrology, and engineering planning is sufficient upon which to develop first-stage facilities that will fit into the likely set of alternative master plans. There were many other comments on a variety of issues and reference is made to the final EIR/S for detailed presentation and responses.

PUBLIC REVIEW

In addition to the EIR/S process, the San Francisco wastewater program has been subject to continuous review. This review began late in 1972 when the City appointed a Citizen's Advisory Committee who reviewed the Master Plan in some detail. A series of meetings were held by members of the Committee and the Committee formed individual task groups to evaluate various aspects of the Master Plan. Later, in 1973, the firm of J. B. Gilbert & Associates completed an evaluation of the Master Plan which was presented to the Citizen's Advisory Committee and to the Board of Supervisors. In addition to the public hearings on the environmental report, the Citizen's Advisory Committee, which was composed of representatives from a wide variety of citizen and conservation groups, reviewed the EIR and made its comments which were incorporated into the final report. The matter was considered publicly by the Board of Supervisor's Health and Safety Committee and by the Board itself in adopting a policy resolution on implementation in the summer of 1973.

In summary, there has been a considerable continuing interest in the San Francisco wastewater program. That interest has been limited to conservation groups and individuals. It can be expected that when local facilities are proposed, the local resident interest will be quite high.

The effect of this extensive series of reviews of the Master Plan, the evaluation, and the EIR has resulted in no significant challenge to the basic concept of storage, treatment, and ocean disposal except perhaps for the demand that a large portion—if not all—of the city's waste be reclaimed and reused. The primary comments relate to construction impacts in local areas.

FUTURE REPORTS
(Element Project Reports and EIR's)

This Overview Facilities Plan and the Federal-State Environmental Impact Report contain the information necessary for the evaluation of the first-stage program with respect to a long-range facilities plan. However, study is needed on individual projects. The City plans to comply with the provisions of the State Environmental Quality Act by completing a series of environmental impact reports that also contain sufficient technical information to provide for individual project analysis including alternative sites. Thus, a separate project report and EIR has been prepared for the North Point to Southeast Interceptor and one is under preparation for the Southeast Treatment plant improvements.

Table 13-2 lists the project report-EIR's that will be prepared on elements of the first-stage program.

Table 13-3 lists the studies required to provide information for the first-stage projects or to refine the long-range plan. The studies are discussed below.

Revenue Program Update. The revenue program for the first-stage is being submitted with this report. As first-stage facilities are refined and as cost estimates are improved, the revenue program will be updated.

TABLE 13-2

FIRST-STAGE
PROJECT REPORT/EIR SCHEDULE

Reports	Date of Completion	Estimated Cost
Initial basins	December, 1975	100,000
West side transportation system	June, 1975	100,000
Ocean outfall	December, 1975	100,000
Richmond-Sunset interim treatment improvements	June, 1975	35,000
Southeast secondary treatment improvements	Draft Complete	50,000
North Point to Southeast Transport	Complete	42,000

TABLE 13-3

FIRST-STAGE PROJECT STUDIES

Study	Date of Completion	Cost $
Revenue Program Update	Annually or as required	
Outfall Screening	December, 1975	25,000
Outfall Extension	December, 1975	25,000
Industrial Waste Control	December, 1977	575,000
Central Control and Information	mid-1978	1,395,000
Retention Basins	mid-1978	3,841,000

Outfall Screening. It has been recommended in the tentative Basin Plan that wet weather overflows be screened. The specific type of screening has not been defined. Numerous problems with screens can be anticipated. For example, when screens are fine enough to achieve significant reductions in the discharge of pollutants, the cost and effectiveness of the operation come into question. No major dry weather treatment plant uses screens continually. Racks or other coarse screens on a traveling frame could be used to reduce floatable emissions. However, there is no evidence that they would result in significant aesthetic or bacteriological improvement along the waterfront. The percent solids removal in operations such as the City of Sacramento's principal wet weather pumping station indicate that rack screens are only partially successful. A pilot study is required to determine whether screening should be employed as a cost-effective measure on outfalls and, if so, the type of screening process to be employed.

Outfall Extension. The tentative Basin Plan calls for a 10:1 dilution of all wastewater discharges. This requirement will be fairly easy to achieve where construction impacts will not be severe and where the intensity of use warrants such dilution. An example of such an area would be Ocean Beach. However, other areas, particularly those with peculiar nearshore current patterns, construction problems, and the like, will require a case-by-case analysis for each outfall or proposed consolidated outfall. Such studies will be necessary prior to decisions on the details of how or whether it is cost-effective to comply with the 10:1 dilution requirement.

Industrial Waste Control. The Industrial Waste Program was started in 1970. The following steps have been completed or started:

1. Industrial Waste Ordinance—January 1971
2. Collection of 155 Waste Discharge Reports—1972-73
3. Development of a computer program and collection of industrial waste surcharges—1973
4. Inspections of industries—1974 and continuing in 1975—4500 inspections
5. Questionnaires (850) sent to suspected dischargers—1974-75
6. Orders (300) issued to dischargers—300; 1973, 1974, and 1975

In early 1975, the City will implement a source control program which will restrict discharges of chromium, zinc, mercury, and possibly other metals which are critical to the City's effluent discharge requirements.

Programs now being initiated include:

1. Modification and improvement of the ordinance
2. Development of a computer program to provide technical information on dischargers
3. Development of a laboratory analysis capability, including the purchase of an atomic absorption spectrophotometer to analyze heavy metals

Central Control and Information. Proper design and operation of upstream and downstream retention basins, the transportation system, and the treatment plants will require a computerized prediction and control system. This system will provide remote sensing control operation of the individual retention basins and the transport systems, and treatment plant operational information. Such a system will require that the physical operation of each retention basin be coordinated with the watershed characteristics. This coordination can best be described after physical models of the retention basin systems and interconnecting piping or for individual basins are developed and studied and a program is undertaken to simulate operational modes.

During the last four years, 30 rain gauges have been in operation in various parts of the city. Prior to that, gauging was done only at a single measuring point. The efficiency of the recommended plan will depend upon exploiting the spatial and temporal variations of rainfall, so that each individual storage collection system can be most efficiently operated. That is, individual storage reservoir operation will be programmed so that, when used in concert with other retention basins, operation can anticipate storm direction, intensity, and duration. To achieve this objective, it is necessary to continue the citywide monitoring of rainfall as well as the insystem flow measurements.

Retention Basins. The control and operation of large retention basins for wet weather flows is a new approach. A number of problems can be anticipated, including odor control, mechanical failure of the basins or operations systems, solids removal, and dewatering. Operational studies on prototype basins are therefore required prior to the expenditure of very large sums of money for the construction of basins around the entire city.