ASSUMPTIONS:

1. 6th RAFFINATE WATER AVERAGES 2000 GPD WITH A MAXIMUM OF 3000 GPD PLUS 1000 GPD OF CHEM C CLEANUP WATER.
2. 6th RAFFINATE WATER AFTER LIME NEUTRALIZATION WILL GENERATE 517 LBS. OF DRY WEIGHT SOLIDS PER 74 GALLONS (13973 LBS/DAY OF DRY WEIGHT SOLIDS AVG.).
3. SOLIDS GENERATED IN EXISTING NEUTRALIZATION SYSTEM ARE AT 3.8% OR 44368 LBS/DAY OF DRY WEIGHT SOLIDS AT A FLOW OF 140000 GPD – NOT INCLUDING THE 6th RAFFINATE WASTEWATER.
4. POND NO. 3 FRENCH DRAIN WATER AFTER LIME NEUTRALIZATION WILL GENERATE 0.94 LBS OF DRY WEIGHT SOLIDS PER 4 LITERS OF WASTEWATER TREATED (7152 LBS/DAY OF DRY WEIGHT SOLIDS AVERAGE)
5. NH3 LADEN WASTEWATER AFTER LIME ADDITION WILL CONTAIN APPROXIMATELY 3% DRY WEIGHT SOLIDS
6. CAPABILITY OF MAIN TREATMENT SYSTEM WILL BE 350 GPM
7. FILTER PRESS CAKE IS APPROXIMATELY 50% DRY WEIGHT
8. 6TH RAFFINATE WATER WILL BE TREATED IN THREE 1333 GALLON BATCHES PER DAY
9. FRENCH DRAIN WATER WILL BE TREATED IN TEN 2900 GALLON BATCHES PER DAY
10. PEAK RAINFALL OF 5.5 IN./24 HR., BASED ON 10 YEAR, 24 HR STORM EVENT
11. PONDS 1S AND 1N WILL BE MAINTAINED AT LOWEST POSSIBLE LEVEL

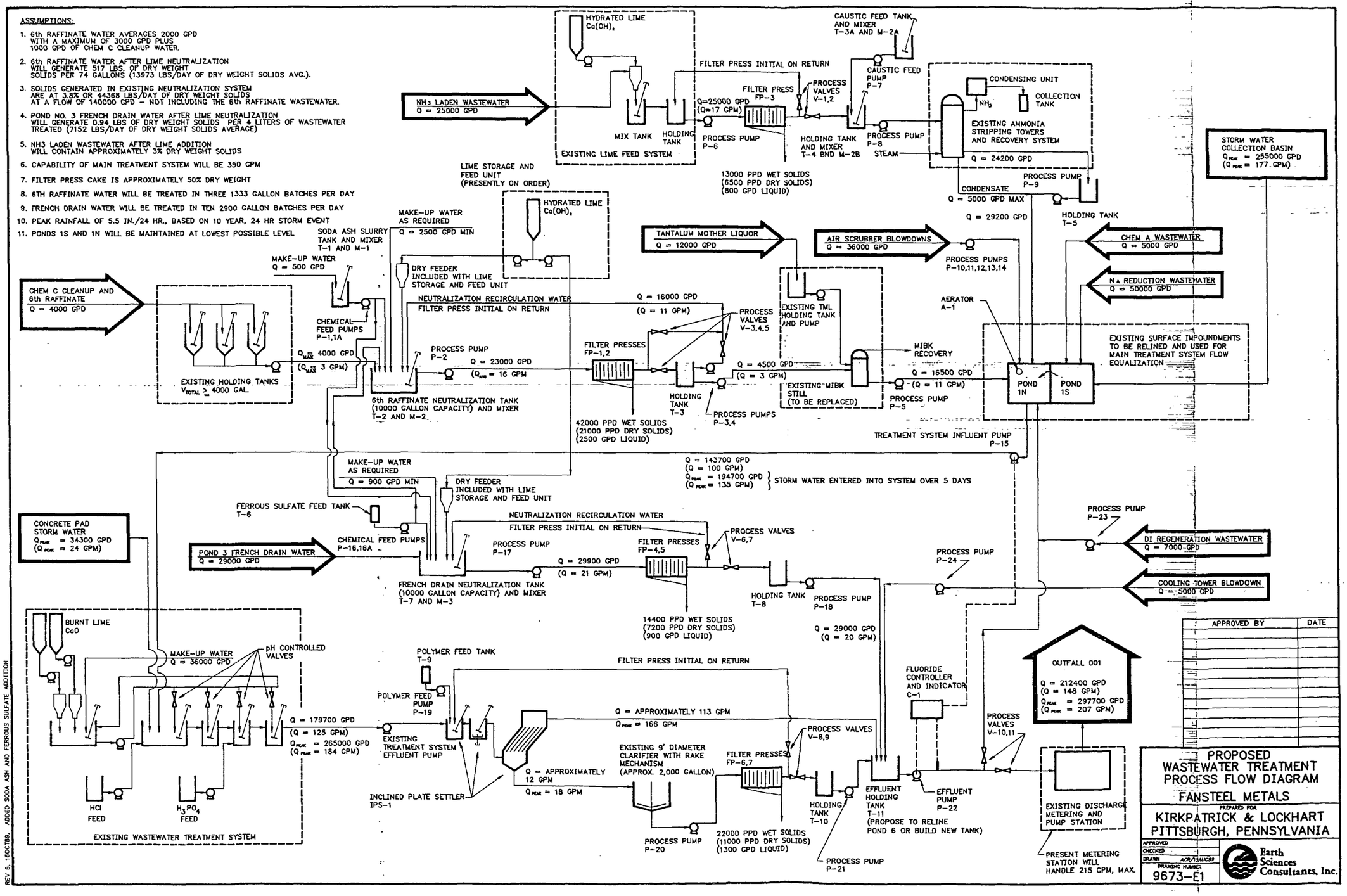

APPROVED BY	DATE

PROPOSED WASTEWATER TREATMENT PROCESS FLOW DIAGRAM

FANSTEEL METALS

PREPARED FOR

KIRKPATRICK & LOCKHART
PITTSBURGH, PENNSYLVANIA

APPROVED
CHECKED
DRAWN ACR/JSW/CBB
DRAWING NUMBER 9673-E1

Earth Sciences Consultants, Inc.

REV 6, 16OCT89, ADDED SODA ASH AND FERROUS SULFATE ADDITION

195723

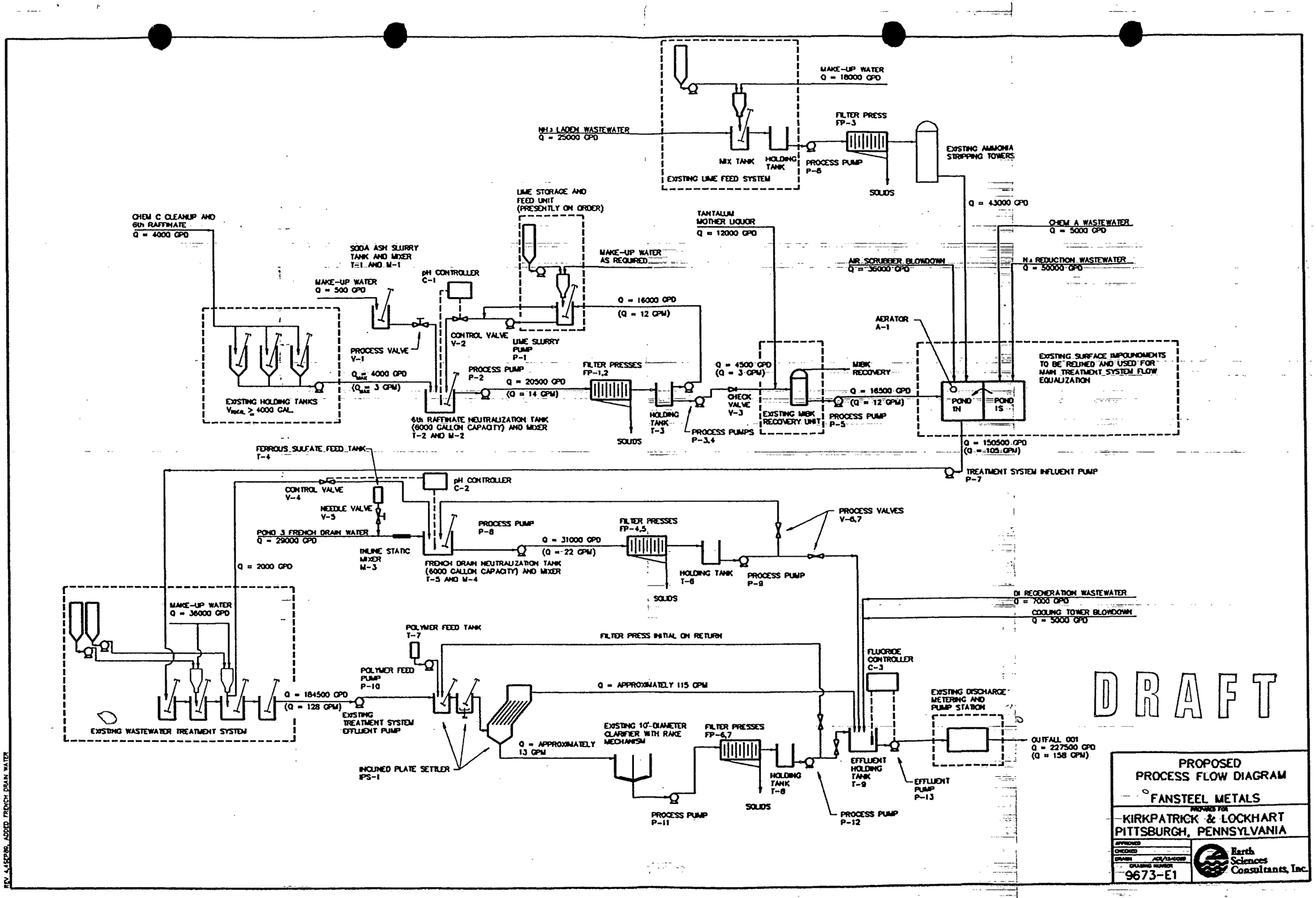
MAKE-UP WATER
Q = 18000 GPD
NH3 LADEN WASTEWATER
Q = 25000 GPD
MIX TANK
HOLDING TANK
EXISTING LIME FEED SYSTEM
FILTER PRESS
FP-3
PROCESS PUMP
P-6
SOLIDS
EXISTING AMMONIA STRIPPING TOWERS
Q = 43000 GPD
LIME STORAGE AND FEED UNIT (PRESENTLY ON ORDER)
TANTALUM MOTHER LIQUOR
Q = 12000 GPD
CHEM C CLEANUP AND 6th RAFFINATE
Q = 4000 GPD
SODA ASH SLURRY TANK AND MIXER
T-1 AND M-1
MAKE-UP WATER
Q = 500 GPD
pH CONTROLLER
C-1
MAKE-UP WATER AS REQUIRED
Q = 16000 GPD
(Q = 12 GPM)
CHEM A WASTEWATER
Q = 5000 GPD
AIR SCRUBBER BLOWDOWN
Q = 36000 GPD
Na REDUCTION WASTEWATER
Q = 50000 GPD
AERATOR
A-1
PROCESS VALVE
V-1
CONTROL VALVE
V-2
LIME SLURRY PUMP
P-1
Q = 4000 GPD
(Q = 3 GPM)
PROCESS PUMP
P-2
Q = 20500 GPD
(Q = 14 GPM)
FILTER PRESSES
FP-1,2
Q = 4500 GPD
(Q = 3 GPM)
MIBK RECOVERY
Q = 16500 GPD
(Q = 12 GPM)
EXISTING SURFACE IMPOUNDMENTS TO BE RELINED AND USED FOR MAIN TREATMENT SYSTEM FLOW EQUALIZATION
EXISTING HOLDING TANKS
V_TOTAL ≥ 4000 GAL.
6th RAFFINATE NEUTRALIZATION TANK (6000 GALLON CAPACITY) AND MIXER
T-2 AND M-2
HOLDING TANK
T-3
CHECK VALVE
V-3
EXISTING MIBK RECOVERY UNIT
PROCESS PUMP
P-5
POND 1N
POND 1S
SOLIDS
PROCESS PUMPS
P-3,4
Q = 150500 GPD
(Q = 105 GPM)
FERROUS SULFATE FEED TANK
T-4
TREATMENT SYSTEM INFLUENT PUMP
P-7
pH CONTROLLER
C-2
CONTROL VALVE
V-4
NEEDLE VALVE
V-5
POND 3 FRENCH DRAIN WATER
Q = 29000 GPD
PROCESS PUMP
P-8
Q = 31000 GPD
(Q = 22 GPM)
FILTER PRESSES
FP-4,5
PROCESS VALVES
V-6,7
INLINE STATIC MIXER
M-3
FRENCH DRAIN NEUTRALIZATION TANK (6000 GALLON CAPACITY) AND MIXER
T-5 AND M-4
HOLDING TANK
T-6
PROCESS PUMP
P-9
SOLIDS
Q = 2000 GPD
MAKE-UP WATER
Q = 36000 GPD
DI REGENERATION WASTEWATER
Q = 7000 GPD
COOLING TOWER BLOWDOWN
Q = 5000 GPD
POLYMER FEED TANK
T-7
FILTER PRESS INITIAL ON RETURN
POLYMER FEED PUMP
P-10
Q = APPROXIMATELY 115 GPM
FLUORIDE CONTROLLER
C-3
Q = 184500 GPD
(Q = 128 GPM)
EXISTING TREATMENT SYSTEM EFFLUENT PUMP
EXISTING WASTEWATER TREATMENT SYSTEM
EXISTING DISCHARGE METERING AND PUMP STATION
DRAFT
Q = APPROXIMATELY 13 GPM
EXISTING 10'-DIAMETER CLARIFIER WITH RAKE MECHANISM
FILTER PRESSES
FP-6,7
OUTFALL 001
Q = 227500 GPD
(Q = 158 GPM)
INCLINED PLATE SETTLER
IPS-1
HOLDING TANK
T-8
EFFLUENT HOLDING TANK
T-9
EFFLUENT PUMP
P-13
SOLIDS
PROCESS PUMP
P-11
PROCESS PUMP
P-12
PROPOSED
PROCESS FLOW DIAGRAM
FANSTEEL METALS
PREPARED FOR
KIRKPATRICK & LOCKHART
PITTSBURGH, PENNSYLVANIA
APPROVED
CHECKED
DRAWN
DRAWING NUMBER
9673-E1
Earth Sciences Consultants, Inc.
REV 4,SEP86, ADDED TRENCH DRAIN WATER

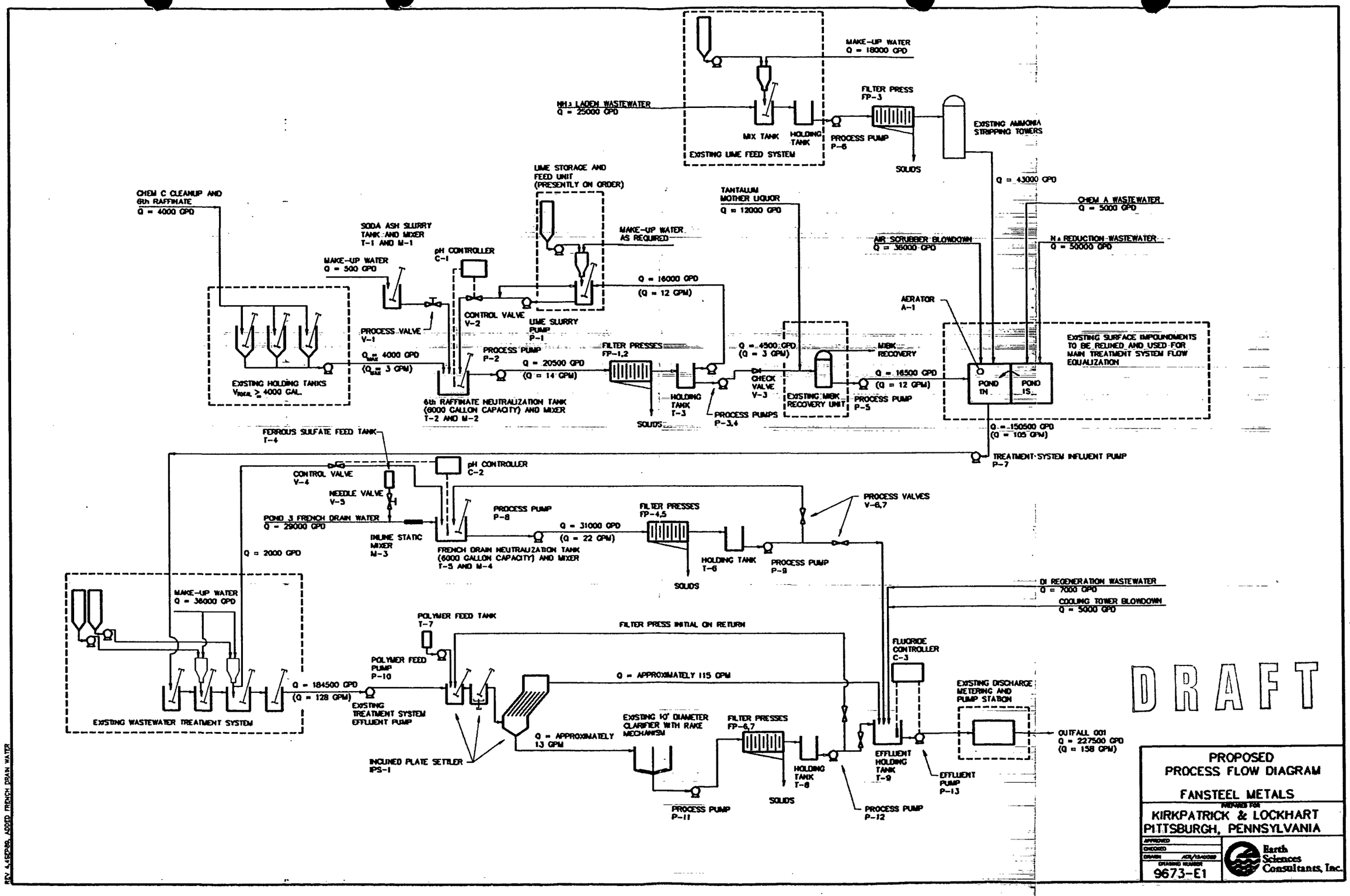
MAKE-UP WATER
Q = 18000 GPD
NH3 LADEN WASTEWATER
Q = 25000 GPD
MIX TANK
HOLDING TANK
EXISTING LIME FEED SYSTEM
FILTER PRESS
FP-3
PROCESS PUMP
P-6
SOLIDS
EXISTING AMMONIA STRIPPING TOWERS
Q = 43000 GPD
CHEM A WASTEWATER
Q = 5000 GPD
N A REDUCTION WASTEWATER
Q = 50000 GPD
LIME STORAGE AND FEED UNIT (PRESENTLY ON ORDER)
TANTALUM MOTHER LIQUOR
Q = 12000 GPD
CHEM C CLEANUP AND 6th RAFFINATE
Q = 4000 GPD
SODA ASH SLURRY TANK AND MIXER
T-1 AND M-1
MAKE-UP WATER
Q = 500 GPD
pH CONTROLLER
C-1
MAKE-UP WATER AS REQUIRED
Q = 16000 GPD
(Q = 12 GPM)
AIR SCRUBBER BLOWDOWN
Q = 36000 GPD
AERATOR
A-1
PROCESS VALVE
V-1
CONTROL VALVE
V-2
LIME SLURRY PUMP
P-1
EXISTING HOLDING TANKS
Vtotal ≥ 4000 GAL.
Q max = 4000 GPD
(Q max = 3 GPM)
PROCESS PUMP
P-2
Q = 20500 GPD
(Q = 14 GPM)
FILTER PRESSES
FP-1,2
Q = 4500 GPD
(Q = 3 GPM)
MIBK RECOVERY
CHECK VALVE
V-3
EXISTING MIBK RECOVERY UNIT
Q = 16500 GPD
(Q = 12 GPM)
PROCESS PUMP
P-5
EXISTING SURFACE IMPOUNDMENTS TO BE RELINED AND USED FOR MAIN TREATMENT SYSTEM FLOW EQUALIZATION
POND IN
POND IS
6th RAFFINATE NEUTRALIZATION TANK (6000 GALLON CAPACITY) AND MIXER
T-2 AND M-2
HOLDING TANK
T-3
SOLIDS
PROCESS PUMPS
P-3,4
Q = 150500 GPD
(Q = 105 GPM)
FERROUS SULFATE FEED TANK
T-4
TREATMENT SYSTEM INFLUENT PUMP
P-7
pH CONTROLLER
C-2
CONTROL VALVE
V-4
NEEDLE VALVE
V-5
PROCESS VALVES
V-6,7
POND 3 FRENCH DRAIN WATER
Q = 29000 GPD
PROCESS PUMP
P-8
FILTER PRESSES
FP-4,5
Q = 31000 GPD
(Q = 22 GPM)
INLINE STATIC MIXER
M-3
Q = 2000 GPD
FRENCH DRAIN NEUTRALIZATION TANK (6000 GALLON CAPACITY) AND MIXER
T-5 AND M-4
HOLDING TANK
T-6
PROCESS PUMP
P-9
SOLIDS
DI REGENERATION WASTEWATER
Q = 7000 GPD
COOLING TOWER BLOWDOWN
Q = 5000 GPD
MAKE-UP WATER
Q = 36000 GPD
POLYMER FEED TANK
T-7
FILTER PRESS INITIAL ON RETURN
FLUORIDE CONTROLLER
C-3
POLYMER FEED PUMP
P-10
Q = APPROXIMATELY 115 GPM
Q = 184500 GPD
(Q = 128 GPM)
EXISTING TREATMENT SYSTEM EFFLUENT PUMP
EXISTING DISCHARGE METERING AND PUMP STATION
EXISTING WASTEWATER TREATMENT SYSTEM
EXISTING 10' DIAMETER CLARIFIER WITH RAKE MECHANISM
FILTER PRESSES
FP-6,7
Q = APPROXIMATELY 13 GPM
OUTFALL 001
Q = 227500 GPD
(Q = 158 GPM)
INCLINED PLATE SETTLER
IPS-1
HOLDING TANK
T-8
EFFLUENT HOLDING TANK
T-9
EFFLUENT PUMP
P-13
SOLIDS
PROCESS PUMP
P-11
PROCESS PUMP
P-12
DRAFT
PROPOSED
PROCESS FLOW DIAGRAM
FANSTEEL METALS
PREPARED FOR
KIRKPATRICK & LOCKHART
PITTSBURGH, PENNSYLVANIA
APPROVED
CHECKED
DRAWN
DRAWING NUMBER
9673-E1
Earth Sciences Consultants, Inc.
REV 4/15/96, ADDED FRENCH DRAIN WATER

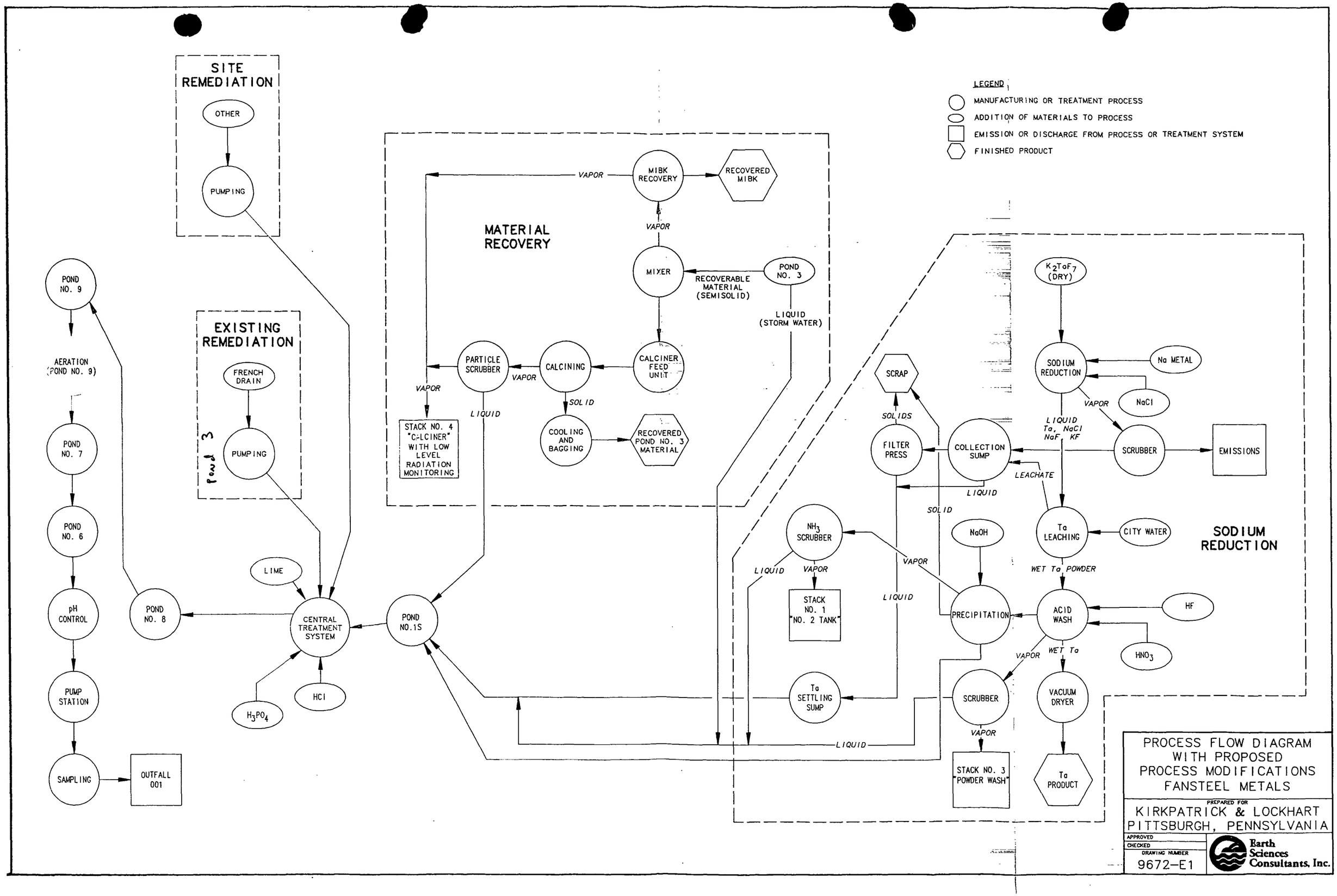

PROCESS FLOW DIAGRAM
WITH PROPOSED
PROCESS MODIFICATIONS
FANSTEEL METALS

PREPARED FOR
KIRKPATRICK & LOCKHART
PITTSBURGH, PENNSYLVANIA

APPROVED
CHECKED
DRAWING NUMBER
9672-E1

Earth Sciences Consultants, Inc.

NOTES:

1. COLLECTED DURING PROCESS EQUIPMENT DISMANTLING AND BUILDING CLEANUPS.
2. INCLUDES POTENTIAL SITE REMEDIATION ACTIVITIES.
3. CURRENTLY NOT IN OPERATION. HOWEVER, THERE IS AN OPTION WITH TTC TO OPERATE THIS PROCESS FOR 24 MONTHS STARTING JULY 1, 1990.
4. COLLECTED UNTIL PLANT IS CLOSED.

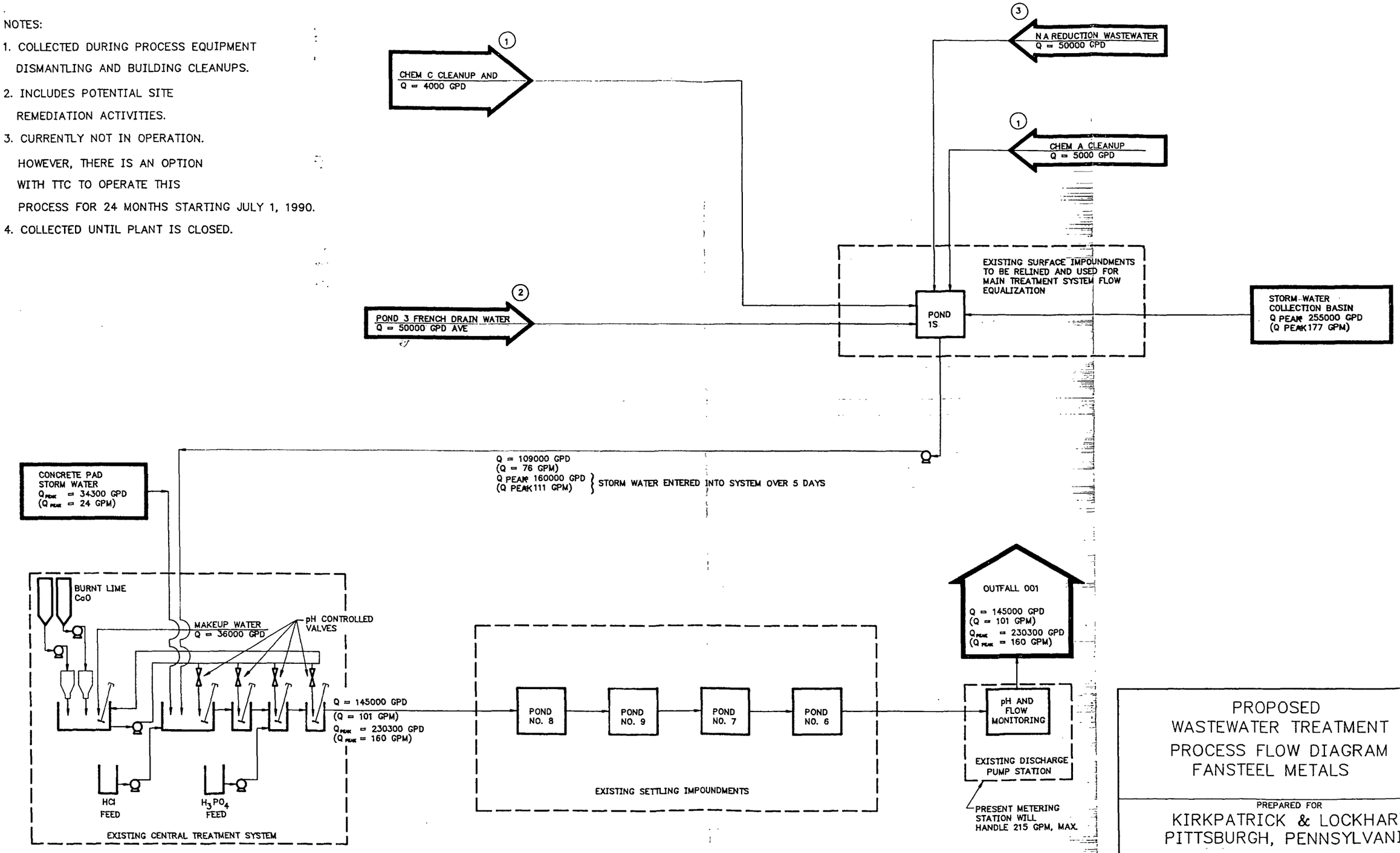

PROPOSED
WASTEWATER TREATMENT
PROCESS FLOW DIAGRAM
FANSTEEL METALS

PREPARED FOR
KIRKPATRICK & LOCKHART
PITTSBURGH, PENNSYLVANIA

APPROVED
CHECKED
DRAWING NUMBER
9672-E2

Earth Sciences Consultants, Inc.

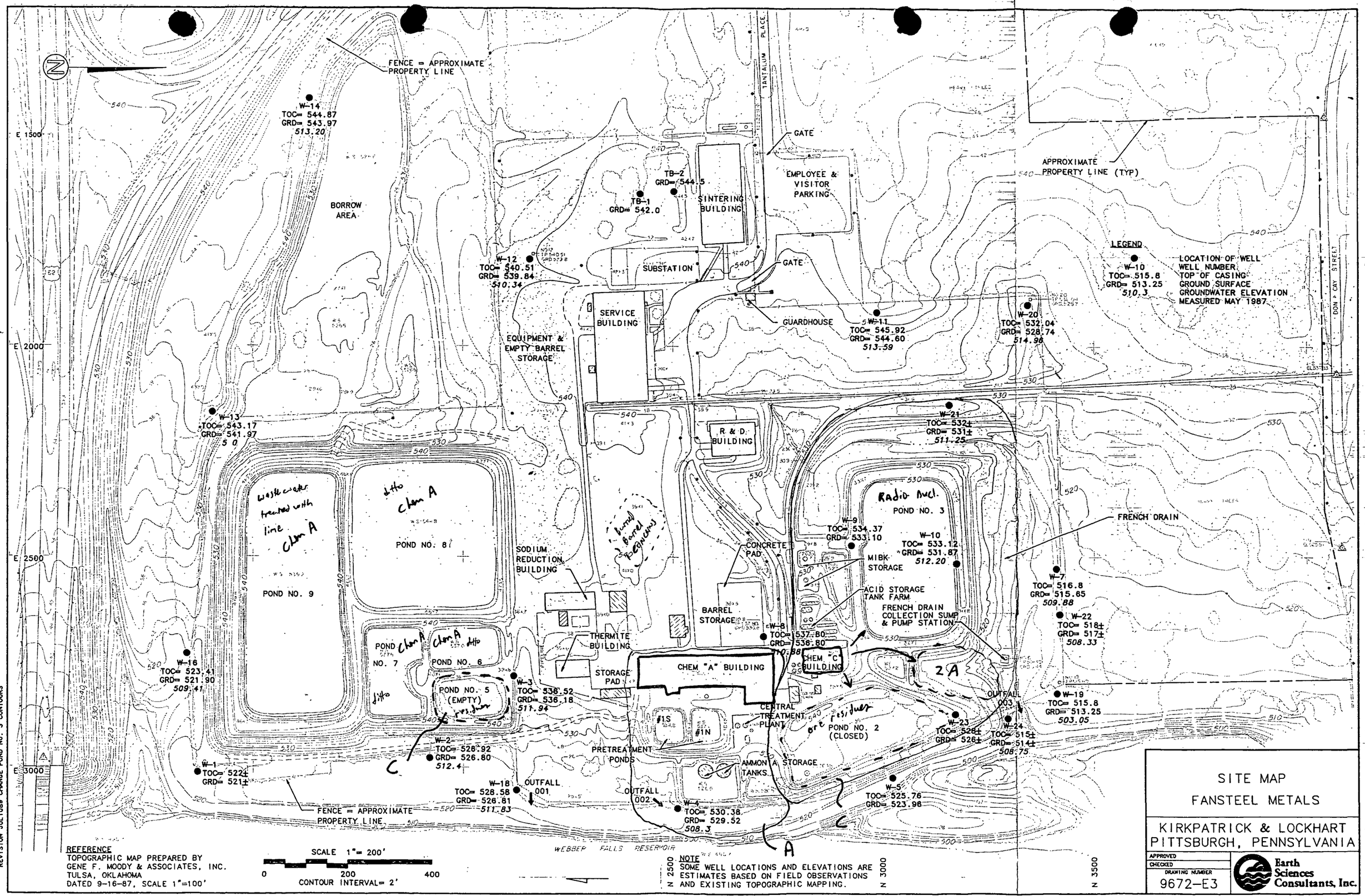

REFERENCE
TOPOGRAPHIC MAP PREPARED BY
GENE F. MOODY & ASSOCIATES, INC.
TULSA, OKLAHOMA
DATED 9-16-87, SCALE 1"=100'

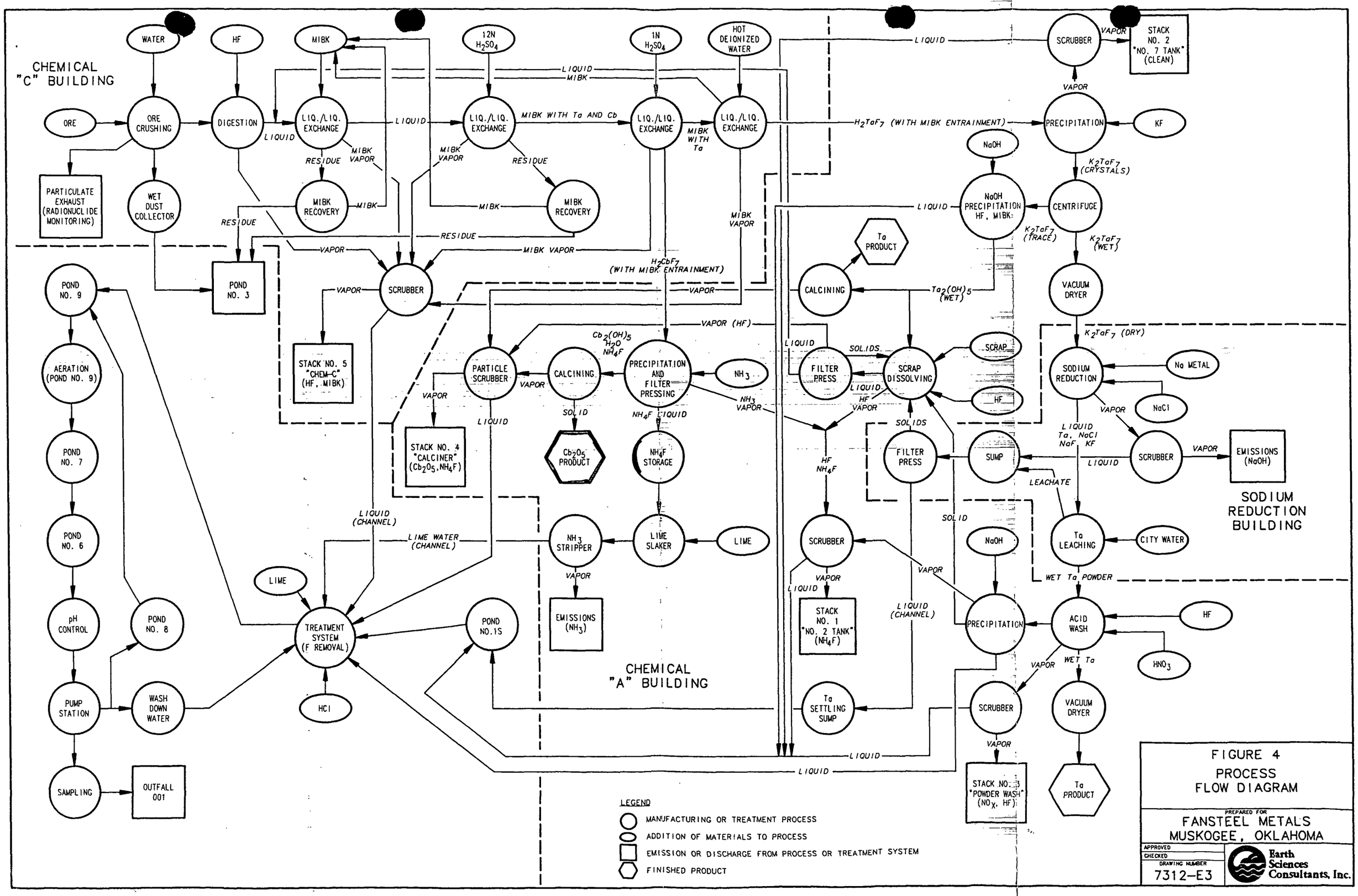

FIGURE 4
PROCESS FLOW DIAGRAM

PREPARED FOR
FANSTEEL METALS
MUSKOGEE, OKLAHOMA

APPROVED
CHECKED
DRAWING NUMBER
7312-E3

Earth Sciences Consultants, Inc.