COMPUTER PROBLEMS 5/94
FOR DWAIN NELL TO SOLVE

1932639 - R8 SEMS

VER. 5.01 031387 REV. B

COMPAQ®

USER DIAGNOSTICS

The COMPAQ® Personal Computer
USER DIAGNOSTICS and SETUP

©Copyright 1982, 83, 84, 85, 86, 87 Compaq Computer Corporation. All Rights Reserved.
©Copyright 1981, 82, 83, 84, 85, 86, 87 Microsoft® Corporation. All Rights Reserved.

106628 Printed in U.S.A.

COMPAQ®

SONY®

NO.

MD-2HD

DOS 5.0 Bootable

SONY®

FLOPPY DISK/DISQUE SOUPLE/FLOPPY DISK

VER. 5.01 032387 REV. B

COMPAQ®

USER PROGRAMS

The COMPAQ® Personal Computer
USER PROGRAMS

© Copyright 1982, 83, 84, 85, 86, 87 Compaq Computer Corporation. All Rights Reserved.
© Copyright 1981, 82, 83, 84, 85, 86, 87 Microsoft® Corporation. All Rights Reserved.

100531 Printed in U.S.A.

COMPAQ®

VER. 3.10 032786 REV. C

COMPAQ®

MS-DOS®

The COMPAQ® Personal Computer
MS-DOS® Supplemental Programs

© Copyright 1982, 83, 84, 85, 86 COMPAQ Computer Corporation – All Rights Reserved
© Copyright 1981, 82, 83, 84, 85, 86 Microsoft, Incorporated – All Rights Reserved

105102-002 Printed in U.S.A.

COMPAQ

GREEN No. 20280 GREGG RULED 80 COUNT

SDMA

Stenographic

NOTE BOOK

copi

Book No. 1 From _____ To _____

Things for Duain

receptionist computer

① - in Enable - ore program
clean up database (archive)
(i.e. combine all of 1993 info into the one file like done before to save time + space when computing daily reports)
* please leave easy to understand instructions on how to do this so we can do it next year, this summer, + etc

② in Enable - ore program menu

- when going in to ② edit a report if a correction was to be made I used to be able to go up to the date after editing + enter 999999 + it would automatically save changes + exit out of that day + put me back to the ore main menu

I think 999999 was set up as some type of macro in the word processing or database to save + exit to one menu, but it hasn't worked since about January

(3) ~~when~~ There's an extra 2 lines in the master document that prints the dailys + needs to be manually deleted (alt F3) for every single daily that's printed
- isn't there a way to edit this master document + delete those 2 extra lines for good? can you do it? now? in case I need to do it some day.

what I do now:

S. to print daily summary
then alt F3 to delete
the 2 extra lines under
the daily section
then alt F2 to print
Alt end to get back to main-
menu

(4) At one time the dailys in Arable would print out on the laser printer in a smaller font with approx 1.5" margin on right + bottom margin
Clive tried setting it up but couldn't figure out how to do it + keep it that way for <u>every</u> daily

can you fix? + how?

Check D:\
every time a chkdsk is done, it always locks up

N/A ~~we're getting rid of computer??~~

---

install ~~lotus~~ DOS on comp.
~~WP, whatever is needed~~

---

fix master menu as needed

can computer be hooked up (via cable) to print either on laserjet or dot matrix? how? can you do this?

Programs needed on reception comp.

EV Tape
WPS1
Lotus - 123/Printgraph + Sideways
Ore program
Norton
PKZip + Color monitor

Programs needed on accounting comp

EV Tape
WPS1
Lotus 123/Printgraph + Sideways
Norton
PKZip
Solomon - ~~single user~~
for sure need Accounts Payable
+ Purchasing portions
on computer + sys mgr

*leave solomon on network + solomon server on comp#2

Accts Payb ~ where all vendors are kept
Purchasing ~ for doing PO's
~ not sure where purch. order master form is in computer or how to create the master form

save

Reception Comp does not keep
Date accurately
-may need new battery??

WPS1 {

WPS1 WS1

5/26 ~ 31 $363 ~~Bos~~ M-R

$252 Phx

$299 Den

30 days

4-18-94

Problems w/reception computer:

Comes up saying its ws 2 after typing NET

when doing FS (list files) on A:\
~~sometimes~~ often comes up reading
Directory H:\ on the screen
????

Date + time is always incorrect of network
+ reception computer

WPS1 - spell check
beeps + says "put spell check 2 in drive"
if keep pressing esc, it works

40 meg

800 17

231 0900 22

DRIVE TYPE, 32

TMP1.ROD

Need on Reception Computer

Lotus (123, printgraph + Sideway)
WPS.1
PKZip
Norton
EN Tape
* Ore Program (Enable)

keep WPS1 data files on computer
+ macro files
save on hard drive

WPS1\WORKS - data files
WPS1\MACROS - macro dir

Hi DWAIN!

LAURA'S COMPUTER LAB

THINGS TO CHECK –

1) WORD PERFECT - ON DRIVE E

A) CAN'T RETRIEVE FILE STHMCT.RPT on my computer but same file will come up on Office (front desk) Computer from Disc (Printer difference?) *
& Disc File won't retrieve on lab computer either

B) Re-load Word Perfect if need be

2) Plotter (ON CHAIR BY FILE CABINET)

A) leave directions for hooking up

B) Change dip switches or ??

* STHMCT.RPT File could be brought up between both computers for about 7 times before it locked up on my computer. Now it can't be retrieved on my computer at all (Hard drive or disc)

Also the last time I tried to work on Word Perfect the keyboard locked up (Spreadsheet said "Please wait" at bottom of screen) when I ~~was~~ had tried to format something (think I may have hit ALT-F8 instead of SHIFT F8).

Confused ?? Call me @ 584-2647
(I AM)

Seagate

WREN™ 3 FULL HEIGHT ESDI

MODEL 94166 INSTALLATION MANUAL

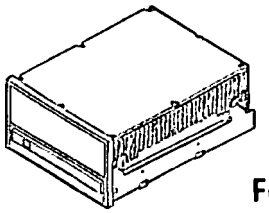

77765441
Revision A
February 1990

PREFACE

This manual provides the basic information and instructions for installing and operating Seagate WREN™3 ESDI Disc Drive; Model 94166. It also provides information to aid in servicing those parts of the drive external to the sealed head, disk assembly (HDA).

WARNINGS

WARNING: This equipment generates, uses, and can radiate radio frequency energy and if not installed and used in accordance with these instructions, may cause interference to radio communications. The WREN 3, as delivered, is designed to provide reasonable protection against interference when installed in a suitable enclosure.

WARNING: This product is an electromechanical device which could present hazards if improperly handled. The device should be maintained only by qualified personnel. Careless disassembly or maintenance procedures may result in damage to the device or injury to personnel. Observe all WARNINGS and CAUTIONS attached to the device and contained in this manual.

These WARNINGS and CAUTIONS are not exhaustive. The manufacturer cannot know in advance all possible maintenance procedures, or tools, which may be devised by persons who choose not to follow the instructions in this manual. Any deviation from the prescribed procedures may entail risks which have not been evaluated by the manufacturer. Any persons who use a nonapproved procedure or tool must satisfy themselves that no injury to personnel, no damage to the device, and no deterioration of device performance will result.

DESCRIPTION

The Seagate WREN 3 ESDI is a small, low cost, high performance, random access rotating disc, mass memory device designed to record and recover data on five rigid 5-1/4 inch fixed disc media. The WREN uses low mass flying read/write heads attached to a precisely controlled rotary positioner. Model 94166 supports the Enhanced Small Device Interface (ESDI) as described in the ESDI Specification 77738076.

MODEL NUMBER	UNFORMATTED MEGABYTES	FORMATTED* MEGABYTES	NUMBER OF CYLINDERS**	NUMBER OF DATA HEADS
94166-182	182	155.9	969	9
94166-141	141	121.3	969	7
94166-101	101	86.6	969	5

* Formatted with 512 Byte Sectors, 35 Sectors per track, one spare sector per track for flawed sector reallocations.
** 967 User Accessable Tracks

STANDARD FEATURES

The WREN 3 has the following standard features:

- Industry Standard Interface
- Sealed head, disc, and actuator chamber
- No preventive maintenance required
- No adjustments required
- LSI circuitry for high reliability
- Low audible noise for office environments
- Vertical (side) or horizontal (bottom) mounting
- Low power consumption
- Balanced low mass rotary voice coil actuator
- Automatic shipping lock and dynamic spindle brake
- Easy access terminator
- Integral HDA shock and vibration isolation mounts
- Dedicated head landing zone

ACCESSORIES

The following accessories are available for WREN 3:

- Front Panel Kit
- Single Unit Shipping Pack Kit

CAUTIONS

CAUTION: The circuit assemblies and components contained in this equipment can be degraded or destroyed by Electrostatic Overstress (EOS) or by Electrostatic Discharge (ESD).

Static electrical charges can accumulate quickly on personnel, clothing, and synthetic materials. The electrostatic fields due to these charges cause EOS or ESD which, when brought in close proximity to susceptable circuit assemblies and components, can result in degraded reliability or immediate failure of the affected component or assembly.

To insure optimum reliable equipment operation, it is required that technical support personnel discharge themselves by wearing a grounding strap around the wrist and be connected to a grounding terminal while working in the vicinity of, and while handling, EOS/ESD susceptible assemblies/parts. This procedure is especially important when handling printed wiring assemblies (PWAs).

PWAs should be placed on a static dissipative work surface during all maintenance procedures on these PWAs. If possible, all persons coming near the equipment should stand on a static dissipative floor mat installed according to established procedures. PWAs should be handled or transported in electrically conductive plastic bags to insure optimum protection against potential EOS/ESD damage. Delicate components soldered into circuits are NOT immune to EOS/ESD damage.

CAUTION: To avoid potential repair problems, observe the following precautions:

- Labels must not be put over the breather holes on the top of the drive. (See Figure 1).
- If a label has been placed over the breather holes, do not poke holes through the label, as the filter underneath is certain to be damaged, allowing contamination to enter the HDA. REMOVE THE LABEL. Do not use solvents to remove the adhesive residue. Solvent may migrate down the breather holes and contaminate the HDA.
- Imprints factory installed labels must not be removed from the drive or covered with additional labels, as they contain information required when repairing.
- DC power should not be switched on to the drive by plugging an electrically "live" DC source cable into the drive power connector. This practice adversely affects the reliability of the connector contacts and may damage other susceptable components.

UNPACKING

Visually inspect the shipping container for any obvious damage. Exercise care so that any tools being used do not damage the unit.

As the WREN is unpacked, inspect it for possible shipping damage. All claims of this type should be filed promptly with the transporter involved. If a claim is filed for damages, save the original packing materials.

After the drive is unpacked, inspect the drive for any visible damage. Verify all parts listed on the shipping bill are received with the equipment. Discrepancies or damage should be reported to the shipping company. Save the packing materials; they can be used for reshipment.

OPERATING ENVIRONMENT

The environmental conditions required for optimum performance of the disc drive are, in general, the same as those in an office environment with minimal environmental control. These conditions are:

Temperature	50° to 122°F (10° to 50°C)	Humidity	8% to 80%
Altitude	-1000 to +10,000 feet (-305 to +3,048 metres)	Wet Bulb	82°F (28°C) maximum

The room temperature should not change more than 18°F (10°C) per hour. Avoid high relative humidity as much as possible since it can result in condensation in the drive under adverse conditions.

COOLING

A sometimes overlooked consideration when mounting several drives in the same enclosure is heat dissipation. Because power supplies, for example, are typically heavy, they are frequently mounted in the bottom of an enclosure, where they produce heat. This heat rises to the top of the cabinet or enclosure and the temperature can reach very high levels. Cabinet ventilation, by natural convection or forced cooling, must be provided to keep the internal air temperature adjacent to the disk drive within the limits specified above.

Temperature of the HDA should not exceed 135°F (57.2°C) during operation when measured at the shock isolation mount on the side closest to the LED.

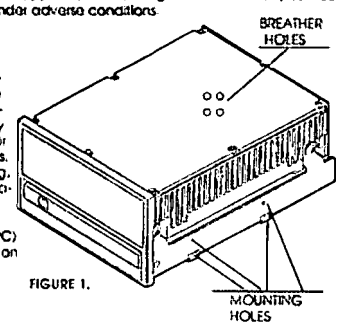

FIGURE 1.

SAFETY INSTRUCTIONS

1. The WREN is to be installed in a customer supplied enclosure where the surrounding air does not exceed 50°C.
2. Four(4) 6-32 UNC-2A screws are required for installation, maximum screw length into chassis mounting holes is 0.12 in (3.17 mm).
3. The power requirements are:
   +5 V ±5% 1.0 A
   +12 V ± 5% 2.3 A (4.5 A, +12 V ±10% regulation, for a maximum of 10 seconds at power up).
4. The power supply must satisfy the safety requirements for SELV (Safety Extra Low Voltage) circuits.
5. Service is to be provided only by trained service personnel.
6. The incorporation of the WREN into a customer supplied enclosure must meet the appropriate safety requirements of the country in which it is to be used (e.g. UL, 478, CSA 22.2 No. 220 and IEC950).

NOTE: Power off when connecting or disconnecting.

SICHERHEITSANLEITUNG

1. Das Gerät ist ein Einbaugerät, vorgesehen für eine maximale Umgebungstemperatur von 50°C.
2. Zur Befestigung der Wren Drive werden 4 Schrauben benötigt (6-32 UNC-2A). Die maximale Länge der Schrauben in der unteren Seite des Chassis darf nicht mehr als 0.12 in (3.17 mm) betragen, die in der oberen 0.12 in (3.17 mm).
3. Als Versorgungsspannungen werden benötigt:
   +5 V ±5% 1.0 A
   +12 V ±5% 2.3 A (Spitzenstrom zur Zeit der Einschaltung: 4.5 A, +12 V ±10% regelung, für 10 Sekunden max.)
4. Die Versorgungsspannung muss SELV entsprechen.
5. Alle Arbeiten dürfen nur von ausgebildetem Service personnel durchgeführt werden.
6. Der Einbau des Drives muss den Anforderungen gemäss DIN IEC 380/VDE 0806/8.81 oder EN60950 entsprechen.

EMI CONSIDERATIONS

The WREN 3, as delivered, is designed for system integration and installation into a suitable enclosure prior to use. As such the WREN 3 is supplied as a sub-assembly and is not subject to Subpart J of Part 15 of the FCC Rules and Regulations nor the Radio Interference Regulations of the Canadian Department of Communications. However, the unit has been tested using proper shielding and grounding and found to be compliant with Class A limits of of the FCC Rules and the Regulations of the Canadian Department of Communications.

The physical design characteristics of the WREN 3 serve to minimize radiation when installed in an enclosure that provides reasonable shielding. As such, the WREN 3 is capable of meeting the Class B limits of the FCC Rules and Regulations of the Canadian Department of Communication. However, it is the users responsibility to assure that the WREN 3 meets the appropriate EMI requirements in their system. Shielded I/O cables may be required if the enclosure does not provide adequate shielding. If not I/O cables are external to the enclosure, shielded cables should be used, with the shields grounded to the enclosure and to the host controller.

DRIVE MOUNTING ORIENTATION

The WREN 3 may be mounted with a horizontal orientation (PCB down) or with either of two vertical orientations (on side orientation). Four 6-32 tapped holes are provided in the bottom of the chassis and two on each side. (See Figure 1) The drive may be mounted using four bottom screws or four side screws (two in each side). Four bottom screws are preferred and recommended. Screws must be of sufficient length to engage the threaded holes, but must not penetrate more than 0.12 in. (3.17mm) into the chassis. A sway space of 0.050 in. is required on top and bottom.

CABLING

The WREN 3 can be connected in radial or daisychain configurations. In the daisychain configuration, a maximum of seven drives can be connected.

RADIAL CONFIGURATION

Figure 2 View A shows each WREN 3 Disc Drive interfaced to its own control cable, which allows interfacing an arbitrary number of drives and a variety of system operational techniques. Each drive has its data cable and control cable radially connected to the host controller. The length of each individual cable must not exceed 10 feet (3.0 metres). Each control and data cable must be terminated at each end in its characteristic impedance. The termination of these cables is accomplished in the drive by a plug - in terminating resistor pack for the control cables and by resistors on the Servo (upper) PWA for the data cables. These same resistor values must be installed in the host controller. See TERMINATION RESISTORS for terminator installation instructions.

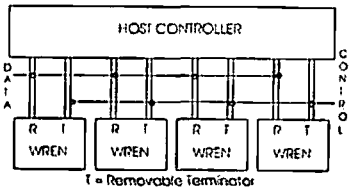

FIGURE 2. VIEW A

DAISYCHAIN CONFIGURATION

In a daisychain configuration, the drives are connected in a daisychain on the control cable, the data cables are connected in a radial configuration. The total length of all control cables used shall be not greater than 10 feet (3.0 metres). The logical address of each drive in the daisychain is determined by the "DRIVE SELECT" plug on the Servo (upper) PWA. Each data and control cable must be terminated in the Host Controller.

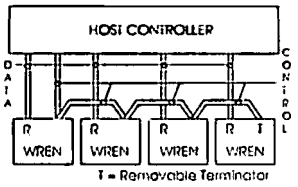

FIGURE 2. VIEW B

DC POWER REQUIREMENT

No AC power is required.

The voltage and current requirements for a single WREN 3 are shown in the following table. Values indicated apply at the drive power connector.

DC POWER REQUIREMENTS (5 VOLT)

VOLTAGE	+5 V
REGULATION	±5%
RIPPLE (MAXIMUM PEAK-TO-PEAK)	100 mV
MAXIMUM OPERATING CURRENT (1) (WORST CASE)	1.0 A
TYPICAL IDLE CURRENT (1)	0.8 A
MAXIMUM STARTING CURRENT (PEAK) (2)	1.4 A

DC POWER REQUIREMENTS (12 VOLT)

VOLTAGE	+12V
REGULATION	±5% (3)
RIPPLE (MAXIMUM PEAK-TO-PEAK)	100 mV
MAXIMUM OPERATING CURRENT (1) (WORST CASE)	2.3 A
TYPICAL IDLE CURRENT (1)	1.4 A
MAXIMUM STARTING CURRENT (PEAK) (2)	4.5 A

(1) Measured with average reading DC ammeter.
(2) Occurs during 10 second start up.
(3) A 10% tolerance is permissible during power up. ±5% must be maintained commencing with unit ready.

DC CABLE AND CONNECTOR

The WREN 3 receives DC power through a 4 pin right angle connector mounted on the Control PWA (see Fig. 3).

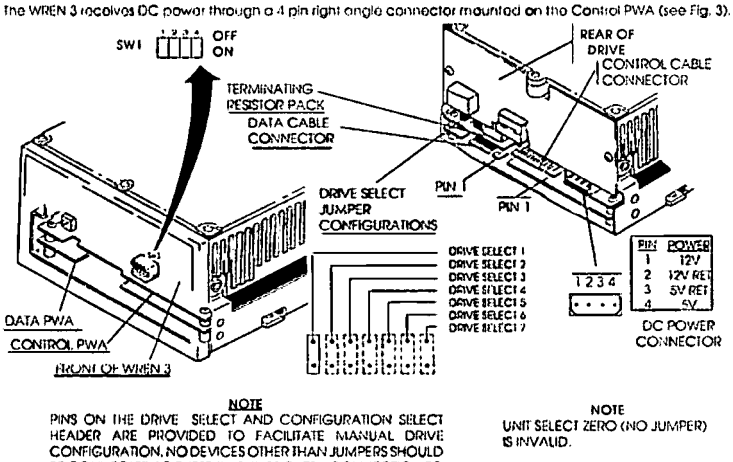

NOTE
PINS ON THE DRIVE SELECT AND CONFIGURATION SELECT HEADER ARE PROVIDED TO FACILITATE MANUAL DRIVE CONFIGURATION. NO DEVICES OTHER THAN JUMPERS SHOULD BE CONNECTED TO THESE PINS. IMPROPER CONNECTION TO EXTERNAL DEVICES (SWITCHES, CONNECTORS,ETC.)COULD ADVERSELY AFFECT DRIVE PERFORMANCE. EXACT LOCATION OF THESE PINS AND HEADERS MAY CHANGE WITHOUT NOTICE.

NOTE
UNIT SELECT ZERO (NO JUMPER) IS INVALID.

SW1 CONFIGURATION SWITCH SETTINGS (2)					
B/SEC	SECTOR/TRACK	-1	-2	-3	-4
512	34 (3)	(1)	ON	ON	OFF
512	35 (3)	(1)	ON	OFF	OFF
512	36 (3)	(1)	OFF	ON	OFF
256	64 (3)	(1)	OFF	OFF	OFF
X	ADDRESS MARK (4)	(1)	ON	ON	ON

(1) When the SW1-1 switch IS ON, a MOTOR ON command is required from the controller to start the spindle motor. When power is applied to the drive, the drive will generate an ATTENTION signal and activate Standard Status Bits 8 and 9 signifying "Power On Reset Conditions Exist" and "Spindle Motor Stopped". The controller must then respond with the command to Reset the Interface ATTENTION line and with the Start Motor Command to start the spindle motor.
NOTE: This procedure is required anytime the "Power On Reset Condition Exists" status bit is received by the controller, if the "Motor Control Implemented" switch is ON.
(2) Switch Up is OFF; Switch Down is ON.
(3) Hard sector configurations
(4) Address Mark mode is used with soft sectored controllers which create their own sector boundaries. Note that all other combinations of switches 2 and 3 with switch 4 active select sector formats usable only during factory tests.

FIGURE 3.

DRIVE SELECTION AND TERMINATION

The logical address of the WREN 3 is selected by installing a jumper in the appropriate location on the DRIVE SELECT header (J5), which is accessible from the back of the drive, located on the Control PWA (see Figure 3). This selection is done at the time of installation.

For radial configurations, it is recommended that the jumper be connected to Drive Select 1 (Position 1). However, check the system manufacturer's instructions.

For daisychain operation, the drive select jumpers should be connected in accordance with the system assignments. Be sure to check the system manufacturer's device selection instructions. "XT" type systems usually require Drive Select 1, "AT" type systems usually require Drive Select 2. In a typical system the drive select lines (Pins 26, 28, 30, of the 34 Pin connector) are usually transposed so that every device on a daisychain has the same drive select number.

TERMINATION RESISTORS

Every drive connected in a radial configuration needs a termination resistor pack (as supplied). The termination resistor pack should be removed from all daisychain drives except the drive in the last position of the daisychain. The terminator resistor pack is a 14 pin DIP (Dual Inline Package) module of 150 Ohm resistors plugged into a DIP socket on the Control PWA, accessible from the rear of the drive (see Figure 3). Drives may be ordered with or without the removable terminator DIP installed. An equivalent terminator must be provided in the Host Controller on each input signal line from the WREN to the controller.

SOFT SECTOR MODE

The WREN 3 supports the use of the soft sector format as described in the ESDI Specification 77738076. To implement the optional soft sectored format operation, select "Address Mark" mode in the WREN 3 by installing option jumper plugs 2, 3, and 4. See Figure 3.

WRITE PRECOMP AND HEAD PARKING TRACK

These two parameters are handled within the drive. Use some value greater than maximum track for each. WREN 3 requires no command from the Host controller to park the heads, as this is automatically done by the drive.

INITIAL CHECKOUT AND STARTUP PROCEDURE

1. Mount the WREN, horizontally or vertically, in the enclosure using standard hardware (four (4) #6-32 screws see DRIVE MOUNTING ORIENTATION).
2. Connect the ribbon cables for radial or for daisychain configuration. Terminate and verify jumper settings.
3. Attach DC power cable from power supply to connector on the rear of the WREN.
4. Apply power.
5. Run system diagnostic to verify the operability of the disk subsystem.
6. If the drive fails to select, be sure the system manufacturer's instructions on the assignment of device select ID have been followed.

SERVICE REQUIREMENTS

The special facilities required for the manufacture of the WREN generally prohibit repair in the field. If problems occur during installation, please contact your supplier for assistance. Some items external to the sealed HDA may be replaced by a technically competent individual.

CAUTION

- NEVER remove the cover of the WREN. Servicing items in the sealed HDA (heads, media, actuator, etc.) requires special facilities.
- Opening the sealed HDA voids the unit warranty.

TROUBLE SHOOTING

WREN disc drives are designed as field replaceable units. They should be returned to the repair depot if failure occurs. Circuit board exchange, if desired, may be performed by technically competent individuals. No adjustments are required. Field repair is discouraged, because of the extensive diagnostic equipment required for effective servicing. Frequently, problems believed to be disc drive failures are not, and it is important to recognize this before taking repair action on the disc drive. The following disc power up sequence is provided to assist in identifying possible disc drive problems. Generally, if performance doesn't follow this sequence either the drive or power supply should be questioned.

POWER UP SEQUENCE

- Power is applied to the disc drive. The LED will glow during motor start up if the drive is selected during that time.
- Spindle motor speeds up until operating velocity is reached (approx 10 seconds). No speed variations should be heard afterward.
- Arm restraint solenoid releases, producing an easily heard characteristic sound.
- The drive performs up to 32 velocity adjustment seeks, as evidenced by head motion sounds.
- Drive finds and stays at track zero, comes ready, makes no further noises, except as the system commands may demand.
- If the drive has successfully cycled up, the front panel LED will light up when the unit is selected by the system.
- Boot up activity may appear as random LED flickering as the drive is randomly selected and deselected.
- Unit spindles down if it cannot come ready. The LED will blink continually indicating a drive fault has occurred. Removing and reapplying power may or may not clear this fault indication. If the fault condition persists, the drive may require service. Power supply problems can also create drive fault status.
- CAUTION: Do not remove drive until spin down is completed.

POWER DOWN SEQUENCE

- Power is removed.
- The arm restraint solenoid release should be heard within three seconds after power is removed.
- The dynamic brake relay cut in sound may be heard many seconds later.
- Spindle rotation should stop in about 30 seconds.

PRODUCT REPAIR INFORMATION

To properly service and maintain warranty, before returning drives to CSC for repair, first telephone 405-491-6262 for a return authorization. Then send to:

Seagate Technology, Inc.
Att: Customer Service Center
301 N. MacArthur
Oklahoma City, OK 73127

The return authorization number must be referenced on any enclosed documentation and in all correspondence concerning the returned drive. TECHNICAL ASSISTANCE IS NOT AVAILABLE AT THIS LOCATION. CONTACT DRIVE PURCHASE SOURCE, or call 1-800-820-3001 or 1-800-468-3472.

SAFETY AND SPECIAL SERVICE PRECAUTIONS

- Avoid overtightening hardware (screws, nuts, etc.) when replacing assemblies and components.
- Do not connect or disconnect cables without first removing all power from the drive.
- Place drive on a flat static dissipative surface.

REMOVAL/REPLACEMENT

Only the PWAs and front panel, external to the sealed area, can be replaced without special facilities. Be sure to observe the EOS/ESD precautions at all times to avoid damage to the electrical assemblies.
The following tool is required for removal and replacement of these items.

TOOL	APPLICATION	
TORX™ TX-10	Six spline socket drive machine screws	This can be purchased through most commercial tool catalogs

SAMPLE LABEL OF WREN 3 DISC DRIVE

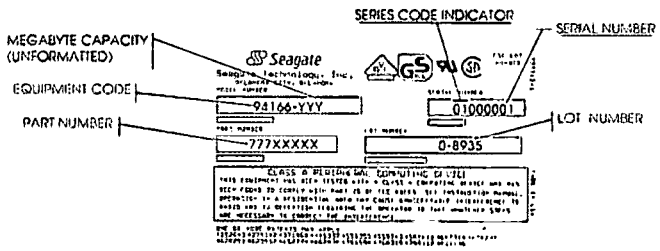

© 1990 SEAGATE TECHNOLOGY, INC
Printed in the United States of America
All rights reserved

SG4383E

B

WREN™ 5 FULL HEIGHT ESDI

MODEL 94186
INSTALLATION
MANUAL

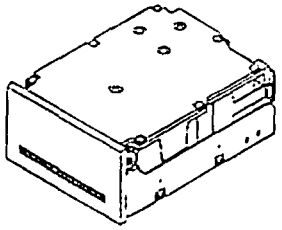

77765301
Revision D
April 1990

PREFACE

This manual provides the basic information and instructions for installing and operating Seagate WREN™ 5 ESDI Disc Drive; Model 94186. It also provides information to aid in servicing those parts of the drive external to the sealed head, disc assembly (HDA).

WARNINGS

WARNING: This equipment generates, uses, and can radiate radio frequency energy and if not installed and used in accordance with these instructions, may cause interference to radio communications. The WREN 5, as delivered, is designed to provide reasonable protection against interference when installed in a suitable enclosure.

WARNING: This product is an electromechanical device which could present hazards if improperly handled. The device should be maintained only by qualified personnel. Careless disassembly or maintenance procedures may result in damage to the device or injury to personnel. Observe all WARNINGS and CAUTIONS attached to the device and contained in this manual.

These WARNINGS and CAUTIONS are not exhaustive. The manufacturer cannot know in advance all possible maintenance procedures, or tools, which may be devised by persons who choose not to follow the instructions in this manual. Any deviation from the prescribed procedures may entail risks which have not been evaluated by the manufacturer. Any persons who use a nonapproved procedure or tool must satisfy themselves that no injury to personnel, no damage to the device, and no deterioration of device performance will result.

DESCRIPTION

The Seagate WREN 5 ESDI is a small, low cost, high performance, random access rotating disc, mass memory device designed to record and recover data on eight rigid 5-1/4 inch fixed disc media. The WREN uses low mass flying read/write heads attached to a precisely controlled rotary positioner. Model 94186 supports the Enhanced Small Device Interface (ESDI) as described in the ESDI Specification 77738076 and WREN 5 Product Specification 77765300.

MODEL NUMBER	UNFORMATTED MEGABYTES	FORMATTED* MEGABYTES	NUMBER OF CYLINDERS**	NUMBER OF DATA HEADS
94186-442	442.2	390.3	1412	15
94186-383	383.2	338.3	1412	13
94186-383H	383.3	338.4	1224	15
94186-324	324.3	286.2	1412	11
94186-265	265	234.2	1412	9

* Formatted with 512 Byte Sectors, 35 Sectors per track, one spare sector per track for flawed sector reallocations.

STANDARD FEATURES

The WREN 5 has the following standard features:

- Industry Standard Interface
- Sealed head, disc, and actuator chamber
- No preventive maintenance required
- No adjustments required
- LSI circuitry for high reliability
- Low audible noise for office environments
- Vertical (side) or horizontal (bottom) mounting
- Low power consumption
- Balanced low mass rotary voice coil actuator
- Automatic shipping lock and dynamic spindle brake
- Easy access terminator
- Integral HDA shock and vibration isolation mounts
- Dedicated head landing zone

ACCESSORIES

The following accessories are available for WREN 5:

- Front Panel Kit (Optional green, red or amber LED)
- Single Unit Shipping Pack Kit

CAUTIONS

CAUTION: The circuit assemblies and components contained in this equipment can be degraded or destroyed by Electrostatic Overstress (EOS) or by Electrostatic Discharge (ESD).

Static electrical charges can accumulate quickly on personnel, clothing, and synthetic materials. The electrostatic fields due to these charges cause EOS or ESD which, when brought in close proximity to susceptable circuit assemblies and components, can result in degraded reliability or immediate failure of the affected component or assembly.

To insure optimum reliable equipment operation, it is required that technical support personnel discharge themselves by wearing a grounding strap around the wrist and be connected to a grounding terminal while working in the vicinity of, and while handling, EOS/ESD susceptible assemblies/parts. This procedure is especially important when handling printed wiring assemblies (PWAs).

PWAs should be placed on a static dissipative work surface during all maintenance procedures on these PWAs. If possible, all persons coming near the equipment should stand on a static dissipative floor mat installed according to established procedures. PWAs should be handled or transported in electrically conductive plastic bags to insure optimum protection against potential EOS/ESD damage. Delicate components soldered into circuits are NOT immune to EOS/ESD damage.

CAUTION: To avoid potential repair problems, observe the following precautions:

- Labels must not be put over the breather holes on the top of the drive. (See Figure 1).
- If a label has been placed over the breather holes, do not poke holes through the label, as the filter underneath is certain to be damaged, allowing contamination to enter the HDA. REMOVE THE LABEL. Do not use solvents to remove the adhesive residue. Solvent may migrate down the breather holes and contaminate the HDA.
- Seagate factory installed labels must not be removed from the drive or covered with additional labels, as they contain information required when repairing.
- DC power should not be switched on to the drive by plugging an electrically "live" DC source cable into the drive power connector. This practice adversely affects the reliability of the connector contacts and may damage other susceptable components.

UNPACKING

Visually inspect the shipping container for any obvious damage. Exercise care so that any tools being used do not damage the unit.

As the WREN is unpacked, inspect it for possible shipping damage. All claims of this type should be filed promptly with the transportor involved. If a claim is filed for damages, save the original packing materials.

After the drive is unpacked, inspect the drive for any visible damage. Verify all parts listed on the shipping bill are received with the equipment. Discrepancies or damage should be reported to the shipping company. Save the packing materials; they can be used for reshipment. Reshipping the drives in unapproved packing materials voids the warranty.

OPERATING ENVIRONMENT

The environmental conditions required for optimum performance of the disc drive are, in general, the same as those in an office environment with minimal environmental control. These conditions are:

*Temperature	50° to 122°F (10° to 50°C)	Humidity	8% to 80%
Altitude	-1000 to +10,000 feet (-305 to +3,048 metres)	Wet Bulb	82°F (28°C) maximum

*Maximum at 0.25 inch (6.3 mm) away from any point on drive surface. For best reliability, keep below 95°F (35°C).

The room temperature should not change more than 36°F (20°C) per hour. Avoid high relative humidity as much as possible since it can result in condensation in the drive under adverse conditions.

COOLING

A sometimes overlooked consideration when mounting several drives in the same enclosure is heat dissipation. Because power supplies, for example, are typically heavy, they are frequently mounted in the bottom of an enclosure, where they produce heat. This heat rises to the top of the cabinet or enclosure and the temperature can reach very high levels. Cabinet ventilation, by natural convection or forced cooling, must be provided to keep the internal air temperature adjacent to the disk drive within the limits specified above.

Temperature of the HDA should not exceed 140°F (60°C) during operation when measured between screws A and B on the Top Cover of the drive. Maximum temperature difference along dotted line must not exceed 2°C.

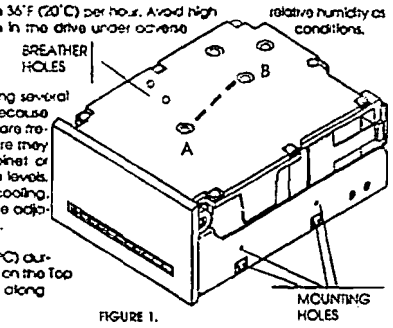

FIGURE 1.

SAFETY INSTRUCTIONS

1. The WREN is to be installed in a customer supplied enclosure where the surrounding air does not exceed 50°C.
2. Four(4) 6-32 UNC-2A screws are required for installation, maximum screw length into chassis mounting holes is 0.14 in (3.55 mm).
3. The power requirements are:
   +5 V ±5% 1.0 A
   +12 V ± 5% 2.3 A (4.5 A, +12 V ±10% regulation, for a maximum of 10 seconds at power up).
4. The power supply must satisfy the safety requirements for SELV (Safety Extra Low Voltage) circuits.
5. Service is to be provided only by trained service personnel.
6. The incorporation of the WREN into a customer supplied enclosure must meet the appropriate safety requirements of the country in which it is to be used (e.g. UL, 478, CSA 22.2 No. 220-M1986, DIN IEC 380/VDE 0806/8.81, DIN IEC 435/VDE 0805/11.84 and EN 60950/09.87).

NOTE: Power off when connecting or disconnecting.

SICHERHEITSANLEITUNG

1. Das Gerät ist ein Einbaugerät, vorgesehen für eine maximale Umgebungstemperatur von 50°C.
2. Zur Befestigung der Wren Drive werden 4 Schrauben benötigt (6-32 UNC-2A). Die maximale Länge der Schrauben in der unteren Seite des Chassis darf nicht mehr als 0.14 in (3.55 mm) betragen, die in der oberen 0.14 in (3.55 mm).
3. Als Versorgungsspannungen werden benötigt:
   + 5 V ±5% 1.1 A
   +12 V ±5%2.3 A (Spitzenstrom zur Zeit der Einschaltung: 4.5 A, +12 V ±10% regelung, für 10 Sekunden max.)
4. Die Versorgungsspannung muss SELV entsprechen.
5. Alle Arbeiten dürfen nur von ausgebildetem Service personnel durchgeführt werden.
6. Der Einbau des Drives muss den Anforderungen gemäss DIN IEC 380/VDE 0806/8.81, DIN IEC 435/VDE 0805/11.84 oder EN60 950/09.87 entsprechen.

EMI CONSIDERATIONS

The WREN 5, as delivered, is designed for system integration and installation into a suitable enclosure prior to use. As such the WREN 5 is supplied as a sub-assembly and is not subject to Subpart J of Part 15 of the FCC Rules and Regulations nor the Radio Interference Regulations of the Canadian Department of Communications. However, the unit has been tested using proper shielding and grounding and found to be compliant with Class A limits of of the FCC Rules and the Regulations of The Canadian Department of Communications.

The physical design characteristics of the WREN 5 serve to minimize radiation when installed in an enclosure that provides reasonable shielding. As such, the WREN 5 is capable of meeting the Class A limits of the FCC Rules and Regulations of the Canadian Department of Communication. However, it is the users responsibility to assure that the WREN 5 meets the appropriate EMI requirements in their system. Shielded I/O cables may be required if the enclosure does not provide adequate shielding. If the I/O cables are external to the enclosure, shielded cables should be used, with the shields grounded to the enclosure and to the host controller.

DRIVE MOUNTING ORIENTATION

The WREN 5 may be mounted with a horizontal orientation (PCB down) or with either of two vertical orientations (on side orientation). Four 6-32 tapped holes are provided in the bottom of the chassis and two on each side. (See Figure 1). The drive may be mounted using four bottom screws or four side screws (two in each side). Four bottom screws are preferred and recommended. Screws must be of sufficient length to engage the threaded holes, but must not penetrate more than 0.14 in. (3.55mm) into the chassis. A sway space of 0.075 in. is required on top and bottom.

CABLING

The WREN 5 can be connected in radial or daisychain configurations. In the daisychain configuration, a maximum of seven drives can be connected.

RADIAL CONFIGURATION

Figure 2 View A shows each WREN 5 Disc Drive interfaced to its own control cable, which allows interfacing an arbitrary number of drives and a variety of system operational techniques. Each drive has its data cable and control cable radially connected to the host controller. The length of each individual cable must not exceed 10 feet (3.0 metres). Each control and data cable must be terminated at each end in its characteristic impedance. The termination of those cables is accomplished in the drive by a plug - in terminating resistor pack for the control cables and by resistors on the Main PWA for the data cables. These same resistor values must be installed in the host controller. See TERMINATION RESISTORS for terminator installation instructions.

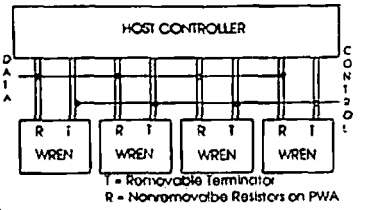

FIGURE 2. VIEW A

DAISYCHAIN CONFIGURATION

In a daisychain configuration, the drives are connected in a daisychain on the control cable, the data cables are connected in a radial configuration. The total length of all control cables used shall be not greater than 10 feet (3.0 meters). The logical address of each drive in the daisychain is determined by the "DRIVE SELECT" plug on the Servo (upper) PWA. Each data and control cable must be terminated in the Host Controller.

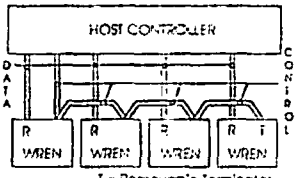

FIGURE 2. VIEW B

T = Removable Terminator
R = Resistor on PWA

DC POWER REQUIREMENT

No AC power is required.

The voltage and current requirements for a single WREN 5 are shown in the following table. Values indicated apply at the drive power connector.

DC POWER REQUIREMENTS (5 VOLT)	
VOLTAGE	+5 V
REGULATION	±5%
RIPPLE (MAXIMUM PEAK-TO-PEAK)	100 mV
MAXIMUM OPERATING CURRENT (1) (WORST CASE)	1.1 A
TYPICAL IDLE CURRENT (1)	0.8 A
MAXIMUM STARTING CURRENT (PEAK) (2)	1.4 A

DC POWER REQUIREMENTS (12 VOLT)	
VOLTAGE	+12V
REGULATION	±5% (3)
RIPPLE (MAXIMUM PEAK-TO-PEAK)	100 mV
MAXIMUM OPERATING CURRENT (1) (WORST CASE)	2.7 A
TYPICAL IDLE CURRENT (1)	2.0 A
MAXIMUM STARTING CURRENT (PEAK) (2)	4.5 A

(1) Measured with average reading DC ammeter.
(2) Occurs during 10 second start up.
(3) A 10% tolerance is permissible during power up. ±5% must be maintained commencing with unit ready.

DC CABLE AND CONNECTOR

The WREN 5 receives DC power through a 4 pin right angle connector mounted on the Control PWA (see Fig. 3).

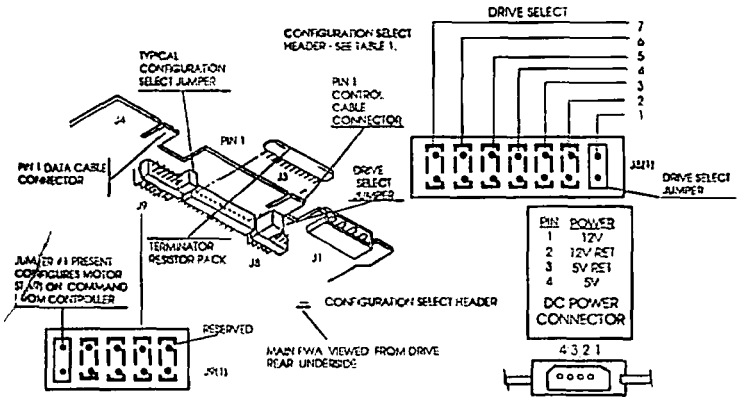

NOTE

PINS ON THE DRIVE SELECT AND CONFIGURATION SELECT HEADER ARE PROVIDED TO FACILITATE MANUAL DRIVE CONFIGURATION. NO DEVICES OTHER THAN JUMPERS SHOULD BE CONNECTED TO THESE PINS. IMPROPER CONNECTION TO EXTERNAL DEVICES (SWITCHES, CONNECTORS, ETC.) COULD ADVERSELY AFFECT DRIVE PERFORMANCE. EXACT LOCATION OF THESE PINS AND HEADERS MAY CHANGE WITHOUT NOTICE.

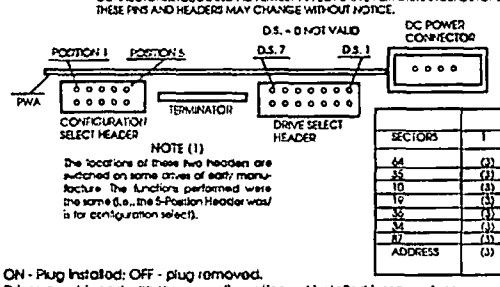

NOTE (1)

The locations of these two headers are switched on some drives of early manufacture. The functions performed were the same (i.e., the 5-Position Header was/is for configuration select).

CONFIGURATION SELECT

SECTORS	JUMPER PLUG 1	2	3	4	5	
64	(3)	OFF	OFF	OFF	(5)	(1)
35	(3)	OFF	OFF	ON	(5)	
10	(3)	OFF	ON	OFF	(5)	
19	(3)	OFF	ON	ON	(5)	
35	(3)	ON	OFF	OFF	(5)	
34	(3)	ON	OFF	ON	(5)	(2)
17	(3)	ON	ON	OFF	(5)	
ADDRESS	(3)	ON	ON	ON	(5)	(4)

(1) ON - Plug Installed; OFF - plug removed.
(2) Drives are shipped with these configurations of installed jumper plugs.
(3) OFF = Motor Start with Power on.
ON = Motor Start with command from controller.
When the jumper plug #1 is installed, a Motor ON command is required from the controller to start the spindle motor. When power is applied to the drive, the drive will generate an Attention signal and assert Standard Status Bits 8 and 9 signifying "Power On Reset Conditions Exist" and "Spindle Motor Stopped". The controller must then respond with a command to Reset the Interface Attention line, and the *Start Motor Command in order to start the spindle motor.*

NOTE

This procedure is required anytime the "Power On Reset Condition Exists" status bit is received by the controller if the "Motor Control Implemented" jumper plug is installed.

(4) Soft Sector operation.
(5) Factory use only.

FIGURE 3.

DRIVE SELECTION AND TERMINATION

The logical address of the WREN 5 is selected by installing a jumper in the appropriate location on the DRIVE SELECT header (J8), which is accessible from the back of the drive, located on the Main PWA (see Figure 3). This selection is done at the time of installation.

For radial configurations, it is recommended that the jumper be connected to Drive Select 1 (Position 1). However, check the system manufacturer's instructions.

For daisychain operation, the drive select jumpers should be connected in accordance with the system assignments. Be sure to check the system manufacturer's device selection instructions. "XT" type systems usually require Drive Select 1, "AT" type systems usually require Drive Select 2. In a typical system the drive select lines (Pins 26, 28, 30, of the 34 Pin connector) are usually transposed so that every device on a daisychain has the same drive select number.

TERMINATION RESISTORS

Every drive connected in a radial configuration needs a termination resistor pack (as supplied). The termination resistor pack should be removed from all daisychain drives except the drive in the last position of the daisychain. The terminator resistor pack is a 14 pin DIP (Dual Inline Package) module of 150 Ohm resistors plugged into a DIP socket on the Main PWA, *accessible from the rear of the drive (see Figure 3). Drives may be ordered with or without* the removable terminator DIP installed. An equivalent terminator must be provided in the Host Controller on each input signal line from the WREN to the controller.

SOFT SECTOR MODE

The WREN 5 supports the use of the soft sector format as described in the ESDI Specification 77738076. To implement the optional soft sectored format operation, select "Address Mark" mode in the WREN 5 by installing option jumper plugs 2, 3, and 4. See Figure 3.

WRITE PRECOMP AND HEAD PARKING TRACK

These two parameters are handled within the drive. Use some value greater than maximum track for each. WREN 5 requires no command from the Host controller to park the heads, as this is automatically done by the drive.

INITIAL CHECKOUT AND STARTUP PROCEDURE

1. Mount the WREN, horizontally or vertically, in the enclosure using standard hardware (four (4) #6-32 screws see DRIVE MOUNTING ORIENTATION).
2. Connect the ribbon cables for radial or for daisychain configuration. Terminate and verify jumper settings.
3. Attach DC power cable from power supply to connector on the rear of the WREN.
4. Apply power.
5. Run system diagnostic to verify the operability of the disc subsystem.
6. *If the drive fails to select, be sure the system manufacturer's instructions on the assignment of device select* ID have been followed.

SERVICE REQUIREMENTS

The special facilities required for the manufacture of the WREN generally prohibit repair in the field. If problems occur during installation, please contact your supplier for assistance. Some items external to the sealed HDA may be *replaced by a technically competent individual.*

CAUTION

- NEVER remove the cover of the WREN. Servicing items in the sealed HDA (heads, media, actuator, etc.) requires special facilities.
- Opening the sealed HDA voids the unit warranty.

TROUBLE SHOOTING

WREN disc drives are designed as field replaceable units. They should be returned to the repair depot if failure occurs. Circuit board exchange, if desired, may be performed by technically competent individuals. No adjustments are required. Field repair is discouraged, because of the extensive diagnostic equipment required for effective servicing. Frequently, problems believed to be disc drive failures are not, and it is important to recognize this before *taking repair action on the disc drive. The following disc power up sequence is provided to assist in identifying* possible disc drive problems. Generally, if performance doesn't follow this sequence either the drive or power supply should be questioned.

POWER UP SEQUENCE

- Power is applied to the disc drive. The LED will glow during motor start up if the drive is selected during that time.
- *Spindle motor speeds up until operating velocity is reached (approx 10 seconds). No speed variations should* be heard afterward.
- Arm restraint solenoid releases, producing an easily heard characteristic sound.
- The drive performs up to 32 velocity adjustment seeks, as evidenced by head motion sounds.
- Drive finds and stays at track zero, comes ready, makes no further noises, except as the system commands may demand.
- If the drive has successfully cycled up, the front panel LED will light up when the unit is selected by the system.
- Boot up activity may appear as random LED flickering as the drive is randomly selected and deselected.
- Unit spindles down if it cannot come ready. The LED will blink continually indicating a drive fault has occurred. Removing and reapplying power may or may not clear this fault indication. If the fault condition persists, the drive may require service. Power supply problems can also create drive fault status.
- CAUTION: Do not remove drive until spin down is completed.

POWER DOWN SEQUENCE

- Power is removed.
- The arm restraint solenoid release should be heard within three seconds after power is removed.
- The dynamic brake relay cut in sound may be heard many seconds later.
- Spindle rotation should stop in about 30 seconds.

PRODUCT REPAIR INFORMATION

To properly service and maintain warranty, before returning drives to CSC for repair, first telephone 405-491-6262 for a return authorization. Then send to:

Seagate Technology, Inc.
Att: Customer Service Center
301 N. MacArthur
Oklahoma City, OK 73127

The return authorization number must be referenced on any enclosed documentation and in all correspondence concerning the returned drive. TECHNICAL ASSISTANCE IS NOT AVAILABLE AT THIS LOCATION. CONTACT DRIVE PURCHASE SOURCE, or call 1-800-468-3472 or from Canada call 408-438-6550.

SAFETY AND SPECIAL SERVICE PRECAUTIONS

- Avoid overtightening hardware (screws, nuts, etc.) when replacing assemblies and components.
- *Do not connect or disconnect cables without first removing all power from the drive.*
- Place drive on a flat static dissipative surface.

REMOVAL/REPLACEMENT

Only the PWAs and front panel, external to the sealed area, can be replaced without special facilities. Be sure to observe the EOS/ESD precautions at all times to avoid damage to the electrical assemblies.
The following tool is required for removal and replacement of these items.

TOOL	APPLICATION	
TORX™ TX-10	Six spline socket drive machine screws	This can be purchased through most commercial tool catalogs.

SAMPLE LABEL OF WREN 5 DISC DRIVE

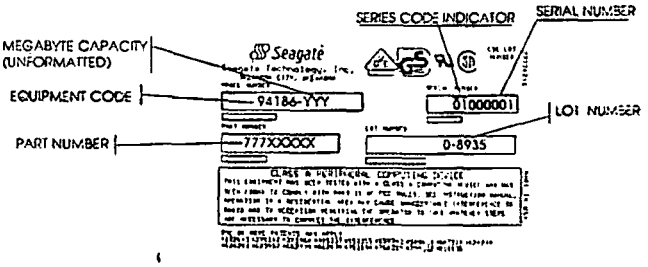

© 1990 SEAGATE TECHNOLOGY, INC.
Printed in the United States of America
All rights reserved

WREN™ 5 FULL HEIGHT
MODEL 94186

03-25-94 11:16a Directory D:\WP51\MACROS*.*
Free:115,122,176

Current		<Dir>		
AD	.WPM	89	10-20-92	01:29p
ALTC	.WPM	827	07-24-89	01:36p
ALTE	.WPM	83	05-27-93	01:19p
ALTG	.WPM	65	11-04-93	02:04p
ALTI	.WPM	400	02-23-94	10:19a
ALTL	.WPM	116	09-16-93	07:52a
ALTN	.WPM	89	01-16-91	03:56p
ALTQ	.WPM	84	02-07-94	10:44p
ALTRNAT	.WPK	919	03-30-90	12:00p
ALTV	.WPM	111	06-16-93	12:23p
ALTZ	.WPM	113	06-29-93	08:50a
CALC	.WPM	7,648	03-30-90	12:00p
CDH	.WPM	120	01-23-91	10:22a
CODES	.WPM	7,403	03-30-90	12:00p
DGFP	.WPM	297	02-23-94	10:11a
ENDFOOT	.WPM	3,953	03-30-90	12:00p
EQUATION	.WPK	2,974	03-30-90	12:00p
FILL	.WPM	132	01-23-91	10:20a
INLINE	.WPM	1,186	03-30-90	12:00p
LJH	.WPM	742	03-17-94	08:35a
MACROS	.WPK	30,003	03-30-90	12:00p
PC	.WPM	133	01-23-91	10:21a
REPLACE	.WPM	16,020	09-25-91	12:00p
REVEALCO	.WPM	24,539	03-30-90	12:00p
RJM	.WPM	544	03-25-94	11:13a
STANS	.WPM	321	11-02-93	01:41p
TQTP	.WPM	145	01-23-91	10:51a
VV	.WPM	96	12-01-93	08:06a
XX	.WPM	71	11-30-93	04:27p

Parent		<Dir>		
ALTB	.WPM	199	11-03-93	01:46p
ALTD	.WPM	1,416	07-24-89	01:38p
ALTF	.WPM	91	10-12-90	09:54a
ALTH	.WPM	194	11-17-93	08:37a
ALTJ	.WPM	82	08-27-93	04:00p
ALTM	.WPM	238	11-02-93	01:40p
ALTO	.WPM	80	01-16-91	03:57p
ALTR	.WPM	283	02-09-93	03:59p
ALTS	.WPM	426	11-02-93	01:46p
ALTX	.WPM	90	01-06-94	08:09a
BMC	.WPM	221	05-17-93	01:24p
CC	.WPM	86	11-30-93	04:21p
CDQ	.WPM	134	01-23-91	10:22a
DENR	.WPM	246	11-04-93	02:09p
EDIT	.WPM	10,826	09-25-91	12:00p
ENHANCED	.WPK	3,853	01-03-94	11:20a
FASTKEYS	.WPK	2,999	09-25-91	12:00p
FOOTEND	.WPM	3,829	03-30-90	12:00p
LABELS	.WPM	17,242	03-30-90	12:00p
LM1	.WPM	64	11-17-93	08:35a
MEMO	.WPM	142	11-02-93	01:48p
PSO	.WPM	82	02-07-94	10:43p
REVEALBX	.WPM	1,039	03-30-90	12:00p
REVEALTX	.WPM	14,573	03-30-90	12:00p
SHORTCUT	.WPK	24,729	03-30-90	12:00p
THTP	.WPM	143	01-23-91	10:25a
TTP	.WPM	120	01-23-91	10:25a
WP{WP}	.WPM	61	03-18-94	06:32p