1866786 - R8 SDMS

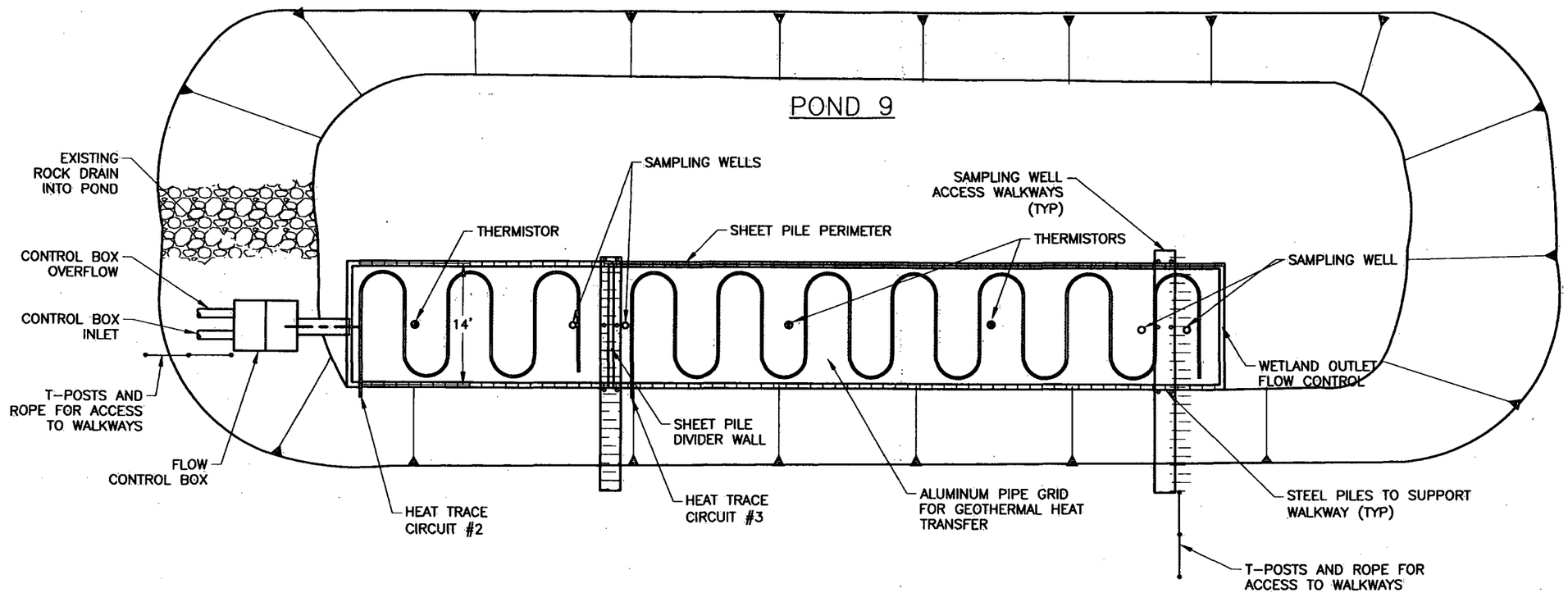

DRAWING NOT TO SCALE

NOTES:

1. PROVIDE DEWATERING DURING CONSTRUCTION.

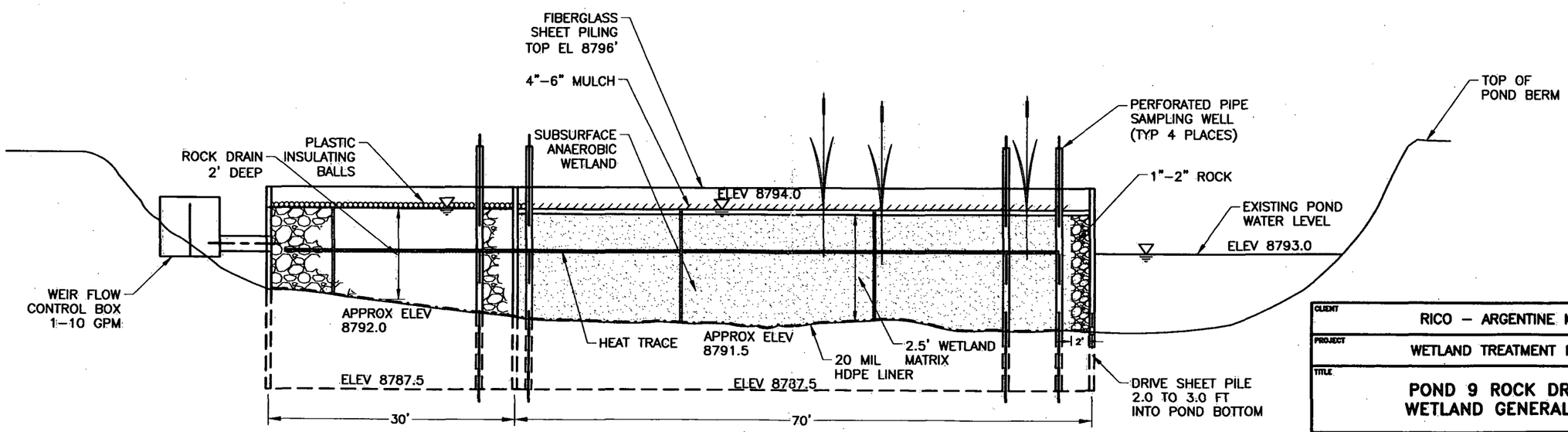

CLIENT	RICO – ARGENTINE MINE SITE
PROJECT	WETLAND TREATMENT PILOT TEST
TITLE	POND 9 ROCK DRAIN AND WETLAND GENERAL DETAILS

amec

DESIGNED BY	RJB	CHECKED BY	RJB	DATE
DRAWN BY	CWM	APPROVED BY	RJB	AUG 2012

FILENAME	FIGURE No.	REV
FIG 1	1	0

L:\PUBLIC\P_Drive\SA11161301-Rico Mine\CAD\FIGURES\DESIGN.dwg-8/22/2012 6:39 PM

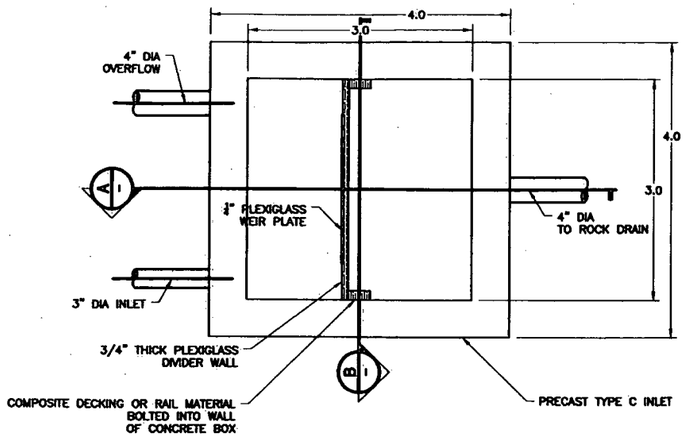

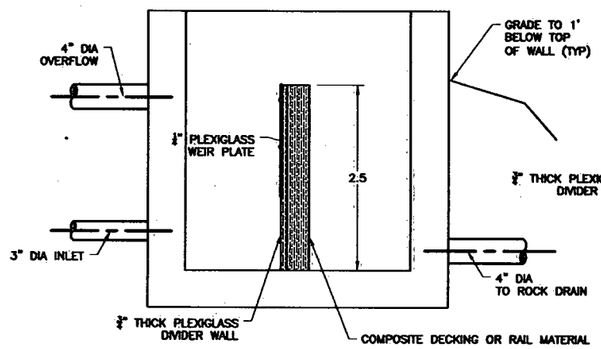

A SECTION

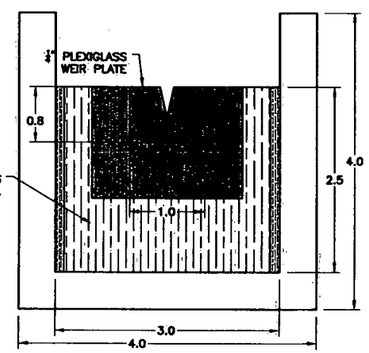

B SECTION

1 FLOW CONTROL BOX
NTS

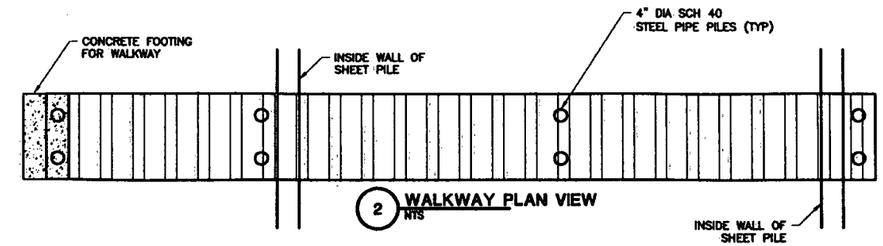

2 WALKWAY PLAN VIEW
NTS

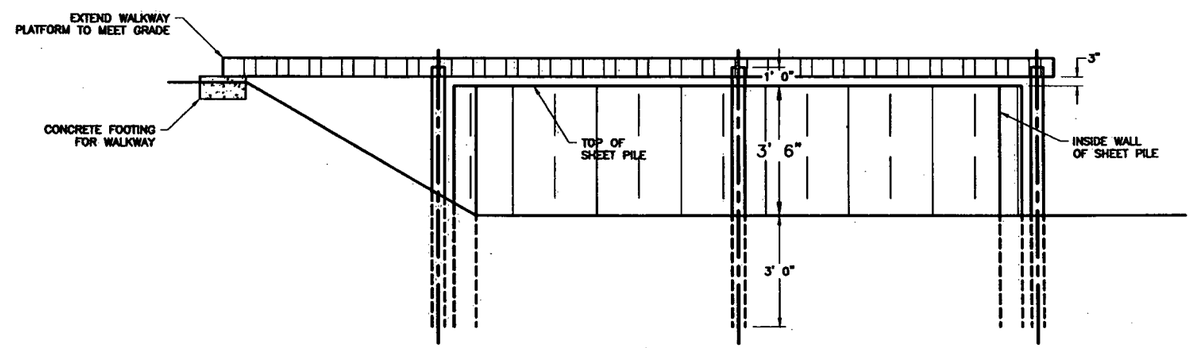

3 WALKWAY ELEVATION
NTS

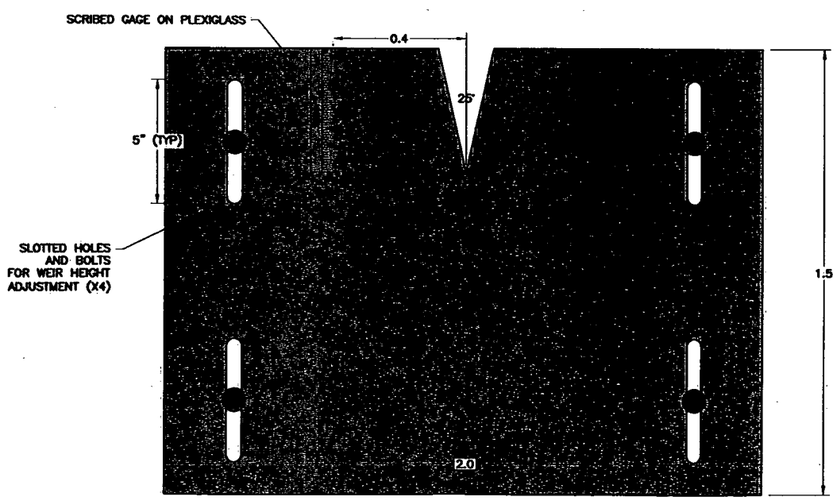

2 WEIR PLATE
NTS

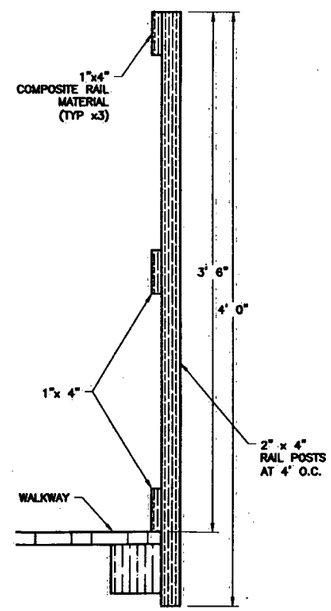

4 HANDRAIL DETAIL
NTS

CLIENT: RICO – ARGENTINE MINE SITE					
PROJECT: WETLAND TREATMENT PILOT TEST					
TITLE: POND 9 DETAILS					
amec	DESIGNED BY	RJB	CHECKED BY	RJB	DATE
	DRAWN BY	CWM	APPROVED BY	RJB	AUG 2012
	FILENAME FIG 2			FIGURE No. 2	REV 0

L:\PUBLIC\P_Drive\SA11161301-Rico_Mine\CAD\FIGURES\DETAILS 1.dwg-8/22/2012 6:33 PM

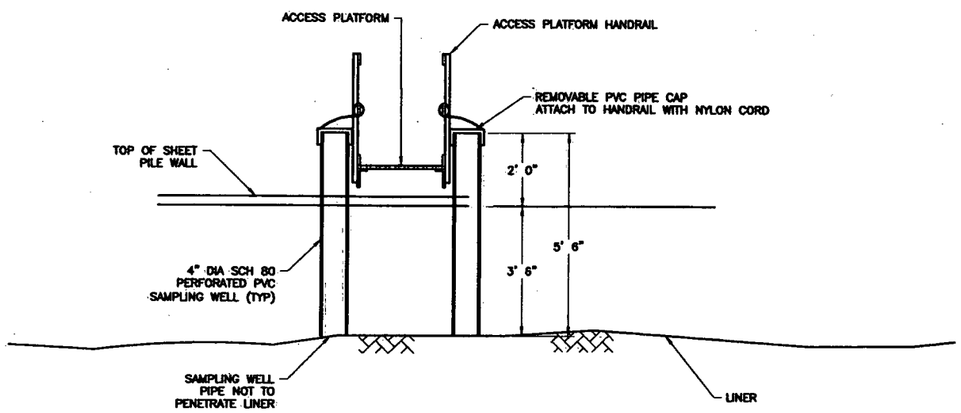

1 SAMPLING WELL
NTS

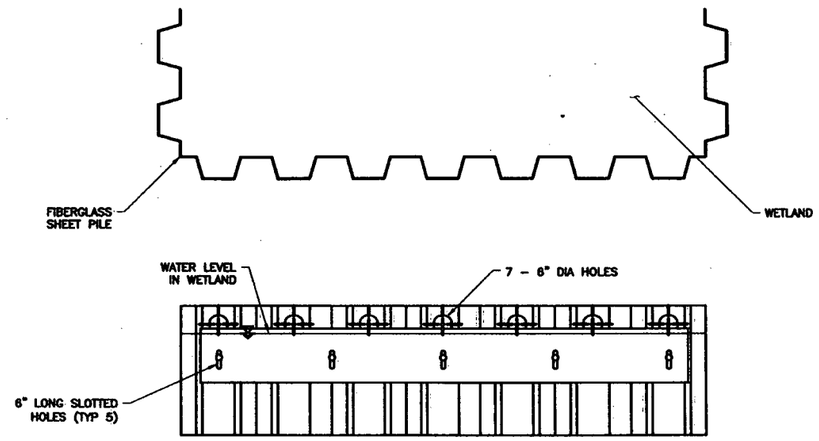

2 WETLAND OUTLET FLOW CONTROL
NTS

L:\PUBLIC\P_Drive\SA11161301-Rico Mine\CAD\FIGURES\DESIGN.dwg-8/22/2012 6:03 PM

CLIENT	RICO – ARGENTINE MINE SITE				
PROJECT	WETLAND TREATMENT PILOT TEST				
TITLE	POND 9 DETAILS				
amec	DESIGNED BY	RJB	CHECKED BY	RJB	DATE
	DRAWN BY	CWM	APPROVED BY	RJB	AUG 2012
	FILENAME FIG 3			FIGURE No. 3	REV 0

NORTH

100 0 100 200 FT

CLIENT	RICO – ARGENTINE MINE SITE
PROJECT	WETLAND TREATMENT POND TEST
TITLE	GENERAL ARRANGEMENT

amec

DESIGNED BY	CWM	CHECKED BY	RJB	DATE
DRAWN BY	CWM	APPROVED BY	RJB	AUG 2012
FILENAME 4			FIGURE No. 4	REV 0

L:\PUBLIC\P_Drive\SA11161301-Rico Mine\CAD\FIGURES\GEOTHERMAL.dwg-8/22/2012 2:50 PM