CHART SHOWING THE FORMATION OF

CONSOLIDATED EDISON COMPANY OF NEW YORK, INC.

AND

ITS SYSTEM ELECTRIC COMPANIES IN NEW YORK CITY

THROUGH CONSTITUENT ELECTRIC COMPANIES

Rate Engineer's Department

S.B.R. - H.P.E January 1, 1942

NOTES

Consolidated Edison Company of New York, Inc., also controls Westchester Lighting Company, Consolidated Telegraph and Electrical Subway Company, and Manhattan Bronx Power Corporation. This latter Company, incorporated May 29, 1923, is now inactive. However, it owns a franchise which was originally granted to American Electric Manufacturing Company (incorporated March 28, 1885). This franchise was conveyed to Frederick E. Townsend on April 18, 1888, and thence on April 19, 1889 to American Electric Illuminating Company (incorporated March 24, 1889). The franchise was sold at public auction, December 4, 1897 to Martin Misturn, who, on March 21, 1906, conveyed it to the Longacre Electric Light and Power Company (incorporated April 23, 1903). At a receiver's sale, March 27, 1923, the franchise and certain property of this Company were sold to Martin C Judge, who, on July 25, 1923 conveyed them to Manhattan Bronx Power Corporation.

? The date and method by which The New York Heat, Light and Power Company acquired the Electric Power Company are not known.

* Conveyed after foreclosure sale by deed dated December 1, 1894, to George W. Maslin, who conveyed to Madison Square Light Company on December 3, 1894.

** The Brush Electric Illuminating Company of New York was merged into The New York Edison Company, Inc., on December 22, 1936, and thereafter, on the same day, The New York Edison Company, Inc., was merged into Consolidated Edison Company of New York, Inc.

*** The Ball Electrical Illuminating Company was dissolved by proclamation of the Governor of the State of New York on December 15, 1930. Thereafter, at a special meeting held March 29, 1937, the Board of Trustees assigned this Company's franchise to Consolidated Edison Company of New York, Inc.

On November 20, 1924, Flatbush Gas Company conveyed its electric franchise to Brooklyn Edison Company. However, it continued in business as a gas company until it was merged into Brooklyn Union Gas Company December 31, 1927.

On June 12, 1891, the Newtown Electric Light Company, a partnership, received a franchise from the Town of Newtown. This franchise and certain other property was assigned on July 29, 1891, to John A. Seeley, who conveyed to Newtown Electric Light and Power Company.

The New York Gas & Electric Light, Heat & Power Company (Inc. Oct. 3, 1898)

The North New York Lighting Company (Inc. Mar. 26, 1887)

← Conveyance Jan. 2, 1892

North River Electric Light & Power Company (Inc. Dec. 29, 1891)

The Mount Morris Electric Light Company (Inc. Oct. 25, 1886)

The Block Lighting and Power Company (Inc. Sept. 10, 1894)

The Borough of Manhattan Electric Company (Inc. Sept. 21, 1897)

Manhattan Lighting Company (Inc. Dec. 12, 1895)

Merger Feb. 2, 1900

New York Heat, Light & Power Company

Electric Power Company (Daft) (Inc. Mar. 4, 1882)

?

The New York Heat, Light & Power Company (Inc. May 21, 1891)

Consolidation Feb. 9, 1895

Consolidation May 21, 1901

Excelsior Steam Power Company (Inc. July 22, 1873)

Manhattan Electric Light Company, Ltd. (Inc. May 22, 1888)

Madison Square Light Company (Inc. Dec. 3, 1894) →

Consolidation Aug. 27, 1896

East River Electric Light Company (Inc. Feb. 8, 1887)

Change of name Mar. 12, 1892 →

*

Thomson - Houston Electric Company of New York

Manhattan Electric Light Company

Merger Mar. 1, 1900

The Harlem Lighting Company (Inc. Nov. 3, 1886)

The Edison Electric Illuminating Company of New York (Inc. Dec. 17, 1880)

Safety Electric Light and Power Company (Inc. Feb. 4, 1887)

← Change of name Dec. 9, 1889

The New York Edison Company

The United Electric Light and Power Company

← Merger June 19, 1902

Consolidation Aug. 1, 1935

The United States Illuminating Company (Inc. Feb. 4, 1891)

The New York Edison Company, Inc.

The Brush Electric Illuminating Company of New York (Inc. Feb. 19, 1891)

Merger Dec. 22, 1936 **

CONSOLIDATED EDISON COMPANY OF NEW YORK, INC.

The Ball Electrical Illuminating Company (Inc. Mar. 25, 1886)

Dissolved Dec. 15, 1930 ***

Merger Dec. 23, 1936

Bronx Gas and Electric Company (Inc. Sept. 5, 1893)

The State Electric Light & Power Company of the State of New York (Inc. Dec. 7, 1891)

← Conveyance Nov. 10, 1897

Knickerbocker Electric Light & Power Company (Inc. June 30, 1892)

Amsterdam Electric Light, Heat and Power Company (Inc. Apr. 12, 1897)

← Conveyance Dec. 27, 1893

The Flatbush Gas Company (Inc. Apr. 12, 1864)

Municipal Electric Light Company (Inc. Aug. 2, 1884)

Citizens Electric Illuminating Company of Brooklyn (Inc. Dec. 13, 1893)

Merger Oct. 31, 1899

Conveyance Nov. 20, 1924 #

Merger Dec. 23, 1936

Edison Electric Illuminating Company of Brooklyn (Inc. Mar. 9, 1887)

← Merger Apr. 11, 1900

← Merger Jan. 27, 1919

Bergen Beach Light & Power Company (Inc. Apr. 10, 1896)

Brooklyn Edison Company, Inc.

← Change of name Jan. 10, 1919

Kings County Electric Light and Power Company (Inc. June 26, 1890)

Newtown Electric Light & Power Company (Inc. May 20, 1892)

← Conveyance Nov. 4, 1899

New York and Queens Light & Power Company

Change of name Apr. 12, 1898 →

The Flushing Electric Light and Power Company (Inc. Jan. 9, 1890)

← Merger June 17, 1899

Newtown Light and Power Company (Inc. May 18, 1895)

Flushing Gas and Electric Light Company (Inc. June 11, 1897)

New York and Queens Electric Light and Power Company (Inc. July 21, 1900)

New York and Queens Gas and Electric Company (Inc. June 12, 1899)

Merger July 27, 1900

Electric Illuminating and Power Company of Long Island City (Inc. Feb. 19, 1894)

← Merger May 28, 1903

The Jamaica Electric Light Company (Inc. Oct. 12, 1893)

Long Island Illuminating Company (Inc. Dec. 2, 1895)

1880 1885 1890 1895 1900 1905 1910 1915 1920 1925 1930 1935 1940

160786

EPA-NC-CE-0000001

CHART SHOWING THE FORMATION OF CONSOLIDATED EDISON COMPANY OF NEW YORK, INC. THROUGH ITS CONSTITUENT GAS COMPANIES

Rate Engineer's Department
S.B.R. - H.P.K. October 1, 1941

1820 1830 1840 1850 1860 1870 1880 1890 1900 1910 1920 1930 1940

Flushing Gas Light Company (Inc. Oct. 11, 1855) — Conveyance July 20, 1897
Flushing Gas and Electric Light Company (Inc. June 11, 1897) — Merger June 17, 1899
New York and Queens Gas and Electric Company (Inc. June 12, 1899) — Conveyance July 23, 1900
Newtown and Flushing Gas Company (Inc. July 16, 1900) — Conveyance July 20, 1900
Whitestone Gas Company (Inc. July 3, 1900) — Merger July 25, 1904
College Point Gas Company (Inc. July 2, 1866) — Merger Mar. 27, 1901
New York and Queens Gas Company (Inc. July 9, 1904)
The Astoria Light, Heat and Power Company (Inc. Jan. 20, 1899) — Merger May 11, 1905
Citizens Mutual Gas Light Company of Long Island City (Inc. Sept. 13, 1879)
The Standard Gas Light Company of the City of New York (Inc. Feb. 11, 1886)
New York Mutual Gas Light Company (Inc. Apr. 17, 1866)
(Reorg. June 1, 1871)
The New York Gas Light Company (Inc. Mar. 26, 1823)
The Manhattan Gas Light Company (Inc. Feb. 26, 1830)
The Harlem Gas Light Company (Inc. Feb. 8, 1856)
The Metropolitan Gas Light Company of the City of New York (Inc. Apr. 17, 1855)
The Knickerbocker Gas Light Company (Inc. July 10, 1876) — Conveyance Aug. 22, 1876
The Union Gas Light Company of the City of New York (Inc. Oct. 26, 1871) — Conveyance Nov. 22, 1871
The Citizens Mutual Gas Company of New York (Inc. May 27, 1865) — Conveyance May 27, 1865
The Anthracite Gas Lighting and Heating Company of New York (Inc. May 28, 1863)
The Municipal Gas Light Company of New York — Change of Name July 7, 1876
Municipal Oxygen Gas Company of the City of New York (Inc. June 1, 1874)
Consolidation Nov. 10, 1884
Purchase of Properties Aug. 31, 1932
Merger June 1, 1936
Consolidated Edison Company of New York, Inc.
Change of Name Mar. 23, 1936
Consolidated Gas Company of New York
Bronx Gas and Electric Company (Inc. Sept. 5, 1893)
Wakefield Gas Light Company (Inc. May 24, 1894)
Williamsbridge Gas and Electric Light Company (Inc. May 16, 1895) — Merger June 14, 1902
Northern Union Gas Company (Inc. Oct. 1, 1887) — Purchase Nov. 16, 1897
Merger Dec. 23, 1936 ##
Northern Gas Light Company of New York City — Change of Name July 8, 1878
* Suburban Gas Light Company (Inc. June 11, 1870)
Equitable Gas Light Company of New York (Inc. Mar. 10, 1882)
Empire Gas Light Company (Inc. Mar. 31, 1871)
The New York and East River Gas Company (Inc. Dec. 29, 1893) — Conveyance 1871-1877
Consolidation Mar. 5, 1898
The Citizens Gas Light Company of Long Island City (Inc. Apr. 2, 1875) — Purchase June 28, 1877
New Amsterdam Gas Company (Inc. Nov. 1, 1897)
New Amsterdam Gas Company (Inc. Mar. 5, 1898)
George A. Allin & Wife — Purchase Aug. 21, 1877
Titus B. Eldridge & Wife — Purchase Feb. 15, 1879
The East River Gas Company of Long Island City (Inc. Nov. 2, 1877)
The East River Gas Company of Long Island City (Inc. May 3, 1890) — Purchase May 31, 1890
Central Union Gas Company (Inc. July 14, 1897) — Purchase Aug. 16, 1897
The Central Gas Light Company of New York City (Inc. May 16, 1876) — Change of Name May 15, 1875
** Westchester County Gas Light Company (Inc. July 18, 1859)

NOTE

Consolidated Edison Company of New York, Inc., also controls Westchester Lighting Company, incorporated November 5, 1900.

On April 10, 1901, the Long Island Illuminating Company leased in perpetuity to the Newtown and Flushing Gas Company, its rights to gas distribution in the Town of Jamaica.

Central Union Gas Company and The East River Gas Company of Long Island City were merged into New Amsterdam Gas Company on December 23, 1936; and thereafter, on the same day, New Amsterdam Gas Company, together with Northern Union Gas Company and Bronx Gas and Electric Company, was merged into Consolidated Edison Company of New York, Inc.

* On February 28, 1871, the Suburban Gas Light Company purchased the mains, meters, services, etc., of the Westchester County Gas Light Company, in the district lying north of the Town of Morrisania.

** On November 1, 1859, Robert Campbell & Company assigned to Westchester County Gas Light Company a grant by the Town of Morrisania, dated March 7, 1859, and a grant by the Town of West Farms, dated March 22, 1859, such grants giving permission to lay pipes, etc., for the purpose of supplying gas.

EPA-NC-CE-0000002

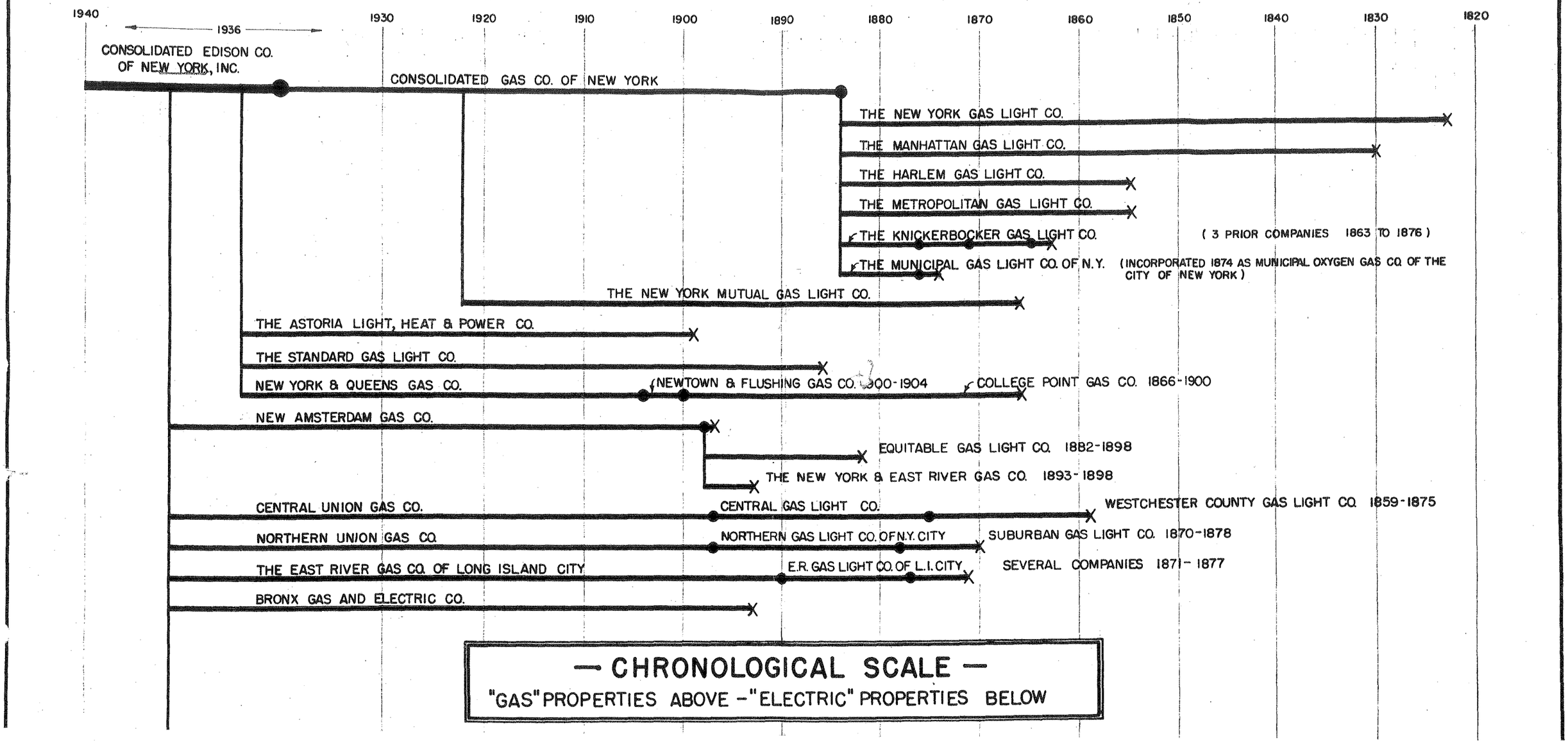

EPA-NC-CE-0000003

— CHRONOLOGICAL SCALE —

"GAS" PROPERTIES ABOVE - "ELECTRIC" PROPERTIES BELOW

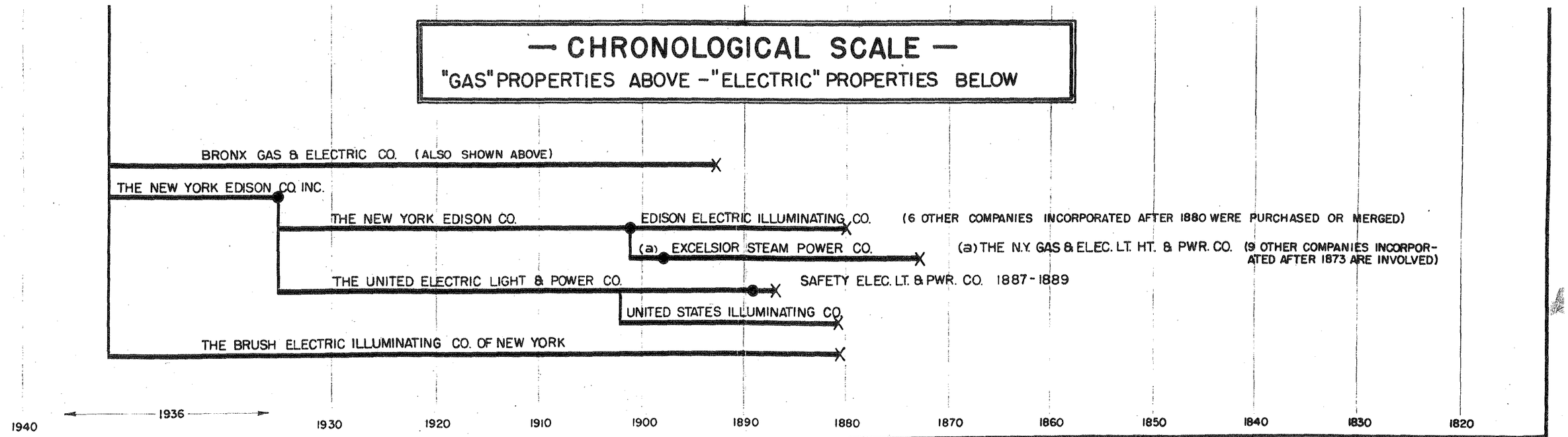

LEGEND

X - CORPORATE ORIGINS

● - PURCHASE, MERGER OR CHANGE OF NAME

CONSOLIDATED EDISON CO. OF N.Y. INC.

PRINCIPAL CORPORATE GENEALOGY

TO DECEMBER 31, 1940

EPA-NC-CE-0000004

SUPPLEMENT TO CORPORATE HISTORY

1. Tarrytown Terminal Corporation was dissolved on December 14, 1945.

2. Green Mountain Lake Farms, Inc. was dissolved on December 22, 1945.

3. Manhattan Bronx Power Corporation was dissolved on July 16, 1948.

4. Yonkers Electric Light & Power Company was merged in to Con Edison on February 16, 1951.

5. Westchester Lighting Company was merged into Con Edison on February 19, 1951

6. Staten Island Edison Corporation Inc. was acquired by Con Edison from General Public Utilities on April 4, 1950 and was merged into Con Edison on December 31, 1951. Staten Island Edison was incorporated on February 15, 1923 and acquired the electric franchises and property of the Richmond Light and Railroad Company on August 1, 1923.

7. New York Steam Corporation was merged into Con Edison on March 8, 1954.

8. Consolidated Telegraph and Electrical Subway Company was merged into Con Edison on February 24, 1961.

9. Davids Island Development Corporation was incorporated as a New York corporation on April 9, 1976 and is a wholly owned subsidiary of Con Edison.

10. Fair Day Corporation was incorporated as a Colorado corporation on September 1, 1976 and was a wholly owned subsidiary of Con Edison. It was dissolved on September 23, 1982.

11. Gramercy Capital Corporation was incorporated as a New York corporation on October 21, 1986. Its name was changed to Gramercy Assets Corporation on October 26, 1987. It is a wholly owned subsidiary of Con Edison.

11/14/90

THIS EDITION OF THE CORPORATE HISTORY OF THE SYSTEM COMPANIES AND ALL PREDECESSOR COMPANIES HAS BEEN BROUGHT UP TO DATE AND IS CORRECT AS TO PROPER NAMES AND DATES IN SO FAR AS IT IS POSSIBLE TO MAKE IT SO FROM THE AVAILABLE RECORDS.

5-5-44

Assistant Secretary and Manager
Department of Taxes-General

EPA-NC-CE-0000006

CONSOLIDATED EDISON COMPANY OF NEW YORK, INC.
AND ITS AFFILIATED COMPANIES

FOOTNOTES

(a) Filed in office of County Clerk
(b) Date of Agreement
(c) Date of Payment of Tax to Treasurers Office, State of New York, for privilege of incorporation
(d) Filed in Office of Secretary of State

(1) An act to authorize the formation of gas light companies, passed February 16-1848, Chapter 37, Laws of 1848
(2) Transportation Corporation Law
(3) An Act to authorize the formation of manufacturing, etc. companies, passed February 17-1848
(4) Stock Corporation Law, and amendments thereto
(5) An Act to authorize the consolidation of manufacturing corporations, Chapter 367, passed May 28-1884
(6) Railroad Law, Chapter 565, Laws of 1890 and amendatory acts
(7) An Act passed June 29-1853, to amend an act entitled "An Act to provide for the incorporation and regulation of Telegraph Companies" passed April 12-1848, being Chapter 471, Laws of 1853
(8) Business Corporations Law
(9) Chapter 85, Laws of 1823
(10) Chapter 59, Laws of 1830
(11) Chapter 545, Laws of 1855
(12) Incorporated in New Jersey under "An Act concerning Corporations" approved April 7-1875 and supplements thereto
(13) Act 6, Chapter 566, Laws of 1890
(14) Chapter 651, Laws of 1866
(15) Law under which incorporated not given in Certificate of Incorporation
(16) General Corporation Law, Section 7
(17) Chapter 611, Laws of 1875, passed June 21-1875
(18) An Act concerning corporations, passed April 18-1872 by State of Illinois General Assembly
(19) Chapter 40 of the Laws of 1848 and Chapter 512, Laws of 1879 as amended by Chapter 73, Laws of 1882

EPA-NC-CE-0000007

CONSOLIDATED EDISON COMPANY OF NEW YORK, INC.
AND ITS AFFILIATED COMPANIES

CORPORATE HISTORY OF EACH OF THE SYSTEM COMPANIES
INCLUDING ALL PREDECESSOR COMPANIES

	Date of Incorporation (d)	Law or Act under which Incorporated	Successor Company — Through Mergers, Consolidations and Purchases: Merger, Consolidation, or Purchase	Date	Successor Company
Amsterdam Electric Light, Heat and Power Company	4/12/97	(2)	Merger	12/23/36	Brooklyn Edison Co Inc
The Anthracite Gas Lighting and Heating Company of New York	5/29/63	(3)	Purchase of inventions and franchises	5/27/65	The Citizens Mutual Gas Co of N Y
Ardsley Electric Company	3/6/99	(2)	Purchase	3/18/26	Westchester Lighting Co
The Astoria Light, Heat and Power Company	1/20/99	(2)	Merger	6/1/36	Consolidated Edison Co of N Y Inc
The Ball Electrical Illuminating Company	3/25/86	(3)	Dissolution by proclamation of the governor ([illegible])	12/15/30	Franchise assigned to Consolidated Edison Co of N Y 3/29/37.
Bellum Supply Company, Inc (Owned by New York Steam Corp)	-	-	Dissolution	2/28/36	-
Bergen Beach Light and Power Company	4/10/96(c)	(2)	Merger	4/4/00	Edison Electric Illuminating Co of Bklyn
The Block Lighting and Power Company No. 1	9/10/94(a)	(2)	Merger Sale of Assets	2/2/00 12/13/98	The N Y Gas & Elec Lt, Heat & Pr Co Manhattan Lighting Co
The Borough of Manhattan Electric Company	9/21/97(b)	(2)	Merger	2/2/00	The N Y Gas & Elec Lt, Heat & Pr Co
Friar Cliff Manor Light and Power Company	11/1/00	(2)	Merger	5/26/05	Northern Westchester Lighting Co
Bronx Gas and Electric Company	9/5/93	(2)	Merger	12/23/36	Consolidated Edison Co of N Y Inc
Brooklyn Edison Company, Inc	6/26/90	(3)	(Kings Co. Elec Lt & Pr Co-name changed) Merger	1/10/19 7/31/45	Consolidated Edison Co of N Y Inc
The Brush Electric Illuminating Company of New York	2/19/81	(3)	Merger	12/22/36	The New York Edison Co Inc
The Central Gas Light Company of New York City	7/13/59	(1)	Purchase (The West.Co. Gas Light Co.-name changed)	8/16/97(b) 5/15/75	Central Union Gas Company
Central Union Gas Company	7/14/97	(2)	Merger	12/23/36	New Amsterdam Gas Co. No. 2
Citizens Electric Illuminating Company of Brooklyn	12/13/83	(3)	Merger	10/30/99	Edison Electric Illuminating Co of Bklyn
Citizens Gas and Electric Company	4/15/90(c)	(5)	Purchase	6/27/93	White Plains Lighting Co
Citizens Gas Light Company of Long Island City	4/2/75	(1)	Purchase	2/15/78	The East River Gas Lt Co of L I City
The Citizens Gas Light Company of Westchester County Geo. H. Baldwin - Receiver	4/30/85(a)	(1)	Purchase	11/27/89	The Portchester Standard Gas Light Co

EPA-NC-CE-0000008

EPA-NC-CE-0000009

CONSOLIDATED EDISON COMPANY OF NEW YORK, INC.
AND ITS AFFILIATED COMPANIES

	Date of Incorporation (d)	Law or Act under which Incorporated	Successor Company Through Mergers, Consolidations and Purchases		
			Merger, Consolidation, or Purchase	Date	Successor Company
The Citizens Mutual Gas Company of New York	5/27/65	(3)	Purchase of franchise only	11/22/71	The Union Gas Light Co of the City of N Y
The Citizens Mutual Gas Light Company of Long Island City	9/13/79	(1)	Merger	5/11/05	The Astoria Light, Heat and Power Co
The City Gas Company of Yonkers	8/23/72(a)	(15)	Purchase	10/18/75	The Westchester Gas Lt Co of the City of Yonkers
College Point Gas Company	5/25/65(a)	(15)	Merger	3/27/01	Newtown and Flushing Gas Company
Columbia Mineral Wool Company (Owned by New York Steam Corp)	10/25/99	(13)	Sale Agreement	4/13/37	Sold along with U.S. Mineral Wool Co to a N.J. Corporation (See Memo U.S. Min.Wool).
The Combination Electric Light and Power Company	10/3/99(a)	(3)	Consolidation	7/23/91	Westchester Electric Company (No. 2)
Consolidated Edison Company of New York, Inc.	11/10/34	(5)	Consolidated Gas Co of N Y - Name Changed	3/23/36	
The Consolidated Gas and Electric Light Company of Westchester County	1/25/99(a)	(1)	Purchase	1/5/07	Westchester Gas and Electric Co
Consolidated Gas Company of New York	11/10/84	(5)	Change of Name	3/23/36	Consolidated Edison Co of New York, Inc
Consolidated Telegraph and Electrical Subway Company	12/29/85	(7)	-	-	
Croton Electric Company (A Co-Partnership)	-	-	Purchase	7/16/00	Croton Electric Light & Power Co
Croton Electric Light and Power Company	7/3/00	(2)	Purchase	6/3/01	Ossining Heat, Light & Power Co
Deft Electric Power Company	3/4/82		Acquired by NYELAP Co No.1, date & method unknown		The New York Heat, Light & Power Co
Dobbs Ferry and Hastings Gas Light Company	11/22/59(a)	(15)	Consolidation	6/6/95	Hudson River Gas and Electric Co
Dobbs Ferry Lighting Company	4/28/94	(2)	Consolidation	6/11/94	New York & Dobbs Ferry Lt, Heat & Pr Co
The Dover Electric Light and Power Company	3/23/95	(15)	Sale Agreement	6/9/98	White Plains Lighting Co
East River Electric Light Company	2/14/87(a)	(3)	Name Changed	3/12/92	Thomson-Houston Electric Co of New York
The East River Gas Company of Long Island City	5/3/90	(1)	Merger	12/23/36	New Amsterdam Gas Co (No. 2)
The East River Gas Light Company of Long Island City	11/2/77	(1)	Purchase	5/31/90	The East River Gas Co of L I City
Eastchester Electric Company (No. 1)	7/26/89(c)	(3)	Consolidation	7/23/91	Eastchester Electric Company (No. 2)
Eastchester Electric Company (No. 2)	7/23/91	(5)	Merger	12/1/00	Westchester Lighting Company
Eastchester Gas Light Company	9/11/90	(3)	Consolidation	3/9/99	New York Suburban Gas Company (No. 1)
Edison Construction Company	7/10/06		Company lapsed through failure to pay State Corporation Tax. In or about 1918.		

CONSOLIDATED EDISON COMPANY OF NEW YORK, INC.
AND ITS AFFILIATED COMPANIES

	Date of Incorporation (d)	Law or Act under which Incorporated	Successor Company Through Mergers, Consolidations and Purchases: Merger, Consolidation, or Purchase	Date	Successor Company
Edison Construction Company, Inc.	6/15/26(b)	(4)	Dissolution	3/12/36	
Edison Electric Illuminating Company of Brooklyn	3/9/87	(3)	Merger	1/27/19	Brooklyn Edison Company, Inc.
The Edison Electric Illuminating Company of New York	12/17/80	(1)	Consolidation	5/21/01	The New York Edison Company
Edison Light and Power Installation Company	2/8/87(N.J.)		Dissolution(N.J. Sec'y of State Certificate)	12/23/29	-
Electric Illuminating and Power Company of Long Island City	2/19/94(b)	(15)	Merger	7/27/00	New York & Queens Electric Lt & Pr Co
The Empire Gas Light Company	3/31/71	(1)	Purchase (1871-1877)		Citizens Gas Light Co of L I City
Ensign-Reynolds, Inc. (Owned by Municipal Lighting Co)	6/14/23	(4)	Sales Agreement	4/20/37	Non-affiliated Company
Equitable Gas Light Company of New York	3/10/32	(1)	Consolidation	3/5/[illegible](a)	New Amsterdam Gas Company (No. 2)
Excelsior Electric Company	Not known		Sale	7/11/93	Excelsior Electric Light Co of Tarrytown
Excelsior Electric Light Company of Tarrytown	7/8/93(c)	(2)	Consolidation	6/6/95	Hudson River Gas and Electric Company
Excelsior Steam Power Company	7/22/73	(3)	Consolidation	2/9/95	New York Heat, Light & Power Co
The Flatbush Gas Company	4/2/64	(1)	Sale of franchise and certain electric plant, etc.	11/[illegible]/24	Brooklyn Edison Co, Inc
The Flushing Electric Light and Power Company	1/9/90	(3)	Change of Name	4/12/98	New York & Queens Light & Power Co
Flushing Gas and Electric Light Company	6/11/97	(2)	Merger	6/17/99	New York & Queens Gas & Electric Co
The Flushing Gas Light Company	10/11/55(a)	(1)	Purchase	7/20/97	Flushing Gas & Electric Light Co
Green Mountain Lake Farms, Inc.	1/18/27	(4)	-		
The Harlem Gas Light Company	2/8/55	(1)	Consolidation	11/10/84	Consolidated Gas Co of New York
The Harlem Lighting Company	11/3/86	(3)	Merger	3/1/00	The Edison Elec Illuminating Co of N Y
Hudson River Gas and Electric Company	6/6/95	(2)	Merger	12/1/02	Westchester Lighting Co
Huguenot Electric Light, Heat and Power Company	5/1/00	(2)	Merger	12/1/00	Westchester Lighting Co
Insulating Products Company	No Papers	(2)	Sale	5/5/36	Non-affiliated company
Irvington & Greenburg Gas Company	5/15/94	(2)	Consolidation	6/11/94	N Y & Dobbs Ferry Lt, Heat & Pr Co

EPA-NC-CE-0000010

Jamaica Electric Light Company

Kings County Electric Light and Power Company

Knickerbocker Gas Light Company

Knickerbocker Electric Light and Power Company

Larchmont Electric Light Company

Larchmont Gas Company

Longacre Electric Light and Power Company

Long Island Gas Light Company (No. 1)

The Long Island Gas Light Company (No. 2)

Long Island Illuminating Company

The Lorena Company

Madison Square Light Company

Manhattan-Bronx Power Corporation

Manhattan Electric Light Company

Manhattan Electric Light Company, Limited

The Manhattan Gas Light Company

Manhattan Lighting Company

The Metropolitan Gas Light Company of the City of

Mount Kisco Lighting Company

The Mount Morris Electric Light Company

The Municipal Electric Light Company

EPA-NC-CE-000011

EPA-NC-CE-0000012

CONSOLIDATED EDISON COMPANY OF NEW YORK, INC.
AND ITS AFFILIATED COMPANIES

	Date of Incorporation (d)	Law or Act under which Incorporated	Successor Company Through Mergers, Consolidations and Purchases		
			Merger, Consolidation, or Purchase	Date	Successor Company
Municipal Gas Company of Yonkers	6/2/79	(1)	Merger	12/1/00	Westchester Lighting Company
Municipal Gas Light Company of New York	6/1/74	(1)	Consolidation. (Municipal Oxygen Gas Co. of the City of N.Y. by change of name 7/7/76)	11/1/34	Consolidated Gas Company of New York
Municipal Lighting Company, Inc.	5/13/15	(3)	Dissolution. (Dissolved by Certificate filed and accepted by Secretary of State 8/25/37).	8/25/37	
Municipal Oxygen Gas Company of the City of New York	6/1/74	(1)	Change of name	7/7/76	Municipal Gas Light Co of New York
National Coke and Coal Company	11/21/01		Dissolution. Purchase of Assets	7/25/34 6/30/34	Consolidated Gas Co of New York
New Amsterdam Gas Company (No. 1)	11/1/97(c)	(2)	Consolidation	3/5/98(a)	New Amsterdam Gas Company (No. 2)
New Amsterdam Gas Company (No. 2)	3/5/98(a)	(5)	Merger	12/23/36	Consolidated Edison Co of N Y, Inc
The New Rochelle Electric Light Company	2/7/87	(1)	Purchase. (Foreclosure purchase by Martin Freeman)	10/3/00	The Combination Electric Lt & Pr Co
New Rochelle Gas and Fuel Company	(12/1/37 (11/30/38(b)	(1)	Consolidation	3/10/99(b)	New York Suburban Gas Co (No. 2)
The New Rochelle Gas Light Company	2/13/63	(1)	This Company never went into operation; sold	1/4/08 to	New Rochelle Gas and Fuel Co
Newtown and Flushing Gas Company	7/12/00(c)	(2)	Merger	7/25/04	New York and Queens Gas Company
Newtown Electric Light and Power Company	5/20/92(N.J.)	(12)	Purchase (franchise only)	11/4/99	New York and Queens Gas & Elec Co
Newtown Electric Light Company (A Partnership)	5/7/91	-	Purchase	11/4/99	New York and Queens Gas & Elec Co
Newtown Light and Power Company	5/13/95(c)	(2)	Merger	6/12/99	New York and Queens Gas & Elec Co
New York and Dobbs Ferry Light, Heat and Power Company	6/11/94	(2)	Consolidation	6/6/95	Hudson River Gas and Electric Co
The New York and East River Gas Company	12/20/93	(2)	Consolidation	3/5/98(a)	New Amsterdam Gas Company (No. 2)
New York and Queens Electric Light and Power Company	7/21/00	(2)	Merger	7/31/45	Consolidated Edison Co of N Y Inc
New York and Queens Gas and Electric Company	6/12/99(c)	(2)	Merger Sale of Gas Properties	7/27/00 7/25/00	New York & Queens Elec Lt & Pr Co. Newtown and Flushing Gas Co.
New York and Queens Gas Company	7/9/04(c)	(2)	Merger	6/1/36	Consolidated Edison Co of N Y, Inc

EPA-NC-CE-000013

CONSOLIDATED EDISON COMPANY OF NEW YORK, INC.
AND ITS AFFILIATED COMPANIES

	Date of Incorporation (d)	Law or Act under which Incorporated	Successor Company Through Mergers, Consolidations and Purchases		
			Merger, Consolidation, or Purchase	Date	Successor Company
New York and Queens Light and Power Company	1/9/90	(3)	Merger. (Flushing Elec Light & Power Company - by change of name 3/11/98)	6/17/99	New York & Queens Gas & Electric Co
New York and Westchester Lighting Company	7/11/04(c)	(2)	Merger	10/20/04	Westchester Lighting Company
New York Carbide and Acetylene Company	12/24/95	(3)	Dissolution by proclamation of the governor	12/15/41	-
The New York Edison Company	5/21/01	(5)	Consolidation	8/1/35	The New York Edison Company, Inc
The New York Edison Company, Inc.	8/1/35	(2),(4)	Merger	12/22/36	Consolidated Edison Co of N Y, Inc
The New York Gas and Electric Light, Heat and Power Company	10/3/98	(2)	Consolidation	5/21/01	The New York Edison Company
The New York Gas Light Company (No. 1)	3/26/1823	(9)	Reorganization	6/1/71	The New York Gas Light Company (No. 2)
The New York Gas Light Company (No. 2)	6/1/71(a)	(1)	Consolidation	11/10/84	Consolidated Gas Company of New York
The New York Heat, Light and Power Company	5/21/91	(15)	Consolidation	2/9/95	New York Heat, Light and Power Co
New York Heat, Light and Power Company	2/9/95	(5)	Merger	2/2/00	The New York Gas & Elec Lt, Heat & Pr Co
The New York Mutual Gas Light Company	4/17/66	(14)	Dissolution Purchase of assets	8/31/22 8/31/22	- Consolidated Gas Company of New York
The New York Steam Company (No. 1)	7/24/80(a)	(3)	Consolidation	9/19/31	New York Steam Company (No. 2)
The New York Steam Company (No. 2)	9/19/81	(5)	Purchase	8/11/21	New York Steam Corporation
New York Steam Corporation	7/15/21	(3)	-	-	
New York Suburban Gas Company (No. 1)	3/9/99	(5)	Consolidation	3/10/99(b)	New York Suburban Gas Company (No. 2)
New York Suburban Gas Company (No. 2)	3/10/99(b)	(5)	Merger	12/1/00	Westchester Lighting Company
The North New York Lighting Company	3/26/87(a)	(3)	Sale by referee	1/2/92(b)	North River Electric Light & Power Co
North River Electric Light and Power Company	12/29/91	(2)	Merger	2/2/00	The N Y Gas & Elec Lt, Heat & Pr Co
Northern Gas Light Company of New York City	6/11/70(a)	(1)	Purchase. (Suburban Gas Light Co. - by change of name 6/18/78(a)).	11/17/97	Northern Union Gas Company
Northern Union Gas Company Amended Certificate	10/1/97. 7/12/00(b)	(2)	Merger	12/23/36	Consolidated Edison Co of N Y, Inc

EPA-NC-CE-0000014

CONSOLIDATED EDISON COMPANY OF NEW YORK, INC.
AND ITS AFFILIATED COMPANIES

	Date of Incorporation (d)	Law or Act under which Incorporated	Successor Company Through Mergers, Consolidations and Purchases: Merger, Consolidation, or Purchase	Date	Successor Company
Northern Westchester Light and Power Company	12/8/04(c)	(2)	Merger	5/25/05	Northern Westchester Lighting Company
Northern Westchester Lighting Company	5/5/05	(2)	Merger	11/1/29	Westchester Lighting Company
Ossining Heat, Light and Power Company	12/27/00(c)	(2)	Merger	5/25/05	Northern Westchester Lighting Company
The Peekskill Electric Light and Power Company	4/7/87(c)	(3)	Purchase	7/18/00(b)	Peekskill Lighting Company
Peekskill Gas Light Company	7/18/55(a)	(1)	Purchase	7/30/00(b)	Peekskill Lighting Company
Peekskill Lighting Company	7/12/00	(2)	See amended certificate of incorporation changing name to Peekskill Light.&R.R.Co.	8/31/00	
Peekskill Lighting and Railroad Company	8/31/00	(6)	Merger	11/1/29	Westchester Lighting Company
Peekskill Traction Company	4/16/98(a)	(6)	Purchase	Not known	Peekskill Lighting and Railroad Company
Pelham Bay Park Electric Light, Power & Storage Company	7/23/90	(3)	Merger	6/13/14	Westchester Lighting Company
The Pelham Electric Light and Power Company	1/30/97	(2)	Merger	12/1/00	Westchester Lighting Company
The Pelham Gaslight Company	1/16/95	(2)	Consolidation	3/9/99	New York Suburban Gas Company (No. 1)
Peoples Gas Company of Yonkers	9/20/70		Purchase. (Edward Devitt 6/2/72 - Sale to The City Gas Co of Yonkers 11/23/73)	10/15/75	The Westchester Gas Light Co of the City of Yonkers.
Peoples Gas Light Company	No Papers		Not Known		The Long Island Gas Light Company (No. 2)
Portchester Electric Lighting Company	6/28/98(c)	(2)	Merger	12/1/00	Westchester Lighting Company
The Port Chester Standard Gas Light Company	11/23/87(c)	(1)	Purchase	6/16/91	The Cons. Gas & Elec Lt Co of Westchester Count
The Rye and Portchester Gas Light Company	8/21/61(a)	(15)	Purchase	11/30/87	The Port Chester Standard Gas Light Co
The Safety Electric Light and Power Company	2/8/87(a)	(3)	Change of name	12/9/89	The United Electric Lt & Pr Co
The Sing Sing Electric Lighting Company	4/11/89	(3)	Purchase	6/3/01	Ossining Heat, Light and Power Company
The Sing Sing Gas Manufacturing Company	11/1/55	(1)	Purchase	6/3/01	Ossining Heat, Light and Power Company
Standard Gas Light Company	12/11/82(a)	(1)	Purchase (of land only-? Mains ? - Franchise apparently not legal) (New York Steam 50 Year History)	3/9/85	The East River Gas Light Co of L I City

EPA-NC-CE-0000015

CONSOLIDATED EDISON COMPANY OF NEW YORK, INC.
AND ITS AFFILIATED COMPANIES

	Date of Incorporation (d)	Law or Act under which Incorporated	Successor Company Through Mergers, Consolidations and Purchases		
			Merger, Consolidation, or Purchase	Date	Successor Company
The Standard Gas Light Company of the City of New York	2/11/36	(1)	Merger	6/1/36	Consolidated Edison Company of New York, Inc
The State Electric Light and Power Company of the State of New York	12/7/91(c)	(2)	Purchase	11/10/37	Amsterdam Electric Light, Heat & Power Co
The Steam Heating and Power Company of New York	7/24/79(a)		Consolidation. (See Steam 50 Year Book)	9/19/31	New York Steam Company (No. 2)
The Suburban Gas Light Company	6/11/70(a)	(1)	Change of name	6/13/73(a)	Northern Gas Light Co of New York City
Tarrytown and Irvington Union Gas Light Company	3/14/59	(15)	Consolidation	6/6/95	Hudson River Gas and Electric Co
Tarrytown Terminal Corporation	12/30/20(c)	(3)	-		
The Tarrytown Union Electric Light, Heat and Power Company	6/21/89	(19)	Purchase	10/13/99	Hudson River Gas and Electric Company
Thomson-Houston Electric Company of New York	3/12/92(b)	(3)	Referees sale Deed dated 12/1/94 to Geo. F. Baslin. East River Elec Lt Co. by change of name	12/5/94 3/12/92	Madison Square Light Company
The Thomson-Houston Electric Light Company of Yonkers	7/11/88(c)	(3)	Purchase of franchises. (Merger)	5/4/23	The Yonkers Elec Lt & Pr Co
The Union Gas Light Company of the City of New York	11/6/71	(1)	Purchase	8/22/76	Knickerbocker Gas Light Company
The United Electric Light and Power Company	2/4/37	(3)	Consolidation. (The Safety Elec Lt & Pr Co. by change of name 12/9/89)	8/1/35	The New York Edison Company, Inc
The United States Illuminating Company	2/4/81(a)	(1)	Merger	6/19/02	The United Electric Light & Power Co
United States Mineral Wool Company (Owned by New York Steam Corp)	6/10/81	(3)	Sale Agreement	4/13/37	Sold to a private group. (See Memo attached)
Westfield Gas Light Company	5/24/94	(2)	Merger	6/14/02	Northern Union Gas Company
The Westchester County Gas Light Company	7/18/59	(1)	Change of name	5/15/75	The Central Gas Light Co of New York City
Westchester Gas and Coke Company	3/6/99	(2)	Merger	12/1/00	Westchester Lighting Company
Westchester Gas and Electric Company	1/4/97 Amended 2/17/99(a)	(16)	Consolidation	3/9/99	New York Suburban Gas Company (No. 1)
Westchester Gas Light Company of the City of Yonkers	9/18/75(a)	(1)	Merger	12/1/00	Westchester Lighting Company
Westchester Lighting Company	11/5/00	(2)	-		
Westchester Turnpike Road Company	No Papers		Purchase	9/6/62	The Rye & Port Chester Gas Light Co

CONSOLIDATED EDISON COMPANY OF NEW YORK, INC.
AND ITS AFFILIATED COMPANIES

	Date of Incorporation (d)	Law or Act under which Incorporated	Successor Company Through Mergers, Consolidations and Purchases		
			Merger, Consolidation, or Purchase	Date	Successor Company
hite Plains Electric Company	9/25/88(e)	(3)	Consolidation	4/19/00	Citizens Gas and Electric Company
ite Plains Gas Light Company	12/29/71	(1)	Consolidation	4/19/00	Citizens Gas and Electric Company
ite Plains Lighting Company	6/10/98(e)	(2)	Merger	12/1/02	Westchester Lighting Company
ditestone Gas Company	7/5/00(e)	(2)	Purchase of certain franchises	7/20/00	Newtown and Flushing Gas Company
e Williamsbridge Gas and Electric Light Company	5/16/95	(2)	Merger	6/14/02	Northern Union Gas Company
e Yonkers Electric Light and Power Company	10/22/86	(1)	Change of name from The Yonkers Schuyler Electric Light Co.	5/21/92	
nkers Fuel Gas Company	No Papers				
e Yonkers Gas Light Company	5/10/54(a)	(15)	Merger	12/1/08	Westchester Lighting Company
e Yonkers Schuyler Electric Light Company	10/22/86	(1)	Change of name	5/21/92	The Yonkers Electric Light & Power Co

-44

EPA-NC-CE-0000016

SALE OF UNITED STATES MINERAL WOOL COMPANY

The United States Mineral Wool Company, a New York Corporation, was organized on June 10, 1881. During the course of negotiations for the sale of the company, it was disclosed that the corporation, due to the statute under which it was organized, ceased to be a corporation on June 10, 1931; viz. at the end of fifty years from date of organization. To alleviate this situation, a New Jersey corporation was formed on or about April 8, 1937, to purchase the net assets of United States Mineral Wool Company, through issuance of stock of the New Jersey corporation. This was done by exchange of the capital stock of the New Jersey corporation for the outstanding stock of the United States Mineral Wool Company, held by the New York Steam Corporation, on April 13, 1937. According to the terms of the sale, the investment of the United States Mineral Wool Company in the Columbia Mineral Wool Company passed to the purchaser; when the sale was consummated on April 13, 1937.

Note: New Jersey corporation was also named - United States Mineral Wool Company.

Information from Mr. C. E. Kelly, Assistant Treasurer, New York Steam Corporation. April 29-1937.

EPA-NC-CE-0000017

(ALSO COLUMBIA MINERAL WOOL COMPANY)

SALE OF UNITED STATES MINERAL WOOL COMPANY

The United States Mineral Wool Company, a New York Corporation, was organized on June 10, 1831. During the course of negotiations for the sale of the company, it was disclosed that the corporation, due to the statute under which it was organized, ceased to be a corporation on June 10, 1931; viz. at the end of fifty years from date of organization. To alleviate this situation, a New Jersey corporation was formed on or about April 8, 1937, to purchase the net assets of United States Mineral Wool Company, through issuance of stock of the New Jersey corporation. This was done by exchange of the capital stock of the New Jersey corporation for the outstanding stock of the United States Mineral Wool Company, held by the New York Steam Corporation, on April 13, 1937. According to the terms of the sale, the investment of the United States Mineral Wool Company in the Columbia Mineral Wool Company passed to the purchaser; when the sale was consummated on April 13, 1937.

Note: New Jersey corporation was also named - United States Mineral Wool Company.

Information from Mr. C. E. Kelly, Assistant Treasurer, New York Steam Corporation. April 29-1937.

EPA-NC-CE-0000018

New York State Department of Environmental Conservation
Division of Environmental Permits, 4th Floor
625 Broadway, Albany, NY 12233-1750
Phone: (518) 402-9167 • **Fax:** (518) 402-9168
Website: www.dec.ny.gov

Joe Martens
Commissioner

OCT 2 8 2011

FACILITY INFORMATION

NAME: 11th Street Conduit
LOCATION: New York (C)
COUNTY: Kings
SPDES NO: NY 020 1138
DEC ID NO.: 2-9902-00018/00001

RECEIVED
OCT 31 2011
Randolph Price

Director of Environmental & Chemical Management
Consolidated Edison of NY Inc
4 Irving Pl, Rm 100
New York, NY 10003

Dear SPDES Permittee:

Enclosed please find a validated NOTICE/RENEWAL APPLICATION/PERMIT form renewing your State Pollutant Discharge Elimination System (SPDES) permit for the referenced facility. This validated form, together with the previously issued permit (see issuance date of this permit in Part 3 of the NOTICE/RENEWAL APPLICATION/PERMIT form), and any subsequent permit modifications constitute authorization to discharge wastewater in accordance with all terms, conditions and limitations specified therein.

The instructions and other information that you received with the NOTICE/RENEWAL APPLICATION/PERMIT package fully described procedures for renewal and modification of your SPDES permit under the Environmental Benefit Permit Strategy (EBPS). As a reminder, SPDES permits are renewed at a central location in Albany in order to make the process more efficient. All other concerns with your permit such as applications for permit modifications, permit transfers to a new owner, name changes, and other questions should be directed to the Regional Permit Administrator at the following address:

John Cryan
NYS DEC Region 2
47-40 21st Street
1 Hunters Point Plaza
Long Island City, NY 11101-5407
(718) 482-4997

If you have already filed an application for modification of your permit, it will be processed separately through our regional office. If you have questions concerning this permit renewal, please contact Lindy Sue Czubernat at (518) 402-9165.

Sincerely,

Lindy Sue Czubernat

Agency Program Aide

Enclosure

cc: RPA
RWE
BWP

I-20-5 (5/97)

NEW YORK STATE DEPARTMENT OF ENVIRONMENTAL CONSERVATION
State Pollutant Discharge Elimination System (SPDES)
NOTICE / RENEWAL APPLICATION / PERMIT

Please read **ALL** instructions on the back before completing this application form. Please **TYPE** or **PRINT** clearly in ink.

PART 1 - NOTICE 04/13/2011

Permittee Contact Name, Title, Address

CONSOLIDATED EDISON OF NY INC
DIR ENVR & CHEM MGMT
4 IRVING PL, RM 300
NEW YORK NY 10003

Facility and SPDES Permit Information

Name: 11TH STREET CONDUIT
Ind. Code: 4939 County: KINGS
DEC No.: 2-9902-00018/00001
SPDES No.: NY 020 1138
Expiration Date: 02/29/2012
Application Due By: 09/02/2011

Are these name(s) & address(es) correct? if not, please write corrections above.

The State Pollutant Discharge Elimination System Permit for the facility referenced above expires on the date indicated. You are required by law to file a complete renewal application **at least 180 days prior to expiration of your current permit. Note the "Application Due By" date above.**

CAUTION: This short application form and attached questionnaire are the only forms acceptable for permit renewal. Sign Part 2 below and mail only this form and the completed questionnaire using the enclosed envelope. *Effective April 1, 1994 the Department no longer assesses SPDES application fees.*

If there are changes to your discharge, or to operations affecting the discharge, then in addition to this renewal application, you must also submit a separate permit modification application to the Regional Permit Administrator for the DEC region in which the facility is located, as required by your current permit. See the reverse side of this page for instructions on filing a modification request.

PART 2 - RENEWAL APPLICATION

CERTIFICATION: I hereby affirm that under penalty of perjury that the information provided on this form and all attachments submitted herewith is true to the best of my knowledge and belief. False statements made herein are punishable as a Class A misdemeanor pursuant to section 210.45 of the Penal Law.

X Edward C. Foppiano — Vice President - Gas Engineering
Name of person signing application (see instructions on back) — **Title**

X Edward C. Foppiano — 8-15-2011
Signature — **Date**

PART 3 - PERMIT (Below this line - Official Use Only)

Effective Date: 3/1/12 **Expiration Date:** 2/28/17

Stuart Fox
Permit Administrator

Address: NYSDEC - Division of Environmental Permits
Bureau of Environmental Analysis
625 Broadway, Albany, NY 12233-1750

Stuart M. Fox — OCT 28 2011
Signature — **Date**

This permit together with the previous valid permit for this facility issued 3/1/07 and subsequent modifications constitute authorization to discharge wastewater in accordance with all terms, conditions and limitations specified in the previously issued valid permit, modifications thereof or issued as part of this permit, including any special or general conditions attached hereto. Nothing in this permit shall be deemed to waive the Department's authority to initiate a modification of this permit on the grounds specified in 6NYCRR §621.14, 6NYCRR §754.4 or 6NYCRR §757.1 existing at the time this permit is issued or which arise thereafter.

~~Attachments: General Conditions dated~~

11 AUG 18 AM 11:51
RECEIVED NYSDEC ENVIRONMENTAL PERMITS

RECEIVED
OCT 31 2011

EPA-NC-CE-0000079

91-20-5a (5/97)

NEW YORK STATE DEPARTMENT OF ENVIRONMENTAL CONSERVATION

Please enter the numbers from your current permit: DEC Number: 2-9902-00018/0000-1

SPDES Number: NY 020 1138

SPDES RENEWAL APPLICATION QUESTIONNAIRE

THIS PAGE MUST BE COMPLETED AND RETURNED WITH YOUR COMPLETED APPLICATION

Please **TYPE** or **PRINT** neatly using adequate pressure to make ALL copies legible. Keep a copy for your records:

1. Has the SPDES permit for your facility been modified in the past 5 years ☐ YES ☒ NO

2. Dischargers who use, manufacture, store, handle or discharge toxic or hazardous pollutants are subject to Industrial Best Management Practices (BMP) plan requirements for toxic or hazardous substances. A BMP plan prevents or minimizes the potential for release of pollutants to receiving waters from such ancillary industrial activities, including material storage areas; plant site runoff; in-plant transfer; process and material storage areas; loading and unloading operations, and sludge and waste disposal areas.

   Does your facility conduct ancillary activities as described above, which are not covered by BMP requirements in your current permit? ☐ YES ☒ NO

Please indicate which of the following best describes the situation at your facility:

☒ None of the concerns on the "Self Evaluation List" seem to apply to my facility at this time and I will not be applying for a modification of the SPDES permit in the foreseeable future.

☐ Yes, some of the items on the "Self Evaluation List" have led me to believe that the permit for this facility needs to be modified. I already have a complete modification application pending with the Department.

☐ Yes, some of the items on the "Self Evaluation List" have led me to believe that the SPDES permit for this facility may need to be Modified. I have requested the appropriate forms by phone OR I have completed and attached the "Request For SPDES Application Forms" (included in this renewal package) to allow me to submit a permittee-initiated Modification application. See The "Request For SPDES Application Forms" page for a toll free 800 number.

☐ The items on the "Self Evaluation List" have left me unable to conclude whether my permit needs to be modified at this time. I am reporting the following general concerns about my permit:

_____

_____

_____

_____

_____

_____

_____

_____

_____

_____

_____

_____

_____

_____

_____

DISTRIBUTION: Regional Water Engineer
Regional Permit Administrator
Central Office (BWP)

Con Edison
Consolidated Edison Company of New York, Inc.
4 Irving Place, New York, N.Y. 10003

March 28, 1994

Mr. John Ferguson
Regional Permit Administrator
Region 2
New York State Department
of Environmental Conservation
47-40 21st Street
Long Island City, New York 11101

Re: New SPDES Permit Application
11th Street Conduit

Dear Mr. Ferguson:

Enclosed are one original and four copies of a SPDES permit application for a discharge from Con Edison's 11th Street Conduit, a tunnel under Newtown Creek that allows electrical distribution cables to pass through. The application is for the discharge of groundwater infiltrated into and collected inside the tunnel. Also enclosed is a check in the amount of $200 to cover the application fee.

If you have any questions concerning the application, please contact me at (212) 460-4833 or Eddy Louie at (212) 460-2882.

Very truly yours,

Robert T. Keegan, Ph.D.
Director
Water and Waste Management
Environmental Affairs

Enc.

cc: Brian Mitchell, DEC (w/o)

(Fill-in areas are spaced for elite type, i.e., 12 characters/inch).

Form Approved. OMB No. 2040-0086 Approval expires 7-31-88

FORM 1 GENERAL

EPA

U.S. ENVIRONMENTAL PROTECTION AGENCY

GENERAL INFORMATION

Consolidated Permits Program

(Read the "General Instructions" before starting.)

I. EPA I.D. NUMBER: F

LABEL ITEMS

I. EPA I.D. NUMBER

III. FACILITY NAME

V. FACILITY MAILING ADDRESS

VI. FACILITY LOCATION

PLEASE PLACE LABEL IN THIS SPACE

GENERAL INSTRUCTIONS

If a preprinted label has been provided, affix it in the designated space. Review the information carefully; if any of it is incorrect, cross through it and enter the correct data in the appropriate fill-in area below. Also, if any of the preprinted data is absent *(the area to the left of the label space lists the information that should appear)*, please provide it in the proper fill-in area(s) below. If the label is complete and correct, you need not complete Items I, III, V, and VI *(except VI-B which must be completed regardless)*. Complete all items if no label has been provided. Refer to the instructions for detailed item descriptions and for the legal authorizations under which this data is collected.

II. POLLUTANT CHARACTERISTICS

INSTRUCTIONS: Complete A through J to determine whether you need to submit any permit application forms to the EPA. If you answer "yes" to any questions, you must submit this form and the supplemental form listed in the parenthesis following the question. Mark "X" in the box in the third column if the supplemental form is attached. If you answer "no" to each question, you need not submit any of these forms. You may answer "no" if your activity is excluded from permit requirements; see Section C of the instructions. See also, Section D of the instructions for definitions of bold-faced terms.

SPECIFIC QUESTIONS	MARK 'X' YES	NO	FORM ATTACHED	SPECIFIC QUESTIONS	MARK 'X' YES	NO	FORM ATTACHED
A. Is this facility a **publicly owned treatment works** which results in a discharge to **waters of the U.S.**? (FORM 2A)		X		B. Does or will this facility *(either existing or proposed)* include a **concentrated animal feeding operation** or **aquatic animal production facility** which results in a **discharge** to **waters of the U.S.**? (FORM 2B)		X	
C. Is this a facility which currently results in **discharges** to **waters of the U.S.** other than those described in A or B above? (FORM 2C)	X		See Att. 1	D. Is this a proposed facility *(other than those described in A or B above)* which will result in a **discharge** to **waters of the U.S.**? (FORM 2D)	X		X
E. Does or will this facility treat, store, or dispose of hazardous wastes? (FORM 3)		X		F. Do you or will you inject at this facility industrial or municipal effluent below the lowermost stratum containing, within one quarter mile of the well bore, underground sources of drinking water? (FORM 4)		X	
G. Do you or will you inject at this facility any produced water or other fluids which are brought to the surface in connection with conventional oil or natural gas production, inject fluids used for enhanced recovery of oil or natural gas, or inject fluids for storage of liquid hydrocarbons? (FORM 4)		X		H. Do you or will you inject at this facility fluids for special processes such as mining of sulfur by the Frasch process, solution mining of minerals, in situ combustion of fossil fuel, or recovery of geothermal energy? (FORM 4)		X	
I. Is this facility a proposed **stationary source** which is one of the 28 industrial categories listed in the instructions and which will potentially emit 100 tons per year of any air pollutant regulated under the Clean Air Act and may affect or be located in an attainment area? (FORM 5)		X		J. Is this facility a proposed **stationary source** which is NOT one of the 28 industrial categories listed in the instructions and which will potentially emit 250 tons per year of any air pollutant regulated under the Clean Air Act and may affect or be located in an **attainment area**? (FORM 5)		X	

III. NAME OF FACILITY

1 SKIP: 11th STREET CONDUIT

IV. FACILITY CONTACT

A. NAME & TITLE *(last, first, & title)*	B. PHONE *(area code & no.)*
2 KEEGAN, ROBERT T., DIRECTOR	212 460 4833

V. FACILITY MAILING ADDRESS

A. STREET OR P.O. BOX

3 4 IRVING PLACE, ROOM 300

B. CITY OR TOWN	C. STATE	D. ZIP CODE
4 NEW YORK	NY	10003

VI. FACILITY LOCATION

A. STREET, ROUTE NO. OR OTHER SPECIFIC IDENTIFIER

5 OAKLAND ST. & WATER ST.

B. COUNTY NAME

KINGS

C. CITY OR TOWN	D. STATE	E. ZIP CODE	F. COUNTY CODE *(if known)*
6 BROOKLYN	NY	11222	

CONTINUE ON REVERSE

EPA-NC-CE-0000082

CONTINUED FROM THE FRONT

VII. SIC CODES (4-digit, in order of priority)

A. FIRST	B. SECOND
4931 (specify) ELECTRIC & OTHER SERVICES	(specify)

C. THIRD	D. FOURTH
(specify)	(specify)

VIII. OPERATOR INFORMATION

A. NAME: CONSOLIDATED EDISON CO. OF NY, INC.

B. Is the name listed in Item VIII-A also the owner? [X] YES [ ] NO

C. STATUS OF OPERATOR (Enter the appropriate letter into the answer box; if "Other", specify.)
F = FEDERAL; S = STATE; P = PRIVATE; M = PUBLIC (other than federal or state); O = OTHER (specify)
P (specify)

D. PHONE (area code & no.): A 212 460 4833

E. STREET OR P.O. BOX: 4 IRVING PLACE, ROOM 300

F. CITY OR TOWN: NEW YORK

G. STATE: NY

H. ZIP CODE: 10003

IX. INDIAN LAND

Is the facility located on Indian lands? [ ] YES [X] NO

X. EXISTING ENVIRONMENTAL PERMITS

A. NPDES (Discharges to Surface Water)	D. PSD (Air Emissions from Proposed Sources)
9 N	9 P
B. UIC (Underground Injection of Fluids)	E. OTHER (specify)
9 U	9 (specify)
C. RCRA (Hazardous Wastes)	E. OTHER (specify)
9 R	9 (specify)

XI. MAP

Attach to this application a topographic map of the area extending to at least one mile beyond property bounderies. The map must show the outline of the facility, the location of each of its existing and proposed intake and discharge structures, each of its hazardous waste treatment, storage, or disposal facilities, and each well where it injects fluids underground. Include all springs, rivers and other surface water bodies in the map area. See instructions for precise requirements. SEE FIGURES 1, 2

XII. NATURE OF BUSINESS (provide a brief description)

The 11th Street Conduit provides an artificial closed conduit under Newtown Creek where Con Edison's electrical distribution cable for Brooklyn and Queens pass through. The tunnel extends from Oakland and Water Streets in Brooklyn to 11th Street and 47th Road in Queens. The only discharge is located at the tunnel headhouse in Brooklyn at Oakland and Water Streets.

XIII. CERTIFICATION (see instructions)

I certify under penalty of law that I have personally examined and am familiar with the information submitted in this application and all attachments and that, based on my inquiry of those persons immediately responsible for obtaining the information contained in the application, I believe that the information is true, accurate and complete. I am aware that there are significant penalties for submitting false information, including the possibility of fine and imprisonment.

A. NAME & OFFICIAL TITLE (type or print)	B. SIGNATURE	C. DATE SIGNED
RAYMOND R. KIMMEL, Jr., Asst. V.P. ENVIRONMENTAL AFFAIRS	See Attachment #2 for revised Certification and Signature	

COMMENTS FOR OFFICIAL USE ONLY

EPA-NC-CE-0000083

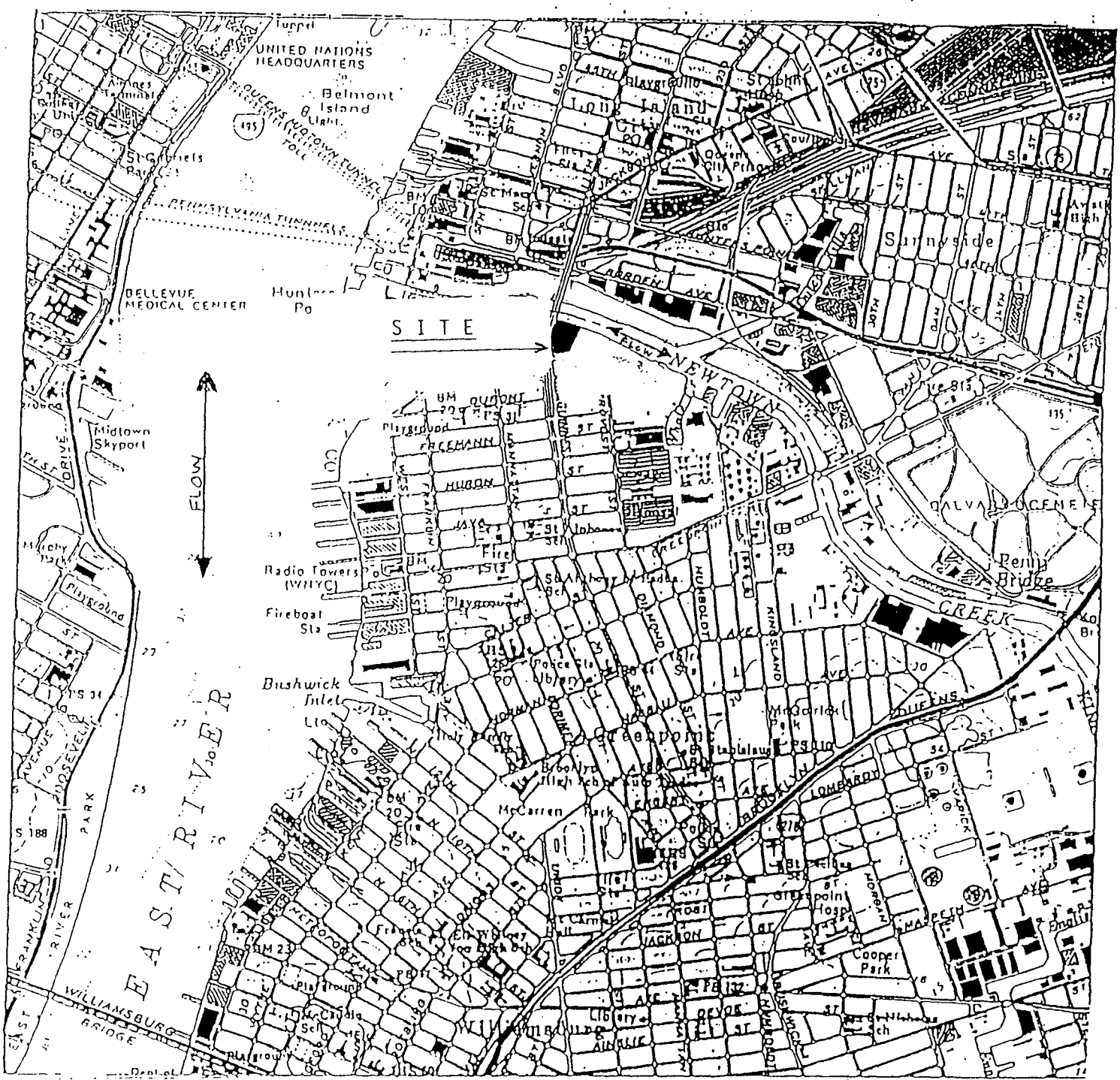

SCALE 1:24000

1 0 1 MILE

1000 0 1000 2000 3000 4000 5000 6000 7000 FEET

1 .5 0 1 KILOMETER

CONTOUR INTERVAL 10 FEET

NATIONAL GEODETIC VERTICAL DATUM OF 1929

DEPTH CURVES AND SOUNDINGS IN FEET—DATUM IS MEAN LOW WATER

THE RELATIONSHIP BETWEEN THE TWO DATUMS IS VARIABLE

SHORELINE SHOWN REPRESENTS THE APPROXIMATE LINE OF MEAN HIGH WATER

THE MEAN RANGE OF TIDE IS APPROXIMATELY 4.2 FEET IN THE EAST RIVER AND 5.2 FEET IN JAMAICA BAY

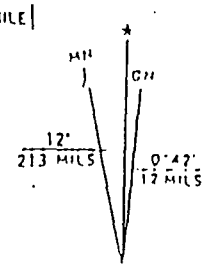

UTM GRID AND 1979 MAGNETIC NORTH DECLINATION AT CENTER OF SHEET

BROOKLYN, N. Y.

N4037.5—W7352.5/7.5

1967
PHOTOREVISED 1979

CON EDISON
11th STREET CONDUIT
EPA FORM 1 XI. MAP
Figure 1

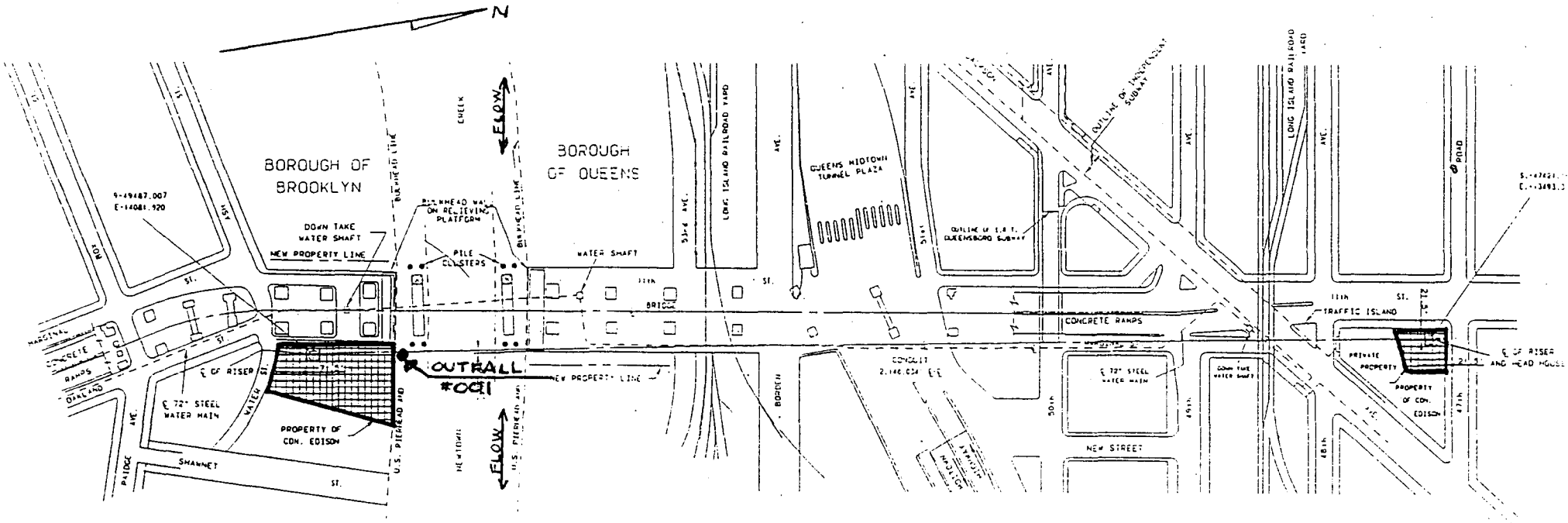

CON EDISON

11th STREET CONDUIT

SITE PLOT PLAN

EPA FORM 1 XI. MAP

Figure 2

EPA-NC-CE-000085

ATTACHMENT #1

CON EDISON
11th STREET CONDUIT
EPA FORM 1
GENERAL INFORMATION

II. C. POLLUTANT CHARACTERISTICS: Is this a facility which currently results in a discharge to waters of the U. S. other than those described in A or B above?

This permit application is for the discharge of groundwater and rainwater which currently enters Newtown Creek via sump pump discharge piping. Since there are oil-filled cables in the Conduit, an oil water separator will be installed to remove any oil that may be present in the sump prior to discharge.

ATTACHMENT #2

CON EDISON
11th STREET CONDUIT
EPA FORM 1
GENERAL INFORMATION

XIII. Certification*

I certify under penalty of law that this document and all attachments were prepared under my direction or supervision in accordance with a system designed to assure that qualified personnel properly gather and evaluate the information submitted. Based on my inquiry of the person or persons who manage the system or those persons directly responsible for gathering the information, the information is, to the best of my knowledge and belief, true, accurate, and complete. I am aware that there are significant penalties for submitting false information, including the possibility of fine and imprisonment for knowing violations.

Signature: _____ Date: 3/25/04

Raymond R. Kimmel, Jr.
Assistant Vice President
Environmental Affairs

* The certification statement of EPA Form 1, dated October 1980, is herein revised in accordance with revised regulations (40 CFR 122.22(d)) published by EPA on September 1, 1983 (Federal Register, Volume 48, Number 171, page 36919)

Please type or print in the unshaded areas only

EPA ID Number *(copy from Item 1 of Form 1)*

Form Approved
OMB No. 2040-0086
Approval expires 7-31-88

Form 2D NPDES

EPA New Sources and New Dischargers Application for Permit to Discharge Process Wastewater

I. Outfall Location

For each outfall, list the latitude and longitude, and the name of the receiving water.

Outfall Number *(list)*	Latitude			Longitude			Receiving Water *(name)*
	Deg	Min	Sec	Deg	Min	Sec	
001	40	44	28	73	57	08	NEWTOWN CREEK

II. Discharge Date *(When do you expect to begin discharging?)* This is an on-going discharge. Installation of an oil water separator is expected to be completed by June 30, 1995.

III. Flows, Sources of Pollution, and Treatment Technologies

A. For each outfall, provide a description of (1) All operations contributing wastewater to the effluent, including process wastewater, sanitary wastewater, cooling water, and stormwater runoff; (2) The average flow contributed by each operation; and (3) The treatment received by the wastewater. Continue on additional sheets if necessary.

Outfall Number	1. Operations Contributing Flow *(list)*	2. Average Flow *(include units)*	3. Treatment *(Description or List Codes from Table 2D-1)*
001	SEEPAGE (or INFILTRATION) OF	85,000 GPD **	AT PRESENT: 4-A
	GROUNDWATER THROUGH THE		IN FUTURE: OIL WATER SEPARATOR
	CONDUIT WALLS and INFILTRATION		
	OF RAINWATER THROUGH THE RISER		
	SHAFTS LOCATED AT OAKLAND/		
	WATER STREETS AND AT 11th ST/		
	47th ROAD.		
** Estimated flow based on approximate		pumping rate of 230 gpm for approximately	
15 minutes per hour.			

EPA-NC-CE-0000088

B. Attach a line drawing showing the water flow through the facility. Indicate sources of intake water, operations contributing wastewater to the effluent, and treatment units labeled to correspond to the more detailed descriptions in Item III-A. Construct a water balance on the line drawing by showing average flows between intakes, operations, treatment units, and outfalls. If a water balance cannot be determined (e.g., for certain mining activities), provide a pictorial description of the nature and amount of any sources of water and any collection or treatment measures. SEE FIGURE #3.

C. Except for storm runoff, leaks, or spills, will any of the discharges described in item III-A be intermittent or seasonal?

☐ Yes *(complete the following table)* ☒ No *(go to item IV)*

Outfall Number	1. Frequency		2. Flow		
	a. Days Per Week *(specify average)*	b. Months Per Year *(specify average)*	a. Maximum Daily Flow Rate *(in mgd)*	b. Maximum Total Volume *(specify with units)*	c. Duration *(in days)*

IV. Production

If there is an applicable production-based effluent guideline or NSPS, for each outfall list the estimated level of production (projection of actual production level, not design), expressed in the terms and units used in the applicable effluent guideline or NSPS, for each of the first 3 years of operation. If production is likely to vary, you may also submit alternative estimates (attach a separate sheet).

Year	a. Quantity Per Day	b. Units of Measure	c. Operation, Product, Material, etc *(specify)*
			"NA"

EPA-NC-CE-0000089

CONTINUED FROM THE FRONT	EPA ID Number *(copy from Item 1 of Form 1)*	Outfall Number 001

V. Effluent Characteristics

A, and B: These items require you to report estimated amounts *(both concentration and mass)* of the pollutants to be discharged from each of your outfalls. Each part of this item addresses a different set of pollutants and should be completed in accordance with the specific instructions for that part. Data for each outfall should be on a separate page. Attach additional sheets of paper if necessary.

General Instructions *(See table 2D-2 for Pollutants)*

Each part of this item requests you to provide an estimated daily maximum and average for certain pollutants and the source of information. Data for all pollutants in Group A, for all outfalls, must be submitted unless waived by the permitting authority. For all outfalls, data for pollutants in Group B should be reported only for pollutants which you believe will be present or are limited directly by an effluent limitations guideline or NSPS or indirectly through limitations on an indicator pollutant.

1. Pollutant	2. Maximum Daily Value *(include units)*	3. Average Daily Value *(include units)*	4. Source *(see instructions)*
Group A:			(1)(2)
Total Organic Carbon	5.0 ppm		
Total Suspended Solids (3)	25.0 ppm	19.0 ppm	
BOD	3.6 ppm		
COD	120.0 ppm		
Ammonia	4.0 ppm		
pH (units)	7.1		
Group B:			(2)(3)
PCB's (All Aroclors)	<0.3 ppb	<0.3 ppb	
Oil & Grease	8.4 ppm	4.4 ppm	
Benzene (4)	<1.0 ppb	<1.0 ppb	
Toluene	<1.0 ppb	<1.0 ppb	
Ethylbenzene	<1.1 ppb	<1.1 ppb	
Xylenes	<1.3 ppb	<1.3 ppb	

Footnotes: (1) Except otherwise noted, data are based on analytical results of discharge sample collected at the facility on 1/21/94.

(2) Since there is no treatment system at the facility at this time, these concentrations represent the expected influent characteristics to the planned oil water separator.

EPA-NC-CE-0000090

CONTINUED FROM THE FRONT	EPA ID Number *(copy from Item 1 of Form 1)*	

C. Use the space below to list any of the pollutants listed in Table 2D-3 of the instructions which you know or have reason to believe will be discharged from any outfall. For every pollutant you list, briefly describe the reasons you believe it will be present.

1. Pollutant	2. Reason for Discharge
None	

VI. Engineering Report on Wastewater Treatment

A. If there is any technical evaluation concerning your wastewater treatment, including engineering reports or pilot plant studies, check the appropriate box below.

☐ Report Available ☒ No Report

B. Provide the name and location of any existing plant(s) which, to the best of your knowledge, resembles this production facility with respect to production processes, wastewater constituents, or wastewater treatments.

Name	Location
Hudson Avenue Tunnel Headhouse	Hudson Avenue Generating Station
Ravenswood Tunnel Headhouse	Ravenswood Generating Station

Note: The above utility tunnels include No. 6 fuel oil pipelines in addition to electric distribution cables. The 11th Street Conduit contains only electric distribution cables.

EPA-NC-CE-0000091

CONTINUED FROM THE FRONT	EPA ID Number *(copy from Item 1 of Form 1)*	Outfall Number

V. Effluent Characteristics

A, and B: These items require you to report estimated amounts *(both concentration and mass)* of the pollutants to be discharged from each of your outfalls. Each part of this item addresses a different set of pollutants and should be completed in accordance with the specific instructions for that part. Data for each outfall should be on a separate page. Attach additional sheets of paper if necessary.

General Instructions *(See table 2D-2 for Pollutants)*

Each part of this item requests you to provide an estimated daily maximum and average for certain pollutants and the source of information. Data for all pollutants in Group A, for all outfalls, must be submitted unless waived by the permitting authority. For all outfalls, data for pollutants in Group B should be reported only for pollutants which you believe will be present or are limited directly by an effluent limitations guideline or NSPS or indirectly through limitations on an indicator pollutant.

1. Pollutant	2. Maximum Daily Value *(include units)*	3. Average Daily Value *(include units)*	4. Source *(see instructions)*
Footnotes (continued):			
(3) Data are based on analytical results of periodic sampling conducted between 12/93 and 2/94. Samples were collected to determine the possible presence and concentration of these pollutants. All but TSS and Oil & Grease were found to be below detection limits. Pollutants in Group B other than those analyzed for are believed to be absent.			
(4) Various concentrations of benzene have been measured in some dielectric fluids used to cool electric transmission and distribution cables. Laboratory analyses of water samples from the 11th Street Conduit, however, measured benzene to be below the detection limit.			

EPA-NC-CE-0000092

EPA ID Number *(copy from item one of Form 1)*

VII. Other Information *(Optional)*

Use the space below to expand upon any of the above questions or to bring to the attention of the reviewer any other information you feel should be considered in establishing permit limitations for the proposed facility. Attach additional sheets if necessary.

VIII. Certification

I certify under penalty of law that this document and all attachments were prepared under my direction or supervision in accordance with a system designed to assure that qualified personnel properly gather and evaluate the information submitted. Based on my inquiry of the person or persons who manage the system, or those persons directly responsible for gathering the information, the information submitted is, to the best of my knowledge and belief, true, accurate, and complete. I am aware that there are significant penalties for submitting false information, including the possibility of fine and imprisonment for knowing violations.

A. Name and Official Title *(type or print)*	B. Phone No.
RAYMOND R. KIMMEL, JR. ASST. VICE PRESIDENT ENVIRONMENTAL AFFAIRS	(212) 460-2211
C. Signature	D. Date Signed 3/25/94

☆U.S. Government Printing Office : 1986 - 491-191/52940

CON EDISON

11th STREET CONDUIT

FLOW DIAGRAM

EPA FORM 2D.III.B.

Figure #3

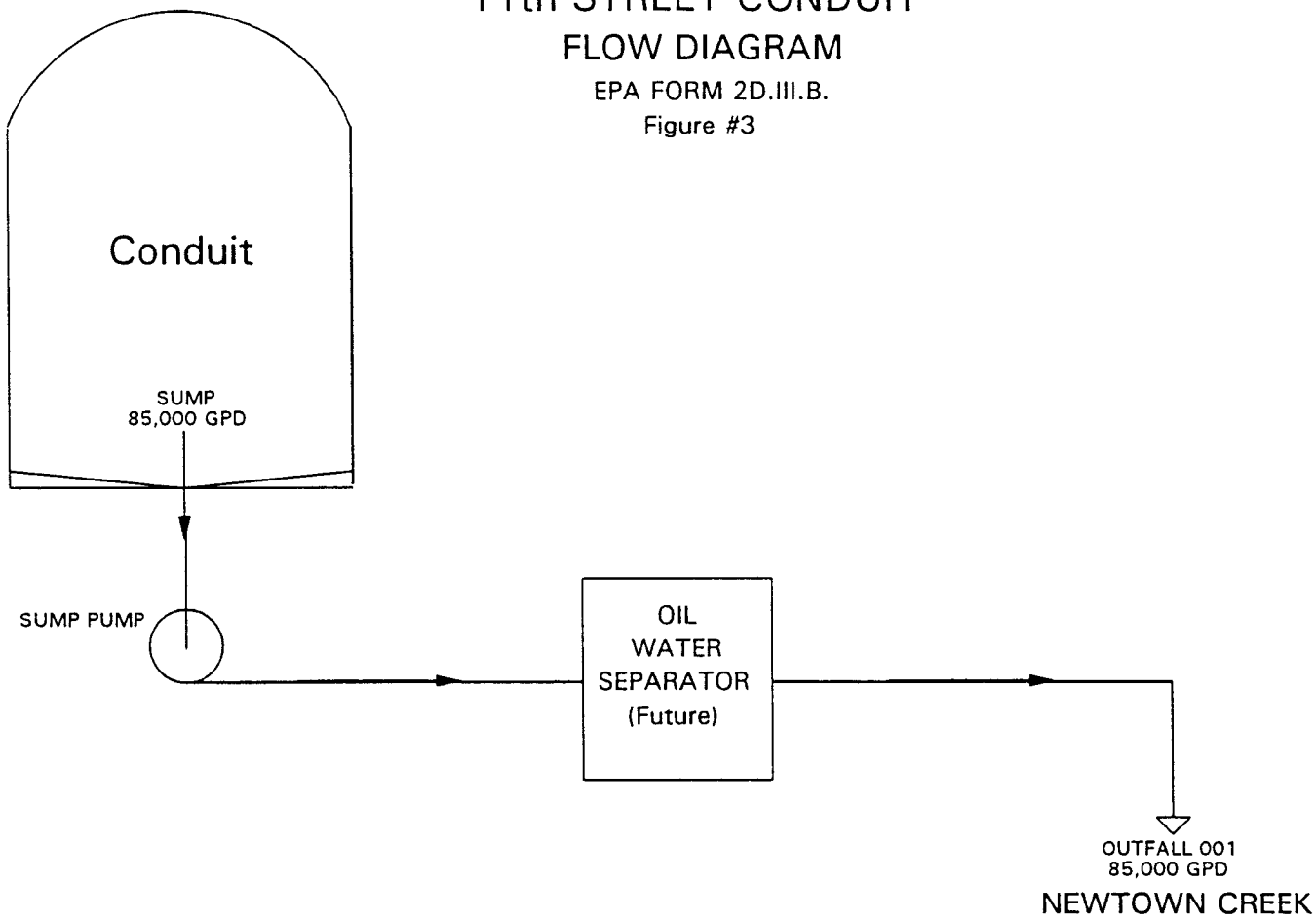

NOTE: Wastewater Source from seepage of groundwater through the conduit walls and infiltration of rainwater through the riser air shafts.

EPA-NC-CE-0000094

NYSDEC SUPPLEMENTAL INSTRUCTIONS - ATTACHMENT

Your SPDES permit, when issued, may require you to periodically submit a Discharge Monitoring Report (DMR). The reports must be signed as follows:

1. for a corporation: by a responsible corporate officer. For the purposes of this section, a responsible corporate officer means:

(i) a president, secretary, treasurer, or a vice president of the corporation in charge of a principal business function, or any other person who performs similar policy or decision-making function for the corporation, or

(ii) the manager of one or more manufacturing, production, or operating facilities employing more than 250 persons or having annual sales or expenditures exceeding $25 million (in second quarter 1980 dollars), if authority to sign documents has been assigned or delegated to the manager in accordance with corporate procedures; or

2. for a partnership or sole proprietorship: by a general partner or the proprietor, respectively; or

3. for a municipality, state, federal, or other public agency: by either a principal or executive officer or ranking elected official. A principal executive officer of a federal agency includes: (i) the chief executive officer of the agency, or (ii) a senior executive officer having responsibility for the overall operations of a principal geographic unit of the agency; or

4. a duly authorized representative of the person described in items (1), (2) or (3). A person is a duly authorized representative only if:

(i) the authorization is made in writing by a person described in paragraph (1), (2) or (3);

(ii) the authorization specifies either an individual or a position having responsibility for the overall operation of the regulated facility or activity such as the position of plant manager, operator of a well or well field, superintendent, position of equivalent responsibility, or an individual or position having overall responsibility for environmental matters for the company. (A duly authorized representative may thus be either a named individual or any individual occupying a named position).

(iii) the written authorization is submitted to the Department.

Changes to authorization: If an authorization under paragraph (4) is no longer accurate because a different individual or position has responsibility for the overall operation of the facility, a new authorization satisfying the requirements of paragraph (4) must be submitted to the Department prior to or together with any reports to be signed by an authorized representative.

THE TABLE BELOW MUST BE COMPLETED AND FILED WITH YOUR APPLICATION. The person identified on the first line will be listed in Part I of the issued permit under the DMR MAILING ADDRESS section and must be a person described in paragraph (1), (2), (3) or (4). The table may be used to designate an authorized representative as described in paragraph (4).

THE APPLICANT MUST NOTIFY THE DEPARTMENT OF ANY CHANGE IN THIS INFORMATION DURING THE LIFE OF THE PERMIT.

Name and/or Title of person responsible for signing and submitting DMR's:			Phone:
Manager, Tunnel Maintenance			(718) 579-1202
Mailing Name: Robert T. Keegan, Director, Water and Waste Management			
Mailing Address: 4 Irving Place, Room 300	City: New York	State: NY	Zip Code: 10003
Name of person described in paragraph (1), (2) or (3): Raymond R. Kimmel, Jr.	Title: Assistant Vice President Environmental Affairs		
Signature of person described in paragraph (1), (2), or (3):			Date: 3/25/94

Failure to submit this completed page with your application will result in your application being declared incomplete. This will delay issuance of your permit and authorization to discharge.

(Rev. 4/90)

Discharge Monitoring Reports

All correspondence related to this SPDES permit should be sent to Robert T. Keegan, Director, Water and Waste Management, as indicated in Item IV of EPA Form 1. Although the General Manager of Gas Operations is responsible for signing the DMR's, all monthly DMR forms should be sent to Robert T. Keegan, the designated facility contact.

PK

New York State Department of Environmental Conservation
Division of Regulatory Services - Room 538
50 Wolf Road, Albany, New York 12233-1750
Telephone: (518) 457-2224
Fax: (518) 457-5965

Michael D. Zagata
Commissioner

January 9, 1997

Mr. Harry Coates
Consolidated Edison Company
of New York, Inc.
4 Irving Plaza, Room 300
New York, NY 10003

1/1/2

Re: DEC No. 2-9902-00181/00001-1
SPDES No. NY 020 1138
Facility: 11th Street Conduit

Dear Mr. Coates:

Enclosed are the modified pages for the subject State Pollution Discharge Elimination System (SPDES) application. Please read it carefully. Should you have any questions, please call me at (518) 457-8817.

Please note that the TSS Limit was not changed because the BCT for solids is 50 mg/l as listed in the draft permit. Other Con Ed facilities have TSS as 30 mg/l avg and 100 mg/l max because the limit is specified in the federal standards (40 CFR 423) at those numbers for Steam Electric Power Generating Stations (4911). This facility is not regulated by that section of the law.

Sincerely,

Timothy R. Cooke
Environmental Analyst 2

TRC/pm
Enclosure
cc: Interstate Sanitation Commission
U. S. Environmental Protection Agency
P. Kolakowski, NYSDEC
R. Newman, NYSDEC Region 2
C:\Cooke\11street.2TC/P

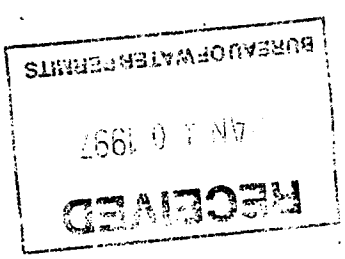

91-20-2 (1/89)

NEW YORK STATE DEPARTMENT OF ENVIRONMENTAL CONSERVATION

State Pollutant Discharge Elimination System (SPDES)

DISCHARGE PERMIT

Special Conditions (Part I)

Industrial Code: ~~4939~~ 4939
Discharge Class (CL): 01
Toxic Class (TX): N
Major Drainage Basin: 17
Sub Drainage Basin: 02
Water Index Number: ~~ER-54~~ LI 4
Compact Area: IJC

SPDES Number: NY-0201138
DEC Number: 2-9902-00018/00001-0
Effective Date (EDP): 3/1/97
Expiration Date (ExDP): 3/1/02
Modification Date(s):
Attachment(s): General Conditions (Part II) Date: /

This SPDES permit is issued in compliance with Title 8 of Article 17 of the Environmental Conservation Law of New York State and in compliance with the Clean Water Act as amended, (33 U.S.C. Section 1251 et. seq.)(hereafter referred to as "the Act").

PERMITTEE NAME AND ADDRESS Attention: Harry Coates

Name: Consolidated Edison of New York, Inc.
Street: 4 Irving Place, Room 300
City: New York State: NY Zip Code: 10003
is authorized to discharge from the facility described below:

FACILITY NAME AND ADDRESS

Name: 11th Street Conduit
Location (C,T,V): Brooklyn County: Kings
Facility Address: Oakland and Water Streets
City: Brooklyn State: NY Zip Code: 11222
NYTM - E: . NYTM - N: 4 .
From Outfall No.: 001 at Latitude: 40° 44′ 28" & Longitude: 73° 57′ 08"
into receiving waters known as: Newtown Creek Class: SD
and; (list other Outfalls, Receiving Waters & Water Classifications)

in accordance with the effluent limitations, monitoring requirements and other conditions set forth in Special Conditions (Part I) and General Conditions (Part II) of this permit.

DISCHARGE MONITORING REPORT (DMR) MAILING ADDRESS

Mailing Name: Consolidated Edison Company of New York, Inc.
Street: 4 Irving Place
City: New York State: NY Zip Code: 10003
Responsible Official or Agent: Yi-Chang Shao Phone: (718)204-4151

This permit and the authorization to discharge shall expire on midnight of the expiration date shown and the permittee shall not discharge after the expiration date unless this permit has been renewed, or extended pursuant to law. To be authorized to discharge beyond the expiration date, the permittee shall apply for a permit renewal no less than 180 days prior to the expiration date shown above.

DISTRIBUTION:

Permit Administrator: William R. Adriance	
Address: 50 Wolf Road, Albany, N.Y. 12233	
Signature: William R. Adriance	Date: 1/9/97

EFFLUENT LIMITATIONS AND MONITORING REQUIREMENTS

During the period beginning EDP 3/1/97

and lasting until EDP + 5 YEARS 3/1/02

the discharges from the permitted facility shall be limited and monitored by the permittee as specified below:

Outfall Number & Effluent Parameter	Discharge Limitations Daily Avg.	Daily Max.	Units	Minimum Monitoring Requirements Measurement Frequency	Sample Type
001 - Groundwater Infiltration and Stormwater					
Flow	NA	Monitor	GPD	Monthly	Calculated
Total Suspended Solids	NA	50	mg/l	Monthly	Grab
Oil & Grease	NA	15	mg/l	Monthly	Grab

ACTION LEVEL REQUIREMENTS (TYPE I)

The parameters listed below have been reported present in the discharge but at levels that currently do not require technology or water quality based limits. Action levels have been established which, if routinely or excessively exceeded, will result in reconsideration and/or development of technology or water quality based limits.

Routine action level monitoring results, if not provided for on the Discharge Monitoring Report (DMR) form, shall be appended to the DMR for the period during which the sampling was conducted. If submission of DMR's is not required by this permit, the results shall be maintained in accordance with instructions on the RECORDING, REPORTING AND MONITORING page of this permit.

If any of the action levels is exceeded, the permittee shall undertake a short-term, high-intensity monitoring program for the parameter(s). Samples identical to those required for routine monitoring purposes shall be taken on each of at least three consecutive operating and discharge days and analyzed. Results shall be expressed in terms of both concentration and mass, and shall be submitted no later than the end of the second month following the month when the action level was first exceeded. Results may be appended to the DMR or transmitted under separate cover to the addresses listed on the RECORDING, REPORTING AND MONITORING page of this permit. If levels higher than the actions levels are confirmed the results shall constitute an application for permit modification and the permit may be reopened for consideration of revised action levels or effluent limits.

The permittee is not authorized to discharge any of listed parameters at levels which may cause or contribute to a violation of water quality standards.

Outfall Number & Effluent Parameter	Action Level	Units	Minimum Monitoring Requirements: Measurement Frequency	Sample Type
001 - Groundwater Infiltration and Storm Water				
Benzene	0.10	mg/l	Annual	Grab
Toluene	0.10	mg/l	Annual	Grab
Xylenes	0.10	mg/l	Annual	Grab
Ethylbenzene	0.10	mg/l	Annual	Grab

Limits apply for direct discharge to Newtown Creek.

Additional Requirements:

1. There shall be no discharge of polychlorinated biphenyl compounds.

DEFINITIONS OF DAILY AVERAGE AND DAILY MAXIMUM

The daily average discharge is the total discharge by weight or in other appropriate units as specified herein, during a calendar month divided by the number of days in the month that the production or commercial facility was operating. Where less than daily sampling is required by this permit, the daily average discharge shall be determined by the summation of all the measured daily discharges in appropriate units as specified herein divided by the number of days during the calendar month when measurements were made.

The daily maximum discharge means the total discharge by weight or in other appropriate units as specified herein, during any calendar day.

MONITORING LOCATIONS

The permittee shall take samples and measurements, to comply with the monitoring requirements specified in this permit, at the location(s) indicated below: (Show sampling locations and outfalls with sketch or flow diagram as appropriate)

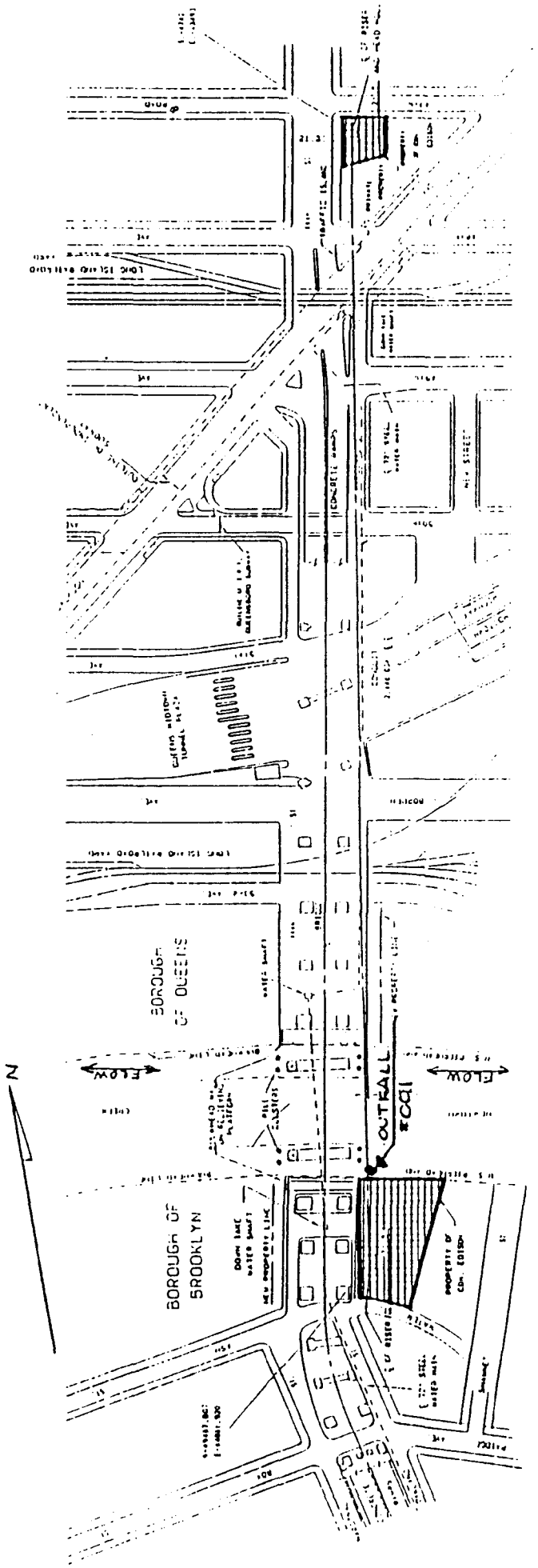

CON EDISON
11th STREET CONDUIT
SITE PLOT PLAN
EPA FORM 1 XI. MAP

Figure 2

SPECIAL CONDITIONS - BEST MANAGEMENT PRACTICES

1. The permittee shall develop and implement a Best Management Practices (BMP) plan, within one year of EDP to prevent, or minimize the potential for, release of significant amounts of toxic or hazardous pollutants to the waters of the State through plant site runoff; spillage and leaks; sludge or waste disposal; and storm water discharges including, but not limited to, drainage from raw material storage. Completed BMP plans shall be submitted to the Regional Water Engineer within six months of EDP.

2. The permittee shall review all facility components or systems (including material storage areas; in-plant transfer, process and material handling areas; loading and unloading operations; storm water, erosion, and sediment control measures; process emergency control systems; and sludge and waste disposal areas) where toxic or hazardous pollutants are used, manufactured, stored or handled to evaluate the potential for the release of significant amounts of such pollutants to the waters of the State. In performing such an evaluation, the permittee shall consider such factors as the probability of equipment failure or improper operation, cross-contamination of storm water by process materials, settlement of facility air emissions, the effects of natural phenomena such as freezing temperatures and precipitation, fires, and the facility's history of spills and leaks. For hazardous pollutants, the list of reportable quantities as defined in 40 CFR, Part 117 may be used as a guide in determining significant amounts of releases. For toxic pollutants, the relative toxicity of the pollutant shall be considered in determining the significance of potential releases.

   The review shall address all substances present at the facility that are listed as toxic pollutants under Section 307(a)(1) of the Clean Water Act or as hazardous pollutants under Section 311 of the Act or that are identified as Chemicals of Concern by the Industrial Chemical Survey.

3. Whenever the potential for a significant release of toxic or hazardous pollutants to State waters is determined to be present, the permittee shall identify Best Management Practices that have been established to minimize such potential releases. Where BMPs are inadequate or absent, appropriate BMPs shall be established. In selecting appropriate BMPs, the permittee shall consider typical industry practices such as spill reporting procedures, risk identification and assessment, employee training, inspections and records, preventive maintenance, good housekeeping, materials compatibility and security. In addition, the permittee may consider structural measures (such as secondary containment and erosion/sediment control devices and practices) where appropriate.

4. Development of the BMP plan shall include sampling of waste stream segments for the purpose of toxic "hot spot"* identification. The economic achievability of technology-based end-of-pipe treatment will not be considered until plant site "hot spot" sources have been identified, contained, removed or minimized through the imposition of site specific BMPs or application of internal facility treatment technology.

5. The BMP plan shall be documented in narrative form and shall include any necessary plot plans, drawings or maps. Other documents already prepared for the facility such as a Safety Manual or a Spill Prevention, Control and Countermeasure (SPCC) plan may be used as part of the plan and may be incorporated by reference. USEPA guidance for development of storm water elements of the BMP is available in the September 1992 manual "Storm Water Management for Industrial Activities," USEPA Office of Water Publication EPA 832-R-92-006 (available from NTIS, (703)487-4650, order number PB 92235969). A copy of the BMP plan shall be maintained at the facility and shall be available to authorized Department representatives upon request. As a minimum, the plan shall include the following BMP's:

a.	BMP Committee	e.	Inspections and Records	l.	Security
b.	Reporting of BMP Incidents	f.	Preventive Maintenance	j.	Spill prevention & response
c.	Risk Identification & Assessment	g.	Good Housekeeping	k.	Erosion & sediment control
d.	Employee Training	h.	Materials Compatibility	l.	Management of runoff

6. The BMP plan shall be modified whenever changes at the facility materially increase the potential for significant releases of toxic or hazardous pollutants or where actual releases indicate the plan is inadequate.

* A "hot spot" is a segment of an industrial facility; including but not limited to soil, equipment, material storage areas, sewer lines etc.; which contributes elevated levels of problem pollutants to the wastewater and/or storm water collection system of that facility. For the purposes of this definition, problem pollutants are substances for which end of pipe treatment to meet a water quality or technology requirement may, considering the results of wastestream segment sampling, be deemed unreasonable. For the purposes of this definition, an elevated level is a concentration or mass loading of the pollutant in question which is sufficiently higher than the end of pipe concentration of that same pollutant so as to allow for an economically justifiable removal and/or isolation of the segment and/or B.A.T. treatment of wastewaters emanating from the segment.

RECORDING, REPORTING AND ADDITIONAL MONITORING REQUIREMENTS

a) The permittee shall also refer to the General Conditions (Part II) of this permit for additional information concerning monitoring and reporting requirements and conditions.

b) The monitoring information required by this permit shall be summarized, signed and retained for a period of three years from the date of the sampling for subsequent inspection by the Department or its designated agent. **Also;**

[X] (if box is checked) monitoring information required by this permit shall be summarized and reported by submitting completed and signed Discharge Monitoring Report (DMR) forms for each 1 month reporting period to the locations specified below. Blank forms are available at the Department's Albany office listed below. The first reporting period begins on the effective date of this permit and the reports will be due no later than the 28th day of the month following the end of each reporting period.

Send the **original** (top sheet) of each DMR page to:

Department of Environmental Conservation
Division of Water
Bureau of Water Compliance Programs
50 Wolf Road
Albany, New York 12233-3506

Phone: (518) 457-3790

Send the **first copy** (second sheet) of each DMR page to:

Department of Environmental Conservation
Regional Water Engineer
Region 2
One Unters Point Plaza
47-40 21st. St.
Long Island City, NY 11101-5407

c) A monthly "Wastewater Facility Operation Report..." (form 92-15-7) shall be submitted (if box is checked) to the [ ] Regional Water Engineer and/or [ ] County Health Department or Environmental Control Agency listed above.

d) **Noncompliance** with the provisions of this permit shall be reported to the Department as prescribed in the attached General Conditions (Part II).

e) Monitoring must be conducted according to test procedures approved under 40 CFR Part 136, unless other test procedures have been specified in this permit.

f) If the permittee monitors any pollutant more frequently than required by this permit, using test procedures approved under 40 CFR Part 136 or as specified in this permit, the results of this monitoring shall be included in the calculations and recording on the Discharge Monitoring Reports.

g) Calculations for all limitations which require averaging of measurements shall utilize an arithmetic mean unless otherwise specified in this permit.

h) Unless otherwise specified, all information recorded on the Discharge Monitoring Report shall be based upon measurements and sampling carried out during the most recently completed reporting period.

i) Any laboratory test or sample analysis required by this permit for which the State Commissioner of Health issues certificates of approval pursuant to section five hundred two of the Public Health Law shall be conducted by a laboratory which has been issued a certificate of approval. Inquiries regarding laboratory certification should be sent to the Environmental Laboratory Accreditation Program, New York State Health Department Center for Laboratories and Research, Division of Environmental Sciences, The Nelson A. Rockefeller State Plaza, Albany, New York 12201.

DEC CONSENT ORDER

SUMMARY OF ABBREVIATIONS

ECL	Environmental Conservation Law
NL	Navigation Law
MOSF	Major Oil Storage Facility
PBS	Petroleum Bulk Storage Facility
SPDES	State Pollutant Discharge Elimination System
BMP Plans	Best Management Practices Plans
CAP	Compliance Audit Program
EMSE	Environmental Management Systems Evaluation
PISCES	Power Plant Integrated Systems Chemical Emissions Studies
CBS	Chemical Bulk Storage Facility
WP	Site Specific Work Plan
SIRP	Summary Of Investigation And Remediation Plan

11th Street Conduit - NY0201138

1- The permit effective date is March 1, 1996.

2- DEC did not change the TSS limit since the facility is not a Steam Electric Power Generating Station - TSS limit is 50 mg/l daily max - Monthly Grab.

3- pH limit was deleted.

4- BTEX action levels not deleted as requested but changed from quarterly to annual for direct discharges to Newtown Creek.

BTEX - Action level of 0.10 mg//l - Annual Grab

5- Additional Requirements - The short-term high intensity monitoring program for PCB arochlors has been deleted as requested.

As in the draft permit, submittal of a Best Management Practices Plan within 6 months of the effective date of permit is required as well (Environment, Health and Safety will handle).

New York State Department of Environmental Conservation
Division of Environmental Permits, 4th Floor
625 Broadway, Albany, New York 12233-1750
Phone: (518) 402-9167 • **FAX:** (518) 402-9168
Website: www.dec.state.ny.us

Erin M. Crotty
Commissioner

September 06, 2001

FACILITY INFORMATION

HARRY COATES
CONSOLIDATED EDISON OF NEW YORK INC
4 IRVING PL, RM 300
NEW YORK, NY 10003

11TH STREET CONDUIT
LOCATION : BROOKLYN
COUNTY : KINGS
DEC NO : 2-9902-00018-00001-
SPDES NO : NY 020 1138

Dear SPDES Permittee:

Enclosed please find your renewed State Pollutant Discharge Elimination System (SPDES) permit. This renewal permit together with the previously issued valid permit constitute authorization to discharge wastewater in accordance with all terms, conditions and limitations specified in your previously issued permit, including any valid modifications. Under the Environmental Benefit Permit Strategy, SPDES permits are renewed at a central location in Albany in order to make the process more efficient. All other concerns with your permit such as permittee-initiated modifications, permit transfers to a new owner, name changes, and other questions should be directed to the Regional Permit Administrator at the following address:

John Cryan
NYSDEC REGION 2
47-40 21st St 1 Hunters Pt Plaza
Long Island City, NY 11101-5407
(718) 482-4997

IMPORTANT NOTICE - In accordance with Article 17 Title 8 (State Pollutant Discharge Elimination System) and Article 70 (Uniform Procedures) of the Environmental Conservation Law, your permit is subject to the Discharge Notification Act (DNA). This law requires permittees to post a sign near each outfall of a wastewater discharge to surface waters, and also to provide a public repository for Discharge Monitoring Reports (DMRs) required by the SPDES permit. To initiate your complying with the provisions of the DNA, the Department has elected to modify your permit during this renewal period.

Please note, however, that *compliance with DNA requirements can be waived in certain cases*. ***If*** an outfall meets any of the circumstances listed in (g) under **DISCHARGE NOTIFICATION REQUIREMENTS**, in the enclosed modified permit, you need only notify the DNA Program Specialist using the enclosed *Notice of Waiver* form. If applicable, this completed form must be sent to the Bureau of Water Permits, NYSDEC, 625 Broadway, Albany, NY 12233-3505. In this case, construction of a sign and maintaining of DMRs in a public repository, *for the specific outfall or outfalls indicated in the Notice of Waiver*, is not required.

Sign and repository requirements will become effective (unless waived) 30 DAYS after the date of this letter. Should you object to this DNA modification, you must submit a written statement to the Regional Permit Administrator within 15 days of the date of this letter, giving supporting reasons why the permit should not be modified, or to request a hearing, or both.

If you have questions concerning this permit renewal, please contact Erin L. Burns at (518) 402-9170. If you have questions pertaining to the requirements of the Discharge Notification Act, please contact your Regional Water Engineer (see attached list and Region Map). Thank you.

Sincerely,

Barbara B. Rinaldi

Barbara B. Rinaldi
Deputy Chief Permit Administrator

Enclosures
cc: RPA
RWE
BWP

91-20-2 (1/89)

NEW YORK STATE DEPARTMENT OF ENVIRONMENTAL CONSERVATION

State Pollutant Discharge Elimination System (SPDES)

DISCHARGE PERMIT

Special Conditions (Part I)

Industrial Code: ~~4939~~ 4939
Discharge Class (CL): 01
Toxic Class (TX): N
Major Drainage Basin: 17
Sub Drainage Basin: 02
Water Index Number: ~~ER-34~~ LI 4
Compact Area: IJC

SPDES Number: NY-0201138
DEC Number: 2-9902-00018/00001-0
Effective Date (EDP): 3/1/97
Expiration Date (ExDP): 3/1/02
Modification Date(s):
Attachment(s): General Conditions (Part II) Date: /

This SPDES permit is issued in compliance with Title 8 of Article 17 of the Environmental Conservation Law of New York State and in compliance with the Clean Water Act as amended, (33 U.S.C. Section 1251 et. seq.)(hereafter referred to as "the Act").

PERMITTEE NAME AND ADDRESS Attention: Harry Coates

Name: Consolidated Edison of New York, Inc.
Street: 4 Irving Place, Room 300
City: New York State: NY Zip Code: 10003
is authorized to discharge from the facility described below:

FACILITY NAME AND ADDRESS

Name: 11th Street Conduit
Location (C,T,V): Brooklyn County: Kings
Facility Address: Oakland and Water Streets
City: Brooklyn State: NY Zip Code: 11222
NYTM - E: . NYTM - N: 4 .
From Outfall No.: 001 at Latitude: 40° 44′ 28" & Longitude: 73° 57′ 08"
into receiving waters known as: Newtown Creek Class: SD
and; (list other Outfalls, Receiving Waters & Water Classifications)

in accordance with the effluent limitations, monitoring requirements and other conditions set forth in Special Conditions (Part I) and General Conditions (Part II) of this permit.

DISCHARGE MONITORING REPORT (DMR) MAILING ADDRESS

Mailing Name: Consolidated Edison Company of New York, Inc.
Street: 4 Irving Place
City: New York State: NY Zip Code: 10003
Responsible Official or Agent: Yi-Chang Shao Phone: (718)204-4151

This permit and the authorization to discharge shall expire on midnight of the expiration date shown and the permittee shall not discharge after the expiration date unless this permit has been renewed, or extended pursuant to law. To be authorized to discharge beyond the expiration date, the permittee shall apply for a permit renewal no less than 180 days prior to the expiration date shown above.

DISTRIBUTION:

Permit Administrator: William R. Adriance	
Address: 50 Wolf Road, Albany, N.Y. 12233	
Signature: William R. Adriance	Date: 1/9/97

EFFLUENT LIMITATIONS AND MONITORING REQUIREMENTS

During the period beginning EDP 3/1/97

and lasting until EDP + 5 YEARS 3/1/02

the discharges from the permitted facility shall be limited and monitored by the permittee as specified below:

Outfall Number & Effluent Parameter	Discharge Limitations Daily Avg.	Daily Max.	Units	Minimum Monitoring Requirements Measurement Frequency	Sample Type
001 - Groundwater Infiltration and Stormwater					
Flow	NA	Monitor	GPD	Monthly	Calculated
Total Suspended Solids	NA	50	mg/l	Monthly	Grab
Oil & Grease	NA	15	mg/l	Monthly	Grab

ACTION LEVEL REQUIREMENTS (TYPE I)

The parameters listed below have been reported present in the discharge but at levels that currently do not require technology or water quality based limits. Action levels have been established which, if routinely or excessively exceeded, will result in reconsideration and/or development of technology or water quality based limits.

Routine action level monitoring results, if not provided for on the Discharge Monitoring Report (DMR) form, shall be appended to the DMR for the period during which the sampling was conducted. If submission of DMR's is not required by this permit, the results shall be maintained in accordance with instructions on the RECORDING, REPORTING AND MONITORING page of this permit.

If any of the action levels is exceeded, the permittee shall undertake a short-term, high-intensity monitoring program for the parameter(s). Samples identical to those required for routine monitoring purposes shall be taken on each of at least three consecutive operating and discharge days and analyzed. Results shall be expressed in terms of both concentration and mass, and shall be submitted no later than the end of the second month following the month when the action level was first exceeded. Results may be appended to the DMR or transmitted under separate cover to the addresses listed on the RECORDING, REPORTING AND MONITORING page of this permit. If levels higher than the actions levels are confirmed the results shall constitute an application for permit modification and the permit may be reopened for consideration of revised action levels or effluent limits.

The permittee is not authorized to discharge any of listed parameters at levels which may cause or contribute to a violation of water quality standards.

Outfall Number & Effluent Parameter	Action Level	Units	Minimum Monitoring Requirements: Measurement Frequency	Sample Type
001 - Groundwater Infiltration and Storm Water				
Benzene	0.10	mg/l	Annual	Grab
Toluene	0.10	mg/l	Annual	Grab
Xylenes	0.10	mg/l	Annual	Grab
Ethylbenzene	0.10	mg/l	Annual	Grab

Limits apply for direct discharge to Newtown Creek.

Additional Requirements:

1. There shall be no discharge of polychlorinated biphenyl compounds.

DEFINITIONS OF DAILY AVERAGE AND DAILY MAXIMUM

The daily average discharge is the total discharge by weight or in other appropriate units as specified herein, during a calendar month divided by the number of days in the month that the production or commercial facility was operating. Where less than daily sampling is required by this permit, the daily average discharge shall be determined by the summation of all the measured daily discharges in appropriate units as specified herein divided by the number of days during the calendar month when measurements were made.

The daily maximum discharge means the total discharge by weight or in other appropriate units as specified herein, during any calendar day.

MONITORING LOCATIONS

The permittee shall take samples and measurements, to comply with the monitoring requirements specified in this permit, at the location(s) indicated below: (Show sampling locations and outfalls with sketch or flow diagram as appropriate)

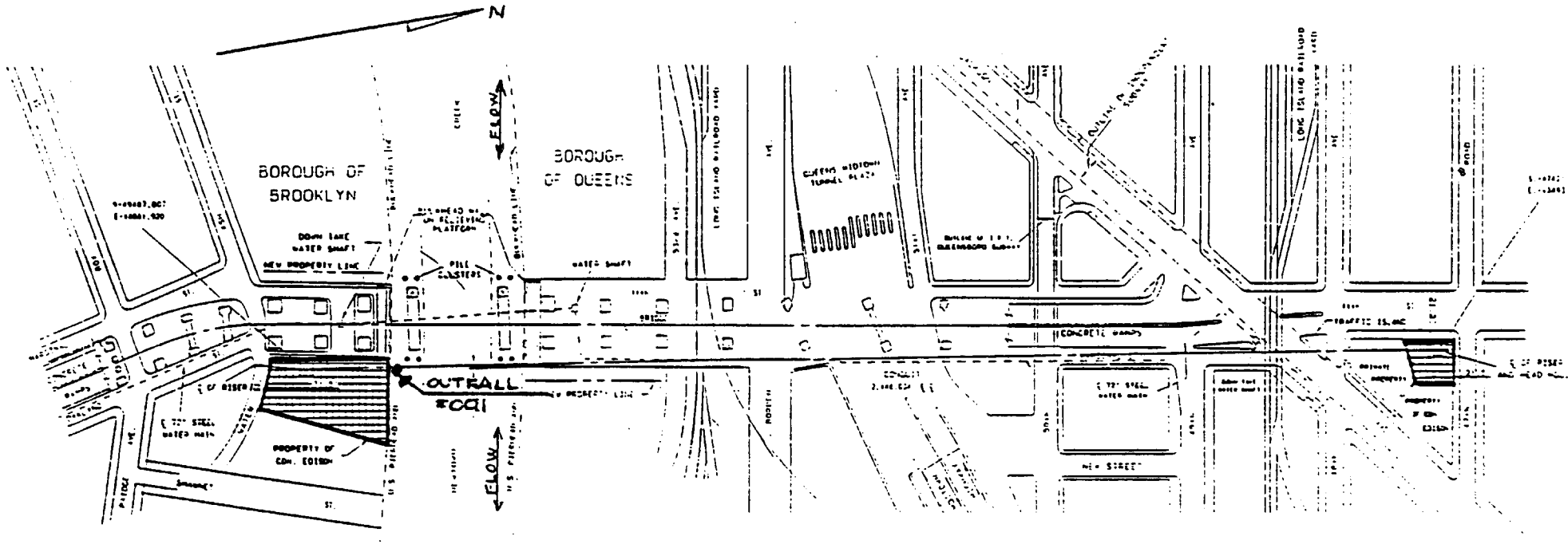

CON EDISON

11th STREET CONDUIT

SITE PLOT PLAN

EPA FORM 1 XI. MAP

Figure 2

SPECIAL CONDITIONS - BEST MANAGEMENT PRACTICES

1. The permittee shall develop and implement a Best Management Practices (BMP) plan, within one year of EDP to prevent, or minimize the potential for, release of significant amounts of toxic or hazardous pollutants to the waters of the State through plant site runoff; spillage and leaks; sludge or waste disposal; and storm water discharges including, but not limited to, drainage from raw material storage. Completed BMP plans shall be submitted to the Regional Water Engineer within six months of EDP.

2. The permittee shall review all facility components or systems (including material storage areas; in-plant transfer, process and material handling areas; loading and unloading operations; storm water, erosion, and sediment control measures; process emergency control systems; and sludge and waste disposal areas) where toxic or hazardous pollutants are used, manufactured, stored or handled to evaluate the potential for the release of significant amounts of such pollutants to the waters of the State. In performing such an evaluation, the permittee shall consider such factors as the probability of equipment failure or improper operation, cross-contamination of storm water by process materials, settlement of facility air emissions, the effects of natural phenomena such as freezing temperatures and precipitation, fires, and the facility's history of spills and leaks. For hazardous pollutants, the list of reportable quantities as defined in 40 CFR, Part 117 may be used as a guide in determining significant amounts of releases. For toxic pollutants, the relative toxicity of the pollutant shall be considered in determining the significance of potential releases.

   The review shall address all substances present at the facility that are listed as toxic pollutants under Section 307(a)(1) of the Clean Water Act or as hazardous pollutants under Section 311 of the Act or that are identified as Chemicals of Concern by the Industrial Chemical Survey.

3. Whenever the potential for a significant release of toxic or hazardous pollutants to State waters is determined to be present, the permittee shall identify Best Management Practices that have been established to minimize such potential releases. Where BMPs are inadequate or absent, appropriate BMPs shall be established. In selecting appropriate BMPs, the permittee shall consider typical industry practices such as spill reporting procedures, risk identification and assessment, employee training, inspections and records, preventive maintenance, good housekeeping, materials compatibility and security. In addition, the permittee may consider structural measures (such as secondary containment and erosion/sediment control devices and practices) where appropriate.

4. Development of the BMP plan shall include sampling of waste stream segments for the purpose of toxic "hot spot"* identification. The economic achievability of technology-based end-of-pipe treatment will not be considered until plant site "hot spot" sources have been identified, contained, removed or minimized through the imposition of site specific BMPs or application of internal facility treatment technology.

5. The BMP plan shall be documented in narrative form and shall include any necessary plot plans, drawings or maps. Other documents already prepared for the facility such as a Safety Manual or a Spill Prevention, Control and Countermeasure (SPCC) plan may be used as part of the plan and may be incorporated by reference. USEPA guidance for development of storm water elements of the BMP is available in the September 1992 manual "Storm Water Management for Industrial Activities," USEPA Office of Water Publication EPA 832-R-92-006 (available from NTIS, (703)487-4650, order number PB 92235969). A copy of the BMP plan shall be maintained at the facility and shall be available to authorized Department representatives upon request. As a minimum, the plan shall include the following BMP's:

a.	BMP Committee	e.	Inspections and Records	i.	Security
b.	Reporting of BMP Incidents	f.	Preventive Maintenance	j.	Spill prevention & response
c.	Risk Identification & Assessment	g.	Good Housekeeping	k.	Erosion & sediment control
d.	Employee Training	h.	Materials Compatibility	l.	Management of runoff

6. The BMP plan shall be modified whenever changes at the facility materially increase the potential for significant releases of toxic or hazardous pollutants or where actual releases indicate the plan is inadequate.

* A "hot spot" is a segment of an industrial facility; including but not limited to soil, equipment, material storage areas, sewer lines etc.; which contributes elevated levels of problem pollutants to the wastewater and/or storm water collection system of that facility. For the purposes of this definition, problem pollutants are substances for which end of pipe treatment to meet a water quality or technology requirement may, considering the results of wastestream segment sampling, be deemed unreasonable. For the purposes of this definition, an elevated level is a concentration or mass loading of the pollutant in question which is sufficiently higher than the end of pipe concentration of that same pollutant so as to allow for an economically justifiable removal and/or isolation of the segment and/or B.A.T. treatment of wastewaters emanating from the segment.

RECORDING, REPORTING AND ADDITIONAL MONITORING REQUIREMENTS

a) The permittee shall also refer to the General Conditions (Part II) of this permit for additional information concerning monitoring and reporting requirements and conditions.

b) The monitoring information required by this permit shall be summarized, signed and retained for a period of three years from the date of the sampling for subsequent inspection by the Department or its designated agent. **Also;**

[X] (if box is checked) monitoring information required by this permit shall be summarized and reported by submitting completed and signed Discharge Monitoring Report (DMR) forms for each 1 month reporting period to the locations specified below. Blank forms are available at the Department's Albany office listed below. The first reporting period begins on the effective date of this permit and the reports will be due no later than the 28th day of the month following the end of each reporting period.

Send the **original** (top sheet) of each DMR page to:

Department of Environmental Conservation
Division of Water
Bureau of Water Compliance Programs
50 Wolf Road
Albany, New York 12233-3506

Phone: (518) 457-3790

Send the **first copy** (second sheet) of each DMR page to:

Department of Environmental Conservation
Regional Water Engineer
Region 2
One Unters Point Plaza
47-40 21st. St.
Long Island City, NY 11101-5407

c) A monthly "Wastewater Facility Operation Report..." (form 92-15-7) shall be submitted (if box is checked) to the [ ] Regional Water Engineer and/or [ ] County Health Department or Environmental Control Agency listed above.

d) **Noncompliance** with the provisions of this permit shall be reported to the Department as prescribed in the attached General Conditions (Part II).

e) Monitoring must be conducted according to test procedures approved under 40 CFR Part 136, unless other test procedures have been specified in this permit.

f) If the permittee monitors any pollutant more frequently than required by this permit, using test procedures approved under 40 CFR Part 136 or as specified in this permit, the results of this monitoring shall be included in the calculations and recording on the Discharge Monitoring Reports.

g) Calculations for all limitations which require averaging of measurements shall utilize an arithmetic mean unless otherwise specified in this permit.

h) Unless otherwise specified, all information recorded on the Discharge Monitoring Report shall be based upon measurements and sampling carried out during the most recently completed reporting period.

i) Any laboratory test or sample analysis required by this permit for which the State Commissioner of Health issues certificates of approval pursuant to section five hundred two of the Public Health Law shall be conducted by a laboratory which has been issued a certificate of approval. Inquiries regarding laboratory certification should be sent to the Environmental Laboratory Accreditation Program, New York State Health Department Center for Laboratories and Research, Division of Environmental Sciences, The Nelson A. Rockefeller State Plaza, Albany, New York 12201.

91-20-5 (5/97)

NEW YORK STATE DEPARTMENT OF ENVIRONMENTAL CONSERVATION

State Pollutant Discharge Elimination System (SPDES)

NOTICE / RENEWAL APPLICATION / PERMIT

Please read **ALL** instructions on the back before completing this application form. Please **TYPE** or **PRINT** clearly in ink.

PART 1 - NOTICE

05/15/2001

Permittee Contact Name, Title, Address

CONSOLIDATED EDISON OF NEW YORK INC
HARRY COATES
4 IRVING PL, RM 300
NEW YORK NY 10003

Facility and SPDES Permit Information

Name: 11TH STREET CONDUIT
Ind. Code: 4939 County: KINGS
DEC No.: 2-9902-0038/00001
SPDES No.: NY 020 1138
Expiration Date: 03/01/2002
Application Due By: 09/02/2001

Are these name(s) & address(es) correct? if not, please write corrections above.

The State Pollutant Discharge Elimination System Permit for the facility referenced above expires on the date indicated. You are required by law to file a complete renewal application **at least 180 days prior to expiration of your current permit**. **Note the "Application Due By" date above.**

CAUTION: This short application form and attached questionnaire are the only forms acceptable for permit renewal. Sign Part 2 below and mail only this form and the completed questionnaire using the enclosed envelope. *Effective April 1, 1994 the Department no longer assesses SPDES application fees.*

If there are changes to your discharge, or to operations affecting the discharge, then in addition to this renewal application, you must also submit a separate permit modification application to the Regional Permit Administrator for the DEC region in which the facility is located, as required by your current permit. See the reverse side of this page for instructions on filing a modification request.

PART 2 - RENEWAL APPLICATION

CERTIFICATION: I hereby affirm that under penalty of perjury that the information provided on this form and all attachments submitted herewith is true to the best of my knowledge and belief. False statements made herein are punishable as a Class A misdemeanor pursuant to section 210.45 of the Penal Law.

M. Peter Lanahan — **Name of person signing application (see instructions on back)**

EH&S Vice President — **Title**

x — **Signature**

JUNE 6, 2001 — **Date**

RECEIVED JUN - 7 PM 2:5 NYSDEC ENVIRONMENTAL PERMITS

PART 3 - PERMIT (Below this line - Official Use Only)

Effective Date: 3/1/02 **Expiration Date:** 3/1/07

Barbara B. Rinaldi — **Permit Administrator**

Address: NYSDEC - Division of Environmental Permits
Bureau of Environmental Analysis
50 Wolf Road, Albany, NY 12233-1760

Barbara B. Rinaldi — **Signature**

9/6/01 — **Date**

This permit together with the previous valid permit for this facility issued 01/09/97 and subsequent modifications constitute authorization to discharge wastewater in accordance with all terms, conditions and limitations specified in the previously issued valid permit, modifications thereof or issued as part of this permit, including any special or general conditions attached hereto. Nothing in this permit shall be deemed to waive the Department's authority to initiate a modification of this permit on the grounds specified in 6NYCRR §621.14, 6NYCRR §754.4 or 6NYCRR §757.1 existing at the time this permit is issued or which arise thereafter.

Attachments: General Conditions dated 11/90

Effective Date of Modification 10/8/01

DISCHARGE NOTIFICATION REQUIREMENTS

(a) Except as provided in (c), (f) and (g) of these Discharge Notification Act requirements, the permittee shall install and maintain identification signs at all outfalls to surface waters listed in this permit. Such signs shall be installed within 90 days of the Effective Date of this Modification.

(b) Subsequent modifications to or renewal of this permit does not reset or revise the deadline set forth in (a) above, unless a new deadline is set explicitly by such permit modification or renewal.

(c) The Discharge Notification Requirements described herein do not apply to outfalls from which the discharge is composed exclusively of storm water, or discharges to ground water.

(d) The sign(s) shall be conspicuous, legible and in as close proximity to the point of discharge as is reasonably possible while ensuring the maximum visibility from the surface water and shore. The signs shall be installed in such a manner to pose minimal hazard to navigation, bathing or other water related activities. If the public has access to the water from the land in the vicinity of the outfall, an identical sign shall be posted to be visible from the direction approaching the surface water.

The signs shall have **minimum** dimensions of eighteen inches by twenty four inches (18" x 24") and shall have white letters on a green background and contain the following information:

N.Y.S. PERMITTED DISCHARGE POINT

SPDES PERMIT No.: NY_____

OUTFALL No. :____

For information about this permitted discharge contact:

Permittee Name: _____

Permittee Contact: _____

Permittee Phone: ( ) - ### - ####

OR:

NYSDEC Division of Water Regional Office Address :

NYSDEC Division of Water Regional Phone: ( ) - ### -####

(e) For each discharge required to have a sign in accordance with a), the permittee shall, concurrent with the installation of the sign, provide a repository of copies of the Discharge Monitoring Reports (DMRs), as required by the **RECORDING, REPORTING AND ADDITIONAL MONITORING REQUIREMENTS** page of this permit. This repository shall be open to the public, at a minimum, during normal daytime business hours. The repository may be at the business office repository of the permittee or at an off-premises location of its choice (such location shall be the village, town, city or county clerk's office, the local library or other location as approved by the Department). In accordance with the **RECORDING, REPORTING AND ADDITIONAL MONITORING REQUIREMENTS** page of your permit, each DMR shall be maintained on record for a period of three years.

(continued)

(f) If, upon November 1, 1997, the permittee has installed signs that include the information required by 17-0815-a(2)(a) of the ECL, but do not meet the specifications listed above, the permittee may continue to use the existing signs for a period of up to five years, after which the signs shall comply with the specifications listed above.

(g) All requirements of the Discharge Notification Act, including public repository requirements, are waived for any outfall meeting any of the following circumstances, provided Department notification is made in accordance with (h):

(i) such sign would be inconsistent with any other state or federal statute;

(ii) the Discharge Notification Requirements contained herein would require that such sign could only be located in an area that is damaged by ice or flooding due to a one-year storm or storms of less severity;

(iii) instances in which the outfall to the receiving water is located on private or government property which is restricted to the public through fencing, patrolling, or other control mechanisms. Property which is posted only, without additional control mechanisms, does not qualify for this provision;

(iv) instances where the outfall pipe or channel discharges to another outfall pipe or channel, before discharge to a receiving water; or

(v) instances in which the discharge from the outfall is located in the receiving water, two-hundred or more feet from the shoreline of the receiving water.

(h) If the permittee believes that any outfall which discharges wastewater from the permitted facility meets any of the waiver criteria listed in (g) above, notification (form enclosed) must be made to the Department's Bureau of Water Permits, Central Office, of such fact, and, provided there is no objection by the Department, a sign and DMR repository for the involved outfall(s) are not required. This notification must include the facility's name, address, telephone number, contact, permit number, outfall number(s), and reason why such outfall(s) is waived from the requirements of discharge notification. The Department may evaluate the applicability of a waiver at any time, and take appropriate measures to assure that the ECL and associated regulations are complied with.

(i) The permittee shall periodically inspect the outfall identification signs in order to ensure that they are maintained, are still visible and contain information that is current and factually correct.

New York State Department of Environmental Conservation
Division of Environmental Permits, 4th Floor
625 Broadway, Albany, New York 12233-1750
Phone: (518) 402-9167 • **FAX:** (518) 402-9168
Website: www.dec.state.ny.us

Denise M. Sheehan
Commissioner

SEP 19 2006

FACILITY INFORMATION

CONSOLIDATED EDISON OF NY INC
HARRY COATES
4 IRVING PLACE, RM 300
NEW YORK NY 10003

NAME: 11TH STREET CONDUIT
LOCATION: LONG ISLAND CITY
COUNTY: NEW YORK (C)
SPDES NO: NY 020 1138
DEC ID NO. 2-9902-00018-00001

Dear SPDES Permittee:

Enclosed please find a validated NOTICE/RENEWAL APPLICATION/PERMIT form renewing your State Pollutant Discharge Elimination System (SPDES) permit for the referenced facility. This validated form, together with the previously issued permit (see issuance date of this permit in Part 3 of the NOTICE/RENEWAL APPLICATION/PERMIT form), and any subsequent permit modifications constitute authorization to discharge wastewater in accordance with all terms, conditions and limitations specified therein.

The instructions and other information that you received with the NOTICE/RENEWAL APPLICATION/PERMIT package fully described procedures for renewal and modification of your SPDES permit under the Environmental Benefit Permit Strategy (EBPS). As a reminder, SPDES permits are renewed at a central location in Albany in order to make the process more efficient. All other concerns with your permit such as applications for permit modifications, permit transfers to a new owner, name changes, and other questions should be directed to the Regional Permit Administrator at the following address:

John Cryan
NYSDEC REGION 2
One Hunters Point Plaza-47-40 21st Street
Long Island City, NY 11101-5407
(718) 482-4077

If you have already filed an application for modification of your permit, it will be processed separately through our regional office. If you have questions concerning this permit renewal, please contact Lynn Kaplan at (518) 402-9165.

Sincerely,

William R. Adriance

Chief Permit Administrator

Enclosure
cc: RPA
RWE
BWP

91-20-5 (5/97)

NEW YORK STATE DEPARTMENT OF ENVIRONMENTAL CONSERVATION

State Pollutant Discharge Elimination System (SPDES)

NOTICE / RENEWAL APPLICATION / PERMIT

Please read ALL instructions on the back before completing this application form. Please TYPE or PRINT clearly in ink.

PART 1 - NOTICE 05/15/2006

Permittee Contact Name, Title, Address

CONSOLIDATED EDISON OF NY INC
HARRY COATES
4 IRVING PL, RM 300
NEW YORK NY 10003

Facility and SPDES Permit Information

Name: 11TH STREET CONDUIT
Ind. Code: 4939 County: KINGS
DEC No.: 2-9902-00018/00001
SPDES No.: NY 020 1138
Expiration Date: 03/01/2007
Application Due By: 09/02/2006

Are these name(s) & address(es) correct? if not, please write corrections above.

The State Pollutant Discharge Elimination System Permit for the facility referenced above expires on the date indicated. You are required by law to file a complete renewal application **at least 180 days prior to expiration of your current permit**. **Note the "Application Due By" date above**.

CAUTION: This short application form and attached questionnaire are the only forms acceptable for permit renewal. Sign Part 2 below and mail only this form and the completed questionnaire using the enclosed envelope. *Effective April 1, 1994 the Department no longer assesses SPDES application fees.*

If there are changes to your discharge, or to operations affecting the discharge, then in addition to this renewal application, you must also submit a separate permit modification application to the Regional Permit Administrator for the DEC region in which the facility is located, as required by your current permit. See the reverse side of this page for instructions on filing a modification request.

PART 2 - RENEWAL APPLICATION

CERTIFICATION: I hereby affirm that under penalty of perjury that the information provided on this form and all attachments submitted herewith is true to the best of my knowledge and belief. False statements made herein are punishable as a Class A misdemeanor pursuant to section 210.45 of the Penal Law.

David Davidowitz — Vice President

Name of person signing application (see instructions on back) — Title

8/3/06

Signature — Date

RECEIVED 06 AU ENVIR

PART 3 - PERMIT (Below this line - Official Use Only)

Effective Date: 3/1/07 **Expiration Date:** 2/29/12

William R. Adriance

Permit Administrator

Address: NYSDEC - Division of Environmental Permits
Bureau of Environmental Analysis
625 Broadway, Albany, NY 12233-1750

William R. Adriance — SEP 19 2006

Signature — **Date**

This permit together with the previous valid permit for this facility issued 3/1/02 and subsequent modifications constitute authorization to discharge wastewater in accordance with all terms, conditions and limitations specified in the previously issued valid permit, modifications thereof or issued as part of this permit, including any special or general conditions attached hereto. Nothing in this permit shall be deemed to waive the Department's authority to initiate a modification of this permit on the grounds specified in 6NYCRR §621.14, 6NYCRR §754.4 or 6NYCRR §757.1 existing at the time this permit is issued or which arise thereafter.

~~Attachments: General Conditions dated ___/___~~

CON EDISON

11TH STREET CONDUIT

FLOW DIAGRAM

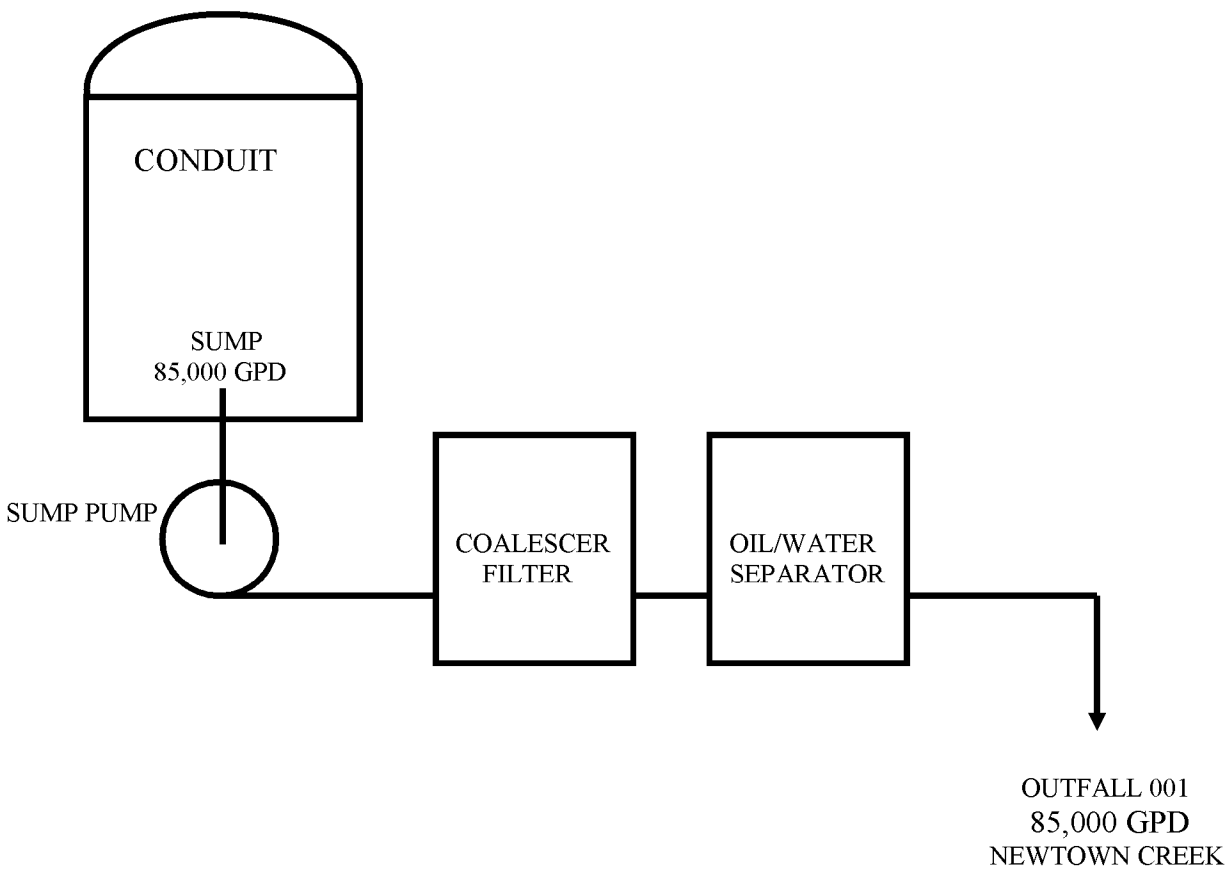

NOTE: Wastewater Sources from seepage of groundwater through the conduit walls and infiltration of rainwater through the riser air shafts.

PERMITTEE NAME/ADDRESS *(Include Facility Name/Location if Different)*
NAME
CONSOLIDATED EDISON CHEM LAB
ADDRESS 11TH STREET CONDUIT
31-01 20TH AVE, BLDG 13B
LONG ISLAND CITY NY 11105
FACILITY
LOCATION 11TH STREET CONDUIT
ATTN: YI-CHANG SHAO

NATIONAL POLLUTANT DISCHARGE ELIMINATION SYSTEM *(NPDES)*
DISCHARGE MONITORING REPORT *(DMR)*
(2-16) *(17-19)*

NY0201138 — PERMIT NUMBER
001 M — DISCHARGE NUMBER
GROUNDWATER INFIL (SUBR 02)
F - FINAL
MINOR

MONITORING PERIOD

	YEAR	MO	DAY		YEAR	MO	DAY
FROM	97	12	01	TO	97	12	31
	(20-21)	(22-23)	(24-25)		(26-27)	(28-29)	(30-31)

*** NO DISCHARGE [ ] ***

Form Approved.
OMB No. 2040-0004
Approval expires 05-31-98

NOTE: Read instructions before completing this form.

PARAMETER *(32-37)*		*(3 Card Only)* QUANTITY OR LOADING *(46-53)* AVERAGE	*(54-61)* MAXIMUM	UNITS	*(4 Card Only)* QUANTITY OR CONCENTRATION *(38-45)* MINIMUM	*(46-53)* AVERAGE	*(54-61)* MAXIMUM	UNITS	NO. EX *(62-63)*	FREQUENCY OF ANALYSIS *(64-68)*	SAMPLE TYPE *(69-70)*
FLOW RATE	SAMPLE MEASUREMENT	******	108000	(07)	******	******	******		0	01/30	CALC.
00056 1 0 0 EFFLUENT GROSS VALUE	PERMIT REQUIREMENT	******	REPORT DAILY MX	GPD	******	******	******	*** ****		ONCE/ MONTH	CALC
SOLIDS, TOTAL SUSPENDED	SAMPLE MEASUREMENT	******	******		******	******	21.0	(19)	0	02/30	G
00530 1 0 0 EFFLUENT GROSS VALUE	PERMIT REQUIREMENT	******	******	*** ****	******	******	30 DAILY MX	MG/L		ONCE/ MONTH	GRAB
OIL AND GREASE FREON EXTR-GRAV METH	SAMPLE MEASUREMENT	******	******		******	******	<5.0	(19)	0	02/30	G
00556 1 0 0 EFFLUENT GROSS VALUE	PERMIT REQUIREMENT	******	******	*** ****	******	******	15 DAILY MX	MG/L		ONCE/ MONTH	GRAB
	SAMPLE MEASUREMENT										
	PERMIT REQUIREMENT										
	SAMPLE MEASUREMENT										
	PERMIT REQUIREMENT										
	SAMPLE MEASUREMENT										
	PERMIT REQUIREMENT										
	SAMPLE MEASUREMENT										
	PERMIT REQUIREMENT										

NAME/TITLE PRINCIPAL EXECUTIVE OFFICER		TELEPHONE	DATE
Victor Basso Plant Representive	I CERTIFY UNDER PENALTY OF LAW THAT I HAVE PERSONALLY EXAMINED AND AM FAMILIAR WITH THE INFORMATION SUBMITTED HEREIN; AND BASED ON MY INQUIRY OF THOSE INDIVIDUALS IMMEDIATELY RESPONSIBLE FOR OBTAINING THE INFORMATION, I BELIEVE THE SUBMITTED INFORMATION IS TRUE, ACCURATE AND COMPLETE. I AM AWARE THAT THERE ARE SIGNIFICANT PENALTIES FOR SUBMITTING FALSE INFORMATION, INCLUDING THE POSSIBILITY OF FINE AND IMPRISONMENT. SEE 18 U.S.C. § 1001 AND 33 U.S.C. § 1319. *(Penalties under these statutes may include fines up to $10,000 and or maximum imprisonment of between 6 months and 5 years.)*	Victor Basso	718 204-4151	98 / 1 / 21
TYPED OR PRINTED		**SIGNATURE OF PRINCIPAL EXECUTIVE OFFICER OR AUTHORIZED AGENT**	AREA CODE / NUMBER	YEAR / MO / DAY

COMMENTS AND EXPLANATION OF ANY VIOLATIONS *(Reference all attachments here)*

PERMITTEE NAME/ADDRESS *(Include Facility Name/ Location if Different)*
NAME CONS IDATED EDISON CHEM LAB
ADDRESS 11TH STREET CONDUIT
31-01 20TH AVE, BLDG 138
LONG ISLAND CITY NY 11105
FACILITY 11TH STREET CONDUIT
LOCATION
ATTN: YI-CHANG SHAO

NATIONAL POLLUTANT DISCHARGE ELIMINATION SYSTEM *(NPDES)*
DISCHARGE MONITORING REPORT *(DMR)*

PERMIT NUMBER (2-16)	DISCHARGE NUMBER (17-19)
NY0201136	001 M

Form Approved.
OMB No. 2040-0004
Approval expires 05-31-98

GROUNDWATER INFI[illegible] (SUBR 02)
F - FINAL
MINOR

*** NO DISCHARGE [ ] ***

MONITORING PERIOD	YEAR	MO	DAY		YEAR	MO	DAY
FROM	97	11	01	TO	97	11	30
	(20-21)	(22-23)	(24-25)		(26-27)	(28-29)	(30-31)

NOTE: Read instructions before completing this form.

PARAMETER (32-37)		QUANTITY OR LOADING (3 Card Only) (46-53) AVERAGE	(54-61) MAXIMUM	UNITS	QUANTITY OR CONCENTRATION (4 Card Only) (38-45) MINIMUM	(46-53) AVERAGE	(54-61) MAXIMUM	UNITS	NO. EX (62-63)	FREQUENCY OF ANALYSIS (64-68)	SAMPLE TYPE (69-70)
FLOW RATE	SAMPLE MEASUREMENT	******	108000	(07)	******	******	******		0	01/30	CALC.
00056 1 0 0 EFFLUENT GROSS VALUE	PERMIT REQUIREMENT	******	REPORT DAILY MX	GPD	******	******	******	**** ****		ONCE/ MONTH	CALCTD
SOLIDS, TOTAL SUSPENDED	SAMPLE MEASUREMENT	******	******		******	******	20.0	(19)	0	02/30	G
00530 1 0 0 EFFLUENT GROSS VALUE	PERMIT REQUIREMENT	******	******	**** ****	******	******	30 DAILY MX	MG/L		ONCE/ MONTH	GRAB
OIL AND GREASE FREON EXTR-GRAV METH	SAMPLE MEASUREMENT	******	******		******	******	<5.0	(19)	0	02/30	G
00556 1 0 0 EFFLUENT GROSS VALUE	PERMIT REQUIREMENT	******	******	**** ****	******	******	15 DAILY MX	MG/L		ONCE/ MONTH	GRAB
	SAMPLE MEASUREMENT										
	PERMIT REQUIREMENT										
	SAMPLE MEASUREMENT										
	PERMIT REQUIREMENT										
	SAMPLE MEASUREMENT										
	PERMIT REQUIREMENT										
	SAMPLE MEASUREMENT										
	PERMIT REQUIREMENT										

NAME/TITLE PRINCIPAL EXECUTIVE OFFICER			TELEPHONE		DATE		
Victor Basso Plant Representive	I CERTIFY UNDER PENALTY OF LAW THAT I HAVE PERSONALLY EXAMINED AND AM FAMILIAR WITH THE INFORMATION SUBMITTED HEREIN; AND BASED ON MY INQUIRY OF THOSE INDIVIDUALS IMMEDIATELY RESPONSIBLE FOR OBTAINING THE INFORMATION, I BELIEVE THE SUBMITTED INFORMATION IS TRUE, ACCURATE AND COMPLETE. I AM AWARE THAT THERE ARE SIGNIFICANT PENALTIES FOR SUBMITTING FALSE INFORMATION, INCLUDING THE POSSIBILITY OF FINE AND IMPRISONMENT. SEE 18 U.S.C. § 1001 AND 33 U.S.C. § 1319. *(Penalties under these statutes may include fines up to $10,000 and or maximum imprisonment of between 6 months and 5 years.)*	Victor P Basso	718 204-4151		97	12	15
TYPED OR PRINTED		SIGNATURE OF PRINCIPAL EXECUTIVE OFFICER OR AUTHORIZED AGENT	AREA CODE	NUMBER	YEAR	MO	DAY

COMMENTS AND EXPLANATION OF ANY VIOLATIONS *(Reference all attachments here)*

PERMITTEE NAME/ADDRESS *(Include Facility Name/ Location if Different)*
NAME CONSOLIDATED EDISON CHEM LAB
ADDRESS 11TH STREET CONDUIT
41-01 20TH AVE, BLDG 130
LONG ISLAND CITY NY 11105
FACILITY 11TH STREET CONDUIT
LOCATION
ATTN: YI-CHANG SHAU

NATIONAL POLLUTANT DISCHARGE ELIMINATION SYSTEM *(NPDES)* MONITORING REPORT *(DMR)*

NY0201138	001 W
PERMIT NUMBER *(2-16)*	DISCHARGE NUMBER *(17-19)*

MONITORING PERIOD	YEAR	MO	DAY		YEAR	MO	DAY
FROM	97	10	01	TO	97	10	31
	(20-21)	*(22-23)*	*(24-25)*		*(26-27)*	*(28-29)*	*(30-31)*

Form Approved.
OMB No. 2040-0004
Approval expires 05-31-98

GROUNDWATER INFILTRATION PROGRAM
(SUBR. 02)
F - FINAL
MINOR

*** NO DISCHARGE [ ] ***

NOTE: Read instructions before completing this form.

PARAMETER *(32-37)*		*(3 Card Only)* QUANTITY OR LOADING *(46-53)* AVERAGE	*(54-61)* MAXIMUM	UNITS	*(4 Card Only)* QUANTITY OR CONCENTRATION *(38-45)* MINIMUM	*(46-53)* AVERAGE	*(54-61)* MAXIMUM	UNITS	NO. EX *(62-63)*	FREQUENCY OF ANALYSIS *(64-68)*	SAMPLE TYPE *(69-70)*
FLOW RATE	SAMPLE MEASUREMENT	******	108000	(07)	******	******	******		0	01/30	CALC.
00056 1 0 0 EFFLUENT GROSS VALUE	PERMIT REQUIREMENT	******	REPORT DAILY MX	GPD	******	******	******	*** ****		NEV/ MONTH	CALCTD
SOLIDS, TOTAL SUSPENDED	SAMPLE MEASUREMENT	******	******		******	******	15.0	(19)	0	02/30	G
00530 1 0 0 EFFLUENT GROSS VALUE	PERMIT REQUIREMENT	******	******	*** ****	******	******	30 DAILY MX	MG/L		NEV/ MONTH	GRAB
OIL AND GREASE FREON EXTR-GRAV METH	SAMPLE MEASUREMENT	******	******		******	******	<5.0	(19)	0	02/30	G
00556 1 0 0 EFFLUENT GROSS VALUE	PERMIT REQUIREMENT	******	******	*** ****	******	******	15 DAILY MX	MG/L		NEV/ MONTH	GRAB
	SAMPLE MEASUREMENT										
	PERMIT REQUIREMENT										
	SAMPLE MEASUREMENT										
	PERMIT REQUIREMENT										
	SAMPLE MEASUREMENT										
	PERMIT REQUIREMENT										
	SAMPLE MEASUREMENT										
	PERMIT REQUIREMENT										

NAME/TITLE PRINCIPAL EXECUTIVE OFFICER			TELEPHONE		DATE		
Victor Basso Plant Representative	I CERTIFY UNDER PENALTY OF LAW THAT I HAVE PERSONALLY EXAMINED AND AM FAMILIAR WITH THE INFORMATION SUBMITTED HEREIN; AND BASED ON MY INQUIRY OF THOSE INDIVIDUALS IMMEDIATELY RESPONSIBLE FOR OBTAINING THE INFORMATION, I BELIEVE THE SUBMITTED INFORMATION IS TRUE, ACCURATE AND COMPLETE. I AM AWARE THAT THERE ARE SIGNIFICANT PENALTIES FOR SUBMITTING FALSE INFORMATION, INCLUDING THE POSSIBILITY OF FINE AND IMPRISONMENT. SEE 18 U.S.C. § 1001 AND 33 U.S.C. § 1319. *(Penalties under these statutes may include fines up to $10,000 and or maximum imprisonment of between 6 months and 5 years.)*	Victor Basso	718	204-4151	97	11	18
TYPED OR PRINTED		SIGNATURE OF PRINCIPAL EXECUTIVE OFFICER OR AUTHORIZED AGENT	AREA CODE	NUMBER	YEAR	MO	DAY

COMMENTS AND EXPLANATION OF ANY VIOLATIONS *(Reference all attachments here)*

EPA-NC-CE-0000125

PERMITTEE NAME/ADDRESS *(Include Facility Name/ Location if Different)*
NAME CONSOLIDATED EDISON CHEM LAB
ADDRESS 11TH STREET CONDUIT
4 IRVING PLACE ROOM 1445-S
NEW YORK NY 10003
FACILITY LOCATION 11TH STREET CONDUIT
ATTN: YI-CHANG SHAO

NATIONAL POLLUTANT DISCHARGE ELIMINATION SYSTEM *(NPDES)*
DISCHARGE MONITORING REPORT *(DMR)*

PERMIT NUMBER *(2-16)*	DISCHARGE NUMBER *(17-19)*
NY0201138	001 M

MINOR
(SUBR 023
F - FINAL
GROUNDWATER, INFILTRATION&STORM
*** NO DISCHARGE [ ] ***

Form Approved.
OMB No. 2040-0004
Approval expires 05-31-98

2-NT

MONITORING PERIOD

	YEAR *(20-21)*	MO *(22-23)*	DAY *(24-25)*		YEAR *(26-27)*	MO *(28-29)*	DAY *(30-31)*
FROM	98	12	01	TO	98	12	31

NOTE: Read instructions before completing this form.

PARAMETER *(32-37)*		*(3 Card Only)* QUANTITY OR LOADING *(46-53)* AVERAGE	*(54-61)* MAXIMUM	UNITS	*(4 Card Only)* QUANTITY OR CONCENTRATION *(38-45)* MINIMUM	*(46-53)* AVERAGE	*(54-61)* MAXIMUM	UNITS	NO. EX *(62-63)*	FREQUENCY OF ANALYSIS *(64-68)*	SAMPLE TYPE *(69-70)*
FLOW RATE	SAMPLE MEASUREMENT	******	108000	(07)	******	******	******		0	01/30	CALC.
00056 1 0 0 EFFLUENT GROSS VALU	PERMIT REQUIREMENT	******	REPORT DAILY MX	GPD	******	******	******	**** ****		DAILY MNTR	CALC
SOLIDS, TOTAL SUSPENDED	SAMPLE MEASUREMENT	******	******		******	******	14.0	(19)	0	01/30	G
00530 1 0 0 EFFLUENT GROSS VALU	PERMIT REQUIREMENT	******	******	**** ****	******	******	30 DAILY MX	MG/L		WEEKLY MNTR	GRAB
OIL AND GREASE FREON EXTR-GRAV MET	SAMPLE MEASUREMENT	******	******		******	******	< 5.0	(19)	0	01/30	G
00556 1 0 0 EFFLUENT GROSS VALU	PERMIT REQUIREMENT	******	******	**** ****	******	******	15 DAILY MX	MG/L		WEEKLY MNTR	GRAB
	SAMPLE MEASUREMENT										
	PERMIT REQUIREMENT										
	SAMPLE MEASUREMENT										
	PERMIT REQUIREMENT										
	SAMPLE MEASUREMENT										
	PERMIT REQUIREMENT										
	SAMPLE MEASUREMENT										
	PERMIT REQUIREMENT										

NAME/TITLE PRINCIPAL EXECUTIVE OFFICER			TELEPHONE	DATE		
Victor Basso Plant Representive	I CERTIFY UNDER PENALTY OF LAW THAT I HAVE PERSONALLY EXAMINED AND AM FAMILIAR WITH THE INFORMATION SUBMITTED HEREIN; AND BASED ON MY INQUIRY OF THOSE INDIVIDUALS IMMEDIATELY RESPONSIBLE FOR OBTAINING THE INFORMATION, I BELIEVE THE SUBMITTED INFORMATION IS TRUE, ACCURATE AND COMPLETE. I AM AWARE THAT THERE ARE SIGNIFICANT PENALTIES FOR SUBMITTING FALSE INFORMATION, INCLUDING THE POSSIBILITY OF FINE AND IMPRISONMENT. SEE 18 U.S.C. § 1001 AND 33 U.S.C. § 1319. *(Penalties under these statutes may include fines up to $10,000 and or maximum imprisonment of between 6 months and 5 years.)*	Victor Basso	2124604363	95	1	20
TYPED OR PRINTED		SIGNATURE OF PRINCIPAL EXECUTIVE OFFICER OR AUTHORIZED AGENT	AREA CODE / NUMBER	YEAR	MO	DAY

COMMENTS AND EXPLANATION OF ANY VIOLATIONS *(Reference all attachments here)*

PERMITTEE NAME/ADDRESS (Include Facility Name/Location if Different)
NAME CONSOLIDATED EDISON CHEM LAB
ADDRESS 11TH STREET CONDUIT
4 IRVING PLACE ROOM 1445-S
NEW YORK NY 10003
FACILITY 11TH STREET CONDUIT
LOCATION
ATTN: YI-CHANG SHAO

NATIONAL POLLUTANT DISCHARGE ELIMINATION SYSTEM (NPDES)
DISCHARGE MONITORING REPORT (DMR)

(2-16)	(17-19)
NY0201138	001 M
PERMIT NUMBER	DISCHARGE NUMBER

MINOR
(SUBR 02)
F - FINAL 2-KIN
GROUNDWATER INFILTRATION&STORM

Form Approved.
OMB No. 2040-0004
Approval expires 05-31-98

MONITORING PERIOD

	YEAR	MO	DAY		YEAR	MO	DAY
FROM	98	11	01	TO	98	11	30
	(20-21)	(22-23)	(24-25)		(26-27)	(28-29)	(30-31)

*** NO DISCHARGE [ ] ***

NOTE: Read instructions before completing this form.

PARAMETER (32-37)		(3 Card Only) QUANTITY OR LOADING (46-53) AVERAGE	(54-61) MAXIMUM	UNITS	(4 Card Only) QUANTITY OR CONCENTRATION (38-45) MINIMUM	(46-53) AVERAGE	(54-61) MAXIMUM	UNITS	NO. EX (62-63)	FREQUENCY OF ANALYSIS (64-68)	SAMPLE TYPE (69-70)
FLOW RATE	SAMPLE MEASUREMENT	******	108000	(07)	******	******	******		0	01/30	CALC
00056 1 0 0 EFFLUENT GROSS VALUE	PERMIT REQUIREMENT	******	REPORT DAILY MX	GPD	******	******	******	**** ****		ONCE/ MONTH	CALCT
SOLIDS, TOTAL SUSPENDED	SAMPLE MEASUREMENT	******	******		******	******	15.0	(19)	0	01/30	G
00530 1 0 0 EFFLUENT GROSS VALUE	PERMIT REQUIREMENT	******	******	**** ****	******	******	15 DAILY MX	MG/L		ONCE/ MONTH	GRAB
OIL AND GREASE FREON EXTR-GRAV METH	SAMPLE MEASUREMENT	******	******		******	******	< 5.0	(19)	0	01/30	G
00556 1 0 0 EFFLUENT GROSS VALUE	PERMIT REQUIREMENT	******	******	**** ****	******	******	15 DAILY MX	MG/L		ONCE/ MONTH	GRAB
	SAMPLE MEASUREMENT										
	PERMIT REQUIREMENT										
	SAMPLE MEASUREMENT										
	PERMIT REQUIREMENT										
	SAMPLE MEASUREMENT										
	PERMIT REQUIREMENT										
	SAMPLE MEASUREMENT										
	PERMIT REQUIREMENT										

NAME/TITLE PRINCIPAL EXECUTIVE OFFICER			TELEPHONE	DATE
Victor Basso Plant Representive	I CERTIFY UNDER PENALTY OF LAW THAT I HAVE PERSONALLY EXAMINED AND AM FAMILIAR WITH THE INFORMATION SUBMITTED HEREIN; AND BASED ON MY INQUIRY OF THOSE INDIVIDUALS IMMEDIATELY RESPONSIBLE FOR OBTAINING THE INFORMATION, I BELIEVE THE SUBMITTED INFORMATION IS TRUE, ACCURATE AND COMPLETE. I AM AWARE THAT THERE ARE SIGNIFICANT PENALTIES FOR SUBMITTING FALSE INFORMATION, INCLUDING THE POSSIBILITY OF FINE AND IMPRISONMENT. SEE 18 U.S.C. § 1001 AND 33 U.S.C. § 1319. (Penalties under these statutes may include fines up to $10,000 and or maximum imprisonment of between 6 months and 5 years.)	Victor Basso	2124604363	98 / 11
TYPED OR PRINTED		SIGNATURE OF PRINCIPAL EXECUTIVE OFFICER OR AUTHORIZED AGENT	AREA CODE / NUMBER	YEAR / MO / DAY

COMMENTS AND EXPLANATION OF ANY VIOLATIONS (Reference all attachments here)

PERMITTEE NAME/ADDRESS *(Include Facility Name/ Location if Different)*
NAME CONSOLIDATED EDISON CHEM LAB
ADDRESS 11TH STREET CONDUIT
4 IRVING PLACE ROOM 1445-S
NEW YORK NY 10003
FACILITY 11TH STREET CONDUIT
LOCATION
ATTN: YI-CHANG SHAO

NATIONAL POLLUTANT DISCHARGE ELIMINATION SYSTEM *(NPDES)*
DISCHARGE MONITORING REPORT *(DMR)*

NY0201138	001 M
PERMIT NUMBER (2-16)	DISCHARGE NUMBER (17-19)

MONITORING PERIOD

	YEAR	MO	DAY		YEAR	MO	DAY
FROM	95	10	01	TO	95	10	31
	(20-21)	(22-23)	(24-25)		(26-27)	(28-29)	(30-31)

MINOR
(SUBR 02)
F - FINAL
GROUNDWATER INFILTRATION/STORM
*** NO DISCHARGE [ ] ***

Form Approved.
OMB No. 2040-0004
Approval expires 05-31-98

2-K1

NOTE: Read instructions before completing this form.

PARAMETER (32-37)		(3 Card Only) QUANTITY OR LOADING (46-53) AVERAGE	(54-61) MAXIMUM	UNITS	(4 Card Only) QUANTITY OR CONCENTRATION (38-45) MINIMUM	(46-53) AVERAGE	(54-61) MAXIMUM	UNITS	NO. EX (62-63)	FREQUENCY OF ANALYSIS (64-68)	SAMPLE TYPE (69-70)
FLOW RATE 00056 1 0 0 EFFLUENT GROSS VALU	SAMPLE MEASUREMENT	******		(07)	******	******	******		0	01/30	CALC
	PERMIT REQUIREMENT	******	108000 REPORT DAILY MX	GPD	******	******	******	****		ONCE/ MONTH	CALC
SOLIDS, TOTAL SUSPENDED 00530 1 0 0 EFFLUENT GROSS VALU	SAMPLE MEASUREMENT	******	******		******	******	13.0	(19)	0	01/30	G
	PERMIT REQUIREMENT	******	******	****	******	******	30 DAILY MX	MG/L		ONCE/ MONTH	GRAB
OIL AND GREASE FREON EXTR-GRAV MET 00556 1 0 0 EFFLUENT GROSS VALU	SAMPLE MEASUREMENT	******	******		******	******	< 5	(19)	0	01/30	G
	PERMIT REQUIREMENT	******	******	****	******	******	15 DAILY MX	MG/L		ONCE/ MONTH	GRAB
	SAMPLE MEASUREMENT										
	PERMIT REQUIREMENT										
	SAMPLE MEASUREMENT										
	PERMIT REQUIREMENT										
	SAMPLE MEASUREMENT										
	PERMIT REQUIREMENT										
	SAMPLE MEASUREMENT										
	PERMIT REQUIREMENT										

NAME/TITLE PRINCIPAL EXECUTIVE OFFICER		TELEPHONE		DATE		
Victor Basso Plant Representive	I CERTIFY UNDER PENALTY OF LAW THAT I HAVE PERSONALLY EXAMINED AND AM FAMILIAR WITH THE INFORMATION SUBMITTED HEREIN; AND BASED ON MY INQUIRY OF THOSE INDIVIDUALS IMMEDIATELY RESPONSIBLE FOR OBTAINING THE INFORMATION, I BELIEVE THE SUBMITTED INFORMATION IS TRUE, ACCURATE AND COMPLETE. I AM AWARE THAT THERE ARE SIGNIFICANT PENALTIES FOR SUBMITTING FALSE INFORMATION, INCLUDING THE POSSIBILITY OF FINE AND IMPRISONMENT. SEE 18 U.S.C. § 1001 AND 33 U.S.C. § 1319. *(Penalties under these statutes may include fines up to $10,000 and or maximum imprisonment of between 6 months and 5 years.)*		2124604363	/ /		
TYPED OR PRINTED		SIGNATURE OF PRINCIPAL EXECUTIVE OFFICER OR AUTHORIZED AGENT	AREA CODE / NUMBER	YEAR	MO	DAY

COMMENTS AND EXPLANATION OF ANY VIOLATIONS *(Reference all attachments here)*

PERMITTEE NAME/ADDRESS (Include Facility Name/Location if Different)

NAME CONSOLIDATED EDISON CHEM LAB

ADDRESS 11TH STREET CONDUIT
31-01 20TH AVE, BLDG 138
LONG ISLAND CITY NY 11105

FACILITY 11TH STREET CONDUIT

LOCATION

ATTN: YI-CHANG SHAO

NATIONAL POLLUTANT DISCHARGE ELIMINATION SYSTEM (NPDES)
DISCHARGE MONITORING REPORT (DMR)

PERMIT NUMBER (2-16)	DISCHARGE NUMBER (17-19)
NY0201136	001 M

GROUNDWATER INFILTRATION
(SUBR 02)
F - FINAL
MINOR

Form Approved.
OMB No. 2040-0004
Approval expires 05-31-98

MONITORING PERIOD

	YEAR	MO	DAY		YEAR	MO	DAY
FROM	98	09	01	TO	98	09	30
	(20-21)	(22-23)	(24-25)		(26-27)	(28-29)	(30-31)

*** NO DISCHARGE [ ] ***

NOTE: Read instructions before completing this form.

PARAMETER (32-37)		QUANTITY OR LOADING (3 Card Only) (46-53) AVERAGE	(54-61) MAXIMUM	UNITS	QUANTITY OR CONCENTRATION (4 Card Only) (38-45) MINIMUM	(46-53) AVERAGE	(54-61) MAXIMUM	UNITS	NO. EX (62-63)	FREQUENCY OF ANALYSIS (64-68)	SAMPLE TYPE (69-70)
FLOW RATE	SAMPLE MEASUREMENT	******	108000	(07)	******	******	******		0	01/30	CALC.
00056 1 0 0 EFFLUENT GROSS VALUE	PERMIT REQUIREMENT	******	REPORT DAILY MX	GPD	******	******	******	**** ****		NCE/ MONTH	CALCT
SOLIDS, TOTAL SUSPENDED	SAMPLE MEASUREMENT	******	******		******	******	17.0	(19)	0	01/30	G
00530 1 0 0 EFFLUENT GROSS VALUE	PERMIT REQUIREMENT	******	******	**** ****	******	******	50 DAILY MX	MG/L		NCE/ MONTH	GRAB
OIL AND GREASE FREON EXTR-GRAV METH	SAMPLE MEASUREMENT	******	******		******	******	4.2	(19)	0	01/30	G
00556 1 0 0 EFFLUENT GROSS VALUE	PERMIT REQUIREMENT	******	******	**** ****	******	******	15 DAILY MX	MG/L		NCE/ MONTH	GRAB
	SAMPLE MEASUREMENT										
	PERMIT REQUIREMENT										
	SAMPLE MEASUREMENT										
	PERMIT REQUIREMENT										
	SAMPLE MEASUREMENT										
	PERMIT REQUIREMENT										
	SAMPLE MEASUREMENT										
	PERMIT REQUIREMENT										

NAME/TITLE PRINCIPAL EXECUTIVE OFFICER			TELEPHONE		DATE		
Victor Basso Plant Representive	I CERTIFY UNDER PENALTY OF LAW THAT I HAVE PERSONALLY EXAMINED AND AM FAMILIAR WITH THE INFORMATION SUBMITTED HEREIN; AND BASED ON MY INQUIRY OF THOSE INDIVIDUALS IMMEDIATELY RESPONSIBLE FOR OBTAINING THE INFORMATION, I BELIEVE THE SUBMITTED INFORMATION IS TRUE, ACCURATE AND COMPLETE. I AM AWARE THAT THERE ARE SIGNIFICANT PENALTIES FOR SUBMITTING FALSE INFORMATION, INCLUDING THE POSSIBILITY OF FINE AND IMPRISONMENT. SEE 18 U.S.C. § 1001 AND 33 U.S.C. § 1319. *(Penalties under these statutes may include fines up to $10,000 and or maximum imprisonment of between 6 months and 5 years.)*	[signature]	2124604363		98	10	21
TYPED OR PRINTED		SIGNATURE OF PRINCIPAL EXECUTIVE OFFICER OR AUTHORIZED AGENT	AREA CODE	NUMBER	YEAR	MO	DAY

COMMENTS AND EXPLANATION OF ANY VIOLATIONS *(Reference all attachments here)*

PERMITTEE NAME/ADDRESS *(Include Facility Name/ Location if Different)*
NAME CONSOLIDATED EDISON CHEM LAB
ADDRESS 11TH STREET CONDUIT
31-01 20TH AVE, BLDG 139
LONG ISLAND CITY NY 11105
FACILITY LOCATION 11TH STREET CONDUIT
ATTN: YI-CHANG SHAO

NATIONAL POLLUTANT DISCHARGE ELIMINATION SYSTEM *(NPDES)*
DISCHARGE MONITORING REPORT *(DMR)*
(2-16) *(17-19)*

NY0201138	001 M
PERMIT NUMBER	DISCHARGE NUMBER

MONITORING PERIOD	YEAR	MO	DAY		YEAR	MO	DAY
FROM	98	08	01	TO	98	08	31
	(20-21)	*(22-23)*	*(24-25)*		*(26-27)*	*(28-29)*	*(30-31)*

GROUNDWATER IMFIL
(SUBR 02)
F - FINAL
MINOR
*** NO DISCHARGE [ ] ***

Form App d.
OMB No. 2 0-0004
Approval expires 05-31-98

NOTE: Read instructions before completing this form.

PARAMETER *(32-37)*		*(3 Card Only)* QUANTITY OR LOADING *(46-53)* AVERAGE	*(54-61)* MAXIMUM	UNITS	*(4 Card Only)* QUANTITY OR CONCENTRATION *(38-45)* MINIMUM	*(46-53)* AVERAGE	*(54-61)* MAXIMUM	UNITS	NO. EX *(62-63)*	FREQUENCY OF ANALYSIS *(64-68)*	SAMPLE TYPE *(69-70)*
FLOW RATE	SAMPLE MEASUREMENT	******		(07)	******	******	******				
00056 1 0 0	PERMIT REQUIREMENT	******	108000 REPORT DAILY MX	GPD	******	******	******	**** ****	0	01/30 INST MINTR	CALC CALC
SOLIDS, TOTAL SUSPENDED	SAMPLE MEASUREMENT	******	******		******	******	16.0	(19)			
00530 1 0 0	PERMIT REQUIREMENT	******	******	**** ****	******	******	30 DAILY MX	MG/L	0	01/30 INST MINTR	G G
OIL AND GREASE FREON EXTR-GRAV METH	SAMPLE MEASUREMENT	******	******		******	******	5.0	(19)			
00556 1 0 0	PERMIT REQUIREMENT	******	******	**** ****	******	******	15 DAILY MX	MG/L	0	01/30 INST MINTR	G G
	SAMPLE MEASUREMENT										
	PERMIT REQUIREMENT										
	SAMPLE MEASUREMENT										
	PERMIT REQUIREMENT										
	SAMPLE MEASUREMENT										
	PERMIT REQUIREMENT										
	SAMPLE MEASUREMENT										
	PERMIT REQUIREMENT										

NAME/TITLE PRINCIPAL EXECUTIVE OFFICER			TELEPHONE		DATE		
Victor Basso Plant Representive	I CERTIFY UNDER PENALTY OF LAW THAT I HAVE PERSONALLY EXAMINED AND AM FAMILIAR WITH THE INFORMATION SUBMITTED HEREIN; AND BASED ON MY INQUIRY OF THOSE INDIVIDUALS IMMEDIATELY RESPONSIBLE FOR OBTAINING THE INFORMATION, I BELIEVE THE SUBMITTED INFORMATION IS TRUE, ACCURATE AND COMPLETE. I AM AWARE THAT THERE ARE SIGNIFICANT PENALTIES FOR SUBMITTING FALSE INFORMATION, INCLUDING THE POSSIBILITY OF FINE AND IMPRISONMENT. SEE 18 U.S.C. § 1001 AND 33 U.S.C. § 1319. *(Penalties under these statutes may include fines up to $10,000 and or maximum imprisonment of between 6 months and 5 years.)*	Victor Basso	2124604363	9	1	21
TYPED OR PRINTED		SIGNATURE OF PRINCIPAL EXECUTIVE OFFICER OR AUTHORIZED AGENT	AREA CODE NUMBER		YEAR	MO	DAY

COMMENTS AND EXPLANATION OF ANY VIOLATIONS *(Reference all attachments here)*

EPA-NC-CE-0000130

PERMITTEE NAME/ADDRESS (Include Facility Name/Location if Different)

NAME CONSOLIDATED EDISON CHEM LAB

ADDRESS 11TH STREET CONDUIT
31-01 20TH AVE, BLDG 138
LONG ISLAND CITY NY 11105

FACILITY 11TH STREET CONDUIT

LOCATION

ATTN: YI-CHANG SHAU

NATIONAL POLLUTANT DISCHARGE ELIMINATION SYSTEM (NPDES)
DISCHARGE MONITORING REPORT (DMR)

(2-16)	(17-19)
NY0201138	001 M
PERMIT NUMBER	DISCHARGE NUMBER

GROUNDWATER INFILTRATION FORM
(SUBR 02)
F - FINAL
MINOR

Form Approved.
OMB No. 2040-0004
Approval expires 05-31-98

MONITORING PERIOD

	YEAR	MO	DAY		YEAR	MO	DAY
FROM	98	07	01	TO	98	07	31
	(20-21)	(22-23)	(24-25)		(26-27)	(28-29)	(30-31)

*** NO DISCHARGE [ ] ***

NOTE: Read instructions before completing this form.

PARAMETER (32-37)		(3 Card Only) QUANTITY OR LOADING (46-53) AVERAGE	(54-61) MAXIMUM	UNITS	(4 Card Only) QUANTITY OR CONCENTRATION (38-45) MINIMUM	(46-53) AVERAGE	(54-61) MAXIMUM	UNITS	NO. EX (62-63)	FREQUENCY OF ANALYSIS (64-68)	SAMPLE TYPE (69-70)
FLOW RATE	SAMPLE MEASUREMENT	******	108000	(07)	******	******	******		0	01/30	CALC.
00056 1 0 0 EFFLUENT GROSS VALUE	PERMIT REQUIREMENT	******	REPORT DAILY MAX	GPD	******	******	******	*** ****		NCE/ MONTH	CALC.
SOLIDS, TOTAL SUSPENDED	SAMPLE MEASUREMENT	******	******		******	******	17.0	(19)	0	01/30	G
00530 1 0 0 EFFLUENT GROSS VALUE	PERMIT REQUIREMENT	******	******	**** ****	******	******	50 DAILY MX	MG/L		NCE/ MONTH	GRAB
OIL AND GREASE FREON EXTR-GRAV METH	SAMPLE MEASUREMENT	******	******		******	******	6.0	(19)	0	01/30	G
00556 1 0 0 EFFLUENT GROSS VALUE	PERMIT REQUIREMENT	******	******	**** ****	******	******	15 DAILY MX	MG/L		NCE/ MONTH	GRAB
	SAMPLE MEASUREMENT										
	PERMIT REQUIREMENT										
	SAMPLE MEASUREMENT										
	PERMIT REQUIREMENT										
	SAMPLE MEASUREMENT										
	PERMIT REQUIREMENT										
	SAMPLE MEASUREMENT										
	PERMIT REQUIREMENT										

NAME/TITLE PRINCIPAL EXECUTIVE OFFICER			TELEPHONE		DATE		
Victor Basso Plant Representive	I CERTIFY UNDER PENALTY OF LAW THAT I HAVE PERSONALLY EXAMINED AND AM FAMILIAR WITH THE INFORMATION SUBMITTED HEREIN; AND BASED ON MY INQUIRY OF THOSE INDIVIDUALS IMMEDIATELY RESPONSIBLE FOR OBTAINING THE INFORMATION, I BELIEVE THE SUBMITTED INFORMATION IS TRUE, ACCURATE AND COMPLETE. I AM AWARE THAT THERE ARE SIGNIFICANT PENALTIES FOR SUBMITTING FALSE INFORMATION, INCLUDING THE POSSIBILITY OF FINE AND IMPRISONMENT. SEE 18 U.S.C. § 1001 AND 33 U.S.C. § 1319. *(Penalties under these statutes may include fines up to $10,000 and or maximum imprisonment of between 6 months and 5 years.)*	Victor Basso	2124604363		98	07	21
TYPED OR PRINTED		SIGNATURE OF PRINCIPAL EXECUTIVE OFFICER OR AUTHORIZED AGENT	AREA CODE	NUMBER	YEAR	MO	DAY

COMMENTS AND EXPLANATION OF ANY VIOLATIONS *(Reference all attachments here)*

PERMITTEE NAME/ADDRESS *(Include Facility Name/ Location if Different)*
NAME
ADDRESS
FACILITY
LOCATION

NATIONAL POLLUTANT DISCHARGE ELIMINATION SYSTEM *(NPDES)*
DISCHARGE MONITORING REPORT *(DMR)*
(2-16) *(17-19)*

PERMIT NUMBER | DISCHARGE NUMBER

Form Approved.
OMB No. 2040-0004
Approval expires 05-31-98

MONITORING PERIOD

	YEAR	MO	DAY		YEAR	MO	DAY
FROM	98	05	01	TO	98	06	30

(20-21) (22-23) (24-25) *(26-27) (28-29) (30-31)*

NOTE: Read instructions before completing this form.

PARAMETER *(32-37)*		*(3 Card Only)* QUANTITY OR LOADING *(46-53)* AVERAGE	*(54-61)* MAXIMUM	UNITS	*(4 Card Only)* QUANTITY OR CONCENTRATION *(38-45)* MINIMUM	*(46-53)* AVERAGE	*(54-61)* MAXIMUM	UNITS	NO. EX *(62-63)*	FREQUENCY OF ANALYSIS *(64-68)*	SAMPLE TYPE *(69-70)*
FLOW RATE 00056 1 0 0 EFFLUENT GROSS VALUE	SAMPLE MEASUREMENT	******	108000	(03)	******	******	******		0	01/30	CALC.
	PERMIT REQUIREMENT	******	REPORT DAILY MX	MGD	******	******	******	*** ****			
SOLIDS, TOTAL SUSPENDED 00530 1 0 0 EFFLUENT GROSS VALUE	SAMPLE MEASUREMENT	******	******		******	******	13.0	(19)	0	01/30	G
	PERMIT REQUIREMENT	******	****** **** ****		******	******	30 DAILY MX	MG/L		WEEKLY	GRAB
OIL AND GREASE FREON EXTR-GRAV METH 00556 1 0 0 EFFLUENT GROSS VALUE	SAMPLE MEASUREMENT	******	******		******	******	1.8	(19)	0	01/30	G
	PERMIT REQUIREMENT	******	****** **** ****		******	******	15 DAILY MX	MG/L		WEEKLY	GRAB
	SAMPLE MEASUREMENT										
	PERMIT REQUIREMENT										
	SAMPLE MEASUREMENT										
	PERMIT REQUIREMENT										
	SAMPLE MEASUREMENT										
	PERMIT REQUIREMENT										
	SAMPLE MEASUREMENT										
	PERMIT REQUIREMENT										

NAME/TITLE PRINCIPAL EXECUTIVE OFFICER		TELEPHONE	DATE
Victor Basso Plant Representative TYPED OR PRINTED	I CERTIFY UNDER PENALTY OF LAW THAT I HAVE PERSONALLY EXAMINED AND AM FAMILIAR WITH THE INFORMATION SUBMITTED HEREIN; AND BASED ON MY INQUIRY OF THOSE INDIVIDUALS IMMEDIATELY RESPONSIBLE FOR OBTAINING THE INFORMATION, I BELIEVE THE SUBMITTED INFORMATION IS TRUE, ACCURATE AND COMPLETE. I AM AWARE THAT THERE ARE SIGNIFICANT PENALTIES FOR SUBMITTING FALSE INFORMATION, INCLUDING THE POSSIBILITY OF FINE AND IMPRISONMENT. SEE 18 U.S.C. § 1001 AND 33 U.S.C. § 1319. *(Penalties under these statutes may include fines up to $10,000 and or maximum imprisonment of between 6 months and 6 years.)*	Victor Basso SIGNATURE OF PRINCIPAL EXECUTIVE OFFICER OR AUTHORIZED AGENT	212 604363 AREA CODE NUMBER	98 / 7 / 7 YEAR MO DAY

COMMENTS AND EXPLANATION OF ANY VIOLATIONS *(Reference all attachments here)*

EPA-NC-CE-0000132

PERMITTEE NAME/ADDRESS (Include Facility Name/ Location if Different)

NAME CONSOLIDATED EDISON CHEM LAB

ADDRESS 11TH STREET CONDUIT
31-01 20TH AVE, BLDG 139
LONG ISLAND CITY NY 11105

FACILITY 11TH STREET CONDUIT

LOCATION

ATTN: YI-CHANG SHAO

NATIONAL POLLUTANT DISCHARGE ELIMINATION SYSTEM (NPDES)
DISCHARGE MONITORING REPORT (DMR)

(2-16)	(17-19)
NY0201134	001 M
PERMIT NUMBER	DISCHARGE NUMBER

Form Approved.
OMB No. 2040-0004
Approval expires 05-31-98

GROUNDWATER INFILTRATION FORM
(SUBR 02) 12345
F - FINAL
MINOR

MONITORING PERIOD	YEAR	MO	DAY		YEAR	MO	DAY
FROM	98	05	01	TO	98	05	31
	(20-21)	(22-23)	(24-25)		(26-27)	(28-29)	(30-31)

*** NO DISCHARGE [ ] ***

NOTE: Read instructions before completing this form.

PARAMETER (32-37)		(3 Card Only) QUANTITY OR LOADING (46-53) AVERAGE	(54-61) MAXIMUM	UNITS	(4 Card Only) QUANTITY OR CONCENTRATION (38-45) MINIMUM	(46-53) AVERAGE	(54-61) MAXIMUM	UNITS	NO. EX (62-63)	FREQUENCY OF ANALYSIS (64-68)	SAMPLE TYPE (69-70)
FLOW RATE	SAMPLE MEASUREMENT	******		(07)	******	******	******		0	01/30	CALC.
00056 1 0 0	PERMIT REQUIREMENT	******	108000 REPORT DAILY MX	GPD	******	******	******	**** ****		[illegible]	[illegible]
EFFLUENT GROSS VALUE											
SOLIDS, TOTAL SUSPENDED	SAMPLE MEASUREMENT	******	******		******	******	15.0	(19)	0	01/30	G
00530 1 0 0	PERMIT REQUIREMENT	******	******	**** ****	******	******	30 DAILY MX	MG/L		[illegible]	[illegible]
EFFLUENT GROSS VALUE											
OIL AND GREASE FREON EXTP-GRAV METH	SAMPLE MEASUREMENT	******	******		******	******	8.0	(19)	0	01/30	G
00556 1 0 0	PERMIT REQUIREMENT	******	******	**** ****	******	******	15 DAILY MX	MG/L		[illegible]	[illegible]
EFFLUENT GROSS VALUE											
	SAMPLE MEASUREMENT										
	PERMIT REQUIREMENT										
	SAMPLE MEASUREMENT										
	PERMIT REQUIREMENT										
	SAMPLE MEASUREMENT										
	PERMIT REQUIREMENT										
	SAMPLE MEASUREMENT										
	PERMIT REQUIREMENT										

NAME/TITLE PRINCIPAL EXECUTIVE OFFICER		TELEPHONE		DATE		
Victor Basso Plant Representive	I CERTIFY UNDER PENALTY OF LAW THAT I HAVE PERSONALLY EXAMINED AND AM FAMILIAR WITH THE INFORMATION SUBMITTED HEREIN; AND BASED ON MY INQUIRY OF THOSE INDIVIDUALS IMMEDIATELY RESPONSIBLE FOR OBTAINING THE INFORMATION, I BELIEVE THE SUBMITTED INFORMATION IS TRUE, ACCURATE AND COMPLETE. I AM AWARE THAT THERE ARE SIGNIFICANT PENALTIES FOR SUBMITTING FALSE INFORMATION, INCLUDING THE POSSIBILITY OF FINE AND IMPRISONMENT. SEE 18 U.S.C. § 1001 AND 33 U.S.C. § 1319. *(Penalties under these statutes may include fines up to $10,000 and or maximum imprisonment of between 6 months and 5 years.)*	[signature]	2124604363		98	05	23
TYPED OR PRINTED		SIGNATURE OF PRINCIPAL EXECUTIVE OFFICER OR AUTHORIZED AGENT	AREA CODE	NUMBER	YEAR	MO	DAY

COMMENTS AND EXPLANATION OF ANY VIOLATIONS *(Reference all attachments here)*

PERMITTEE NAME/ADDRESS (Include Facility Name/Location if Different)

NAME CONSOLIDATED EDISON CHEM LAB

ADDRESS 11TH STREET CONDUIT
31-01 20TH AVE, BLDG 138
LONG ISLAND CITY NY 11105

FACILITY 11TH STREET CONDUIT

LOCATION

ATTN: YI-CHANG SHAO

NATIONAL POLLUTANT DISCHARGE ELIMINATION SYSTEM (NPDES)
DISCHARGE MONITORING REPORT (DMR)

(2-16)	(17-19)
NY0201138	001 M
PERMIT NUMBER	DISCHARGE NUMBER

GROUNDWATER INFIL
(SUBR 02)
F - FINAL
MINOR

Form Approved.
OMB No. 2040-0004
Approval expires 05-31-98

MONITORING PERIOD	YEAR	MO	DAY		YEAR	MO	DAY
FROM	98	04	01	TO	98	04	30
	(20-21)	(22-23)	(24-25)		(26-27)	(28-29)	(30-31)

*** NO DISCHARGE [ ] ***

NOTE: Read instructions before completing this form.

PARAMETER (32-37)		(3 Card Only) QUANTITY OR LOADING (46-53) AVERAGE	(54-61) MAXIMUM	UNITS	(4 Card Only) QUANTITY OR CONCENTRATION (38-45) MINIMUM	(46-53) AVERAGE	(54-61) MAXIMUM	UNITS	NO. EX (62-63)	FREQUENCY OF ANALYSIS (64-68)	SAMPLE TYPE (69-70)
FLOW RATE	SAMPLE MEASUREMENT	******		(07)	******	******	******		0	01/30	CALC
00056 1 0 0 EFFLUENT GROSS VALUE	PERMIT REQUIREMENT	******	100000 REPORT DAILY MX	GPD	******	******	******	*** ****		ONCE/ MONTH	CALC
SOLIDS, TOTAL SUSPENDED	SAMPLE MEASUREMENT	******	******		******	******	26.0	(19)	0	01/30	G
00530 1 0 0 EFFLUENT GROSS VALUE	PERMIT REQUIREMENT	******	******	*** ****	******	******	50 DAILY MX	MG/L		ONCE/ MONTH	MAX
OIL AND GREASE FREON EXTR-GRAV METH	SAMPLE MEASUREMENT	******	******		******	******	3.1	(19)	0	01/30	G
00556 1 0 0 EFFLUENT GROSS VALUE	PERMIT REQUIREMENT	******	******	*** ****	******	******	15 DAILY MX	MG/L		ONCE/ MONTH	MAX
	SAMPLE MEASUREMENT										
	PERMIT REQUIREMENT										
	SAMPLE MEASUREMENT										
	PERMIT REQUIREMENT										
	SAMPLE MEASUREMENT										
	PERMIT REQUIREMENT										
	SAMPLE MEASUREMENT										
	PERMIT REQUIREMENT										

NAME/TITLE PRINCIPAL EXECUTIVE OFFICER			TELEPHONE	DATE		
Victor Basso Plant Representive	I CERTIFY UNDER PENALTY OF LAW THAT I HAVE PERSONALLY EXAMINED AND AM FAMILIAR WITH THE INFORMATION SUBMITTED HEREIN; AND BASED ON MY INQUIRY OF THOSE INDIVIDUALS IMMEDIATELY RESPONSIBLE FOR OBTAINING THE INFORMATION, I BELIEVE THE SUBMITTED INFORMATION IS TRUE, ACCURATE AND COMPLETE. I AM AWARE THAT THERE ARE SIGNIFICANT PENALTIES FOR SUBMITTING FALSE INFORMATION, INCLUDING THE POSSIBILITY OF FINE AND IMPRISONMENT. SEE 18 U.S.C. § 1001 AND 33 U.S.C. § 1319. *(Penalties under these statutes may include fines up to $10,000 and or maximum imprisonment of between 6 months and 5 years.)*	Victor P Basso SIGNATURE OF PRINCIPAL EXECUTIVE OFFICER OR AUTHORIZED AGENT	212460-4363	98	5	20
TYPED OR PRINTED			AREA CODE / NUMBER	YEAR	MO	DAY

COMMENTS AND EXPLANATION OF ANY VIOLATIONS *(Reference all attachments here)*

PERMITTEE NAME/ADDRESS (Include Facility Name/Location if Different)

NAME CONSOLIDATED EDISON CHEM LAB

ADDRESS 11TH STREET CONDUIT
31-01 20TH AVE, BLDG 138
LONG ISLAND CITY NY 11105

FACILITY 11TH STREET CONDUIT

LOCATION

ATTN: YI-CHANG SHAO

NATIONAL POLLUTANT DISCHARGE ELIMINATION SYSTEM (NPDES)
DISCHARGE MONITORING REPORT (DMR)

(2-16)	(17-19)
NY0201138	001 M
PERMIT NUMBER	DISCHARGE NUMBER

GROUNDWATER INFILTRATION
(SUBR 02)
F - FINAL
MINOR

Form Approved
OMB No. 2040-0004
Approval expires 05-31-98

MONITORING PERIOD

	YEAR	MO	DAY		YEAR	MO	DAY
FROM	98	03	01	TO	98	03	31
	(20-21)	(22-23)	(24-25)		(26-27)	(28-29)	(30-31)

*** NO DISCHARGE [ ] ***

NOTE: Read instructions before completing this form.

PARAMETER (32-37)		(3 Card Only) QUANTITY OR LOADING (46-53) AVERAGE	(54-61) MAXIMUM	UNITS	(4 Card Only) QUANTITY OR CONCENTRATION (38-45) MINIMUM	(46-53) AVERAGE	(54-61) MAXIMUM	UNITS	NO. EX (62-63)	FREQUENCY OF ANALYSIS (64-68)	SAMPLE TYPE (69-70)
FLOW RATE	SAMPLE MEASUREMENT	******	108000	(07)	******	******	******		0	01/30	CALC.
00056 1 0 0 EFFLUENT GROSS VALUE	PERMIT REQUIREMENT	******	REPORT DAILY MX	GPD	******	******	******	**** ****		ONCE/ MONTH	CALCU
SOLIDS, TOTAL SUSPENDED	SAMPLE MEASUREMENT	******	******		******	******	22.0	(19)	0	01/30	G
00530 1 0 0 EFFLUENT GROSS VALUE	PERMIT REQUIREMENT	******	******	**** ****	******	******	30 DAILY MX	MG/L		ONCE/ MONTH	GRAB
OIL AND GREASE FREON EXTR-GRAV METH	SAMPLE MEASUREMENT	******	******		******	******	3.0	(19)	0	01/30	G
00556 1 0 0 EFFLUENT GROSS VALUE	PERMIT REQUIREMENT	******	******	**** ****	******	******	15 DAILY MX	MG/L		ONCE/ MONTH	GRAB
	SAMPLE MEASUREMENT										
	PERMIT REQUIREMENT										
	SAMPLE MEASUREMENT										
	PERMIT REQUIREMENT										
	SAMPLE MEASUREMENT										
	PERMIT REQUIREMENT										
	SAMPLE MEASUREMENT										
	PERMIT REQUIREMENT										

NAME/TITLE PRINCIPAL EXECUTIVE OFFICER			TELEPHONE		DATE		
Victor Basso Plant Representive	I CERTIFY UNDER PENALTY OF LAW THAT I HAVE PERSONALLY EXAMINED AND AM FAMILIAR WITH THE INFORMATION SUBMITTED HEREIN; AND BASED ON MY INQUIRY OF THOSE INDIVIDUALS IMMEDIATELY RESPONSIBLE FOR OBTAINING THE INFORMATION, I BELIEVE THE SUBMITTED INFORMATION IS TRUE, ACCURATE AND COMPLETE. I AM AWARE THAT THERE ARE SIGNIFICANT PENALTIES FOR SUBMITTING FALSE INFORMATION, INCLUDING THE POSSIBILITY OF FINE AND IMPRISONMENT. SEE 18 U.S.C. § 1001 AND 33 U.S.C. § 1319. *(Penalties under these statutes may include fines up to $10,000 and or maximum imprisonment of between 6 months and 5 years.)*	Victor Basso	7182044151		98	07	
TYPED OR PRINTED		SIGNATURE OF PRINCIPAL EXECUTIVE OFFICER OR AUTHORIZED AGENT	AREA CODE	NUMBER	YEAR	MO	DAY

COMMENTS AND EXPLANATION OF ANY VIOLATIONS *(Reference all attachments here)*

PERMITTEE NAME/ADDRESS (Include Facility Name/Location if Different)

NAME CONSOLIDATED EDISON CHEM LAB

ADDRESS 11TH STREET CONDUIT
31-01 20TH AVE. BLDG 138
LONG ISLAND CITY NY 11105

FACILITY 11TH STREET CONDUIT

LOCATION

ATTN: YI-CHANG SHAO

NATIONAL POLLUTANT DISCHARGE ELIMINATION SYSTEM (NPDES)
DISCHARGE MONITORING REPORT (DMR)

(2-16)	(17-19)
NY0201138	001 V
PERMIT NUMBER	DISCHARGE NUMBER

GROUNDWTR INFILTR
(SUBR 02)
P - FINAL
MINOR

Form Approved.
OMB No. 2040-0004
Approval expires 05-31-98

MONITORING PERIOD

	YEAR	MO	DAY		YEAR	MO	DAY
FROM	97	03	01	TO	98	02	28
	(20-21)	(22-23)	(24-25)		(26-27)	(28-29)	(30-31)

*** NO DISCHARGE [ ] ***

NOTE: Read instructions before completing this form.

PARAMETER (32-37)		(3 Card Only) QUANTITY OR LOADING (46-53) AVERAGE	(54-61) MAXIMUM	UNITS	(4 Card Only) QUANTITY OR CONCENTRATION (38-45) MINIMUM	(46-53) AVERAGE	(54-61) MAXIMUM	UNITS	NO. EX (62-63)	FREQUENCY OF ANALYSIS (64-68)	SAMPLE TYPE (69-70)
TOLUENE	SAMPLE MEASUREMENT	******	******		******	******	<0.001	(19)	0	A	G
34010 V 0 0 SEE COMMENTS BELOW	PERMIT REQUIREMENT	******	******	*** ****	******	******	0.10 DAILY MX	MG/L		ANNUAL	GRAB
BENZENE	SAMPLE MEASUREMENT	******	******		******	******	<0.001	(19)	0	A	G
34030 V 0 0 SEE COMMENTS BELOW	PERMIT REQUIREMENT	******	******	*** ****	******	******	0.10 DAILY MX	MG/L		ANNUAL	GRAB
ETHYLBENZENE	SAMPLE MEASUREMENT	******	******		******	******	0.008	(19)	0	A	G
34371 V 0 0 SEE COMMENTS BELOW	PERMIT REQUIREMENT	******	******	*** ****	******	******	0.10 DAILY MX	MG/L		ANNUAL	GRAB
XYLENE	SAMPLE MEASUREMENT	******	******		******	******	<0.003	(19)	0	A	G
81551 V 0 0 SEE COMMENTS BELOW	PERMIT REQUIREMENT	******	******	*** ****	******	******	0.10 DAILY MX	MG/L		ANNUAL	GRAB
	SAMPLE MEASUREMENT										
	PERMIT REQUIREMENT										
	SAMPLE MEASUREMENT										
	PERMIT REQUIREMENT										
	SAMPLE MEASUREMENT										
	PERMIT REQUIREMENT										

NAME/TITLE PRINCIPAL EXECUTIVE OFFICER			TELEPHONE	DATE
Victor Basso Plant Representive	I CERTIFY UNDER PENALTY OF LAW THAT I HAVE PERSONALLY EXAMINED AND AM FAMILIAR WITH THE INFORMATION SUBMITTED HEREIN; AND BASED ON MY INQUIRY OF THOSE INDIVIDUALS IMMEDIATELY RESPONSIBLE FOR OBTAINING THE INFORMATION, I BELIEVE THE SUBMITTED INFORMATION IS TRUE, ACCURATE AND COMPLETE. I AM AWARE THAT THERE ARE SIGNIFICANT PENALTIES FOR SUBMITTING FALSE INFORMATION, INCLUDING THE POSSIBILITY OF FINE AND IMPRISONMENT. SEE 18 U.S.C. § 1001 AND 33 U.S.C. § 1318. *(Penalties under these statutes may include fines up to $10,000 and or maximum imprisonment of between 6 months and 5 years.)*	Victor Basso SIGNATURE OF PRINCIPAL EXECUTIVE OFFICER OR AUTHORIZED AGENT	7182044151 AREA CODE NUMBER	98 03 23 YEAR MO DAY
TYPED OR PRINTED				

COMMENTS AND EXPLANATION OF ANY VIOLATIONS *(Reference all attachments here)*

LIMITS APPLY FOR DIRECT DISCHARGE TO NEWTON CREEK. ALSO, THERE SHALL BE NO DISCHARGE OF POLYCHLORINATED BIPHENYL COMPOUNDS.

EPA Form 3320-1 (08-95) Previous editions may be used. (REPLACES EPA FORM T-40 WHICH MAY NOT BE USED.) 04757/980218-2022 PAGE 1 OF

EPA-NC-CE-0000136

PERMITTEE NAME/ADDRESS (Include Facility Name/Location if Different)

NAME CONSOLIDATED EDISON CHEM LAB

ADDRESS 11TH STREET CONDUIT
31-01 20TH AVE, BLDG 13E
LONG ISLAND CITY NY 11105

FACILITY 11TH STREET CONDUIT

LOCATION

ATTN: YI-CHANG SHAO

NATIONAL POLLUTANT DISCHARGE ELIMINATION SYSTEM (NPDES)
DISCHARGE MONITORING REPORT (DMR)

(2-16)	(17-19)
NY0201138	001 M
PERMIT NUMBER	DISCHARGE NUMBER

GROUNDWATER INFILTRATION FORM
(SUBR 02)
F - FINAL
MINOR

Form App. [illegible]
OMB No. 2040-0004
Approval expires 05-31-98

MONITORING PERIOD	YEAR	MO	DAY		YEAR	MO	DAY
FROM	98	02	01	TO	98	02	28
	(20-21)	(22-23)	(24-25)		(26-27)	(28-29)	(30-31)

*** NO DISCHARGE [ ] ***

NOTE: Read instructions before completing this form.

PARAMETER (32-37)		(3 Card Only) QUANTITY OR LOADING (46-53) AVERAGE	(54-61) MAXIMUM	UNITS	(4 Card Only) QUANTITY OR CONCENTRATION (38-45) MINIMUM	(46-53) AVERAGE	(54-61) MAXIMUM	UNITS	NO. EX (62-63)	FREQUENCY OF ANALYSIS (64-68)	SAMPLE TYPE (69-70)
FLOW RATE	SAMPLE MEASUREMENT	******	108000	(07)	******	******	******		0	01/30	CALC.
00056 1 0 0 EFFLUENT GROSS VALUE	PERMIT REQUIREMENT	******	[illegible] DAILY MX	GPD	******	******	******	**** ****		[illegible]	[illegible]
SOLIDS, TOTAL SUSPENDED	SAMPLE MEASUREMENT	******	******		******	******	9.0	(19)	0	01/30	G
00530 1 0 0 EFFLUENT GROSS VALUE	PERMIT REQUIREMENT	******	******	*** ****	******	******	[illegible] DAILY MX	MG/L		[illegible]	[illegible]
OIL AND GREASE FREON EXTR-GRAV METH	SAMPLE MEASUREMENT	******	******		******	******	2.3	(19)	0	01/30	G
00556 1 0 0 EFFLUENT GROSS VALUE	PERMIT REQUIREMENT	******	******	*** ****	******	******	[illegible] DAILY MX	MG/L		[illegible]	[illegible]
	SAMPLE MEASUREMENT										
	PERMIT REQUIREMENT										
	SAMPLE MEASUREMENT										
	PERMIT REQUIREMENT										
	SAMPLE MEASUREMENT										
	PERMIT REQUIREMENT										
	SAMPLE MEASUREMENT										
	PERMIT REQUIREMENT										

NAME/TITLE PRINCIPAL EXECUTIVE OFFICER			TELEPHONE		DATE		
Victor Basso Plant Representive	I CERTIFY UNDER PENALTY OF LAW THAT I HAVE PERSONALLY EXAMINED AND AM FAMILIAR WITH THE INFORMATION SUBMITTED HEREIN; AND BASED ON MY INQUIRY OF THOSE INDIVIDUALS IMMEDIATELY RESPONSIBLE FOR OBTAINING THE INFORMATION, I BELIEVE THE SUBMITTED INFORMATION IS TRUE, ACCURATE AND COMPLETE. I AM AWARE THAT THERE ARE SIGNIFICANT PENALTIES FOR SUBMITTING FALSE INFORMATION, INCLUDING THE POSSIBILITY OF FINE AND IMPRISONMENT. SEE 18 U.S.C. § 1001 AND 33 U.S.C. § 1319. *(Penalties under these statutes may include fines up to $10,000 and or maximum imprisonment of between 6 months and 6 years.)*	Victor P Basso	718	2044151	98	03	23
TYPED OR PRINTED		SIGNATURE OF PRINCIPAL EXECUTIVE OFFICER OR AUTHORIZED AGENT	AREA CODE	NUMBER	YEAR	MO	DAY

COMMENTS AND EXPLANATION OF ANY VIOLATIONS *(Reference all attachments here)*

PERMITTEE NAME/ADDRESS *(Include Facility Name/Location if Different)*

NAME CONSOLIDATED EDISON CHEM LAB

ADDRESS 11TH STREET CONDUIT
31-01 20TH AVE, BLDG 138
LONG ISLAND CITY NY 11105

FACILITY 11TH STREET CONDUIT

LOCATION

ATTN: YI-CHANG SHAO

NATIONAL POLLUTANT DISCHARGE ELIMINATION SYSTEM *(NPDES)*
DISCHARGE MONITORING REPORT *(DMR)*

PERMIT NUMBER (2-16)	DISCHARGE NUMBER (17-19)
NY0201138	001 M

Form Approved.
OMB No. 2040-0004
Approval expires 05-31-98

GROUNDWATER INFILTRATION FORM
(SUBR 02)
F - FINAL
MINOR

MONITORING PERIOD	YEAR	MO	DAY		YEAR	MO	DAY
FROM	98	01	01	TO	98	01	31
	(20-21)	(22-23)	(24-25)		(26-27)	(28-29)	(30-31)

*** NO DISCHARGE [ ] ***

NOTE: Read instructions before completing this form.

PARAMETER (32-37)		QUANTITY OR LOADING (3 Card Only) (46-53) AVERAGE	(54-61) MAXIMUM	UNITS	QUANTITY OR CONCENTRATION (4 Card Only) (38-45) MINIMUM	(46-53) AVERAGE	(54-61) MAXIMUM	UNITS	NO. EX (62-63)	FREQUENCY OF ANALYSIS (64-68)	SAMPLE TYPE (69-70)
FLOW RATE	SAMPLE MEASUREMENT	******	108000	(07)	******	******	******		0	01/30	CALC.
00056 1 0 0 EFFLUENT GROSS VALUE	PERMIT REQUIREMENT	******	REPORT DAILY MX	GPD	******	******	******	**** ****		ONCE/ MONTH	CALCTN
SOLIDS, TOTAL SUSPENDED	SAMPLE MEASUREMENT	******	******		******	******	16.0	(19)	0	01/30	G
00530 1 0 0 EFFLUENT GROSS VALUE	PERMIT REQUIREMENT	******	******	**** ****	******	******	30 DAILY MX	MG/L		ONCE/ MONTH	GRAB
OIL AND GREASE FREON EXTR-GRAV METH	SAMPLE MEASUREMENT	******	******		******	******	2.3	(19)	0	01/30	G
00556 1 0 0 EFFLUENT GROSS VALUE	PERMIT REQUIREMENT	******	******	**** ****	******	******	15 DAILY MX	MG/L		ONCE/ MONTH	GRAB
	SAMPLE MEASUREMENT										
	PERMIT REQUIREMENT										
	SAMPLE MEASUREMENT										
	PERMIT REQUIREMENT										
	SAMPLE MEASUREMENT										
	PERMIT REQUIREMENT										
	SAMPLE MEASUREMENT										
	PERMIT REQUIREMENT										

NAME/TITLE PRINCIPAL EXECUTIVE OFFICER			TELEPHONE		DATE		
Victor Basso Plant Representive	I CERTIFY UNDER PENALTY OF LAW THAT I HAVE PERSONALLY EXAMINED AND AM FAMILIAR WITH THE INFORMATION SUBMITTED HEREIN; AND BASED ON MY INQUIRY OF THOSE INDIVIDUALS IMMEDIATELY RESPONSIBLE FOR OBTAINING THE INFORMATION, I BELIEVE THE SUBMITTED INFORMATION IS TRUE, ACCURATE AND COMPLETE. I AM AWARE THAT THERE ARE SIGNIFICANT PENALTIES FOR SUBMITTING FALSE INFORMATION, INCLUDING THE POSSIBILITY OF FINE AND IMPRISONMENT. SEE 18 U.S.C. § 1001 AND 33 U.S.C. § 1319. *(Penalties under these statutes may include fines up to $10,000 and or maximum imprisonment of between 6 months and 6 years.)*	Victor C Basso	718	204-4151	98	2	23
TYPED OR PRINTED		SIGNATURE OF PRINCIPAL EXECUTIVE OFFICER OR AUTHORIZED AGENT	AREA CODE	NUMBER	YEAR	MO	DAY

COMMENTS AND EXPLANATION OF ANY VIOLATIONS *(Reference all attachments here)*

Discharge Monitoring Report (DMR)

Name	Consolidated Edison
Address	4 Irving Place
	New York NY 10003
Facility	11th Street Conduit
Location	Oakland and Water Street

NY0201138	001M
Permit Number	Discharge Number

GROUNDWATER INFILTRAT
SUBR 02
F-Final
Major

Monitoring Period: FROM YR-MO-DA 99-12-01 TO YR-MO-DA 99-12-31

No Discharge ☐

Parameter		Quantity or Loading AVERAGE	Quantity or Loading MAXIMUM	Quantity or Loading UNITS	Quality Or Concentration MINIMUM	Quality Or Concentration AVERAGE	Quality Or Concentration MAXIMUM	Quality Or Concentration UNITS	NO. EX	Sample Frequency	Sample Type
FLOW RATE	SAMPLE MEASUREMENT	* * * * *	108,000	07	* * * * *	* * * * *	* * * * *		0	ONCE/ MONTH	CALCTD
00056 1 0 0 EFFLUENT GROSS VALUE	PERMIT REQUIREMENT	* * * * *	REPORT DAILY MX	GPD	* * * * *	* * * * *	* * * * *			ONCE/ MONTH	CALCTD
SOLIDS, TOTAL SUSPENDED	SAMPLE MEASUREMENT	* * * * *	* * * * *		* * * * *	* * * * *	14	19	0	ONCE/ MONTH	GRAB
00530 1 0 0 EFFLUENT GROSS VALUE	PERMIT REQUIREMENT	* * * * *	* * * * *		* * * * *	* * * * *	50 DAILY MX	MG/L		ONCE/ MONTH	GRAB
OIL AND GREASE FREON EXTR-GRAV METH	SAMPLE MEASUREMENT	* * * * *	* * * * *		* * * * *	* * * * *	5	19	0	ONCE/ MONTH	GRAB
00556 1 0 0 EFFLUENT GROSS VALUE	PERMIT REQUIREMENT	* * * * *	* * * * *		* * * * *	* * * * *	15 DAILY MX	MG/L		ONCE/ MONTH	GRAB

Name/Title of Principal Executive Officer			Telephone	Date
Victor Basso	I certify under penalty of law that I have personally examined and am familiar with the information submitted herein: and based upon my inquiry of individuals immediately responsible for obtaining the information, I believe the submitted information is true accurate and complete. I am aware that there are significant penalties for submitting false information, including the possibility of fine and imprisonment. See 18 U.S.C 1001 & 33 U.S.C 1319.	Signature of Principal Executive Officer or Authorized Agent	(212) 460-2262	00-01-07 YR-MO-DA

Comments and explanations of any Violations:

EPA Form 3320-1 (8-95)

Discharge Monitoring Report (DMR)

Name	Consolidated Edison
Address	4 Irving Place
	New York NY 10003
Facility	11th Street Conduit
Location	Oakland and Water Street

NY0201138	001M
Permit Number	Discharge Number

GROUNDWATER INFILTRAT
SUBR 02
F-Final
Major

Monitoring Period: FROM YR-MO-DA 99-11-01 TO YR-MO-DA 99-11-30

No Discharge ☐

Parameter		Quantity or Loading AVERAGE	MAXIMUM	UNITS	Quality Or Concentration MINIMUM	AVERAGE	MAXIMUM	UNITS	NO. EX	Sample Frequency	Sample Type
FLOW RATE	SAMPLE MEASUREMENT	*****	108,000	07	*****	*****	*****		0	ONCE/ MONTH	CALCTD
00056 1 0 0 EFFLUENT GROSS VALUE	PERMIT REQUIREMENT	*****	REPORT DAILY MX	GPD	*****	*****	*****			ONCE/ MONTH	CALCTD
SOLIDS, TOTAL SUSPENDED	SAMPLE MEASUREMENT	*****	*****		*****	*****	8	19	0	ONCE/ MONTH	GRAB
00530 1 0 0 EFFLUENT GROSS VALUE	PERMIT REQUIREMENT	*****	*****		*****	*****	30 DAILY MX	MG/L		ONCE/ MONTH	GRAB
OIL AND GREASE FREON EXTR-GRAV METH	SAMPLE MEASUREMENT	*****	*****		*****	*****	6	19	0	ONCE/ MONTH	GRAB
00556 1 0 0 EFFLUENT GROSS VALUE	PERMIT REQUIREMENT	*****	*****		*****	*****	15 DAILY MX	MG/L		ONCE/ MONTH	GRAB

Name/Title of Principal Executive Officer		Telephone	Date
Victor Basso	I certify under penalty of law that I have personally examined and am familiar with the information submitted herein: and based upon my inquiry of individuals immediately responsible for obtaining the information, I believe the submitted information is true accurate and complete. I am aware that there are significant penalties for submitting false information, including the possibility of fine and imprisonment. See 18 U.S.C 1001 & 33 U.S.C 1319.	(212) 460-2262	99-12-13 YR-MO-DA

Signature of Principal Executive Officer or Authorized Agent

Comments and explanations of any Violations:

EPA Form 3320-1 (8-95)

Discharge Monitoring Report (DMR)

Name	Consolidated Edison
Address	4 Irving Place
	New York NY 10003
Facility	11th Street Conduit
Location	Oakland and Water Street

NY0201138	001M	GROUNDWATER INFILTRAT
Permit Number	Discharge Number	SUBR 02
		F-Final
		Major

Monitoring Period: FROM YR-MO-DA 99-10-01 TO YR-MO-DA 99-10-31

No Discharge ☐

Parameter		Quantity or Loading AVERAGE	MAXIMUM	UNITS	Quality Or Concentration MINIMUM	AVERAGE	MAXIMUM	UNITS	NO. EX	Sample Frequency	Sample Type
FLOW RATE	SAMPLE MEASUREMENT	*****	108,000	07	*****	*****	*****		0	ONCE/ MONTH	CALCTD
00056 1 0 0 EFFLUENT GROSS VALUE	PERMIT REQUIREMENT	*****	REPORT DAILY MX	GPD	*****	*****	*****			ONCE/ MONTH	CALCTD
SOLIDS, TOTAL SUSPENDED	SAMPLE MEASUREMENT	*****	*****		*****	*****	21	19	0	ONCE/ MONTH	GRAB
00530 1 0 0 EFFLUENT GROSS VALUE	PERMIT REQUIREMENT	*****	*****		*****	*****	30 DAILY MX	MG/L		ONCE/ MONTH	GRAB
OIL AND GREASE FREON EXTR-GRAV METH	SAMPLE MEASUREMENT	*****	*****		*****	*****	6	19	0	ONCE/ MONTH	GRAB
00556 1 0 0 EFFLUENT GROSS VALUE	PERMIT REQUIREMENT	*****	*****		*****	*****	15 DAILY MX	MG/L		ONCE/ MONTH	GRAB

Name/Title of Principal Executive Officer		Telephone	Date
Victor Basso	I certify under penalty of law that I have personally examined and am familiar with the information submitted herein; and based upon my inquiry of individuals immediately responsible for obtaining the information, I believe the submitted information is true accurate and complete. I am aware that there are significant penalties for submitting false information, including the possibility of fine and imprisonment. See 18 U.S.C 1001 & 33 U.S.C 1319.	Signature of Principal Executive Officer or Authorized Agent	(212) 460-2262	99-11-10 YR-MO-DA

Comments and explanations of any Violations:

EPA Form 3320-1 (8-95)

Discharge Monitoring Report (DMR)

Name	Consolidated Edison
Address	4 Irving Place
	New York NY 10003
Facility	11th Street Conduit
Location	Oakland and Water Street

NY0201138	001M
Permit Number	Discharge Number

GROUNDWATER INFILTRAT
SUBR 02
F-Final
Major

Monitoring Period
FROM YR-MO-DA 99-09-01 TO YR-MO-DA 99-09-30

No Discharge ☐

Parameter		Quantity or Loading AVERAGE	Quantity or Loading MAXIMUM	Quantity or Loading UNITS	Quality Or Concentration MINIMUM	Quality Or Concentration AVERAGE	Quality Or Concentration MAXIMUM	Quality Or Concentration UNITS	NO. EX	Sample Frequency	Sample Type
FLOW RATE	SAMPLE MEASUREMENT	*****	108,000	07	*****	*****	*****		0	ONCE/ MONTH	CALCTD
00056 1 0 0 EFFLUENT GROSS VALUE	PERMIT REQUIREMENT	*****	REPORT DAILY MX	GPD	*****	*****	*****			ONCE/ MONTH	CALCTD
SOLIDS, TOTAL SUSPENDED	SAMPLE MEASUREMENT	*****	*****		*****	*****	31	19	0	ONCE/ MONTH	GRAB
00530 1 0 0 EFFLUENT GROSS VALUE	PERMIT REQUIREMENT	*****	*****		*****	*****	30 DAILY MX	MG/L		ONCE/ MONTH	GRAB
OIL AND GREASE FREON EXTR-GRAV METH	SAMPLE MEASUREMENT	*****	*****		*****	*****	16	19	1	ONCE/ MONTH	GRAB
00556 1 0 0 EFFLUENT GROSS VALUE	PERMIT REQUIREMENT	*****	*****		*****	*****	15 DAILY MX	MG/L		ONCE/ MONTH	GRAB

Name/Title of Principal Executive Officer			Telephone	Date
Victor Basso	I certify under penalty of law that I have personally examined and am familiar with the information submitted herein: and based upon my inquiry of individuals immediately responsible for obtaining the information, I believe the submitted information is true accurate and complete. I am aware that there are significant penalties for submitting false information, including the possibility of fine and imprisonment. See 18 U.S.C 1001 & 33 U.S.C 1319.	Signature of Principal Executive Officer or Authorized Agent	(212) 460-2262	99-10-14 YR-MO-DA

Comments and explanations of any Violations:

EPA Form 3320-1 (8-95)

Discharge Monitoring Report (DMR)

Name	Consolidated Edison
Address	4 Irving Place
	New York NY 10003
Facility	11th Street Conduit
Location	Oakland and Water Street

NY0201138	001M	GROUNDWATER INFILTRAT
Permit Number	Discharge Number	SUBR 02
		F-Final
		Major

Monitoring Period: FROM YR MO DA 99-08-01 TO YR MO DA 99-08-31

No Discharge ☐

Parameter		Quantity or Loading AVERAGE	Quantity or Loading MAXIMUM	Quantity or Loading UNITS	Quality Or Concentration MINIMUM	Quality Or Concentration AVERAGE	Quality Or Concentration MAXIMUM	Quality Or Concentration UNITS	NO. EX	Sample Frequency	Sample Type
FLOW RATE	SAMPLE MEASUREMENT	* * * * *	108,000	07	* * * * *	* * * * *	* * * * *		0	ONCE/ MONTH	CALCTD
00056 1 0 0 EFFLUENT GROSS VALUE	PERMIT REQUIREMENT	*****	REPORT DAILY MX	GPD	*****	*****	*****			ONCE/ MONTH	CALCTD
SOLIDS, TOTAL SUSPENDED	SAMPLE MEASUREMENT	* * * * *	* * * * *		* * * * *	* * * * *	30	19	0	ONCE/ MONTH	GRAB
00530 1 0 0 EFFLUENT GROSS VALUE	PERMIT REQUIREMENT	*****	*****		*****	*****	50 DAILY MX	MG/L		ONCE/ MONTH	GRAB
OIL AND GREASE FREON EXTR GRAV METH	SAMPLE MEASUREMENT	* * * * *	* * * * *		* * * * *	* * * * *	14	19	0	ONCE/ MONTH	GRAB
00556 1 0 0 EFFLUENT GROSS VALUE	PERMIT REQUIREMENT	*****	*****		*****	*****	15 DAILY MX	MG/L		ONCE/ MONTH	GRAB

Name/Title of Principal Executive Officer			Telephone	Date
Victor Basso	I certify under penalty of law that I have personally examined and am familiar with the information submitted herein; and based upon my inquiry of individuals immediately responsible for obtaining the information, I believe the submitted information is true accurate and complete. I am aware that there are significant penalties for submitting false information, including the possibility of fine and imprisonment. See 18 U.S.C 1001 & 33 U.S.C 1319	Signature of Principal Executive Officer or Authorized Agent	(212) 460-2262	99-09-13 YR MO DA

Comments and explanations of any Violations:

EPA Form 3320-1 (8-93)

EPA-NC-CE-0000143

PAGE 04
CON ED
212-677-7715
08/24/1999 07:59

Discharge Monitoring Report (DMR)

Name	Consolidated Edison
Address	4 Irving Place
	New York NY 10003
Facility	11th Street Conduit
Location	Oakland and Water Street

NY0201138	001M
Permit Number	Discharge Number

GROUNDWATER INFILTRAT
SUBR 02
F-Final
Major

Monitoring Period	YR-MO-DA		YR-MO-DA
FROM	99-07-01	TO	99-07-31

No Discharge ☐

Parameter		Quantity or Loading AVERAGE	Quantity or Loading MAXIMUM	UNITS	Quality Or Concentration MINIMUM	Quality Or Concentration AVERAGE	Quality Or Concentration MAXIMUM	UNITS	NO. EX	Sample Frequency	Sample Type
FLOW RATE	SAMPLE MEASUREMENT	* * * * *	108,000	07	* * * * *	* * * * *	* * * * *		0	ONCE/ MONTH	CALCTD
00056 1 0 0 EFFLUENT GROSS VALUE	PERMIT REQUIREMENT	* * * * *	REPORT DAILY MX	GPD	* * * * *	* * * * *	* * * * *			ONCE/ MONTH	CALCTD
SOLIDS, TOTAL SUSPENDED	SAMPLE MEASUREMENT	* * * * *	* * * * *		* * * * *	* * * * *	15	19	0	ONCE/ MONTH	GRAB
00530 1 0 0 EFFLUENT GROSS VALUE	PERMIT REQUIREMENT	* * * * *	* * * * *		* * * * *	* * * * *	30 DAILY MX	MG/L		ONCE/ MONTH	GRAB
OIL AND GREASE FREON EXTR-GRAV METH	SAMPLE MEASUREMENT	* * * * *	* * * * *		* * * * *	* * * * *	4	19	0	ONCE/ MONTH	GRAB
00556 1 0 0 EFFLUENT GROSS VALUE	PERMIT REQUIREMENT	* * * * *	* * * * *		* * * * *	* * * * *	15 DAILY MX	MG/L		ONCE/ MONTH	GRAB

Name/Title of Principal Executive Officer	Certification	Signature of Principal Executive Officer or Authorized Agent	Telephone	Date
Victor Basso	I certify under penalty of law that I have personally examined and am familiar with the information submitted herein; and based upon my inquiry of individuals immediately responsible for obtaining the information, I believe the submitted information is true accurate and complete. I am aware that there are significant penalties for submitting false information, including the possibility of fine and imprisonment. See 18 U.S.C 1001 & 33 U.S.C 1319.		(212) 460-2262	99-08-06 YR-MO-DA

Comments and explanations of any Violations:

EPA Form 3320-1 (8-95)

Discharge Monitoring Report (DMR)

Name Consolidated Edison
Address 4 Irving Place
New York NY 10003
Facility 11th Street Conduit
Location Oakland and Water Street

NY0201138 (Permit Number) | 001M (Discharge Number)

GROUNDWATER INFILTRAT
SUBR 02
F-Final
Major

Monitoring Period: FROM YR-MO-DA 99-06-01 TO YR-MO-DA 99-06-30

No Discharge ☐

Parameter		Quantity or Loading AVERAGE	Quantity or Loading MAXIMUM	Quantity or Loading UNITS	Quality Or Concentration MINIMUM	Quality Or Concentration AVERAGE	Quality Or Concentration MAXIMUM	Quality Or Concentration UNITS	NO. EX	Frequency	Sample Type
FLOW RATE	SAMPLE MEASUREMENT	* * * * *	108,000	07	* * * * *	* * * * *	* * * * *		0	ONCE/ MONTH	CALCTD
00056 1 0 0 EFFLUENT GROSS VALUE	PERMIT REQUIREMENT	*****	REPORT DAILY MX	GPD	*****	*****	*****			ONCE/ MONTH	CALCTD
SOLIDS, TOTAL SUSPENDED	SAMPLE MEASUREMENT	* * * * *	* * * * *		* * * * *	* * * * *	<5	19	0	ONCE/ MONTH	GRAB
00530 1 0 0 EFFLUENT GROSS VALUE	PERMIT REQUIREMENT	*****	*****		*****	*****	30 DAILY MX	MG/L		ONCE/ MONTH	GRAB
OIL AND GREASE FREON EXTR-GRAV METH	SAMPLE MEASUREMENT	* * * * *	* * * * *		* * * * *	* * * * *	3	19	0	ONCE/ MONTH	GRAB
00556 1 0 0 EFFLUENT GROSS VALUE	PERMIT REQUIREMENT	*****	*****		*****	*****	15 DAILY MX	MG/L		ONCE/ MONTH	GRAB

Name/Title of Principal Executive Officer			Telephone	Date
Victor Basso	I certify under penalty of law that I have personally examined and am familiar with the information submitted herein: and based upon my inquiry of individuals immediately responsible for obtaining the information, I believe the submitted information is true accurate and complete. I am aware that there are significant penalties for submitting false information, including the possibility of fine and imprisonment. See 18 U.S.C 1001 & 33 U.S.C 1319.	Signature of Principal Executive Officer or Authorized Agent	(212) 460-2262	99-07-14 YR-MO-DA

Comments and explanations of any Violations:

EPA Form 3320-1 (8-95)

Discharge Monitoring Report (DMR)

Name	Consolidated Edison
Address	4 Irving Place
	New York NY 10003
Facility	11th Street Conduit
Location	Oakland and Water Street

NY0201138	001M
Permit Number	Discharge Number

GROUNDWATER INFILTRAT
SUBR 02
F-Final
Major

Monitoring Period: FROM YR-MO-DA 99-05-01 TO YR-MO-DA 99-05-31

No Discharge ☐

Parameter		Quantity or Loading AVERAGE	Quantity or Loading MAXIMUM	Quantity or Loading UNITS	Quality Or Concentration MINIMUM	Quality Or Concentration AVERAGE	Quality Or Concentration MAXIMUM	Quality Or Concentration UNITS	NO. EX	Sample Frequency	Sample Type
FLOW RATE	SAMPLE MEASUREMENT	* * * * *	108,000	07	* * * * *	* * * * *	* * * * *		0	ONCE/ MONTH	CALCTD
00056 1 0 0 EFFLUENT GROSS VALUE	PERMIT REQUIREMENT	*****	REPORT DAILY MX	GPD	*****	*****	*****			ONCE/ MONTH	CALCTD
SOLIDS, TOTAL SUSPENDED	SAMPLE MEASUREMENT	* * * * *	* * * * *		* * * * *	* * * * *	4	19	0	ONCE/ MONTH	GRAB
00530 1 0 0 EFFLUENT GROSS VALUE	PERMIT REQUIREMENT	*****	*****		*****	*****	50 DAILY MX	MG/L		ONCE/ MONTH	GRAB
OIL AND GREASE FREON EXTR-GRAV METH	SAMPLE MEASUREMENT	* * * * *	* * * * *		* * * * *	* * * * *	5	19	0	ONCE/ MONTH	GRAB
00556 1 0 0 EFFLUENT GROSS VALUE	PERMIT REQUIREMENT	*****	*****		*****	*****	15 DAILY MX	MG/L		ONCE/ MONTH	GRAB

Name/Title of Principal Executive Officer			Telephone	Date
Victor Basso	I certify under penalty of law that I have personally examined and am familiar with the information submitted herein; and based upon my inquiry of individuals immediately responsible for obtaining the information, I believe the submitted information is true accurate and complete. I am aware that there are significant penalties for submitting false information, including the possibility of fine and imprisonment. See 18 U.S.C 1001 & 33 U.S.C 1319.	Victor Basso Signature of Principal Executive Officer or Authorized Agent	(212) 460-2262	99-06-11 YR-MO-DA

Comments and explanations of any Violations:

EPA Form 3320-1 (8-95)

PERMITTEE NAME/ADDRESS *(Include Facility Name/Location if Different)*
NAME CONSOLIDATED EDISON CHEM LAB
ADDRESS 11TH STREET CONDUIT
4 IRVING PLACE ROOM 1445-S
NEW YORK NY 10003
FACILITY LOCATION 11TH STREET CONDUIT
NEW YORK NY 10003
ATTN: YI-CHANG SHAO

NATIONAL POLLUTANT DISCHARGE ELIMINATION SYSTEM *(NPDES)*
DISCHARGE MONITORING REPORT *(DMR)*

NY0201130	001 M	MINOR (SUBR 02) F - FINAL
PERMIT NUMBER (2-16)	DISCHARGE NUMBER (17-19)	GROUNDWATER INFILTRATION&STORM

MONITORING PERIOD

	YEAR	MO	DAY		YEAR	MO	DAY
FROM	99	04	01	TO	99	04	30
	(20-21)	(22-23)	(24-25)		(26-27)	(28-29)	(30-31)

*** NO DISCHARGE [ ] ***

NOTE: Read Instructions before completing this form.

Form Approved.
OMB No. 2[illegible]-0004
Approval expires 05-31-98

2-K1

PARAMETER (32-37)		(3 Card Only) QUANTITY OR LOADING (46-53) AVERAGE	(54-61) MAXIMUM	UNITS	(4 Card Only) QUANTITY OR CONCENTRATION (38-45) MINIMUM	(46-53) AVERAGE	(54-61) MAXIMUM	UNITS	NO. EX (62-63)	FREQUENCY OF ANALYSIS (64-68)	SAMPLE TYPE (69-70)
FLOW RATE	SAMPLE MEASUREMENT	******	108000	(07)	******	******	******		0	01/30	CA
00056 1 0 0 EFFLUENT GROSS VALU	PERMIT REQUIREMENT	******	****** DAILY MX	GPD	******	******	******	*** ****		NEV MONTH	MEASRM
SOLIDS, TOTAL SUSPENDED	SAMPLE MEASUREMENT	******	******		******	******	11.0	(19)	0	01/30	GR
00530 1 0 0 EFFLUENT GROSS VALU	PERMIT REQUIREMENT	******	****** 30 DAILY MX	*** ****	******	******	30 DAILY MX	MG/L		NEV MONTH	MEASRM
OIL & GREASE	SAMPLE MEASUREMENT	******	******		******	******	5.0	(19)	0	01/30	GR
00556 1 0 0 EFFLUENT GROSS VALU	PERMIT REQUIREMENT	******	****** 15 DAILY MX	*** ****	******	******	15 DAILY MX	MG/L		NEV MONTH	MEASRM
	SAMPLE MEASUREMENT										
	PERMIT REQUIREMENT										
	SAMPLE MEASUREMENT										
	PERMIT REQUIREMENT										
	SAMPLE MEASUREMENT										
	PERMIT REQUIREMENT										
	SAMPLE MEASUREMENT										
	PERMIT REQUIREMENT										

NAME/TITLE PRINCIPAL EXECUTIVE OFFICER			TELEPHONE	DATE		
Victor Basso Plant Representative	I CERTIFY UNDER PENALTY OF LAW THAT I HAVE PERSONALLY EXAMINED AND AM FAMILIAR WITH THE INFORMATION SUBMITTED HEREIN; AND BASED ON MY INQUIRY OF THOSE INDIVIDUALS IMMEDIATELY RESPONSIBLE FOR OBTAINING THE INFORMATION, I BELIEVE THE SUBMITTED INFORMATION IS TRUE, ACCURATE AND COMPLETE. I AM AWARE THAT THERE ARE SIGNIFICANT PENALTIES FOR SUBMITTING FALSE INFORMATION, INCLUDING THE POSSIBILITY OF FINE AND IMPRISONMENT. SEE 18 U.S.C. § 1001 AND 33 U.S.C. § 1319. *(Penalties under these statutes may include fines up to $10,000 and or maximum imprisonment of between 6 months and 5 years.)*	Victor Basso SIGNATURE OF PRINCIPAL EXECUTIVE OFFICER OR AUTHORIZED AGENT	2124604363	99	05	19
TYPED OR PRINTED			AREA CODE NUMBER	YEAR	MO	DAY

COMMENTS AND EXPLANATION OF ANY VIOLATIONS *(Reference all attachments here)*

PERMITTEE NAME/ADDRESS *(Include Facility Name/Location if Different)*
NAME CONSOLIDATED EDISON CHEM LAB
ADDRESS 11TH STREET CONDUIT
4 IRVING PLACE ROOM 1445-S
NEW YORK NY 10003
FACILITY LOCATION 11TH STREET CONDUIT
NEW YORK NY 10003
ATTN: YI-CHANG SHAO

NATIONAL POLLUTANT DISCHARGE ELIMINATION SYSTEM *(NPDES)*
DISCHARGE MONITORING REPORT *(DMR)*

NY0201134	001 M
PERMIT NUMBER (2-16)	DISCHARGE NUMBER (17-19)

MINOR
(SUBR 02)
F - FINAL
GROUNDWATER INFILTRATION/STORM

MONITORING PERIOD	YEAR	MO	DAY		YEAR	MO	DAY
FROM	99	03	01	TO	99	03	31
	(20-21)	(22-23)	(24-25)		(26-27)	(28-29)	(30-31)

*** NO DISCHARGE [ ] ***

Form Approved.
OMB No. 2040-0004
Approval expires 05-31-98

NOTE: Read Instructions before completing this form.

PARAMETER (32-37)		(3 Card Only) QUANTITY OR LOADING (46-53) AVERAGE	(54-61) MAXIMUM	UNITS	(4 Card Only) QUANTITY OR CONCENTRATION (38-45) MINIMUM	(46-53) AVERAGE	(54-61) MAXIMUM	UNITS	NO. EX (62-63)	FREQUENCY OF ANALYSIS (64-68)	SAMPLE TYPE (69-70)
FLOW RATE	SAMPLE MEASUREMENT	******	108000	(07)	******	******	******		0	01/30	CALC
00056 1 0 0 EFFLUENT GROSS VALUE	PERMIT REQUIREMENT	******	******	MGD	******	******	******	*** ****			
SOLIDS, TOTAL SUSPENDED	SAMPLE MEASUREMENT	******	******		******	******	12.0	(19)	0	01/30	G
00530 1 0 0 EFFLUENT GROSS VALUE	PERMIT REQUIREMENT	******	******	*** ****	******	******	DAILY MX	MG/L			
OIL & GREASE	SAMPLE MEASUREMENT	******	******		******	******	5.0	(19)	0	01/30	G
00556 1 0 0 EFFLUENT GROSS VALUE	PERMIT REQUIREMENT	******	******	*** ****	******	******	DAILY MX	MG/L			
	SAMPLE MEASUREMENT										
	PERMIT REQUIREMENT										
	SAMPLE MEASUREMENT										
	PERMIT REQUIREMENT										
	SAMPLE MEASUREMENT										
	PERMIT REQUIREMENT										
	SAMPLE MEASUREMENT										
	PERMIT REQUIREMENT										

NAME/TITLE PRINCIPAL EXECUTIVE OFFICER		TELEPHONE	DATE		
Victor Basso Plant Representive	I CERTIFY UNDER PENALTY OF LAW THAT I HAVE PERSONALLY EXAMINED AND AM FAMILIAR WITH THE INFORMATION SUBMITTED HEREIN; AND BASED ON MY INQUIRY OF THOSE INDIVIDUALS IMMEDIATELY RESPONSIBLE FOR OBTAINING THE INFORMATION, I BELIEVE THE SUBMITTED INFORMATION IS TRUE, ACCURATE AND COMPLETE. I AM AWARE THAT THERE ARE SIGNIFICANT PENALTIES FOR SUBMITTING FALSE INFORMATION, INCLUDING THE POSSIBILITY OF FINE AND IMPRISONMENT. SEE 18 U.S.C. § 1001 AND 33 U.S.C. § 1319. *(Penalties under these statutes may include fines up to $10,000 and or maximum imprisonment of between 6 months and 5 years.)*	2124604363	95	03	17
TYPED OR PRINTED	SIGNATURE OF PRINCIPAL EXECUTIVE OFFICER OR AUTHORIZED AGENT	AREA CODE NUMBER	YEAR	MO	DAY

COMMENTS AND EXPLANATION OF ANY VIOLATIONS *(Reference all attachments here)*

PERMITTEE NAME/ADDRESS *(Include Facility Name/Location if Different)*
NAME CONSOLIDATED EDISON CHEM LAB
ADDRESS 11TH STREET CONDUIT
4 IRVING PLACE ROOM 1445-S
NEW YORK NY 10003
FACILITY LOCATION 11TH STREET CONDUIT
NEW YORK NY 10003
ATTN: YI-CHANG SHAO

NATIONAL POLLUTANT DISCHARGE ELIMINATION SYSTEM *(NPDES)*
DISCHARGE MONITORING REPORT *(DMR)*

NY0201138	001 M
PERMIT NUMBER	DISCHARGE NUMBER

MINOR
(SUBR 02)
F - FINAL
GROUNDWATER INFILTRATION&STORM

MONITORING PERIOD	YEAR	MO	DAY		YEAR	MO	DAY
FROM	99	02	01	TO	99	02	28
	(20-21)	(22-23)	(24-25)		(26-27)	(28-29)	(30-31)

*** NO DISCHARGE [ ] ***

Form Approved.
OMB No. 2040-0004
Approval expires 05-31-98

2-MIN

NOTE: Read Instructions before completing this form.

PARAMETER (32-37)		(3 Card Only) QUANTITY OR LOADING (46-53) AVERAGE	(54-61) MAXIMUM	UNITS	(4 Card Only) QUANTITY OR CONCENTRATION (38-45) MINIMUM	(46-53) AVERAGE	(54-61) MAXIMUM	UNITS	NO. EX (62-63)	FREQUENCY OF ANALYSIS (64-68)	SAMPLE TYPE (69-70)
FLOW RATE	SAMPLE MEASUREMENT	******	108000	(07)	******	******	******		0	01/30	CALC.
00056 1 0 0 EFFLUENT GROSS VALUE	PERMIT REQUIREMENT	******	Report DAILY MX	GPD	******	******	******	**** ****			
SOLIDS, TOTAL SUSPENDED	SAMPLE MEASUREMENT	******	******		******	******	13.0	(19)	0	01/30	G
00530 1 0 0 EFFLUENT GROSS VALUE	PERMIT REQUIREMENT	******	******	*** ****	******	******	30 DAILY MX	MG/L		1/MONTH	GRAB
OIL AND GREASE FREON EXTR-GRAV METH	SAMPLE MEASUREMENT	******	******		******	******	< 5.0	(19)	0	01/30	G
00556 1 0 0 EFFLUENT GROSS VALUE	PERMIT REQUIREMENT	******	******	*** ****	******	******	15 DAILY MX	MG/L		1/MONTH	GRAB
	SAMPLE MEASUREMENT										
	PERMIT REQUIREMENT										
	SAMPLE MEASUREMENT										
	PERMIT REQUIREMENT										
	SAMPLE MEASUREMENT										
	PERMIT REQUIREMENT										
	SAMPLE MEASUREMENT										
	PERMIT REQUIREMENT										

NAME/TITLE PRINCIPAL EXECUTIVE OFFICER			TELEPHONE	DATE		
Victor Basso Plant Representive	I CERTIFY UNDER PENALTY OF LAW THAT I HAVE PERSONALLY EXAMINED AND AM FAMILIAR WITH THE INFORMATION SUBMITTED HEREIN; AND BASED ON MY INQUIRY OF THOSE INDIVIDUALS IMMEDIATELY RESPONSIBLE FOR OBTAINING THE INFORMATION, I BELIEVE THE SUBMITTED INFORMATION IS TRUE, ACCURATE AND COMPLETE. I AM AWARE THAT THERE ARE SIGNIFICANT PENALTIES FOR SUBMITTING FALSE INFORMATION, INCLUDING THE POSSIBILITY OF FINE AND IMPRISONMENT. SEE 18 U.S.C. § 1001 AND 33 U.S.C. § 1319. *(Penalties under these statutes may include fines up to $10,000 and or maximum imprisonment of between 6 months and 5 years.)*		2124604363	99	3	16
TYPED OR PRINTED		SIGNATURE OF PRINCIPAL EXECUTIVE OFFICER OR AUTHORIZED AGENT	AREA CODE NUMBER	YEAR	MO	DAY

COMMENTS AND EXPLANATION OF ANY VIOLATIONS *(Reference all attachments here)*

PERMITTEE NAME/ADDRESS *(Include Facility Name/Location if Different)*
NAME CONSOLIDATED EDISON CHEM LAB
ADDRESS 11TH STREET CONDUIT
4 IRVING PLACE ROOM 1449-S
NEW YORK NY 10003
FACILITY LOCATION 11TH STREET CONDUIT
NEW YORK NY 10003
ATTN: YI-CHANG SHAO

NATIONAL POLLUTANT DISCHARGE ELIMINATION SYSTEM *(NPDES)*
DISCHARGE MONITORING REPORT *(DMR)*

NY0201138 (2-16)	001 V (17-19)
PERMIT NUMBER	DISCHARGE NUMBER

MONITORING PERIOD

	YEAR	MO	DAY		YEAR	MO	DAY
FROM	95	03	01	TO	99	02	28
	(20-21)	(22-23)	(24-25)		(26-27)	(28-29)	(30-31)

MINOR
(SUBR 02)
F - FINAL
GROUNDWTR INFILTR.CSW ACT LVLS

*** NO DISCHARGE [ ] ***

Form Approved.
OMB No. 2040-0004
Approval expires 05-31-98

NOTE: Read Instructions before completing this form.

PARAMETER (32-37)		(3 Card Only) QUANTITY OR LOADING (46-53) AVERAGE	(54-61) MAXIMUM	UNITS	(4 Card Only) QUANTITY OR CONCENTRATION (38-45) MINIMUM	(46-53) AVERAGE	(54-61) MAXIMUM	UNITS	NO. EX (62-63)	FREQUENCY OF ANALYSIS (64-68)	SAMPLE TYPE (69-70)
TOLUENE	SAMPLE MEASUREMENT	******	******		******	******	< 0.00016	(19)	0	A	G
34010 V 0 0 SEE COMMENTS BELOW	PERMIT REQUIREMENT	******	******	**** ****	******	******	0.010 DAILY MX	MG/L		ANNUAL	GR
BENZENE	SAMPLE MEASUREMENT	******	******		******	******	< 0.00013	(19)	0	A	G
34030 V 0 0 SEE COMMENTS BELOW	PERMIT REQUIREMENT	******	******	**** ****	******	******	0.010 DAILY MX	MG/L		ANNUAL	GR
ETHYLBENZENE	SAMPLE MEASUREMENT	******	******		******	******	0.00886	(19)	0	A	G
34371 V 0 0 SEE COMMENTS BELOW	PERMIT REQUIREMENT	******	******	**** ****	******	******	0.010 DAILY MX	MG/L		ANNUAL	GR
XYLENE	SAMPLE MEASUREMENT	******	******		******	******	0.00261	(19)	0	A	G
81551 V 0 0 SEE COMMENTS BELOW	PERMIT REQUIREMENT	******	******	**** ****	******	******	0.010 DAILY MX	MG/L		ANNUAL	GR
	SAMPLE MEASUREMENT										
	PERMIT REQUIREMENT										
	SAMPLE MEASUREMENT										
	PERMIT REQUIREMENT										
	SAMPLE MEASUREMENT										
	PERMIT REQUIREMENT										

NAME/TITLE PRINCIPAL EXECUTIVE OFFICER		TELEPHONE	DATE		
Victor Basso Plant Representative	I CERTIFY UNDER PENALTY OF LAW THAT I HAVE PERSONALLY EXAMINED AND AM FAMILIAR WITH THE INFORMATION SUBMITTED HEREIN; AND BASED ON MY INQUIRY OF THOSE INDIVIDUALS IMMEDIATELY RESPONSIBLE FOR OBTAINING THE INFORMATION, I BELIEVE THE SUBMITTED INFORMATION IS TRUE, ACCURATE AND COMPLETE. I AM AWARE THAT THERE ARE SIGNIFICANT PENALTIES FOR SUBMITTING FALSE INFORMATION, INCLUDING THE POSSIBILITY OF FINE AND IMPRISONMENT. SEE 18 U.S.C. § 1001 AND 33 U.S.C. § 1319. *(Penalties under these statutes may include fines up to $10,000 and or maximum imprisonment of between 6 months and 5 years.)*	2124604363	4	3	12
TYPED OR PRINTED	SIGNATURE OF PRINCIPAL EXECUTIVE OFFICER OR AUTHORIZED AGENT	AREA CODE	NUMBER	YEAR	MO DAY

COMMENTS AND EXPLANATION OF ANY VIOLATIONS *(Reference all attachments here)*
LIMITS APPLY FOR DIRECT DISCHARGE TO NEWTON CREEK. ALSO, THERE SHALL BE NO DISCHARGE OF POLYCHLORINATED BIPHENYL COMPOUNDS.

PERMITTEE NAME/ADDRESS *(Include Facility Name/Location if Different)*

NAME: CONSOLIDATED EDISON CHEM LAB

ADDRESS: 11TH STREET CONDUIT
4 IRVING PLACE ROOM 1445-S
NEW YORK NY 10003

FACILITY LOCATION: 11TH STREET CONDUIT

ATTN: YI-CHANG SHAO

NATIONAL POLLUTANT DISCHARGE ELIMINATION SYSTEM *(NPDES)*
DISCHARGE MONITORING REPORT *(DMR)*

NY0201146	001 M
PERMIT NUMBER	DISCHARGE NUMBER

MONITORING PERIOD

	YEAR	MO	DAY		YEAR	MO	DAY
FROM	99	01	01	TO	99	01	31
	(20-21)	(22-23)	(24-25)		(26-27)	(28-29)	(30-31)

MINOR
(SUBM 02)
F - FINAL
GROUNDWATER INFILTRATION/STORM

*** NO DISCHARGE [ ] ***

Form Approved.
OMB No. 2040-0004
Approval expires 05-31-98

NOTE: Read instructions before completing this form.

PARAMETER *(32-37)*		(3 Card Only) QUANTITY OR LOADING *(46-53)* AVERAGE	*(54-61)* MAXIMUM	UNITS	(4 Card Only) QUANTITY OR CONCENTRATION *(38-45)* MINIMUM	*(46-53)* AVERAGE	*(54-61)* MAXIMUM	UNITS	NO. EX *(62-63)*	FREQUENCY OF ANALYSIS *(64-68)*	SAMPLE TYPE *(69-70)*
FLOW RATE 00056 1 0 0 EFFLUENT GROSS VALUE	SAMPLE MEASUREMENT	******	108000	(07)	******	******	******		0	01/30	CALC
	PERMIT REQUIREMENT	******	REPORT DAILY MX	GPD	******	******	******	**** ****		ONCE / MONTH	CALC
SOLIDS, TOTAL SUSPENDED 00530 1 0 0 EFFLUENT GROSS VALUE	SAMPLE MEASUREMENT	******	******		******	******	11.0	(19)	0	01/30	G
	PERMIT REQUIREMENT	******	******	**** ****	******	******	REPORT DAILY MX	MG/L		ONCE / MONTH	GRAB
OIL AND GREASE FREON EXTR-GRAV METH 00556 1 0 0 EFFLUENT GROSS VALUE	SAMPLE MEASUREMENT	******	******		******	******	<5.0	(19)	0	01/30	G
	PERMIT REQUIREMENT	******	******	**** ****	******	******	REPORT DAILY MX	MG/L		ONCE / MONTH	GRAB
	SAMPLE MEASUREMENT										
	PERMIT REQUIREMENT										
	SAMPLE MEASUREMENT										
	PERMIT REQUIREMENT										
	SAMPLE MEASUREMENT										
	PERMIT REQUIREMENT										
	SAMPLE MEASUREMENT										
	PERMIT REQUIREMENT										

NAME/TITLE PRINCIPAL EXECUTIVE OFFICER			TELEPHONE	DATE		
Victor Basso Plant Representative	I CERTIFY UNDER PENALTY OF LAW THAT I HAVE PERSONALLY EXAMINED AND AM FAMILIAR WITH THE INFORMATION SUBMITTED HEREIN; AND BASED ON MY INQUIRY OF THOSE INDIVIDUALS IMMEDIATELY RESPONSIBLE FOR OBTAINING THE INFORMATION, I BELIEVE THE SUBMITTED INFORMATION IS TRUE, ACCURATE AND COMPLETE. I AM AWARE THAT THERE ARE SIGNIFICANT PENALTIES FOR SUBMITTING FALSE INFORMATION, INCLUDING THE POSSIBILITY OF FINE AND IMPRISONMENT. SEE 18 U.S.C. § 1001 AND 33 U.S.C. § 1319. *(Penalties under these statutes may include fines up to $10,000 and or maximum imprisonment of between 6 months and 6 years.)*	Victor Basso	2124604363	99	2	24
TYPED OR PRINTED		SIGNATURE OF PRINCIPAL EXECUTIVE OFFICER OR AUTHORIZED AGENT	AREA CODE / NUMBER	YEAR	MO	DAY

COMMENTS AND EXPLANATION OF ANY VIOLATIONS *(Reference all attachments here)*

Discharge Monitoring Report (DMR)

Name	Consolidated Edison
Address	4 Irving Place
	New York NY 10003
Facility	11th Street Conduit
Location	Oakland and Water Street

NY0201138	001M
Permit Number	Discharge Number

GROUNDWATER INFILTRAT
SUBR 02
F-Final
Major

Monitoring Period: FROM YR-MO-DA 00-12-01 TO YR-MO-DA 00-12-31

No Discharge ☐

Parameter		Quantity or Loading AVERAGE	Quantity or Loading MAXIMUM	Quantity or Loading UNITS	Quality Or Concentration MINIMUM	Quality Or Concentration AVERAGE	Quality Or Concentration MAXIMUM	Quality Or Concentration UNITS	NO. EX	Sample Frequency	Sample Type
FLOW RATE	SAMPLE MEASUREMENT	* * * * *	108,000	07	* * * * *	* * * * *	* * * * *		0	ONCE/ MON	CALCTD
00056 1 0 0 EFFLUENT GROSS VALUE	PERMIT REQUIREMENT	* * * * *	REPORT DAILY MX	GPD	* * * * *	* * * * *	* * * * *			ONCE/ MONTH	CALCTD
SOLIDS, TOTAL SUSPENDED	SAMPLE MEASUREMENT	* * * * *	* * * * *		* * * * *	* * * * *	11	19	0	ONCE/ MON	GRAB
00530 1 0 0 EFFLUENT GROSS VALUE	PERMIT REQUIREMENT	* * * * *	* * * * *		* * * * *	* * * * *	30 DAILY MX	MG/L		ONCE/ MONTH	GRAB
OIL AND GREASE FREON EXTR-GRAV METH	SAMPLE MEASUREMENT	* * * * *	* * * * *		* * * * *	* * * * *	5	19	0	ONCE/ MON	GRAB
00556 1 0 0 EFFLUENT GROSS VALUE	PERMIT REQUIREMENT	* * * * *	* * * * *		* * * * *	* * * * *	15 DAILY MX	MG/L		ONCE/ MONTH	GRAB

Name/Title of Principal Executive Officer		Telephone	Date
Victor Basso	I certify under penalty of law that I have personally examined and am familiar with the information submitted herein: and based on my inquiry of those individuals immediately responsible for obtaining the information, I believe the submitted information is true accurate and complete. I am aware that there are significant penalties for submitting false information, including the possibility of fine and imprisonment. See 18 U.S.C 1001 & 33 U.S.C 1319.	(212) 460-2262	01-01-11
	Victor Basso Signature of Principal Executive Officer or Authorized Agent		YR-MO-DA

Comments and explanations of any Violations:

EPA Form 3320-1 (8-95)

Discharge Monitoring Report (DMR)

Name	Consolidated Edison of New York
Address	4 Irving Place
	New York NY 10003
Facility	11th Street Conduit
Location	Oakland and Water Street

NY0201138 — Permit Number

001M — Discharge Number

GROUNDWATER INI RAT
SUBR 02
F-Final
Major

Monitoring Period: FROM YR-MO-DA 00-11-01 TO YR-MO-DA 00-11-30

No Discharge ☐

Parameter		Quantity or Loading AVERAGE	Quantity or Loading MAXIMUM	Quantity or Loading UNITS	Quality Or Concentration MINIMUM	Quality Or Concentration AVERAGE	Quality Or Concentration MAXIMUM	Quality Or Concentration UNITS	NO. EX	Sample Frequency	Sample Type
FLOW RATE	SAMPLE MEASUREMENT	* * * * *	108,000	07	* * * * *	* * * * *	* * * * *		0	ONCE/ MON	CALCTD
00056 1 0 0 EFFLUENT GROSS VALUE	PERMIT REQUIREMENT	* * * * *	REPORT DAILY MX	GPD	* * * * *	* * * * *	* * * * *			ONCE/ MONTH	CALCTD
SOLIDS, TOTAL SUSPENDED	SAMPLE MEASUREMENT	* * * * *	* * * * *		* * * * *	* * * * *	12	19	0	ONCE/ MON	GRAB
00530 1 0 0 EFFLUENT GROSS VALUE	PERMIT REQUIREMENT	* * * * *	* * * * *		* * * * *	* * * * *	50 DAILY MX	MG/L		ONCE/ MONTH	GRAB
OIL AND GREASE FREON EXTR-GRAV METH	SAMPLE MEASUREMENT	* * * * *	* * * * *		* * * * *	* * * * *	3	19	0	ONCE/ MON	GRAB
00556 1 0 0 EFFLUENT GROSS VALUE	PERMIT REQUIREMENT	* * * * *	* * * * *		* * * * *	* * * * *	15 DAILY MX	MG/L		ONCE/ MONTH	GRAB

Name/Title of Principal Executive Officer			Telephone	Date
Victor Basso	I certify under penalty of law that I have personally examined and am familiar with the information submitted herein; and based on my inquiry of those individuals immediately responsible for obtaining the information, I believe the submitted information is true accurate and complete. I am aware that there are significant penalties for submitting false information, including the possibility of fine and imprisonment. See 18 U.S.C 1001 & 33 U.S.C 1319.	Victor Basso Signature of Principal Executive Officer or Authorized Agent	(212) 460-2262	00-12-01 YR-MO-DA

Comments and explanations of any Violations:

Discharge Monitoring Report (DMR)

Name	Consolidated Edison of New York
Address	4 Irving Place
	New York NY 10003
Facility	11th Street Conduit
Location	Oakland and Water Street

NY0201138	001M	GROUNDWATER INFILTRAT
Permit Number	Discharge Number	SUBR 02
		F-Final
		Major

Monitoring Period: FROM YR-MO-DA 00-10-01 TO YR-MO-DA 00-10-31

No Discharge ☐

Parameter		Quantity or Loading AVERAGE	Quantity or Loading MAXIMUM	Quantity or Loading UNITS	Quality Or Concentration MINIMUM	Quality Or Concentration AVERAGE	Quality Or Concentration MAXIMUM	Quality Or Concentration UNITS	NO. EX	Sample Frequency	Sample Type
OIL AND GREASE FREON EXTR-GRAV METH 00556 1 0 0 EFFLUENT GROSS VALUE	SAMPLE MEASUREMENT	* * * * *	* * * * *		* * * * *	* * * * *	5	19 MG/L	0	ONCE/ MON	GRAB
	PERMIT REQUIREMENT						DAILY MX			ONCE/ MONTH	GRAB
FLOW RATE 00056 1 0 0 EFFLUENT GROSS VALUE	SAMPLE MEASUREMENT	* * * * *	108,000	07 GPD	* * * * *	* * * * *	* * * * *		0	ONCE/ MON	CALC'D
	PERMIT REQUIREMENT		REPORT DAILY MX							ONCE/ MONTH	CALC'D
SOLIDS, TOTAL SUSPENDED 00530 1 0 0 EFFLUENT GROSS VALUE	SAMPLE MEASUREMENT	* * * * *	* * * * *		* * * * *	* * * * *	20	19 MG/L	0	ONCE/ MON	GRAB
	PERMIT REQUIREMENT						DAILY MX			ONCE/ MONTH	GRAB

Name/Title of Principal Executive Officer			Telephone	Date
Victor Basso	I certify under penalty of law that I have personally examined and am familiar with the information submitted herein: and based on my inquiry of those individuals immediately responsible for obtaining the information, I believe the submitted information is true accurate and complete. I am aware that there are significant penalties for submitting false information, including the possibility of fine and imprisonment. See 18 U.S.C 1001 & 33 U.S.C 1319.	Victor Basso Signature of Principal Executive Officer or Authorized Agent	(212) 460-2262	00-11-15 YR-MO-DA

Comments and explanations of any Violations:

Discharge Monitoring Report (DMR)

Name	Consolidated Edison of New York
Address	4 Irving Place
	New York NY 10003
Facility	11th Street Conduit
Location	Oakland and Water Street

NY0201138	001M
Permit Number	Discharge Number

GROUNDWATER INFILTRAT
SUBR 02
F-Final
Major

Monitoring Period: FROM YR-MO-DA 00-09-01 TO YR-MO-DA 00-09-30

No Discharge ☐

Parameter		Quantity or Loading AVERAGE	MAXIMUM	UNITS	Quality Or Concentration MINIMUM	AVERAGE	MAXIMUM	UNITS	NO. EX	Sample Frequency	Sample Type
FLOW RATE	SAMPLE MEASUREMENT	* * * * *	108,000	07	* * * * *	* * * * *	* * * * *		0	ONCE/ MON	CALCTD
00056 1 0 0 EFFLUENT GROSS VALUE	PERMIT REQUIREMENT	* * * * *	REPORT DAILY MX	GPD	* * * * *	* * * * *	* * * * *			ONCE/ MONTH	CALCTD
SOLIDS, TOTAL SUSPENDED	SAMPLE MEASUREMENT	* * * * *	* * * * *		* * * * *	* * * * *	40	19	0	ONCE/ MON	GRAB
00530 1 0 0 EFFLUENT GROSS VALUE	PERMIT REQUIREMENT	* * * * *	* * * * *		* * * * *	* * * * *	50 DAILY MX	MG/L		ONCE/ MONTH	GRAB
OIL AND GREASE FREON EXTR-GRAV METH	SAMPLE MEASUREMENT	* * * * *	* * * * *		* * * * *	* * * * *	5	19	0	ONCE/ MON	GRAB
00556 1 0 0 EFFLUENT GROSS VALUE	PERMIT REQUIREMENT	* * * * *	* * * * *		* * * * *	* * * * *	15 DAILY MX	MG/L		ONCE/ MONTH	GRAB

Name/Title of Principal Executive Officer			Telephone	Date
Victor Basso	I certify under penalty of law that I have personally examined and am familiar with the information submitted herein: and based on my inquiry of those individuals immediately responsible for obtaining the information, I believe the submitted information is true accurate and complete. I am aware that there are significant penalties for submitting false information, including the possibility of fine and imprisonment. See 18 U.S.C 1001 & 33 U.S.C 1319.	Victor P. Basso Signature of Principal Executive Officer or Authorized Agent	(212) 460-2262	00-10-06 YR-MO-DA

Comments and explanations of any Violations:

EPA Form 3320-1 (8-95)

Discharge Monitoring Report (DMR)

Name	Consolidated Edison of New York
Address	4 Irving Place
	New York NY 10003
Facility	11th Street Conduit
Location	Oakland and Water Street

NY0201138	001M
Permit Number	Discharge Number

GROUNDWATER INFILTRAT
SUBR 02
F-Final
Major

Monitoring Period

FROM YR-MO-DA 00-08-01 TO YR-MO-DA 00-08-31

No Discharge ☐

Parameter		Quantity or Loading AVERAGE	MAXIMUM	UNITS	Quality Or Concentration MINIMUM	AVERAGE	MAXIMUM	UNITS	NO. EX	Sample Frequency	Sample Type
FLOW RATE	SAMPLE MEASUREMENT	* * * * *	108,000	07	* * * * *	* * * * *	* * * * *		0	ONCE/ MON	CALCTD
00056 1 0 0 EFFLUENT GROSS VALUE	PERMIT REQUIREMENT	*****	REPORT DAILY MX	GPD	*****	*****	*****			ONCE/ MONTH	CALCTD
SOLIDS, TOTAL SUSPENDED	SAMPLE MEASUREMENT	* * * * *	* * * * *		* * * * *	* * * * *	9	19	0	ONCE/ MON	GRAB
00530 1 0 0 EFFLUENT GROSS VALUE	PERMIT REQUIREMENT	*****	*****		*****	*****	30 DAILY MX	MG/L		ONCE/ MONTH	GRAB
OIL AND GREASE FREON EXTR-GRAV METH	SAMPLE MEASUREMENT	* * * * *	* * * * *		* * * * *	* * * * *	5	19	0	ONCE/ MON	GRAB
00556 1 0 0 EFFLUENT GROSS VALUE	PERMIT REQUIREMENT	*****	*****		*****	*****	15 DAILY MX	MG/L		ONCE/ MONTH	GRAB

Name/Title of Principal Executive Officer		Telephone	Date
Victor Basso	I certify under penalty of law that I have personally examined and am familiar with the information submitted herein: and based on my inquiry of those individuals immediately responsible for obtaining the information, I believe the submitted information is true accurate and complete. I am aware that there are significant penalties for submitting false information, including the possibility of fine and imprisonment. See 18 U.S.C 1001 & 33 U.S.C 1319.	Victor Basso Signature of Principal Executive Officer or Authorized Agent	(212) 460-2262	00-09-14 YR-MO-DA

Comments and explanations of any Violations:

EPA Form 3320-1 (8-95)

Discharge Monitoring Report (DMR)

Name	Consolidated Edison
Address	4 Irving Place
	New York NY 10003
Facility	11th Street Conduit
Location	Oakland and Water Street

NY0201138 — Permit Number

001M — Discharge Number

GROUNDWATER INFILTRAT
SUBR 02
F-Final
Major

Monitoring Period: FROM YR-MO-DA 00-07-01 TO YR-MO-DA 00-07-31

No Discharge ☐

Parameter		Quantity or Loading AVERAGE	MAXIMUM	UNITS	Quality Or Concentration MINIMUM	AVERAGE	MAXIMUM	UNITS	NO. EX	Sample Frequency	Sample Type
FLOW RATE	SAMPLE MEASUREMENT	* * * * *	108,000	07	* * * * *	* * * * *	* * * * *		0	ONCE/ MON	CALCTD
00056 1 0 0 EFFLUENT GROSS VALUE	PERMIT REQUIREMENT	*****	REPORT DAILY MX	GPD	*****	*****	*****			ONCE/ MONTH	CALCTD
SOLIDS, TOTAL SUSPENDED	SAMPLE MEASUREMENT	* * * * *	* * * * *		* * * * *	* * * * *	9	19	0	ONCE/ MON	GRAB
00530 1 0 0 EFFLUENT GROSS VALUE	PERMIT REQUIREMENT	*****	*****		*****	*****	30 DAILY MX	MG/L		ONCE/ MONTH	GRAB
OIL AND GREASE FREON EXTR-GRAV METH	SAMPLE MEASUREMENT	* * * * *	* * * * *		* * * * *	* * * * *	7	19	0	ONCE/ MON	GRAB
00556 1 0 0 EFFLUENT GROSS VALUE	PERMIT REQUIREMENT	*****	*****		*****	*****	15 DAILY MX	MG/L		ONCE/ MONTH	GRAB

Name/Title of Principal Executive Officer		Telephone	Date
Victor Basso	I certify under penalty of law that I have personally examined and am familiar with the information submitted herein: and based on my inquiry of those individuals immediately responsible for obtaining the information, I believe the submitted information is true accurate and complete. I am aware that there are significant penalties for submitting false information, including the possibility of fine and imprisonment. See 18 U.S.C 1001 & 33 U.S.C 1319.	(212) 460-2262	00-08-09
	Signature of Principal Executive Officer or Authorized Agent		YR-MO-DA

Comments and explanations of any Violations:

EPA Form 3320-1 (8-95)

Discharge Monitoring Report (DMR)

Name Consolidated Edison
Address 4 Irving Place
New York NY 10003
Facility 11th Street Conduit
Location Oakland and Water Street

NY0201138 — Permit Number
001M — Discharge Number

GROUNDWATER INFILTRAT
SUBR 02
F-Final
Major

Monitoring Period
FROM YR-MO-DA 00-06-01 TO YR-MO-DA 00-06-30

No Discharge ☐

Parameter		Quantity or Loading AVERAGE	MAXIMUM	UNITS	Quality Or Concentration MINIMUM	AVERAGE	MAXIMUM	UNITS	NO. EX	Sample Frequency	Sample Type
FLOW RATE	SAMPLE MEASUREMENT	*****	108,000	07	*****	*****	*****		0	ONCE/ MON	CALCTD
00056 1 0 0 EFFLUENT GROSS VALUE	PERMIT REQUIREMENT	*****	REPORT DAILY MX	GPD	*****	*****	*****			ONCE/ MONTH	CALCTD
SOLIDS, TOTAL SUSPENDED	SAMPLE MEASUREMENT	*****	*****		*****	*****	7	19	0	ONCE/ MON	GRAB
00530 1 0 0 EFFLUENT GROSS VALUE	PERMIT REQUIREMENT	*****	*****		*****	*****	50 DAILY MX	MG/L		ONCE/ MONTH	GRAB
OIL AND GREASE FREON EXTR-GRAV METH	SAMPLE MEASUREMENT	*****	*****		*****	*****	<5	19	0	ONCE/ MON	GRAB
00556 1 0 0 EFFLUENT GROSS VALUE	PERMIT REQUIREMENT	*****	*****		*****	*****	15 DAILY MX	MG/L		ONCE/ MONTH	GRAB

Name/Title of Principal Executive Officer		Telephone	Date
Victor Basso	I certify under penalty of law that I have personally examined and am familiar with the information submitted herein: and based on my inquiry of those individuals immediately responsible for obtaining the information, I believe the submitted information is true accurate and complete. I am aware that there are significant penalties for submitting false information, including the possibility of fine and imprisonment. See 18 U.S.C 1001 & 33 U.S.C 1319.	Victor Basso Signature of Principal Executive Officer or Authorized Agent	(212) 460-2262	00-07-07 YR-MO-DA

Comments and explanations of any Violations:

EPA Form 3320-1 (8-95)

Discharge Monitoring Report (DMR)

Name	Consolidated Edison
Address	4 Irving Place
	New York NY 10003
Facility	11th Street Conduit
Location	Oakland and Water Street

NY0201138	001M
Permit Number	Discharge Number

GROUNDWATER INFILTRAT
SUBR 02
F-Final
Major

Monitoring Period
FROM YR-MO-DA 00-05-01 TO YR-MO-DA 00-05-31

No Discharge ☐

Parameter		Quantity or Loading AVERAGE	MAXIMUM	UNITS	Quality Or Concentration MINIMUM	AVERAGE	MAXIMUM	UNITS	NO. EX	Sample Frequency	Sample Type
FLOW RATE	SAMPLE MEASUREMENT	* * * * *	108,000	07	* * * * *	* * * * *	* * * * *		0	ONCE/ MON	CALCTD
00056 1 0 0 EFFLUENT GROSS VALUE	PERMIT REQUIREMENT	*****	REPORT DAILY MX	GPD	*****	*****	*****			ONCE/ MONTH	CALCTD
SOLIDS, TOTAL SUSPENDED	SAMPLE MEASUREMENT	* * * * *	* * * * *		* * * * *	* * * * *	14	19	0	ONCE/ MON	GRAB
00530 1 0 0 EFFLUENT GROSS VALUE	PERMIT REQUIREMENT	*****	*****		*****	*****	30 DAILY MX	MG/L		ONCE/ MONTH	GRAB
OIL AND GREASE FREON EXTR-GRAV METH	SAMPLE MEASUREMENT	* * * * *	* * * * *		* * * * *	* * * * *	5	19	0	ONCE/ MON	GRAB
00556 1 0 0 EFFLUENT GROSS VALUE	PERMIT REQUIREMENT	*****	*****		*****	*****	15 DAILY MX	MG/L		ONCE/ MONTH	GRAB

Name/Title of Principal Executive Officer		Telephone	Date
Victor Basso	I certify under penalty of law that I have personally examined and am familiar with the information submitted herein: and based on my inquiry of those individuals immediately responsible for obtaining the information, I believe the submitted information is true accurate and complete. I am aware that there are significant penalties for submitting false information, including the possibility of fine and imprisonment. See 18 U.S.C 1001 & 33 U.S.C 1319.	(212) 460-2262	00-06-12 YR-MO-DA

Signature of Principal Executive Officer or Authorized Agent

Comments and explanations of any Violations:

EPA-NC-CE-0000159

Discharge Monitoring Report (DMR)

Name	Consolidated Edison
Address	4 Irving Place
	New York NY 10003
Facility	11th Street Conduit
Location	Oakland and Water Street

NY0201138	001M
Permit Number	Discharge Number

GROUNDWATER INFILTRAT
SUBR 02
F-Final
Major

Monitoring Period

FROM	YR-MO-DA	TO	YR-MO-DA
	00-04-01		00-04-30

No Discharge ☐

Parameter		Quantity or Loading AVERAGE	MAXIMUM	UNITS	Quality Or Concentration MINIMUM	AVERAGE	MAXIMUM	UNITS	NO. EX	Sample Frequency	Sample Type
FLOW RATE	SAMPLE MEASUREMENT	* * * * *	108,000	07	* * * * *	* * * * *	* * * * *		0	ONCE/ MON	CALCTD
00056 1 0 0 EFFLUENT GROSS VALUE	PERMIT REQUIREMENT	*****	REPORT DAILY MX	GPD	*****	*****	*****			ONCE/ MONTH	CALCTD
SOLIDS, TOTAL SUSPENDED	SAMPLE MEASUREMENT	* * * * *	* * * * *		* * * * *	* * * * *	11	19	0	ONCE/ MON	GRAB
00530 1 0 0 EFFLUENT GROSS VALUE	PERMIT REQUIREMENT	*****	*****		*****	*****	30 DAILY MX	MG/L		ONCE/ MONTH	GRAB
OIL AND GREASE FREON EXTR-GRAV METH	SAMPLE MEASUREMENT	* * * * *	* * * * *		* * * * *	* * * * *	5	19	0	ONCE/ MON	GRAB
00556 1 0 0 EFFLUENT GROSS VALUE	PERMIT REQUIREMENT	*****	*****		*****	*****	15 DAILY MX	MG/L		ONCE/ MONTH	GRAB

Name/Title of Principal Executive Officer		Telephone	Date
Victor Basso	I certify under penalty of law that I have personally examined and am familiar with the information submitted herein: and based on my inquiry of those individuals immediately responsible for obtaining the information, I believe the submitted information is true accurate and complete. I am aware that there are significant penalties for submitting false information, including the possibility of fine and imprisonment. See 18 U.S.C 1001 & 33 U.S.C 1319.	(212) 460-2262	00-05-16
	Signature of Principal Executive Officer or Authorized Agent		YR-MO-DA

Comments and explanations of any Violations:

EPA Form 3320-1 (8-95)

Discharge Monitoring Report (DMR)

Name	Consolidated Edison
Address	4 Irving Place
	New York NY 10003
Facility	11th Street Conduit
Location	Oakland and Water Street

NY0201138 — Permit Number

001M — Discharge Number

GROUNDWATER INFILTRAT
SUBR 02
F-Final
Major

Monitoring Period: FROM YR-MO-DA 00-03-01 TO YR-MO-DA 00-03-31

No Discharge ☐

Parameter		Quantity or Loading AVERAGE	Quantity or Loading MAXIMUM	Quantity or Loading UNITS	Quality Or Concentration MINIMUM	Quality Or Concentration AVERAGE	Quality Or Concentration MAXIMUM	Quality Or Concentration UNITS	NO. EX	Sample Frequency	Sample Type
FLOW RATE	SAMPLE MEASUREMENT	* * * * *	108,000	07	* * * * *	* * * * *	* * * * *		0	ONCE/ MON	CALCTD
00056 1 0 0 EFFLUENT GROSS VALUE	PERMIT REQUIREMENT	*****	REPORT DAILY MX	GPD	*****	*****	*****			ONCE/ MONTH	CALCTD
SOLIDS, TOTAL SUSPENDED	SAMPLE MEASUREMENT	* * * * *	* * * * *		* * * * *	* * * * *	10	19	0	ONCE/ MON	GRAB
00530 1 0 0 EFFLUENT GROSS VALUE	PERMIT REQUIREMENT	*****	*****		*****	*****	50 DAILY MX	MG/L		ONCE/ MONTH	GRAB
OIL & GREASE	SAMPLE MEASUREMENT	* * * * *	* * * * *		* * * * *	* * * * *	<5	19	0	ONCE/ MON	GRAB
00556 1 0 0 EFFLUENT GROSS VALUE	PERMIT REQUIREMENT	*****	*****		*****	*****	15 DAILY MX	MG/L		ONCE/ MONTH	GRAB

Name/Title of Principal Executive Officer			Telephone	Date
Victor Basso	I certify under penalty of law that I have personally examined and am familiar with the information submitted herein: and based on my inquiry of those individuals immediately responsible for obtaining the information, I believe the submitted information is true accurate and complete. I am aware that there are significant penalties for submitting false information, including the possibility of fine and imprisonment. See 18 U.S.C 1001 & 33 U.S.C 1319.	Signature of Principal Executive Officer or Authorized Agent	212-460-2262	00-04-07 YR-MO-DA

Comments and explanations of any Violations:

EPA Form 3320-1 (8-95)

Discharge Monitoring Report (DMR)

Name	Consolidated Edison
Address	4 Irving Place
	New York NY 10003
Facility	11th Street Conduit
Location	Oakland and Water Street

NY0201138	001M	GROUNDWATER INFILTRAT
Permit Number	Discharge Number	SUBR 02
		F-Final
		Major

Monitoring Period: FROM YR-MO-DA 00-02-01 TO YR-MO-DA 00-02-29

No Discharge ☐

Parameter		Quantity or Loading AVERAGE	MAXIMUM	UNITS	Quality Or Concentration MINIMUM	AVERAGE	MAXIMUM	UNITS	NO. EX	Sample Frequency	Sample Type
FLOW RATE	SAMPLE MEASUREMENT	* * * * *	108,000	07	* * * * *	* * * * *	* * * * *		0	ONCE/ MONTH	CALCTD
00056 1 0 0 EFFLUENT GROSS VALUE	PERMIT	* * * * *	REPORT DAILY MX	GPD	* * * * *	* * * * *	* * * * *			ONCE/ MONTH	CALCTD
SOLIDS, TOTAL SUSPENDED	SAMPLE MEASUREMENT	* * * * *	* * * * *		* * * * *	* * * * *	3	19	0	ONCE/ MONTH	GRAB
00530 1 0 0 EFFLUENT GROSS VALUE	PERMIT	* * * * *	* * * * *		* * * * *	* * * * *	30 DAILY MX	MG/L		ONCE/ MONTH	GRAB
OIL AND GREASE FREON EXTR-GRAV METH	SAMPLE MEASUREMENT	* * * * *	* * * * *		* * * * *	* * * * *	5	19	0	ONCE/ MONTH	GRAB
00556 1 0 0 EFFLUENT GROSS VALUE	PERMIT	* * * * *	* * * * *		* * * * *	* * * * *	15 DAILY MX	MG/L		ONCE/ MONTH	GRAB

Name/Title of Principal Executive Officer			Telephone	Date
Victor Basso	I certify under penalty of law that I have personally examined and am familiar with the information submitted herein: and based upon my inquiry of individuals immediately responsible for obtaining the information, I believe the submitted information is true accurate and complete. I am aware that there are significant penalties for submitting false information, including the possibility of fine and imprisonment. See 18 U.S.C 1001 & 33 U.S.C 1319.	Victor P Basso Signature of Principal Executive Officer or Authorized Agent	(212) 460-2262	00-03-08 YR-MO-DA

Comments and explanations of any Violations:

EPA Form 3320-1 (8-95)

Discharge Monitoring Report (DMR)

Name	Consolidated Edison
Address	4 Irving Place
	New York NY 10003
Facility	11th Street Conduit
Location	Oakland and Water Street

NY0201138 (Permit Number) | 001V (Discharge Number)

GROUNDWTR INFILTR.&SW
SUBR 02
F-Final
Major

Monitoring Period: FROM YR-MO-DA 99-03-01 TO YR-MO-DA 00-02-29

No Discharge ☐

Parameter		Quantity or Loading AVERAGE	Quantity or Loading MAXIMUM	UNITS	Quality Or Concentration MINIMUM	Quality Or Concentration AVERAGE	Quality Or Concentration MAXIMUM	UNITS	NO. EX	Sample Frequency	Sample Type
TOLUENE	SAMPLE MEASUREMENT	*****	*****		*****	*****	0.001 FS	19	0	ANNUAL	GRAB
34010 V 0 0 SEE COMMENTS BELOW	PERMIT	*****	*****		*****	*****	0.1 DAILY MX	MG/L		ANNUAL	GRAB
BENZENE	SAMPLE MEASUREMENT	*****	*****		*****	*****	0.008	19	0	ANNUAL	GRAB
34030 V 0 0 SEE COMMENTS BELOW	PERMIT	*****	*****		*****	*****	0.1 DAILY MX	MG/L		ANNUAL	GRAB
ETHYLBENZENE	SAMPLE MEASUREMENT	*****	*****		*****	*****	0.007	19	0	ANNUAL	GRAB
34371 V 0 0 SEE COMMENTS BELOW	PERMIT	*****	*****		*****	*****	0.1 DAILY MX	MG/L		ANNUAL	GRAB
XYLENE	SAMPLE MEASUREMENT	*****	*****		*****	*****	0.002	19	0	ANNUAL	GRAB
81551 V 0 0 SEE COMMENTS BELOW	PERMIT	*****	*****		*****	*****	0.1 DAILY MX	MG/L		ANNUAL	GRAB

Name/Title of Principal Executive Officer			Telephone	Date
Victor Basso	I certify under penalty of law that I have personally examined and am familiar with the information submitted herein; and based upon my inquiry of individuals immediately responsible for obtaining the information, I believe the submitted information is true accurate and complete. I am aware that there are significant penalties for submitting false information, including the possibility of fine and imprisonment. See 18 U.S.C 1001 & 33 U.S.C 1319.	Victor P. Basso Signature of Principal Executive Officer or Authorized Agent	(212) 460-2262	00-03-08 YR-MO-DA

Comments and explanations of any Violations:

EPA Form 3320-1 (8-95)

Discharge Monitoring Report (DMR)

Name	Consolidated Edison
Address	4 Irving Place
	New York NY 10003
Facility	11th Street Conduit
Location	Oakland and Water Street

NY0201138 — Permit Number

001M — Discharge Number

GROUNDWATER INFILTRAT
SUBR 02
F-Final
Major

Monitoring Period
FROM YR-MO-DA 00-01-01 TO YR-MO-DA 00-01-31

No Discharge ☐

Parameter		Quantity or Loading AVERAGE	MAXIMUM	UNITS	Quality Or Concentration MINIMUM	AVERAGE	MAXIMUM	UNITS	NO. EX	Sample Frequency	Sample Type
FLOW RATE	SAMPLE MEASUREMENT	* * * * *	108,000	07	* * * * *	* * * * *	* * * * *		0	ONCE/ MONTH	CALCTD
00056 1 0 0 EFFLUENT GROSS VALUE	PERMIT	* * * * *	REPORT DAILY MX	GPD	* * * * *	* * * * *	* * * * *			ONCE/ MONTH	CALCTD
SOLIDS, TOTAL SUSPENDED	SAMPLE MEASUREMENT	* * * * *	* * * * *		* * * * *	* * * * *	12	19	0	ONCE/ MONTH	GRAB
00530 1 0 0 EFFLUENT GROSS VALUE	PERMIT	* * * * *	* * * * *		* * * * *	* * * * *	30 DAILY MX	MG/L		ONCE/ MONTH	GRAB
OIL AND GREASE FREON EXTR-GRAV METH	SAMPLE MEASUREMENT	* * * * *	* * * * *		* * * * *	* * * * *	5	19	0	ONCE/ MONTH	GRAB
00556 1 0 0 EFFLUENT GROSS VALUE	PERMIT	* * * * *	* * * * *		* * * * *	* * * * *	15 DAILY MX	MG/L		ONCE/ MONTH	GRAB

Name/Title of Principal Executive Officer			Telephone	Date
Victor Basso	I certify under penalty of law that I have personally examined and am familiar with the information submitted herein: and based upon my inquiry of individuals immediately responsible for obtaining the information, I believe the submitted information is true accurate and complete. I am aware that there are significant penalties for submitting false information, including the possibility of fine and imprisonment. See 18 U.S.C 1001 & 33 U.S.C 1319.	Victor Basso Signature of Principal Executive Officer or Authorized Agent	(212) 460-2262	00-02-09 YR-MO-DA

Comments and explanations of any Violations:

EPA Form 3320-1 (8-95)

Discharge Monitoring Report (DMR)

Name	Consolidated Edison of New York
Address	4 Irving Place
	New York NY 10003
Facility	11th Street Conduit
Location	Oakland and Water Street

NY0201138	001M
Permit Number	Discharge Number

GROUNDWATER INFILTRATIC
SUBR 02
F-Final
Major

Monitoring Period

FROM YR-MO-DA 01-12-01 TO YR-MO-DA 01-12-31

No Discharge ☐

Parameter		Quantity or Loading AVERAGE	Quantity or Loading MAXIMUM	UNITS	Quality Or Concentration MINIMUM	Quality Or Concentration AVERAGE	Quality Or Concentration MAXIMUM	UNITS	NO. EX	Sample Frequency	Sample Type
FLOW RATE	SAMPLE MEASUREMENT	* * * * *	108,000	07	* * * * *	* * * * *	* * * * *		0	ONCE/ MON	CALCTD
00056 1 0 0 EFFLUENT GROSS VALUE	PERMIT REQUIREMENT	* * * * *	REPORT DAILY MX	GPD	* * * * *	* * * * *	* * * * *			ONCE/ MONTH	CALCTD
SOLIDS, TOTAL SUSPENDED	SAMPLE MEASUREMENT	* * * * *	* * * * *		* * * * *	* * * * *	18	19	0	ONCE/ MON	GRAB
00530 1 0 0 EFFLUENT GROSS VALUE	PERMIT REQUIREMENT	* * * * *	* * * * *		* * * * *	* * * * *	50 DAILY MX	MG/L		ONCE/ MONTH	GRAB
OIL AND GREASE FREON EXTR-GRAV METH	SAMPLE MEASUREMENT	* * * * *	* * * * *		* * * * *	* * * * *	3	19	0	ONCE/ MON	GRAB
00556 1 0 0 EFFLUENT GROSS VALUE	PERMIT REQUIREMENT	* * * * *	* * * * *		* * * * *	* * * * *	15 DAILY MX	MG/L		ONCE/ MONTH	GRAB

Name/Title of Principal Executive Officer		Telephone	Date
Victor Basso	I certify under penalty of law that I have personally examined and am fami with the information submitted herein: and based on my inquiry of those individuals immediately responsible for obtaining the information. I believe the submitted information is true accurate and complete. I am aware that there are significant penalties for submitting false information, including th possibility of fine and imprisonment. See 18 U.S.C 1001 & 33 U.S.C 1319.	(212) 460-2262	02-01-15 YR-MO-DA

Signature of Principal Executive Officer or Authorized Agent

Comments and explanations of any Violations:

EPA Form 3320-1 (8-9

EPA-NC-CE-0000165

Discharge Monitoring Report (DMR)

Name	Consolidated Edison of New York
Address	4 Irving Place
	New York NY 10003
Facility	11th Street Conduit
Location	Oakland and Water Street

NY0201138	001M
Permit Number	Discharge Number

GROUNDWATER INFILTRATIO
SUBR 02
F-Final
Major

Monitoring Period: FROM YR-MO-DA 01-11-01 TO YR-MO-DA 01-11-30

No Discharge ☐

Parameter		Quantity or Loading AVERAGE	Quantity or Loading MAXIMUM	Quantity or Loading UNITS	Quality Or Concentration MINIMUM	Quality Or Concentration AVERAGE	Quality Or Concentration MAXIMUM	Quality Or Concentration UNITS	NO. EX	Sample Frequency	Sample Type
FLOW RATE	SAMPLE MEASUREMENT	* * * * *	108,000	07	* * * * *	* * * * *	* * * * *		0	ONCE/ MONT	CALCTD
00056 1 0 0 EFFLUENT GROSS VALUE	PERMIT REQUIREMENT	* * * * *	REPORT DAILY MX	GPD	* * * * *	* * * * *	* * * * *			ONCE/ MONTH	CALCTD
SOLIDS, TOTAL SUSPENDED	SAMPLE MEASUREMENT	* * * * *	* * * * *		* * * * *	* * * * *	7	19	0	ONCE/ MONT	GRAB
00530 1 0 0 EFFLUENT GROSS VALUE	PERMIT REQUIREMENT	* * * * *	* * * * *		* * * * *	* * * * *	50 DAILY MX	MG/L		ONCE/ MONTH	GRAB
OIL AND GREASE FREON EXTR-GRAV METH	SAMPLE MEASUREMENT	* * * * *	* * * * *		* * * * *	* * * * *	3	19	0	ONCE/ MONT	GRAB
00556 1 0 0 EFFLUENT GROSS VALUE	PERMIT REQUIREMENT	* * * * *	* * * * *		* * * * *	* * * * *	15 DAILY MX	MG/L		ONCE/ MONTH	GRAB

Name/Title of Principal Executive Officer			Telephone	Date
Victor Basso	I certify under penalty of law that I have personally examined and am fami with the information submitted herein: and based on my inquiry of those individuals immediately responsible for obtaining the information, I believe the submitted information is true accurate and complete. I am aware that there are significant penalties for submitting false information, including th possibility of fine and imprisonment. See 18 U.S.C 1001 & 33 U.S.C 1319.	Victor Basso 12-5-01 Signature of Principal Executive Officer or Authorized Agent	(212) 460-2262	01-12-03 YR-MO-DA

Comments and explanations of any Violations:

EPA Form 3320-1 (8-95

Discharge Monitoring Report (DMR)

Name	Consolidated Edison of New York
Address	4 Irving Place
	New York NY 10003
Facility	11th Street Conduit
Location	Oakland and Water Street

NY0201138	001M
Permit Number	Discharge Number

GROUNDWATER INFILTRATIO
SUBR 02
F-Final
Major

Monitoring Period: FROM YR-MO-DA 01-10-01 TO YR-MO-DA 01-10-31

No Discharge ☐

Parameter		Quantity or Loading AVERAGE	MAXIMUM	UNITS	Quality Or Concentration MINIMUM	AVERAGE	MAXIMUM	UNITS	NO. EX	Sample Frequency	Sample Type
FLOW RATE	SAMPLE MEASUREMENT	* * * * *	108,000	07	* * * * *	* * * * *	* * * * *		0	ONCE/ MONT	CALCTD
00056 1 0 0 EFFLUENT GROSS VALUE	PERMIT REQUIREMENT	* * * * *	REPORT DAILY MX	GPD	* * * * *	* * * * *	* * * * *			ONCE/ MONTH	CALCTD
SOLIDS, TOTAL SUSPENDED	SAMPLE MEASUREMENT	* * * * *	* * * * *		* * * * *	* * * * *	9	19	0	ONCE/ MONT	GRAB
00530 1 0 0 EFFLUENT GROSS VALUE	PERMIT REQUIREMENT	* * * * *	* * * * *		* * * * *	* * * * *	50 DAILY MX	MG/L		ONCE/ MONTH	GRAB
OIL AND GREASE FREON EXTR-GRAV METH	SAMPLE MEASUREMENT	* * * * *	* * * * *		* * * * *	* * * * *	3	19	0	ONCE/ MONT	GRAB
00556 1 0 0 EFFLUENT GROSS VALUE	PERMIT REQUIREMENT	* * * * *	* * * * *		* * * * *	* * * * *	15 DAILY MX	MG/L		ONCE/ MONTH	GRAB

Name/Title of Principal Executive Officer			Telephone	Date
Victor Basso	I certify under penalty of law that I have personally examined and am fami with the information submitted herein: and based on my inquiry of those individuals immediately responsible for obtaining the information, I believe the submitted information is true accurate and complete. I am aware that there are significant penalties for submitting false information, including th possibility of fine and imprisonment. See 18 U.S.C 1001 & 33 U.S.C 1319.	Signature of Principal Executive Officer or Authorized Agent	(212) 460-2262	01-11-02 YR-MO-DA

Comments and explanations of any Violations:

EPA Form 3320-1 (8-95

Discharge Monitoring Report (DMR)

Name	Consolidated Edison of New York
Address	4 Irving Place
	New York NY 10003
Facility	11th Street Conduit
Location	Oakland and Water Street

NY0201138	001M
Permit Number	Discharge Number

GROUNDWATER INFILTRATIO
SUBR 02
F-Final
Major

Monitoring Period: FROM YR-MO-DA 01-09-01 TO YR-MO-DA 01-09-30

No Discharge ☐

Parameter		Quantity or Loading AVERAGE	MAXIMUM	UNITS	Quality Or Concentration MINIMUM	AVERAGE	MAXIMUM	UNITS	NO. EX	Sample Frequency	Sample Type
FLOW RATE	SAMPLE MEASUREMENT	* * * * *	108,000	07	* * * * *	* * * * *	* * * * *		0	ONCE/ MONT	CALCTD
00056 1 0 0 EFFLUENT GROSS VALUE	PERMIT REQUIREMENT	* * * * *	REPORT DAILY MX	GPD	* * * * *	* * * * *	* * * * *			ONCE/ MONTH	CALCTD
SOLIDS, TOTAL SUSPENDED	SAMPLE MEASUREMENT	* * * * *	* * * * *		* * * * *	* * * * *	6	19	0	ONCE/ MONT	GRAB
00530 1 0 0 EFFLUENT GROSS VALUE	PERMIT REQUIREMENT	* * * * *	* * * * *		* * * * *	* * * * *	50 DAILY MX	MG/L		ONCE/ MONTH	GRAB
OIL AND GREASE FREON EXTR-GRAV METH	SAMPLE MEASUREMENT	* * * * *	* * * * *		* * * * *	* * * * *	3	19	0	ONCE/ MONT	GRAB
00556 1 0 0 EFFLUENT GROSS VALUE	PERMIT REQUIREMENT	* * * * *	* * * * *		* * * * *	* * * * *	15 DAILY MX	MG/L		ONCE/ MONTH	GRAB

Name/Title of Principal Executive Officer			Telephone	Date
Victor Basso	I certify under penalty of law that I have personally examined and am fami with the information submitted herein: and based on my inquiry of those individuals immediately responsible for obtaining the information, I believe the submitted information is true accurate and complete. I am aware that there are significant penalties for submitting false information, including th possibility of fine and imprisonment. See 18 U.S.C 1001 & 33 U.S.C 1319.	Victor Basso Signature of Principal Executive Officer or Authorized Agent	(212) 460-2262	01-10-04 YR-MO-DA

Comments and explanations of any Violations:

EPA Form 3320-1 (8-95

Discharge Monitoring Report (DMR)

Name	Consolidated Edison of New York
Address	4 Irving Place
	New York NY 10003
Facility	11th Street Conduit
Location	Oakland and Water Street

NY0201138	001M	GROUNDWATER INFILTRATIC
Permit Number	Discharge Number	SUBR 02
		F-Final
		Major

Monitoring Period: FROM YR-MO-DA 01-08-01 TO YR-MO-DA 01-08-31

No Discharge ☐

Parameter		Quantity or Loading AVERAGE	MAXIMUM	UNITS	Quality Or Concentration MINIMUM	AVERAGE	MAXIMUM	UNITS	NO. EX	Sample Frequency	Sample Type
FLOW RATE	SAMPLE MEASUREMENT	* * * * *	108,000	07	* * * * *	* * * * *	* * * * *		0	ONCE/ MON	CALCTD
00056 1 0 0 EFFLUENT GROSS VALUE	PERMIT REQUIREMENT	* * * * *	REPORT DAILY MX	GPD	* * * * *	* * * * *	* * * * *			ONCE/ MONTH	CALCTD
SOLIDS, TOTAL SUSPENDED	SAMPLE MEASUREMENT	* * * * *	* * * * *		* * * * *	* * * * *	6	19	0	ONCE/ MON	GRAB
00530 1 0 0 EFFLUENT GROSS VALUE	PERMIT REQUIREMENT	* * * * *	* * * * *		* * * * *	* * * * *	50 DAILY MX	MG/L		ONCE/ MONTH	GRAB
OIL AND GREASE FREON EXTR-GRAV METH	SAMPLE MEASUREMENT	* * * * *	* * * * *		* * * * *	* * * * *	4	19	0	ONCE/ MON	GRAB
00556 1 0 0 EFFLUENT GROSS VALUE	PERMIT REQUIREMENT	* * * * *	* * * * *		* * * * *	* * * * *	15 DAILY MX	MG/L		ONCE/ MONTH	GRAB

Name/Title of Principal Executive Officer			Telephone	Date
Victor Basso	I certify under penalty of law that I have personally examined and am fami with the information submitted herein: and based on my inquiry of those individuals immediately responsible for obtaining the information. I believe the submitted information is true accurate and complete. I am aware that there are significant penalties for submitting false information, including th possibility of fine and imprisonment. See 18 U.S.C 1001 & 33 U.S.C 1319.	Signature of Principal Executive Officer or Authorized Agent	(212) 460-2262	01-09-06 YR-MO-DA

Comments and explanations of any Violations:

EPA Form 3320-1 (8-9

Discharge Monito[illegible]g Report (DMR)

Name	Consolidated Edison of New York
Address	4 Irving Place
	New York NY 10003
Facility	11th Street Conduit
Location	Oakland and Water Street

NY0201138	001M
Permit Number	Discharge Number

GROUNDWATER INFILTRAT
SUBR 02
F-Final
Major

Monitoring Period

FROM YR-MO-DA 01-07-01 TO YR-MO-DA 01-07-31

No Discharge ☐

Parameter		Quantity or Loading AVERAGE	MAXIMUM	UNITS	Quality Or Concentration MINIMUM	AVERAGE	MAXIMUM	UNITS	NO. EX	Sample Frequency	Sample Type
FLOW RATE	SAMPLE MEASUREMENT	* * * * *	108,000	07	* * * * *	* * * * *	* * * * *		0	ONCE/ MON	CALCTD
00056 1 0 0 EFFLUENT GROSS VALUE	PERMIT REQUIREMENT	* * * * *	REPORT DAILY MX	GPD	* * * * *	* * * * *	* * * * *			ONCE/ MONTH	CALCTD
SOLIDS, TOTAL SUSPENDED	SAMPLE MEASUREMENT	* * * * *	* * * * *		* * * * *	* * * * *	12	19	0	ONCE/ MON	GRAB
00530 1 0 0 EFFLUENT GROSS VALUE	PERMIT REQUIREMENT	* * * * *	* * * * *		* * * * *	* * * * *	50 DAILY MX	MG/L		ONCE/ MONTH	GRAB
OIL AND GREASE FREON EXTR-GRAV METH	SAMPLE MEASUREMENT	* * * * *	* * * * *		* * * * *	* * * * *	2	19	0	ONCE/ MON	GRAB
00556 1 0 0 EFFLUENT GROSS VALUE	PERMIT REQUIREMENT	* * * * *	* * * * *		* * * * *	* * * * *	15 DAILY MX	MG/L		ONCE/ MONTH	GRAB

Name/Title of Principal Executive Officer		Telephone	Date
Victor Basso	I certify under penalty of law that I have personally examined and am familiar with the information submitted herein: and based on my inquiry of those individuals immediately responsible for obtaining the information, I believe the submitted information is true accurate and complete. I am aware that there are significant penalties for submitting false information, including the possibility of fine and imprisonment. See 18 U.S.C 1001 & 33 U.S.C 1319.	(212) 460-2262	01-08-06 YR-MO-DA

Signature of Principal Executive Officer or Authorized Agent

Comments and explanations of any Violations:

EPA Form 3320-1 (8-95)

Discharge Monitoring Report (DMR)

Name Consolidated Edison of New York
Address 4 Irving Place
New York NY 10003
Facility 11th Street Conduit
Location Oakland and Water Street

NY0201138	001M
Permit Number	Discharge Number

GROUNDWATER INFILTRAT
SUBR 02
F-Final
Major

Monitoring Period

	YR-MO-DA		YR-MO-DA
FROM	01-06-01	TO	01-06-30

No Discharge ☐

Parameter		Quantity or Loading AVERAGE	MAXIMUM	UNITS	Quality Or Concentration MINIMUM	AVERAGE	MAXIMUM	UNITS	NO. EX	Sample Frequency	Sample Type
FLOW RATE	SAMPLE MEASUREMENT	* * * * *	108,000	07	* * * * *	* * * * *	* * * * *		0	ONCE/ MON	CALCTD
00056 1 0 0 EFFLUENT GROSS VALUE	PERMIT REQUIREMENT	* * * * *	REPORT DAILY MX	GPD	* * * * *	* * * * *	* * * * *			ONCE/ MONTH	CALCTD
SOLIDS, TOTAL SUSPENDED	SAMPLE MEASUREMENT	* * * * *	* * * * *		* * * * *	* * * * *	10	19	0	ONCE/ MON	GRAB
00530 1 0 0 EFFLUENT GROSS VALUE	PERMIT REQUIREMENT	* * * * *	* * * * *		* * * * *	* * * * *	50 DAILY MX	MG/L		ONCE/ MONTH	GRAB
OIL AND GREASE FREON EXTR-GRAV METH	SAMPLE MEASUREMENT	* * * * *	* * * * *		* * * * *	* * * * *	5	19	0	ONCE/ MON	GRAB
00556 1 0 0 EFFLUENT GROSS VALUE	PERMIT REQUIREMENT	* * * * *	* * * * *		* * * * *	* * * * *	15 DAILY MX	MG/L		ONCE/ MONTH	GRAB

Name/Title of Principal Executive Officer			Telephone	Date
Victor Basso	I certify under penalty of law that I have personally examined and am familiar with the information submitted herein: and based on my inquiry of those individuals immediately responsible for obtaining the information, I believe the submitted information is true accurate and complete. I am aware that there are significant penalties for submitting false information, including the possibility of fine and imprisonment. See 18 U.S.C 1001 & 33 U.S.C 1319.	Victor Basso Signature of Principal Executive Officer or Authorized Agent	(212) 460-2262	01-07-05 YR-MO-DA

Comments and explanations of any Violations:

EPA Form 3320-1 (8-95)

Discharge Monitoring Report (DMR)

Name	Cinsolidated Edison of New York
Address	4 Irving Place
	New York NY 10003
Facility	11th Street Conduit
Location	Oakland and Water Street

NY0201138	001M	GROUNDWATER INFILTRAT
Permit Number	Discharge Number	SUBR 02
		F-Final
		Major

Monitoring Period: FROM YR-MO-DA 01-05-01 TO YR-MO-DA 01-05-31

No Discharge ☐

Parameter		Quantity or Loading AVERAGE	MAXIMUM	UNITS	Quality Or Concentration MINIMUM	AVERAGE	MAXIMUM	UNITS	NO. EX	Sample Frequency	Sample Type
FLOW RATE	SAMPLE MEASUREMENT	* * * * *	108,000	07	* * * * *	* * * * *	* * * * *		0	ONCE/ MON	CALCTD
00056 1 0 0 EFFLUENT GROSS VALUE	PERMIT REQUIREMENT	* * * * *	REPORT DAILY MX	GPD	* * * * *	* * * * *	* * * * *			ONCE/ MONTH	CALCTD
SOLIDS, TOTAL SUSPENDED	SAMPLE MEASUREMENT	* * * * *	* * * * *		* * * * *	* * * * *	12	19	0	ONCE/ MON	GRAB
00530 1 0 0 EFFLUENT GROSS VALUE	PERMIT REQUIREMENT	* * * * *	* * * * *		* * * * *	* * * * *	50 DAILY MX	MG/L		ONCE/ MONTH	GRAB
OIL AND GREASE FREON EXTR-GRAV METH	SAMPLE MEASUREMENT	* * * * *	* * * * *		* * * * *	* * * * *	6	19	0	ONCE/ MON	GRAB
00556 1 0 0 EFFLUENT GROSS VALUE	PERMIT REQUIREMENT	* * * * *	* * * * *		* * * * *	* * * * *	15 DAILY MX	MG/L		ONCE/ MONTH	GRAB

Name/Title of Principal Executive Officer			Telephone	Date
Victor Basso	I certify under penalty of law that I have personally examined and am familiar with the information submitted herein: and based on my inquiry of those individuals immediately responsible for obtaining the information, I believe the submitted information is true accurate and complete. I am aware that there are significant penalties for submitting false information, including the possibility of fine and imprisonment. See 18 U.S.C 1001 & 33 U.S.C 1319.	Signature of Principal Executive Officer or Authorized Agent	(212) 460-2262	01-06-01 YR-MO-DA

Comments and explanations of any Violations:

EPA Form 3320-1 (8-95)

Discharge Monitoring Report (DMR)

Name Cinsolidated Edison of New York
Address 4 Irving Place
New York NY 10003
Facility 11th Street Conduit
Location Oakland and Water Street

NY0201138 — Permit Number
001M — Discharge Number

GROUNDWATER INFILTRAT
SUBR 02
F-Final
Major

Monitoring Period
FROM YR-MO-DA 01-04-01 TO YR-MO-DA 01-04-30

No Discharge ☐

Parameter		Quantity or Loading AVERAGE	Quantity or Loading MAXIMUM	Quantity or Loading UNITS	Quality Or Concentration MINIMUM	Quality Or Concentration AVERAGE	Quality Or Concentration MAXIMUM	Quality Or Concentration UNITS	NO. EX	Sample Frequency	Sample Type
FLOW RATE	SAMPLE MEASUREMENT	* * * * *	108,000	07	* * * * *	* * * * *	* * * * *		0	ONCE/ MON	CALCTD
00056 1 0 0 EFFLUENT GROSS VALUE	PERMIT REQUIREMENT	*****	REPORT DAILY MX	GPD	*****	*****	*****			ONCE/ MONTH	CALCTD
SOLIDS, TOTAL SUSPENDED	SAMPLE MEASUREMENT	* * * * *	* * * * *		* * * * *	* * * * *	9	19	0	ONCE/ MON	GRAB
00530 1 0 0 EFFLUENT GROSS VALUE	PERMIT REQUIREMENT	*****	*****		*****	*****	50 DAILY MX	MG/L		ONCE/ MONTH	GRAB
OIL AND GREASE FREON EXTR-GRAV METH	SAMPLE MEASUREMENT	* * * * *	* * * * *		* * * * *	* * * * *	2	19	0	ONCE/ MON	GRAB
00556 1 0 0 EFFLUENT GROSS VALUE	PERMIT REQUIREMENT	*****	*****		*****	*****	15 DAILY MX	MG/L		ONCE/ MONTH	GRAB

Name/Title of Principal Executive Officer			Telephone	Date
Victor Basso	I certify under penalty of law that I have personally examined and am familiar with the information submitted herein: and based on my inquiry of those individuals immediately responsible for obtaining the information, I believe the submitted information is true accurate and complete. I am aware that there are significant penalties for submitting false information, including the possibility of fine and imprisonment. See 18 U.S.C 1001 & 33 U.S.C 1319.	Victor Basso Signature of Principal Executive Officer or Authorized Agent	(212) 460-2262	01-05-04 YR-MO-DA

Comments and explanations of any Violations:

EPA Form 3320-1 (8-95)

Discharge Monitoring Report (DMR)

Name Consolidated Edison of New York
Address 4 Irving Place
New York NY 10003
Facility 11th Street Conduit
Location Oakland and Water Street

NY0201138 — Permit Number
001M — Discharge Number

GROUNDWATER INFILTRAT
SUBR 02
F-Final
Major

Monitoring Period
FROM YR-MO-DA 01-03-01 TO YR-MO-DA 01-03-31

No Discharge ☐

Parameter		Quantity or Loading AVERAGE	Quantity or Loading MAXIMUM	Quantity or Loading UNITS	Quality Or Concentration MINIMUM	Quality Or Concentration AVERAGE	Quality Or Concentration MAXIMUM	Quality Or Concentration UNITS	NO. EX	Sample Frequency	Sample Type
FLOW RATE	SAMPLE MEASUREMENT	* * * * *	108,000	07	* * * * *	* * * * *	* * * * *		0	ONCE/ MON	CALCTD
00056 1 0 0 EFFLUENT GROSS VALUE	PERMIT REQUIREMENT	* * * * *	REPORT DAILY MX	GPD	* * * * *	* * * * *	* * * * *			ONCE/ MONTH	CALCTD
SOLIDS, TOTAL SUSPENDED	SAMPLE MEASUREMENT	* * * * *	* * * * *		* * * * *	* * * * *	13	19	0	ONCE/ MON	GRAB
00530 1 0 0 EFFLUENT GROSS VALUE	PERMIT REQUIREMENT	* * * * *	* * * * *		* * * * *	* * * * *	50 DAILY MX	MG/L		ONCE/ MONTH	GRAB
OIL AND GREASE FREON EXTR-GRAV METH	SAMPLE MEASUREMENT	* * * * *	* * * * *		* * * * *	* * * * *	8	19	0	ONCE/ MON	GRAB
00556 1 0 0 EFFLUENT GROSS VALUE	PERMIT REQUIREMENT	* * * * *	* * * * *		* * * * *	* * * * *	15 DAILY MX	MG/L		ONCE/ MONTH	GRAB

Name/Title of Principal Executive Officer			Telephone	Date
Victor Basso	I certify under penalty of law that I have personally examined and am familiar with the information submitted herein: and based on my inquiry of those individuals immediately responsible for obtaining the information, I believe the submitted information is true accurate and complete. I am aware that there are significant penalties for submitting false information, including the possibility of fine and imprisonment. See 18 U.S.C 1001 & 33 U.S.C 1319.	Signature of Principal Executive Officer or Authorized Agent	(212) 460-2262	01-04-02 YR-MO-DA

Comments and explanations of any Violations:

EPA Form 3320-1 (8-95)

Discharge Monitoring Report (DMR)

Name	Consolidated Edison of New York
Address	4 Irving Place
	New York NY 10003
Facility	11th Street Conduit
Location	Oakland and Water Street

NY0201138	001M
Permit Number	Discharge Number

GROUNDWATER INFILTRAT
SUBR 02
F-Final
Major

Monitoring Period
FROM YR-MO-DA 01-02-01 TO YR-MO-DA 01-02-28

No Discharge ☐

Parameter		Quantity or Loading AVERAGE	MAXIMUM	UNITS	Quality Or Concentration MINIMUM	AVERAGE	MAXIMUM	UNITS	NO. EX	Sample Frequency	Sample Type
FLOW RATE	SAMPLE MEASUREMENT	* * * * *	108,000	07	* * * * *	* * * * *	* * * * *		0	ONCE/ MON	CALCTD
00056 1 0 0 EFFLUENT GROSS VALUE	PERMIT REQUIREMENT	* * * * *	REPORT DAILY MX	GPD	* * * * *	* * * * *	* * * * *			ONCE/ MONTH	CALCTD
SOLIDS, TOTAL SUSPENDED	SAMPLE MEASUREMENT	* * * * *	* * * * *		* * * * *	* * * * *	8	19	0	ONCE/ MON	GRAB
00530 1 0 0 EFFLUENT GROSS VALUE	PERMIT REQUIREMENT	* * * * *	* * * * *		* * * * *	* * * * *	50 DAILY MX	MG/L		ONCE/ MONTH	GRAB
OIL AND GREASE FREON EXTR-GRAV METH	SAMPLE MEASUREMENT	* * * * *	* * * * *		* * * * *	* * * * *	5	19	0	ONCE/ MON	GRAB
00556 1 0 0 EFFLUENT GROSS VALUE	PERMIT REQUIREMENT	* * * * *	* * * * *		* * * * *	* * * * *	15 DAILY MX	MG/L		ONCE/ MONTH	GRAB

Name/Title of Principal Executive Officer			Telephone	Date
Victor Basso	I certify under penalty of law that I have personally examined and am familiar with the information submitted herein; and based on my inquiry of those individuals immediately responsible for obtaining the information, I believe the submitted information is true accurate and complete. I am aware that there are significant penalties for submitting false information, including the possibility of fine and imprisonment. See 18 U.S.C 1001 & 33 U.S.C 1319.	Signature of Principal Executive Officer or Authorized Agent	(212) 460-2262	01-03-02 YR-MO-DA

Comments and explanations of any Violations:

EPA Form 3320-1 (8-95)

EPA-NC-CE-0000175

Discharge Monitoring Report (DMR)

Name	Consolidated Edison of New York
Address	4 Irving Place
	New York NY 10003
Facility	11th Street Conduit
Location	Oakland and Water Street

NY0201138	001V
Permit Number	Discharge Number

GROUNDWTR INFILTR.&SW
SUBR 02
F-Final
Major

Monitoring Period
FROM YR-MO-DA 00-03-01 TO YR-MO-DA 01-02-28

No Discharge ☐

Parameter		Quantity or Loading AVERAGE	MAXIMUM	UNITS	Quality Or Concentration MINIMUM	AVERAGE	MAXIMUM	UNITS	NO. EX	Sample Frequency	Sample Type
TOLUENE	SAMPLE MEASUREMENT	*****	*****		*****	*****	0.001	19	0	ANNUAL	GRAB
34010 V 0 0 SEE COMMENTS BELOW	PERMIT REQUIREMENT	*****	*****		*****	*****	0.10 DAILY MX	MG/L		ANNUAL	GRAB
BENZENE	SAMPLE MEASUREMENT	*****	*****		*****	*****	0.004	19	0	ANNUAL	GRAB
34030 V 0 0 SEE COMMENTS BELOW	PERMIT REQUIREMENT	*****	*****		*****	*****	0.10 DAILY MX	MG/L		ANNUAL	GRAB
ETHYLBENZENE	SAMPLE MEASUREMENT	*****	*****		*****	*****	0.013	19	0	ANNUAL	GRAB
34371 V 0 0 SEE COMMENTS BELOW	PERMIT REQUIREMENT	*****	*****		*****	*****	0.10 DAILY MX	MG/L		ANNUAL	GRAB
XYLENE	SAMPLE MEASUREMENT	*****	*****		*****	*****	0.009	19	0	ANNUAL	GRAB
81551 V 0 0 SEE COMMENTS BELOW	PERMIT REQUIREMENT	*****	*****		*****	*****	0.10 DAILY MX	MG/L		ANNUAL	GRAB

Name/Title of Principal Executive Officer			Telephone	Date
Victor Basso	I certify under penalty of law that I have personally examined and am familiar with the information submitted herein: and based on my inquiry of those individuals immediately responsible for obtaining the information, I believe the submitted information is true accurate and complete. I am aware that there are significant penalties for submitting false information, including the possibility of fine and imprisonment. See 18 U.S.C 1001 & 33 U.S.C 1319.	Victor Basso Signature of Principal Executive Officer or Authorized Agent	(212) 460-2262	01-03-02 YR-MO-DA

Comments and explanations of any Violations:

EPA Form 3320-1 (8-95)

Discharge Monito g Report (DMR)

Name	Consolidated Edison of New York
Address	4 Irving Place
	New York NY 10003
Facility	11th Street Conduit
Location	Oakland and Water Street

NY0201138	001M
Permit Number	Discharge Number

GROUNDWATER INFILTRAT
SUBR 02
F-Final
Major

Monitoring Period
FROM YR-MO-DA 01-01-01 TO YR-MO-DA 01-01-31

No Discharge ☐

Parameter		Quantity or Loading AVERAGE	MAXIMUM	UNITS	Quality Or Concentration MINIMUM	AVERAGE	MAXIMUM	UNITS	NO. EX	Sample Frequency	Sample Type
FLOW RATE	SAMPLE MEASUREMENT	* * * * *	108,000	07	* * * * *	* * * * *	* * * * *		0	ONCE/ MON	CALCTD
00056 1 0 0 EFFLUENT GROSS VALUE	PERMIT REQUIREMENT	* * * * *	REPORT DAILY MX	GPD	* * * * *	* * * * *	* * * * *			ONCE/ MONTH	CALCTD
SOLIDS, TOTAL SUSPENDED	SAMPLE MEASUREMENT	* * * * *	* * * * *		* * * * *	* * * * *	9	19	0	ONCE/ MON	GRAB
00530 1 0 0 EFFLUENT GROSS VALUE	PERMIT REQUIREMENT	* * * * *	* * * * *		* * * * *	* * * * *	50 DAILY MX	MG/L		ONCE/ MONTH	GRAB
OIL AND GREASE FREON EXTR-GRAV METH	SAMPLE MEASUREMENT	* * * * *	* * * * *		* * * * *	* * * * *	2	19	0	ONCE/ MON	GRAB
00556 1 0 0 EFFLUENT GROSS VALUE	PERMIT REQUIREMENT	* * * * *	* * * * *		* * * * *	* * * * *	15 DAILY MX	MG/L		ONCE/ MONTH	GRAB

Name/Title of Principal Executive Officer		Telephone	Date
Victor Basso	I certify under penalty of law that I have personally examined and am familiar with the information submitted herein: and based on my inquiry of those individuals immediately responsible for obtaining the information, I believe the submitted information is true accurate and complete. I am aware that there are significant penalties for submitting false information, including the possibility of fine and imprisonment. See 18 U.S.C 1001 & 33 U.S.C 1319.	(212) 460-2262	01-02-06
	Signature of Principal Executive Officer or Authorized Agent		YR-MO-DA

Comments and explanations of any Violations:

EPA Form 3320-1 (8-95)

Discharge Monitoring Report (DMR)

Name	Consolidated Edison of New York
Address	4 Irving Place
	New York NY 10003
Facility	11th Street Conduit
Location	Oakland and Water Street

NY0201138	001M
Permit Number	Discharge Number

GROUNDWATER INFILTRAT
SUBR 02
F-Final
Major

Monitoring Period: FROM YR-MO-DA 02-12-01 TO YR-MO-DA 02-12-31

No Discharge ☐

Parameter		Quantity or Loading AVERAGE	Quantity or Loading MAXIMUM	Quantity or Loading UNITS	Quality Or Concentration MINIMUM	Quality Or Concentration AVERAGE	Quality Or Concentration MAXIMUM	Quality Or Concentration UNITS	NO. EX	Sample Frequency	Sample Type
FLOW RATE	SAMPLE MEASUREMENT	* * * * *	108,000	07	* * * * *	* * * * *	* * * * *		0	ONCE/ MON	CALCTD
00056 1 0 0 EFFLUENT GROSS VALUE	PERMIT REQUIREMENT	*****	REPORT DAILY MX	GPD	*****	*****	*****			ONCE/ MONTH	CALCTD
SOLIDS, TOTAL SUSPENDED	SAMPLE MEASUREMENT	* * * * *	* * * * *		* * * * *	* * * * *	23	19	0	ONCE/ MON	GRAB
00530 1 0 0 EFFLUENT GROSS VALUE	PERMIT REQUIREMENT	*****	*****		*****	*****	30 DAILY MX	MG/L		ONCE/ MONTH	GRAB
OIL AND GREASE FREON EXTR-GRAV METH	SAMPLE MEASUREMENT	* * * * *	* * * * *		* * * * *	* * * * *	3	19	0	ONCE/ MON	GRAB
00556 1 0 0 EFFLUENT GROSS VALUE	PERMIT REQUIREMENT	*****	*****		*****	*****	15 DAILY MX	MG/L		ONCE/ MONTH	GRAB

Name/Title of Principal Executive Officer			Telephone	Date
Victor Basso	I certify under penalty of law that I have personally examined and am familiar with the information submitted herein: and based on my inquiry of those individuals immediately responsible for obtaining the information, I believe the submitted information is true accurate and complete. I am aware that there are significant penalties for submitting false information, including the possibility of fine and imprisonment. See 18 U.S.C 1001 & 33 U.S.C 1319.	Signature of Principal Executive Officer or Authorized Agent	(212) 460-2262	03-01-07 YR-MO-DA

Comments and explanations of any Violations:

EPA Form 3320-1 (8-95)

EPA-NC-CE-0000178

Discharge Monitoring Report (DMR)

Name	Consolidated Edison of New York
Address	4 Irving Place
	New York NY 10003
Facility	11th Street Conduit
Location	Oakland and Water Street

NY0201138	001M
Permit Number	Discharge Number

GROUNDWATER INFILTRAT
SUBR 02
F-Final
Major

Monitoring Period: FROM YR-MO-DA 02-11-01 TO YR-MO-DA 02-11-30

No Discharge ☐

Parameter		Quantity or Loading AVERAGE	Quantity or Loading MAXIMUM	Quantity or Loading UNITS	Quality Or Concentration MINIMUM	Quality Or Concentration AVERAGE	Quality Or Concentration MAXIMUM	Quality Or Concentration UNITS	NO. EX	Sample Frequency	Sample Type
FLOW RATE	SAMPLE MEASUREMENT	* * * * *	108,000	07	* * * * *	* * * * *	* * * * *		0	ONCE/ MON	CALCTD
00056 1 0 0 EFFLUENT GROSS VALUE	PERMIT REQUIREMENT	* * * * *	REPORT DAILY MX	GPD	* * * * *	* * * * *	* * * * *			ONCE/ MONTH	CALCTD
SOLIDS, TOTAL SUSPENDED	SAMPLE MEASUREMENT	* * * * *	* * * * *		* * * * *	* * * * *	16	19	0	ONCE/ MON	GRAB
00530 1 0 0 EFFLUENT GROSS VALUE	PERMIT REQUIREMENT	* * * * *	* * * * *		* * * * *	* * * * *	50 DAILY MX	MG/L		ONCE/ MONTH	GRAB
OIL AND GREASE FREON EXTR-GRAV METH	SAMPLE MEASUREMENT	* * * * *	* * * * *		* * * * *	* * * * *	3	19	0	ONCE/ MON	GRAB
00556 1 0 0 EFFLUENT GROSS VALUE	PERMIT REQUIREMENT	* * * * *	* * * * *		* * * * *	* * * * *	15 DAILY MX	MG/L		ONCE/ MONTH	GRAB

Name/Title of Principal Executive Officer		Telephone	Date
Victor Basso	I certify under penalty of law that I have personally examined and am familiar with the information submitted herein: and based on my inquiry of those individuals immediately responsible for obtaining the information, I believe the submitted information is true accurate and complete. I am aware that there are significant penalties for submitting false information, including the possibility of fine and imprisonment. See 18 U.S.C 1001 & 33 U.S.C 1319.	(212) 460-2262	02-12-03 YR-MO-DA

Signature of Principal Executive Officer or Authorized Agent

Comments and explanations of any Violations:

EPA Form 3320-1 (8-95)

EPA-NC-CE-0000179

Discharge Monitoring Report (DMR)

Name	Consolidated Edison Of New York
Address	4 Irving Place
	New York NY 10003
Facility	11th Street Conduit
Location	Oakland and Water Street

NY0201138	001M	GROUNDWATER INFILTRAT
Permit Number	Discharge Number	SUBR 02
		F-Final
		Major

Monitoring Period: FROM YR-MO-DA 02-10-01 TO YR-MO-DA 02-10-31

No Discharge ☐

Parameter		Quantity or Loading AVERAGE	Quantity or Loading MAXIMUM	UNITS	Quality Or Concentration MINIMUM	Quality Or Concentration AVERAGE	Quality Or Concentration MAXIMUM	UNITS	NO. EX	Sample Frequency	Sample Type
FLOW RATE	SAMPLE MEASUREMENT	* * * * *	108,000	07	* * * * *	* * * * *	* * * * *		0	ONCE/ MON	CALCTD
00056 1 0 0 EFFLUENT GROSS VALUE	PERMIT REQUIREMENT	* * * * *	REPORT DAILY MX	GPD	* * * * *	* * * * *	* * * * *			ONCE/ MONTH	CALCTD
SOLIDS, TOTAL SUSPENDED	SAMPLE MEASUREMENT	* * * * *	* * * * *		* * * * *	* * * * *	8	19	0	ONCE/ MON	GRAB
00530 1 0 0 EFFLUENT GROSS VALUE	PERMIT REQUIREMENT	* * * * *	* * * * *		* * * * *	* * * * *	50 DAILY MX	MG/L		ONCE/ MONTH	GRAB
OIL AND GREASE FREON EXTR-GRAV METH	SAMPLE MEASUREMENT	* * * * *	* * * * *		* * * * *	* * * * *	3	19	0	ONCE/ MON	GRAB
00556 1 0 0 EFFLUENT GROSS VALUE	PERMIT REQUIREMENT	* * * * *	* * * * *		* * * * *	* * * * *	15 DAILY MX	MG/L		ONCE/ MONTH	GRAB

Name/Title of Principal Executive Officer		Telephone	Date
Victor Basso	I certify under penalty of law that I have personally examined and am familiar with the information submitted herein: and based on my inquiry of those individuals immediately responsible for obtaining the information, I believe the submitted information is true accurate and complete. I am aware that there are significant penalties for submitting false information, including the possibility of fine and imprisonment. See 18 U.S.C 1001 & 33 U.S.C 1319.	(212) 460-2262	02-11-06
	Signature of Principal Executive Officer or Authorized Agent		YR-MO-DA

Comments and explanations of any Violations:

EPA Form 3320-1 (8-95)

Discharge Monitoring Report (DMR)

Name	Consolidated Edison of New York
Address	4 Irving Place
	New York NY 10003
Facility	11th Street Conduit
Location	Oakland and Water Street

NY0201138	001M	GROUNDWATER INFILTRAT
Permit Number	Discharge Number	SUBR 02
		F-Final
		Major

Monitoring Period: FROM YR-MO-DA 02-09-01 TO YR-MO-DA 02-09-30

No Discharge ☐

Parameter		Quantity or Loading AVERAGE	Quantity or Loading MAXIMUM	Quantity or Loading UNITS	Quality Or Concentration MINIMUM	Quality Or Concentration AVERAGE	Quality Or Concentration MAXIMUM	Quality Or Concentration UNITS	NO. EX	Sample Frequency	Sample Type
FLOW RATE	SAMPLE MEASUREMENT	* * * * *	108,000	07	* * * * *	* * * * *	* * * * *		0	ONCE/ MON	CALCTD
00056 1 0 0 EFFLUENT GROSS VALUE	PERMIT REQUIREMENT	* * * * *	REPORT DAILY MX	GPD	* * * * *	* * * * *	* * * * *			ONCE/ MONTH	CALCTD
SOLIDS, TOTAL SUSPENDED	SAMPLE MEASUREMENT	* * * * *	* * * * *		* * * * *	* * * * *	12	19	0	ONCE/ MON	GRAB
00530 1 0 0 EFFLUENT GROSS VALUE	PERMIT REQUIREMENT	* * * * *	* * * * *		* * * * *	* * * * *	50 DAILY MX	MG/L		ONCE/ MONTH	GRAB
OIL AND GREASE FREON EXTR-GRAV METH	SAMPLE MEASUREMENT	* * * * *	* * * * *		* * * * *	* * * * *	3	19	0	ONCE/ MON	GRAB
00556 1 0 0 EFFLUENT GROSS VALUE	PERMIT REQUIREMENT	* * * * *	* * * * *		* * * * *	* * * * *	15 DAILY MX	MG/L		ONCE/ MONTH	GRAB

Name/Title of Principal Executive Officer			Telephone	Date
Victor Basso	I certify under penalty of law that I have personally examined and am familiar with the information submitted herein: and based on my inquiry of those individuals immediately responsible for obtaining the information, I believe the submitted information is true accurate and complete. I am aware that there are significant penalties for submitting false information, including the possibility of fine and imprisonment. See 18 U.S.C 1001 & 33 U.S.C 1319.	Signature of Principal Executive Officer or Authorized Agent	(212) 460-2262	02-10-03 YR-MO-DA

Comments and explanations of any Violations:

EPA Form 3320-1 (8-95)

Discharge Monitoring Report (DMR)

Name	Consolidated Edison of New York
Address	4 Irving Place
	New York NY 10003
Facility	11th Street Conduit
Location	Oakland and Water Street

NY0201138	001M
Permit Number	Discharge Number

GROUNDWATER INFILTRAT
SUBR 02
F-Final
Major

Monitoring Period: FROM YR-MO-DA 02-08-01 TO YR-MO-DA 02-08-31

No Discharge ☐

Parameter		Quantity or Loading AVERAGE	Quantity or Loading MAXIMUM	Quantity or Loading UNITS	Quality Or Concentration MINIMUM	Quality Or Concentration AVERAGE	Quality Or Concentration MAXIMUM	Quality Or Concentration UNITS	NO. EX	Sample Frequency	Sample Type
FLOW RATE	SAMPLE MEASUREMENT	* * * * *	108,000	07	* * * * *	* * * * *	* * * * *		0	ONCE/ MON	CALCTD
00056 1 0 0 EFFLUENT GROSS VALUE	PERMIT REQUIREMENT	* * * * *	REPORT DAILY MX	GPD	* * * * *	* * * * *	* * * * *			ONCE/ MONTH	CALCTD
SOLIDS, TOTAL SUSPENDED	SAMPLE MEASUREMENT	* * * * *	* * * * *		* * * * *	* * * * *	11	19	0	ONCE/ MON	GRAB
00530 1 0 0 EFFLUENT GROSS VALUE	PERMIT REQUIREMENT	* * * * *	* * * * *		* * * * *	* * * * *	50 DAILY MX	MG/L		ONCE/ MONTH	GRAB
OIL AND GREASE FREON EXTR-GRAV METH	SAMPLE MEASUREMENT	* * * * *	* * * * *		* * * * *	* * * * *	3	19	0	ONCE/ MON	GRAB
00556 1 0 0 EFFLUENT GROSS VALUE	PERMIT REQUIREMENT	* * * * *	* * * * *		* * * * *	* * * * *	15 DAILY MX	MG/L		ONCE/ MONTH	GRAB

Name/Title of Principal Executive Officer		Telephone	Date
Victor Basso	I certify under penalty of law that I have personally examined and am familiar with the information submitted herein: and based on my inquiry of those individuals immediately responsible for obtaining the information, I believe the submitted information is true accurate and complete. I am aware that there are significant penalties for submitting false information, including the possibility of fine and imprisonment. See 18 U.S.C 1001 & 33 U.S.C 1319.	Signature of Principal Executive Officer or Authorized Agent	(212) 460-2262	02-09-10 YR-MO-DA

Comments and explanations of any Violations:

EPA Form 3320-1 (8-95)

Discharge Monitoring Report (DMR)

Name	Consolidated Edison of New York
Address	4 Irving Place
	New York NY 10003
Facility	11th Street Conduit
Location	Oakland and Water Street

NY0201138	001M
Permit Number	Discharge Number

GROUNDWATER INFILTRATIC
SUBR 02
F-Final
Major

Monitoring Period: FROM YR-MO-DA 02-07-01 TO YR-MO-DA 02-07-31

No Discharge ☐

Parameter		Quantity or Loading AVERAGE	Quantity or Loading MAXIMUM	Quantity or Loading UNITS	Quality Or Concentration MINIMUM	Quality Or Concentration AVERAGE	Quality Or Concentration MAXIMUM	Quality Or Concentration UNITS	NO. EX	Sample Frequency	Sample Type
FLOW RATE	SAMPLE MEASUREMENT	* * * * *	139,731	07	* * * * *	* * * * *	* * * * *		0	ONCE/ MON	CALCTD
00056 1 0 0 EFFLUENT GROSS VALUE	PERMIT REQUIREMENT	* * * * *	REPORT DAILY MX	GPD	* * * * *	* * * * *	* * * * *			ONCE/ MONTH	CALCTD
SOLIDS, TOTAL SUSPENDED	SAMPLE MEASUREMENT	* * * * *	* * * * *		* * * * *	* * * * *	27	19	0	ONCE/ MON	GRAB
00530 1 0 0 EFFLUENT GROSS VALUE	PERMIT REQUIREMENT	* * * * *	* * * * *		* * * * *	* * * * *	50 DAILY MX	MG/L		ONCE/ MONTH	GRAB
OIL AND GREASE FREON EXTR-GRAV METH	SAMPLE MEASUREMENT	* * * * *	* * * * *		* * * * *	* * * * *	3	19	0	ONCE/ MON	GRAB
00556 1 0 0 EFFLUENT GROSS VALUE	PERMIT REQUIREMENT	* * * * *	* * * * *		* * * * *	* * * * *	15 DAILY MX	MG/L		ONCE/ MONTH	GRAB

Name/Title of Principal Executive Officer			Telephone	Date
Victor Basso	I certify under penalty of law that I have personally examined and am fami with the information submitted herein: and based on my inquiry of those individuals immediately responsible for obtaining the information. I believe the submitted information is true accurate and complete. I am aware that there are significant penalties for submitting false information, including th possibility of fine and imprisonment. See 18 U.S.C 1001 & 33 U.S.C 1319.	Victor Basso Signature of Principal Executive Officer or Authorized Agent	(212) 460-2262	02-08-02 YR-MO-DA

Comments and explanations of any Violations:

EPA Form 3320-1 (8-9

Discharge Monitoring Report (DMR)

Name	Consolidated Edison of New York
Address	4 Irving Place
	New York NY 10003
Facility	11th Street Conduit
Location	Oakland and Water Street

NY0201138	001M
Permit Number	Discharge Number

GROUNDWATER INFILTRAT
SUBR 02
F-Final
Major

Monitoring Period: FROM YR-MO-DA 02-06-01 TO YR-MO-DA 02-06-30

No Discharge ☐

Parameter		Quantity or Loading AVERAGE	MAXIMUM	UNITS	Quality Or Concentration MINIMUM	AVERAGE	MAXIMUM	UNITS	NO. EX	Sample Frequency	Sample Type
FLOW RATE	SAMPLE MEASUREMENT	* * * * *	108,000	07	* * * * *	* * * * *	* * * * *		0	ONCE/ MON	CALCTD
00056 1 0 0 EFFLUENT GROSS VALUE	PERMIT REQUIREMENT	* * * * *	REPORT DAILY MX	GPD	* * * * *	* * * * *	* * * * *			ONCE/ MONTH	CALCTD
SOLIDS, TOTAL SUSPENDED	SAMPLE MEASUREMENT	* * * * *	* * * * *		* * * * *	* * * * *	14	19	0	ONCE/ MON	GRAB
00530 1 0 0 EFFLUENT GROSS VALUE	PERMIT REQUIREMENT	* * * * *	* * * * *		* * * * *	* * * * *	50 DAILY MX	MG/L		ONCE/ MONTH	GRAB
OIL AND GREASE FREON EXTR-GRAV METH	SAMPLE MEASUREMENT	* * * * *	* * * * *		* * * * *	* * * * *	4	19	0	ONCE/ MON	GRAB
00556 1 0 0 EFFLUENT GROSS VALUE	PERMIT REQUIREMENT	* * * * *	* * * * *		* * * * *	* * * * *	15 DAILY MX	MG/L		ONCE/ MONTH	GRAB

Name/Title of Principal Executive Officer			Telephone	Date
Victor Basso	I certify under penalty of law that I have personally examined and am familiar with the information submitted herein: and based on my inquiry of those individuals immediately responsible for obtaining the information, I believe the submitted information is true accurate and complete. I am aware that there are significant penalties for submitting false information, including the possibility of fine and imprisonment. See 18 U.S.C 1001 & 33 U.S.C 1319.	Victor Basso Signature of Principal Executive Officer or Authorized Agent	(212) 460-2262	02-07-08 YR-MO-DA

Comments and explanations of any Violations:

EPA Form 3320-1 (8-95)

Discharge Monitoring Report (DMR)

Name	Consolidated Edison of New York
Address	4 Irving Place
	New York NY 10003
Facility	11th Street Conduit
Location	Oakland and Water Street

NY0201138	001M
Permit Number	Discharge Number

GROUNDWATER INFILTRAT
SUBR 02
F-Final
Major

Monitoring Period: FROM YR-MO-DA 02-05-01 TO YR-MO-DA 02-05-31

No Discharge ☐

Parameter		Quantity or Loading AVERAGE	Quantity or Loading MAXIMUM	Quantity or Loading UNITS	Quality Or Concentration MINIMUM	Quality Or Concentration AVERAGE	Quality Or Concentration MAXIMUM	Quality Or Concentration UNITS	NO. EX	Sample Frequency	Sample Type
FLOW RATE	SAMPLE MEASUREMENT	* * * * *	108,000	07	* * * * *	* * * * *	* * * * *		0	ONCE/ MON	CALCTD
00056 1 0 0 EFFLUENT GROSS VALUE	PERMIT REQUIREMENT	* * * * *	REPORT DAILY MX	GPD	* * * * *	* * * * *	* * * * *			ONCE/ MONTH	CALCTD
SOLIDS, TOTAL SUSPENDED	SAMPLE MEASUREMENT	* * * * *	* * * * *		* * * * *	* * * * *	10	19	0	ONCE/ MON	GRAB
00530 1 0 0 EFFLUENT GROSS VALUE	PERMIT REQUIREMENT	* * * * *	* * * * *		* * * * *	* * * * *	30 DAILY MX	MG/L		ONCE/ MONTH	GRAB
OIL AND GREASE FREON EXTR-GRAV METH	SAMPLE MEASUREMENT	* * * * *	* * * * *		* * * * *	* * * * *	5	19	0	ONCE/ MON	GRAB
00556 1 0 0 EFFLUENT GROSS VALUE	PERMIT REQUIREMENT	* * * * *	* * * * *		* * * * *	* * * * *	15 DAILY MX	MG/L		ONCE/ MONTH	GRAB

Name/Title of Principal Executive Officer			Telephone	Date
Victor Basso	I certify under penalty of law that I have personally examined and am familiar with the information submitted herein: and based on my inquiry of those individuals immediately responsible for obtaining the information, I believe the submitted information is true accurate and complete. I am aware that there are significant penalties for submitting false information, including the possibility of fine and imprisonment. See 18 U.S.C 1001 & 33 U.S.C 1319.	Victor Basso Signature of Principal Executive Officer or Authorized Agent	(212) 460-2262	02-06-05 YR-MO-DA

Comments and explanations of any Violations:

EPA Form 3320-1 (8-95)

Discharge Monitoring Report (DMR)

Name	Consolidated Edison of New York
Address	4 Irving Place
	New York NY 10003
Facility	11th Street Conduit
Location	Oakland and Water Street

NY0201138	001M
Permit Number	Discharge Number

GROUNDWATER INFILTRAT
SUBR 02
F-Final
Major

Monitoring Period: FROM YR-MO-DA 02-04-01 TO YR-MO-DA 02-04-30

No Discharge ☐

Parameter		Quantity or Loading AVERAGE	Quantity or Loading MAXIMUM	Quantity or Loading UNITS	Quality Or Concentration MINIMUM	Quality Or Concentration AVERAGE	Quality Or Concentration MAXIMUM	Quality Or Concentration UNITS	NO. EX	Sample Frequency	Sample Type
FLOW RATE	SAMPLE MEASUREMENT	* * * * *	108,000	07	* * * * *	* * * * *	* * * * *		0	ONCE/ MON	CALCTD
00056 1 0 0 EFFLUENT GROSS VALUE	PERMIT REQUIREMENT	* * * * *	REPORT DAILY MX	GPD	* * * * *	* * * * *	* * * * *			ONCE/ MONTH	CALCTD
SOLIDS, TOTAL SUSPENDED	SAMPLE MEASUREMENT	* * * * *	* * * * *		* * * * *	* * * * *	14	19	0	ONCE/ MON	GRAB
00530 1 0 0 EFFLUENT GROSS VALUE	PERMIT REQUIREMENT	* * * * *	* * * * *		* * * * *	* * * * *	50 DAILY MX	MG/L		ONCE/ MONTH	GRAB
OIL AND GREASE FREON EXTR-GRAV METH	SAMPLE MEASUREMENT	* * * * *	* * * * *		* * * * *	* * * * *	3	19	0	ONCE/ MON	GRAB
00556 1 0 0 EFFLUENT GROSS VALUE	PERMIT REQUIREMENT	* * * * *	* * * * *		* * * * *	* * * * *	15 DAILY MX	MG/L		ONCE/ MONTH	GRAB

Name/Title of Principal Executive Officer			Telephone	Date
Victor Basso	I certify under penalty of law that I have personally examined and am familiar with the information submitted herein: and based on my inquiry of those individuals immediately responsible for obtaining the information, I believe the submitted information is true accurate and complete. I am aware that there are significant penalties for submitting false information, including the possibility of fine and imprisonment. See 18 U.S.C 1001 & 33 U.S.C 1319.	Victor Basso Signature of Principal Executive Officer or Authorized Agent	(212) 460-2262	02-05-06 YR-MO-DA

Comments and explanations of any Violations:

EPA Form 3320-1 (8-95)

Discharge Monitoring Report (DMR)

Name	Consolidated Edison of New York
Address	4 Irving Place
	New York NY 10003
Facility	11th Street Conduit
Location	Oakland and Water Street

NY0201138	001M
Permit Number	Discharge Number

GROUNDWATER INFILTRATIO
SUBR 02
F-Final
Major

Monitoring Period	YR-MO-DA		YR-MO-DA
FROM	02-03-01	TO	02-03-31

No Discharge ☐

Parameter		Quantity or Loading AVERAGE	MAXIMUM	UNITS	Quality Or Concentration MINIMUM	AVERAGE	MAXIMUM	UNITS	NO. EX	Sample Frequency	Sample Type
FLOW RATE	SAMPLE MEASUREMENT	* * * * *	108,000	07	* * * * *	* * * * *	* * * * *		0	ONCE/ MONT	CALCTD
00056 1 0 0 EFFLUENT GROSS VALUE	PERMIT REQUIREMENT	* * * * *	REPORT DAILY MX	GPD	* * * * *	* * * * *	* * * * *			ONCE/ MONTH	CALCTD
SOLIDS, TOTAL SUSPENDED	SAMPLE MEASUREMENT	* * * * *	* * * * *		* * * * *	* * * * *	20	19	0	ONCE/ MONT	GRAB
00530 1 0 0 EFFLUENT GROSS VALUE	PERMIT REQUIREMENT	* * * * *	* * * * *		* * * * *	* * * * *	30 DAILY MX	MG/L		ONCE/ MONTH	GRAB
OIL AND GREASE FREON EXTR-GRAV METH	SAMPLE MEASUREMENT	* * * * *	* * * * *		* * * * *	* * * * *	4	19	0	ONCE/ MONT	GRAB
00556 1 0 0 EFFLUENT GROSS VALUE	PERMIT REQUIREMENT	* * * * *	* * * * *		* * * * *	* * * * *	15 DAILY MX	MG/L		ONCE/ MONTH	GRAB

Name/Title of Principal Executive Officer			Telephone	Date
Victor Basso	I certify under penalty of law that I have personally examined and am fami with the information submitted herein: and based on my inquiry of those individuals immediately responsible for obtaining the information, I believe the submitted information is true accurate and complete. I am aware that there are significant penalties for submitting false information, including th possibility of fine and imprisonment. See 18 U.S.C 1001 & 33 U.S.C 1319.	Signature of Principal Executive Officer or Authorized Agent	(212) 460-2262	02-03-29 YR-MO-DA

Comments and explanations of any Violations:

EPA Form 3320-1 (8-95

Discharge Monitoring Report (DMR)

Name	Consolidated Edison of New York
Address	4 Irving Place
	New York NY 10003
Facility	11th Street Conduit
Location	Oakland and Water Street

NY0201138	001V	GROUNDWTR INFILTR.&SW A
Permit Number	Discharge Number	SUBR 02
		F-Final
		Major

Monitoring Period: FROM YR-MO-DA 01-03-01 TO YR-MO-DA 02-02-28

No Discharge ☐

Parameter		Quantity or Loading AVERAGE	Quantity or Loading MAXIMUM	UNITS	Quality Or Concentration MINIMUM	Quality Or Concentration AVERAGE	Quality Or Concentration MAXIMUM	UNITS	NO. EX	Sample Frequency	Sample Type
TOLUENE	SAMPLE MEASUREMENT	* * * * *	* * * * *		* * * * *	* * * * *	0.001	19	0	ANNUAL	GRAB
34010 V 0 0 SEE COMMENTS BELOW	PERMIT REQUIREMENT	* * * * *	* * * * *		* * * * *	* * * * *	0.10 DAILY MX	MG/L		ANNUAL	GRAB
BENZENE	SAMPLE MEASUREMENT	* * * * *	* * * * *		* * * * *	* * * * *	0.004	19	0	ANNUAL	GRAB
34030 V 0 0 SEE COMMENTS BELOW	PERMIT REQUIREMENT	* * * * *	* * * * *		* * * * *	* * * * *	0.10 DAILY MX	MG/L		ANNUAL	GRAB
ETHYLBENZENE	SAMPLE MEASUREMENT	* * * * *	* * * * *		* * * * *	* * * * *	0.007	19	0	ANNUAL	GRAB
34371 V 0 0 SEE COMMENTS BELOW	PERMIT REQUIREMENT	* * * * *	* * * * *		* * * * *	* * * * *	0.10 DAILY MX	MG/L		ANNUAL	GRAB
XYLENE	SAMPLE MEASUREMENT	* * * * *	* * * * *		* * * * *	* * * * *	0.009	19	0	ANNUAL	GRAB
81551 V 0 0 SEE COMMENTS BELOW	PERMIT REQUIREMENT	* * * * *	* * * * *		* * * * *	* * * * *	0.10 DAILY MX	MG/L		ANNUAL	GRAB

Name/Title of Principal Executive Officer			Telephone	Date
Victor Basso	I certify under penalty of law that I have personally examined and am fami with the information submitted herein: and based on my inquiry of those individuals immediately responsible for obtaining the information, I believe the submitted information is true accurate and complete. I am aware that there are significant penalties for submitting false information, including th possibility of fine and imprisonment. See 18 U.S.C 1001 & 33 U.S.C 1319.	Signature of Principal Executive Officer or Authorized Agent	(212) 460-2262	02-03-04 YR-MO-DA

Comments and explanations of any Violations:

EPA Form 3320-1 (8-95

Discharge Monitoring Report (DMR)

Name	Consolidated Edison of New York
Address	4 Irving Place
	New York NY 10003
Facility	11th Street Conduit
Location	Oakland and Water Street

NY0201138	00IM
Permit Number	Discharge Number

GROUNDWATER INFILTRATIO
SUBR 02
F-Final
Major

Monitoring Period

FROM YR-MO-DA 02-02-01 TO YR-MO-DA 02-02-28

No Discharge ☐

Parameter		Quantity or Loading AVERAGE	MAXIMUM	UNITS	Quality Or Concentration MINIMUM	AVERAGE	MAXIMUM	UNITS	NO. EX	Sample Frequency	Sample Type
FLOW RATE	SAMPLE MEASUREMENT	* * * * *	108,000	07	* * * * *	* * * * *	* * * * *		0	ONCE/ MONT	CALCTD
00056 1 0 0 EFFLUENT GROSS VALUE	PERMIT REQUIREMENT	* * * * *	REPORT DAILY MX	GPD	* * * * *	* * * * *	* * * * *			ONCE/ MONTH	CALCTD
SOLIDS, TOTAL SUSPENDED	SAMPLE MEASUREMENT	* * * * *	* * * * *		* * * * *	* * * * *	12	19	0	ONCE/ MONT	GRAB
00530 1 0 0 EFFLUENT GROSS VALUE	PERMIT REQUIREMENT	* * * * *	* * * * *		* * * * *	* * * * *	50 DAILY MX	MG/L		ONCE/ MONTH	GRAB
OIL AND GREASE FREON EXTR-GRAV METH	SAMPLE MEASUREMENT	* * * * *	* * * * *		* * * * *	* * * * *	3	19	0	ONCE/ MONT	GRAB
00556 1 0 0 EFFLUENT GROSS VALUE	PERMIT REQUIREMENT	* * * * *	* * * * *		* * * * *	* * * * *	15 DAILY MX	MG/L		ONCE/ MONTH	GRAB

Name/Title of Principal Executive Officer			Telephone	Date
Victor Basso	I certify under penalty of law that I have personally examined and am fami with the information submitted herein: and based on my inquiry of those individuals immediately responsible for obtaining the information, I believe the submitted information is true accurate and complete. I am aware that there are significant penalties for submitting false information, including th possibility of fine and imprisonment. See 18 U.S.C 1001 & 33 U.S.C 1319.	Signature of Principal Executive Officer or Authorized Agent	(212) 460-2262	02-03-04 YR-MO-DA

Comments and explanations of any Violations:

EPA Form 3320-1 (8-95

Discharge Monitoring Report (DMR)

Name	Consolidated Edison of New York
Address	4 Irving Place
	New York NY 10003
Facility	11th Street Conduit
Location	Oakland and Water Street

NY0201138	001M
Permit Number	Discharge Number

Monitoring Period: FROM YR-MO-DA 02-01-01 TO YR-MO-DA 02-01-31

GROUNDWATER INFILTRATIC
SUBR 02
F-Final
Major

No Discharge ☐

Parameter		Quantity or Loading AVERAGE	MAXIMUM	UNITS	Quality Or Concentration MINIMUM	AVERAGE	MAXIMUM	UNITS	NO. EX	Sample Frequency	Sample Type
FLOW RATE	SAMPLE MEASUREMENT	* * * * *	108,000	07	* * * * *	* * * * *	* * * * *		0	ONCE/ MON	CALCTD
00056 1 0 0 EFFLUENT GROSS VALUE	PERMIT REQUIREMENT	* * * * *	REPORT DAILY MX	GPD	* * * * *	* * * * *	* * * * *			ONCE/ MONTH	CALCTD
SOLIDS, TOTAL SUSPENDED	SAMPLE MEASUREMENT	* * * * *	* * * * *		* * * * *	* * * * *	9	19	0	ONCE/ MON	GRAB
00530 1 0 0 EFFLUENT GROSS VALUE	PERMIT REQUIREMENT	* * * * *	* * * * *		* * * * *	* * * * *	50 DAILY MX	MG/L		ONCE/ MONTH	GRAB
OIL AND GREASE FREON EXTR-GRAV METH	SAMPLE MEASUREMENT	* * * * *	* * * * *		* * * * *	* * * * *	11	19	0	ONCE/ MON	GRAB
00556 1 0 0 EFFLUENT GROSS VALUE	PERMIT REQUIREMENT	* * * * *	* * * * *		* * * * *	* * * * *	15 DAILY MX	MG/L		ONCE/ MONTH	GRAB

Name/Title of Principal Executive Officer			Telephone	Date
Victor Basso	I certify under penalty of law that I have personally examined and am fami with the information submitted herein: and based on my inquiry of those individuals immediately responsible for obtaining the information. I believe the submitted information is true accurate and complete. I am aware that there are significant penalties for submitting false information, including th possibility of fine and imprisonment. See 18 U.S.C 1001 & 33 U.S.C 1319.	Victor Basso Signature of Principal Executive Officer or Authorized Agent	(212) 460-2262	02-02-07 YR-MO-DA

Comments and explanations of any Violations:

EPA-NC-CE-0000190

Discharge Monitoring Report (DMR)

Name	Consolidated Edison of New York
Address	4 Irving Place
	New York NY 10003
Facility	11th Street Conduit
Location	Oakland and Water Street

NY0201138	001M	GROUNDWATER INFILTRAT
Permit Number	Discharge Number	SUBR 02
		F-Final
		Major

Monitoring Period: FROM YR-MO-DA 03-12-01 TO YR-MO-DA 03-12-31

No Discharge ☐

Parameter		Quantity or Loading AVERAGE	Quantity or Loading MAXIMUM	Quantity or Loading UNITS	Quality Or Concentration MINIMUM	Quality Or Concentration AVERAGE	Quality Or Concentration MAXIMUM	Quality Or Concentration UNITS	NO. EX	Sample Frequency	Sample Type
FLOW RATE	SAMPLE MEASUREMENT	* * * * *	100,800	07	* * * * *	* * * * *	* * * * *		0	ONCE/ MON	CALCTD
00056 1 0 0 EFFLUENT GROSS VALUE	PERMIT REQUIREMENT	* * * * *	REPORT DAILY MX	GPD	* * * * *	* * * * *	* * * * *			ONCE/ MONTH	CALCTD
SOLIDS, TOTAL SUSPENDED	SAMPLE MEASUREMENT	* * * * *	* * * * *		* * * * *	* * * * *	7	19	0	ONCE/ MON	GRAB
00530 1 0 0 EFFLUENT GROSS VALUE	PERMIT REQUIREMENT	* * * * *	* * * * *		* * * * *	* * * * *	30 DAILY MX	MG/L		ONCE/ MONTH	GRAB
OIL AND GREASE FREON EXTR-GRAV METH	SAMPLE MEASUREMENT	* * * * *	* * * * *		* * * * *	* * * * *	3	19	0	ONCE/ MON	GRAB
00556 1 0 0 EFFLUENT GROSS VALUE	PERMIT REQUIREMENT	* * * * *	* * * * *		* * * * *	* * * * *	15 DAILY MX	MG/L		ONCE/ MONTH	GRAB

Name/Title of Principal Executive Officer			Telephone	Date
Victor Basso	I certify under penalty of law that I have personally examined and am familiar with the information submitted herein; and based on my inquiry of those individuals immediately responsible for obtaining the information, I believe the submitted information is true accurate and complete. I am aware that there are significant penalties for submitting false information, including the possibility of fine and imprisonment. See 18 U.S.C 1001 & 33 U.S.C 1319.	Signature of Principal Executive Officer or Authorized Agent	(212) 460-2262	04-01-06 YR-MO-DA

Comments and explanations of any Violations:

EPA Form 3320-1 (8-95)

Discharge Monitoring Report (DMR)

Name	Consolidated Edison of New York
Address	4 Irving Place
	New York NY 10003
Facility	11th Street Conduit
Location	Oakland and Water Street

NY0201138	001M	GROUNDWATER INFILTRAT
Permit Number	Discharge Number	SUBR 02
		F-Final
		Major

Monitoring Period: FROM YR-MO-DA 03-11-01 TO YR-MO-DA 03-11-30

No Discharge ☐

Parameter		Quantity or Loading AVERAGE	Quantity or Loading MAXIMUM	Quantity or Loading UNITS	Quality Or Concentration MINIMUM	Quality Or Concentration AVERAGE	Quality Or Concentration MAXIMUM	Quality Or Concentration UNITS	NO. EX	Sample Frequency	Sample Type
FLOW RATE	SAMPLE MEASUREMENT	* * * * *	108,000	07	* * * * *	* * * * *	* * * * *		0	ONCE/ MON	CALCTD
00056 1 0 0 EFFLUENT GROSS VALUE	PERMIT REQUIREMENT	* * * * *	REPORT DAILY MX	GPD	* * * * *	* * * * *	* * * * *			ONCE/ MONTH	CALCTD
SOLIDS, TOTAL SUSPENDED	SAMPLE MEASUREMENT	* * * * *	* * * * *		* * * * *	* * * * *	10	19	0	ONCE/ MON	GRAB
00530 1 0 0 EFFLUENT GROSS VALUE	PERMIT REQUIREMENT	* * * * *	* * * * *		* * * * *	* * * * *	50 DAILY MX	MG/L		ONCE/ MONTH	GRAB
OIL AND GREASE FREON EXTR-GRAV METH	SAMPLE MEASUREMENT	* * * * *	* * * * *		* * * * *	* * * * *	3	19	0	ONCE/ MON	GRAB
00556 1 0 0 EFFLUENT GROSS VALUE	PERMIT REQUIREMENT	* * * * *	* * * * *		* * * * *	* * * * *	15 DAILY MX	MG/L		ONCE/ MONTH	GRAB

Name/Title of Principal Executive Officer			Telephone	Date
Victor Basso	I certify under penalty of law that I have personally examined and am familiar with the information submitted herein: and based on my inquiry of those individuals immediately responsible for obtaining the information, I believe the submitted information is true accurate and complete. I am aware that there are significant penalties for submitting false information, including the possibility of fine and imprisonment. See 18 U.S.C 1001 & 33 U.S.C 1319.	Victor P Basso Signature of Principal Executive Officer or Authorized Agent	(212) 460-2262	03-12-03 YR-MO-DA

Comments and explanations of any Violations:

EPA Form 3320-1 (8-95)

Discharge Monitoring Report (DMR)

Name	Consolidated Edison of New York
Address	4 Irving Place
	New York NY 10003
Facility	11th Street Conduit
Location	Oakland and Water Street

NY0201138	001M
Permit Number	Discharge Number

GROUNDWATER INFILTRAT
SUBR 02
F-Final
Major

Monitoring Period

FROM (YR-MO-DA)	TO (YR-MO-DA)
03-10-01	03-10-31

No Discharge ☐

Parameter		Quantity or Loading AVERAGE	MAXIMUM	UNITS	Quality Or Concentration MINIMUM	AVERAGE	MAXIMUM	UNITS	NO. EX	Sample Frequency	Sample Type
FLOW RATE	SAMPLE MEASUREMENT	* * * * *	108,000	07	* * * * *	* * * * *	* * * * *		0	ONCE/ MON	CALCTD
00056 1 0 0 EFFLUENT GROSS VALUE	PERMIT REQUIREMENT	* * * * *	REPORT DAILY MX	GPD	* * * * *	* * * * *	* * * * *			ONCE/ MONTH	CALCTD
SOLIDS, TOTAL SUSPENDED	SAMPLE MEASUREMENT	* * * * *	* * * * *		* * * * *	* * * * *	8	19	0	ONCE/ MON	GRAB
00530 1 0 0 EFFLUENT GROSS VALUE	PERMIT REQUIREMENT	* * * * *	* * * * *		* * * * *	* * * * *	50 DAILY MX	MG/L		ONCE/ MONTH	GRAB
OIL AND GREASE FREON EXTR-GRAV METH	SAMPLE MEASUREMENT	* * * * *	* * * * *		* * * * *	* * * * *	3	19	0	ONCE/ MON	GRAB
00556 1 0 0 EFFLUENT GROSS VALUE	PERMIT REQUIREMENT	* * * * *	* * * * *		* * * * *	* * * * *	15 DAILY MX	MG/L		ONCE/ MONTH	GRAB

Name/Title of Principal Executive Officer			Telephone	Date
Victor Basso	I certify under penalty of law that I have personally examined and am familiar with the information submitted herein: and based on my inquiry of those individuals immediately responsible for obtaining the information, I believe the submitted information is true accurate and complete. I am aware that there are significant penalties for submitting false information, including the possibility of fine and imprisonment. See 18 U.S.C 1001 & 33 U.S.C 1319.	Signature of Principal Executive Officer or Authorized Agent	(212) 460-2262	03-11-04 YR-MO-DA

Comments and explanations of any Violations:

EPA Form 3320-1 (8-95)

Discharge Monitoring Report (DMR)

Name	Consolidated Edison of New York
Address	4 Irving Place
	New York NY 10003
Facility	11th Street Conduit
Location	Oakland and Water Street

NY0201138	001M
Permit Number	Discharge Number

GROUNDWATER INFILTRAT
SUBR 02
F-Final
Major

Monitoring Period: FROM YR-MO-DA 03-09-01 TO YR-MO-DA 03-09-30

No Discharge ☐

Parameter		Quantity or Loading AVERAGE	MAXIMUM	UNITS	Quality Or Concentration MINIMUM	AVERAGE	MAXIMUM	UNITS	NO. EX	Sample Frequency	Sample Type
FLOW RATE	SAMPLE MEASUREMENT	* * * * *	100,800	07	* * * * *	* * * * *	* * * * *		0	ONCE/ MON	CALCTD
00056 1 0 0 EFFLUENT GROSS VALUE	PERMIT REQUIREMENT	* * * * *	REPORT DAILY MX	GPD	* * * * *	* * * * *	* * * * *			ONCE/ MONTH	CALCTD
SOLIDS, TOTAL SUSPENDED	SAMPLE MEASUREMENT	* * * * *	* * * * *		* * * * *	* * * * *	11	19	0	ONCE/ MON	GRAB
00530 1 0 0 EFFLUENT GROSS VALUE	PERMIT REQUIREMENT	* * * * *	* * * * *		* * * * *	* * * * *	50 DAILY MX	MG/L		ONCE/ MONTH	GRAB
OIL AND GREASE FREON EXTR-GRAV METH	SAMPLE MEASUREMENT	* * * * *	* * * * *		* * * * *	* * * * *	3	19	0	ONCE/ MON	GRAB
00556 1 0 0 EFFLUENT GROSS VALUE	PERMIT REQUIREMENT	* * * * *	* * * * *		* * * * *	* * * * *	15 DAILY MX	MG/L		ONCE/ MONTH	GRAB

Name/Title of Principal Executive Officer			Telephone	Date
Victor Basso	I certify under penalty of law that I have personally examined and am familiar with the information submitted herein; and based on my inquiry of those individuals immediately responsible for obtaining the information, I believe the submitted information is true accurate and complete. I am aware that there are significant penalties for submitting false information, including the possibility of fine and imprisonment. See 18 U.S.C 1001 & 33 U.S.C 1319.	Signature of Principal Executive Officer or Authorized Agent	(212) 460-2262	03-10-03 YR-MO-DA

Comments and explanations of any Violations:

EPA Form 3320-1 (8-95)

Discharge Monitoring Report (DMR)

Name	Consolidated Edison of New York
Address	4 Irving Place
	New York NY 10003
Facility	11th Street Conduit
Location	Oakland and Water Street

NY0201138	001M
Permit Number	Discharge Number

GROUNDWATER INFILTRAT
SUBR 02
F-Final
Major

Monitoring Period

FROM YR-MO-DA 03-08-01 TO YR-MO-DA 03-08-31

No Discharge ☐

Parameter		Quantity or Loading AVERAGE	MAXIMUM	UNITS	Quality Or Concentration MINIMUM	AVERAGE	MAXIMUM	UNITS	NO. EX	Sample Frequency	Sample Type
FLOW RATE	SAMPLE MEASUREMENT	* * * * *	108,000	07	* * * * *	* * * * *	* * * * *		0	ONCE/ MON	CALCTD
00056 1 0 0 EFFLUENT GROSS VALUE	PERMIT REQUIREMENT	* * * * *	REPORT DAILY MX	GPD	* * * * *	* * * * *	* * * * *			ONCE/ MONTH	CALCTD
SOLIDS, TOTAL SUSPENDED	SAMPLE MEASUREMENT	* * * * *	* * * * *		* * * * *	* * * * *	10	19	0	ONCE/ MON	GRAB
00530 1 0 0 EFFLUENT GROSS VALUE	PERMIT REQUIREMENT	* * * * *	* * * * *		* * * * *	* * * * *	50 DAILY MX	MG/L		ONCE/ MONTH	GRAB
OIL AND GREASE FREON EXTR-GRAV METH	SAMPLE MEASUREMENT	* * * * *	* * * * *		* * * * *	* * * * *	3	19	0	ONCE/ MON	GRAB
00556 1 0 0 EFFLUENT GROSS VALUE	PERMIT REQUIREMENT	* * * * *	* * * * *		* * * * *	* * * * *	15 DAILY MX	MG/L		ONCE/ MONTH	GRAB

Name/Title of Principal Executive Officer			Telephone	Date
Victor Basso	I certify under penalty of law that I have personally examined and am familiar with the information submitted herein; and based on my inquiry of those individuals immediately responsible for obtaining the information, I believe the submitted information is true accurate and complete. I am aware that there are significant penalties for submitting false information, including the possibility of fine and imprisonment. See 18 U.S.C 1001 & 33 U.S.C 1319.	Victor Basso Signature of Principal Executive Officer or Authorized Agent	(212) 460-2262	03-09-10 YR-MO-DA

Comments and explanations of any Violations:

EPA Form 3320-1 (8-95)

Discharge Monitoring Report (DMR)

Name	Consolidated Edison of New York
Address	4 Irving Place
	New York NY 10003
Facility	11th Street Conduit
Location	Oakland and Water Street

NY0201138	001M	GROUNDWATER INFILTRAT
Permit Number	Discharge Number	SUBR 02
		F-Final
		Major

Monitoring Period: FROM YR-MO-DA 03-07-01 TO YR-MO-DA 03-07-31

No Discharge ☐

Parameter		Quantity or Loading AVERAGE	Quantity or Loading MAXIMUM	Quantity or Loading UNITS	Quality Or Concentration MINIMUM	Quality Or Concentration AVERAGE	Quality Or Concentration MAXIMUM	Quality Or Concentration UNITS	NO. EX	Sample Frequency	Sample Type
FLOW RATE	SAMPLE MEASUREMENT	* * * * *	100,800	07	* * * * *	* * * * *	* * * * *		0	ONCE/ MON	CALCTD
00056 1 0 0 EFFLUENT GROSS VALUE	PERMIT REQUIREMENT	* * * * *	REPORT DAILY MX	GPD	* * * * *	* * * * *	* * * * *			ONCE/ MONTH	CALCTD
SOLIDS, TOTAL SUSPENDED	SAMPLE MEASUREMENT	* * * * *	* * * * *		* * * * *	* * * * *	8	19	0	ONCE/ MON	GRAB
00530 1 0 0 EFFLUENT GROSS VALUE	PERMIT REQUIREMENT	* * * * *	* * * * *		* * * * *	* * * * *	50 DAILY MX	MG/L		ONCE/ MONTH	GRAB
OIL AND GREASE FREON EXTR-GRAV METH	SAMPLE MEASUREMENT	* * * * *	* * * * *		* * * * *	* * * * *	3	19	0	ONCE/ MON	GRAB
00556 1 0 0 EFFLUENT GROSS VALUE	PERMIT REQUIREMENT	* * * * *	* * * * *		* * * * *	* * * * *	15 DAILY MX	MG/L		ONCE/ MONTH	GRAB

Name/Title of Principal Executive Officer			Telephone	Date
Victor Basso	I certify under penalty of law that I have personally examined and am familiar with the information submitted herein: and based on my inquiry of those individuals immediately responsible for obtaining the information, I believe the submitted information is true accurate and complete. I am aware that there are significant penalties for submitting false information, including the possibility of fine and imprisonment. See 18 U.S.C 1001 & 33 U.S.C 1319.	Signature of Principal Executive Officer or Authorized Agent	(212) 460-2262	03-08-11 YR-MO-DA

Comments and explanations of any Violations:

EPA Form 3320-1 (8-95)

Discharge Monitoring Report (DMR)

Name	Consolidated Edison of New York
Address	4 Irving Place
	New York NY 10003
Facility	11th Street Conduit
Location	Oakland and Water Street

NY0201138	001M
Permit Number	Discharge Number

GROUNDWATER INFILTRAT
SUBR 02
F-Final
Major

Monitoring Period: FROM YR-MO-DA 03-06-01 TO YR-MO-DA 03-06-30

No Discharge ☐

Parameter		Quantity or Loading AVERAGE	Quantity or Loading MAXIMUM	UNITS	Quality Or Concentration MINIMUM	Quality Or Concentration AVERAGE	Quality Or Concentration MAXIMUM	UNITS	NO. EX	Sample Frequency	Sample Type
FLOW RATE	SAMPLE MEASUREMENT	* * * * *	108,000	07	* * * * *	* * * * *	* * * * *		0	ONCE/ MON	CALCTD
00056 1 0 0 EFFLUENT GROSS VALUE	PERMIT REQUIREMENT	* * * * *	REPORT DAILY MX	GPD	* * * * *	* * * * *	* * * * *			ONCE/ MONTH	CALCTD
SOLIDS, TOTAL SUSPENDED	SAMPLE MEASUREMENT	* * * * *	* * * * *		* * * * *	* * * * *	8	19	0	ONCE/ MON	GRAB
00530 1 0 0 EFFLUENT GROSS VALUE	PERMIT REQUIREMENT	* * * * *	* * * * *		* * * * *	* * * * *	50 DAILY MX	MG/L		ONCE/ MONTH	GRAB
OIL AND GREASE FREON EXTR-GRAV METH	SAMPLE MEASUREMENT	* * * * *	* * * * *		* * * * *	* * * * *	5	19	0	ONCE/ MON	GRAB
00556 1 0 0 EFFLUENT GROSS VALUE	PERMIT REQUIREMENT	* * * * *	* * * * *		* * * * *	* * * * *	15 DAILY MX	MG/L		ONCE/ MONTH	GRAB

Name/Title of Principal Executive Officer			Telephone	Date
Victor Basso	I certify under penalty of law that I have personally examined and am familiar with the information submitted herein: and based on my inquiry of those individuals immediately responsible for obtaining the information, I believe the submitted information is true accurate and complete. I am aware that there are significant penalties for submitting false information, including the possibility of fine and imprisonment. See 18 U.S.C 1001 & 33 U.S.C 1319.	Victor P Basso Signature of Principal Executive Officer or Authorized Agent	(212) 460-2262	03-07-08 YR-MO-DA

Comments and explanations of any Violations:

EPA Form 3320-1 (8-95)

Discharge Monitoring Report (DMR)

Name	Consolidated Edison of New York
Address	4 Irving Place
	New York NY 10003
Facility	11th Street Conduit
Location	Oakland and Water Street

NY0201138	001M
Permit Number	Discharge Number

GROUNDWATER INFILTRAT
SUBR 02
F-Final
Major

Monitoring Period: FROM YR-MO-DA 03-05-01 TO YR-MO-DA 03-05-31

No Discharge ☐

Parameter		Quantity or Loading AVERAGE	Quantity or Loading MAXIMUM	Quantity or Loading UNITS	Quality Or Concentration MINIMUM	Quality Or Concentration AVERAGE	Quality Or Concentration MAXIMUM	Quality Or Concentration UNITS	NO. EX	Sample Frequency	Sample Type
FLOW RATE	SAMPLE MEASUREMENT	* * * * *	100,800	07	* * * * *	* * * * *	* * * * *		0	ONCE/ MON	CALCTD
00056 1 0 0 EFFLUENT GROSS VALUE	PERMIT REQUIREMENT	* * * * *	REPORT DAILY MX	GPD						ONCE/ MONTH	CALCTD
SOLIDS, TOTAL SUSPENDED	SAMPLE MEASUREMENT	* * * * *	* * * * *		* * * * *	* * * * *	8	19	0	ONCE/ MON	GRAB
00530 1 0 0 EFFLUENT GROSS VALUE	PERMIT REQUIREMENT	* * * * *	* * * * *		* * * * *	* * * * *	50 DAILY MX	MG/L		ONCE/ MONTH	GRAB
OIL AND GREASE FREON EXTR-GRAV METH	SAMPLE MEASUREMENT	* * * * *	* * * * *		* * * * *	* * * * *	4	19	0	ONCE/ MON	GRAB
00556 1 0 0 EFFLUENT GROSS VALUE	PERMIT REQUIREMENT	* * * * *	* * * * *		* * * * *	* * * * *	15 DAILY MX	MG/L		ONCE/ MONTH	GRAB

Name/Title of Principal Executive Officer			Telephone	Date
Victor Basso	I certify under penalty of law that I have personally examined and am familiar with the information submitted herein; and based on my inquiry of those individuals immediately responsible for obtaining the information, I believe the submitted information is true accurate and complete. I am aware that there are significant penalties for submitting false information, including the possibility of fine and imprisonment. See 18 U.S.C 1001 & 33 U.S.C 1319.	Victor Basso Signature of Principal Executive Officer or Authorized Agent	(212) 460-2262	03-06-05 YR-MO-DA

Comments and explanations of any Violations:

EPA Form 3320-1 (8-95)

Discharge Monitoring Report (DMR)

Name	Consolidated Edison of New York
Address	4 Irving Place
	New York NY 10003
Facility	11th Street Conduit
Location	Oakland and Water Street

NY0201138	001M	GROUNDWATER INFILTRAT
Permit Number	Discharge Number	SUBR 02
		F-Final
		Major

Monitoring Period: FROM YR-MO-DA 03-04-01 TO YR-MO-DA 03-04-30

No Discharge ☐

Parameter		Quantity or Loading AVERAGE	Quantity or Loading MAXIMUM	Quantity or Loading UNITS	Quality Or Concentration MINIMUM	Quality Or Concentration AVERAGE	Quality Or Concentration MAXIMUM	Quality Or Concentration UNITS	NO. EX	Sample Frequency	Sample Type
FLOW RATE	SAMPLE MEASUREMENT	* * * * *	108,000	07	* * * * *	* * * * *	* * * * *		0	ONCE/ MON	CALCTD
00056 1 0 0 EFFLUENT GROSS VALUE	PERMIT REQUIREMENT	* * * * *	REPORT DAILY MX	GPD	* * * * *	* * * * *	* * * * *			ONCE/ MONTH	CALCTD
SOLIDS, TOTAL SUSPENDED	SAMPLE MEASUREMENT	* * * * *	* * * * *		* * * * *	* * * * *	5	19	0	ONCE/ MON	GRAB
00530 1 0 0 EFFLUENT GROSS VALUE	PERMIT REQUIREMENT	* * * * *	* * * * *		* * * * *	* * * * *	50 DAILY MX	MG/L		ONCE/ MONTH	GRAB
OIL AND GREASE FREON EXTR-GRAV METH	SAMPLE MEASUREMENT	* * * * *	* * * * *		* * * * *	* * * * *	3	19	0	ONCE/ MON	GRAB
00556 1 0 0 EFFLUENT GROSS VALUE	PERMIT REQUIREMENT	* * * * *	* * * * *		* * * * *	* * * * *	15 DAILY MX	MG/L		ONCE/ MONTH	GRAB

Name/Title of Principal Executive Officer			Telephone	Date
Victor Basso	I certify under penalty of law that I have personally examined and am familiar with the information submitted herein; and based on my inquiry of those individuals immediately responsible for obtaining the information, I believe the submitted information is true accurate and complete. I am aware that there are significant penalties for submitting false information, including the possibility of fine and imprisonment. See 18 U.S.C 1001 & 33 U.S.C 1319.	Victor Basso Signature of Principal Executive Officer or Authorized Agent	(212) 460-2262	03-05-06 YR-MO-DA

Comments and explanations of any Violations:

EPA Form 3320-1 (8-95)

Discharge Monitoring Report (DMR)

Name	Consolidated Edison of New York
Address	4 Irving Place
	New York NY 10003
Facility	11th Street Conduit
Location	Oakland and Water Street

NY0201138	001M	GROUNDWATER INFILTRAT
Permit Number	Discharge Number	SUBR 02
		F-Final
		Major

Monitoring Period: FROM YR-MO-DA 03-03-01 TO YR-MO-DA 03-03-31

No Discharge ☐

Parameter		Quantity or Loading AVERAGE	MAXIMUM	UNITS	Quality Or Concentration MINIMUM	AVERAGE	MAXIMUM	UNITS	NO. EX	Sample Frequency	Sample Type
FLOW RATE	SAMPLE MEASUREMENT	* * * * *	108,000	07	* * * * *	* * * * *	* * * * *		0	ONCE/ MON	CALCTD
00056 1 0 0 EFFLUENT GROSS VALUE	PERMIT REQUIREMENT	* * * * *	REPORT DAILY MX	GPD	* * * * *	* * * * *	* * * * *			ONCE/ MONTH	CALCTD
SOLIDS, TOTAL SUSPENDED	SAMPLE MEASUREMENT	* * * * *	* * * * *		* * * * *	* * * * *	6	19	0	ONCE/ MON	GRAB
00530 1 0 0 EFFLUENT GROSS VALUE	PERMIT REQUIREMENT	* * * * *	* * * * *		* * * * *	* * * * *	50 DAILY MX	MG/L		ONCE/ MONTH	GRAB
OIL AND GREASE FREON EXTR-GRAV METH	SAMPLE MEASUREMENT	* * * * *	* * * * *		* * * * *	* * * * *	3	19	0	ONCE/ MON	GRAB
00556 1 0 0 EFFLUENT GROSS VALUE	PERMIT REQUIREMENT	* * * * *	* * * * *		* * * * *	* * * * *	15 DAILY MX	MG/L		ONCE/ MONTH	GRAB

Name/Title of Principal Executive Officer			Telephone	Date
Victor Basso	I certify under penalty of law that I have personally examined and am familiar with the information submitted herein: and based on my inquiry of those individuals immediately responsible for obtaining the information, I believe the submitted information is true accurate and complete. I am aware that there are significant penalties for submitting false information, including the possibility of fine and imprisonment. See 18 U.S.C 1001 & 33 U.S.C 1319.	Victor Basso Signature of Principal Executive Officer or Authorized Agent	(212) 460-2262	03-04-03 YR-MO-DA

Comments and explanations of any Violations:

EPA Form 3320-1 (8-95)

Discharge Monitoring Report (DMR)

Name	Consolidated Edison of New York
Address	4 Irving Place
	New York NY 10003
Facility	11th Street Conduit
Location	Oakland and Water Street

NY0201138	001M	GROUNDWATER INFILTRAT
Permit Number	Discharge Number	SUBR 02
		F-Final
		Major

Monitoring Period: FROM YR-MO-DA 03-02-01 TO YR-MO-DA 03-02-28

No Discharge ☐

Parameter		Quantity or Loading AVERAGE	MAXIMUM	UNITS	Quality Or Concentration MINIMUM	AVERAGE	MAXIMUM	UNITS	NO. EX	Sample Frequency	Sample Type
FLOW RATE	SAMPLE MEASUREMENT	* * * * *	108,000	07	* * * * *	* * * * *	* * * * *		0	ONCE/ MON	CALCTD
00056 1 0 0 EFFLUENT GROSS VALUE	PERMIT REQUIREMENT	* * * * *	REPORT DAILY MX	GPD	* * * * *	* * * * *	* * * * *			ONCE/ MONTH	CALCTD
SOLIDS, TOTAL SUSPENDED	SAMPLE MEASUREMENT	* * * * *	* * * * *		* * * * *	* * * * *	6	19	0	ONCE/ MON	GRAB
00530 1 0 0 EFFLUENT GROSS VALUE	PERMIT REQUIREMENT	* * * * *	* * * * *		* * * * *	* * * * *	50 DAILY MX	MG/L		ONCE/ MONTH	GRAB
OIL AND GREASE FREON EXTR-GRAV METH	SAMPLE MEASUREMENT	* * * * *	* * * * *		* * * * *	* * * * *	3	19	0	ONCE/ MON	GRAB
00556 1 0 0 EFFLUENT GROSS VALUE	PERMIT REQUIREMENT	* * * * *	* * * * *		* * * * *	* * * * *	15 DAILY MX	MG/L		ONCE/ MONTH	GRAB

Name/Title of Principal Executive Officer			Telephone	Date
Victor Basso	I certify under penalty of law that I have personally examined and am familiar with the information submitted herein: and based on my inquiry of those individuals immediately responsible for obtaining the information, I believe the submitted information is true accurate and complete. I am aware that there are significant penalties for submitting false information, including the possibility of fine and imprisonment. See 18 U.S.C 1001 & 33 U.S.C 1319.	Signature of Principal Executive Officer or Authorized Agent	(212) 460-2262	03-03-11 YR-MO-DA

Comments and explanations of any Violations:

EPA Form 3320-1 (8-95)

Discharge Monitoring Report (DMR)

Name	Consolidated Edison of New York
Address	4 Irving Place
	New York NY 10003
Facility	11th Street Conduit
Location	Oakland and Water Street

NY0201138	001V	GROUNDWTR INFILTR.&SW
Permit Number	Discharge Number	SUBR 02
		F-Final
		Major

Monitoring Period: FROM YR-MO-DA 02-03-01 TO YR-MO-DA 03-02-28

No Discharge ☐

Parameter		Quantity or Loading AVERAGE	Quantity or Loading MAXIMUM	UNITS	Quality Or Concentration MINIMUM	Quality Or Concentration AVERAGE	Quality Or Concentration MAXIMUM	UNITS	NO. EX	Sample Frequency	Sample Type
TOLUENE	SAMPLE MEASUREMENT	* * * * *	* * * * *		* * * * *	* * * * *	<0.001	19	0	SEMI- ANNL	GRAB
34010 V 0 0 SEE COMMENTS BELOW	PERMIT REQUIREMENT	*****	*****		*****	*****	0.10 DAILY MX	MG/L		ANNUAL	GRAB
BENZENE	SAMPLE MEASUREMENT	* * * * *	* * * * *		* * * * *	* * * * *	<0.001	19	0	SEMI- ANNL	GRAB
34030 V 0 0 SEE COMMENTS BELOW	PERMIT REQUIREMENT	*****	*****		*****	*****	0.10 DAILY MX	MG/L		ANNUAL	GRAB
ETHYLBENZENE	SAMPLE MEASUREMENT	* * * * *	* * * * *		* * * * *	* * * * *	0.002	19	0	SEMI- ANNL	GRAB
34371 V 0 0 SEE COMMENTS BELOW	PERMIT REQUIREMENT	*****	*****		*****	*****	0.10 DAILY MX	MG/L		ANNUAL	GRAB
XYLENE	SAMPLE MEASUREMENT	* * * * *	* * * * *		* * * * *	* * * * *	<0.003	19	0	SEMI- ANNL	GRAB
81551 V 0 0 SEE COMMENTS BELOW	PERMIT REQUIREMENT	*****	*****		*****	*****	0.10 DAILY MX	MG/L		ANNUAL	GRAB

Name/Title of Principal Executive Officer			Telephone	Date
Victor Basso	I certify under penalty of law that I have personally examined and am familiar with the information submitted herein: and based on my inquiry of those individuals immediately responsible for obtaining the information, I believe the submitted information is true accurate and complete. I am aware that there are significant penalties for submitting false information, including the possibility of fine and imprisonment. See 18 U.S.C 1001 & 33 U.S.C 1319.	Victor Basso Signature of Principal Executive Officer or Authorized Agent	(212) 460-2262	03-03-11 YR-MO-DA

Comments and explanations of any Violations:

EPA Form 3320-1 (8-95)

Discharge Monitoring Report (DMR)

Name	Consolidated Edison Of New York
Address	4 Irving Place
	New York NY 10003
Facility	11th Street Conduit
Location	Oakland and Water Street

NY0201138	001M	GROUNDWATER INFILTRAT
Permit Number	Discharge Number	SUBR 02
		F-Final
		Major

Monitoring Period: FROM YR-MO-DA 03-01-01 TO YR-MO-DA 03-01-31

No Discharge ☐

Parameter		Quantity or Loading AVERAGE	Quantity or Loading MAXIMUM	Quantity or Loading UNITS	Quality Or Concentration MINIMUM	Quality Or Concentration AVERAGE	Quality Or Concentration MAXIMUM	Quality Or Concentration UNITS	NO. EX	Sample Frequency	Sample Type
FLOW RATE	SAMPLE MEASUREMENT	* * * * *	108,000	07	* * * * *	* * * * *	* * * * *		0	ONCE/ MON	CALCTD
00056 1 0 0 EFFLUENT GROSS VALUE	PERMIT REQUIREMENT	* * * * *	REPORT DAILY MX	GPD	* * * * *	* * * * *	* * * * *			ONCE/ MONTH	CALCTD
SOLIDS, TOTAL SUSPENDED	SAMPLE MEASUREMENT	* * * * *	* * * * *		* * * * *	* * * * *	22	19	0	ONCE/ MON	GRAB
00530 1 0 0 EFFLUENT GROSS VALUE	PERMIT REQUIREMENT	* * * * *	* * * * *		* * * * *	* * * * *	50 DAILY MX	MG/L		ONCE/ MONTH	GRAB
OIL AND GREASE FREON EXTR-GRAV METH	SAMPLE MEASUREMENT	* * * * *	* * * * *		* * * * *	* * * * *	3	19	0	ONCE/ MON	GRAB
00556 1 0 0 EFFLUENT GROSS VALUE	PERMIT REQUIREMENT	* * * * *	* * * * *		* * * * *	* * * * *	15 DAILY MX	MG/L		ONCE/ MONTH	GRAB

Name/Title of Principal Executive Officer		Telephone	Date
Victor Basso	I certify under penalty of law that I have personally examined and am familiar with the information submitted herein: and based on my inquiry of those individuals immediately responsible for obtaining the information, I believe the submitted information is true accurate and complete. I am aware that there are significant penalties for submitting false information, including the possibility of fine and imprisonment. See 18 U.S.C 1001 & 33 U.S.C 1319.	(212) 460-2262	03-02-10
	Signature of Principal Executive Officer of Authorized Agent		YR-MO-DA

Comments and explanations of any Violations:

EPA Form 3320-1 (8-95)

Discharge Monitoring Report (DMR)

Name	Consolidated Edison of New York
Address	4 Irving Place
	New York NY 10003
Facility	11th Street Conduit
Location	Oakland and Water Street

NY0201138	001M	GROUNDWATER INFILTRAT
Permit Number	Discharge Number	SUBR 02
		F-Final
		Major

Monitoring Period: FROM YR-MO-DA 04-12-01 TO YR-MO-DA 04-12-31

No Discharge ☐

Parameter		Quantity or Loading AVERAGE	Quantity or Loading MAXIMUM	Quantity or Loading UNITS	Quality Or Concentration MINIMUM	Quality Or Concentration AVERAGE	Quality Or Concentration MAXIMUM	Quality Or Concentration UNITS	NO. EX	Sample Frequency	Sample Type
FLOW RATE	SAMPLE MEASUREMENT	* * * * *	108,000	07	* * * * *	* * * * *	* * * * *		0	ONCE/ MON	CALCTD
00056 1 0 0 EFFLUENT GROSS VALUE	PERMIT REQUIREMENT	* * * * *	REPORT DAILY MX	GPD	* * * * *	* * * * *	* * * * *			ONCE/ MONTH	CALCTD
SOLIDS, TOTAL SUSPENDED	SAMPLE MEASUREMENT	* * * * *	* * * * *		* * * * *	* * * * *	7	19	0	ONCE/ MON	GRAB
00530 1 0 0 EFFLUENT GROSS VALUE	PERMIT REQUIREMENT	* * * * *	* * * * *		* * * * *	* * * * *	50 DAILY MX	MG/L		ONCE/ MONTH	GRAB
OIL AND GREASE FREON EXTR-GRAV METH	SAMPLE MEASUREMENT	* * * * *	* * * * *		* * * * *	* * * * *	3	19	0	ONCE/ MON	GRAB
00556 1 0 0 EFFLUENT GROSS VALUE	PERMIT REQUIREMENT	* * * * *	* * * * *		* * * * *	* * * * *	15 DAILY MX	MG/L		ONCE/ MONTH	GRAB

Name/Title of Principal Executive Officer			Telephone	Date
William Murphy	I certify under penalty of law that I have personally examined and am familiar with the information submitted herein; and based on my inquiry of those individuals immediately responsible for obtaining the information, I believe the submitted information is true accurate and complete. I am aware that there are significant penalties for submitting false information, including the possibility of fine and imprisonment. See 18 U.S.C 1001 & 33 U.S.C 1319.	William Murphy Signature of Principal Executive Officer or Authorized Agent	(212) 460-2262	05-01-13 YR-MO-DA

Comments and explanations of any Violations:

EPA Form 3320-1 (8-95)

Discharge Monitoring Report (DMR)

Name	Consolidated Edison of New York
Address	4 Irving Place
	New York NY 10003
Facility	11th Street Conduit
Location	Oakland and Water Street

NY0201138	001M	GROUNDWATER INFILTRAT
Permit Number	Discharge Number	

Monitoring Period	YR-MO-DA		YR-MO-DA
FROM	04-12-01	TO	04-12-31

Parameter	User Comments
OIL AND GREASE FREON EXTR-GRAV METH 00556 1 0 0 EFFLUENT GROSS VALUE	The ELAP ID is 10380.

Discharge Monitoring Report (DMR)

Name	Consolidated Edison of New York
Address	4 Irving Place
	New York NY 10003
Facility	11th Street Conduit
Location	Oakland and Water Street

NY0201138	001M
Permit Number	Discharge Number

GROUNDWATER INFILTRAT
SUBR 02
F-Final
Major

Monitoring Period: FROM YR-MO-DA 04-11-01 TO YR-MO-DA 04-11-30

No Discharge ☐

Parameter		Quantity or Loading AVERAGE	MAXIMUM	UNITS	Quality Or Concentration MINIMUM	AVERAGE	MAXIMUM	UNITS	NO. EX	Sample Frequency	Sample Type
FLOW RATE	SAMPLE MEASUREMENT	* * * * *	108,000	07	* * * * *	* * * * *	* * * * *		0	ONCE/ MON	CALCTD
00056 1 0 0 EFFLUENT GROSS VALUE	PERMIT REQUIREMENT	* * * * *	REPORT DAILY MX	GPD	* * * * *	* * * * *	* * * * *			ONCE/ MONTH	CALCTD
SOLIDS, TOTAL SUSPENDED	SAMPLE MEASUREMENT	* * * * *	* * * * *		* * * * *	* * * * *	9	19	0	ONCE/ MON	GRAB
00530 1 0 0 EFFLUENT GROSS VALUE	PERMIT REQUIREMENT	* * * * *	* * * * *		* * * * *	* * * * *	60 DAILY MX	MG/L		ONCE/ MONTH	GRAB
OIL AND GREASE FREON EXTR-GRAV METH	SAMPLE MEASUREMENT	* * * * *	* * * * *		* * * * *	* * * * *	7	19	0	ONCE/ MON	GRAB
00556 1 0 0 EFFLUENT GROSS VALUE	PERMIT REQUIREMENT	* * * * *	* * * * *		* * * * *	* * * * *	15 DAILY MX	MG/L		ONCE/ MONTH	GRAB

Name/Title of Principal Executive Officer			Telephone	Date
Victor Basso	I certify under penalty of law that I have personally examined and am familiar with the information submitted herein: and based on my inquiry of those individuals immediately responsible for obtaining the information, I believe the submitted information is true accurate and complete. I am aware that there are significant penalties for submitting false information, including the possibility of fine and imprisonment. See 18 U.S.C 1001 & 33 U.S.C 1319.	Signature of Principal Executive Officer or Authorized Agent	(212) 460-2262	04-12-02 YR-MO-DA

Comments and explanations of any Violations: See Attached

EPA Form 3320-1 (8-95)

Discharge Monitoring Report (DMR)

Name	Consolidated Edison of New York
Address	4 Irving Place
	New York NY 10003
Facility	11th Street Conduit
Location	Oakland and Water Street

NY0201138	001M	GROUNDWATER INFILTRAT
Permit Number	Discharge Number	

Monitoring Period	YR-MO-DA		YR-MO-DA
FROM	04-11-01	TO	04-11-30

Parameter	User Comments
FLOW RATE 00056 1 0 0 EFFLUENT GROSS VALUE	The ELAP ID is 10380.

Discharge Monitoring Report (DMR)

Name	Consolidated Edison of New York
Address	4 Irving Place
	New York NY 10003
Facility	11th Street Conduit
Location	Oakland and Water Street

NY0201138	001M
Permit Number	Discharge Number

GROUNDWATER INFILTRAT
SUBR 02
F-Final
Major

Monitoring Period: FROM YR-MO-DA 04-10-01 TO YR-MO-DA 04-10-31

No Discharge ☐

Parameter		Quantity or Loading AVERAGE	MAXIMUM	UNITS	Quality Or Concentration MINIMUM	AVERAGE	MAXIMUM	UNITS	NO. EX	Sample Frequency	Sample Type
FLOW RATE	SAMPLE MEASUREMENT	* * * * *	108,000	07	* * * * *	* * * * *	* * * * *		0	ONCE/ MON	CALCTD
00056 1 0 0 EFFLUENT GROSS VALUE	REQUIREMENT			GPD							
SOLIDS, TOTAL SUSPENDED	SAMPLE MEASUREMENT	* * * * *	* * * * *		* * * * *	* * * * *	8	19	0	ONCE/ MON	GRAB
00530 1 0 0 EFFLUENT GROSS VALUE	REQUIREMENT						DAILY MX	MG/L			
OIL AND GREASE FREON EXTR-GRAV METH	SAMPLE MEASUREMENT	* * * * *	* * * * *		* * * * *	* * * * *	3	19	0	ONCE/ MON	GRAB
00556 1 0 0 EFFLUENT GROSS VALUE	REQUIREMENT						DAILY MX	MG/L			

Name/Title of Principal Executive Officer		Telephone	Date
Victor Basso	I certify under penalty of law that I have personally examined and am familiar with the information submitted herein: and based on my inquiry of those individuals immediately responsible for obtaining the information, I believe the submitted information is true accurate and complete. I am aware that there are significant penalties for submitting false information, including the possibility of fine and imprisonment. See 18 U.S.C 1001 & 33 U.S.C 1319.	(212) 460-2262	04-11-03
	Signature of Principal Executive Officer or Authorized Agent		YR-MO-DA

Comments and explanations of any Violations: See Attached

EPA Form 3320-1 (8-95)

Discharge Monitoring Report (DMR)

Name	Consolidated Edison of New York
Address	4 Irving Place
	New York NY 10003
Facility	11th Street Conduit
Location	Oakland and Water Street

NY0201138	001M	GROUNDWATER INFILTRAT
Permit Number	Discharge Number	

Monitoring Period	YR-MO-DA		YR-MO-DA
FROM	04-10-01	TO	04-10-31

Parameter	User Comments
FLOW RATE 00056 1 0 0 EFFLUENT GROSS VALUE	The ELAP ID is 10380.

Discharge Monitoring Report (DMR)

Name	Consolidated Edison of New York
Address	4 Irving Place
	New York NY 10003
Facility	11th Street Conduit
Location	Oakland and Water Street

NY0201138	001M
Permit Number	Discharge Number

GROUNDWATER INFILTRAT
SUBR 02
F-Final
Major

Monitoring Period: FROM YR-MO-DA 04-09-01 TO YR-MO-DA 04-09-30

No Discharge ☐

Parameter		Quantity or Loading AVERAGE	MAXIMUM	UNITS	Quality Or Concentration MINIMUM	AVERAGE	MAXIMUM	UNITS	NO. EX	Sample Frequency	Sample Type
FLOW RATE	SAMPLE MEASUREMENT	* * * * *	108,000	07	* * * * *	* * * * *	* * * * *		0	ONCE/ MON	CALCTD
00056 1 0 0 EFFLUENT GROSS VALUE	PERMIT REQUIREMENT	* * * * *	REPORT DAILY MX	GPD	* * * * *	* * * * *	* * * * *			ONCE/ MONTH	CALCTD
SOLIDS, TOTAL SUSPENDED	SAMPLE MEASUREMENT	* * * * *	* * * * *		* * * * *	* * * * *	7	19	0	ONCE/ MON	GRAB
00530 1 0 0 EFFLUENT GROSS VALUE	PERMIT REQUIREMENT	* * * * *	* * * * *		* * * * *	* * * * *	30 DAILY MX	MG/L		ONCE/ MONTH	GRAB
OIL AND GREASE FREON EXTR-GRAV METH	SAMPLE MEASUREMENT	* * * * *	* * * * *		* * * * *	* * * * *	3	19	0	ONCE/ MON	GRAB
00556 1 0 0 EFFLUENT GROSS VALUE	PERMIT REQUIREMENT	* * * * *	* * * * *		* * * * *	* * * * *	15 DAILY MX	MG/L		ONCE/ MONTH	GRAB

Name/Title of Principal Executive Officer			Telephone	Date
Victor Basso	I certify under penalty of law that I have personally examined and am familiar with the information submitted herein: and based on my inquiry of those individuals immediately responsible for obtaining the information, I believe the submitted information is true accurate and complete. I am aware that there are significant penalties for submitting false information, including the possibility of fine and imprisonment. See 18 U.S.C 1001 & 33 U.S.C 1319.	Signature of Principal Executive Officer or Authorized Agent	(212) 460-2262	04-10-05 YR-MO-DA

Comments and explanations of any Violations: See Attached

EPA Form 3320-1 (8-95)

Discharge Monitoring Report (DMR)

Name	Consolidated Edison of New York
Address	4 Irving Place
	New York NY 10003
Facility	11th Street Conduit
Location	Oakland and Water Street

NY0201138	001M	GROUNDWATER INFILTRAT
Permit Number	Discharge Number	

Monitoring Period			
	YR-MO-DA		YR-MO-DA
FROM	04-09-01	TO	04-09-30

Parameter	User Comments
FLOW RATE 00056 1 0 0 EFFLUENT GROSS VALUE	The ELAP ID is 10380.

Discharge Monitoring Report (DMR)

Name	Consolidated Edison of New York
Address	4 Irving Place
	New York NY 10003
Facility	11th Street Conduit
Location	Oakland and Water Street

NY0201138	001M
Permit Number	Discharge Number

GROUNDWATER INFILTRAT
SUBR 02
F-Final
Major

Monitoring Period: FROM YR-MO-DA 04-08-01 TO YR-MO-DA 04-08-31

No Discharge ☐

Parameter		Quantity or Loading AVERAGE	Quantity or Loading MAXIMUM	UNITS	Quality Or Concentration MINIMUM	Quality Or Concentration AVERAGE	Quality Or Concentration MAXIMUM	UNITS	NO. EX	Sample Frequency	Sample Type
FLOW RATE	SAMPLE MEASUREMENT	* * * * *	108,000	07	* * * * *	* * * * *	* * * * *		0	ONCE/ MON	CALCTD
00056 1 0 0 EFFLUENT GROSS VALUE	PERMIT REQUIREMENT	* * * * *	REPORT DAILY MX	GPD	* * * * *	* * * * *	* * * * *			ONCE/ MONTH	CALCTD
SOLIDS, TOTAL SUSPENDED	SAMPLE MEASUREMENT	* * * * *	* * * * *		* * * * *	* * * * *	7	19	0	ONCE/ MON	GRAB
00530 1 0 0 EFFLUENT GROSS VALUE	PERMIT REQUIREMENT	* * * * *	* * * * *		* * * * *	* * * * *	50 DAILY MX	MG/L		ONCE/ MONTH	GRAB
OIL AND GREASE FREON EXTR-GRAV METH	SAMPLE MEASUREMENT	* * * * *	* * * * *		* * * * *	* * * * *	3	19	0	ONCE/ MON	GRAB
00556 1 0 0 EFFLUENT GROSS VALUE	PERMIT REQUIREMENT	* * * * *	* * * * *		* * * * *	* * * * *	15 DAILY MX	MG/L		ONCE/ MONTH	GRAB

Name/Title of Principal Executive Officer			Telephone	Date
Victor Basso	I certify under penalty of law that I have personally examined and am familiar with the information submitted herein: and based on my inquiry of those individuals immediately responsible for obtaining the information, I believe the submitted information is true accurate and complete. I am aware that there are significant penalties for submitting false information, including the possibility of fine and imprisonment. See 18 U.S.C 1001 & 33 U.S.C 1319.	Victor Basso Signature of Principal Executive Officer or Authorized Agent	(212) 460-2262	04-09-08 YR-MO-DA

Comments and explanations of any Violations: See Attached

EPA Form 3320-1 (8-95)

Discharge Monitoring Report (DMR)

Name	Consolidated Edison of New York
Address	4 Irving Place
	New York NY 10003
Facility	11th Street Conduit
Location	Oakland and Water Street

NY0201138	001M	GROUNDWATER INFILTRAT
Permit Number	Discharge Number	

Monitoring Period	YR-MO-DA		YR-MO-DA
FROM	04-08-01	TO	04-08-31

Parameter	User Comments
FLOW RATE 00056 1 0 0 EFFLUENT GROSS VALUE	The ELAP ID is 10380.

Discharge Monitoring Report (DMR)

Name	Consolidated Edison of New York
Address	4 Irving Place
	New York NY 10003
Facility	11th Street Conduit
Location	Oakland and Water Street

NY0201138	001M	GROUNDWATER INFILTRATI
Permit Number	Discharge Number	SUBR 02
		F-Final
		Major

Monitoring Period: FROM YR-MO-DA 04-07-01 TO YR-MO-DA 04-07-31

No Discharge ☐

Parameter		Quantity or Loading AVERAGE	MAXIMUM	UNITS	Quality Or Concentration MINIMUM	AVERAGE	MAXIMUM	UNITS	NO. EX	Sample Frequency	Sample Type
FLOW RATE	SAMPLE MEASUREMENT	* * * * *	108,000	07	* * * * *	* * * * *	* * * * *		0	ONCE/ MON	CALCTD
00056 1 0 0 EFFLUENT GROSS VALUE	PERMIT REQUIREMENT	* * * * *	REPORT DAILY MX	GPD	* * * * *	* * * * *	* * * * *			ONCE/ MON	CALCTD
SOLIDS, TOTAL SUSPENDED	SAMPLE MEASUREMENT	* * * * *	* * * * *		* * * * *	* * * * *	10	19	0	ONCE/ MON	GRAB
00530 1 0 0 EFFLUENT GROSS VALUE	PERMIT REQUIREMENT	* * * * *	* * * * *		* * * * *	* * * * *	100 DAILY MX	MG/L		ONCE/ MON	GRAB
OIL AND GREASE FREON EXTR-GRAV METH	SAMPLE MEASUREMENT	* * * * *	* * * * *		* * * * *	* * * * *	3	19	0	ONCE/ MON	GRAB
00556 1 0 0 EFFLUENT GROSS VALUE	PERMIT REQUIREMENT	* * * * *	* * * * *		* * * * *	* * * * *	15 DAILY MX	MG/L		ONCE/ MON	GRAB

Name/Title of Principal Executive Officer			Telephone	Date
Victor Basso	I certify under penalty of law that I have personally examined and am familiar with the information submitted herein; and based on my inquiry of those individuals immediately responsible for obtaining the information, I believe the submitted information is true accurate and complete. I am aware that there are significant penalties for submitting false information, including the possibility of fine and imprisonment. See 18 U.S.C 1001 & 33 U.S.C 1319.	Signature of Principal Executive Officer or Authorized Agent	(212) 460-2262	04-08-09 YR-MO-DA

Comments and explanations of any Violations: See Attached

EPA Form 3320-1 (8-95)

Discharge Monitoring Report (DMR)

Name	Consolidated Edison of New York
Address	4 Irving Place
	New York NY 10003
Facility	11th Street Conduit
Location	Oakland and Water Street

NY0201138	001M	GROUNDWATER INFILTRAT
Permit Number	Discharge Number	

Monitoring Period

	YR-MO-DA		YR-MO-DA
FROM	04-07-01	TO	04-07-31

Parameter	User Comments
OIL AND GREASE FREON EXTR-GRAV METH 00556 1 0 0 EFFLUENT GROSS VALUE	The ELAP ID is 10380.

Discharge Monitoring Report (DMR)

Name	Consolidated Edison of New York
Address	4 Irving Place
	New York NY 10003
Facility	11th Street Conduit
Location	Oakland and Water Street

NY0201138	001M
Permit Number	Discharge Number

GROUNDWATER INFILTRAT
SUBR 02
F-Final
Major

Monitoring Period
FROM YR-MO-DA 04-06-01 TO YR-MO-DA 04-06-30

No Discharge ☐

Parameter		Quantity or Loading AVERAGE	MAXIMUM	UNITS	Quality Or Concentration MINIMUM	AVERAGE	MAXIMUM	UNITS	NO. EX	Sample Frequency	Sample Type
FLOW RATE	SAMPLE MEASUREMENT	* * * * *	108,000	07	* * * * *	* * * * *	* * * * *		0	ONCE/ MON	CALCTD
00056 1 0 0 EFFLUENT GROSS VALUE	PERMIT REQUIREMENT	* * * * *	REPORT DAILY MX	GPD	* * * * *	* * * * *	* * * * *			ONCE/ MONTH	CALCTD
SOLIDS, TOTAL SUSPENDED	SAMPLE MEASUREMENT	* * * * *	* * * * *		* * * * *	* * * * *	8	19	0	ONCE/ MON	GRAB
00530 1 0 0 EFFLUENT GROSS VALUE	PERMIT REQUIREMENT	* * * * *	* * * * *		* * * * *	* * * * *	50 DAILY MX	MG/L		ONCE/ MONTH	GRAB
OIL AND GREASE FREON EXTR-GRAV METH	SAMPLE MEASUREMENT	* * * * *	* * * * *		* * * * *	* * * * *	3	19	0	ONCE/ MON	GRAB
00556 1 0 0 EFFLUENT GROSS VALUE	PERMIT REQUIREMENT	* * * * *	* * * * *		* * * * *	* * * * *	15 DAILY MX	MG/L		ONCE/ MONTH	GRAB

Name/Title of Principal Executive Officer			Telephone	Date
Victor Basso	I certify under penalty of law that I have personally examined and am familiar with the information submitted herein: and based on my inquiry of those individuals immediately responsible for obtaining the information, I believe the submitted information is true accurate and complete. I am aware that there are significant penalties for submitting false information, including the possibility of fine and imprisonment. See 18 U.S.C 1001 & 33 U.S.C 1319.	Signature of Principal Executive Officer or Authorized Agent	(212) 460-2262	04-07-08 YR-MO-DA

Comments and explanations of any Violations: See Attached

EPA Form 3320-1 (8-95)

Discharge Monitoring Report (DMR)

Name	Consolidated Edison of New York
Address	4 Irving Place
	New York NY 10003
Facility	11th Street Conduit
Location	Oakland and Water Street

NY0201138	001M	GROUNDWATER INFILTRAT
Permit Number	Discharge Number	

Monitoring Period	YR-MO-DA		YR-MO-DA
FROM	04-06-01	TO	04-06-30

Parameter	User Comments
FLOW RATE 00056 1 0 0 EFFLUENT GROSS VALUE	ELAP ID is 10380.

Discharge Monitoring Report (DMR)

Name	Consolidated Edison of New York
Address	4 Irving Place
	New York NY 10003
Facility	11th Street Conduit
Location	Oakland and Water Street

NY0201138	001M	GROUNDWATER INFILTRAT
Permit Number	Discharge Number	SUBR 02
		F-Final
		Major

Monitoring Period: FROM YR-MO-DA 04-05-01 TO YR-MO-DA 04-05-31

No Discharge ☐

Parameter		Quantity or Loading AVERAGE	Quantity or Loading MAXIMUM	Quantity or Loading UNITS	Quality Or Concentration MINIMUM	Quality Or Concentration AVERAGE	Quality Or Concentration MAXIMUM	Quality Or Concentration UNITS	NO. EX	Sample Frequency	Sample Type
FLOW RATE	SAMPLE MEASUREMENT	* * * * *	108,000	07	* * * * *	* * * * *	* * * * *		0	ONCE/ MON	CALCTD
00056 1 0 0 EFFLUENT GROSS VALUE	PERMIT REQUIREMENT	* * * * *	REPORT DAILY MX	GPD	* * * * *	* * * * *	* * * * *			ONCE/ MONTH	CALCTD
SOLIDS, TOTAL SUSPENDED	SAMPLE MEASUREMENT	* * * * *	* * * * *		* * * * *	* * * * *	10	19	0	ONCE/ MON	GRAB
00530 1 0 0 EFFLUENT GROSS VALUE	PERMIT REQUIREMENT	* * * * *	* * * * *		* * * * *	* * * * *	50 DAILY MX	MG/L		ONCE/ MONTH	GRAB
OIL AND GREASE FREON EXTR-GRAV METH	SAMPLE MEASUREMENT	* * * * *	* * * * *		* * * * *	* * * * *	5	19	0	ONCE/ MON	GRAB
00556 1 0 0 EFFLUENT GROSS VALUE	PERMIT REQUIREMENT	* * * * *	* * * * *		* * * * *	* * * * *	15 DAILY MX	MG/L		ONCE/ MONTH	GRAB

Name/Title of Principal Executive Officer			Telephone	Date
Victor Basso	I certify under penalty of law that I have personally examined and am familiar with the information submitted herein; and based on my inquiry of those individuals immediately responsible for obtaining the information, I believe the submitted information is true accurate and complete. I am aware that there are significant penalties for submitting false information, including the possibility of fine and imprisonment. See 18 U.S.C 1001 & 33 U.S.C 1319.	Victor Basso Signature of Principal Executive Officer or Authorized Agent	(212) 460-2262	04-06-01 YR-MO-DA

Comments and explanations of any Violations: See Attached

EPA Form 3320-1 (8-95)

Discharge Monitoring Report (DMR)

Name	Consolidated Edison of New York
Address	4 Irving Place
	New York NY 10003
Facility	11th Street Conduit
Location	Oakland and Water Street

NY0201138	001M	GROUNDWATER INFILTRAT
Permit Number	Discharge Number	

Monitoring Period			
	YR-MO-DA		YR-MO-DA
FROM	04-05-01	TO	04-05-31

Parameter	User Comments
FLOW RATE 00056 1 0 0 EFFLUENT GROSS VALUE	The ELAP ID is 10380.

Discharge Monitoring Report (DMR)

Name	Consolidated Edison of New York
Address	4 Irving Place
	New York NY 10003
Facility	11th Street Conduit
Location	Oakland and Water Street

NY0201138	001M	GROUNDWATER INFILTRAT
Permit Number	Discharge Number	SUBR 02
		F-Final
		Major

Monitoring Period: FROM YR-MO-DA 04-04-01 TO YR-MO-DA 04-04-30

No Discharge ☐

Parameter		Quantity or Loading AVERAGE	MAXIMUM	UNITS	Quality Or Concentration MINIMUM	AVERAGE	MAXIMUM	UNITS	NO. EX	Sample Frequency	Sample Type
FLOW RATE	SAMPLE MEASUREMENT	* * * * *	108,000	07	* * * * *	* * * * *	* * * * *		0	ONCE/ MON	CALCTD
00056 1 0 0 EFFLUENT GROSS VALUE	PERMIT REQUIREMENT	* * * * *	REPORT DAILY MX	GPD	* * * * *	* * * * *	* * * * *			ONCE/ MONTH	CALCTD
SOLIDS, TOTAL SUSPENDED	SAMPLE MEASUREMENT	* * * * *	* * * * *		* * * * *	* * * * *	10	19	0	ONCE/ MON	GRAB
00530 1 0 0 EFFLUENT GROSS VALUE	PERMIT REQUIREMENT	* * * * *	* * * * *		* * * * *	* * * * *	30 DAILY MX	MG/L		ONCE/ MONTH	GRAB
OIL AND GREASE FREON EXTR-GRAV METH	SAMPLE MEASUREMENT	* * * * *	* * * * *		* * * * *	* * * * *	4	19	0	ONCE/ MON	GRAB
00556 1 0 0 EFFLUENT GROSS VALUE	PERMIT REQUIREMENT	* * * * *	* * * * *		* * * * *	* * * * *	15 DAILY MX	MG/L		ONCE/ MONTH	GRAB

Name/Title of Principal Executive Officer			Telephone	Date
Victor Basso	I certify under penalty of law that I have personally examined and am familiar with the information submitted herein; and based on my inquiry of those individuals immediately responsible for obtaining the information, I believe the submitted information is true accurate and complete. I am aware that there are significant penalties for submitting false information, including the possibility of fine and imprisonment. See 18 U.S.C 1001 & 33 U.S.C 1319.	Victor Basso Signature of Principal Executive Officer or Authorized Agent	(212) 460-2262	04-05-04 YR-MO-DA

Comments and explanations of any Violations:

EPA Form 3320-1 (8-95)

Discharge Monitoring Report (DMR)

Name	Consolidated Edison of New York
Address	4 Irving Place
	New York NY 10003
Facility	11th Street Conduit
Location	Oakland and Water Street

NY0201138	001M	GROUNDWATER INFILTRAT
Permit Number	Discharge Number	

Monitoring Period

FROM YR-MO-DA 04-04-01 TO YR-MO-DA 04-04-30

Parameter	User Comments
FLOW RATE 00056 1 0 0 EFFLUENT GROSS VALUE	ELAP 10380 analyzed TSS and O&G.

Discharge Monitoring Report (DMR)

Name	Consolidated Edison of New York
Address	4 Irving Place
	New York NY 10003
Facility	11th Street Conduit
Location	Oakland and Water Street

NY0201138	001M
Permit Number	Discharge Number

GROUNDWATER INFILTRAT
SUBR 02
F-Final
Major

Monitoring Period: FROM YR-MO-DA 04-03-01 TO YR-MO-DA 04-03-31

No Discharge ☐

Parameter		Quantity or Loading AVERAGE	MAXIMUM	UNITS	Quality Or Concentration MINIMUM	AVERAGE	MAXIMUM	UNITS	NO. EX	Sample Frequency	Sample Type
FLOW RATE	SAMPLE MEASUREMENT	* * * * *	108,000	07	* * * * *	* * * * *	* * * * *		0	ONCE/ MON	CALCTD
00056 1 0 0 EFFLUENT GROSS VALUE	PERMIT REQUIREMENT	* * * * *	REPORT DAILY MX	GPD	* * * * *	* * * * *	* * * * *			ONCE/ MONTH	CALCTD
SOLIDS, TOTAL SUSPENDED	SAMPLE MEASUREMENT	* * * * *	* * * * *		* * * * *	* * * * *	3	19	0	ONCE/ MON	GRAB
00530 1 0 0 EFFLUENT GROSS VALUE	PERMIT REQUIREMENT	* * * * *	* * * * *		* * * * *	* * * * *	50 DAILY MX	MG/L		ONCE/ MONTH	GRAB
OIL AND GREASE FREON EXTR-GRAV METH	SAMPLE MEASUREMENT	* * * * *	* * * * *		* * * * *	* * * * *	7	19	0	ONCE/ MON	GRAB
00556 1 0 0 EFFLUENT GROSS VALUE	PERMIT REQUIREMENT	* * * * *	* * * * *		* * * * *	* * * * *	15 DAILY MX	MG/L		ONCE/ MONTH	GRAB

Name/Title of Principal Executive Officer			Telephone	Date
Victor Basso	I certify under penalty of law that I have personally examined and am familiar with the information submitted herein: and based on my inquiry of those individuals immediately responsible for obtaining the information, I believe the submitted information is true accurate and complete. I am aware that there are significant penalties for submitting false information, including the possibility of fine and imprisonment. See 18 U.S.C 1001 & 33 U.S.C 1319.	Signature of Principal Executive Officer or Authorized Agent	(212) 460-2262	04-04-05 YR-MO-DA

Comments and explanations of any Violations:

EPA Form 3320-1 (8-95)

Discharge Monitoring Report (DMR)

Name	Consolidated Edison of New York
Address	4 Irving Place
	New York NY 10003
Facility	11th Street Conduit
Location	Oakland and Water Street

NY0201138	001M	GROUNDWATER INFILTRAT
Permit Number	Discharge Number	

Monitoring Period			
	YR-MO-DA		YR-MO-DA
FROM	04-03-01	TO	04-03-31

Parameter	User Comments
FLOW RATE 00056 1 0 0 EFFLUENT GROSS VALUE	ELAP 10380 analyzed O&G and TSS.

Discharge Monitoring Report (DMR)

Name	Consolidated Edison of New York
Address	4 Irving Place
	New York NY 10003
Facility	11th Street Conduit
Location	Oakland and Water Street

NY0201138	001V	GROUNDWTR INFILTR.&SW
Permit Number	Discharge Number	SUBR 02
		F-Final
		Major

Monitoring Period: FROM YR-MO-DA 04-03-01 TO YR-MO-DA 05-02-28

No Discharge ☐

Parameter		Quantity or Loading AVERAGE	Quantity or Loading MAXIMUM	UNITS	Quality Or Concentration MINIMUM	Quality Or Concentration AVERAGE	Quality Or Concentration MAXIMUM	UNITS	NO. EX	Sample Frequency	Sample Type
TOLUENE	SAMPLE MEASUREMENT	* * * * *	* * * * *		* * * * *	* * * * *	<0.0004	19	0	ANNUAL	GRAB
34010 V 0 0 SEE COMMENTS BELOW	PERMIT REQUIREMENT	* * * * *	* * * * *		* * * * *	* * * * *	0.10 DAILY MX	MG/L		ANNUAL	GRAB
BENZENE	SAMPLE MEASUREMENT	* * * * *	* * * * *		* * * * *	* * * * *	<0.0007	19	0	ANNUAL	GRAB
34030 V 0 0 SEE COMMENTS BELOW	PERMIT REQUIREMENT	* * * * *	* * * * *		* * * * *	* * * * *	0.10 DAILY MX	MG/L		ANNUAL	GRAB
ETHYLBENZENE	SAMPLE MEASUREMENT	* * * * *	* * * * *		* * * * *	* * * * *	0.0072	19	0	ANNUAL	GRAB
34371 V 0 0 SEE COMMENTS BELOW	PERMIT REQUIREMENT	* * * * *	* * * * *		* * * * *	* * * * *	0.10 DAILY MX	MG/L		ANNUAL	GRAB
XYLENE	SAMPLE MEASUREMENT	* * * * *	* * * * *		* * * * *	* * * * *	<0.0010	19	0	ANNUAL	GRAB
81551 V 0 0 SEE COMMENTS BELOW	PERMIT REQUIREMENT	* * * * *	* * * * *		* * * * *	* * * * *	0.10 DAILY MX	MG/L		ANNUAL	GRAB

Name/Title of Principal Executive Officer			Telephone	Date
William Murphy	I certify under penalty of law that I have personally examined and am familiar with the information submitted herein: and based on my inquiry of those individuals immediately responsible for obtaining the information, I believe the submitted information is true accurate and complete. I am aware that there are significant penalties for submitting false information, including the possibility of fine and imprisonment. See 18 U.S.C 1001 & 33 U.S.C 1319.	William Murphy Signature of Principal Executive Officer or Authorized Agent	(212) 460-2262	05-03-03 YR-MO-DA

Comments and explanations of any Violations:

EPA Form 3320-1 (8-95)

Discharge Monitoring Report (DMR)

Name	Consolidated Edison of New York
Address	4 Irving Place
	New York NY 10003
Facility	11th Street Conduit
Location	Oakland and Water Street

NY0201138	001M	GROUNDWATER INFILTRAT
Permit Number	Discharge Number	SUBR 02
		F-Final
		Major

Monitoring Period: FROM YR-MO-DA 04-02-01 TO YR-MO-DA 04-02-29

No Discharge ☐

Parameter		Quantity or Loading AVERAGE	Quantity or Loading MAXIMUM	Quantity or Loading UNITS	Quality Or Concentration MINIMUM	Quality Or Concentration AVERAGE	Quality Or Concentration MAXIMUM	Quality Or Concentration UNITS	NO. EX	Sample Frequency	Sample Type
OIL AND GREASE FREON EXTR-GRAV METH 00556 1 0 0 EFFLUENT GROSS VALUE	SAMPLE MEASUREMENT	* * * * *	* * * * *		* * * * *	* * * * *	3	19 MG/L	0	ONCE/ MON	GRAB
	PERMIT REQUIREMENT	* * * * *	* * * * *		* * * * *	* * * * *	15 DAILY MX			ONCE/ MONTH	GRAB
FLOW RATE 00056 1 0 0 EFFLUENT GROSS VALUE	SAMPLE MEASUREMENT	* * * * *	100,800	07 GPD	* * * * *	* * * * *	* * * * *		0	ONCE/ MON	CALCTD
	PERMIT REQUIREMENT	* * * * *	REPORT DAILY MX		* * * * *	* * * * *	* * * * *			ONCE/ MONTH	CALCTD
SOLIDS, TOTAL SUSPENDED 00530 1 0 0 EFFLUENT GROSS VALUE	SAMPLE MEASUREMENT	* * * * *	* * * * *		* * * * *	* * * * *	10	19 MG/L	0	ONCE/ MON	GRAB
	PERMIT REQUIREMENT	* * * * *	* * * * *		* * * * *	* * * * *	50 DAILY MX			ONCE/ MONTH	GRAB

Name/Title of Principal Executive Officer			Telephone	Date
Victor Basso	I certify under penalty of law that I have personally examined and am familiar with the information submitted herein; and based on my inquiry of those individuals immediately responsible for obtaining the information, I believe the submitted information is true accurate and complete. I am aware that there are significant penalties for submitting false information, including the possibility of fine and imprisonment. See 18 U.S.C 1001 & 33 U.S.C 1319.	Victor Basso Signature of Principal Executive Officer or Authorized Agent	(212) 460-2262	04-03-02 YR-MO-DA

Comments and explanations of any Violations:

EPA Form 3320-1 (8-95)

Discharge Monitoring Report (DMR)

Name	Consolidated Edison of New York
Address	4 Irving Place
	New York NY 10003
Facility	11th Street Conduit
Location	Oakland and Water Street

NY0201138	001V
Permit Number	Discharge Number

GROUNDWTR INFILTR.&SW
SUBR 02
F-Final
Major

Monitoring Period: FROM YR-MO-DA 03-03-01 TO YR-MO-DA 04-02-29

No Discharge ☐

Parameter		Quantity or Loading AVERAGE	Quantity or Loading MAXIMUM	UNITS	Quality Or Concentration MINIMUM	Quality Or Concentration AVERAGE	Quality Or Concentration MAXIMUM	UNITS	NO. EX	Sample Frequency	Sample Type
TOLUENE	SAMPLE MEASUREMENT	* * * * *	* * * * *		* * * * *	* * * * *	<0.0004	19	0	ANNUAL	GRAB
34010 V 0 0 SEE COMMENTS BELOW	PERMIT REQUIREMENT	* * * * *	* * * * *		* * * * *	* * * * *	0.10 DAILY MX	MG/L		ANNUAL	GRAB
BENZENE	SAMPLE MEASUREMENT	* * * * *	* * * * *		* * * * *	* * * * *	<0.0003	19	0	ANNUAL	GRAB
34030 V 0 0 SEE COMMENTS BELOW	PERMIT REQUIREMENT	* * * * *	* * * * *		* * * * *	* * * * *	0.10 DAILY MX	MG/L		ANNUAL	GRAB
ETHYLBENZENE	SAMPLE MEASUREMENT	* * * * *	* * * * *		* * * * *	* * * * *	<0.0005	19	0	ANNUAL	GRAB
34371 V 0 0 SEE COMMENTS BELOW	PERMIT REQUIREMENT	* * * * *	* * * * *		* * * * *	* * * * *	0.10 DAILY MX	MG/L		ANNUAL	GRAB
XYLENE	SAMPLE MEASUREMENT	* * * * *	* * * * *		* * * * *	* * * * *	<0.0005	19	0	ANNUAL	GRAB
81551 V 0 0 SEE COMMENTS BELOW	PERMIT REQUIREMENT	* * * * *	* * * * *		* * * * *	* * * * *	0.10 DAILY MX	MG/L		ANNUAL	GRAB

Name/Title of Principal Executive Officer			Telephone	Date
Victor Basso	I certify under penalty of law that I have personally examined and am familiar with the information submitted herein: and based on my inquiry of those individuals immediately responsible for obtaining the information, I believe the submitted information is true accurate and complete. I am aware that there are significant penalties for submitting false information, including the possibility of fine and imprisonment. See 18 U.S.C 1001 & 33 U.S.C 1319.	Victor P Basso Signature of Principal Executive Officer or Authorized Agent	(212) 460-2262	04-03-02 YR-MO-DA

Comments and explanations of any Violations:

EPA Form 3320-1 (8-95)

Discharge Monitoring Report (DMR)

Name	Consolidated Edison of New York
Address	4 Irving Place
	New York NY 10003
Facility	11th Street Conduit
Location	Oakland and Water Street

NY0201138	001M	GROUNDWATER INFILTRAT
Permit Number	Discharge Number	SUBR 02
		F-Final
		Major

Monitoring Period: FROM YR-MO-DA 04-01-01 TO YR-MO-DA 04-01-31

No Discharge ☐

Parameter		Quantity or Loading AVERAGE	MAXIMUM	UNITS	Quality Or Concentration MINIMUM	AVERAGE	MAXIMUM	UNITS	NO. EX	Sample Frequency	Sample Type
FLOW RATE	SAMPLE MEASUREMENT	* * * * *	108,000	07	* * * * *	* * * * *	* * * * *		0	ONCE/ MON	CALCTD
00056 1 0 0 EFFLUENT GROSS VALUE	PERMIT REQUIREMENT	* * * * *	REPORT DAILY MX	GPD	* * * * *	* * * * *	* * * * *			ONCE/ MONTH	CALCTD
SOLIDS, TOTAL SUSPENDED	SAMPLE MEASUREMENT	* * * * *	* * * * *		* * * * *	* * * * *	13	19	0	ONCE/ MON	GRAB
00530 1 0 0 EFFLUENT GROSS VALUE	PERMIT REQUIREMENT	* * * * *	* * * * *		* * * * *	* * * * *	30 DAILY MX	MG/L		ONCE/ MONTH	GRAB
OIL AND GREASE FREON EXTR-GRAV METH	SAMPLE MEASUREMENT	* * * * *	* * * * *		* * * * *	* * * * *	3	19	0	ONCE/ MON	GRAB
00556 1 0 0 EFFLUENT GROSS VALUE	PERMIT REQUIREMENT	* * * * *	* * * * *		* * * * *	* * * * *	15 DAILY MX	MG/L		ONCE/ MONTH	GRAB

Name/Title of Principal Executive Officer			Telephone	Date
Victor Basso	I certify under penalty of law that I have personally examined and am familiar with the information submitted herein: and based on my inquiry of those individuals immediately responsible for obtaining the information, I believe the submitted information is true accurate and complete. I am aware that there are significant penalties for submitting false information, including the possibility of fine and imprisonment. See 18 U.S.C 1001 & 33 U.S.C 1319.	Victor Basso Signature of Principal Executive Officer or Authorized Agent	(212) 460-2262	04-02-12 YR-MO-DA

Comments and explanations of any Violations:

EPA Form 3320-1 (8-95)

Discharge Monitoring Report (DMR)

Name	Consolidated Edison of New York
Address	4 Irving Place
	New York NY 10003
Facility	11th Street Conduit
Location	Oakland and Water Street

NY0201138	001M	GROUNDWATER INFILTRAT
Permit Number	Discharge Number	SUBR 02
		F-Final
		Major

Monitoring Period: FROM YR-MO-DA 05-12-01 TO YR-MO-DA 05-12-31

No Discharge ☐

Parameter		Quantity or Loading AVERAGE	MAXIMUM	UNITS	Quality Or Concentration MINIMUM	AVERAGE	MAXIMUM	UNITS	NO. EX	Sample Frequency	Sample Type
FLOW RATE	SAMPLE MEASUREMENT	* * * * *	108,000	07	* * * * *	* * * * *	* * * * *		0	ONCE/ MON	CALCTD
00056 1 0 0 EFFLUENT GROSS VALUE	PERMIT REQUIREMENT	*****	REPORT DAILY MX	GPD	*****	*****	*****			ONCE/ MONTH	CALCTD
SOLIDS, TOTAL SUSPENDED	SAMPLE MEASUREMENT	* * * * *	* * * * *		* * * * *	* * * * *	13	19	0	ONCE/ MON	GRAB
00530 1 0 0 EFFLUENT GROSS VALUE	PERMIT REQUIREMENT	*****	*****		*****	*****	50 DAILY MX	MG/L		ONCE/ MONTH	GRAB
OIL AND GREASE FREON EXTR-GRAV METH	SAMPLE MEASUREMENT	* * * * *	* * * * *		* * * * *	* * * * *	5	19	0	ONCE/ MON	GRAB
00556 1 0 0 EFFLUENT GROSS VALUE	PERMIT REQUIREMENT	*****	*****		*****	*****	15 DAILY MX	MG/L		ONCE/ MONTH	GRAB

Name/Title of Principal Executive Officer		Telephone	Date
William Murphy	I certify under penalty of law that I have personally examined and am familiar with the information submitted herein: and based on my inquiry of those individuals immediately responsible for obtaining the information, I believe the submitted information is true accurate and complete. I am aware that there are significant penalties for submitting false information, including the possibility of fine and imprisonment. See 18 U.S.C 1001 & 33 U.S.C 1319.	(212) 460-2262	06-01-04
	Signature of Principal Executive Officer or Authorized Agent		YR-MO-DA

Comments and explanations of any Violations: See Attached

EPA Form 3320-1 (8-95)

Discharge Monitoring Report (DMR)

Name	Consolidated Edison of New York
Address	4 Irving Place
	New York NY 10003
Facility	11th Street Conduit
Location	Oakland and Water Street

NY0201138	001M	GROUNDWATER INFILTRAT
Permit Number	Discharge Number	

Monitoring Period	YR-MO-DA		YR-MO-DA
FROM	05-12-01	TO	05-12-31

Parameter	User Comments
FLOW RATE 00056 1 0 0 EFFLUENT GROSS VALUE	The ELAP ID is 10380.

Discharge Monitoring Report (DMR)

Name	Consolidated Edison of New York
Address	4 Irving Place
	New York NY 10003
Facility	11th Street Conduit
Location	Oakland and Water Street

NY0201138	001M
Permit Number	Discharge Number

GROUNDWATER INFILTRAT
SUBR 02
F-Final
Major

Monitoring Period: FROM YR-MO-DA 05-11-01 TO YR-MO-DA 05-11-30

No Discharge ☐

Parameter		Quantity or Loading AVERAGE	MAXIMUM	UNITS	Quality Or Concentration MINIMUM	AVERAGE	MAXIMUM	UNITS	NO. EX	Sample Frequency	Sample Type
FLOW RATE	SAMPLE MEASUREMENT	* * * * *	108,000	07	* * * * *	* * * * *	* * * * *		0	ONCE/ MON	CALCTD
00056 1 0 0 EFFLUENT GROSS VALUE	PERMIT REQUIREMENT	*****	REPORT DAILY MX	GPD	*****	*****	*****			ONCE/ MONTH	CALCTD
SOLIDS, TOTAL SUSPENDED	SAMPLE MEASUREMENT	* * * * *	* * * * *		* * * * *	* * * * *	13	19	0	ONCE/ MON	GRAB
00530 1 0 0 EFFLUENT GROSS VALUE	PERMIT REQUIREMENT	*****	*****		*****	*****	50 DAILY MX	MG/L		ONCE/ MONTH	GRAB
OIL AND GREASE FREON EXTR-GRAV METH	SAMPLE MEASUREMENT	* * * * *	* * * * *		* * * * *	* * * * *	8	19	0	ONCE/ MON	GRAB
00556 1 0 0 EFFLUENT GROSS VALUE	PERMIT REQUIREMENT	*****	*****		*****	*****	15 DAILY MX	MG/L		ONCE/ MONTH	GRAB

Name/Title of Principal Executive Officer			Telephone	Date
William Murphy	I certify under penalty of law that I have personally examined and am familiar with the information submitted herein; and based on my inquiry of those individuals immediately responsible for obtaining the information, I believe the submitted information is true accurate and complete. I am aware that there are significant penalties for submitting false information, including the possibility of fine and imprisonment. See 18 U.S.C 1001 & 33 U.S.C 1319.	William Murphy Signature of Principal Executive Officer or Authorized Agent	(212) 460-2262	05-11-30 YR-MO-DA

Comments and explanations of any Violations: See Attached

EPA Form 3320-1 (8-95)

Discharge Monitoring Report (DMR)

Name	Consolidated Edison of New York
Address	4 Irving Place
	New York NY 10003
Facility	11th Street Conduit
Location	Oakland and Water Street

NY0201138	001M	GROUNDWATER INFILTRAT
Permit Number	Discharge Number	

Monitoring Period	YR-MO-DA		YR-MO-DA
FROM	05-11-01	TO	05-11-30

Parameter	User Comments
FLOW RATE 00056 1 0 0 EFFLUENT GROSS VALUE	The ELAP ID is 10380.

Discharge Monitoring Report (DMR)

Name	Consolidated Edison of New York
Address	4 Irving Place
	New York NY 10003
Facility	11th Street Conduit
Location	Oakland and Water Street

NY0201138	001M
Permit Number	Discharge Number

GROUNDWATER INFILTRAT
SUBR 02
F-Final
Major

Monitoring Period: FROM YR-MO-DA 05-10-01 TO YR-MO-DA 05-10-31

No Discharge ☐

Parameter		Quantity or Loading AVERAGE	MAXIMUM	UNITS	Quality Or Concentration MINIMUM	AVERAGE	MAXIMUM	UNITS	NO. EX	Sample Frequency	Sample Type
FLOW RATE	SAMPLE MEASUREMENT	* * * * *	108,000	07	* * * * *	* * * * *	* * * * *		0	ONCE/ MON	CALCTD
00056 1 0 0 EFFLUENT GROSS VALUE	PERMIT REQUIREMENT	* * * * *	REPORT DAILY MX	GPD	* * * * *	* * * * *	* * * * *			ONCE/ MONTH	CALCTD
SOLIDS, TOTAL SUSPENDED	SAMPLE MEASUREMENT	* * * * *	* * * * *		* * * * *	* * * * *	9	19	0	ONCE/ MON	GRAB
00530 1 0 0 EFFLUENT GROSS VALUE	PERMIT REQUIREMENT	* * * * *	* * * * *		* * * * *	* * * * *	50 DAILY MX	MG/L		ONCE/ MONTH	GRAB
OIL AND GREASE FREON EXTR-GRAV METH	SAMPLE MEASUREMENT	* * * * *	* * * * *		* * * * *	* * * * *	9	19	0	ONCE/ MON	GRAB
00556 1 0 0 EFFLUENT GROSS VALUE	PERMIT REQUIREMENT	* * * * *	* * * * *		* * * * *	* * * * *	15 DAILY MX	MG/L		ONCE/ MONTH	GRAB

Name/Title of Principal Executive Officer			Telephone	Date
William Murphy	I certify under penalty of law that I have personally examined and am familiar with the information submitted herein: and based on my inquiry of those individuals immediately responsible for obtaining the information, I believe the submitted information is true accurate and complete. I am aware that there are significant penalties for submitting false information, including the possibility of fine and imprisonment. See 18 U.S.C 1001 & 33 U.S.C 1319.	William Murphy Signature of Principal Executive Officer or Authorized Agent	(212) 460-2262	05-11-01 YR-MO-DA

Comments and explanations of any Violations: See Attached

EPA Form 3320-1 (8-95)

Discharge Monitoring Report (DMR)

Name	Consolidated Edison of New York
Address	4 Irving Place
	New York NY 10003
Facility	11th Street Conduit
Location	Oakland and Water Street

NY0201138	001M	GROUNDWATER INFILTRAT
Permit Number	Discharge Number	

Monitoring Period	YR-MO-DA		YR-MO-DA
FROM	05-10-01	TO	05-10-31

Parameter	User Comments
FLOW RATE 00056 1 0 0 EFFLUENT GROSS VALUE	The ELAP ID is 10380.

Discharge Monitoring Report (DMR)

Name	Consolidated Edison of New York
Address	4 Irving Place
	New York NY 10003
Facility	11th Street Conduit
Location	Oakland and Water Street

NY0201138	001M	GROUNDWATER INFILTRAT
Permit Number	Discharge Number	SUBR 02
		F-Final
		Major

Monitoring Period: FROM YR-MO-DA 05-09-01 TO YR-MO-DA 05-09-30

No Discharge ☐

Parameter		Quantity or Loading AVERAGE	MAXIMUM	UNITS	Quality Or Concentration MINIMUM	AVERAGE	MAXIMUM	UNITS	NO. EX	Sample Frequency	Sample Type
FLOW RATE	SAMPLE MEASUREMENT	* * * * *	108,000	07	* * * * *	* * * * *	* * * * *		0	ONCE/ MON	CALCTD
00056 1 0 0 EFFLUENT GROSS VALUE	PERMIT REQUIREMENT	*****	REPORT DAILY MX	GPD	*****	*****	*****			ONCE/ MONTH	CALCTD
SOLIDS, TOTAL SUSPENDED	SAMPLE MEASUREMENT	* * * * *	* * * * *		* * * * *	* * * * *	10	19	0	ONCE/ MON	GRAB
00530 1 0 0 EFFLUENT GROSS VALUE	PERMIT REQUIREMENT	*****	*****		*****	*****	50 DAILY MX	MG/L		ONCE/ MONTH	GRAB
OIL AND GREASE FREON EXTR-GRAV METH	SAMPLE MEASUREMENT	* * * * *	* * * * *		* * * * *	* * * * *	7	19	0	ONCE/ MON	GRAB
00556 1 0 0 EFFLUENT GROSS VALUE	PERMIT REQUIREMENT	*****	*****		*****	*****	15 DAILY MX	MG/L		ONCE/ MONTH	GRAB

Name/Title of Principal Executive Officer			Telephone	Date
William Murphy	I certify under penalty of law that I have personally examined and am familiar with the information submitted herein: and based on my inquiry of those individuals immediately responsible for obtaining the information, I believe the submitted information is true accurate and complete. I am aware that there are significant penalties for submitting false information, including the possibility of fine and imprisonment. See 18 U.S.C 1001 & 33 U.S.C 1319.	William Murphy Signature of Principal Executive Officer or Authorized Agent	(212) 460-2262	05-09-29 YR-MO-DA

Comments and explanations of any Violations: See Attached

EPA Form 3320-1 (8-95)

Discharge Monitoring Report (DMR)

Name	Consolidated Edison of New York
Address	4 Irving Place
	New York NY 10003
Facility	11th Street Conduit
Location	Oakland and Water Street

NY0201138	001M	GROUNDWATER INFILTRAT
Permit Number	Discharge Number	

Monitoring Period	YR-MO-DA		YR-MO-DA
FROM	05-09-01	TO	05-09-30

Parameter	User Comments
FLOW RATE 00056 1 0 0 EFFLUENT GROSS VALUE	The ELAP ID is 10380.

Discharge Monitoring Report (DMR)

Name	Consolidated Edison of New York
Address	4 Irving Place
	New York NY 10003
Facility	11th Street Conduit
Location	Oakland and Water Street

NY0201138	001M	GROUNDWATER INFILTRAT
Permit Number	Discharge Number	SUBR 02
		F-Final
		Major

Monitoring Period: FROM YR-MO-DA 05-08-01 TO YR-MO-DA 05-08-31

No Discharge ☐

Parameter		Quantity or Loading AVERAGE	MAXIMUM	UNITS	Quality Or Concentration MINIMUM	AVERAGE	MAXIMUM	UNITS	NO. EX	Sample Frequency	Sample Type
FLOW RATE	SAMPLE MEASUREMENT	* * * * *	108,000	07	* * * * *	* * * * *	* * * * *		0	ONCE/ MON	CALCTD
00056 1 0 0 EFFLUENT GROSS VALUE	PERMIT REQUIREMENT	* * * * *	REPORT DAILY MX	GPD	* * * * *	* * * * *	* * * * *			ONCE/ MONTH	CALCTD
SOLIDS, TOTAL SUSPENDED	SAMPLE MEASUREMENT	* * * * *	* * * * *		* * * * *	* * * * *	9	19	0	ONCE/ MON	GRAB
00530 1 0 0 EFFLUENT GROSS VALUE	PERMIT REQUIREMENT	* * * * *	* * * * *		* * * * *	* * * * *	50 DAILY MX	MG/L		ONCE/ MONTH	GRAB
OIL AND GREASE FREON EXTR-GRAV METH	SAMPLE MEASUREMENT	* * * * *	* * * * *		* * * * *	* * * * *	7	19	0	ONCE/ MON	GRAB
00556 1 0 0 EFFLUENT GROSS VALUE	PERMIT REQUIREMENT	* * * * *	* * * * *		* * * * *	* * * * *	15 DAILY MX	MG/L		ONCE/ MONTH	GRAB

Name/Title of Principal Executive Officer		Telephone	Date
William Murphy	I certify under penalty of law that I have personally examined and am familiar with the information submitted herein; and based on my inquiry of those individuals immediately responsible for obtaining the information, I believe the submitted information is true accurate and complete. I am aware that there are significant penalties for submitting false information, including the possibility of fine and imprisonment. See 18 U.S.C 1001 & 33 U.S.C 1319.	(212) 460-2262	05-09-07
	Signature of Principal Executive Officer or Authorized Agent		YR-MO-DA

Comments and explanations of any Violations: See Attached

EPA Form 3320-1 (8-95)

Discharge Monitoring Report (DMR)

Name	Consolidated Edison of New York
Address	4 Irving Place
	New York NY 10003
Facility	11th Street Conduit
Location	Oakland and Water Street

NY0201138	001M	GROUNDWATER INFILTRAT
Permit Number	Discharge Number	

Monitoring Period	YR-MO-DA		YR-MO-DA
FROM	05-08-01	TO	05-08-31

Parameter	User Comments
FLOW RATE 00056 1 0 0 EFFLUENT GROSS VALUE	The ELAP ID is 10380.

Discharge Monitoring Report (DMR)

Name	Consolidated Edison of New York
Address	4 Irving Place
	New York NY 10003
Facility	11th Street Conduit
Location	Oakland and Water Street

NY0201138	001M	GROUNDWATER INFILTRAT
Permit Number	Discharge Number	SUBR 02
		F-Final
		Major

Monitoring Period: FROM YR-MO-DA 05-07-01 TO YR-MO-DA 05-07-31

No Discharge ☐

Parameter		Quantity or Loading AVERAGE	MAXIMUM	UNITS	Quality Or Concentration MINIMUM	AVERAGE	MAXIMUM	UNITS	NO. EX	Sample Frequency	Sample Type
FLOW RATE	SAMPLE MEASUREMENT	* * * * *	108,000	07	* * * * *	* * * * *	* * * * *		0	ONCE/ MON	CALCTD
00056 1 0 0 EFFLUENT GROSS VALUE	PERMIT REQUIREMENT	* * * * *	REPORT DAILY MX	GPD	* * * * *	* * * * *	* * * * *			ONCE/ MONTH	CALCTD
SOLIDS, TOTAL SUSPENDED	SAMPLE MEASUREMENT	* * * * *	* * * * *		* * * * *	* * * * *	21	19	0	ONCE/ MON	GRAB
00530 1 0 0 EFFLUENT GROSS VALUE	PERMIT REQUIREMENT	* * * * *	* * * * *		* * * * *	* * * * *	50 DAILY MX	MG/L		ONCE/ MONTH	GRAB
OIL AND GREASE FREON EXTR-GRAV METH	SAMPLE MEASUREMENT	* * * * *	* * * * *		* * * * *	* * * * *	5	19	0	ONCE/ MON	GRAB
00556 1 0 0 EFFLUENT GROSS VALUE	PERMIT REQUIREMENT	* * * * *	* * * * *		* * * * *	* * * * *	15 DAILY MX	MG/L		ONCE/ MONTH	GRAB

Name/Title of Principal Executive Officer			Telephone	Date
William Murphy	I certify under penalty of law that I have personally examined and am familiar with the information submitted herein: and based on my inquiry of those individuals immediately responsible for obtaining the information, I believe the submitted information is true accurate and complete. I am aware that there are significant penalties for submitting false information, including the possibility of fine and imprisonment. See 18 U.S.C 1001 & 33 U.S.C 1319.	William Murphy Signature of Principal Executive Officer or Authorized Agent	(212) 460-2262	05-08-02 YR-MO-DA

Comments and explanations of any Violations: See Attached

EPA Form 3320-1 (8-95)

Discharge Monitoring Report (DMR)

Name	Consolidated Edison of New York
Address	4 Irving Place
	New York NY 10003
Facility	11th Street Conduit
Location	Oakland and Water Street

NY0201138	001M	GROUNDWATER INFILTRAT
Permit Number	Discharge Number	

Monitoring Period	YR-MO-DA		YR-MO-DA
FROM	05-07-01	TO	05-07-31

Parameter	User Comments
FLOW RATE 00056 1 0 0 EFFLUENT GROSS VALUE	The ELAP ID is 10380.

Discharge Monitoring Report (DMR)

Name	Consolidated Edison of New York
Address	4 Irving Place
	New York NY 10003
Facility	11th Street Conduit
Location	Oakland and Water Street

NY0201138	001M	GROUNDWATER INFILTRAT
Permit Number	Discharge Number	SUBR 02
		F-Final
		Major

Monitoring Period: FROM YR-MO-DA 05-06-01 TO YR-MO-DA 05-06-30

No Discharge ☐

Parameter		Quantity or Loading AVERAGE	MAXIMUM	UNITS	Quality Or Concentration MINIMUM	AVERAGE	MAXIMUM	UNITS	NO. EX	Sample Frequency	Sample Type
FLOW RATE	SAMPLE MEASUREMENT	* * * * *	108,000	07	* * * * *	* * * * *	* * * * *		0	ONCE/ MON	CALCTD
00056 1 0 0 EFFLUENT GROSS VALUE	PERMIT REQUIREMENT	*****	REPORT DAILY MX	GPD	*****	*****	*****			ONCE/ MONTH	CALCTD
SOLIDS, TOTAL SUSPENDED	SAMPLE MEASUREMENT	* * * * *	* * * * *		* * * * *	* * * * *	16	19	0	ONCE/ MON	GRAB
00530 1 0 0 EFFLUENT GROSS VALUE	PERMIT REQUIREMENT	*****	*****		*****	*****	50 DAILY MX	MG/L		ONCE/ MONTH	GRAB
OIL AND GREASE FREON EXTR-GRAV MBTH	SAMPLE MEASUREMENT	* * * * *	* * * * *		* * * * *	* * * * *	6	19	0	ONCE/ MON	GRAB
00556 1 0 0 EFFLUENT GROSS VALUE	PERMIT REQUIREMENT	*****	*****		*****	*****	15 DAILY MX	MG/L		ONCE/ MONTH	GRAB

Name/Title of Principal Executive Officer			Telephone	Date
William Murphy	I certify under penalty of law that I have personally examined and am familiar with the information submitted herein; and based on my inquiry of those individuals immediately responsible for obtaining the information, I believe the submitted information is true accurate and complete. I am aware that there are significant penalties for submitting false information, including the possibility of fine and imprisonment. See 18 U.S.C 1001 & 33 U.S.C 1319.	William Murphy Signature of Principal Executive Officer or Authorized Agent	(212) 460-2262	05-07-08 YR-MO-DA

Comments and explanations of any Violations: See Attached

EPA Form 3320-1 (8-95)

Discharge Monitoring Report (DMR)

Name	Consolidated Edison of New York
Address	4 Irving Place
	New York NY 10003
Facility	11th Street Conduit
Location	Oakland and Water Street

NY0201138	001M	GROUNDWATER INFILTRAT
Permit Number	Discharge Number	

Monitoring Period	YR-MO-DA		YR-MO-DA
FROM	05-06-01	TO	05-06-30

Parameter	User Comments
FLOW RATE 00056 1 0 0 EFFLUENT GROSS VALUE	The ELAP ID is 10380.

Discharge Monitoring Report (DMR)

Name	Consolidated Edison of New York
Address	4 Irving Place
	New York NY 10003
Facility	11th Street Conduit
Location	Oakland and Water Street

NY0201138	001M
Permit Number	Discharge Number

GROUNDWATER INFILTRAT
SUBR 02
F-Final
Major

Monitoring Period: FROM YR-MO-DA 05-05-01 TO YR-MO-DA 05-05-31

No Discharge ☐

Parameter		Quantity or Loading AVERAGE	MAXIMUM	UNITS	Quality Or Concentration MINIMUM	AVERAGE	MAXIMUM	UNITS	NO. EX	Sample Frequency	Sample Type
FLOW RATE	SAMPLE MEASUREMENT	* * * * *	108,000	07	* * * * *	* * * * *	* * * * *		0	ONCE/ MON	CALCTD
00056 1 0 0 EFFLUENT GROSS VALUE	PERMIT REQUIREMENT	* * * * *	REPORT DAILY MX	GPD	* * * * *	* * * * *	* * * * *			ONCE/ MONTH	CALCTD
SOLIDS, TOTAL SUSPENDED	SAMPLE MEASUREMENT	* * * * *	* * * * *		* * * * *	* * * * *	7	19	0	ONCE/ MON	GRAB
00530 1 0 0 EFFLUENT GROSS VALUE	PERMIT REQUIREMENT	* * * * *	* * * * *		* * * * *	* * * * *	50 DAILY MX	MG/L		ONCE/ MONTH	GRAB
OIL AND GREASE FREON EXTR-GRAV METH	SAMPLE MEASUREMENT	* * * * *	* * * * *		* * * * *	* * * * *	7	19	0	ONCE/ MON	GRAB
00556 1 0 0 EFFLUENT GROSS VALUE	PERMIT REQUIREMENT	* * * * *	* * * * *		* * * * *		15 DAILY MX	MG/L		ONCE/ MONTH	GRAB

Name/Title of Principal Executive Officer			Telephone	Date
William Murphy	I certify under penalty of law that I have personally examined and am familiar with the information submitted herein: and based on my inquiry of those individuals immediately responsible for obtaining the information, I believe the submitted information is true accurate and complete. I am aware that there are significant penalties for submitting false information, including the possibility of fine and imprisonment. See 18 U.S.C 1001 & 33 U.S.C 1319.	William Murphy Signature of Principal Executive Officer or Authorized Agent	(212) 460-2262	05-06-03 YR-MO-DA

Comments and explanations of any Violations: See Attached

EPA Form 3320-1 (8-95)

Discharge Monitoring Report (DMR)

Name	Consolidated Edison of New York
Address	4 Irving Place
	New York NY 10003
Facility	11th Street Conduit
Location	Oakland and Water Street

NY0201138	001M	GROUNDWATER INFILTRAT
Permit Number	Discharge Number	

Monitoring Period	YR-MO-DA		YR-MO-DA
FROM	05-05-01	TO	05-05-31

Parameter	User Comments
FLOW RATE 00056 1 0 0 EFFLUENT GROSS VALUE	The ELAP ID is 10380.

Discharge Monitoring Report (DMR)

Name	Consolidated Edison of New York
Address	4 Irving Place
	New York NY 10003
Facility	11th Street Conduit
Location	Oakland and Water Street

NY0201138	001M	GROUNDWATER INFILTRAT
Permit Number	Discharge Number	SUBR 02
		F-Final
		Major

Monitoring Period: FROM YR-MO-DA 05-04-01 TO YR-MO-DA 05-04-30

No Discharge ☐

Parameter		Quantity or Loading AVERAGE	Quantity or Loading MAXIMUM	Quantity or Loading UNITS	Quality Or Concentration MINIMUM	Quality Or Concentration AVERAGE	Quality Or Concentration MAXIMUM	Quality Or Concentration UNITS	NO. EX	Sample Frequency	Sample Type
FLOW RATE	SAMPLE MEASUREMENT	* * * * *	108,000	07	* * * * *	* * * * *	* * * * *		0	ONCE/ MON	CALCTD
00056 1 0 0 EFFLUENT GROSS VALUE	PERMIT REQUIREMENT	*****	REPORT DAILY MX	GPD	*****	*****	*****			ONCE/ MONTH	CALCTD
SOLIDS, TOTAL SUSPENDED	SAMPLE MEASUREMENT	* * * * *	* * * * *		* * * * *	* * * * *	10	19	0	ONCE/ MON	GRAB
00530 1 0 0 EFFLUENT GROSS VALUE	PERMIT REQUIREMENT	*****	*****		*****	*****	50 DAILY MX	MG/L		ONCE/ MONTH	GRAB
OIL AND GREASE FREON EXTR-GRAV METH	SAMPLE MEASUREMENT	* * * * *	* * * * *		* * * * *	* * * * *	5	19	0	ONCE/ MON	GRAB
00556 1 0 0 EFFLUENT GROSS VALUE	PERMIT REQUIREMENT	*****	*****		*****	*****	15 DAILY MX	MG/L		ONCE/ MONTH	GRAB

Name/Title of Principal Executive Officer			Telephone	Date
William Murphy	I certify under penalty of law that I have personally examined and am familiar with the information submitted herein: and based on my inquiry of those individuals immediately responsible for obtaining the information, I believe the submitted information is true accurate and complete. I am aware that there are significant penalties for submitting false information, including the possibility of fine and imprisonment. See 18 U.S.C 1001 & 33 U.S.C 1319.	William Murphy Signature of Principal Executive Officer or Authorized Agent	(212) 460-2262	05-05-04 YR-MO-DA

Comments and explanations of any Violations: See Attached

EPA Form 3320-1 (8-95)

Discharge Monitoring Report (DMR)

Name	Consolidated Edison of New York
Address	4 Irving Place
	New York NY 10003
Facility	11th Street Conduit
Location	Oakland and Water Street

NY0201138	001M	GROUNDWATER INFILTRAT
Permit Number	Discharge Number	

Monitoring Period	YR-MO-DA		YR-MO-DA
FROM	05-04-01	TO	05-04-30

Parameter	User Comments
FLOW RATE 00056 1 0 0 EFFLUENT GROSS VALUE	The ELAP ID is 10380.

Discharge Monitoring Report (DMR)

Name	Consolidated Edison of New York
Address	4 Irving Place
	New York NY 10003
Facility	11th Street Conduit
Location	Oakland and Water Street

NY0201138	001M
Permit Number	Discharge Number

GROUNDWATER INFILTRAT
SUBR 02
F-Final
Major

Monitoring Period

FROM YR-MO-DA 05-03-01 TO YR-MO-DA 05-03-31

No Discharge ☐

Parameter		Quantity or Loading AVERAGE	MAXIMUM	UNITS	Quality Or Concentration MINIMUM	AVERAGE	MAXIMUM	UNITS	NO. EX	Sample Frequency	Sample Type
FLOW RATE	SAMPLE MEASUREMENT	* * * * *	108,000	07	* * * * *	* * * * *	* * * * *		0	ONCE/ MON	CALCTD
00056 1 0 0 EFFLUENT GROSS VALUE	PERMIT REQUIREMENT	* * * * *	REPORT DAILY MX	GPD	* * * * *	* * * * *	* * * * *			ONCE/ MONTH	CALCTD
SOLIDS, TOTAL SUSPENDED	SAMPLE MEASUREMENT	* * * * *	* * * * *		* * * * *	* * * * *	10	19	0	ONCE/ MON	GRAB
00530 1 0 0 EFFLUENT GROSS VALUE	PERMIT REQUIREMENT	* * * * *	* * * * *		* * * * *	* * * * *	50 DAILY MX	MG/L		ONCE/ MONTH	GRAB
OIL AND GREASE FREON EXTR-GRAV METH	SAMPLE MEASUREMENT	* * * * *	* * * * *		* * * * *	* * * * *	4	19	0	ONCE/ MON	GRAB
00556 1 0 0 EFFLUENT GROSS VALUE	PERMIT REQUIREMENT	* * * * *	* * * * *		* * * * *	* * * * *	15 DAILY MX	MG/L		ONCE/ MONTH	GRAB

Name/Title of Principal Executive Officer			Telephone	Date
William Murphy	I certify under penalty of law that I have personally examined and am familiar with the information submitted herein: and based on my inquiry of those individuals immediately responsible for obtaining the information, I believe the submitted information is true accurate and complete. I am aware that there are significant penalties for submitting false information, including the possibility of fine and imprisonment. See 18 U.S.C 1001 & 33 U.S.C 1319.	William Murphy Signature of Principal Executive Officer or Authorized Agent	(212) 460-2262	05-04-01 YR-MO-DA

Comments and explanations of any Violations: See Attached

EPA Form 3320-1 (8-95)

Discharge Monitoring Report (DMR)

Name	Consolidated Edison of New York		
Address	4 Irving Place		
	New York	NY	10003
Facility	11th Street Conduit		
Location	Oakland and Water Street		

NY0201138	001M	GROUNDWATER INFILTRAT
Permit Number	Discharge Number	

Monitoring Period			
	YR-MO-DA		YR-MO-DA
FROM	05-03-01	TO	05-03-31

Parameter	User Comments
FLOW RATE 00056 1 0 0 EFFLUENT GROSS VALUE	The ELAP ID is 10380.

Discharge Monitoring Report (DMR)

Name	Consolidated Edison of New York
Address	4 Irving Place
	New York NY 10003
Facility	11th Street Conduit
Location	Oakland and Water Street

NY0201138	001V	GROUNDWTR INFILTR.&SW A
Permit Number	Discharge Number	SUBR 02
		F-Final
		Major

Monitoring Period: FROM YR-MO-DA 05-03-01 TO YR-MO-DA 06-02-28

No Discharge ☐

Parameter		Quantity or Loading AVERAGE	Quantity or Loading MAXIMUM	UNITS	Quality Or Concentration MINIMUM	Quality Or Concentration AVERAGE	Quality Or Concentration MAXIMUM	UNITS	NO. EX	Sample Frequency	Sample Type
TOLUENE	SAMPLE MEASUREMENT	* * * * *	* * * * *		* * * * *	* * * * *	0.0011	19	0	ANNUAL	GRAB
34010 V 0 0 SEE COMMENTS BELOW	PERMIT REQUIREMENT	* * * * *	* * * * *		* * * * *	* * * * *	0.10 DAILY MX	MG/L		ANNUAL	GRAB
BENZENE	SAMPLE MEASUREMENT	* * * * *	* * * * *		* * * * *	* * * * *	0.0014	19	0	ANNUAL	GRAB
34030 V 0 0 SEE COMMENTS BELOW	PERMIT REQUIREMENT	* * * * *	* * * * *		* * * * *	* * * * *	0.10 DAILY MX	MG/L		ANNUAL	GRAB
ETHYLBENZENE	SAMPLE MEASUREMENT	* * * * *	* * * * *		* * * * *	* * * * *	0.0085	19	0	ANNUAL	GRAB
34371 V 0 0 SEE COMMENTS BELOW	PERMIT REQUIREMENT	* * * * *	* * * * *		* * * * *	* * * * *	0.10 DAILY MX	MG/L		ANNUAL	GRAB
XYLENE	SAMPLE MEASUREMENT	* * * * *	* * * * *		* * * * *	* * * * *	0.0035	19	0	ANNUAL	GRAB
81551 V 0 0 SEE COMMENTS BELOW	PERMIT REQUIREMENT	* * * * *	* * * * *		* * * * *	* * * * *	0.10 DAILY MX	MG/L		ANNUAL	GRAB

Name/Title of Principal Executive Officer			Telephone	Date
William Murphy	I certify under penalty of law that I have personally examined and am fami with the information submitted herein: and based on my inquiry of those individuals immediately responsible for obtaining the information. I believe the submitted information is true accurate and complete. I am aware that there are significant penalties for submitting false information, including th possibility of fine and imprisonment. See 18 U.S.C 1001 & 33 U.S.C 1319.	William Murphy Signature of Principal Executive Officer or Authorized Agent	(212) 460-2262	06-03-07 YR-MO-DA

Comments and explanations of any Violations:

EPA-NC-CE-0000248

Discharge Monitoring Report (DMR)

Name	Consolidated Edison of New York
Address	4 Irving Place
	New York NY 10003
Facility	11th Street Conduit
Location	Oakland and Water Street

NY0201138	001M
Permit Number	Discharge Number

GROUNDWATER INFILTRAT
SUBR 02
F-Final
Major

Monitoring Period: FROM YR-MO-DA 05-02-01 TO YR-MO-DA 05-02-28

No Discharge ☐

Parameter		Quantity or Loading AVERAGE	Quantity or Loading MAXIMUM	UNITS	Quality Or Concentration MINIMUM	Quality Or Concentration AVERAGE	Quality Or Concentration MAXIMUM	UNITS	NO. EX	Sample Frequency	Sample Type
FLOW RATE	SAMPLE MEASUREMENT	* * * * *	108,000	07	* * * * *	* * * * *	* * * * *		0	ONCE/ MON	CALCTD
00056 1 0 0 EFFLUENT GROSS VALUE	PERMIT REQUIREMENT	* * * * *	REPORT DAILY MX	GPD	* * * * *	* * * * *	* * * * *			ONCE/ MONTH	CALCTD
SOLIDS, TOTAL SUSPENDED	SAMPLE MEASUREMENT	* * * * *	* * * * *		* * * * *	* * * * *	8	19	0	ONCE/ MON	GRAB
00530 1 0 0 EFFLUENT GROSS VALUE	PERMIT REQUIREMENT	* * * * *	* * * * *		* * * * *	* * * * *	50 DAILY MX	MG/L		ONCE/ MONTH	GRAB
OIL AND GREASE FREON EXTR-GRAV METH	SAMPLE MEASUREMENT	* * * * *	* * * * *		* * * * *	* * * * *	5	19	0	ONCE/ MON	GRAB
00556 1 0 0 EFFLUENT GROSS VALUE	PERMIT REQUIREMENT	* * * * *	* * * * *		* * * * *	* * * * *	15 DAILY MX	MG/L		ONCE/ MONTH	GRAB

Name/Title of Principal Executive Officer			Telephone	Date
William Murphy	I certify under penalty of law that I have personally examined and am familiar with the information submitted herein: and based on my inquiry of those individuals immediately responsible for obtaining the information, I believe the submitted information is true accurate and complete. I am aware that there are significant penalties for submitting false information, including the possibility of fine and imprisonment. See 18 U.S.C 1001 & 33 U.S.C 1319.	William Murphy Signature of Principal Executive Officer or Authorized Agent	(212) 460-2262	05-03-03 YR-MO-DA

Comments and explanations of any Violations: See Attached

EPA Form 3320-1 (8-95)

Discharge Monitoring Report (DMR)

Name	Consolidated Edison of New York
Address	4 Irving Place
	New York NY 10003
Facility	11th Street Conduit
Location	Oakland and Water Street

NY0201138	001M	GROUNDWATER INFILTRAT
Permit Number	Discharge Number	

Monitoring Period	YR-MO-DA		YR-MO-DA
FROM	05-02-01	TO	05-02-28

Parameter	User Comments
FLOW RATE 00056 1 0 0 EFFLUENT GROSS VALUE	The ELAP ID were 10380 and 10969.

Discharge Monitoring Report (DMR)

Name	Consolidated Edison of New York
Address	4 Irving Place
	New York NY 10003
Facility	11th Street Conduit
Location	Oakland and Water Street

NY0201138	001M
Permit Number	Discharge Number

GROUNDWATER INFILTRAT
SUBR 02
F-Final
Major

Monitoring Period: FROM YR-MO-DA 05-01-01 TO YR-MO-DA 05-01-31

No Discharge ☐

Parameter		Quantity or Loading AVERAGE	Quantity or Loading MAXIMUM	Quantity or Loading UNITS	Quality Or Concentration MINIMUM	Quality Or Concentration AVERAGE	Quality Or Concentration MAXIMUM	Quality Or Concentration UNITS	NO. EX	Sample Frequency	Sample Type
FLOW RATE	SAMPLE MEASUREMENT	* * * * *	108,000	07	* * * * *	* * * * *	* * * * *		0	ONCE/ MON	CALCTD
00056 1 0 0 EFFLUENT GROSS VALUE	PERMIT REQUIREMENT	*****	REPORT DAILY MX	GPD	*****	*****	*****			ONCE/ MONTH	CALCTD
SOLIDS, TOTAL SUSPENDED	SAMPLE MEASUREMENT	* * * * *	* * * * *		* * * * *	* * * * *	8	19	0	ONCE/ MON	GRAB
00530 1 0 0 EFFLUENT GROSS VALUE	PERMIT REQUIREMENT	*****	*****		*****	*****	50 DAILY MX	MG/L		ONCE/ MONTH	GRAB
OIL AND GREASE FREON EXTR-GRAV METH	SAMPLE MEASUREMENT	* * * * *	* * * * *		* * * * *	* * * * *	3	19	0	ONCE/ MON	GRAB
00556 1 0 0 EFFLUENT GROSS VALUE	PERMIT REQUIREMENT	*****	*****		*****	*****	15 DAILY MX	MG/L		ONCE/ MONTH	GRAB

Name/Title of Principal Executive Officer		Telephone	Date
William Murphy	I certify under penalty of law that I have personally examined and am familiar with the information submitted herein: and based on my inquiry of those individuals immediately responsible for obtaining the information, I believe the submitted information is true accurate and complete. I am aware that there are significant penalties for submitting false information, including the possibility of fine and imprisonment. See 18 U.S.C 1001 & 33 U.S.C 1319.	(212) 460-2262	05-02-04
	Signature of Principal Executive Officer or Authorized Agent		YR-MO-DA

Comments and explanations of any Violations: See Attached

EPA Form 3320-1 (8-95)

Discharge Monitoring Report (DMR)

Name	Consolidated Edison of New York
Address	4 Irving Place
	New York NY 10003
Facility	11th Street Conduit
Location	Oakland and Water Street

NY0201138	001M	GROUNDWATER INFILTRAT
Permit Number	Discharge Number	

Monitoring Period

FROM	YR-MO-DA	TO	YR-MO-DA
	05-01-01		05-01-31

Parameter	User Comments
FLOW RATE 00056 1 0 0 EFFLUENT GROSS VALUE	The ELAP ID is 10380.

NATIONAL POLLUTANT DISCHARGE ELIMINATION SYSTEM (NPDES)
DISCHARGE MONITORING REPORT (DMR)

Approved
OMB No. 2040-0004

PERMITTEE NAME/ADDRESS *(Include Facility Name/Location if Different)*

NAME: 11TH STREET CONDUIT
ADDRESS: 4 IRVING PLACE ROOM 300
NEW YORK, NY 10003
FACILITY: 11TH STREET CONDUIT
LOCATION: 11TH ST BETWEEN 53RD AND ASH
LONG ISLAND CITY, NY 11101
ATTN:YI-CHANG SHAO

NY0201138	001M
PERMIT NUMBER	DISCHARGE NUMBER

MONITORING PERIOD	YEAR	MO	DAY		YEAR	MO	DAY
FROM	06	12	01	TO	06	12	31

DMR MAILING ZIP CODE: 10003
MINOR
(SUBR02)
GROUNDWATER INFILTRATION&STORM
External Outfall

No Data Indicator ☐

PARAMETER		QUANTITY OR LOADING			QUALITY OR CONCENTRATION				NO. EX	FREQUENCY OF ANALYSIS	SAMPLE TYPE
		VALUE	VALUE	UNITS	VALUE	VALUE	VALUE	UNITS			
Flow rate	SAMPLE MEASUREMENT	******	108000		******	******	******		0	01/30	CA
00056 1 0 Effluent Gross	PERMIT REQUIREMENT	******	Req. Mon. DAILY MX	gal/d	******	******	******			Once Per Month	CALCTD
Solids, total suspended	SAMPLE MEASUREMENT	******	******		******	******	9		0	01/30	GR
00530 1 0 Effluent Gross	PERMIT REQUIREMENT	******	******		******	******	50 DAILY MX	mg/L		Once Per Month	GRAB
Oil & grease	SAMPLE MEASUREMENT	******	******		******	******	8		0	01/30	GR
00556 1 0 Effluent Gross	PERMIT REQUIREMENT	******	******		******	******	15 DAILY MX	mg/L		Once Per Month	GRAB

NAME/TITLE PRINCIPAL EXECUTIVE OFFICER			TELEPHONE		DATE		
William Murphy, Manager	I certify under penalty of law that this document and all attachments were prepared under my direction or supervision in accordance with a system designed to assure that qualified personnel properly gather and evaluate the information submitted. Based on my inquiry of the person or persons who manage the system, or those persons directly responsible for gathering the information, the information submitted is, to the best of my knowledge and belief, true, accurate, and complete. I am aware that there are significant penalties for submitting false information, including the possibility of fine and imprisonment for knowing violations.	William Murphy	212-460-2262		07	01	17
TYPED OR PRINTED		SIGNATURE OF PRINCIPAL EXECUTIVE OFFICER OR AUTHORIZED AGENT	AREA Code	NUMBER	YEAR	MO	DAY

COMMENTS AND EXPLANATION OF ANY VIOLATIONS (Reference all attachments here)

TAP ID IS 10380.

EPA Form 3320-1 (Rev.01/06) Previous editions may be used.

NATIONAL POLLUTANT DISCHARGE ELIMINATION SYSTEM (NPDES)
DISCHARGE MONITORING REPORT (DMR)

Approved
No. 2040-0004

PERMITTEE NAME/ADDRESS *(Include Facility Name/Location if Different)*

NAME: 11TH STREET CONDUIT
ADDRESS: 4 IRVING PLACE ROOM 1445-S
NEW YORK, NY 10003
FACILITY: 11TH STREET CONDUIT
LOCATION: 11TH ST BETWEEN 53RD AND ASH
LONG ISLAND CITY, NY 11101
ATTN:YI-CHANG SHAO

NY0201138	001M
PERMIT NUMBER	DISCHARGE NUMBER

MONITORING PERIOD	YEAR	MO	DAY		YEAR	MO	DAY
FROM	06	11	01	TO	06	11	30

DMR MAILING ZIP CODE: 10003
MINOR
(SUBR02)
GROUNDWATER INFILTRATION&STORM
External Outfall

No Data Indicator ☐

PARAMETER		QUANTITY OR LOADING			QUALITY OR CONCENTRATION				NO. EX	FREQUENCY OF ANALYSIS	SAMPLE TYPE
		VALUE	VALUE	UNITS	VALUE	VALUE	VALUE	UNITS			
Flow rate	SAMPLE MEASUREMENT	******	108000		******	******	******		0	01/30	CA
00056 1 0 Effluent Gross	PERMIT REQUIREMENT	******	Req. Mon. DAILY MX	gal/d	******	******	******			Once Per Month	CALCTD
Solids, total suspended	SAMPLE MEASUREMENT	******	******		******	******	13		0	01/30	GR
00530 1 0 Effluent Gross	PERMIT REQUIREMENT	******	******		******	******	50 DAILY MX	mg/L		Once Per Month	GRAB
Oil & grease	SAMPLE MEASUREMENT	******	******		******	******	21		1	02/30	GR
00556 1 0 Effluent Gross	PERMIT REQUIREMENT	******	******		******	******	15 DAILY MX	mg/L		Once Per Month	GRAB

NAME/TITLE PRINCIPAL EXECUTIVE OFFICER			TELEPHONE		DATE		
William Murphy, Manage	I certify under penalty of law that this document and all attachments were prepared under my direction or supervision in accordance with a system designed to assure that qualified personnel properly gather and evaluate the information submitted. Based on my inquiry of the person or persons who manage the system, or those persons directly responsible for gathering the information, the information submitted is, to the best of my knowledge and belief, true, accurate, and complete. I am aware that there are significant penalties for submitting false information, including the possibility of fine and imprisonment for knowing violations.	William Murphy	212 460-2262		06	12	15
TYPED OR PRINTED		SIGNATURE OF PRINCIPAL EXECUTIVE OFFICER OR AUTHORIZED AGENT	AREA Code	NUMBER	YEAR	MO	DAY

COMMENTS AND EXPLANATION OF ANY VIOLATIONS (Reference all attachments here)
See attachment The ELAP ID is 10380.

EPA Form 3320-1 (Rev.01/06) Previous editions may be used.

NATIONAL POLLUTANT DISCHARGE [illegible]INATION SYSTEM (NPDES)
DISCHARGE MONITORING REPORT (DMR)

Approved
OMB No. 2040-0004

ERMITTEE NAME/ADDRESS *(Include Facility Name/Location if Different)*

AME: 11TH STREET CONDUIT
DDRESS: 4 IRVING PLACE ROOM 1445-S
NEW YORK, NY 10003
ACILITY: 11TH STREET CONDUIT
OCATION: 11TH ST BETWEEN 53RD AND ASH
LONG ISLAND CITY, NY 11101
ATTN:YI-CHANG SHAO

NY0201138	001M
PERMIT NUMBER	DISCHARGE NUMBER

MONITORING PERIOD	YEAR	MO	DAY		YEAR	MO	DAY
FROM	06	10	01	TO	06	10	31

DMR MAILING ZIP CODE: 10003
MINOR
(SUBR02)
GROUNDWATER INFILTRATION&STORM
External Outfall

No Data Indicator [ ]

PARAMETER		QUANTITY OR LOADING			QUALITY OR CONCENTRATION				NO. EX	FREQUENCY OF ANALYSIS	SAMPLE TYPE
		VALUE	VALUE	UNITS	VALUE	VALUE	VALUE	UNITS			
Flow rate	SAMPLE MEASUREMENT	******	108000		******	******	******		0	01/30	CA
00056 1 0 Effluent Gross	PERMIT REQUIREMENT	******	Req. Mon. DAILY MX	gal/d	******	******	******			Once Per Month	CALCTD
Solids, total suspended	SAMPLE MEASUREMENT	******	******		******	******	8		0	01/30	GR
00530 1 0 Effluent Gross	PERMIT REQUIREMENT	******	******		******	******	50 DAILY MX	mg/L		Once Per Month	GRAB
Oil & grease	SAMPLE MEASUREMENT	******	******		******	******	7		0	01/30	GR
00556 1 0 Effluent Gross	PERMIT REQUIREMENT	******	******		******	******	15 DAILY MX	mg/L		Once Per Month	GRAB

NAME/TITLE PRINCIPAL EXECUTIVE OFFICER			TELEPHONE		DATE		
William Murphy, Manager	I certify under penalty of law that this document and all attachments were prepared under my direction or supervision in accordance with a system designed to assure that qualified personnel properly gather and evaluate the information submitted. Based on my inquiry of the person or persons who manage the system, or those persons directly responsible for gathering the information, the information submitted is, to the best of my knowledge and belief, true, accurate, and complete. I am aware that there are significant penalties for submitting false information, including the possibility of fine and imprisonment for knowing violations.	William Murphy	212-460-2262		06	11	07
TYPED OR PRINTED		SIGNATURE OF PRINCIPAL EXECUTIVE OFFICER OR AUTHORIZED AGENT	AREA Code	NUMBER	YEAR	MO	DAY

COMMENTS AND EXPLANATION OF ANY VIOLATIONS (Reference all attachments here)

NATIONAL POLLUTANT DISCHARGE E[illegible]INATION SYSTEM (NPDES)
DISCHARGE MONITORING REPORT (DMR)

Approved
OMB No. 2040-0004

RMITTEE NAME/ADDRESS *(Include Facility Name/Location if Different)*

AME: 11TH STREET CONDUIT
DDRESS: 4 IRVING PLACE ROOM 1445-S
NEW YORK, NY 10003
ACILITY: 11TH STREET CONDUIT
OCATION: 4 IRVING PLACE ROOM 1445-S
NEW YORK, NY 10003
TTN:YI-CHANG SHAO

NY0201138	001M
PERMIT NUMBER	DISCHARGE NUMBER

MONITORING PERIOD	YEAR	MO	DAY		YEAR	MO	DAY
FROM	06	09	01	TO	06	09	30

DMR MAILING ZIP CODE: 10003
MINOR
(SUBR02)
GROUNDWATER INFILTRATION&STORM
External Outfall

No Data Indicator ☐

PARAMETER		QUANTITY OR LOADING			QUALITY OR CONCENTRATION				NO. EX	FREQUENCY OF ANALYSIS	SAMPLE TYPE
		VALUE	VALUE	UNITS	VALUE	VALUE	VALUE	UNITS			
ow rate	SAMPLE MEASUREMENT		108000						0	01/30	CA
0056 1 0 ffluent Gross	PERMIT REQUIREMENT	******	Req. Mon. DAILY MX	gal/d	******	******	******			Once Per Month	CALCTD
olids, total suspended	SAMPLE MEASUREMENT						18		0	01/30	GR
0530 1 0 ffluent Gross	PERMIT REQUIREMENT	******	******		******	******	50 DAILY MX	mg/L		Once Per Month	GRAB
il & grease	SAMPLE MEASUREMENT						<5		0	01/30	GR
0556 1 0 ffluent Gross	PERMIT REQUIREMENT	******	******		******	******	15 DAILY MX	mg/L		Once Per Month	GRAB

NAME/TITLE PRINCIPAL EXECUTIVE OFFICER			TELEPHONE		DATE		
William Murphy, Manager	I certify under penalty of law that this document and all attachments were prepared under my direction or supervision in accordance with a system designed to assure that qualified personnel properly gather and evaluate the information submitted. Based on my inquiry of the person or persons who manage the system, or those persons directly responsible for gathering the information, the information submitted is, to the best of my knowledge and belief, true, accurate, and complete. I am aware that there are significant penalties for submitting false information, including the possibility of fine and imprisonment for knowing violations.	William Murphy	212-460 2262		06	10	16
TYPED OR PRINTED		SIGNATURE OF PRINCIPAL EXECUTIVE OFFICER OR AUTHORIZED AGENT	AREA Code	NUMBER	YEAR	MO	DAY

COMMENTS AND EXPLANATION OF ANY VIOLATIONS (Reference all attachments here)
ELAP ID IS 10380.

EPA Form 3320-1 (Rev.01/06) Previous editions may be used.

Discharge Monitoring Report (DMR)

Name	Consolidated Edison of New York
Address	4 Irving Place
	New York NY 10003
Facility	11th Street Conduit
Location	Oakland and Water Street

NY0201138	001M
Permit Number	Discharge Number

GROUNDWATER INFILTRAT
SUBR 02
F-Final
Major

Monitoring Period: FROM YR-MO-DA 06-08-01 TO YR-MO-DA 06-08-31

No Discharge ☐

Parameter		Quantity or Loading AVERAGE	MAXIMUM	UNITS	Quality Or Concentration MINIMUM	AVERAGE	MAXIMUM	UNITS	NO. EX	Sample Frequency	Sample Type
FLOW RATE	SAMPLE MEASUREMENT	* * * * *	108,000	07	* * * * *	* * * * *	* * * * *		0	ONCE/ MON	CALCTD
00056 1 0 0 EFFLUENT GROSS VALUE	PERMIT REQUIREMENT	* * * * *	REPORT DAILY MX	GPD	* * * * *	* * * * *	* * * * *			ONCE/ MONTH	CALCTD
SOLIDS, TOTAL SUSPENDED	SAMPLE MEASUREMENT	* * * * *	* * * * *		* * * * *	* * * * *	10	19	0	ONCE/ MON	GRAB
00530 1 0 0 EFFLUENT GROSS VALUE	PERMIT REQUIREMENT	* * * * *	* * * * *		* * * * *	* * * * *	50 DAILY MX	MG/L		ONCE/ MONTH	GRAB
OIL AND GREASE FREON EXTR-GRAV METH	SAMPLE MEASUREMENT	* * * * *	* * * * *		* * * * *	* * * * *	5	19	0	ONCE/ MON	GRAB
00556 1 0 0 EFFLUENT GROSS VALUE	PERMIT REQUIREMENT	* * * * *	* * * * *		* * * * *	* * * * *	15 DAILY MX	MG/L		ONCE/ MONTH	GRAB

Name/Title of Principal Executive Officer			Telephone	Date
William Murphy	I certify under penalty of law that I have personally examined and am familiar with the information submitted herein: and based on my inquiry of those individuals immediately responsible for obtaining the information, I believe the submitted information is true accurate and complete. I am aware that there are significant penalties for submitting false information, including the possibility of fine and imprisonment. See 18 U.S.C 1001 & 33 U.S.C 1319.	William Murphy Signature of Principal Executive Officer or Authorized Agent	(212) 460-2262	06-09-07 YR-MO-DA

Comments and explanations of any Violations: See Attached

EPA Form 3320-1 (8-95)

Discharge Monitoring Report (DMR)

Name	Consolidated Edison of New York
Address	4 Irving Place
	New York NY 10003
Facility	11th Street Conduit
Location	Oakland and Water Street

NY0201138	001M	GROUNDWATER INFILTRAT
Permit Number	Discharge Number	

Monitoring Period	YR-MO-DA		YR-MO-DA
FROM	06-08-01	TO	06-08-31

Parameter	User Comments
FLOW RATE 00056 1 0 0 EFFLUENT GROSS VALUE	The ELAP ID is 10380.

Discharge Monitoring Report (DMR)

Name	Consolidated Edison of New York
Address	4 Irving Place
	New York NY 10003
Facility	11th Street Conduit
Location	Oakland and Water Street

NY0201138	001M
Permit Number	Discharge Number

GROUNDWATER INFILTRAT
SUBR 02
F-Final
Major

Monitoring Period
FROM YR-MO-DA 06-07-01 TO YR-MO-DA 06-07-31

No Discharge ☐

Parameter		Quantity or Loading AVERAGE	MAXIMUM	UNITS	Quality Or Concentration MINIMUM	AVERAGE	MAXIMUM	UNITS	NO. EX	Sample Frequency	Sample Type
FLOW RATE	SAMPLE MEASUREMENT	* * * * *	108,000	07	* * * * *	* * * * *	* * * * *		0	ONCE/ MON	CALCTD
00056 1 0 0 EFFLUENT GROSS VALUE	PERMIT REQUIREMENT	* * * * *	REPORT DAILY MX	GPD	* * * * *	* * * * *	* * * * *			ONCE/ MONTH	CALCTD
SOLIDS, TOTAL SUSPENDED	SAMPLE MEASUREMENT	* * * * *	* * * * *		* * * * *	* * * * *	12	19	0	ONCE/ MON	GRAB
00530 1 0 0 EFFLUENT GROSS VALUE	PERMIT REQUIREMENT	* * * * *	* * * * *		* * * * *	* * * * *	50 DAILY MX	MG/L		ONCE/ MONTH	GRAB
OIL AND GREASE FREON EXTR-GRAV METH	SAMPLE MEASUREMENT	* * * * *	* * * * *		* * * * *	* * * * *	12	19	0	ONCE/ MON	GRAB
00556 1 0 0 EFFLUENT GROSS VALUE	PERMIT REQUIREMENT	* * * * *	* * * * *		* * * * *	* * * * *	15 DAILY MX	MG/L		ONCE/ MONTH	GRAB

Name/Title of Principal Executive Officer			Telephone	Date
William Murphy	I certify under penalty of law that I have personally examined and am familiar with the information submitted herein: and based on my inquiry of those individuals immediately responsible for obtaining the information, I believe the submitted information is true accurate and complete. I am aware that there are significant penalties for submitting false information, including the possibility of fine and imprisonment. See 18 U.S.C 1001 & 33 U.S.C 1319.	William Murphy Signature of Principal Executive Officer or Authorized Agent	(212) 460-2262	06-08-04 YR-MO-DA

Comments and explanations of any Violations: See Attached

EPA Form 3320-1 (8-95)

Discharge Monitoring Report (DMR)

Name	Consolidated Edison of New York		
Address	4 Irving Place		
	New York	NY	10003
Facility	11th Street Conduit		
Location	Oakland and Water Street		

NY0201138	001M	GROUNDWATER INFILTRAT
Permit Number	Discharge Number	

Monitoring Period			
	YR-MO-DA		YR-MO-DA
FROM	06-07-01	TO	06-07-31

Parameter	User Comments
FLOW RATE 00056 1 0 0 EFFLUENT GROSS VALUE	The ELAP ID is 10380.

Discharge Monitoring Report (DMR)

Name	Consolidated Edison of New York
Address	4 Irving Place
	New York NY 10003
Facility	11th Street Conduit
Location	Oakland and Water Street

NY0201138	001M	GROUNDWATER INFILTRATI
Permit Number	Discharge Number	SUBR 02
		F-Final
		Major

Monitoring Period: FROM YR-MO-DA 06-06-01 TO YR-MO-DA 06-06-30

No Discharge ☐

Parameter		Quantity or Loading AVERAGE	MAXIMUM	UNITS	Quality Or Concentration MINIMUM	AVERAGE	MAXIMUM	UNITS	NO. EX	Sample Frequency	Sample Type
FLOW RATE	SAMPLE MEASUREMENT	* * * * *	108,000	07	* * * * *	* * * * *	* * * * *		0	ONCE/ MON	CALCTD
00056 1 0 0 EFFLUENT GROSS VALUE	PERMIT REQUIREMENT	*****	REPORT DAILY MX	GPD	*****	*****	*****			ONCE/ MONTH	CALCTD
SOLIDS, TOTAL SUSPENDED	SAMPLE MEASUREMENT	* * * * *	* * * * *		* * * * *	* * * * *	11	19	0	ONCE/ MON	GRAB
00530 1 0 0 EFFLUENT GROSS VALUE	PERMIT REQUIREMENT	*****	*****		*****	*****	50 DAILY MX	MG/L		ONCE/ MONTH	GRAB
OIL AND GREASE FREON EXTR-GRAV METH	SAMPLE MEASUREMENT	* * * * *	* * * * *		* * * * *	* * * * *	7	19	0	ONCE/ MON	GRAB
00556 1 0 0 EFFLUENT GROSS VALUE	PERMIT REQUIREMENT	*****	*****		*****	*****	15 DAILY MX	MG/L		ONCE/ MONTH	GRAB

Name/Title of Principal Executive Officer			Telephone	Date
William Murphy	I certify under penalty of law that I have personally examined and am familiar with the information submitted herein: and based on my inquiry of those individuals immediately responsible for obtaining the information, I believe the submitted information is true accurate and complete. I am aware that there are significant penalties for submitting false information, including the possibility of fine and imprisonment. See 18 U.S.C 1001 & 33 U.S.C 1319.	William Murphy Signature of Principal Executive Officer or Authorized Agent	(212) 460-2262	06-07-06 YR-MO-DA

Comments and explanations of any Violations: See Attached

EPA Form 3320-1 (8-95)

Discharge Monitoring Report (DMR)

Name	Consolidated Edison of New York
Address	4 Irving Place
	New York NY 10003
Facility	11th Street Conduit
Location	Oakland and Water Street

NY0201138	001M	GROUNDWATER INFILTRAT
Permit Number	Discharge Number	

Monitoring Period			
	YR-MO-DA		YR-MO-DA
FROM	06-06-01	TO	06-06-30

Parameter	User Comments
FLOW RATE 00056 1 0 0 EFFLUENT GROSS VALUE	The ELAP ID is 10380.

Discharge Monitoring Report (DMR)

Name	Consolidated Edison of New York
Address	4 Irving Place
	New York NY 10003
Facility	11th Street Conduit
Location	Oakland and Water Street

NY0201138	001M	GROUNDWATER INFILTRATI
Permit Number	Discharge Number	SUBR 02
		F-Final
		Major

Monitoring Period: FROM YR-MO-DA 06-05-01 TO YR-MO-DA 06-05-31

No Discharge ☐

Parameter		Quantity or Loading AVERAGE	MAXIMUM	UNITS	Quality Or Concentration MINIMUM	AVERAGE	MAXIMUM	UNITS	NO. EX	Sample Frequency	Sample Type
FLOW RATE	SAMPLE MEASUREMENT	* * * * *	108,000	07	* * * * *	* * * * *	* * * * *		0	ONCE/ MON	CALCTD
00056 1 0 0 EFFLUENT GROSS VALUE	PERMIT REQUIREMENT	* * * * *	REPORT DAILY MX	GPD	* * * * *	* * * * *	* * * * *			ONCE/ MONTH	CALCTD
SOLIDS, TOTAL SUSPENDED	SAMPLE MEASUREMENT	* * * * *	* * * * *		* * * * *	* * * * *	9	19	0	ONCE/ MON	GRAB
00530 1 0 0 EFFLUENT GROSS VALUE	PERMIT REQUIREMENT	* * * * *	* * * * *		* * * * *	* * * * *	30 DAILY MX	MG/L		ONCE/ MONTH	GRAB
OIL AND GREASE FREON EXTR-GRAV METH	SAMPLE MEASUREMENT	* * * * *	* * * * *		* * * * *	* * * * *	11	19	0	ONCE/ MON	GRAB
00556 1 0 0 EFFLUENT GROSS VALUE	PERMIT REQUIREMENT	* * * * *	* * * * *		* * * * *	* * * * *	15 DAILY MX	MG/L		ONCE/ MONTH	GRAB

Name/Title of Principal Executive Officer			Telephone	Date
William Murphy	I certify under penalty of law that I have personally examined and am familiar with the information submitted herein: and based on my inquiry of those individuals immediately responsible for obtaining the information, I believe the submitted information is true accurate and complete. I am aware that there are significant penalties for submitting false information, including the possibility of fine and imprisonment. See 18 U.S.C 1001 & 33 U.S.C 1319.	William Murphy Signature of Principal Executive Officer or Authorized Agent	(212) 460-2262	06-06-02 YR-MO-DA

Comments and explanations of any Violations: See Attached

EPA Form 3320-1 (8-95)

Discharge Monitoring Report (DMR)

Name	Consolidated Edison of New York
Address	4 Irving Place
	New York NY 10003
Facility	11th Street Conduit
Location	Oakland and Water Street

NY0201138	001M	GROUNDWATER INFILTRAT
Permit Number	Discharge Number	

Monitoring Period	YR-MO-DA		YR-MO-DA
FROM	06-05-01	TO	06-05-31

Parameter	User Comments
FLOW RATE 00056 1 0 0 EFFLUENT GROSS VALUE	The ELAP ID is 10380.

Discharge Monitoring Report (DMR)

Name	Consolidated Edison of New York
Address	4 Irving Place
	New York NY 10003
Facility	11th Street Conduit
Location	Oakland and Water Street

NY0201138	001M	GROUNDWATER INFILTRAT
Permit Number	Discharge Number	SUBR 02
		F-Final
		Major

Monitoring Period: FROM YR-MO-DA 06-04-01 TO YR-MO-DA 06-04-30

No Discharge ☐

Parameter		Quantity or Loading AVERAGE	MAXIMUM	UNITS	Quality Or Concentration MINIMUM	AVERAGE	MAXIMUM	UNITS	NO. EX	Sample Frequency	Sample Type
FLOW RATE	SAMPLE MEASUREMENT	* * * * *	108,000	07	* * * * *	* * * * *	* * * * *		0	ONCE/ MON	CALCTD
00056 1 0 0 EFFLUENT GROSS VALUE	PERMIT REQUIREMENT	*****	REPORT DAILY MX	GPD	*****	*****	*****			ONCE/ MONTH	CALCTD
SOLIDS, TOTAL SUSPENDED	SAMPLE MEASUREMENT	* * * * *	* * * * *		* * * * *	* * * * *	12	19	0	ONCE/ MON	GRAB
00530 1 0 0 EFFLUENT GROSS VALUE	PERMIT REQUIREMENT	*****	*****		*****	*****	50 DAILY MX	MG/L		ONCE/ MONTH	GRAB
OIL AND GREASE FREON EXTR-GRAV METH	SAMPLE MEASUREMENT	* * * * *	* * * * *		* * * * *	* * * * *	11	19	0	ONCE/ MON	GRAB
00556 1 0 0 EFFLUENT GROSS VALUE	PERMIT REQUIREMENT	*****	*****		*****	*****	15 DAILY MX	MG/L		ONCE/ MONTH	GRAB

Name/Title of Principal Executive Officer			Telephone	Date
William Murphy	I certify under penalty of law that I have personally examined and am familiar with the information submitted herein: and based on my inquiry of those individuals immediately responsible for obtaining the information, I believe the submitted information is true accurate and complete. I am aware that there are significant penalties for submitting false information, including the possibility of fine and imprisonment. See 18 U.S.C 1001 & 33 U.S.C 1319.	William Murphy Signature of Principal Executive Officer or Authorized Agent	(212) 460-2262	06-05-02 YR-MO-DA

Comments and explanations of any Violations: See Attached

EPA Form 3320-1 (8-95)

Discharge Monitoring Report (DMR)

Name	Consolidated Edison of New York
Address	4 Irving Place
	New York NY 10003
Facility	11th Street Conduit
Location	Oakland and Water Street

NY0201138	001M	GROUNDWATER INFILTRAT
Permit Number	Discharge Number	

Monitoring Period			
	YR-MO-DA		YR-MO-DA
FROM	06-04-01	TO	06-04-30

Parameter	User Comments
FLOW RATE 00056 1 0 0 EFFLUENT GROSS VALUE	The ELAP ID is 10380.

Discharge Monitoring Report (DMR)

Name	Consolidated Edison of New York
Address	4 Irving Place
	New York NY 10003
Facility	11th Street Conduit
Location	Oakland and Water Street

NY0201138	001M
Permit Number	Discharge Number

GROUNDWATER INFILTRATIC
SUBR 02
F-Final
Major

Monitoring Period

FROM YR-MO-DA 06-03-01 TO YR-MO-DA 06-03-31

No Discharge ☐

Parameter		Quantity or Loading AVERAGE	MAXIMUM	UNITS	Quality Or Concentration MINIMUM	AVERAGE	MAXIMUM	UNITS	NO. EX	Sample Frequency	Sample Type
FLOW RATE	SAMPLE MEASUREMENT	* * * * *	108,000	07	* * * * *	* * * * *	* * * * *		0	ONCE/ MON	CALCTD
00056 1 0 0 EFFLUENT GROSS VALUE	PERMIT REQUIREMENT	* * * * *	REPORT DAILY MX	GPD	* * * * *	* * * * *	* * * * *			ONCE/ MONTH	CALCTD
SOLIDS, TOTAL SUSPENDED	SAMPLE MEASUREMENT	* * * * *	* * * * *		* * * * *	* * * * *	18	19	0	ONCE/ MON	GRAB
00530 1 0 0 EFFLUENT GROSS VALUE	PERMIT REQUIREMENT	* * * * *	* * * * *		* * * * *	* * * * *	60 DAILY MX	MG/L		ONCE/ MONTH	GRAB
OIL AND GREASE FREON EXTR-GRAV METH	SAMPLE MEASUREMENT	* * * * *	* * * * *		* * * * *	* * * * *	6	19	0	ONCE/ MON	GRAB
00556 1 0 0 EFFLUENT GROSS VALUE	PERMIT REQUIREMENT	* * * * *	* * * * *		* * * * *	* * * * *	15 DAILY MX	MG/L		ONCE/ MONTH	GRAB

Name/Title of Principal Executive Officer			Telephone	Date
William Murphy	I certify under penalty of law that I have personally examined and am fami with the information submitted herein; and based on my inquiry of those individuals immediately responsible for obtaining the information. I believe the submitted information is true accurate and complete. I am aware that there are significant penalties for submitting false information, including th possibility of fine and imprisonment. See 18 U.S.C 1001 & 33 U.S.C 1319.	William Murphy Signature of Principal Executive Officer or Authorized Agent	(212) 460-2262	06-03-31 YR-MO-DA

Comments and explanations of any Violations: See Attached

EPA Form 3320-1 (8-9!

Discharge Monitoring Report (DMR)

Name	Consolidated Edison of New York
Address	4 Irving Place
	New York NY 10003
Facility	11th Street Conduit
Location	Oakland and Water Street

NY0201138	001M	GROUNDWATER INFILTRATIC
Permit Number	Discharge Number	

Monitoring Period	YR-MO-DA		YR-MO-DA
FROM	06-03-01	TO	06-03-31

Parameter	User Comments
FLOW RATE 00056 1 0 0 EFFLUENT GROSS VALUE	The ELAP ID is 10380.

NATIONAL POLLUTANT DISCHARG[illegible]MINATION SYSTEM (NPDES)
DISCHARGE MONITOR[illegible]REPORT (DMR)

[illegible]n Approved
[illegible]B No. 2040-0004

PERMITTEE NAME/ADDRESS *(Include Facility Name/Location if Different)*

NAME: 11TH STREET CONDUIT
ADDRESS: 4 IRVING PLACE ROOM 300
NEW YORK, NY 10003
FACILITY: 11TH STREET CONDUIT
LOCATION: 11TH ST BETWEEN 53RD AND ASH
LONG ISLAND CITY, NY 11101
ATTN:YI-CHANG SHAO

NY0201138	001V
PERMIT NUMBER	DISCHARGE NUMBER

MONITORING PERIOD	YEAR	MO	DAY		YEAR	MO	DAY
FROM	06	03	01	TO	07	02	28

DMR MAILING ZIP CODE: 10003
MINOR
(SUBR02)
GROUNDWTR INFILTR.&SW ACT LVLS
External Outfall

No Discharge ☐

PARAMETER		QUANTITY OR LOADING			QUALITY OR CONCENTRATION				NO. EX	FREQUENCY OF ANALYSIS	SAMPLE TYPE
		VALUE	VALUE	UNITS	VALUE	VALUE	VALUE	UNITS			
Toluene	SAMPLE MEASUREMENT	******	******		******	******	0.003		0	Annual	GR
34010 V 0 See Comments	PERMIT REQUIREMENT	******	******		******	******	1 DAILY MX	mg/L		Annual	GRAB
Benzene	SAMPLE MEASUREMENT	******	******		******	******	0.003		0	Annual	GR
34030 V 0 See Comments	PERMIT REQUIREMENT	******	******		******	******	1 DAILY MX	mg/L		Annual	GRAB
Ethylbenzene	SAMPLE MEASUREMENT	******	******		******	******	0.023		0	Annual	GR
34371 V 0 See Comments	PERMIT REQUIREMENT	******	******		******	******	1 DAILY MX	mg/L		Annual	GRAB
Xylene	SAMPLE MEASUREMENT	******	******		******	******	0.031		0	Annual	GR
81551 V 0 See Comments	PERMIT REQUIREMENT	******	******		******	******	1 DAILY MX	mg/L		Annual	GRAB

NAME/TITLE PRINCIPAL EXECUTIVE OFFICER			TELEPHONE		DATE		
William Murphy, Manager	I certify under penalty of law that this document and all attachments were prepared under my direction or supervision in accordance with a system designed to assure that qualified personnel properly gather and evaluate the information submitted. Based on my inquiry of the person or persons who manage the system, or those persons directly responsible for gathering the information, the information submitted is, to the best of my knowledge and belief, true, accurate, and complete. I am aware that there are significant penalties for submitting false information, including the possibility of fine and imprisonment for knowing violations.	William Murphy	917-578-2576		07	03	14
TYPED OR PRINTED		SIGNATURE OF PRINCIPAL EXECUTIVE OFFICER OR AUTHORIZED AGENT	AREA Code	NUMBER	YEAR	MO	DAY

COMMENTS AND EXPLANATION OF ANY VIOLATIONS (Reference all attachments here)
LIMITS APPLY FOR DIRECT DISCHARGETO NEWTON CREEK. ALSO, THERE SHALLBE NO DISCHARGE OF POLYCHLORINATEDBIPHENYL COMPOUNDS.

Discharge Monitoring Report (DMR)

Name	Consolidated Edison of New York
Address	4 Irving Place
	New York NY 10003
Facility	11th Street Conduit
Location	Oakland and Water Street

NY0201138	001M
Permit Number	Discharge Number

GROUNDWATER INFILTRATIC
SUBR 02
F-Final
Major

Monitoring Period: FROM YR-MO-DA 06-02-01 TO YR-MO-DA 06-02-28

No Discharge ☐

Parameter		Quantity or Loading AVERAGE	MAXIMUM	UNITS	Quality Or Concentration MINIMUM	AVERAGE	MAXIMUM	UNITS	NO. EX	Sample Frequency	Sample Type
FLOW RATE	SAMPLE MEASUREMENT	* * * * *	108,000	07	* * * * *	* * * * *	* * * * *		0	ONCE/ MON	CALCTD
00056 1 0 0 EFFLUENT GROSS VALUE	PERMIT REQUIREMENT	* * * * *	REPORT DAILY MX	GPD	* * * * *	* * * * *	* * * * *			ONCE/ MONTH	CALCTD
SOLIDS, TOTAL SUSPENDED	SAMPLE MEASUREMENT	* * * * *	* * * * *		* * * * *	* * * * *	25	19	0	ONCE/ MON	GRAB
00530 1 0 0 EFFLUENT GROSS VALUE	PERMIT REQUIREMENT	* * * * *	* * * * *		* * * * *	* * * * *	50 DAILY MX	MG/L		ONCE/ MONTH	GRAB
OIL AND GREASE FREON EXTR-GRAV METH	SAMPLE MEASUREMENT	* * * * *	* * * * *		* * * * *	* * * * *	9	19	0	ONCE/ MON	GRAB
00556 1 0 0 EFFLUENT GROSS VALUE	PERMIT REQUIREMENT	* * * * *	* * * * *		* * * * *	* * * * *	15 DAILY MX	MG/L		ONCE/ MONTH	GRAB

Name/Title of Principal Executive Officer		Signature of Principal Executive Officer or Authorized Agent	Telephone	Date
William Murphy	I certify under penalty of law that I have personally examined and am fami with the information submitted herein: and based on my inquiry of those individuals immediately responsible for obtaining the information. I believe the submitted information is true accurate and complete. I am aware that there are significant penalties for submitting false information, including th possibility of fine and imprisonment. See 18 U.S.C 1001 & 33 U.S.C 1319.	William Murphy	(212) 460-2262	06-03-07 YR-MO-DA

Comments and explanations of any Violations: See Attached

EPA Form 3320-1 (8-9

Discharge Monitoring Report (DMR)

Name	Consolidated Edison of New York
Address	4 Irving Place
	New York NY 10003
Facility	11th Street Conduit
Location	Oakland and Water Street

NY0201138	001M	GROUNDWATER INFILTRATI(
Permit Number	Discharge Number	

Monitoring Period	YR-MO-DA		YR-MO-DA
FROM	06-02-01	TO	06-02-28

Parameter	User Comments
FLOW RATE 00056 1 0 0 EFFLUENT GROSS VALUE	The ELAP ID is 10380.

Discharge Monitoring Report (DMR)

Name	Consolidated Edison of New York
Address	4 Irving Place
	New York NY 10003
Facility	11th Street Conduit
Location	Oakland and Water Street

NY0201138	001M	GROUNDWATER INFILTRAT
Permit Number	Discharge Number	SUBR 02
		F-Final
		Major

Monitoring Period: FROM YR-MO-DA 06-01-01 TO YR-MO-DA 06-01-31

No Discharge ☐

Parameter		Quantity or Loading AVERAGE	Quantity or Loading MAXIMUM	Quantity or Loading UNITS	Quality Or Concentration MINIMUM	Quality Or Concentration AVERAGE	Quality Or Concentration MAXIMUM	Quality Or Concentration UNITS	NO. EX	Sample Frequency	Sample Type
FLOW RATE	SAMPLE MEASUREMENT	* * * * *	108,000	07	* * * * *	* * * * *	* * * * *		0	ONCE/ MON	CALCTD
00056 1 0 0 EFFLUENT GROSS VALUE	PERMIT REQUIREMENT	* * * * *	REPORT DAILY MX	GPD	* * * * *	* * * * *	* * * * *			ONCE/ MONTH	CALCTD
SOLIDS, TOTAL SUSPENDED	SAMPLE MEASUREMENT	* * * * *	* * * * *		* * * * *	* * * * *	9	19	0	ONCE/ MON	GRAB
00530 1 0 0 EFFLUENT GROSS VALUE	PERMIT REQUIREMENT	* * * * *	* * * * *		* * * * *	* * * * *	50 DAILY MX	MG/L		ONCE/ MONTH	GRAB
OIL AND GREASE FREON EXTR-GRAV METH	SAMPLE MEASUREMENT	* * * * *	* * * * *		* * * * *	* * * * *	6	19	0	ONCE/ MON	GRAB
00556 1 0 0 EFFLUENT GROSS VALUE	PERMIT REQUIREMENT	* * * * *	* * * * *		* * * * *	* * * * *	15 DAILY MX	MG/L		ONCE/ MONTH	GRAB

Name/Title of Principal Executive Officer			Telephone	Date
William Murphy	I certify under penalty of law that I have personally examined and am familiar with the information submitted herein: and based on my inquiry of those individuals immediately responsible for obtaining the information, I believe the submitted information is true accurate and complete. I am aware that there are significant penalties for submitting false information, including the possibility of fine and imprisonment. See 18 U.S.C 1001 & 33 U.S.C 1319.	William Murphy Signature of Principal Executive Officer or Authorized Agent	(212) 460-2262	06-02-07 YR-MO-DA

Comments and explanations of any Violations: See Attached

EPA Form 3320-1 (8-95)

Discharge Monitoring Report (DMR)

Name	Consolidated Edison of New York
Address	4 Irving Place
	New York NY 10003
Facility	11th Street Conduit
Location	Oakland and Water Street

NY0201138	001M	GROUNDWATER INFILTRAT
Permit Number	Discharge Number	

Monitoring Period	YR-MO-DA		YR-MO-DA
FROM	06-01-01	TO	06-01-31

Parameter	User Comments
FLOW RATE 00056 1 0 0 EFFLUENT GROSS VALUE	The ELAP ID is 10380.

NATIONAL POLLUTANT DISCHARGE ELIMINATION SYSTEM (NPDES)

DISCHARGE MONI[illegible]NG REPORT (DMR)

Form Approved
No. 2040-0004

PERMITTEE NAME/ADDRESS *(Include Facility Name/Location if Different)*

NAME: CONSOLIDATED EDISON OF NY
ADDRESS: 4 IRVING PLACE
NEW YORK, NY 10003
FACILITY: 11TH STREET CONDUIT
LOCATION: 11TH ST BETWEEN 53RD AND ASH
LONG ISLAND CITY, NY 11101
ATTN:YI-CHANG SHAO

NY0201138	001M
PERMIT NUMBER	DISCHARGE NUMBER

MONITORING PERIOD							
	YEAR	MO	DAY		YEAR	MO	DAY
FROM	07	12	01	TO	07	12	31

DMR MAILING ZIP CODE: 10003
MINOR
(SUBR02)
GROUNDWATER INFILTRATION&STORM
External Outfall

No Discharge ☐

PARAMETER		QUANTITY OR LOADING			QUALITY OR CONCENTRATION				NO. EX	FREQUENCY OF ANALYSIS	SAMPLE TYPE
		VALUE	VALUE	UNITS	VALUE	VALUE	VALUE	UNITS			
Flow rate	SAMPLE MEASUREMENT	******	108000		******	******	******		0	01/30	CA
00056 1 0 Effluent Gross	PERMIT REQUIREMENT	******	Req. Mon. DAILY MX	gal/d	******	******	******			Monthly	CALCTD
Solids, total suspended	SAMPLE MEASUREMENT	******	******		******	******	10		0	01/30	GR
00530 1 0 Effluent Gross	PERMIT REQUIREMENT	******	******		******	******	50 DAILY MX	mg/L		Monthly	GRAB
Oil & grease	SAMPLE MEASUREMENT	******	******		******	******	<5		0	01/30	GR
00556 1 0 Effluent Gross	PERMIT REQUIREMENT	******	******		******	******	15 DAILY MX	mg/L		Monthly	GRAB

NAME/TITLE PRINCIPAL EXECUTIVE OFFICER			TELEPHONE		DATE		
WILLIAM MURPHY, Manager	I certify under penalty of law that this document and all attachments were prepared under my direction or supervision in accordance with a system designed to assure that qualified personnel properly gather and evaluate the information submitted. Based on my inquiry of the person or persons who manage the system, or those persons directly responsible for gathering the information, the information submitted is, to the best of my knowledge and belief, true, accurate, and complete. I am aware that there are significant penalties for submitting false information, including the possibility of fine and imprisonment for knowing violations.	William Murphy	718-204-4209		08	01	10
TYPED OR PRINTED		SIGNATURE OF PRINCIPAL EXECUTIVE OFFICER OR AUTHORIZED AGENT	AREA Code	NUMBER	YEAR	MO	DAY

COMMENTS AND EXPLANATION OF ANY VIOLATIONS (Reference all attachments here) ECLAP ID is 10380.

EPA Form 3320-1 (Rev.01/06) Previous editions may be used.

NATIONAL POLLUTANT DISCHARGE ELIMINATION SYSTEM (NPDES)
DISCHARGE MONI[illegible]G REPORT (DMR)

Form Approved
No. 2040-0004

PERMITTEE NAME/ADDRESS *(Include Facility Name/Location If Different)*

NAME: CONSOLIDATED EDISON OF NY
ADDRESS: 4 IRVING PLACE
NEW YORK, NY 10003
FACILITY: 11TH STREET CONDUIT
LOCATION: 11TH ST BETWEEN 53RD AND ASH
LONG ISLAND CITY, NY 11101
ATTN:YI-CHANG SHAO

NY0201138	001M
PERMIT NUMBER	DISCHARGE NUMBER

MONITORING PERIOD						
	YEAR	MO	DAY		YEAR	MO	DAY
FROM	07	11	01	TO	07	11	30

DMR MAILING ZIP CODE: 10003
MINOR
(SUBR02)
GROUNDWATER INFILTRATION&STORM
External Outfall

No Discharge ☐

PARAMETER		QUANTITY OR LOADING			QUALITY OR CONCENTRATION				NO. EX	FREQUENCY OF ANALYSIS	SAMPLE TYPE
		VALUE	VALUE	UNITS	VALUE	VALUE	VALUE	UNITS			
Flow rate	SAMPLE MEASUREMENT	******	108000		******	******	******		0	01/30	CA
00056 1 0 Effluent Gross	PERMIT REQUIREMENT	******	Req. Mon. DAILY MX	gal/d	******	******	******			Monthly	CALCTD
Solids, total suspended	SAMPLE MEASUREMENT	******	******		******	******	9		0	01/30	GR
00530 1 0 Effluent Gross	PERMIT REQUIREMENT	******	******		******	******	50 DAILY MX	mg/L		Monthly	GRAB
Oil & grease	SAMPLE MEASUREMENT	******	******		******	******	<5		0	01/30	GR
00556 1 0 Effluent Gross	PERMIT REQUIREMENT	******	******		******	******	15 DAILY MX	mg/L		Monthly	GRAB

NAME/TITLE PRINCIPAL EXECUTIVE OFFICER			TELEPHONE		DATE		
William Murphy, Manager	I certify under penalty of law that this document and all attachments were prepared under my direction or supervision in accordance with a system designed to assure that qualified personnel properly gather and evaluate the information submitted. Based on my inquiry of the person or persons who manage the system, or those persons directly responsible for gathering the information, the information submitted is, to the best of my knowledge and belief, true, accurate, and complete. I am aware that there are significant penalties for submitting false information, including the possibility of fine and imprisonment for knowing violations.	William Murphy	718-204-4209		07	12	06
TYPED OR PRINTED		SIGNATURE OF PRINCIPAL EXECUTIVE OFFICER OR AUTHORIZED AGENT	AREA Code	NUMBER	YEAR	MO	DAY

COMMENTS AND EXPLANATION OF ANY VIOLATIONS (Reference all attachments here)

ECAP ID is 10380.

NATIONAL POLLUTANT DISCHARGE ELIMINATION SYSTEM (NPDES)
DISCHARGE MONIT G REPORT (DMR)

Form Approved
lo. 2040-0004

PERMITTEE NAME/ADDRESS *(Include Facility Name/Location If Different)*

NAME: CONSOLIDATED EDISON OF NY
ADDRESS: 4 IRVING PLACE
NEW YORK, NY 10003
FACILITY: 11TH STREET CONDUIT
LOCATION: 11TH ST BETWEEN 53RD AND ASH
LONG ISLAND CITY, NY 11101
ATTN:YI-CHANG SHAO

NY0201138	001M
PERMIT NUMBER	DISCHARGE NUMBER

MONITORING PERIOD	YEAR	MO	DAY		YEAR	MO	DAY
FROM	07	10	01	TO	07	10	31

DMR MAILING ZIP CODE: 10003
MINOR
(SUBR02)
GROUNDWATER INFILTRATION&STORM
External Outfall

No Discharge ☐

PARAMETER		QUANTITY OR LOADING			QUALITY OR CONCENTRATION				NO. EX	FREQUENCY OF ANALYSIS	SAMPLE TYPE
		VALUE	VALUE	UNITS	VALUE	VALUE	VALUE	UNITS			
Flow rate	SAMPLE MEASUREMENT	******	108000		******	******	******		0	01/30	CA
00056 1 0 Effluent Gross	PERMIT REQUIREMENT	******	Req. Mon. DAILY MX	gal/d	******	******	******			Monthly	CALCTD
Solids, total suspended	SAMPLE MEASUREMENT	******	******		******	******	14		0	01/30	GR
00530 1 0 Effluent Gross	PERMIT REQUIREMENT	******	******		******	******	50 DAILY MX	mg/L		Monthly	GRAB
Oil & grease	SAMPLE MEASUREMENT	******	******		******	******	<5		0	01/30	GR
00556 1 0 Effluent Gross	PERMIT REQUIREMENT	******	******		******	******	15 DAILY MX	mg/L		Monthly	GRAB

NAME/TITLE PRINCIPAL EXECUTIVE OFFICER			TELEPHONE		DATE		
WILLIAM MURPHY, Manager	I certify under penalty of law that this document and all attachments were prepared under my direction or supervision in accordance with a system designed to assure that qualified personnel properly gather and evaluate the information submitted. Based on my inquiry of the person or persons who manage the system, or those persons directly responsible for gathering the information, the information submitted is, to the best of my knowledge and belief, true, accurate, and complete. I am aware that there are significant penalties for submitting false information, including the possibility of fine and imprisonment for knowing violations.	William Murphy	718-204-4209		07	11	19
TYPED OR PRINTED		SIGNATURE OF PRINCIPAL EXECUTIVE OFFICER OR AUTHORIZED AGENT	AREA Code	NUMBER	YEAR	MO	DAY

COMMENTS AND EXPLANATION OF ANY VIOLATIONS (Reference all attachments here) ELAP ID is 10380.

EPA Form 3320-1 (Rev.01/06) Previous editions may be used.

NATIONAL POLLUTANT DISCHARGE ELIMINATION SYSTEM (NPDES)
DISCHARGE MONIT G REPORT (DMR)

Form Approved
o. 2040-0004

PERMITTEE NAME/ADDRESS *(Include Facility Name/Location if Different)*

NAME: CONSOLIDATED EDISON OF NY
ADDRESS: 4 IRVING PLACE
NEW YORK, NY 10003
FACILITY: 11TH STREET CONDUIT
LOCATION: 11TH ST BETWEEN 53RD AND ASH
LONG ISLAND CITY, NY 11101
ATTN:YI-CHANG SHAO

NY0201138	001M
PERMIT NUMBER	DISCHARGE NUMBER

MONITORING PERIOD	YEAR	MO	DAY		YEAR	MO	DAY
FROM	07	09	01	TO	07	09	30

DMR MAILING ZIP CODE: 10003
MINOR
(SUBR02)
GROUNDWATER INFILTRATION&STORM
External Outfall

No Discharge ☐

PARAMETER		QUANTITY OR LOADING			QUALITY OR CONCENTRATION				NO. EX	FREQUENCY OF ANALYSIS	SAMPLE TYPE
		VALUE	VALUE	UNITS	VALUE	VALUE	VALUE	UNITS			
Flow rate	SAMPLE MEASUREMENT	******	108000		******	******	******		0	01/30	CA
00056 1 0 Effluent Gross	PERMIT REQUIREMENT	******	Req. Mon. DAILY MX	gal/d	******	******	******			Monthly	CALCTD
Solids, total suspended	SAMPLE MEASUREMENT	******	******		******	******	7		0	01/30	GR
00530 1 0 Effluent Gross	PERMIT REQUIREMENT	******	******		******	******	50 DAILY MX	mg/L		Monthly	GRAB
Oil & grease	SAMPLE MEASUREMENT	******	******		******	******	<5		0	01/30	GR
00556 1 0 Effluent Gross	PERMIT REQUIREMENT	******	******		******	******	15 DAILY MX	mg/L		Monthly	GRAB

NAME/TITLE PRINCIPAL EXECUTIVE OFFICER			TELEPHONE		DATE		
William Murphy, Manager	I certify under penalty of law that this document and all attachments were prepared under my direction or supervision in accordance with a system designed to assure that qualified personnel properly gather and evaluate the information submitted. Based on my inquiry of the person or persons who manage the system, or those persons directly responsible for gathering the information, the information submitted is, to the best of my knowledge and belief, true, accurate, and complete. I am aware that there are significant penalties for submitting false information, including the possibility of fine and imprisonment for knowing violations.	William Murphy	718-204-4209		07	10	16
TYPED OR PRINTED		SIGNATURE OF PRINCIPAL EXECUTIVE OFFICER OR AUTHORIZED AGENT	AREA Code	NUMBER	YEAR	MO	DAY

COMMENTS AND EXPLANATION OF ANY VIOLATIONS (Reference all attachments here)

ELAP ID is 10380.

EPA Form 3320-1 (Rev.01/06) Previous editions may be used.

NATIONAL POLLUTANT DISCHARGE ELIMINATION SYSTEM (NPDES)
DISCHARGE MONITO REPORT (DMR)

Form Approved
IB No. 2040-0004

ERMITTEE NAME/ADDRESS *(Include Facility Name/Location if Different)*

AME: 11TH STREET CONDUIT
DDRESS: 4 IRVING PLACE ROOM 300
NEW YORK, NY 10003
ACILITY: 11TH STREET CONDUIT
OCATION: 11TH ST BETWEEN 53RD AND ASH
LONG ISLAND CITY, NY 11101
ATTN:YI-CHANG SHAO

NY0201138	001M
PERMIT NUMBER	DISCHARGE NUMBER

MONITORING PERIOD	YEAR	MO	DAY		YEAR	MO	DAY
FROM	07	08	01	TO	07	08	31

DMR MAILING ZIP CODE: 10003
MINOR
(SUBR02)
GROUNDWATER INFILTRATION&STORM
External Outfall

No Discharge ☐

PARAMETER		QUANTITY OR LOADING			QUALITY OR CONCENTRATION				NO. EX	FREQUENCY OF ANALYSIS	SAMPLE TYPE
		VALUE	VALUE	UNITS	VALUE	VALUE	VALUE	UNITS			
Flow rate	SAMPLE MEASUREMENT	******	108000		******	******	******		0	01/30	CA
00056 1 0 Effluent Gross	PERMIT REQUIREMENT	******	Req. Mon. DAILY MX	gal/d	******	******	******			Monthly	CALCTD
Solids, total suspended	SAMPLE MEASUREMENT	******	******		******	******	8		0	01/30	GR
00530 1 0 Effluent Gross	PERMIT REQUIREMENT	******	******		******	******	50 DAILY MX	mg/L		Monthly	GRAB
Oil & grease	SAMPLE MEASUREMENT	******	******		******	******	<5		0	01/30	GR
00556 1 0 Effluent Gross	PERMIT REQUIREMENT	******	******		******	******	15 DAILY MX	mg/L		Monthly	GRAB

NAME/TITLE PRINCIPAL EXECUTIVE OFFICER			TELEPHONE		DATE		
William Murphy, Manager	I certify under penalty of law that this document and all attachments were prepared under my direction or supervision in accordance with a system designed to assure that qualified personnel properly gather and evaluate the information submitted. Based on my inquiry of the person or persons who manage the system, or those persons directly responsible for gathering the information, the information submitted is, to the best of my knowledge and belief, true, accurate, and complete. I am aware that there are significant penalties for submitting false information, including the possibility of fine and imprisonment for knowing violations.	William Murphy	718-204-4209		07	09	18
TYPED OR PRINTED		SIGNATURE OF PRINCIPAL EXECUTIVE OFFICER OR AUTHORIZED AGENT	AREA Code	NUMBER	YEAR	MO	DAY

COMMENTS AND EXPLANATION OF ANY VIOLATIONS (Reference all attachments here) ELAP ID is 10380.

EPA Form 3320-1 (Rev.01/06) Previous editions may be used.

NATIONAL POLLUTANT DISCHARGE ELIMINATION SYSTEM (NPDES)

DISCHARGE MONITORING REPORT (DMR)

Form Approved
OMB No. 2040-0004

PERMITTEE NAME/ADDRESS *(Include Facility Name/Location If Different)*

NAME: 11TH STREET CONDUIT
ADDRESS: 4 IRVING PLACE ROOM 300
NEW YORK, NY 10003
FACILITY: 11TH STREET CONDUIT
LOCATION: 11TH ST BETWEEN 53RD AND ASH
LONG ISLAND CITY, NY 11101
ATTN:YI-CHANG SHAO

NY0201138	001M
PERMIT NUMBER	DISCHARGE NUMBER

MONITORING PERIOD	YEAR	MO	DAY		YEAR	MO	DAY
FROM	07	07	01	TO	07	07	31

DMR MAILING ZIP CODE: 10003
MINOR
(SUBR02)
GROUNDWATER INFILTRATION&STORM
External Outfall

No Discharge ☐

PARAMETER		QUANTITY OR LOADING			QUALITY OR CONCENTRATION				NO. EX	FREQUENCY OF ANALYSIS	SAMPLE TYPE
		VALUE	VALUE	UNITS	VALUE	VALUE	VALUE	UNITS			
Flow rate	SAMPLE MEASUREMENT	******	108000		******	******	******		0	01/30	CA
00056 1 0 Effluent Gross	PERMIT REQUIREMENT	******	Req. Mon. DAILY MX	gal/d	******	******	******			Monthly	CALCTD
Solids, total suspended	SAMPLE MEASUREMENT	******	******		******	******	9		0	01/30	GR
00530 1 0 Effluent Gross	PERMIT REQUIREMENT	******	******		******	******	50 DAILY MX	mg/L		Monthly	GRAB
Oil & grease	SAMPLE MEASUREMENT	******	******		******	******	<5		0	01/30	GR
00556 1 0 Effluent Gross	PERMIT REQUIREMENT	******	******		******	******	15 DAILY MX	mg/L		Monthly	GRAB

NAME/TITLE PRINCIPAL EXECUTIVE OFFICER			TELEPHONE		DATE		
William Murphy, Manager	I certify under penalty of law that this document and all attachments were prepared under my direction or supervision in accordance with a system designed to assure that qualified personnel properly gather and evaluate the information submitted. Based on my inquiry of the person or persons who manage the system, or those persons directly responsible for gathering the information, the information submitted is, to the best of my knowledge and belief, true, accurate, and complete. I am aware that there are significant penalties for submitting false information, including the possibility of fine and imprisonment for knowing violations.	William Murphy	718-204-4209		07	8	9
TYPED OR PRINTED		SIGNATURE OF PRINCIPAL EXECUTIVE OFFICER OR AUTHORIZED AGENT	AREA Code	NUMBER	YEAR	MO	DAY

COMMENTS AND EXPLANATION OF ANY VIOLATIONS (Reference all attachments here) ELAP ID: S 10380.

EPA Form 3320-1 (Rev.01/06) Previous editions may be used.

NATIONAL POLLUTANT DISCHARGE ELIMINATION SYSTEM (NPDES)
DISCHARGE MONITORING REPORT (DMR)

Form Approved
OMB No. 2040-0004

PERMITTEE NAME/ADDRESS *(Include Facility Name/Location If Different)*

NAME: 11TH STREET CONDUIT
ADDRESS: 4 IRVING PLACE ROOM 300
NEW YORK, NY 10003
FACILITY: 11TH STREET CONDUIT
LOCATION: 11TH ST BETWEEN 53RD AND ASH
LONG ISLAND CITY, NY 11101
ATTN:YI-CHANG SHAO

NY0201138	001M
PERMIT NUMBER	DISCHARGE NUMBER

MONITORING PERIOD	YEAR	MO	DAY		YEAR	MO	DAY
FROM	07	06	01	TO	07	06	30

DMR MAILING ZIP CODE: 10003
MINOR
(SUBR02)
GROUNDWATER INFILTRATION&STORM
External Outfall

No Discharge ☐

PARAMETER		QUANTITY OR LOADING			QUALITY OR CONCENTRATION				NO. EX	FREQUENCY OF ANALYSIS	SAMPLE TYPE
		VALUE	VALUE	UNITS	VALUE	VALUE	VALUE	UNITS			
Flow rate	SAMPLE MEASUREMENT	******	108000		******	******	******		0	01/30	CA
00056 1 0 Effluent Gross	PERMIT REQUIREMENT	******	Req. Mon. DAILY MX	gal/d	******	******	******			Monthly	CALCTD
Solids, total suspended	SAMPLE MEASUREMENT	******	******		******	******	9		0	01/30	GR
00530 1 0 Effluent Gross	PERMIT REQUIREMENT	******	******		******	******	50 DAILY MX	mg/L		Monthly	GRAB
Oil & grease	SAMPLE MEASUREMENT	******	******		******	******	<5		0	01/30	GR
00556 1 0 Effluent Gross	PERMIT REQUIREMENT	******	******		******	******	15 DAILY MX	mg/L		Monthly	GRAB

NAME/TITLE PRINCIPAL EXECUTIVE OFFICER			TELEPHONE		DATE		
William Murphy, Manager	I certify under penalty of law that this document and all attachments were prepared under my direction or supervision in accordance with a system designed to assure that qualified personnel properly gather and evaluate the information submitted. Based on my inquiry of the person or persons who manage the system, or those persons directly responsible for gathering the information, the information submitted is, to the best of my knowledge and belief, true, accurate, and complete. I am aware that there are significant penalties for submitting false information, including the possibility of fine and imprisonment for knowing violations.	William Murphy	718-204-4209		07	07	19
TYPED OR PRINTED		SIGNATURE OF PRINCIPAL EXECUTIVE OFFICER OR AUTHORIZED AGENT	AREA Code	NUMBER	YEAR	MO	DAY

COMMENTS AND EXPLANATION OF ANY VIOLATIONS (Reference all attachments here) ELAP ID is 10380.

NATIONAL POLLUTANT DISCHARGE [illegible]MINATION SYSTEM (NPDES)
DISCHARGE MONITORI[illegible]REPORT (DMR)

Approved
No. 2040-0004

RMITTEE NAME/ADDRESS *(Include Facility Name/Location if Different)*

ME: 11TH STREET CONDUIT
DDRESS: 4 IRVING PLACE ROOM 300
NEW YORK, NY 10003
ACILITY: 11TH STREET CONDUIT
OCATION: 11TH ST BETWEEN 53RD AND ASH
LONG ISLAND CITY, NY 11101
TTN:YI-CHANG SHAO

NY0201138	001M
PERMIT NUMBER	DISCHARGE NUMBER

MONITORING PERIOD	YEAR	MO	DAY		YEAR	MO	DAY
FROM	07	05	01	TO	07	05	31

DMR MAILING ZIP CODE: 10003
MINOR
(SUBR02)
GROUNDWATER INFILTRATION&STORM
External Outfall

No Discharge ☐

PARAMETER		QUANTITY OR LOADING			QUALITY OR CONCENTRATION				NO. EX	FREQUENCY OF ANALYSIS	SAMPLE TYPE
		VALUE	VALUE	UNITS	VALUE	VALUE	VALUE	UNITS			
ow rate	SAMPLE MEASUREMENT	******	108000		******	******	******		0	01/30	CA
0056 1 0 fluent Gross	PERMIT REQUIREMENT	******	Req. Mon. DAILY MX	gal/d	******	******	******			Monthly	CALCTD
olids, total suspended	SAMPLE MEASUREMENT	******	******		******	******	8		0	01/30	GR
0530 1 0 fluent Gross	PERMIT REQUIREMENT	******	******		******	******	50 DAILY MX	mg/L		Monthly	GRAB
il & grease	SAMPLE MEASUREMENT	******	******		******	******	8		0	01/30	GR
0556 1 0 fluent Gross	PERMIT REQUIREMENT	******	******		******	******	15 DAILY MX	mg/L		Monthly	GRAB

NAME/TITLE PRINCIPAL EXECUTIVE OFFICER				TELEPHONE		DATE		
William Murphy, Manager	I certify under penalty of law that this document and all attachments were prepared under my direction or supervision in accordance with a system designed to assure that qualified personnel properly gather and evaluate the information submitted. Based on my inquiry of the person or persons who manage the system, or those persons directly responsible for gathering the information, the information submitted is, to the best of my knowledge and belief, true, accurate, and complete. I am aware that there are significant penalties for submitting false information, including the possibility of fine and imprisonment for knowing violations.	William Murphy		212-460-2278		07	06	20
TYPED OR PRINTED		SIGNATURE OF PRINCIPAL EXECUTIVE OFFICER OR AUTHORIZED AGENT		AREA Code	NUMBER	YEAR	MO	DAY

COMMENTS AND EXPLANATION OF ANY VIOLATIONS (Reference all attachments here)

ECAP ID is 10380.

EPA Form 3320-1 (Rev.01/06) Previous editions may be used.

NATIONAL POLLUTANT DISCHAR[illegible]ELIMINATION SYSTEM (NPDES)
DISCHARGE MONIT[illegible]G REPORT (DMR)

Form Approved
OMB No. 2040-0004

PERMITTEE NAME/ADDRESS *(Include Facility Name/Location If Different)*

NAME: 11TH STREET CONDUIT
ADDRESS: 4 IRVING PLACE ROOM 300
NEW YORK, NY 10003
FACILITY: 11TH STREET CONDUIT
LOCATION: 11TH ST BETWEEN 53RD AND ASH
LONG ISLAND CITY, NY 11101
ATTN:YI-CHANG SHAO

NY0201138	001M
PERMIT NUMBER	DISCHARGE NUMBER

MONITORING PERIOD	YEAR	MO	DAY		YEAR	MO	DAY
FROM	07	04	01	TO	07	04	30

DMR MAILING ZIP CODE: 10003
MINOR
(SUBR02)
GROUNDWATER INFILTRATION&STORM
External Outfall

No Discharge ☐

PARAMETER		QUANTITY OR LOADING			QUALITY OR CONCENTRATION				NO. EX	FREQUENCY OF ANALYSIS	SAMPLE TYPE
		VALUE	VALUE	UNITS	VALUE	VALUE	VALUE	UNITS			
Flow rate	SAMPLE MEASUREMENT	******	108000		******	******	******		0	01/30	CA
00056 1 0 Effluent Gross	PERMIT REQUIREMENT	******	Req. Mon. DAILY MX	gal/d	******	******	******			MONTHLY	CALCTD
Solids, total suspended	SAMPLE MEASUREMENT	******	******		******	******	8		0	01/30	GR
00530 1 0 Effluent Gross	PERMIT REQUIREMENT	******	******		******	******	50 DAILY MX	mg/L		MONTHLY	GRAB
Oil & grease	SAMPLE MEASUREMENT	******	******		******	******	5		0	01/30	GR
00556 1 0 Effluent Gross	PERMIT REQUIREMENT	******	******		******	******	15 DAILY MX	mg/L		MONTHLY	GRAB

NAME/TITLE PRINCIPAL EXECUTIVE OFFICER			TELEPHONE		DATE		
William Murphy, Manager	I certify under penalty of law that this document and all attachments were prepared under my direction or supervision in accordance with a system designed to assure that qualified personnel properly gather and evaluate the information submitted. Based on my inquiry of the person or persons who manage the system, or those persons directly responsible for gathering the information, the information submitted is, to the best of my knowledge and belief, true, accurate, and complete. I am aware that there are significant penalties for submitting false information, including the possibility of fine and imprisonment for knowing violations.	William Murphy	212-460-2262		07	05	15
TYPED OR PRINTED		SIGNATURE OF PRINCIPAL EXECUTIVE OFFICER OR AUTHORIZED AGENT	AREA Code	NUMBER	YEAR	MO	DAY

COMMENTS AND EXPLANATION OF ANY VIOLATIONS (Reference all attachments here) ELAP ID IS 10380.

EPA Form 3320-1 (Rev.01/06) Previous editions may be used.

NATIONAL POLLUTANT DISCHARGE ELIMINATION SYSTEM (NPDES)
DISCHARGE MONIT(G REPORT (DMR)

Form Approved
o. 2040-0004

PERMITTEE NAME/ADDRESS *(Include Facility Name/Location If Different)*

NAME: CONSOLIDATED EDISON OF NY
ADDRESS: 4 IRVING PLACE
NEW YORK, NY 10003
FACILITY: CONSOLIDATED EDISON CO OF NY
LOCATION: 11TH ST BETWEEN 53RD AND ASH
LONG ISLAND CITY, NY 11101
ATTN:YI-CHANG SHAO

NY0201138	001V
PERMIT NUMBER	DISCHARGE NUMBER

MONITORING PERIOD	YEAR	MO	DAY		YEAR	MO	DAY
FROM	07	03	01	TO	08	02	29

DMR MAILING ZIP CODE: 10003
MINOR
(SUBR02)
GROUNDWTR INFILTR & SW - ACT LVLS
External Outfall

No Discharge ☐

PARAMETER		QUANTITY OR LOADING			QUALITY OR CONCENTRATION				NO. EX	FREQUENCY OF ANALYSIS	SAMPLE TYPE
		VALUE	VALUE	UNITS	VALUE	VALUE	VALUE	UNITS			
Toluene	SAMPLE MEASUREMENT	******	******		******	******	0.005		0	01/YR	GR
34010 V 0 See Comments	PERMIT REQUIREMENT	******	******		******	******	1 DAILY MX	mg/L		Annual	GRAB
Benzene	SAMPLE MEASUREMENT	******	******		******	******	0.005		0	01/YR	GR
34030 V 0 See Comments	PERMIT REQUIREMENT	******	******		******	******	1 DAILY MX	mg/L		Annual	GRAB
Ethylbenzene	SAMPLE MEASUREMENT	******	******		******	******	0.042		0	01/YR	GR
34371 V 0 See Comments	PERMIT REQUIREMENT	******	******		******	******	1 DAILY MX	mg/L		Annual	GRAB
Xylene	SAMPLE MEASUREMENT	******	******		******	******	<0.003		0	01/YR	GR
81551 V 0 See Comments	PERMIT REQUIREMENT	******	******		******	******	1 DAILY MX	mg/L		Annual	GRAB

NAME/TITLE PRINCIPAL EXECUTIVE OFFICER			TELEPHONE		DATE		
WILLIAM MURPHY, Manager	I certify under penalty of law that this document and all attachments were prepared under my direction or supervision in accordance with a system designed to assure that qualified personnel properly gather and evaluate the information submitted. Based on my inquiry of the person or persons who manage the system, or those persons directly responsible for gathering the information, the information submitted is, to the best of my knowledge and belief, true, accurate, and complete. I am aware that there are significant penalties for submitting false information, including the possibility of fine and imprisonment for knowing violations.	William Murphy	718-204-4209		08	03	13
TYPED OR PRINTED		SIGNATURE OF PRINCIPAL EXECUTIVE OFFICER OR AUTHORIZED AGENT	AREA Code	NUMBER	YEAR	MO	DAY

COMMENTS AND EXPLANATION OF ANY VIOLATIONS (Reference all attachments here)
LIMITS APPLY FOR DIRECT DISCHARGE TO NEWTON CREEK. ALSO, THERE SHALL BE NO DISCHARGE OF POLYCHLORINATED BIPHENYL COMPOUNDS.

NATIONAL POLLUTANT DISCHARGE INATION SYSTEM (NPDES)
DISCHARGE MONITORING REPORT (DMR)

Approved
OMB No. 2040-0004

ERMITTEE NAME/ADDRESS *(Include Facility Name/Location if Different)*

AME: 11TH STREET CONDUIT
DDRESS: 4 IRVING PLACE ROOM 300
NEW YORK, NY 10003
ACILITY: 11TH STREET CONDUIT
OCATION: 11TH ST BETWEEN 53RD AND ASH
LONG ISLAND CITY, NY 11101
TTN:YI-CHANG SHAO

NY0201138	001M
PERMIT NUMBER	DISCHARGE NUMBER

MONITORING PERIOD	YEAR	MO	DAY		YEAR	MO	DAY
FROM	07	03	01	TO	07	03	31

DMR MAILING ZIP CODE: 10003
MINOR
(SUBR02)
GROUNDWATER INFILTRATION&STORM
External Outfall

No Discharge ☐

PARAMETER		QUANTITY OR LOADING			QUALITY OR CONCENTRATION				NO. EX	FREQUENCY OF ANALYSIS	SAMPLE TYPE
		VALUE	VALUE	UNITS	VALUE	VALUE	VALUE	UNITS			
low rate	SAMPLE MEASUREMENT	******	10 8000		******	******	******		0	01/30	CA
0056 1 0 ffluent Gross	PERMIT REQUIREMENT	******	Req. Mon. DAILY MX	gal/d	******	******	******			MONTHLY	CALCTD
olids, total suspended	SAMPLE MEASUREMENT	******	******		******	******	9		0	01/30	GR
0530 1 0 ffluent Gross	PERMIT REQUIREMENT	******	******		******	******	50 DAILY MX	mg/L		MONTHLY	GRAB
il & grease	SAMPLE MEASUREMENT	******	******		******	******	5		0	01/30	GR
0556 1 0 ffluent Gross	PERMIT REQUIREMENT	******	******		******	******	15 DAILY MX	mg/L		MONTHLY	GRAB

NAME/TITLE PRINCIPAL EXECUTIVE OFFICER			TELEPHONE		DATE		
Jillian Murphy, Manager	I certify under penalty of law that this document and all attachments were prepared under my direction or supervision in accordance with a system designed to assure that qualified personnel properly gather and evaluate the information submitted. Based on my inquiry of the person or persons who manage the system, or those persons directly responsible for gathering the information, the information submitted is, to the best of my knowledge and belief, true, accurate, and complete. I am aware that there are significant penalties for submitting false information, including the possibility of fine and imprisonment for knowing violations.	Jillian Murphy	212-460-2262		07	04	12
TYPED OR PRINTED		SIGNATURE OF PRINCIPAL EXECUTIVE OFFICER OR AUTHORIZED AGENT	AREA Code	NUMBER	YEAR	MO	DAY

OMMENTS AND EXPLANATION OF ANY VIOLATIONS (Reference all attachments here)

NATIONAL POLLUTANT DISCHARG[illegible]IMINATION SYSTEM (NPDES)
DISCHARGE MONITOR[illegible] REPORT (DMR)

[illegible]n Approved
[illegible]MB No. 2040-0004

PERMITTEE NAME/ADDRESS *(Include Facility Name/Location If Different)*

NAME: 11TH STREET CONDUIT
ADDRESS: 4 IRVING PLACE ROOM 300
NEW YORK, NY 10003
FACILITY: 11TH STREET CONDUIT
LOCATION: 11TH ST BETWEEN 53RD AND ASH
LONG ISLAND CITY, NY 11101
ATTN:YI-CHANG SHAO

NY0201138	001M
PERMIT NUMBER	DISCHARGE NUMBER

MONITORING PERIOD	YEAR	MO	DAY		YEAR	MO	DAY
FROM	07	02	01	TO	07	02	28

DMR MAILING ZIP CODE: 10003
MINOR
(SUBR02)
GROUNDWATER INFILTRATION&STORM
External Outfall

No Discharge ☐

PARAMETER		QUANTITY OR LOADING			QUALITY OR CONCENTRATION				NO. EX	FREQUENCY OF ANALYSIS	SAMPLE TYPE
		VALUE	VALUE	UNITS	VALUE	VALUE	VALUE	UNITS			
Flow rate	SAMPLE MEASUREMENT	******	108000		******	******	******		0	01/30	CA
00056 1 0 Effluent Gross	PERMIT REQUIREMENT	******	Req. Mon. DAILY MX	gal/d	******	******	******			MONTHLY	CALCTD
Solids, total suspended	SAMPLE MEASUREMENT	******	******		******	******	9		0	01/30	GR
00530 1 0 Effluent Gross	PERMIT REQUIREMENT	******	******		******	******	50 DAILY MX	mg/L		MONTHLY	GRAB
Oil & grease	SAMPLE MEASUREMENT	******	******		******	******	7		0	01/30	GR
00556 1 0 Effluent Gross	PERMIT REQUIREMENT	******	******		******	******	15 DAILY MX	mg/L		MONTHLY	GRAB

NAME/TITLE PRINCIPAL EXECUTIVE OFFICER			TELEPHONE		DATE		
William Murphy, Manager	I certify under penalty of law that this document and all attachments were prepared under my direction or supervision in accordance with a system designed to assure that qualified personnel properly gather and evaluate the information submitted. Based on my inquiry of the person or persons who manage the system, or those persons directly responsible for gathering the information, the information submitted is, to the best of my knowledge and belief, true, accurate, and complete. I am aware that there are significant penalties for submitting false information, including the possibility of fine and imprisonment for knowing violations.	William Murphy	917-578-2576		07	03	14
TYPED OR PRINTED		SIGNATURE OF PRINCIPAL EXECUTIVE OFFICER OR AUTHORIZED AGENT	AREA Code	NUMBER	YEAR	MO	DAY

COMMENTS AND EXPLANATION OF ANY VIOLATIONS (Reference all attachments here)

NATIONAL POLLUTANT DISCHARGE ELIMINATION SYSTEM (NPDES)

DISCHARGE MONITORING REPORT (DMR)

Approved
OMB No. 2040-0004

PERMITTEE NAME/ADDRESS *(Include Facility Name/Location if Different)*

NAME: 11TH STREET CONDUIT
ADDRESS: 4 IRVING PLACE ROOM 300
NEW YORK, NY 10003
FACILITY: 11TH STREET CONDUIT
LOCATION: 11TH ST BETWEEN 53RD AND ASH
LONG ISLAND CITY, NY 11101
ATTN:YI-CHANG SHAO

NY0201138	001M
PERMIT NUMBER	DISCHARGE NUMBER

MONITORING PERIOD	YEAR	MO	DAY		YEAR	MO	DAY
FROM	07	01	01	TO	07	01	31

DMR MAILING ZIP CODE: 10003
MINOR
(SUBR02)
GROUNDWATER INFILTRATION&STORM
External Outfall

No Discharge ☐

PARAMETER		QUANTITY OR LOADING			QUALITY OR CONCENTRATION				NO. EX	FREQUENCY OF ANALYSIS	SAMPLE TYPE
		VALUE	VALUE	UNITS	VALUE	VALUE	VALUE	UNITS			
Flow rate	SAMPLE MEASUREMENT	******	108006		******	******	******		0	01/30	CA
00056 1 0 Effluent Gross	PERMIT REQUIREMENT	******	Req. Mon. DAILY MX	gal/d	******	******	******			Once Per Month	CALCTD
Solids, total suspended	SAMPLE MEASUREMENT	******	******		******	******	10		0	01/30	GR
00530 1 0 Effluent Gross	PERMIT REQUIREMENT	******	******		******	******	50 DAILY MX	mg/L		Once Per Month	GRAB
Oil & grease	SAMPLE MEASUREMENT	******	******		******	******	<5		0	01/30	GR
00556 1 0 Effluent Gross	PERMIT REQUIREMENT	******	******		******	******	15 DAILY MX	mg/L		Once Per Month	GRAB

NAME/TITLE PRINCIPAL EXECUTIVE OFFICER			TELEPHONE		DATE		
William Murphy, Manager	I certify under penalty of law that this document and all attachments were prepared under my direction or supervision in accordance with a system designed to assure that qualified personnel properly gather and evaluate the information submitted. Based on my inquiry of the person or persons who manage the system, or those persons directly responsible for gathering the information, the information submitted is, to the best of my knowledge and belief, true, accurate, and complete. I am aware that there are significant penalties for submitting false information, including the possibility of fine and imprisonment for knowing violations.	William Murphy	212 - 460-2262		07	02	22
TYPED OR PRINTED		SIGNATURE OF PRINCIPAL EXECUTIVE OFFICER OR AUTHORIZED AGENT	AREA Code	NUMBER	YEAR	MO	DAY

COMMENTS AND EXPLANATION OF ANY VIOLATIONS (Reference all attachments here) The ECAP ID is 10380.

EPA Form 3320-1 (Rev.01/06) Previous editions may be used.

NATIONAL POLLUTANT DISCHARGE ELIMINATION SYSTEM (NPDES)
DISCHARGE MONITORING REPORT (DMR)

Form Approved
OMB No. 2040-0004

PERMITTEE NAME/ADDRESS *(Include Facility Name/Location if Different)*

NAME: CONSOLIDATED EDISON OF NY
ADDRESS: 4 IRVING PLACE
NEW YORK, NY 10003
FACILITY: CONSOLIDATED EDISON CO OF NY
LOCATION: 11TH ST BETWEEN 53RD AND ASH .
LONG ISLAND CITY, NY 11101

ATTN: YI-CHANG SHAO

NY0201138	001M
PERMIT NUMBER	DISCHARGE NUMBER

MONITORING PERIOD			
	MM/DD/YYYY		MM/DD/YYYY
FROM	12/01/2008	TO	12/31/2008

DMR Mailing ZIP CODE: 10003
MINOR
(SUBR 02)
GROUNDWATER INFILTRATION&STORM
External Outfall

No Discharge ☐

PARAMETER		QUANTITY OR LOADING			QUALITY OR CONCENTRATION				NO. EX	FREQUENCY OF ANALYSIS	SAMPLE TYPE
		VALUE	VALUE	UNITS	VALUE	VALUE	VALUE	UNITS			
Flow rate	SAMPLE MEASUREMENT	******	108 000		******	******	******	******	0	01/30	CA
00056 1 0 Effluent Gross	PERMIT REQUIREMENT	******	Req. Mon. DAILY MX	gal/d	******	******	******	******		Monthly	CALCTD
Solids, total suspended	SAMPLE MEASUREMENT	******	******	******	******	******	9		0	01/30	GR
00530 1 0 Effluent Gross	PERMIT REQUIREMENT	******	******	******	******	******	50 DAILY MX	mg/L		Monthly	GRAB
Oil & grease	SAMPLE MEASUREMENT	******	******	******	******	******	<5		0	01/30	GR
00556 1 0 Effluent Gross	PERMIT REQUIREMENT	******	******	******	******	******	15 DAILY MX	mg/L		Monthly	GRAB

NAME/TITLE PRINCIPAL EXECUTIVE OFFICER			TELEPHONE		DATE
WARREN MILLER, Manager	I certify under penalty of law that this document and all attachments were prepared under my direction or supervision in accordance with a system designed to assure that qualified personnel properly gather and evaluate the information submitted. Based on my inquiry of the person or persons who manage the system, or those persons directly responsible for gathering the information, the information submitted is, to the best of my knowledge and belief, true, accurate, and complete. I am aware that there are significant penalties for submitting false information, including the possibility of fine and imprisonment for knowing violations.	David M. Miller	917-578-9757		01/13/2009
TYPED OR PRINTED		SIGNATURE OF PRINCIPAL EXECUTIVE OFFICER OR AUTHORIZED AGENT	AREA Code	NUMBER	MM/DD/YYYY

COMMENTS AND EXPLANATION OF ANY VIOLATIONS (Reference all attachments here)

ECAP ID is 10380.

EPA-NC-CE-0000287

NATIONAL POLLUTANT DISCHARGE ELIMINATION SYSTEM (NPDES)
DISCHARGE MONIT G REPORT (DMR)

Form Approved
o. 2040-0004

PERMITTEE NAME/ADDRESS *(Include Facility Name/Location if Different)*

NAME: CONSOLIDATED EDISON OF NY
ADDRESS: 4 IRVING PLACE
NEW YORK, NY 10003
FACILITY: CONSOLIDATED EDISON CO OF NY
LOCATION: 11TH ST BETWEEN 53RD AND ASH
LONG ISLAND CITY, NY 11101

ATTN: YI-CHANG SHAO

NY0201138	001M
PERMIT NUMBER	DISCHARGE NUMBER

MONITORING PERIOD			
	MM/DD/YYYY		MM/DD/YYYY
FROM	11/01/2008	TO	11/30/2008

DMR Mailing ZIP CODE: 10003
MINOR
(SUBR 02)
GROUNDWATER INFILTRATION&STORM
External Outfall

No Discharge ☐

PARAMETER		QUANTITY OR LOADING			QUALITY OR CONCENTRATION				NO. EX	FREQUENCY OF ANALYSIS	SAMPLE TYPE
		VALUE	VALUE	UNITS	VALUE	VALUE	VALUE	UNITS			
Flow rate	SAMPLE MEASUREMENT	******	108000		******	******	******	******	0	01/30	CA
00056 1 0 Effluent Gross	PERMIT REQUIREMENT	******	Req. Mon. DAILY MX	gal/d	******	******	******	******		Monthly	CALCTD
Solids, total suspended	SAMPLE MEASUREMENT	******	******	******	******	******	19		0	01/30	GR
00530 1 0 Effluent Gross	PERMIT REQUIREMENT	******	******	******	******	******	50 DAILY MX	mg/L		Monthly	GRAB
Oil & grease	SAMPLE MEASUREMENT	******	******	******	******	******	<5		0	01/30	GR
00556 1 0 Effluent Gross	PERMIT REQUIREMENT	******	******	******	******	******	15 DAILY MX	mg/L		Monthly	GRAB

NAME/TITLE PRINCIPAL EXECUTIVE OFFICER			TELEPHONE		DATE
WARREN MILLER, Manager	I certify under penalty of law that this document and all attachments were prepared under my direction or supervision in accordance with a system designed to assure that qualified personnel properly gather and evaluate the information submitted. Based on my inquiry of the person or persons who manage the system, or those persons directly responsible for gathering the information, the information submitted is, to the best of my knowledge and belief, true, accurate, and complete. I am aware that there are significant penalties for submitting false information, including the possibility of fine and imprisonment for knowing violations.	Warren S. Miller	917-678-9257		12-17-2008
TYPED OR PRINTED		SIGNATURE OF PRINCIPAL EXECUTIVE OFFICER OR AUTHORIZED AGENT	AREA Code	NUMBER	MM/DD/YYYY

COMMENTS AND EXPLANATION OF ANY VIOLATIONS (Reference all attachments here)

ELAP ID is 10380.

NATIONAL POLLUTANT DISCHARGE ELIMINATION SYSTEM (NPDES)
DISCHARGE MONIT G REPORT (DMR)

Form Approved
o. 2040-0004

PERMITTEE NAME/ADDRESS *(Include Facility Name/Location if Different)*

NAME: CONSOLIDATED EDISON OF NY
ADDRESS: 4 IRVING PLACE
NEW YORK, NY 10003

FACILITY: CONSOLIDATED EDISON CO OF NY
LOCATION: 11TH ST BETWEEN 53RD AND ASH
LONG ISLAND CITY, NY 11101

ATTN:YI-CHANG SHAO

NY0201138	001M
PERMIT NUMBER	DISCHARGE NUMBER

	YEAR	MO	DAY		YEAR	MO	DAY
FROM	08	10	01	TO	08	10	31

DMR Mailing ZIP CODE: 10003
MINOR
(SUBR02)
GROUNDWATER INFILTRATION&STORM
External Outfall

No Discharge ☐

PARAMETER		QUANTITY OR LOADING			QUALITY OR CONCENTRATION				NO. EX	FREQUENCY OF ANALYSIS	SAMPLE TYPE
		VALUE	VALUE	UNITS	VALUE	VALUE	VALUE	UNITS			
Flow rate	SAMPLE MEASUREMENT	******	108000		******	******	******		0	01/30	CA
00056 1 0 Effluent Gross	PERMIT REQUIREMENT	******	Req. Mon. DAILY MX	gal/d	******	******	******			Monthly	CALCTD
Solids, total suspended	SAMPLE MEASUREMENT	******	******		******	******	8		0	01/30	GR
00530 1 0 Effluent Gross	PERMIT REQUIREMENT	******	******		******	******	50 DAILY MX	mg/L		Monthly	GRAB
Oil & grease	SAMPLE MEASUREMENT	******	******		******	******	<5		0	01/30	GR
00556 1 0 Effluent Gross	PERMIT REQUIREMENT	******	******		******	******	15 DAILY MX	mg/L		Monthly	GRAB

NAME/TITLE PRINCIPAL EXECUTIVE OFFICER			TELEPHONE		DATE		
WARREN MILLER Manager	I certify under penalty of law that this document and all attachments were prepared under my direction or supervision in accordance with a system designed to assure that qualified personnel properly gather and evaluate the information submitted. Based on my inquiry of the person or persons who manage the system, or those persons directly responsible for gathering the information, the information submitted is, to the best of my knowledge and belief, true, accurate, and complete. I am aware that there are significant penalties for submitting false information, including the possibility of fine and imprisonment for knowing violations.	Warren S. Miller	917-578-9757		04	11	06
TYPED OR PRINTED		SIGNATURE OF PRINCIPAL EXECUTIVE OFFICER OR AUTHORIZED AGENT	AREA Code	NUMBER	YEAR	MO	DAY

COMMENTS AND EXPLANATION OF ANY VIOLATIONS (Reference all attachments here)

NATIONAL POLLUTANT DISCHARGE ELIMINATION SYSTEM (NPDES)
DISCHARGE MONITO[illegible] REPORT (DMR)

Form Approved
[illegible]o. 2040-0004

PERMITTEE NAME/ADDRESS *(Include Facility Name/Location if Different)*

NAME: CONSOLIDATED EDISON OF NY
ADDRESS: 4 IRVING PLACE
NEW YORK, NY 10003

FACILITY: CONSOLIDATED EDISON CO OF NY
LOCATION: 11TH ST BETWEEN 53RD AND ASH
LONG ISLAND CITY, NY 11101

ATTN:YI-CHANG SHAO

NY0201138	001M
PERMIT NUMBER	DISCHARGE NUMBER

	YEAR	MO	DAY		YEAR	MO	DAY
FROM	08	09	01	TO	08	09	30

DMR Mailing ZIP CODE: 10003
MINOR
(SUBR02)
GROUNDWATER INFILTRATION&STORM
External Outfall

No Discharge ☐

PARAMETER		QUANTITY OR LOADING			QUALITY OR CONCENTRATION				NO. EX	FREQUENCY OF ANALYSIS	SAMPLE TYPE
		VALUE	VALUE	UNITS	VALUE	VALUE	VALUE	UNITS			
Flow rate	SAMPLE MEASUREMENT	******	108000		******	******	******		0	01/30	CA
00056 1 0 Effluent Gross	PERMIT REQUIREMENT	******	Req. Mon. DAILY MX	gal/d	******	******	******			Monthly	CALCTD
Solids, total suspended	SAMPLE MEASUREMENT	******	******		******	******	11		0	01/30	GR
00530 1 0 Effluent Gross	PERMIT REQUIREMENT	******	******		******	******	50 DAILY MX	mg/L		Monthly	GRAB
Oil & grease	SAMPLE MEASUREMENT	******	******		******	******	<5		0	01/30	GR
00556 1 0 Effluent Gross	PERMIT REQUIREMENT	******	******		******	******	15 DAILY MX	mg/L		Monthly	GRAB

NAME/TITLE PRINCIPAL EXECUTIVE OFFICER			TELEPHONE		DATE		
WARREN MILLER	I certify under penalty of law that this document and all attachments were prepared under my direction or supervision in accordance with a system designed to assure that qualified personnel properly gather and evaluate the information submitted. Based on my inquiry of the person or persons who manage the system, or those persons directly responsible for gathering the information, the information submitted is, to the best of my knowledge and belief, true, accurate, and complete. I am aware that there are significant penalties for submitting false information, including the possibility of fine and imprisonment for knowing violations.	Warren J. Miller	917-578-9757		2008	10	08
TYPED OR PRINTED		SIGNATURE OF PRINCIPAL EXECUTIVE OFFICER OR AUTHORIZED AGENT	AREA Code	NUMBER	YEAR	MO	DAY

COMMENTS AND EXPLANATION OF ANY VIOLATIONS (Reference all attachments here)

NATIONAL POLLUTANT DISCHARGE ELIMINATION SYSTEM (NPDES)
DISCHARGE MONITO[illegible] REPORT (DMR)

Form Approved
[illegible]. 2040-0004

PERMITTEE NAME/ADDRESS *(Include Facility Name/Location if Different)*

NAME: CONSOLIDATED EDISON OF NY
ADDRESS: 4 IRVING PLACE
NEW YORK, NY 10003

FACILITY: CONSOLIDATED EDISON CO OF NY
LOCATION: 11TH ST BETWEEN 53RD AND ASH
LONG ISLAND CITY, NY 11101

ATTN:YI-CHANG SHAO

NY0201138	001M
PERMIT NUMBER	DISCHARGE NUMBER

	YEAR	MO	DAY		YEAR	MO	DAY
FROM	08	08	01	TO	08	08	31

DMR Mailing ZIP CODE: 10003
MINOR
(SUBR02)
GROUNDWATER INFILTRATION&STORM
External Outfall

No Discharge ☐

PARAMETER		QUANTITY OR LOADING			QUALITY OR CONCENTRATION				NO. EX	FREQUENCY OF ANALYSIS	SAMPLE TYPE
		VALUE	VALUE	UNITS	VALUE	VALUE	VALUE	UNITS			
Flow rate	SAMPLE MEASUREMENT	******	108000		******	******	******		0	01/30	CA
00056 1 0 Effluent Gross	PERMIT REQUIREMENT	******	Req. Mon. DAILY MX	gal/d	******	******	******			Monthly	CALCTD
Solids, total suspended	SAMPLE MEASUREMENT	******	******		******	******	8		0	01/30	GR
00530 1 0 Effluent Gross	PERMIT REQUIREMENT	******	******		******	******	50 DAILY MX	mg/L		Monthly	GRAB
Oil & grease	SAMPLE MEASUREMENT	******	******		******	******	6		0	01/30	GR
00556 1 0 Effluent Gross	PERMIT REQUIREMENT	******	******		******	******	15 DAILY MX	mg/L		Monthly	GRAB

NAME/TITLE PRINCIPAL EXECUTIVE OFFICER			TELEPHONE		DATE		
WARREN MILLER, Manager	I certify under penalty of law that this document and all attachments were prepared under my direction or supervision in accordance with a system designed to assure that qualified personnel properly gather and evaluate the information submitted. Based on my inquiry of the person or persons who manage the system, or those persons directly responsible for gathering the information, the information submitted is, to the best of my knowledge and belief, true, accurate, and complete. I am aware that there are significant penalties for submitting false information, including the possibility of fine and imprisonment for knowing violations.	Warren L. Miller	917-578-7757		08	09	10
TYPED OR PRINTED		SIGNATURE OF PRINCIPAL EXECUTIVE OFFICER OR AUTHORIZED AGENT	AREA Code	NUMBER	YEAR	MO	DAY

COMMENTS AND EXPLANATION OF ANY VIOLATIONS (Reference all attachments here)

ELAP ID IS 10380.

EPA Form 3320-1 (Rev.01/06) Previous editions may be used.

NATIONAL POLLUTANT DISCHARGE ELIMINATION SYSTEM (NPDES)
DISCHARGE MONIT[illegible]G REPORT (DMR)

Form Approved
[illegible]lo. 2040-0004

PERMITTEE NAME/ADDRESS *(Include Facility Name/Location if Different)*

NAME: CONSOLIDATED EDISON OF NY
ADDRESS: 4 IRVING PLACE
NEW YORK, NY 10003

FACILITY: CONSOLIDATED EDISON CO OF NY
LOCATION: 11TH ST BETWEEN 53RD AND ASH
LONG ISLAND CITY, NY 11101

ATTN:YI-CHANG SHAO

NY0201138	001M
PERMIT NUMBER	DISCHARGE NUMBER

MONITORING PERIOD	YEAR	MO	DAY		YEAR	MO	DAY
FROM	08	07	01	TO	08	07	31

DMR MAILING ZIP CODE: 10003
MINOR
(SUBR02)
GROUNDWATER INFILTRATION&STORM
External Outfall

No Discharge ☐

PARAMETER		QUANTITY OR LOADING			QUALITY OR CONCENTRATION				NO. EX	FREQUENCY OF ANALYSIS	SAMPLE TYPE
		VALUE	VALUE	UNITS	VALUE	VALUE	VALUE	UNITS			
Flow rate	SAMPLE MEASUREMENT	******	108000		******	******	******		0	01/30	CA
00056 1 0 Effluent Gross	PERMIT REQUIREMENT	******	Req. Mon. DAILY MX	gal/d	******	******	******			Monthly	CALCTD
Solids, total suspended	SAMPLE MEASUREMENT	******	******		******	******	10		0	01/30	GR
00530 1 0 Effluent Gross	PERMIT REQUIREMENT	******	******		******	******	50 DAILY MX	mg/L		Monthly	GRAB
Oil & grease	SAMPLE MEASUREMENT	******	******		******	******	<5		0	01/30	GR
00556 1 0 Effluent Gross	PERMIT REQUIREMENT	******	******		******	******	15 DAILY MX	mg/L		Monthly	GRAB

NAME/TITLE PRINCIPAL EXECUTIVE OFFICER			TELEPHONE		DATE		
WARREN MILLER, Manager	I certify under penalty of law that this document and all attachments were prepared under my direction or supervision in accordance with a system designed to assure that qualified personnel properly gather and evaluate the information submitted. Based on my inquiry of the person or persons who manage the system, or those persons directly responsible for gathering the information, the information submitted is, to the best of my knowledge and belief, true, accurate, and complete. I am aware that there are significant penalties for submitting false information, including the possibility of fine and imprisonment for knowing violations.	Warren D. Miller	917-575-9257		08	08	07
TYPED OR PRINTED		SIGNATURE OF PRINCIPAL EXECUTIVE OFFICER OR AUTHORIZED AGENT	AREA Code	NUMBER	YEAR	MO	DAY

COMMENTS AND EXPLANATION OF ANY VIOLATIONS (Reference all attachments here)

ELAP ID IS 10380

EPA Form 3320-1 (Rev.01/06) Previous editions may be used.

NATIONAL POLLUTANT DISCHARGE ELIMINATION SYSTEM (NPDES)
DISCHARGE MONIT G REPORT (DMR)

Form Approved
No. 2040-0004

PERMITTEE NAME/ADDRESS *(Include Facility Name/Location if Different)*

NAME: CONSOLIDATED EDISON OF NY
ADDRESS: 4 IRVING PLACE
NEW YORK, NY 10003

FACILITY: CONSOLIDATED EDISON CO OF NY
LOCATION: 11TH ST BETWEEN 53RD AND ASH
LONG ISLAND CITY, NY 11101

ATTN:YI-CHANG SHAO

NY0201138	001M
PERMIT NUMBER	DISCHARGE NUMBER

MONITORING PERIOD	YEAR	MO	DAY		YEAR	MO	DAY
FROM	08	06	01	TO	08	06	30

DMR MAILING ZIP CODE: 10003
MINOR
(SUBR02)
GROUNDWATER INFILTRATION&STORM
External Outfall

No Discharge ☐

PARAMETER		QUANTITY OR LOADING			QUALITY OR CONCENTRATION				NO. EX	FREQUENCY OF ANALYSIS	SAMPLE TYPE
		VALUE	VALUE	UNITS	VALUE	VALUE	VALUE	UNITS			
Flow rate	SAMPLE MEASUREMENT	******	108000		******	******	******		0	01/30	CA
00056 1 0 Effluent Gross	PERMIT REQUIREMENT	******	Req. Mon. DAILY MX	gal/d	******	******	******			Monthly	CALCTD
Solids, total suspended	SAMPLE MEASUREMENT	******	******		******	******	10		0	01/30	GR
00530 1 0 Effluent Gross	PERMIT REQUIREMENT	******	******		******	******	50 DAILY MX	mg/L		Monthly	GRAB
Oil & grease	SAMPLE MEASUREMENT	******	******		******	******	<5		0	01/30	GR
00556 1 0 Effluent Gross	PERMIT REQUIREMENT	******	******		******	******	15 DAILY MX	mg/L		Monthly	GRAB

NAME/TITLE PRINCIPAL EXECUTIVE OFFICER			TELEPHONE		DATE		
WARREN MILLER, Manager	I certify under penalty of law that this document and all attachments were prepared under my direction or supervision in accordance with a system designed to assure that qualified personnel properly gather and evaluate the information submitted. Based on my inquiry of the person or persons who manage the system, or those persons directly responsible for gathering the information, the information submitted is, to the best of my knowledge and belief, true, accurate, and complete. I am aware that there are significant penalties for submitting false information, including the possibility of fine and imprisonment for knowing violations.	Warren S. Miller	917-578-9757		2008	07	07
TYPED OR PRINTED		SIGNATURE OF PRINCIPAL EXECUTIVE OFFICER OR AUTHORIZED AGENT	AREA Code	NUMBER	YEAR	MO	DAY

COMMENTS AND EXPLANATION OF ANY VIOLATIONS (Reference all attachments here)

ELAP ID IS 10380.

EPA Form 3320-1 (Rev.01/06) Previous editions may be used.

NATIONAL POLLUTANT DISCHARGE ELIMINATION SYSTEM (NPDES)

DISCHARGE MONITORING REPORT (DMR)

Form Approved
No. 2040-0004

PERMITTEE NAME/ADDRESS *(Include Facility Name/Location if Different)*

NAME: CONSOLIDATED EDISON OF NY
ADDRESS: 4 IRVING PLACE
NEW YORK, NY 10003
FACILITY: CONSOLIDATED EDISON CO OF NY
LOCATION: 11TH ST BETWEEN 53RD AND ASH
LONG ISLAND CITY, NY 11101
ATTN:YI-CHANG SHAO

NY0201138	001M
PERMIT NUMBER	DISCHARGE NUMBER

MONITORING PERIOD	YEAR	MO	DAY		YEAR	MO	DAY
FROM	08	05	01	TO	08	05	31

DMR MAILING ZIP CODE: 10003
MINOR
(SUBR02)
GROUNDWATER INFILTRATION&STORM
External Outfall

No Discharge ☐

PARAMETER		QUANTITY OR LOADING			QUALITY OR CONCENTRATION				NO. EX	FREQUENCY OF ANALYSIS	SAMPLE TYPE
		VALUE	VALUE	UNITS	VALUE	VALUE	VALUE	UNITS			
Flow rate	SAMPLE MEASUREMENT	******	108000		******	******	******		0	01/30	CA
00056 1 0 Effluent Gross	PERMIT REQUIREMENT	******	Req. Mon. DAILY MX	gal/d	******	******	******			Monthly	CALCTD
Solids, total suspended	SAMPLE MEASUREMENT	******	******		******	******	10		0	01/30	GR
00530 1 0 Effluent Gross	PERMIT REQUIREMENT	******	******		******	******	50 DAILY MX	mg/L		Monthly	GRAB
Oil & grease	SAMPLE MEASUREMENT	******	******		******	******	5		0	01/30	GR
00556 1 0 Effluent Gross	PERMIT REQUIREMENT	******	******		******	******	15 DAILY MX	mg/L		Monthly	GRAB

NAME/TITLE PRINCIPAL EXECUTIVE OFFICER			TELEPHONE		DATE		
WILLIAM MURPHY, Manager	I certify under penalty of law that this document and all attachments were prepared under my direction or supervision in accordance with a system designed to assure that qualified personnel properly gather and evaluate the information submitted. Based on my inquiry of the person or persons who manage the system, or those persons directly responsible for gathering the information, the information submitted is, to the best of my knowledge and belief, true, accurate, and complete. I am aware that there are significant penalties for submitting false information, including the possibility of fine and imprisonment for knowing violations.	William Murphy	718-204-4209		08	06	10
TYPED OR PRINTED		SIGNATURE OF PRINCIPAL EXECUTIVE OFFICER OR AUTHORIZED AGENT	AREA Code	NUMBER	YEAR	MO	DAY

COMMENTS AND EXPLANATION OF ANY VIOLATIONS (Reference all attachments here)

ELAP ID is 10038.

EPA Form 3320-1 (Rev.01/06) Previous editions may be used.

NATIONAL POLLUTANT DISCHARGE ELIMINATION SYSTEM (NPDES)
DISCHARGE MONI NG REPORT (DMR)

Form Approved
No. 2040-0004

PERMITTEE NAME/ADDRESS *(Include Facility Name/Location if Different)*

NAME: CONSOLIDATED EDISON OF NY
ADDRESS: 4 IRVING PLACE
NEW YORK, NY 10003
FACILITY: CONSOLIDATED EDISON CO OF NY
LOCATION: 11TH ST BETWEEN 53RD AND ASH
LONG ISLAND CITY, NY 11101
ATTN:YI-CHANG SHAO

NY0201138	001M
PERMIT NUMBER	DISCHARGE NUMBER

MONITORING PERIOD						
	YEAR	MO	DAY		YEAR	MO	DAY
FROM	08	04	01	TO	08	04	30

DMR MAILING ZIP CODE: 10003
MINOR
(SUBR02)
GROUNDWATER INFILTRATION&STORM
External Outfall

No Discharge ☐

PARAMETER		QUANTITY OR LOADING			QUALITY OR CONCENTRATION				NO. EX	FREQUENCY OF ANALYSIS	SAMPLE TYPE
		VALUE	VALUE	UNITS	VALUE	VALUE	VALUE	UNITS			
Flow rate	SAMPLE MEASUREMENT	******	108000		******	******	******		0	01/30	CA
00056 1 0 Effluent Gross	PERMIT REQUIREMENT	******	Req. Mon. DAILY MX	gal/d	******	******	******			Monthly	CALCTD
Solids, total suspended	SAMPLE MEASUREMENT	******	******		******	******	10		0	01/30	GR
00530 1 0 Effluent Gross	PERMIT REQUIREMENT	******	******		******	******	50 DAILY MX	mg/L		Monthly	GRAB
Oil & grease	SAMPLE MEASUREMENT	******	******		******	******	<5		0	01/30	GR
00556 1 0 Effluent Gross	PERMIT REQUIREMENT	******	******		******	******	15 DAILY MX	mg/L		Monthly	GRAB

NAME/TITLE PRINCIPAL EXECUTIVE OFFICER			TELEPHONE		DATE		
WILLIAM MURPHY, Manager	I certify under penalty of law that this document and all attachments were prepared under my direction or supervision in accordance with a system designed to assure that qualified personnel properly gather and evaluate the information submitted. Based on my inquiry of the person or persons who manage the system, or those persons directly responsible for gathering the information, the information submitted is, to the best of my knowledge and belief, true, accurate, and complete. I am aware that there are significant penalties for submitting false information, including the possibility of fine and imprisonment for knowing violations.	William Murphy	718-204-4209		08	05	22
TYPED OR PRINTED		SIGNATURE OF PRINCIPAL EXECUTIVE OFFICER OR AUTHORIZED AGENT	AREA Code	NUMBER	YEAR	MO	DAY

COMMENTS AND EXPLANATION OF ANY VIOLATIONS (Reference all attachments here) ELAP ID is 10380.

EPA Form 3320-1 (Rev.01/06) Previous editions may be used.

NATIONAL POLLUTANT DISCHARGE ELIMINATION SYSTEM (NPDES)
DISCHARGE MONI[illegible]IG REPORT (DMR)

Form Approved
No. 2040-0004

PERMITTEE NAME/ADDRESS *(Include Facility Name/Location if Different)*

NAME: CONSOLIDATED EDISON OF NY
ADDRESS: 4 IRVING PLACE
NEW YORK, NY 10003
FACILITY: CONSOLIDATED EDISON CO OF NY
LOCATION: 11TH ST BETWEEN 53RD AND ASH
LONG ISLAND CITY, NY 11101
ATTN:YI-CHANG SHAO

NY0201138	001M
PERMIT NUMBER	DISCHARGE NUMBER

MONITORING PERIOD	YEAR	MO	DAY		YEAR	MO	DAY
FROM	08	03	01	TO	08	03	31

DMR MAILING ZIP CODE: 10003
MINOR
(SUBR02)
GROUNDWATER INFILTRATION&STORM
External Outfall

No Discharge ☐

PARAMETER		QUANTITY OR LOADING			QUALITY OR CONCENTRATION				NO. EX	FREQUENCY OF ANALYSIS	SAMPLE TYPE
		VALUE	VALUE	UNITS	VALUE	VALUE	VALUE	UNITS			
Flow rate	SAMPLE MEASUREMENT	******	108000		******	******	******		0	01/30	CA
00056 1 0 Effluent Gross	PERMIT REQUIREMENT	******	Req. Mon. DAILY MX	gal/d	******	******	******			Monthly	CALCTD
Solids, total suspended	SAMPLE MEASUREMENT	******	******		******	******	7		0	01/30	GR
00530 1 0 Effluent Gross	PERMIT REQUIREMENT	******	******		******	******	50 DAILY MX	mg/L		Monthly	GRAB
Oil & grease	SAMPLE MEASUREMENT	******	******		******	******	<5		0	01/30	GR
00556 1 0 Effluent Gross	PERMIT REQUIREMENT	******	******		******	******	15 DAILY MX	mg/L		Monthly	GRAB

NAME/TITLE PRINCIPAL EXECUTIVE OFFICER			TELEPHONE		DATE		
WILLIAM MURPHY, Manager	I certify under penalty of law that this document and all attachments were prepared under my direction or supervision in accordance with a system designed to assure that qualified personnel properly gather and evaluate the information submitted. Based on my inquiry of the person or persons who manage the system, or those persons directly responsible for gathering the information, the information submitted is, to the best of my knowledge and belief, true, accurate, and complete. I am aware that there are significant penalties for submitting false information, including the possibility of fine and imprisonment for knowing violations.	William Murphy	718-204-4209		08	04	17
TYPED OR PRINTED		SIGNATURE OF PRINCIPAL EXECUTIVE OFFICER OR AUTHORIZED AGENT	AREA Code	NUMBER	YEAR	MO	DAY

COMMENTS AND EXPLANATION OF ANY VIOLATIONS (Reference all attachments here)

ECAP ID IS 10380.

EPA Form 3320-1 (Rev.01/06) Previous editions may be used.

NATIONAL POLLUTANT DISCHARGE ELIMINATION SYSTEM (NPDES)

DISCHARGE MONIT G REPORT (DMR)

Form Approved
No. 2040-0004

PERMITTEE NAME/ADDRESS *(Include Facility Name/Location if Different)*

NAME: CONSOLIDATED EDISON OF NY
ADDRESS: 4 IRVING PLACE
NEW YORK, NY 10003
FACILITY: CONSOLIDATED EDISON CO OF NY
LOCATION: 11TH ST BETWEEN 53RD AND ASH
LONG ISLAND CITY, NY 11101
ATTN:YI-CHANG SHAO

NY0201138	001M
PERMIT NUMBER	DISCHARGE NUMBER

MONITORING PERIOD	YEAR	MO	DAY		YEAR	MO	DAY
FROM	08	02	01	TO	08	02	29

DMR MAILING ZIP CODE: 10003
MINOR
(SUBR02)
GROUNDWATER INFILTRATION&STORM
External Outfall

No Discharge ☐

PARAMETER		QUANTITY OR LOADING			QUALITY OR CONCENTRATION				NO. EX	FREQUENCY OF ANALYSIS	SAMPLE TYPE
		VALUE	VALUE	UNITS	VALUE	VALUE	VALUE	UNITS			
Flow rate	SAMPLE MEASUREMENT	******	108000		******	******	******		0	01/30	CA
00056 1 0 Effluent Gross	PERMIT REQUIREMENT	******	Req. Mon. DAILY MX	gal/d	******	******	******			Monthly	CALCTD
Solids, total suspended	SAMPLE MEASUREMENT	******	******		******	******	12		0	01/30	GR
00530 1 0 Effluent Gross	PERMIT REQUIREMENT	******	******		******	******	50 DAILY MX	mg/L		Monthly	GRAB
Oil & grease	SAMPLE MEASUREMENT	******	******		******	******	<5		0	01/30	GR
00556 1 0 Effluent Gross	PERMIT REQUIREMENT	******	******		******	******	15 DAILY MX	mg/L		Monthly	GRAB

NAME/TITLE PRINCIPAL EXECUTIVE OFFICER			TELEPHONE		DATE		
William Murphy, Manager	I certify under penalty of law that this document and all attachments were prepared under my direction or supervision in accordance with a system designed to assure that qualified personnel properly gather and evaluate the information submitted. Based on my inquiry of the person or persons who manage the system, or those persons directly responsible for gathering the information, the information submitted is, to the best of my knowledge and belief, true, accurate, and complete. I am aware that there are significant penalties for submitting false information, including the possibility of fine and imprisonment for knowing violations.	William Murphy	718-204-4209		08	03	13
TYPED OR PRINTED		SIGNATURE OF PRINCIPAL EXECUTIVE OFFICER OR AUTHORIZED AGENT	AREA Code	NUMBER	YEAR	MO	DAY

COMMENTS AND EXPLANATION OF ANY VIOLATIONS (Reference all attachments here)

ELAP ID is 10380.

EPA Form 3320-1 (Rev.01/06) Previous editions may be used.

NATIONAL POLLUTANT DISCHARGE ELIMINATION SYSTEM (NPDES)
DISCHARGE MONI IG REPORT (DMR)

Form Approved
No. 2040-0004

PERMITTEE NAME/ADDRESS *(Include Facility Name/Location if Different)*

NAME: CONSOLIDATED EDISON OF NY
ADDRESS: 4 IRVING PLACE
NEW YORK, NY 10003
FACILITY: 11TH STREET CONDUIT
LOCATION: 11TH ST BETWEEN 53RD AND ASH
LONG ISLAND CITY, NY 11101
ATTN:YI-CHANG SHAO

NY0201138	001M
PERMIT NUMBER	DISCHARGE NUMBER

MONITORING PERIOD						
	YEAR	MO	DAY		YEAR	MO	DAY
FROM	08	01	01	TO	08	01	31

DMR MAILING ZIP CODE: 10003
MINOR
(SUBR02)
GROUNDWATER INFILTRATION&STORM
External Outfall

No Discharge ☐

PARAMETER		QUANTITY OR LOADING			QUALITY OR CONCENTRATION				NO. EX	FREQUENCY OF ANALYSIS	SAMPLE TYPE
		VALUE	VALUE	UNITS	VALUE	VALUE	VALUE	UNITS			
Flow rate	SAMPLE MEASUREMENT	******	108000		******	******	******		0	01/30	CA
00056 1 0 Effluent Gross	PERMIT REQUIREMENT	******	Req. Mon. DAILY MX	gal/d	******	******	******			Monthly	CALCTD
Solids, total suspended	SAMPLE MEASUREMENT	******	******		******	******	8		0	01/30	GR
00530 1 0 Effluent Gross	PERMIT REQUIREMENT	******	******		******	******	50 DAILY MX	mg/L		Monthly	GRAB
Oil & grease	SAMPLE MEASUREMENT	******	******		******	******	<5		0	01/30	GR
00556 1 0 Effluent Gross	PERMIT REQUIREMENT	******	******		******	******	15 DAILY MX	mg/L		Monthly	GRAB

NAME/TITLE PRINCIPAL EXECUTIVE OFFICER			TELEPHONE		DATE		
WILLIAM MURPHY, Manager	I certify under penalty of law that this document and all attachments were prepared under my direction or supervision in accordance with a system designed to assure that qualified personnel properly gather and evaluate the information submitted. Based on my inquiry of the person or persons who manage the system, or those persons directly responsible for gathering the information, the information submitted is, to the best of my knowledge and belief, true, accurate, and complete. I am aware that there are significant penalties for submitting false information, including the possibility of fine and imprisonment for knowing violations.	William Murphy	718-204-4209		08	02	15
TYPED OR PRINTED		SIGNATURE OF PRINCIPAL EXECUTIVE OFFICER OR AUTHORIZED AGENT	AREA Code	NUMBER	YEAR	MO	DAY

COMMENTS AND EXPLANATION OF ANY VIOLATIONS (Reference all attachments here)

ELAP ID is 10380.

EPA Form 3320-1 (Rev.01/06) Previous editions may be used.

NATIONAL POLLUTANT DISCHARGE ELIMINATION SYSTEM (NPDES)
DISCHARGE MONIT[illegible]G REPORT (DMR)

Form Approved
O[illegible] 2040-0004

PERMITTEE NAME/ADDRESS *(Include Facility Name/Location if Different)*

NAME: CONSOLIDATED EDISON OF NY
ADDRESS: 4 IRVING PLACE
NEW YORK, NY 10003
FACILITY: CONSOLIDATED EDISON CO OF NY
LOCATION: 11TH ST BETWEEN 53RD AND ASH
LONG ISLAND CITY, NY 11101

ATTN: YI-CHANG SHAO

NY0201138	001-M
PERMIT NUMBER	DISCHARGE NUMBER

MONITORING PERIOD			
	MM/DD/YYYY		MM/DD/YYYY
FROM	12/01/2009	TO	12/31/2009

DMR Mailing ZIP CODE: 10003
MINOR
(SUBR 02)
GROUNDWATER INFILTRATION&STORM
External Outfall

No Discharge ☐

PARAMETER		QUANTITY OR LOADING			QUALITY OR CONCENTRATION				NO. EX	FREQUENCY OF ANALYSIS	SAMPLE TYPE
		VALUE	VALUE	UNITS	VALUE	VALUE	VALUE	UNITS			
Flow rate	SAMPLE MEASUREMENT	******	108000		******	******	******	******	0	01/30	CA
00056 1 0 Effluent Gross	PERMIT REQUIREMENT	******	Req. Mon. DAILY MX	gal/d	******	******	******	******		Monthly	CALCTD
Solids, total suspended	SAMPLE MEASUREMENT	******	******	******	******	******	8		0	01/30	GR
00530 1 0 Effluent Gross	PERMIT REQUIREMENT	******	******	******	******	******	50 DAILY MX	mg/L		Monthly	GRAB
Oil & grease	SAMPLE MEASUREMENT	******	******	******	******	******	<5		0	01/30	GR
00556 1 0 Effluent Gross	PERMIT REQUIREMENT	******	******	******	******	******	15 DAILY MX	mg/L		Monthly	GRAB

NAME/TITLE PRINCIPAL EXECUTIVE OFFICER			TELEPHONE		DATE
David Davidowitz, VP	I certify under penalty of law that this document and all attachments were prepared under my direction or supervision in accordance with a system designed to assure that qualified personnel properly gather and evaluate the information submitted. Based on my inquiry of the person or persons who manage the system, or those persons directly responsible for gathering the information, the information submitted is, to the best of my knowledge and belief, true, accurate, and complete. I am aware that there are significant penalties for submitting false information, including the possibility of fine and imprisonment for knowing violations.	Warren L. Miller	917-578-9787		01/07/2010
TYPED OR PRINTED		SIGNATURE OF PRINCIPAL EXECUTIVE OFFICER OR AUTHORIZED AGENT	AREA Code	NUMBER	MM/DD/YYYY

COMMENTS AND EXPLANATION OF ANY VIOLATIONS (Reference all attachments here)

NATIONAL POLLUTANT DISCHARGE ELIMINATION SYSTEM (NPDES)
DISCHARGE MONIT G REPORT (DMR)

Form Approved
2040-0004

PERMITTEE NAME/ADDRESS *(Include Facility Name/Location if Different)*

NAME: CONSOLIDATED EDISON OF NY
ADDRESS: 4 IRVING PLACE
NEW YORK, NY 10003
FACILITY: CONSOLIDATED EDISON CO OF NY
LOCATION: 11TH ST BETWEEN 53RD AND ASH
LONG ISLAND CITY, NY 11101

ATTN: YI-CHANG SHAO

NY0201138	001-M
PERMIT NUMBER	DISCHARGE NUMBER

MONITORING PERIOD			
	MM/DD/YYYY		MM/DD/YYYY
FROM	11/01/2009	TO	11/30/2009

DMR Mailing ZIP CODE: 10003
MINOR
(SUBR 02)
GROUNDWATER INFILTRATION&STORM
External Outfall

No Discharge ☐

PARAMETER		QUANTITY OR LOADING			QUALITY OR CONCENTRATION				NO. EX	FREQUENCY OF ANALYSIS	SAMPLE TYPE
		VALUE	VALUE	UNITS	VALUE	VALUE	VALUE	UNITS			
Flow rate	SAMPLE MEASUREMENT	******	108 000		******	******	******	******	0	01/30	CA
00056 1 0 Effluent Gross	PERMIT REQUIREMENT	******	Req. Mon. DAILY MX	gal/d	******	******	******	******		Monthly	CALCTD
Solids, total suspended	SAMPLE MEASUREMENT	******	******	******	******	******	14		0	01/30	GR
00530 1 0 Effluent Gross	PERMIT REQUIREMENT	******	******	******	******	******	50 DAILY MX	mg/L		Monthly	GRAB
Oil & grease	SAMPLE MEASUREMENT	******	******	******	******	******	<5		0	01/30	GR
00556 1 0 Effluent Gross	PERMIT REQUIREMENT	******	******	******	******	******	15 DAILY MX	mg/L		Monthly	GRAB

NAME/TITLE PRINCIPAL EXECUTIVE OFFICER			TELEPHONE		DATE
WARREN MILLER, Manager	I certify under penalty of law that this document and all attachments were prepared under my direction or supervision in accordance with a system designed to assure that qualified personnel properly gather and evaluate the information submitted. Based on my inquiry of the person or persons who manage the system, or those persons directly responsible for gathering the information, the information submitted is, to the best of my knowledge and belief, true, accurate, and complete. I am aware that there are significant penalties for submitting false information, including the possibility of fine and imprisonment for knowing violations.	Warren L. Miller	917-578-9757		12/03/2009
TYPED OR PRINTED		SIGNATURE OF PRINCIPAL EXECUTIVE OFFICER OR AUTHORIZED AGENT	AREA Code	NUMBER	MM/DD/YYYY

COMMENTS AND EXPLANATION OF ANY VIOLATIONS (Reference all attachments here)

EPA-NC-CE-0000300

NATIONAL POLLUTANT DISCHARGE ELIMINATION SYSTEM (NPDES)
DISCHARGE MONI NG REPORT (DMR)

Form Approved
o. 2040-0004

PERMITTEE NAME/ADDRESS *(Include Facility Name/Location if Different)*

NAME: CONSOLIDATED EDISON OF NY
ADDRESS: 4 IRVING PLACE
NEW YORK, NY 10003
FACILITY: CONSOLIDATED EDISON CO OF NY
LOCATION: 11TH ST BETWEEN 53RD AND ASH
LONG ISLAND CITY, NY 11101
ATTN: YI-CHANG SHAO

NY0201138	001M
PERMIT NUMBER	DISCHARGE NUMBER

MONITORING PERIOD			
	MM/DD/YYYY		MM/DD/YYYY
FROM	10/01/2009	TO	10/31/2009

DMR Mailing ZIP CODE: 10003
MINOR
(SUBR 02)
GROUNDWATER INFILTRATION&STORM
External Outfall
No Discharge ☐

PARAMETER		QUANTITY OR LOADING			QUALITY OR CONCENTRATION				NO. EX	FREQUENCY OF ANALYSIS	SAMPLE TYPE
		VALUE	VALUE	UNITS	VALUE	VALUE	VALUE	UNITS			
Flow rate	SAMPLE MEASUREMENT	******	108 000		******	******	******	******	0	01/30	CA
00056 1 0 Effluent Gross	PERMIT REQUIREMENT	******	Req. Mon. DAILY MX	gal/d	******	******	******	******		Monthly	CALCTD
Solids, total suspended	SAMPLE MEASUREMENT	******	******	******	******	******	15		0	01/30	GR
00530 1 0 Effluent Gross	PERMIT REQUIREMENT	******	******	******	******	******	50 DAILY MX	mg/L		Monthly	GRAB
Oil & grease	SAMPLE MEASUREMENT	******	******	******	******	******	< 5		0	01/30	GR
00556 1 0 Effluent Gross	PERMIT REQUIREMENT	******	******	******	******	******	15 DAILY MX	mg/L		Monthly	GRAB

NAME/TITLE PRINCIPAL EXECUTIVE OFFICER			TELEPHONE		DATE
WARREN MILLER, Manager	I certify under penalty of law that this document and all attachments were prepared under my direction or supervision in accordance with a system designed to assure that qualified personnel properly gather and evaluate the information submitted. Based on my inquiry of the person or persons who manage the system, or those persons directly responsible for gathering the information, the information submitted is, to the best of my knowledge and belief, true, accurate, and complete. I am aware that there are significant penalties for submitting false information, including the possibility of fine and imprisonment for knowing violations.	Warren L. Miller	917-526-9757		11/03/2009
TYPED OR PRINTED		SIGNATURE OF PRINCIPAL EXECUTIVE OFFICER OR AUTHORIZED AGENT	AREA Code	NUMBER	MM/DD/YYYY

COMMENTS AND EXPLANATION OF ANY VIOLATIONS (Reference all attachments here)

NATIONAL POLLUTANT DISCHARGE ELIMINATION SYSTEM (NPDES)
DISCHARGE MONI[illegible]G REPORT (DMR)

Form Approved
[illegible]o. 2040-0004

PERMITTEE NAME/ADDRESS *(Include Facility Name/Location if Different)*

NAME: CONSOLIDATED EDISON OF NY
ADDRESS: 4 IRVING PLACE
NEW YORK, NY 10003
FACILITY: CONSOLIDATED EDISON CO OF NY
LOCATION: 11TH ST BETWEEN 53RD AND ASH
LONG ISLAND CITY, NY 11101

ATTN: YI-CHANG SHAO

NY0201138	001M
PERMIT NUMBER	DISCHARGE NUMBER

MONITORING PERIOD			
	MM/DD/YYYY		MM/DD/YYYY
FROM	09/01/2009	TO	09/30/2009

DMR Mailing ZIP CODE: 10003
MINOR
(SUBR 02)
GROUNDWATER INFILTRATION&STORM
External Outfall

No Discharge ☐

PARAMETER		QUANTITY OR LOADING			QUALITY OR CONCENTRATION				NO. EX	FREQUENCY OF ANALYSIS	SAMPLE TYPE
		VALUE	VALUE	UNITS	VALUE	VALUE	VALUE	UNITS			
Flow rate	SAMPLE MEASUREMENT	******	108000		******	******	******	******	0	01/30	CA
00056 1 0 Effluent Gross	PERMIT REQUIREMENT	******	Req. Mon. DAILY MX	gal/d	******	******	******	******		Monthly	CALCTD
Solids, total suspended	SAMPLE MEASUREMENT	******	******	******	******	******	10		0	01/30	GR
00530 1 0 Effluent Gross	PERMIT REQUIREMENT	******	******	******	******	******	50 DAILY MX	mg/L		Monthly	GRAB
Oil & grease	SAMPLE MEASUREMENT	******	******	******	******	******	<5		0	01/30	GR
00556 1 0 Effluent Gross	PERMIT REQUIREMENT	******	******	******	******	******	15 DAILY MX	mg/L		Monthly	GRAB

NAME/TITLE PRINCIPAL EXECUTIVE OFFICER			TELEPHONE		DATE
WARREN MILLER, Manager	I certify under penalty of law that this document and all attachments were prepared under my direction or supervision in accordance with a system designed to assure that qualified personnel properly gather and evaluate the information submitted. Based on my inquiry of the person or persons who manage the system, or those persons directly responsible for gathering the information, the information submitted is, to the best of my knowledge and belief, true, accurate, and complete. I am aware that there are significant penalties for submitting false information, including the possibility of fine and imprisonment for knowing violations.	Warren L. Miller	917-578-9757		10/08/2009
TYPED OR PRINTED		SIGNATURE OF PRINCIPAL EXECUTIVE OFFICER OR AUTHORIZED AGENT	AREA Code	NUMBER	MM/DD/YYYY

COMMENTS AND EXPLANATION OF ANY VIOLATIONS (Reference all attachments here)

ELAP ID is 10380.

EPA Form 3320-1 (Rev.01/06) Previous editions may be used.

NATIONAL POLLUTANT DISCHARGE ELIMINATION SYSTEM (NPDES)
DISCHARGE MONI G REPORT (DMR)

Form Approved
No. 2040-0004

PERMITTEE NAME/ADDRESS *(Include Facility Name/Location if Different)*

NAME: CONSOLIDATED EDISON OF NY
ADDRESS: 4 IRVING PLACE
NEW YORK, NY 10003
FACILITY: CONSOLIDATED EDISON CO OF NY
LOCATION: 11TH ST BETWEEN 53RD AND ASH
LONG ISLAND CITY, NY 11101

ATTN: YI-CHANG SHAO

NY0201138	001M
PERMIT NUMBER	DISCHARGE NUMBER

MONITORING PERIOD			
	MM/DD/YYYY		MM/DD/YYYY
FROM	08/01/2009	TO	08/31/2009

DMR Mailing ZIP CODE: 10003
MINOR
(SUBR 02)
GROUNDWATER INFILTRATION&STORM
External Outfall

No Discharge ☐

PARAMETER		QUANTITY OR LOADING			QUALITY OR CONCENTRATION				NO. EX	FREQUENCY OF ANALYSIS	SAMPLE TYPE
		VALUE	VALUE	UNITS	VALUE	VALUE	VALUE	UNITS			
Flow rate	SAMPLE MEASUREMENT	******	108000		******	******	******	******	0	01/30	CA
00056 1 0 Effluent Gross	PERMIT REQUIREMENT	******	Req. Mon. DAILY MX	gal/d	******	******	******	******		Monthly	CALCTD
Solids, total suspended	SAMPLE MEASUREMENT	******	******	******	******	******	16		0	01/30	GR
00530 1 0 Effluent Gross	PERMIT REQUIREMENT	******	******	******	******	******	50 DAILY MX	mg/L		Monthly	GRAB
Oil & grease	SAMPLE MEASUREMENT	******	******	******	******	******	<5		0	01/30	GR
00556 1 0 Effluent Gross	PERMIT REQUIREMENT	******	******	******	******	******	15 DAILY MX	mg/L		Monthly	GRAB

NAME/TITLE PRINCIPAL EXECUTIVE OFFICER			TELEPHONE		DATE
WARREN MILLER, Manager	I certify under penalty of law that this document and all attachments were prepared under my direction or supervision in accordance with a system designed to assure that qualified personnel properly gather and evaluate the information submitted. Based on my inquiry of the person or persons who manage the system, or those persons directly responsible for gathering the information, the information submitted is, to the best of my knowledge and belief, true, accurate, and complete. I am aware that there are significant penalties for submitting false information, including the possibility of fine and imprisonment for knowing violations.	Warren S. Miller	917-678-7757		09/09/2009
TYPED OR PRINTED		SIGNATURE OF PRINCIPAL EXECUTIVE OFFICER OR AUTHORIZED AGENT	AREA Code	NUMBER	MM/DD/YYYY

COMMENTS AND EXPLANATION OF ANY VIOLATIONS (Reference all attachments here)

EPA-NC-CE-0000303

NATIONAL POLLUTANT DISCHARGE ELIMINATION SYSTEM (NPDES)
DISCHARGE MONI[illegible]IG REPORT (DMR)

Form Approved
[illegible]o. 2040-0004

PERMITTEE NAME/ADDRESS *(Include Facility Name/Location if Different)*

NAME: CONSOLIDATED EDISON OF NY
ADDRESS: 4 IRVING PLACE
NEW YORK, NY 10003

FACILITY: CONSOLIDATED EDISON CO OF NY
LOCATION: 11TH ST BETWEEN 53RD AND ASH
LONG ISLAND CITY, NY 11101

ATTN: YI-CHANG SHAO

NY0201138	001M
PERMIT NUMBER	DISCHARGE NUMBER

MONITORING PERIOD			
	MM/DD/YYYY		MM/DD/YYYY
FROM	07/01/2009	TO	07/31/2009

DMR Mailing ZIP CODE: 10003
MINOR
(SUBR 02)
GROUNDWATER INFILTRATION&STORM
External Outfall

No Discharge ☐

PARAMETER		QUANTITY OR LOADING			QUALITY OR CONCENTRATION				NO. EX	FREQUENCY OF ANALYSIS	SAMPLE TYPE
		VALUE	VALUE	UNITS	VALUE	VALUE	VALUE	UNITS			
Flow rate	SAMPLE MEASUREMENT	******	108000		******	******	******	******	0	01/30	CA
00056 1 0 Effluent Gross	PERMIT REQUIREMENT	******	Req. Mon. DAILY MX	gal/d	******	******	******	******		Monthly	CALCTD
Solids, total suspended	SAMPLE MEASUREMENT	******	******	******	******	******	7		0	01/30	GR
00530 1 0 Effluent Gross	PERMIT REQUIREMENT	******	******	******	******	******	50 DAILY MX	mg/L		Monthly	GRAB
Oil & grease	SAMPLE MEASUREMENT	******	******	******	******	******	<5		0	01/30	GR
00556 1 0 Effluent Gross	PERMIT REQUIREMENT	******	******	******	******	******	15 DAILY MX	mg/L		Monthly	GRAB

NAME/TITLE PRINCIPAL EXECUTIVE OFFICER			TELEPHONE		DATE
WARREN MILLER, Manager	I certify under penalty of law that this document and all attachments were prepared under my direction or supervision in accordance with a system designed to assure that qualified personnel properly gather and evaluate the information submitted. Based on my inquiry of the person or persons who manage the system, or those persons directly responsible for gathering the information, the information submitted is, to the best of my knowledge and belief, true, accurate, and complete. I am aware that there are significant penalties for submitting false information, including the possibility of fine and imprisonment for knowing violations.	Warren S. Miller	917-578-9707		08/06/2009
TYPED OR PRINTED		SIGNATURE OF PRINCIPAL EXECUTIVE OFFICER OR AUTHORIZED AGENT	AREA Code	NUMBER	MM/DD/YYYY

COMMENTS AND EXPLANATION OF ANY VIOLATIONS (Reference all attachments here)

ELAP ID is 10380.

NATIONAL POLLUTANT DISCHARGE ELIMINATION SYSTEM (NPDES)
DISCHARGE MONI[illegible]NG REPORT (DMR)

Form Approved
[illegible]lo. 2040-0004

PERMITTEE NAME/ADDRESS *(Include Facility Name/Location if Different)*

NAME: CONSOLIDATED EDISON OF NY
ADDRESS: 4 IRVING PLACE
NEW YORK, NY 10003

FACILITY: CONSOLIDATED EDISON CO OF NY
LOCATION: 11TH ST BETWEEN 53RD AND ASH
LONG ISLAND CITY, NY 11101

ATTN: YI-CHANG SHAO

NY0201136	001M
PERMIT NUMBER	DISCHARGE NUMBER

MONITORING PERIOD			
	MM/DD/YYYY		MM/DD/YYYY
FROM	06/01/2009	TO	06/30/2009

DMR Mailing ZIP CODE: 10003
MINOR
(SUBR 02)
GROUNDWATER INFILTRATION&STORM
External Outfall

No Discharge ☐

PARAMETER		QUANTITY OR LOADING			QUALITY OR CONCENTRATION				NO. EX	FREQUENCY OF ANALYSIS	SAMPLE TYPE
		VALUE	VALUE	UNITS	VALUE	VALUE	VALUE	UNITS			
Flow rate	SAMPLE MEASUREMENT	******	108000		******	******	******	******	0	01/30	CA
00056 1 0 Effluent Gross	PERMIT REQUIREMENT	******	Req. Mon. DAILY MX	gal/d	******	******	******	******		Monthly	CALCTD
Solids, total suspended	SAMPLE MEASUREMENT	******	******	******	******	******	12		0	01/30	GR
00530 1 0 Effluent Gross	PERMIT REQUIREMENT	******	******	******	******	******	50 DAILY MX	mg/L		Monthly	GRAB
Oil & grease	SAMPLE MEASUREMENT	******	******	******	******	******	8		0	01/30	GR
00556 1 0 Effluent Gross	PERMIT REQUIREMENT	******	******	******	******	******	15 DAILY MX	mg/L		Monthly	GRAB

NAME/TITLE PRINCIPAL EXECUTIVE OFFICER			TELEPHONE		DATE
WARREN MILLER, Manager	I certify under penalty of law that this document and all attachments were prepared under my direction or supervision in accordance with a system designed to assure that qualified personnel properly gather and evaluate the information submitted. Based on my inquiry of the person or persons who manage the system, or those persons directly responsible for gathering the information, the information submitted is, to the best of my knowledge and belief, true, accurate, and complete. I am aware that there are significant penalties for submitting false information, including the possibility of fine and imprisonment for knowing violations.	Warren S. Miller	917-578-9257		07/04/2009
TYPED OR PRINTED		SIGNATURE OF PRINCIPAL EXECUTIVE OFFICER OR AUTHORIZED AGENT	AREA Code	NUMBER	MM/DD/YYYY

COMMENTS AND EXPLANATION OF ANY VIOLATIONS (Reference all attachments here)

ECAP ID IS 10380.

EPA Form 3320-1 (Rev.01/06) Previous editions may be used.

NATIONAL POLLUTANT DISCHARGE ELIMINATION SYSTEM (NPDES)
DISCHARGE MONIT G REPORT (DMR)

Form Approved
o. 2040-0004

PERMITTEE NAME/ADDRESS *(Include Facility Name/Location if Different)*

NAME: CONSOLIDATED EDISON OF NY
ADDRESS: 4 IRVING PLACE
NEW YORK, NY 10003

FACILITY: CONSOLIDATED EDISON CO OF NY
LOCATION: 11TH ST BETWEEN 53RD AND ASH
LONG ISLAND CITY, NY 11101

ATTN: YI-CHANG SHAO

NY0201138	001M
PERMIT NUMBER	DISCHARGE NUMBER

MONITORING PERIOD			
	MM/DD/YYYY		MM/DD/YYYY
FROM	05/01/2009	TO	05/31/2009

DMR Mailing ZIP CODE: 10003
MINOR
(SUBR 02)
GROUNDWATER INFILTRATION&STORM
External Outfall

No Discharge ☐

PARAMETER		QUANTITY OR LOADING			QUALITY OR CONCENTRATION				NO. EX	FREQUENCY OF ANALYSIS	SAMPLE TYPE
		VALUE	VALUE	UNITS	VALUE	VALUE	VALUE	UNITS			
Flow rate	SAMPLE MEASUREMENT	******	108000		******	******	******	******	0	01/30	CA
00056 1 0 Effluent Gross	PERMIT REQUIREMENT	******	Req. Mon. DAILY MX	gal/d	******	******	******	******		Monthly	CALCTD
Solids, total suspended	SAMPLE MEASUREMENT	******	******	******	******	******	15		0	01/30	GR
00530 1 0 Effluent Gross	PERMIT REQUIREMENT	******	******	******	******	******	50 DAILY MX	mg/L		Monthly	GRAB
Oil & grease	SAMPLE MEASUREMENT	******	******	******	******	******	6		0	01/30	GR
00556 1 0 Effluent Gross	PERMIT REQUIREMENT	******	******	******	******	******	15 DAILY MX	mg/L		Monthly	GRAB

NAME/TITLE PRINCIPAL EXECUTIVE OFFICER			TELEPHONE		DATE
WARREN MILLER, Manager	I certify under penalty of law that this document and all attachments were prepared under my direction or supervision in accordance with a system designed to assure that qualified personnel properly gather and evaluate the information submitted. Based on my inquiry of the person or persons who manage the system, or those persons directly responsible for gathering the information, the information submitted is, to the best of my knowledge and belief, true, accurate, and complete. I am aware that there are significant penalties for submitting false information, including the possibility of fine and imprisonment for knowing violations.	Warren S. Miller	914-578-9247		06/05/2009
TYPED OR PRINTED		SIGNATURE OF PRINCIPAL EXECUTIVE OFFICER OR AUTHORIZED AGENT	AREA Code	NUMBER	MM/DD/YYYY

COMMENTS AND EXPLANATION OF ANY VIOLATIONS (Reference all attachments here)

NATIONAL POLLUTANT DISCHARGE ELIMINATION SYSTEM (NPDES)
DISCHARGE MONIT G REPORT (DMR)

Form Approved
o. 2040-0004

PERMITTEE NAME/ADDRESS *(Include Facility Name/Location if Different)*

NAME: CONSOLIDATED EDISON OF NY
ADDRESS: 4 IRVING PLACE
NEW YORK, NY 10003
FACILITY: CONSOLIDATED EDISON CO OF NY
LOCATION: 11TH ST BETWEEN 53RD AND ASH
LONG ISLAND CITY, NY 11101
ATTN: YI-CHANG SHAO

NY0201138	001M
PERMIT NUMBER	DISCHARGE NUMBER

MONITORING PERIOD			
	MM/DD/YYYY		MM/DD/YYYY
FROM	04/01/2009	TO	04/30/2009

DMR Mailing ZIP CODE: 10003
MINOR
(SUBR 02)
GROUNDWATER INFILTRATION&STORM
External Outfall
No Discharge ☐

PARAMETER		QUANTITY OR LOADING			QUALITY OR CONCENTRATION				NO. EX	FREQUENCY OF ANALYSIS	SAMPLE TYPE
		VALUE	VALUE	UNITS	VALUE	VALUE	VALUE	UNITS			
Flow rate	SAMPLE MEASUREMENT	******	108000		******	******	******	******	0	01/30	CA
00056 1 0 Effluent Gross	PERMIT REQUIREMENT	******	Req. Mon. DAILY MX	gal/d	******	******	******	******		Monthly	CALCTD
Solids, total suspended	SAMPLE MEASUREMENT	******	******	******	******	******	15		0	01/30	GR
00530 1 0 Effluent Gross	PERMIT REQUIREMENT	******	******	******	******	******	50 DAILY MX	mg/L		Monthly	GRAB
Oil & grease	SAMPLE MEASUREMENT	******	******	******	******	******	<5		0	01/30	GR
00556 1 0 Effluent Gross	PERMIT REQUIREMENT	******	******	******	******	******	15 DAILY MX	mg/L		Monthly	GRAB

NAME/TITLE PRINCIPAL EXECUTIVE OFFICER			TELEPHONE		DATE
WARREN MILLER, Manager	I certify under penalty of law that this document and all attachments were prepared under my direction or supervision in accordance with a system designed to assure that qualified personnel properly gather and evaluate the information submitted. Based on my inquiry of the person or persons who manage the system, or those persons directly responsible for gathering the information, the information submitted is, to the best of my knowledge and belief, true, accurate, and complete. I am aware that there are significant penalties for submitting false information, including the possibility of fine and imprisonment for knowing violations.	Warren S. Miller	914-578-9287		05-13-2009
TYPED OR PRINTED		SIGNATURE OF PRINCIPAL EXECUTIVE OFFICER OR AUTHORIZED AGENT	AREA Code	NUMBER	MM/DD/YYYY

COMMENTS AND EXPLANATION OF ANY VIOLATIONS (Reference all attachments here)
ECAP ID is 10380.

NATIONAL POLLUTANT DISCHARGE ELIMINATION SYSTEM (NPDES)
DISCHARGE MONIT G REPORT (DMR)

Form Approved
o. 2040-0004

PERMITTEE NAME/ADDRESS *(Include Facility Name/Location if Different)*

NAME: CONSOLIDATED EDISON OF NY
ADDRESS: 4 IRVING PLACE
NEW YORK, NY 10003
FACILITY: CONSOLIDATED EDISON CO OF NY
LOCATION: 11TH ST BETWEEN 53RD AND ASH
LONG ISLAND CITY, NY 11101
ATTN: YI-CHANG SHAO

NY0201138	001M
PERMIT NUMBER	DISCHARGE NUMBER

MONITORING PERIOD			
	MM/DD/YYYY		MM/DD/YYYY
FROM	03/01/2009	TO	03/31/2009

DMR Mailing ZIP CODE: 10003
MINOR
(SUBR 02)
GROUNDWATER INFILTRATION&STORM
External Outfall

No Discharge ☐

PARAMETER		QUANTITY OR LOADING			QUALITY OR CONCENTRATION				NO. EX	FREQUENCY OF ANALYSIS	SAMPLE TYPE
		VALUE	VALUE	UNITS	VALUE	VALUE	VALUE	UNITS			
Flow rate	SAMPLE MEASUREMENT	******	108000		******	******	******	******	0	01/30	CA
00056 1 0 Effluent Gross	PERMIT REQUIREMENT	******	Req. Mon. DAILY MX	gal/d	******	******	******	******		Monthly	CALCTD
Solids, total suspended	SAMPLE MEASUREMENT	******	******	******	******	******	16		0	02/30	GR
00530 1 0 Effluent Gross	PERMIT REQUIREMENT	******	******	******	******	******	50 DAILY MX	mg/L		Monthly	GRAB
Oil & grease	SAMPLE MEASUREMENT	******	******	******	******	******	<5		0	02/30	GR
00556 1 0 Effluent Gross	PERMIT REQUIREMENT	******	******	******	******	******	15 DAILY MX	mg/L		Monthly	GRAB

NAME/TITLE PRINCIPAL EXECUTIVE OFFICER			TELEPHONE		DATE
WARREN MILLER, Manager	I certify under penalty of law that this document and all attachments were prepared under my direction or supervision in accordance with a system designed to assure that qualified personnel properly gather and evaluate the information submitted. Based on my inquiry of the person or persons who manage the system, or those persons directly responsible for gathering the information, the information submitted is, to the best of my knowledge and belief, true, accurate, and complete. I am aware that there are significant penalties for submitting false information, including the possibility of fine and imprisonment for knowing violations.	Warren D. Miller	917-678-9757		04/09/2009
TYPED OR PRINTED		SIGNATURE OF PRINCIPAL EXECUTIVE OFFICER OR AUTHORIZED AGENT	AREA Code	NUMBER	MM/DD/YYYY

COMMENTS AND EXPLANATION OF ANY VIOLATIONS (Reference all attachments here)

EPA-NC-CE-0000308

NATIONAL POLLUTANT DISCHARGE ELIMINATION SYSTEM (NPDES)
DISCHARGE MONI[illegible]G REPORT (DMR)

Form Approved
[illegible] 2040-0004

PERMITTEE NAME/ADDRESS *(Include Facility Name/Location if Different)*

NAME: CONSOLIDATED EDISON OF NY
ADDRESS: 4 IRVING PLACE
NEW YORK, NY 10003

FACILITY: CONSOLIDATED EDISON CO OF NY
LOCATION: 11TH ST BETWEEN 53RD AND ASH
LONG ISLAND CITY, NY 11101

ATTN: YI-CHANG SHAO

NY0201138	001M
PERMIT NUMBER	DISCHARGE NUMBER

MONITORING PERIOD			
	MM/DD/YYYY		MM/DD/YYYY
FROM	02/01/2009	TO	02/28/2009

DMR Mailing ZIP CODE: 10003
MINOR
(SUBR 02)
GROUNDWATER INFILTRATION&STORM
External Outfall

No Discharge ☐

PARAMETER		QUANTITY OR LOADING			QUALITY OR CONCENTRATION				NO. EX	FREQUENCY OF ANALYSIS	SAMPLE TYPE
		VALUE	VALUE	UNITS	VALUE	VALUE	VALUE	UNITS			
Flow rate	SAMPLE MEASUREMENT	******	108000		******	******	******	******	0	01/30	CA
00056 1 0 Effluent Gross	PERMIT REQUIREMENT	******	Req. Mon. DAILY MX	gal/d	******	******	******	******		Monthly	CALCTD
Solids, total suspended	SAMPLE MEASUREMENT	******	******	******	******	******	12		0	01/30	GR
00530 1 0 Effluent Gross	PERMIT REQUIREMENT	******	******	******	******	******	50 DAILY MX	mg/L		Monthly	GRAB
Oil & grease	SAMPLE MEASUREMENT	******	******	******	******	******	8		0	01/30	GR
00556 1 0 Effluent Gross	PERMIT REQUIREMENT	******	******	******	******	******	15 DAILY MX	mg/L		Monthly	GRAB

NAME/TITLE PRINCIPAL EXECUTIVE OFFICER			TELEPHONE		DATE
WARREN MILLER, Manager	I certify under penalty of law that this document and all attachments were prepared under my direction or supervision in accordance with a system designed to assure that qualified personnel properly gather and evaluate the information submitted. Based on my inquiry of the person or persons who manage the system, or those persons directly responsible for gathering the information, the information submitted is, to the best of my knowledge and belief, true, accurate, and complete. I am aware that there are significant penalties for submitting false information, including the possibility of fine and imprisonment for knowing violations.	Warren D. Miller	917-578-9757		03-05-2009
TYPED OR PRINTED		SIGNATURE OF PRINCIPAL EXECUTIVE OFFICER OR AUTHORIZED AGENT	AREA Code	NUMBER	MM/DD/YYYY

COMMENTS AND EXPLANATION OF ANY VIOLATIONS (Reference all attachments here)

ELAP ID is 10380

EPA Form 3320-1 (Rev.01/06) Previous editions may be used.

NATIONAL POLLUTANT DISCHARGE ELIMINATION SYSTEM (NPDES)
DISCHARGE MONIT[illegible]G REPORT (DMR)

Form Approved
[illegible] 2040-0004

PERMITTEE NAME/ADDRESS *(Include Facility Name/Location if Different)*

NAME: CONSOLIDATED EDISON OF NY
ADDRESS: 4 IRVING PLACE
NEW YORK, NY 10003

FACILITY: CONSOLIDATED EDISON CO OF NY
LOCATION: 11TH ST BETWEEN 53RD AND ASH
LONG ISLAND CITY, NY 11101

ATTN: YI-CHANG SHAO

NY0201138	001M
PERMIT NUMBER	DISCHARGE NUMBER

MONITORING PERIOD			
	MM/DD/YYYY		MM/DD/YYYY
FROM	02/01/2009	TO	02/28/2009

DMR Mailing ZIP CODE: 10003
MINOR
(SUBR 02)
GROUNDWATER INFILTRATION&STORM
External Outfall

No Discharge ☐

PARAMETER		QUANTITY OR LOADING			QUALITY OR CONCENTRATION				NO. EX	FREQUENCY OF ANALYSIS	SAMPLE TYPE
		VALUE	VALUE	UNITS	VALUE	VALUE	VALUE	UNITS			
Flow rate	SAMPLE MEASUREMENT	******	100900		******	******	******	******	0	01/30	CA
00056 1 0 Effluent Gross	PERMIT REQUIREMENT	******	Req. Mon. DAILY MX	gal/d	******	******	******	******		Monthly	CALCTD
Solids, total suspended	SAMPLE MEASUREMENT	******	******	******	******	******	12		0	01/30	GR
00530 1 0 Effluent Gross	PERMIT REQUIREMENT	******	******	******	******	******	50 DAILY MX	mg/L		Monthly	GRAB
Oil & grease	SAMPLE MEASUREMENT	******	******	******	******	******	8		0	01/30	GR
00556 1 0 Effluent Gross	PERMIT REQUIREMENT	******	******	******	******	******	15 DAILY MX	mg/L		Monthly	GRAB

NAME/TITLE PRINCIPAL EXECUTIVE OFFICER			TELEPHONE		DATE
WARREN MILLER, Manager	I certify under penalty of law that this document and all attachments were prepared under my direction or supervision in accordance with a system designed to assure that qualified personnel properly gather and evaluate the information submitted. Based on my inquiry of the person or persons who manage the system, or those persons directly responsible for gathering the information, the information submitted is, to the best of my knowledge and belief, true, accurate, and complete. I am aware that there are significant penalties for submitting false information, including the possibility of fine and imprisonment for knowing violations.	Warren D. Miller	917-578-9757		03-05-2009
TYPED OR PRINTED		SIGNATURE OF PRINCIPAL EXECUTIVE OFFICER OR AUTHORIZED AGENT	AREA Code	NUMBER	MM/DD/YYYY

COMMENTS AND EXPLANATION OF ANY VIOLATIONS (Reference all attachments here)

ELAP ID is 10380

EPA-NC-CE-0000310

NATIONAL POLLUTANT DISCHARGE ELIMINATION SYSTEM (NPDES)
DISCHARGE MONIT G REPORT (DMR)

Form Approved
2040-0004

PERMITTEE NAME/ADDRESS *(Include Facility Name/Location if Different)*

NAME: CONSOLIDATED EDISON OF NY
ADDRESS: 4 IRVING PLACE
NEW YORK, NY 10003
FACILITY: CONSOLIDATED EDISON CO OF NY
LOCATION: 11TH ST BETWEEN 53RD AND ASH
LONG ISLAND CITY, NY 11101
ATTN: YI-CHANG SHAO

NY0201138	001V
PERMIT NUMBER	DISCHARGE NUMBER

MONITORING PERIOD			
	MM/DD/YYYY		MM/DD/YYYY
FROM	03/01/2008	TO	02/28/2009

DMR Mailing ZIP CODE: 10003
MINOR
(SUBR 02)
GROUNDWTR INFILTR & SW - ACT LVLS
External Outfall
No Discharge ☐

PARAMETER		QUANTITY OR LOADING			QUALITY OR CONCENTRATION				NO. EX	FREQUENCY OF ANALYSIS	SAMPLE TYPE
		VALUE	VALUE	UNITS	VALUE	VALUE	VALUE	UNITS			
Toluene	SAMPLE MEASUREMENT	******	******	******	******	******	0.0018		0	01/YR	GR
34010 V 0 See Comments	PERMIT REQUIREMENT	******	******	******	******	******	1 DAILY MX	mg/L		Annual	GRAB
Benzene	SAMPLE MEASUREMENT	******	******	******	******	******	0.0036		0	01/YR	GR
34030 V 0 See Comments	PERMIT REQUIREMENT	******	******	******	******	******	1 DAILY MX	mg/L		Annual	GRAB
Ethylbenzene	SAMPLE MEASUREMENT	******	******	******	******	******	0.019		0	01/YR	GR
34371 V 0 See Comments	PERMIT REQUIREMENT	******	******	******	******	******	1 DAILY MX	mg/L		Annual	GRAB
Xylene	SAMPLE MEASUREMENT	******	******	******	******	******	0.0168		0	01/YR	GR
81551 V 0 See Comments	PERMIT REQUIREMENT	******	******	******	******	******	1 DAILY MX	mg/L		Annual	GRAB

NAME/TITLE PRINCIPAL EXECUTIVE OFFICER			TELEPHONE		DATE
WARREN MILLER. Manager	I certify under penalty of law that this document and all attachments were prepared under my direction or supervision in accordance with a system designed to assure that qualified personnel properly gather and evaluate the information submitted. Based on my inquiry of the person or persons who manage the system, or those persons directly responsible for gathering the information, the information submitted is, to the best of my knowledge and belief, true, accurate, and complete. I am aware that there are significant penalties for submitting false information, including the possibility of fine and imprisonment for knowing violations.	Warren S. Miller	917-578-9757		03-05-2009
TYPED OR PRINTED		SIGNATURE OF PRINCIPAL EXECUTIVE OFFICER OR AUTHORIZED AGENT	AREA Code	NUMBER	MM/DD/YYYY

COMMENTS AND EXPLANATION OF ANY VIOLATIONS (Reference all attachments here)
LIMITS APPLY FOR DIRECT DISCHARGE TO NEWTON CREEK. ALSO, THERE SHALL BE NO DISCHARGE OF POLYCHLORINATED BIPHENYL COMPOUNDS. ECAP ID's 10380 and 10478.

EPA-NC-CE-0000311

NATIONAL POLLUTANT DISCHARGE ELIMINATION SYSTEM (NPDES)
DISCHARGE MONITORING REPORT (DMR)

Approved
OMB No. 2040-0004

PERMITTEE NAME/ADDRESS *(Include Facility Name/Location if Different)*

NAME: CONSOLIDATED EDISON OF NY
ADDRESS: 4 IRVING PLACE
NEW YORK, NY 10003
FACILITY: CONSOLIDATED EDISON CO OF NY
LOCATION: 11TH ST BETWEEN 53RD AND ASH
LONG ISLAND CITY, NY 11101

ATTN: YI-CHANG SHAO

NY0201138	001M
PERMIT NUMBER	DISCHARGE NUMBER

MONITORING PERIOD			
	MM/DD/YYYY		MM/DD/YYYY
FROM	01/01/2009	TO	01/31/2009

DMR Mailing ZIP CODE: 10003
MINOR
(SUBR 02)
GROUNDWATER INFILTRATION&STORM
External Outfall

No Discharge ☐

PARAMETER		QUANTITY OR LOADING			QUALITY OR CONCENTRATION				NO. EX	FREQUENCY OF ANALYSIS	SAMPLE TYPE
		VALUE	VALUE	UNITS	VALUE	VALUE	VALUE	UNITS			
Flow rate	SAMPLE MEASUREMENT	******	108000		******	******	******	******	0	01/30	CA
00056 1 0 Effluent Gross	PERMIT REQUIREMENT	******	Rec. Mon. DAILY MX	gal/d	******	******	******	******		Monthly	CALCTD
Solids, total suspended	SAMPLE MEASUREMENT	******	******	******	******	******	12		0	01/30	GR
00530 1 0 Effluent Gross	PERMIT REQUIREMENT	******	******	******	******	******	50 DAILY MX	mg/L		Monthly	GRAB
Oil & grease	SAMPLE MEASUREMENT	******	******	******	******	******	9		0	01/30	GR
00556 1 0 Effluent Gross	PERMIT REQUIREMENT	******	******	******	******	******	15 DAILY MX	mg/L		Monthly	GRAB

NAME/TITLE PRINCIPAL EXECUTIVE OFFICER			TELEPHONE		DATE
WARREN MILLER, Manager	I certify under penalty of law that this document and all attachments were prepared under my direction or supervision in accordance with a system designed to assure that qualified personnel properly gather and evaluate the information submitted. Based on my inquiry of the person or persons who manage the system, or those persons directly responsible for gathering the information, the information submitted is, to the best of my knowledge and belief, true, accurate, and complete. I am aware that there are significant penalties for submitting false information, including the possibility of fine and imprisonment for knowing violations.	Warren S. Miller	917-578-9257		02/20/2009
TYPED OR PRINTED		SIGNATURE OF PRINCIPAL EXECUTIVE OFFICER OR AUTHORIZED AGENT	AREA Code	NUMBER	MM/DD/YYYY

COMMENTS AND EXPLANATION OF ANY VIOLATIONS (Reference all attachments here)

conEdison
a conEdison, inc. company

Consolidated Edison Company
of New York, Inc.
4 Irving Place
New York NY 10003
www.conEd.com

EPA-NC-CE-0000313

May 28, 2009

Mr. Noui Bouasay-Gibson
Division of Water
New York State Department of Environmental Conservation
625 Broadway fourth floor
Albany, New York 12233-3506

Dear Sir:

Please find enclosed, a corrected DMR sheet for 11th Street (NY 0201138) for the February 1 - February 28, 2009 reporting period. Please disregard the previously submitted DMR for the same period.

Please call Francis Shao on (212) 460-4363, if you have any questions regarding this submission.

Yours truly,

Yi-chang Shao
Engineer
Steam Operations - EH&S

NATIONAL POLLUTANT DISCHARGE ELIMINATION SYSTEM (NPDES)
DISCHARGE MONIT[illegible]G REPORT (DMR)

Form Approved
2040-0004

PERMITTEE NAME/ADDRESS *(Include Facility Name/Location if Different)*

NAME: CONSOLIDATED EDISON OF NY
ADDRESS: 4 IRVING PLACE
NEW YORK, NY 10003
FACILITY: CONSOLIDATED EDISON CO OF NY
LOCATION: 11TH ST BETWEEN 53RD AND ASH
LONG ISLAND CITY, NY 11101
ATTN: YI-CHANG SHAO

NY0201138	001M
PERMIT NUMBER	DISCHARGE NUMBER

MONITORING PERIOD			
	MM/DD/YYYY		MM/DD/YYYY
FROM	02/01/2009	TO	02/28/2009

DMR Mailing ZIP CODE: 10003
MINOR
(SUBR 02)
GROUNDWATER INFILTRATION&STORM
External Outfall

No Discharge ☐

PARAMETER		QUANTITY OR LOADING			QUALITY OR CONCENTRATION				NO. EX	FREQUENCY OF ANALYSIS	SAMPLE TYPE
		VALUE	VALUE	UNITS	VALUE	VALUE	VALUE	UNITS			
Flow rate	SAMPLE MEASUREMENT	******	1080 00		******	******	******	******	0	01/30	CA
00056 1 0 Effluent Gross	PERMIT REQUIREMENT		Req. Mon. DAILY MX	paid						Monthly	CALCTD
Solids, total suspended	SAMPLE MEASUREMENT	******	******	******	******	******	12		0	01/30	GR
00530 1 0 Effluent Gross	PERMIT REQUIREMENT						30 DAILY MX	mg/L		Monthly	GRAB
Oil & grease	SAMPLE MEASUREMENT	******	******	******	******	******	8		0	01/30	GR
00556 1 0 Effluent Gross	PERMIT REQUIREMENT						15 DAILY MX	mg/L		Monthly	GRAB

NAME/TITLE PRINCIPAL EXECUTIVE OFFICER			TELEPHONE		DATE
WARREN MILLER, Manager	I certify under penalty of law that this document and all attachments were prepared under my direction or supervision in accordance with a system designed to ensure that qualified personnel properly gather and evaluate the information submitted. Based on my inquiry of the person or persons who manage the system, or those persons directly responsible for gathering the information, the information submitted is, to the best of my knowledge and belief, true, accurate, and complete. I am aware that there are significant penalties for submitting false information, including the possibility of fine and imprisonment for knowing violations.	Warren L. Miller	917-578-9757		05-27-2009
TYPED OR PRINTED		SIGNATURE OF PRINCIPAL EXECUTIVE OFFICER OR AUTHORIZED AGENT	AREA Code	NUMBER	MM/DD/YYYY

COMMENTS AND EXPLANATION OF ANY VIOLATIONS (Reference all attachments here)

ELAP ID is 10380

EPA-NC-CE-0000314

New York State Department of Environmental Conservation
Division of Water
Bureau of Water Compliance Programs
625 Broadway 4th. Floor, Albany, New York 12233-3506
Phone: (518) 402-8191 • **FAX:** (518) 402-8082
Website: www.dec.state.ny.us

Alexander B. Grannis
Commissioner

EPA-NC-CE-0000315

TO:

NY0201138
CONSOLIDATED EDISON CHEM LAB
11TH STREET CONDUIT
4 IRVING PLACE, ROOM 1325
NEW YORK, NEW YORK 10003

NPDES: NY 0201138 **REGION** 2

SUBJECT: RETURN OF DISCHARGE MONITORING REPORT (DMR'S)

THE ENCLOSED DMR FOR THE MONITORING PERIOD ENDING 2-28-09
IS BEING RETURNED FOR THE FOLLOWING REASON(S):

☐ FAILURE TO EITHER SIGN AND/OR DATE ALL PAGES OF THE DMR.

☑ FAILURE TO SUBMIT ORIGINAL SIGNATURE. PLEASE RESIGN THE DMR & RETURN.

☐ FAILURE TO ENTER DATA LEGIBLY IN BLUE OR BLACK INK.

☐ FAILURE TO ENTER ALL REQUIRED DATA (ALL OPEN FIELDS MUST BE ENTERED OR A REASON GIVEN IN "COMMENTS" AREA), OR TO INDICATE "NO DISCHARGE" IN THE BOX AT UPPER RIGHT.

☐ FAILURE TO SUBMIT ORIGINAL SIGNATURE & DATE THE CHANGES MADE ON AMENDED DMR. FORM SHALL BE SUBJECT TO THE SAME CERTIFICATION REQUIREMENTS AS THE ORIGINAL DMR. PLEASE RESIGN & DATE THEN RETURN.

★ CARBONS ARE TO BE SENT TO THE LOCATIONS STATED IN YOUR PERMIT. FAILURE TO FILE DMR'S WITH ALL THE OFFICES WILL CAUSE YOU TO BE CONSIDERED A NON-FILER BY THOSE OFFICES.

PLEASE MAKE THE APPROPRIATE CORRECTION(S) AND RETURN THE DMR TO THE ADDRESS PRINTED IN THE NYS AGENCY LETTERHEAD (SEE ABOVE).

REMINDERS

❶ ALBANY OFFICE NEEDS ONLY THE SIGNED, DATED ORIGINALS
❷ PLEASE NOTIFY US IN WRITING OF ANY ADDRESS CHANGES PERTAINING TO THE MAILING OF DISCHARGE MONITORING REPORTS

SINCERELY,

NOUI BOUASAY-GIBSON
(518)402-8191
nvbousa@gw.dec.state.ny.us

conEdison
a conEdison, inc. company

Consolidated Edison Company
of New York, Inc.
4 Irving Place
New York NY 10003
www.conEd.com

EPA-NC-CE-0000316

April 8, 2009

Mr. Roland Tozer
Division of Water
New York State Department of Environmental Conservation
625 Broadway fourth floor
Albany, New York 12233-3506

Dear Sir:

Please find enclosed, a corrected DMR sheet for 11th Street (NY 0201138) for the February 1 - February 28, 2009 reporting period. Please disregard the previously submitted DMR for the same period.

Please call Francis Shao on (212) 460-4363, if you have any questions regarding this submission.

Yours truly,

Yi-chang Shao
Engineer
Steam Operations - EH&S

Received NYSDEC BWC APR 09 2009

NATIONAL POLLUTANT DISCHARGE ELIMINATION SYSTEM (NPDES)
DISCHARGE MONI[illegible]G REPORT (DMR)

Form Approved
2040-0004

Received NYSDEC BWC APR 09 2009

PERMITTEE NAME/ADDRESS *(Include Facility Name/Location if Different)*

NAME: CONSOLIDATED EDISON OF NY
ADDRESS: 4 IRVING PLACE
NEW YORK, NY 10003

FACILITY: CONSOLIDATED EDISON CO OF NY
LOCATION: 11TH ST BETWEEN 53RD AND ASH
LONG ISLAND CITY, NY 11101

ATTN: YI-CHANG SHAO

NY0201138	001M
PERMIT NUMBER	DISCHARGE NUMBER

MONITORING PERIOD			
	MM/DD/YYYY		MM/DD/YYYY
FROM	02/01/2009	TO	02/28/2009

DMR Mailing ZIP CODE: 10003
MINOR
(SUBR 02)
GROUNDWATER INFILTRATION&STORM
External Outfall

No Discharge ☐

PARAMETER		QUANTITY OR LOADING			QUALITY OR CONCENTRATION				NO. EX	FREQUENCY OF ANALYSIS	SAMPLE TYPE
		VALUE	VALUE	UNITS	VALUE	VALUE	VALUE	UNITS			
Flow rate	SAMPLE MEASUREMENT	******	108900		******	******	******	******	0	01/30	CA
00056 1 0 Effluent Gross	PERMIT REQUIREMENT	******	Req. Mon. DAILY MX	gal/d	******	******	******	******		Monthly	CALCTD
Solids, total suspended	SAMPLE MEASUREMENT	******	******	******	******	******	12		0	01/30	GR
00530 1 0 Effluent Gross	PERMIT REQUIREMENT	******	******	******	******	******	50 DAILY MX	mg/L		Monthly	GRAB
Oil & grease	SAMPLE MEASUREMENT	******	******	******	******	******	8		0	01/30	GR
00556 1 0 Effluent Gross	PERMIT REQUIREMENT	******	******	******	******	******	15 DAILY MX	mg/L		Monthly	GRAB

NAME/TITLE PRINCIPAL EXECUTIVE OFFICER			TELEPHONE		DATE
WARREN MILLER, Manager	I certify under penalty of law that this document and all attachments were prepared under my direction or supervision in accordance with a system designed to assure that qualified personnel properly gather and evaluate the information submitted. Based on my inquiry of the person or persons who manage the system, or those persons directly responsible for gathering the information, the information submitted is, to the best of my knowledge and belief, true, accurate, and complete. I am aware that there are significant penalties for submitting false information, including the possibility of fine and imprisonment for knowing violations.	Warren D. Miller	917-578-9757		03-03-2009
TYPED OR PRINTED		SIGNATURE OF PRINCIPAL EXECUTIVE OFFICER OR AUTHORIZED AGENT	AREA Code	NUMBER	MM/DD/YYYY

COMMENTS AND EXPLANATION OF ANY VIOLATIONS (Reference all attachments here)

ELAP ID is 10380

EPA Form 3320-1 (Rev.01/06) Previous editions may be used.

Page 1

- Corrected -

EPA-NC-CE-0000317

New York State Department of Environmental Conservation
Division of Water
Bureau of Water Compliance, 4th Floor
625 Broadway, Albany, New York 12233-3506
Phone: (518) 402-8177 • **FAX:** (518) 402-8082
Website: www.dec.ny.gov

Alexander B. Grannis
Commissioner

EPA-NC-CE-0000318

IMPORTANT NOTICE

Re: Completed Discharge Monitoring Reports (DMR) Signatures

All SPDES permittees are reminded that:

- All completed DMRs sent to the DEC's Central Office in Albany must be signed and dated in blue or black ink by the person authorized to sign the DMR. This is very important because the DMR is a legal and binding document required by your SPDES permit. Completed DMRs with original signatures and dates must be submitted to the Bureau of Water Compliance in Albany. Photocopies of signatures and dates are not acceptable and will be returned to the permittee for original signatures.

- Copies of completed DMR shall be submitted to the DEC Regional Office and if required by your SPDES Permit, to the County Health Department,, also you must retain a copy for your records.

Please review these requirements with your appropriate staff or consultants.

We are sending this reminder because we are receiving a number of photocopied signatures and dates rather than the originals as required by your SPDES permit.

Please contact Roland Tozer at (518) 402-8083 with any questions.

Sincerely,

Charles S. Haugh, Jr. P.E.

Charles S. Haugh, Jr., P.E.
SPDES Compliance Information Section
Bureau of Water Compliance

1000

FedEx Express **US Airbill**

FedEx Tracking Number **8693 2669 69**

SPH22

Form ID No. 0215

Sender's Copy

1 From Please print and press hard.

Date 5/28/09

Sender's FedEx Account Number 0100-7284-0

Sender's Name GLORIA DRAFFIN Phone (212) 460-3569

Company CON EDISON

Address 4 IRVING PL

Dept/Floor/Suite/Room

City NEW YORK State NY ZIP 10003-3502

2 Your Internal Billing Reference First 24 characters will appear on invoice. S 8295 FINAL

3 To

Recipient's Name Noni Bonasay-Gibson Phone (518) 402-8191

Company NYS Dept. of Env. Conservation

Recipient's Address 625 Broadway fourth floor

We cannot deliver to P.O. boxes or P.O. ZIP codes. Dept/Floor/Suite/Room

Address Nelson 11th st Bank

To request a package be held at a specific FedEx location, print FedEx address here.

City Albany State NY ZIP 12233-3506

0400777340

Find drop-off locations at fedex.com
Simplify your shipping. Manage your account. Access all the tools you need.

4a Express Package Service *Packages up to 150 lbs.*

- [x] FedEx Priority Overnight — Next business morning.* Friday shipments will be delivered on Monday unless SATURDAY Delivery is selected.
- [ ] FedEx Standard Overnight — Next business afternoon.* Saturday Delivery NOT available.
- [ ] FedEx First Overnight — Earliest next business morning delivery to select locations.* Saturday Delivery NOT available.
- [ ] FedEx 2Day — Second business day.* Thursday shipments will be delivered on Monday unless SATURDAY Delivery is selected.
- [ ] FedEx Express Saver — Third business day.* Saturday Delivery NOT available.

FedEx Envelope rate not available. Minimum charge: One-pound rate. * To most locations.

4b Express Freight Service *Packages over 150 lbs.*

- [ ] FedEx 1Day Freight* — Next business day.** Friday shipments will be delivered on Monday unless SATURDAY Delivery is selected.
- [ ] FedEx 2Day Freight — Second business day.** Thursday shipments will be delivered on Monday unless SATURDAY Delivery is selected.
- [ ] FedEx 3Day Freight — Third business day.** Saturday Delivery NOT available.

* Call for Confirmation: ** To most locations.

5 Packaging

- [x] FedEx Envelope*
- [ ] FedEx Pak* — Includes FedEx Small Pak, FedEx Large Pak, and FedEx Sturdy Pak.
- [ ] FedEx Box
- [ ] FedEx Tube
- [ ] Other

* Declared value limit $500.

6 Special Handling — Include FedEx address in Section 3.

- [ ] SATURDAY Delivery — NOT Available for FedEx Standard Overnight, FedEx First Overnight, FedEx Express Saver, or FedEx 3Day Freight.
- [ ] HOLD Weekday at FedEx Location — NOT Available for FedEx First Overnight.
- [ ] HOLD Saturday at FedEx Location — Available ONLY for FedEx Priority Overnight and FedEx 2Day to select locations.

Does this shipment contain dangerous goods? One box must be checked.

- [ ] No
- [ ] Yes — As per attached Shipper's Declaration.
- [ ] Yes — Shipper's Declaration not required.
- [ ] Dry Ice — Dry Ice, 9, UN 1845 ____ x ____ kg
- [ ] Cargo Aircraft Only

Dangerous goods (including dry ice) cannot be shipped in FedEx packaging.

7 Payment *Bill to:* Enter FedEx Acct. No. or Credit Card No. below.

- [x] Sender — Acct. No. in Section 1 will be billed.
- [ ] Recipient
- [ ] Third Party
- [ ] Credit Card
- [ ] Cash/Check

FedEx Acct. No. / Credit Card No. Exp. Date

Total Packages	Total Weight	Total Declared Value†
		$ .00

†Our liability is limited to $100 unless you declare a higher value. See back for details. By using this Airbill you agree to the service conditions on the back of this Airbill and in the current FedEx Service Guide, including terms that limit our liability.

8 Residential Delivery Signature Options If you require a signature, check Direct or Indirect.

- [ ] No Signature Required — Package may be left without obtaining a signature for delivery.
- [ ] Direct Signature — Someone at recipient's address may sign for delivery. *See applies.*
- [ ] Indirect Signature — If no one is available at recipient's address, someone at a neighboring address may sign for delivery. *See applies.*

519

Rev. Date 10/06 • Part #158275 • ©1994–2006 FedEx • PRINTED IN U.S.A. • SRS

fedex.com 1.800.GoFedEx 1.800.463.3339

PULL AND RETAIN THIS COPY BEFORE AFFIXING TO THE PACKAGE. NO POUCH NEEDED.

EPA-NC-CE-0000319

NATIONAL POLLUTANT DISCHARGE ELIMINATION SYSTEM (NPDES)
DISCHARGE MONITORING REPORT (DMR)

Form Approved
2040-0004

PERMITTEE NAME/ADDRESS *(Include Facility Name/Location if Different)*

NAME: CONSOLIDATED EDISON OF NY
ADDRESS: 4 IRVING PLACE
NEW YORK, NY 10003

FACILITY: CONSOLIDATED EDISON CO OF NY
LOCATION: 11TH ST BETWEEN 53RD AND ASH
LONG ISLAND CITY, NY 11101

ATTN: YI-CHANG SHAO

NY0201138	001-M
PERMIT NUMBER	DISCHARGE NUMBER

MONITORING PERIOD			
	MM/DD/YYYY		MM/DD/YYYY
FROM	12/01/2010	TO	12/31/2010

DMR Mailing ZIP CODE: 10003
MINOR
(SUBR 02)
GROUNDWATER INFILTRATION&STORM
External Outfall

No Discharge ☐

PARAMETER		QUANTITY OR LOADING			QUALITY OR CONCENTRATION				NO. EX	FREQUENCY OF ANALYSIS	SAMPLE TYPE
		VALUE	VALUE	UNITS	VALUE	VALUE	VALUE	UNITS			
Flow rate	SAMPLE MEASUREMENT	******	108000		******	******	******	******	0	01/30	CA
00056 1 0 Effluent Gross	PERMIT REQUIREMENT	******	Req. Mon. DAILY MX	gal/d	******	******	******	******		Monthly	CALCTD
Solids, total suspended	SAMPLE MEASUREMENT	******	******	******	******	******	7		0	01/30	GR
00530 1 0 Effluent Gross	PERMIT REQUIREMENT	******	******	******	******	******	60 DAILY MX	mg/L		Monthly	GRAB
Oil & Grease	SAMPLE MEASUREMENT	******	******	******	******	******	<5		0	01/30	GR
00556 1 0 Effluent Gross	PERMIT REQUIREMENT	******	******	******	******	******	15 DAILY MX	mg/L		Monthly	GRAB

NAME/TITLE PRINCIPAL EXECUTIVE OFFICER			TELEPHONE		DATE
EDWARD FOPPIANO VP	I certify under penalty of law that this document and all attachments were prepared under my direction or supervision in accordance with a system designed to assure that qualified personnel properly gather and evaluate the information submitted. Based on my inquiry of the person or persons who manage the system, or those persons directly responsible for gathering the information, the information submitted is, to the best of my knowledge and belief, true, accurate, and complete. I am aware that there are significant penalties for submitting false information, including the possibility of fine and imprisonment for knowing violations.		917-578-9257		01/21/2011
TYPED OR PRINTED		SIGNATURE OF PRINCIPAL EXECUTIVE OFFICER OR AUTHORIZED AGENT	AREA Code	NUMBER	MM/DD/YYYY

COMMENTS AND EXPLANATION OF ANY VIOLATIONS (Reference all attachments here)

ELAP ID: 510380

NATIONAL POLLUTANT DISCHARGE ELIMINATION SYSTEM (NPDES)
DISCHARGE MONIT[illegible]E REPORT (DMR)

Form Approved
C[illegible] 2040-0004

PERMITTEE NAME/ADDRESS *(Include Facility Name/Location if Different)*

NAME: CONSOLIDATED EDISON OF NY
ADDRESS: 4 IRVING PLACE
NEW YORK, NY 10003

FACILITY: CONSOLIDATED EDISON CO OF NY
LOCATION: 11TH ST BETWEEN 53RD AND ASH
LONG ISLAND CITY, NY 11101

ATTN: YI-CHANG SHAO

NY0201138	001-M
PERMIT NUMBER	DISCHARGE NUMBER

MONITORING PERIOD			
	MM/DD/YYYY		MM/DD/YYYY
FROM	11/01/2010	TO	11/30/2010

DMR Mailing ZIP CODE: 10003
MINOR
(SUBR 02)
GROUNDWATER INFILTRATION&STORM
External Outfall

No Discharge ☐

PARAMETER		QUANTITY OR LOADING			QUALITY OR CONCENTRATION				NO. EX	FREQUENCY OF ANALYSIS	SAMPLE TYPE
		VALUE	VALUE	UNITS	VALUE	VALUE	VALUE	UNITS			
Flow rate	SAMPLE MEASUREMENT	******	108060		******	******	******	******	0	01/30	CA
00056 1 0 Effluent Gross	PERMIT REQUIREMENT	******	Req. Mon. DAILY MX	gal/d	******	******	******	******		Monthly	CALCTD
Solids, total suspended	SAMPLE MEASUREMENT	******	******	******	******	******	13		0	01/30	GR
00530 1 0 Effluent Gross	PERMIT REQUIREMENT	******	******	******	******	******	50 DAILY MX	mg/L		Monthly	GRAB
Oil & Grease	SAMPLE MEASUREMENT	******	******	******	******	******	<5		0	01/30	GR
00556 1 0 Effluent Gross	PERMIT REQUIREMENT	******	******	******	******	******	15 DAILY MX	mg/L		Monthly	GRAB

NAME/TITLE PRINCIPAL EXECUTIVE OFFICER			TELEPHONE		DATE
EDWARD FOPPIANO VP	I certify under penalty of law that this document and all attachments were prepared under my direction or supervision in accordance with a system designed to assure that qualified personnel properly gather and evaluate the information submitted. Based on my inquiry of the person or persons who manage the system, or those persons directly responsible for gathering the information, the information submitted is, to the best of my knowledge and belief, true, accurate, and complete. I am aware that there are significant penalties for submitting false information, including the possibility of fine and imprisonment for knowing violations.	Warren S. Miller	917-578-9757		12/14/2010
TYPED OR PRINTED		SIGNATURE OF PRINCIPAL EXECUTIVE OFFICER OR AUTHORIZED AGENT	AREA Code	NUMBER	MM/DD/YYYY

COMMENTS AND EXPLANATION OF ANY VIOLATIONS (Reference all attachments here)

NATIONAL POLLUTANT DISCHARGE ELIMINATION SYSTEM (NPDES)
DISCHARGE MONI[illegible]NG REPORT (DMR)

Form Approved
[illegible]o. 2040-0004

PERMITTEE NAME/ADDRESS *(Include Facility Name/Location if Different)*

NAME: CONSOLIDATED EDISON OF NY
ADDRESS: 4 IRVING PLACE
NEW YORK, NY 10003
FACILITY: CONSOLIDATED EDISON CO OF NY
LOCATION: 11TH ST BETWEEN 53RD AND ASH
LONG ISLAND CITY, NY 11101

ATTN: YI-CHANG SHAO

NY0201138	001-M
PERMIT NUMBER	DISCHARGE NUMBER

MONITORING PERIOD			
	MM/DD/YYYY		MM/DD/YYYY
FROM	10/01/2010	TO	10/31/2010

DMR Mailing ZIP CODE: 10003
MINOR
(SUBR 02)
GROUNDWATER INFILTRATION&STORM
External Outfall

No Discharge ☐

PARAMETER		QUANTITY OR LOADING			QUALITY OR CONCENTRATION				NO. EX	FREQUENCY OF ANALYSIS	SAMPLE TYPE
		VALUE	VALUE	UNITS	VALUE	VALUE	VALUE	UNITS			
Flow rate	SAMPLE MEASUREMENT	******	108000		******	******	******	******	0	01/30	CA
00056 1 0 Effluent Gross	PERMIT REQUIREMENT	******	Req. Mon. DAILY MX	gal/d	******	******	******	******		Monthly	CALCTD
Solids, total suspended	SAMPLE MEASUREMENT	******	******	******	******	******	13		0	01/30	GR
00530 1 0 Effluent Gross	PERMIT REQUIREMENT	******	******	******	******	******	50 DAILY MX	mg/L		Monthly	GRAB
Oil & Grease	SAMPLE MEASUREMENT	******	******	******	******	******	<5		0	01/30	GR
00556 1 0 Effluent Gross	PERMIT REQUIREMENT	******	******	******	******	******	15 DAILY MX	mg/L		Monthly	GRAB

NAME/TITLE PRINCIPAL EXECUTIVE OFFICER	I certify under penalty of law that this document and all attachments were prepared under my direction or supervision in accordance with a system designed to assure that qualified personnel properly gather and evaluate the information submitted. Based on my inquiry of the person or persons who manage the system, or those persons directly responsible for gathering the information, the information submitted is, to the best of my knowledge and belief, true, accurate, and complete. I am aware that there are significant penalties for submitting false information, including the possibility of fine and imprisonment for knowing violations.	[signature]	TELEPHONE		DATE
EDWARD FOPPIANO VP		SIGNATURE OF PRINCIPAL EXECUTIVE OFFICER OR AUTHORIZED AGENT	917-578-9757		11/04/2010
TYPED OR PRINTED			AREA Code	NUMBER	MM/DD/YYYY

COMMENTS AND EXPLANATION OF ANY VIOLATIONS (Reference all attachments here)

EPA Form 3320-1 (Rev.01/06) Previous editions may be used.

EPA-NC-CE-0000322

NATIONAL POLLUTANT DISCHARGE ELIMINATION SYSTEM (NPDES)
DISCHARGE MONITORING REPORT (DMR)

Form Approved
OMB No. 2040-0004

PERMITTEE NAME/ADDRESS *(Include Facility Name/Location if Different)*

NAME: CONSOLIDATED EDISON OF NY
ADDRESS: 4 IRVING PLACE
NEW YORK, NY 10003

FACILITY: CONSOLIDATED EDISON CO OF NY
LOCATION: 11TH ST BETWEEN 53RD AND ASH
LONG ISLAND CITY, NY 11101

ATTN: YI-CHANG SHAO

NY0201138	001-M
PERMIT NUMBER	DISCHARGE NUMBER

MONITORING PERIOD			
	MM/DD/YYYY		MM/DD/YYYY
FROM	09/01/2010	TO	09/30/2010

DMR Mailing ZIP CODE: 10003
MINOR
(SUBR 02)
GROUNDWATER INFILTRATION&STORM
External Outfall

No Discharge ☐

PARAMETER		QUANTITY OR LOADING			QUALITY OR CONCENTRATION				NO. EX	FREQUENCY OF ANALYSIS	SAMPLE TYPE
		VALUE	VALUE	UNITS	VALUE	VALUE	VALUE	UNITS			
Flow rate	SAMPLE MEASUREMENT	******	108 000		******	******	******	******	0	01/30	CA
00056 1 0 Effluent Gross	PERMIT REQUIREMENT	******	Req. Mon. DAILY MX	gal/d	******	******	******	******		Monthly	CALCTD
Solids, total suspended	SAMPLE MEASUREMENT	******	******	******	******	******	15		0	01/30	GR
00530 1 0 Effluent Gross	PERMIT REQUIREMENT	******	******	******	******	******	50 DAILY MX	mg/L		Monthly	GRAB
Oil & grease	SAMPLE MEASUREMENT	******	******	******	******	******	< 5		0	01/30	GR
00556 1 0 Effluent Gross	PERMIT REQUIREMENT	******	******	******	******	******	15 DAILY MX	mg/L		Monthly	GRAB

NAME/TITLE PRINCIPAL EXECUTIVE OFFICER			TELEPHONE		DATE
EDWARD FOPPIANO, VP	I certify under penalty of law that this document and all attachments were prepared under my direction or supervision in accordance with a system designed to assure that qualified personnel properly gather and evaluate the information submitted. Based on my inquiry of the person or persons who manage the system, or those persons directly responsible for gathering the information, the information submitted is, to the best of my knowledge and belief, true, accurate, and complete. I am aware that there are significant penalties for submitting false information, including the possibility of fine and imprisonment for knowing violations.	David M. Foppiano	917-578-9257		10-7-10
TYPED OR PRINTED		SIGNATURE OF PRINCIPAL EXECUTIVE OFFICER OR AUTHORIZED AGENT	AREA Code	NUMBER	MM/DD/YYYY

COMMENTS AND EXPLANATION OF ANY VIOLATIONS (Reference all attachments here)

ELAP ID is 10380

EPA-NC-CE-0000323

NATIONAL POLLUTANT DISCHARGE ELIMINATION SYSTEM (NPDES)
DISCHARGE MONI[illegible]G REPORT (DMR)

Form Approved
[illegible]lo. 2040-0004

PERMITTEE NAME/ADDRESS *(Include Facility Name/Location if Different)*

NAME: CONSOLIDATED EDISON OF NY
ADDRESS: 4 IRVING PLACE
NEW YORK, NY 10003

FACILITY: CONSOLIDATED EDISON CO OF NY
LOCATION: 11TH ST BETWEEN 53RD AND ASH
LONG ISLAND CITY, NY 11101

ATTN: YI-CHANG SHAO

NY0201138	001-M
PERMIT NUMBER	DISCHARGE NUMBER

MONITORING PERIOD			
	MM/DD/YYYY		MM/DD/YYYY
FROM	08/01/2010	TO	08/31/2010

DMR Mailing ZIP CODE: 10003
MINOR
(SUBR 02)
GROUNDWATER INFILTRATION&STORM
External Outfall

No Discharge ☐

PARAMETER		QUANTITY OR LOADING			QUALITY OR CONCENTRATION				NO. EX	FREQUENCY OF ANALYSIS	SAMPLE TYPE
		VALUE	VALUE	UNITS	VALUE	VALUE	VALUE	UNITS			
Flow rate	SAMPLE MEASUREMENT	******	108000		******	******	******	******	0	01/30	CA
00056 1 0 Effluent Gross	PERMIT REQUIREMENT	******	Req. Mon. DAILY MX	gal/d	******	******	******	******		Monthly	CALCTD
Solids, total suspended	SAMPLE MEASUREMENT	******	******	******	******	******	11		0	01/30	GR
00530 1 0 Effluent Gross	PERMIT REQUIREMENT	******	******	******	******	******	50 DAILY MX	mg/L		Monthly	GRAB
Oil & grease	SAMPLE MEASUREMENT	******	******	******	******	******	< 5		0	01/30	GR
00556 1 0 Effluent Gross	PERMIT REQUIREMENT	******	******	******	******	******	15 DAILY MX	mg/L		Monthly	GRAB

NAME/TITLE PRINCIPAL EXECUTIVE OFFICER			TELEPHONE		DATE
EDWARD FOPPIANO, VP	I certify under penalty of law that this document and all attachments were prepared under my direction or supervision in accordance with a system designed to assure that qualified personnel properly gather and evaluate the information submitted. Based on my inquiry of the person or persons who manage the system, or those persons directly responsible for gathering the information, the information submitted is, to the best of my knowledge and belief, true, accurate, and complete. I am aware that there are significant penalties for submitting false information, including the possibility of fine and imprisonment for knowing violations.	Darren S. Miller	917-578-9757		09/09/2010
TYPED OR PRINTED		SIGNATURE OF PRINCIPAL EXECUTIVE OFFICER OR AUTHORIZED AGENT	AREA Code	NUMBER	MM/DD/YYYY

COMMENTS AND EXPLANATION OF ANY VIOLATIONS (Reference all attachments here)

ELAP ID is 10380.

EPA Form 3320-1 (Rev.01/06) Previous editions may be used.

NATIONAL POLLUTANT DISCHARGE ELIMINATION SYSTEM (NPDES)
DISCHARGE MONI NG REPORT (DMR)

Form Approved
No. 2040-0004

PERMITTEE NAME/ADDRESS *(Include Facility Name/Location if Different)*

NAME: CONSOLIDATED EDISON OF NY
ADDRESS: 4 IRVING PLACE
NEW YORK, NY 10003
FACILITY: CONSOLIDATED EDISON CO OF NY
LOCATION: 11TH ST BETWEEN 53RD AND ASH
LONG ISLAND CITY, NY 11101
ATTN: YI-CHANG SHAO

NY0201136	001-M
PERMIT NUMBER	DISCHARGE NUMBER

MONITORING PERIOD			
	MM/DD/YYYY		MM/DD/YYYY
FROM	07/01/2010	TO	07/31/2010

DMR Mailing ZIP CODE: 10003
MINOR
(SUBR 02)
GROUNDWATER INFILTRATION&STORM
External Outfall

No Discharge ☐

PARAMETER		QUANTITY OR LOADING			QUALITY OR CONCENTRATION				NO. EX	FREQUENCY OF ANALYSIS	SAMPLE TYPE
		VALUE	VALUE	UNITS	VALUE	VALUE	VALUE	UNITS			
Flow rate	SAMPLE MEASUREMENT	******	108000		******	******	******	******	0	01/30	CA
00056 1 0 Effluent Gross	PERMIT REQUIREMENT	******	Req. Mon. DAILY MX	gal/d	******	******	******	******		Monthly	CALCTD
Solids, total suspended	SAMPLE MEASUREMENT	******	******	******	******	******	37		0	01/30	GR
00530 1 0 Effluent Gross	PERMIT REQUIREMENT	******	******	******	******	******	50 DAILY MX	mg/L		Monthly	GRAB
Oil & grease	SAMPLE MEASUREMENT	******	******	******	******	******	<5		0	01/30	GR
00556 1 0 Effluent Gross	PERMIT REQUIREMENT	******	******	******	******	******	15 DAILY MX	mg/L		Monthly	GRAB

NAME/TITLE PRINCIPAL EXECUTIVE OFFICER			TELEPHONE		DATE
EDWARD FOPPIANO VP	I certify under penalty of law that this document and all attachments were prepared under my direction or supervision in accordance with a system designed to assure that qualified personnel properly gather and evaluate the information submitted. Based on my inquiry of the person or persons who manage the system, or those persons directly responsible for gathering the information, the information submitted is, to the best of my knowledge and belief, true, accurate, and complete. I am aware that there are significant penalties for submitting false information, including the possibility of fine and imprisonment for knowing violations.	Darren D. Miller	917-878-9757		08/03/2010
TYPED OR PRINTED		SIGNATURE OF PRINCIPAL EXECUTIVE OFFICER OR AUTHORIZED AGENT	AREA Code	NUMBER	MM/DD/YYYY

COMMENTS AND EXPLANATION OF ANY VIOLATIONS (Reference all attachments here)

E-LAP ID IS 10380.

EPA-NC-CE-0000325

NATIONAL POLLUTANT DISCHARGE ELIMINATION SYSTEM (NPDES)
DISCHARGE MONITORING REPORT (DMR)

Form Approved
OMB No. 2040-0004

PERMITTEE NAME/ADDRESS *(Include Facility Name/Location if Different)*

NAME: CONSOLIDATED EDISON OF NY
ADDRESS: 4 IRVING PLACE
NEW YORK, NY 10003
FACILITY: CONSOLIDATED EDISON CO OF NY
LOCATION: 11TH ST BETWEEN 53RD AND ASH
LONG ISLAND CITY, NY 11101

ATTN: YI-CHANG SHAO

NY0201138	001-M
PERMIT NUMBER	DISCHARGE NUMBER

MONITORING PERIOD			
	MM/DD/YYYY		MM/DD/YYYY
FROM	06/01/2010	TO	06/30/2010

DMR Mailing ZIP CODE: 10003
MINOR
(SUBR 02)
GROUNDWATER INFILTRATION&STORM
External Outfall

No Discharge ☐

PARAMETER		QUANTITY OR LOADING			QUALITY OR CONCENTRATION				NO. EX	FREQUENCY OF ANALYSIS	SAMPLE TYPE
		VALUE	VALUE	UNITS	VALUE	VALUE	VALUE	UNITS			
Flow rate	SAMPLE MEASUREMENT	******	108000		******	******	******	******	0	01/30	CA
00056 1 0 Effluent Gross	PERMIT REQUIREMENT	******	Req. Mon. DAILY MX	gal/d	******	******	******	******		Monthly	CALCTD
Solids, total suspended	SAMPLE MEASUREMENT	******	******	******	******	******	15		0	01/30	GR
00530 1 0 Effluent Gross	PERMIT REQUIREMENT	******	******	******	******	******	50 DAILY MX	mg/L		Monthly	GRAB
Oil & grease	SAMPLE MEASUREMENT	******	******	******	******	******	<5		0	01/30	GR
00556 1 0 Effluent Gross	PERMIT REQUIREMENT	******	******	******	******	******	15 DAILY MX	mg/L		Monthly	GRAB

NAME/TITLE PRINCIPAL EXECUTIVE OFFICER			TELEPHONE		DATE
DAVID DAVIDOWITZ VP	I certify under penalty of law that this document and all attachments were prepared under my direction or supervision in accordance with a system designed to assure that qualified personnel properly gather and evaluate the information submitted. Based on my inquiry of the person or persons who manage the system, or those persons directly responsible for gathering the information, the information submitted is, to the best of my knowledge and belief, true, accurate, and complete. I am aware that there are significant penalties for submitting false information, including the possibility of fine and imprisonment for knowing violations.	David M. Davidowitz	917-578-7757		07-06-2010
TYPED OR PRINTED		SIGNATURE OF PRINCIPAL EXECUTIVE OFFICER OR AUTHORIZED AGENT	AREA Code	NUMBER	MM/DD/YYYY

COMMENTS AND EXPLANATION OF ANY VIOLATIONS (Reference all attachments here)

ELAP ID is 10380.

EPA Form 3320-1 (Rev.01/06) Previous editions may be used.

EPA-NC-CE-0000326

NATIONAL POLLUTANT DISCHARGE ELIMINATION SYSTEM (NPDES)
DISCHARGE MONITORING REPORT (DMR)

Form Approved
OMB No. 2040-0004

PERMITTEE NAME/ADDRESS *(Include Facility Name/Location if Different)*

NAME: CONSOLIDATED EDISON OF NY
ADDRESS: 4 IRVING PLACE
NEW YORK, NY 10003
FACILITY: CONSOLIDATED EDISON CO OF NY
LOCATION: 11TH ST BETWEEN 53RD AND ASH
LONG ISLAND CITY, NY 11101

ATTN: YI-CHANG SHAO

NY0201138	001-M
PERMIT NUMBER	DISCHARGE NUMBER

MONITORING PERIOD			
	MM/DD/YYYY		MM/DD/YYYY
FROM	05/01/2010	TO	05/31/2010

DMR Mailing ZIP CODE: 10003
MINOR
(SUBR 02)
GROUNDWATER INFILTRATION&STORM
External Outfall

No Discharge ☐

PARAMETER		QUANTITY OR LOADING			QUALITY OR CONCENTRATION				NO. EX	FREQUENCY OF ANALYSIS	SAMPLE TYPE
		VALUE	VALUE	UNITS	VALUE	VALUE	VALUE	UNITS			
Flow rate	SAMPLE MEASUREMENT	******	108000		******	******	******	******	0	01/30	CA
00056 1 0 Effluent Gross	PERMIT REQUIREMENT	******	Req. Mon. DAILY MX	gal/d	******	******	******	******		Monthly	CALCTD
Solids, total suspended	SAMPLE MEASUREMENT	******	******	******	******	******	11		0	01/30	GK
00530 1 0 Effluent Gross	PERMIT REQUIREMENT	******	******	******	******	******	50 DAILY MX	mg/L		Monthly	GRAB
Oil & grease	SAMPLE MEASUREMENT	******	******	******	******	******	6		0	01/30	GK
00556 1 0 Effluent Gross	PERMIT REQUIREMENT	******	******	******	******	******	15 DAILY MX	mg/L		Monthly	GRAB

NAME/TITLE PRINCIPAL EXECUTIVE OFFICER			TELEPHONE		DATE
DAVID DAVIDOWITZ VP	I certify under penalty of law that this document and all attachments were prepared under my direction or supervision in accordance with a system designed to assure that qualified personnel properly gather and evaluate the information submitted. Based on my inquiry of the person or persons who manage the system, or those persons directly responsible for gathering the information, the information submitted is, to the best of my knowledge and belief, true, accurate, and complete. I am aware that there are significant penalties for submitting false information, including the possibility of fine and imprisonment for knowing violations.	Daniel M. Hurley	917-578-9757		06-09-2010
TYPED OR PRINTED		SIGNATURE OF PRINCIPAL EXECUTIVE OFFICER OR AUTHORIZED AGENT	AREA Code	NUMBER	MM/DD/YYYY

COMMENTS AND EXPLANATION OF ANY VIOLATIONS (Reference all attachments here)

ELAP ID is 10380.

EPA-NC-CE-0000327

NATIONAL POLLUTANT DISCHARGE ELIMINATION SYSTEM (NPDES)
DISCHARGE MONI[illegible]G REPORT (DMR)

Form Approved
[illegible]No. 2040-0004

PERMITTEE NAME/ADDRESS *(Include Facility Name/Location if Different)*

NAME: CONSOLIDATED EDISON OF NY
ADDRESS: 4 IRVING PLACE
NEW YORK, NY 10003
FACILITY: CONSOLIDATED EDISON CO OF NY
LOCATION: 11TH ST BETWEEN 53RD AND ASH
LONG ISLAND CITY, NY 11101
ATTN: YI-CHANG SHAO

NY0201138	001-M
PERMIT NUMBER	DISCHARGE NUMBER

MONITORING PERIOD			
	MM/DD/YYYY		MM/DD/YYYY
FROM	04/01/2010	TO	04/30/2010

DMR Mailing ZIP CODE: 10003
MINOR
(SUBR 02)
GROUNDWATER INFILTRATION&STORM
External Outfall

No Discharge ☐

PARAMETER		QUANTITY OR LOADING			QUALITY OR CONCENTRATION				NO. EX	FREQUENCY OF ANALYSIS	SAMPLE TYPE
		VALUE	VALUE	UNITS	VALUE	VALUE	VALUE	UNITS			
Flow rate	SAMPLE MEASUREMENT	******	108000		******	******	******	******	0	01/30	GA
00056 1 0 Effluent Gross	PERMIT REQUIREMENT	******	Req. Mon. DAILY MX	gal/d	******	******	******	******		Monthly	CALCTD
Solids, total suspended	SAMPLE MEASUREMENT	******	******	******	******	******	15		0	01/30	GK
00530 1 0 Effluent Gross	PERMIT REQUIREMENT	******	******	******	******	******	50 DAILY MX	mg/L		Monthly	GRAB
Oil & grease	SAMPLE MEASUREMENT	******	******	******	******	******	<5		0	01/30	GK
00556 1 0 Effluent Gross	PERMIT REQUIREMENT	******	******	******	******	******	15 DAILY MX	mg/L		Monthly	GRAB

NAME/TITLE PRINCIPAL EXECUTIVE OFFICER			TELEPHONE		DATE
DAVID DAVIDOWITZ VP	I certify under penalty of law that this document and all attachments were prepared under my direction or supervision in accordance with a system designed to assure that qualified personnel properly gather and evaluate the information submitted. Based on my inquiry of the person or persons who manage the system, or those persons directly responsible for gathering the information, the information submitted is, to the best of my knowledge and belief, true, accurate, and complete. I am aware that there are significant penalties for submitting false information, including the possibility of fine and imprisonment for knowing violations.	David M. Davidowitz	917-578-9757		05/05/2010
TYPED OR PRINTED		SIGNATURE OF PRINCIPAL EXECUTIVE OFFICER OR AUTHORIZED AGENT	AREA Code	NUMBER	MM/DD/YYYY

COMMENTS AND EXPLANATION OF ANY VIOLATIONS (Reference all attachments here) ELAP ID is 10380.

NATIONAL POLLUTANT DISCHARGE ELIMINATION SYSTEM (NPDES)
DISCHARGE MONIT[illegible] REPORT (DMR)

Form Approved
O[illegible] 2040-0004

PERMITTEE NAME/ADDRESS *(Include Facility Name/Location if Different)*

NAME: CONSOLIDATED EDISON OF NY
ADDRESS: 4 IRVING PLACE
NEW YORK, NY 10003
FACILITY: CONSOLIDATED EDISON CO OF NY
LOCATION: 11TH ST BETWEEN 53RD AND ASH
LONG ISLAND CITY, NY 11101

ATTN: YI-CHANG SHAO

NY0201138	001-M
PERMIT NUMBER	DISCHARGE NUMBER

MONITORING PERIOD			
	MM/DD/YYYY		MM/DD/YYYY
FROM	03/01/2010	TO	03/31/2010

DMR Mailing ZIP CODE: 10003
MINOR
(SUBR 02)
GROUNDWATER INFILTRATION&STORM
External Outfall

No Discharge ☐

PARAMETER		QUANTITY OR LOADING			QUALITY OR CONCENTRATION				NO. EX	FREQUENCY OF ANALYSIS	SAMPLE TYPE
		VALUE	VALUE	UNITS	VALUE	VALUE	VALUE	UNITS			
Flow rate	SAMPLE MEASUREMENT	******	108000		******	******	******	******	0	01/30	CA
00056 1 0 Effluent Gross	PERMIT REQUIREMENT	******	Req. Mon. DAILY MX	gal/d	******	******	******	******		Monthly	CALCTD
Solids, total suspended	SAMPLE MEASUREMENT	******	******	******	******	******	14		0	01/30	GR
00530 1 0 Effluent Gross	PERMIT REQUIREMENT	******	******	******	******	******	50 DAILY MX	mg/L		Monthly	GRAB
Oil & grease	SAMPLE MEASUREMENT	******	******	******	******	******	7		0	02/30	GR
00556 1 0 Effluent Gross	PERMIT REQUIREMENT	******	******	******	******	******	15 DAILY MX	mg/L		Monthly	GRAB

NAME/TITLE PRINCIPAL EXECUTIVE OFFICER			TELEPHONE		DATE
DAVID DAVIDOWITZ VP	I certify under penalty of law that this document and all attachments were prepared under my direction or supervision in accordance with a system designed to assure that qualified personnel properly gather and evaluate the information submitted. Based on my inquiry of the person or persons who manage the system, or those persons directly responsible for gathering the information, the information submitted is, to the best of my knowledge and belief, true, accurate, and complete. I am aware that there are significant penalties for submitting false information, including the possibility of fine and imprisonment for knowing violations.	Warren S. Miller	917-578-9757		04/20/2010
TYPED OR PRINTED		SIGNATURE OF PRINCIPAL EXECUTIVE OFFICER OR AUTHORIZED AGENT	AREA Code	NUMBER	MM/DD/YYYY

COMMENTS AND EXPLANATION OF ANY VIOLATIONS (Reference all attachments here)

ECAP ID is 10380.

EPA-NC-CE-0000329

NATIONAL POLLUTANT DISCHARGE ELIMINATION SYSTEM (NPDES)
DISCHARGE MONI[illegible]G REPORT (DMR)

Form Approved
[illegible]lo. 2040-0004

PERMITTEE NAME/ADDRESS *(Include Facility Name/Location if Different)*

NAME: CONSOLIDATED EDISON OF NY
ADDRESS: 4 IRVING PLACE
NEW YORK, NY 10003
FACILITY: CONSOLIDATED EDISON CO OF NY
LOCATION: 11TH ST BETWEEN 53RD AND ASH
LONG ISLAND CITY, NY 11101

ATTN: YI-CHANG SHAO

NY0201138	001-M
PERMIT NUMBER	DISCHARGE NUMBER

MONITORING PERIOD			
	MM/DD/YYYY		MM/DD/YYYY
FROM	02/01/2010	TO	02/28/2010

DMR Mailing ZIP CODE: 10003
MINOR
(SUBR 02)
GROUNDWATER INFILTRATION&STORM
External Outfall

No Discharge ☐

PARAMETER		QUANTITY OR LOADING			QUALITY OR CONCENTRATION				NO. EX	FREQUENCY OF ANALYSIS	SAMPLE TYPE
		VALUE	VALUE	UNITS	VALUE	VALUE	VALUE	UNITS			
Flow rate	SAMPLE MEASUREMENT	******	108000		******	******	******	******	0	01/30	CA
00056 1 0 Effluent Gross	PERMIT REQUIREMENT	******	Req. Mon. DAILY MX	gal/d	******	******	******	******		Monthly	CALCTD
Solids, total suspended	SAMPLE MEASUREMENT	******	******	******	******	******	8		0	01/30	GR
00530 1 0 Effluent Gross	PERMIT REQUIREMENT	******	******	******	******	******	50 DAILY MX	mg/L		Monthly	GRAB
Oil & grease	SAMPLE MEASUREMENT	******	******	******	******	******	<5		0	01/30	GR
00556 1 0 Effluent Gross	PERMIT REQUIREMENT	******	******	******	******	******	15 DAILY MX	mg/L		Monthly	GRAB

NAME/TITLE PRINCIPAL EXECUTIVE OFFICER			TELEPHONE		DATE
DAVID DAVIDOWITZ, VP	I certify under penalty of law that this document and all attachments were prepared under my direction or supervision in accordance with a system designed to assure that qualified personnel properly gather and evaluate the information submitted. Based on my inquiry of the person or persons who manage the system, or those persons directly responsible for gathering the information, the information submitted is, to the best of my knowledge and belief, true, accurate, and complete. I am aware that there are significant penalties for submitting false information, including the possibility of fine and imprisonment for knowing violations.	Vivian L. Miller	917-578-9757		03/04/2010
TYPED OR PRINTED		SIGNATURE OF PRINCIPAL EXECUTIVE OFFICER OR AUTHORIZED AGENT	AREA Code	NUMBER	MM/DD/YYYY

COMMENTS AND EXPLANATION OF ANY VIOLATIONS (Reference all attachments here) ELAP ID's 10380 and 10478

EPA Form 3320-1 (Rev.01/06) Previous editions may be used.

NATIONAL POLLUTANT DISCHARGE ELIMINATION SYSTEM (NPDES)
DISCHARGE MONI IG REPORT (DMR)

Form Approved
lo. 2040-0004

PERMITTEE NAME/ADDRESS *(Include Facility Name/Location if Different)*

NAME: CONSOLIDATED EDISON OF NY
ADDRESS: 4 IRVING PLACE
NEW YORK, NY 10003
FACILITY: CONSOLIDATED EDISON CO OF NY
LOCATION: 11TH ST BETWEEN 53RD AND ASH
LONG ISLAND CITY, NY 11101
ATTN: YI-CHANG SHAO

NY0201138	001-V
PERMIT NUMBER	DISCHARGE NUMBER

MONITORING PERIOD			
	MM/DD/YYYY		MM/DD/YYYY
FROM	03/01/2009	TO	02/28/2010

DMR Mailing ZIP CODE: 10003
MINOR
(SUBR 02)
GROUNDWTR INFILTR & SW - ACT LVLS
External Outfall
No Discharge ☐

PARAMETER		QUANTITY OR LOADING			QUALITY OR CONCENTRATION				NO. EX	FREQUENCY OF ANALYSIS	SAMPLE TYPE
		VALUE	VALUE	UNITS	VALUE	VALUE	VALUE	UNITS			
Toluene	SAMPLE MEASUREMENT	******	******	******	******	******	0.004		0	01/YR	GR
34010 V 0 See Comments	PERMIT REQUIREMENT	******	******	******	******	******	1 DAILY MX	mg/L		Annual	GRAB
Benzene	SAMPLE MEASUREMENT	******	******	******	******	******	0.004		0	01/YR	GR
34030 V 0 See Comments	PERMIT REQUIREMENT	******	******	******	******	******	1 DAILY MX	mg/L		Annual	GRAB
Ethylbenzene	SAMPLE MEASUREMENT	******	******	******	******	******	0.026		0	01/YR	GR
34371 V 0 See Comments	PERMIT REQUIREMENT	******	******	******	******	******	1 DAILY MX	mg/L		Annual	GRAB
Xylene	SAMPLE MEASUREMENT	******	******	******	******	******	0.032		0	01/YR	GR
81551 V 0 See Comments	PERMIT REQUIREMENT	******	******	******	******	******	1 DAILY MX	mg/L		Annual	GRAB

NAME/TITLE PRINCIPAL EXECUTIVE OFFICER			TELEPHONE		DATE
DAVID DAVIDOWITZ, VP	I certify under penalty of law that this document and all attachments were prepared under my direction or supervision in accordance with a system designed to assure that qualified personnel properly gather and evaluate the information submitted. Based on my inquiry of the person or persons who manage the system, or those persons directly responsible for gathering the information, the information submitted is, to the best of my knowledge and belief, true, accurate, and complete. I am aware that there are significant penalties for submitting false information, including the possibility of fine and imprisonment for knowing violations.	Warren S. Miller	917-528-9257		03/01/2010
TYPED OR PRINTED		SIGNATURE OF PRINCIPAL EXECUTIVE OFFICER OR AUTHORIZED AGENT	AREA Code	NUMBER	MM/DD/YYYY

COMMENTS AND EXPLANATION OF ANY VIOLATIONS (Reference all attachments here)
LIMITS APPLY FOR DIRECT DISCHARGE TO NEWTON CREEK. ALSO, THERE SHALL BE NO DISCHARGE OF POLYCHLORINATED BIPHENYL COMPOUNDS.

NATIONAL POLLUTANT DISCHARGE ELIMINATION SYSTEM (NPDES)
DISCHARGE MONIT G REPORT (DMR)

Form Approved
2040-0004

PERMITTEE NAME/ADDRESS *(Include Facility Name/Location if Different)*

NAME: CONSOLIDATED EDISON OF NY
ADDRESS: 4 IRVING PLACE
NEW YORK, NY 10003
FACILITY: CONSOLIDATED EDISON CO OF NY
LOCATION: 11TH ST BETWEEN 53RD AND ASH
LONG ISLAND CITY, NY 11101

ATTN: YI-CHANG SHAO

NY0201138	001-M
PERMIT NUMBER	DISCHARGE NUMBER

MONITORING PERIOD			
	MM/DD/YYYY		MM/DD/YYYY
FROM	01/01/2010	TO	01/31/2010

DMR Mailing ZIP CODE: 10003
MINOR
(SUBR 02)
GROUNDWATER INFILTRATION&STORM
External Outfall

No Discharge ☐

PARAMETER		QUANTITY OR LOADING			QUALITY OR CONCENTRATION				NO. EX	FREQUENCY OF ANALYSIS	SAMPLE TYPE
		VALUE	VALUE	UNITS	VALUE	VALUE	VALUE	UNITS			
Flow rate	SAMPLE MEASUREMENT	******	108000		******	******	******	******	0	01/30	CA
00056 1 0 Effluent Gross	PERMIT REQUIREMENT	******	Req. Mon. DAILY MX	gal/d	******	******	******	******		Monthly	CALCTD
Solids, total suspended	SAMPLE MEASUREMENT	******	******	******	******	******	7		0	01/30	GR
00530 1 0 Effluent Gross	PERMIT REQUIREMENT	******	******	******	******	******	50 DAILY MX	mg/L		Monthly	GRAB
Oil & grease	SAMPLE MEASUREMENT	******	******	******	******	******	8		0	01/30	GR
00556 1 0 Effluent Gross	PERMIT REQUIREMENT	******	******	******	******	******	15 DAILY MX	mg/L		Monthly	GRAB

NAME/TITLE PRINCIPAL EXECUTIVE OFFICER			TELEPHONE		DATE
DAVID DAVIDOWITZ VP	I certify under penalty of law that this document and all attachments were prepared under my direction or supervision in accordance with a system designed to assure that qualified personnel properly gather and evaluate the information submitted. Based on my inquiry of the person or persons who manage the system, or those persons directly responsible for gathering the information, the information submitted is, to the best of my knowledge and belief, true, accurate, and complete. I am aware that there are significant penalties for submitting false information, including the possibility of fine and imprisonment for knowing violations.	Warren D. Miller	917-526-8857		02/09/2010
TYPED OR PRINTED		SIGNATURE OF PRINCIPAL EXECUTIVE OFFICER OR AUTHORIZED AGENT	AREA Code	NUMBER	MM/DD/YYYY

COMMENTS AND EXPLANATION OF ANY VIOLATIONS (Reference all attachments here)

NATIONAL POLLUTANT DISCHARGE ELIMINATION SYSTEM (NPDES)
DISCHARGE MONITORING REPORT (DMR)

Form Approved
OMB No. 2040-0004

EPA-NC-CE-0000333

PERMITTEE NAME/ADDRESS *(Include Facility Name/Location if Different)*

NAME: CONSOLIDATED EDISON OF NY
ADDRESS: 4 IRVING PLACE
NEW YORK, NY 10003
FACILITY: CONSOLIDATED EDISON CO OF NY
LOCATION: 11TH ST BETWEEN 53RD AND ASH
LONG ISLAND CITY, NY 11101

ATTN: YI-CHANG SHAO

NY0201138	001-M
PERMIT NUMBER	DISCHARGE NUMBER

MONITORING PERIOD			
	MM/DD/YYYY		MM/DD/YYYY
FROM	01/01/2011	TO	01/31/2011

DMR Mailing ZIP CODE: 10003
MINOR
(SUBR 02)
GROUNDWATER INFILTRATION&STORM
External Outfall

No Discharge ☐

PARAMETER		QUANTITY OR LOADING			QUALITY OR CONCENTRATION				NO. EX	FREQUENCY OF ANALYSIS	SAMPLE TYPE
		VALUE	VALUE	UNITS	VALUE	VALUE	VALUE	UNITS			
Flow rate	SAMPLE MEASUREMENT	******	108,000	gal/d	******	******	******	******	0	01/30	CA
00056 1 0 Effluent Gross	PERMIT REQUIREMENT	******	Req. Mon. DAILY MX	gal/d	******	******	******	******		Monthly	CALCTD
Solids, total suspended	SAMPLE MEASUREMENT	******	******	******	******	******	13	mg/L	0	01/30	GR
00530 1 0 Effluent Gross	PERMIT REQUIREMENT	******	******	******	******	******	50 DAILY MX	mg/L		Monthly	GRAB
Oil & Grease	SAMPLE MEASUREMENT	******	******	******	******	******	< 5	mg/L	0	01/30	GR
00556 1 0 Effluent Gross	PERMIT REQUIREMENT	******	******	******	******	******	15 DAILY MX	mg/L		Monthly	GRAB

NAME/TITLE PRINCIPAL EXECUTIVE OFFICER			TELEPHONE		DATE
EDWARD FOPPIANO, VP	I certify under penalty of law that this document and all attachments were prepared under my direction or supervision in accordance with a system designed to assure that qualified personnel properly gather and evaluate the information submitted. Based on my inquiry of the person or persons who manage the system, or those persons directly responsible for gathering the information, the information submitted is, to the best of my knowledge and belief, true, accurate, and complete. I am aware that there are significant penalties for submitting false information, including the possibility of fine and imprisonment for knowing violations.	Daniel M. Foppiano	646-529-0164		02/18/2011
TYPED OR PRINTED		SIGNATURE OF PRINCIPAL EXECUTIVE OFFICER OR AUTHORIZED AGENT	AREA Code	NUMBER	MM/DD/YYYY

COMMENTS AND EXPLANATION OF ANY VIOLATIONS (Reference all attachments here)

ConEdison

SPDES Ad Hoc Report

Sample ID	Parameter	Collect date	Test date	Holding Time	Result	Unit	Prefix	Avg.Daily Result	Min Value	Avg Value	Max Value	No. Results
Permit Name:	***11th Street Conduit***											
			Outfall 001									
411059	OIL AND GREASE	01/25/2011	01/26/2011	2	5.00	ppm	<	5.00	5	5	5	1
411058	TOTAL SUSPENDED SOLIDS	01/25/2011	01/26/2011	2	13.10	ppm		13.10	13	13	13	1

EPA-NC-CE-0000334

NATIONAL POLLUTANT DISCHARGE ELIMINATION SYSTEM (NPDES)
DISCHARGE MONITORING REPORT (DMR)

Form Approved
OMB No. 2040-0004

EPA-NC-CE-0000335

PERMITTEE NAME/ADDRESS *(Include Facility Name/Location if Different)*

NAME: CONSOLIDATED EDISON OF NY
ADDRESS: 4 IRVING PLACE
NEW YORK, NY 10003
FACILITY: CONSOLIDATED EDISON CO OF NY
LOCATION: 11TH ST BETWEEN 53RD AND ASH
LONG ISLAND CITY, NY 11101

ATTN: YI-CHANG SHAO

NY0201138	001-V
PERMIT NUMBER	DISCHARGE NUMBER

MONITORING PERIOD			
	MM/DD/YYYY		MM/DD/YYYY
FROM	03/01/2010	TO	02/28/2011

DMR Mailing ZIP CODE: 10003
MINOR
(SUBR 02)
GROUNDWTR INFILTR & SW - ACT LVLS
External Outfall

No Discharge ☐

PARAMETER		QUANTITY OR LOADING			QUALITY OR CONCENTRATION				NO. EX	FREQUENCY OF ANALYSIS	SAMPLE TYPE
		VALUE	VALUE	UNITS	VALUE	VALUE	VALUE	UNITS			
Toluene	SAMPLE MEASUREMENT	*****	*****	*****	*****	*****	<0.005	mg/L	0	01/YR	GR
34010 V 0 See Comments	PERMIT REQUIREMENT	*****	*****	*****	*****	*****	1 DAILY MX	mg/L		Annual	GRAB
Benzene	SAMPLE MEASUREMENT	*****	*****	*****	*****	*****	<0.005	mg/L	0	01/YR	GR
34030 V 0 See Comments	PERMIT REQUIREMENT	*****	*****	*****	*****	*****	1 DAILY MX	mg/L		Annual	GRAB
Ethylbenzene	SAMPLE MEASUREMENT	*****	*****	*****	*****	*****	<0.005	mg/L	0	01/YR	GR
34371 V 0 See Comments	PERMIT REQUIREMENT	*****	*****	*****	*****	*****	1 DAILY MX	mg/L		Annual	GRAB
Xylene	SAMPLE MEASUREMENT	*****	*****	*****	*****	*****	<0.015	mg/L	0	01/YR	GR
81551 V 0 See Comments	PERMIT REQUIREMENT	*****	*****	*****	*****	*****	1 DAILY MX	mg/L		Annual	GRAB

NAME/TITLE PRINCIPAL EXECUTIVE OFFICER			TELEPHONE		DATE
EDWARD FOPPIANO, VP	I certify under penalty of law that this document and all attachments were prepared under my direction or supervision in accordance with a system designed to assure that qualified personnel properly gather and evaluate the information submitted. Based on my inquiry of the person or persons who manage the system, or those persons directly responsible for gathering the information, the information submitted is, to the best of my knowledge and belief, true, accurate, and complete. I am aware that there are significant penalties for submitting false information, including the possibility of fine and imprisonment for knowing violations.	SIGNATURE OF PRINCIPAL EXECUTIVE OFFICER OR AUTHORIZED AGENT	646-529-8641		03/24/2011
TYPED OR PRINTED			AREA Code	NUMBER	MM/DD/YYYY

COMMENTS AND EXPLANATION OF ANY VIOLATIONS (Reference all attachments here)
LIMITS APPLY FOR DIRECT DISCHARGE TO NEWTON CREEK. ALSO, THERE SHALL BE NO DISCHARGE OF POLYCHLORINATED BIPHENYL COMPOUNDS

NATIONAL POLLUTANT DISCHARGE ELIMINATION SYSTEM (NPDES)
DISCHARGE MONITORING REPORT (DMR)

Form Approved
OMB No. 2040-0004

EPA-NC-CE-0000336

PERMITTEE NAME/ADDRESS *(Include Facility Name/Location if Different)*

NAME: CONSOLIDATED EDISON OF NY
ADDRESS: 4 IRVING PLACE
NEW YORK, NY 10003
FACILITY: CONSOLIDATED EDISON CO OF NY
LOCATION: 11TH ST BETWEEN 53RD AND ASH
LONG ISLAND CITY, NY 11101

ATTN: YI-CHANG SHAO

NY0201138	001-M
PERMIT NUMBER	DISCHARGE NUMBER

MONITORING PERIOD			
	MM/DD/YYYY		MM/DD/YYYY
FROM	02/01/2011	TO	02/28/2011

DMR Mailing ZIP CODE: 10003
MINOR
(SUBR 02)
GROUNDWATER INFILTRATION&STORM
External Outfall

No Discharge ☐

PARAMETER		QUANTITY OR LOADING			QUALITY OR CONCENTRATION				NO. EX	FREQUENCY OF ANALYSIS	SAMPLE TYPE
		VALUE	VALUE	UNITS	VALUE	VALUE	VALUE	UNITS			
Flow rate	SAMPLE MEASUREMENT	******	108,000	gal/d	******	******	******	******	0	01/30	CA
00056 1 0 Effluent Gross	PERMIT REQUIREMENT	******	Req. Mon. DAILY MX	gal/d	******	******	******	******		Monthly	CALCTD
Solids, total suspended	SAMPLE MEASUREMENT	******	******	******	******	******	1	mg/L	0	01/30	GR
00530 1 0 Effluent Gross	PERMIT REQUIREMENT	******	******	******	******	******	50 DAILY MX	mg/L		Monthly	GRAB
Oil & Grease	SAMPLE MEASUREMENT	******	******	******	******	******	<5	mg/L	0	01/30	GR
00556 1 0 Effluent Gross	PERMIT REQUIREMENT	******	******	******	******	******	15 DAILY MX	mg/L		Monthly	GRAB

NAME/TITLE PRINCIPAL EXECUTIVE OFFICER			TELEPHONE		DATE
EDWARD FOPPIANO, VP	I certify under penalty of law that this document and all attachments were prepared under my direction or supervision in accordance with a system designed to assure that qualified personnel properly gather and evaluate the information submitted. Based on my inquiry of the person or persons who manage the system, or those persons directly responsible for gathering the information, the information submitted is, to the best of my knowledge and belief, true, accurate, and complete. I am aware that there are significant penalties for submitting false information, including the possibility of fine and imprisonment for knowing violations.	SIGNATURE OF PRINCIPAL EXECUTIVE OFFICER OR AUTHORIZED AGENT	646-529-0864		03-23-2011
TYPED OR PRINTED			AREA Code	NUMBER	MM/DD/YYYY

COMMENTS AND EXPLANATION OF ANY VIOLATIONS (Reference all attachments here)

ELAP 10380

ConEdison

SPDES Ad Hoc Report

Sample ID	Parameter	Collect date	Test date	Holding Time	Result	Unit	Prefix	Avg.Daily Result	Min Value	Avg Value	Max Value	No. Results
Permit Name:	***11th Street Conduit***											
			Outfall 001									
411210	OIL AND GREASE	02/22/2011	02/24/2011	3	5.00	ppm	<	5.00	5	5	5	1
411209	TOTAL SUSPENDED SOLIDS	02/22/2011	02/23/2011	2	1.00	ppm		1.00	1	1	1	1

EPA-NC-CE-0000337

NATIONAL POLLUTANT DISCHARGE ELIMINATION SYSTEM (NPDES)
DISCHARGE MONITORING REPORT (DMR)

Form Approved
OMB No. 2040-0004

EPA-NC-CE-0000338

PERMITTEE NAME/ADDRESS *(Include Facility Name/Location if Different)*

NAME: CONSOLIDATED EDISON OF NY
ADDRESS: 4 IRVING PLACE
NEW YORK, NY 10003
FACILITY: CONSOLIDATED EDISON CO OF NY
LOCATION: 11TH ST BETWEEN 53RD AND ASH
LONG ISLAND CITY, NY 11101

ATTN: YI-CHANG SHAO

NY0201138	001-M
PERMIT NUMBER	DISCHARGE NUMBER

MONITORING PERIOD			
	MM/DD/YYYY		MM/DD/YYYY
FROM	03/01/2011	TO	03/31/2011

DMR Mailing ZIP CODE: 10003
MINOR
(SUBR 02)
GROUNDWATER INFILTRATION&STORM
External Outfall

No Discharge ☐

PARAMETER		QUANTITY OR LOADING			QUALITY OR CONCENTRATION				NO. EX	FREQUENCY OF ANALYSIS	SAMPLE TYPE
		VALUE	VALUE	UNITS	VALUE	VALUE	VALUE	UNITS			
Flow rate	SAMPLE MEASUREMENT	*****	108,000	gal/d	*****	*****	*****	*****	0	01/30	CA
00056 1 0 Effluent Gross	PERMIT REQUIREMENT	*****	Req. Mon. DAILY MX	gal/d	*****	*****	*****	*****		Monthly	CALCTD
Solids, total suspended	SAMPLE MEASUREMENT	*****	*****	*****	*****	*****	1.0	mg/L	0	01/30	GR
00530 1 0 Effluent Gross	PERMIT REQUIREMENT	*****	*****	*****	*****	*****	50 DAILY MX	mg/L		Monthly	GRAB
Oil & Grease	SAMPLE MEASUREMENT	*****	*****	*****	*****	*****	<5.00	mg/L	0	01/30	GR
00556 1 0 Effluent Gross	PERMIT REQUIREMENT	*****	*****	*****	*****	*****	15 DAILY MX	mg/L		Monthly	GRAB

NAME/TITLE PRINCIPAL EXECUTIVE OFFICER			TELEPHONE		DATE
EDWARD FOPPIANO, VP	I certify under penalty of law that this document and all attachments were prepared under my direction or supervision in accordance with a system designed to assure that qualified personnel properly gather and evaluate the information submitted. Based on my inquiry of the person or persons who manage the system, or those persons directly responsible for gathering the information, the information submitted is, to the best of my knowledge and belief, true, accurate, and complete. I am aware that there are significant penalties for submitting false information, including the possibility of fine and imprisonment for knowing violations.	David M Foppiano	646-529-0864		04/26/2011
TYPED OR PRINTED		SIGNATURE OF PRINCIPAL EXECUTIVE OFFICER OR AUTHORIZED AGENT	AREA Code	NUMBER	MM/DD/YYYY

COMMENTS AND EXPLANATION OF ANY VIOLATIONS (Reference all attachments here)

NATIONAL POLLUTANT DISCHARGE ELIMINATION SYSTEM (NPDES)
DISCHARGE MONITORING REPORT (DMR)

Form Approved
OMB No. 2040-0004

EPA-NC-CE-0000339

PERMITTEE NAME/ADDRESS *(Include Facility Name/Location if Different)*

NAME: CONSOLIDATED EDISON OF NY
ADDRESS: 4 IRVING PLACE
NEW YORK, NY 10003
FACILITY: CONSOLIDATED EDISON CO OF NY
LOCATION: 11TH ST BETWEEN 53RD AND ASH
LONG ISLAND CITY, NY 11101

ATTN: YI-CHANG SHAO

NY0201138	001-M
PERMIT NUMBER	DISCHARGE NUMBER

MONITORING PERIOD			
	MM/DD/YYYY		MM/DD/YYYY
FROM	04/01/2011	TO	04/30/2011

DMR Mailing ZIP CODE: 10003
MINOR
(SUBR 02)
GROUNDWATER INFILTRATION&STORM
External Outfall

No Discharge ☐

PARAMETER		QUANTITY OR LOADING			QUALITY OR CONCENTRATION				NO. EX	FREQUENCY OF ANALYSIS	SAMPLE TYPE
		VALUE	VALUE	UNITS	VALUE	VALUE	VALUE	UNITS			
Flow rate	SAMPLE MEASUREMENT	******	108,000	gal/d	******	******	******	******	0	01/30	CA
00056 1 0 Effluent Gross	PERMIT REQUIREMENT	******	Rpt Mon DAILY MX	gal/d	******	******	******	******		Monthly	CALCTD
Solids, total suspended	SAMPLE MEASUREMENT	******	******	******	******	******	15	mg/L	0	01/30	GR
00530 1 0 Effluent Gross	PERMIT REQUIREMENT	******	******	******	******	******	50 DAILY MX	mg/L		Monthly	GRAB
Oil & Grease	SAMPLE MEASUREMENT	******	******	******	******	******	5.5	mg/L	0	01/30	GR
00556 1 0 Effluent Gross	PERMIT REQUIREMENT	******	******	******	******	******	15 DAILY MX	mg/L		Monthly	GRAB

NAME/TITLE PRINCIPAL EXECUTIVE OFFICER			TELEPHONE		DATE
EDWARD FOPPIANO, VP	I certify under penalty of law that this document and all attachments were prepared under my direction or supervision in accordance with a system designed to assure that qualified personnel properly gather and evaluate the information submitted. Based on my inquiry of the person or persons who manage the system, or those persons directly responsible for gathering the information, the information submitted is, to the best of my knowledge and belief, true, accurate, and complete. I am aware that there are significant penalties for submitting false information, including the possibility of fine and imprisonment for knowing violations.	Daniel M. Tellone	646	529 0864	05/26/2011
TYPED OR PRINTED		SIGNATURE OF PRINCIPAL EXECUTIVE OFFICER OR AUTHORIZED AGENT	AREA Code	NUMBER	MM/DD/YYYY

COMMENTS AND EXPLANATION OF ANY VIOLATIONS (Reference all attachments here)

NATIONAL POLLUTANT DISCHARGE ELIMINATION SYSTEM (NPDES)

DISCHARGE MONITORING REPORT (DMR)

Form Approved
OMB No. 2040-0004

EPA-NC-CE-0000340

PERMITTEE NAME/ADDRESS *(Include Facility Name/Location if Different)*

NAME: CONSOLIDATED EDISON OF NY
ADDRESS: 4 IRVING PLACE
NEW YORK, NY 10003
FACILITY: CONSOLIDATED EDISON CO OF NY
LOCATION: 11TH ST BETWEEN 53RD AND ASH
LONG ISLAND CITY, NY 11101

ATTN: YI-CHANG SHAO

NY0201138	001-M
PERMIT NUMBER	DISCHARGE NUMBER

MONITORING PERIOD			
	MM/DD/YYYY		MM/DD/YYYY
FROM	05/01/2011	TO	05/31/2011

DMR Mailing ZIP CODE: 10003
MINOR
(SUBR 02)
GROUNDWATER INFILTRATION&STORM
External Outfall

No Discharge ☐

PARAMETER		QUANTITY OR LOADING			QUALITY OR CONCENTRATION				NO. EX	FREQUENCY OF ANALYSIS	SAMPLE TYPE
		VALUE	VALUE	UNITS	VALUE	VALUE	VALUE	UNITS			
Flow rate	SAMPLE MEASUREMENT	******	108,000	gal/d	******	******	******	******	0	01/30	CA
00056 1 0 Effluent Gross	PERMIT REQUIREMENT	******	Req Mon DAILY MX	gal/d	******	******	******	******		Monthly	CALCTD
Solids, total suspended	SAMPLE MEASUREMENT	******	******	******	******	******	12	mg/L	0	01/30	GR
00530 1 0 Effluent Gross	PERMIT REQUIREMENT	******	******	******	******	******	50 DAILY MX	mg/L		Monthly	GRAB
Oil & Grease	SAMPLE MEASUREMENT	******	******	******	******	******	<5.0	mg/L	0	01/30	GR
00556 1 0 Effluent Gross	PERMIT REQUIREMENT	******	******	******	******	******	15 DAILY MX	mg/l		Monthly	GRAB

NAME/TITLE PRINCIPAL EXECUTIVE OFFICER			TELEPHONE		DATE
EDWARD FOPPIANO, VP	I certify under penalty of law that this document and all attachments were prepared under my direction or supervision in accordance with a system designed to assure that qualified personnel properly gather and evaluate the information submitted. Based on my inquiry of the person or persons who manage the system, or those persons directly responsible for gathering the information, the information submitted is, to the best of my knowledge and belief, true, accurate, and complete. I am aware that there are significant penalties for submitting false information, including the possibility of fine and imprisonment for knowing violations.	Nancy S. Miller	917	578 9757	06/24/2011
TYPED OR PRINTED		SIGNATURE OF PRINCIPAL EXECUTIVE OFFICER OR AUTHORIZED AGENT	AREA Code	NUMBER	MM/DD/YYYY

COMMENTS AND EXPLANATION OF ANY VIOLATIONS (Reference all attachments here)

FLAP 10380

conEdison
a conEdison, inc. company

Consolidated Edison Company
of New York, Inc.
4 Irving Place
New York NY 10003
www.conEd.com

EPA-NC-CE-0000341

July 25, 2011

Division of Water
Bureau of Watershed Compliance Program
New York State Department of Environmental Conservation
625 Broadway, 4th Floor
Albany, NY 12233

Re: SPDES Permit Discharge Monitoring Reports (DMRs)

Permit No.	Location
NY 0201243	Astoria Central WWTF
NY 0201154	Astoria Liquified Natural Gas Storage
NY 0201219	Astoria Tunnel Headhouse
NY 0201227	Ravenswood Tunnel Headhouse
NY 0201138	11th Street Conduit

Enclosed are DMRs for the reporting period ending on June 30, 2011 for the facilities referenced above.

Please call me at (212) 460-1399 if you have any questions regarding this submission.

Yours truly,

Maureen Gaffney
Section Manager
Environmental, Health & Safety

conEdison
a conEdison, inc. company

Consolidated Edison Company
of New York, Inc.
4 Irving Place
New York NY 10003
www.conEd.com

EPA-NC-CE-0000342

July 25, 2011

Regional Water Engineer, Region 2
New York State Department of Environmental Conservation
1Hunters Point Plaza
47-40 21st Street
Long Island City, NY 11101

Re: SPDES Permit Discharge Monitoring Reports (DMRs)

Permit No.	Location
NY 0201243	Astoria Central WWTF
NY 0201154	Astoria Liquified Natural Gas Storage
NY 0201219	Astoria Tunnel Headhouse
NY 0201227	Ravenswood Tunnel Headhouse
NY 0201138	11th Street Conduit

Enclosed are DMRs for the reporting period ending on June 30, 2011 for the facilities referenced above.

Please call me at (212) 460-1399 if you have any questions regarding this submission.

Yours truly,

Maureen Gaffney
Section Manager
Environmental, Health & Safety

NATIONAL POLLUTANT DISCHARGE ELIMINATION SYSTEM (NPDES)
DISCHARGE MONITORING REPORT (DMR)

Form Approved
OMB No. 2040-0004

EPA-NC-CE-0000343

PERMITTEE NAME/ADDRESS *(Includes Facility Name/Location if Different)*

NAME: CONSOLIDATED EDISON OF NY
ADDRESS: 4 IRVING PLACE
NEW YORK, NY 10003
FACILITY: CONSOLIDATED EDISON CO OF NY
LOCATION: 11TH ST BETWEEN 53RD AND ASH
LONG ISLAND CITY, NY 11101
ATTN: YI-CHANG SHAO

NY0201138	001-M
PERMIT NUMBER	DISCHARGE NUMBER

MONITORING PERIOD			
	MM/DD/YYYY		MM/DD/YYYY
FROM	06/01/2011	TO	06/30/2011

DMR Mailing ZIP CODE: 10003
MINOR
(SUBR 02)
GROUNDWATER INFILTRATION&STORM
External Outfall
No Discharge ☐

PARAMETER		QUANTITY OR LOADING			QUALITY OR CONCENTRATION				NO. EX	FREQUENCY OF ANALYSIS	SAMPLE TYPE
		VALUE	VALUE	UNITS	VALUE	VALUE	VALUE	UNITS			
Flow rate 00056 1 0 Effluent Gross	SAMPLE MEASUREMENT	******	108,000	gal/d	******	******	******	******	0	01/30	CA
	PERMIT REQUIREMENT	******	Req. Mon. DAILY MX	gal/d	******	******	******	******		Monthly	CALCTD
Solids, total suspended 00530 1 0 Effluent Gross	SAMPLE MEASUREMENT	******	******	******	******	******	12	mg/L	0	01/30	GR
	PERMIT REQUIREMENT	******	******	******	******	******	50 DAILY MX	mg/L		Monthly	GRAB
Oil & Grease 00556 1 0 Effluent Gross	SAMPLE MEASUREMENT	******	******	******	******	******	<5	mg/L	0	01/30	GR
	PERMIT REQUIREMENT	******	******	******	******	******	15 DAILY MX	mg/L		Monthly	GRAB

NAME/TITLE PRINCIPAL EXECUTIVE OFFICER			TELEPHONE		DATE
Edward Foffman, VP	I certify under penalty of law that this document and all attachments were prepared under my direction or supervision in accordance with a system designed to assure that qualified personnel properly gather and evaluate the information submitted. Based on my inquiry of the person or persons who manage the system, or those persons directly responsible for gathering the information, the information submitted is, to the best of my knowledge and belief, true, accurate, and complete. I am aware that there are significant penalties for submitting false information, including the possibility of fine and imprisonment for knowing violations.	Daniel M. Galpin	646	529 0864	07-18-2011
TYPED OR PRINTED		SIGNATURE OF PRINCIPAL EXECUTIVE OFFICER OR AUTHORIZED AGENT	AREA Code	NUMBER	MM/DD/YYYY

COMMENTS AND EXPLANATION OF ANY VIOLATIONS (Reference all attachments here)

FLAP 10380

conEdison
a conEdison, Inc. company

Consolidated Edison Company
of New York, Inc.
4 Irving Place
New York NY 10003
www.conEd.com

EPA-NC-CE-0000344

August 24, 2011

Division of Water
Bureau of Watershed Compliance Program
New York State Department of Environmental Conservation
625 Broadway, 4th Floor
Albany, NY 12233

Re: SPDES Permit Discharge Monitoring Reports (DMRs)

Permit No.	Location
NY 0201243	Astoria Central WWTF
NY 0201154	Astoria Liquified Natural Gas Storage
NY 0201219	Astoria Tunnel Headhouse
NY 0201227	Ravenswood Tunnel Headhouse
NY 0201138	11th Street Conduit

Enclosed are DMRs for the reporting period ending on July 31, 2011 for the facilities referenced above.

Please call me at (212) 460-1399 if you have any questions regarding this submission.

Yours truly,

Maureen Gaffney
Section Manager
Environmental, Health & Safety

conEdison
a conEdison, Inc. company

Consolidated Edison Company
of New York, Inc.
4 Irving Place
New York NY 10003
www.conEd.com

EPA-NC-CE-0000345

August 24, 2011

Regional Water Engineer, Region 2
New York State Department of Environmental Conservation
1 Hunters Point Plaza
47-40 21st Street
Long Island City, NY 11101

Re: SPDES Permit Discharge Monitoring Reports (DMRs)

Permit No.	Location
NY 0201243	Astoria Central WWTF
NY 0201154	Astoria Liquified Natural Gas Storage
NY 0201219	Astoria Tunnel Headhouse
NY 0201227	Ravenswood Tunnel Headhouse
NY 0201138	11th Street Conduit

Enclosed are DMRs for the reporting period ending on July 31, 2011 for the facilities referenced above.

Please call me at (212) 460-1399 if you have any questions regarding this submission.

Yours truly,

Maureen Gaffney
Section Manager
Environmental, Health & Safety

NATIONAL POLLUTANT DISCHARGE ELIMINATION SYSTEM (NPDES)
DISCHARGE MONITORING REPORT (DMR)

Form Approved
OMB No. 2040-0004

PERMITTEE NAME/ADDRESS *(Include Facility Name/Location If Different)*

NAME: CONSOLIDATED EDISON OF NY
ADDRESS: 4 IRVING PLACE
NEW YORK, NY 10003
FACILITY: CONSOLIDATED EDISON CO OF NY
LOCATION: 11TH ST BETWEEN 53RD AND ASH
LONG ISLAND CITY, NY 11101

ATTN: YI-CHANG SHAO

NY0201138	001-M
PERMIT NUMBER	DISCHARGE NUMBER

MONITORING PERIOD			
	MM/DD/YYYY		MM/DD/YYYY
FROM	07/01/2011	TO	07/31/2011

DMR Mailing ZIP CODE: 10003
MINOR
(SUBR 02)
GROUNDWATER INFILTRATION&STORM
External Outfall

No Discharge ☐

PARAMETER		QUANTITY OR LOADING			QUALITY OR CONCENTRATION				NO. EX	FREQUENCY OF ANALYSIS	SAMPLE TYPE
		VALUE	VALUE	UNITS	VALUE	VALUE	VALUE	UNITS			
Flow rate	SAMPLE MEASUREMENT	******	108,000	gal/d	******	******	******	******	0	01/30	Calc
00056 1 0 Effluent Gross	PERMIT REQUIREMENT	******	Req. Mon. DAILY MX	gal/d	******	******	******	******		Monthly	CALCTD
Solids, total suspended	SAMPLE MEASUREMENT	******	******	******	******	******	10	mg/L	0	01/30	Grab
00530 1 0 Effluent Gross	PERMIT REQUIREMENT	******	******	******	******	******	50 DAILY MX	mg/L		Monthly	GRAB
Oil & Grease	SAMPLE MEASUREMENT	******	******	******	******	******	<5	mg/L	0	01/30	Grab
00556 1 0 Effluent Gross	PERMIT REQUIREMENT	******	******	******	******	******	15 DAILY MX	mg/L		Monthly	GRAB

NAME/TITLE PRINCIPAL EXECUTIVE OFFICER			TELEPHONE		DATE
Edward Foppiano, VP	I certify under penalty of law that this document and all attachments were prepared under my direction or supervision in accordance with a system designed to assure that qualified personnel properly gather and evaluate the information submitted. Based on my inquiry of the person or persons who manage the system, or those persons directly responsible for gathering the information, the information submitted is, to the best of my knowledge and belief, true, accurate, and complete. I am aware that there are significant penalties for submitting false information, including the possibility of fine and imprisonment for knowing violations.	Warren S. Miller	917	5789757	08/17/2011
TYPED OR PRINTED		SIGNATURE OF PRINCIPAL EXECUTIVE OFFICER OR AUTHORIZED AGENT	AREA Code	NUMBER	MM/DD/YYYY

COMMENTS AND EXPLANATION OF ANY VIOLATIONS (Reference all attachments here)

ELAP ID IS 10380

EPA-NC-CE-0000346

conEdison
a conEdison, inc. company

Consolidated Edison Company
of New York, Inc.
4 Irving Place
New York NY 10003
www.conEd.com

EPA-NC-CE-0000347

September 22, 2011

Division of Water
Bureau of Watershed Compliance Program
New York State Department of Environmental Conservation
625 Broadway, 4th Floor
Albany, NY 12233

Re: SPDES Permit Discharge Monitoring Reports (DMRs)

Permit No.	Location
NY 0201243	Astoria Central WWTF
NY 0201154	Astoria Liquified Natural Gas Storage
NY 0201219	Astoria Tunnel Headhouse
NY 0201227	Ravenswood Tunnel Headhouse
NY 0201138	11th Street Conduit

Enclosed are DMRs for the reporting period ending on August 31, 2011 for the facilities referenced above.

Please call me at (212) 460-1399 if you have any questions regarding this submission.

Yours truly,

Maureen Gaffney
Section Manager
Environmental, Health & Safety

conEdison
a conEdison, inc. company

Consolidated Edison Company
of New York, Inc.
4 Irving Place
New York NY 10003
www.conEd.com

EPA-NC-CE-0000348

September 22, 2011

Regional Water Engineer, Region 2
New York State Department of Environmental Conservation
1 Hunters Point Plaza
47-40 21st Street
Long Island City, NY 11101

Re: SPDES Permit Discharge Monitoring Reports (DMRs)

Permit No.	Location
NY 0201243	Astoria Central WWTF
NY 0201154	Astoria Liquified Natural Gas Storage
NY 0201219	Astoria Tunnel Headhouse
NY 0201227	Ravenswood Tunnel Headhouse
NY 0201138	11th Street Conduit

Enclosed are DMRs for the reporting period ending on August 31, 2011 for the facilities referenced above.

Please call me at (212) 460-1399 if you have any questions regarding this submission.

Yours truly,

Maureen Gaffney
Section Manager
Environmental, Health & Safety

NATIONAL POLLUTANT DISCHARGE ELIMINATION SYSTEM (NPDES)
DISCHARGE MONITORING REPORT (DMR)

Form Approved
OMB No. 2040-0004

EPA-NC-CE-0000349

PERMITTEE NAME/ADDRESS *(Include Facility Name/Location if Different)*

NAME: CONSOLIDATED EDISON OF NY
ADDRESS: 4 IRVING PLACE
NEW YORK, NY 10003
FACILITY: CONSOLIDATED EDISON CO OF NY
LOCATION: 11TH ST BETWEEN 53RD AND ASH
LONG ISLAND CITY, NY 11101

ATTN: YI-CHANG SHAO

NY0201138	001-M
PERMIT NUMBER	DISCHARGE NUMBER

MONITORING PERIOD			
	MM/DD/YYYY		MM/DD/YYYY
FROM	08/01/2011	TO	08/31/2011

DMR Mailing ZIP CODE: 10003
MINOR
(SUBR 02)
GROUNDWATER INFILTRATION&STORM
External Outfall

No Discharge ☐

PARAMETER		QUANTITY OR LOADING			QUALITY OR CONCENTRATION				NO. EX	FREQUENCY OF ANALYSIS	SAMPLE TYPE
		VALUE	VALUE	UNITS	VALUE	VALUE	VALUE	UNITS			
Flow rate	SAMPLE MEASUREMENT	******	108 000	gal/d	******	******	******	******	0	01/30	Calc
00056 1 0 Effluent Gross	PERMIT REQUIREMENT	******	Req. Mon. DAILY MX	gal/d	******	******	******	******		Monthly	CALCTD
Solids, total suspended	SAMPLE MEASUREMENT	******	******	******	******	******	23	mg/L	0	01/30	Grab
00530 1 0 Effluent Gross	PERMIT REQUIREMENT	******	******	******	******	******	50 DAILY MX	mg/L		Monthly	GRAB
Oil & Grease	SAMPLE MEASUREMENT	******	******	******	******	******	<5	mg/L	0	01/30	Grab
00556 1 0 Effluent Gross	PERMIT REQUIREMENT	******	******	******	******	******	15 DAILY MX	mg/L		Monthly	GRAB

NAME/TITLE PRINCIPAL EXECUTIVE OFFICER			TELEPHONE		DATE
Edward Foppiano VP	I certify under penalty of law that this document and all attachments were prepared under my direction or supervision in accordance with a system designed to assure that qualified personnel properly gather and evaluate the information submitted. Based on my inquiry of the person or persons who manage the system, or those persons directly responsible for gathering the information, the information submitted is, to the best of my knowledge and belief, true, accurate, and complete. I am aware that there are significant penalties for submitting false information, including the possibility of fine and imprisonment for knowing violations.	Warren S. Miller	917 - 578 - 9757		09/12/2011
TYPED OR PRINTED		SIGNATURE OF PRINCIPAL EXECUTIVE OFFICER OR AUTHORIZED AGENT	AREA Code	NUMBER	MM/DD/YYYY

COMMENTS AND EXPLANATION OF ANY VIOLATIONS (Reference all attachments here)

ELAP ID is 10380

conEdison
a conEdison, Inc. company

Consolidated Edison Company
of New York, Inc.
4 Irving Place
New York NY 10003
www.conEd.com

EPA-NC-CE-0000350

October 27, 2011

Division of Water
Bureau of Watershed Compliance Program
New York State Department of Environmental Conservation
625 Broadway, 4th Floor
Albany, NY 12233

Re: SPDES Permit Discharge Monitoring Reports (DMRs)

Permit No.	Location
NY 0201243	Astoria Central WWTF
NY 0201154	Astoria Liquified Natural Gas Storage
NY 0201219	Astoria Tunnel Headhouse
NY 0201227	Ravenswood Tunnel Headhouse
NY 0201138	11th Street Conduit

Enclosed are DMRs for the reporting period ending on September 30, 2011 for the facilities referenced above.

Please call me at (212) 460-1399 if you have any questions regarding this submission.

Yours truly,

for Maureen Gaffney
Section Manager
Environmental, Health & Safety

conEdison
a conEdison, inc. company

Consolidated Edison Company
of New York, Inc.
4 Irving Place
New York NY 10003
www.conEd.com

EPA-NC-CE-0000351

October 27, 2011

Regional Water Engineer, Region 2
New York State Department of Environmental Conservation
1 Hunters Point Plaza
47-40 21st Street
Long Island City, NY 11101

Re: SPDES Permit Discharge Monitoring Reports (DMRs)

Permit No.	Location
NY 0201243	Astoria Central WWTF
NY 0201154	Astoria Liquified Natural Gas Storage
NY 0201219	Astoria Tunnel Headhouse
NY 0201227	Ravenswood Tunnel Headhouse
NY 0201138	11th Street Conduit

Enclosed are DMRs for the reporting period ending on September 30, 2011 for the facilities referenced above.

Please call me at (212) 460-1399 if you have any questions regarding this submission.

Yours truly,

for

Maureen Gaffney
Section Manager
Environmental, Health & Safety

EPA-NC-CE-0000352

NATIONAL POLLUTANT DISCHARGE ELIMINATION SYSTEM (NPDES)
DISCHARGE MONITORING REPORT (DMR)

Form Approved
OMB No. 2040-0004

PERMITTEE NAME/ADDRESS *(Include Facility Name/Location if Different)*

NAME: CONSOLIDATED EDISON OF NY
ADDRESS: 4 IRVING PLACE
NEW YORK, NY 10003
FACILITY: CONSOLIDATED EDISON CO OF NY
LOCATION: 11TH ST BETWEEN 53RD AND ASH
LONG ISLAND CITY, NY 11101

ATTN: YI-CHANG SHAO

NY0201138	001-M
PERMIT NUMBER	DISCHARGE NUMBER

MONITORING PERIOD			
	MM/DD/YYYY		MM/DD/YYYY
FROM	09/01/2011	TO	09/30/2011

DMR Mailing ZIP CODE: 10003
MINOR
(SUBR 02)
GROUNDWATER INFILTRATION&STORM
External Outfall
No Discharge ☐

PARAMETER		QUANTITY OR LOADING			QUALITY OR CONCENTRATION				NO. EX	FREQUENCY OF ANALYSIS	SAMPLE TYPE
		VALUE	VALUE	UNITS	VALUE	VALUE	VALUE	UNITS			
Flow rate	SAMPLE MEASUREMENT	******	108,000	gal/d	******	******	******	******	0	01/30	Calc
00056 1 0 Effluent Gross	PERMIT REQUIREMENT	******	Rec Mon DAILY MX	gal/d	******	******	******	******		Monthly	CALCTD
Solids, total suspended	SAMPLE MEASUREMENT	******	******	******	******	******	17	mg/L	0	01/30	Grab
00530 1 0 Effluent Gross	PERMIT REQUIREMENT	******	******	******	******	******	50 DAILY MX	mg/L		Monthly	GRAB
Oil & Grease	SAMPLE MEASUREMENT	******	******	******	******	******	5	mg/L	0	01/30	Grab
00556 1 0 Effluent Gross	PERMIT REQUIREMENT	******	******	******	******	******	15 DAILY MX	mg/L		Monthly	GRAB

NAME/TITLE PRINCIPAL EXECUTIVE OFFICER			TELEPHONE		DATE
Edward Foppiano VP	I certify under penalty of law that this document and all attachments were prepared under my direction or supervision in accordance with a system designed to assure that qualified personnel properly gather and evaluate the information submitted. Based on my inquiry of the person or persons who manage the system, or those persons directly responsible for gathering the information, the information submitted is, to the best of my knowledge and belief, true, accurate, and complete. I am aware that there are significant penalties for submitting false information, including the possibility of fine and imprisonment for knowing violations.	Warren S. Miller	917- 578 -9757		10-26-2011
TYPED OR PRINTED		SIGNATURE OF PRINCIPAL EXECUTIVE OFFICER OR AUTHORIZED AGENT	AREA Code	NUMBER	MM/DD/YYYY

COMMENTS AND EXPLANATION OF ANY VIOLATIONS (Reference all attachments here)

ELAP ID 15 10380

conEdison
a conEdison, inc. company

Consolidated Edison Company
of New York, Inc.
4 Irving Place
New York NY 10003
www.conEd.com

EPA-NC-CE-0000353

November 22, 2011

Division of Water
Bureau of Watershed Compliance Program
New York State Department of Environmental Conservation
625 Broadway, 4th Floor
Albany, NY 12233

Re: SPDES Permit Discharge Monitoring Reports (DMRs)

Permit No.	Location
NY 0201243	Astoria Central WWTF
NY 0201154	Astoria Liquified Natural Gas Storage
NY 0201219	Astoria Tunnel Headhouse
NY 0201227	Ravenswood Tunnel Headhouse
NY 0201138	11th Street Conduit

Enclosed are DMRs for the reporting period ending on October 31, 2011 for the facilities referenced above.

Please call me at (212) 460-1399 if you have any questions regarding this submission.

Yours truly,

Maureen Gaffney
Section Manager
Environmental, Health & Safety

conEdison
a conEdison, inc. company

Consolidated Edison Company
of New York, Inc.
4 Irving Place
New York NY 10003
www.conEd.com

EPA-NC-CE-0000354

November 22, 2011

Regional Water Engineer, Region 2
New York State Department of Environmental Conservation
1 Hunters Point Plaza
47-40 21st Street
Long Island City, NY 11101

Re: SPDES Permit Discharge Monitoring Reports (DMRs)

Permit No.	Location
NY 0201243	Astoria Central WWTF
NY 0201154	Astoria Liquified Natural Gas Storage
NY 0201219	Astoria Tunnel Headhouse
NY 0201227	Ravenswood Tunnel Headhouse
NY 0201138	11th Street Conduit

Enclosed are DMRs for the reporting period ending on October 31, 2011 for the facilities referenced above.

Please call me at (212) 460-1399 if you have any questions regarding this submission.

Yours truly,

Maureen Gaffney
Section Manager
Environmental, Health & Safety

NATIONAL POLLUTANT DISCHARGE ELIMINATION SYSTEM (NPDES)
DISCHARGE MONITORING REPORT (DMR)

Form Approved
OMB No. 2040-0004

PERMITTEE NAME/ADDRESS *(Include Facility Name/Location if Different)*

NAME: CONSOLIDATED EDISON OF NY
ADDRESS: 4 IRVING PLACE
NEW YORK, NY 10003
FACILITY: CONSOLIDATED EDISON CO OF NY
LOCATION: 11TH ST BETWEEN 53RD AND ASH
LONG ISLAND CITY, NY 11101
ATTN: YI-CHANG SHAO

NY0201138	001-M
PERMIT NUMBER	DISCHARGE NUMBER

MONITORING PERIOD			
	MM/DD/YYYY		MM/DD/YYYY
FROM	10/01/2011	TO	10/31/2011

DMR Mailing ZIP CODE: 10003
MINOR
(SUBR 02)
GROUNDWATER INFILTRATION&STORM
External Outfall
No Discharge ☐

PARAMETER		QUANTITY OR LOADING			QUALITY OR CONCENTRATION				NO. EX	FREQUENCY OF ANALYSIS	SAMPLE TYPE
		VALUE	VALUE	UNITS	VALUE	VALUE	VALUE	UNITS			
Flow rate	SAMPLE MEASUREMENT	*****	108000	gal/d	*****	*****	*****	*****	0	01/30	CA
00056 1 0 Effluent Gross	PERMIT REQUIREMENT	*****	Req. Mon. DAILY MX	gal/d	*****	*****	*****	*****		Monthly	CALCTD
Solids, total suspended	SAMPLE MEASUREMENT	*****	*****	*****	*****	*****	9	mg/L	0	01/30	GR
00530 1 0 Effluent Gross	PERMIT REQUIREMENT	*****	*****	*****	*****	*****	50 DAILY MX	mg/L		Monthly	GRAB
Oil & Grease	SAMPLE MEASUREMENT	*****	*****	*****	*****	*****	<5	mg/L	0	01/30	GR
00556 1 0 Effluent Gross	PERMIT REQUIREMENT	*****	*****	*****	*****	*****	15 DAILY MX	mg/L		Monthly	GRAB

NAME/TITLE PRINCIPAL EXECUTIVE OFFICER			TELEPHONE	DATE
Edward Fioppiano VP	I certify under penalty of law that this document and all attachments were prepared under my direction or supervision in accordance with a system designed to assure that qualified personnel properly gather and evaluate the information submitted. Based on my inquiry of the person or persons who manage the system, or those persons directly responsible for gathering the information, the information submitted is, to the best of my knowledge and belief, true, accurate, and complete. I am aware that there are significant penalties for submitting false information, including the possibility of fine and imprisonment for knowing violations.	Warren S. Miller	917.578 9757	11-18-2011
TYPED OR PRINTED		SIGNATURE OF PRINCIPAL EXECUTIVE OFFICER OR AUTHORIZED AGENT	AREA Code / NUMBER	MM/DD/YYYY

COMMENTS AND EXPLANATION OF ANY VIOLATIONS (Reference all attachments here)

ELAP ID is 10380

EPA-NC-CE-000355

conEdison
a conEdison, inc. company

Consolidated Edison Company
of New York, Inc.
4 Irving Place
New York NY 10003
www.conEd.com

EPA-NC-CE-0000356

December 20, 2011

Division of Water
Bureau of Watershed Compliance Program
New York State Department of Environmental Conservation
625 Broadway, 4th Floor
Albany, NY 12233

Re: SPDES Permit Discharge Monitoring Reports (DMRs)

Permit No.	Location
NY 0201243	Astoria Central WWTF
NY 0201154	Astoria Liquified Natural Gas Storage
NY 0201219	Astoria Tunnel Headhouse
NY 0201227	Ravenswood Tunnel Headhouse
NY 0201138	11th Street Conduit

Enclosed are DMRs for the reporting period ending on November 30, 2011 for the facilities referenced above.

Please call me at (212) 460-4005 if you have any questions regarding this submission.

Yours truly,

Richard J Knob
Senior Scientist
Environmental, Health & Safety

conEdison
a conEdison, inc. company

Consolidated Edison Company
of New York, Inc.
4 Irving Place
New York NY 10003
www.conEd.com

EPA-NC-CE-0000357

December 20, 2011

Regional Water Engineer, Region 2
New York State Department of Environmental Conservation
1 Hunters Point Plaza
47-40 21st Street
Long Island City, NY 11101

Re: SPDES Permit Discharge Monitoring Reports (DMRs)

Permit No.	Location
NY 0201243	Astoria Central WWTF
NY 0201154	Astoria Liquified Natural Gas Storage
NY 0201219	Astoria Tunnel Headhouse
NY 0201227	Ravenswood Tunnel Headhouse
NY 0201138	11th Street Conduit

Enclosed are DMRs for the reporting period ending on November 30, 2011 for the facilities referenced above.

Please call me at (212) 460-4005 if you have any questions regarding this submission.

Yours truly,

Richard J Knob
Senior Scientist
Environmental, Health & Safety

NATIONAL POLLUTANT DISCHARGE ELIMINATION SYSTEM (NPDES)
DISCHARGE MONITORING REPORT (DMR)

Form Approved
OMB No. 2040-0004

PERMITTEE NAME/ADDRESS *(Include Facility Name/Location if Different)*

NAME: CONSOLIDATED EDISON OF NY
ADDRESS: 4 IRVING PLACE
NEW YORK, NY 10003
FACILITY: CONSOLIDATED EDISON CO OF NY
LOCATION: 11TH ST BETWEEN 53RD AND ASH
LONG ISLAND CITY, NY 11101
ATTN: YI-CHANG SHAO

NY0201138	001-M
PERMIT NUMBER	DISCHARGE NUMBER

MONITORING PERIOD	MM/DD/YYYY		MM/DD/YYYY
FROM	11/01/2011	TO	11/30/2011

DMR Mailing ZIP CODE: 10003
MINOR
(SUBR 02)
GROUNDWATER INFILTRATION&STORM
External Outfall

No Discharge ☐

PARAMETER		QUANTITY OR LOADING			QUALITY OR CONCENTRATION				NO. EX	FREQUENCY OF ANALYSIS	SAMPLE TYPE
		VALUE	VALUE	UNITS	VALUE	VALUE	VALUE	UNITS			
Flow rate	SAMPLE MEASUREMENT	******	108000	gal/d	******	******	******	******	0	01/30	CA
00056 1 0 Effluent Gross	PERMIT REQUIREMENT	******	Req. Mon. DAILY MX	gal/d	******	******	******	******		Monthly	CALCTD
Solids, total suspended	SAMPLE MEASUREMENT	******	******	******	******	******	37	mg/l	0	01/30	GR
00530 1 0 Effluent Gross	PERMIT REQUIREMENT	******	******	******	******	******	50 DAILY MX	mg/L		Monthly	GRAB
Oil & Grease	SAMPLE MEASUREMENT	******	******	******	******	******	< 5	mg/l	0	01/30	GR
00556 1 0 Effluent Gross	PERMIT REQUIREMENT	******	******	******	******	******	15 DAILY MX	mg/L		Monthly	GRAB

NAME/TITLE PRINCIPAL EXECUTIVE OFFICER			TELEPHONE		DATE
Edward Foppiano, VP	I certify under penalty of law that this document and all attachments were prepared under my direction or supervision in accordance with a system designed to assure that qualified personnel properly gather and evaluate the information submitted. Based on my inquiry of the person or persons who manage the system, or those persons directly responsible for gathering the information, the information submitted is, to the best of my knowledge and belief, true, accurate, and complete. I am aware that there are significant penalties for submitting false information, including the possibility of fine and imprisonment for knowing violations.	Warren S. Miller	917-548-9757		12/14/2011
TYPED OR PRINTED		SIGNATURE OF PRINCIPAL EXECUTIVE OFFICER OR AUTHORIZED AGENT	AREA Code	NUMBER	MM/DD/YYYY

COMMENTS AND EXPLANATION OF ANY VIOLATIONS (Reference all attachments here)

ELAP ID is 10380

EPA-NC-CE-0000358

conEdison
a conEdison, inc. company

Consolidated Edison Company
of New York, Inc.
4 Irving Place
New York NY 10003
www.conEd.com

EPA-NC-CE-0000359

January 24, 2012

Division of Water
Bureau of Watershed Compliance Program
New York State Department of Environmental Conservation
625 Broadway, 4th Floor
Albany, NY 12233

Re: SPDES Permit Discharge Monitoring Reports (DMRs)

Permit No.	Location
NY 0201243	Astoria Central WWTF
NY 0201154	Astoria Liquefied Natural Gas Storage
NY 0201219	Astoria Tunnel Headhouse
NY 0201227	Ravenswood Tunnel Headhouse
NY 0201138	11th Street Conduit

Enclosed are DMRs for the reporting period ending on December 31, 2011 for the facilities referenced above.

Astoria Central WWTF (NY 0201243) and the Astoria Liquefied Natural Gas Storage facility (NY 0201154) have been approved to use water treatment chemicals (WTC). However, neither facility utilized these WTCs during the year 2011.

Please call me at (212) 460-4005 if you have any questions regarding this submission.

Yours truly,

Richard J. Knob

Richard J Knob
Senior Scientist
Environment, Health & Safety

conEdison
a conEdison, inc. company

Consolidated Edison Company
of New York, Inc.
4 Irving Place
New York NY 10003
www.conEd.com

EPA-NC-CE-0000360

January 24, 2012

Regional Water Engineer, Region 2
New York State Department of Environmental Conservation
1 Hunters Point Plaza
47-40 21st Street
Long Island City, NY 11101

Re: SPDES Permit Discharge Monitoring Reports (DMRs)

Permit No.	Location
NY 0201243	Astoria Central WWTF
NY 0201154	Astoria Liquified Natural Gas Storage
NY 0201219	Astoria Tunnel Headhouse
NY 0201227	Ravenswood Tunnel Headhouse
NY 0201138	11th Street Conduit

Enclosed are DMRs for the reporting period ending on December 31, 2011 for the facilities referenced above.

Please call me at (212) 460-4005 if you have any questions regarding this submission.

Astoria Central WWTF (NY 0201243) and the Astoria Liquified Natural Gas Storage facility (NY 0201154) have been approved to use water treatment chemicals (WTC). However, neither facility utilized these WTCs during the year 2011.

Yours truly,

Richard J. Knob

Richard J Knob
Senior Scientist
Environment, Health & Safety

NATIONAL POLLUTANT DISCHARGE ELIMINATION SYSTEM (NPDES)

DISCHARGE MONITORING REPORT (DMR)

Form Approved
OMB No. 2040-0004

EPA-NC-CE-0000361

PERMITTEE NAME/ADDRESS *(Include Facility Name/Location if Different)*

NAME: CONSOLIDATED EDISON OF NY
ADDRESS: 4 IRVING PLACE, RM 300
NEW YORK, NY 10003
FACILITY: CONSOLIDATED EDISON CO OF NY
LOCATION: 11TH ST BETWEEN 53RD & ASH
LONG ISLAND CITY, NY 11101

ATTN: YI-CHANG SHAO

NY0201138	001-M
PERMIT NUMBER	DISCHARGE NUMBER

MONITORING PERIOD			
	MM/DD/YYYY		MM/DD/YYYY
FROM	12/01/2011	TO	12/31/2011

DMR Mailing ZIP CODE: 10003
MINOR
(SUBR 02)
GROUNDWATER INFILTRATION&STORM
External Outfall

No Discharge ☐

PARAMETER		QUANTITY OR LOADING			QUALITY OR CONCENTRATION				NO. EX	FREQUENCY OF ANALYSIS	SAMPLE TYPE
		VALUE	VALUE	UNITS	VALUE	VALUE	VALUE	UNITS			
Flow rate	SAMPLE MEASUREMENT	******	108000	gal/d	******	******	******	******	0	01/30	CA
00056 1 0 Effluent Gross	PERMIT REQUIREMENT	******	Req. Mon DAILY MX	gal/d	******	******	******	******		Monthly	CALCTD
Solids, total suspended	SAMPLE MEASUREMENT	******	******	******	******	******	13	mg/L	0	01/30	GR
00530 1 0 Effluent Gross	PERMIT REQUIREMENT	******	******	******	******	******	50 DAILY MX	mg/L		Monthly	GRAB
Oil & Grease	SAMPLE MEASUREMENT	******	******	******	******	******	5	mg/L	0	01/30	GR
00556 1 0 Effluent Gross	PERMIT REQUIREMENT	******	******	******	******	******	15 DAILY MX	mg/L		Monthly	GRAB

NAME/TITLE PRINCIPAL EXECUTIVE OFFICER			TELEPHONE		DATE
Edward Foppiano, VP	I certify under penalty of law that this document and all attachments were prepared under my direction or supervision in accordance with a system designed to assure that qualified personnel properly gather and evaluate the information submitted. Based on my inquiry of the person or persons who manage the system, or those persons directly responsible for gathering the information, the information submitted is, to the best of my knowledge and belief, true, accurate, and complete. I am aware that there are significant penalties for submitting false information, including the possibility of fine and imprisonment for knowing violations.	Warren S. Miller	917	578-9757	01/17/2012
TYPED OR PRINTED		SIGNATURE OF PRINCIPAL EXECUTIVE OFFICER OR AUTHORIZED AGENT	AREA Code	NUMBER	MM/DD/YYYY

COMMENTS AND EXPLANATION OF ANY VIOLATIONS (Reference all attachments here)

ELAP ID is 10380

conEdison
a conEdison, inc. company

Consolidated Edison Company
of New York, Inc.
4 Irving Place
New York NY 10003
www.conEd.com

EPA-NC-CE-0000362

February 24, 2012

Division of Water
Bureau of Watershed Compliance Program
New York State Department of Environmental Conservation
625 Broadway, 4th Floor
Albany, NY 12233

Re: SPDES Permit Discharge Monitoring Reports (DMRs)

Permit No.	Location
NY 0201243	Astoria Central WWTF
NY 0201154	Astoria Liquified Natural Gas Storage
NY 0201219	Astoria Tunnel Headhouse
NY 0201227	Ravenswood Tunnel Headhouse
NY 0201138	11th Street Conduit

Enclosed are DMRs for the reporting period ending on January 31, 2012 for the facilities referenced above.

Please call me at (212) 460-4005 if you have any questions regarding this submission.

Yours truly,

Richard J. Knob

Richard J Knob
Senior Scientist
Environment, Health & Safety

conEdison
a conEdison, inc. company

Consolidated Edison Company
of New York, Inc.
4 Irving Place
New York NY 10003
www.conEd.com

EPA-NC-CE-0000363

February 24, 2012

Regional Water Engineer, Region 2
New York State Department of Environmental Conservation
1 Hunters Point Plaza
47-40 21st Street
Long Island City, NY 11101

Re: SPDES Permit Discharge Monitoring Reports (DMRs)

Permit No.	Location
NY 0201243	Astoria Central WWTF
NY 0201154	Astoria Liquified Natural Gas Storage
NY 0201219	Astoria Tunnel Headhouse
NY 0201227	Ravenswood Tunnel Headhouse
NY 0201138	11th Street Conduit

Enclosed are DMRs for the reporting period ending on January 31, 2012 for the facilities referenced above.

Please call me at (212) 460-4005 if you have any questions regarding this submission.

Yours truly,

Richard J Knob
Senior Scientist
Environment, Health & Safety

NATIONAL POLLUTANT DISCHARGE ELIMINATION SYSTEM (NPDES)
DISCHARGE MONITORING REPORT (DMR)

Form Approved
OMB No. 2040-0004

EPA-NC-CE-0000364

PERMITTEE NAME/ADDRESS *(Include Facility Name/Location if Different)*

NAME: CONSOLIDATED EDISON OF NY
ADDRESS: 4 IRVING PLACE, RM 300
NEW YORK, NY 10003
FACILITY: CONSOLIDATED EDISON CO OF NY
LOCATION: 11TH ST BETWEEN 53RD & ASH
LONG ISLAND CITY, NY 11101

ATTN: YI-CHANG SHAO

NY0201138	001-M
PERMIT NUMBER	DISCHARGE NUMBER

MONITORING PERIOD			
	MM/DD/YYYY		MM/DD/YYYY
FROM	01/01/2012	TO	01/31/2012

DMR Mailing ZIP CODE: 10003
MINOR
(SUBR 02)
GROUNDWATER INFILTRATION&STORM
External Outfall

No Discharge ☐

PARAMETER		QUANTITY OR LOADING			QUALITY OR CONCENTRATION				NO. EX	FREQUENCY OF ANALYSIS	SAMPLE TYPE
		VALUE	VALUE	UNITS	VALUE	VALUE	VALUE	UNITS			
Flow rate	SAMPLE MEASUREMENT	*****	108000	gal/d	*****	*****	*****	*****	0	01/30	CA
00056 1 0 Effluent Gross	PERMIT REQUIREMENT	*****	Req. Mon. DAILY MX	gal/d	*****	*****	*****	*****		Monthly	CALCTD
Solids, total suspended	SAMPLE MEASUREMENT	*****	*****	*****	*****	*****	5	mg/L	0	01/30	GR
00530 1 0 Effluent Gross	PERMIT REQUIREMENT	*****	*****	*****	*****	*****	50 DAILY MX	mg/L		Monthly	GRAB
Oil & Grease	SAMPLE MEASUREMENT	*****	*****	*****	*****	*****	<5	mg/L	0	01/30	GR
00556 1 0 Effluent Gross	PERMIT REQUIREMENT	*****	*****	*****	*****	*****	15 DAILY MX	mg/L		Monthly	GRAB

NAME/TITLE PRINCIPAL EXECUTIVE OFFICER			TELEPHONE		DATE
Edward Foppiano, VP	I certify under penalty of law that this document and all attachments were prepared under my direction or supervision in accordance with a system designed to assure that qualified personnel properly gather and evaluate the information submitted. Based on my inquiry of the person or persons who manage the system, or those persons directly responsible for gathering the information, the information submitted is, to the best of my knowledge and belief, true, accurate, and complete. I am aware that there are significant penalties for submitting false information, including the possibility of fine and imprisonment for knowing violations.	Darren S. Miller	917-518-9757		02/16/2012
TYPED OR PRINTED		SIGNATURE OF PRINCIPAL EXECUTIVE OFFICER OR AUTHORIZED AGENT	AREA Code	NUMBER	MM/DD/YYYY

COMMENTS AND EXPLANATION OF ANY VIOLATIONS (Reference all attachments here)

ELAP ID is 10380

conEdison
a conEdison, Inc. company

Consolidated Edison Company
of New York, Inc.
4 Irving Place
New York NY 10003
www.conEd.com

EPA-NC-CE-0000365

March 22, 2012

Division of Water
Bureau of Watershed Compliance Program
New York State Department of Environmental Conservation
625 Broadway, 4th Floor
Albany, NY 12233

Re: SPDES Permit Discharge Monitoring Reports (DMRs)

Permit No.	Location
NY 0201243	Astoria Central WWTF
NY 0201154	Astoria Liquified Natural Gas Storage
NY 0201219	Astoria Tunnel Headhouse
NY 0201227	Ravenswood Tunnel Headhouse
NY 0201138	11th Street Conduit

Enclosed are DMRs for the reporting period ending on February 29, 2012 for the facilities referenced above.

Please call me at (212) 460-4005 if you have any questions regarding this submission.

Yours truly,

Richard J. Knob

Richard J Knob
Senior Scientist
Environment, Health & Safety

conEdison
a conEdison, inc. company

Consolidated Edison Company
of New York, Inc.
4 Irving Place
New York NY 10003
www.conEd.com

EPA-NC-CE-0000366

March 22, 2012

Regional Water Engineer, Region 2
New York State Department of Environmental Conservation
1 Hunters Point Plaza
47-40 21st Street
Long Island City, NY 11101

Re: SPDES Permit Discharge Monitoring Reports (DMRs)

Permit No.	Location
NY 0201243	Astoria Central WWTF
NY 0201154	Astoria Liquified Natural Gas Storage
NY 0201219	Astoria Tunnel Headhouse
NY 0201227	Ravenswood Tunnel Headhouse
NY 0201138	11th Street Conduit

Enclosed are DMRs for the reporting period ending on February 29, 2012 for the facilities referenced above.

Please call me at (212) 460-4005 if you have any questions regarding this submission.

Yours truly,

Richard J. Knob

Richard J Knob
Senior Scientist
Environment, Health & Safety

NATIONAL POLLUTANT DISCHARGE ELIMINATION SYSTEM (NPDES)
DISCHARGE MONITORING REPORT (DMR)

Form Approved
OMB No. 2040-0004

EPA-NC-CE-0000367

PERMITTEE NAME/ADDRESS *(Include Facility Name/Location if Different)*

NAME: CONSOLIDATED EDISON OF NY
ADDRESS: 4 IRVING PLACE, RM 300
NEW YORK, NY 10003
FACILITY: CONSOLIDATED EDISON CO OF NY
LOCATION: 11TH ST BETWEEN 53RD & ASH
LONG ISLAND CITY, NY 11101

ATTN: YI-CHANG SHAO

NY0201138	001-M
PERMIT NUMBER	DISCHARGE NUMBER

MONITORING PERIOD			
	MM/DD/YYYY		MM/DD/YYYY
FROM	02/01/2012	TO	02/29/2012

DMR Mailing ZIP CODE: 10003
MINOR
(SUBR 02)
GROUNDWATER INFILTRATION&STORM
External Outfall

No Discharge ☐

PARAMETER		QUANTITY OR LOADING			QUALITY OR CONCENTRATION				NO. EX	FREQUENCY OF ANALYSIS	SAMPLE TYPE
		VALUE	VALUE	UNITS	VALUE	VALUE	VALUE	UNITS			
Flow rate	SAMPLE MEASUREMENT	******	108000	gal/d	******	******	******	******	0	01/30	CA
00056 1 0 Effluent Gross	PERMIT REQUIREMENT	******	Req. Mon. DAILY MX	gal/d	******	******	******	******		Monthly	CALCTD
Solids, total suspended	SAMPLE MEASUREMENT	******	******	******	******	******	12	mg/L	0	01/30	GR
00530 1 0 Effluent Gross	PERMIT REQUIREMENT	******	******	******	******	******	60 DAILY MX	mg/L		Monthly	GRAB
Oil & Grease	SAMPLE MEASUREMENT	******	******	******	******	******	<5	mg/L	0	01/30	GR
00556 1 0 Effluent Gross	PERMIT REQUIREMENT	******	******	******	******	******	15 DAILY MX	mg/L		Monthly	GRAB

NAME/TITLE PRINCIPAL EXECUTIVE OFFICER			TELEPHONE		DATE
Edward Foppiano, VP	I certify under penalty of law that this document and all attachments were prepared under my direction or supervision in accordance with a system designed to assure that qualified personnel properly gather and evaluate the information submitted. Based on my inquiry of the person or persons who manage the system, or those persons directly responsible for gathering the information, the information submitted is, to the best of my knowledge and belief, true, accurate, and complete. I am aware that there are significant penalties for submitting false information, including the possibility of fine and imprisonment for knowing violations.	Warren S. Miller	917-578-9757		03/08/2012
TYPED OR PRINTED		SIGNATURE OF PRINCIPAL EXECUTIVE OFFICER OR AUTHORIZED AGENT	AREA Code	NUMBER	MM/DD/YYYY

COMMENTS AND EXPLANATION OF ANY VIOLATIONS (Reference all attachments here)

ELAP ID is 10380

NATIONAL POLLUTANT DISCHARGE ELIMINATION SYSTEM (NPDES)

DISCHARGE MONITORING REPORT (DMR)

Form Approved
OMB No. 2040-0004

EPA-NC-CE-0000368

PERMITTEE NAME/ADDRESS *(Include Facility Name/Location if Different)*

NAME: CONSOLIDATED EDISON OF NY
ADDRESS: 4 IRVING PLACE, RM 300
NEW YORK, NY 10003
FACILITY: CONSOLIDATED EDISON CO OF NY
LOCATION: 11TH ST BETWEEN 53RD & ASH
LONG ISLAND CITY, NY 11101

ATTN: YI-CHANG SHAO

NY0201138	001-V
PERMIT NUMBER	DISCHARGE NUMBER

MONITORING PERIOD			
	MM/DD/YYYY		MM/DD/YYYY
FROM	03/01/2011	TO	02/29/2012

DMR Mailing ZIP CODE: 10003
MINOR
(SUBR 02)
GROUNDWTR INFILTR & SW - ACT LVLS
External Outfall

No Discharge ☐

PARAMETER		QUANTITY OR LOADING			QUALITY OR CONCENTRATION				NO. EX	FREQUENCY OF ANALYSIS	SAMPLE TYPE
		VALUE	VALUE	UNITS	VALUE	VALUE	VALUE	UNITS			
Toluene	SAMPLE MEASUREMENT	******	******	******	******	******	0.0048	mg/L	0	01/YR	GR
34010 V 0 See Comments	PERMIT REQUIREMENT	******	******	******	******	******	DAILY MX	mg/L		Annual	GRAB
Benzene	SAMPLE MEASUREMENT	******	******	******	******	******	0.0054	mg/L	0	01/YR	GR
34030 V 0 See Comments	PERMIT REQUIREMENT	******	******	******	******	******	DAILY MX	mg/L		Annual	GRAB
Ethylbenzene	SAMPLE MEASUREMENT	******	******	******	******	******	0.031	mg/L	0	01/YR	GR
34371 V 0 See Comments	PERMIT REQUIREMENT	******	******	******	******	******	DAILY MX	mg/L		Annual	GRAB
Xylene (mix of m+o+p)	SAMPLE MEASUREMENT	******	******	******	******	******	0.052	mg/L	0	01/YR	GR
81551 V 0 See Comments	PERMIT REQUIREMENT	******	******	******	******	******	DAILY MX	mg/L		Annual	GRAB

NAME/TITLE PRINCIPAL EXECUTIVE OFFICER			TELEPHONE		DATE
Edward Foppiano, VP	I certify under penalty of law that this document and all attachments were prepared under my direction or supervision in accordance with a system designed to assure that qualified personnel properly gather and evaluate the information submitted. Based on my inquiry of the person or persons who manage the system, or those persons directly responsible for gathering the information, the information submitted is, to the best of my knowledge and belief, true, accurate, and complete. I am aware that there are significant penalties for submitting false information, including the possibility of fine and imprisonment for knowing violations.	Warren S. Miller	917 -578-9757		03/08/2012
TYPED OR PRINTED		SIGNATURE OF PRINCIPAL EXECUTIVE OFFICER OR AUTHORIZED AGENT	AREA Code	NUMBER	MM/DD/YYYY

COMMENTS AND EXPLANATION OF ANY VIOLATIONS (Reference all attachments here)
LIMITS APPLY FOR DIRECT DISCHARGE TO NEWTON CREEK. ALSO, THERE SHALL BE NO DISCHARGE OF POLYCHLORINATED BIPHENYL COMPOUNDS.

ELAP ID is 10478

conEdison
a conEdison, inc. company

Consolidated Edison Company
of New York, Inc.
4 Irving Place
New York NY 10003
www.conEd.com

EPA-NC-CE-0000369

April 24, 2012

Division of Water
Bureau of Watershed Compliance Program
New York State Department of Environmental Conservation
625 Broadway, 4th Floor
Albany, NY 12233

Re: SPDES Permit Discharge Monitoring Reports (DMRs)

Permit No.	Location
NY 0201243	Astoria Central WWTF
NY 0201154	Astoria Liquefied Natural Gas Storage
NY 0201219	Astoria Tunnel Headhouse
NY 0201227	Ravenswood Tunnel Headhouse
NY 0201138	11th Street Conduit

Enclosed are DMRs for the reporting period ending on March 31, 2012 for the facilities referenced above.

Please call me at (212) 460-4005 if you have any questions regarding this submission.

Yours truly,

Richard J. Knob

Richard J Knob
Senior Scientist
Environment, Health & Safety

conEdison
a conEdison, inc. company

Consolidated Edison Company
of New York, Inc.
4 Irving Place
New York NY 10003
www.conEd.com

EPA-NC-CE-0000370

April 24, 2012

Regional Water Engineer, Region 2
New York State Department of Environmental Conservation
1 Hunters Point Plaza
47-40 21st Street
Long Island City, NY 11101

Re: SPDES Permit Discharge Monitoring Reports (DMRs)

Permit No.	Location
NY 0201243	Astoria Central WWTF
NY 0201154	Astoria Liquified Natural Gas Storage
NY 0201219	Astoria Tunnel Headhouse
NY 0201227	Ravenswood Tunnel Headhouse
NY 0201138	11th Street Conduit

Enclosed are DMRs for the reporting period ending on March 31, 2012 for the facilities referenced above.

Please call me at (212) 460-4005 if you have any questions regarding this submission.

Yours truly,

Richard J. Knob

Richard J Knob
Senior Scientist
Environment, Health & Safety

NATIONAL POLLUTANT DISCHARGE ELIMINATION SYSTEM (NPDES)

DISCHARGE MONITORING REPORT (DMR)

Form Approved
OMB No. 2040-0004

EPA-NC-CE-0000371

PERMITTEE NAME/ADDRESS *(Include Facility Name/Location if Different)*

NAME: CONSOLIDATED EDISON OF NY
ADDRESS: 4 IRVING PLACE, RM 300
NEW YORK, NY 10003
FACILITY: CONSOLIDATED EDISON CO OF NY
LOCATION: 11TH ST BETWEEN 53RD & ASH
LONG ISLAND CITY, NY 11101

ATTN: YI-CHANG SHAO

NY0201138	001-M
PERMIT NUMBER	DISCHARGE NUMBER

MONITORING PERIOD			
	MM/DD/YYYY		MM/DD/YYYY
FROM	03/01/2012	TO	03/31/2012

DMR Mailing ZIP CODE: 10003
MINOR
(SUBR 02)
GROUNDWATER INFILTRATION&STORM
External Outfall
No Discharge ☐

PARAMETER		QUANTITY OR LOADING			QUALITY OR CONCENTRATION				NO. EX	FREQUENCY OF ANALYSIS	SAMPLE TYPE
		VALUE	VALUE	UNITS	VALUE	VALUE	VALUE	UNITS			
Flow rate	SAMPLE MEASUREMENT	******	108000	gal/d	******	******	******	******	0	01/30	CA
00056 1 0 Effluent Gross	PERMIT REQUIREMENT	******	Req. Mon. DAILY MX	gal/d	******	******	******	******		Monthly	CALCTD
Solids, total suspended	SAMPLE MEASUREMENT	******	******	******	******	******	19	mg/L	0	01/30	GR
00530 1 0 Effluent Gross	PERMIT REQUIREMENT	******	******	******	******	******	50 DAILY MX	mg/L		Monthly	GRAB
Oil & Grease	SAMPLE MEASUREMENT	******	******	******	******	******	<5	mg/L	0	01/30	GR
00556 1 0 Effluent Gross	PERMIT REQUIREMENT	******	******	******	******	******	15 DAILY MX	mg/L		Monthly	GRAB

NAME/TITLE PRINCIPAL EXECUTIVE OFFICER			TELEPHONE		DATE
Edward Foppiano, VP	I certify under penalty of law that this document and all attachments were prepared under my direction or supervision in accordance with a system designed to assure that qualified personnel properly gather and evaluate the information submitted. Based on my inquiry of the person or persons who manage the system, or those persons directly responsible for gathering the information, the information submitted is, to the best of my knowledge and belief, true, accurate, and complete. I am aware that there are significant penalties for submitting false information, including the possibility of fine and imprisonment for knowing violations.	Warren D. Miller	917-578-9757		04/06/2012
TYPED OR PRINTED		SIGNATURE OF PRINCIPAL EXECUTIVE OFFICER OR AUTHORIZED AGENT	AREA Code	NUMBER	MM/DD/YYYY

COMMENTS AND EXPLANATION OF ANY VIOLATIONS (Reference all attachments here)

ELAP ID is 10380

conEdison
a conEdison, inc. company

Consolidated Edison Company
of New York, Inc.
4 Irving Place
New York NY 10003
www.conEd.com

EPA-NC-CE-0000372

May 24, 2012

Regional Water Engineer, Region 2
New York State Department of Environmental Conservation
1 Hunters Point Plaza
47-40 21st Street
Long Island City, NY 11101

Re: SPDES Permit Discharge Monitoring Reports (DMRs)

Permit No.	Location
NY 0201243	Astoria Central WWTF
NY 0201154	Astoria Liquified Natural Gas Storage
NY 0201219	Astoria Tunnel Headhouse
NY 0201227	Ravenswood Tunnel Headhouse
NY 0201138	11th Street Conduit

Enclosed are DMRs for the reporting period ending on April 30, 2012 for the facilities referenced above.

Please call me at (212) 460-4005 if you have any questions regarding this submission.

Yours truly,

Richard J. Knob

Richard J Knob
Senior Scientist
Environment, Health & Safety

conEdison
a conEdison, Inc. company

Consolidated Edison Company
of New York, Inc.
4 Irving Place
New York NY 10003
www.conEd.com

EPA-NC-CE-0000373

May 24, 2012

Division of Water
Bureau of Watershed Compliance Program
New York State Department of Environmental Conservation
625 Broadway, 4th Floor
Albany, NY 12233

Re: SPDES Permit Discharge Monitoring Reports (DMRs)

Permit No.	Location
NY 0201243	Astoria Central WWTF
NY 0201154	Astoria Liquified Natural Gas Storage
NY 0201219	Astoria Tunnel Headhouse
NY 0201227	Ravenswood Tunnel Headhouse
NY 0201138	11th Street Conduit

Enclosed are DMRs for the reporting period ending on April 30, 2012 for the facilities referenced above.

Please call me at (212) 460-4005 if you have any questions regarding this submission.

Yours truly,

Richard J. Knob

Richard J Knob
Senior Scientist
Environment, Health & Safety

NATIONAL POLLUTANT DISCHARGE ELIMINATION SYSTEM (NPDES)

DISCHARGE MONITORING REPORT (DMR)

Form Approved
OMB No. 2040-0004

EPA-NC-CE-0000374

PERMITTEE NAME/ADDRESS *(Include Facility Name/Location if Different)*

NAME: CONSOLIDATED EDISON OF NY
ADDRESS: 4 IRVING PLACE, RM 300
NEW YORK, NY 10003
FACILITY: CONSOLIDATED EDISON CO OF NY
LOCATION: 11TH ST BETWEEN 53RD & ASH
LONG ISLAND CITY, NY 11101

ATTN: YI-CHANG SHAO

NY0201138	001-M
PERMIT NUMBER	DISCHARGE NUMBER

MONITORING PERIOD			
	MM/DD/YYYY		MM/DD/YYYY
FROM	04/01/2012	TO	04/30/2012

DMR Mailing ZIP CODE: 10003
MINOR
(SUBR 02)
GROUNDWATER INFILTRATION&STORM
External Outfall

No Discharge ☐

PARAMETER		QUANTITY OR LOADING			QUALITY OR CONCENTRATION				NO. EX	FREQUENCY OF ANALYSIS	SAMPLE TYPE
		VALUE	VALUE	UNITS	VALUE	VALUE	VALUE	UNITS			
Flow rate	SAMPLE MEASUREMENT	******	108000	gal/d	******	******	******	******	0	01/30	CA
00056 1 0 Effluent Gross	PERMIT REQUIREMENT	******	Req. Mon. DAILY MX	gal/d	******	******	******	******		Monthly	CALCTD
Solids, total suspended	SAMPLE MEASUREMENT	******	******	******	******	******	16	mg/L	0	01/30	GR
00530 1 0 Effluent Gross	PERMIT REQUIREMENT	******	******	******	******	******	50 DAILY MX	mg/L		Monthly	GRAB
Oil & Grease	SAMPLE MEASUREMENT	******	******	******	******	******	<5	mg/L	0	01/30	GR
00556 1 0 Effluent Gross	PERMIT REQUIREMENT	******	******	******	******	******	15 DAILY MX	mg/L		Monthly	GRAB

NAME/TITLE PRINCIPAL EXECUTIVE OFFICER			TELEPHONE		DATE
Edward Foppiano, VP	I certify under penalty of law that this document and all attachments were prepared under my direction or supervision in accordance with a system designed to assure that qualified personnel properly gather and evaluate the information submitted. Based on my inquiry of the person or persons who manage the system, or those persons directly responsible for gathering the information, the information submitted is, to the best of my knowledge and belief, true, accurate, and complete. I am aware that there are significant penalties for submitting false information, including the possibility of fine and imprisonment for knowing violations.	Vernon B. Miller	917-578-9757		05/03/2012
TYPED OR PRINTED		SIGNATURE OF PRINCIPAL EXECUTIVE OFFICER OR AUTHORIZED AGENT	AREA Code	NUMBER	MM/DD/YYYY

COMMENTS AND EXPLANATION OF ANY VIOLATIONS (Reference all attachments here)

ELAP ID is 10380

conEdison
a conEdison, inc. company

Consolidated Edison Company
of New York, Inc.
4 Irving Place
New York NY 10003
www.conEd.com

EPA-NC-CE-0000375

June 22, 2012

Regional Water Engineer, Region 2
New York State Department of Environmental Conservation
1 Hunters Point Plaza
47-40 21st Street
Long Island City, NY 11101

Re: SPDES Permit Discharge Monitoring Reports (DMRs)

Permit No.	Location
NY 0201243	Astoria Central WWTF
NY 0201154	Astoria Liquified Natural Gas Storage
NY 0201219	Astoria Tunnel Headhouse
NY 0201227	Ravenswood Tunnel Headhouse
NY 0201138	11th Street Conduit

Enclosed are DMRs for the reporting period ending on May 31, 2012 for the facilities referenced above.

Please call me at (212) 460-4005 if you have any questions regarding this submission.

Yours truly,

Richard J. Knob

Richard J Knob
Senior Scientist
Environment, Health & Safety

conEdison
a conEdison, inc. company

Consolidated Edison Company
of New York, Inc.
4 Irving Place
New York NY 10003
www.conEd.com

EPA-NC-CE-0000376

June 22, 2012

Division of Water
Bureau of Watershed Compliance Program
New York State Department of Environmental Conservation
625 Broadway, 4th Floor
Albany, NY 12233

Re: SPDES Permit Discharge Monitoring Reports (DMRs)

Permit No.	Location
NY 0201243	Astoria Central WWTF
NY 0201154	Astoria Liquified Natural Gas Storage
NY 0201219	Astoria Tunnel Headhouse
NY 0201227	Ravenswood Tunnel Headhouse
NY 0201138	11th Street Conduit

Enclosed are DMRs for the reporting period ending on May 31, 2012 for the facilities referenced above.

Please call me at (212) 460-4005 if you have any questions regarding this submission.

Yours truly,

Richard J. Knob

Richard J Knob
Senior Scientist
Environment, Health & Safety

NATIONAL POLLUTANT DISCHARGE ELIMINATION SYSTEM (NPDES)

DISCHARGE MONITORING REPORT (DMR)

Form Approved
OMB No. 2040-0004

EPA-NC-CE-0000377

PERMITTEE NAME/ADDRESS *(Include Facility Name/Location if Different)*

NAME: CONSOLIDATED EDISON OF NY
ADDRESS: 4 IRVING PLACE, RM 300
NEW YORK, NY 10003
FACILITY: CONSOLIDATED EDISON CO OF NY
LOCATION: 11TH ST BETWEEN 53RD & ASH
LONG ISLAND CITY, NY 11101

ATTN: YI-CHANG SHAO

NY0201138	001-M
PERMIT NUMBER	DISCHARGE NUMBER

MONITORING PERIOD			
	MM/DD/YYYY		MM/DD/YYYY
FROM	05/01/2012	TO	05/31/2012

DMR Mailing ZIP CODE: 10003
MINOR
(SUBR 02)
GROUNDWATER INFILTRATION&STORM
External Outfall

No Discharge ☐

PARAMETER		QUANTITY OR LOADING			QUALITY OR CONCENTRATION				NO. EX	FREQUENCY OF ANALYSIS	SAMPLE TYPE
		VALUE	VALUE	UNITS	VALUE	VALUE	VALUE	UNITS			
Flow rate	SAMPLE MEASUREMENT	******	108000	gal/d	******	******	******	******	0	01/30	CA
00056 1 0 Effluent Gross	PERMIT REQUIREMENT	******	Req. Mon. DAILY MX	gal/d	******	******	******	******		Monthly	CALCTD
Solids, total suspended	SAMPLE MEASUREMENT	******	******	******	******	******	7	mg/L	0	01/30	GR
00530 1 0 Effluent Gross	PERMIT REQUIREMENT	******	******	******	******	******	50 DAILY MX	mg/L		Monthly	GRAB
Oil & Grease	SAMPLE MEASUREMENT	******	******	******	******	******	<5	mg/L	0	01/30	GR
00556 1 0 Effluent Gross	PERMIT REQUIREMENT	******	******	******	******	******	15 DAILY MX	mg/L		Monthly	GRAB

NAME/TITLE PRINCIPAL EXECUTIVE OFFICER			TELEPHONE		DATE
Edward Foppiano, VP	I certify under penalty of law that this document and all attachments were prepared under my direction or supervision in accordance with a system designed to assure that qualified personnel properly gather and evaluate the information submitted. Based on my inquiry of the person or persons who manage the system, or those persons directly responsible for gathering the information, the information submitted is, to the best of my knowledge and belief, true, accurate, and complete. I am aware that there are significant penalties for submitting false information, including the possibility of fine and imprisonment for knowing violations.	Warren S. Miller	917 - 578-9757		06-08-2012
TYPED OR PRINTED		SIGNATURE OF PRINCIPAL EXECUTIVE OFFICER OR AUTHORIZED AGENT	AREA Code	NUMBER	MM/DD/YYYY

COMMENTS AND EXPLANATION OF ANY VIOLATIONS (Reference all attachments here)

ELAP ID is 10380

Consolidated Edison Company
of New York, Inc.
4 Irving Place
New York NY 10003
www.conEd.com

EPA-NC-CE-0000378

July 23, 2012

Division of Water
Bureau of Watershed Compliance Program
New York State Department of Environmental Conservation
625 Broadway, 4th Floor
Albany, NY 12233

Re: SPDES Permit Discharge Monitoring Reports (DMRs)

Permit No.	Location
NY 0201243	Astoria Central WWTF
NY 0201154	Astoria Liquefied Natural Gas Storage
NY 0201219	Astoria Tunnel Headhouse
NY 0201227	Ravenswood Tunnel Headhouse
NY 0201138	11th Street Conduit

Enclosed are DMRs for the reporting period ending on June 30, 2012 for the facilities referenced above.

Please call me at (212) 460-2262 if you have any questions regarding this submission.

Yours truly,

Michael J. Trofinoff
Senior Scientist
Environment, Health & Safety

conEdison
a conEdison, inc. company

Consolidated Edison Company
of New York, Inc.
4 Irving Place
New York NY 10003
www.conEd.com

EPA-NC-CE-0000379

July 23, 2012

Regional Water Engineer, Region 2
New York State Department of Environmental Conservation
1 Hunters Point Plaza
47-40 21st Street
Long Island City, NY 11101

Re: SPDES Permit Discharge Monitoring Reports (DMRs)

Permit No.	Location
NY 0201243	Astoria Central WWTF
NY 0201154	Astoria Liquefied Natural Gas Storage
NY 0201219	Astoria Tunnel Headhouse
NY 0201227	Ravenswood Tunnel Headhouse
NY 0201138	11th Street Conduit

Enclosed are DMRs for the reporting period ending on June 30, 2012 for the facilities referenced above.

Please call me at (212) 460-2262 if you have any questions regarding this submission.

Yours truly,

Michael J. Trofimoff
Senior Scientist
Environment, Health & Safety

NATIONAL POLLUTANT DISCHARGE ELIMINATION SYSTEM (NPDES)

DISCHARGE MONITORING REPORT (DMR)

Form Approved
OMB No. 2040-0004

EPA-NC-CE-000380

PERMITTEE NAME/ADDRESS *(Include Facility Name/Location If Different)*

NAME: CONSOLIDATED EDISON OF NY
ADDRESS: 4 IRVING PLACE, RM 300
NEW YORK, NY 10003
FACILITY: CONSOLIDATED EDISON CO OF NY
LOCATION: 11TH ST BETWEEN 53RD & ASH
LONG ISLAND CITY, NY 11101

ATTN: YI-CHANG SHAO

NY0201138	001-M
PERMIT NUMBER	DISCHARGE NUMBER

MONITORING PERIOD			
	MM/DD/YYYY		MM/DD/YYYY
FROM	06/01/2012	TO	06/30/2012

DMR Mailing ZIP CODE: 10003
MINOR
(SUBR 02)
GROUNDWATER INFILTRATION&STORM
External Outfall

No Discharge ☐

PARAMETER		QUANTITY OR LOADING			QUALITY OR CONCENTRATION				NO. EX	FREQUENCY OF ANALYSIS	SAMPLE TYPE
		VALUE	VALUE	UNITS	VALUE	VALUE	VALUE	UNITS			
Flow rate	SAMPLE MEASUREMENT	******	108000	gal/d	******	******	******	******	0	01/30	CA
00056 1 0 Effluent Gross	PERMIT REQUIREMENT	******	Req. Mon. DAILY MX	gal/d	******	******	******	******		Monthly	CALCTD
Solids, total suspended	SAMPLE MEASUREMENT	******	******	******	******	******	9	mg/L	0	01/30	GR
00530 1 0 Effluent Gross	PERMIT REQUIREMENT	******	******	******	******	******	50 DAILY MX	mg/L		Monthly	GRAB
Oil & Grease	SAMPLE MEASUREMENT	******	******	******	******	******	<5	mg/L	0	01/30	GR
00556 1 0 Effluent Gross	PERMIT REQUIREMENT	******	******	******	******	******	15 DAILY MX	mg/L		Monthly	GRAB

NAME/TITLE PRINCIPAL EXECUTIVE OFFICER			TELEPHONE		DATE
Edward Foppiano, VP	I certify under penalty of law that this document and all attachments were prepared under my direction or supervision in accordance with a system designed to assure that qualified personnel properly gather and evaluate the information submitted. Based on my inquiry of the person or persons who manage the system, or those persons directly responsible for gathering the information, the information submitted is, to the best of my knowledge and belief, true, accurate, and complete. I am aware that there are significant penalties for submitting false information, including the possibility of fine and imprisonment for knowing violations	Karen S. Miller	917 578 9757		07/17/2012
TYPED OR PRINTED		SIGNATURE OF PRINCIPAL EXECUTIVE OFFICER OR AUTHORIZED AGENT	AREA Code	NUMBER	MM/DD/YYYY

COMMENTS AND EXPLANATION OF ANY VIOLATIONS (Reference all attachments here)

ELAP ID is 10380

Con Edison
Consolidated Edison Company of New York, Inc.
4 Irving Place, New York, N.Y. 10003

August 7, 1995

Mr. Richard L. Newman, P.E.
Regional Water Program Director
Region 2
New York State Department
of Environmental Conservation
47-40 21st Street
Long Island City, New York 11101

Re: Emergency Discharge Authorizations
Astoria Coke Filter
11th Street Conduit
Ravenswood Gas Turbine Site

Dear Mr. Newman:

Enclosed are three applications requesting emergency permits for the discharge of treated groundwater or stormwater from Con Edison's Astoria Coke Filter, 11th Street Conduit, and Ravenswood Gas Turbine Site. Also enclosed are three drawings showing the general layout and construction of the Astoria Coke Filter (Con Edison Drawing Nos. 124201, 124203, and 124206).

Con Edison had previously submitted SPDES permit applications for the Ravenswood GT Site and the 11th Street Conduit on August 12, 1992 and March 28, 1994, respectively. Regarding the Astoria Coke Filter, the Company requested on March 31, 1994 that this discharge be added to the SPDES permit for the Astoria Generating Station. Since DEC has not acted on the above applications, Con Edison is requesting that temporary discharge authorizations be issued in the same manner as the Department did for other Company facilities where SPDES permits are pending. This will allow these discharges be covered by temporary DEC permits until such time when the SPDES permits are issued.

If you have any questions concerning the enclosed applications, please contact Eddy Louie at (212)460-2882.

Very truly yours,

Robert T. Keegan, Ph.D.
Director
Water and Waste Management
Environmental Affairs

Enc.

NEW YORK STATE DEPARTMENT OF ENVIRONMENTAL CONSERVATION

Regional Authorization No.

Page 1 of

Application and
Emergency Authorization to Discharge Wastewater

This application form with attachements, when signed by an authorized issuing agent, constitutes an Emergency Authorization to Discharge Wastewater in conformance with Article 70 of the environmental Conservation Law of New York State.

(The Person Making Application Should Complete the Shaded Areas Only)

1. Person Making Application:	Name:	Robert T. Keegan			Phone: (212)460-4833
	Address:	4 Irving Place, Room 300			
	City:	New York	State:	N.Y.	Zip Code: 10003
2. Representing	Name:	Consolidated Edison Company of New York			
(Government, Firm, Self)	Address:	4 Irving Place, Room 300			
	City:	New York	State:	N.Y.	Zip Code: 10003
3. Facility or Project Site:	Name:	Astoria Generating Station - Coke Filter			
	Address:	20th Avenue and 21st Street			
	City, Town or Village:	Astoria			
	County:	Queens			
	Name of Water Body Receiving Discharge:				East River

4. Give Explicit Directions to Project and/or Discharge Site and a Map Describing the Project area(s):
20th Avenue and 21st Street; entrance near Shore Boulevard

5a. Describe Exact Nature of Emergency: Need to discharge groundwater from utility tunnel headhouse. Groundwater infiltrates into tunnel that connects Astoria complex and Hellgate facility in the Bronx.

5b. Describe How Emergency Came to exist: Permit modification requesting the Astoria Tunnel Headhouse discharge be added to the Station's SPDES permit was submitted to DEC on 3/31/94. The permit modification has not been issued.

5c. Pollutants Potentially Released in the Discharge (Toxics, Petroleum Products, Sewage, others):
Tunnel contains dielectric fluid-filled feeder cables. Potential for groundwater to contain some product in the event of leaks.

5d. Adverse Impact if Treated Discharge is not Authorized (Life, Health, Property, Natural Resources, etc):
Water will fill up tunnel, possibly causing interruption of service.

5e. Is Area of Pollution Expanding in the Environment or is the Pollution Now Contained?
Water is discharged after treatment by the coke filter.

This Emergency Authorization to Discharge Wastewater shall expire at midnight on the 30th day following issuance. This 30 day authorization can be extended only once for a 30 day period upon submission of a complete SPDES Discharge Permit Application in full compliance with sections 17-0803 and 17-0804 of the environmental Conservation Law and Parts 621 and 752 of the Department's rules and regulations.

I hereby affirm under penalty of perjury that the information provided on this form and attached supplemental information is true to the best of my knowledge and belief. False statements are punishable as a Class A misdemeanor pursuant to section 210.45 of the Penal Law.

Signature of Person Making Application:	Date:	Printed Name:	Title:
	5/7/95	Robert T. Keegan	Director Water & Waste Management

DISTRIBUTION:

Based on the information provided in this application, I hereby issue a finding that this authorization is immediately necessary to respond to an emergency and thereby minimize adverse impacts to life, heath, property or natural resources. This Emergency Authorization is issued in conformance with Section 70-0116 of the environmental Conservation Law.

Signature of issuing Agent (address & phone # is on attached page): Date	Effective Date:
	Expiraton Date:

NEW YORK STATE DEPARTMENT OF ENVIRONMENTAL CONSERVATION

Regional Authorization No.

Page 1 of

Application and
Emergency Authorization to Discharge Wastewater

This application form with attachements, when signed by an authorized issuing agent, constitutes an Emergency Authorization to Discharge Wastewater in conformance with Article 70 of the environmental Conservation Law of New York State.

(The Person Making Application Should Complete the Shaded Areas Only)

1. Person Making Application:	**Name:**	Robert T. Keegan			**Phone:** (212)460-4833
	Address:	4 Irving Place, Room 300			
	City:	New York	**State:**	N.Y.	**Zip Code:** 10003
2. Representing	**Name:**	Consolidated Edison Company of New York			
(Government, Firm, Self)	**Address:**	4 Irving Place, Room 300			
	City:	New York	**State:**	N.Y.	**Zip Code:** 10003
3. Facility or Project Site:	**Name:**	11th Street Conduit			
	Address:	Oakland Street and Water Street			
	City, Town or Village:	Brooklyn			
	County:	Kings			
	Name of Water Body Receiving Discharge:				Newtown Creek

4. Give Explicit Directions to Project and/or Discharge Site and a Map Describing the Project area(s):
Oakland Street and Water Street, near McGuiness Boulevard

5a. Describe Exact Nature of Emergency: Need to discharge groundwater from utility tunnel headhouse. Groundwater infiltrates into tunnel that connects Oakland and Water Steets in Brooklyn and 11th Street at 47th Road in Long Island City, Queens.

5b. Describe How Emergency Came to exist: SPDES permit application for this facility was submitted to DEC on 3/28/94. Permit has not been issued.

5c. Pollutants Potentially Released in the Discharge (Toxics, Petroleum Products, Sewage, others):
Tunnel contains dielectric fluid-filled feeder cables. Potential for groundwater to contain some product in the event of leaks. Groundwater is treated by a new oil/water separator.

5d. Adverse Impact if Treated Discharge is not Authorized (Life, Health, Property, Natural Resources, etc):
Water will fill up tunnel, possibly causing interruption of service.

5e. Is Area of Pollution Expanding in the Environment or is the Pollution Now Contained?
Water is discharged after treatment by an oil/water separator.

This Emergency Authorization to Discharge Wastewater shall expire at midnight on the 30th day following issuance. This 30 day authorization can be extended only once for a 30 day period upon submission of a complete SPDES Discharge Permit Application in full compliance with sections 17-0803 and 17-0804 of the environmental Conservation Law and Parts 621 and 752 of the Department's rules and regulations.

I hereby affirm under penalty of perjury that the information provided on this form and attached supplemental information is true to the best of my knowledge and belief. False statements are punishable as a Class A misdemeanor pursuant to section 210.45 of the Penal Law.

Signature of Person Making Application:	Date:	Printed Name:	Title:
	8/7/94	Robert T. Keegan	Director Water & Waste Management

DISTRIBUTION:

Based on the information provided in this application, I hereby issue a finding that this authorization is immediately necessary to respond to an emergency and thereby minimize adverse impacts to life, heath, property or natural resources. This Emergency Authorization is issued in conformance with Section 70-0116 of the environmental Conservation Law.

Signature of issuing Agent (address & phone # is on attached page): Date	Effective Date:
	Expiraton Date:

conEdison
a conEdison, Inc. company

Consolidated Edison Company
of New York, Inc.
1560 Bruckner Blvd.
Bronx NY 10473
www.conEd.com

REGISTERED MAIL-RETURNED RECEIPT REQUESTED

October 3, 2006

Mr. Selvin Southwell, P.E.
New York State Department of Environmental Conservation
Division of Environmental Remediation, Region 2
47-40 21st Street
Long Island City, New York 11101-5407

Re: Consolidated Edison of NY, Inc.
11th. Street Conduit
SPDES No: NY0201138
Discharge Pipe Breach Incident Report

Dear Mr. Southwell,

This letter provides the information you requested during your phone conversation with Bahi Elmiry concerning Consolidated Edison's 11th Street Conduit September 11, 2006 incident. The 11th Street Conduit is a tunnel located at McGuiness Boulevard and Ash Street in Brooklyn which contains utility lines running underneath Newtown Creek between Brooklyn and Queens. The incident involved a breach of a discharge line that runs underground from the tunnel to an Oil Water Separator (OWS). The incident did not impact Con Edison's State Pollution Discharge Elimination System (SPDES) permit.

On September 11, 2006 the Department of Transportation (DOT) reported to the New York City Department of Environmental Protection (DEP) that water was leaking onto its property. The DOT property is located adjacent to Con Edison's unmanned 11th Street Conduit. The DEP notified Con Edison of a possible leak from the tunnel. Con Edison's Tunnel Maintenance personnel investigated and found, in the

area of the DOT driveway, discolored water with an oil sheen (less than 5 gallons) and a dark viscous material.

Con Edison immediately reported the spill to the NYSDEC and the NYCDEP. Upon investigation, Gas EH&S and Tunnel Maintenance personnel determined that the liquid in the DOT driveway was discharge water from the tunnel. There are two discharge lines, a 6" line and a 4" line, that run underground from the tunnel to the OWS. Through laboratory analysis it was determined that there were no PCBs in the water and the water was non-hazardous. Miller Environmental conducted an initial cleanup of the area.

On September 12 Allstate Environmental excavated the area and a corrosion leak was found on a 6" steel coupling connected to a cast iron pipe located 5 feet below grade on the west exterior wall of the tunnel head house. Prior to beginning the repairs, a bypass was installed to direct water from the tunnel to the OWS to avoid flooding in the tunnel. While the bypass was in place, the tunnel and OWS were monitored on a continual basis. Miller Environmental controlled ground water using a pumping operation to an onsite tanker. During excavation, contaminated soil on the top surface was segregated from the clean sand. An additional 2 ½ feet of contaminated soil was excavated until clean soil was found. All impacted soil was containerized and labeled for disposal. The excavated soil was sampled to confirm that the material was consistent with tunnel discharge water and non-hazardous for disposal. Sample results verified non-hazardous liquid and solid waste.

On September 13, the repair of the 6" coupling was completed, the temporary bypass to the OWS was removed, the discharge line was reactivated and the excavation was then backfilled with clean fill.

Very truly yours,

Lois Westfall
General Manager
Gas Operations

conEdison
a conEdison, Inc. company

Consolidated Edison Company
of New York, Inc.
1560 Bruckner Blvd.
Bronx NY 10473
www.conEd.com

April 7, 2010

Sent by E-mail and Regular Mail

Vichit Aramsombatdee, PE, REP
Environmental Engineer 2
New York State Department of Environmental Conservation
Division of Water, Region 2
47-40 21st Street, Long Island City, NY 11101-5407

Re: 11th Street Conduit Headhouse Tunnel
SPDES Permit Compliance Sampling
SPDES Permit No. NY 0201138

Dear Mr. Aramsombatdee:

Responding to your March 26, 2010 letter citing the results of your visit to the referenced facility, Con Edison has taken immediate steps to address the issues you raised. Thank you for bringing these matters to our attention.

Attached are our responses to the two specific issues.

Sincerely

Janet Fox
General Manager
Gas Operations- EH&S

Cc: Robert Elburn, PE, NYSDEC
Selvin T. Southwell, PE, NYSDEC
John Urda, Esq. NYSDEC

11th Street Conduit Headhouse Tunnel

NYS DEC items noted during inspection:

(1) A grab sampler was used by Con Edison's sampling personnel, on top of the oil water separator, to obtain oil and grease samples from the last chamber of the oil water separator even though there is a spigot available on the discharge side of the oil water separator. Because of health and safety concerns for the sampling staff, it is requested that by April 7, 2010, the sampling be performed at the spigot instead of the top of the oil water separator unless Con Edison provides an infeasible explanation for the spigot.

> **Con Edison's response**: As requested, the sampling will be performed at the spigot instead of the top of the oil water separator. Also, as discussed this change will necessitate flushing the pipe with the spigot valve for a few minutes to ensure the sample is representative. During sampling, this small quantity of treated wastewater will be discharged onto the ground in a manner not to create a nuisance (ponding, erosion, etc.)

(2) There was no sampling sign at the sampling location. Please post the sign by April7, 2010 and provide NYSDEC with a picture.

> **Con Edison's response**: The sampling sign at the sampling location was reposted on April 5, 2010. The sampling sign had been blown off during the recent storm events. . A photograph of the reposted sign is attached.

11th Street Conduit
SPDES permit #NY0201138
Outfall #001
Sample Point

BEST MANAGEMENT PRACTICES PLAN
11th STREET CONDUIT
BROOKLYN, NEW YORK

CONSOLIDATED EDISON COMPANY OF NEW YORK, INC.
NEW YORK, NEW YORK

October 30, 1997
1278-059-800

MALCOLM PIRNIE, INC.

One International Boulevard
Mahwah, New Jersey 07495

104 Corporate Park Drive
White Plains, New York 10602

TABLE OF CONTENTS

1.0 INTRODUCTION 1

1.1 BACKGROUND AND OBJECTIVES 1

2.0 PLANNING AND ORGANIZATION 2

2.1 BMP TEAM 2
2.2 REVIEW FOR CONSISTENCY WITH OTHER PLANS 3

3.0 PRELIMINARY ASSESSMENT 5

3.1 SITE PLAN 5
3.2 SOURCE MATERIAL INVENTORY 5
3.3 PAST SPILLS AND LEAKS 5
3.4 SUMMARY OF ASSESSMENT ACTIVITIES 5

4.0 BMP IDENTIFICATION 6

4.1 EXISTING BMPS 6
4.1.1 Good Housekeeping 6
4.1.2 Preventive Maintenance 6
4.1.3 Visual Equipment Inspections 6
4.1.4 Spill Prevention and Response 7
4.1.5 Employee Training 7
4.1.6 Recordkeeping and Reporting 7
4.1.7 Security 7
4.2 RECOMMENDED BMPS 8
4.2.1 Good Housekeeping 8
4.2.2 Preventive Maintenance 8
4.2.3 Visual Equipment Inspections 8
4.2.4 Spill Prevention and Response 8
4.2.5 Employee Training 8
4.2.6 Recordkeeping and Reporting 9
4.2.7 Security 9

5.0 BMP IMPLEMENTATION 10

5.1 IMPLEMENTATION SCHEDULE 10

6.0 EVALUATION 11

6.1 ANNUAL SITE INSPECTION AND BMP EVALUATION 11

EPA-NC-CE-0000390

LIST OF TABLES

Table	Title
2-1	BMP Team .....
5-1	BMP Implementation Schedule .....

LIST OF FIGURES

Figure	Title
1-1	Site Location Map .....
1-2	Site Plan .....

LIST OF APPENDICES

Appendix	Description
A	Review/Comment Form

1.0 INTRODUCTION

1.1 BACKGROUND AND OBJECTIVES

This Best Management Practices (BMP) Plan has been developed for the Consolidated Edison - 11th Street Conduit Tunnel Headhouse Site (See Figure 1-1) located in Brooklyn, New York and addresses best management practice (BMPs) as required in this facility's State Pollution Discharge Elimination System (SPDES) permit (# NY0201138).

The 11th Street Conduit is a tunnel under the Newtown Creek that contains four 345 KV oil filled feeders. A tunnel headhouse is located on both the south bank (Brooklyn) and the north bank (Queens) of the Newtown Creek. The Con Edison property where these headhouses are located is shown on Figure 1-2. The tunnel is sloped towards the Brooklyn tunnel headhouse. The Brooklyn tunnel headhouse contains a sump that collects any water that may infiltrate into the tunnel and the water is treated via an oil water separator before being discharged to the Newtown Creek.

In an effort to prevent, or minimize the potential for, release of significant amounts of toxic or hazardous pollutants to the waters of the State through plant site runoff including storm water, spillage and leaks, sludge or waste disposal, or drainage from raw material storage at the 11th Street Conduit Tunnel Headhouse Site (the Site), Con Edison has prepared this plan. This BMP Plan documents practices that Con Edison is currently implementing or intends to implement to prevent any pollution originating on the site from entering waters of the State.

This document incorporates guidance provided by the USEPA's Storm Water Management for Industrial Activities - Developing Pollution Prevention Plans and Best Management Practices (September 1992).

EPA-NC-CE-0000392

2.0 PLANNING AND ORGANIZATION

2.1 BMP TEAM

The BMP Team identified in Table 2-1 below is responsible for developing the 11th Street Conduit BMP Plan and assisting the facility manager in implementation, maintenance, and revision of this plan. Each team member's name, phone number, and responsibilities are summarized in Table 2-1. The active participation of all personnel in helping to identify and eliminate potential storm water pollution sources is vital to the success of this plan; therefore, the BMP Team is responsible for ensuring that all 11th Street Conduit personnel are made aware of the purpose of this BMP Plan. If personnel notice potential sources of pollutants or have ideas to help reduce storm water pollution, they are advised to discuss them with the appropriate team member.

TABLE 2-1
BMP TEAM

Name/Title	Responsibilities
Victor Basso Environmental Manager (718)579-1242	✎ Certifies the BMP Plan ✎ Oversees implementation of the BMPs, Material Inventory, Risk Assessment, Employee Training, Recordkeeping, and Keeping BMPs current ✎ Implements all SPDES permit and BMP Plan requirements
John O'Connor Site Manager (718)579-1247	✎ Assists the Environmental Manager in implementation of the BMPs, Material Inventory, Risk Assessment, Employee Training, Recordkeeping, and Keeping BMPs current ✎ Conducts comprehensive site compliance evaluation ✎ Maintains all records

EPA-NC-CE-0000393

2.2 REVIEW FOR CONSISTENCY WITH OTHER PLANS

Coordination of this BMP Plan with other existing environmental management plans and procedures is necessary for proper implementation of this plan. BMPs provided in other existing management plans can be incorporated by reference into this BMP Plan. Company-wide environmental procedures are described in this section. The BMP team will regularly review this plan with other existing environmental management plans and procedures to ensure overall consistency.

Con Edison has developed Corporate Environmental Procedures (CEPs) to address Company-wide federal, state, and local regulatory requirements. The CEPs manual is organized into 12 major environmental subject areas:

- Air Resources
- Water
- Oil
- Hazardous Waste Management
- Solid Waste Management
- PCB Management
- Chemical
- Land Use
- Fish, Wildlife, and Wetlands
- Asbestos
- Management of Change
- Administrative Control Procedures

Each environmental subject area includes a Program Overview, which details the minimum technical and procedural performance standards applicable by activity to assure compliance with environmental and health and safety requirements and specify good management practices.

General Environmental Instructions (GEIs) have been prepared from the CEPs to provide all Con Edison with one-page instructions outlining the environmental requirements associated with specific job tasks. The Environmental Manager will be responsible for implementing the GEIs. In addition, there will be on the job training of the GEIs, as appropriate

EPA-NC-CE-0000394

for each specific job description. A committee is being established to review GEIs and revise them as appropriate based on Company operating procedures and environmental regulations.

EPA-NC-CE-0000395

3.0 PRELIMINARY ASSESSMENT

3.1 SITE PLAN

The site plan (Figure 1-2) shows the location of the 11th Street Conduit Tunnel. This figure was prepared based on information acquired through a site reconnaissance conducted by Malcolm Pirnie during the BMPs site assessment conducted on November 27, 1996. As illustrated on Figure 1-2, a tunnel headhouse containing an elevator which provides access to the tunnel and an oil/water (O/W) separator are located on the site.

3.2 SOURCE MATERIAL INVENTORY

The EPA guidance document for developing Pollution Prevention Plans & Best Management Practices recommends that an inventory of ✌significant materials✍ that may potentially come in contact with the site■s wastewater or storm water and thereby be released to waters of the State be conducted. For the purposes of this document, significant materials is limited to industrial activity chemicals and fuels.

3.3 PAST SPILLS AND LEAKS

There were no recorded spills and /or leaks at this site during the past three years.

3.4 SUMMARY OF ASSESSMENT ACTIVITIES

A site assessment inspection was conducted on November 27, 1996 to identify the areas where material handling and storage activities occur at the 11th Street Conduit. The 11th Street Conduit site is maintained fenced and locked. The areas of potential pollutant sources at the 11th Street Conduit include: Oil-filled feeders; O/W separator

EPA-NC-CE-0000396

4.0 BMP IDENTIFICATION

4.1 EXISTING BMPS

BMPs are measures used to prevent or mitigate wastewater and/or storm water from becoming contaminated with pollutants. BMPs are selected to prevent contamination by stressing the importance of pollution prevention management and employee awareness of potential pollutant sources. The BMPs currently being implemented at the 11th Street Conduit to eliminate or reduce pollutant loadings are summarized in the subsections that follow.

4.1.1 Good Housekeeping

Good housekeeping requires the maintenance of areas which may contribute pollutants to wastewater and/or storm water discharges in a clean, orderly manner. The 11th Street Conduit site is maintained in a clean, orderly manner. Tunnel operations conducts weekly inspections of the 11th Street Conduit elevator, tunnel sump, water pump high and low level alarms, lighting, and O/W separator. The O/W separator's oil high level alarm and high water alarm are remotely monitored at Con Edison's Energy Control Center located at East 60th Street and West End Avenue, New York.

4.1.2 Preventive Maintenance

The O/W separator located at the 11th Street Conduit site is maintained by a vendor on a semi-annual basis. Maintenance includes cleaning of the oil compartment and sludge removal. During maintenance operations, the sump pump within the tunnel is shut off to prevent any bypass of the O/W separator.

4.1.3 Visual Equipment Inspections

As discussed in Section 4.1.1, tunnel operations conducts weekly inspections of the entire site including the 11th Street Conduit tunnel, elevator, tunnel sump, water pump high and

EPA-NC-CE-0000397

low alarms, lighting, O/W separator, and SPDES outfall piping. A checklist and response procedure is completed to document weekly inspections and to address comments and/or concerns identified during the inspection. This checklist includes a list of inspected equipment.

4.1.4 Spill Prevention and Response

During the site assessment, the environmental manager and site manager reported that if a spill were to be discovered all personnel are required to contact the Con Edison Central Information Group (CIG). Subsequently, the Environmental Response Team will be dispatched to the site and implement necessary cleanup procedures. A cleanup contractor may be hired as necessary.

4.1.5 Employee Training

No formal employee training is currently in-place to teach all levels of personnel the components and goals of the BMP Plan. However, all Environmental Managers and Environmental Affairs personnel receive CEP training as introduced in Section 2. GEIs are currently being prepared from the CEPs to provide all Con Edison with one-page instructions outlining the environmental requirements associated with specific job tasks. The Environmental Managers will be responsible for enforcing the GEIs. In addition, there will be on the job training of the GEIs, as appropriate for each specific job description. A committee is being established to review GEIs and revise them as appropriate based on Company operating procedures and environmental regulations.

4.1.6 Recordkeeping and Reporting

Central Gas Operations personnel department maintains records of weekly inspections.

4.1.7 Security

The entire 11th Street Conduit site is fenced and locked.

EPA-NC-CE-0000398

4.2 RECOMMENDED BMPS

4.2.1 Good Housekeeping

A material inventory should be maintained at the 11th Street Conduit of any/all industrial activity chemicals and fuels that are handled, treated, stored, used, processed, or disposed in a manner to potentially allow exposure to the 11th Street Conduit site SPDES outfall and/or storm water.

4.2.2 Preventive Maintenance

BMPs are currently in-place.

4.2.3 Visual Equipment Inspections

BMPs are currently in-place.

4.2.4 Spill Prevention and Response

A written spill response procedure should be established and posted at the 11th Street Conduit site.

4.2.5 Employee Training

An employee training program should be implemented for the 11th Street Conduit to teach personnel at all levels of responsibility the components and goals of the BMP Plan. The program should, at a minimum, address spill prevention and response, good housekeeping, and material management practices. A schedule for the training program and list of the employees who attend training sessions should be prepared.

EPA-NC-CE-0000399

4.2.6 Recordkeeping and Reporting

A checklist, as discussed in Section 4.1.3, should be established for the weekly inspections, and completed inspection sheets should be maintained by the environmental manager or other designated person. The items identified in 4.1.3 above should be included on the checklist. The checklist sheet should allow a blank space for comments. Any storage of material on the entire 11th Street Conduit site should be reported in this section.

4.2.7 Security

BMPs are currently in-place.

EPA-NC-CE-0000400

5.0 BMP IMPLEMENTATION

5.1 IMPLEMENTATION SCHEDULE

The implementation schedule for BMPs identified in Section 4.2 is contained in Table 5-1.

TABLE 5-1
BMP IMPLEMENTATION SCHEDULE

BMPs	Description of Action(s) required for Implementation	Scheduled Completion Date(s) for Required Action**	Person Responsible for Action**
Good Housekeeping	Prepare and maintain a material inventory of all industrial activity chemicals and fuels that have the potential to contaminate a SPDES permitted outfall or storm water.		
Spill Prevention and Response	Develop a written spill response procedure.		
Employee Training	Implement a BMP employee training program		

**** To be completed by Con Edison**

6.0 EVALUATION

6.1 ANNUAL SITE INSPECTION AND BMP EVALUATION

Site compliance evaluations must be conducted at appropriate intervals or at least once per year by designated BMP Team members of the 11th Street Conduit site. The BMP Plan shall be modified whenever changes at the site materially increase the potential of significant releases of toxic or hazardous pollutants or where actual releases indicate the plan is inadequate. The compliance evaluations shall include:

- Review of the BMP Plan and confirm that items which are part of material handling, storage, and transfer areas are addressed in the plan.
- Review site operations for the past year to determine if any additional areas need to be included in the BMP Plan, or if any existing areas were modified so as to require plan modification.
- Visually inspect the site especially the wastewater and storm water discharge areas to determine if (1) all pollution prevention measures are accurately identified in the plan and (2) all pollution prevention measures are in place and working properly
- Document findings on Review/Comment Form provided in Appendix A and modify plan, as appropriate.

EPA-NC-CE-0000402

APPENDIX A

REVIEW/COMMENT FORM
BEST MANAGEMENT PRACTICES PLAN
11th STREET CONDUIT

BEST MANAGEMENT PRACTICES PLAN
REVIEW/COMMENT FORM

LOCATION _____

DATE OF REVIEW _____

TYPE OF REVIEW (CHECK ONE)

Annual Review	_____
Unscheduled Review*	_____

(* Describe equipment, operation, or source on detailed comment page)

REVIEWER(S)

_____	_____
(print name)	(print name)
_____	_____
(signature)	(signature)

RESULTS OF REVIEW (CHECK ONE)

No Change Required	____
Comments/Change Required**	____

(**Attach as many detailed comment pages as necessary to fully describe the change that is needed)

EPA-NC-CE-0000404

BEST MANAGEMENT PRACTICES PLAN
REVIEW/COMMENT FORM

DETAILED COMMENTS

Current Practice

_____
_____
_____
_____
_____

Recommended Modification

_____
_____
_____
_____
_____

Reason for Change

_____
_____
_____
_____
_____

Reviewer _____
(print name)

_____
(signature)

EPA-NC-CE-0000405

BEST MANAGEMENT PRACTICES PLAN
11th STREET CONDUIT
BROOKLYN, NEW YORK

CONSOLIDATED EDISON COMPANY OF NEW YORK, INC.
NEW YORK, NEW YORK

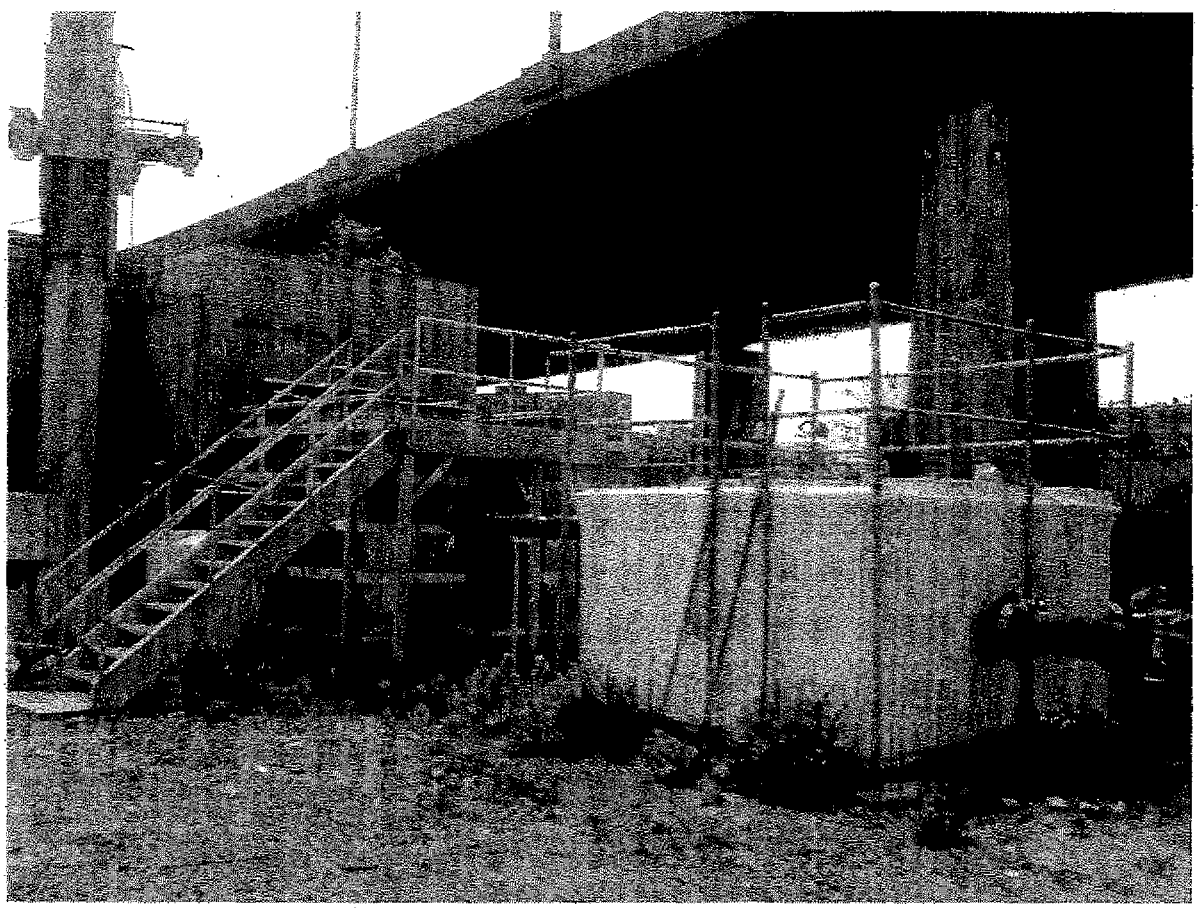

May 2009 (Rev 2)

EPA-NC-CE-0000406

TABLE OF CONTENTS

1.0 INTRODUCTION 1

1.1 BACKGROUND AND OBJECTIVES 1

2.0 PLANNING AND ORGANIZATION 2

2.1 BMP TEAM 2
2.2 REVIEW FOR CONSISTENCY WITH OTHER PLANS 3

3.0 PRELIMINARY ASSESSMENT 4

3.1 SITE PLAN 4
3.2 SOURCE MATERIAL INVENTORY 4
3.3 PAST SPILLS AND LEAKS 4
3.4 SUMMARY OF ASSESSMENT ACTIVITIES 4

4.0 BMP IDENTIFICATION 5

4.1 EXISTING BMPs 5
4.1.1 Good Housekeeping 5
4.1.2 Preventive Maintenance 5
4.1.3 Visual Equipment Inspections 6
4.1.4 Spill Prevention and Response 6
4.1.5 Employee Training 6
4.1.6 Recordkeeping and Reporting 6
4.1.7 Security 6
4.2 RECOMMENDED BMPs 7
4.2.1 Good Housekeeping 7
4.2.2 Preventive Maintenance 7
4.2.3 Visual Equipment Inspections 7
4.2.4 Spill Prevention and Response 7
4.2.5 Employee Training 7
4.2.6 Recordkeeping and Reporting 7
4.2.7 Security 8

5.0 BMP IMPLEMENTATION 9

5.1 IMPLEMENTATION SCHEDULE 9

6.0 EVALUATION 10

6.1 ANNUAL SITE INSPECTION AND BMP EVALUATION 10

EPA-NC-CE-0000407

LIST OF TABLES

Table	Title
2-1	BMP Team
5-1	BMP Implementation Schedule

LIST OF FIGURES

Figure	Title
1-1	Site Location Map
1-2	Site Plan

LIST OF APPENDICES

Appendix	Description
A	Review/Comment Form

EPA-NC-CE-0000408

1.0 INTRODUCTION

1.1 BACKGROUND AND OBJECTIVES

This Best Management Practices (BMP) Plan has been developed for the Consolidated Edison - 11th Street Conduit Tunnel Headhouse Site (See Figure 1-1) located in Brooklyn, New York and addresses best management practice (BMPs) as required in this facility's State Pollution Discharge Elimination System (SPDES) permit (# NY0201138).

The 11th Street Conduit is a tunnel under the Newtown Creek that contains four 345 KV oil filled feeders. A tunnel headhouse is located on both the south bank (Brooklyn) and the north bank (Queens) of the Newtown Creek. The Con Edison property where these headhouses are located is shown on Figure 1-2. The tunnel is sloped towards the Brooklyn tunnel headhouse. The Brooklyn tunnel headhouse contains a sump that collects any water that may infiltrate into the tunnel and the water is treated via an oil water separator before being discharged to the Newtown Creek.

In an effort to prevent, or minimize the potential for, release of significant amounts of toxic or hazardous pollutants to the waters of the State through plant site runoff including storm water, spillage and leaks, sludge or waste disposal, or drainage from raw material storage at the 11th Street Conduit Tunnel Headhouse Site (the Site), Con Edison has prepared this plan. This BMP Plan documents practices that Con Edison is currently implementing or intends to implement to prevent any pollution originating on the site from entering waters of the State.

This document incorporates guidance provided by the USEPA's Storm Water Management for Industrial Activities - Developing Pollution Prevention Plans and Best Management Practices (September 1992).

EPA-NC-CE-0000409

2.0 PLANNING AND ORGANIZATION

2.1 BMP TEAM

The BMP Team identified in Table 2-1 below is responsible for developing the 11th Street Conduit BMP Plan and assisting the facility manager in implementation, maintenance, and revision of this plan. Each team member's name, phone number, and responsibilities are summarized in Table 2-1. The active participation of all personnel in helping to identify and eliminate potential storm water pollution sources is vital to the success of this plan; therefore, the BMP Team is responsible for ensuring that all 11th Street Conduit personnel are made aware of the purpose of this BMP Plan. If personnel notice potential sources of pollutants or have ideas to help reduce storm water pollution, they are advised to discuss them with the appropriate team member.

TABLE 2-1
BMP TEAM

Name/Title	Responsibilities
Warren Miller (917) 578-9757 EH&S Project Specialist Dan Gately (718) 204-4209 EH&S Project Specialist	• Certifies the BMP Plan • Oversees implementation of the BMPs, Material Inventory, Risk Assessment, Employee Training, Recordkeeping, and Keeping BMPs current • Implements all SPDES permit and BMP Plan requirements
David Ferri Site Manager (718) 204-4016 Charles Valenti Operating Supervisor (718)204-4213	• Assists the Environmental Manager in implementation of the BMPs, Material Inventory, Risk Assessment, Employee Training, Recordkeeping, and Keeping BMPs current • Conducts comprehensive site compliance evaluation • Maintains all records

EPA-NC-CE-0000410

2.2 REVIEW FOR CONSISTENCY WITH OTHER PLANS

Coordination of this BMP Plan with other existing environmental management plans and procedures is necessary for proper implementation of this plan. BMPs provided in other existing management plans can be incorporated by reference into this BMP Plan. Company-wide environmental procedures are described in this section. The BMP team will regularly review this plan with other existing environmental management plans and procedures to ensure overall consistency.

Con Edison has developed Corporate Environmental Health and Safety Procedures (CEHSPs) to address Company-wide federal, state, and local regulatory requirements. The CEHSP manual is organized into 12 major environmental subject areas:

- Air Resources
- Water
- Oil
- Hazardous Waste Management
- Solid Waste Management
- PCB Management
- Chemical
- Land Use
- Fish, Wildlife, and Wetlands
- Release Reporting
- Management of Change
- Administrative Control Procedures

Each environmental subject area includes a Program Overview, which details the minimum technical and procedural performance standards applicable by activity to assure compliance with environmental and health and safety requirements and specify good management practices.

General Environmental Instructions (GEIs) have been prepared from the CEHSPs to provide all Con Edison with short instructions outlining the environmental requirements associated with specific job tasks. The Environmental Manager will be responsible for implementing the GEIs. In addition, there will be on the job training of the GEIs, as appropriate for each specific job description.

EPA-NC-CE-0000411

3.0 PRELIMINARY ASSESSMENT

3.1 SITE PLAN

The site plan (Figure 1-2) shows the location of the 11th Street Conduit Tunnel. This figure was prepared based on information acquired through a site reconnaissance conducted by Malcolm Pirnie during the BMPs site assessment conducted on November 27, 1996. As illustrated on Figure 1-2, a tunnel headhouse containing an elevator that provides access to the tunnel, Two Twin Mercer Filters and an oil/water (O/W) separator are located on the site.

3.2 SOURCE MATERIAL INVENTORY

The EPA guidance document for developing Pollution Prevention Plans & Best Management Practices recommends that an inventory of "significant materials" that may potentially come in contact with the site's wastewater or storm water and thereby be released to waters of the State be conducted. For the purposes of this document, significant materials are limited to industrial activity chemicals and fuels.

3.3 PAST SPILLS AND LEAKS

Information on past spills and leaks can be obtained in the e2mis tracking system.

3.4 SUMMARY OF ASSESSMENT ACTIVITIES

A site assessment inspection was conducted on November 27, 1996 to identify the areas where material handling and storage activities occur at the 11th Street Conduit. The 11th Street Conduit site is maintained fenced and locked. The areas of potential pollutant sources at the 11th Street Conduit include: Oil-filled feeders; Two Twin Mercer Filters; O/W separator

EPA-NC-CE-0000412

4.0 BMP IDENTIFICATION

4.1 EXISTING BMPS

BMPs are measures used to prevent or mitigate wastewater and/or storm water from becoming contaminated with pollutants. BMPs are selected to prevent contamination by stressing the importance of pollution prevention management and employee awareness of potential pollutant sources. The BMPs currently being implemented at the 11th Street Conduit to eliminate or reduce pollutant loadings are summarized in the subsections that follow.

4.1.1 Good Housekeeping

Good housekeeping requires the maintenance of areas, which may contribute pollutants to wastewater and/or storm water discharges in a clean, orderly manner. A material inventory is maintained at the 11th Street Conduit of any/all industrial activity chemicals and fuels that are handled, treated, stored, used, processed, or disposed in a manner to potentially allow exposure to the 11th Street Conduit site SPDES outfall and/or storm water.

The 11th Street Conduit site is maintained in a clean, orderly manner. Tunnel operations conducts weekly inspections of the 11th Street Conduit elevator, tunnel sump, water pump high and low level alarms, lighting, and O/W separator. The O/W separator's oil high level alarm and high water alarm are remotely monitored at Con Edison's Gas Control Center located at 1516 Bronxdale Avenue, Bronx, New York.

4.1.2 Preventive Maintenance

The O/W separator and Two Twin Mercer Filters located at the 11th Street Conduit site is maintained by a vendor on a quarterly basis. Maintenance includes cleaning of the oil compartment and sludge removal. During maintenance operations, the sump pump within the tunnel is shut off to prevent any bypass of the O/W separator and Two Twin Mercer Filters.

EPA-NC-CE-0000413

4.1.3 Visual Equipment Inspections

As discussed in Section 4.1.1, tunnel operations conducts weekly inspections of the entire site including the 11th Street Conduit tunnel, elevator, tunnel sump, water pump high and low alarms, lighting, Two Twin Mercer Filters, O/W separator, and SPDES outfall piping. A checklist (tunnel inspection form) is completed to document weekly inspections and to address comments and/or concerns identified during the inspection. This checklist includes a list of inspected equipment.

4.1.4 Spill Prevention and Response

If a spill were to be discovered all personnel are required to follow General Environmental Instruction (GEI) 2.01. A cleanup contractor may be hired as necessary.

4.1.5 Employee Training

All employees with spill response responsibilities are trained in GEI 2.01. Environmental Manager receives Corporate Environmental Health Safety Procedures (CEHSP) training as introduced in Section 2. The Environmental Managers and site manager will be responsible for enforcing the applicable GEIs.

4.1.6 Recordkeeping and Reporting

Central Gas Operations Tunnel Maintenance personnel department maintains records of weekly inspections.

4.1.7 Security

The entire 11th Street Conduit site is fenced and locked.

EPA-NC-CE-0000414

4.2 RECOMMENDED BMPS

4.2.1 Good Housekeeping

BMPs are currently in-place.

4.2.2 Preventive Maintenance

BMPs are currently in-place.

4.2.3 Visual Equipment Inspections

BMPs are currently in-place.

4.2.4 Spill Prevention and Response

In addition to the corporate CEHSPs and GEIs this facility has a Hazardous Waste Contingency Plan and Emergency Response Plan.

4.2.5 Employee Training

An employee training program is implemented for the 11th Street Conduit to teach personnel at all levels of responsibility the components and goals of the BMP Plan. The program, at a minimum, addresses spill prevention and response, good housekeeping, and material management practices. A schedule for the training program and list of the employees who attend training sessions are kept on file.

4.2.6 Recordkeeping and Reporting

A checklist, as discussed in Section 4.1.3, is established for the weekly inspections, and completed inspection sheets are maintained by the site manager or other designated person. This site is considered a Conditionally Exempt Small Quantity Generator (CESQG).

EPA-NC-CE-0000415

4.2.7 Security

BMPs are currently in-place.

EPA-NC-CE-0000416

5.0 BMP IMPLEMENTATION

5.1 IMPLEMENTATION SCHEDULE

The implementation schedule for BMPs identified in Section 4.2 is contained in Table 5-1.

TABLE 5-1
BMP IMPLEMENTATION SCHEDULE

BMPs	Description of Action(s) required for Implementation	Scheduled Completion Date(s) for Required Action	Person Responsible for Action
Good Housekeeping	• Prepare and maintain a material inventory of all industrial activity chemicals and fuels that have the potential to contaminate a SPDES permitted outfall or storm water.	Completed.	Site Manager
Employee Training	• Implement a BMP employee training program	Completed	Site Manager Gas EH&S

EPA-NC-CE-0000417

6.0 EVALUATION

6.1 ANNUAL SITE INSPECTION AND BMP EVALUATION

Site compliance evaluations must be conducted at appropriate intervals or at least once per year by designated BMP Team members of the 11th Street Conduit site. The BMP Plan shall be modified whenever changes at the site materially increase the potential of significant releases of toxic or hazardous pollutants or where actual releases indicate the plan is inadequate. The compliance evaluations shall include:

- Review of the BMP Plan and confirm that items that are part of material handling, storage, and transfer areas are addressed in the plan.
- Review site operations for the past year to determine if any additional areas need to be included in the BMP Plan, or if any existing areas were modified so as to require plan modification.
- Visually inspect the site especially the wastewater and storm water discharge areas to determine if (1) all pollution prevention measures are accurately identified in the plan and (2) all pollution prevention measures are in place and working properly
- Document findings on Review/Comment Form provided in Appendix A and modify plan, as appropriate.

EPA-NC-CE-0000418

FIGURE 1-1

SITE LOCATION MAP

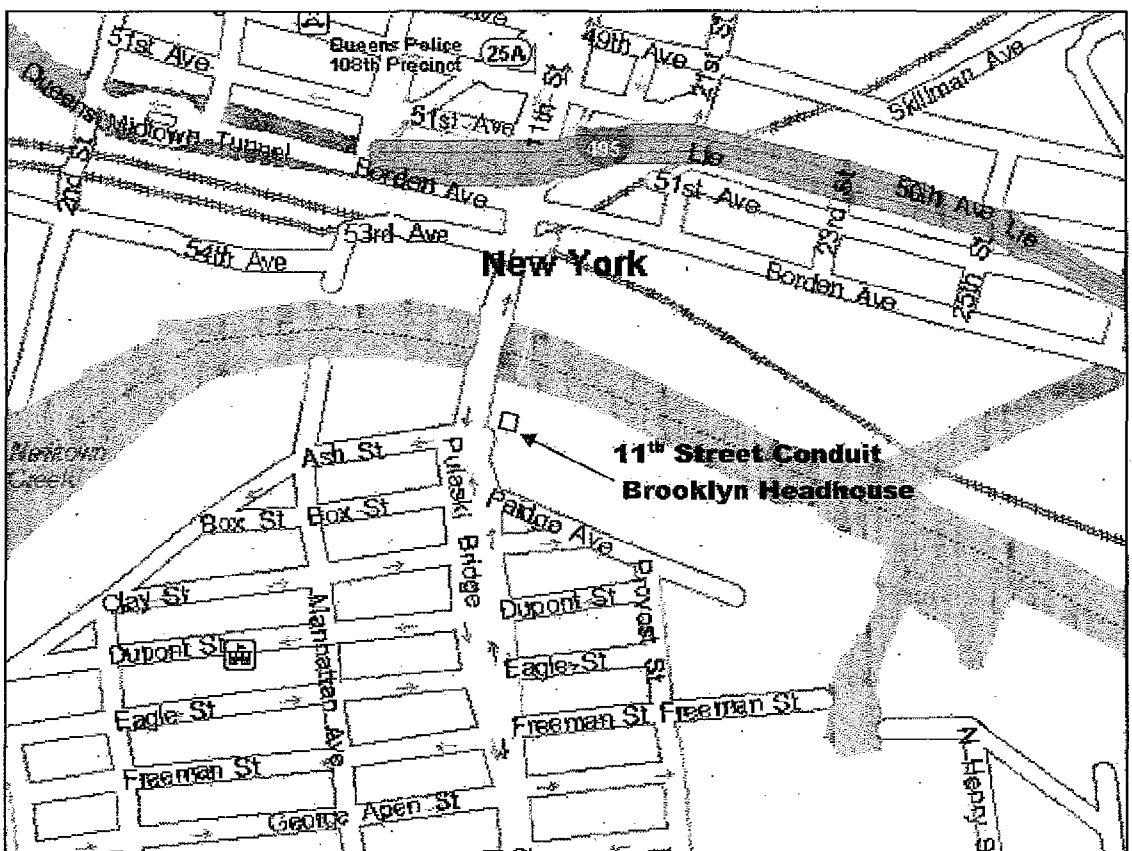

11th STREET CONDUIT, BROOKLYN HEADHOUSE - SITE LOCATION MAP

EPA-NC-CE-0000419

FIGURE 1-2

SITE PLAN

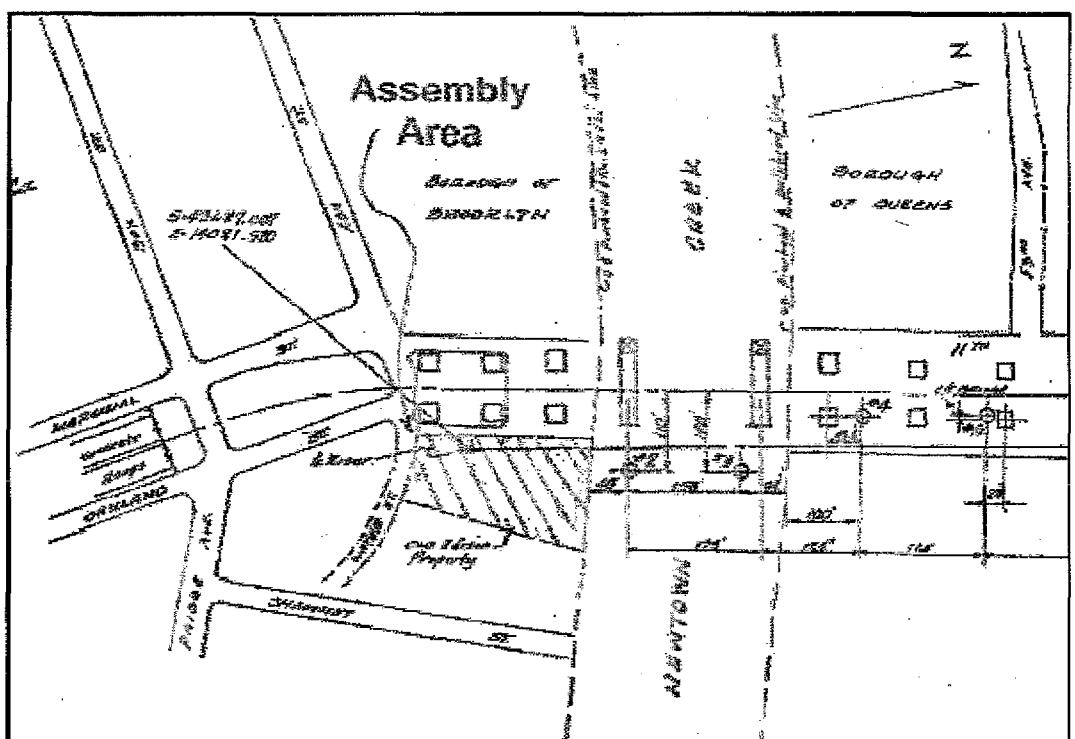

11th STREET CONDUIT, BROOKLYN HEADHOUSE - SITE PLAN

EPA-NC-CE-0000420

APPENDIX A

REVIEW/COMMENT FORM
BEST MANAGEMENT PRACTICES PLAN
11th STREET CONDUIT

EPA-NC-CE-0000421

BEST MANAGEMENT PRACTICES PLAN
REVIEW/COMMENT FORM

LOCATION 11TH STREET CONDUIT

DATE OF REVIEW 5/2009

TYPE OF REVIEW (CHECK ONE)
Annual Review X
Unscheduled Review*

(* Describe equipment, operation, or source on detailed comment page)

REVIEWER(S)

WARREN MILLER
(print name)

DAVID FERRI
(print name)

Warren S. Miller
(signature)

David R Ferri
(signature)

RESULTS OF REVIEW (CHECK ONE)
No Change Required
Comments/Change Required** X

(**Attach as many detailed comment pages as necessary to fully describe the change that is needed)

EPA-NC-CE-0000422

BEST MANAGEMENT PRACTICES PLAN
REVIEW/COMMENT FORM

DETAILED COMMENTS

Current Practice:

Current Practice updated to reflect the installation of the Two Twin Mercer Filters. Also the change in the Corporate Environmental Procedures (CEPs) to Corporate Environmental Health Safety Procedures CEHSPs and the updating of the BMP Team.

Recommended Modification

Comments as listed in plan.

Reason for Change: Update Plan

Annual Review: May 13, 2009

Reviewer WARREN S. MILLER
(print name)

Warren S. Miller
(signature)

EPA-NC-CE-0000423

BEST MANAGEMENT PRACTICES PLAN
11th STREET CONDUIT
BROOKLYN, NEW YORK

CONSOLIDATED EDISON COMPANY OF NEW YORK, INC.
NEW YORK, NEW YORK

December 2011 (Rev 4)

EPA-NC-CE-0000424

TABLE OF CONTENTS

1.0 INTRODUCTION

1.1 BACKGROUND AND OBJECTIVES 1

2.0 PLANNING AND ORGANIZATION 2

2.1 BMP TEAM 2
2.2 REVIEW FOR CONSISTENCY WITH OTHER PLANS 3

3.0 PRELIMINARY ASSESSMENT 4

3.1 SITE PLAN 4
3.2 SOURCE MATERIAL INVENTORY 4
3.3 PAST SPILLS AND LEAKS 4
3.4 SUMMARY OF ASSESSMENT ACTIVITIES 4

4.0 BMP IDENTIFICATION 5

4.1 EXISTING BMPs 5
4.1.1 Good Housekeeping 5
4.1.2 Preventive Maintenance 5
4.1.3 Visual Equipment Inspections 6
4.1.4 Spill Prevention and Response 6
4.1.5 Employee Training 6
4.1.6 Recordkeeping and Reporting 6
4.1.7 Security 6
4.2 RECOMMENDED BMPs 7
4.2.1 Good Housekeeping 7
4.2.2 Preventive Maintenance 7
4.2.3 Visual Equipment Inspections 7
4.2.4 Spill Prevention and Response 7
4.2.5 Employee Training 7
4.2.6 Recordkeeping and Reporting 7
4.2.7 Security *8*

5.0 BMP IMPLEMENTATION 8

5.1 IMPLEMENTATION SCHEDULE 8

6.0 EVALUATION 9

6.1 ANNUAL SITE INSPECTION AND BMP EVALUATION 9

EPA-NC-CE-0000425

LIST OF TABLES

Table	Title
2-1	BMP Team
5-1	BMP Implementation Schedule

LIST OF FIGURES

Figure	Title
1-1	Site Location Map
1-2	Site Plan

LIST OF APPENDICES

Appendix	Description
A	Review/Comment Form

EPA-NC-CE-0000426

1.0 INTRODUCTION

1.1 BACKGROUND AND OBJECTIVES

This Best Management Practices (BMP) Plan has been developed for the Consolidated Edison - 11th Street Conduit Tunnel Headhouse Site (See Figure 1-1) located in Brooklyn, New York and addresses best management practice (BMPs) as required in this facility's State Pollution Discharge Elimination System (SPDES) permit (# NY0201138).

The 11th Street Conduit is a tunnel under the Newtown Creek that contains four 345 KV oil filled feeders. A tunnel headhouse is located on both the south bank (Brooklyn) and the north bank (Queens) of the Newtown Creek. The Con Edison property where these headhouses are located is shown on Figure 1-2. The tunnel is sloped towards the Brooklyn tunnel headhouse. The Brooklyn tunnel headhouse contains a sump that collects any water that may infiltrate into the tunnel and the water is treated via Mercer filters and oil water separator before being discharged to the Newtown Creek.

In an effort to prevent, or minimize the potential for, release of significant amounts of toxic or hazardous pollutants to the waters of the State through plant site runoff including storm water, spillage and leaks, sludge or waste disposal, or drainage from raw material storage at the 11th Street Conduit Tunnel Headhouse Site (the Site), Con Edison has prepared this plan. This BMP Plan documents practices that Con Edison is currently implementing or intends to implement to prevent any pollution originating on the site from entering waters of the State.

This document incorporates guidance provided by the USEPA's Storm Water Management for Industrial Activities - Developing Pollution Prevention Plans and Best Management Practices (September 1992).

EPA-NC-CE-0000427

2.0 PLANNING AND ORGANIZATION

2.1 BMP TEAM

The BMP Team identified in Table 2-1 below is responsible for developing the 11th Street Conduit BMP Plan and assisting the facility manager in implementation, maintenance, and revision of this plan. Each team member's name, phone number, and responsibilities are summarized in Table 2-1. The active participation of all personnel in helping to identify and eliminate potential storm water pollution sources is vital to the success of this plan; therefore, the BMP Team is responsible for ensuring that all 11th Street Conduit personnel are made aware of the purpose of this BMP Plan. If personnel notice potential sources of pollutants or have ideas to help reduce storm water pollution, they are advised to discuss them with the appropriate team member.

TABLE 2-1
BMP TEAM

Name/Title	Responsibilities
Warren Miller (917) 578-9757 EH&S Project Specialist Dan Gately (718) 204-4209 EH&S Project Specialist	• Certifies the BMP Plan • Oversees implementation of the BMPs, Material Inventory, Risk Assessment, Employee Training, Recordkeeping, and Keeping BMPs current • Implements all SPDES permit and BMP Plan requirements
David Ferri Site Manager (718) 204-4016 Charles Valenti Operating Supervisor (718)204-4213	• Assists the Environmental Manager in implementation of the BMPs, Material Inventory, Risk Assessment, Employee Training, Recordkeeping, and Keeping BMPs current • Conducts comprehensive site compliance evaluation • Maintains all records

EPA-NC-CE-0000428

2.2 REVIEW FOR CONSISTENCY WITH OTHER PLANS

Coordination of this BMP Plan with other existing environmental management plans and procedures is necessary for proper implementation of this plan. BMPs provided in other existing management plans can be incorporated by reference into this BMP Plan. Company-wide environmental procedures are described in this section. The BMP team will regularly review this plan with other existing environmental management plans and procedures to ensure overall consistency.

Con Edison has developed Corporate Environmental Health and Safety Procedures (CEHSPs) to address Company-wide federal, state, and local regulatory requirements. The CEHSP manual is organized into 12 major environmental subject areas:

- Air Resources
- Water
- Oil
- Hazardous Waste Management
- Solid Waste Management
- PCB Management
- Chemical
- Land Use
- Fish, Wildlife, and Wetlands
- Release Reporting
- Management of Change
- Administrative Control Procedures

Each environmental subject area includes a Program Overview, which details the minimum technical and procedural performance standards applicable by activity to assure compliance with environmental and health and safety requirements and specify good management practices.

General Environmental Health Safety Instructions (GEHSIs) have been prepared from the CEHSPs to provide all Con Edison with short instructions outlining the environmental requirements associated with specific job tasks. The Environmental Manager will be responsible for implementing the GEHSIs. In addition, there will be on the job training of the GEHSIs, as appropriate for each specific job description.

EPA-NC-CE-0000429

3.0 PRELIMINARY ASSESSMENT

3.1 SITE PLAN

The site plan (Figure 1-2) shows the location of the 11th Street Conduit Tunnel. This figure was prepared based on information acquired through a site reconnaissance conducted by Malcolm Pirnie during the BMPs site assessment conducted on November 27, 1996. As illustrated on Figure 1-2, a tunnel headhouse containing an elevator that provides access to the tunnel, Two Twin Mercer Filters and an oil/water (O/W) separator are located on the site.

3.2 SOURCE MATERIAL INVENTORY

The EPA guidance document for developing Pollution Prevention Plans & Best Management Practices recommends that an inventory of "significant materials" that may potentially come in contact with the site's wastewater or storm water and thereby be released to waters of the State be conducted. For the purposes of this document, significant materials are limited to industrial activity chemicals and fuels.

3.3 PAST SPILLS AND LEAKS

Information on past spills and leaks can be obtained in the e2mis tracking system.

3.4 SUMMARY OF ASSESSMENT ACTIVITIES

A site assessment inspection was conducted on June 1, 2010 and October 6, 2010 to identify the areas where material handling and storage activities occur at the 11th Street Conduit. The 11th Street Conduit site is maintained fenced and locked. The areas of potential pollutant sources at the 11th Street Conduit include: Oil-filled feeders; Two Twin Mercer Filters; O/W separator

4.0 BMP IDENTIFICATION

4.1 EXISTING BMPS

BMPs are measures used to prevent or mitigate wastewater and/or storm water from becoming contaminated with pollutants. BMPs are selected to prevent contamination by stressing the importance of pollution prevention management and employee awareness of potential pollutant sources. The BMPs currently being implemented at the 11th Street Conduit to eliminate or reduce pollutant loadings are summarized in the subsections that follow.

4.1.1 Good Housekeeping

Good housekeeping requires the maintenance of areas, which may contribute pollutants to wastewater and/or storm water discharges in a clean, orderly manner. A material inventory is maintained at the 11th Street Conduit of any/all industrial activity chemicals and fuels that are handled, treated, stored, used, processed, or disposed in a manner to potentially allow exposure to the 11th Street Conduit site SPDES outfall and/or storm water.

The 11th Street Conduit site is maintained in a clean, orderly manner. Tunnel operations conducts weekly inspections of the 11th Street Conduit elevator, tunnel sump, water pump high and low level alarms, lighting, and O/W separator. The O/W separator's oil high level alarm and high water alarm are remotely monitored at Con Edison's Gas Control Center located at 1516 Bronxdale Avenue, Bronx, New York.

4.1.2 Preventive Maintenance

The O/W separator and Two Twin Mercer Filters located at the 11th Street Conduit site is maintained by a vendor on a quarterly basis. Maintenance includes cleaning of the oil compartment and sludge removal. During maintenance operations, the sump pump within the tunnel is shut off to prevent any bypass of the O/W separator and Two Twin Mercer Filters.

EPA-NC-CE-0000431

4.1.3 Visual Equipment Inspections

As discussed in Section 4.1.1, tunnel operations conducts weekly inspections of the entire site including the 11th Street Conduit tunnel, elevator, tunnel sump, water pump high and low alarms, lighting, Two Twin Mercer Filters, O/W separator, and SPDES outfall piping. A checklist (tunnel inspection form) is completed to document weekly inspections and to address comments and/or concerns identified during the inspection. This checklist includes a list of inspected equipment.

4.1.4 Spill Prevention and Response

If a spill were to be discovered all personnel are required to follow General Environmental Health Safety Instruction (GEI) E 2.01. A cleanup contractor may be hired as necessary.

4.1.5 Employee Training

All employees with spill response responsibilities are trained in GEHSI E2.01. Environmental Manager receives Corporate Environmental Health Safety Procedures (CEHSP) training as introduced in Section 2. The Environmental Managers and site manager will be responsible for enforcing the applicable GEHSIs.

4.1.6 Recordkeeping and Reporting

Central Gas Operations Tunnel Maintenance personnel department maintains records of weekly inspections.

4.1.7 Security

The entire 11th Street Conduit site is fenced and locked. Tunnel access doors are Alarmed to the Gas Control Center.

EPA-NC-CE-0000432

4.2 RECOMMENDED BMPS

4.2.1 Good Housekeeping

BMPs are currently in-place.

4.2.2 Preventive Maintenance

BMPs are currently in-place.

4.2.3 Visual Equipment Inspections

BMPs are currently in-place.

4.2.4 Spill Prevention and Response

In addition to the corporate CEHSPs and GEHSIs this facility has a Hazardous Waste Contingency Plan and Emergency Response Plan.

4.2.5 Employee Training

An employee training program is implemented for the 11th Street Conduit to teach personnel at all levels of responsibility the components and goals of the BMP Plan. The program, at a minimum, addresses spill prevention and response, good housekeeping, and material management practices. A schedule for the training program and list of the employees who attend training sessions are kept on file.

4.2.6 Recordkeeping and Reporting

A checklist, as discussed in Section 4.1.3, is established for the weekly inspections, and completed inspection sheets are maintained by the site manager or other designated person. This site is considered a Conditionally Exempt Small Quantity Generator (CESQG).

EPA-NC-CE-0000433

4.2.7 Security

BMPs are currently in-place.

5.0 BMP IMPLEMENTATION

5.1 IMPLEMENTATION SCHEDULE

The implementation schedule for BMPs identified in Section 4.2 is contained in Table 5-1.

TABLE 5-1
BMP IMPLEMENTATION SCHEDULE

BMPs	Description of Action(s) required for Implementation	Scheduled Completion Date(s) for Required Action	Person Responsible for Action
Good Housekeeping	• Prepare and maintain a material inventory of all industrial activity chemicals and fuels that have the potential to contaminate a SPDES permitted outfall or storm water.	Completed.	Site Manager
Spill Prevention and Response	• Develop a written spill response procedure.	Completed	Gas EH&S
Employee Training	• Implement a BMP employee training program	Completed	Site Manager Gas EH&S

EPA-NC-CE-0000434

6.0 EVALUATION

6.1 ANNUAL SITE INSPECTION AND BMP EVALUATION

Site compliance evaluations must be conducted at appropriate intervals or at least once per year by designated BMP Team members of the 11th Street Conduit site. The BMP Plan shall be modified whenever changes at the site materially increase the potential of significant releases of toxic or hazardous pollutants or where actual releases indicate the plan is inadequate. The compliance evaluations shall include:

- Review of the BMP Plan and confirm that items that are part of material handling, storage, and transfer areas are addressed in the plan.
- Review site operations for the past year to determine if any additional areas need to be included in the BMP Plan, or if any existing areas were modified so as to require plan modification.
- Visually inspect the site especially the wastewater and storm water discharge areas to determine if (1) all pollution prevention measures are accurately identified in the plan and (2) all pollution prevention measures are in place and working properly
- Document findings on Review/Comment Form provided in Appendix A and modify plan, as appropriate.

EPA-NC-CE-0000435

FIGURE 1-1

SITE LOCATION MAP

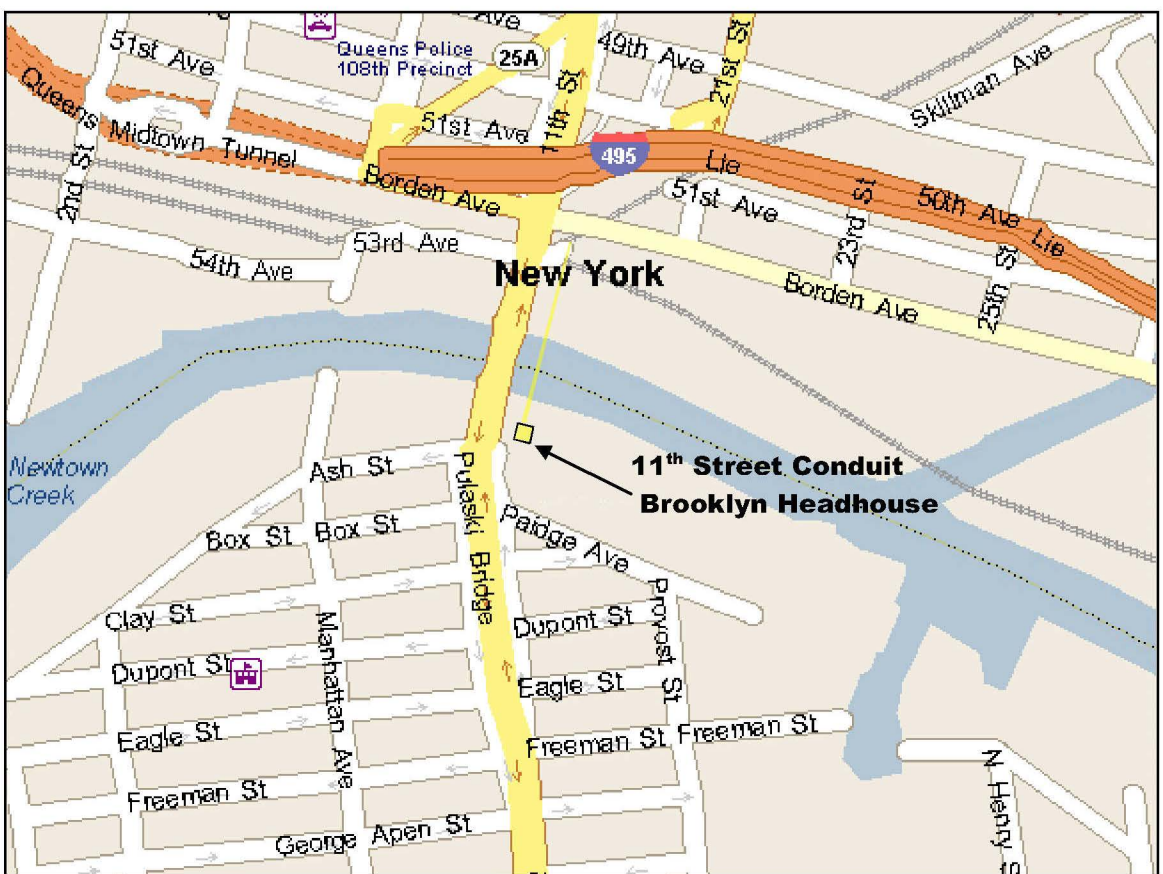

11th STREET CONDUIT, BROOKLYN HEADHOUSE - SITE LOCATION MAP

FIGURE 1-2

SITE PLAN

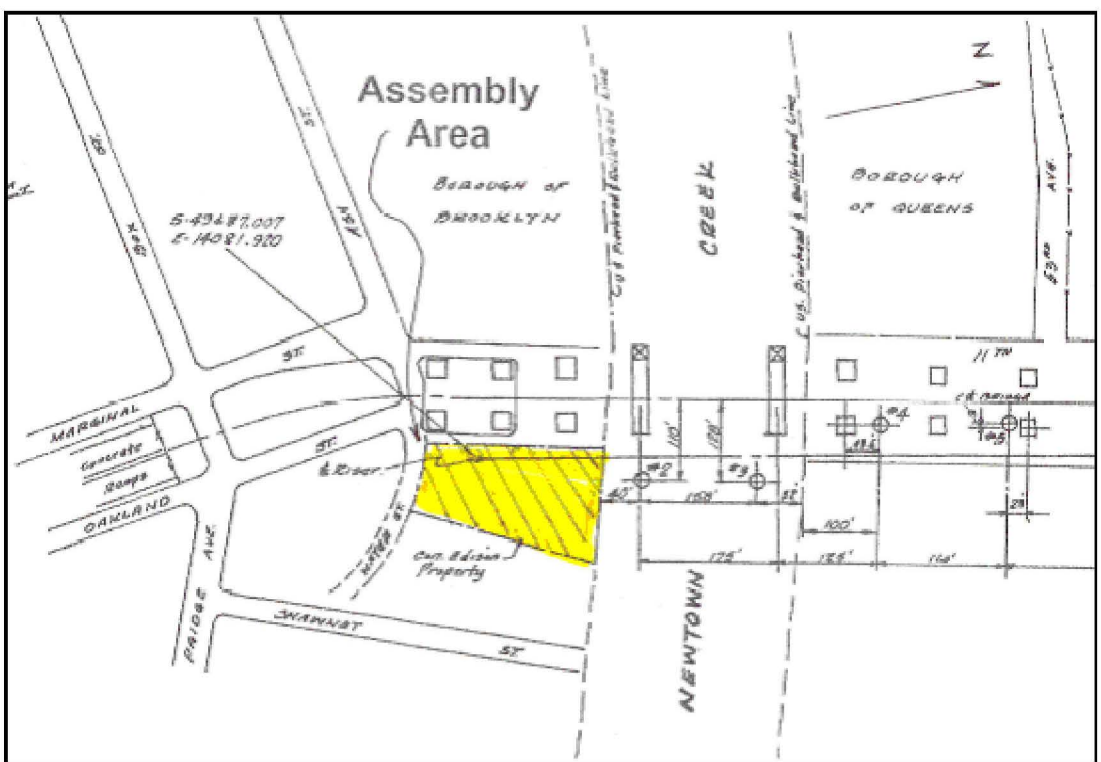

11th STREET CONDUIT, BROOKLYN HEADHOUSE - SITE PLAN

APPENDIX A

REVIEW/COMMENT FORM
BEST MANAGEMENT PRACTICES PLAN
11th STREET CONDUIT
BEST MANAGEMENT PRACTICES PLAN
REVIEW/COMMENT FORM

IN SEPTEMBER 2011 ALL TUNNEL MECHANICS WERE GIVEN WATER VULNERABILITY TRAINING COVERING ALL ASPECTS OF NYS SPDES COMPLIANCE AS WELL AS Best Management Practices.

EPA-NC-CE-0000438

LOCATION 11TH STREET CONDUIT

DATE OF REVIEW DECEMBER 2011

TYPE OF REVIEW (CHECK ONE)

Annual Review	X
Unscheduled Review*	

(* Describe equipment, operation, or source on detailed comment page)

REVIEWER(S)

WARREN MILLER	DAVID FERRI
(print name)	(print name)
(signature)	(signature)

RESULTS OF REVIEW (CHECK ONE)

No Change Required	X
Comments/Change Required**	

(**Attach as many detailed comment pages as necessary to fully describe the change that is needed)

EPA-NC-CE-0000439

BEST MANAGEMENT PRACTICES PLAN
REVIEW/COMMENT FORM

DETAILED COMMENTS

Current Practice: No Change in current BMP Practice.

Recommended Modification

Comments as listed in plan.: IN SEPTEMBER 2011 ALL TUNNEL MECHANICS WERE GIVEN WATER VULNERABILITY TRAINING COVERING ALL ASPECTS OF NYS SPDES COMPLIANCE AS WELL AS Best Management Practices.

Reason for Change: No changes as to date.

Annual Review: December 15, 2011

Reviewer _WARREN S. MILLER_____
(print name)

_____
(signature)

EPA-NC-CE-0000440

SECTION 1

New York State Department of Environmental Conservation
Division of Water

Report of Noncompliance Event

To: DEC Water Contact Timothy P. Burns **DEC Region:** 2

Report Type: ___ 5 Day X Permit Violation ___ Order Violation ___ Anticipated Noncompliance ___ Bypass/Overflow

SECTION 2

SPDES #: NY - 0201138 **Facility:** 11th Street Conduit

Date of noncompliance: 09/29/99 **Location (Outfall, Treatment Unit, or Pump Station):** 001M

Description of noncompliance(s) and cause(s): Recent work activity involving the cleaning of the drainage trough may have affected the reading. Hard sediment had built up in the trough to the point where it was impeding the water from draining. This hard sediment was broken out. Black droplets of an oily substance began emanating from the bottom of the trough surface. These droplets are floating in the drainage water into the sump pit.

Has event ceased? X (Yes) (No) **If so, when?** 10-5-99 **Was event due to plant upset?** (Yes) X (No) **SPDES limits violated? X** (Yes) (No)

State date, time of event: 10-29-99 1000 (AM) (PM) **End date, Time of event** (AM) (PM)

ate, time oral notification made to DEC? ___ ___ (AM) ___ (PM) **DEC Official contacted:**

Immediate corrective Actions: Miller Environmental was dispatched to the location and to clean the sump and the oil water separator on Oct 5, 1999. The separator was cleaned and returned to service. Absorbent pigs have been installed in the trough to capture the black droplets. A means of eliminating the oily substance from penetrating the trough is currently under investigation. The source of the oily substance is extneral to the tunnel and is unknown. An Oil Id analysis does not match any known Con Ed standard. It has similar characteristics to a fuel oil but is too degraded for a conclusive ID.

Preventive (long-term) corrective actions: Increase cleaning of the separator will be scheduled.

SECTION 3

Complete this section if event was a bypass:

Bypass amount: ___ Was prior DEC authorization received for this event? (Yes) (No)

DEC Official contacted: ___ Date of DEC approval: ___

Describe event in "Description of noncompliance and cause" area Section 2. Detail the start and end dates and times in Section 2 also.

SECTION 4

Facility Representative: John O'Connor Title: Manager Date: 10-6-99

Phone #: 718-579-1242 Fax #: 718-589-8676

Appendix B

SECTION 1

New York State Department of Environmental Conservation
Division of Water

Report of Noncompliance Event

To: DEC Water Contact Selvin Southwell **DEC Region:** 2

Report Type: ___ 5 Day ✓ *Permit Violation* ___ *Order Violation* ___ *Anticipated Noncompliance* ___ *Bypass/Overflow* ___ *Other*

SECTION 2

SPDES #: NY- 020-1138 **Facility:** 11th Street Conduit

Date of noncompliance: 11/21/06 **Location (Outfall, Treatment Unit, or Pump Station):** Outfall 001

Description of noncompliance(s) and cause(s): Results for oil + grease sample taken on 11/21/06 was 20.5 mg/L which exceeded the SPDES permit discharge limit of 15 mg/L. Investigation revealed that one of the two sump pumps had fallen to the bottom of the sump and pumped sludge from the sump bottom.

Has event ceased? (Yes) (No) **If so, when?** 11/28/06 **Was event due to plant upset?** (Yes) (No) **SPDES limits violated?** (Yes) (No)

Start date, time of event: 11/19/06, 10:30 (AM) (PM) **End date, time of event:** 11/28/06, 2:30 (AM) (PM)

Date, time oral notification made to DEC? 11/28/06, 2:50 (AM) (PM) **DEC Official contacted:** Selvin Southwell

Immediate corrective actions: When the initial sample result was received on 11/28, a crew was dispatched to the location. At 2:30pm the conduit discharge was diverted to a tanker. The sump & o/w Seperator were cleaned. The crew also discovered that 1 of 2 sump pumps had fallen to the bottom of the sump & was pumping sludge from the sump bottom. The pump was re-hung. A previous tunnel inspection on 11/8/06 at 10:30 detected no problem with pump.

Preventive (long term) corrective actions: The sump pump was replaced with a pump with a better hanging mechanism. The sump pump support beam and rigging were also changed. Previous plans to install a pre-filter before the o/w Seperator are ongoing. Accelerated cleaning schedule for the sump and o/w Seperator will continue.

SECTION 3

Complete this section if event was a bypass:

Bypass amount: _____ Was prior DEC authorization received for this event? (Yes) (No)

DEC Official contacted: _____ Date of DEC approval: ___/___/___

Describe event in "Description of noncompliance and cause" area in Section 2. Detail the start and end dates and times in Section 2 also.

SECTION 4

Facility Representative: William Murphy **Title:** Sr. EHS Specialist **Date:** 12/20/06

Phone #: (917) 578-2576 **Fax #:** (718) 278-1857

I Certify under penalty of law that this document and all attachments were prepared under my direction or supervision in accordance with a system designed to assure that qualified personnel properly gather and evaluate the information submitted. Based on my inquiry of the person or persons who manage the system, or those persons directly responsible for gathering the information, the information submitted is, to the best of my knowledge and belief, true, accurate, and complete. I am aware that there are significant penalties for submitting false information, including the possibility of fine and imprisonment for knowing violations.

✗ William Murphy

Signature of Principal Executive Officer or Authorized Agent

Appendix B

SECTION 1

New York State Department of Environmental Conservation
Division of Water

Report of Noncompliance Event

To: DEC Water Contact - Mr. Selvin Southwell DEC Region: Region 2

Report Type: X 5 Day ___ *Permit Violation* ___ *Order Violation* ___ *Anticipated Noncompliance* ___ *Bypass/Overflow* ___ *Other*

SECTION 2

SPDES #: NY-0201138 **Facility**: 11th Street Conduit

Date of noncompliance: 2-19-09 **Location** : Tunnel discharge pipe prior to the inlet to the Mercer filter and Oil water separator.

Description of noncompliance(s) and cause(s): Discharge water from the tunnel sump spilled to the blue stone in the Tunnel Yard. At 08:02 on Thursday 2-19-09 the tunnel crew working with the Miller Environmental contractor who was cleaning the oil water separator in the 11th Street yard, discovered a spill of approximately 1 gallon of oily water which sprayed out from the tunnel waste water discharge line prior to the mercer filter and oil water separator. The spill was not the result of work in progress in the area. The crew immediately turned the tunnel pumps off and drained the discharge line into a tanker that was on the site for the oil water separator cleaning. With the leak secured, the tunnel and Miller Environmental Crews proceeded to clean up the spill. At 10:17 the spill was cleaned up and any oil contaminated bluestone was drummed for proper disposal. The waste water that was put in the tanker was not reintroduced into the discharge system but was shipped off site for disposal. The spill was caused by internal corrosion of the steel to P.E. transition fitting in the discharge line. Tunnel sump waste water sample test results will be forwarded when received.

Has event ceased? Yes **If so, when?** 2-19-09 **Was event due to plant upset?** No **SPDES limits violated?** No

Start date, time of event: 2-19-09 at 08:02 **End date, time of event:** 2-19-09 at 10:17

Date, time oral notification made to DEC? 2-19-09 / 08:39 **DEC Official contacted:** Mr. Clark

Immediate corrective actions:
Tunnel Maintenance removed the corroded pipe and fittings and replaced them with new pipe and fittings. The repair was completed at 1915 on 2-19-09 and the discharge system was returned to service

Preventive (long term) corrective actions: Tunnel maintenance will be cutting out all metallic fittings and piping and replacing them with PE pipe and fittings.

SECTION 3

Complete this section if event was a bypass:
Bypass amount: 1 GAL. Was prior DEC authorization received for this event? (Yes) (No)
DEC Official contacted: _____ Date of DEC approval: __/__/__
Describe event in "Description of noncompliance and cause" area in Section 2. Detail the start and end dates and times in Section 2 also.

SECTION 4

Facility Representative: Warren Miller **Title: EH&S Project Specialist** **Date: 2-23-09**

Phone #: 917-578-9757 **Fax #: 718-278-1857**

I Certify under penalty of law that this document and all attachments were prepared under my direction or supervision in accordance with a system designed to assure that qualified personnel properly gather and evaluate the information submitted. Based on my inquiry of the person or persons who manage the system, or those persons directly responsible for gathering the information, the information submitted is, to the best of my knowledge and belief, true, accurate, and complete. I am aware that there are significant penalties for submitting false information, including the possibility of fine and imprisonment for knowing violations.

Signature of Principal Executive Officer or Authorized Agent Warren S. Miller

RECEIVED
OCT 1994
KENNETH E. RICHTER

Roey

AFL Industries, Inc.
3661 West Blue Heron Blvd., Riviera Beach, FL 33404, Phone ~~(407)~~ 844-5200
Fax No. (407) 844-5246

561

engineering a better environment

CONSOLIDATED EDISON CO.
MECH. ENG. DEPT.
APPROVED
___ FINAL
___ WITH NOTATIONS INDICATED
___ PROCEED WITH FABRICATION
___ REVISED DWG. FOR RECORD
NOT APPROVED
___ REVISED DWG. REQUIRED
STATION: 11TH ST. CONDUIT
TITLE: ...L/WATER
...PARATER
...STALLATION
REQ. ...
PUR. ORD. 41312
M.M. 002 ...50.00 ITEM 1.1
PROJ. NO. 10150-94 | DESIGN | ENGINEER K.E. Richter

CONSOLIDATED EDISON
11TH STREET
NEW YORK

AFL CONTRACT #94288

INSTALLATION, OPERATION & MAINTENANCE BROCHURE

CONSOLIDATED EDISON
11TH STREET
NEW YORK

TABLE OF CONTENTS

General Instructions ---------- I-O-M: 0.01

Maintenance & Application of Fiberglass ---------- I-O-M: 0.02

Handling, Storage & Field Assembly
of Plastic Piping ---------- I-O-M: 0.03

Installation Instructions ---------- I-O-M: 2.00-02

Operation & Maintenance Instructions ---------- I-O-M: 2.10-21

Start-Up Procedure ---------- I-O-M: 2.04.0

Operation Principle ---------- I-O-M: 2.00-1

Troubleshooting Guide ---------- I-O-M: 2.00-3

Operation & Maintenance Instructions (RPS) -------- I-O-M: 7.11

Installation Instructions ---------- I-O-M: 7.13

Recommended Spare Parts ---------- I-O-M: 7.14

Operation & Maintenance Instructions (OSV) -------- I-O-M: 8.10

Equipment Specifications ---------- Contract #94288

VTC400A2---------- Drawing #4S1562

8"ø Oil Stop Valve ---------- Drawing #3S1901

6"ø Rotary Pipe Skimmer---------- Drawing #3S302

Tube Arrangement ---------- Drawing #1S212-1

Lifting Straps ---------- Drawing #1S165

Electrical ---------- Drawing #3E-477-0

TABLE OF CONTENTS
(Continued)

VENDOR DATA

Heaters ---------- Glo-Quartz

Level Switches ---------- Magnetrol

Thermostat ---------- United Electric

AFL INDUSTRIES, INC.
RIVIERA BEACH, FLORIDA

SERVICE MANUAL	GENERAL INSTRUCTIONS	Page 1 OF 1
PRODUCT:	SEPARATORS	ISSUED JAN '83

WARNING: ON DESALTING APPLICATIONS, DO NOT ALLOW THE EMULSION LAYER OR INTERFACE EMULSION LAYER TO ENTER THE OIL WATER SEPARATOR STREAM. THE SEPARATOR STREAM MUST BE BY-PASSED, OR THE SEGREGATE STREAM INTERFACE EMULSION LAYER WILL CAUSE THE PLUGGING OF COALESCING TUBES AND DELTA PACKS.

IN CASE OF AN ACCIDENTAL SPILL, REMOVE COALESCING TUBES AND DELTA PACKS AND CLEAN IMMEDIATELY.

A DE-EMULSIFIER SIMILAR TO ARCO 3037 MAY BE USED IN THE CLEANING OPERATION

SUPERSEDES: I-O-M:

CONTRACTOR - PLEASE READ THIS

INSTRUCTION CAREFULLY

AFL Industries provides you with several valuable aids, and the few minutes you spend reading this instruction will save you hours later. The purpose of this instruction is to acquaint you with the equipment-erecting knowledge which you now have at your fingertips.

THE INFORMATION CONTAINED IN THESE INSTRUCTIONS IS BASED ON YEARS OF EXPERIENCE WITH THE ERECTION OF OUR EQUIPMENT, BUT IS INTENDED AS A GUIDE ONLY. THE EQUIPMENT WHICH YOU HAVE AVAILABLE TO YOU MAY DICTATE OTHER, MORE CONVENIENT, PROCEDURES, BUT THE FINAL RESPONSIBILITY FOR SELECTION OF ERECTION PROCEDURES OR TOOLS IS NOT BORNE BY AFL INDUSTRIES, INC.

IOM BROCHURE

This brochure contains the heart of the information necessary to erect the equipment. It is structured as follows:

1. Title Page and General Instructions;
2. Table of Contents - listing of descriptions and reference numbers for all drawings;
3. Specific Contract Information.

The complete section of information provided for each contract includes:

1. Contract Equipment Specification - a written description of the equipment;
2. Installation Instructions - a general erection instruction for the equipment provided;
3. Assembly Drawings - showing the unit and its various components;
4. Operation and Maintenance Instructions;
5. Spare Parts Lists;
6. Information on our buy-out items (pumps, motors, etc.), certified prints, special operation and maintenance instructions.

RECEIVING MATERIAL

The equipment pieces and components you receive may have been shipped from:

1. The AFL Industries factory in Riviera Beach, Florida;
2. A fabricator acting under AFL instruction;
3. A buy-out distributor, such as a motor or pump manufacturer.

Since there may be more than one shipment to the job site, it is important to coordinate the receiving and storage of the goods accordingly.

Upon receipt of a shipment, you should immediately check goods received. If you find that certain items are missing, make a note of this on the shipping papers to protect your interests. Also, IMMEDIATELY notify AFL Industries of this shortage.

All material has been thoroughly checked and inspected before shipment. If the equipment is received in bad condition or if the packages are broken, make a "bad order" notation on the shipping papers to this effect. THIS PROTECTS YOU since it will enable you to place the proper claims against the freight company. Notify proper authorities IMMEDIATELY if any parts are found broken or damaged during shipment.

Please handle the equipment properly when unloading and erecting. All cartons, electrical equipment, and gear drives, shipped separately or mounted on tank, should be stored under cover and protected from moisture, grit, and mud. AFL Industries will not be responsible for material deterioration due to improper handling, exposure, or inadequate protection during storage.

PROCEDURE FOR ORDERING SPARE OR REPAIR PARTS

1. Identify your equipment using the AFL or Engineer's contract number shown on equipment specification sheets.
2. Identify the part by name and give the number of the drawing on which this part or assembly appears. If it is a part for a motor, pump, electrical control or any part not manufactured by AFL, the information will be found in the manufacturer's reference data included in this brochure, or on the manufacturer's nameplate.
3. Show the part number. (Information can be gained in the same manner.)
4. Show the size, and include all pertinent dimensions (such as diameter, length, thickness, bore, pitch, etc.) whenever possible.
5. If parts being ordered are electrical in nature, give all pertinent data: Voltage, amperage, wattage, cycle, speed power factor or other information given on a nameplate or in the brochure.
6. Submit your written purchase order or request for quotation, both signing and printing your full name so that we will know whom to contact should further clarification of the order be necessary. ALL VERBAL ORDERS MUST BE CONFIRMED IN WRITING.

EPA-NC-CE-0000449

7. Give return address, and shipping address.

8. Give preferred method of shipping: Parcel post, truck freight, rail freight, air express, etc.

9. Show quantity desired.

10. Give directions on where to send invoice.

11 ALL SPARE OR REPAIR PART ORDERS ARE SUBJECT TO A $100.00 MINIMUM ORDER CHARGE.

BACKCHARGES

AFL Industries, Inc. will not accept any charge for modification, servicing, adjustment or for any other item without written authority in the form of a PURCHASE ORDER issued from the home office at Riviera Beach, Florida IN ADVANCE of doing the work. This authority will only be given when satisfactory proof is submitted and the authority will only then be issued providing the price is agreed upon and the authority is given as outlined above BY OUR TECHNICAL SERVICE MANAGER. **ANY BACKCHARGE SUBMITTED CONTRARY TO THIS AGREEMENT WILL BE REJECTED IN TOTAL WITHOUT CONSIDERATION.**

FURTHER ASSISTANCE

The erection aids material provided by AFL should enable you to install, operate, and maintain the equipment. This instruction is provided to help you to help yourself, and therefore, to save you time and expense. If a problem is encountered in installing or operating the equipment which cannot be solved by referring to the available material, please feel free to contact us. Address your inquiry to our Technical Service Department, AFL Industries, Inc., 3661 W. Blue Heron Blvd., Riviera Beach, Florida 33404, or call us at 407-844-5200.

AFL INDUSTRIES, INC.
RIVIERA BEACH, FLORIDA

SERVICE MANUAL	MAINTENANCE INSTRUCTIONS	PAGE 1 OF 2
PRODUCT:	MAINTENANCE AND APPLICATION OF FIBERGLASS	ISSUED JAN '79

To ensure long life for the separator, care must be taken to keep the fiberglass skin intact. Any holes made in the fiberglass should be repaired immediately. Fiberglass materials can be obtained from AFL, or any local fiberglass shop or fiberglass distributor. The following information contains instructions on the method for fiberglassing.

Any holes drilled for mounting screws to secure pumps, electrical control boxes, brackets or other items should be well caulked using a waterproof caulk.

If necessary and desired the fiberglass can be cleaned using hot soapy water and a scrub brush followed by a cold rinse.

PROCEDURE FOR THE APPLICATION OF FIBERGLASS

1. Clean the area to be fiberglassed with acetone. (A)*
2. Sand the area to be fiberglassed. Sand about six (6) inches beyond the area to be fiberglassed.
3. Clean the sanded area with acetone. (A)*
4. Cut the fiberglass mat (E)* to cover the area to be fiberglassed
5. Add one half (½) ounce of hardener (C)** to approximately 10 ounces of resin (B)* and mix well for 60 seconds. If the resin sets up too quickly, add less hardener. Heat affects the time required for the resin to set up. If the resin is used on a very warm day it might be necessary to use less hardener. If resin is used on a cold day, a heat lamp will help to speed the reaction. Do not use more hardener to speed the reaction on a cold day. Too much hardener will slow the reaction even more.
6. Brush and dab the resin and hardener (which was mixed in Step 5) onto the fiberglass mat (E)*. After saturating mat, place it on the area to be fiberglassed. Brush and dab the fiberglass mat to remove all air bubbles between the mat and surface on which it was placed.
7. When dry, sand the fiberglass and clean with acetone. (A)*
8. Add one half (½) ounce of hardener (C)* to approximately 10 ounces of gelcoat (D)* and mix well for 60 seconds. Gelcoat is resin with a pigment added. See step 5 for information regarding its use.
9. The first coat of gelcoat may not cover sufficiently, so sand the first coat of gelcoat, clean with acetone (A)* and apply a second coat.

For * and ** - Instructions on following page.

SUPERSEDES: I-O-M: 0.02

EPA-NC-CE-0000451

CLEAN UP

Use acetone to clean brushes, tools and hands of resin and gelcoat.

* Letters in parenthesis ( ) designate marking or containers in AFL-supplied fiberglass kit.

** DANGER The hardener (C) will cause a chemcial burn in prolonged contact with the skin. If the hardener comes in contact with the skin, immediately clean with acetone.

EPA-NC-CE-0000452

HANDLING AND STORING PLASTIC PIPING

Plastic pipe does not require "kid-glove" treatment; however normal precautions should be taken to prevent excessive mechanical abuse. When unloading pipe from a truck, for example, it is unwise to drag a length off the tailgate and allow the free end to crash to the ground. Remember too, that scratches and gouges on the pipe surface can lead to reduced pressure-carrying capacity. Standard-pipe wrenches should not be used for making up threaded connections since they can deform or scar the pipe; use strap wrenches instead. When using a pipe vise or chuck, wrap jaws with emery cloth or soft metal.

Pipe should be stored on racks that afford continuous support and prevent sagging or draping of longer lengths. Burrs and sharp edges of metal racks should be avoided. Plastic fittings and flanges should be stored in separate bins or boxes and never mixed with metal piping components. The storage area should be clean and have adequate ventilation. Plastic pipe should not be stored or installed near a steamline or other source of heat that could overheat the pipe.

CUTTING PLASTIC PIPE

Plastic pipe can be cut easily with a power or hand hacksaw, circular or band saw. For best results, use fine-tooth blades with relatively little set. A circumferential speed of about 6,000 ft/min is suitable for circular saws; band saw speed should be approximately 3,000 ft/min. Carbide-tipped blades are preferable when quantities of pipe are to be cut. Pipe and tube cutters are not recommended since they might cause excessive heat and pressure than can result in cracked or irregular ends. To ensure square-end cuts, a mitre box, hold-down or jig should be used. All burrs should be removed with a fine-tooth file, deburring tool or sharp knife. Chips, burrs, filings, etc., should be removed from the pipe I.D. before installation.

BENDING PLASTIC PIPE

Bending leaves residual stresses in plastic pipe and, consequently, use of bends is not recommended, particularly when the line is to operate at or near maximum rated pressures and temperatures. Factory-made fittings and straight lengths of pipe invariably give better performance.

When field bending is necessary to meet special conditions or to provide for expansion and contraction of the pipe, the following technique should produce good results:

1. Seal both ends of the pipe length with plumber's test plugs and introduce sufficient air pressure to maintain ovality of the pipe during bending. The same purpose can be achieved by filling the pipe with pre-heated sand.

2. Heat the pipe uniformly by immersing it in hot oil or water, or by rotating it in front of a hot-air gun. An open flame should not be used.

3. When the pipe becomes soft and pliable, it should be placed in a wooden forming jig or form, and the bend should be made as quickly as possible to prevent weakening or deforming the pipe. The minimum radius to which a bend should be made is 5 to 6 diameters, but the initial forming bend should be slightly greater to allow for springback.

4 The bend should be kept in the forming jig until the pipe cools and becomes rigid; then it should be cooled quickly by immersion in water. Air pressure should not be relieved or sand removed until after final cooling. **(Thermoset plastics such as glass-reinforced epoxy cannot be field bent by heating, of course.)**

EPA-NC-CE-0000453

SOLVENT WELDING PLASTIC PIPING

The preferred method for joining rigid thermoplastics such as PVC and PVDC, solvent welding provides stronger and tighter joints than threading. Here are tips that should be useful.

1. Use the proper solvent cement: PVC cement with PVC pipe and PVDC cement with PVDC pipe.

2. When solvent welding PVC pipe, apply PVC cement liberally to the pipe O.D. and to the fitting I.D.

3. Leave a fillet bead between pipe and fitting when solvent welding PVC and PVDC piping, but remove excess cement from ABS and CAB.

4. Use a natural (hog) bristle brush for applyinq solvent cement; nylon and other synthetic materials are attacked by solvents in the cements.

5. Use a ½" wide brush for pipe ½" through 1"; a 1" brush for 1¼" through 2" pipe; and a 2" brush for pipe 3" and larger.

6. An ordinary oil can is an excellent container for acetone or cleaner. Excessive evaporation is prevented and the solvent is always handy.

7. Never allow water to come into contact with solvent cement. Wrap a handkerchief around your forehead in hot weather to keep perspiration from dripping into the cement. When not using cement keep covered.

8. Allow solvent cement to cure 5 to 15 minutes before handling and wait 24 hours before introducing full line pressure in a solvent cemented piping system.

9. At end of day, place brush in solvent and cover cement tightly. When re-using brush, shake excess solvent out before dipping it into cement.

SOLVENT CEMENT REQUIREMENTS

NOMINAL SIZE OF PIPE	AVG. NUMBER OF JOINTS PER QT.	NOMINAL SIZE OF PIPE	AVG. NUMBER OF JOINTS PER QT.
1/2"	700	2"	90
3/4"	400	3"	70
1"	300	4"	50
1¼"	220	6"	32
1½"	160	8"	20

SUPERSEDES: I-O-M: 0.03

THREADED JOINTS

Take-down piping systems and temporary lines usually are installed with threaded connections. Threading reduces the effective wall thicknesses of the pipe and results in lower pressure ratings. Threaded connections should be used only with Sch. 80 or heavier pipe.

"Tite-Joint" Thread Tape should be used for all threaded connections since screwed fittings tend to bind after long periods of service. Wrap tape around male threads, overlapping about ¼", until thread length is covered. "Teflon" base thread lubricant also can be used. It is inert and retains its lubricating qualities indefinitely. Squeeze a small amount on pipe male threads, spread with a brush and screw fitting onto pipe.

FLANGED JOINTS

One of the earliest methods for joining plastic pipes, flanging, continues to be used extensively, especially for process lines that must be dismantled frequently. Plastic flanges and flanged fittings are available in a full size range and may be attached to pipe by solvent welding, threading or fusion welding.

Flanging is the preferred method of joining plastic-lined piping.

Soft rubber gaskets generally should be used between the flanges.

RECOMMENDED FLANGE BOLT TORQUE FOR PLASTIC FLANGES

FLANGE SIZE	BOLT DIAMETER	TORQUE FT-LB PSI*	FLANGE SIZE	BOLT DIAMETER	TORQUE FT-LB PSI*
1/2"	1/2"	10-15	2½"	5/8"	20-30
3/4"	1/2"	10-15	3"	5/8"	20-30
1"	1/2"	10-15	4"	5/8"	20-30
1¼"	1/2"	10-15	6"	3/4"	33-50
1½"	1/2"	10-15	8"	3/4"	33-50
2"	5/8"	20-30	10"	7/8"	53-75

* To give bolt stress of 10,000 - 15,000 psi. Bolt torque refers to a well lubricated bolt.

EPA-NC-CE-0000455

AFL INDUSTRIES, INC.
RIVIERA BEACH, FLORIDA

SERVICE MANUAL	INSTALLATION INSTRUCTIONS	PAGE 1 OF 10
PRODUCT:	MOLDED AND CONSTRUCTED UNITS	ISSUED JUNE '83

GENERAL:
The instructions outlined herein pertain to constructed (stressed skin) and molded units, and cover models for above, flush, and below grade installations.

Specific models covered are:

1. All VTC, EGS, GDS Models "A" (Above grade), "B" (Below grade) and "F" (Flush with grade)

   NOTE:

   The instructions outlined herein have been prepared to alert the contractor and maintenance personnel to procedures which require special attention during erection, operating and maintenance of units.

CAUTION: Any attempt to install, operate and maintain the units without following these instructions may result in damage, failure and improper operation of the units, and will be the sole responsibility of the contractor and/or owner.

It is most important that the site be properly prepared before the arrival of AFL equipment.

A. Above Grade Units - (No concrete slab provided)

   Provide a minimum of six (6) inches deep bed of bank run sand on compacted grade. Whenever possible, the sand should be retained by concrete retaining wall designed to hold the surcharge of the filled separator.

   NOTE: In cold climates, it is recommended that the retaining wall extends below frost line.

B. Above Grade Units - (Concrete slab)

   If the units are to be installed on concrete slab, sand on bottom of excavation is not required.

SUPERSEDES: I-O-M: 2.00-02

EPA-NC-CE-0000456

C. Below and Flush with Grade Units

Provide a minimum of six (6) inches deep of bank run sand at the bottom of excavation. The excavation should be large enough to allow a minimum of eighteen (18) inches of backfill around separator.

If the units are to be installed on a concrete slab, sand on bottom of excavation is not required.

CAUTION: BEFORE THE UNIT IS PLACED, THE WATER TABLE AT JOB SITE (GROUND WATER ELEVATION) MUST BE KNOWN AND SPECIAL PRECAUTIONS TAKEN TO PROPERLY SECURE UNITS IN ORDER TO PREVENT BUOYANCY OF UNIT.

Several hold-down methods have been developed to counteract buoyancy/tank flotation: however, the use of any specific method will depend on specific job site/soil conditions.

The methods used successfully in the past are outlined below:

a. Strapping the tank with hold-down cables and anchoring the cables to a concrete pad, see Fig. 1.0.

b. Earth augers (screws) in combination with cables, see Fig. 2.0.

c. Site drainage system.

d. Use of structural members, such as channels, in combination with threaded rods, as shown in Fig. 3.0.

CAUTION: ON APPLICATIONS WHERE HOLD-DOWN CABLES ARE SPECIFIED, THE CABLE SIZE, ANCHORAGE SIZE AND ANCHORAGE EMBEDMENT MUST BE SIZED FOR EACH APPLICATION.

CAUTION: WHEN PLACING SEPARATOR DIRECTLY ON CONCRETE SLAB, MAKE SURE SLAB SURFACE IS LEVEL, SMOOTH, WITHOUT BURRS AND CLEANLY SWEPT. ANY DEBRIS OR BURRS ON CONCRETE SURFACE MAY DAMAGE THE FRP SKINS AND/OR PUNCTURE THE FLOOR.

EPA-NC-CE-0000457

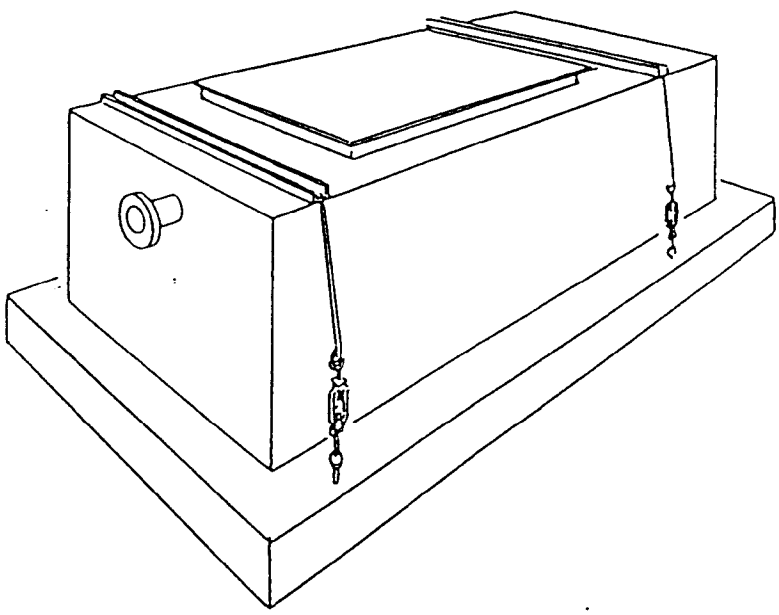

FIG. 1.0

SUPSERSEDES: I-O-M: 2.00-02

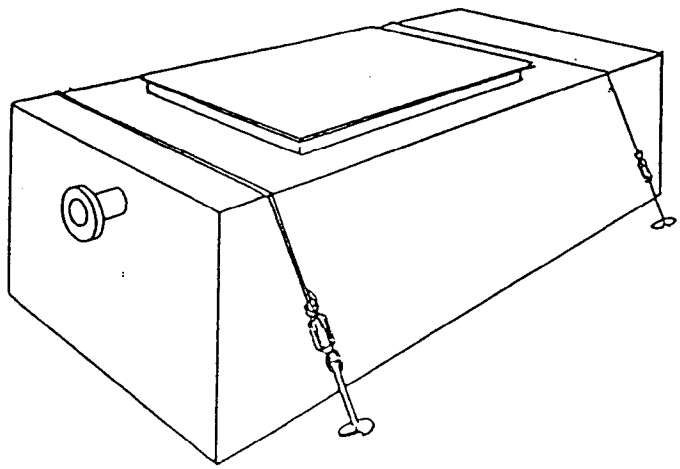

FIG. 2.0

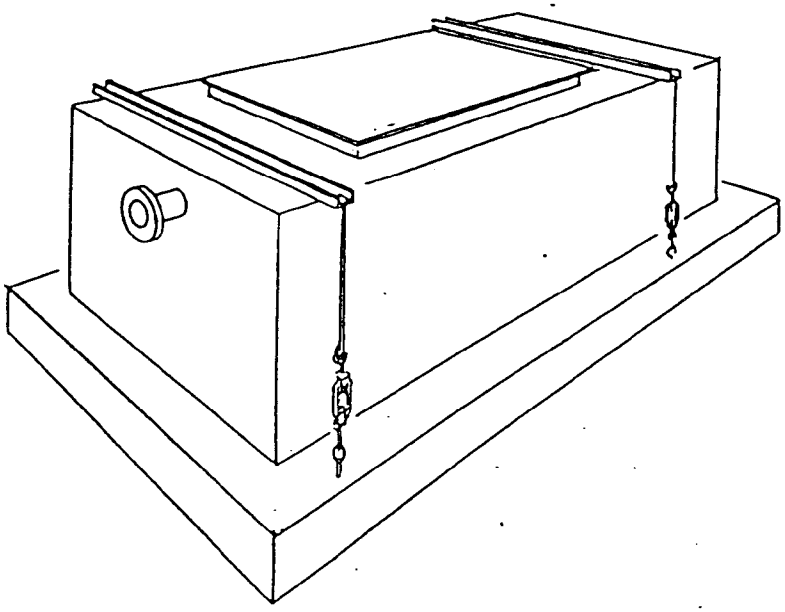

FIG. 3.0

SUPERSEDES: I-O-M: 2.00-02

C. Pipe Connections

1. All flanged unit connections, unless otherwise noted, provided by AFL are flat face design.

2. All piping runs to and from AFL units must be independently supported in order to eliminate strain and stress due to soil conditions or due to pipe contractions and expansions.

3. For plain end connections, use the customer specified attachment.

If the separator is to be anchored to the concrete slab, make sure the anchor bolts are placed according to orientation drawing included in this brochure.

NOTE: SUFFICIENT DISTANCE BETWEEN THE SEPARATOR LOCATION AND ANY PIPING TO SEPARATOR MUST BE PROVIDED FOR PROPER WORKING CLEARANCE.

INSTALLATION

1. Upon arrival, check the separator for any visible damage. Report any damage to the driver. Also see General Instructions I-O-M: 0.01 for additional information.

2. Lift separator from trailor with crane by connecting chains or cables to the lifting straps provided with the separator. See drawings and specifications in this brochure for number of straps provided/required.

WARNING: IF LIFTING LUGS ARE PROVIDED, USE SPREADER BARS TO ELIMINATE ANY SIDE FORCES ON LIFTING LUGS. FORCE ON LUGS MUST BE APPLIED IN VERTICAL DIRECTION ONLY. ANY SIDE FORCE ON LIFTING LUGS MIGHT DAMAGE TANK CONSTRUCTION. SEE FIG 4.0 FOR PROPER CABLE/HOOK ATTACHMENT TO LIFTING LUGS.

3. Set separator in place, See Fig. 5.0, 6.0, and 7.0.

EPA-NC-CE-0000460

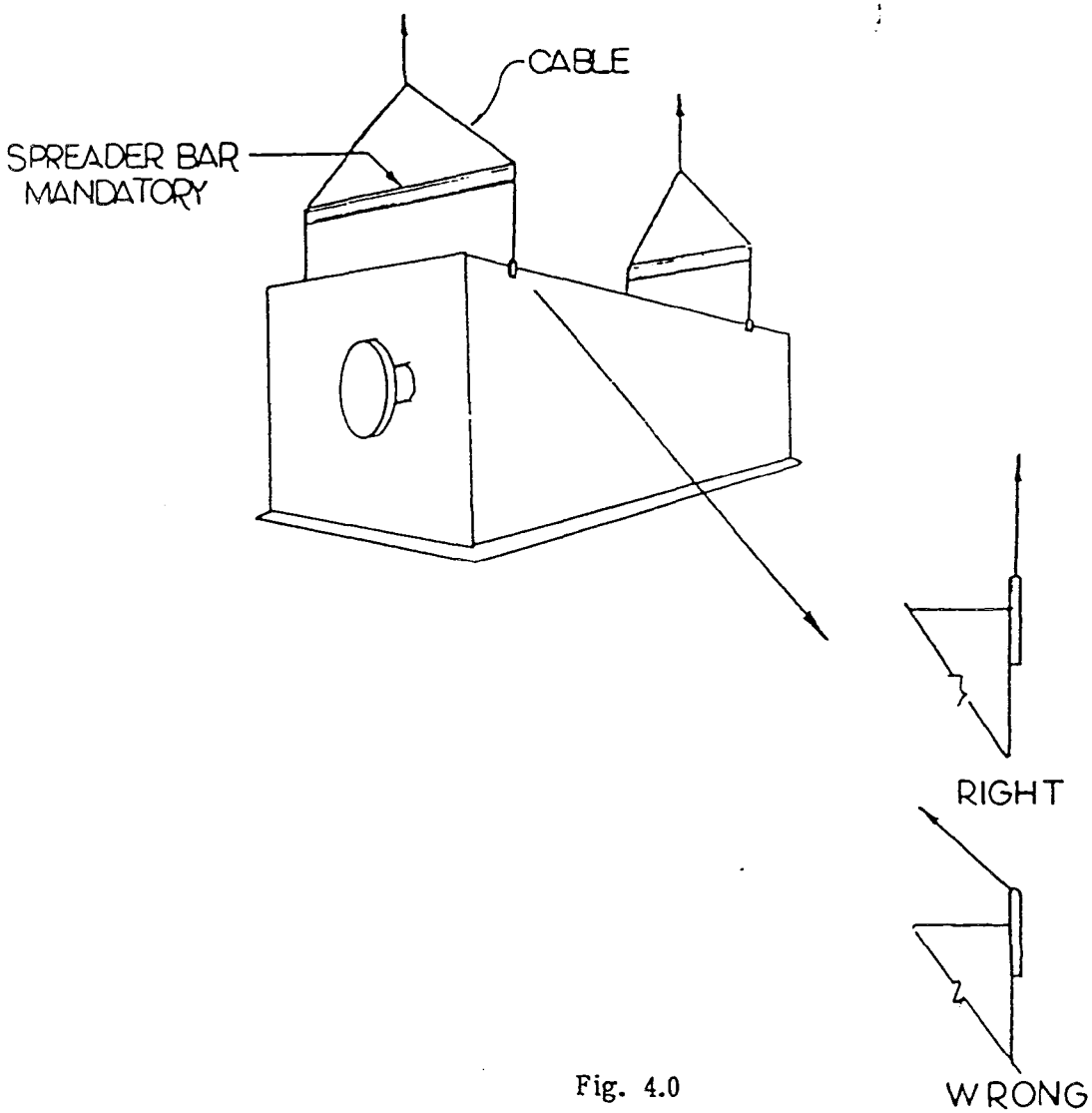

Fig. 4.0

SUPERSEDES: I-O-M: 2.00-02

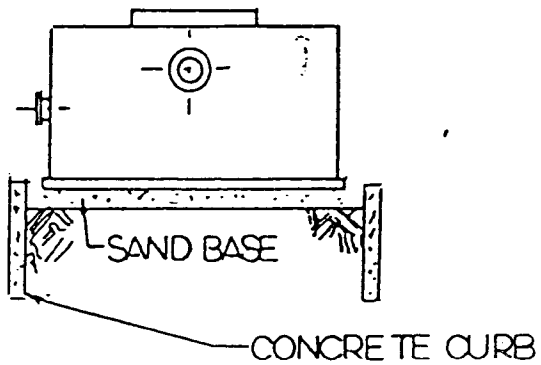

Fig. 5.0, Above Grade Installation

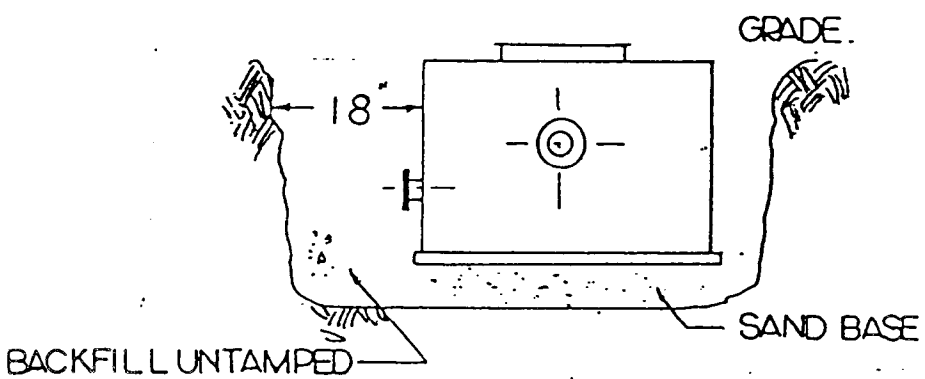

Fig. 6.0, Flush with Grade Installation

SUPERSEDES: I-O-M: 2.00-02

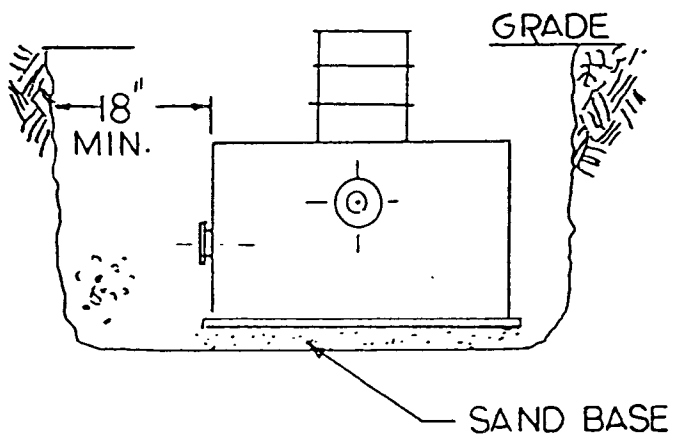

Fig. 7.0, Below Grade Installation

4. If the site has not been prepared by the time equipment arrives, simply set separator on smooth flat ground.

SUPERSEDES: I-O-M: 2.00-02

LEVELING TANKS:

Before piping connections are performed, the tanks must be properly leveled. The allowable deviations shall be:

1. Side to Side (Tank width): $\frac{1}{4}$"
2. End to End (Tank Length): $\frac{1}{4}$"

NOTE: ON TANKS RESTING ON CONCRETE SLAB, SAND MAY BE USED FOR LEVELING THE TANK. SAND MUST BE EVENLY DISTRIBUTED UNDER THE ENTIRE TANK BOTTOM SECTION. DO NOT USE WEDGES OR SHIMS.

WARNING: AVOID POINT LOADS

If the tank is equipped with skimmer or other specified equipment, remove shipping braces and tape, and refer to specific instruction in this brochure for installation and adjustment required.

LEVELING WEIR PLATES

Loosen nuts on effluent and oil trough weir plates.

If blind flanges are available, use them on all tank nozzles located below tank water level. If connecting piping to all tank nozzles is supplied with shut-off valves that can isolate the tank, connect piping and close valves.

Fill tank with water. Make sure all tank chambers are filled evenly. Do not exceed tank design flow (see equipment specifications in this brochure when filling tank).

Inspect all weir plates and skimmers, check weir plate levels using water level as reference, adjust as required. Tighten weir plate bolts. Do not overtighten.

Connect all piping if not previously done, see instructions above and check for leaks.

When the above described installation procedures are completed, and tank, accessories, such as pumps, mixers, heaters etc., are installed and checked out, the equipment is ready for operation.

CAUTION: DO NOT START-UP SEPARATOR - SEE START-UP PROCEDURE I-O-M 2.04.0 BEFORE LETTING UNTREATED FLOW ENTER.

EPA-NC-CE-0000464

BACKFILLING

Backfill with a naturally rounded material that, when poured, becomes interlocked and exhibits sufficient resistance to shear and load bearing capacities to be termed "Self Compacting".

The single material answering this requirement is a naturally rounded aggregate of ¼" nominal size (ranging from 1/8" to 3/8"ϕ), clean, and free flowing. Local names vary. Some are "pea gravel", "pea stone", "roofing gravel", etc.

Specify pea gravel of naturally rounded aggregate of ¼" nominal size with 100% passing of 3/8" screen and 0-10% passing a number 10 screen.

WARNING: IF MATERIAL OTHER THAN RECOMMENDED IS USED FOR BACKFILL CARE SHOULD BE TAKEN THAT NO LARGE ROCKS, BOULDERS, OR CONSTRUCTION DEBRIS ARE USED IN THE BACKFILL THAT MIGHT DAMAGE THE FIBERGLASS SHELL.

Backfill with an 18" layer of pea gravel. Make sure pipes are not damaged during backfill operation.

WARNING: DO NOT TAMP OR PACK BACKFILL.

On below grade installation, install manway extension before backfilling over the separator. Make sure all seams between tank manway and extensions are properly sealed before backfill is done. Use caulk or rope on seams. Complete backfill operation.

WARNING: DO NOT TAMP OR PACK BACKFILL AND KEEP TEE HEAVY EQUIPMENT A MINIMUM OF 6' AWAY FROM SEPARATOR WALLS.

For flush with grade installation that is subject to surface water, provide a ditch around the separator to prevent surface water from depositing eroded soil on separator top.

Do not cut holes or fasten equipment without contacting the factory.

When the above described installation procedures are completed, and tank accessories such as pumps, mixers, heater, etc., are installed and checked out, the equipment is ready for operation.

CAUTION: DO NOT START-UP SEPARATOR - SEE START-UP PROCEDURE I-O-M 204.0 BEFORE LETTING UNTREATED FLOW ENTER.

EPA-NC-CE-0000465

AFL INDUSTRIES, INC.
RIVIERA BEACH, FLORIDA

SERVICE MANUAL	OPERATION AND MAINTENANCE INSTRUCTIONS	PAGE 1 OF 4
PRODUCT:	VERTICAL TUBE COALESCING SEPARATOR (VTC) MODELS 100 GPM AND GREATER	ISSUED MARCH '79

GENERAL

Instructions contained herein peretain to VTC models designed for flows 100 gpm and greater. Refer to VTC assembly drawing contained in this manual and determine model furnished. It will be helpful to become familiar with part names, their location and principles of operation of separator.

NOMENCLATURE:

From the model number given in the Equipment Specifications contained in this manual, the separator design flows, type of installation and whether the tank is furnished with an integral oil (product) storage chamber can be easily determined. The VTC model coding is as follows:

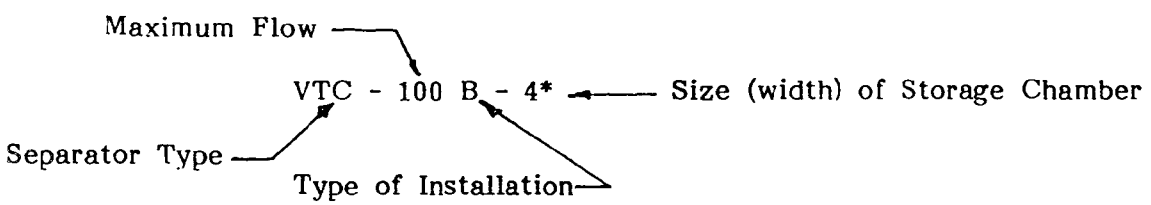

*Note: If this Fig. is omitted, separator does not have storage chamber.

Two basic models of VTC separators are available: a) individually constructed units, designed for flows up to and including 400 gpm and b) units designed for flows greater than 400 gpm and constructed as described below.

VTC MODELS DESIGNED FOR FLOWS GREATER THAN 400 GPM:

Construction

Models designed for flows greater than 400 gpm are constructed using two or more chambers consisting of units rated for flows 400 gpm and less.

The chambers are integrally enclosed in one envelope and are as a standard, partitioned into symmetrical sections for proper flow distribution.

Each module is identical in cross section and is designed to process an equal fraction of the total incoming flow.

SUPERSEDES: I-O-M: 2.10-21

Construction (continued)

On identical chamber construction, each section may have the same size inlet and outlet nozzles located at the same elevation and located with respect to each module, or may be furnished with one inlet nozzle and an internal manifold for directing flow to individual chambers.

In order to equalize hydraulic loadings, the partition walls separating the chambers are designed with equalizing slots (openings) which are located in the influent and effluent chamber on units with isolated chambers or one equalizing opening in separating chamber partition wall when units are provided with internal inlet manifold.

The oil collection troughs are also connected through the partition walls and act as one unit.

OPERATION:

1. With the hookup of inlet, oil, water outlet, and surge connections, the separator is ready for operation. The separator does not have any moving (or rotating) parts and therefore, no special precaution, except periodic check and cleaning, is required for a satisfactory performance.

2. Sediment buildup in the separation chamber should be checked and removed when 5 or 6 inch accumulation is reached.

3. Sludge build up withdrawal from the separation chamber can be accomplished through a sludge draw-off pipe, located in the separation chamber and extending above the coalescing tubes or through side walls. The draw-off pipe is flanged and can be attached to a mating flange of a pump suction.

   If a flanged pump suction is not available, the pump suction hose can be inserted into the draw-off pipe for sludge withdrawal.

   The inlet chamber should also be inspected periodically for sludge accumulation and sludge and solid removed as required.

EPA-NC-CE-0000467

OPERATION: (continued)

4. Coalescing Tubes Removal: Before tubes can be removed, the top grating, holding the tubes, must be unbolted and removed.

   Tube packs then are removed individually. After tubes are removed, the bottom grating supporting tube packs should also be removed. A vacuum truck or similar sludge removal means should be used for sludge removal. The tubes should be placed back in the separation chamber and the unit put back in operation.

   Coalescing tubes should also be periodically inspected and cleaned. A good indication that the tubes need cleaning is a decrease in effluent quality, providing the unit is operated at design flows, or water backing up at the inlet and separation chamber. For proper cleaning, the tube packs should be removed and steam cleaned or pressure washed. When pressure washing, use bio-degradeable cleaning detergents suitable for grease and oil.

   4.A Delta Packs - Removal

   Packs are always enclosed in individual frames and can be removed for cleaning as required.
   Delta Pack Cleaning - Follow procedure outlined in (4.) above.

5. Weir Plate Adjustment

   Constructed VTC models designed for flows greater than 100 gpm are furnished with two (2) adjustable weir plates. One on the oil collection trough and one on the effluent weir wall.

   The oil trough weir plate can be adjusted to either decrease or increase surface oil skimming rates.

   NOTE: The relative oil and effluent weir plate elevations should always be checked after either one is adjusted, and the effluent weir plate should always be lower than the oil trough skimming weir plate. Improper adjustment/elevations of weir plates may result in water accumulation in the oil trough or storage tank.

   Generally, the top of the oil trough weir plate should be set at an elevation greater than or equal to the elevation of the effluent weir plate plus "head" @ design flow above the plate plus 1/8" to 1/4".

EPA-NC-CE-0000468

MAINTENANCE PROCEDURES:

NOTE: In most cases it is not necessary to empty the separator for cleaning. The separator has been designed to collect solids in specific areas. Solids should be pumped or vacuumed from these collection areas.

1. Sludge level accumulation in the influent and separation chamber should be periodically checked.

2. Oil trough and oil discharge opening(s) or nozzles should be inspected periodically for debris accumulation and plugging.

3. On constructed modular units the flow equalization ports/slots should be periodically checked for plugging.

4. If pumps, skimmers or other auxiliary equipment is furnished with the separator, check and lubricate equipment as required by manufacturer or as described in separate instructions contained in this manual.

NOTE: For additional instructions on operation and maintenance of the separator, refer to Troubleshooting Guide, I-O-M: 2.00-3, contained in this manual.

EPA-NC-CE-0000469

AFL INDUSTRIES, INC.
RIVIERA BEACH, FLORIDA

SERVICE MANUAL	START-UP PROCEDURE	PAGE 1 OF 1
PRODUCT:	GRAVITY SEPARATORS ALL MODELS	ISSUED JAN '80

GENERAL

Instructions contained herein are of utmost importance to proper operation of all VTC separators.

WARNING:

Failure to follow the described procedure may result in improper separator performance, poor effluent quality and the possibility of tube plugging on vertical tube coalescing models (VTC).

START-UP

After the separator installation is completed and all piping and pumps are connected, and before the water stream to be separated is allowed to enter the separator: **ALL OF THE SEPARATOR CHAMBERS, INCLUDING THE EFFLUENT CHAMBER MUST BE FILLED "PRIMED" WITH CLEAN WATER.** The clean water may be introduced through manways until the water level reaches the top of effluent weir.

CAUTION:

Do not fill the oil troughs or oil storage (slop) tanks.

When the separator is primed, the waste stream may be introduced into the inlet chamber through inlet connection.

NOTE: The above described separator priming procedure must always be used in cases where separator has been drained either for cleaning, maintenance or repairs.

Priming will not be necessary if influent to separator is interrupted during operation and liquid level in separator remains constant.

SUPERSEDES: I-O-M: 2.04.0

BASIC OPERATING PRINCIPLE

In a nearly motionless state, free oil and water separate because of the natural effects of gravity. Water, being heavier, will settle, and oil, being lighter, will rise. Solids, depending on their density and velocity, will also settle out due to gravity. AFL's gravity separators utilize this natural process in a carefully engineered structure. The separators provide a volume through which polluted water and solids flow. The oil accumulates on the top and can be skimmed off, the settleable solids collect on the floor for periodic removal, and the water passes through and is discharged. See assembly drawing in this brochure provided on the unit. The gravity separator model which your company has purchased is a Vertical Tube Coalescer Separator (VTC). The following is a description of the various VTC components and how they function in the system. See Fig. 1 0 for typical flow pattern and components.

INLET CHAMBER

The basic purpose of the inlet chamber is to remove gross solids and trash from the influent stream and to distribute the flow evenly throughout the separating chambers.

INLET PIPE

The inlet pipe(s) provided with elbows, direct the flow towards the separator bottom in order to reduce channeling and turbulence in the separating chamber. No flow control device is provided. As a result, care must be taken to insure that a flow rate greater than the designed flow rate is not fed to the unit. If larger than designed flow rates are permitted to enter the VTC, less time is available to separate the oil and water. The result can be a poor quality effluent.

INLET SLUDGE/DIFFUSION BAFFLE

The inlet sludge/diffusion baffle separates the inlet, and sludge chambers, and redirects the flow to the middle of the vertical coalescing tubes, thereby, forcing the solids to accumulate on the floor. The gross solids accumulated are removed through a sludge draw-off (optional) pipe or by dropping a pump suction hose through a manway.

SEPARATING CHAMBER

The separating chamber is essentially an area where polluted water stands nearly motionless for a period of time so gravity separation of oil, water and solids can occur. In the VTC, this chamber is filled with oleophilic, oil attracting tubes. These AFL designed tubes distribute the flow throughout the entire width and depth of the chamber and greatly reduce the turbulence, thereby, enhancing oil and water separation. The coalescing action of the tubes provides additional assistance in separating oil and water. Small oil globules are attracted to the tubes, combine with other globules, and then float through the tubes to the water surface.

SLUDGE CHAMBER

The sludge chamber is designed to contain settleable solids which have collected on the separator floor and prevent them from passing under the oil retention baffle and out of the VTC. The sludge will build up on the floor of the chamber and can be removed through a sludge draw-off system installed by AFL or by pumping the water out of the VTC and scraping the sludge from the floor.

EPA-NC-CE-0000471

NOTE: A LARGE ACCUMULATION OF SLUDGE IS DETRIMENTAL TO THE OPERATION OF THE VTC SINCE IT REDUCES THE WATER VOLUME AVAILABLE IN THE SEPARATING CHAMBER. THIS REDUCTION IN VOLUME RESULTS IN AN INCREASED FLOW RATE THROUGH THE CHAMBER WHICH DECREASES THE AMOUNT OF TIME AVAILABLE TO SEPARATE THE OIL, WATER AND SETTLEABLE SOLIDS. THE END RESULT CAN BE A POOR QUALITY EFFLUENT. THEREFORE, THE SEPARATING CHAMBER SHOULD BE CHECKED PERIODICALLY FOR SLUDGE BUILD-UP AND THE SLUDGE REMOVED AS NECESSARY.

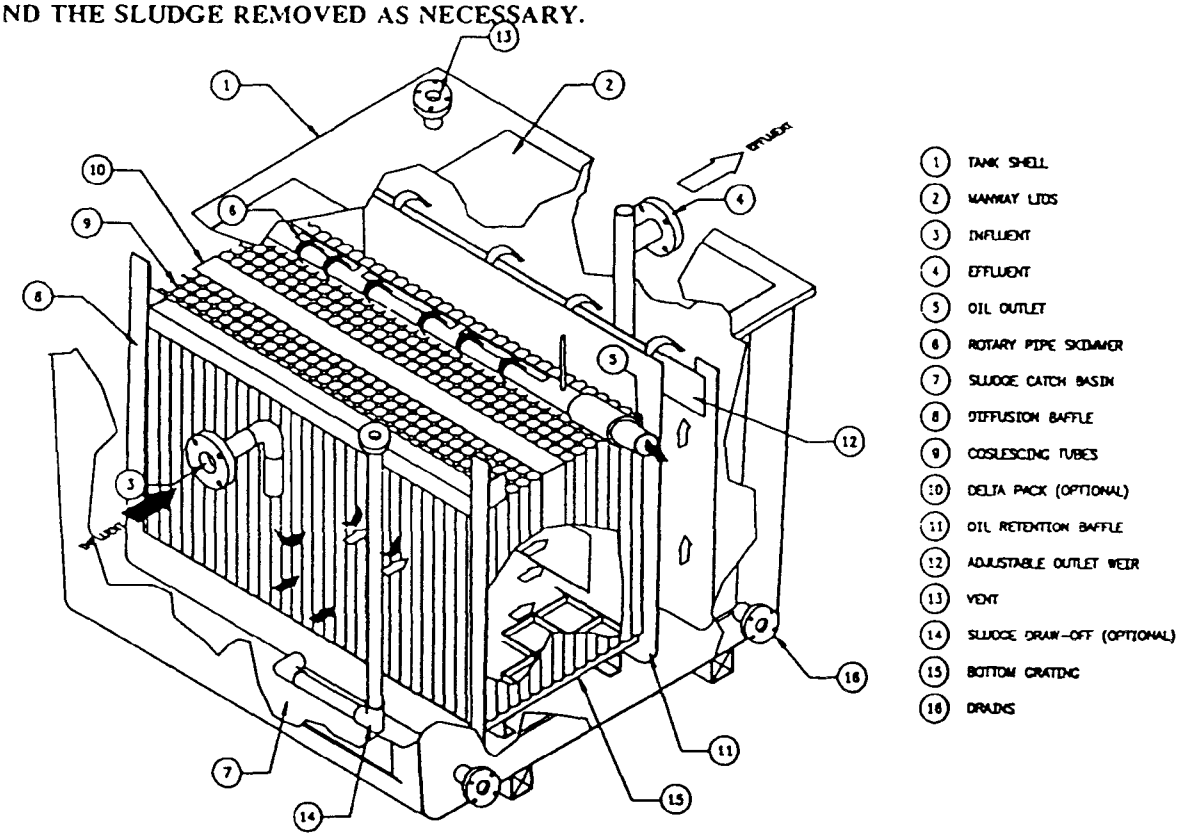

Figure 1

OIL RETENTION BAFFLE

The oil retention baffle blocks the flow of oil which has risen to the surface while allowing the water to pass beneath.

ROTARY PIPE SKIMMER

The unit is provided with a rotary pipe skimmer to skim off the accumulated oil in the separating chamber. see separate instruction manual contained in this brochure.

SHEEN BAFFLE

The sheen baffle is designed to capture small oil droplets that might pass under the oil retention baffle. The buildup of oil at the baffle is so slow that no skimming device is required.

SUPERSEDES: I-O-M: 2.00-1

WEIR WALL AND PLATE

The static water level, which occurs when there is no water flowing through the separator, is determined by the weir wall. This level can be adjusted by raising the effluent weir plate. Once the elevation is established, the flow through the separator may be very closely established by measuring, in inches, the differential between the water level and top of the weir plate or the "head" see Fig. 2.0. Once the "head" is established, the flows through the unit can be calculated by using Table 1 0 on the following page.

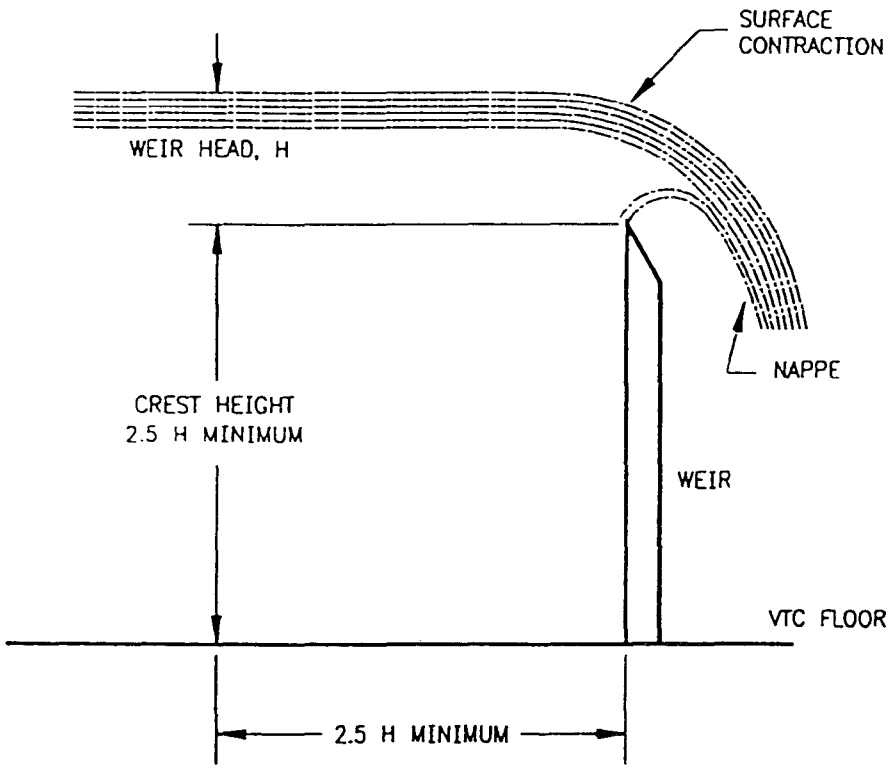

Figure 2

Note: **AFL is not responsible for the performance of units operating at flow rates greater than the design flows. An excessive flow rate can result in a poor quality effluent, plus the possible skimming of water if manual (rotary pipe or trough) skimming devices are installed.**

Oil removal rates can be increased or decreased by effluent weir plate adjustment.

OUTLET

Clarified water exits the separator through a "T" pipe which allows it to exit through the bottom of the pipe only.

EPA-NC-CE-0000473

TABLE 1.0 DIFFERENTIAL WEIR HEAD AND CORRESPONDING FLOWS IN GPM.

H(in)	VTC-20 gpm	VTC-50 gpm	VTC-100 gpm	VTC-200 gpm	VTC-300 gpm	VTC-400 gpm
0.25	8.116	21.659	5.994	15.015	24.036	33.057
0.313	12.207	32.576	8.37	20.977	33.585	46.192
0.375	16.298	43.493	10.994	27.567	44.14	60.712
0.438	20.389	54.41	13.843	34.727	55.611	76.496
0.5	24.48	65.327	16.9	34.727	67.931	93.446
0.563	28.571	76.244	20.15	42.415	81.042	111.488
0.625	32.662	87.16	23.581	50.596	94.899	130.558
0.688	36.753	98.077	27.184	59.24	109.463	150.602
0.75	40.844	108.994	30.949	68.323	124.699	171.574
0.813	-	-	34.87	77.824	140.579	193.434
0.875	-	-	38.939	87.725	157.077	216.147
0.938	-	-	43.15	98.008	174.17	239.68
1.0	-	-	47.499	108.66	191.837	264.005
1.063	-	-	51.98	119.668	210.058	289.098
1.125	-	-	56.588	131.019	228.818	314.933
1.188	-	-	61.32	142.703	248.1	341.49
1.25	-	-	66.172	154.71	267.89	368.749
1.313	-	-	71.14	167.031	288.174	396.691
1.375	-	-	76.221	179.657	308.94	425.3
1.438	-	-	81.411	192.581	330.177	454.56
1.5	-	-	86.709	205.794	351.874	484.457
1.563	-	-	92.111	219.291	374.02	514.975
1.625	-	-	97.615	233.066	396.607	546.102
1.688	-	-	103.218	247.111	419.624	577.827
1.75	-	-	108.918	261.421	443.064	610.137

SUPERSEDES: I-O-M: 2.00-1

INTRODUCTION

After selection and installation of the appropriate oil/water separator, there may be instances when the unit does not appear to be functioning at the expected performance level. Generally, these problems stem from a readily correctable mechanical malfunction. In an effort to make these solutions more readily found, this problem-troubleshoooting guide has been compiled.

A. FREE OIL IN EFFLUENT

Cause	Remedy
1. VTC Tubes above the water level	
a. Water level too low	Raise discharge weir.
b. Tubes floating	Check grating to be sure it is in place and is weighing down all tube packs.
2. Skimmers not removing oil	Weir plate skim edge should be 1/8" above water line or adjusted to desired elevation.
	Leading edge should be just above water line.
3. Oil build-up behind sheen baffle	Remove oil with manual skimmer; by siphoning; use of oil sorbents; or other means.
4. Weirs not level	Adjust for an even water/oil flow over weir.
5. Excessive flow through unit	Reduce flow rate to design rate.

B. WATER BACKING UP AT INLET CHAMBER

Cause	Remedy
1. VTC tubes blinded	
a. High solids level	Remove tube packs and clean. Determine source of solids and possibility of recurrence: Was it an accidental dump, a recurrent dump, or a process change?
b. Algae build-up	Remove tube packs and clean. If a recurrent problem, a commercial algaecide may be required.
2. Excessive flow	Reduce flow to within ratings.

C FOAMING

Cause	Remedy
1. Cleaners/surfactants	
a. Batch dump	Flush system. Determine recurrence probability. A commercial anti-foam may be needed.
b. Process change	Return to former products. Low-foaming substitutes may be possible. If not, an anti-foam may be required.
2. Air in piping	
a. Pumps drawing air	Raise liquid level, reduce flow.
b. Opening/leak in piping	Seal leak/hole.

D SOLIDS IN EFFLUENT

Cause	Remedy
1. Sludge build-up beyond recommended level	Clean tank compartments, remove sludge.
a. Manual removal	Increase maintenance frequency.
b. Pump-out package	Check for correct operation of level sensors, timers, pumps, piping. Increase draw-off rate if necessary.
2. Solids not settling	
a. Excessive flow and decreased retention time	Reduce flow rate.

EPA-NC-CE-0000476

E EMULSIFIED OIL IN EFFLUENT

Cause	Remedy
1. Mechanical emulsification	
a. Pump throttled down too far	Open valve that is reducing flow; put pump on timer for intermittent flow; or change pump size or type.
b. Mixers	Reduce speed; change impeller number, size, or configuration; or put mixer on a timer for intermittent mixing.
2. Chemical emulsification	
a. Synthetic coolants	If accidental, one-time dump, flush system. If recurrent problem, segregate from general wastestream; return to prior process; investigate effectiveness of chemical treatment.
b. Cleaners/surfactants	If accidental, one-time dump, flush system. If recurrent problem, segregate and/or treat chemically or return to former cleaners.

EPA-NC-CE-0000477

DESIGN

The AFL Rotary Pipe Skimmer (RPS) is designed to remove products such as oil, animal fats and floc from API type separators, clarifiers or skim tanks. This style is ideal for heavy or viscous product, and the best operation is achieved when specific gravity difference between liquid and material to be skimmed are great.

Constructed entirely of corrosion-proof materials, (see equipment specifications for type of construction - materials furnished), the RPS can operate in a wide variety of environments with minimal maintenance.

MANUAL OPERATION

The operation of the RPS requires periodic checks of the product level in the tank. The operator decides how much of the product he wants to collect before skimming. When the product level is sufficiently thick to operate the skimmer, the skimmer is rotated about its axis and the skimming edge lowered into the product. As the product spills into the skimmer, it flows by gravity out of the skim pipe, through the wall of the separator, and into a product storage tank for accumulation and subsequent removal. The operator must maintain a watch on the product being skimmed. When water appears to be entering the skimming pipe, the skimmer must be rotated to an upright or non-skim position. Automatic skimming is possible, but requires a continuously thick product level as described below.

AUTOMATIC SKIMMING - UNATTENDED OPERATION

Automatic operation is recommended only on applications where the specific gravity of oil and/or material to by skimmed is known, will not change during operation, and the flow through the unit will remain constant.

To adjust the Rotary Pipe Skimmer for automatic operation, the skimming edge of the skimmer pipe should be set 1/4" above maximum water level (at design flow), see Separator Operating Instructions in this brochure for procedures to calculate maximum liquid level.

With this setting, the skimming operation will be continuous the moment the oil layer floating on the surface is greater than 1/4" thick.

MAINTENANCE

1. Periodically check skimmer assembly and make sure skimmer level and attitude have not changed.

2. Check scum and grease accumulation in pipe and outlet connection weekly and scrape or hose the assembly when required.

EPA-NC-CE-0000478

GENERAL

Refer to manual skimmer assembly drawing on a specific tank installation included in this brochure. It will be helpful to become familiar with part names and their location.

NOMENCLATURE

The letter following the AFL model, RP, designates the axis about which the skimmer rotates. The model described in this instruction is RP-C, or concentric axis and designates skimmer rotation about centerline of skimmer pipe which coincides with oil outlet pipe centerline. See Fig. 1.0 for a typical skimmer assembly and component parts.

SKIMMER COMPONENTS

Model RP-C skimmers consist of five major components as described below and shown in Fig. 1 and 2.

1. Skimmer pipe with 90 degree slots, Item 3
2. Mounting bracket complete with a trunion, Item 2
3. Compression coupling, Item 4, as shown in Fig. 1, Fig. 2, & Fig.3
4. Outlet discharge connection, Item 1
   Note: Item 1, discharge connection is required connection is required on constructed, Duo-Wal™ units or existing/new structures. On molded AFL units, the discharge connection is replaced by compression coupling. See Fig. 2 and Fig.3.
5. Adjustment handle, Item 5

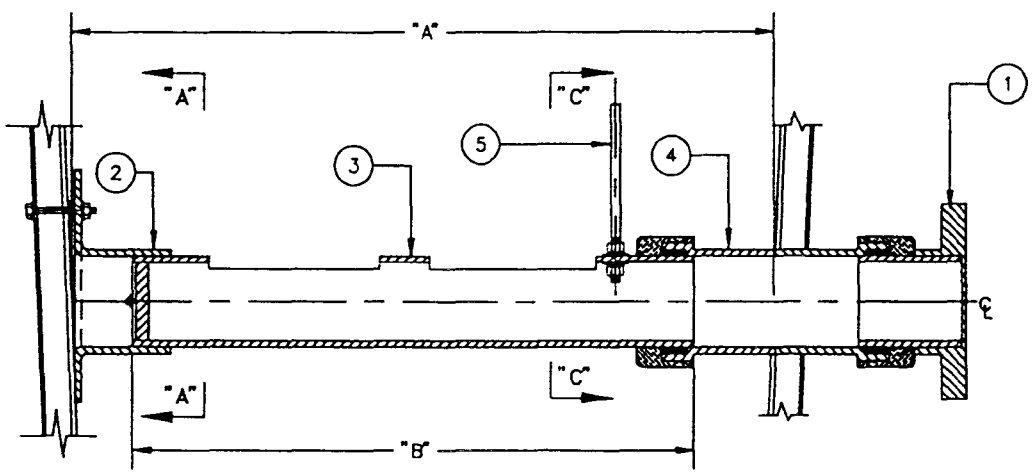

Figure 1.0, Skimmer Assembly, Constructed Tanks

EPA-NC-CE-0000479

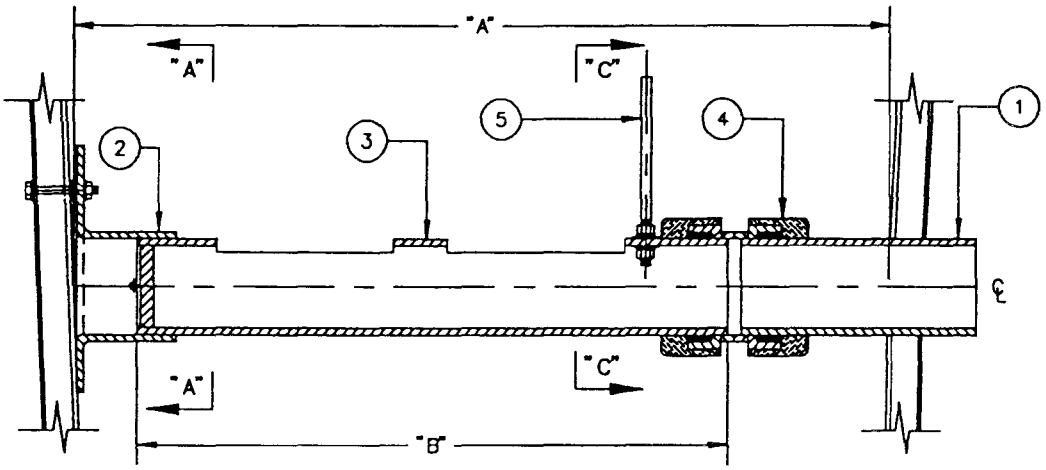

Figure 2.0, Skimmer Assembly, Molded Tanks

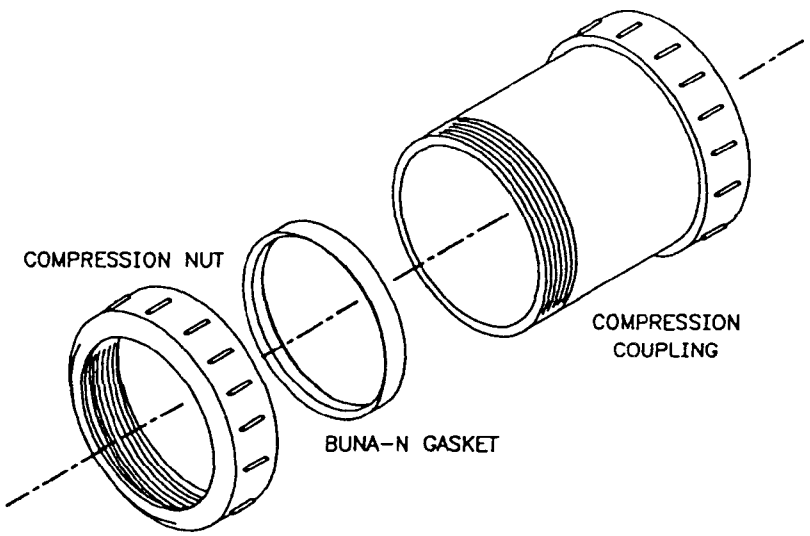

Figure 3.0, Compression Coupling, Item 4

INSTALLATION

Depending on contract requirements, skimmer assembly may be shipped factory installed in AFL process tank or separately for field installation in a designated location. Check equipment specifications and drawings and determine how the skimmer was ordered and follow accordingly.

EPA-NC-CE-0000480

A. Factory Installed Skimmers

1. Install and level the tank, see tank installation instructions in this brochure, and connect all required piping, controls, valves, etc.
2. Remove tape and support braces.
3. Check skimmer for rotation, skimmer should not rotate freely since the friction in the swivel joints maintains skimmer position.
4. Position skimmer with the handle in vertical position, as shown in Fig. 4.0.
5. Skimmer is ready for operation.

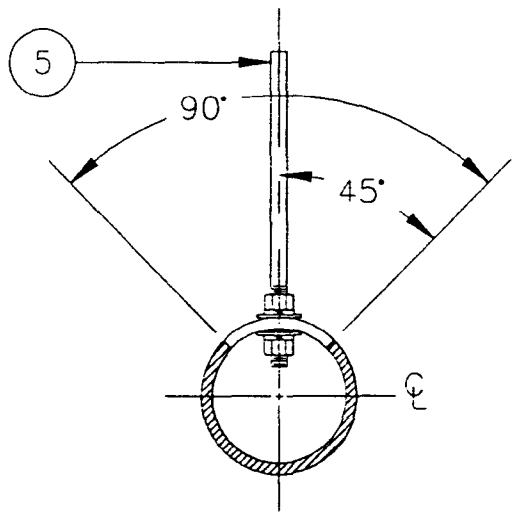

Figure 4.0

INSTALLATION

B. Field Installation

1. Determine skimmer location and skimmer pipe centerline elevation. See Fig. 5.0 and table for standard centerline elevations on AFL model VTC and EGS separators.

   On other applications, see contract drawings or consult AFL Industries, Inc., Engineering Department

EPA-NC-CE-0000481

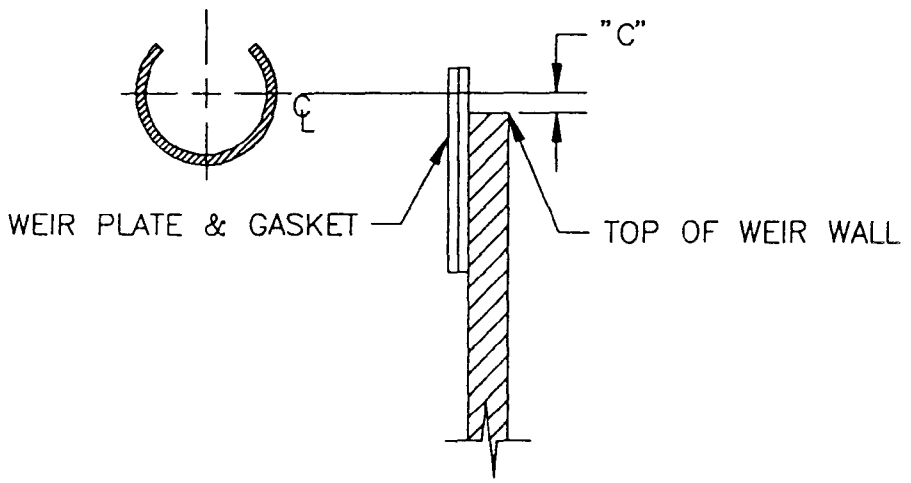

Figure 5.0

Model	"C"
VTC-5	1/4" **
VTC-20 & 50	1/2" *
VTC 100 thru 400	1 5/8"
EGS-50 thru 300	1 3/8"
EGS 350 thru 500	1 3/4"
EGS 600 & 700	2 1/8"

* 3" Dia. Skimmer only
** 2" Dia. Skimmer only

2. Install oil outlet pipe connection, Item 1, on tank wall.

NOTE: a) Outlet pipe size must be equal to RP skimmer diameter. If flanged connection was specified, flat face flange must be provided.

b) Pipe projection inside tank should be 4 1/4", see Fig. 6.0.

EPA-NC-CE-0000482

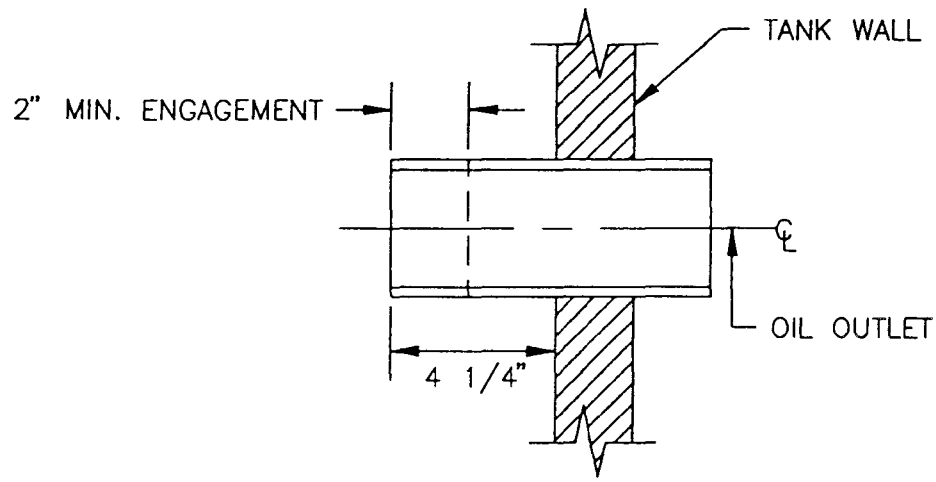

Figure 6.0, Oil Outlet Pipe, Item 1.

3. Locate mounting, Item 2, attachment studs, on tank wall opposite skimmer discharge.

NOTE: Use skimmer pipe centerline as reference point and place stud centerlines approximately in the middle of mounting bracket slots. See Fig. 7.0 for bracket dimensions.

4 Install mounting bracket/trunion assembly on tank wall.

NOTE: Do not tighten nuts.

Dimension Chart

Dim.	2"0	3"0	6"0
A	5"	6"	10"
B	1/2"	1"	1"
C	2"	2"	4"
D	5 1/2"	8"	1' 0"
E	3/4"	3/4"	3/4"
F	1 1/2"	1 3/4"	1 3/4"
G	2"	2 7/8"	4 7/8"
H	3"	4"	3 1/4"
J	1/4"	1/4"	1/4"

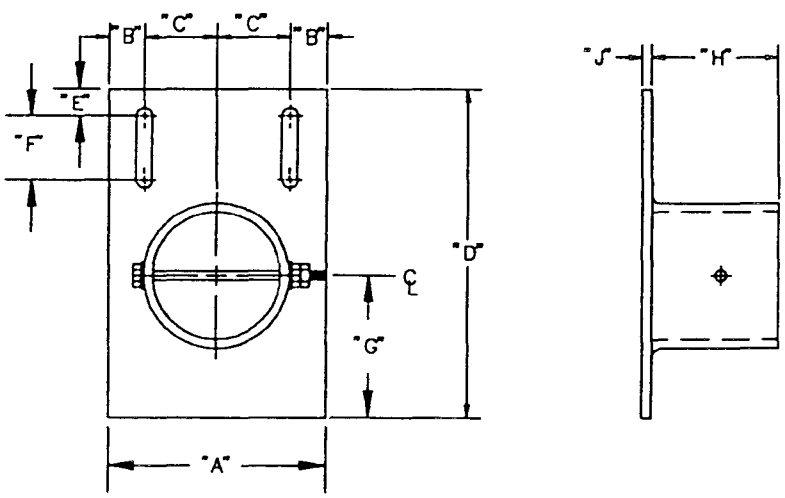

Figure 7.0, Mounting Bracket/Trunion Assembly, Item 2

EPA-NC-CE-0000483

INSTALLATION (continued)

5. If skimmer pipe, Item 3, was shipped with adjusting handle, Item 5, remove handle.
6. Mark skimmer pipe and outlet pipe ends to indicate compression coupling and molded unit skimmer engagement, and Fig. 6.0 for engagement on outlet pipe.
7. Slide compression coupling on the outlet end of skimmer pipe.
8. Slide the capped end of skimmer pipe into trunion.
9. Slide compression coupling on the outlet pipe. Check skimmer pipe engagement on trunion, adjust by moving the pipe horizontally.
10. Hand tighten compression coupling on outlet of skimmer pipe and oil outlet pipe, check engagement on both sides.
11. Install skimmer adjusting handle, Item 5.
12. Level skimmer assembly.
13. Tighten nuts on mounting bracket studs and tighten compression nuts on compression coupling.
NOTE: Do not overtighten, the skimmer pipe should rotate but not without some drag.

C. Skimmer Removal and Disassembly

1. To remove and/or replace skimmer, follow the above instructions in reverse order.

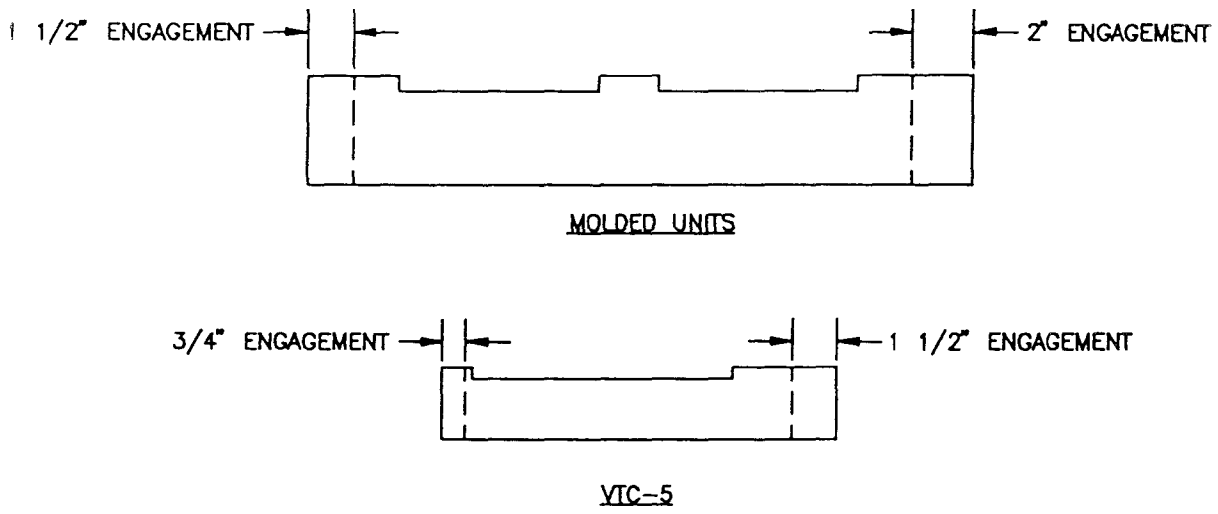

Figure 8.0, Skimmer Pipe Engagement

EPA-NC-CE-0000484

AFL INDUSTRIES
RIVIERA BEACH, FLORIDA

SERVICE MANUAL	RECOMMENDED SPARE PARTS	PAGE 1 OF 1
PRODUCT:	ROTARY PIPE SKIMMER, RP-C	ISSUED FEB '83

Reference: Rotary Pipe Skimmer, Model RP-C

Quantity	Item
2	Compression coupling gaskets

Reference Rotary Pipe Skimmer, Model RC-E

Quantity	Item
2	"O" Rings

NOTE: Prices quoted upon request; not valid beyond terms of quotation.

SUPERSEDES: AUG '81 I-O-M: 7.14

GENERAL

Refer to oil stop valve assembly and component drawing, Figure 1.0 and dimensional drawings located in this brochure. It will be helpful to become familiar with part names and their location.

NOMENCLATURE

The number following the AFL-OSV designates the nominal diameter of the outlet pipe. The size of the valve also determines the maximum flow the valve can pass.

INSTALLATION

Depending on contract requirements, the OSV assembly may be shipped factory installed in an AFL process tank, or separately for field installation in a designated location. Check equipment specifications and drawings to determine how the OSV was ordered and follow accordingly:

A. Factory Installed Oil Stop Valves

1. Install and level the tank, see tank installation instructions in this brochure and connect all piping, controls, valves, etc.

2. Remove tape and support brackets.

3. Check the OSV for any visual damage. Report damage to AFL.

4. Check OSV float, to assure proper vertical movement, by lifting and lowering the float. Use lift cable, supplied with the valve to check the float movement.

5. Valve is now ready for operation.

B. Field Installation

1. Place the valve in the sump or tank and line up the valve discharge with the sump/tank outlet nozzle.

NOTE: Depending on contract requirements, the valve discharge connection may be flanged or plain end. Check AFL drawings and proceed as follows:

EPA-NC-CE-0000486

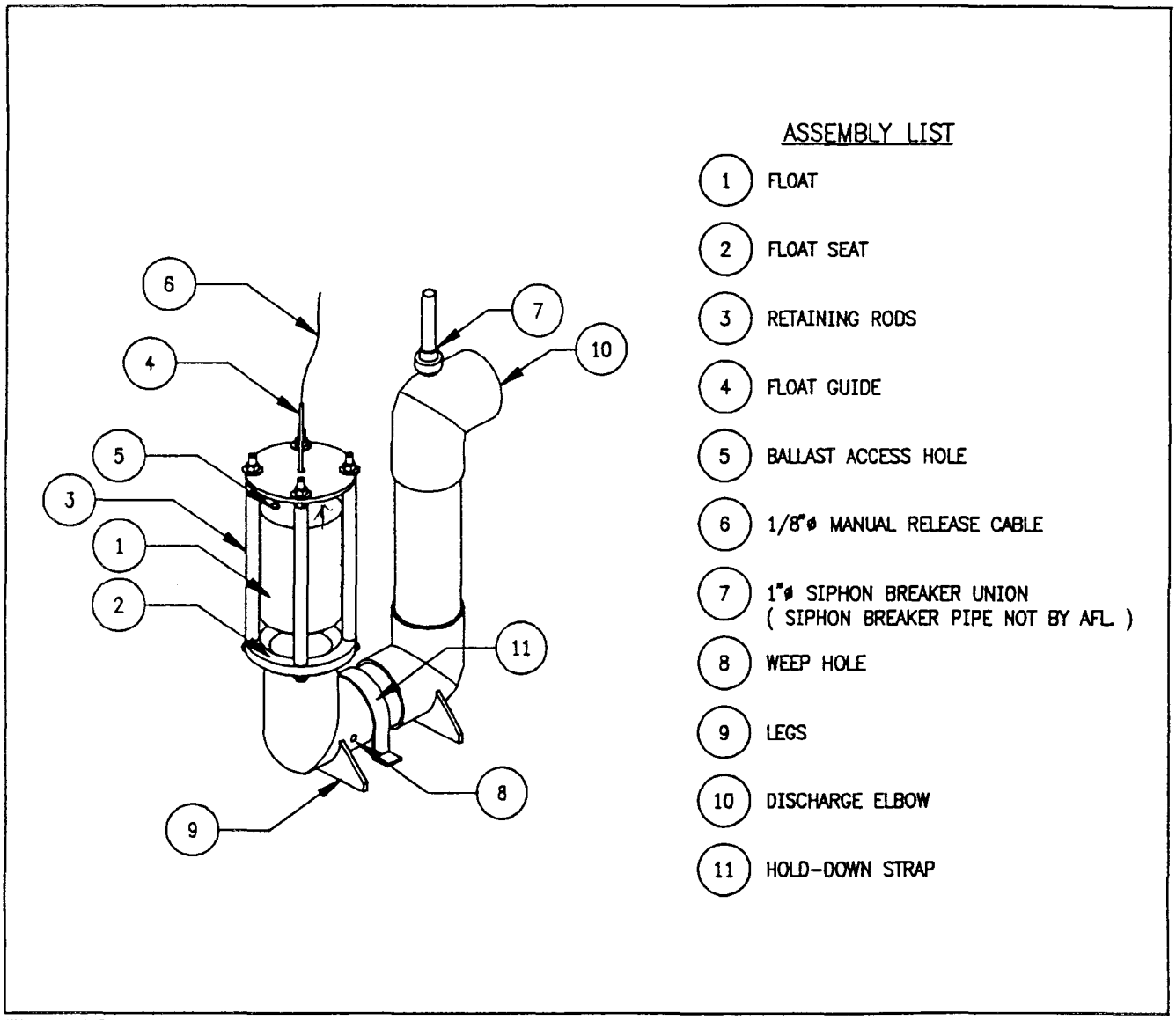

Figure 1.0

NOTE: OSV discharge pipe (plain ends) are shipped loose (not glued to the discharge elbow). The contractor, at his discretion, may solvent glue to the valve discharge elbow, or select other suitable means for connecting OSV discharge to out outlet pipe.

a) Plain End Connections

All valves with plain end connections are supplied with PVC coupling and two stainless steel worm drive hose clamps. Slide the coupling on valve discharge and install the clamps by sliding them on the coupling.

Line up the valve discharge with outlet pipe, leave 1/4" gap between pipe ends, and slide this coupling and clamp on the outlet pipe. Do not tighten the hose clamps at this time.

EPA-NC-CE-0000487

b) Flanged End Connections

Line up the flange bolt holes, insert a gasket and bolt flanges. Do not tighten bolts at this time.

WARNING: **FLANGES SUPPLIED WITH THE VALVES ARE FLATFACE; MAKE SURE THE MATING FLANGE IS OF THE SAME DESIGN. USE OF RAISED FLANGES WILL BREAK THE PVC FLANGES.**

C. Anchorage

1. OSV valves are supplied with hold down straps, which are designed to secure the valves to the concrete.

   After the valve has been lined up with outlet nozzle, install the strap on the valve body and use the two holes as a template for locating the anchor bolts.

2. Remove straps and drill in anchors.

3. Replace the strap and bolt down the strap.

D. Siphon Breaker

1. Siphon breaker connection is located on the valve discharge elbow and is furnished with a union to facilitate installation of siphon breaker pipe.

2. In order to calculate siphon breaker pipe length, determine the maximum liquid level in the sump/tank at a spill condition, subtract elevation of the top of the OSV discharge pipe from maximum liquid level and add 1'-6".

   After the length of the pipe has been cut, attach the pipe to the union using PVC solvent cement.

   Install the siphon breaker pipe on the valve and support it as required.

   NOTE: Ideally the top of the pipe should be as close to grade as possible.

   WARNING: **IMPROPER SIPHON PIPE ELEVATION WILL RESULT IN OIL DISCHARGE THROUGH THE SIPHON BREAKER DURING SPILL CONDITION.**

PRINCIPLE OF OPERATION

The valve operates on a buoyancy principle. The ballasted float, which is the only moving part, is weighted for a specified gravity of 0.95. In the water, the float will float and keep the valve open.

An accumulation of oil around the float will decrease the buoyant force on the float causing it to float lower in the liquid. As the oil accumulation increases the float will sink lower and finally close the valve when the oil level is approximately 3" to 4" above the bottom of the float.

OSV OPERATION

The AFL/Clark Oil Stop Valve (OSV) is designed for easy, efficient operation in confining oil spills to the premises. It is used in oil/water gravity differential separators, coalescing type separators and oil interceptors to prevent the entry of oil into the effluent.

Features of the valve include:

1. Dependable gravity operation
2. Corrosion resistant construction
3. Only one moving part
4. Outlet vent connection (siphon breaker)

The valve is available in a variety of sizes to meet a wide range of flow conditions

The valve is supplied as an option on AFL oil/water separators and oil interceptors. It can also be provided independently for existing applications for similar equipment.

Standard valves are fabricated with a "weep hole" which facilitates reopening of the valves after closure due to oil spill. The weep hole equalizes the pressures in the valve and will pass a minimal of amount of oil/water mixture.

On applications where this minimal discharge is objectionable, the weep hole is eliminated. In such cases, and after the valve closes due to oil spill, the valve must be re-opened manually by lifting the float by pulling on lift cable.

WARNING: **UPON VALVE CLOSURE, DUE TO A SPILL, THE OIL COLLECTED IN THE SUMP, TANK OR OIL SEPARATOR, MUST BE EVACUATED FROM THE VALVE CHAMBER AND DISPOSED OF PROPERLY. AFTER THE OIL HAS BEEN REMOVED, FILL CHAMBER WITH CLEAN WATER AND RE-OPEN THE VALVE BY LIFTING THE FLOAT BY PULLING ON LIFT CABLE. THE SAME PROCEDURE MUST BE USED DURING PROCESS START UP.**

THE ABOVE DESCRIBED PROCEDURE ON RE-OPENING OF THE VALVE IS ESPECIALLY CRITICAL ON STOP VALVES WITHOUT WEEP HOLES.

EPA-NC-CE-0000489

CAPACITIES

A minimum recommended water level, sufficient to completely submerge the float housing, is required for proper operation of the OSV. Operation at less than the minimum recommended water level will reduce the capacity of the OSV.

The recommended operating flow rate versus its associated head loss is shown in **Figures 2.01** through **2.03**.

NOTE: For the valve to operate properly at required flow(s), the valve discharge pipe centerline must be below the liquid level at a distance equal to (or greater than) the associated head loss.

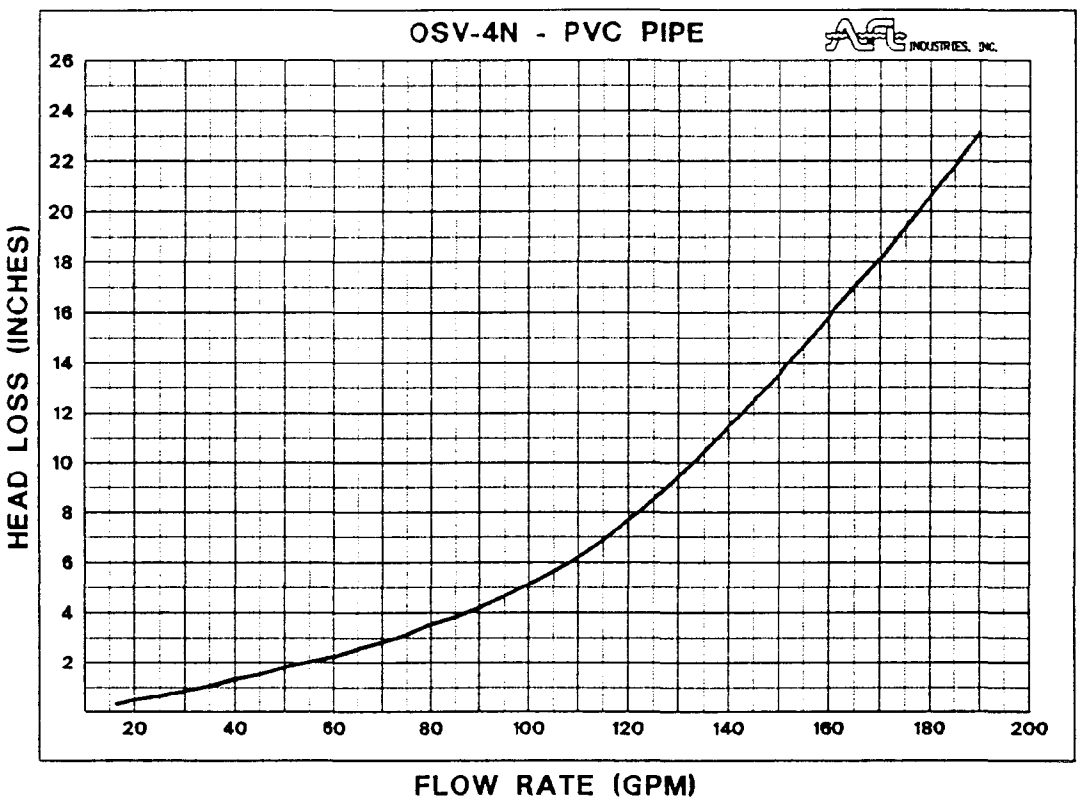

Figure 2.01 OSV-4 HEAD LOSS VS. FLOW RATE

WARNING: **IF THE VALVE IS OPERATED AT GREATER THAN DESIGN OR RECOMMENDED FLOWS IT MAY SHUT OFF AUTOMATICALLY, WHICH MAY NECESSITATE THAT THE VALVE BE REOPENED MANUALLY.**

EPA-NC-CE-0000490

FIG. 2.02

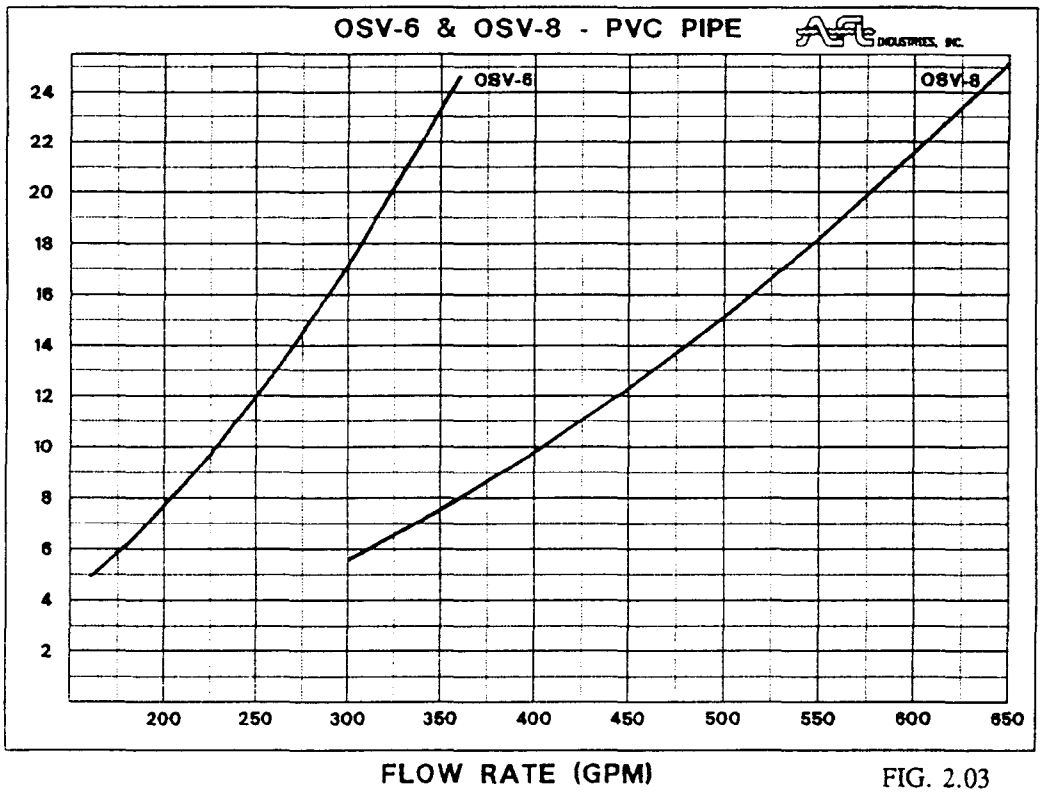

FIG. 2.03

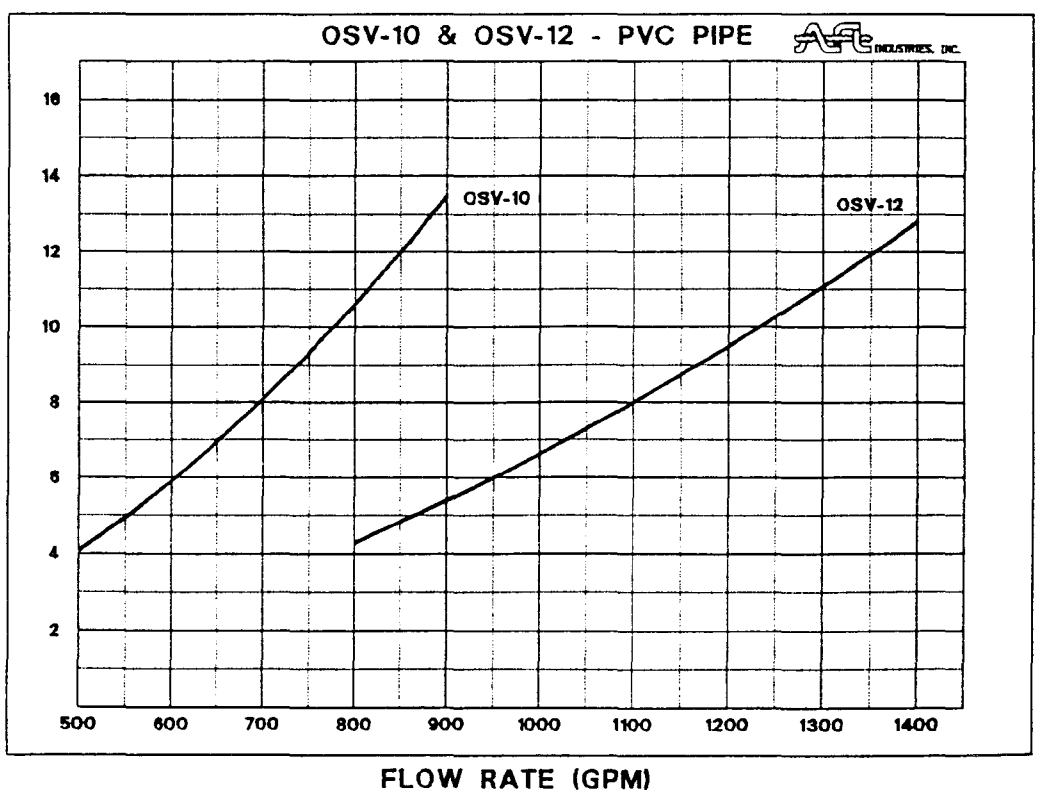

EPA-NC-CE-0000491

FLOAT REPLACEMENT PROCEDURE

On some occasions the float might be damaged during installation or due to freezing of the water surrounding the valve, and must be replaced.

The following instructions outline the procedure for disassembly and installation of a new float.

Refer to Figure 1.0, showing the valve components before disassembly and installation of a new float:

1. Empty sump or tank.
2. Remove top hex nuts and washers off the retaining rods, Item #3.
3. Remove the 3/8" guide rod located at the top of the float, Item #4; do not remove lifting cable.
4. Remove top PVC disk.
   NOTE: This disk contains a metal AFL tag which has a contract number on it. This number must accompany the returned float.
5. Remove the float from the sump, Item #1.

BEFORE INSTALLING THE NEW FLOAT

1. Clean any debris from the float seat, Item #2.
2. Remove any trash from the bottom of the sump to prevent future blockage.
3. Inspect the weep hole for blockage, Item #8.
   NOTE: Some valves do not use this option.

INSTALLING NEW FLOAT

1. Place new float on tapered flange seat, Item #2.
2. Set the top PVC disk on top of the retaining rods, Item #3.
3. Install hardware removed in Step 2 of disassembly procedure. Do not tighten the nuts at this time.
4. Insert guide rod through the disk and install 3/8" nut, lock washer on the guide rod.
5. Install guide rod into top center of the float and tighten the nut.
   Note: Do not over tighten.
6. Adjust pipe sleeves outward away from the float and tighten evenly.
   NOTE: <u>This is imperative!</u> The float must not be restricted by the pipe sleeves.

EPA-NC-CE-0000492

7. Float must be raised and lowered to confirm proper adjustment.
CAUTION: **DO NOT USE CENTER ROD TO RAISE/LOWER FLOAT!**

8. Refilling sump:

See procedure outlined in section OSV Operation and follow the instructions therein.

MAINTENANCE

Since the oil stop valves are made from corrosion-resistant materials and have only one moving part, maintenance requirements are minimal. Unless service requirements are severe, drain tank and visually inspect the OSV annually. Check float orientation and wear. If the valve shuts off the flow regularly, service requirements are severe and the valve should be inspected more often (two to four times per year).

TROUBLESHOOTING GUIDE

PROBLEM	CAUSE	CURE
1. Flow is less than design	Valve partially plugged	Clean valve
	Discharge pipe plugged	Clean discharge piping
	Float hanging up	Check float guide rod for straightness
	Inadequate discharge pipe submergence	Check design flow and liquid level
	Plugged siphon pipe	Clean siphon pipe
2. Water backing up in separator	Valve float down valve closed	Raise float
3. Valve shuts off	Flow through valve too high	Decrease flow
	Float damaged	Check float for leaks, check float weight
4. Valve will not reopen	Siphon pipe plugged or submerged	Clean siphon pipe, raise siphon pipe above water level
	No weep hole	Re-open manually

EPA-NC-CE-0000493

CONSOLIDATED EDISON
11TH STREET
NEW YORK

VERTICAL TUBE COALESCING SEPARATOR SPECIFICATION
(MOLDED UNIT)

Application ---------- Removal of free oil and settleable solids from oil/water mixture.

Model Number ---------- VTC-400A2

Number of Units ---------- One (1)

Outside Unit Dimensions -------- 10'-6" long x 10'-4" wide x 6'-3 3/4" high.

Separator Inside Unit Size ----- 10'-0" long x 8'-0" wide x 6'-0" high

Storage Inside Unit Size ------- 10'-0" wide x 2'-1" long x 6'-0" high

Construction:

Lid, Walls & Floor ---------- Molded, sandwich construction consisting of 1½" thick balsa wood core and fiberglass reinforced skins for a minimum sandwich thickness of 1-7/8".

Partition Wall ---------- Molded, sandwich construction consisting of 1½" thick balsa wood core and fiberglass reinforced skins for a minimum sandwich thickness of 1-7/8".

Internal Components ---------- Baffles, troughs, and weir walls shall be molded fiberglass laminate, minimum 1/8" thick.

The entire exposed external surfaces of the separator shall be covered with a continuous layer, 1.5 mils minimum thickness, of chemically resistant ultra-violet stabilized white polyester gel coat.

Installation ---------- Above Grade

Design Flow ---------- 400 GPM

Maximum Operating Temperature ---------- 180° F

Separator Operating Capacity --- 2,840 Gallons

Oil Storage Capacity ----------	650 Gallons
Materials ----------	All pipes and fittings are RB-2530-IR Epoxy. All flanged tank connections are 150# flat-face flanges. Tank will be constructed with isophthalic polyester resin outside and chlorendic polyester resin inside.

Each unit shall conform to the following specifications:

Nozzles ----------	Inlet --------- One (1) 10"ø, Flanged Outlet -------- One (1) 10"ø, Flanged Drains & Sludge Draw-Off ----- Four (4) 2"ø, Flanged Vent ---------- One (1) 2"ø, Flanged Heater Mtg. --- Two (2) 4"ø, Flanged Oil Level Switch -------- One (1) 3"ø, Flanged Effluent Level Switch -- One (1) 3"ø, Flanged
Inlet Chamber ----------	1'-5" long x 8'-0" wide, complete with inlet baffle and diffuser.
Coalescing/Separation Chamber --	5'-0" long x 8'-0" wide, packed with vertically positioned matrix of perforated polypropylene oleophilic tubes, complete with sludge collection zone below tubes and sludge draw-off header.
Oil Collection ----------	One (1) 6" ø Rotary Pipe Skimmer, complete with oil retention baffle.
Oil Sheen Baffle ----------	12" high x 8'-0" long, located before effluent weir wall.
Effluent Chamber ----------	2'-0" long x 8'-0" wide chamber, complete with weir wall, adjustable weir plate, and an outlet pipe arrangement which allows effluent discharge from bottom of chamber.
Lifting Straps ----------	Two (2) Dacron, D-6000, 11/64" thick with eye-eye ends.

Freeze Protection System

Heater ----------	One (1) 6 KW, immersion heater as manufactured by Glo-Quartz, and designed for 208V/3ph/60hz power supply.

Heater	One (1) 3 KW immersion heater as manufactured by Glo-Quartz and designed for 208V/3ph/60hz power supply.
Thermostat	One (1) United Electric Model E122-5BS, -20° to 80°F adjustment range, dual SPDT switches and complete with 6' stainless steel capillary and bulb, NEMA 7 enclosure, and shall be designed for 120V/1ph/60hz power supply.
Oil High Level Switch	One (1) displacer type level switch complete with a SPDT dry contact switch, porcelain displacers, stainless steel cable and NEMA-7 enclosure. The switch shall be of single stage, narrow differential type, Magnetrol Model A15-1G2A-BKQ.
Effluent High Level Switch	One (1) displacer type level switch complete with a SPDT dry contact switch, porcelain displacers, stainless steel cable and NEMA-7 enclosure. The switch shall be of single stage, narrow differential type, Magnetrol Model A15-1G2A-BKQ. (Separate contacts are provided in the control panel for customer's use.)

Access Manways:

Separator	One (1) 4'-0" x 5'-6" manway above separating chamber. One (1) 1'-6" x 4'-0" manway above effluent chamber.
Oil Storage Chamber	One (1) 1'-6" x 2'-0" manway

Each manway is provided with hinged fiberglass cover plate with handles.

All piping, electrical components, and appurtenances not specifically listed in the above specification **NOT BY AFL.**

CONSOLIDATED EDISON
11TH STREET
NEW YORK

AFL/CLARK OIL STOP VALVE SPECIFICATION

Application ---------- Oil Spill Prevention

Model Number ---------- OSV-8

Number of Units ---------- One (1)

Each unit will conform to the following specifications:

Description ---------- Fabricated control valve designed to control oil spills. Valve assembly shall consist of base, guides, inlet housing, float, and outlet connection. Valve shall be designed to operate on specific gravity differential principle.

Float Weight ---------- Ballasted for 0.95 Sp. Gr.

Flow ---------- 600 GPM Gravity (Max.)

Inlet Size ---------- 8" Diameter

Outlet Connection ---------- 8" Diameter flange, complete with 1" diameter socket type connection for siphon breaker. Siphon breaker connection - **BY AFL.**

Materials of Construction

Base, Float, Housing & Outlet Piping ---------- RB-2530-IR Epoxy resin

Float Guides ---------- Type 304 Stainless Steel & sleeves.

Design Requirements:

Pressure Rating ---------- Atmospheric

Temperature ---------- Ambient with 180°F maximum

Valve to be shipped completely assembled and installed in the separator by **AFL INDUSTRIES.**

CONSOLIDATED EDISON
11TH STREET
NEW YORK

ELECTRICAL SPECIFICATIONS

Type of Equipment ---------- 1/1 Freeze Protection with effluent and oil high levels

Type of Application ---------- Explosion proof

AFL Drawing No. ---------- 3E-477-0

Electrical Power Required ------ 208V/3ph/60hz - 30 AMP

General Sequence of Operation:

(1) As soon as the main disconnect switch is turned on, indicating light **1 LT** comes on at AFL control panel.

(2) Influent Heater **1 HTR** and effluent heater **2 HTR** can be operated by selector switch **1 SS**. In **"HAND"** mode the heaters run continuously and in **"AUTO"** mode they are controlled by thermostat **1 TAS**. Indicating light **2 LT** comes on when the heaters is on.

(3) Thermostat **1 TAS** senses two levels of temperatures in the effluent chamber. The first set point senses low temperature, 35°F heater failure. If and when sensed, control relay **2 CR**, Alarm Horn **1 AH**, and indicating light **3 LT** come on at AFL control panel. One set of dry contacts of control relay **2 CR** is wired to terminal strip for customer's use. The second set point senses the minimum operating temperature of 40°F in the effluent chamber. If and when sensed, control relay **1 CR** and indicating light **2 LT** come on at AFL control panel. One set of dry contacts of control relay **1 CR** is wired to terminal strip for customer's use.

(4) Level switch **1 FS** senses high effluent level in the effluent chamber. If and when sensed, control relay **3 CR**, Alarm Horn **1 AH** and indicating light **4 LT** come on at AFL control panel. One set of dry contacts of control relay **3 CR** is wired to terminal strip for customer's use.

(5) Level switch **2 FS** senses high oil level in the oil chamber. If and when sensed, control relay **4 CR**, Alarm Horn **1 AH** and indicating light **5 LT** come on at AFL control panel. One set of dry contacts of control relay **4 CR** is wired to terminal strip for customer's use.

(6) The Alarm Horn **1 AH** can be silenced by pushbutton **1 PB**. The "Check System" indicating light **6 LT** comes on when any alarm condition has occurred (Heater Failure, High Effluent Level, and/or High Oil Level).

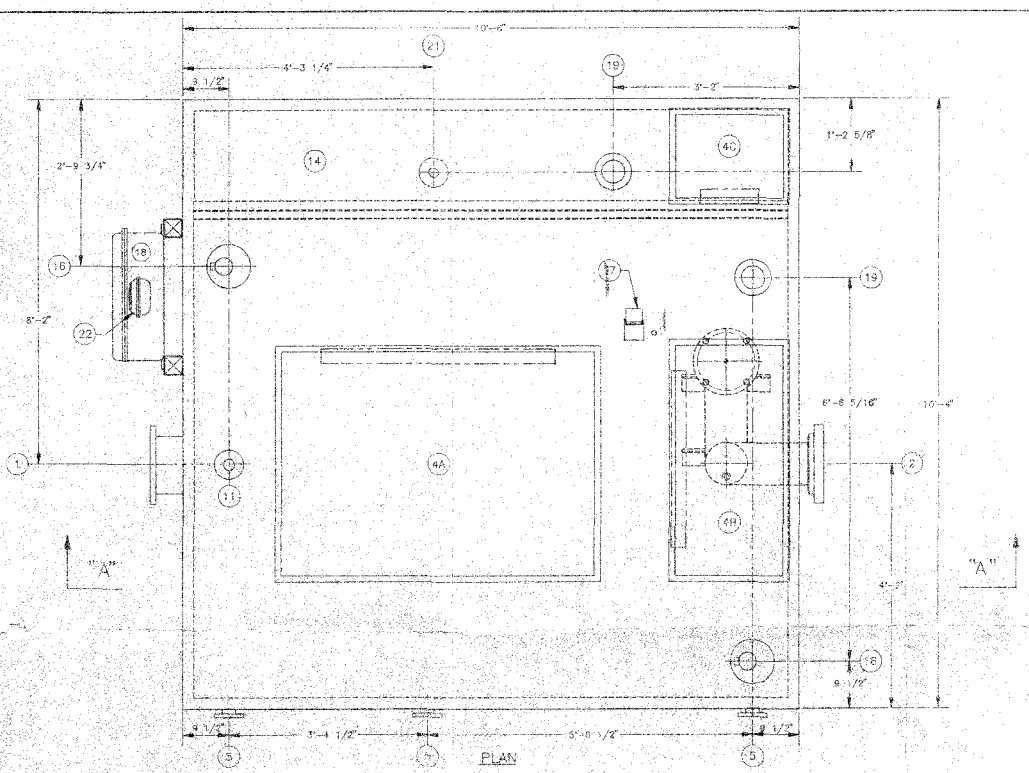

PLAN

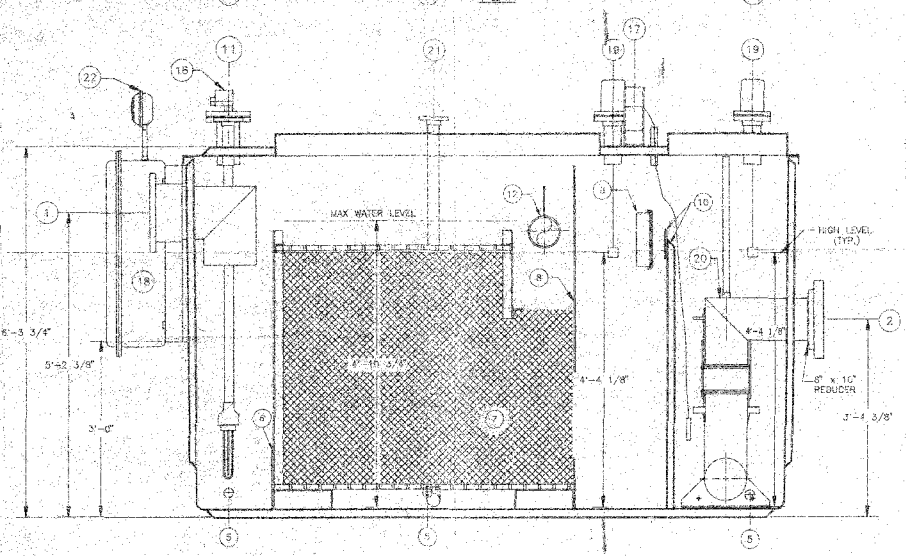

SECTION "A-A"

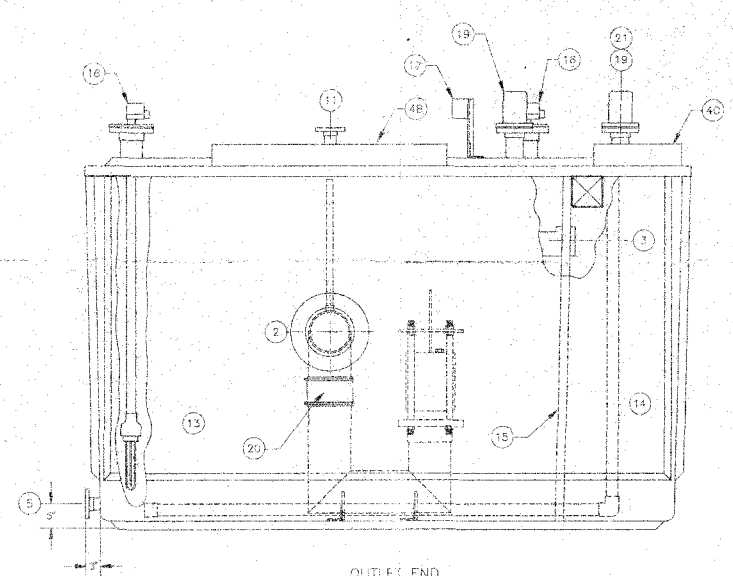

OUTLET END ELEVATION

ASSEMBLY LIST

1. 10"ø INLET, FLANGED
2. 10"ø OUTLET, FLANGED
3. 6"ø OIL TRANSFER PIPE
4A. 4'-0" X 5'-6" MANWAY
4B. 4'-0" X 2'-0" MANWAY
4C. 2'-0" X 1'-6" MANWAY
5. 2"ø DRAIN, FLANGED (3 REQ'D.)
6. INLET BAFFLE
7. VERTICAL TUBE COALESCERS
8. OIL RETENTION BAFFLE
9. SHEEN BAFFLE
10. ADJUSTABLE OUTLET WEIR
11. 2"ø VENT, FLANGED
12. 6"ø ROTARY PIPE SKIMMER
13. VTC-400
14. STORAGE CHAMBER
15. PARTITION WALL
16. HEATER (2 REQ'D.)
17. THERMOSTAT
18. ELECTRICAL CONTROL PANEL
19. HIGH LEVEL SWITCH (2 REQ'D.)
20. 8"ø OIL STOP VALVE
21. 2"ø SLUDGE DRAW-OFF, FLANGED
22. ALARM HORN

NOTES

1. WITHOUT WRITTEN CONSENT FROM AFL INDUSTRIES, INC., DO NOT:
   - A. DRILL HOLES OR OTHERWISE PUNCTURE THE FIBERGLASS SKINS OF THE UNIT.
   - B. MOUNT ANY EQUIPMENT OR ACCESSORY ON THE UNIT.
   - C. REMOVE ANY EQUIPMENT OR ACCESSORY FROM THE UNIT.
   - D. FLOOD THE UNIT OR RESTRICT THE OUTFLOWS.
2. AFL REQUIRES A FLEXIBLE COUPLING TO BE INSTALLED BETWEEN THE TANK AND CUSTOMER'S CONNECTING PIPES TO ELIMINATE EXCESSIVE LOADING ON TANK FLANGES.
3. DIMENSIONAL TOLERANCE ± 1/2".
4. ALL TANK FLANGES FURNISHED BY AFL ARE 150 lb. FLAT FACE FLANGES.
5. ALL NOZZLE PROJECTIONS ARE 6" UNLESS NOTED OTHERWISE.
6. ALL FLANGE BOLT HOLE PATTERNS TO STRADDLE CENTERLINES.

APPROX. UNIT WT. = 2,750 LBS.

ENGINEERING A BETTER ENVIRONMENT

AFL INDUSTRIES, INC.
3661 BLUE HERON BLVD., RIVIERA BEACH, FLA. 33404

SCALE: NONE		DRAWN BY: RLB	
DATE: 8-22-94		CHECKED BY:	
MODEL: VTC-400A2 W/ ROTARY PIPE SKIMMER		AFL JOB NO.: 94288	
CITY: CONSOLIDATED EDISON 11th. STREET		DRAWING NO.: 4S1562	

EPA-NC-CE-0000499

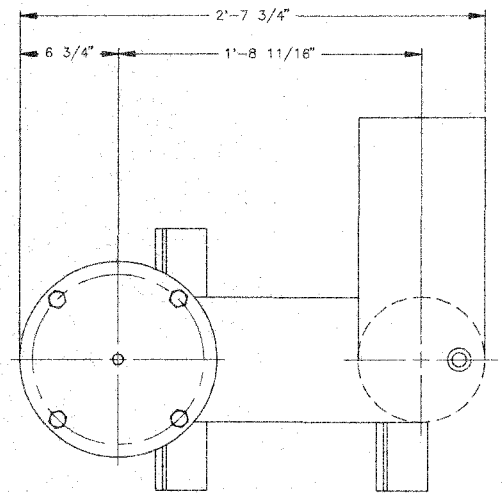

PLAN

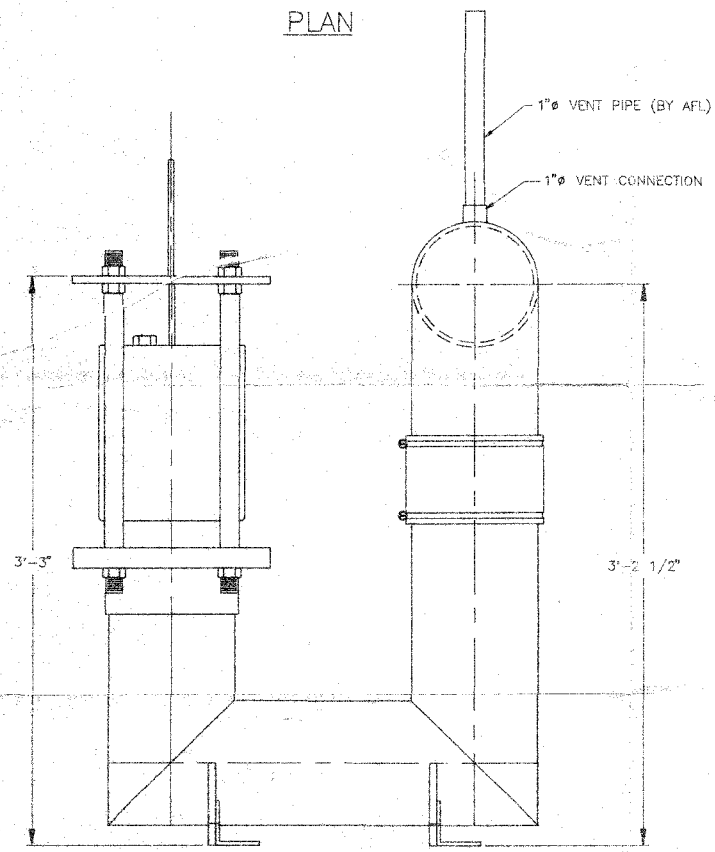

SIDE VIEW

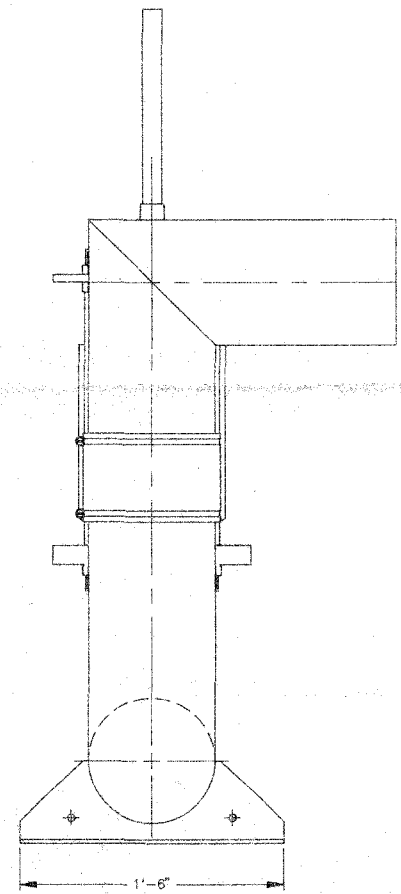

OUTLET END VIEW

NOTES

FOR PROPER VALVE OPERATION THE STEPS AS LISTED BELOW MUST BE FOLLOWED:

1. VENT PIPE IS TO BE FURNISHED BY AFL AND MUST EXTEND ABOVE CONTAINMENT AREA.
2. AFTER VALVE IS INSTALLED, THE SUMP MUST BE FILLED WITH WATER UNTIL THE LIQUID LEVEL IS AT THE INVERT OF DISCHARGE PIPE.
3. MANUALLY OPEN VALVE BY LIFTING THE FLOAT IN A VERTICAL DIRECTION ONLY. TO FACILITATE MANUAL OPENING OF THE VALVE ATTACH 1/16"ø WIRE TO FLOAT STEM AND THE OTHER END TO A EASILY ACCESSIBLE AREA. MAKE SURE THERE IS ENOUGH SLACK IN WIRE FOR THE VALVE(FLOAT) TO CLOSE.
4. AFTER A SPILL, THE SPILLED LIQUID MUST BE EVACUATED UNTIL WATER ONLY IS IN THE SUMP. ADD WATER IF WATER LEVEL IS BELOW THE INVERT.(SEE NOTE#2)
5. MANUALLY REOPEN VALVE.
6. FOR ADDITIONAL INSTRUCTIONS REFER TO INSTALLATION, OPERATION, & MAINTENANCE(I-O-M) MANUAL.

FAILURE TO FOLLOW ABOVE PROCEDURES MAY CAUSE OIL TO BE DISCHARGED.

DIMENSIONAL TOLERANCE ± 1/8"

TOTAL FLOAT WT. 32 LBS. 5 OZS.

TOTAL UNIT WT. 105 LBS

ENGINEERING A BETTER ENVIRONMENT

AFL INDUSTRIES, INC.
3661 BLUE HERON BLVD., RIVIERA BEACH, FLA. 33404

SCALE: NONE	THIS DRAWING AND SPECIFICATION IS THE PROPERTY OF AFL INDUSTRIES, 3661 BLUE HERON BLVD., RIVIERA BEACH, FLA. 33404 AND SHALL NOT BE REPRODUCED WITHOUT WRITTEN PERMISSION.	DRAWN BY: RLB	
DATE: 8-22-94		CHECKED BY:	
MODEL: 8"ø OIL STOP VALVE		AFL JOB NO. 94288	
JOB: CONSOLIDATED EDISON 11th. STREET		DRAWING NO. 3S1901	

2-12 FILE: 4288-3S1

EPA-NC-CE-0000500

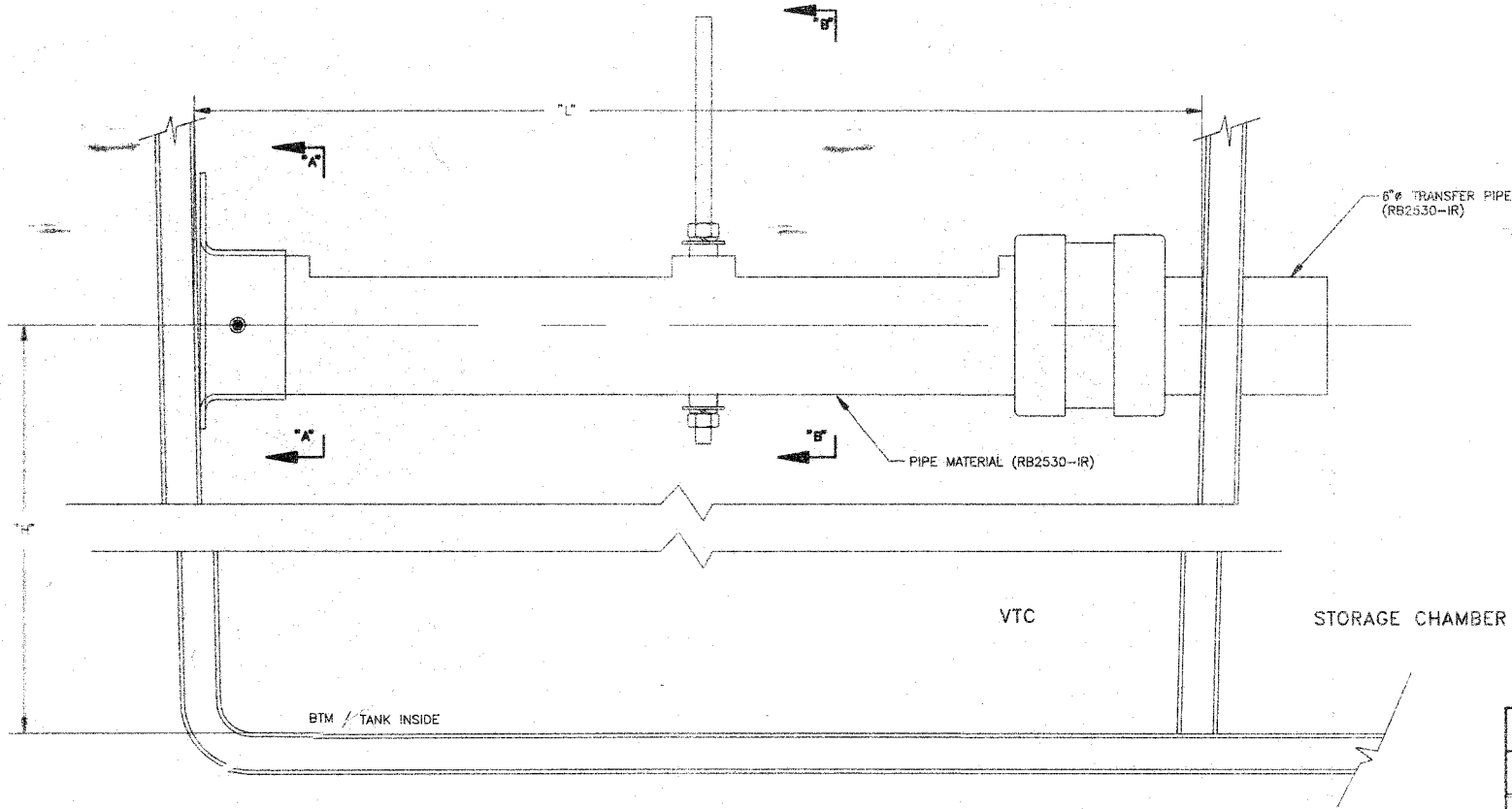

DIMENSION TABLE		
UNIT	L	H
VTC-400	7'-11 3/8"	4'-8 5/8"

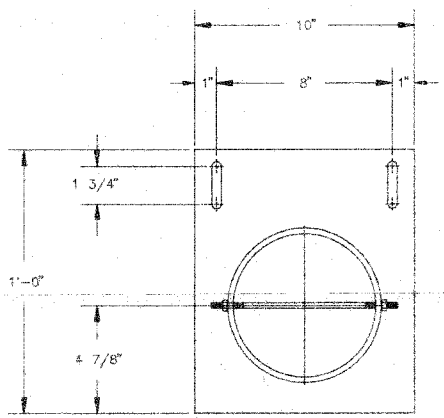

VIEW "A-A"

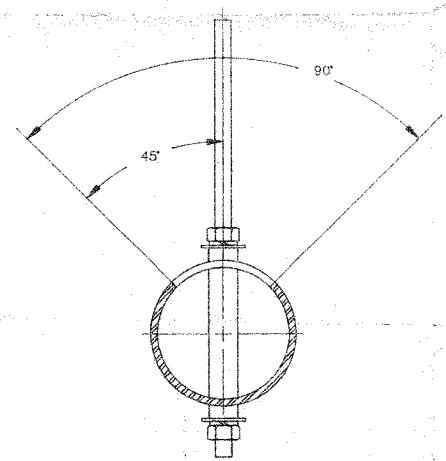

SECTION "B-B"

ENGINEERING A BETTER ENVIRONMENT

AFL INDUSTRIES, INC.
3661 BLUE HERON BLVD., RIVIERA BEACH, FLA. 33404

SCALE: NONE	THIS DRAWING AND SPECIFICATION ARE THE PROPERTY OF AFL INDUSTRIES, 3661 BLUE HERON BLVD., RIVIERA BEACH, FLA. 33404 AND SHALL NOT BE REPRODUCED WITHOUT WRITTEN PERMISSION.	DRAWN BY: RLB
DATE: 8-22-94		CHECKED BY:
MODEL: 6"ø ROTARY PIPE SKIMMER		AFL JOB No.: 94288
JOB: CONSOLIDATED EDISON 11th. STREET		DRAWING No.: 3S302

3412

EPA-NC-CE-000501

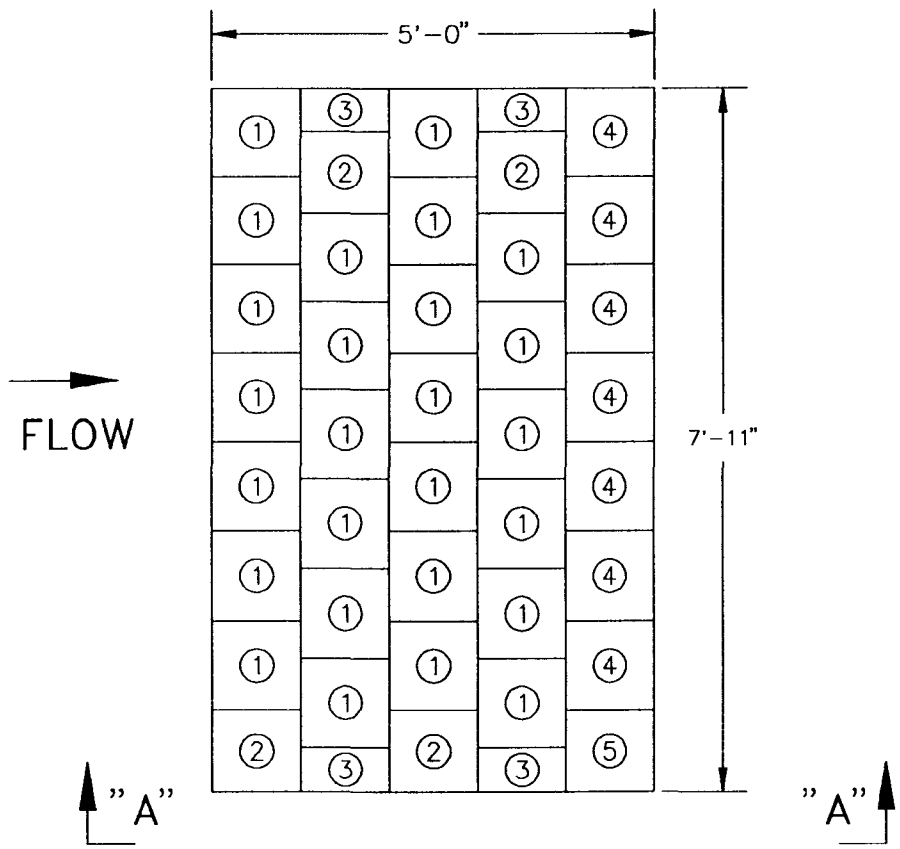

PLAN

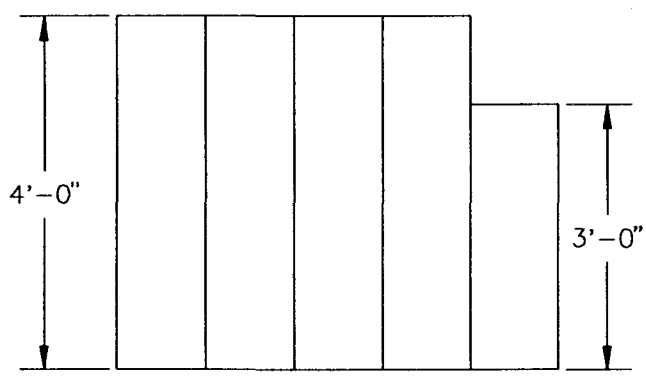

ELEVATION "A-A"

ITEM	QTY.	SIZE
1.	(26)	1'-0" x 1'-0" x 4'-0" H.
2.	(4)	1'-0" x 0'-11" x 4'-0" H.
3.	(4)	1'-0" x 0'-6" x 4'-0" H.
4.	(7)	1'-0" x 1'-0" x 3'-0" H.
5.	(1)	1'-0" x 0'-11" x 3'-0" H.

AFL INDUSTRIES, INC.
3661 BLUE HERON BLVD., RIVIERA BEACH, FLA. 33404

SCALE: NONE	THIS DRAWING AND SPECIFICATION IS THE PROPERTY OF AFL INDUSTRIES. 3661 BLUE HERON BLVD. RIVIERA BEACH, FLA. 33404 AND SHALL NOT BE REPRODUCED WITHOUT WRITTEN PERMISSION.	DRAWN BY: RLB
DATE: 8-22-94		CHECKED BY:
MODEL: VTC-400 TUBE ARANGEMENT		AFL JOB No. 94288
JOB: CON-EDISON 11th. STREET		DRAWING No. 1S212
		FILE:4288-TA

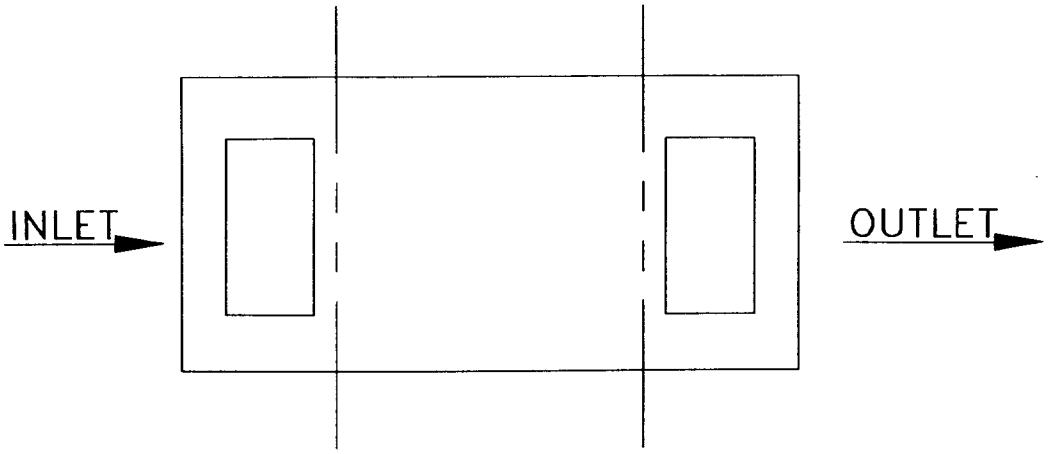

PLAN

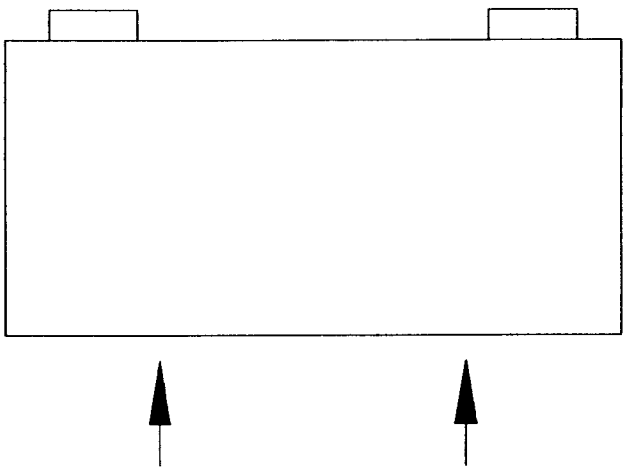

ELEVATION

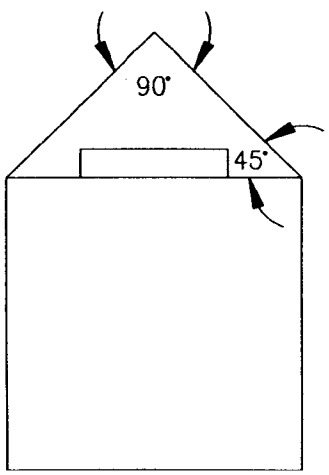

END VIEW

NO. OF STRAPS REQUIRED/SEPARATOR 2
STRAPS SHALL BE EQUALLY SPACED
EACH STRAP IS 38 LG. x 1" W.

AFL INDUSTRIES, INC.
3661 BLUE HERON BLVD., RIVIERA BEACH, FLA. 33404

SCALE: NONE	THIS DRAWING AND SPECIFICATION IS THE PROPERTY OF AFL INDUSTRIES. 3661 BLUE HERON BLVD. RIVIERA BEACH, FLA. 33404 AND SHALL NOT BE REPRODUCED WITHOUT WRITTEN PERMISSION.	DRAWN BY: RLB
DATE: 8-22-94		CHECKED BY:
MODEL: LIFTING STRAPS LOCATIONS		AFL JOB No. 94288
JOB: CONSOLIDATED EDISON 11th. STREET		DRAWING No. 1S165
		FILE:4288-lsg

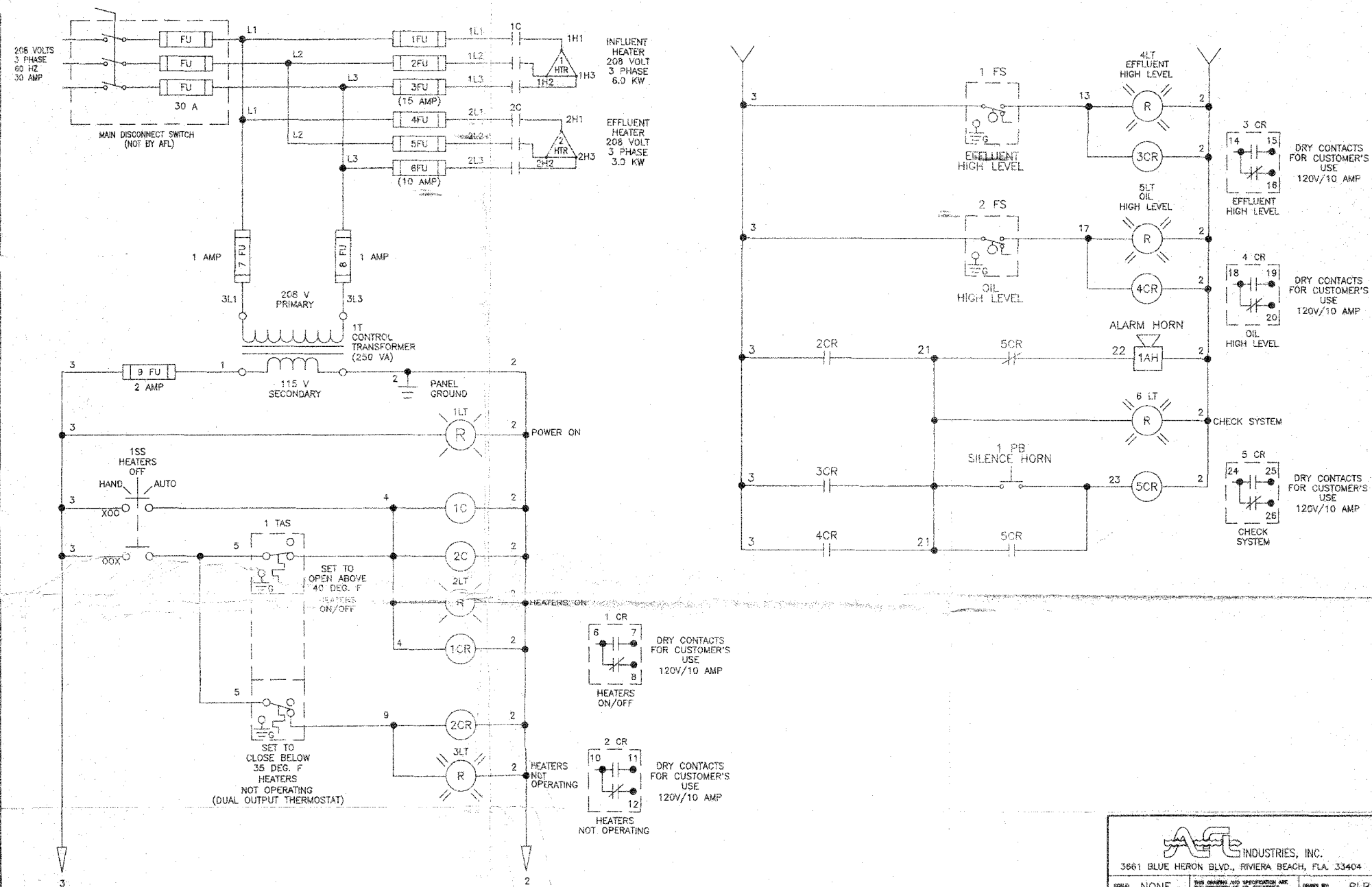

ENGINEERING A BETTER ENVIRONMENT

AFL INDUSTRIES, INC.
3661 BLUE HERON BLVD., RIVIERA BEACH, FLA. 33404

SCALE: NONE	THIS DRAWING AND SPECIFICATION ARE THE PROPERTY OF AFL INDUSTRIES, 3661 BLUE HERON BLVD., RIVIERA BEACH, FLA. 33404 AND SHALL NOT BE REPRODUCED WITHOUT WRITTEN PERMISSION.	DRAWN BY: RLB
DATE: 8-23-94		CHECKED BY:
MODEL: 1/1 FREEZE PROTECTION		AFL JOB No.: 94288
JOB: CONSOLIDATED EDISON 11th. STREET		DRAWING No.: 3E-477-0 SHEET 1 OF 3

1=1 FILE: 3E-477-0

EPA-NC-CE-0000504

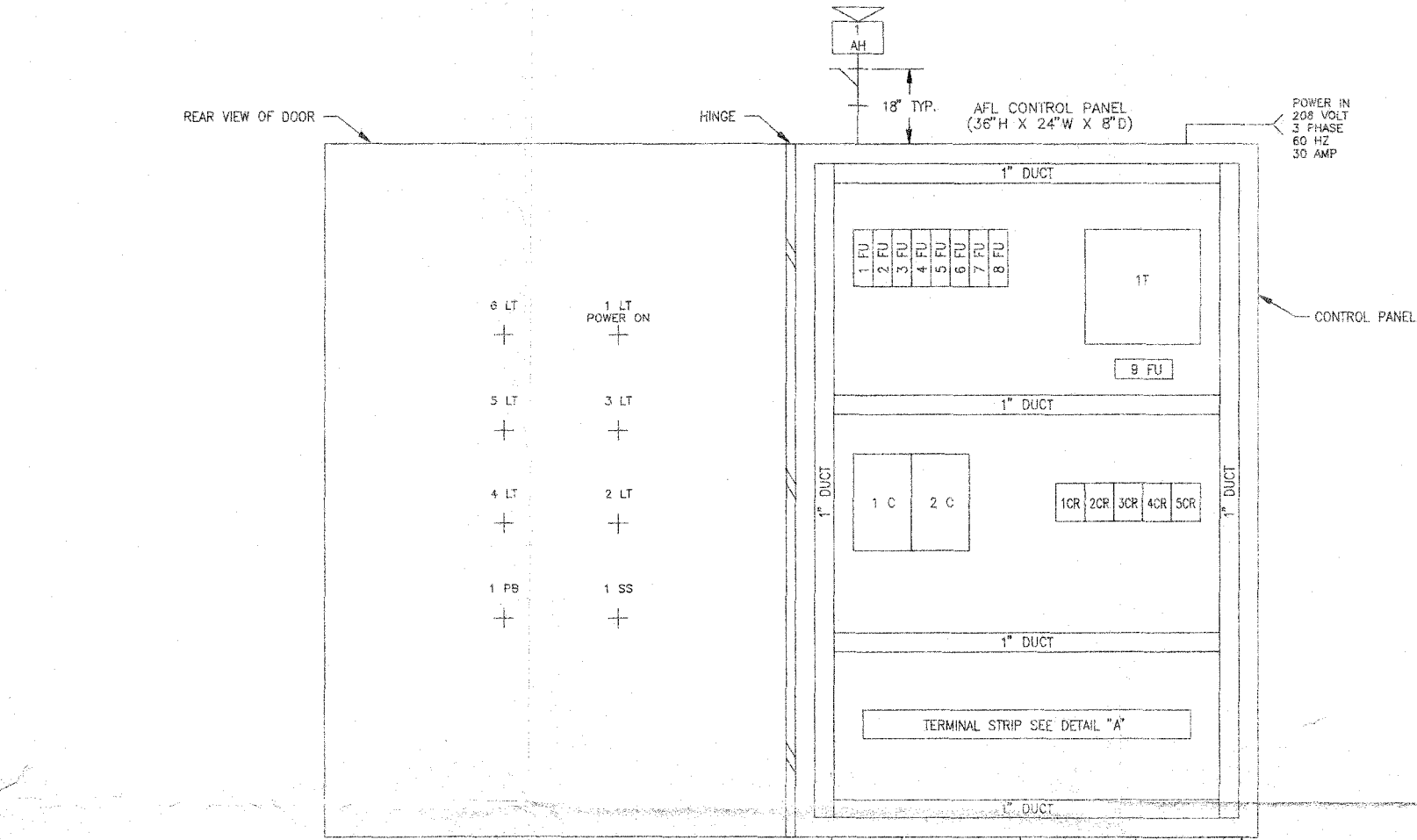

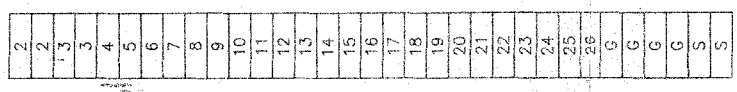

TERMINAL STRIP
DETAIL "A"

NOTES:

(1) AFL CONTROL PANEL, HEATERS, THERMOSTATS AND LEVEL SWITCH ARE TO BE SUPPLIED, LOCATED, INSTALLED AND WIRED ON THE TANK BY AFL.

(2) APPLICATION IS EXPLOSION PROOF.

(3) INSTALLATION SHALL MEET ALL APPLICABLE LOCAL, STATE, NEC AND OSHA REGULATIONS.

(4) USE #14 AWG - THWN WIRE, AND 1/2" CONDUIT.

ENGINEERING A BETTER ENVIRONMENT

AFL INDUSTRIES, INC.
3661 BLUE HERON BLVD., RIVIERA BEACH, FLA. 33404

SCALE: NONE	THIS DRAWING AND SPECIFICATION ARE THE PROPERTY OF AFL INDUSTRIES, 3661 BLUE HERON BLVD., RIVIERA BEACH, FLA. 33404 AND SHALL NOT BE REPRODUCED WITHOUT WRITTEN PERMISSION.	DRAWN BY: RLB
DATE: 8-23-94		CHECKED BY:
MODEL: 1/1 FREEZE PROTECTION		AFL JOB No.: 94288
ACR: CONSOLIDATED EDISON 11th. STREET		DRAWING No.: 3E-477-0 SHEET 2 OF 2

FILE: 3E-477D

EPA-NC-CE-000505

GLO-QUARTZ PRODUCT

INSTALLATION AND MAINTENANCE INSTRUCTIONS

Glo-Quartz Screw Plug Immersion Heaters
Catalog Nos. RSQ, RNS, RSW, RSWX
and RSWT. (Thermostatically Controlled)

Glo-Quartz heaters are carefully made and inspected to insure maximum life and efficiency. Follow these instructions for correct installation and operation.

INSTALLATION - Care must be taken to insure complete immersion of the heated length of the heater at all times. The heated surface should never be in contact with any sludge. The screw plug thread should be covered with pipe dope before installing.

The terminals must be protected at all times from moisture or vapor; in hazardous locations, explosion-resistant covers should be used.

The heaters should be inspected periodically for coatings and erosion, and cleaned if necessary.

When melting solids by direct immersion a surface vent should be provided to allow gases to escape. Operate the heater on 1/2 voltage until melted material completely covers the heated area.

In an electroplating application the metal surface of the heater is to be grounded. The heaters are not under any circumstance to be placed between the electrodes and the work.

LOW MEGOHM CONDITION - The refactory material used in electric heaters may absorb some moisture during transit or when subjected to a humid enviroment. This moisture absorption results in a cold insulation resistance of less than twenty megohms. Normally, this low megohm value corrects itself after heat-up and does not affect heater efficiency or life.

A low megohm condition can be easily corrected by removing the terminal hardware and baking the heater in an oven at 350°F. to 700°F. for several hours, preferably overnight.

An alternate procedure is to energize the heater at low voltage until the megohm reading returns to normal. When energizing heaters in air, the sheath temperatures should not exceed 400°F. for copper and 750°F. for steel or alloy sheaths.

For any particular point not covered, write the factory giving a full description of the application.

GLO-QUARTZ ELECTRIC HEATER CO., INC.

EPA-NC-CE-0000506

GLO-QUARTZ PRODUCT

INSTALLATION AND MAINTENANCE INSTRUCTIONS

Glo-Quartz Screw Plug Immersion Heaters
Catalog Nos. RSQ, RNS, RSW, RSWX
and RSWT. (Thermostatically Controlled)

CONDUIT CONNECTIONS - Heaters purchased with either moisture resistant or explosion resistant terminal covers should be wired with rigid conduit connections in keeping with the requirements of the National Electric Code and local codes for the particular installation.

GENERAL INFORMATION - Immersion heaters with 120 volt or 240 volt elements can be connected in series for higher voltage operation except where uneven wattage is supplied on the respective elements.

Never bend the heating elements. If bending is necessary, check with the factory.

Copper sheathed elements are generally used for water applications; steel sheathed elements are generally used for oil, alkaline, wax, etc. applications. For other materials, check supplier of solution for suggested sheath material.

Do not remove immersion heater from the tank while connected to the power supply.

Terminals are to be protected from drippings, spray, condensation and spilling. Use alloy bus bar or manganese nickel wire for electrical connections where the temperature might exceed 400°F. Insulated copper wire may be used where temperatures will not exceed 400°F. Protect terminals from flux when soldering heaters into tanks or containers.

CORROSION OF METAL - The sheath is believed to be satisfactory for heating the corrosive solution named. The rate of corrosion is affected by temperature, concentration, erosion, inhibitors, flux, impurities in the solution, etc. Glo-Quartz therefore cannot guarantee this unit against damage resulting from corrosion, electrolysis, or other operating conditions beyond our control. The supplier of the chemical solution should be asked for recommendations of sheath materials.

CAUTION - Be sure line voltage is the same as that stamped on the heater nameplate.

98 NO. SAN GABRIEL BLVD., PASADENA, CALIF. 91107 (213) 681–4891 Pasadena TELEX NO. 675–478
7084 MAPLE STREET, MENTOR, OHIO 44060 (216) 255–9701 Mentor TELEX NO. 980–284

EPA-NC-CE-0000507

Magnetrol®

REGISTERED ISO 9001 • Z299.1 ASSURED QUALITY & SERVICE COST LESS

Displacer Type Liquid Level Switches

Instruction Manual and Parts List

Description

Displacement type level switches offer the industrial user a wide choice of alarm and control configurations. Each unit utilizes a simple buoyancy principle and is well suited for simple or complex applications.

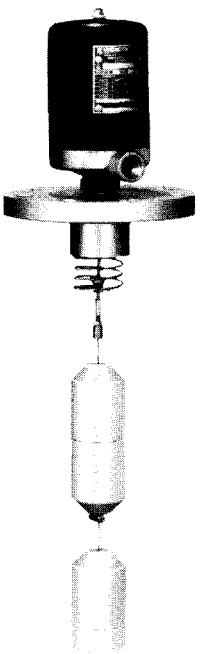

Operating principle

Operation is based upon buoyancy principle, whereby, a spring is loaded with weighted displacers which are heavier than the liquid. Immersion of the displacers in the liquid results in a buoyancy force change, which moves the spring upward. Since the spring moves only when the level moves on a displacer, spring movement (A) is always a small fraction of the level travel between displacers (B). A magnetic sleeve (C) is connected to the spring and operates within a non-magnetic barrier tube (D). Spring movement causes the magnetic sleeve to attract a pivoted magnet (E), actuating a mercury switch (F) located outside the barrier tube.

Switch points are achieved by moving a displacer up or down the displacer cable.

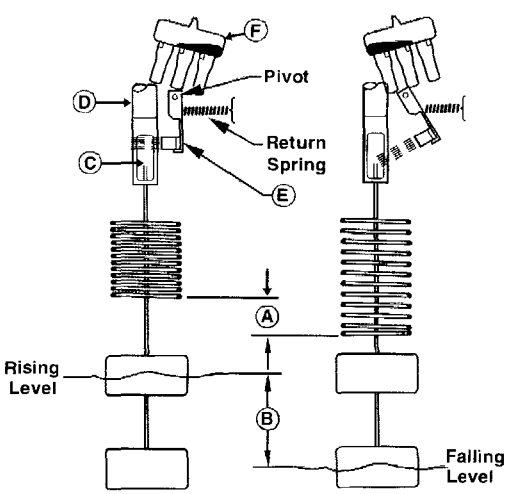

Part number description

Displacer switches are identified by an alphanumeric part numbering system. The part number provides exact specification of unit configuration, materials, switches and other options vital to the performance and function of the instrument.

The system is comprised of four distinct components, each of which describes a specific part or feature of the instrument. A definition of each component is given below.

Model number construction

□□□-□-□□□-□□□

Part number code

A10 = Wide Differential, 1 switch mechanism
A15 = Narrow Differential, 1 switch mechanism
B10 = Wide Differential, 2 switch mechanisms
B15 = Narrow Differential, 2 switch mechanisms
C10 = Wide Differential, 3 switch mechanisms
C15 = Narrow Differential, 3 switch mechanisms

Materials of construction

Support Spring	Trim	Displacer Clamps/ Suspension Cable	Magnetic Sleeve	Code
Inconel	316 SS	316 SS	400 SS	1
Inconel	316 SS	316 SS	400 SS w/ 316 SS Jacket	2
Inconel	316 SS	316 SS	316 SS	4
Inconel	316 SS	Monel	400 SS	5
Inconel	316 SS	Hastelloy C	400 SS	6

10 ft. suspension cable standard.

Tank connection and displacers

Tank Connection①	Displacer Material		
	Porcelain	304SS②	Karbate
2½" NPT	E2A	E2B	E2C
3" 125 lb. Cl Flange	G2A	G2B	G2C
3" 150 lb. Steel Flange	G3A	G3B	G3C
4" 125 lb. Cl Flange	H2A	H2B	H2C
4" 150 lb. Steel Flange	H3A	H3B	H3C
4" 300 lb. Steel Flange	H4A	H4B	H4C
6" 125 lb. Cl Flange	K2A	K2B	K2C
6" 150 lb. Steel Flange	K3A	K3B	K3C
6" 300 lb. Steel Flange	K4A	K4B	K4C

① Flanges are ANSI type.
② Type 304 SS standard, type 316 SS furnished with material code 4.

Refer to electric or pneumatic switch chart

Electric switch mechanism and enclosure

Switch Description③	Max. Process Temp. °F (°C)	Contacts	Cont. Per Encl.	All Models w/Part No. Code A10, B10, and B15				All Models w/Part No. Code A15			
				NEMA 4		NEMA 7/9		NEMA 4		NEMA 7/9	
				Std.	Std. Epoxy Paint	Std.	Class I Div. 1 Group B	Std.	Std. Epoxy Paint	Std.	Class I Div. 1 Group
Series A Mercury Switch	500°F (260°C)	SPDT	1	AAF	AAM	AKM	AKW	AAE	AAY	AKY	AKW
			2	ABF	ABM	ALM	ALW	—	—	—	—
		DPDT	1	ADF	ADM	ANM	ANW	ADE	ADY	ANY	ANW
			2	AEF	AEM	AOM	AOW	—	—	—	—
Series B Snap Switch	250°F (121°C)	SPDT	1	BAF	BAM	BKM	BKW	BAE	BAY	BKY	BKW
			2	BBF	BBM	BLM	BLW	—	—	—	—
		DPDT	1	BDF	BDM	BNM	BNW	BDE	BDY	BNY	BNW
			2	BEF	BEM	BOM	BOW	—	—	—	—
Series C Snap Switch	450°F (232°C)	SPDT	1	CAF	CAM	CKM	CKW	CAE	CAY	CKY	CKW
			2	CBF	CBM	CLM	CLW	—	—	—	—
		DPDT	1	CDF	CDM	CNM	CNW	CDE	CDY	CNY	CNW
			2	CEF	CEM	COM	COW	—	—	—	—
Series D Snap Switch for DC Current Applications	250°F (121°C)	SPDT	1	DAF	DAM	DKM	DKW	DAE	DAY	DKY	DKW
			2	DBF	DBM	DLM	DLW	—	—	—	—
		DPDT	1	DDF	DDM	DNM	DNW	DDE	DDY	DNY	DNW
			2	DEF	DEM	DOM	DOW	—	—	—	—
Series E Vibration Resistant Mercury Switch	500°F (260°C)	SPDT	1	EAF	EAM	EKM	EKW	EAE	EAY	EKY	DKW
			2	EBF	EBM	ELM	ELW	—	—	—	—
		DPDT	1	EDF	EDM	ENM	ENW	EDE	EDY	ENY	ENW
			2	EEF	EEM	EOM	EOW	—	—	—	—
Series HS Snap Switch Hermetically Sealed w/Wiring Leads 5 Amps	500°F (260°C)	SPDT	1	HSG	HSH	HSJ	HSK	HSA	HSB	HSC	HSK
			2	HSL	HSM	HSN	HSP	—	—	—	—
		DPDT	1	HSQ	HSR	HSS	HST	HSD	HSE	HSF	HST
			2	HSW	HSX	HSY	HSZ	—	—	—	—
Series HS Snap Switch Hermetically Sealed w/Terminal Block 5 Amps	500°F (260°C)	SPDT	1	HS1	HS2	HS3	HS4	HWY④	HWV④	HWS	HS4④
		DPDT	1	HS5	HS6	HS7	HS8	HWU④	HWZ④	HWW	HS8④
Series HS Snap Switch Hermetically Sealed w/Wiring Leads 10 Amps	400°F (204°C)	SPDT	1	H4G	H4H	H4J	H4K	H4A	H4B	H4C	H4K
			2	H4L	H4M	H4N	H4P				
		DPDT	1	H4Q	H4R	H4S	H4T	H4D	H4E	H4F	H4T
			2	H4W	H4X	H4Y	H4Z				
Series HS Snap Switch Hermetically Sealed w/Terminal Block 10 Amps	400°F (204°C)	SPDT	1	H41	H42	H43	H44	H5Y④	H5V④	H5S	H44④
		DPDT	1	H45	H46	H47	H48	H5U④	H5Z④	H5W	H48④

③ Housing heater available in NEMA 4 and NEMA 7/9 enclosures. Drain available in NEMA 7/9 enclosures. Consult factory for standard part numbers.
④ Available with a 6" tall cover only.

Electric switch mechanism and enclosure

Switch Description	Max. Process Temp. °F (°C)	Contacts	Cont. Per Encl.	All Models with Part Number Codes C10 or C15				
				NEMA		NEMA 7/9		
				Standard	w/Heater	Standard	w/Heater	w/Drain
Series N Mercury Switch	500°F (260°C)	SPDT	3	NCF	NHF	NMM	NRM	NWM
		DPDT		NEF	NJF	NKM	NLM	NNM
Series O Snap Switch	450°F (232°C)	SPDT	3	OCF	Not Available	OMM	Not Available	OWM
		DPDT		OEF		OKM		ONM
Series Q Mercury Switch	250°F (121°C)	SPDT	3	QCF	QHF	QMM	QRM	QWM
		DPDT		QEF	QJF	QKM	QLM	QNM
Series T Vibration Resistant Mercury Switch	500°F (260°C)	SPDT	3	TCF	THF	TMM	TRM	TWM
		DPDT		TEF	TJF	TKM	TLM	TNM

Pneumatic switch mechanism and enclosure

Switch Description⑤	Maximum Supply Pressure		Maximum Process Temperature		Bleed Orifice Diameter		A10 Codes	A15 Codes
	PSI	BAR	°F	°C	Inches	mm	NEMA 1	NEMA 1
Series J Bleed Type Pneumatic Switch	100	7	400	204	.063	1.6	JGF	JDE
	60	4	400	204	.094	2.4	JHF	JEE
Series K Non-Bleed Pneumatic Switch	100	7	400	204	—	—	KOF	KOE

⑤ Pneumatic switch mechanisms and enclosures are unavailable for models B10, B15, C10 and C15.

INSTALLATION

Unpacking

Top mounting displacer units are shipped from the factory with the displacer and cable assembly removed from the head assembly and packed separately in the same container.

CAUTION: If reshipping to another location, displacer assembly must again be secured using same strap and wire assembly.

After unpacking, inspect all components to see that no damage has occurred during shipment.

Handling

CAUTION: The threaded connection link protruding from the head assembly is extremely fragile. DO NOT handle or place it in a position so that any amount of force is placed on the stem. Proper operation of the control requires that the stem is not damaged or bent.

Mounting

CAUTION: Displacer spring and stem are fragile. DO NOT drop displacers into tank. Hand feed cable into position to avoid bending stem.

Adjust the displacers on the displacer cable for the desired switch actuating levels (instruction tag is attached to cable). Screw displacer cable fitting to threaded connection link protruding from the underside of control.

Be sure there are no tubes, rods, or other obstacles in the tank or vessel to interfere with the operation of the displacers. No guides into the tank are necessary unless liquid turbulence is excessive, in which case a guided pipe or tube should be at least 1" larger than the displacer diameter, open at the bottom end, and with several vent holes located above the maximum high level of the liquid.

Check the installation of pipe or tube to be certain it is plumb.

CAUTION: Before attaching Magnetrol control to tank or vessel, using a level, check to see that tank mounting flange or spud is horizontal. Proper operation of the control depends on the switch housing being plumb.

Wiring

NOTE: If control is equipped with pneumatic switch mechanism, disregard these instructions and refer to instruction bulletin on mechanism furnished for air (or gas) connections.

Most control switch housings are designed to provide 360° positioning of conduit outlet by loosening the set screw(s) located under the housing base. Diagrams of the control's internal electrical circuits (switching action between terminals) will be found in the switch mechanism instruction bulletin included.

On high temperature applications, above 250°F (121°C), high temperature wire should be used between control and first junction box located in a cooler area. Supply wires (conductors) are brought into the switch housing, wrapped around the enclosing tube under the baffle plate and then brought up to the proper terminals. Excess wire should be positioned so as not to interfere with switch mechanism or housing cover.

Some controls are furnished with an explosion proof (cast) switch housing or a vapor tight (gasketed) type. These housings are used in hazardous locations or when liquid temperature is so low that excessive condensation and frosting of switch parts is likely. After wiring connections have been completed, explosion proof housings must be sealed at the conduit outlet with suitable compound to prevent entrance of air. Check cover to base fit on explosion proof and vapor tight housings to be certain gasketed joint is tight. A positive seal is necessary to prevent infiltration of moisture laden air or corrosive gases into switch housing.

Connect power supply to control and test switch action by varying liquid level. If switch mechanism fails to function, check vertical alignment of control and consult installation bulletin on switch mechanism furnished.

PREVENTIVE MAINTENANCE

If the following instructions are observed, your instrument will operate reliably.

What to do

1. **Keep Control Clean**

   Be sure the switch housing cover is always in place on the control. This cover is designed to keep dust and dirt from interfering with switch mechanism operation. In addition, it protects against damaging moisture and acts as a safety feature by keeping bare wires and terminals from being exposed. Should the housing cover become damaged or misplaced, order a replacement immediately.

2. **Inspect Switch Mechanism, Terminals, and Connections Monthly**

   a. Mercury switches may be visually inspected for short circuit damage. Check for small cracks in the glass tube containing the mercury. Such cracks can allow entrance of air into the tube causing the mercury to "oxidize". This is noticeable as the mercury will appear dirty and have a tendency to "string out" like water, instead of breaking into clear round pools. If these conditions exist, replace the mercury switch immediately.

   b. Dry contact switches should be inspected for excessive wear on actuating lever or misalignment of adjustment screw at point of contact between screw and lever.

   Such conditions can cause false switch actuating levels. Adjust switch mechanism to compensate (if possible) or replace switch.

   DO NOT operate your control with defective or maladjusted switch mechanism (refer to bulletin on switch mechanism furnished for service instructions).

What to do cont.

   c. Controls may sometimes be exposed to excessive heat or moisture. Under such conditions, insulation on electrical wire may become brittle, eventually breaking or peeling away. The resulting bare wires can cause short circuits. Check wiring carefully and replace at first sign of brittle insulation.

   d. Vibration may sometimes cause terminal screws to work loose. Check all terminal connections to be certain that screws are tight. Air (or gas) operating medium lines, subjected to vibration, may eventually crack or become loose at connections causing leakage. Check lines and connections carefully and repair or replace if necessary.

What to avoid

1. **NEVER** leave switch housing cover off the control longer than necessary to make routine inspections.
2. **NEVER** use lubricants on pivots of switch mechanism. A sufficient amount of lubricant has been applied at the factory to ensure a lifetime of service. Further oiling is unnecessary, and will only tend to attract dust and dirt which can interfere with mechanism operation.
3. **NEVER** attempt to make adjustments or replace switches without reading instructions carefully. Certain adjustments provided for in displacer controls should not be attempted in the field. When in doubt, consult the factory or your local representative.
4. **NEVER** attempt to readjust magnetic attraction sleeve which is factory set. Tampering may cause failure of control while in service, even though manual operation actuates switch.

TROUBLESHOOTING

Usually the first indication of improper operation is failure of the controlled equipment to function – pump will not start or stop, signal lamps fail to light, etc. When these symptoms occur, whether at time of installation or during routine service thereafter, check the following external causes first.

- Fuses may be blown.
- Reset button(s) may need resetting.
- Power switch may be open.
- Controlled equipment may be faulty.
- Stem may be bent causing hang-up.
- Wiring, or medium lines, leading to control may be defective.

If a thorough inspection of these possible conditions fails to locate the trouble, proceed next to a check of the control's switch mechanism.

1. Pull disconnect switch or otherwise assure that electrical circuit(s) through the control is deactivated.
2. Remove switch housing cover.
3. Swing magnet assembly in and out by hand, checking carefully for any sign of binding. Assembly should require no force, however slight, to move it through its full swing.
4. If binding exists, magnet may be rubbing enclosing tube or pivot sockets may be overly tightened. Readjust pivot sockets as required until a slight amount of side play is evident. If magnet is rubbing, loosen magnet clamp screw and shift magnet position.
5. If switch magnet assembly swings freely and mechanism still fails to actuate, check installation of control to be certain it is within the specified three (3°) degrees of vertical. Use a spirit level on side of enclosing tube in two places, 90° apart.
6. If mechanism is equipped with a mercury switch, examine glass tube closely, as previously described in Preventive Maintenance section. If switch is damaged, replace it immediately.

NOTE: As a matter of good practice, spare switches should be kept on hand at all times.

If switch mechanism is operating satisfactorily, a test of the complete control's performance is the next likely step.

7. Reconnect power supply and carefully actuate switch mechanism manually, using a non-conductive tool on electrical switch mechanism, to determine whether controlled equipment will operate.

CAUTION: With electrical power on, care should be taken to avoid contact with switch leads and connections at terminal block.

TROUBLESHOOTING cont.

8. If controlled equipment responds to manual actuation test, trouble may be located in level sensing portion of the control (displacers, spring, stem, and magnetic attracting sleeve).

NOTE: Check first to be certain liquid is entering tank or vessel. A valve may be closed or pipe line plugged.

9. With liquid in tank or vessel, proceed to check level sensing action by removing switch housing assembly.

CAUTION: Be certain to pull disconnect switch or otherwise assure that electrical circuit(s) through control is deactivated. Close operating medium supply valve on controls equipped with pneumatic switch mechanisms.

a. Disconnect wiring from supply side of switch mechanism(s) and remove electrical conduit or operating medium line connections to switch housing.

b. Relieve pressure from tank vessel and allow unit to cool.

c. Remove switch housing assembly by loosening set screw located immediately below housing base.

10. With switch housing assembly removed, inspect attracting sleeve and inside of enclosing tube for excessive corrosion or solids build-up which could restrict movement, preventing sleeve from reaching field of switch magnet.

11. If trouble is still not located, proceed to remove the entire sensing unit from the tank or vessel by unbolting head flange or unscrewing mounting bushing. Inspect displacer assembly and all internal parts for any signs of damage. Check assembly for binding by supporting head flange or mounting bushing over the edge of a bench and move displacer assembly by hand.

NOTE: When in doubt about the condition or performance of a control, contact the factory or consult your local representative.

REPLACEMENT PARTS

Item No.	Description		A10	A15	B10/B15	C10/C15
1	Enclosing Tube	Standard	32-6325-007	32-6325-001	32-6325-007	32-6301-029
		316 SS	32-6325-008	32-6325-002	32-6325-008	32-6302-029
2	E-Tube Gasket		12-1301-002			
3	Spring and Stem Kit①	Standard	89-5327-001	89-5325-001	Consult Factory	
		316 SS	89-5328-001	89-5326-001	Consult Factory	
4	Body Bushing		89-5707-001			
5	Flange and Spring Protector		Specify size and rating. Furnish serial number of control.			

① 316 SS Spring and Stem Kit includes 316 SS sheathed magnetic sleeve.

Displacer replacement parts

Displacer Material		A10	A15	B10	B15	C10③	C15
Porcelain②		89-6141-001	89-6142-001	89-6143-001	89-6144-001	89-6153-001	89-6156-001
Karbate②		89-6145-001	89-6146-001	89-6147-001	89-6148-001	89-6154-001	89-6157-001
Stainless Steel②		89-6149-001	89-6150-001	89-6151-001	89-6152-001	89-6155-001	89-6158-001
10 feet (3m) Cable with Displacer Clamps only	316 SS	89-5802-003					
	Hastelloy	89-5803-003③					
	Monel	89-5804-003					

② Kits contain 10 feet (3m) 316 SS cable.
③ For Model C10 with operating sequences A, B, or C, order kit 89-5803-004.

NOTE: Refer to pages 9 and 11 for dimensional specifications of displacers.

Threaded Connection Model
(Typical Single Switch Model)

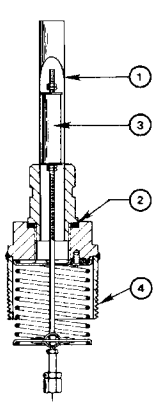

CAUTION:
Location of magnetic sleeve must be maintained for proper switch actuation. Do NOT attempt to alter differential of control by repositioning jam nuts. When disassembling control for maintenance, be certain to measure position of jam nuts on stem and record for reference use during reassembly.

Flanged Connection Model
(Typical Dual Switch Model)

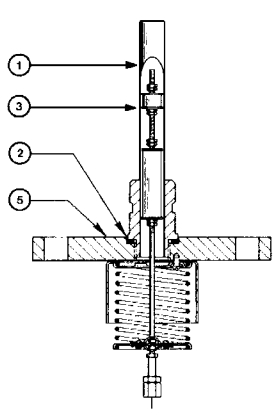

OPERATING SEQUENCES

When ordering B10 units, an operating sequence and specific gravity MUST be provided.

Series B10

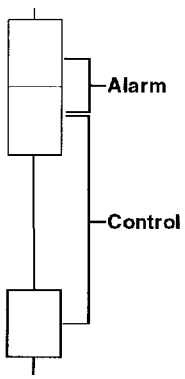

Arrangement No. 1

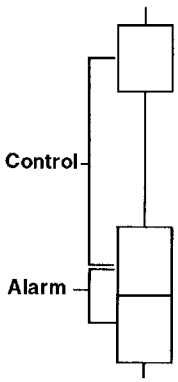

Arrangement No. 2

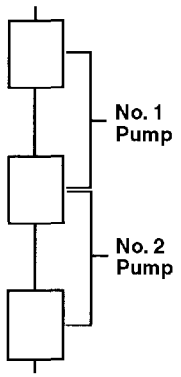

Arrangement No. 3

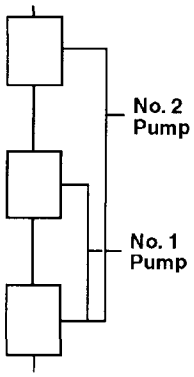

Arrangement No. 4

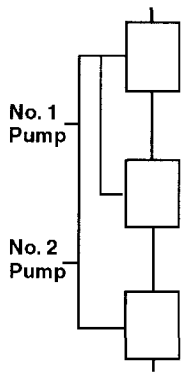

Arrangement No. 5

Series B15

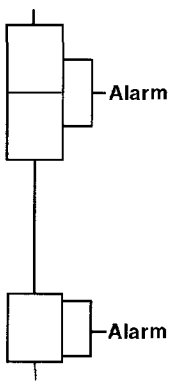

OPERATING SEQUENCES cont.

When ordering C10 units an operating sequence and specific gravity MUST be provided.

When ordering C15 units a specific gravity MUST be provided.

Series C10

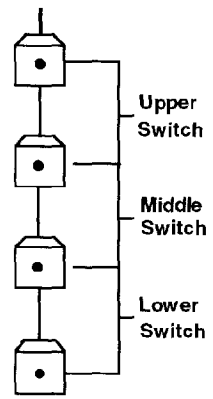

Arrangement A

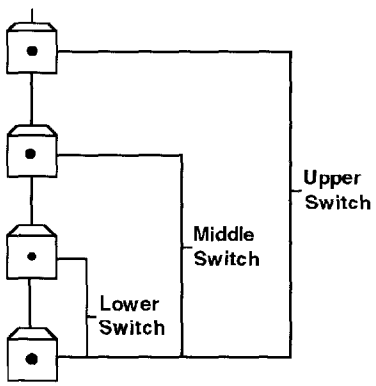

Arrangement B

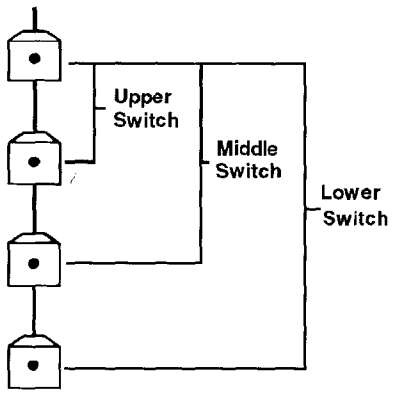

Arrangement C

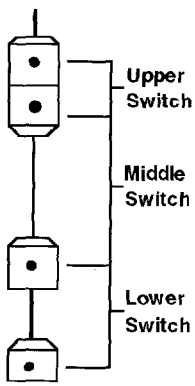

Arrangement D

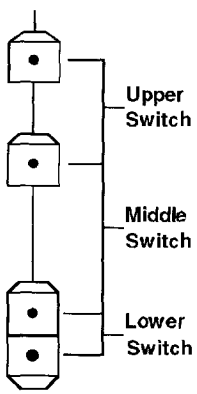

Arrangement E

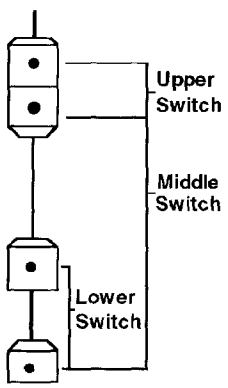

Arrangement F

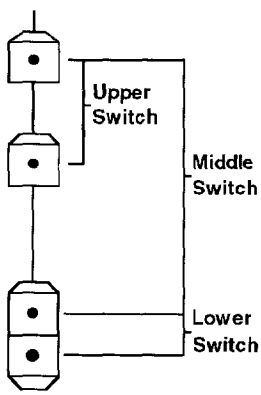

Arrangement G

Series C15

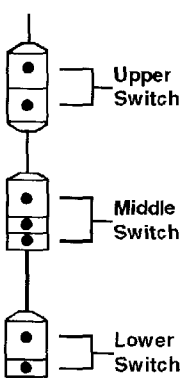

SPECIFICATIONS

Series A10, A15, B10, B15

OUTLINE DIMENSIONS								
Housing	Threaded Mounting				Flanged Mounting			
	A	B	C	D	A	B	C	D
NEMA 4	3.38 (86)	4.62 (117)	14.63 (372)	5.80 (147)	3.38 (86)	4.62 (117)	8.25 (210)	7.80 (198)
NEMA 7/9	5.25 (133)	5.62 (143)	15.88 (403)		5.25 (133)	5.62 (143)	9.50 (241)	
Group B NEMA 7/9			16.76 (426)				10.38 (264)	
NEMA 1 Pneumatic	5.00 (127)	4.62 (117)	12.63 (321)		5.00 (127)	4.62 (117)	6.25 (159)	

CONDUIT CONNECTIONS E	
Electrical Switches	
NEMA 4:	¾" NPT
NEMA 7/9:	1" NPT
Group B:	1" NPT
Pneumatic Switches	
NEMA 1:	¼" NPT

All housings rotatable 360°.

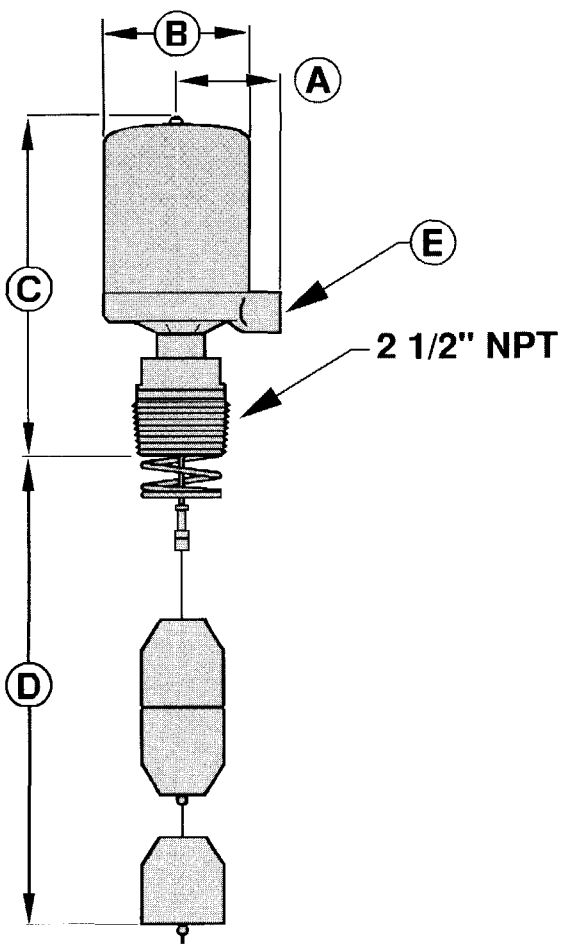

Series A10
with Threaded Mounting

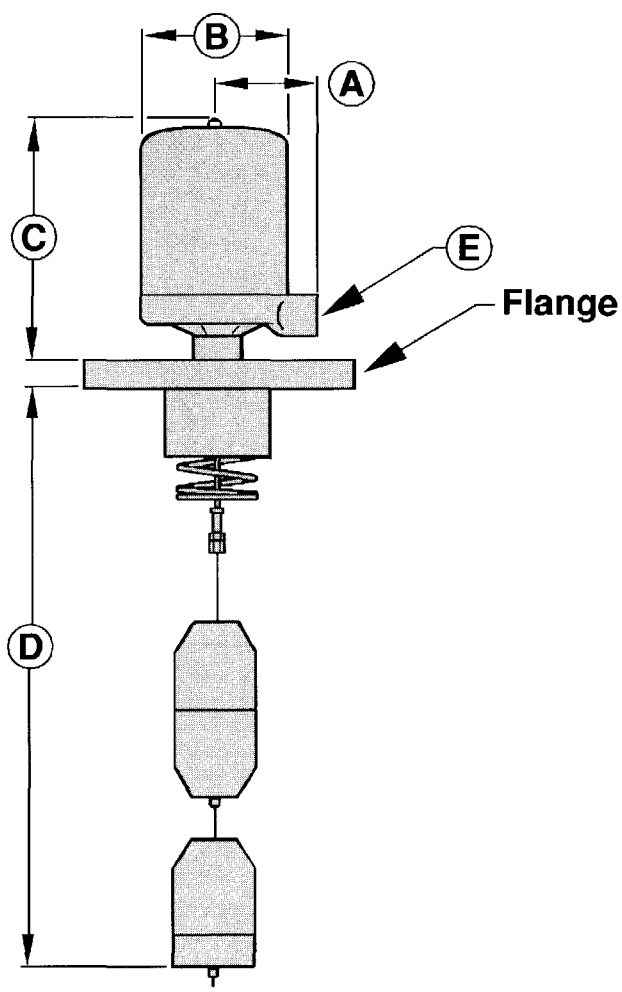

Series B10
with Flanged Mounting

SPECIFICATIONS Cont.

	A10	A15	B10	B15
Porcelain	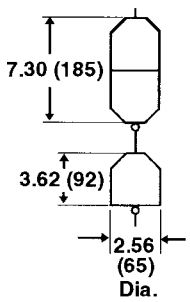	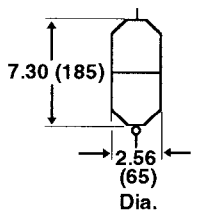	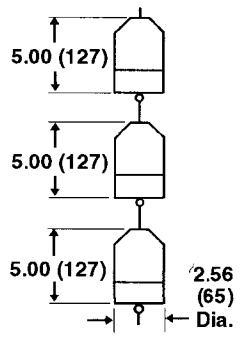	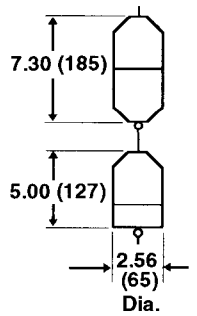
Karbate	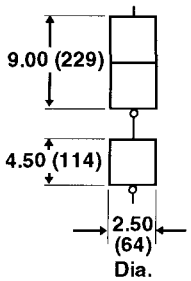	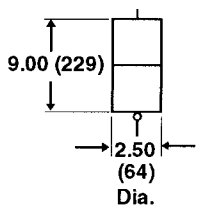	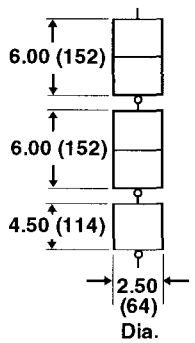	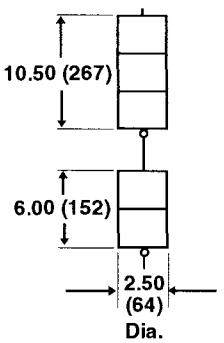
Stainless Steel	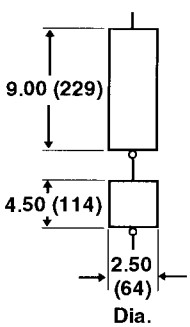	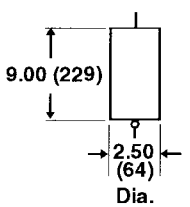	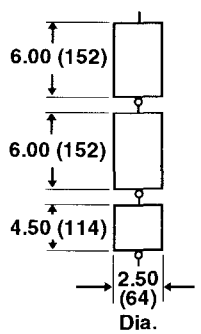	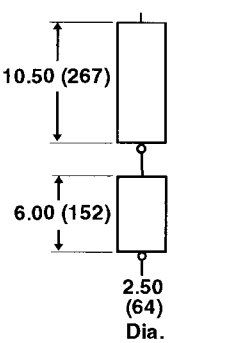

All dimensions in ( ) are in millimeters.

SPECIFICATIONS cont.

Series C10, C15

OUTLINE DIMENSIONS								
Housing	Threaded Mounting				Flanged Mounting			
	A	B	C	D①	A	B	C	D
NEMA 4	3.38 (86)	4.70 (119)	17.50 (445)	6.10 (1.55)	3.38 (86)	4.70 (119)	14.50 (386)	8.10 (206)
NEMA 7/9	5.25 (133)	5.80 (147)	18.70 (475)		5.25 (133)	5.80 (147)	15.70 (399)	

① Minimum distance to top of upper displacer.

CONDUIT CONNECTIONS E
Electrical Switches NEMA 4: ¾" NPT NEMA 7/9: 1" NPT

All housings rotatable 360°.

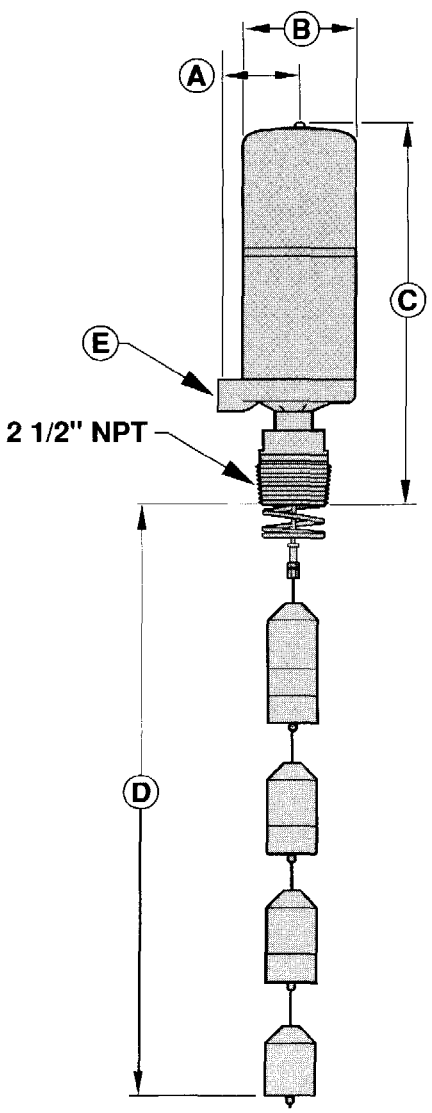

Series C10
with Threaded Mounting

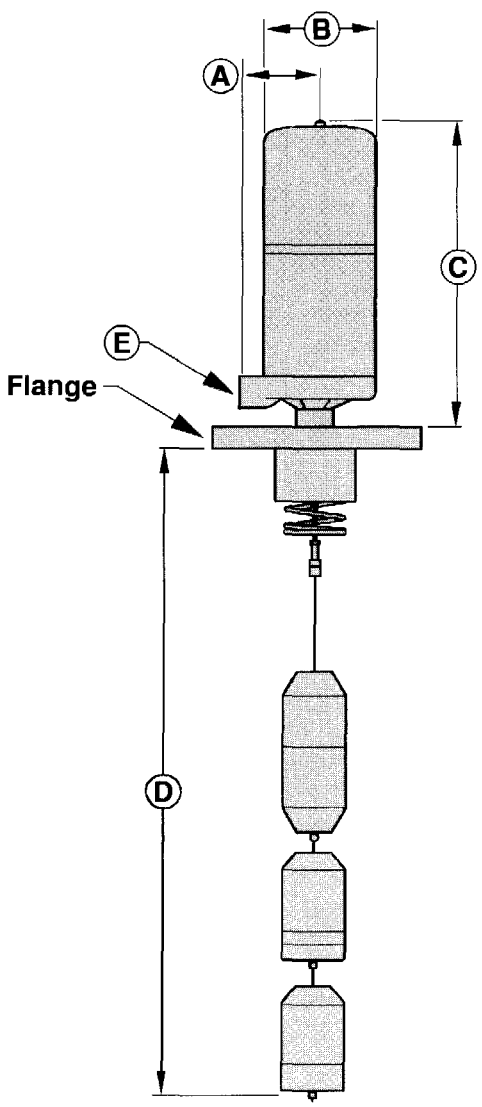

Series C15
with Flanged Mounting

SPECIFICATIONS cont.

<table>
<tr><th></th><th>MODEL C10 OPERATING SEQUENCE</th><th>MODEL C 15 OPERATING SEQUENCE</th></tr>
<tr><td>Porcelain</td><td> 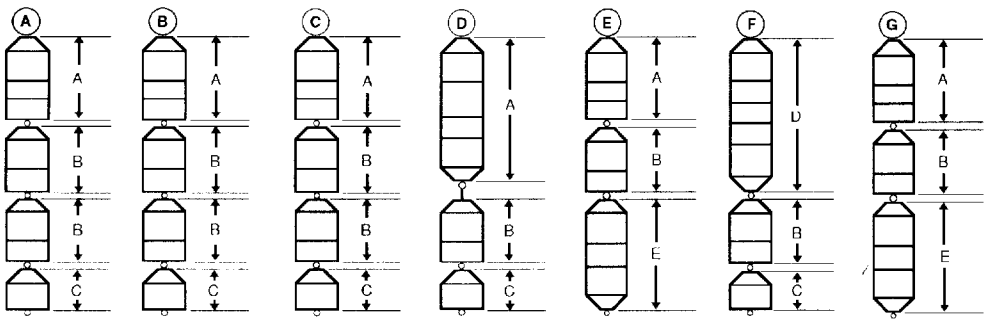

A = 6.40 (163)
B = 5.00 (127)
C = 3.62 (62)
D = 11.40 (2.90
E = 8.60 (218)
NOTE: All displacers 2.56 (65) diameter.</td><td> 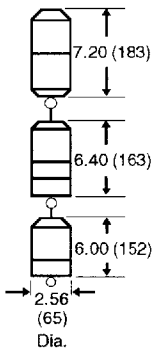
</td></tr>
<tr><td>Karbate and Stainless Steel</td><td> 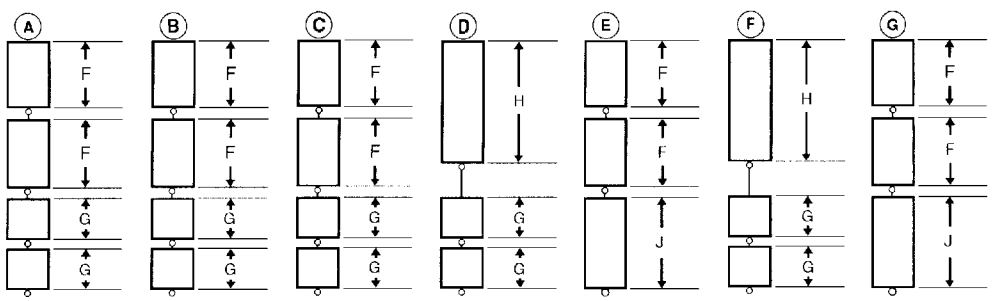

F = 6.00 (152)
G = 4.50 (114)
H = 12.00 (305)
J = 9.00 (229)
NOTE: All displacers 2.50 (64) diameter.</td><td> 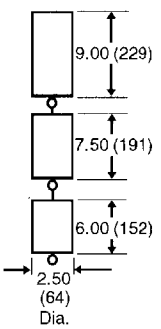
</td></tr>
</table>

IMPORTANT

Product warranty

All Magnetrol® mechanical level controls are warranted free of defects in materials or workmanship for five full years from the date of original factory shipment.

If returned within the warranty period; and, upon factory inspection of the control, the cause of the claim is determined to be covered under the warranty; then, Magnetrol will repair or replace the control at no cost to the purchaser (or owner) other than transportation.

Magnetrol shall not be liable for misapplication, labor claims, direct or consequential damage or expense arising from the installation or use of equipment. There are no other warranties expressed or implied, except special written warranties covering some Magnetrol products.

Quality assurance

QUALITY MANAGEMENT INSTITUTE®
A DIVISION OF CANADIAN STANDARDS ASSOCIATION

The quality assurance system in place at Magnetrol guarantees the highest level of quality throughout the company. Magnetrol is committed to providing full customer satisfaction both in quality products and quality service.

Magnetrol's quality assurance system is registered to ISO 9001 and Z299.1 affirming its commitment to known international quality standards providing the strongest assurance of product/service quality available.

ASSURED QUALITY & SERVICE COST LESS

Service policy

Owners of Magnetrol controls may request the return of a control or any part of a control for complete rebuilding or replacement. They will be rebuilt or replaced promptly. Controls returned under our service policy must be returned by Prepaid transportation. Magnetrol International will repair or replace the control at no cost to the purchaser (or owner) other than transportation if:

a. Returned within the warranty period; and
b. The factory inspection finds the cause of the claim to be covered under the warranty.

If the trouble is the result of conditions beyond our control; or, is NOT covered by the warranty, there will be charges for labor and the parts required to rebuild or replace the equipment.

In some cases it may be expedient to ship replacement parts; or, in extreme cases a complete new control, to replace the original equipment before it is returned. If this is desired, notify the factory of both the model and serial numbers of the control to be replaced. In such cases, credit for the materials returned will be determined on the basis of the applicability of our warranty.

No claims for misapplication, labor, direct or consequential damage will be allowed.

Return material procedure

So that we may efficiently process any materials that are returned, it is essential that a "Return Material Authorization" (RMA) number be obtained from the factory prior to the material's return. This number will facilitate the processing and tracking of your material. The following information must be supplied before the RMA number can be assigned:

1. Installation Name
2. Description of Material
3. Production Number
4. Serial Number
5. Reason for Return
6. Desired Action

All shipments returned to the factory must be by Prepaid transportation.

All replacements will be shipped F.O.B. factory.

Magnetrol®

5300 Belmont Road • Downers Grove, Illinois 60515-4499 • (708) 969-4000 • Fax 708-969-9489
6291 Dorman Road • Mississauga, Ontario L4V-1H2 • Phone: (416) 678-2720 • Fax 416-678-7407
Heikensstraat 6 • B 9240 Zele, Belgium • Tel. 052 45.11.11 • Telex 25944 • Fax 052 45.09.93
Regent Business Ctr., Jubilee Rd. • Burgess Hill, Sussex RH15 9TL U.K. • Tel: 0444-871313 • Telex 87255 • Fax 0444-871317

BULLETIN: 45-610.8
EFFECTIVE: October 1992
SUPERSEDES: April 1991

Magnetrol®

REGISTERED ISO 9001 • Z299.1 ASSURED QUALITY & SERVICE COST LESS

THE HOUSINGS IN THIS SHIPMENT HAVE BEEN UPGRADED TO A NEW MAGNETROL FINISH.

The new Royal Blue polyester finish provides a superior coating for aluminum, steel, and cast iron with the following benefits:

- All electric models now qualify for NEMA 4X/7/9.
- Meets UL, FM, and CSA requirements as an approved coating for outdoor use on electrical equipment enclosures.
- Aluminum surfaces are pretreated with a chromate conversion coating.
- Steel surfaces receive a five stage iron phosphate pretreatment.
- The polyester powder is electrostatically applied and oven baked to achieve a durable, corrosion resistant finish having a minimum thickness of 2 mil.

THE CHAMBERS AND FLANGES IN THIS SHIPMENT HAVE BEEN UPGRADED TO A NEW MAGNETROL FINISH.

The new blue epoxy finish provides a superior coating for carbon steel with the following benefits:

- Blue gloss epoxy eliminates rust.
- Seals and protects against outdoor environments.
- MIL-C-22750 qualification.
- Surfaces pretreated with a degreasing cleaning process.

Magnetrol is committed to providing full customer satisfaction both in quality products and quality service.

(Please forward the attached, updated replacement parts bulletin to the appropriate personnel.)

SC-1162.1

EPA-NC-CE-0000520

Magnetrol®

ISO 9001 • Z299.1 REGISTERED ASSURED QUALITY & SERVICE COST LESS

Switch Housing Replacement Assemblies

Used with Switch Mechanisms Series A, B, C, D, E, F, G, H, I, HS, 2 and 3

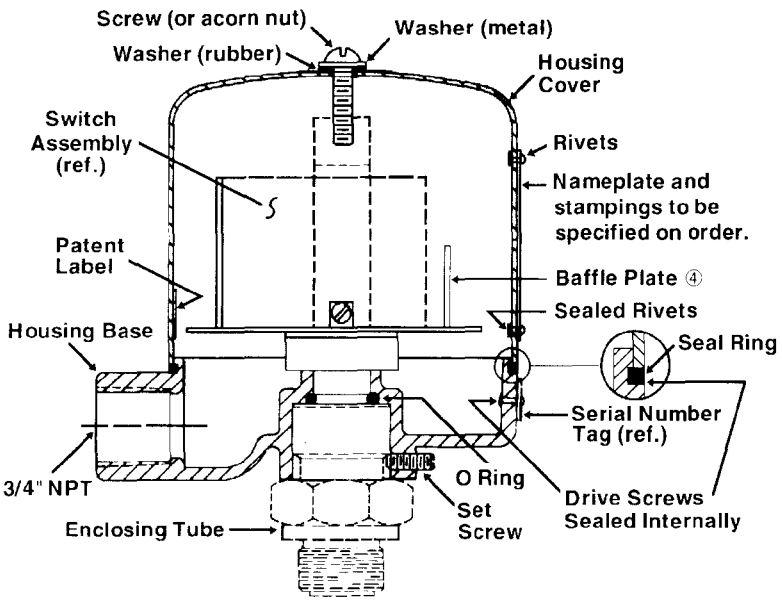

Typical Standard Housing Assembly

Description

Standard housing replacement assemblies are designed for applications ranging from general purpose, indoor use, to nonhazardous installations requiring a dust/water/lint, fiber/oil tight enclosure.

Manual reset assemblies utilize the same basic components as standard units, but are limited to general purpose, indoor applications where the unit is not exposed to unusual conditions.

NOTE: Manual reset mechanism requires a hole in the side of the cover to accomodate the reset actuating plunger.

① National Electrical Manufacturers Association.
② Includes assembly hardware kit (89-6508-001).
③ Includes base assembly hardware.
④ Baffle plate not required for Series G, H, and I switches. Series HS uses a spacer instead.
⑤ Includes housing base.

Description		NEMA Type ①	Replacement Kit Part Number		
			Black Cover	Gray Cover	Blue Cover
Standard Housing Cover	Shon 4" (102 mm)	NEMA 1 thru 5 & 12	89-6509-001 ②	89-6523-002	89-6509-003 ②
	Tall 6" (152 mm)		89-6510-001 ②	89-6523-001	89-6510-003 ②
	w/Extension 12" (305 mm)		89-6528-001 ⑤	–	89-6528-003 ⑤
Manual Reset Housing Cover	Short 4" (102 mm)	NEMA 1 only	89-6511-001 ②	89-6511-002	89-6511-003 ②
	Tall 6" (152 mm)		89-6512-001 ②	89-6512-002	89-6512-003 ②
Housing Base (Standard and Manual Reset)		NEMA 1 thru 5 & 12	89-6505-001 ③	–	89-6505-003 ③
Cover Assembly Hardware		NEMA 1 thru 5 & 12	89-6508-001	89-6508-001	89-6508-001
Baffle Plate ④	Series A, B, C, D E, F, 2 & 3	NEMA 1 thru 5 & 12	36-5303-001	36-5303-001	36-5303-001
Spacer	HS	NEMA 1 thru 5 & 12	04-7517-001	04-7517-001	04-7517-001

Description		NEMA Type	Replacement Kit Part Number
Transparent Lexan Housing Cover	Tall 6" (152 mm)	NEMA 1 Only	89-6522-001 ②

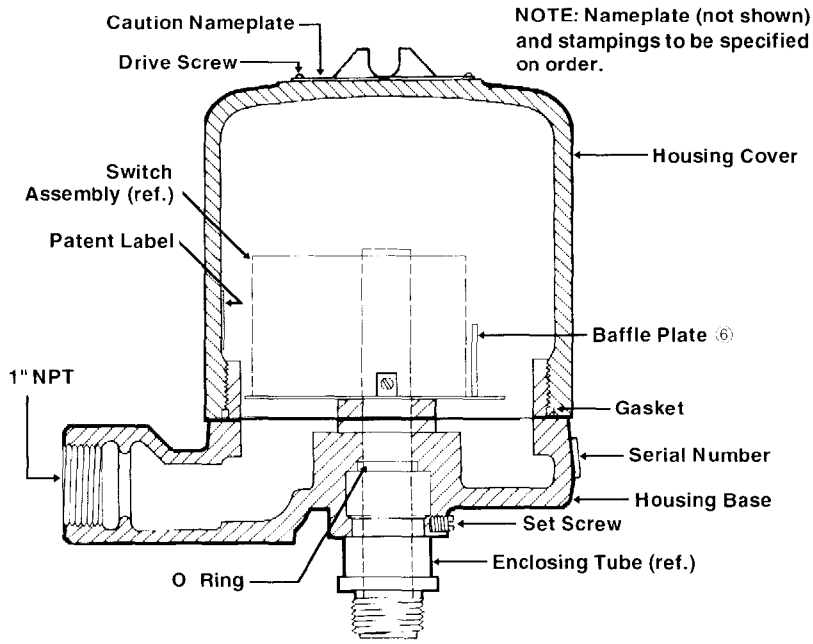

Typical Explosion Proof (EP) Housing Assembly
NEMA 6, 7, 9 and Class I Group B

Description

Explosion proof housing replacement assemblies are designed for applications in hazardous atmospheric locations, as classified under types NEMA 7 and 9 of the National Electrical Code.

Housings equipped with submersible base are suitable for submersion under water, as classified under NEMA type 6 of the code.

IMPORTANT

When ordering, please specify:

1. Model and serial number of control.
2. Name and part number of replacement kit.

NOTE: Consult your local representative on applications to meet NEMA and other codes not covered in this bulletin.

⑥ Baffle plate not required for Series G, H, and I switches. Series HS uses a washer instead for NEMA 6, 7, and 9 housings, and a spacer for Group B housings.

Description			Replacement Kit Part No.
Explosion Proof Housing Cover 4" (102 mm) and Housing Base, Blue Cover			89-6582-002
Explosion Proof Housing Cover 4" (102 mm) and Housing Base With Drain, Blue Cover			89-6582-003
Explosion Proof Housing Cover 6" (152 mm) and Housing Base, Blue Cover			89-6582-005
Explosion Proof Housing Cover 6" (152 mm) and Housing Base with Drain, Blue Cover			89-6582-006
Class I, Group B Housing Cover 6" (152 mm) and Housing Base without Drain, Blue Cover			89-6582-008
Explosion Proof Housing with Extension 11" (279 mm) and Housing Base without Drain, Blue Cover			89-6578-001
Gasket			12-2201-249
O-Ring			12-2201-116
Baffle Plate ⑥	Series A, B, C, D, E, F, 2 & 3		36-5303-001
Spacer	Series HS	NEMA 6, 7 & 9	04-7517-001
Washer	Series HS	Group B	05-7101-001

Magnetrol

5300 Belmont Road • Downers Grove, Illinois 60515-4499 • 708-969-4000 • Fax 708-969-9489
6291 Dorman Road • Mississauga, Ontario L4V-1H2 • Phone: 905-678-2720 • Fax 905-678-7407
Heikensstraat 6 • B 9240 Zele, Belgium • Tel. 052 45.11.11 • Telex 25944 • Fax 052 45.09.93
Regent Business Ctr., Jubilee Rd. • Burgess Hill, Sussex RH15 9TL U.K. • Tel: 0444-871313 • Fax 0444-871317

BULLETIN: 42-680.15
EFFECTIVE: February 1994
SUPERSEDES: April 1993

EPA-NC-CE-0000522

Magnetrol®

REGISTERED ISO 9001 • Z299.1 ASSURED QUALITY & SERVICE COST LESS

Electric Switch Mechanisms Series A, B, C, D, E, F, L, N, O, Q, S, T, 2 & 3

Instruction Manual and Parts List

Magnetrol level controls are available with a range of different switch mechanisms—each designed for specific service conditions. A brief description of the individual switch mechanisms and their applications are given below.

Mercury switches
Series "A", "E", "N" & "T"

Mercury switches offer the advantage of quick visual inspection of contact conditions.
- "A" switches are heavy duty units with high load carrying capability.
- "E" switches are specially designed to provide greater vibration resistance.
- "N" switches are used only in model C10 and C15 units.
- "T" switches are used only in model C10 and C15 units.

High temperature mercury switches
Series "L", "2" & "3"

These switches offer the advantage of quick visual inspection of contact conditions and feature nickel/copper bare wire and ceramic beaded insulation allowing use in applications where the process temperature does not exceed 750°F (399°C).
- "L" switches are used only in model B40 units.
- "2" switches are specially designed to provide greater vibration resistance.
- "3" switches are heavy duty units with high load carrying capability.

Dry contact switches
Series "B", "C", "D", "O", "Q" & "S"

Dry contact switches are specified in applications where mercury must be avoided—such as in nuclear power plant installations.
- "B" switches are general purpose units with a maximum liquid temperature rating of 250°F (121°C).
- "C" switches are general purpose units with a maximum liquid temperature rating of 450°F (232°C).
- "D" switches are designed for DC current applications.
- "O" switches are used only in model C10 and C15 units.
- "Q" switches are used only in model C10 and C15 units.
- "S" switches are used only in model B40 units.

Hermetically sealed switches
Series "F"

Hermetically sealed switches are for use in special applications where hermetically sealed contacts are required.
- "F" switches are well suited for use where the process temperature does not exceed 750°F (399°C).

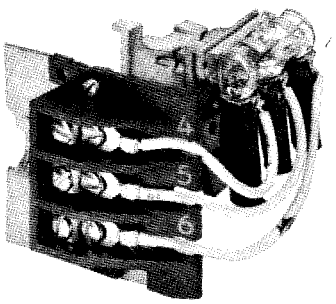

Series A, E, N & T
Mercury Switches

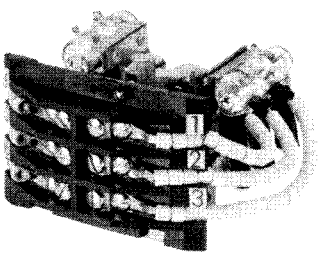

Series 2 & 3
High Temperature
Mercury Switches

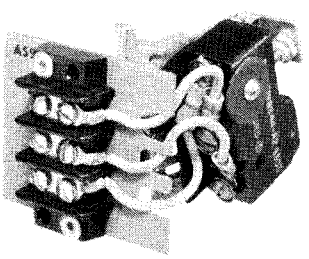

Series B, C, D, O & Q
Dry Contact Switches

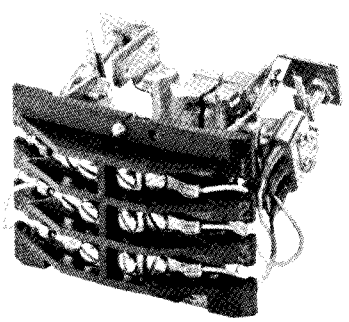

Series F
Hermetically Sealed Switch

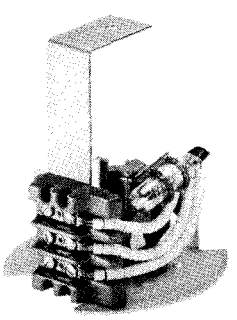

Series L
Mercury Switch

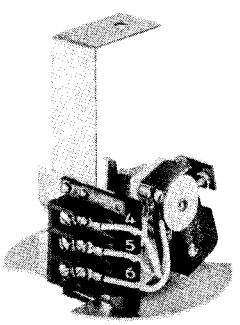

Series S
Snap Switch

GENERAL INSTRUCTIONS

Operating principle

Diagrams A and B illustrate the simple and foolproof operating principle. Switching action is obtained through the use of a magnetic sleeve ④ actuated by a float ③, displacer or flow sensing device and a switching mechanism ②. These two basic component assemblies are separated by a non-magnetic, pressure tight enclosing tube ⑤. A switch mechanism ② and magnet ① are assembled to a swinging arm which operates on precision stainless steel pivot sockets.

Operating cycle

At "Normal Operating Level" of a liquid in a storage vessel, (diagram "A"), the float moves the magnetic sleeve upward in the enclosing tube and into the field of the switch mechanism magnet. As a result, the magnet is drawn in tightly to the enclosing tube causing the switch to tilt, "making" or "breaking" the electrical circuit. As the liquid level recedes, the float pulls the magnetic sleeve downward until, at a predetermined "Low Level", (diagram "B") the switch magnet releases and is drawn outward away from the enclosing tube by a tension spring. This in turn tilts the switch in an opposite direction, thus reversing switch action.

Operating cycle cont.

When the liquid level returns to normal, the float once again moves the magnetic sleeve up the enclosing tube, causing the switch to assume its original position.

Switch mechanisms may include a single switch or multiple switches depending on operational requirements and switching action desired.

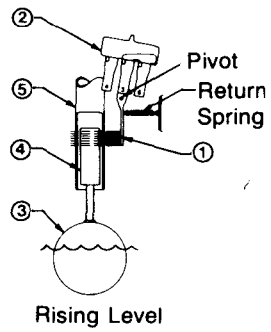

Diagram A

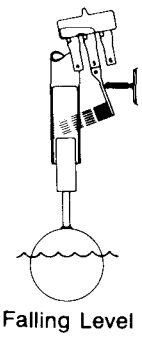

Diagram B

INSTALLATION

Removing switch mechanism

CAUTION: Before attempting to remove a switch mechanism, be certain to pull disconnect switch or otherwise assure that electrical circuit through control is de-energized.

1. Disconnect wiring from supply side of terminal block on switch mechanism. Note and record lead wire terminal locations.
2. Loosen screw in split mounting clamp until mechanism slides freely on enclosing tube, see Figure 1.
3. Remove small round head screw securing lower switch mechanism to baffle plate, see Figure 7 on page 6.
4. Carefully lift off switch mechanism and place on clean surface, free of metal particles which may be attracted to switch magnet.

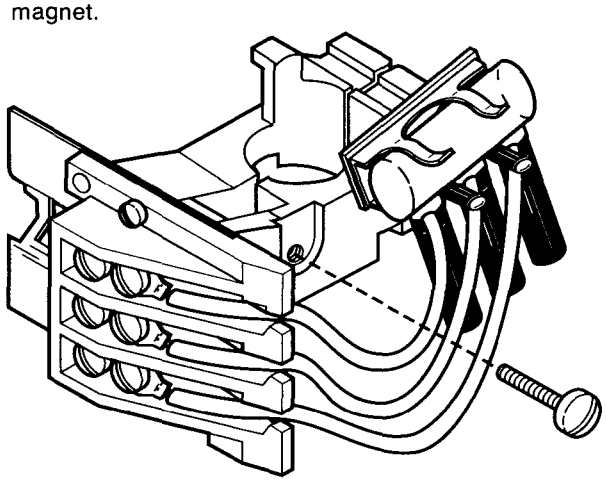

Figure 1

Replacing mercury switch

Series A, L, N & 3

1. Disconnect the control from power supply.
2. Disconnect switch leads from terminal block "A", noting terminal post numbers marked on switch mechanism.

NOTE: Before removing existing mercury switch, loosen cement holding switch by gently prying between switch clips and glass tube.

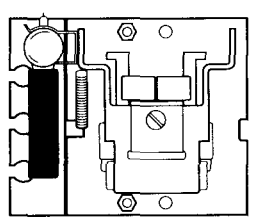

Figure 2

3. Remove mercury switch from clips "B", Figure 3.
4. Replace new mercury switch into clips "B" making certain that switch legs are positioned to help prevent fouling of leads.
5. Glue switch to clips "B" using a cement such as DuPont Duco, Goodyear Pliobond, Shellac or equivalent, see Figures 2 and 3.
6. Connect switch leads to terminal block "A" on identical post positions as those in the original assembly, see Figure 3.

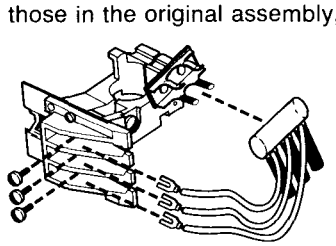

Figure 3

INSTALLATION cont.

Replacing mercury switch cont.

Series A, L, N & 3 cont.

7. Check to be certain that switch leads do NOT cross over or under one another.
8. Swing magnet assembly in and out by hand, checking carefully for any sign of binding. Assembly should require minimum force to move through its full swing. Contact factory if binding is observed.

NOTE: DPDT mechanisms have "left hand" and "right hand" switches, see Fig. 4 (as viewed facing terminal block of mechanism). Follow all steps for switch replacement and adjustment described above. Re-connect power supply and test switch action by varying liquid level in the vessel or by "blowing-down" float chamber.

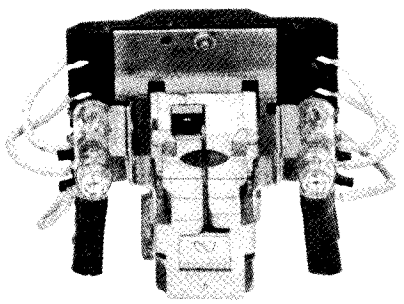

Figure 4

Series E, T & 2

Follow instructions for Series "A" except:

1. Replace new mercury switch into clips making certain that a space of 3/8" exists from edge of clip to point where lead wires attach to glass tube. Lead wires should project downward at 90% angle from horizontal plane, see Fig. 5.

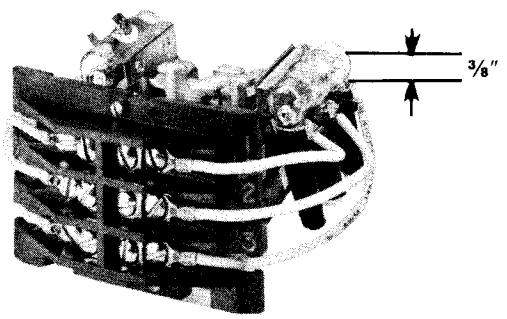

Figure 5

2. Glue switch to clips using a cement such as: DuPont Duco, Goodyear Pliobond, Shellac or equivalent, see Fig. 2.
3. Connect switch leads to terminal block on identical post positions as those in the original assembly.

NOTE: Check to be certain that switch glass tube is not resting on the upper switch lead and that switch leads "drape" loosely when switch magnet is in the "swung-out" position. Glass tube may be slid forward in clips toward terminal block to correct such conditions.

4. Check new mercury switch carefully to see that it makes and breaks circuit properly.
   A. Slowly swing switch magnet through its operating angle. Mercury must make and break contact between electrodes before magnet comes to its "IN" stop or "OUT" stop.
   B. If action is incorrect contact factory for replacement.

Replacing mercury switch cont.

Series E, T & 2 cont.

NOTE: A properly adjusted mercury switch will have equal overtravel tilt-in both directions after switch actuation.

5. DPDT switch mechanisms have two mercury switches carried by the pivoted magnet, see Figure 4. Follow all steps for switch replacement and adjustment described in steps 1 through 4.

   Re-connect power supply and test switch action by varying liquid level in the vessel or by "blowing down" float chamber.

Replacing dry contact switches

Series B, C, D, F, O, Q & S

CAUTION: Before attempting to work on a switch mechanism, be certain to pull disconnect switch or otherwise assure that electrical circuit through control is de-energized.

1. Disconnect switch leads from terminal block. Note and record terminal connections of switch to be replaced.
2. Remove two mounting screws holding existing switch, see Figure 6.
3. Remove existing switch and install replacement switch in the same position, tightening mounting screws securely.

NOTE: For proper operation of the replacement switch, it must actuate in the middle portion of the pivoted magnet's swing.

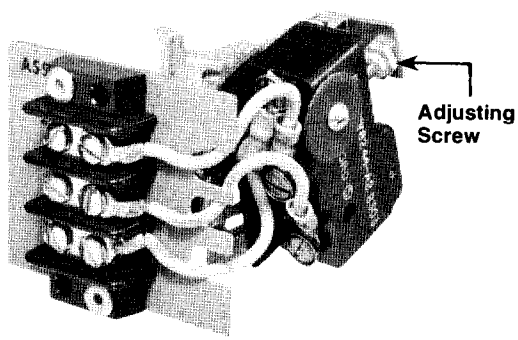

Figure 6

4. Check switch action and adjust as follows:
   A. Slowly rotate the pivoted magnet by hand, back and forth through its angle of swing, listening closely for the actuating "click" of the switch in each direction.
   B. Check to see if there is equal addition over-travel of magnet in its swing after the switch "click" in either direction.
   C. If switch actuation is not correct, change adjustment of actuating screw using a 1/16" hexagon key wrench, see Fig. 6.

NOTE: If a single switch is being replaced on a DPDT mechanism, lever of second switch must be depressed and held to allow for the audible adjustment of new switch, as described above.

   D. With new switch in adjustment, release lever of second switch and perform "fine-tuning" of both switches to provide simultaneous actuation (clicks).

5. Re-connect power supply and test switch action by varying liquid level in the vessel or by "blowing-down" float chamber.

SELECTION DATA

Model number description

Mechanical level switches are identified by an alphanumeric part numbering system. The last three digits of the part number describe the type of switch mechanism, enclosing cover length and finish, and magnet strength.

Example: **B75-1 B20-AAH**

Basic model number — B75

Materials of construction — -1

Tank connections — B20

Switch mechanism, enclosure & magnet strength — AAH

Magnet strength

Switch mechanisms are provided with different strength magnets, as determined by the materials of construciton. A red, white, or yellow dot is visible on each magnet. When ordering replacement switch mechanisms, be certain to determine the color dot on the magnet.

CAUTION: NEVER replace a switch mechanism with a mechanism containing a dot of a different color.

Electric switch mechanism & enclosure codes (Red dot magnets)

Switch Description	Max. Process Temp.	Cont.	Cont. Per Encl.	NEMA 4 Red								NEMA 7/9 Red						
				Standard		Epoxy		Heater		Epoxy Htr.		Standard	Grp. B	Heater		Drain		
				Short	Tall	Short	Tall	Short	Tall	Short	Tall	Short	Tall	Tall	Short	Tall	Short	Tall
Series A Mercury	550°F (288°C)	SPDT	1	AAG	AAH	AAR	AAD	AFG	AFH	AFR	AFD	AKR	AKD	AKV	APR	APD	AUR	AUD
			2	—	ABH	—	ABD	—	AGH	—	AGD	—	ALD	ALV	—	AQD	—	AVD
			3	—	ACH	—	ACD	—	AHH	—	AHD	—	AMD	AMV	—	ARD	—	AWD
		DPDT	1	ADG	ADH	ADR	ADD	AIG	AIH	AIR	AID	ANR	AND	ANV	ASR	ASD	AXR	AXD
			2	—	AEH	—	AED	—	AJH	—	AJD	—	AOD	AOV	—	ATD	—	AYD
Series B Snap Switch	250°F (121°C)	SPDT	1	BAG	BAH	BAR	BAD	BFG	BFH	BFR	BFD	BKR	BKD	BKV	BPR	BPD	BUR	BUD
			2	—	BBH	—	BBD	—	BGH	—	BGD	—	BLD	BLV	—	BQD	—	BVD
			3	—	BCH	—	BCD	—	BHH	—	BHD	—	BMD	BMV	—	BRD	—	BWD
		DPDT	1	BDG	BDH	BDR	BDD	BIG	BIH	BIR	BID	BNR	BND	BNV	BSR	BSD	BXR	BXD
			2	—	BEH	—	BED	—	BJH	—	BJD	—	BOD	BOV	—	BTD	—	BYD
Series C Snap Switch	450°F (232°C)	SPDT	1	CAG	CAH	CAR	CAD	CFG	CFH	—	—	CKR	CKD	CKV	—	CPD	CUR	CUD
			2	—	CBH	—	CBD	—	CGH	—	—	—	CLD	CLV	—	CQD	—	CVD
			3	—	CCH	—	CCD	—	CHH	—	—	—	CMD	CMV	—	CRD	—	CWD
		DPDT	1	CDG	CDH	CDR	CDD	CIG	CIH	—	—	CNR	CND	CNV	—	CSD	CXR	CXD
			2	—	CEH	—	CED	—	CJH	—	—	—	COD	COV	—	CTD	—	CYD
Series E Mercury Vibration Resistant	550°F (288°C)	SPDT	1	EAG	EAH	EAR	EAD	EFG	EFH	EFR	EFD	EKR	EKD	EKV	EPR	EPD	EUR	EUD
			2	—	EBH	—	EBD	—	EGH	—	EGD	—	ELD	ELV	—	EQD	—	EVD
			3	—	ECH	—	ECD	—	EHH	—	EHD	—	EMD	EMV	—	ERD	—	EWD
		DPDT	1	EDG	EDH	EDR	EDD	EIG	EIH	EIR	EID	ENR	END	ENV	ESR	ESD	EXR	EXD
			2	—	EEH	—	EED	—	EJH	—	EJD	—	EOD	EOV	—	ETD	—	EYD
Series F Snap Switch Hermetically Sealed	750°F (399°C)	SPDT	1	FAG	FAH	FAR	FAD	—	—	—	—	FKR	FKD	FKV	—	—	—	—
			2	—	FBH	—	FBD	—	—	—	—	—	FLD	FLV	—	—	—	—
		DPDT	1	FDG	FDH	FDR	FDD	—	—	—	—	FNR	FND	FNV	—	—	—	—
			2	—	FEH	—	FED	—	—	—	—	—	FOD	FOV	—	—	—	—

Electric switch mechanism & enclosure codes (White dot magnets)

Switch Description	Max. Process Temp.	Cont.	Cont. Per Encl.	NEMA 4 White								NEMA 7/9 White						
				Standard		Epoxy		Heater		Epoxy Htr.		Standard	Grp. B	Heater		Drain		
				Short	Tall	Short	Tall	Short	Tall	Short	Tall	Short	Tall	Tall	Short	Tall	Short	Tall
Series 2 Mercury w/ . Beaded Leads Vib. Res.	750°F (399°C)	SPDT	1	2AG	2AH	2AR	2AD	2FG	2FH	2FR	2FD	2KR	2KD	2KV	2PR	2PD	—	2UD
			2	—	2BH	—	2BD	—	2GH	—	2GD	—	2LD	2LV	—	2QD	—	2VD
			3	—	2CH	—	2CD	—	2HH	—	2HD	—	2MD	2MV	—	2RD	—	2WD
		DPDT	1	2DG	2DH	2DR	2DD	2IG	2IH	2IR	2ID	2NR	2ND	2NV	2SR	2SD	—	2XD
			2	—	2EH	—	2ED	—	2JH	—	2JD	—	2OD	2OV	—	2TD	—	2YD
Series 3 Mercury w/ Beaded Leads	750°F (399°C)	SPDT	1	3AG	3AH	3AR	3AD	3FG	3FH	3FR	3FD	3KR	3KD	3KV	3PR	3PD	—	3UD
			2	—	3BH	—	3BD	—	3GH	—	3GD	—	3LD	3LV	—	3QD	—	3VD
			3	—	3CH	—	3CD	—	3HH	—	3HD	—	3MD	3MV	—	3RD	—	3WD
		DPDT	1	3DG	3DH	3DR	3DD	3IG	3IH	3IR	3ID	3NR	3ND	3NV	3SR	3SD	—	3XD
			2	—	3EH	—	3ED	—	3JH	—	3JD	—	3OD	3OV	—	3TD	—	3YD

EPA-NC-CE-0000526

SELECTION DATA cont.

Electric switch mechanism & enclosure codes (Yellow dot magnets)

Switch Description	Max. Process Temp.	Cont.	Cont. Per Encl.	NEMA 4 Yellow								NEMA 7/9 Yellow						
				Standard		Epoxy		Heater		Epoxy Htr.		Standard		Grp. B	Heater		Drain	
				Short	Tall	Short	Tall	Short	Tall	Short	Tall	Short	Tall	Tall	Short	Tall	Short	Tall
Series A Mercury	550°F (288°C)	SPDT	1	AAE	AAF	AAY	AAM	AFE	AFF	AFY	AFM	AKY	AKM	AKW	APY	APM	AUY	AUM
			2	—	ABF	—	ABM	—	AGF	—	AGM	—	ALM	ALW	—	AQM	—	AVM
			3	—	ACF	—	ACM	—	AHF	—	AHM	—	AMM	AMW	—	ARM	—	AWM
		DPDT	1	ADE	ADF	ADY	ADM	AIE	AIF	AIY	AIM	ANY	ANM	ANW	ASY	ASM	AXY	AXM
			2	—	AEF	—	AEM	—	AJF	—	AJM	—	AOM	AOW	—	ATM	—	AYM
Series 3 Mercury w/ Beaded Leads	750°F (399°C)	SPDT	1	3AE	3AF	3AY	3AM	3FE	3FF	3FY	3FM	3KY	3KM	3KW	3PY	3PM	—	3UM
			2	—	3BF	—	3BM	—	3GF	—	3GM	—	3LM	3LW	—	3QM	—	3VM
			3	—	3CF	—	3CM	—	3HF	—	3HM	—	3MM	3MW	—	3RM	—	3WM
		DPDT	1	3DE	3DF	3DY	3DM	3IE	3IF	3IY	3IM	3NY	3NM	3NW	3SY	3SM	—	3XM
			2	—	3EF	—	3EM	—	3JF	—	3JM	—	3OM	3OW	—	3TM	—	3YM
Series B Snap Switch	250°F (121°C)	SPDT	1	BAE	BAF	BAY	BAM	BFE	BFF	BFY	BFM	BKY	BKM	BKW	BPY	BPM	BUY	BUM
			2	—	BBF	—	BBM	—	BGF	—	BGM	—	BLM	BLW	—	BQM	—	BVM
			3	—	BCF	—	BCM	—	BHF	—	BHM	—	BMM	BMW	—	BRM	—	BWM
		DPDT	1	BDE	BDF	BDY	BDM	BIE	BIF	BIY	BIM	BNY	BNM	BNW	BSY	BSM	BXY	BXM
			2	—	BEF	—	BEM	—	BJF	—	BJM	—	BOM	BOW	—	BTM	—	BYM
Series C Snap Switch	450°F (232°C)	SPDT	1	CAE	CAF	CAY	CAM	CFE	CFF	—	—	CKY	CKM	CKW	CPY	CPM	CUY	CUM
			2	—	CBF	—	CBM	—	CGF	—	—	—	CLM	CLW	—	CQM	—	CVM
			3	—	CCF	—	CCM	—	CHF	—	—	—	CMM	CMW	—	CRM	—	CWM
		DPDT	1	CDE	CDF	CDY	CDM	CIE	CIF	—	—	CNY	CNM	CNW	CSY	CSM	CXY	CXM
			2	—	CEF	—	CEM	—	CJF	—	—	—	COM	COW	—	CTM	—	CYM
Series D Snap Switch	250°F (121°C)	SPDT	1	DAE	DAF	DAY	DAM	DFE	DFF	DFY	DFM	DKY	DKM	DKW	DPY	DPM	DUY	DUM
			2	—	DBF	—	DBM	—	DGF	—	DGM	—	DLM	DLW	—	DQM	—	DVM
			3	—	DCF	—	DCM	—	DHF	—	DHM	—	DMM	DMW	—	DRM	—	DWM
		DPDT	1	DDE	DDF	DDY	DDM	DIE	DIF	DIE	DIM	DNY	DNM	DNW	DSY	DSM	DXY	DXM
			2	—	DEF	—	DEM	—	DJF	—	DJM	—	DOM	DOW	—	DTM	—	DYM
Series E Mercury Switch Vibration Resistant	550°F (288°C)	SPDT	1	EAE	EAF	EAY	EAM	EFE	EFF	EFY	EFM	EKY	EKM	EKW	EPY	EPM	EUY	EUM
			2	—	EBF	—	EBM	—	EGF	—	EGM	—	ELM	ELW	—	EQM	—	EVM
			3	—	ECF	—	ECM	—	EHF	—	EHM	—	EMM	EMW	—	ERM	—	EWM
		DPDT	1	EDE	EDF	EDY	EDM	EIE	EIF	EIY	EIM	ENY	ENM	ENW	ESY	ESM	EXY	EXM
			2	—	EEF	—	EEM	—	EJF	—	EJM	—	EOM	EOW	—	ETM	—	EYM
Series 2 Mercury w/ Beaded Leads Vib. Res.	750°F (399°C)	SPDT	1	2AE	2AF	2AY	2AM	2FE	2FF	2FY	2FM	2KY	2KM	2KW	2PY	2PM	—	2UM
			2	—	2BF	—	2BM	—	2GF	—	2GM	—	2LM	2LW	—	2QM	—	2VM
			3	—	2CF	—	2CM	—	2HF	—	2HM	—	2MM	2MW	—	2RM	—	2WM
		DPDT	1	2DE	2DF	2DY	2DM	2IE	2IF	2IY	2IM	2NY	2NM	2NW	2SY	2SM	—	2XM
			2	—	2EF	—	2EM	—	2JF	—	2JM	—	2OM	2OW	—	2TM	—	2YM
Series F Snap Switch Hermetically Sealed	750°F (399°C)	SPDT	1	FAE	FAF	FAY	FAM	—	—	—	—	FKY	FKM	FKW	—	—	—	—
			2	—	FBF	—	FBM	—	—	—	—	—	FLM	FLW	—	—	—	—
		DPDT	1	FDE	FDF	FDY	FDM	—	—	—	—	FNY	FNM	FNW	—	—	—	—
			2	—	FEF	—	FEM	—	—	—	—	—	FOM	FOW	—	—	—	—
Series L Mercury Switch	1000°F (538°C)	SPDT	1	—	LAF	—	LAM	—	—	—	—	—	LKM	LKW	—	—	—	—
		DPDT	1	—	LDF	—	LDM	—	—	—	—	—	LNM	LNW	—	—	—	—
Series L Mercury Switch Vibration Res.	1000°F (538°C)	SPDT	1	—	LBF	—	LBM	—	—	—	—	—	LLM	LLW	—	—	—	—
		DPDT	1	—	LEF	—	LEM	—	—	—	—	—	LOM	LOW	—	—	—	—
Series N Mercury Switch	550°F (288°C)	SPDT	3	—	NCF	—	NCM	—	NHF	—	NHM	—	NMM	NMI	—	NRM	—	NWM
		DPDT	3	—	NEF	—	NEM	—	NJF	—	NJM	—	NKM	NKI	—	NLM	—	NNM
Series O Snap Switch	450°F (232°C)	SPDT	3	—	OCF	—	OCM	—	—	—	—	—	OMM	OMI	—	—	—	OWM
		DPDT	3	—	OEF	—	OEM	—	—	—	—	—	OKM	OKI	—	—	—	ONM
Series Q Snap Switch	250°F (121°C)	SPDT	3	—	QCF	—	QCM	—	QHF	—	QHM	—	QMM	QMI	—	QRM	—	QWM
		DPDT	3	—	QEF	—	QEM	—	QJF	—	QJM	—	QKM	QKI	—	QLM	—	QNM
Series S Snap Switch for AC Cur. Appl.	550°F (288°C)	SPDT	1	—	SAF	—	SAM	—	—	—	—	—	SKM	SKW	—	—	—	—
		DPDT	1	—	SDF	—	SDM	—	—	—	—	—	SLM	SLW	—	—	—	—
Series S Snap Switch for DC Cur. Appl.	400°F (204°C)	SPDT	1	—	SBF	—	SBM	—	—	—	—	—	SNM	SNW	—	—	—	—
		DPDT	1	—	SEF	—	SEM	—	—	—	—	—	SOM	SOW	—	—	—	—
Series T Mercury Switch	500°F (260°C)	SPDT	3	—	TCF	—	TCM	—	THF	—	THM	—	TMM	TMI	—	TRM	—	TWM
		DPDT	3	—	TEF	—	TEM	—	TJF	—	TJM	—	TKM	TKI	—	TLM	—	TNM

EPA-NC-CE-0000527

INSTALLATION cont.

Series E, T & 2

Level controls are frequently used on applications where vibration is encountered, such as on scrubbers in oil field installations. Switch mechanisms may require repositioning to prevent sloshing of mercury in switches. This position is usually best at right angles to the direction of vibration. The direction of vibration may be determined by the arrangement of connections to the vessel or the vessel's mounting method. Accordingly, the vibration will tend to be in one direction only.

Upon determining the vibration direction, switch mechanism(s) may be rotated from an "incorrect" position (as shown in Figure 7 at right which is looking at a control from above) to a "correct" position as follows:

CAUTION: Before attempting to remove a switch mechanism, be certain to pull disconnect switch or otherwise assure that electrical circuit through control is de-energized.

1. Disconnect control from power supply.
2. Loosen screw in split mounting clamp until mechanism slides freely on enclosing tube, see Figure 1 on page 2.
3. Rotate entire mechanism and bottom baffle plate together to a "correct" position.

CAUTION: Be certain power supply wires retain some slack at new position. Do not pull wires taut.

NOTE: Amount of rotation will vary with each installation and may not be as much as shown in illustration.

4. Check action of mercury in switch at new position. When mercury "sloshes" from side to side in glass tube instead of end to end, "correct" position has been attained.
5. Tighten clamp screw on switch mechanism.
6. Re-connect power supply and test switch action under operating conditions.

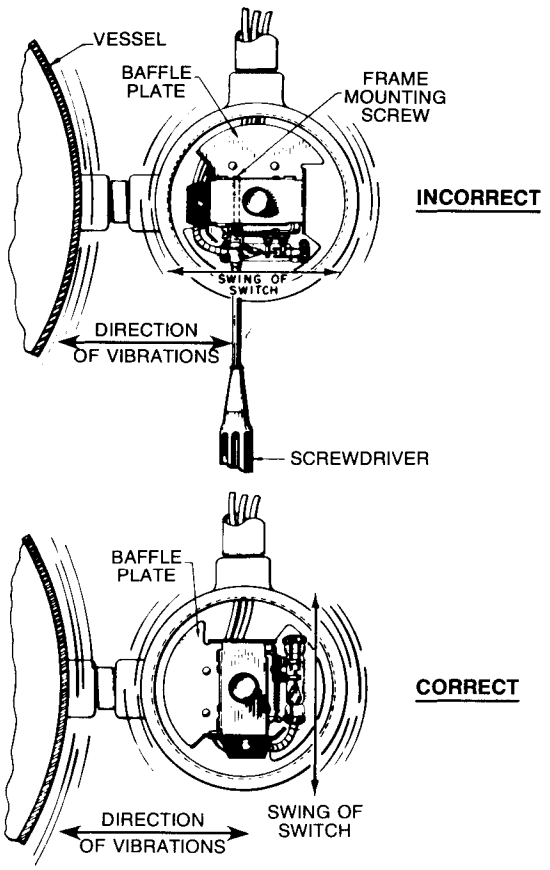

Figure 7

Basic electrical ratings

Voltage	Switch Series and Non-Inductive Ampere Rating															
	A	B	C	D	E	F	L		N	O	Q	S		T	2	3
							Standard	Vibration Resistant				AC	DC			
120 VAC	13.00	15.00	15.00	10.00	4.00	0.25	13.00	4.00	13.00	15.00	15.00	15.00	10.00	4.00	4.00	13.00
240 VAC	6.50	15.00	15.00	—	2.00	—	6.50	2.00	6.50	15.00	15.00	15.00	—	2.00	2.00	6.50
24 VDC	10.00	6.00	10.00	10.00	—	4.00	—	—	3.70	—	6.00	—	—	—	—	10.00
120 VDC	10.00	0.50	1.00	10.00	4.00	0.30	10.00	4.00	10.00	1.00	0.50	1.00	10.00	4.00	4.00	10.00
240 VDC	5.00	0.25	0.50	3.00	2.00	—	5.00	2.00	5.00	0.50	0.25	0.50	3.00	2.00	2.00	5.00

REPLACEMENT SWITCH MECHANISMS

Magnet strength

Switch mechanisms are provided with different strength magnets as determined by the materials of construction. A red, white or yellow dot is visible on each magnet. When ordering replacement switch mechanisms, be certain to determine the color dot on the magnet.

CAUTION: NEVER replace a switch mechanism with a mechanism containing a dot of a different color.

Switch Series	Contacts	Replacement Switch Mechanism With Switch (ES)			Replacement Switch Only	
		Yellow Dot Magnet	Red Dot Magnet	White Dot Magnet	Left Hand	Right Hand
A & N	SPDT	"A" Switch 89-7401-009	"A" Switch 89-7401-003	None	None	89-7101-013
		"B" Switch 89-7401-012	"B" Switch 89-7401-006			
	DPDT	89-7401-055	89-7401-018		89-7101-014	89-7101-013
B & Q	SPDT	"A" Switch 89-7401-103	"A" Switch 89-7401-101	None	None	89-7101-020
		"B" Switch 89-7401-104	"B" Switch 89-7401-102			
	DPDT	89-7401-122	89-7401-121		89-7101-020	89-7101-020
C & O	SPDT	"A" Switch 89-7401-109	"A" Switch 89-7401-107	None	None	89-7101-022
		"B" Switch 89-7401-110	"B" Switch 89-7401-108			
	DPDT	89-7401-125	89-7401-124		89-7101-022	89-7101-022
D	SPDT	"A" Switch 89-7401-105	"A" Switch None	None	None	89-7101-024
		"B" Switch 89-7401-106	"B" Switch None			
	DPDT	89-7401-123	None		89-7101-024	89-7101-024
E & T	SPDT	"A" Switch 89-7401-063	"A" Switch 89-7401-073	None	None	89-7101-015
		"B" Switch 89-7401-068	"B" Switch 89-7401-078			
	DPDT	89-7401-052	89-7401-046		89-7101-015	89-7101-015
F	SPDT	"A" Switch 89-7401-096	"A" Switch 89-7401-094	None	None	89-7101-041
		"B" Switch 89-7401-095	"B" Switch 89-7401-093			
	DPDT	89-7401-098	89-7401-097		89-7101-041	89-7101-041
L	SPDT	89-7401-015	None	None	None	89-7101-042
	DPDT	89-7401-024			89-7101-043	
L Vibration Resistant	SPDT	89-7401-155	None	None	None	89-7101-033
	DPDT	89-7401-156			89-7101-044	
S	SPDT	AC . . . 89-7401-126 DC . . . 89-7401-129	None	None	None	AC . . . 89-7101-022 DC . . . 89-7101-024
	DPDT	AC . . . 89-7401-128 DC . . . 89-7401-127			AC . . . 89-7101-022 DC . . . 89-7101-024	AC . . . 89-7101-022 DC . . . 89-7101-024
2	SPDT	"A" Switch 89-7401-149	None	"A" Switch 89-7401-151	None	89-7101-033
		"B" Switch 89-7401-150		"B" Switch 89-7401-152		
	DPDT	89-7401-154		89-7401-153	89-7101-044	89-7101-033
3	SPDT	"A" Switch 89-7401-146	None	"A" Switch 89-7401-157	None	89-7101-042
		"B" Switch 89-7401-147		"B" Switch 89-7401-158		
	DPDT	89-7401-148		89-7401-159	89-7101-043	89-7101-042

EPA-NC-CE-0000529

WIRING DIAGRAMS

SPDT

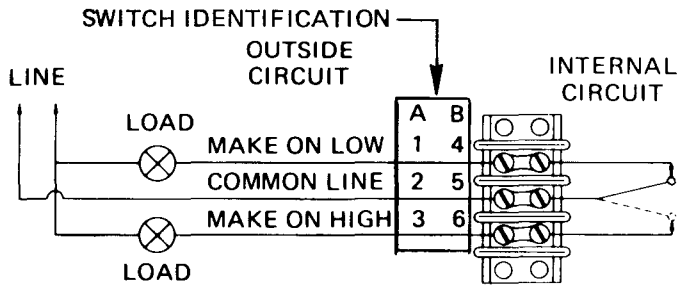

Circuits shown are for direct acting level switches and are reversed in side mounting float-in-tank models, which utilize a reversing float pivot.

DPDT

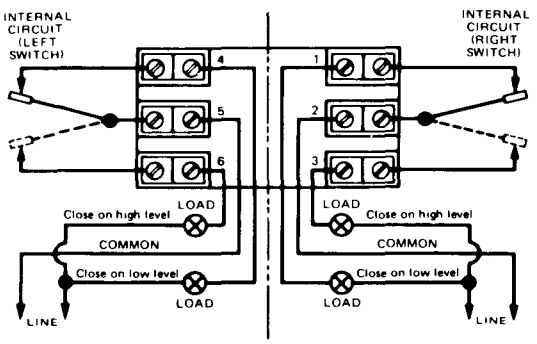

IMPORTANT

PRODUCT WARRANTY

All Magnetrol mechanical level controls are warranted free of defects in materials or workmanship for five full years from the date of original factory shipment.

If returned within the warranty period; and, upon factory inspection of the control, the cause of the claim is determined to be covered under the warranty; then, Magnetrol will repair or replace the control at no cost to the purchaser (or owner) other than transportation.

Magnetrol shall not be liable for misapplication, labor claims, direct or consequential damage or expense arising from the installation or use of equipment. There are no other warranties expressed or implied, except special written warranties covering some Magnetrol products.

QUALITY ASSURANCE

QUALITY MANAGEMENT INSTITUTE®
A DIVISION OF CANADIAN STANDARDS ASSOCIATION

The quality assurance system in place at Magnetrol guarantees the highest level of quality throughout the company. Magnetrol is committed to providing full customer satisfaction both in quality products and quality service.

Magnetrol's quality assurance system is registered to ISO 9001 and Z299.1 affirming its commitment to known international quality standards providing the strongest assurance of product/service quality available.

ASSURED QUALITY & SERVICE COST LESS

SERVICE POLICY

Owners of Magnetrol controls may request the return of a control or any part of a control for complete rebuilding or replacement. They will be rebuilt or replaced promptly. Controls returned under our service policy must be returned by Prepaid transportation. Magnetrol International will repair or replace the control at no cost to the purchaser (or owner) other than transportation if:

a. Returned within the warranty period; and
b. The factory inspection finds the cause of the claim to be covered under the warranty.

If the trouble is the result of conditions beyond our control; or, is NOT covered by the warranty, there will be charges for labor and the parts required to rebuild or replace the equipment.

In some cases it may be expedient to ship replacement parts; or, in extreme cases a complete new control, to replace the original equipment before it is returned. If this is desired, notify the factory of both the model and serial numbers of the control to be replaced. In such cases, credit for the materials returned will be determined on the basis of the applicability of our warranty.

No claims for misapplication, labor, direct or consequential damage will be allowed.

RETURN MATERIAL PROCEDURE

So that we may efficiently process any materials that are returned, it is essential that a "Return Material Authorization" (RMA) number be obtained from the factory prior to the material's return. This number will facilitate the processing and tracking of your material. The following information must be supplied before the RMA number can be assigned:

1. Installation Name
2. Description of Material
3. Production Number
4. Serial Number
5. Reason for Return
6. Desired Action

All shipments returned to the factory must be by Prepaid transportation.

All replacements will be shipped F.O.B. factory.

Magnetrol

5300 Belmont Road • Downers Grove, Illinois 60515-4499 • (708) 969-4000 • Fax 708-969-9489
6291 Dorman Road • Mississauga, Ontario L4V-1H2 • Phone: (416) 678-2720 • Fax 416-678-7407
Heikensstraat 6 • B 9240 Zele, Belgium • Tel. 052 45.11.11 • Telex 25944 • Fax 052 45.09.93
Regent Business Ctr., Jubilee Rd. • Burgess Hill, Sussex RH15 9TL U.K. • Tel: 0444-871313 • Telex 87255 • Fax 0444-871317

BULLETIN: 42-683.2
EFFECTIVE: December 1991
SUPERSEDES: March 1991

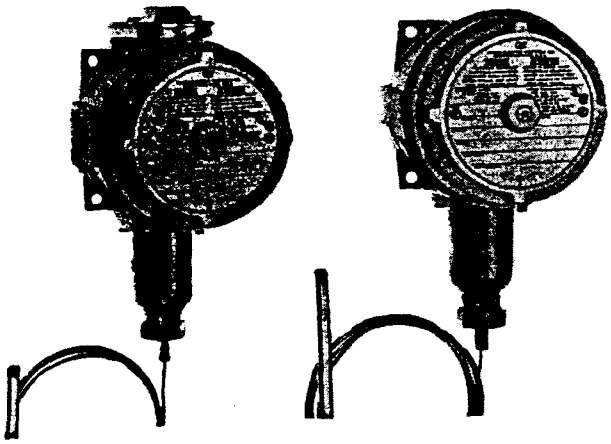

INSTALLATION AND MAINTENANCE INSTRUCTIONS

120 SERIES EXPLOSION-PROOF* TEMPERATURE CONTROLS

TYPES E121, E122, E122P, F120

UL & CSA Listed. Meets Division 1 and 2;
Class I, Groups B, C & D; Class II, Groups E, F, & G; and Class III.

NOTE: Class I, Group B - CSA approval does not cover options 1530 and/or M450.

IM-RT120-4

WARNING: Misuse or misapplication of this product may cause explosion and personal injury. These instructions must be thoroughly read and understood before unit is installed.

OPERATION

Temperature variations of a liquid filled sensing bulb are hydraulically transmitted to a bellows or diaphragm which either actuates or deactuates one or two snap-acting swithches at a predertermined set point(s). Set points are adjusted by turning an external calibrated knob and pointer (E types) or internal adjustment screw (F types).

PART I. INSTALLATION

IMPORTANT: Install unit where shock, vibration and temperature fluctuations are minimal. Orient unit so that moisture is prevented from entering the enclosure. It is imperative that properly rated explosion-proof sealing fittings be used for electrical wire entry.

Do not mount unit in ambient temperatures exceeding published limits.

1. Mounting standard controls and controls with manual reset option

120 Series Remote Mounted Temperature controls should be mounted vertically (temperature assembly facing down) or horizontally (electrical conduit facing up, see breather drain option).

Controls may be surface mounted via the 4-1/4" screw clearance holes on the enclosure or through the use of a mounting bracket. (See Mounting Dimensions on back page)

CAUTION: Always hold a wrench on the temperature housing hex when mounting unit. Do not tighten by turning enclosure. This will damage sensor and weaken soldered or welded joints.

2. Mounting controls with breather drain option (Code M450) Not availabel on FM approval.

A. Types C120 & C120H

Mount with breather drain facing down and conduit connection facing up. (See Figure I) The conduit connection must be properly sealed (potted) for this type of installation.

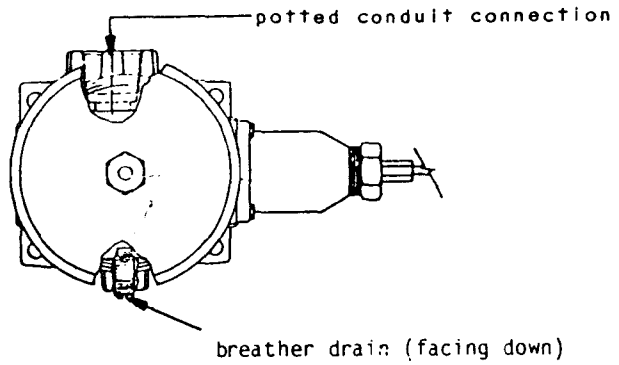

Figure 1

2. Types E121 & E122

Mount in vertical position with temperature assembly and breather drain facing down. (See Figure 2)

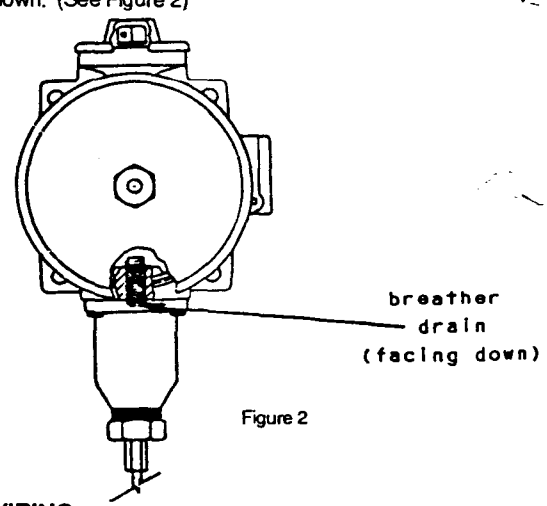

Figure 2

PART II. WIRING

WARNING: Disconnect all supply circuits before wiring unit.

IMPORTANT: Electrical ratings stated in literature and on nameplates must not be exceeded--overload on a switch cause failure on the first cycle. Wire units according to national and local electrical codes. Maximum recommended wire size is 14 AWG.

Remove cover and wire controller according to appropriate Diagrams on page 2.

* Enclosures are designed to withstand gas vapor explosions without bursting or loosening of joints, and are capable of arresting the propagation of flame from the interior of the enclosure to the surrounding atmosphere.

EPA-NC-CE-0000531

Types E121, F120 & F120H

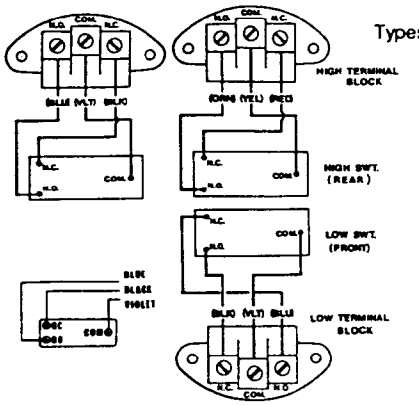

Types E122 & E122P

Option 1010

Type E121

Type F120

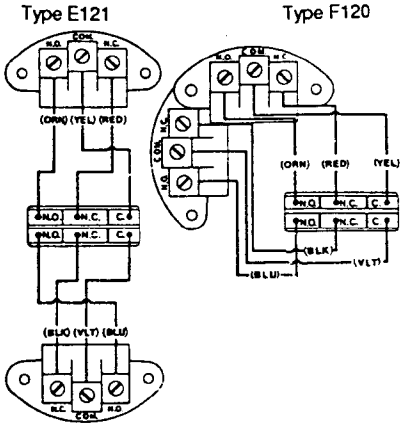

WARNING: To prevent seizure of enclosure cover, DO NOT remove lubricant (petrolatum). Threads should also be free of dirt, etc.

NOTE: Replacing cover hand tight (5 full threads engaged) is sufficient to maintain proper protection. Additional tightening may be required to fully engage cover "O" ring and seal enclosure for rain-tight protection.

PART III. SET POINT ADJUSTMENTS

NOTE: For set point adjustments and recalibration, connect control to a calibrated temperature source and stabilize unit.

1. Types F120 & F120H

Adjust set point by holding plunger with 1/4" wrench and turning 1/4" hex adjusting screw clockwise (in) to increase or counter-clockwise (out) to decrease setting. Turn adjustment screw until switch transfers. Turning "in" for switch transfer achieves temperature "fall" setting. Turning "out" for switch transfer achieves temperature "rise" setting.

2. Type E121

Adjust set point by turning external knob and pointer to desired setting on scale.

Recalibration--adjusting set point after replacing switch(es) and/or thermal assembly:

Slowly turning adjustment knob until switch transfers. Compare switch transfer point to actual temperature. If they do not agree, loosen set screws on adjustment knob and align pointer to indicate actual temperature.

Turning knob from low to high temperature for switch transfer achieves temperature "fall" setting. Turning knob from high to low temperature for switch transfer achieves temperature "rise" setting.

3. Type E122

Individual switches may be set together or apart by up to 100% of range. When not set together, the front switch can not be set higher than the rear switch. Turning external knobs will increase or decrease each switch setting independently.
Recalibration: Follow procedure for Type E121 for each switch.

4. Type E122P (Dual Switch Models)

1. Remove cover, unscrew and remove terminal blocks and insulator, letting terminal blocks hang.
2. Unscrew terminal block supports and remove (2) switch mounting screws and washers.
3. Lift out dual switch bank and actuating lever assembly.
4. Disconnect (6) wires at switch terminals.
5. Assemble new switches and insulators to the switch bank assembly.
6. Connect wires at the switch terminals.
7. Install switch bank assembly, terminal block supports, insulator and terminal block in control.
8. Adjust temperature setting per Part II.

PART IV. REPLACEMENT PROCEDURES

IMPORTANT: Use only factory authorized replacement parts and procedures. Components for replacement parts include the switches and the thermal assemblies only. Order parts by name plate information data on model, range and electrical rating.

A. REPLACEMENT OF SWITCHES

Type E121 & F120

1. Remove cover, (2) switch mounting screws, switch and insulator.
2. Disconnect (3) switch wires at switch terminal.
3. Install new switch and wire per PART II.
4. Mount switch and insulator inside enclosure and recalibrate per PART III.

Types E122

IMPORTANT: Switches are differentiated for replacement purposes and must be installed correctly according to procedure below. Front (top) switch has a white identification mark which is visible through the insulator if switches are properly installed. If it is not visible after installation, check replacement procedure.

NOTE: Switch characteristics between front and rear switches differ in order to maintain consistent control differential. Replace only with original switch type.

1. Remove cover, unscrew (4) terminal blaock mounting screws and remove switch and insulator.
2. Unhook extension spring from conduit wire guide and remove wire guide.
3. Remove (2) switch mounting screws, switch and insulator.
4. Loosen (2) set screws on low set adjusting knob.
5. Turn low set adjusting screw counterclockwise until switch bracket and actuating lever assembly can be removed. (Be sure that extension spring is on bracket and washer is on plunger.)
6. Unscrew (2) bias plate screws and remove bias plate.
7. Remove (2) switch mounting screws, switch and insulator.
8. Disconnect (6) wires at switch terminals.
9. Assemble new switches and insulators, mounting one swithch to switch bracket and lever assembly.
10. Replace bias plate with flat edge facing conduit and slot facing sensor assembly.
11. Position switch bracket and lever assembly so that fingers of lever are on top of washer, and turn low set adjustment screw clockwise until lever actuates switch.

EPA-NC-CE-0000532

12. Hook extension spring onto wire guide and replace terminal block insulator.
13. Tighten set screws and install terminal blocks. Wire per PART II.
14. Recalibrate per PART III.
15. Replace cover.

B. REPLACEMENT OF THERMAL ASSEMBLY (T/A)

1. Place control upside down on work bench.
2. Loosen 3/8" hex dress nut one or two turns to relieve tension on 1/8"hex Thermal Assembly (TA) mounting nut.
3. Unscrew TA mounting nut from TA housing and carefuly remove thermal assembly insuring that "cone" spring and compensator assembly remain in TA housing.
4. Insert new TA, seating bellows stem into cone spring and compensator assembly.
5. Screw on TA mounting screw and screw on "dress" nut snugly-do not overtighten.
6. Recalibrate per PART III.

IMPORTANT: MAXIMUM TEMPERATURE

Maximum Temperature: The highest temperature to which a sensing element may be occasionally operated without adversely affecting set point calibration and repeatability.

WARNING: Maximum temperature limits stated in literature and on nameplates must never be exceeded, even by surges in the system. Occasional operation of unit up to maximum temperature is acceptable (e.g. start-up, testing). Continuous operation should be restricted to the designated adjustable range.

RECOMMENDED PRACTICES

United Electric Controls Company recommends careful consideration of the following factors when specifying and installing UE pressure and temperature units. Before installing a unit, the installation and maintenance instructions provided must be read and understood.

* To avoid damaging unit, proof pressure and maximum temperature limits stated in literature and on nameplates must never be exceeded, even by surges in the system. Operation of unit up to proof pressure or maximum temperature is acceeptable on a limit basis (i.e. start-up, testing), but continuous operation must be restricted to the designated adjustable range. Excessive cycling at proof pressure or maximum temperature limits could reduce sensor life.
* A back-up unit is necessary for applications where damage to a primary unit could endanger life, limb or property. A hi or low limit switch is necessary for applications where a dangerous runaway condition could result.
* The adjustable range must be selected so that incorrect, inadvertant or malicious settings at any range point can not result in an unsafe system condition.
* Install units away from stock and vibration. Proper electrical fittings should be used to prevent moisture entering the enclosure via the conduit.
* Unit must not be altered or modified after shipment. Consult UE if modification is necessary.
* Monitor operations to observe warning signs of possible damage to unit, such as drift in setpoint. Check unit immediately.
* Preventative maintenance and periodic testing is necessary for critical applications where damage to unit could endanger property or personnel.
* For all applications, a factory set unit should be tested before use.
* Electrical ratings stated in UE literature and on nameplate must not be exceeded. Overload on a switch can cause damage, possible on the first cycle. Wire unit according to local and national electrical codes, using wire size recommended in installation sheet.
* Use only factory authorized replacement parts and procedures.
* Do not mount unit in ambient temperature exceeding published limits.
* For remote mounted temperature unit, capillary lengths beyond 10 feet can increase chance for error, and may require recalibration of setpoint and indication.

EPA-NC-CE-0000533

MOUNTING DIMENSIONS

Types E121 & E122

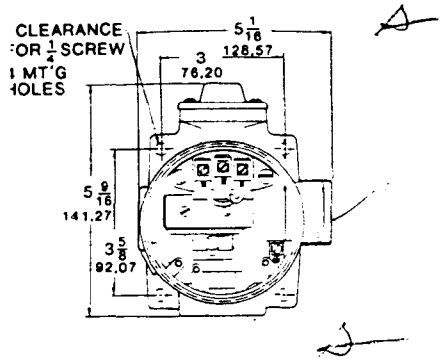

Sensors
(All Models)

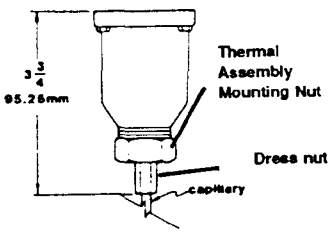

Types F120 &

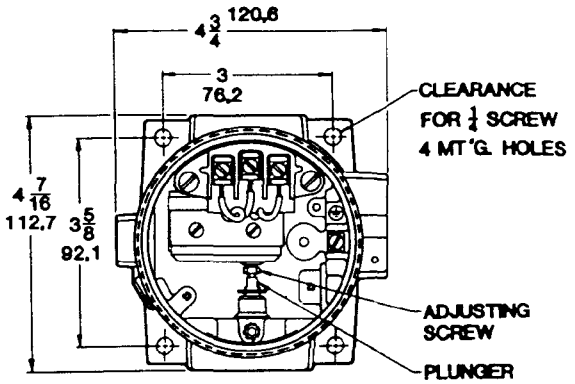

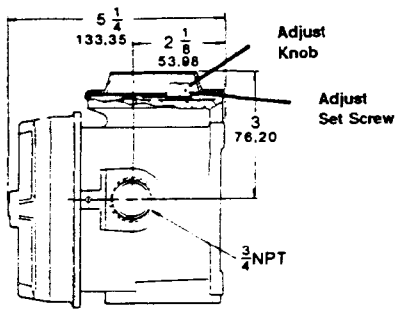

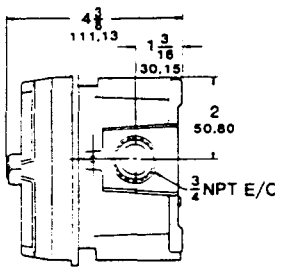

United Electric Controls Co.
85 School Street
Watertown, Ma. 02172
Phone 617-9261000
Fax# 617-926-2568 - Telex: 092-2445

MAP 787 8M

EPA-NC-CE-0000534

MERCER INTERNATIONAL, INC.

39 West Main Street

Mendham, NJ 07945

973-543-9000

INSTALLATION, OPERATING, AND MAINTENANCE INSTRUCTIONS

For

Compliance Master™

GRAVITY OIL/WATER SEPARATOR

MODEL NUMBER

MI-A200-PP

CUSTOMER/P. O. NUMBER

Con Edison / 629148

JOB # MI-06141

© 1994-2008 Mercer International, Inc. All rights reserved.

(Rev. 8/08)

TABLE OF CONTENTS

I. ABSTRACT.....3

II. INSTALLATION INSTRUCTIONS.....4

1. Site Selection

A. Rigging.....4
B. Inspection & Touch-up Painting.....5
C. Setting the Oil/Water Separator.....5

2. Process Piping & Connections

A. Raw Water Inlet.....6
B. Treated Water Outlet.....6
C. Oil Outlet.....7
D. Solids/Sludge Outlets.....7
E. Vent Openings.....7

3. Components & Accessories

A. Standard Internal Components.....7

1. Two-Stage Inlet Distribution Baffle
2. Outlet Distribution Baffle
3. **Multi-Pack™** Coalescer
4. OWS Tank Cover

B. Optional Accessories.....8

1. Oil Skim Pipe
2. Continuous Mechanical Skimmer

(continued)

© 1994-2006 Mercer International, Inc. All rights reserved.

3. Adjustable Process Over-flow Weir
4. **HSA™** Secondary Coalescer
5. Oil-stop Valve
6. High Liquid Level/High Oil Level Float Switches
7. Electric Immersion Heaters

III. START-UP PROCEDURE.....11

IV. OPERATING & MAINTENANCE INSTRUCTIONS.....13

1. **Multi-Pack** Coalescer

A. **Multi-Pack** Coalescer Inspection.....13
B. Cleaning the **Multi-Pack** Coalescer.....14
C. **Multi-Pack** Coalescer Custom Field Adjustment.....15

2. Tankage & Standard Internal Components

A. Inlet Baffle.....18
B. Outlet Baffle.....18
C. Solids/Sludge Chamber.....18
D. OWS Tankage.....19

3. Optional Accessories

A. Oil Skim Pipe.....20
B. Continuous Mechanical Skimmer.....20
C. **HSA™** Secondary Coalescer.....20
D. Adjustable Process Over-flow Weir.....20
E. Oil-stop Valve.....21
F. Level switch assemblies.....21
G. Electric Heaters.....22

V. SPARE PARTS.....23

VI. MISCELLANEOUS O&M INFORMATION & SKETCHES.....24ff

© 1994-2006 Mercer International, Inc. All rights reserved.

I. ABSTRACT

Installation, operation and maintenance instructions are described for the patented Mercer International, Inc. (Mercer) **Compliance Master™** "MI-A200-PP" series above ground, gravity displacement oil/water separator.

The **Compliance Master** oil/water separator (OWS) is a high performance separator featuring the field-adjustable **Multi-Pack™** coalescer, designed to efficiently remove free, non-emulsified, hydrocarbons and certain suspended solids from water. The plate packs are easily removable in the field and adjustable to attain the highest possible efficiency with the lowest practical maintenance.

This OWS is our Model # MI-A200-PP polypropylene unit and will process water flows not to exceed 200 gpm.

NOTE: 1) Please read this entire IO&M Manual before installation and start-up. Refer to all attached sketches and diagrams attached.
2) Use only good common sense and follow all local, state and federal codes, regulations and safety procedures when installing and operating this and all industrial equipment. Please follow OSHA (or applicable) regulations regarding "confined space entry".
3) Exercise special care in and around this unit due to the potential of slippery surfaces associated with oil, grease and water. OSHA approved (or applicable) platforms, stairs and rails are recommended for safety and ease of access for maintenance. Mercer supplies access platform and stairs built for the units.

IMPORTANT NOTE ABOUT POLYPROPYLENE UNITS:

The plastic flanged fittings will break if stepped on or excessive forces are applied. If valves are put on the flanged drain fittings, they need to be permanently "blocked" to prevent bending/moment forces. Also and piping connected to these fittings need to be self supported and have a "zero load" on the fittings.

The separator has 1" thick natural polypropylene tank walls. If the unit is to be outdoors and in sunlight for extended periods, the tank needs to be coated with a UV protective paint or sheath. This will help prevent UV damage to the polypropylene. Contact Mercer for details.

© 1994-2006 Mercer International, Inc. All rights reserved.

II. INSTALLATION INSTRUCTIONS

Note: Start-up and maintenance supervision contracts are available from Mercer. Please contact Mercer for details (1-800-4-MERCER).

1. Site Selection

Notes: This **Compliance Master** oil/water separator is designed to operate with process flows in the temperature range of 35°F-165°F, and within a pH range of 5.0-9.0. Consult Mercer regarding alterations required to operate in other temperature & pH ranges.

If the **Multi-Pack** coalescer or any painted components are to be stored outdoors for more than a week, they should be covered by heavy opaque tarps to protect against damage of materials that may be ultraviolet light (UV) sensitive and/or from wind or weather damage.

A. Rigging

The estimated shipping weight of this **Compliance Master** separator is approximately 4,000 pounds. The estimated dry (clean) shipping weight of the **Multi-Pack** coalescer is 1,000 pounds. Only experienced crane and rigging operators should be employed to move and set this equipment. Lift the separator tank ONLY by the aluminum frame system. Lifting the tank by any part of the plastic tank and/or fittings will cause damage. The unit is designed to be lifted by a fork lift. The skid has a built-in frame guide for the forks. When lifting the separator system with an access platform and skid bolted to the separator skid, always lift the system with a fork lift from the OWS side of the unit to avoid excessive "cantilever" force exerted from the much heavier OWS side of the assembly. Never attempt to lift two separators bolted together, or two separators bolted onto an access platform skid.

Spreader bars should be used where lifting cables are not long enough to produce a minimum 60° angle from the horizontal. Use only the frame for lifting to ensure no damage to the tank, internals or the coating. All lifting lugs should be used, distributing weight evenly, so that damage to the tank and internals will not occur. Tanks shall be carefully lifted and lowered by use of straps of adequate length attached to the skid. Never drop or drag tank or components. A spreader bar should be used where necessary. Avoid using chain or cable to avoid damage to the skid frame. Never use chains or slings around the tank shell. In many cases, internal components may be shipped in place within the unit, so extra care should be taken when moving and setting equipment to prevent damage.

B. Inspection & Touch-up Painting

Upon receipt of equipment, immediate inspection of all internal and external components should be made. Any damage should be reported to Mercer immediately.

Thoroughly inspect any interior and exterior paint. Areas of coating damage should be repaired with touch-up paint. Since the shelf life of this paint may be short, touch-up should be done as soon as possible. Follow all instructions on the paint manufacturer's product data sheets. Clean damaged coating areas through removal of surface rust, dirt, contaminants and disbanded coating prior to application of touch-up coating (see SSPC SP-2 "Hand Tool Cleaning" or SP-3 "Power Tool Cleaning" for additional guidance). Remember, touch-up painting will be much easier to accomplish when done before a unit is placed into operation.

© 1994-2006 Mercer International, Inc. All rights reserved.

See the attached paint specification or call Mercer for specifications, as required. Material Safety Data Sheets (MSDS) are available from Mercer upon request.

Inspect the unit for damage and cleanliness. Call Mercer immediately if condition and/or cleanliness are different from photo documentation sent with this manual.

C. Setting the Oil/Water Separator

The OWS should be set and properly bolted onto a **level** concrete pad, paved area designed to safely hold the OWS in place. The estimated flooded weight of this separator is approximately 20,000 pounds.

Before the OWS is set into it final position, place a carpenter's level on the outlet weir, located inside the unit (down flow of the coalescer), and shim the OWS as required until that weir is dead level. If the outlet weir is adjustable, make sure that the weir is all the way in the "down" position. If there is no outlet weir on this OWS, level the horizontal angles that support the **Multi-Pack** coalescers, instead.

2. Process Piping & Connections

NOTES: All external process connections are typically 150# flat-faced flanges or 150# NPT couplings and/or nipples unless otherwise noted or specified. All outlet fittings require leak-proof gaskets or Teflon tape as recommended for the particular service of the application. All electrical connections require leak-proof connections as recommended for the particular service, as well.

The plastic flanged fittings will break if stepped on or excessive forces are applied. If valves are put on the flanged drain fittings, they need to be permanently "blocked" to prevent bending/moment forces. Also and piping connected to these fittings need to be self supported and have a "zero load" on the fittings.

All piping, ladders and platforms attached to the OWS should be self-supporting (no live load). All piping to OWS should have clean outs, and be easily disconnected for maintenance and modifications, etc.

To help prevent galvanic reaction (corrosion due to stray electrical currents) it is recommended that the unit have suitable cathodic protection by sacrificial anodes. The tank should also be properly isolated with dielectric gaskets, bushings and isolation sleeves.

All piping should have the minimum of turns and short radius bends, and should be large enough to maintain the inlet piping flow velocity at about 3 feet per second, or less. The outlet piping should be at least as large as the outlet fitting, or have enough size and pressure drop to ensure the flow will not back up into the separator unit due to the piping not being able to handle the flow rate.

Sand interceptors are available from Mercer for primary solids/grit removal for installation upstream of the OWS. A well-designed sand interceptor will reduce solids loading within the OWS, and will improve the overall performance of the separator.

The separator has 1" thick natural polypropylene tank walls. If the unit is to be outdoors and in sunlight, the tank needs to be coated with a UV protective paint or sheath. This will help prevent UV damage to the polypropylene.

© 1994-2006 Mercer International, Inc. All rights reserved.

A. Raw Water Inlet

The process flow inlet connection is a 6" flanged fitting. **Important:** the invert of the inlet piping (supplied by the customer) for a standard unit should be a minimum of 12 inches above the outlet weir elevation or static water level, to form a liquid trap. This static water level elevation is at the elevation of the lids, less the amount of free-board (just a few inches under the separator cover). If this model does not have an outlet weir arrangement, the inlet invert of the inlet piping should be a minimum of 12 inches above the highest liquid elevation of the static water level in the separator. This will help prevent backflow after flow into the OWS stops. If this inlet piping elevation cannot be attained due to field conditions, adequate check valves or back-flow preventers should be installed to maintain the static liquid level within the OWS.

It is recommended that the inlet piping be full size and have as few bends as possible to prevent unnecessary mixing. Piping configurations should follow standard designs similar to sanitary and drainage systems. For instance, two 45° elbows are preferred over one short radius 90° elbow. It is recommended that a throttling valve (butterfly, ball, etc.) be placed in the inlet piping for maintenance and operation versatility. All valves, etc., should be "full-port" type valves to prevent restriction of flow. Piping to the separator can be smaller if pumped to the unit. Make sure that the inlet piping size is suitable for the head loss from due to friction. Check the inlet pump(s) curves to determine minimum size of piping.

Gravity flow into the OWS is preferred over pumping for obtaining better oil removal efficiency. If inlet pumps are required, choose a pump that is a positive displacement, non-shearing type if economically practical. Progressive cavity, double diaphragm and lobe type pumps are a good choice. High RPM centrifugal type pumps should be avoided. Consult Mercer for recommendations, as required.

B. Treated Water Outlet

The treated water outlet connection is a 6" flanged fitting.

Standard **Compliance Master** OWS units are typically set up for gravity flow out of the OWS. Outlet piping for gravity operation should have a minimum 1/4" per foot slope, and outlet piping size should be kept no less than the size of the OWS outlet unless you determine that the outlet piping is sized to handle the maximum flows that will be encountered. The outlet piping should be vented with a drainage tee fitting.

All valves or fittings should be "full-port" type to prevent restriction of flow. Add a vapor-seal fixture trap in the outlet piping if required by code.

If this unit has an "oil-stop valve" as an accessory, the outlet piping must have a vent pipe on top of the outlet pipe, directly after the OWS. The vent pipe should extend to the top of the separator tank, and should be sized at least ½ the outlet pipe diameter. For example, a separator unit with an oil-stop valve that has an 6" outlet pipe, should have a 3" vent pipe located directly after the separator, extending just to the top of the separator tank.

Outlet piping for units that have an oil-stop valve and have a significant elevation drop-off should have an air gap installed at the point where the piping elbows down. Without the air gap, excess suction may cause the oil-stop valve to malfunction; the air gap will help prevent additional suction at the oil-stop valve.

Follow standard pump piping practices for this **Compliance Master** OWS if it includes an optional water pump out compartment. Follow all installation & operation manuals provided by the pump manufacturer.

© 1994-2006 Mercer International, Inc. All rights reserved.

C. Oil outlet

The oil outlet connection is a 2" flanged fitting.

Most **Compliance Master** OWS units have gravity oil outlet fittings. The oil outlet piping should be kept full size and have a minimum slope of 1 inch per foot. If oil outflow is by gravity, the collection tank should have a suitable elevation to incorporate adequate transfer pipe slopes. It is recommended that the oil-holding tank have a reliable high level alarm to prevent overflow conditions and oil spillage.

All exposed piping from the oil outlet fitting should be insulated and/or heated, as required, to keep the oil and grease fluid.

D. Solids/Sludge Outlets

There are (4) 2" flanged solids/sludge/drain outlets for improved maintenance capability.

At a minimum, the solids/sludge outlets should have a ball valve (or similar throttling valve) and a "fail-safe" secondary flow control device or secondary containment in case of accidental opening of the primary valve.

Various automatic and semi-automatic systems to remove solids and sludge can be incorporated depending on the desired level of automation and maintenance frequency. Contact Mercer for more details.

The solids/sludge outlets are primarily for sludge and solids removal, and should be piped in such a way to also be used to drain the OWS for system cleaning procedures. It is recommended that each outlet fitting have its own full-port ball valve for segregated solids removal. This will add to the serviceability of the unit.

It is important that a solids-removal management plan is considered and incorporated as part of the cleaning of the system before its return.

E. Vent Openings

There is sufficient venting for the separation process built into the design of the OWS cover. However, on some OWS units, there are vent fittings on the top of the OWS tank wall or top. Vents should be piped to an area suitable for release, per code. Since standard units have sufficient venting within the tops, the vents fittings (if found) should be plugged if they are not used.

3. Components & Accessories

The following interior components may either come shipped separately or may come shipped in place within the OWS.

A. Standard Internal Components

1. Two-Stage Inlet Distribution Baffle.

The removable two-stage inlet distribution baffle is mounted by gravity on the inlet chamber assembly. This baffle has handles, located above the water level, for ease of installation and removal. Simply lower the baffle into position so that the bottom of the inlet distribution baffle rests on the tabs at the bottom plastic guides. The two-stage distribution baffle assembly should sit vertically in place and fit flush. Removal may require a small mechanical crane/hoist system for removal and replacement.

© 1994-2006 Mercer International, Inc. All rights reserved.

The secondary plates covering the distribution holes should face the **Multi-Pack** coalescer (see sketch). If this baffle is already in place at the time of shipment, remove all shipping tie-down ropes, etc, if any.

2. Outlet Distribution Baffle

The removable outlet distribution baffle is built into the oil-stop baffle, just downstream of the coalescer, and needs no installation or removal.

3. **Multi-Pack™** Coalescer

The **Multi-Pack** coalescer is a cross-flow, flat parallel-plate module featuring removable and adjustable plates allowing the operator to field adjust the plate spacing, enabling the OWS to attain the highest possible efficiency with the lowest practical maintenance frequency.

The **Multi-Pack** coalescer packs sit approximately in the center of the separator (side elevation view). There are angle guides to direct the **Multi-Pack** coalescers into there proper position. The correct position of the **Multi-Pack** coalescer within the OWS tankage is such that the "V" configuration of the **Multi-Pack** coalescer is visible from either the inlet end or the outlet end of the OWS. The coalescer sits in a stainless steel "cradle" designed to create a solids-holding compartment.

If the **Multi-Pack** coalescer is shipped in the OWS, the coalescer must be lifted out to remove any packing and tie-downs associated with the **Multi-Pack** coalescer, the inlet baffle, level controls, skimmers and other accessories.

4. OWS Tank Covers

The MI-A200-PP has multi-piece covers. The covers come with temporary hold-down bolts to keep the covers in place during shipment. These bolts can be removed after the OWS is set in place, unless the unit is outdoors and there is a safety concern due to wind blowing the covers.

B. Optional Accessories

Following are descriptions of the most ordered optional accessories. Disregard the descriptions that do not apply to your particular OWS system.

1. Oil Skim Pipe ☒

The oil skim pipe is an adjustable elevation device that skims the top layer of a fluid liquid with a specific gravity less than 0.90. Oil with higher specific gravity may be skimmed, however, the layer of oil required for the skim pipe to function properly may greatly reduce the efficiency of the OWS.

To install the vertical type skim pipe, simply connect the skim pipe to the oil outlet connection inside the OWS, and tighten to prevent leakage, as required. Use pipe dope or sealing tape to help seal the fittings. Use pipe dope or tape as recommended for the service. Loosen and adjust the upper over-flow fitting with a flat-head screwdriver so that the top of the skim pipe is both level and about one inch above the static water level (use a plumber's level to level this component). Units rated for high flow and/or high oil removal rates may have more than one skim pipe assembly.

Final adjustment of the skim pipe will be done during the startup operation.

© 1994-2006 Mercer International, Inc. All rights reserved.

2. Continuous Mechanical Skimmer ☒

The mechanical skimmer is an automatic skimmer designed to continuously remove oil. This skimmer will remove oil from the surface water. Follow all attached IO&M instruction for installation and for a full description of options and components (IO&M attached if ordered with OWS). Utilize the skimmer tube guides to keep the skimmer tube running in its proper path. Adjust the tube guides as necessary to prevent binding, tube "crawling" and excessive rubbing of other tank parts, as well as for optimal performance. The skimmer typically is shipped separately and will need to be bolted to the inlet cover.

3. Adjustable Process Outlet Over-flow Weir ☒

Many units have an adjustable outlet over-flow weir. The adjustable outlet weir is designed for maximal versatility for varying flow characteristics, and to accommodate changes in accessories and field modifications. This adjustable overflow has slight rotational adjustment capability for fine-tuning weir level.

4. **HSA™** Secondary Coalescer ☐

The **HSA** secondary coalescer is a self-contained interwoven fibrous High Surface Area mesh. This secondary coalescer helps remove residual oil particles. The **HSA** pack is easily removable for cleaning and re-use.

High surface area secondary coalescers/filters are generally <u>not</u> recommended in normal. Filters in a gravity flow application tend to plug easily and are an extremely high maintenance component relative to the coalescer pack. Therefore, secondary coalescers are only recommended when maintenance frequency is of little concern, and when the OWS's oil effluent quality is only slightly less than desired.

The **HSA** pack may be effective at removing small quantities of oil coated solids and "floc" that have a specific gravity relatively close to the carrier liquid (typically water). They are usually only recommended to be used when the solids loading is known to be extremely low, or when maintenance is not an issue. The **HSA** packs are used as a "safety net" to meet oil effluent limitations, and are considered only after all other alternatives are investigated.

If the **HSA** pack option is ordered, the outlet distribution baffle will not be required (and may not be shipped with the unit), in that the **HSA** also accomplishes the function of outlet flow distribution.

5. Oil-Stop Valve ☐

The oil-stop valve is an accessory designed to prevent large amounts of oil from passing through the separator in the event of a relatively large accidental spill. The oil-stop valve works on a specific gravity differential in which the specific-gravity sensitive mechanism floats in water (specific gravity 1.0), and sinks in oil (0.90 specific gravity or less). If oil enters the OWS and displaces the water out of the coalescer section, to the point that free oil flows under the oil-stop baffle and into the separator's clear water chamber, the float mechanism will sink, as the oil begins to fill this outlet compartment. As the float falls, it will seal the outlet piping manifold (internal P-trap), thus preventing all but a relatively small amount of oil from escaping the outlet. Whenever the clear water outlet chamber is emptied for maintenance (or for whatever reason), and the float mechanism is in the down (sealed) position, the float mechanism must be reset by breaking the seal that is formed. This can be reset after the clear water chamber is at its normal static water level, by simple pulling float (or cable) upward, until the seal is broken and the float assembly floats freely in its containment cage (see sketch).

Be sure to remove all packing materials from oil-stop valve, if shipped installed in the unit. If installation is required, simply remove packing materials from valve assembly and either attach the flange with gasket (larger

© 1994-2006 Mercer International, Inc. All rights reserved.

valves), or thread assembly with proper pipe dope (smaller valves) into place. Be sure to check that the float mechanism can freely ride up and down in its cage and that it seats properly on the O-ring gasket within the assembly to make a watertight seal. The outlet piping will require a vent pipe, to prevent suction, as close to the outlet fitting as possible. The vent should be no less than one half the diameter of the outlet piping. The vent pipe has to end at an elevation higher than the highest liquid level in the separator.

6. High Liquid Level/High Oil Level Float Switches ☒

The high liquid level and high oil level switches sense high liquid level and high oil level within the OWS coalescer compartment, respectively. These switches activate audio/visual alarms, and can be interlocked to oil pump-out systems, or interlocked to contactors associated with other accessory equipment. Separators with integral oil tanks may have similar level switches for high oil level audio/visual alarms.

The level switches are mounted on a gusseted platform located on the tank side-wall directly adjacent to the **Multi-Pack** coalescer. The switch component is bolted directly to this platform by the bolt holes provided. Take care in handling the level switch device, in that, the floats and mechanisms are fragile.

There is a small FNPT coupling (approx. 3/4 inch diameter) next to the gusseted platform. This is for the electrical connections (which penetrates the side wall of the tank). This connection should be made watertight. It is recommended that a junction box (or pull box) be mounted just outside the OWS at this electrical connection.

Follow **all** the enclosed electrical diagrams and installation instruction for proper wiring and operation of the level alarms, controls and control panel. Since Mercer's standard float controls are designed to be intrinsically safe, it is important to follow all installation instructions and recommendations to maintain its designed rating to assure safe operation. Complete instructions and data sheets are found toward the back of this manual if box is checked.

7. Electric Immersion Heaters ☒

Electric immersion heaters are primarily used to keep the systems from freezing (above 32°F). If larger heaters are installed, they can be used to heat smaller-than-design process flows to increase separation efficiency. If exterior tank insulation is required, call Mercer for options.

Follow **all** enclosed electrical schematics and installation instructions for proper installation and operation.

Note: once the entire OWS is set in place properly, piped and all accessories are mounted and wired for proper operation, the system start-up can begin. Consult Mercer if there are any questions regarding proper installation.

© 1994-2006 Mercer International, Inc. All rights reserved.

III. Start-up Procedure

Note: Refer to all enclosed sketches & diagrams. Wear protective clothing, goggles & gloves suitable for the service, if process water is to be used during start-up instead of clean, fresh water.

A. Be sure all installation instructions have been followed, and that the OWS is ready for operation. If you are unsure of any components and how they work, or if you are not confident that items are installed correctly, or if you do not understand the installation or operation of any part of the unit, contact Mercer for assistance.

B. Raise the skim pipe(s) to the highest setting. If the unit has an adjustable over-flow outlet weir, raise it to its highest setting, as well. Do not tighten the adjustment weir nuts tightly, in that, the weir will probably be lowered again during the start-up procedure (a hand tightening of the weir plate nuts is sufficient for this task).

C. Fill the OWS with clean/fresh water to the full static water level. The full static water level is reached when water starts to spill over the outlet weir into the clear water chamber. Inspect the tank and piping for leaks; drain and repair as required.

D. Admit clean/fresh water at the expected typical maximum flow rate. If this unit is equipped with an oil-stop valve (located in the clean-water outlet chamber), please read paragraph "J" below to prevent potential system overflow due to the oil-stop valve being in the "closed" position.

E. Once the level equalizes, adjust the process outflow weir plate downward (with the clean water still flowing) to the desired dynamic level in the coalescer section of the unit, by slowly tapping the ends of the weir with a rubber mallet. The desired dynamic liquid level will be a function of the anticipated oil layer and its consistency, oil skimming accessories and the height of the coalescers, etc. Generally, the dynamic liquid level should be *approximately* 1" above the height of the top angle frame of the coalescer(s).

F. As the weir plate approaches the desired level, take care to keep the weir plate dead level. This can be accomplished by watching the water overflow the weir plate into the clear water section of the separator. The flow over the weir should have the same crest height over the entire length. Care should be taken when adjusting the weir plate. Since it is easier to utilize gravity to tap the weir down, rather than up, take care not to tap the weir plate lower than the final desired setting. Once the weir is at the desired setting, tighten nuts only as much as required to seal the leaks. Over tightening may damage the gasket and reduce its service life.

G. Continue operating the OWS at its typical peak flow rate until the oil removal device is properly set. Once the process over-flow weir plate is at its desired position, and with the water still flowing at its typical maximum flow

© 1994-2006 Mercer International, Inc. All rights reserved.

rate, adjust the top of the skim pipe to about 1/8 to 1/4 inch above this operating water level. If the maximum flow rate cannot be attained with clean/fresh water, this procedure should be done during peak flow while in actual operation. A plumber's level will be handy to level this component.

H. Before admitting oily process wastewater into the system, check for the proper function of each of the mechanical and electrical components. For instance: practice removing the baffles, the **Multi-Pack** coalescer, etc. Test the level float controls, heaters, or any interlocked control devices. It will be much simpler to test and "de-bug" the system if clean/fresh water is used.

I. If the automatic continuous oil skimmer option was ordered originally, mount the unit on the mounting flange provided (see sketch). Only run the skimmer when separator has a liquid level 1" over the top of the coalescer frame. Follow attached installation and start up instructions supplied by the manufacturer. If the continuous skimmer is used, the static water level in the coalescer section needs to be approximately ¾" above the coalescer top angle frame. Also, the gravity skim pipe should be set high enough that no liquid will flow into it.

J. To set the installed oil-stop valve for proper operation, begin to fill the clear-water outlet chamber until the water fills the chamber and begins to cover the floating mechanism. **Make sure that the float rises with the level of the water filling the chamber, and does not stay "stuck" in its lowest position (as is found when the tank is empty). It may be necessary to pull the float (or attached cable) to break the sealing vacuum which is holding the float in place. This procedure must be done every time that this outlet chamber is emptied to prevent the float from sealing the outlet. Failure to do this may result in overflow of the entire OWS.**

K. When the water begins to reach the invert of the outlet pipe, the ball should be floating freely on the surface of the water. Observe the float at all flow rates and check that there is enough venting/vacuum breaking that the float mechanism does not get sucked down and close the outlet piping. If this does occur, call Mercer for corrective measures. When proper operation is verified, record the depth that the ball is floating in the water. This will be important for maintenance procedures to confirm that the ball is operating properly.

L. Once the system is in hydraulic balance and the mechanical and electrical components are operating properly, admit the process wastewater via the inlet piping arrangement.

NOTE: Separation of larger oil droplets and solids will start immediately. However, it will take several hours or days of operation to "seed" the **Multi-Pack** coalescer and form a "pre-coat" on the coalescer plates to separate the smaller oil particles effectively.

NOTE: Mercer strongly recommends use of a crane system for removal of the Multi-Pack coalescer and other internal components. Access to a fork lift with high lift capability or a "cherry picker," will increase ease of maintenance and final cleaning.

NOTE: Chemically and mechanically emulsified hydrocarbons are not designed to be removed with gravity displacement oil/water separators alone. Consult Mercer for "non-emulsifying" cleaners, and/or equipment up-grades for removal of this type of hydrocarbon and fine suspended solids removal.

© 1994-2006 Mercer International, Inc. All rights reserved.

IV. Operating & Maintenance Instructions

Note: 1) Maintenance supervision contracts are available from Mercer. Please contact Mercer for details.
2) Special care should be exercised around this equipment due to the potential of slippery conditions from the presence of oil & grease. OSHA approved (or applicable) platforms, stairs and rails are recommended for safety and ease of access for maintenance. Refer to all enclosed sketches & diagrams. Wear protective clothing, goggles & gloves suitable for the service.

1. Multi-Pack™ Coalescer

A. **Multi-Pack** Coalescer Inspection

Note: Proper attention to the **Multi-Pack** coalescer is the key to good performance and low maintenance.

First open or remove the OWS tank top for access to the **Multi-Pack** coalescer module. Stop all process flow into the OWS. Removing and/or cleaning coalescer while the separator is in operation may cause additional oil and solids to flow out of the unit.

If multiple separators are used, each individual **Multi-Pack** coalescer should be numbered to help build a performance history, which will be very useful in maintaining the highest possible efficiency with the lowest practical maintenance frequency. The more complete the performance history, the better the unit can be fine-tuned in the field to meet your operational needs.

After two weeks of operation, *very slowly* lift one of the **Multi-Pack** coalescer units vertically (plumb and true) with the lifting hooks provided. Spreader bars should be used when lifting multiple **Multi-Pack** coalescer modules or where lifting cables are not long enough to produce a 60° angle from the horizontal. Use only the lifting bars provided. Lift at the coalescer center of gravity to prevent damage to the coalescer frame and/or the tank. Lift the **Multi-Pack** coalescer only as far as required for complete visual inspection.

NOTE: Take special care not to damage the coalescer plates. Standard plate material (acrylic) has more rigidity than most other plastic materials, and may break more easily. Aluminum and stainless steel plates will bend and crease if hit.

Check for solids/sludge build-up within the plate gaps and the **Chimney Zone™** (the 4" baffled quiet areas running vertically in the center of the **Multi-Pack**). Inspect the condition of the coalescer plates at this time. Replace sagging or chemically corroded plates. Replacement plates are available from Mercer (many different plate materials are available for varying applications).

© 1994-2006 Mercer International, Inc. All rights reserved.

After the inspection and/or cleaning operation, it is recommended that the separator remain in an undisturbed static condition, with no flow through the unit for several minutes. This quiet time allows proper separation of dislodged oil and solids particles, and prevents them from being introduced into the effluent upon placing the separator back into service.

If the **Multi-Pack** is substantially clear and without plugging, simply re-insert it into the separator and repeat the procedure on the next **Multi-Pack** module. If the coalescer pack(s) is substantially clean/clear, the frequency of checking the pack(s) can be extended by approximately two times the length of the previous period.

For instance, if all the packs appeared substantially clean and clear, the next coalescer pack inspection could be extended from every two weeks to every month. Similarly, if after a months all the packs appear substantially clean and clear, the next inspection could be performed two months later (3 1/2 months from the original start-up).

In many applications, the **Multi-Pack** coalescers can go well over a year without plugging or fouling. However, it is good practice (and recommended by Mercer) to inspect the **Multi-Pack** coalescers at least annually. We recommend at least annual inspection because wastewater flow characteristics may change from time to time, altering the maintenance frequency.

Also immediately inspect the coalescer pack if the effluent efficiency drops off from the usual performance. Effluent performance is an indicator of coalescer condition. If effluent performance drops off, it may be an indicator that the coalescer needs attention.

If you suspect unusual amounts of solids or a change in flow characteristics, it is recommended that you inspect the coalescer.

If areas of the coalescer have excess amounts of solids or are plugged to the point of restricting flow through the plate gaps, the coalescer should be cleaned.

During cleaning a detailed description of any areas of fouling and the nature of the fouling should be carefully recorded. The description should specify exactly which plate gaps have plugging and to what extent. As mentioned, this will be useful in adjusting plate gaps to fine-tune the separation efficiency in relation to maintenance frequency, to best meet your performance needs. A photo record may be the best way of recording your visual inspections, thereby having a permanent and accurate record with only minimal paperwork requirements.

B. Cleaning the **Multi-Pack** Coalescer

Oils, solids, sludge, water, and cleaning solutions (to be used in only the most difficult to clean applications) will be the by-products of cleaning the coalescer; therefore care should be taken in choosing an appropriate area for this cleaning.

To clean the coalescer, use clean water and a pressure hose to flush the entire coalescer pack. If proper planning and care are taken, this procedure can be accomplished directly over the OWS tankage.

The **Multi-Pack** coalescer utilizes flat parallel plates (not corrugated or irregular shaped plates), and **Multi-Pack** plates are only 24" wide, so cleaning with a standard garden hose nozzle and normal city pressures is usually sufficient to clean even the most profoundly plugged packs--completely. Spray towards the center of the **Multi-Pack** module and allow the **Chimney Zone** area of the coalescer to process the solids downward and out of the **Multi-Pack** module.

DO NOT USE WATER OVER 130°F TO CLEAN ACRYLIC PLATES. Exposure to excessive temperatures will significantly decrease the service life of the plates. It is not recommended to use solutions and surfactants that will emulsify oil. If they are to be used to clean the coalescer in a difficult-to-clean application, do not clean the

© 1994-2006 Mercer International, Inc. All rights reserved.

coalescer over the separator. Completely rinse the coalescer frame and plates of the cleaner before reinsertion to prevent oil emulsification within the OWS.

If plates retain substantial solids or sludge after standard cleaning, due to the sticky nature of the solids/sludge, a firm, soft-bristled circular brush or similar instrument may be inserted between the plates for additional mechanical cleaning. Mercer can supply specialty brushes for cleaning the pack, if desired.

If the solids build-up is stubborn and brushing is ineffective, the plates are removable and can be cleaned individually. Be careful to replace plates in the correct slot openings (plate slots are at 55° angles). Care should be taken when re-inserting the plates, and should be straightened out and centered within the frame. Plates should be re-inserted from bottom to top.

NOTE: Take special care not to damage the coalescer plates. Standard plate material (acrylic) has more rigidity than most other plastic materials, and may break. Stainless steel and aluminum plates will fold and crease if hit.

After cleaning the packs, return them into the separator in the same manner in which they were removed.

In some cases, the **Multi-Pack** coalescer does not need to be removed from the OWS tankage for cleaning. Sometimes, simply "shaking" the **Multi-Pack** in an up and down movement may create sufficient fluid velocity across the plates to dislodge and process the solids from the plate gaps to the **Chimney Zone** area and then out of the **Chimney Zone** into the solids/sludge chamber underneath the coalescer packs.

The conscientious field operator will quickly learn the maintenance frequency required (and cleaning techniques) for highest performance and can then adjust the **Multi-Pack** coalescer plate gaps to meet their own maintenance frequency requirements.

C. **Multi-Pack** Coalescer Custom Field Adjustment

The **Multi-Pack** coalescer modules are field adjustable. This patented feature allows the plates to be easily removed and the plate gaps adjusted in the field, to meet your particular field conditions.

The plate gaps can be adjusted in increments of 5/16" (nominal right angle plate gaps) from the smallest possible plate gap of 5/16" to plate gaps of 5/8", 15/16", 1 1/4", 1 9/16", 1 7/8", 2 3/16" and so on, to any desired plate gap.

In general, as the gaps between plates in a coalescer get smaller, oil removal efficiency increases and maintenance requirements increase, as well. Conversely, as the plate gaps get larger, maintenance decreases, but with a corresponding decrease in oil removal efficiency.

The removable/adjustable plate feature enables the operator to field adjust the **Multi-Pack** to obtain the highest efficiency possible within a practical maintenance schedule, easily in the field.

© 1994-2006 Mercer International, Inc. All rights reserved.

If after several coalescer inspections and cleanings, there is no pattern to the area of plugging within the coalescer, and the operator wants to reduce the coalescer maintenance frequency, remove and adjust the plates by increasing the plate gaps to the next wider gap setting throughout the coalescer(s). By making this adjustment, the OWS will loose some oil removal capability, but the coalescer will take longer to plug due to solids, thus decreasing the frequency of maintenance. Additional plates are available from Mercer.

An easier method is to simply remove every other plate. This is the most simple coalescer adjustment procedure that requires not additional plates, and takes less than five minutes per pack. After this adjustment, the existing plate gap will effectively double. In this case, the OWS will loose some more oil removal capability, but the coalescer will operate even longer before cleaning is needed.

This important feature gives the operator options and choices in deciding the best way to meet effluent criteria. This inherent versatility enables the operator to attain higher performance without the aggressive maintenance regime typically required by other types of coalescers.

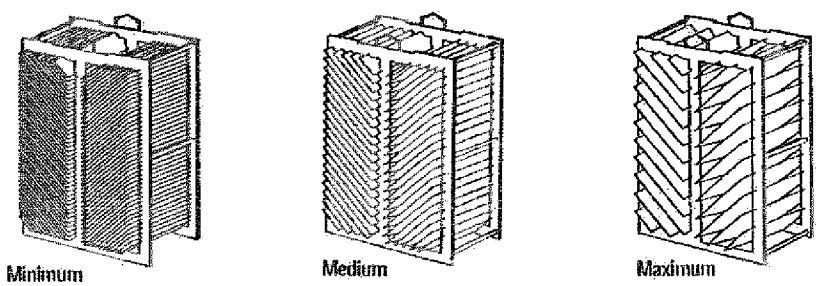

Different Plate Settings (no pattern of plugging)

U.S. Patent Protected. Patent Nos. 5,173,195 & B1 5,173,195

© 1994-2006 Mercer International, Inc. All rights reserved.

If after several inspections and cleanings a *pattern* of coalescer fouling does become evident, **remove and/or adjust plates in only those areas where plugging is persistent.** By doing this, the OWS will maintain the higher efficiencies where plugging is not a problem. By removing plates where plugging is repetitive, the operator can effectively extend the time in between inspections and cleanings, without compromising efficiency throughout the remainder of the coalescer.

Typically, solids will be more concentrated toward the bottom of the coalescer pack since this is naturally where the solids drift during the gravity separation process. Also, the very top to the coalescer, where solids are present in the oil layer, may be an area of higher fouling. These are two areas in which to pay particular attention.

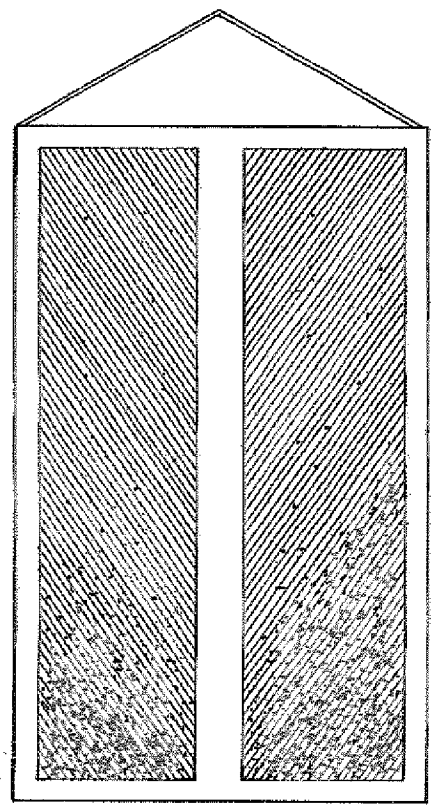

Possible Pattern of Plugging

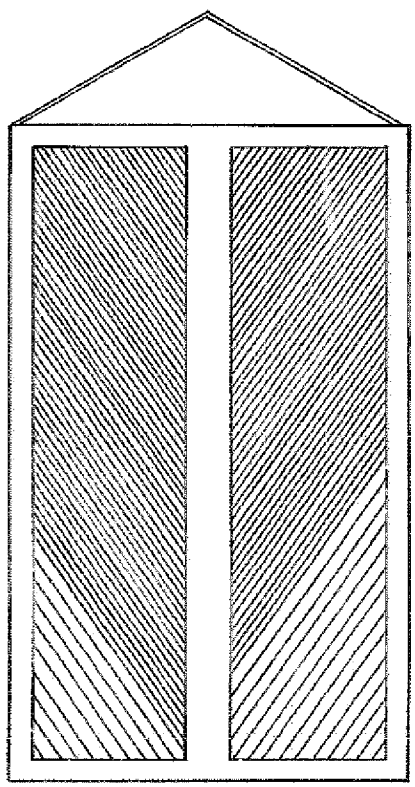

Proper adjustment of plates
to extend maintenance frequency

U.S. Patent Protected. Patent Nos. 5,173,195 & B1 5,173,195

© 1994-2006 Mercer International, Inc. All rights reserved.

2. Tankage & Standard Internal Components

A. Two-Stage Inlet Baffle

The inlet chamber leading to the inlet distribution baffle is a common area of solids build-up. The two-stage inlet distribution baffle is designed to be easily removed for cleaning and replaced without draining the separator.

The inlet chamber and distribution baffle should be inspected after two weeks of operation. This is accomplished by slowly pulling up vertically on the exposed lifting handle (or by the top row of distribution holes, if no lifting bar is present). Be sure to pull up the baffle at the center of gravity. When removing and replacing the baffle plate, be careful not to scratch or otherwise damage the plastic tank walls.

Inspect the baffle and inlet chamber for solids. Clean any solids or sludge build up that may be present. Use a long wooden dowel or other device to probe for solids in the inlet chamber. If solids are present, determine what tools or instruments would be most effective to dislodge and move the solids/sludge to the solids/sludge chamber below. If this cannot be effectively accomplished while the OWS is full, the unit will need to be drained for this maintenance task to be accomplished.

After cleaning is completed, replace the baffle in its proper operating position (see sketch). If the OWS has to be emptied to maintain the inlet chamber, prime OWS back to the full static water level with clean, fresh water.

If the baffle and inlet chamber were substantially clear of solids and sludge, maintenance frequency can be extended in the same manner as previously described for the **Multi-Pack** coalescer. Typical frequency of cleaning may be every six months, depending on the characteristics of the solids/sludge present in the flow.

B. Outlet Distribution Baffle

In some models the outlet distribution baffle is removable. If the OWS has a removable outlet distribution baffle, this can be removed, cleaned and replaced in a similar manner as the inlet baffle. When re-inserting the outlet baffle, the stand-off tabs are to point toward the **Multi-Pack** coalescer. This will allow maximal volume in the coalescer compartment where most of the separation occurs.

This baffle generally needs less maintenance attention than the inlet baffle. Maintenance frequency can be extended in the same manner as previously described for the **Multi-Pack** coalescer. Typically, the maintenance frequency for this baffle will be semi annual or annual, or should be done as often as the unit is drained for a routine overall cleaning.

C. Solids/Sludge Chamber

It is important that a workable solids-removal management plan is implemented. Contact Mercer for information on various piping configurations for effective sludge removal.

The solids/sludge chambers typically have the highest concentration of solids and sludge within the OWS. After one day of operation the solids/sludge outlet valves should be opened to remove any accumulation of debris.

This can be accomplished with a good quality full-port ball valve. The valve should be opened and shut quickly several times until the solids are sufficiently removed. Experience in maintaining the solids/sludge chamber will dictate the amount and duration of time each valve needs to be opened to efficiently remove solids.

© 1994-2006 Mercer International, Inc. All rights reserved.

Certain solids may not easily drift toward the outlet ports. Also, if the solids sit in this chamber too long, they may start to solidify and may not move toward the solids outlet. If this occurs, it is necessary to vacuum these solids via the top of the OWS tank. Note that each **Multi-Pack** coalescer has a 4" wide vertical **Chimney Zone** in which a suction hose can be lowered through to access the solids/sludge chamber in areas directly below the coalescers. With this feature, it may be possible to access these solids sufficiently, without having to remove the coalescer or without having to drain the tank.

If solids accumulations are sufficiently high to warrant automation, automatic-operating valves can be incorporated in a variety of ways. Also, continuous gravity bleed or adjustable flow pumps can be utilized. Consult Mercer for more information.

After the solids/sludge valves have been opened, and the solids removed, it is recommended to probe this chamber area with a long wooden dowel or similar device to "feel" for any solids that do not move to the sludge outlets.

If sludge will not move out of the solids/sludge outlets, it may be most practical to allow the solids to build up in this chamber and remove them when the sludge chamber reaches its capacity, rather than continually trying to keep up with solids removal. **In no case should the solids be allowed to build up and into the Multi-Pack coalescer (or immersion heaters, if present).** This will adversely affect the performance of the OWS and may cause damage to the coalescer plates. Further, if the solids are relatively light (close to the specific gravity of water) and are allowed to build up high enough in the last solids/sludge chamber near the outlet, it is possible that they could be carried into the effluent stream.

Frequency of maintaining the solids/sludge chamber will be determined by the amount of solids and the characteristics of the wastewater entering the OWS. Frequency will vary greatly: from once a shift to once a quarter. Typical frequency of maintenance for sludge removal may be once every week or two, depending on solids concentration and characteristics.

D. OWS Tankage

The entire OWS and tankage requires occasional cleaning due to build-up of solids, oil and the like. Approximately, annually or biannually (and before return of the unit) the entire OWS and components and accessories should be completely drained and thoroughly cleaned of all solids, sludge, oil, etc. Before draining the OWS, remove the floating oil layer. This will help keep the different phases of material separate. Follow all OSHA "confined space entry" regulations.

Follow start-up procedure to return the OWS into service.

© 1994-2006 Mercer International, Inc. All rights reserved.

3. Optional Accessories

A. Oil Skim Pipe ☒

The oil skim pipe should be kept free of viscous oils, sludge and solids that will prevent obstructed flow of oil for removal. The lip of the overflow weir should be kept clean and free of debris. This maintenance procedure should be done as frequently as required to keep the flow of oil unobstructed. An automatic continuous skimmer can be added to the separator to automatically remove floating oil and sludge.

The inside of the skim pipe should be de-sludged and cleaned from time to time, as required.

The frequency of maintenance will depend on the characteristics of the floating material. Oil skim pipes are ineffective for automatic removal in many wastewater flows. If this is the case, the oil needs to be manually decanted from time to time, or an automatic tube-type oil skimmer can be easily retrofitted onto the OWS (contact Mercer for details).

B. Continuous Mechanical Skimmer ☐

Follow oil skimmer manufacturer's O&M manual recommendations for proper operation and maintenance of this automatic system (attached if box is checked). To avoid tube breakage and motor/gear wear, never run the skimmer without the water level 1" higher than the top coalescer angles.

C **HSA™** Secondary Coalescer ☐

The **HSA** secondary coalescer is only recommended when more solids and oils need to be removed than the **Muiti-Pack** is able to remove when properly field adjusted. This accessory is rarely recommended because the **HSA** pack is a filter/screen. Filters in a gravity flow application tend to plug easily and are an extremely high maintenance component relative to the coalescer pack. Therefore, secondary coalescers are only recommended when maintenance frequency is of little concern, and when the OWS's oil effluent quality is only slightly less than desired. The **HSA** pack may also be effective at removing small quantities of oil coated solids and "floc" that have a specific gravity relatively close to the carrier liquid (typically water).

To remove **HSA** secondary coalescer for cleaning, slowly lift handles located at the top of the pack until the entire frame is out of water. Allow the pack to drain for a few minutes.

To clean the **HSA** pack, use a high pressure hose to flush the entire front and back of the pack. This pack may have to be soaked in warm water and cleaning solutions. Pressure wash and soak as required to completely clean the pack. Rinse all residual cleaning solutions from pack to prevent oil emulsification in the OWS. It is recommended that a spare **HSA** pack(s) be available.

The actual mesh material is removable from the frame for cleaning or replacement. Remove the set pins for removal of the mesh pack from the frame. Replace pins before re-installing. The **HSA** pack may have a coarse filter and fine filter mesh together. The coarse filter should face the **Multi-Pack** coalescer for insertion in the proper position. Consult Mercer for replacement, as required.

D Adjustable Process Over-flow Weir ☒

The maintenance for an adjustable over-flow weir is simply to clean built up solids/sludge from crest of the plate and visually check for even flow across the entire weir, when the flow is running. If adjustment is required to equalize flow evenly across the weir plate, follow procedures described in the "Start-up" section of this manual.

© 1994-2006 Mercer International, Inc. All rights reserved.

Check for gasket leaks. Tighten nuts only as much as required to seal the leak. Over tightening may reduce its service life. Check wear/corrosion to this sealing gasket; replace as necessary (contact Mercer for spare parts).

E Oil-Stop Valve ☐

Check the depth that the oil-stop mechanism is floating in the water. Make sure that the unit is floating at the usual depth (the same depth as recorded at the system start-up). If it appears to be less buoyant than before, remove the float--clean and inspect it for leaks.

Check the float seal O-ring at base of the oil-stop valve for wear/corrosion. Replace as necessary (contact Mercer for replacement parts). Clean residual solids/scum from surface of O-ring.

Clean residual solids/scum from float mechanism. If the float is stainless steel and there is an anode attached to it, check the anode for degradation. Replace as necessary (contact Mercer for replacement parts).

Whenever the clear water outlet chamber is emptied for maintenance (or for whatever reason), and the float mechanism is in the down (sealed) position, the float mechanism must be reset by breaking the seal that is formed. This can be reset after the clear water chamber is at its normal static water level, by simple pulling the float upward until the seal is broken and the float assembly floats freely in its containment cage (see sketch). **Make sure that the float rises with the level of the water filling the chamber, and does not stay stuck its lowest position (as found when the tank is empty). It may be necessary to pull the float (or attached cable) to break the sealing vacuum which is holding the float in place. This procedure must be done every time that this outlet chamber is emptied to prevent the float from sealing the outlet. Failure to do this may result in overflow of the entire OWS.**

F. Level Switch Assemblies ☒

Typical level switches are for high level and high oil conditions within the OWS's separation area. If there is an integral oil tank, there is typically one or more level switches associated with this integral tank, as well. If the panel is powered up when the separator is not full, there will be an alarm (which is normal), and can be silenced.

The high level float switch should occasionally be manually activated to test for proper operation of alarms and/or interlocked accessories.

The high oil float switch requires more attention than the high level float switch, in that, in normal operating conditions it is located within the static water and oil layer. This float switch rides on the float rod that the high level float switch is on. Since the float mechanism is in the process flow, it can accumulate solids and/or sludge that can prevent the float from freely riding up and down the float rod. This should be tested frequently.

To test for proper operation of the high oil float, simply push the spring-loaded trip rod down approximately one inch.

The trip rod is coupled to the top of the high oil float switch. When you push it down, the high oil float switch will be pushed down, and should trip (make the contact) the level switch. This should activate the high oil audio/visual alarm and any associated interlocked functions.

Gently release the trip rod to allow it to go back to in its original position. This should simulate a normal oil condition. If the float resets itself when the trip rod is returned to its original position (the audio/visual alarm should stop), the high oil level float assembly is operational and is not fouled with solids.

This trip rod is included on most models and is for use when it is impractical to access the float switch below the oil and water line. It is recommended that the float switch is visually inspected for solids build-up and proper function, whenever the tank is emptied below this float, or quarterly (at a minimum).

© 1994-2006 Mercer International, Inc. All rights reserved.

If the float switch movement is sluggish due to solids build-up, unbolt and remove the float assembly (leaving the flexible wiring connections in place), and gently clean the entire assembly.

Remove floats as necessary to clean sludge from between float and rod. To remove the float in order to clean in between float and rod, remove the bottom allen nut collar (or snap ring) and slide the float off the bottom of the rod. Be careful to replace float switch in the same position that it was removed (there should be markings on the float to indicate "normally open" and "normally closed"). Once clean, replace float in its proper position, and replace the collar or snap ring. Standard integral oil level switches should operate and be maintained in the same manner.

If the float is put back upside down, a normally opened switch will become a normally closed switch and visa versa. To be sure that the float switch is put back in its original position, reconnect the float assembly and manually move the switch to see that it is producing the proper sequence of alarm/control functions.

G. Electric Heaters ☒

At least annually the heaters should be thoroughly cleaned of sludge build-up. If the unit has immersion heaters, the solids/sludge layer should not be allowed to build up to the heaters. Follow all heater manufacturer's O&M manual recommendations for proper operation and maintenance of this system (attached if box is checked).

© 1994-2006 Mercer International, Inc. All rights reserved.

V. Spare Parts

At least one spare **Multi-Pack™** coalescer (or one spare set) is recommended to have on hand at all times, as well as a full set of spare plates for at least one or more coalescer packs. Units are typically shipped with the number of plates required for plate gaps of nominal 5/8" right angle gaps (every other plate in place). Additional plates can be ordered for tighter plate gap settings, if desired.

If the **HSA™** secondary coalescer pack is used, at least one spare secondary coalescer (or set), complete with frame, is recommended to have on hand.

One of each level float switch assemblies and two sets of floats for each level switch are recommended to have on hand.

Specialty cleaning tools are available from Mercer for aid in cleaning the **Multi-Pack** coalescers. A Polaroid camera is recommended for keeping a permanent maintenance record of the **Multi-Pack** coalescers.

For recommended spare parts of control panels and other accessory equipment, refer to manufacturer's O&M manuals (attached if ordered).

Call Mercer for details on maintenance supervision contracts. We can also assist in other areas of you wastewater treatment or process system. Contact Mercer if you have questions or need further information.

© 1994-2006 Mercer International, Inc. All rights reserved.

EPA-NC-CE-0000559

BILL OF MATERIAL

ITEM NO.	QTY	DESCRIPTION	REMARK
1	1	WATER INLET 6" DIA	
2	1	INLET CHAMBER	
3	1	TWO-STAGE INLET DISTRIBUTION BAFFLE	MAT'L: ALUM.
4	1	REMOVABLE COVER W/ ACCESS LIDS	2 LIDS
5	1	PATENTED MULTI PACK™ COALESCER	FRAME: 304 S.S.
6	1	OIL-STOP BAFFLE	POLYPROPYLENE
7	1	OVERFLOW WEIR	POLYPROPYLENE
8	1	WATER OUTLET 6" DIA	
9	1	CLEARWELL COMPARTMENT	
10	1	TANK ASSEMBLY	POLYPROPYLENE
11	3	BYPASS PREVENTATION BAFFLES	
12	1	ADJUSTABLE GRAVITY OIL SKIN PIPE	2"DIA
13	3	SOLIDS/SLUDGE CHAMBER	
14	1	COALESCER STAND	MAT'L: 304 S.S.

(4) NOT SHOWN

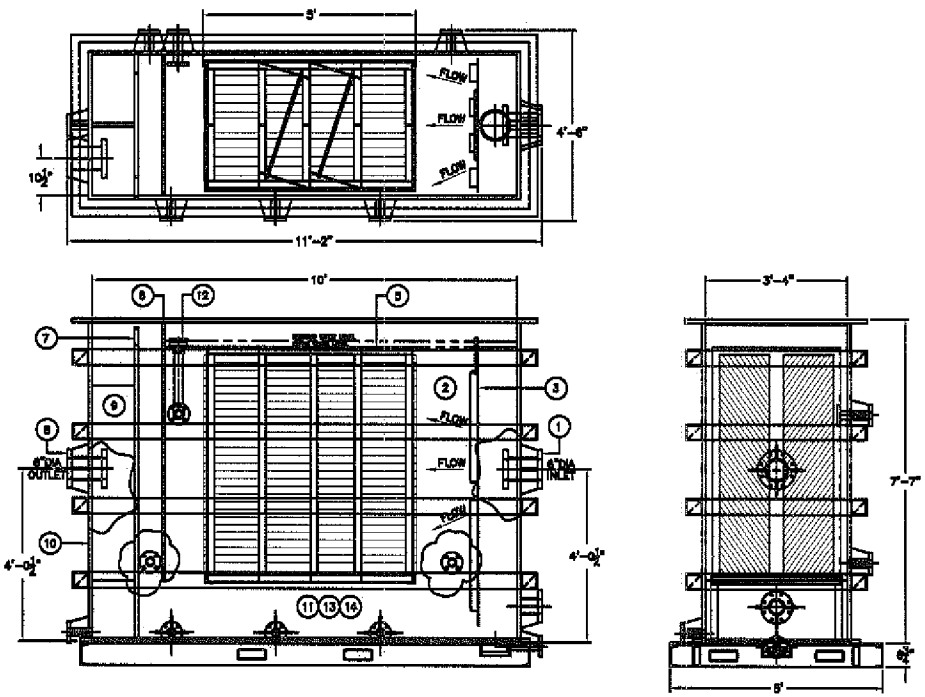

PRELIMINARY DRAWING

NOTES:
1) MATERIAL SHALL BE NATURAL POLYPROPYLENE UNLESS OTHERWISE NOTED.
2) REMOVE ALL BURRS AND SHARP CORNERS.

Mercer International Inc.
POLYPROPYLENE OWS
A200 GPM TANK
D MI-A200-PP 01 of 01 00

MERCER INTERNATIONAL INC.
WASTEWATER TREATMENT SYSTEMS

Mercer International *Compliance Master* Recommended Spare Parts List

Con Ed Hudson 11th Street Conduit - MI-A200-PP OWS

Part #	Description	Price	Tier
1	Multi-Pack coalescer-complete with 304 s.s. plates	**$18,500**	3
2	Oil Skimmer Assembly--Complete	$3,750	2
3	Electric Bayonnete Heater (2)	$2,550	2
4	Coalescer Plates (304 stl. Stl.) - Assorted set	$1,750	2
5	Oil Skimmer sub-assemblies, 55SA, 57SA & 58SA	$1,450	2
6	OWS Level Switch assembly, complete	$1,250	2
		$10,750	
7	Set of 4 nylon coalescer flow stops	$150	1
8	Over flow weir plate gasket (white nitrile)	$325	1
9	Adjustable gravity oil skimmer boots (2)	$20	1
10	Control panel spares, including spare fuses,	$1,500	1
	skimmer contactor, timer, bulbs and lens caps.	-	
11	Spare Level Switch floats and collars	$250	1
12	Internal Oil Skimmer Parts, 55SA, 57SA & 58SA	$1,450	1
13	Oil Skimmer parts including: 2 skimmer tubes,	$2,500	1
	skimmer motor, ceramic fingers, ceramic cylinder	-	
	ceramic wear pieces, drive wheel, tube scraper,	-	
	motor coupling, scraper bracket, P&G block.	-	
14	Electric Bayonnet heater (1)	$1,275	1
15	Set of stainless steel bolts/nuts/washers for covers	$35	1
16	Set of stainless steel bolts/nuts/washers for weir	$40	1
17	Custom coalescer cleaning brushes (4)	$350	1
		$7,895	

Tier 1 Parts to have for ease of typical maintenance and/or critical funtions.
Tier 2 Additional parts for quick change out of components.
Tier 3 Additional Multi-Pack Coalescer for quickest change out of coalescer component.

* * * 39 West Main Street, Mendham, NJ, 07945 / (973) 543-9000 / fax 543-4343 * * *

EPA-NC-CE-0000561

NAMEPLATE SCHEDULE

TAG	INSCRIPTION	LETTER COLOR	PLATE COLOR	LETTER HEIGHT	PLATE SIZE (W x H)	TAG	INSCRIPTION	LETTER COLOR	PLATE COLOR	LETTER HEIGHT	PLATE SIZE (W x H)
NP-8	SPARE	BLACK	WHITE	0.125"	2.5"x0.75"	NP-1	POWER ON	BLACK	WHITE	0.125"	2.5"x0.75"
NP-9	OIL SKIMMER #2 ON	BLACK	WHITE	0.125"	2.5"x0.75"	NP-2	ALARM RESET	BLACK	WHITE	0.125"	2.5"x0.75"
NP-10	OIL SKIMMER #2 HAND OFF AUTO	BLACK	WHITE	0.125"	2.5"x0.75"	NP-3	OIL SKIMMER #1 ON	BLACK	WHITE	0.125"	2.5"x0.75"
NP-11	OWS #2 HIGH LEVEL	BLACK	WHITE	0.125"	2.5"x0.75"	NP-4	OIL SKIMMER #1 HAND OFF AUTO	BLACK	WHITE	0.125"	2.5"x0.75"
NP-12	OWS #2 HIGH OIL LEVEL	BLACK	WHITE	0.125"	2.5"x0.75"	NP-5	OWS #1 HIGH LEVEL	BLACK	WHITE	0.125"	2.5"x0.75"
NP-13	OWS #2 OIL TANK HIGH LEVEL	BLACK	WHITE	0.125"	2.5"x0.75"	NP-6	OWS #1 HIGH OIL LEVEL	BLACK	WHITE	0.125"	2.5"x0.75"
NP-14	SPARE	BLACK	WHITE	0.125"	2.5"x0.75"	NP-7	OWS #1 OIL TANK HIGH LEVEL	BLACK	WHITE	0.125"	2.5"x0.75"

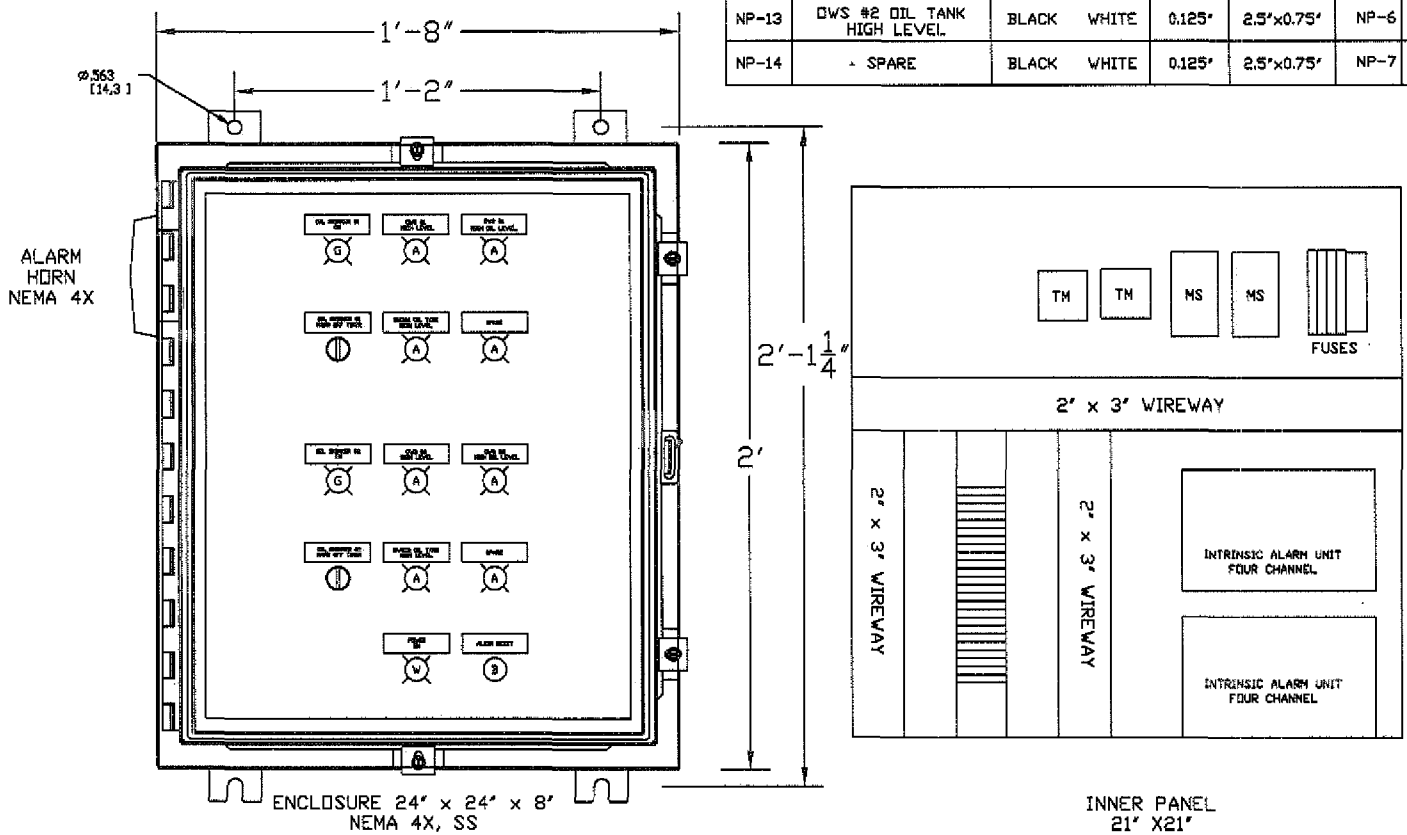

REV.	DESCRIPTION	DATE
0	RELEASED FOR FABRICATION	1/09/07

DRAWN BY	ICS
CHECKED BY	RWH
DATE	1/02/07
JOB NUMBER	J06360
DATE	1/02/07
PO NUMBER	

THIS DRAWING IS THE CONFIDENTIAL PROPERTY OF INDUSTRIAL CONTROL SOLUTIONS. ANY REPRODUCTION, DISCLOSURE AND USE OF THIS DRAWING WITHOUT AUTHORIZATION IS PROHIBITED. THIS DRAWING MUST BE RETURNED TO ICS ON DEMAND OR IF USED FOR ANY OTHER PURPOSE THEN INTENDED.

CUSTOMER: MERCER INTERNATIONAL /CON EDISON 11 TH. STREET CONDUIT

TITLE: NEMA 4X OIL SKIMMER, LEVEL ALARM CONTROL PANEL PANEL LAYOUT

Industrial Control Solutions
4 BEAVERBROOK ROAD, #137
LINCOLN PARK, NEW JERSEY 07035
PHONE: 973-244-4450
FAX: 973-244-5699

FILENAME	DRAWING NUMBER	SHEET	REV
NONE	J06360-1	1 of 3	0

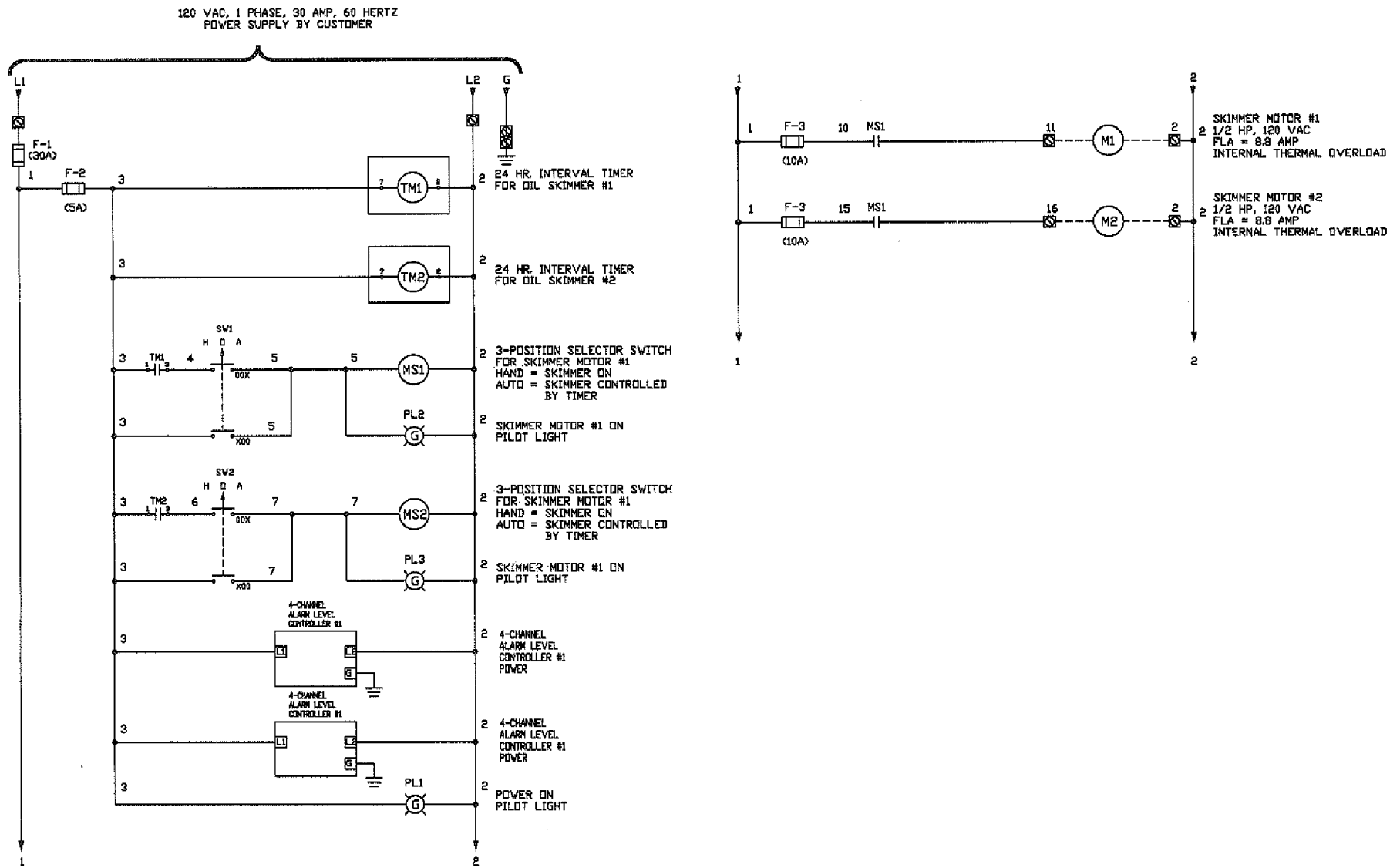

NOTES:

1. ⊠ TERMINALS LOCATED IN PANEL.
2. DASHED LINES DENOTE FIELD WIRING
3. ALL INTRINSICALLY SAFE WIRING MUST BE RUN IN A DEADICATED, SEPPARATE CONDUIT FROM ALL OTHER WIRING.

REV.	DESCRIPTION	DATE

REV.	DESCRIPTION	DATE
A	RELEASED FOR FABRICATION	1/25/07

DRAWN BY: KCS 1/02/07
DESIGNED BY: RWN 1/02/07
JOB NUMBER: J06360

THIS DRAWING IS THE CONFIDENTIAL PROPERTY OF INDUSTRIAL CONTROL SOLUTIONS. ANY REPRODUCTION, DISCLOSURE AND USE OF THIS DRAWING WITHOUT AUTHORIZATION IS PROHIBITED. THIS DRAWING MUST BE RETURNED TO ICS ON DEMAND OR IF USED FOR ANY OTHER PURPOSE OTHER THAN INTENDED.

MERCER INTERNATIONAL /CON EDISON
11 TH. STREET CONDUIT

NEMA 4X OIL SKIMMER, LEVEL ALARM
CONTROL PANEL
WIRING SCHEMATIC

Industrial Control Solutions
4 BEAVERBROOK ROAD, #137
LINCOLN PARK, NEW JERSEY 07035
PHONE: 973-244-4450
FAX: 973-244-5859

SCALE: NONE | DRAWING NUMBER: J06360-2 | SHEET: 2 of 3 | REV: 0

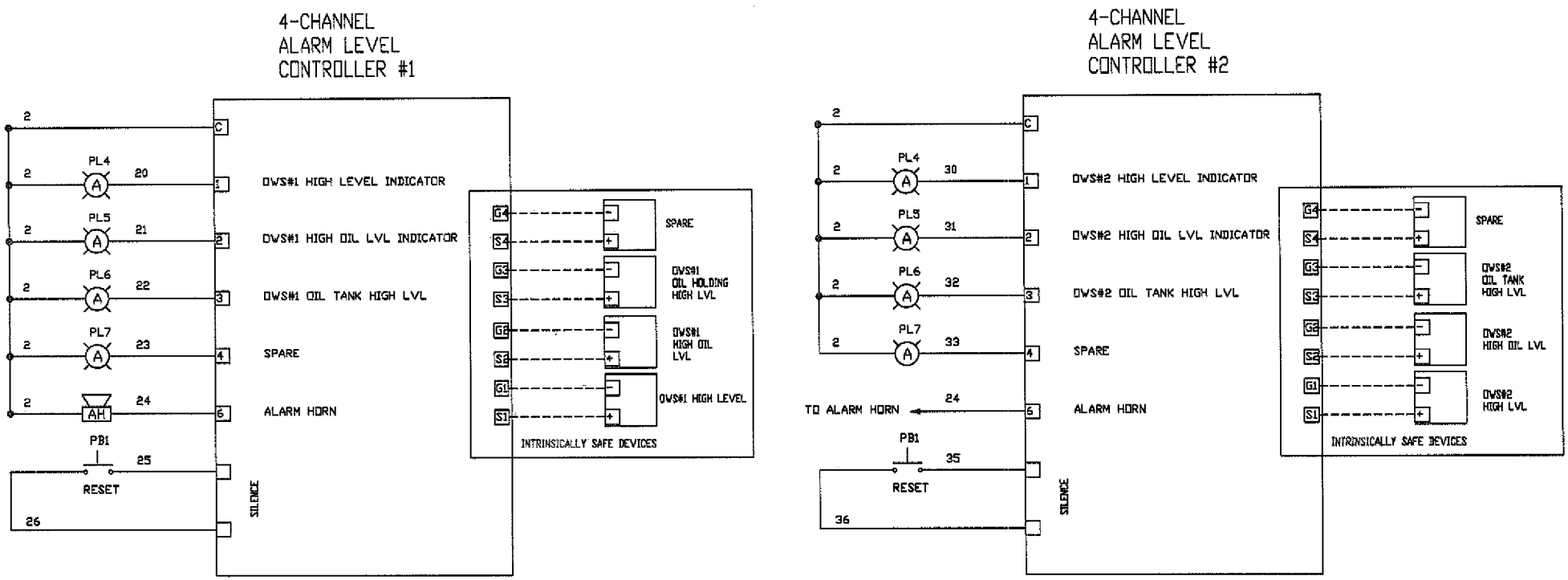

NOTES:

1. TERMINALS LOCATED IN PANEL.
2. DASHED LINES DENOTE FIELD WIRING
3. ALL INTRINSICALLY SAFE WIRING MUST BE RUN IN A DEADICATED, SEPPARATE CONDUIT FROM ALL OTHER WIRING.

REV.	DESCRIPTION	DATE	REV.	DESCRIPTION	DATE
			0	RELEASED FOR FABRICATION	1/05/07

DRAWN BY: ICS	DATE: 1/02/07	JOB NUMBER: J06360	
CHECKED BY: RWN	DATE: 1/02/07	PO NUMBER: VERBAL	

THIS DRAWING IS THE CONFIDENTIAL PROPERTY OF INDUSTRIAL CONTROL SOLUTIONS. ANY REPRODUCTION, DISCLOSURE AND USE OF THIS DRAWING WITHOUT AUTHORIZATION IS PROHIBITED. THIS DRAWING MUST BE RETURNED TO ICS ON DEMAND OR IF USED FOR ANY OTHER PURPOSE OTHER THEY INTENDED.

CLIENT: MERCER INTERNATIONAL /CON EDISON
11 TH. STREET CONDUIT

TITLE: NEMA 4X OIL SKIMMER, LEVEL ALARM CONTROL PANEL WIRING SCHEMATIC

Industrial Control Solutions
4 BEAVERBROOK ROAD, #137
LINCOLN PARK, NEW JERSEY 07035
PHONE: 973-244-4450
FAX: 973-244-5859

SCALE	DRAWING NUMBER	SHEET	REV
NONE	J06360-3	3 of 3	0

EPA-NC-CE-0000563

-PROPRIETARY NOTICE-
THIS DOCUMENT AND THE DATA DISCLOSED HEREIN OR HEREWITH IS NOT TO BE REPRODUCED, USED, OR DISCLOSED IN WHOLE OR IN PART TO ANYONE WITHOUT THE PERMISSION OF INNOVATION SOLUTIONS.

REVISION BLOCK				
REV.	E.C.N. NO.	DESCRIPTION	DATE	APPRV'D.
00		INITIAL RELEASE		

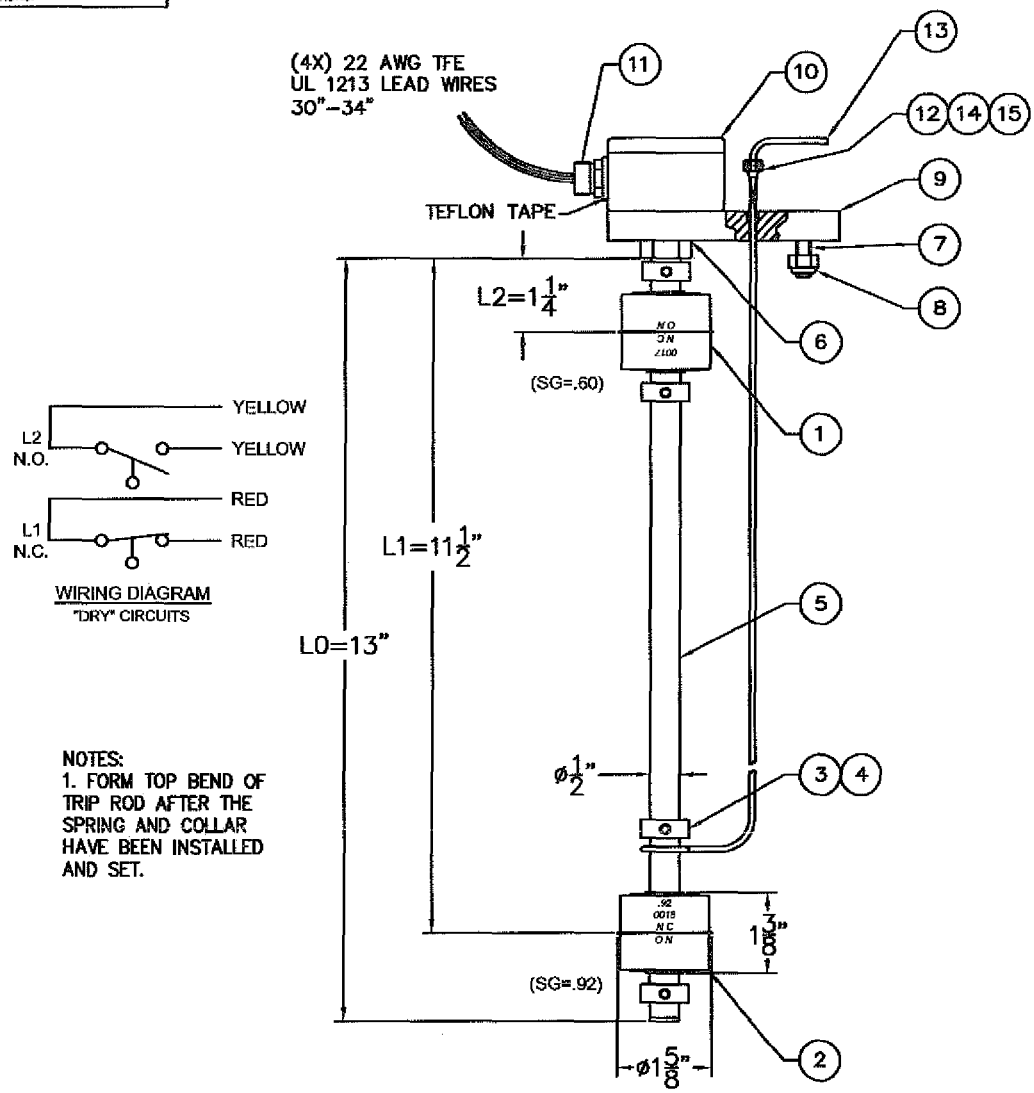

NOTES:
1. FORM TOP BEND OF TRIP ROD AFTER THE SPRING AND COLLAR HAVE BEEN INSTALLED AND SET.

ITEM	QTY	PART NUMBER	DESCRIPTION, CATALOG NO. OR FINISHED SIZE	MAT'L
15	1	0820–0022–0125	#4–40 X 1/8" SET SCREW	18–8 SS
14	1	0610C2602–0001	.094 ID SHAFT COLLAR	316 SS
13	1	0850C5859–0001	TRIP ROD	316 SS
12	1	0840C2602–0002	SPRING .180 OD X .75 LG	SS
11	1	0150C2602–0001	CORD GRIP CONNECTOR	BRASS
10	1	0700C2602–0001	DIECAST BOX 2"X2"X1.25"	ALUM.
9	1	0199C5859–0001	MTG. BLOCK 2"X4"X1/2"	NYLON
8	2	0800C2602–0001	NYLOK NUT 1/4"–20	316 SS
7	2	0820C2602–0001	MTG. SCREW 1/4"–20	316 SS
6	2	0650–2014–0001	O–RING	BUNA–N
5	1	5000C5859–0001	STEM/ELECT. ASSY	316 SS
4	4	0820–0009–0188	#8–32 X 3/16 SET SCREW	316 SS
3	4	0610–0500–0008	SHAFT COLLAR	316 SS
2	1	2000–1513–0018	1513 FLOAT (SG=.92)	316 SS
1	1	2000–1513–0017	1513 FLOAT (SG=.60)	316 SS

UNLESS OTHERWISE SPECIFIED
DIMENSIONS ARE IN INCHES, [ ] ARE IN MM (MILLIMETERS)
TOLERANCES:
X±.1 XX±.01 XXX±.005
FRACTIONS ±1/64, ANGLES±30'
MACHINED SURFACES: 63 RMS
REMOVE ALL BURRS AND SHARP EDGES
MATL: AS SPECIFIED
MATL PART #
HEAT TREAT
FINISH
PLATING
DRAWN BY: MJR
DATE: 12/17/09
CHKD. BY:
DATE:
APPRVD. BY:
DATE:
PROJECT NO.
SKETCH NO.
NEXT ASSY.

INNOVATIVE SOLUTIONS, LLC
60 GREAT HILL ROAD, NAUGATUCK, CT 06770 USA

TITLE: POINT LEVEL OIL/WATER SEPARATOR LEVEL SENSOR

SIZE: B
FSCM NO.
DWG. NO. L500C5859–0001
REV. 00
SCALE 0.3125
SHEET 1 OF 1

Pre Installation

- Check to make sure that heater received is the same as that ordered.
- Elements may come in contact with each other during shipment. Minor adjustments to elements may be required prior to installation to separate them. Extensive bending of elements should be avoided since dielectric strength between coil and sheath may be compromised.
- Watlow heaters are built to comply with UL and CSA dielectric requirements, it may be necessary due to atmospheric conditions / humidity, to perform a dielectric test prior to startup. (Refer to **megohm test** under **Installation** section)

Safety

Electric heaters are inherently dangerous!! Care should be taken to read and completely understand the Installation and Maintenance manual before installing and wiring the heater. Any installation and maintenance performed on the heater shall be done by a qualified electrician, in accordance with the "National Electric Code" and other electrical codes as they apply. It is the users responsibility to ensure that the heater being used is properly selected and installed in the application.

The Caution Symbol (exclamation point) alerts you to a **"CAUTION"**, a safety or functional hazard which could affect your equipment or its performance.

The warning symbol (lightning bolt) alerts you to a **"WARNING"**, a safety hazard which could affect you and the equipment

Installation

Proper heater selection and installation will result in efficient heat transfer, safe operation, and long heater life.

1. **Megohm precheck**
   During shipping and/or storage, the possibility of moisture absorption by the insulation material within the element is possible. To ensure proper megohm values a minimum 500 VDC megohm meter (Megger) should be used to ensure that the megohm reading between the heater terminal and the heater sheath is more than 10 megohms when the unit is at room temperature.

   If several units are interconnected, the megohm of the heater is obtained by taking the reading and dividing by the number of interconnected elements. This reading should be greater than 10 megohms.

   If a low megohm value exists, two alternative methods can be used to remedy the situation. The best method is to remove all terminal hardware including thermostat if provided, and bake out the heater at no higher than 250°F (120°C) overnight or until an acceptable reading is reached. The second method is to energize the unit at low voltage in air until the megohm is at an acceptable reading. Care should be taken to prevent the heater sheath from exceeding 750°F (398°C) for Incoloy® and steel elements and 400°F (204°C) for copper elements.

2. **Protection of heater elements from over temperature**
   The use of temperature controls to regulate heating process and prevent heater over temperature is highly recommended to ensure safe heater operation. It is the users responsibility to ensure safety of the installation.

WARNING: ***Install high temperature control protection in systems where an over temperature fault condition could present a fire hazard or other hazard. Failure to install temperature control protection where a potential hazard exists could result in damage to equipment and property, and injury to personnel.***

EPA-NC-CE-0000565

Failure of components in a temperature control loop, such as the sensor, heater control relay or main temperature control, can result in damage to a product in process, a melt down of a heater, and / or damaging fire.

To protect against this possibility, over temperature protection must be provided to interrupt or remove power from the heater circuit. **A bulb and capillary thermostat is not recommended for this function since it may not respond quickly enough to adequately protect the heater. In cases where the thermostat bulb gets too hot before the system is turned off, the thermostat bulb could rupture. This could result in the thermostat remaining in the "ON" condition since there is insufficient fluid to move contacts apart.** We recommend the temperature protection have appropriate third party approval, and be applied in the classification for which it was tested and approved.

In order to help prevent premature failure and a potentially hazardous condition in cases where consequences of failure may be severe, use an appropriate third party approved liquid level protection device. The liquid level should be such that the entire heater is fully submerged with enough liquid above the heater to adequately dissipate heat from itself as under normal operating conditions. Consult your local authorized sales representative for specific recommendations for your application.

3. **Terminal Enclosures**
Terminal enclosures should be selected to be compatible with the environment in which the heater will be located. It is the users responsibility to determine the need for correct rating of the electrical housing. This should be based on appropriate national and local electrical codes. Failure to use a compatible enclosure could result in heater damage and personnel danger.

Standard terminal enclosures are designed for general purpose use and are rated NEMA 1. These enclosures should be applied where there will be no danger of spilled liquids, dampness, dirt, and gaseous conditions. Enclosures for wet or hazardous locations are also available, but must be installed at the factory.

Although enclosures are supplied over the terminals, units should be located in an area that will minimize the chance of being hit by falling or moving objects. The terminals must be protected at all times from moisture or vapor.

In hazardous locations, (as defined in NFPA 70 NEC, Article 501) explosion resistant housings must be used.

In order to maintain termination integrity, the terminal enclosure should be kept below 400°F (204°C).

4. **Orientation / Mounting**
Watlow flange immersion heaters incorporate a standard ANSI flange for universal mounting in tanks equipped with the same size mounting flange. A suitable gasket and mounting bolts are required for installation but are not provided with the heater. The correct gasket material should be based on the material being heated and the process temperature.

Heater orientation is important in order to ensure efficient heat transfer and safe operation. Care should be taken to allow enough room for heater expansion without compromising heat transfer. When installing the heater through the header on the tank, care should be taken to avoid bending the elements. If possible elements should be inspected to ensure that they are not touching. Failure to do so could result in shorter heater life due to higher heater temperatures.
The location of an immersion heater in a process is of prime importance. To take advantage of natural convection, the unit should be located as low as possible; similar to the position in Figure 1.
Consideration should also be given to sludge build-up in the bottom of the tank and the need for heater

removal (replacement or maintenance). Location of the heater in the sludge area will cause premature failure and lower heat transfer efficiency.

If heater is being installed in customer supplied circulation tank, a Tubular Circulation I&M manual should be obtained from the factory to ensure safe installation of heater in tank. Failure to do this could result in premature heater failure due to improper fluid flow over elements

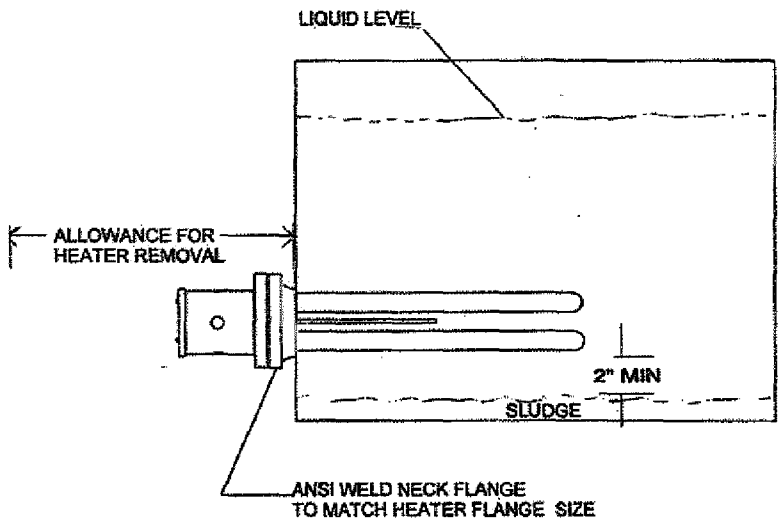

Figure # 1

DANGER: HAZARD OF FIRE. Electric heaters are capable of developing high temperatures so extreme care should be taken to locate heaters in safe environments. Mounting heaters in atmospheres containing combustible gases and vapors should be avoided. According to article 501 of the NEC, the maximum surface temperature of the heater shall not exceed 80 % of the auto-ignition of the surrounding atmosphere when the heater is continuously energized. Care should also be taken to keep combustible materials far enough away to be free of the effects of high temperatures.

5. **Wiring**

WARNING: HAZARD OF ELECTRIC SHOCK. Any installation involving electric heaters must be grounded to earth to eliminate shock hazard.

Electrical wiring to the heaters must be installed in accordance with the National Electric Code and any state and local electrical code by qualified personnel.

Consult wiring diagram supplied with the unit for correct feeder wires connections. If one is not supplied, the factory should be consulted for the appropriate wiring diagram. Feeder wire should be properly selected based on amperage, electrical power rating, ambient temperature, and type of environment. Feeder wire should also be housed in either rigid or flexible conduit which carries the same classification as the heater enclosure. It is the users responsibility to properly size and install feeder wire.

Feeder wire line connections may be made directly to stud terminals or box type compression fittings. Box type compression fittings will accept a #4 AWG maximum wire while stud terminals will accept a #10 ring connector(T&B, Amp, etc.). It is essential that these connections be tight. Stud terminals should be tightened to a maximum torque of 20 in-lbs while the bottom nut is supported. Ground connection (color coded "green") is supplied inside the housing for ground wire.

Line voltage must be equal to or less than rating stamped on the heater assembly. Some units are supplied as dual voltage . Example: 240V / 480V, check wiring diagram supplied with the unit to make

EPA-NC-CE-0000567

sure which scheme was used. In most cases (unless specified by customer) units are wired for the higher voltage.

Thermostats can be supplied with flange heaters. Consult the wiring diagram supplied with the heater for the suggested wiring of thermostats. For safe operation of thermostats, consult Installation and Maintenance manual for thermostats that is attached.

Thermostats should not be used as an "OFF" device; the use of a disconnect switch or circuit breaker is recommended. The disconnect switch will allow isolation of the heater when maintenance of the heater is required.

Start Up

Before energizing the heater the following items should have been checked with the heater power disconnected:

1. Immersed section of heater is completely covered by liquid
2. Electrical termination is tight and wiring is per wiring diagram supplied with heater
3. Proper disconnecting means and fusing have been installed
4. The voltage rating of the heater is the same as that being applied
5. Megohm is within acceptable limits
6. Proper temperature controls and safety limiting devices are in place
7. Heater is securely installed in tank header and no leaks are visible

After applying power to the heater make sure that the system is being controlled properly before leaving it to run unattended. Failure to do this could result in overheating resulting in personnel danger and fire.

Troubleshooting

PROBLEM	Cause / Correction
No power available to heater	Check disconnect switch to ensure it is in the "ON" position and that fuses are not blown. Replace fuses if they are blown
Fuses blowing	Check heater electrical rating. Applied voltage may be wrong Check fuse rating. Fuses should be at least 25% more than full load amperage. Disconnect heater power source. Check the heater resistance to ground. This should be no less than 1 Megohm. Refer to Megohm checking.
Not enough power	Check line voltage to ensure it is within specification Check full line current if voltage is correct. If line current is lower, the heater may be wired wrong or has open elements
Fluid not heating to desired temperature	Not enough Kw Too much heat loss
High limit tripping / alarm	Not enough fluid flow Too much Kw Line voltage higher than designed / allowable

Preventative Maintenance

EPA-NC-CE-0000568

CAUTION: HAZARD OF ELECTRIC SHOCK. TURN ALL POWER TO HEATER OFF, USE APPROPRIATE DISCONNECT LOCKOUTS AND ALLOW SYSTEM/HEATER TO COOL BEFORE PERFORMING ANY MAINTENANCE

Check line connections to make sure they are tight, free of oxide build-up, and that no dust or dirt build-up is present. Retighten to 20 in-lbs as necessary.

Check enclosure (inside) for rust, dirt or dust. Remove rust if present, with steel wool (or equal) and thoroughly blow clean with dry, oil-free air.

If enclosure is moisture resistant, check condition of cover gasket. A replacement can be obtained from the factory.

Liquid immersed units should be removed from tank and checked periodically for scale build-up. Clean as required. Scale can cause high sheath temperature and result in inefficiency and shortened life.

Thermal cycling may cause sealed joints to relax causing a leak. Tightening of heater plug should stop leak.

Inspect flange gasket and replace if necessary

Replacement Parts

Reference the flange heater part number on the nameplate when ordering replacement parts. Recommended spare parts would be : a Flange Heater and thermostat (if supplied).

Contact your local Watlow distributor for ordering replacement parts. Check the Yellow Pages under "Electrical Heating Elements" in the largest industrial area nearest you.

Warranty

Watlow warrants its products against defects in material and workmanship for 12 months from the date of delivery for custom products and 18 months for stock products providing such products are properly applied, used and maintained. Watlow does not warrant any product against damage from corrosion, contamination, misapplication, improper specification or operating conditions beyond our control. The terms of this warranty are the exclusive terms available to any person. No person has authority to bind the Company to representation or warranty other than this warranty. Watlow is not liable for incidental or consequential damages resulting from use of the product whether a claim for such damages is based upon warranty, contract, negligence or other fault. Should any product fail under these warranty conditions it will be repaired or replaced at no charge. Advanced authorization must be obtained within 30 days of failure.

Return Policy

1. Call Watlow Industries at 573-221-2816, for a Return Material Authorization (RMA) number before returning any item for repair or replacement. The following information is needed to process a returned heater expeditiously:

- Customer name
- Contact Name
- Part number
- Quantity
- Reason for return
- Application information
- MSDS sheet of material(s) that came in contact with heater, if used.
- Customer account number
- Phone Number
- P.O. number

2. Prior approval and an RMA number is needed when returning any unused product for credit. Make sure the RMA number is on the outside of the carton, and on all paperwork. Return all material Freight Prepaid basis.

3. Stock heaters and accessories which have not been used or modified can be returned to the plant for a 20% restocking charge. Modified stock units can only be returned, if they are not permanently modified, for a minimum 30% restocking charge.

4. All stock and modified stock must have a date code no later than 2 years from the date of shipment.

330-42-400-1

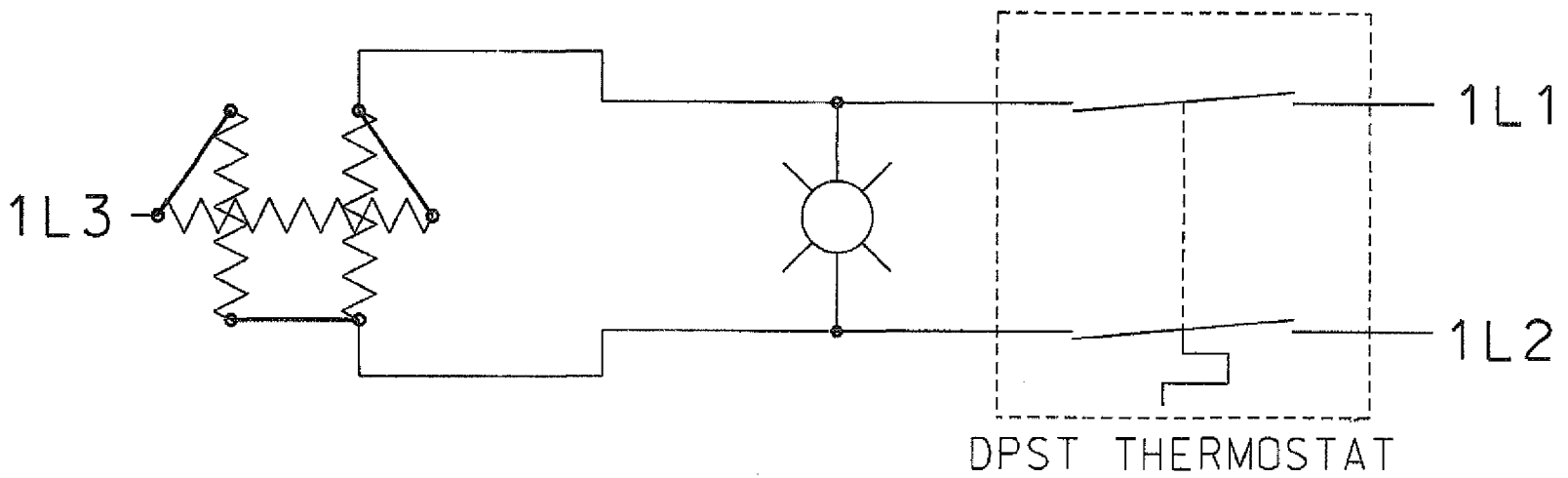

3 PHASE DELTA

THERMOSTAT RATING

120 VAC - 30 AMPS
277 VAC - 30 AMPS
480 VAC - 10 AMPS

G:\330\42\400-1.dgn 12/20/2007 2:56:33 PM

EPA-NC-CE-000571

MODEL 5H BRILL™ OIL SKIMMER MAINTENANCE MANUAL

The Model 5H Brill™ Oil Skimmer is a well-designed and built piece of machinery. Under normal operation, the skimmer is quiet and made for many years of service. However, routine maintenance is essential for efficient, trouble-free use.

THE SKIMMER IS SHIPPED DRY

LUBRICATION INFORMATION

Before start-up of the 5H Brill™ Oil Skimmer, both the top housing AND the bottom housing must be filled with SAE 30w non-detergent oil (see Drawing 200511) through a ¾" Pipe Plug. These reservoirs are NOT connected; therefore each must be filled independently. The top housing requires 2 quarts of oil and the bottom housing requires 1-1/2 quarts.

INSTALLATION INSTRUCTIONS

Determine the most advantageous mounting location and secure the Mounting Kit to the tank lip. If no lip exists or if it is too small, it will be necessary to install 2 pieces of angle iron to support it. The holes for the mounting kit are 19" on center, using 3/8-16 bolts (angle iron and mounting bolts are supplied by customer). Mount the skimmer to the mounting kit using the bolts provided and make the proper electrical connections to the motor; your specific Motor Data Sheet is included with this manual. **The N.E.C. code for your locality must be followed for all electrical work.** Install the #5 Collector Tube using Drawing 200518. Lastly, attach your discharge pipe to the 2" NPT threaded hole in the rear of the bottom pan of the mounting kit. Drain into an optional Decanting System (supplied by Oil Skimmers, Inc.) or a collection tank or drum.

NOTE: The collector tube must be hung in an untwisted condition for not less than 2 days before being installed on the skimmer.

ROUTINE MAINTENANCE

Every 6 months, check the oil levels in **BOTH** housings and fill each reservoir as necessary. If oil loss is noted, check the seals at output shaft locations for leakage (Drawing 200129-P, nos. 10 & 19). Periodically, check the ceramic #5CS Scraper/Wear Pieces, #CC1 Cylinders and the #1R Fingers for excessive wear and replace as needed. Also make sure all hardware is tightened sufficiently.
If the collector tube is determined to be slipping on the Drive Wheel, increase the pressure of the ceramic cylinder against the tube as it exits the skimmer. This is accomplished by loosening the bolts of the #B45L Scraper Bracket Assembly and pivoting the top of the assembly in more towards the collector tube; then retighten the bolts. Should it be necessary to replace any interior part(s), refer to the Parts List and the Assembly Instructions (Sections A-B-C) provided with this manual.

ATTACHED DRAWINGS

200518 200511 990224 H2 H3 H4 200716 Parts List

RECOMMENDED SPARE PARTS

One Collector Tube 12 # 1R Ceramic Fingers 6 # 5CS Ceramic Scraper/Wear Piece

OILSKIMMERS, INC.®

P.O. BOX 33092 CLEVELAND, OHIO 44133
PHONE: (440) 237-4600 FAX: (440) 582-2759
E-MAIL: info@oilskim.com
WEB: www.oilskim.com

OILSKIMMERS, INC.®

P.O. BOX 33092 CLEVELAND, OHIO 44133
PHONE: (440) 237-4600 FAX: (440) 582-2759

E-MAIL: info@oilskim.com
WEB: www.oilskim.com

SPECIFICATION - MODEL 5H OIL SKIMMING SYSTEM

GENERAL DESCRIPTION

The oil skimming equipment shall utilize a closed loop flexible collector tube which floats. The tube is continuously drawn through ceramic scrapers which remove the oil. The oil then flows by gravity into a pan which flows to the collection tank and the clean tube shall cycle continuously into the basin. The oil shall flow by gravity to the oil storage tank.

CAPACITIES

Oil/Grease Type	Capacity (GPH)
Diesel Oil or #2 Fuel Oil	10 - 20
Hydraulic Oil	20 - 30
Gear Lubricants & Heavy Fuel Oil	60 - 75

The skimmer shall not pick up more than one (1) gallon of water per hour when run in an oil-free area.

COLLECTOR TUBE

The collector tube shall be constructed of closed loop flexible hollow material resistant to oil, grease, abrasion and high temperatures. The collector tube length shall be sized to achieve the above specified capacities (# of ft.).

SKIMMER PARTS

The skimmer parts in contact with the collector tube, including the tube scrapers, pressure block, tube guide cylinders and drive wheel fingers, shall be made of hard, abrasion-resistant ceramic.

ELECTRIC MOTOR

The oil skimmer shall be driven by a 1/2Hp, 1725 rpm, 60Hz motor, suitable for indoor or outdoor installation (specify enclosure, single or three phase, and voltage). No electrical components shall be exposed to the area being skimmed.

MOUNTING KIT

The mounting kit shall consist of the #57 bottom and #58 top pan.
The discharge shall be no less than 2".
A - 200W - Single Phase 120V or 240V heater can be added to the bottom mounting pan.

OILSKIMMERS, INC.®

Post Office Box 33092 • 12800 York Road
Cleveland, Ohio 44133, U.S.A.

Sales Office (440) 237-4600
FAX (440) 582-2759

MODEL 5H

The Model 5H Brill™ oil skimmer is used to remove oil, fat or grease from solutions in above floor tanks or basins where the skimmer is mounted less than 2 feet above the liquid surface. Being compact in design, it is used where space is limited. It can be installed for either open or closed tank usage with its own mounting system.

The unit is used to skim floating mineral, vegetable, animal oil or fat, diesel oil, fuel oil or hydraulic oil from waste water, coolants and certain cleaning solutions. A decanter is used where oil enters the waste water occasionally or where solution carry over would be a problem due to frothy emulsions. The decanter returns the solution to the original tank and just the oil to the oil collection tank. The capacity of the skimmer increases with the viscosity of the contaminant being skimmed.

Since the Model 5H is only to be used for applications where the skimmer is less than 2 feet above the water surface, the tube will be 10 to 20 feet long. If the unit is 2 feet above contaminated surface, multiply by 2 and add 10 feet.

EXAMPLE: 2' x 2' = 4' + 10' = 14' tube length

Tube life varies with the solution. This can be three months to three years based on 24 hour per day usage. The tube does not wear out. It will crack, swell and deteriorate in certain solutions and then must be replaced. Once a tube separates at the weld it must be replaced. We have been unable to find a good method of putting it back together with glue or sealant. We butt weld the ends together (using a heat fusing process) and have found that this is the best method.

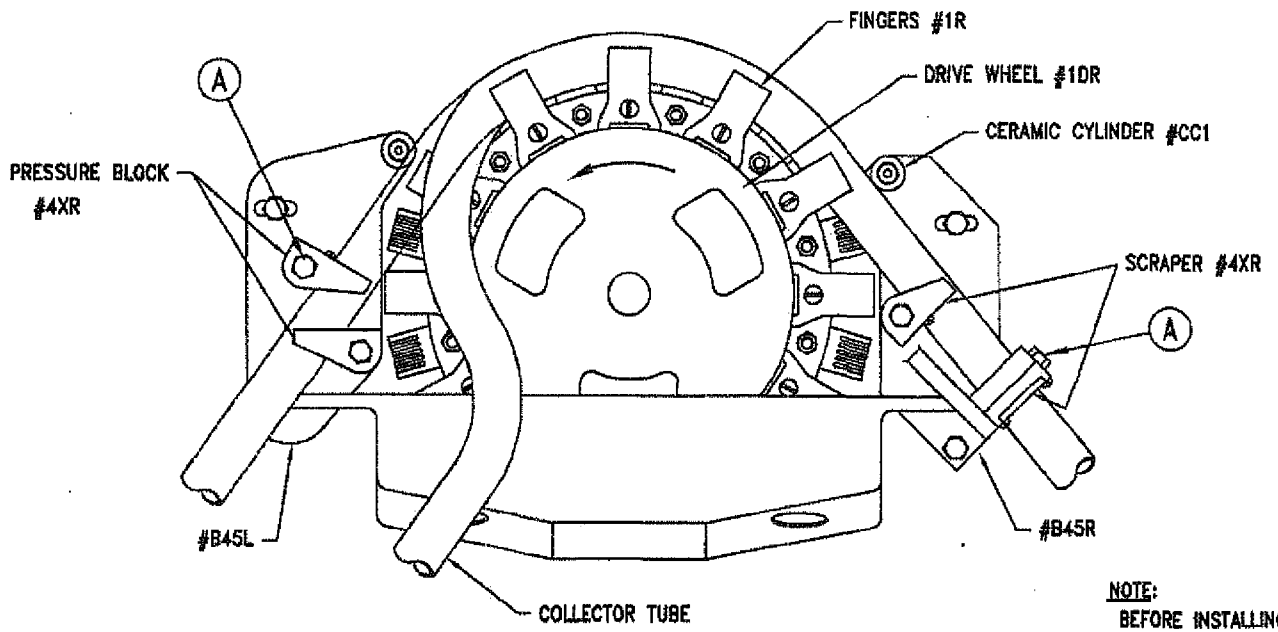

NOTE:
BEFORE INSTALLING COLLECTOR TUBE HANG UNTWISTED FOR MINIMUM OF 2 DAYS.

TO INSTALL COLLECTOR TUBE

LOOSEN BOLTS (ITEM A) AND ROTATE #4XR SCRAPER/PRESSURE BLOCK OUT OF THE WAY. PLACE COLLECTOR TUBE ON DRIVE WHEEL FINGERS AND ROTATE DRIVE WHEEL. (SEE INSTRUCTIONS BELOW)
WITH COLLECTOR TUBE BENT BETWEEN 2 OF THE FINGERS AS SHOWN ABOVE, GOING PAST THE CERAMIC CYLINDER ON EACH SIDE OF THE DRIVE WHEEL. THEN GUIDE THE COLLECTOR TUBE THRU BOTH #4XR SCRAPERS ON THE #B45R BRACKET, REPOSITION SCRAPER AND TIGHTEN BOLT. GUIDE THE COLLECTOR TUBE THRU BOTH #4XR PRESSURE BLOCKS ON THE #B45L BRACKET, REPOSITION PRESSURE BLOCK AND TIGHTEN BOLT.
TO ROTATE DRIVE WHEEL, PLACE A COIN OR SCREW DRIVER IN MOTOR SHAFT SLOT ON THE SIDE OF THE TOP HOUSING AND TURN WHILE PLACING THE COLLECTOR TUBE BETWEEN DRIVE WHEEL FINGERS AS ILLUSTRATED.

OILSKIMMERS, INC.

SCALE:	APPROVED BY:	DRAWN BY:
DATE:		REVISED

5H COLLECTOR TUBE INSTALLATION

DRAWING NUMBER
200518

EPA-NC-CE-000575

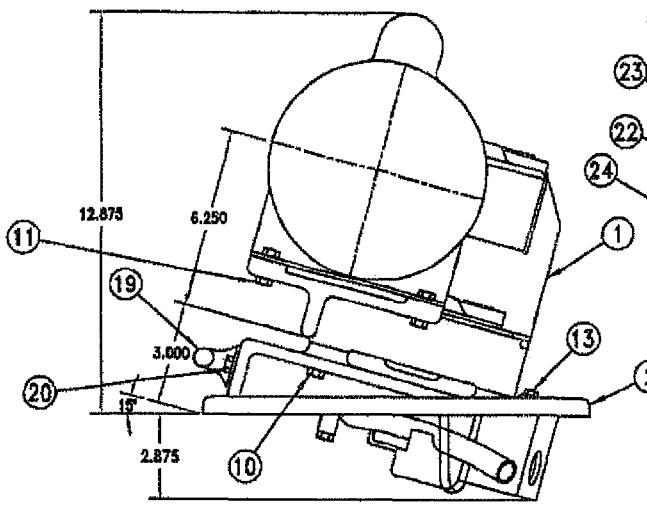

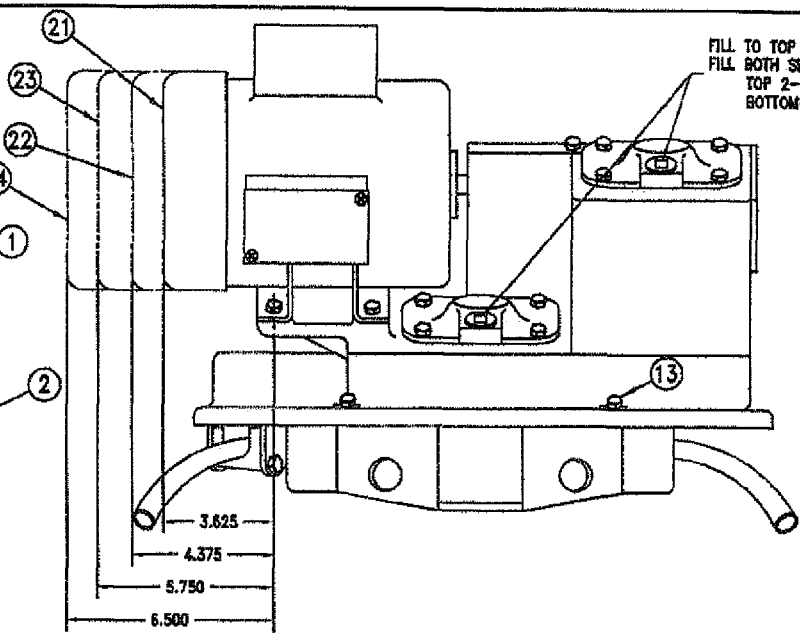

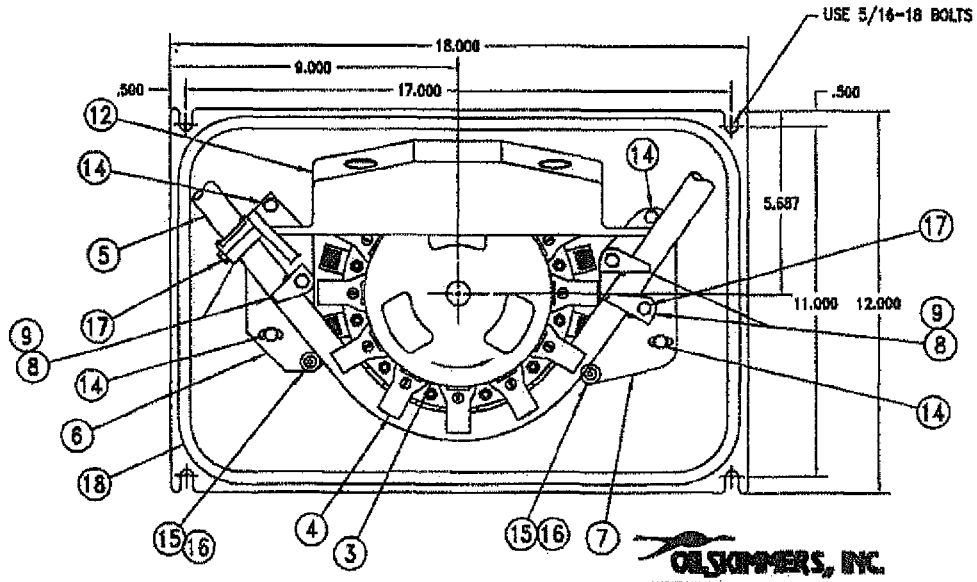

ITEM		DESCRIPTION	QTY
24		MOTOR, 120 V, 1 PH, 1/2 HP-EXPLOSION PROOF	
23		MOTOR, 230V, 3 PH, 1/2 HP-EXPLOSION PROOF	
22		MOTOR, 120 V, 1 PH, 1/2 HP	
21		MOTOR, 230 V, 3 PH, 1/2 HP "SHOWN"	1
20		1/4-20 X 5/8 BOLT WITH LOCKWASHER & NUT	2
19		HANDLE	1
18		1/4 X 3/8 X 48 SEAL GROOVE TUBE CLEAR PVC	1
17		1/4-20 X 2 BOLT	4
16		SHOULDER BOLT	2
15		CERAMIC CYLINDER & NYLON WASHER	2
14		1/4-20 X 7/8 BOLT, LOCKWASHER & NUT	4
13		1/4-20 X 1 1/4 BOLT, LOCKWASHER, NUT	2
12		GUARD #G-45	1
11		5/16-18 NUT	4
10		5/16-18 X 1" BOLT	8
9		TUBE SCRAPER HOLDER #4XR	4
8		SCRAPER-CERAMIC # 5CS	4
7		P + G BLOCK BRACKET #B45L	1
6		SCRAPER BRACKET #B45R	1
5		COLLECTOR TUBE #5	1
4		FINGERS, CERAMIC #1R	24
3		DRIVE WHEEL #1 OR	1
2		#B-45 BASE PLATE	1
1		SKIMMER DRIVE UNIT #5H	1

OILSKIMMERS, INC.

SCALE .375	APPROVED BY	DRAWN BY CLDS
DATE 5-11-00		REVISED
MODEL 5H		
		DRAWING NUMBER 200511

EPA-NC-CE-000576

ITEM	PARTNO.	DESCRIPTION	QTY
1	760112	MODEL #5H	1
2	760128	MOUNTING PAN ASSEMBLY	1
3		5/16 -18 X 1 1/4 HEX BOLT (FL & LK WASHER)	4
4		3/8-16 HEX HD BOLT WITH WASHER	2
5		COLLECTOR TUBE #5	1
6		CUSTOMER TANK	
7		2" SCH 40 PIPE (FURNISHED BY CUSTOMER)	
8	820202	SIDE PLATE	2
9	820614	HANDLE	1

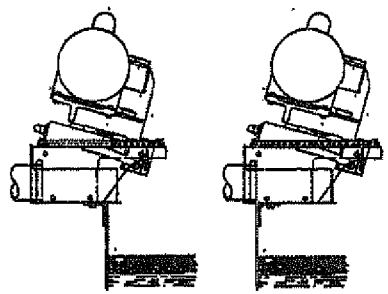

MOUNTING RANGE 5 1/4

MOUNTING PAN #57 HAS (4) 3/8-16 TAPPED HOLES ON EACH SIDE.
MOUNT 5H SKIMMER WITHIN MOUNTING RANGE USING 1 TAPPED HOLE ON EACH SIDE.
BOLT THRU ANGLE (CUSTOMER FURNISHED) WITH 3/8-16 X 3/4 HEX HD BOLTS WITH FLAT WASHER

TO SERVICE OR CHANGE TUBE REMOVE SIDE BOLTS, AND ROTATE UNIT FORWARD. AS SHOWN

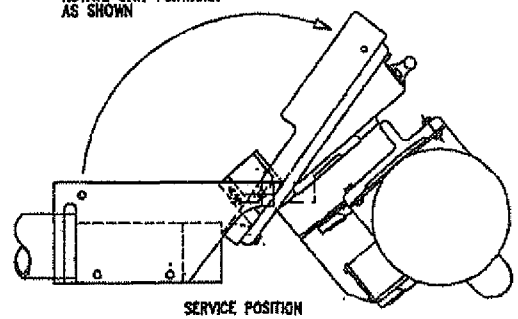

SERVICE POSITION

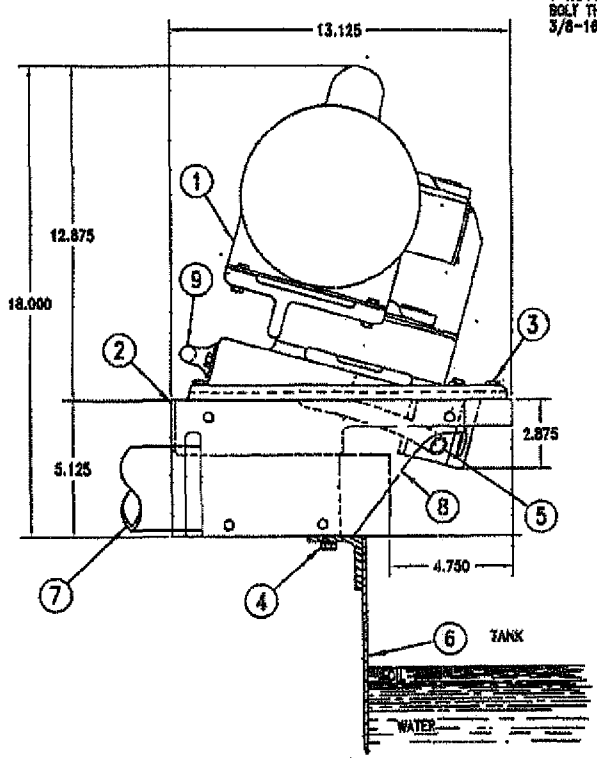

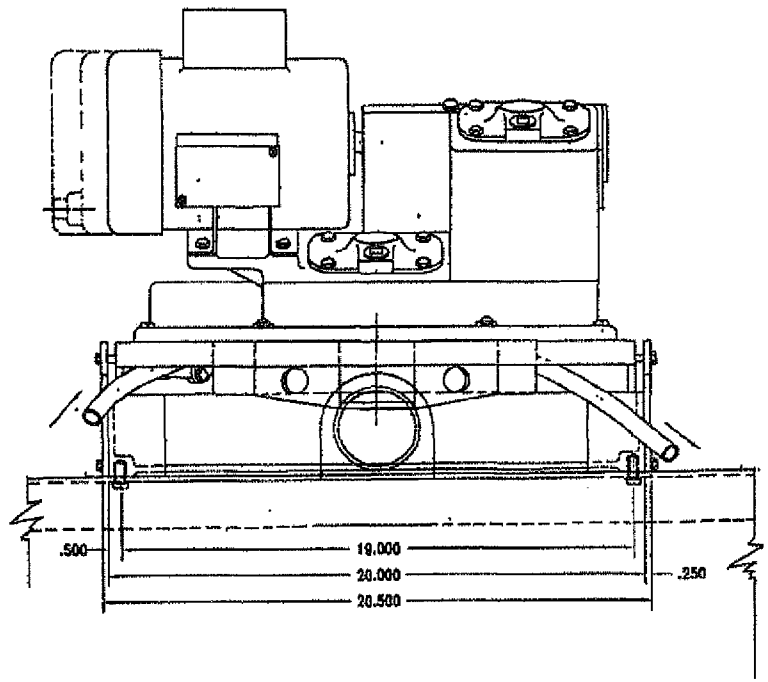

OILSKIMMERS, INC.

SCALE NTS	APPROVED BY:	DRAWN BY: CLDS
DATE 2-24-99		REVISED

TANK MOUNTING ARRANGEMENT

DRAWING NUMBER 990224

EPA-NC-CE-000577

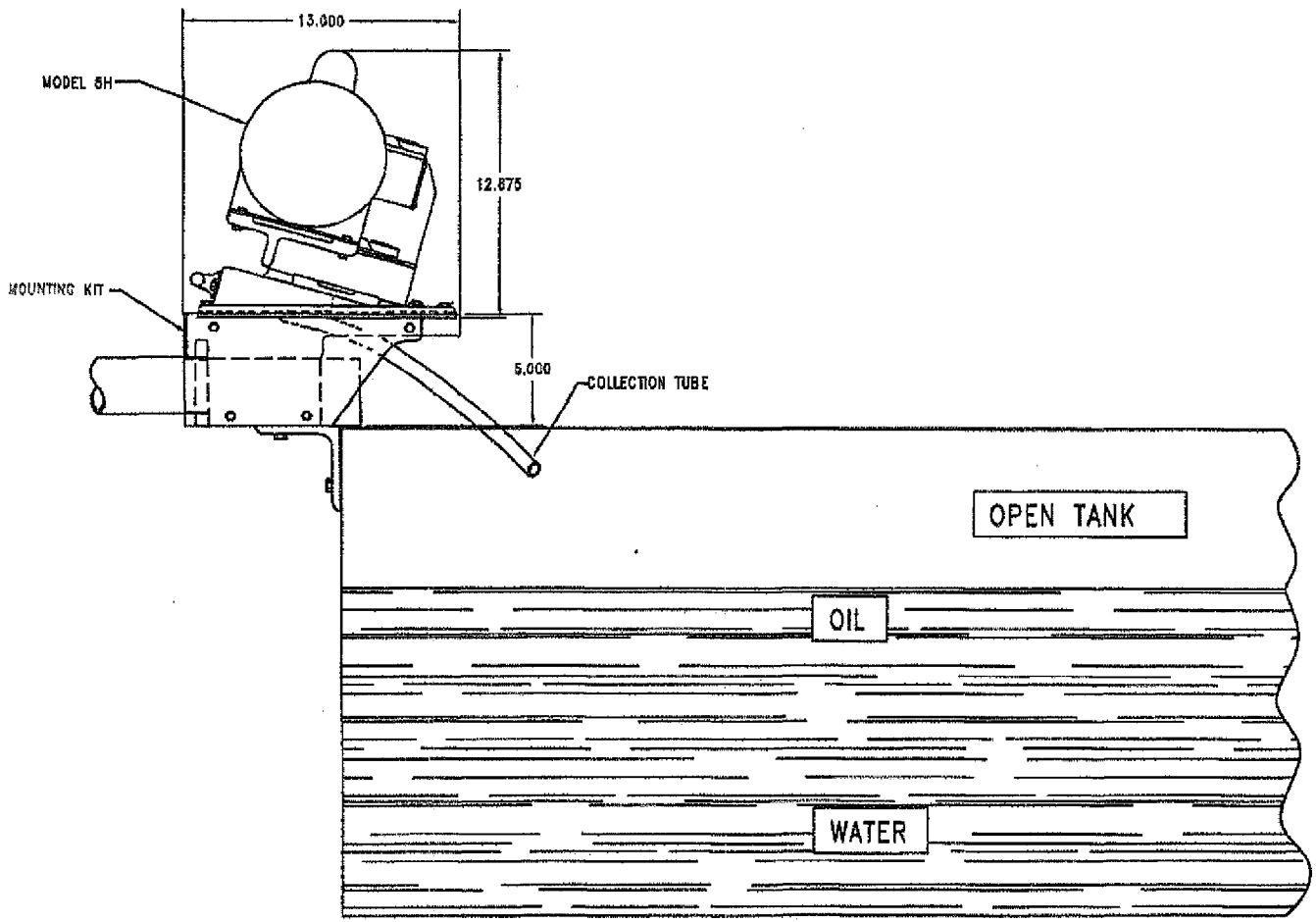

OILSKIMMERS, INC.

SCALE: 10 8	APPROVED BY:	DRAWN BY: CLDS
DATE: 4-3-99		REVISED

MODEL 5H MOUNTED ON OPEN TANK

DRAWING NUMBER H-2

EPA-NC-CE-000578

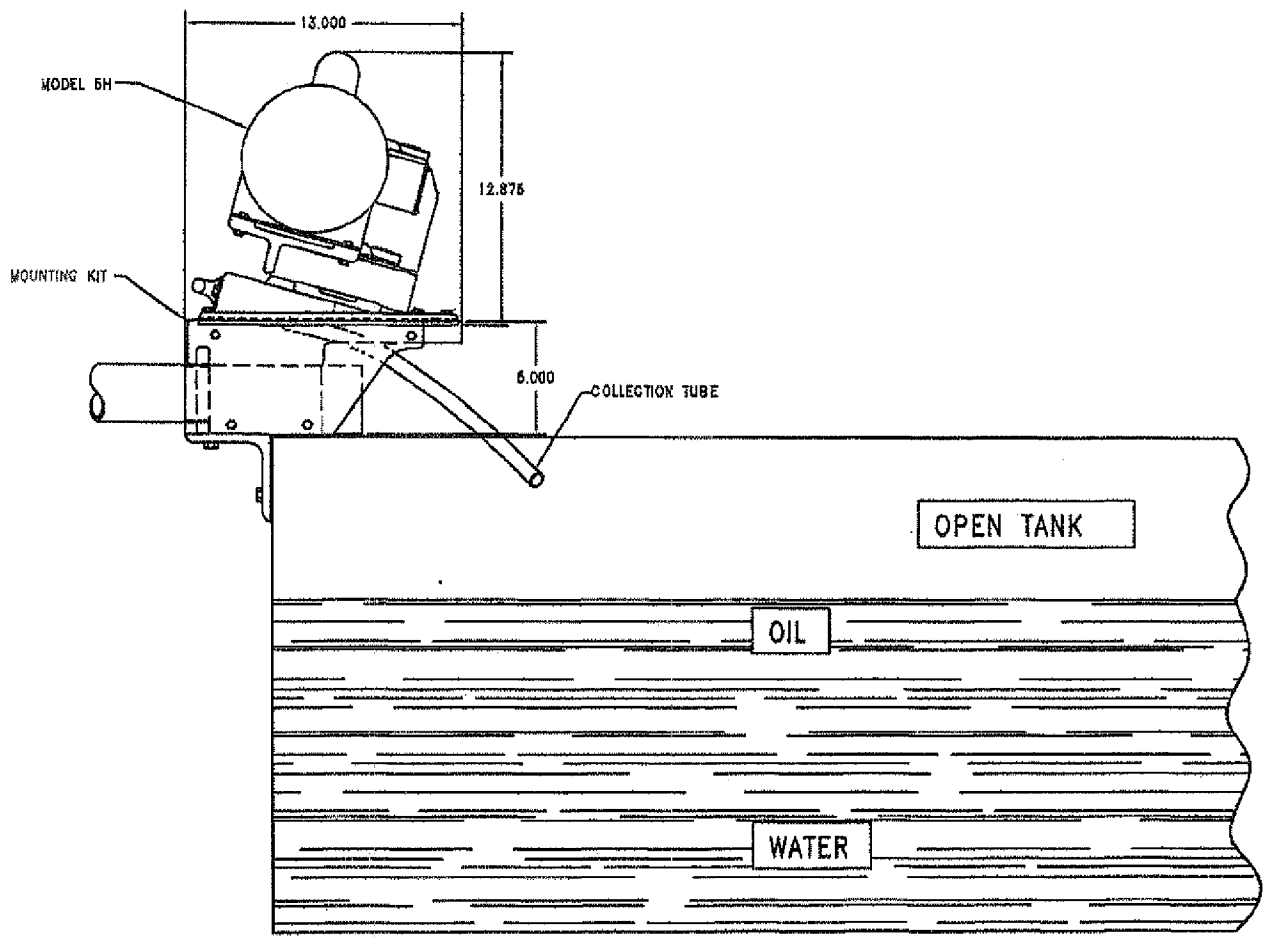

OILSKIMMERS, INC.

SCALE: 10_8	APPROVED BY:	DRAWN BY: CIDS
DATE: 4-3-98		REVISED

MODEL 5H MOUNTED ON OPEN TANK

DRAWING NUMBER H-3

EPA-NC-CE-000579

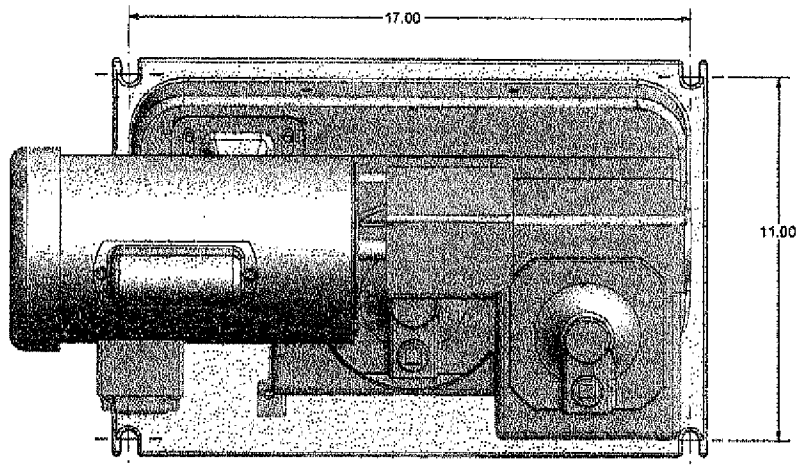

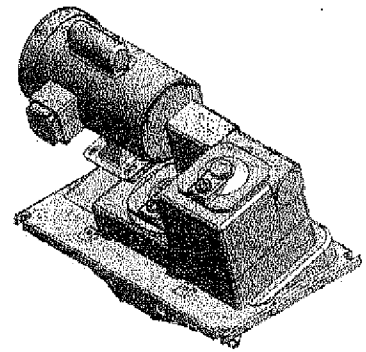

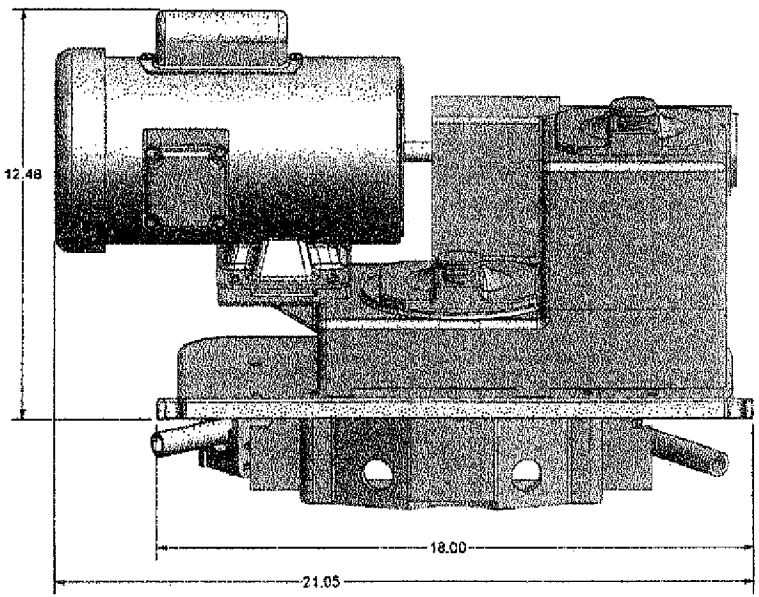

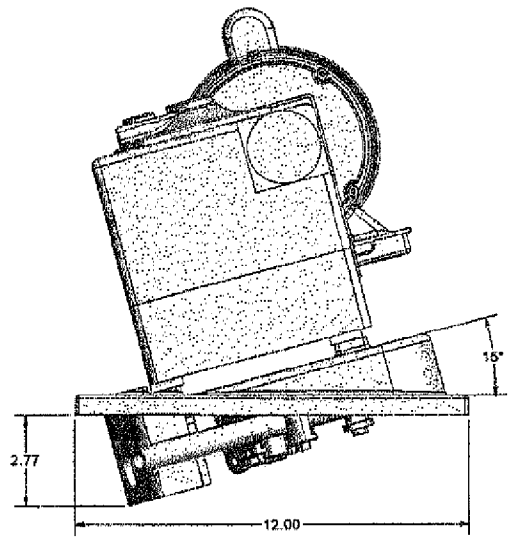

OILSKIMMERS, INC.

SCALE:	APPROVED BY:	DRAWN BY: CLDS
DATE: 7/17/01		REVISED:
TITLE: MODEL 5H SKIMMER		
		DRAWING NUMBER: 200716

EPA-NC-CE-000580

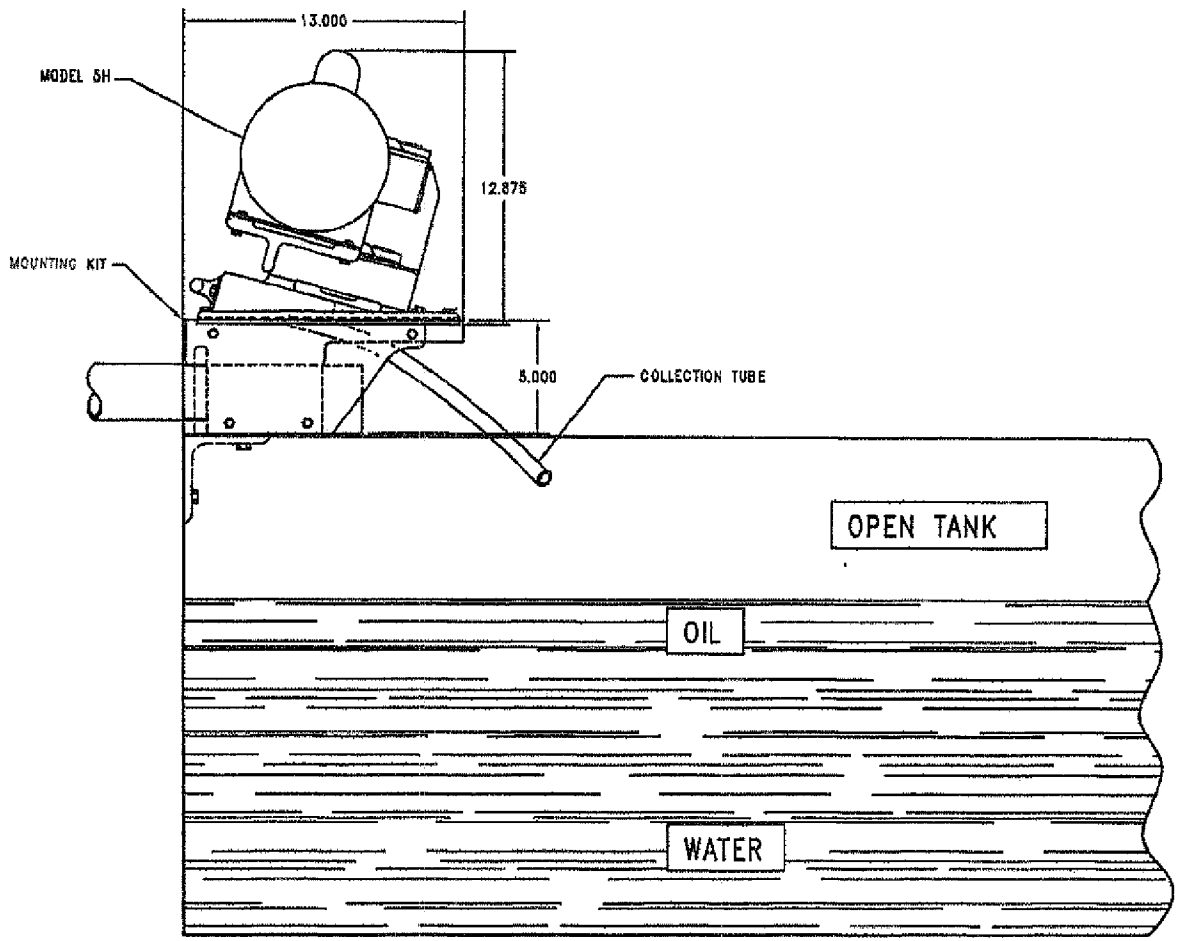

OILSKIMMERS, INC.

SCALE: 10.8	APPROVED BY:	DRAWN BY: CLDS
DATE: 3-23-99		REVISED

MODEL 5H MOUNTED ON OPEN TANK

DRAWING NUMBER: H-4

EPA-NC-CE-000581

MODEL 5H
SUB-ASSEMBLY INSTRUCTIONS

SECTION A:

Steps to follow to replace the bronze gear and worm gear assembly #55SA in the top housing:

1. Remove electric motor, coupling guard and couplings #7 & #8, Woodruff key #5.
2. Drain oil out of top housing #16.
3. Remove the cover #20.
4. Remove both shaft end covers #25. If seals #10 need to be replaced press them out and press in new seals.
5. Remove the retaining ring #14 above the bronze gear #1.
6. Remove the bronze gear #1. Use large channel lock pliers or 2 bolts in taped holes in the bronze gear to pull the gear out of the housing.
7. Remove the worm gear assembly #55SA by driving the assembly back out of the top housing #16 in either direction.

Reverse steps 7 thru 2 to reassemble. Be sure to clean all surfaces and remove any oil residue. Apply some type of sealant (Silicone caulk or Permatex) to the cover #20 and both shaft end covers #25.

NOTE: Refill top housing #16 with 2 quarts non-detergent oil before start-up.

SECTION B:

Steps to follow to replace the bronze gear assembly #57SA and/or the sprocket assembly #58SA.

1. Remove the drive wheel guard #31 by removing bolts #26.
2. Remove the drive wheel #32.
3. Remove the base plate #29 by removing bolts #35.
4. Drain oil from the top housing #16 and the bottom housing #27.
5. Follow the steps in Section A to remove top housing components, plus the Woodruff key #13.
6. Remove the cover #20 on the bottom housing.
7. Remove the 4 bolts #28 from the bottom housing.
8. Remove Woodruff key #13. Drive the sprocket shaft #15 back thru the bottom housing to loosen the assembly.
9. Loosen the top housing from the bottom housing. Once the top housing is loose slip the chain #36 off the sprocket on the top housing.
10. Pull out the sprocket assembly #58SA.
11. Drive out the 2 seals #19 in the bottom housing.
12. Remove the Woodruff key #13 and the sprocket #12.
13. Remove the large retaining ring #18 in bottom of top housing to remove the bearing and shaft.

TO REASSEMBLE SEE SECTION C

OILSKIMMERS, INC.®

P.O. BOX 33092 CLEVELAND, OHIO 44133
PHONE: (440) 237-4600 FAX: (440) 582-2759
E-MAIL: Sales@OilSkimmersINC.com
WEB: www.OilSkimmersINC.com

SECTION C:

Steps to follow to reassemble the 5H gear box assembly:

1. Clean all surfaces; top housing, bottom housing, covers, shaft end covers of any remaining oil film.
2. Replace the gear and sprocket shaft #11 being careful not to damage the inner seal #19 in the top housing #16. Replace the large retaining ring #18 to hold the shaft and bearing #17 in place. Use bearing Loctite on bearing when replacing.
3. Replace the sprocket #12.
4. Slip the chain #36 back onto the sprocket #12.
5. Apply sealant to bottom of top housing #16 or top of bottom housing #27.
6. Slip the chain into bottom housing and slip the top housing back into position and fasten with 4 bolts #28.
7. Slip sprocket assembly #58SA back in and slip the chain onto the sprocket #12. Apply bearing Loctite to bearing and slip back into position. **NOTE:** *No seals in place yet!* ***OR*** Woodruff key #13.
8. Replace cover #20 using sealant.
9. Replace bronze gear #1.
10. Replace retaining ring #14.
11. Replace worm gear assembly #55SA.
12. Replace cover #20.
13. Replace shaft end covers #25 using sealant
14. Replace seals #19 in bottom housing.
15. Replace the 5H gear box assembly on the base plate.
16. Replace drive wheel #32.
17. Replace drive guard #31.

NOTE: ***Refill top housing #16 with 2 quarts non-detergent oil before start-up.***
Refill bottom housing #27 with 1-1/2 quarts non-detergent oil before start-up

MODEL 5H PARTS LIST

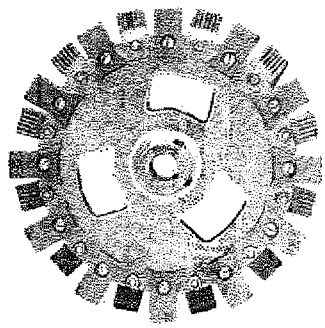

1DR

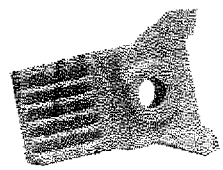

1R

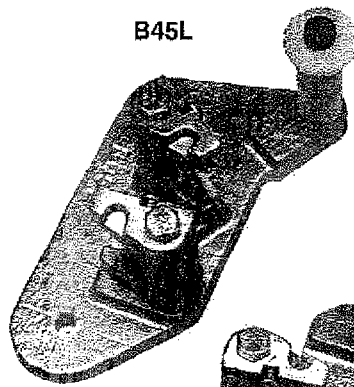

B45L

B45R

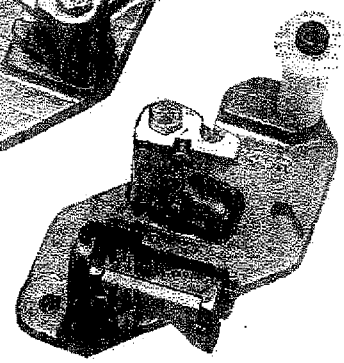

5CS

SUB-ASSEMBLIES

55SA

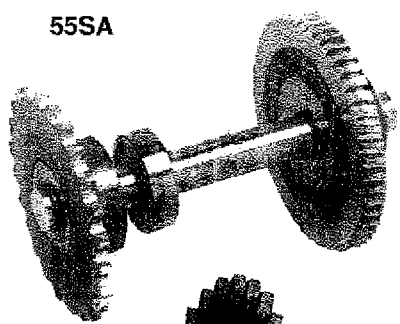

57SA

CC1

3J-5/8

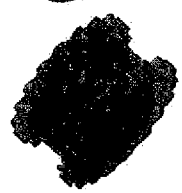

3JE

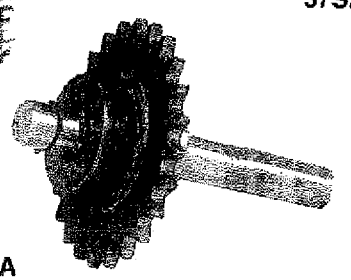

58SA

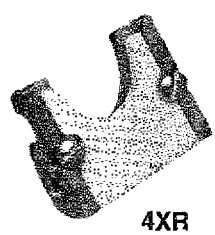

4XR

3J-5/8

Part No.		Part No.	
1DR	Drive Wheel, Ceramic (complete)	B45R	Scraper Bracket Assembly
1R	Finger, Ceramic	B45L	P & G Block Bracket Assembly
5CS	Ceramic Replacement Wear Piece (Replacement for Scraper and Pressure Blocks)	55SA	Steel Worm Sub-assembly (Specify standard or high speed)
4XR	Tube Scraper Assembly (Complete with 5CS Ceramic wear piece)	57SA	Sprocket and Bronze Gear Sub-assembly (Specify standard or high speed)
CC1	Ceramic Cylinder	58SA	Sprocket Sub-assembly
8T	Motor Coupling (Includes 2 - 3J 5/8 Flange 1 - 3J E Sleeve)	5HH	Pan Heater 200 watts (Complete) (Specify 120 or 240 volts)
TU (#)	Standard Collector Tube (# Specify Length)	STU (#)	High Temperature Super Tube (# Specify Length)

OILSKIMMERS, INC.®

P.O. BOX 33092 CLEVELAND, OHIO 4413
PHONE: (440) 237-4600 FAX: (440) 582-275
E-MAIL: Sales@OilSkimmersINC.com
WEB: www.OilSkimmersINC.com

OILSKIMMERS, INC.

MODEL 5H PARTS LIST
(INTERNAL)

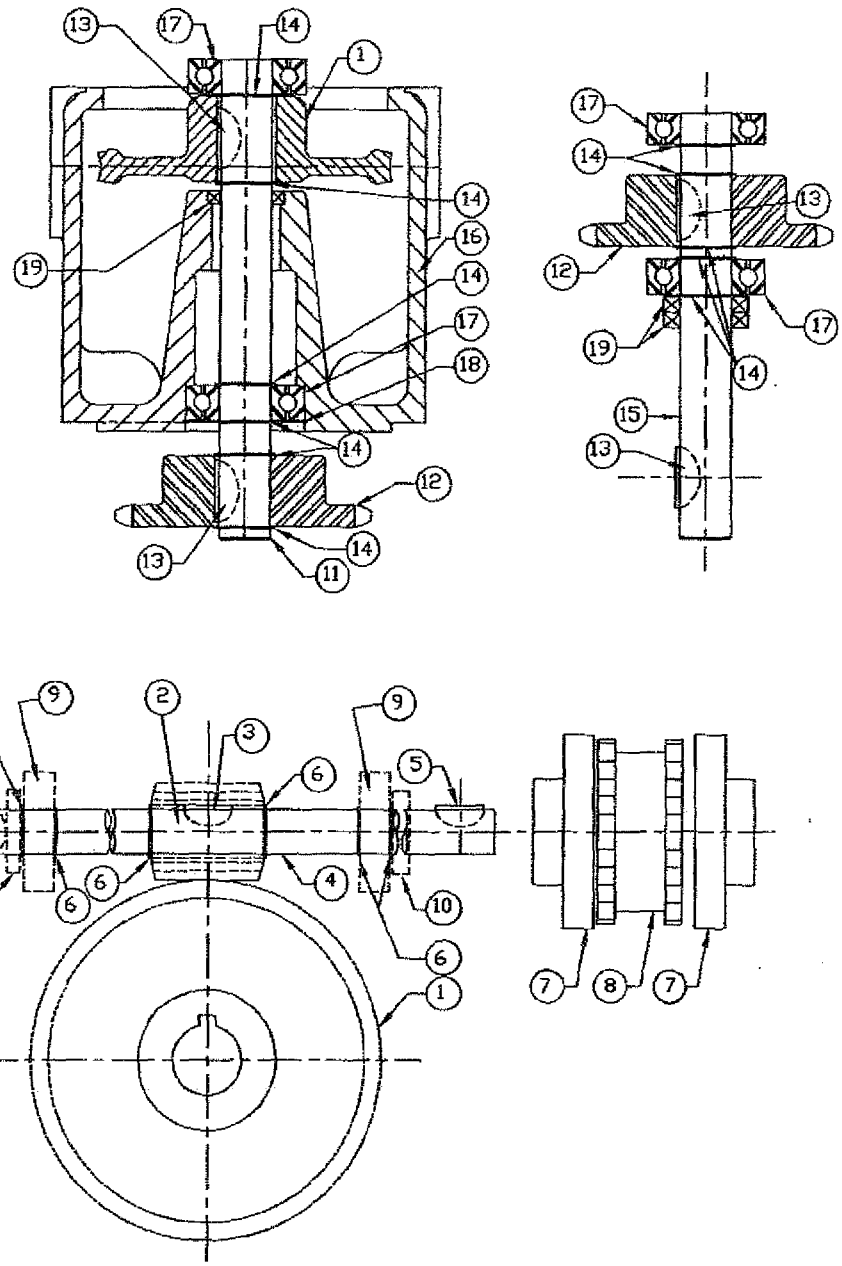

ITEM	DESCRIPTION
1	BRONZE GEAR STANDARD SPEED BRONZE GEAR HIGH SPEED
2	STEEL WORM STANDARD SPEED STEEL WORM HIGH SPEED
3	WOODRUFF KEY #7 (1)
4	SHAFT 7-1/4 X .625 (1)
5	WOODRUFF KEY #9 (1)

ITEM	DESCRIPTION
6	RETAINING RING (6) 5100-62
7	FLANGE 3J (2)
8	SLEEVE 3JE (1)
9	BEARING 1623DC (2)
10	SEAL 6229 (2)
11	SHAFT 6-12/16" X .75" (1)
12	SPROCKET 24 TOOTH ASA 40 (2)

ITEM	DESCRIPTION
13	WOODRUFF KEY #11 (4)
14	RETAINING RING 5100-75 (11)
15	SHAFT 6" X .75" (1)
16	TOP HOUSING (1)
17	BEARING 1635DC (4)
18	RETAINING RING N5002-175 (1)
19	SEAL 7443 (3)

NOTE: NUMBERS IN PARENTHESIS INDICATES QUANTITY

REPLACES DRAWING 880902-P

OIL SKIMMERS INC
P.O. BOX 33092
CLEVELAND, OHIO 44133
1-440-237-4600 (FAX) 1-440-582-2759
WWW.OilSkimmersINC.com

OILSKIMMERS, INC.

SHAFT AND GEAR ASSEMBLY

INSIDE MODEL 5H

200129-P

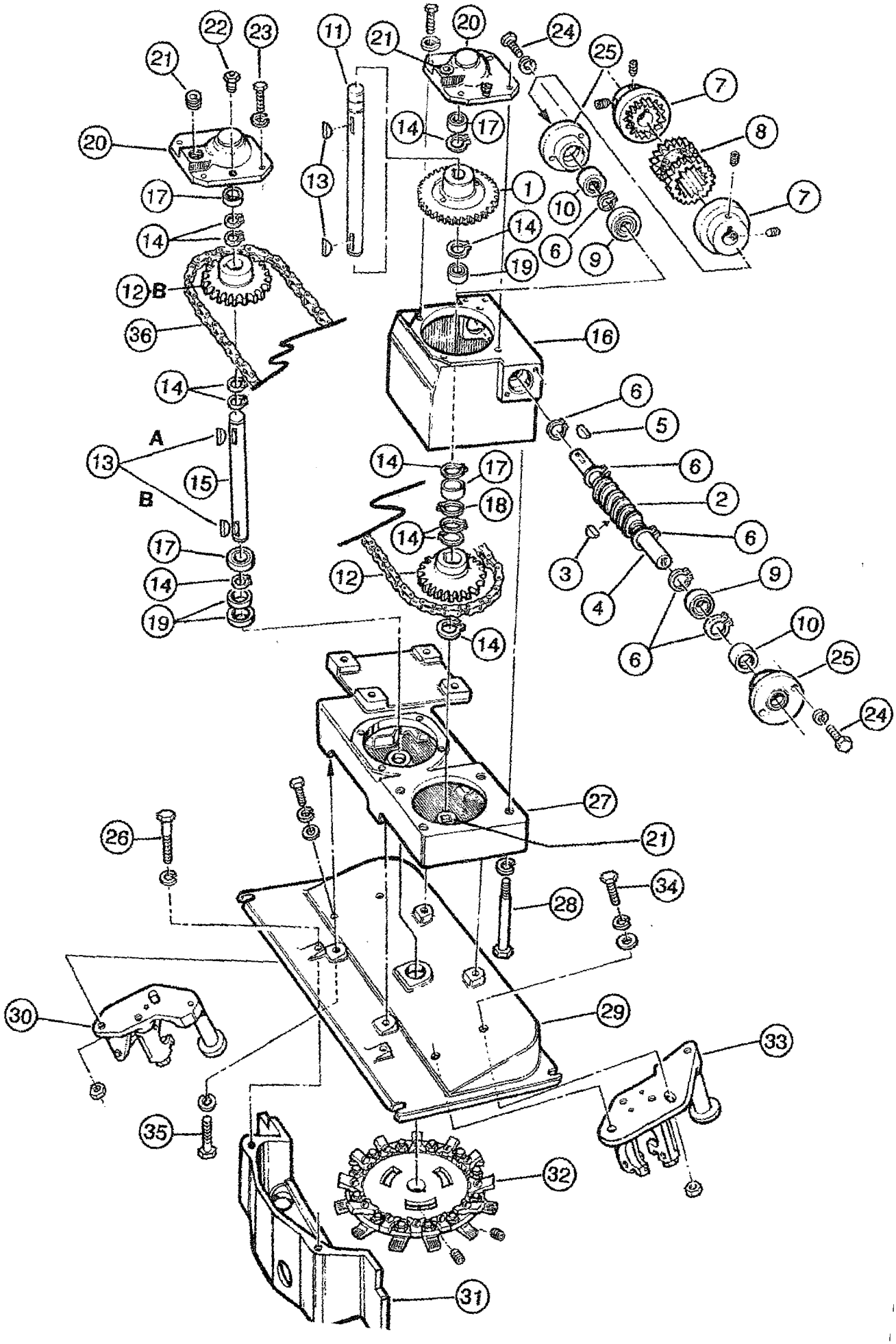
22
23
11
21
20
24
25
7
21
14
17
8
20
13
1
10
7
17
14
6
9
14
19
12 B
36
16
14
6
5
A
13
15
B
14
17
6
18
2
14
6
17
3
12
4
9
14
6
10
25
24
26
27
21
34
28
30
29
33
35
32
31

MODEL 5H PARTS LIST

ITEM	PART NO.	DESCRIPTION
1	Gear-SS	Bronze Gear Standard Speed
	Gear-HS	Bronze Gear High Speed
2	Worm-SS	Steel Worm - Standard Speed
	Worm-HS	Steel Worm - High Speed
3	7	Woodruff Key #7
4	55 Shaft	Shaft 7-1/4 x .625
5	9	Woodruff Key #9
6	5100-62	Retaining Ring 5100-62
7	3J-5/8	Flange 3J
8	3JE	Sleeve 3JE
	8T	Coupling Complete (2-3J & 1-3JE)
9	1623DC	Bearing 1623DC
10	6229	Seal 6229
11	57 Shaft	Shaft 6-12/16" x .75"
12	4024-3/4	Sprocket 24 Tooth ASA 40
13	11	Woodruff Key #11
14	5100-75	Retaining Ring 5100-75
15	58 Shaft	Shaft 6" x .75"
16	52	Top Housing
17	1635DC	Bearing 1635DC
18	N5002-175	Retaining Ring N5002-175
19	7443	Seal 7443
20	53	Cover - Model 5H
21	Plug 3/4"	Oil Plug 3/4" NPT
22	47200	Breather Vent
23	Bolt 3/4"	Bolt - 1/4 20NC 3/4" Long
24	Bolt 5/8"	Bolt - 1/4 20NC 5/8" Long
25	5HSEC	Shaft End Cover
26	Bolt/G45	Bolt - 1/4 20NC 1-1/4" Long
27	51	Bottom Housing
28	Bolt 3"	Bolt - 5/16 18NC 3" Long
29	B45	Base Plate
30	B45R	Scraper Bracket Assembly
31	G45	Drive Wheel Guard
32	1DR	Drive Wheel
33	B45L	Pressure & Guide Block Assembly
34	Bolt 7/8"	Bolt - 1/4 20NC 7/8" Long
35	Bolt 1-1/4"	Bolt - 5/16 x 18NC 1-1/4" Long
36	Chain 5H	Chain

COMPONENTS OF
MODEL 5H SHAFT & GEAR SUB-ASSEMBLIES

55SA WORM SUB-ASSEMBLY ..... DRAWING 200129P

ITEM	PART #	DESCRIPTION	QUANTITY
2	WORM	Steel worm (SS or HS)	1
3	7	Woodruff key 7	1
4	55SHAFT	Shaft 7-1/4 x .625	1
5	9	Woodruff key 9	1
6	5100-62	Retaining ring	6
9	1623DC	Bearing	2
10	6229	Seal	2

TOTAL COST 55SA WORM GEAR SUB-ASSEMBLY .....

57SA SPROCKET & WORM GEAR SUB-ASSEMBLY..... DRAWING 200129P

ITEM	PART #	DESCRIPTION	QUANTITY
1	GEAR	Bronze gear (SS or HS)	1
11	57SHAFT	Shaft 6-12/16 x .75	1
12	4024-3/4	Sprocket 24 tooth for ASA 40	1
13	11	Woodruff key 11	2
14	5100-75	Retaining ring	6
17	1635DC	Bearing	2
18	N5002-175	Retaining ring	1
19	7443	Seal	1

TOTAL COST 57SA SPROCKET & WORM GEAR SUB-ASSEMBLY .....

58SA SPROCKET SUB-ASSEMBLY ..... DRAWING 200129P

ITEM	PART #	DESCRIPTION	QUANTITY
12	4024-3/4	Sprocket 24 tooth for ASA 40	1
13	11	Woodruff key 11	2
14	5100-75	Retaining ring	5
15	58SHAFT	Shaft 6 x .750	1
17	1635DC	Bearing	2
19	7443	Seal	2

TOTAL COST 58SA SPROCKET SUB-ASSEMBLY.....

Messrs. ~~Fisher~~ 6/4/64
Bahrink

638-218-4

June 2, 1964

Re Sump Discharge Pipe for
11th Street Conduit at
the Brooklyn Shaft

Mr. W. A. O'Leary, Director
Water Pollution Control
Department of Public Works
40 Worth Street
New York 7, N. Y.

Attention - Mr. J. V. Marra
Chief of Sewer Design

Dear Sir

Transmitted herewith are 4 copies each of our Drawings No. EO-11968-A, Rev. 0 and EO-11969-A, Rev. 0, showing the proposed 8" Sump discharge pipe connection to the 75" x 54" outfall Sewer with 6" and 4" reducer pipes from the Brooklyn Shaft of our 11th Street conduit located at Oakland and Ash Streets in Brooklyn.

Confirming a verbal discussion between Mr. W. Stampe of your department and Mr. E. J. Diekmann of our Company, permission is requested to connect our discharge pipe to the sewer as shown on the attached drawings and in accordance with your specifications listed below, which will be indicated on our final drawings.

1. The sewer connection will be made at a minimum distance of 10'0" from the outfall side of the Regulator Chamber.

2. The sewer connection will be located a minimum of 6" below the inner top of the sewer, thru the 12" reinforced concrete wall, flush with the inner face and properly grouted in place.

3. A 125# swing check valve will be installed for a back water valve.

4. The sump pump will have a 60 gpm intake capacity. A spare pump for emergency use will be also provided.

5. Relative to the sodium chloride concentration of the effluent to the City sewer outfall, our tests indicate an approximate concentration of sodium chloride in solution of 2400 ppm.

Re Sump Discharge Pipe for
11th Street Conduit at
the Brooklyn Shaft

6. A sand cushion of 6" will be provided between our drain pipes and the roofs of the 36" and 42" sewers at the points of crossing.

We wish to thank you and your engineering staff for their cooperation in connection with this project.

Very truly yours

G. WARDE
FOR W. C. Schotte, General Superintendent
Inspection & Major Construction Projects Bureau

sc

Copy to: Messrs. E. G. Watkins, Dist. Structures Bureau
F. Bahniuk, Dist. Structures Bureau

EPA-NC-CE-0000590

638 218-2
638-218-1

THE CITY OF NEW YORK

DEPARTMENT OF PUBLIC WORKS

MUNICIPAL BUILDING

NEW YORK, N. Y. 10007

COMMISSIONER
BRADFORD N. CLARK, P. E.

DEPUTY COMMISSIONERS
MEYER F. WILES, P. E.
JOSEPH M. GIBLIN

June 23, 1964

ADDRESS ALL COMMUNICATIONS TO THE DEPARTMENT

IN REPLY REFER TO

Sump Discharge Pipe for
11th Street Conduit at
the Brooklyn Shaft

Mr. W. C. Schotte, General Superintendent
Inspection & Major Construction Projects Bureau
Consolidated Edison
708 First Avenue
New York 17, N. Y.

Dear Sir:

In reply to your letter of June 5, 1964 this Department will grant permission for an eight inch connection to the 75" x 54" outfall sewer in Oakland Street, as shown on your Drawing Numbers EO-11968A, dated January 7, 1963 and EO-11969A, dated February 11, 1964 and under the conditions stated in said letter.

Please contact Mr. F. Gleason, Room 902, in the Municipal Building, Brooklyn, to make arrangements to have an inspector of this Department present when this work is done.

Very truly yours,

W. N. TORPEY
Deputy Director
Bureau of Water Pollution
Control

EPA-NC-CE-0000591

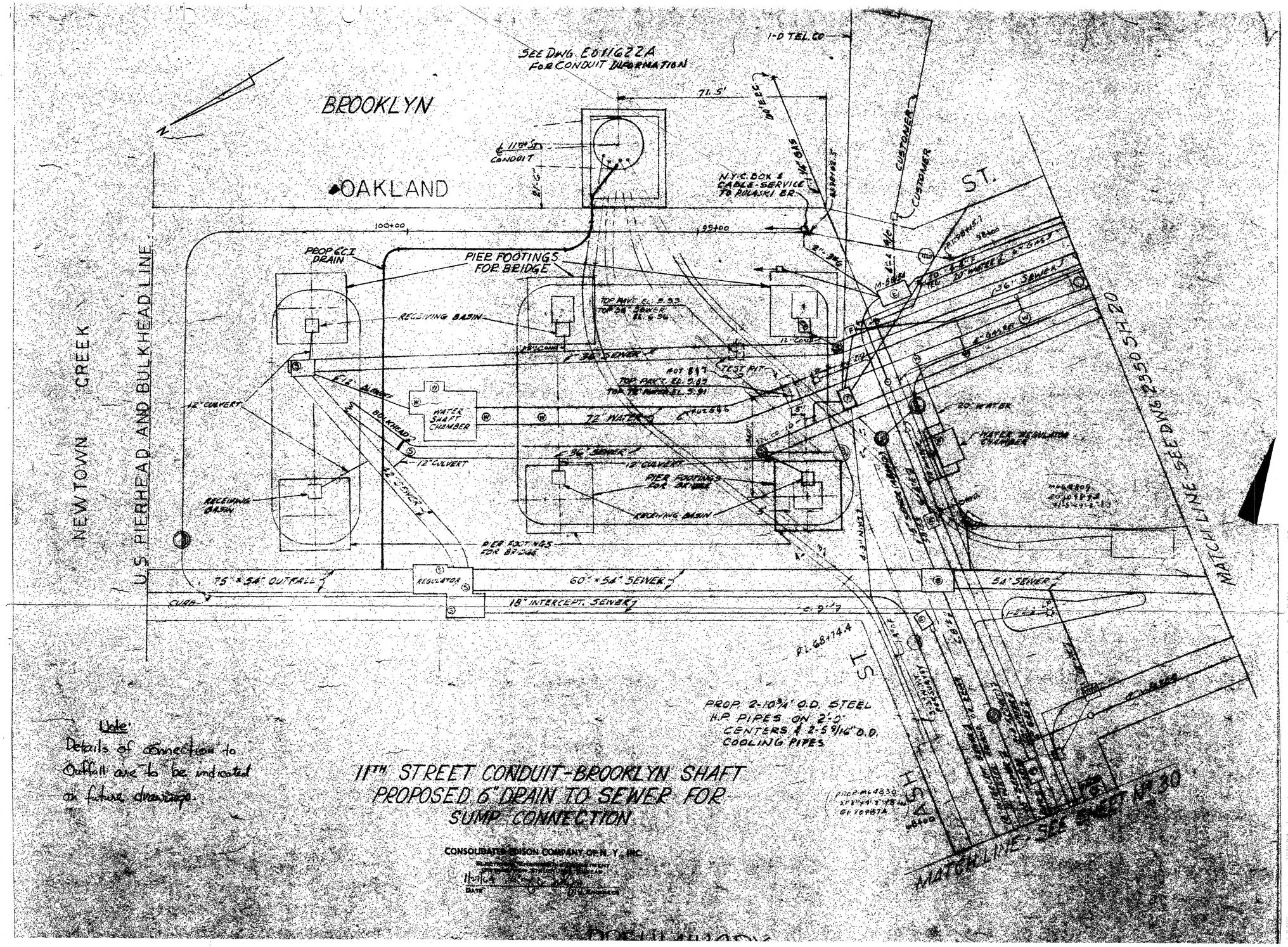

EPA-NC-CE-0000592

Form OP1979-5M-512005(80) 346

10-83-52016

The City of New York

DEPARTMENT OF PORTS AND TERMINALS

No. .....

Battery Maritime Building, New York, NY 10004 Tel. (212) 248—

Parties This Permit, made on the day of , 19 between The City of New York, hereinafter called Permittor, acting by its Commissioner of Ports and Terminals, hereinafter called Commissioner, and

of Consolidated Edison Company
4 Irving Place
New York, N. Y. 10003

hereinafter called Permittee.

Term For and in consideration of the charges, covenants, terms and conditions hereinafter to be paid, performed, kept and observed, Permittor does hereby issue this permit to Permittee to use and occupy the hereinafter described property, for the period commencing on October 1, 1983 and terminating on September 30, 1984 subject to termination and revocation as hereinafter provided;

Premises All that certain property, situated in The County of Kings , City of New York, described as follows:

Space through the bulkhead on City-owned property at the foot of McGuiness Boulevard, Newton Creek, Brooklyn, New York, all as shown on print attached hereto and made a part hereof, in accordance with work permit # 73077, plan # 6699, Brooklyn dated May 17, 1973,

hereinafter called the premises, together with the right to enter thereupon for the purpose of this permit.

On the following TERMS AND CONDITIONS which Permittee hereby covenants, promises and agrees to and with Permittor to keep and perform:

Use of Property (1) a. Permittee shall use the premises for maintenance of two cast iron pipes six inches in diameter

only, and for no other purpose except with the prior written approval of the Commissioner in each instance.

b. In the event of a breach or threatened breach by Permittee of the provision of this Article, Permittor shall have the right of injunction and/or may reenter the premises as provided herein. Permittor may also maintain an action for damages arising out of such breach.

Charge for use of Premises (2) Permittee shall well and truly, and without any manner of deduction, abatement, fraud, or delay, pay or cause to be paid to Permittor, its successors or assigns, at the office of the Commissioner, during the term of this permit, a charge at the rate of $816.22

payable annually in advance to the Cashier of the Department of Ports and Terminals.

a. If the rent, additional rent and all arrears (including prior 2% charges) are not paid in full by the 10th day of the month following the month in which it shall become due, or is already past due, an additional rental charge of two percent (2%) of the total of such rent, additional rent and arrears shall be added thereto and shall be payable and collectible as additional rent with the next monthly rental installment.

Bond (3) Permittee shall furnish as security for the payment of rent and for the faithful performance by Permittee of all the terms, covenants and provisions of this permit, either (a) a certified check equal to two months rent and surety bond as approved by the Comptroller in an amount equal to ten (10) months rent or (b) a certified check equal to two (2) months rent and securities of The City of New York, the market value of which shall be in an amount equal to four (4) months rent or (c) a certified check equal to six (6) months rent.

Notices (4) All notices or orders to be given by Permittor to Permittee shall be served either by personal service upon Permittee or by posting same in a conspicuous place upon the said property or by ordinary first class mail addressed to Permittee at

4 Irving Place, New York, N. Y. 10003

Any notice by Permittee to Permittor shall be served by certified or registered mail addressed as follows: Commissioner of Ports and Terminals, City of New York, Battery Maritime Building, New York, N.Y. 10004.

Water, Gas, Heat, Electricity and Sewer Charges (5) Permittee shall pay all sewer charges and for all water, gas, heat, and electricity consumed and used in the premises, and shall procure at Permittee's own cost and expense, all meters, permits, approvals, and licenses necessary to effectuate this provision.

Permittee will in no event make any charge to or accept any money, commission, premium, bonus, or other valuable consideration from any person, firm or corporation for the sale of water, gas, heat, electricity or for any sewer charges in excess of the rates actually charged to or paid therefor by Permittee; and Permittee will make no charge to or accept any money from any person, firm, or corporation for any handling services rendered by Permittee in connection with any such sale of water, gas, heat, electricity or for any sewer charges in excess of a reasonable sum expended by Permittee.

Permittee shall deposit, upon execution and delivery hereof, with the City Collector the sum of $ as security for payment of all water and sewer charges for water used or consumed on the property. The said sum shall be based on an estimate of consumption of water for the previous year. If the amount of such deposit has not been determined as of the date of the execution of this Permit, Permittor waives none of its rights to receive such deposit when the aforesaid estimate is determined. The City Collector shall apply such deposit to the payment of all unpaid water and sewer charges for water used or consumed on the property up to the date of termination or expiration of this Permit and refund to Permittee the remaining balance, if any.

Insurance (6) a. Permittee shall furnish Permittor with liability insurance during the term hereof issued by a responsible company or companies approved by the Commissioner naming as the insured the Permittor or the Permittor and Permittee against any claims, suits, demands or judgments by reason of personal injuries including death and for any claims of damage to property occurring on or in proximity to the premises, including, but not limited to, the lands under water and marginal street, wharf or place, or arising out of or as a result of the use of occupancy thereof by Permittee. Such liability insurance shall provide limits of at least $ 25,000.00 for property damage per occurrence and of at least $100,000.00 for one person, or more than one person, injured or killed in any one occurrence. The said policy or policies may provide that there be no subrogation against Permittee.

12-2-83

EPA-NC-CE-0000593

b. Permittee shall also for the benefit of Permittor, keep the premises and structures on the premises insured against loss or damage by fire, floating ice, collision, action of the elements and such other hazards, casualties and contingencies, in an amount equal to the estimated replacement value as fixed herein, without deduction for depreciation, including the cost of the removal of the debris. Policies providing for such insurance shall be issued by such insurance company or companies as are satisfactory to the Commissioner, and shall insure Permittor solely and unconditionally, with loss adjusted with and payable solely and unconditionally to Permittor, without restriction or regard as to whether or not Permittee carried additional or other insurance.

c. At the commencement of the term hereof, an engineer, appraiser or other representative of the Commissioner shall inspect and examine the premises for the purpose of determining the replacement value, without deduction for depreciation, including the cost debris removal. Such replacement value is hereby fixed in the amount of $ and insurance in this amount shall be furnished by Permittee.

d. Permittee, however, shall be, continue and remain liable for any uninsured destruction, loss or damage from any cause arising from breach of the covenant of the several articles of this permit by Permittee. In the event of any such loss or damage for which Permittee becomes liable as aforesaid, Permittee shall, at its sole cost and expense, promptly repair or replace the property so lost or damaged in accordance with plans and specifications approved by the Commissioner.

e. All policies of insurance required by this article shall contain the terms and conditions of policies and endorsements available for such risks. Should other different or additional types of insurance or clauses thereafter become available, Permittee agrees to furnish such new policies on demand of the Commissioner, Permittee further agrees to execute and deliver any additional instruments and to do or cause to be done all acts and things that may be requested by Permittor properly and fully to insure Permittor against all damage and loss as herein provided for and to effectuate and carry out the intents and purposes of this permit.

f. All insurance policies and insurance required to be furnished hereunder shall be issued by a responsible company or companies approved by the Commissioner and all insurance policies shall be subject to approval by the Commissioner as to form and sufficiency of coverage and shall be filed in the Office of the Commissioner. All insurance policies shall be filed before Permittee enters into possession of the premises, with premiums paid in full and so marked. Each policy shall contain a provision stating that it cannot be cancelled or materially altered without the approval of the Commissioner of Ports and Terminals of The City of New York. If Permittee neglects, or refuses, or is unable to obtain any of the insurance required in this permit, then Permittor may procure same, wherever available, at the expense of Permittee. All amounts due from Permittee to Permittor, under this article, shall be deemed additional charges for use of the premises payable with and collectible as such charges.

Requirements of Law

(7) Permittee shall comply with and observe and this permit shall be subject to the Waterfront Commission Act (Laws of 1953, Chapters 882, 883, as amended), and to any and all other laws and to regulations and orders of the Department of Ports and Terminals and of any and all administrations, departments, bureaus and boards of the federal, state and city governments.

Acceptance of Payments No Waiver

(8) The acceptance of payments by Permittor for any period or periods after a default of any of the terms, covenants, or conditions herein contained to be performed, kept, and observed by Permittee, shall not be deemed a waiver of any right on the part of the Commissioner to cancel this permit for failure by Permittee so to perform, keep, or observe any of the terms, covenants or conditions of this permit. No waiver of default by Permittor of any of the terms, covenants or conditions hereof to be performed, kept and observed by Permittee shall be construed to be or act as a waiver of any subsequent default of any of the terms, covenants and conditions herein contained to be performed, kept and observed by Permittee.

Erection of Structures

(9) Permittee shall not erect nor maintain nor permit to be erected or maintained upon the premises structures of any kind other than those now on the premises or specifically authorized by this permit, without the prior consent in writing of the Commissioner. Permittee, at the Commissioner's option, upon twenty-four hours' notice so to do, shall remove any and all structures, signs or encumbrance that have been placed by it upon the premises without such consent of the Commissioner. In case of Permittee's failure to remove the same, the Commissioner may remove such structures, signs or encumbrance, and Permittee shall pay the cost of such removal and of the storage of the material, as additional rent, or Permittor may, if Permittor so elects, deal with it as though it was abandoned property.

Condemnation

(10) In the event that the premises or any part thereof are required, whether by Permittor or any other agency of Government, for a public use or condemned for a public use, Permittee waives any and all claims to an award for its permit or other damage or alleged damage by reason of such condemnation or requirement.

Unconditional Right of Revocation

(11) Permittee expressly agrees that Permittor, by the Commissioner, shall have the unconditional right to revoke this permit and terminate the period thereof, upon twenty-four hours' notice to Permittee, any provision of this permit to the contrary notwithstanding. In the event of such revocation and termination, Permittee shall remain liable for the due and full performance of all the terms, covenants and conditions of this permit on the part of Permittee to be performed up to the time of such revocation and termination.

Any and all obligations and/or liabilities of Permittee under this Permit shall survive the expiration of the term of this Permit or other cancellation or termination thereof.

Repairs, Painting, Rebuilding

(12) Except as otherwise provided herein, Permittee, at its own cost and expense, at all times during the said term, shall put, keep, and maintain the premises, and every part thereof, and the structures thereon or to be erected thereon, in good and sufficient repair and condition. The Commissioner shall be the sole judge of the amount of repairs, maintenance, and painting necessary under the terms of this permit.

Fees and Expenses

(13) If Permittee shall default in the performance of any covenant on Permittee's part to be performed by virtue of any provision in any article in this permit contained, the Commissioner may immediately, or any time thereafter, without notice, perform the same for the account of Permittee in the name of, or as agent of Permittee, or otherwise. If Permittor at any time elects to pay any sum of money, or do any act which will require the payment of any sum of money, by reason of Permittee's failure to comply with any provision hereof, or, if Permittor is compelled to incur any expenses, in instituting, prosecuting, or defending any action or proceeding instituted by reason of any default of Permittee hereunder, the sum or sums so paid by Permittor with all interest, costs and damages, shall be deemed to be additional rent hereunder and shall be due from Permittee to Permittor on the first day of the month following the incurring of such respective expenses.

Waiver of Liability

(14) Permittor shall not be liable for any damage, injury or liability that may be sustained by Permittee or any other person whatsoever, or to their goods and chattels from any cause whatsoever, arising from or out of the occupancy of the premises, including but not limited to damage by the elements, leakage, obstruction, or other defect of water pipes, gas pipes, soil pipes, electric apparatus, other leakage in or about the premises or in and from any other part of the structure or structures of which the premises are part, or the condition of the premises or any part thereof; and Permittee hereby expressly releases and discharges Permittor from any and all demands, claims, actions and causes of action arising from any of the aforesaid.

Indemnification

(15) Permittee shall forever indemnify and save harmless Permittor for and against any and all liability, claims, penalties, damages, expenses and judgments arising from injury during the term hereof to any person or persons including death or any property of any nature, occasioned wholly or in part by any act or acts, omission or omissions of Permittee, or of the employees, guests or agents of the Permittee and also for any matter, act, use or occupancy arising out of or as a result of this permit, occurring on or in proximity to the premises, including, but not limited to, the lands under water and marginal street, wharf or place.

Surrender

(16) Permittee shall peaceably and quietly leave, surrender, and yield up unto the possession of said Permittor, without any fraud or delay, the premises together with all structures, additions, alterations, changes, or replacements made thereon, except such thereof made by Permittee as the Commissioner shall require to be removed by Permittee, at the end of said term or other sooner termination thereof, and the premises, structures, and improvements thereon shall then be well and sufficiently repaired, painted and in good order and condition.

In the event the premises at the end of the said term or other sooner termination thereof are in a state of disrepair resulting from the failure of Permittee to repair, paint, and maintain the premises during said term, then and in that event or either of such events, Permittee shall be required to sufficiently repair, paint and place the premises in good order and condition as though all of such work had properly been done during such term.

No Right of Redemption

(17) Permittee hereby expressly waives any and all rights of redemption granted by or under any present or future laws, whether in the event of Permittee being evicted or dispossessed for any cause, or in the event of Permittor obtaining possession of the premises, by reason of the violation by Permittee of any of the covenants and conditions of this permit, or otherwise.

Access

(18) Permittee, at all times during the term, shall permit inspection of the premises by Permittor's agents or representatives and shall permit inspection thereof by or on behalf of prospective future occupants. Permittee shall, at the Commissioner's direction, allow an adjoining owner desiring to excavate on his property or Permittor desiring to excavate a nearby street, to enter the premises and shore up an intervening wall during such excavation.

Right of Entry

(19) In the event that this permit shall be terminated as provided in this permit or by summary proceedings, notice of revocation, or otherwise, or in the event that the premises, or any part thereof, shall be abandoned by Permittee, or shall become vacant during the said term, Permittor, or its agents, servants, or representatives, may, immediately or any time thereafter, reenter and resume possession of the premises or such part thereof, and remove all persons and property therefrom, either by summary dispossess

EPA-NC-CE-0000594

proceedings or by a suitable action or proceeding at law or in equity or by force or otherwise, without being liable for any damage therefor. No reentry by Permittor shall be deemed an acceptance of a surrender of this permit.

signment Mortgage

(20) Permittee shall not at any time assign, sublet, mortgage, or pledge this permit or any part thereof, or in any way charge or encumber the rights or property granted herein, or any part thereof, or issue or grant any permit or license to use the premises or any part thereof, whether for wharfage or any other purpose, without the prior written consent of the Commissioner.

ver- ing

(21) a. No advertisement, notice, or sign shall be placed or affixed to any of the structures, appurtenances, or any other part of the outside or inside of the premises except such as shall have first received the written approval of the Commissioner.

b. The Commissioner may require Permittee to place and affix or require Permittee to at Permittee's sole cost and expense to any of the structures, appurtenances, or any other part of the outside or inside of the premises, appropriate sign or signs designating the premises as City owned under the jurisdiction of the Department of Ports and Terminals, and Permittee shall at its own cost and expense maintain such sign or signs.

nding on ins

(22) Each and every of the terms, covenants and provisions of this permit shall inure to the benefit of and be binding upon the parties hereto and, except as herein otherwise provided, their respective legal representatives, successors, and assigns.

aiver of ial by ry

(23) Permittee hereby expressly waives all rights to trial by jury in any summary proceeding hereafter instituted by Permittor against Permittee or on any counterclaim interposed by Permittee in respect to the premises and in any action hereafter brought to recover rent becoming due hereunder or in any proceeding, counterclaim or action or any cause of action directly or indirectly involving the terms, covenants or conditions of this permit or the premises on any matters whatsoever arising out of or in any way connected with this permit, including, but not limited to, the relationship of Permittor and Permittee's use or occupancy of the premises.

aiver of otice

(24) Permittee hereby expressly waives and renounces all rights to any notice to surrender possession, or of an intention of Permittor to enter, reenter or resume possession under any statute, law or decision now or hereafter in force, or of instituting legal proceedings to that end.

rvival ights

(25) The provisions of this permit relating to waiver of a jury trial and the right of reentry upon revocation shall survive the expiration date of this permit.

aiver of mmunity

(26) Upon the refusal of a person, when called before a grand jury, governmental department, a commission, agency or any other body which is empowered to compel the attendance of witnesses and examine them under oath, to testify concerning a transaction, contract, lease, permit or license entered into with The City of New York (City), the State, or any political subdivision thereof, or a public authority or with any public department, agency or official of the State or a political subdivision thereof, upon being advised that neither his or her statement nor any information or evidence derived from such statement will be used against that person in any subsequent criminal proceeding;

a. Such person, or any firm, partnership, corporation or other entity related to the aforesaid testimony of which he or she was at the time of the testimony a member, partner, director, officer, fiduciary, principal or employee may be disqualified for a period not to exceed five years after such refusal from submitting bids for or entering into or obtaining any contract, lease, permit or license with or from the City or submitting bids for or entering or obtaining any contract, lease, permit or license which will be paid in whole or in part out of monies under the control of or collected by the City, and

b. Any and all such existing City contracts, leases, permits or licenses that said refusal to testify concerned may be cancelled or terminated by the City of the contracting agency and/or be subject to such other action appropriate under the circumstances thereto, in the discretion of the City for cause after a hearing, without the City incurring any penalty or damages on account of such cancellation or termination, but any monies owing for goods delivered, work done, rentals, permit or license fees due, prior to the cancellation or termination, shall be paid by the City.

c. The term license or permit as used herein shall be defined as a license, permit, franchise or concession not granted as a matter of right.

d. Any disqualification, cancellation or termination hereunder shall be made by the City commissioner or agency head who is or would be a party to the contract, lease, permit or license that is the subject of the aforesaid disqualification, cancellation and/or termination, after a hearing upon not less than two (2) days written notice to the parties involved.

elephones, ending achines

(27) No telephone booths, merchandise vending machines or concessions shall be installed on the premises without prior written permission of the Commissioner. If, after obtaining such written permission from the Commissioner, Permittee places or installs any telephone booths, merchandise vending machines or concessions thereon, Permittee shall pay to Permittor fifty percent (50%) of all gross revenues derived by it from these operations, whether such telephone booths, merchandise vending machines or concessions are presently installed or in operation, or are hereafter installed or operated.

Such fifty percent (50%) of all sums so collected shall be the property of Permittor, and shall be remitted by Permittee as additional rent to Permittor on each of the days fixed for the payment of charges under this permit. The Commissioner may require Permittee to keep records in such form as he designates relating to collection of any of the aforesaid moneys; and the books and records of Permittee with respect to such collections shall be open to inspection by the Commissioner and the Comptroller of The City of New York and their designees at all reasonable times for the purpose of determining any amounts due to Permittor.

emoval of tructures d Improve- ents by rmittee

(28) a. All existing structures and improvements on the premises owned by Permittee at the commencement of the term hereof and all structures erected and improvements made by Permittee on the premises during the term hereof shall remain the property of Permittee and shall be removed by Permittee and the premises restored to its original condition by Permittee, at its sole cost and expense, immediately upon the expiration or sooner termination of this permit or any reissuance thereof, and if Permittee fails or neglects so to do, the Commissioner shall have the right to remove the said structures and improvements and effect restoration of the premises or any part thereof at the expense of Permittee.

b. However, Permittee hereby agrees that at any time on or before the expiration or sooner termination of this permit or any reissuance thereof, upon written notice to Permittee by the Commissioner, served in the manner provided by Article (4) hereof, ownership of and title to any and all or any part or portion of such structures and improvements shall pass to and vest in Permittor upon such expiration or sooner termination of this permit or any reissuance thereof without cost to Permittor.

Default

(29) If any default be made in the payment of the said charges or any part thereof, or if any default be made in the performance of any of the covenants and agreements herein contained, or if the premises shall become vacant, Permittor may in addition to the right to reenter without notice, and in addition to the right to regain possession by means of summary proceedings or any other method permitted by law, upon resuming possession, let or otherwise permit the use of the premises without terminating this permit, or in any manner affecting the obligation of Permittee to pay, as damages, the amount herein covenanted to be paid as charges, in which event, however, there shall be credited to the account of Permittee the amount received from such new occupancy after deducting the expenses of such proceedings as may have been necessary in order to regain possession under this provision, as well as the costs of arranging such new occupancy; and the execution of a new lease or permit for the same property, regardless of the term and/or provisions thereof, shall not terminate Permittee's liability or obligations hereunder which shall, in all events, remain in full force and effect for the full term of this permit. If Permittee shall have once vacated the premises, Permittee may not reenter.

amages ollectible s Periodic harges

(30) In the case of the reentry or taking of possession by Permittor in the manner, or by means, provided or referred to in Article (29) of this permit, the amount of damages or deficiency shall become due and payable on the first day of each month, as soon as the amount of such damage or deficiency shall have been ascertained in the manner herein provided, and separate actions may be maintained monthly to recover the damage or deficiency then due, without waiting until the end of the term. No notice or demand shall be necessary in order to maintain such action.

apital mprove- ents for ire Pre- ention

(31) Permittor shall have the right, if it so chooses, to install capital improvements consisting of sprinkler system, fire holes and fire walls. Permittee agrees to pay as additional charge eight percent (8%) per annum of the actual cost of each such improvement. The cost as certified by the Chief Engineer of the Department of Ports and Terminals as the date of completion of any of said improvements shall be the date when said additional charge shall commence with respect to such improvement. Said additional charge shall be paid in equal installments on the same dates when charges are due and payable under the provisions of this permit. Permittee shall not be entitled to any reduction or diminution in charges by reason of loss of use, delay or inconvenience due to installation of any capital improvement.

Legality f Use

(32) Permittor makes no representation as to the legality of the use of the premises for the Permittee's intended purposes. In the event any use or proposed use is declared illegal by a court of competent jurisdiction, Permittee covenants and agrees that Permittor, its agents, officers, employees and Commissioner, or any person whatsoever, shall not be liable for any damages arising out of or related to such illegal use or proposed use.

Marginal lotes

(33) The marginal notes are inserted for references only and in no way define, limit, or describe the scope or intent of this permit, or affect this permit in any way.

EPA-NC-CE-0000595

oise ontrol (34) Permittee shall comply with 1403.3-2.25 of the Administrative Code of The City of New York. Permittee shall not permit or cause to be permitted on the Premises devices and activities which are subject to the provisions of the New York City Noise Control Code to be operated, conducted, constructed or manufactured which cause a violation of the Noise Control Code.

Any such devices and activities shall incorporate advances in the art of noise control developed for the kind and level of noise emitted or produced by such devices and activities, in accordance with regulations issued by the Commissioner of the Department of Environmental Protection of The City of New York, or its successor.

Oral odification (35) This permit may not be altered, modified or amended in any manner whatsoever except by a written instrument signed by Permittor and Permittee.

n Dis- imination (36) Permittee covenants and agrees not to discriminate upon the basis of race, sex, age, color, creed or national origin in the use or occupancy of the demised premises or in improvements erected on or to be erected thereon, or in part thereof and will state in all solicitations or advertisements for employees placed by or in behalf of the Permittee that all equally qualified applicants will be afforded equal employment opportunities without discrimination because of race, sex, age, color, creed or national origin.

cal state axes (37) Permittee agrees to pay all real estate taxes and assessments levied on such structures and improvements so owned by Permittee, presently existing or subsequently erected by Permittee on the demised premises throughout the term of this permit or any reissuance thereof. All real estate taxes and assessments and the penalties thereon remaining unpaid shall be deemed additional rent and Permittor shall have the right to enforce collection thereof in the same manner as though there was a default in the payment of rent hereunder.

ndition of remises (38) Permittee accepts the premises "as is" and will not at any time make any claim that the premises or structures thereon are not, or at the time of the commencement of the term hereof were not well painted and in suitable repair or condition for the uses and purposes of this permit, nor will Permittee at any time make any claim for or by way of reduction of charge, or otherwise, for loss of wharfage or other damage arising from or consequent upon any repairs or dredging that Permittor may do or cause to be done pursuant to the provisions of this permit or in consequence of the occupation of the premises by Permittor, or its agents or contractors.

The provision contained in this article that Permittee accepts the premises "as is" relates to the condition of the premises as they were when Permittee first entered into possession thereof.

(39) This permit states the entire and integrated agreement between Permittor and Permittee and supersedes all prior negotiations, representations or agreements, either written or oral. This Permit may not be altered, modified or amended except as described in Article Thirty-Five (35) above.

IN WITNESS WHEREOF, the parties hereunder have caused this permit to be executed the day and year first above written.

THE CITY OF NEW YORK

By ..... Commissioner Ports and Terminals

Company Consolidated Edison Company ..... Permittee

By Mr. Robert J. Mele

Real Estate Manager

Address Consolidated Edison Company of New York Inc.

4 Irving Place - Room 1228

New York, New York 10003 Zip No. .....

Telephone ( ) .....

Affix Corporate Seal

EPA-NC-CE-0000596

Form OP1979-5M-512005(80) [redacted] 846

mmis-
ner CITY, COUNTY, AND STATE OF NEW YORK, ss.:

On this day of 19 , before me personally came

Commissioner of Ports and Terminals to me known and known to me to be the person described in and who executed the foregoing permit and duly acknowledged to me that he executed the same.

Notary Public of Commissioner of Deeds

ividual STATE OF , COUNTY OF , ss.:

On this day of 19 , before me personally came

to me known and known to me to be the individual described in and who executed the foregoing permit and he duly acknowledged to me that he executed the same.

Notary Public or Commissioner of Deeds

rporate STATE OF NEW YORK , COUNTY OF NEW YORK , ss.:

On this 26 day of JANUARY 1984, before me personally came

ROBERT T. MELE

to me known, who being by me duly sworn, did depose and say that he resides at

68 TERESA AVE. YONKERS, N.Y. 10704

that he is the MANAGER of

CONSOLIDATED EDISON CO. OF N. Y. INC.
REAL ESTATE DEPARTMENT

the firm described in and which executed the foregoing instrument and acknowledged to me that he subscribed the name of said firm thereto on behalf of said firm for the purposes therein mentioned.

Peter G. Silletti

Notary Public or Commissioner of Deeds

PETER G. SILLETTI
Notary Public, State of New York
No. 03-4621177
Qualified in Bronx County
Term Expires March 30, 1985

irm STATE OF , COUNTY OF , ss.:

On this day of 19 , before me personally came

to me known and known to me to be a member of the firm of

the firm described in and which executed the foregoing instrument and acknowledged to me that he subscribed the name of said firm thereto on behalf of said firm for the purposes therein mentioned.

Notary Public or Commissioner of Deeds

EPA-NC-CE-0000597

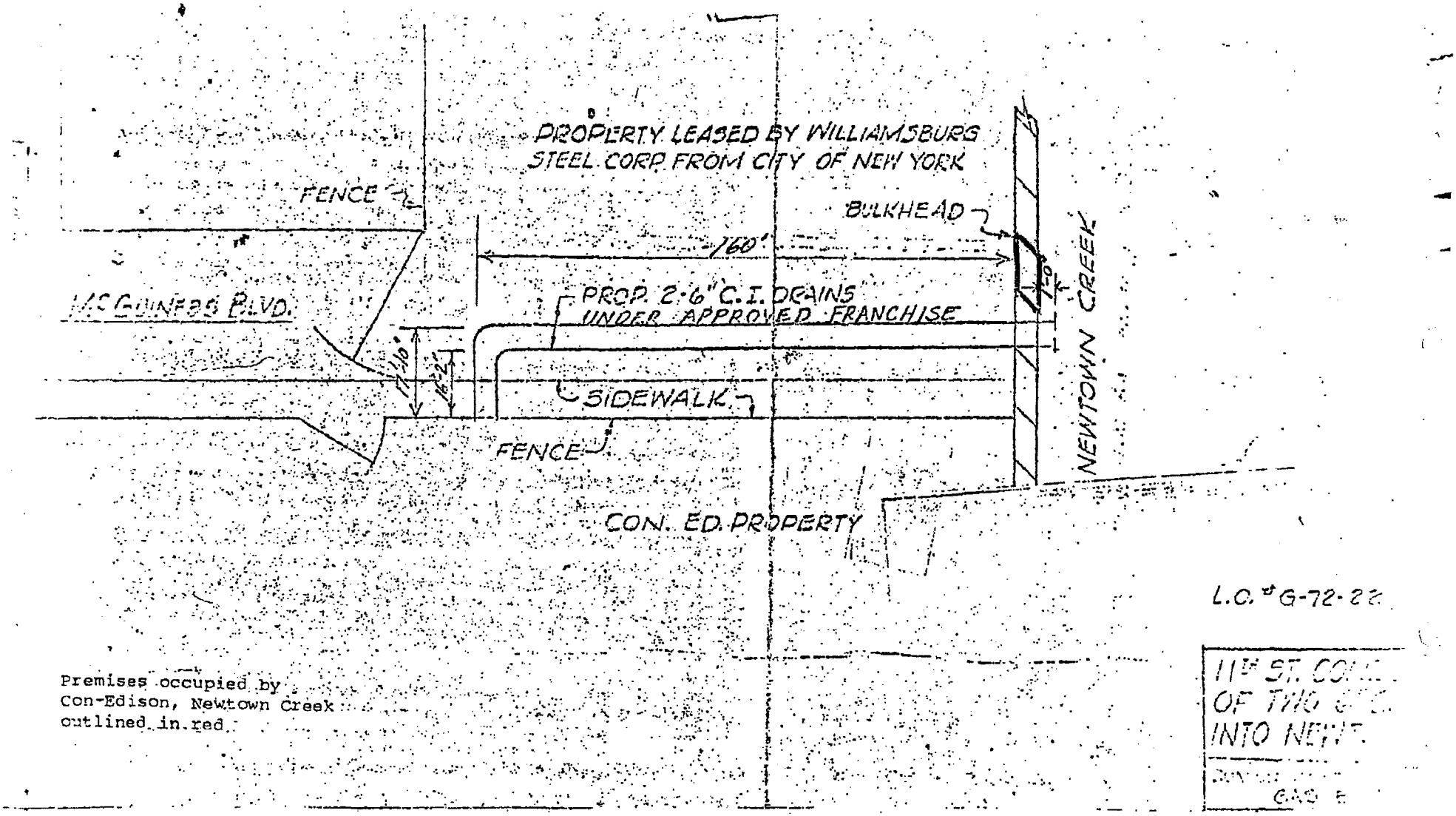

EPA-NC-CE-000598

THE CITY OF NEW YORK

Economic Development Administration – DEPARTMENT OF PORTS AND TERMINALS
Battery Maritime Building • New York, New York 10004 • Tel. (212) 566-0186

EXTENSION OF OCCUPANCY PERMIT

PERMITTEE: CONSOLIDATED EDISON CO
4 IRVING PLACE
NEW YORK N Y 10003

Auditor's Account number: 52016

PERMIT NUMBER: 93 77

Dated:

PREMISES

BULKHEAD NEWTON CREEK

All as more fully described in or as referred to in the prior permit mentioned below

RENTAL PAYABLE AS FOLLOWS:

501. 38 PER ANNUM

THE PARTIES HERETO AGREE THAT:

Prior Permit Number: 460 73

is hereby extended for a period commencing on: Mo 7 Day 1 Year 77

and terminating on: Mo 6 Day 30 Year 78

or sooner if provided in such permit, and remaining revocable as provided therein, all at the rental payable as indicated above. Other amendments, if any, are as follows:

All other terms and conditions of such permit are incorporated herein by reference as though set forth in full, except as may otherwise be indicated herein.

IN WITNESS WHEREOF, THE PARTIES HAVE CAUSED THIS EXTENSION OF PERMIT TO BE EXECUTED BELOW:

PERMITTEE

CONSOLIDATED EDISON CO

By James P. Manning Title Director, Real Estate & Insurance Tel. 460-4536

REVIEWED AS TO TERMS:

6/27/77 RJ

THE CITY OF NEW YORK, PERMITTOR

LOUIS E. MASTRIANI

By Commissioner of Ports and Terminals

By Arnold D. Hirsch
Director, Property Management Services

THIS EXTENSION OF PERMIT NOT VALID UNLESS SIGNED BY PERMITTOR.

CITY, COUNTY, AND STATE OF NEW YORK, ss:

On this AUG 19 1977 day of 197 , before me personally came

Commissioner

Arnold D. Hirsch, Director
Property Management Services

Commissioner of the Department of Ports and Terminals of the Economic Development Administration to me known and known to me to be the person described in and who executed the foregoing extension of permit and duly acknowledged to me that he executed the same.

WILLIAM J. SEXTON
Commissioner of Deeds, City of New York 3-119
Certificate filed in New York County
Commission Expires December 1, 1978

William J. Sexton
Notary Public or Commissioner of Deeds

Corporate Acknowledgement—Permittee

STATE OF NEW YORK , COUNTY OF NEW YORK ,ss:

On this 18th day of July 1977 , before me personally came James P. Manning

to me known who being by me duly sworn, did depose and say that he resides at 97 Wilson Avenue, Rutherford, New Jersey 07070 that he is the Director of Real Estate & Insurance of Consolidated Edison Company of New York, Inc. the corporation described in and which executed the above extension of permit; that he knows the seal of said corporation; that the seal affixed to said permit is such corporate seal; that it was so affixed by order of the Board of Directors of said corporation, and that he signed his name thereto by like order. Trustees

PETER G. SILLETTI
Notary Public, State of New York
No. 03-4621177
Qualified in Bronx County
Term Expires March 30, 1979

Peter G. Silletti
Notary Public or Commissioner of Deeds

Individual Acknowledgement—Permittee

STATE OF , COUNTY OF ,ss:

On this day of 197 , before me personally came

to me known and known to me to be the individual described in and who executed the foregoing permit and he duly acknowledged to me that he executed the same.

Notary Public or Commissioner of Deeds

EPA-NC-CE-0000599

FO-14493-A

REVISIONS	
R. Schaffranek	0
RELEASED FOR BIDS & CONSTRUCTION. PROJECT NO 2160 JL 8-14-72	
	1
CHANGED EL AT BULKHEAD & SHOW CLEARANCE TO BULKHEAD JP 1 28 73	

72-256

SPECIFICATIONS
1 ELEVATIONS REFER TO 000 LOCAL PLANE OF MEAN LOW WATER WHICH IS 2.01 BELOW MEAN SEA LEVEL AT SANDY HOOK N.J.
2 CAST IRON MECHANICAL JOINT PIPE SHALL BE IN ACCORDANCE WITH CON EDISON CO SPEC. EO-8004 & EO-8008 (ASA CLASS 100)

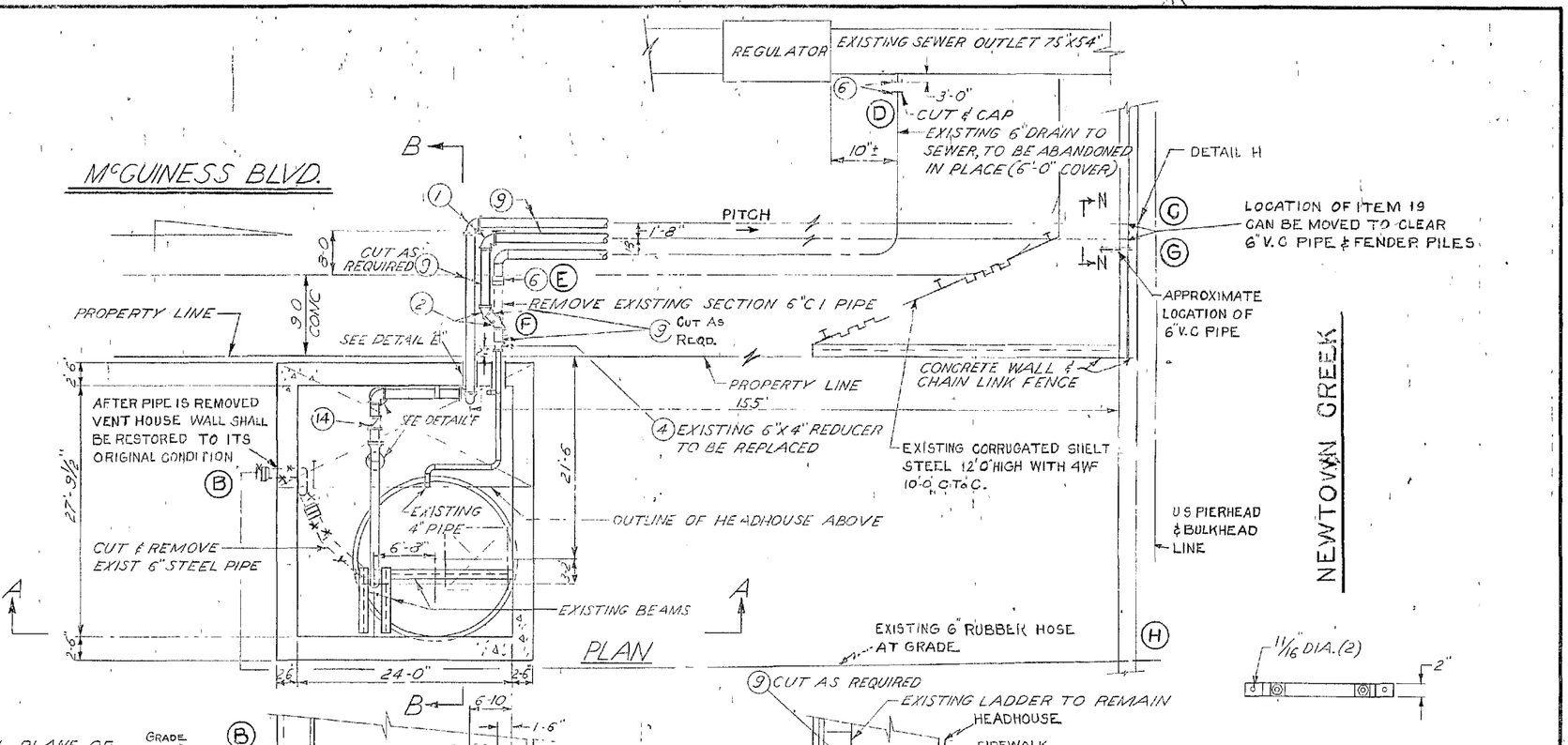

NOTES:
CONTRACTOR TO VERIFY ALL DIMENSIONS IN THE FIELD.
APPLY COLMA "FIX" BETWEEN OLD AND NEW CONCRETE.

CLASSIFICATION ESTIMATED MAN HOURS										
A☐ B☐ C☐						C☐ G☐ C☐ S☐				
1	2	3	5	6	7	@ 55th		2 CONTR		TOTAL
AM	CAB	PS	SS	OH	SI	VAULT	OTHER	VAULT	OTHER	

PAVT RESTORATION - ITEM ____ ORDER # ____

CITY OF NEW YORK
DEPARTMENT OF HIGHWAYS
DIVISION OF DESIGN — BRIDGES
APPROVED
CHIEF DIVISION OF DESIGN — BRIDGES DATE

ITEM	ORDER NO.	LOCATION	DESCRIPTION	LENGTH	DATE	FOREMAN FIELD REPORT
9		B	RESTORE WALL TO ORIGINAL CONDITION			
8		B To H	REMOVE 6" RUBBER HOSE	200±		
7		F To E	EXIST. PIPE TO BE REMOVED	8'±		
6		C & G	INSTALL ITEM 7 THRU BULKHEAD WALL & REPAIR AS REQ'D.			
5		F TO G	EXISTING 4" PIPE TO BE PICKED-UP WITH 6" PIPE AT 'F' AND EXTENDED TO 'G' WITH 6" PIPE.			
4		D	CAP SEWER CONNECTION.			
3		D TO E	CUT & CAP EXISTING 6" PIPE & ABANDON IN PLACE			
2		A TO C	INSTALL 6" DIA. MECH. JOINT PIPE, AS PER THIS DWG.	220'±		
1		A TO B	CUT & REMOVE EXISTING 6" STEEL PIPE.	52'±		

DESCRIPTION OF WORK ITEMS

ITEM NO	QUAN	DESCRIPTION	STOCK NO
19	2	12" DIA. STEEL SLEEVE 6'-0" LONG (TO BE VERIFIED IN FIELD)	
18	2	10" DIA STEEL SLEEVE 2'-11" LONG (TO BE VERIFIED IN FIELD)	
17	1	6" HEAVY DUTY RISER CLAMP PIPING SPECIALTIES INC FIG 183 OR APPD EQUAL	
16	1	PIPE STRAP 2" x ⅜" STEEL BENT AS SHOWN	
15	4	LINK SEALS, PER G-8096, 7 LINKS PER PIPE, MODEL NO. LS-400-C	341-0768
14	1	6"-125" FERRO STEEL SWING CHECK VALVE	
13	16	⅞ ANCHOR BOLTS EO-1051, EO-11968-A	
12	2	½" DIA THREADED ROD 10" LONG W/2 NUTS, (2 FLAT & 2 LOCK WASHERS)	
11	4	OFFSET PIPE CLAMP (MODULAR IRON)	
10	2	PIPE SUPPORT	
9	21	6" C.I. M.J. PIPE 18' LONG	
8	6	6" C.I. M.J. 12' LONG PIPE	
7	3	6" C.I. MECHANICAL JOINT (INCLUDE ½ CONNECTING PIECE, M & F END	
6	3	6" C.I. M.J. CAP WITH 3 CAST IRON GLANDS & GASKETS	
5	1	6" DRESSER STYLE 39-62 STEEL TO C.I. COUPLING	
4	1	6" TO 4" C.I. MJ CONCENTRIC REDUCER	
3	1	6" C.I. MJ OFFSET (12" DROP)	
2	2	6"-45° C.I. MJ ELBOW	
1	6	6"-90° C.I. MECHANICAL JOINT ELBOW	

BILL OF MATERIAL

REFERENCE DWG'S.
3"C.I. DISCH. PIPE IN HEADHOUSE _____ EO-11968-A

L.O.# G-72-22

11th ST. CONDUIT INSTALLATION OF TWO 6" DRAINS
McGUINESS BLVD & NEWTOWN CREEK

CONSOLIDATED EDISON COMPANY OF N.Y., INC.
GAS ENGINEERING DEPT

DATE 2-23-72
LAST REV. 1-25-73

DWG. No EO-14493-A REV. 1

FOR APPROVAL	DIV	SIGNATURE	DATE

DRAWN BY JLUGO 2-23-72 | CHECKED BY MM 2 20 72 | TRACED BY | SCALE
APPROVED
CHIEF DESIGN ENGINEER | DATE
MANAGER | DATE

EPA-NC-CE-0000600

11TH STREET CONDUIT TUNNEL

SYSTEM DESCRIPTION

TUNNEL DEWATERING AND DRAINAGE SYSTEM / OIL WATER SEPARATORS

REVISION 00

July 18, 2011

Prepared by: _____
Nickitas F. Panayotou, NYS PE 043583 TRC Engineers Inc.

Concurrence By: _____
Jed Khandji – Water Vulnerability – Contract Administrator

EH&S Concurrence: _____
Lima Jones – Section Manger Gas EH&S

Approved By: _____
David Ferri, Section Manager Tunnels Group / Date

TABLE OF CONTENTS

1.0 SYSTEM OVERVIEW 3
1.1 DESCRIPTION AND FUNCTIONS 3
1.2 DESIGN BACKGROUND AND SCOPE 4
1.3 ABBREVIATIONS AND ACRONYMS 4

2.0 SYSTEM DESIGN BASIS REQUIREMENTS AND CHARACTERISTICS 4
2.1 REGULATORY / CODE REQUIREMENTS AND COMMITMENTS 4
2.2 SYSTEM FUNCTIONAL REQUIREMENTS 5
2.3 OTHER REQUIREMENTS 6

3.0 COMPONENT DESIGN BASIS REQUIREMENTS 6
3.1 SUMP PIT, PUMPS AND FITTINGS 6
3.1.1 NORMAL OPERATING FUNCTIONS 6
3.1.2 ACCIDENT MITIGATING MEASURES 7
3.1.3 DESIGN BASIS REQUIREMENTS 7
3.2 OIL/WATER SEPARATOR (OWS) SYSTEM AND WATER OUTFALL 8
3.2.1 NORMAL OPERATING FUNCTIONS 8
3.2.2 ACCIDENT MITIGATION FUNCTIONS 12
3.2.3 DESIGN BASIS REQUIREMENTS 12
3.3 EMERGENCY GENERATOR 13
3.3.1 NORMAL OPERATING FUNCTIONS 13
3.3.2 ACCIDENT MITIGATION FUNCTIONS 14
3.3.3 DESIGN BASIS REQUIREMENTS 14

4.0 SYSTEM INTERFACES / BOUNDARIES, INTERLOCKS, ACTUATIONS AND CONTROLS. 14
4.1 SUPPORT SYSTEMS SUPPLIED BY PUMPING SYSTEM 14
4.2 SUPPORT SYSTEMS SUPPLIED BY THE OWS SYSTEM 14
4.3 SUPPORT SYSTEMS REQUIRED BY THE OWS SYSTEM 14
4.4 SYSTEM INTERLOCKS 15
4.5 SYSTEM ACTUATION AND CONTROL FEATURES 15

5.0 REFERENCES 16
5.1 DRAWING REFERENCES 16
5.2 CORRESPONDENCE 16
5.3 OTHER REFERENCES 16

6.0 HISTORICAL EVOLUTION OF DESIGN CHANGES 17
6.1 ADDITIONAL OF MERCER UNITS 17

1.0 SYSTEM OVERVIEW

1.1 DESCRIPTION AND FUNCTIONS

1.1.1 The 11th Street Conduit Tunnel was constructed in 1965 and is located immediately to the east of the Pulaski Bridge. Its depth ranges from 140 to 150 feet below grade, spanning a distance of 2,150± feet between the Boroughs of Queens (Queens County) and Brooklyn (Kings County), and 103± feet beneath the bed of the Newtown Creek, a boundary separating these two boroughs.

The shaft on the Queens side is located at the southeasterly corner of 11th Street and 47th Road on lands identified as Lot 16 in Block 60 (Queens tax maps), while the shaft on the Brooklyn side is off of Ash Street and north of McGuinness Boulevard, approximately 160 feet from the south bank of the Newtown Creek on lands identified as Lot 136 in Block 2491 (Brooklyn tax maps).

1.1.2 Groundwater that infiltrates through the tunnel walls and both headhouse shafts flows via gravity from the Queens side toward the Brooklyn end where it is directed into a sump pit located at the bottom of the Brooklyn shaft and conveyed via submersible pumps up to the surface and into OWS's installed at grade and located just beyond the Brooklyn headhouse. (See Figure 1.1)

This groundwater that infiltrates into the tunnel includes contaminants from the bed of the Newtown Creek, and has the potential to accumulate additional solids and/or contaminants as it flows in channels running along the tunnel floor and into the sump pit.

Figure 1.1 The simplified block diagram of the system is shown below:

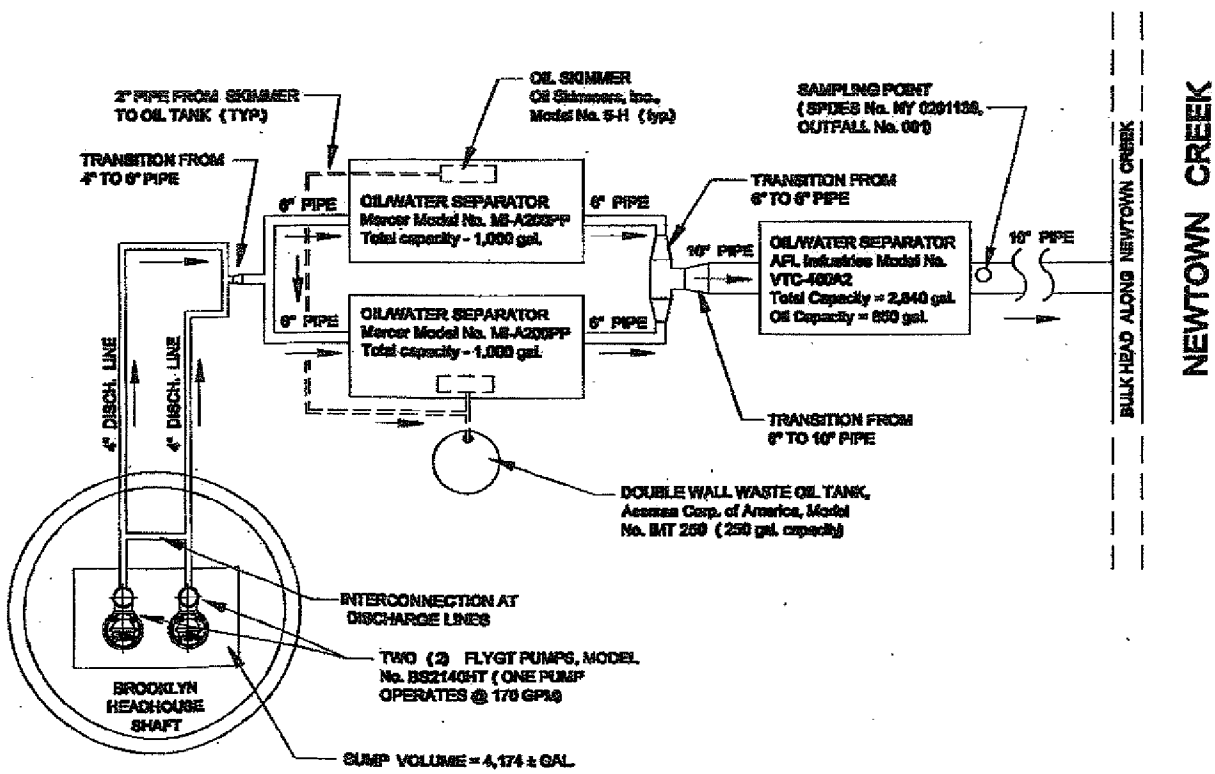

1.2 DESIGN BACKGROUND AND SCOPE

1.2.1 Polluted influent, which historically consists of oil and grease (O&G) and creosote, accumulates in this sump pit with limited settlement time and is pumped controlled by float level switches into piping to the surface and into two (2) OWSs (Mercer units) at the surface that are installed in parallel. In the Mercer Units a portion of the suspended solids settles to the bottom of these units. Pollutants/oils in the remaining liquid with a density less than that of water are skimmed off by an integral skimmer that is continuously operated and directed into an adjacent oil collector 250 gallon tank.

The effluent from these two units converges and is then directed into a third OWS secondary wastewater treatment (AFL unit) where additional settlement of suspended solids and segregation of any remaining O&G/contaminants take place.

The processed effluent from the AFL unit is then directed via a 12" pipe running 2± feet above grade for a distance of 110± feet where it is discharged into the Newtown Creek.

1.2.2 The Brooklyn headhouse also contains a diesel-powered emergency generator that is intended to activate and run the facility – including the pumps and OWS accessories – in the event of a power failure.

1.3 ABBREVIATIONS AND ACRONYMS

OWS – Oil / Water Separator
TSS – Total Suspended Solids
O&G – Oil and Grease
BTEX – Benzene, Toluene, Ethyl Benzene, and Xylene
GC – Gas Control office at Van Nest in the Bronx
GOSS – Gas Operations Supervisory System
SPDES – State Pollution Discharge Elimination System
NYSDEC – New York State Department of Environmental Conservation

2.0 SYSTEM DESIGN BASIS REQUIREMENTS AND CHARACTERISTICS

2.1 REGULATORY / CODE REQUIREMENTS AND COMMITMENTS

2.1.1 According to the DEC regulations all effluent pumped out of a tunnel containing oil filled equipment needs to have a waste water treatment system in place prior to discharge into state waterways. The discharge at this tunnel is conducted in accordance with DEC SPDES permit.

2.1.2 The latest edition of the following codes or standards is applicable to this system design, description and operations:

a. US Army Corps of Engineers, "Appendix A, Selection and Design of Oil/Water Separators at Army Facilities" (ETL 1110-3-466, 26 Aug., 1994);

b. Dept. of Defense, United Facilities Criteria (UFC), "Design: Industrial and Oily Wastewater Control" (UFGC 4-832-01N), Jan. 16, 2004;

c. US Dept. of Transportation, Federal Highway Administration, "Highway Storm water Pump Station Design" (Hydraulic Engineering Circular No. 24, Feb. 2001);

d. American Petroleum Institute, "Monographs on Refinery Environmental Control – Management of Water Discharges; Design and Operation of Oil-Water Separators" (API Publication 421, February 1990);

e. US Environmental Protection Agency, "SPCC Guidance for Regional Inspectors" (EPA 550-B-05-001, Ver. 1.0, November 28, 2005);

f. Uniform Fire Code (UFC), 1999 Article 64 Stationary Lead-Acid Battery Systems";

"Article 64 applies to stationary lead-acid battery systems that have a total or aggregate liquid capacity of more than 100 gallons (378.5 L) in buildings with fire suppression sprinklers (50 gallons (189.3 L) in non-sprinkler buildings) and are used for facility standby power, emergency power or uninterrupted power supplies. (6401.1.)"

g. The EPA enforces the Code of Federal Regulations (CFR), which stems from the Resources Conservation Recovery Act (RCRA) and the Right to Know Act. The Right to Know Act requires businesses to report the storage of any hazardous materials exceeding 500 lb — including batteries. The RCRA states that any materials exceeding 500 lb (10 lb equals 1 gal of electrolyte) must have liquid-tight, secondary containment systems.

h. U.S. Code of Federal Regulations (CFR), Vol. 40, Part 112 ("40 CFR-112") (Oil pollution prevention) – applicability, definitions and general requirements for spill control and countermeasure (SPCC) plans.

i. 40 CFR-264.193 (Containment and detection of releases) – Addresses secondary containment, requirements for double-walled tanks, and leak testing. (website: http://edocket.access.gpo.gov/cfr_2003/julqtr/pdf/40cfr264.193.pdf) "Designed or operated to contain 100 percent of the capacity of the largest tank within its boundary; (ii) Designed or operated to prevent run-on or infiltration of precipitation into the secondary containment system unless the collection system has sufficient excess capacity to contain run-on or infiltration. Such additional capacity must be sufficient to contain precipitation from a 25-year, 24-hour rainfall event. (iii) Free of cracks or gaps; and (iv) Designed and installed to surround the tank completely and to cover all surrounding earth likely to come into contact with the waste if the waste is released from the tank(s) (i.e., capable of preventing lateral as well as vertical migration of the waste)."

j. 40 CFR-264.196 (Responses to leaks and spills and disposition of unfit-for-use tank systems).

k. Subpart 750-01, NYSDEC Regulations, "Obtaining a SPDES Permit", Chapter X, Division of Water.

2.2 SYSTEM FUNCTIONAL REQUIREMENTS

2.2.1 The discharge into the Newton Creek waterway in is regulated by the State of New York Department of Environmental Conservation (NYSDEC) Spill Pollutant Discharge Elimination System (Permit No. NY-020 1138).

2.2.2 The SPDES permit limitations are as follows:

a. Oil & Grease (O&G) – 15 mg/l (Daily Max.)

b. Total Suspended Solids (TSS) – 50 mg/l (Daily Max.)

2.2.3 Sampling for these components is required to be conducted on a monthly basis, with Discharge Monitoring Reports (DMRs) submitted to the NYSDEC.

2.2.4 This SPDES permit also requires that flows be monitored and calculated on a monthly basis to establish the actual gallons per day (GPD) being discharged into the Newton Creek. The maximum allowable discharge is 108,000 GPD.

This SPDES permit also requires that samples be taken annually to establish that concentrations of the following chemicals infiltrating into groundwater and storm water runoff do not exceed the allowable maximums:

a. Benzene – 0.10 mg/l (Max.)

b. Toluene – 0.10 mg/l (Max.)

c. Ethyl Benzene – 0.10 mg/l (Max.)

d. Xylene – 0.10 mg/l (Max.)

These chemicals are collectively referred to as BTEX.

2.3 OTHER REQUIREMENTS

2.3.1 No other requirements are applicable to this system. The current system is reliable and is expected to satisfy the previously mentioned operation requirements.

3.0 COMPONENT DESIGN BASIS REQUIREMENTS

3.1 SUMP PIT, PUMPS AND FITTINGS

3.1.1 NORMAL OPERATING FUNCTIONS

a. Tunnel access is via the Brooklyn shaft, which descends 150± feet below grade and is served by an elevator. Beneath the supporting structure of the elevator shaft is a sump pit containing two submersible sumps with an area of approximately 6.2ft x 18ft and a depth of 5.0 feet, confirming dimensions shown on Con Edison drawing no.'s A301012-01 and B301013-00.

Two (2) submersible pumps are individually supported by a steel chain connected to cross beams 7.4± feet above the tunnel floor, and are connected to their own 4" discharge lines via 2" flexible steel-reinforced hoses. The pumps are manufactured by ITT-Flygt (Model No. BS2140HT) and that each pump operates at an adjusted flow rate of 170 GPM. Pumps operate off a 460VAC 3 phase 60hz power supply. All piping material has been designed and specified

to accommodate long term maintenance service life due to thermal expansion, freeze thaw cycles and UV above grade weathering degradation considerations.

b. The discharge line has 2" ball and check valves, a 4"x2" reducer, and 4" steel piping along with additional 4" check valves before connecting to separate 4" HDPE pipes that run along the wall of the tunnel and up to the surface.

c. The two discharge lines are connected to each other at three points as follows:

i. In the vicinity of the sump pit before the vertical risers running up the tunnel shaft;
ii. At the surface, where they converge and then separate again before discharging into either of two (2) parallel Mercer OWSs;
iii. Beyond the outlet pipes of the Mercer OWSs, where a single pipe enters the inlet end of the AFL OWS.

d. Upon reaching the surface and running along the walls of the Brooklyn headhouse, the two 4" HDPE discharge lines converge into a common 8" pipe via appropriate reducers and tees, and then diverge again into two (2) 6" pipes with each one connected to a Mercer OWS.

3.1.2 ACCIDENT MITIGATING MEASURES

a. In the event that an excessive volume of groundwater reaches the sump pit, this influent will fill up the sump pit, exceeding the operating rate of the lead pump (170 GPM) and reach the float for "High Water" level. The lag pump will turn on and both pumps (operating at a combined flow rate estimated between 275 and 325 GPM) will either: a) dewater the pit back down to the "Low Level" (pumps off) elevation and the cycle will repeat, or b) reach the "High-High" level, indicating that the inflow rate exceeds the combined operating capacity of both pumps. Alarms both onsite and connected to Con Edison's GOSS system will alert staff that a problem exists and that action is required. Water will build up and inundate the tunnel while both pumps continue to operate and discharge liquid through the system of OWSs and into the Newtown Creek / East River (The secondary OWS is capable of handling a 400 GPM inflow capacity).

3.1.3 DESIGN BASIS REQUIREMENTS

a. According to Con Edison Drawing no. EO-12245-A, water that has infiltrated into the tunnel and headhouse shafts, along with any suspended solids and contaminants/oils, particularly polluted influent, flows via gravity toward the Brooklyn end where it is conveyed via two (2) channels, one along each wall of the tunnel. The floor of the tunnel is slightly crowned in order to direct the runoff into these channels. The tunnel is 2,150± feet long with all water being directed into an 8ft x 15ft, 5ft deep sump pit. Gross volume of this pit is 4,500± gallons.

b. The sump pit contains two (2) submersible pumps manufactured by ITT-Flygt (Model No. BS2140HT). Under normal operating conditions, inflows into the sump pit are approximately 60 GPM. There is always a permanent pool of water within the pit in order that the pumps remain submerged, thereby avoiding dry conditions that would damage the impellers at startup. Each pump is capable of directing effluent into the OWSs at the surface at a rate of 170 GPM. Under normal conditions and during a typical cycle, the control panel is

configured to alternately run one of the two pumps, thereby allowing for equal wear.

c. Each pump has its own 4" discharge pipe, with both pipes running to the surface and along the wall of the Brooklyn headhouse, converging into a common 8" pipe and then diverging again into two (2) separate 6" pipes, with one flowing into each of two parallel Mercer OWS's. This piping is mostly HDPE between the sump pit and the OWS's, but includes steel piping immediately beyond the pit where connection points for the pumps are located. The pumps are connected to their respective discharge lines via a 2" flexible steel-reinforced hose, followed by 2" ball- and check valves, a 4"x2" reducer, and 4" steel piping with an additional check valve, before connecting to the 4" HDPE pipes running up along the tunnel wall (Drawing no. A301012-01).

3.2 OIL/WATER SEPARATOR (OWS) SYSTEM AND WATER OUTFALL

3.2.1 NORMAL OPERATING FUNCTIONS

a. The discharge lines direct their effluent into two (2) OWS units, identified as manufactured by Mercer International (Model No. MI-A200-PP), and confirming information shown on Con Edison drawing no. 360901-00.

b. Each Mercer unit also has its own set of two sensors/alarms wired to a common control panel. Con Edison drawing no.'s 360558-0 and 360875-00 indicate that these alert the operator to "High Liquid Level" and "High Oil Level" conditions. Alarms and Floats are also shown on separated flow diagrams drawing.

c. Each Mercer unit is provided with two (2) 3kW electric heaters (Watlow model no. 7-23-211-19) that are intended to keep the influent from freezing during the winter.

d. Each Mercer unit has both a belt-driven oil skimmer mounted on top (Oil Skimmers, Inc. Model No. 5-H.) along with a rotary-type skimmer across its shorter span, which are intended to remove waste oil and convey it via collector tubes to a separate 250 gallon double-wall oil recovery tank (Assman Corp. of America, model No. IMT 250) situated next to easterly Mercer OWS. The make and model of both products were identified, and are as specified on drawing no. 360901-00. Mercer units hold back creosote, mud and oily sludge within their sludge compartments as intended, acting as a pre-filter/separation component and reduce the load of pollutants/oils that flow out and then into the AFL unit. As a result, the 250 gallon waste oil tank piped from collections made by the skimmers routinely contains very little oil. The following is a schematic of a typical Mercer oil/water separator without a skimmer and auxiliary oil collection tank and overflow piping. Skimmers within these two tanks have a regulated adjustable speed setting. The setting of the speed is based on operating experiences subject to influent characteristics experienced over time.

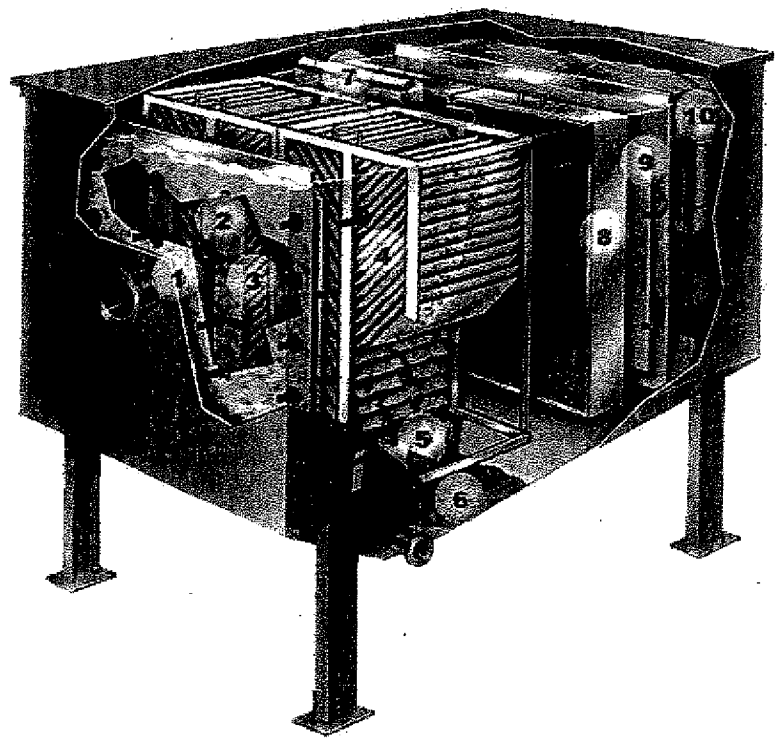

1. Inlet Chamber
2. Distribution Baffles
3. Coarse Separating Zone
4. Multi-Pack™ Coalescer
5. By-Pass Prevention Baffles
6. Solids/sludge Chamber
7. Oil Skim Pipe
8. HSA™ Secondary Coalescer
9. Outlet Distribution Baffle
10. Outlet Manifold

SCHEMATIC OF OIL/WATER SEPARATOR MANUFACTURED BY MERCER INTERNATIONAL (from www.mercerows.com)

e. The 6" discharge pipes from each Mercer OWS converge (via the appropriate fittings) into an 8"x8" tee and then, via a reversed 10"x8" reducer, direct their effluent into the 10" inlet of the AFL OWS. AFL Industries of Riviera Beach, Florida. This OWS is of molded fiberglass with internal reinforcement. External dimensions are 10.5' L x 10.3' W x 6' H, and it is capable of accepting an oily water inflow of up to 400 GPM, Accounting for the various internal components and baffles, the AFL OWS has a holding capacity of 2,840 gallons and an oil storage capacity of 650 gallons.

The following are schematics of a typical OWS as manufactured by AFL Industries:

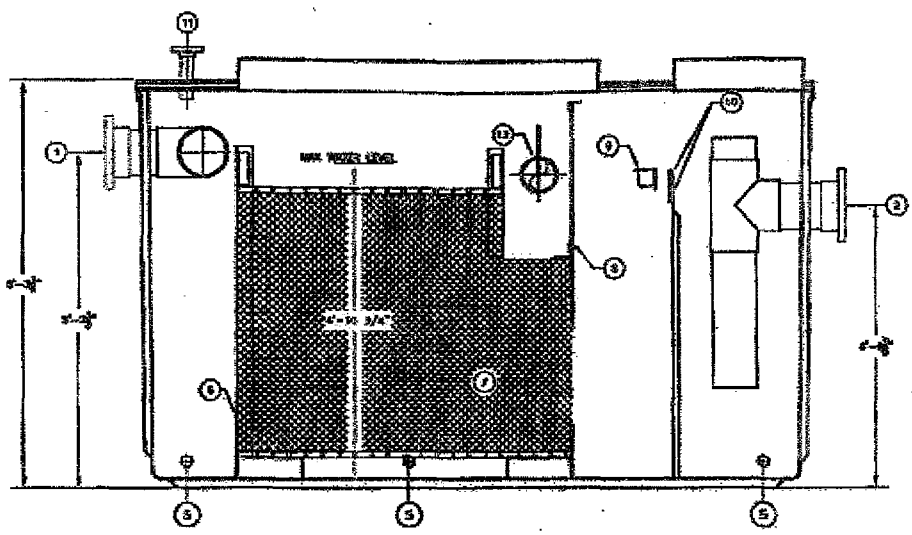

CROSS-SECTION / ELEVATION VIEW OF AFL OWS

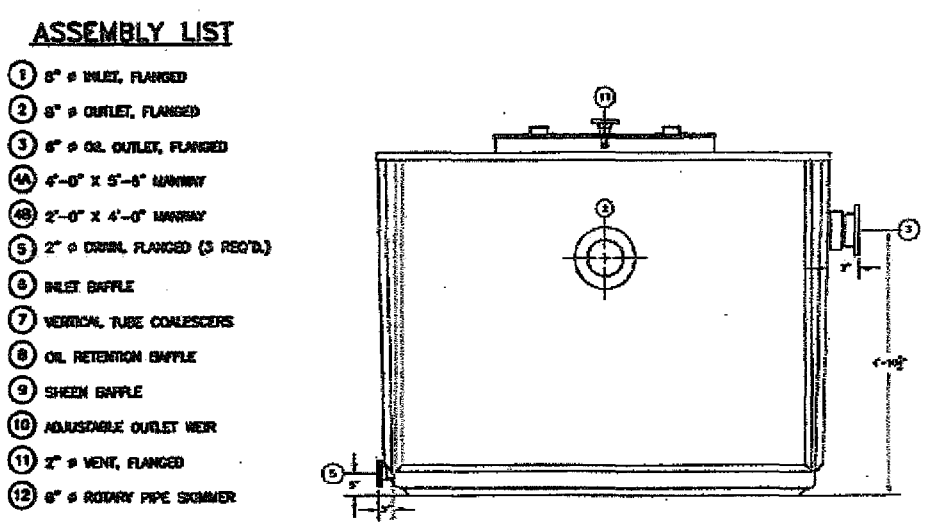

ELEVATION VIEW OF OUTLET END OF AFL OWS

SCHEMATICS OF OIL/WATER SEPARATOR MANUFACTURED BY AFL INDUSTRIES (from www.aflindustries.com)

AFL Industries describes the operation of their product as follows:

"The VTC removes hydrocarbons and settleable solids from industrial wastewater and coolant. In operation, this separator accepts industrial liquid waste in the inlet chamber. Here settleable solids fall to the bottom as sludge for periodic removal.

Then the waste stream enters the coalescing separation chamber. A matrix of vertically-positioned polypropylene tubes gives laminar flow characteristics to the liquid. The result is a liquid more responsive to gravity separation.

The tubes also provide a coalescing medium. Oleophilic in nature, they attract small oil globules which coalesce with other globules, increase in size and buoyancy, then break away to rise through the tubes to the top. Surface oil drains by gravity into a rotary pipe skimmer for discharge to a storage facility.

Performance that can be expected of the VTC separator is:

1. Removal of oil globules down to 20-micron size;
2. Reduction of oil content to 10mg/ltr.

The VTC removes even non-permanent mechanically emulsified oil. It leaves no visible sheen and traps solids too. In metalworking and similar applications, it removes more than 99% of tramp oils from coolants.

The VTC incorporates a molded fiberglass construction. Internally reinforced, the structure withstands severe soil and hydraulic loadings.

The entire exterior surface is covered with corrosion-resistant gel coat, integrally-colored and ultra-violet resistant. Since the envelope and fittings are corrosion-resistant, the separator can be installed in many hostile environments. No sacrificial protection required."

f. The downstream chamber in the AFL unit includes an oil stop valve (OSV). According to the manufacturer, this component works based upon a specific gravity (SG) differential in which an SG-sensitive mechanism floats in water (SG=1) and sinks in oil (SG ≤ 0.90). The ballasted float has a SG between these values. In the event of a spill, oil enters the OWS and displaces the water out of the coalescer section to the point where free oil flows under the oil-stop baffle, and the float mechanism will sink as the oil begins to fill the outlet compartment. As the float loses buoyancy, it will seal the outlet piping, (See figure 7, schematic of this component) 10" butterfly valves are installed at both the inlet and outlet ends of the AFL unit. This is followed by a 10" HDPE discharge pipe at the outlet end with a 3/4" tap, a ball valve and a 10±" length of pipe immediately downstream of the AFL unit. This tap is the sampling point at which effluent is taken and tested in order to verify compliance with the SPDES permit requirements via periodic Discharge Monitoring Reports. Valves and fittings were noted to be substantially in conformance with the piping arrangement shown on Con Edison drawing no. 360901-00.

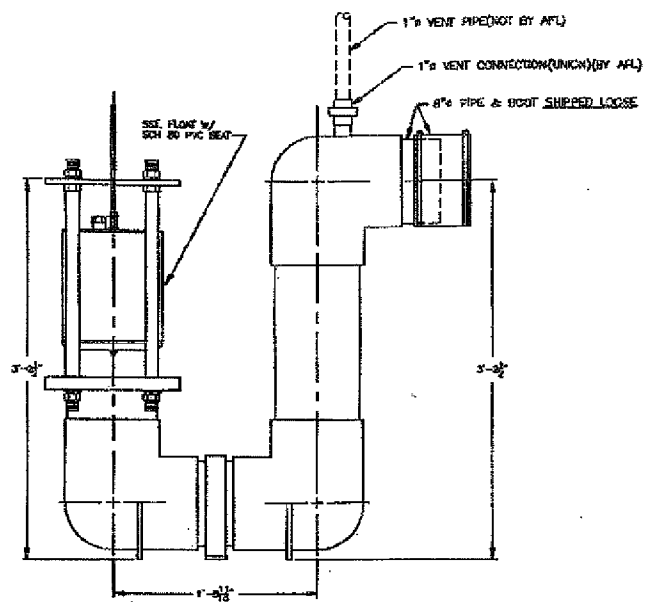

OIL STOP VALVE, MODEL OSV-8, AS MANUFACTURED BY
AFL INDUSTRIES, AND INSTALLED INSIDE OIL/WATER SEPARATOR

g. A 10" HDPE pipe runs from the outlet end of the AFL units to an outfall along the southerly bulkhead of the Newtown Creek.

3.2.2 ACCIDENT MITIGATION FUNCTIONS

a. Two sensors/alarms within the AFL OWS are identified as "High Liquid Level" and "High Oil Level", and are wired to a control panel inside the building and these are linked to local and remote alarm advisory systems (Con Edison's Gas Operations Supervisory System, or GOSS).

b. In the event that the percentage of oil in the liquid pumped out of the tunnel increases dramatically the pumps will continue operating until either: a) one or more of the three OWS's fills up with oil and that oil is skimmed and the High Oil alarm is activated or b) the oil stop valve (OSV) located in the downstream chamber of the AFL unit engages and closes the discharge end of this AFL OWS prior to discharge. As the alarm systems associated with the OWSs are not interlinked with the controls for the pumps, Personnel could only stop the pumps once an alarm in the OWSs is activated; In addition to these alarms, a sump oil monitor is being installed to monitor excess oil collection in the sump and shut the pumps off in the event of this excessive oil.

3.2.3 DESIGN BASIS REQUIREMENTS

a. The two discharge lines from the pumps direct the oily water into either of the two Mercer OWS units, located immediately to the north of the Brooklyn headhouse. Both units are installed on a concrete slab and set approx. 15" above existing grade. According to the manufacturer, each unit is capable of accepting an oily water influent flow of up to 200 GPM. A Mercer OWS tank is made of polypropylene with exterior stainless steel cladding with dimensions of

11.2ft. L x 4.7ft W x 7.6ft H. With double wall construction, the containment area reduces to approximately 10ft x 3.5ft. With their outlet pipes set 4.5±ft above grade, each unit can contain just under 1,000 gallons of effluent.

b. Each Mercer OWS has its own oil skimmer mounted on top. This consists of a small motorized unit manufactured by Oil Skimmers, Inc. (Model No. 5-H.) that removes waste oil by means of an oil collector tube and conveys it to a separate 250 gallon double wall storage oil tank manufactured by Assman Corp. of America (Model No. IMT 250) situated next to easterly Mercer OWS.

c. Upon completion of primary treatment within the Mercer OWS's, effluent from each unit discharges via 6"HDPE pipes which, with the appropriate fittings, converge into a common 8"x8" tee, and then into the 10" inlet of the AFL OWS for additional treatment. This unit is of molded fiberglass with internal reinforcement. External dimensions of the AFL unit are 10.5ft L x 10.3ft W, with a height of just over 6 feet and, according to the manufacturer, it is capable of accepting an oily water influent flow of up to 400 GPM. Accounting for the various internal components and baffles, the AFL unit has an operating capacity of 2,840 gallons, and an oil storage capacity of 650 gallons. This unit is fitted with an oil stop valve, located within its downstream chamber, which activates when oil has reached a critical level.

d. Effluent that has undergone treatment within the AFL unit is then released into a 10" HDPE pipe where it flows via gravity to an outfall at the bulkhead along the Newton Creek. This 10" pipe is visible at the surface and includes a 3/4" tap with a ball valve just beyond the OWS which allows for the collection of samples for laboratory analysis in order to establish compliance with the provisions of this facility's SPDES permit.

e. The Mercer OWSs are each served by their own Local Control Panels. Sensors on the AFL unit indicate conditions of High Water Level and High Oil Level registering at a local panel inside the head house. Sensors on the Mercer units indicate conditions of High Water Level, High Oil Level.

f. Valves are located at several key points at the inlet- and outlet ends of the OWSs allowing for their isolation and/or removal, and include:

1. 6" butterfly valves, one at the inlet- and outlet ends of each of the two Mercer OWSs.

2. 10" butterfly valves, one at the inlet and outlet ends of the AFL OWS.

3. 2" ball valves at each of the oil skimmer discharge lines from the Mercer OWSs.

3.3 EMERGENCY GENERATOR

3.3.1 NORMAL OPERATING FUNCTIONS

a. Con Edison's drawing no. EO-11463-15 indicates an emergency generator located in the Brooklyn headhouse, more or less at finished grade, along with a 250 gallon steel diesel fuel tank, and this was verified in the field. The tank is approximately 3.5 ft x 3.5 ft., 5 ft high.

3.3.2 ACCIDENT MITIGATION FUNCTIONS

a. The 250 gallon steel diesel tank is located inside a steel secondary containment vessel, approximately 4.5 ft x 3.7 ft, 4.3± ft high.

b. Two (2) lead-acid batteries connected in series and set within a containment tray are located alongside the generator. (See section 3.5.5 for containment calculations, and section 8.0, photographs, for both the generator and its batteries).

3.3.3 DESIGN BASIS REQUIREMENTS

a. The generator has been sized to operate the system during power outage events.

4.0 SYSTEM INTERFACES / BOUNDARIES, INTERLOCKS, ACTUATIONS AND CONTROLS

4.1 SUPPORT SYSTEMS SUPPLIED BY PUMPING SYSTEM

4.1.1 Float switches are provided in the sump and are linked to the control panel and alarm system in the Brooklyn headhouse, indicating when: 1) the pump(s) remain on after the low water level has been reached and continues to drop, which would result in the pumps overheating (Low-Low water level); 2) the water level reaches a depth such that the second – or "lag" – pump has turned on, indicating an inflow rate exceeding 170 GPM, the operating rate of one pump (High water level); and 3) the water level reaches – and continues beyond – a level indicating that inflow into the sump exceeds the operating rate of both pumps, estimated at 300± GPM (High-High water level). In the event of Low-Low or High-High scenarios, the pumps will also turn off.

4.1.2 Each pump has its own 4" discharge pipe, with both pipes running to the surface and along the wall of the Brooklyn headhouse, converging into a common 8" pipe and then diverging again into two (2) separate 6" pipes, with one flowing into each of two parallel Mercer OWS's.

4.1.3 The two submersible pumps located in the sump at the Brooklyn end of the tunnel (ITT Flygt, Model No. BS 2140 HT) operate off of a 460VAC, 3Φ, 60Hz power supply.

4.2 SUPPORT SYSTEMS SUPPLIED BY THE OWS SYSTEM

4.2.1 The Mercer OWSs are equipped with their own electronic control panels to which their alarm float systems are connected in the event of abnormal operating conditions. These consist of "High Water"- and "High Oil" alarms and, in the case of the Mercer OWS, (Drawing no. 360558-0).

4.3 SUPPORT SYSTEMS REQUIRED BY THE OWS SYSTEM

4.3.1 The OWS system is limited to receiving and treating runoff that has permeated either through the walls of the tunnel itself or the shafts at either end. The inflow of any stormwater runoff from any paved or gravel road / parking area associated with the facility is not considered. Where a stormwater collection system exists – on the Queens end of the facility – this is either connected into the City of New York's sewer system, or discharges directly into the Newtown Creek as runoff.

4.3.2 Electrical Power

a. The two heaters for the OWS by AFL (Glo-Quartz, 3- and 6kW immersion heaters) require a 208 VAC, 3Φ, 60 Hz power supply.

b. The thermostat for the OWS by AFL (United Electric, Model No. E122-5BS) requires a 120 VAC, 1Φ, 60 Hz power supply.

c. The control panel for the OWS by AFL operates off of a 120 VAC, 1Φ, 60 Hz power supply.

d. Each of the Mercer OWS units has two heaters (Watlow Industries, 3kW Flange Immersion type), which require a 208 VAC, 3Φ, 60 Hz power supply.

e. The control panel for the Mercer OWSs operates off of a 120 VAC, 1Φ, 60 Hz power supply.

4.4 SYSTEM INTERLOCKS

4.4.1 The Mercer- and AFL OWSs and the 250 gallon oil collection tank are equipped with oil/water interface and level sensors to activate warning alarms for "High Oil" levels.

4.4.2 When the oil/water separator tank in the AFL unit is not maintained or in the event of an oil spill condition – and after the "High Oil" alarm in this OWS has turned on – an oil stop valve (OSV) located in the downstream chamber of this unit will activate. The OSV works on a specific gravity (SG) differential in which the SG-sensitive mechanism floats in water (SG=1) and sinks in oil (SG ≤ 0.90). The ballasted float has a SG between these values. In the event of a spill, oil enters the OWS and displaces the water out of the coalescer section to the point where free oil flows under the oil-stop baffle, and the float mechanism will sink as the oil begins to fill the outlet compartment. As the float loses buoyancy, it will seal the outlet piping and prevent oil from being released.

4.5 SYSTEM ACTUATION AND CONTROL FEATURES

4.5.1 ALARMS AND ALARM PANELS

a. The original OWS unit by AFL Industries installed in 1994 includes float switches for High Liquid-, High Oil- and High-High Oil levels. (See Flow diagram for this system). Normally, these would activate audio and visual alarms contained in a control panel mounted on the exterior, southerly side of the OWS. However, the control panel for this AFL OWS is currently relocated to be in the head house.

b. The Mercer OWSs that have been providing primary treatment since their installation in 2007 include float switches for High Liquid-, High Oil- and High Sludge levels. These activate audio and visual alarms contained in a common control panel serving both Mercer units.

c. In the event of a general power failure at the facility, an alarm is activated. Under such circumstances an emergency generator located in the Brooklyn headhouse will provide backup power, automatically, along with another alarm indicating that the generator has turned on.

d. In addition to activating audio and/or visual alarms at this facility, signals are relayed via Con Edison's GOSS system to GC facilities at Van Nest in the Bronx and in Astoria, Queens, allowing for the Con Edison personnel to investigate the situation.

5.0 REFERENCES

5.1 DRAWING REFERENCES

- EO-12245A 1 – System Gas, Electric, Oil And Steam Tunnels (last rev. 9/30/08)
- EC-11463-15 – Power & Heating Electrical Installation (last rev. 3/21/07)
- A301012-01 – Piping Arrangements Plan, Sections And Details For Oil Water Separator System (8/5/94)
- B301013-00 – Structural Plans, Sections And Details For Oil Water Separator System (8/5/94)
- 360901-00 – Piping Arrangement Oil Water Separator (3/20/07)
- 360558-0 – OWS #1 And #2 Raceway And Cable Block Diagram (3/21/07)
- New Flow Diagram for the 11th Street showing PID with alarm layout for the system.

5.2 CORRESPONDENCE

There are no correspondences relevant to this operation.

5.3 OTHER REFERENCES

- Con Edison Purchase Order No. 941770, 6/03/09 to Miller Environmental Group, Inc. (Indicates water seepage into tunnel as 50 GPM)
- Con Edison – Central Gas Operations "Tunnel Maintenance Handbook", Rev 4 – Feb. 1, 2010
- Con Edison – Corporate Environmental, Health and Safety Procedure (CEHSP) E02.02 – Wastewater Discharge SPDES Permits, Rev 14 – Feb.26, 2010
- Con Edison – Tunnel Pump Performance Chart (Identifies pump make and model, feet of head, flow rate, etc. for seven (7) tunnels which collect in discharge collected effluent to the surface)
- State Pollution Discharge Elimination (SPDES) permit issued by the New York State Department of Environmental Conservation (NYSDEC), SPDES No. NY 0201138, DEC No. 2-9902-00018 / 00001-0, Effective Date 3/1/97, Expiration Date 3/1/02; Renewed September 6, 2001 (Information regarding subsequent renewal and validity to 2/29/12 is from NYSDEC's website)
- AFL Industries, Installation and Operating Manual for AFL 400 Unit
- AFL Industries - Riviera Beach, FL (website: www.aflindustires.com)
- Mercer International, Operating Manuals for MI-A299-PP OWS and Skimmer.
- Mendham, NJ (website: www.mercerows.com)
- Oil Skimmers, Inc., Cleveland, OH (website: www.oilsikm.com)

6.0 HISTORICAL EVOLUTION OF DESIGN CHANGES

6.1 ADDITION OF MERCER UNITS UPSTREAM OF AFT OWS

6.1.1 2 Mercer OWS units were installed upstream of the AFL unit to process the sludge associated with the creosote that infiltrates the tunnel.

6.1.2 Each Mercer unit has both a belt-driven oil skimmer mounted on top (Oil Skimmers, Inc. Model No. 5-H.) along with a rotary-type skimmer across its shorter span, which are intended to remove waste oil and convey it via collector tubes to a separate 250 gallon double-wall oil recovery tank (Assman Corp. of America, model No. IMT 250) situated next to easterly Mercer OWS. The make and model of both products were identified, and are as specified on drawing no. 360901-00. The Mercer units hold back creosote, mud and oily sludge within their sludge compartments as intended, acting as a pre-filter/separation component and reducing the load of pollutants/oils that flow out and then into the AFL unit. The 250 gallon waste oil tank routinely contains mostly water and very little oil. As this maintenance is generally undertaken every two months, this is an indication that either: a) there is very little oil to begin with, and that it tends to adhere to the sludge that is retained in the OWSs; or b) any oils are too well dispersed within the influent (which is mostly water) and haven't had the opportunity to pass across the coalescer plates and float to the top.

conEdison
a conEdison, inc. company

WATER VULNERABILITY ANALYSIS

DESIGN BASIS REPORT

FOR THE

11TH STREET CONDUIT TUNNEL

Facility Owner/Operator:

Consolidated Edison Company of New York, Inc.
4 Irving Place
New York, New York 10003

Prepared by:

TRC

TRC Engineers, Inc.
57 East Willow Street
Millburn, NJ 07041
Contact: Barry Sutherland, P.E., P.P., Project Manager
Tel: 973-564-6006

December 21, 2010

STATE OF NEW YORK
NICKITAS F. PANAYOTOU
LICENSED PROFESSIONAL ENGINEER
NO. 43583

Nickitas F. Panayotou, P.E.
N.Y.P.E. License No. 043583

Under New York State Education Law Article 145 - Engineering, Section 7209 (2), it is a violation of this law for any person to alter an item in any way in this Report/Specification, unless acting under the direction of a licensed professional engineer. If an item bearing the seal of an engineer is altered, the altering engineer shall affix to the item his seal and the notation "altered by" followed by his signature and the date of such alteration, and a specific description of the alteration.

TABLE OF CONTENTS

1.0 EXECUTIVE SUMMARY 3

1.1 PROJECT SUMMARY 3
1.2 PROJECT OBJECTIVE 3
1.3 SPECIFIC STATION IDENTIFICATION / SUMMARY 4
1.4 DEFINITIONS 8

2.0 FIELD VISIT AND SUMMARY OF FINDINGS 9

2.1 SUMP PIT, PUMPS AND FITTINGS 10
2.2 OIL/WATER SEPARATOR (OWS) SYSTEM AND WATER OUTFALL 11
2.3 EMERGENCY GENERATOR 15

3.0 DESIGN BASIS EVALUATION 16

3.1 SIMPLIFIED BLOCK DIAGRAM OF SYSTEM: 16
3.2 DESIGN BASIS 16
3.3 EQUIPMENT NOT TIED TO SYSTEM 18
3.4 CONTAINMENT SYSTEM 18
3.5 SYSTEM CALCULATIONS 19
3.5.1 PURPOSE 19
3.5.2 METHODOLOGY 19
3.5.3 CALCULATION REFERENCES 19
3.5.4 CALCULATION ASSUMPTIONS AND INPUTS 20
3.5.5 CALCULATIONS 22
3.5.6 CONCLUSIONS 29

4.0 SYSTEM EVALUATION 29

4.1 IDENTIFICATION OF TECHNICAL DEFICIENCIES 29
4.2 SCENARIOS OF OVERFLOW CONDITIONS 29
4.3 SPILL PATH ANALYSIS 30

5.0 STATEMENT OF ADEQUACY 30

5.1 SUMP PIT, PUMPS AND FITTINGS 30
5.2 OIL/WATER SEPARATORS 31
5.3 CONTAINMENT SYSTEM 31
5.4 OUTFALL PIPE 32

6.0 ENGINEERING RECOMMENDATIONS AND PRELIMINARY COST ESTIMATES 32

7.0 REFERENCES 33

7.1 DRAWING REFERENCES 33
7.2 OTHER REFERENCES 33

8.0 PHOTOGRAPHS 35

EPA-NC-CE-0000619

1.0 EXECUTIVE SUMMARY

TRC Engineers, Inc. was retained by Con Edison in May 2010 to evaluate the dewatering/discharge outflow and spill containment systems at 13 Gas Operations sites that Con Edison owns and operates, and to prepare a water vulnerability assessment for these sites . The purpose of this evaluation is to confirm that these systems are in compliance with company design standards and prevailing local, state and federal regulations which are designed to prevent the release of contaminants from these sites into the environment. This is being accomplished through field visits to each site, by reviewing Con Edison's drawings, by assessing pollution control measures where they are provided, and by reconstituting the current design basis for these systems. This report looks exclusively at one of these sites, the 11th Street Conduit Tunnel.

1.1 PROJECT SUMMARY

Con Edison Gas Operations owns, operates and maintains the 11th Street Conduit Tunnel, which runs beneath the Newtown Creek and connects the Boroughs of Brooklyn and Queens. This facility contains the following, which were to be designed to meet Con Edison's design standards:

1. A dewatering system to collect and pump to the surface any groundwater / stormwater that has entered the tunnel; and

2. A series of oil/water separators (OWSs) with skimmer tanks and other components into which this groundwater is pumped and treated prior to discharging it into the state's open waters.

1.2 PROJECT OBJECTIVE

The purpose of this report is to:

a. Reconstitute and prepare a design basis for the dewatering system, the three (3) OWSs and appurtenances;

b. Prepare a containment evaluation and calculations which shall include an examination of possible scenarios of overflow conditions for spill containment systems;

c. Present a statement of adequacy of containment and discharge criteria in conformance with regulatory requirements; and

d. Present an engineering analysis and provide recommendations for modifications needed to comply with operating and regulatory requirements.

EPA-NC-CE-0000620

1.3 SPECIFIC STATION IDENTIFICATION / SUMMARY

Con Edison Drawing no. EO-12245-A identifies the 11th Street Conduit as an 11ft W x 13ft H utilities tunnel containing three (3) 10-3/4 " diameter 345 kV electric feeder cables, three (3) 5-9/16" heat exchange pipes, and a single 5" heat exchange pipe. Figures 1 through 3 respectively show: a profile, a typical cross-section, and a plan view of the shaft in which the dewatering system is located:

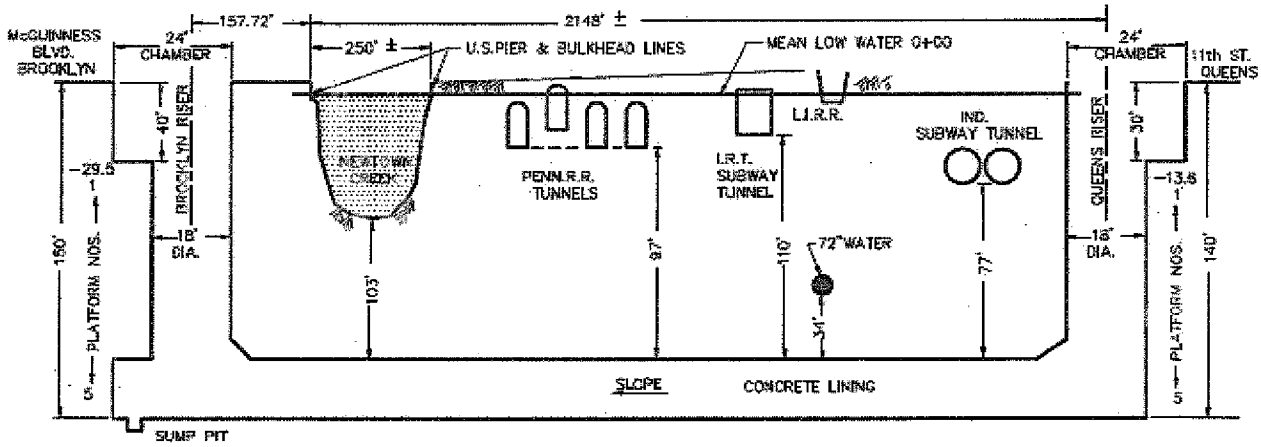

PROFILE
11TH STREET CONDUIT
(COMPLETED 1965)

Figure 1

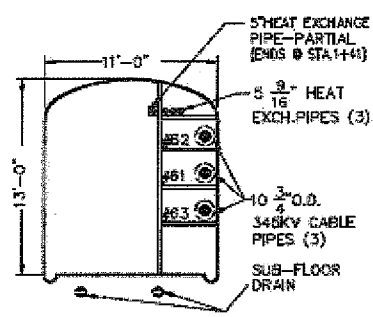

(SEE EO-11584-A)
TYPICAL CROSS SECTION OF CONDUIT
LOOKING TOWARD BROOKLYN

Figure 2

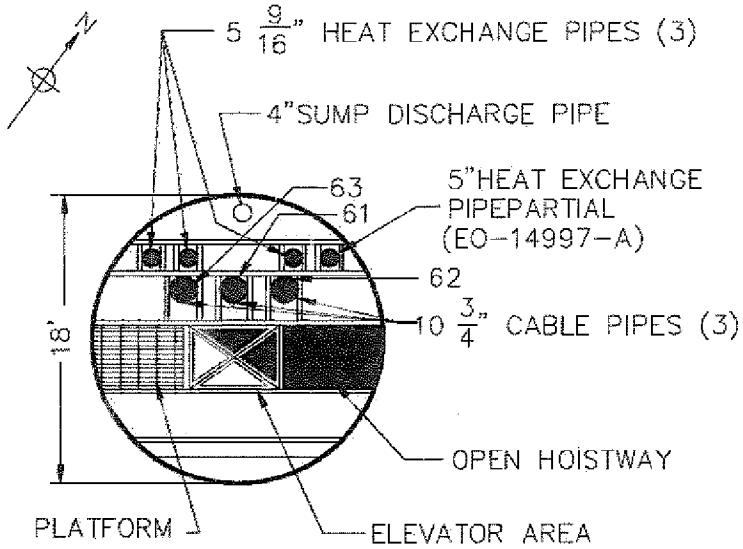

PLATFORM EL.-29.5

BROOKLYN RISER

Figure 3

This tunnel was constructed in 1965 and is located immediately to the east of the Pulaski Bridge. Its depth ranges from 140 to 150 feet below grade, spanning a distance of 2,150± feet between the Boroughs of Queens (Queens County) and Brooklyn (Kings County), and 103± feet beneath the bed of the Newtown Creek, a boundary separating these two boroughs.

The shaft on the Queens side is located at the southeasterly corner of 11th Street and 47th Road on lands identified as Lot 16 in Block 60 (Queens tax maps), while the shaft on the Brooklyn side is off of Ash Street and north of McGuinness Boulevard, approximately 160 feet from the south bank of the Newtown Creek on lands identified as Lot 136 in Block 2491 (Brooklyn tax maps).

Groundwater that infiltrates through the tunnel walls and both headhouse shafts flows via gravity from the Queens side toward the Brooklyn end where it is directed into a sump pit located at the bottom of the Brooklyn shaft and conveyed via submersible pumps up to the surface and into OWS's installed at grade and located just beyond the Brooklyn headhouse.

This groundwater that infiltrates into the tunnel includes contaminants from the bed of the Newtown Creek, and has the potential to accumulate additional solids and/or contaminants as it flows in channels running along the tunnel floor and into the sump pit.

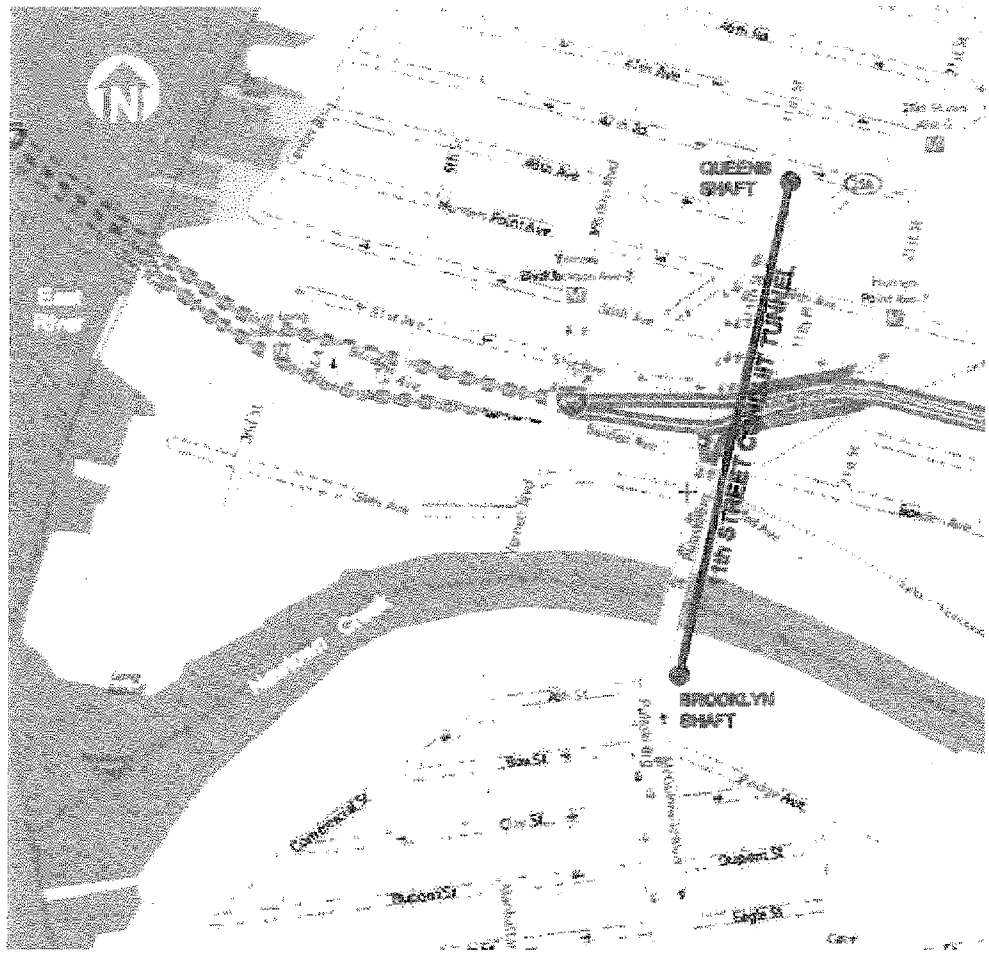

Figure 4 – Area map showing the Hudson Avenue Tunnel

Polluted influent, which historically consists of oil and grease (O&G) and creosote, accumulates in this sump pit and is pumped into two (2) OWSs (Mercer units) at the surface that are installed in parallel. A portion of the suspended solids settles to the bottom of these units. Pollutants/oils in the remaining liquid with a density less than that of water are skimmed off and directed into an adjacent oil collector tank.

The effluent from these two units converges and is then directed into a third OWS (AFL unit) where additional settlement of suspended solids and segregation of any remaining O&G/contaminants take place.

The effluent from the AFL unit is then directed via a 10" pipe running 2± feet above grade for a distance of 110± feet where it is discharged into the Newtown Creek.

The Brooklyn headhouse also contains a diesel-powered emergency generator that is intended to activate and run the facility – including the pumps and OWS accessories – in the event of a power failure.

The following is a tabulation of key information pertaining to the 11th Street Conduit Tunnel dewatering system:

Station:	11 th Street Conduit Tunnel
Borough:	Queens (upstream), Brooklyn (downstream)
Address:	Ash Street x McGuinness Blvd (Brooklyn shaft)
Latitude / Longitude	N.40°44'18" / W. 73°.57'09" (Brooklyn shaft)
Tunnel put into service (year)	1965
Located in 100yr flood zone	Yes (FEMA, FIRM No. 3604970202F)
Date of site visit:	June 1, 2010, follow-up visit Oct. 6, 2010
Design basis criteria:	Influent detention time, pump run cycle time; discharge limitations in SPDES and compliance with BMP Plan
OWS type	Mercer units – coalescing plate interceptor (CPI) with 2 - belt driven skimmers, 1 rotary skimmer. AFL unit – vertical tube coalescer (VTC) with rotary skimmer
Make / model / design flow	2 - Mercer International OWS, MI-A200-PP (200 GPM ea) w/ Assman IMT 250 oil recovery tank; 1 –AFL Industries OWS, VTC 400-A2 (400 GPM);
Gravity inflow	No. Pumped from underground sump pit to grade level
OWSs of double wall construction	Mercer units (Yes); Assman tank (Yes); AFL unit (No)
Corrosion protection	None
Oil Stop Valve (OSV)	Yes (in AFL unit); no interlock to pumps
Separation chambers with screening and coalescing plates	Mercer units (Yes); AFL unit (Yes)
Venting and man way access covers	Mercer units (Yes); AFL unit (Yes)
OWS above / below / flush with grade	Above grade (all three units)
OWS capacity	1,000± gal. (each Mercer); 2,840 gal. (AFL)
OWS oil capacity	250 gal (Assman tank); 650 gal. (AFL)
Flow rate (one pump)	170 GPM @ 150ft of head
Alarm	For "High Liquid" and "High Oil" in OWSs; for "low-low", "high", and "high-high" liquid levels in sump pit; local and remote systems to GOSS
Emergency generator	Yes (diesel powered)
Moat containment	None
OWS inlet / outlet pipe sizes	6" / 6" (Mercer); 10" / 10" (AFL)
Sump pump	ITT-Flygt BS2140HT (2 pumps)
Sump pit	Approx. 6.2ft. x 18ft., 5ft. deep (vol.≈ 4,174 gal.)
Largest oil containing equipment	Chamber in AFL OWS
Largest oil volume contained in tank	650 gallons
Equipment that drains to OWS	Sump pit via submersible pumps
Equipment that does not drain to OWS	Containment area for emergency generator
OWS (SPDES) Discharge Point	Newtown Creek, tributary to the East River

1.4 DEFINITIONS

Contaminant – Any physical, chemical, biological, or radiological substance or matter that has an adverse effect on air, water, or soil

Groundwater – In the broadest sense, all subsurface water; more commonly that part of the subsurface water in the saturated zone; a layer of underground water that forms when precipitation soaks into the soil and becomes trapped between the soil above and a rock or clay layer below.

Infiltration – The penetration of water through the ground surface into sub-surface soil or the penetration of water from the soil into sewers or other pipes (or a tunnel) through defective joints, connections, or manhole walls. (NYSDEC: water other than wastewater that enters a sewerage system from the ground through such means as defective pipes, pipe joints, connections, or manholes. Infiltration does not include and is distinguished from inflow).

Inflow (Influent) – For the purposes of this and similar reports, a liquid (clean or contaminated groundwater and stormwater, oily water) that enters a component – i.e., a sump pit, an oil/water separator, etc. – and upon which an action will be taken – i.e., conveyance via pumping, treatment via an oil/water separator, etc. (NYSDEC: water other than wastewater that enters a sewerage system from sources such as roof leaders, cellar drains, yard drains, area drains, foundation drains, drains from springs and swampy areas, manhole covers, cross connections between storm sewers, process and sanitary sewers, catch basins, cooling towers, storm waters, surface runoff, street wash waters, or drainage. Inflow does not include, and is distinguished from infiltration).

Oil/water separator (OWS) – Any device or piece of equipment, which utilizes the difference in density between oil or petroleum products and water to remove the oil or associated chemicals from the water. This generally consists of a tank – fiberglass, concrete, or steel – containing a forebay and other separator basins, skimmers, weirs, grit chambers, sludge hoppers, and bar screens.

Outflow (Effluent) – A liquid (as described under "inflow") which is discharged from a component following an action – i.e., into a watercourse via pumps, or following treatment via an oil/water separator, etc.

Runoff – That part of precipitation, snow melt, or irrigation water that runs off the land into streams or other surface-water. It can carry pollutants from the air and land into receiving waters.

Sewer, Combined – A sewer designed to carry both sanitary wastewater and stormwater or surface water runoff.

Sewer, Storm – A separate pipe, conduit, or open channel (sewer) that carries runoff from storms, surface drainage, and street wash, but does not include domestic and industrial wastes.

Sewer, Sanitary– A pipe or conduit (sewer) intended to carry wastewater or waterborne wastes from homes, businesses, and industries to treatment works.

Stormwater – Water that originates during precipitation events. It may also be used to apply to water that originates with snowmelt or runoff water from overwatering that enters a stormwater system.

Sump (or sump pit) – A pit or tank that catches liquid runoff for drainage or disposal.

Wastewater – Any water that has been adversely affected in quality by effects, processes, or materials that are derived from human activities. It comprises liquid waste discharged by domestic residences, commercial properties, industry, and/or agriculture and can encompass a wide range of potential contaminants and concentrations. (NYSDEC: water that is not stormwater, is contaminated with pollutants, and is or will be discarded).

2.0 FIELD VISIT AND SUMMARY OF FINDINGS

This section describes: a) observations made during a site visit conducted by TRC on June 1st, 2010, and a follow-up visit on October 6, 2010; and b) a review of plans and other documentation provided by Con Edison. The following is limited to an examination/assessment of how this facility collects and conveys groundwater that has infiltrated into the tunnel, and is not intended to assess and confirm the design and adequacy of electrical components – i.e., wiring and accessories associated with pumps, control panels, etc., and their conformance with NEC, NEMA, IEEE or other organizations' standards and specifications – nor to address or comment on issues such as air- or noise pollution, the presence of asbestos, etc.

References throughout this and all reports may be made to materials and documents provided by Con Edison, such as the following:

a. Drawings, either prepared in-house by Con Edison or by outside parties / consulting firms retained by Con Edison for their preparation;

b. General Environmental, Health and Safety Instruction (GEHSI) documents (formerly referred to as General Environmental Instruction, or GEI, documents);

c. Corporate Environmental Health Safety Procedures (CEHSP's);

d. Con Edison Specifications, which address a range of topics including: program requirements specific to a particular facility; inspection procedures; operation and maintenance procedures for a particular piece of equipment, general procedures for specific tasks applicable to all Con Edison facilities – e.g., Specification G-4903-6, Notification Procedure for Tunnel Alarms Monitored by GOSS; and various other publications utilized by Central Gas Operations at a number of similar facilities – e.g., Con Edison's Tunnel Maintenance Handbook.

It is not the purpose of this report to reproduce lengthy excerpts from these and other documents that were prepared by Con Edison and that are otherwise available to the reader. It is presumed that the reader has access to these, as well as other documentation such as permits issued by – or regulations associated with – local, state or federal agencies for specific activities at Gas Operations facilities that fall within those agencies' respective jurisdictions.

References may be made to guidelines or design manuals prepared by various trade and professional organizations such as the Institute of Electric and Electronics Engineers (IEEE), the American Petroleum Institute (API), the National Fire Prevention Association (NFPA), et al. This report does not include the detailed design procedures presented in the publications of those organizations, nor is it intended to elaborate in depth on the operation of, or theory behind, particular components – e.g., how an oil/water separator (OWS) works.

2.1 SUMP PIT, PUMPS AND FITTINGS

Tunnel access is via the Brooklyn shaft, which descends 150± feet below grade and is served by an elevator.

Beneath the supporting structure of the elevator shaft is a sump pit containing two submersible sumps with an area of approximately 6.2ft x 18ft and a depth of 5.0 feet, confirming dimensions shown on Con Edison drawing no.'s A301012-01 and B301013-00.

Two (2) submersible pumps are individually supported by a steel chain connected to cross beams 7.4± feet above the tunnel floor, and are connected to their own 4" discharge lines via 2" flexible steel-reinforced hoses. This is followed by 2" ball- and check valves, a 4"x2" reducer, and 4" steel piping along with additional 4" check valves before connecting to separate 4" HDPE pipes that run along the wall of the tunnel and up to the surface.

The two discharge lines are connected to each other at three points as follows:

a. In the vicinity of the sump pit before the vertical risers running up the tunnel shaft;

b. At the surface, where they converge and then separate again before discharging into either of two (2) parallel Mercer OWSs;

c. Beyond the outlet pipes of the Mercer OWSs, where a single pipe enters the inlet end of the AFL OWS.

As the sump pit was substantially full at the time of the site visit, the make and model of these pumps could not be confirmed. Documentation provided by Con Edison (a "Tunnel Pump Performance Chart") indicates that these are manufactured by ITT-Flygt (Model No. BS2140HT) and that each pump operates at an adjusted flow rate of 170 GPM.

EPA-NC-CE-0000627

Upon reaching the surface and running along the walls of the Brooklyn headhouse, the two 4" HDPE discharge lines converge into a common 8" pipe via appropriate reducers and tees, and then diverge again into two (2) 6" pipes with each one connected to a Mercer OWS.

2.2 OIL/WATER SEPARATOR (OWS) SYSTEM AND WATER OUTFALL

The aforementioned discharge lines direct their effluent into two (2) OWS units, identified as manufactured by Mercer International (Model No. MI-A200-PP), and confirming information shown on Con Edison drawing no. 360901-00.

Each Mercer unit is provided with two (2) 3kW electric heaters (Watlow model no. 7-23-211-19) that are intended to keep the influent from freezing during the winter. Each Mercer unit also has its own set of two sensors/alarms wired to a common control panel. Con Edison drawing no.'s 360558-0 and 360875-00 indicate that these alert the operator to "High Liquid Level" and "High Oil Level" conditions.

Drawing no. 360875-00 shows a platform around and above the Mercer OWS's to facilitate access to their various compartments via hatches along the top of each unit. This platform is set 8± feet above grade and is accessible via a staircase; these have been built substantially in conformance with that drawing. The most significant discrepancy was the location of the control panel for the Mercer OWSs, which was to have been built some 2± feet above the floor of the platform, but was instead set 4± feet above existing grade.

Each Mercer unit has both a belt-driven oil skimmer mounted on top (Oil Skimmers, Inc. Model No. 5-H.) along with a rotary-type skimmer across its shorter span, which are intended to remove waste oil and convey it via collector tubes to a separate 250 gallon double-wall oil recovery tank (Assman Corp. of America, model No. IMT 250) situated next to easterly Mercer OWS. The make and model of both products were identified, and are as specified on drawing no. 360901-00. A report prepared by A.T. Goding Associates, Inc. addressed the routine maintenance performed on the OWSs and waste oil tank during February 2010. This report indicated that the Mercer units were holding back creosote, mud and oily sludge within their sludge compartments as intended, acting as a pre-filter/separation component and reducing the load of pollutants/oils that flow out and then into the AFL unit. Further discussion with representatives from this firm revealed that the 250 gallon waste oil tank (see photographs, section 8.0) routinely contains mostly water and very little oil. As this maintenance is generally undertaken every two months, this is an indication that either: a) there is very little oil to begin with, and that it tends to adhere to the sludge that is retained in the OWSs; or b) any oils are too well dispersed within the influent (which is mostly water) and haven't had the opportunity to pass across the coalescer plates and float to the top. The following is a schematic of a typical Mercer oil/water separator:

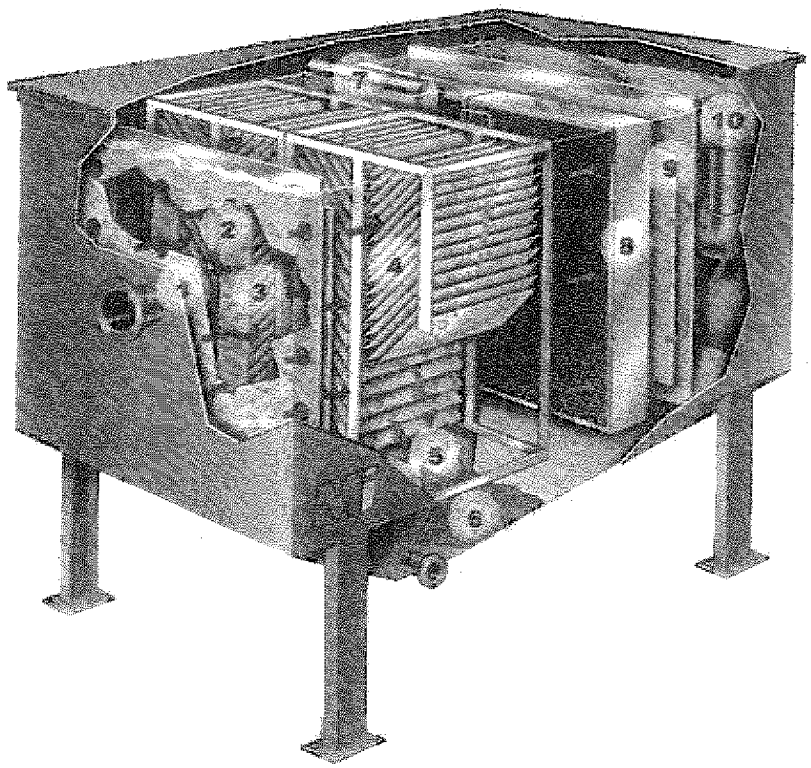

Figure 5 – SCHEMATIC OF OIL/WATER SEPARATOR MANUFACTURED BY MERCER INTERNATIONAL (from www.mercerows.com)

The 6" discharge pipes from each Mercer OWS converge (via the appropriate fittings) into an 8"x8" tee and then, via a reversed 10"x8" reducer, direct their effluent into the 10" inlet of the AFL OWS. This OWS is of molded fiberglass with internal reinforcement. External dimensions are 10.5' L x 10.3' W x 6' H, and it is capable of accepting an oily water inflow of up to 400 GPM, according to the manufacturer, AFL Industries of Riviera Beach, Florida. Accounting for the various internal components and baffles, the AFL OWS has a holding capacity of 2,840 gallons and an oil storage capacity of 650 gallons.

The following are schematics of a typical OWS as manufactured by AFL Industries:

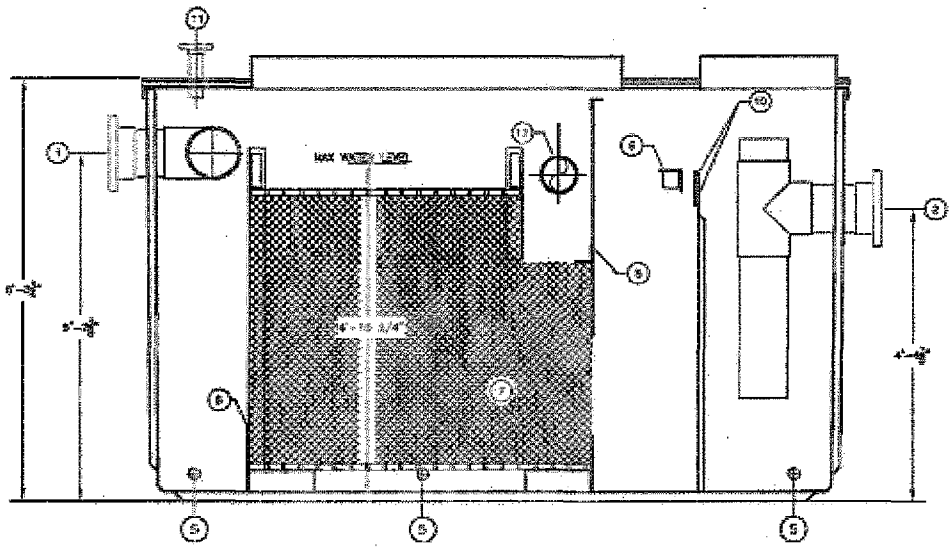

CROSS-SECTION / ELEVATION VIEW OF AFL OWS

ASSEMBLY LIST

1. 8" ø INLET, FLANGED
2. 8" ø OUTLET, FLANGED
3. 8" ø OIL OUTLET, FLANGED
4A. 4'-0" X 5'-6" MANWAY
4B. 2'-0" X 4'-0" MANWAY
5. 2" ø DRAIN, FLANGED (3 REQ'D.)
6. INLET BAFFLE
7. VERTICAL TUBE COALESCERS
8. OIL RETENTION BAFFLE
9. SHEEN BAFFLE
10. ADJUSTABLE OUTLET WEIR
11. 2" ø VENT, FLANGED
12. 8" ø ROTARY PIPE SKIMMER

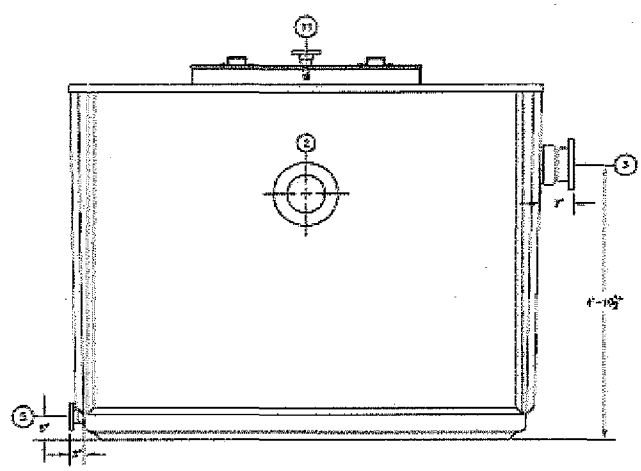

ELEVATION VIEW OF OUTLET END OF AFL OWS

Figure 6 – SCHEMATICS OF OIL/WATER SEPARATOR MANUFACTURED BY AFL INDUSTRIES (from www.aflindustries.com)

AFL Industries describes the operation of their product as follows:

> "The VTC removes hydrocarbons and settleable solids from industrial wastewater and coolant. In operation, this separator accepts industrial liquid waste in the inlet chamber. Here settleable solids fall to the bottom as sludge for periodic removal.
>
> Then the waste stream enters the coalescing separation chamber. A matrix of vertically-positioned polypropylene tubes gives laminar flow characteristics to the liquid. The result is a liquid more responsive to gravity separation.
>
> The tubes also provide a coalescing medium. Oleophilic in nature, they attract small oil globules which coalesce with other globules, increase in size and buoyancy, then break away to rise through the tubes to the top. Surface oil drains by gravity into a rotary pipe skimmer for discharge to a storage facility.
>
> Performance that can be expected of the VTC separator is:
>
> 1. Removal of oil globules down to 20-micron size;
> 2. Reduction of oil content to 10mg/ltr.
>
> The VTC removes even non-permanent mechanically emulsified oil. It leaves no visible sheen and traps solids too. In metalworking and similar applications, it removes more than 99% of tramp oils from coolants.
>
> The VTC incorporates a molded fiberglass construction. Internally reinforced, the structure withstands severe soil and hydraulic loadings.
>
> The entire exterior surface is covered with corrosion-resistant gel coat, integrally-colored and ultra-violet resistant. Since the envelope and fittings are corrosion-resistant, the separator can be installed in many hostile environments. No sacrificial protection required."

The downstream chamber in the AFL unit includes an oil stop valve (OSV). According to the manufacturer, this component works based upon a specific gravity (SG) differential in which an SG-sensitive mechanism floats in water (SG=1) and sinks in oil (SG ≤ 0.90). The ballasted float has a SG between these values. In the event of a spill, oil enters the OWS and displaces the water out of the coalescer section to the point where free oil flows under the oil-stop baffle, and the float mechanism will sink as the oil begins to fill the outlet compartment. As the float loses buoyancy, it will seal the outlet piping, (See figure 7, schematic of this component) 10" butterfly valves are installed at both the inlet and outlet ends of the AFL unit. This is followed by a 10"HDPE discharge pipe at the outlet end with a 3/4" tap, a ball valve and a 10±" length of pipe immediately downstream of the AFL unit. This tap is the sampling point at which effluent is taken and tested in order to verify compliance with the SPDES permit requirements via periodic Discharge Monitoring Reports (See section 3.1, simplified block diagram for sampling point location, and section 3.2 for SPDES permit conditions). Valves and fittings were noted to be substantially in conformance with the piping arrangement shown on Con Edison drawing no. 360901-00.

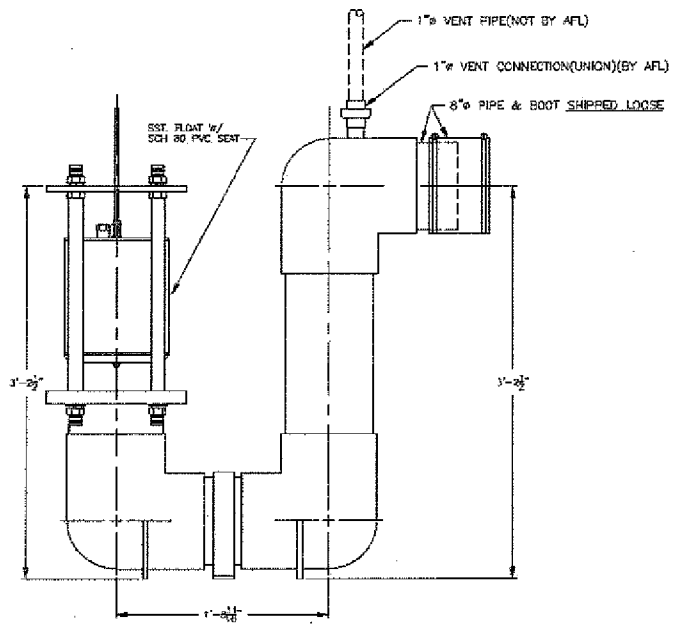

Figure 7 – OIL STOP VALVE, MODEL OSV-8, AS MANUFACTURED BY AFL INDUSTRIES, AND INSTALLED INSIDE OIL/WATER SEPARATOR

A 10" HDPE pipe runs from the outlet end of the AFL units to an outfall along the southerly bulkhead of the Newtown Creek (See section 8.0, photographs).

Two sensors/alarms within the AFL OWS are identified as "High Liquid Level" and "High Oil Level", and are wired to a control panel mounted on the inlet side of the AFL unit. However, based upon discussions with tunnel maintenance personnel during a follow-up site visit, neither the control panel nor these sensors are functioning, and so these are not linked to either local or remote alarm systems (Con Edison's Gas Operations Supervisory System, or GOSS).

2.3 EMERGENCY GENERATOR

Con Edison's drawing no. EO-11463-15 indicates an emergency generator located in the Brooklyn headhouse, more or less at finished grade, along with a 250 gallon steel diesel fuel tank, and this was verified in the field. The tank is approximately 3.5 ft x 3.5 ft., 5 ft high, and is located inside a steel secondary containment vessel, approximately 4.5 ft x 3.7 ft, 4.3± ft high.

Two (2) lead-acid batteries connected in series and set within a containment tray are located alongside the generator. (See section 3.5.5 for containment calculations, and section 8.0, photographs, for both the generator and its batteries).

3.0 DESIGN BASIS EVALUATION

3.1 SIMPLIFIED BLOCK DIAGRAM OF SYSTEM:

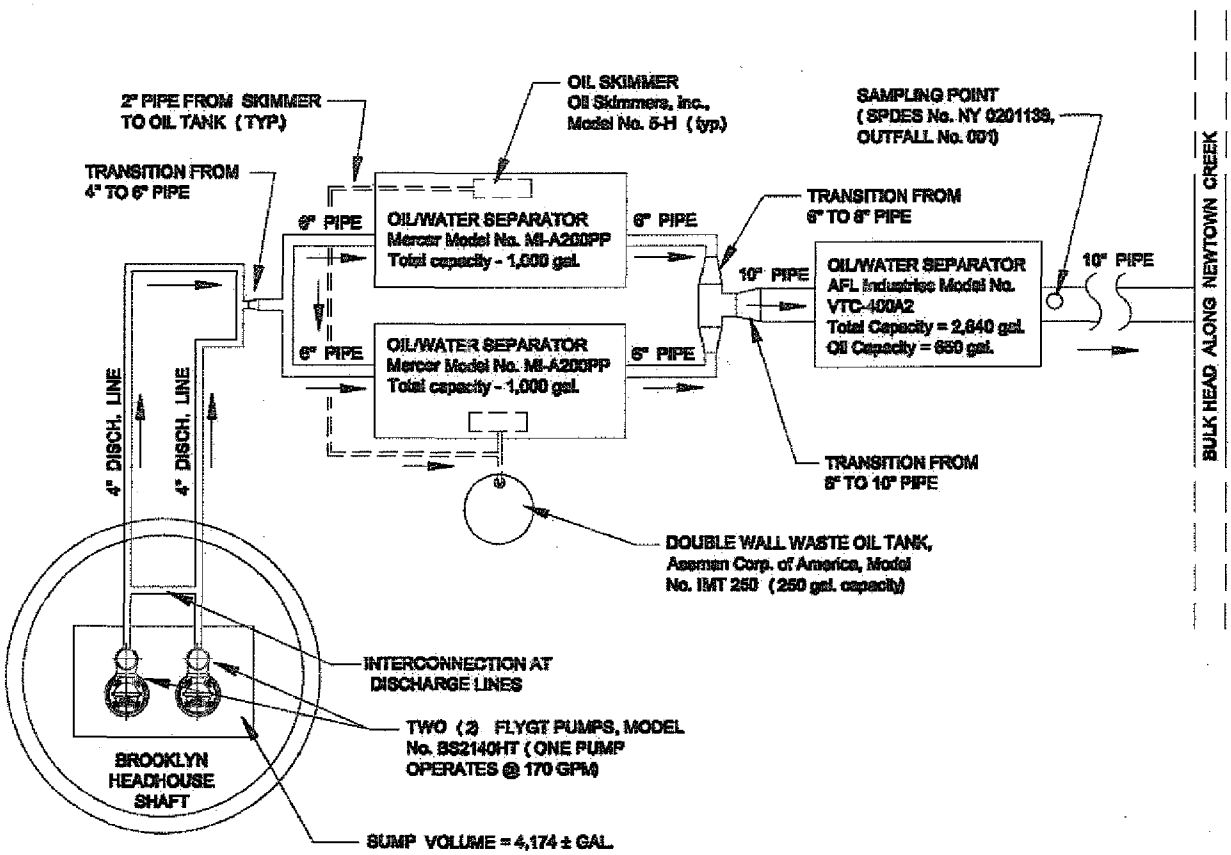

Figure 8 – SCHEMATIC OF OIL/WATER SEPARATORS AND RELATED COMPONENTS AT THE 11TH STREET CONDUIT TUNNEL, BROOKLYN SIDE

3.2 DESIGN BASIS

The design bases for the dewatering system serving this facility are: a) the collecting and discharging of groundwater that has infiltrated into this tunnel in accordance with good engineering practice and guidelines as presented in the publications listed in the section of this report entitled "calculation references", and b) compliance with the discharge limitations set forth in a State Discharge Elimination System (SPDES) permit issued by the New York Department of Environmental Conservation (NYSDEC).

Furthermore, there is the need to establish whether provisions for spill containment are in place and adequate where required and, if not, suggest measures that should be taken to provide them.

The SPDES for this facility was issued on March 1, 1997 and subsequently renewed; this permit is currently valid through February 29, 2012. (SPDES permit No. NY 020 1138, DEC No. 2-9902-00018-00001).

The conditions / limitations contained in this permit insofar as discharges are as follows:

a. Oil & Grease (O&G) – 15 mg/l (Daily maximum, sampled monthly);

b. Total Suspended Solids (TSS) – 50 mg/l (Daily maximum, sampled monthly);

c. Maximum allowable discharge – 108,000 GPD (gallon per day monitored monthly).

The Discharge Monitoring Report (DMR) for the period 02/01/10 through 02/28/10 was provided to this office and indicated compliance with the SPDES requirements. The results were as follows:

a. Oil & grease – < 5 mg/l.;

b. Total suspended solids – 8 mg/l;

c. Flow rate – 108,000 GPD

This permit also limits the discharging at this facility via groundwater infiltration and stormwater of the following (collectively referred to as BTEX):

a. Benzene – 0.10 mg/l (Max.);

b. Toluene – 0.10 mg/l (Max.);

c. Ethyl Benzene – 0.10 mg/l (Max.);

d. Xylene – 0.10 mg/l (Max.).

A separate DMR addressing BTEX (03/01/09 through 02/01/10) indicates concentrations of these chemicals as follows:

a. Benzene – 0.004 mg/l;

b. Toluene – 0.004 mg/l;

c. Ethyl Benzene – 0.026 mg/l;

d. Xylene – 0.032 mg/l.

An additional requirement stated in this permit is that "There shall be no discharge of polychlorinated biphenyl compounds" (PCB's).

Monitoring and sampling for these components is required on an annual basis.

3.3 EQUIPMENT NOT TIED TO SYSTEM

Except for any water that may permeate through the walls of either the Queens- or Brooklyn shafts, stormwater runoff that flows onto and across the two headhouse sites does not get directed into the sump pit for conveyance into the OWSs.

Secondary containment is provided for both diesel fuel tank and the two lead-acid batteries serving the emergency generator, and so these components are independent of and not connected to this facility's dewatering system.

Good housekeeping and proper refuse removal generally prevent potential pollution/contaminants from reaching this dewatering system. There are no other containment/pollutant sources present on site.

3.4 CONTAINMENT SYSTEM

This site currently does not have a spill prevention control and countermeasure (SPCC) plan in place nor, following a review of Federal SPCC regulations 40 CFR 112, is one required for the components being examined; the tunnel itself provides containment in the event that any oil-containing conduit ruptures; the fuel tank and batteries for the emergency generator are provided with secondary containment; and the three OWSs themselves constitute a flow-through treatment system – i.e., the regulations do not consider them to be oil storage tanks; the site does not have any underground storage tanks with a capacity of 42,000 gallons or more of oil; there are no single aboveground containers with a capacity of at least 660 gallons of oil, nor any smaller containers which, cumulatively, would result in a total aboveground oil storage capacity of 1,320 gallons; and the facility could reasonably be expected not to discharge oil into a navigable water way.

The following regulations, while not strictly required or applicable to the site, can serve as guidelines in developing procedures and undertaking on-site improvements that would minimize, or prevent altogether, the effects of an accidental spill, leak, or catastrophic event.

a. U.S. Code of Federal Regulations (CFR), Vol. 40, Part 112 ("40 CFR-112") (Oil pollution prevention) – applicability, definitions and general requirements for spill control and countermeasure (SPCC) plans.

b. 40 CFR-264.193 (Containment and detection of releases) – Addresses secondary containment, requirements for double-walled tanks, and leak testing. (website: http://edocket.access.gpo.gov/cfr_2003/julqtr/pdf/40cfr264.193.pdf)

"Designed or operated to contain 100 percent of the capacity of the largest tank within its boundary; (ii) Designed or operated to prevent run-on or infiltration of precipitation into the secondary containment system unless the collection system has sufficient excess capacity to contain run-on or infiltration. Such additional capacity must be sufficient to contain precipitation from a 25-year, 24-hour rainfall event. (iii) Free of cracks or gaps; and (iv) Designed and installed to surround the tank completely and to cover all surrounding earth likely to come into contact with the waste if the waste is released from the tank(s) (i.e., capable of preventing lateral as well as vertical migration of the waste)."

c. 40 CFR-264.196 (Responses to leaks and spills and disposition of unfit-for-use tank systems).

d. Subpart 750-01, NYSDEC Regulations, "Obtaining a SPDES Permit", Chapter X, Division of Water.

3.5 SYSTEM CALCULATIONS

3.5.1 PURPOSE

The calculations in this section are intended to demonstrate if – under normal operating conditions, or using reasonable assumptions and engineering judgment in the absence of data as to the normal condition – the major components of the dewatering system serving this facility are appropriately designed to perform their respective function.

These calculations are also intended to demonstrate if secondary containment measures (where they have been provided) are adequate, or to identify where they are necessary in order to comply with state (NYSDEC) and/or federal (EPA) regulations.

3.5.2 METHODOLOGY

The calculations are presented in the order in which the groundwater / polluted influent passes along or through the major components of this dewatering system. For this particular facility, this means an examination of the capacity of the sump pit, the flow rate of the pumps, the sizing of the OWSs and appurtenances, and the outfall discharge.

3.5.3 CALCULATION REFERENCES

The following design manuals, technical bulletins, and other publications were among the references used in assessing the capabilities of the dewatering system, and the OWSs and appurtenances serving this facility:

a. Flygt USA technical specifications for submersible pump B2140, 60Hz (File/Doc. No.894755/1.0);

b. US Army Corps of Engineers, "Appendix A, Selection and Design of Oil/Water Separators at Army Facilities" (ETL 1110-3-466, 26 Aug., 1994);

c. Dept. of Defense, United Facilities Criteria (UFC), "Design: Industrial and Oily Wastewater Control" (UFGC 4-832-01N), Jan. 16, 2004;

d. US Dept. of Transportation, Federal Highway Administration, "Highway Stormwater Pump Station Design" (Hydraulic Engineering Circular No. 24, Feb. 2001);

e. American Petroleum Institute, "Monographs on Refinery Environmental Control – Management of Water Discharges; Design and Operation of Oil-Water Separators" (API Publication 421, February 1990);

f. US Environmental Protection Agency, "SPCC Guidance for Regional Inspectors" (EPA 550-B-05-001, Ver. 1.0, November 28, 2005);

g. Uniform Fire Code (UFC), 1999 Article 64 Stationary Lead-Acid Battery Systems";

> "Article 64 applies to stationary lead-acid battery systems that have a total or aggregate liquid capacity of more than 100 gallons (378.5 L) in buildings with fire suppression sprinklers (50 gallons (189.3 L) in non-sprinkler buildings) and are used for facility standby power, emergency power or uninterrupted power supplies. (6401.1.)"

h. The EPA enforces the Code of Federal Regulations (CFR), which stems from the Resources Conservation Recovery Act (RCRA) and the Right to Know Act. The Right to Know Act requires businesses to report the storage of any hazardous materials exceeding 500 lb — including batteries. The RCRA states that any materials exceeding 500 lb (10 lb equals 1 gal of electrolyte) must have liquid-tight, secondary containment systems.

3.5.4 CALCULATION ASSUMPTIONS AND INPUTS

A number of drawings associated with this facility were provided to this office and are noted in the references section at the end of this report. These drawings, in addition to observations from the site visits, discussions with Con Edison personnel, and other references such as correspondence, charts, etc., were the basis for the calculations that follow. As an example, the following chart presents information pertaining to the pumps installed in each facility's sump pit (feet of head, make/model, rated- and adjusted flow rates, outlet- and hose sizes) as well as the emergency pump which would be brought onto the site and used in the event of sump pump failure:

TUNNEL PUMP PERFORMANCE CHART

Tunnel	ft of head	existing pump model# / voltage	Pump outlet dia.	Rated GPM	discharge hose dia.	adjusted GPM	emergency pump model#	Pump outlet dia.	GPM
Astoria	261	Stancor P-70chh / 208v	4"	250	2"	180	Flygt B2201	4"	500
Ravenswood	137	BS2140HT / 460v	3"	250	2"	190	Flygt B2201	4"	850
11th Street	150	BS2140HT / 460v	3"	230	2"	170	Flygt B2201	4"	790
Hudson Avenue	230	BS2140HT / 230v	3"	250	2"	190	Flygt B2201	4"	590
1st Avenue	130	Flyght NP3171HT / 230v	4"	590	4"	590	Flygt B2201	4"	850
Flushing	58	Flyght 2171 / 230v	2"	160	2"	160	Flygt B2201	4"	950
Bronx River	74	Flyght 2171 / 460v	2"	140	2"	140	Flygt B2201	4"	950

Figure 9 – TUNNEL PUMP PERFORMANCE CHART PROVIDED BY CON EDISON

The dewatering system at the 11th Street Conduit tunnel consists of two Flygt pumps which alternate in the "lead" position. Each pump has an adjusted flow rate of 170 GPM when overcoming 150 feet of head during normal, one-pump operation. Using this information, along with findings from the site investigation, Con Edison's drawings as referenced at the end of this report, and the pump manufacturer's information, calculations have been made regarding this tunnel's dewatering system.

Reasonable assumptions were made as to what the characteristics of a "typical" influent into the OWSs may be, and are as follows:

a. The OWSs are designed for intermittent and variable flows of water, oil, or any combination of non-emulsified oil/water mixtures ranging from 0- to a maximum of 340 GPM – i.e., two pumps in operation, each at their rated 170 GPM and not accounting for the losses associated with combing their flows into a common pipe, which would substantially reduce this maximum;

b. Operating temperatures of the influent oil/water mixture shall range from 40° to 120° F;

c. The specific gravity of the oils within this range of temperatures shall range from 0.68 to 0.95;

d. Under normal operating conditions, petroleum hydrocarbon concentrations will typically be minimal (see results from DMR in section 3.2). Consideration should be given to scenarios in the event of a rupture, when concentrations can go from minimal (nearly 0%) up to 1,000,000 mg/l (100%).

e. The specific gravity of fresh water within the aforementioned temperature range shall range from 1.00 to 1.03.

3.5.5 CALCULATIONS

Sump pit volume:

(Based upon a review of dwg. A301012-01 and site visit)

Dimensions are approximately 6.2ft x 18ft, with a total depth of 5 feet, and a permanent pool depth of 2.7± feet.

GROSS VOLUME: (6.2ft x 18ft) x 5ft depth = 558 cu.ft ....x 7.48 gal./cu.ft. = 4,174 gal.

PERMANENT POOL is approx. 2.7 ft deep

(2.7 / 5.00) x (4,174 gal) = 2,254 gallons (permanent pool, bottom to "pumps off")

Good standard practice to assure adequate permanent pool to prevent exposure of pump impellers/cavitation during startup is 10gal. of storage for each GPM of pump....Pump operates at 170 GPM...1,700 gal. (Suggested)

Available volume left for "normal" operation – i.e., 1 pump – is 2,254 gal.
(OK.... Volume of sump pit is adequate) Calculated by: ACB
Checked by: GS

EPA-NC-CE-0000639

Submersible pump (one pump operation):

Dwg. no. A301012-01 shows elev's for floats. However, a number of these appear to be incorrect. Distances as scaled off of this plan are probably more accurate and are approximately as follows ....

Bottom of sump pit to "Lo-Lo-water level" – 1.7ft
"Lo-Lo-" to "Lo water level" / pumps off – 1.0 ft.
"Lo water-" to "First pump on" – 1.3 ft.
"First pump on" to "Hi water"/ second pump on – 1.1 ft.

(First pump on) to ((pumps off) = 1.3 ft.
Corresponding volume = (1.3ft.) x (6.2ft x 18ft) = 145.13 c.f....x 7.48 gal. /c.f.
(= 1,085 gal.)

Inflow into sump = 60 GPM (Based upon information provided by Con Edison)
Outflow via one pump = 170 GPM (Based upon "Tunnel Pump Performance Chart").
Determine length of pump cycle time....

$$t = (V/D)\,[1 / (1 - Q/D) + (1 / [Q / D])]$$

t = total time between successive starts (minutes)
D = pump capacity (GPM)
V = wet well storage between pump off / pump on (Gallons)
Q = inflow into wet well (GPM)

$$t = (1{,}085 / 170)\,[1 / (1 - 60 / 170) + (1 / [60/170])]$$
$$= (6.38)\,\{1.545 + 2.83\} = 27.9 \text{ min. (Say 28 minutes between starts)}$$

Approx. length of time for which one pump is on....

$$T = 1{,}085 \text{ gal.} / (170 \text{ GPM} - 60 \text{ GPM}) = 9.86 \text{ minutes (say 10 min.)}$$

Calculations above are as per Dept. of Defense / UFC manual (see calculation references)....recommendation for pumps less than 50 HP is 6 minute time of operating cycle....**Pump operating cycle time is OK**

Static head:
(El. of inlets, Mercer units) – (El. of pumps) = 16.8 – (-143.5) = 160.3 ft.

Friction Head:

- Pipe is mostly 4" HDPE, with an estimated length of 180± feet
- Estimated 6 - 90° bends @ 12±ft ea. = 72 feet
- Estimated 3 – var. valves @ 3±ft ea. = 9 feet
- Est. 2 check valves @ 38±ft ea. = 76 feet
- Est. 2 – 4" tees (thru side) @ 22±ft = 44 feet
  (Total equiv. length, pipe + fittings = 381± feet)
- Accounting for 2" piping and var. fittings near sump assume 20ft (equiv. length) and calculate friction head separately

Cont'd...

Use Hazen-Williams formula using a nominal 4" dia. pipe, C=140, to calculate friction loss, then add to static head to get total dynamic head (TDH) for range of flows:

$$f = 0.2083\ (100/c)^{1.852}\ q^{1.852} / d_h^{4.8655}$$

Where:

f = friction head loss per 100LF of pipe ("HL/100ft" in tabulation)
C = Hazen-Williams roughness coefficient
q = flow rate (gal./min)
dh = inside diameter of pipe (inches)

(An online program is used to expedite the calculation of "HL/100ft" for the various flow rates and lengths of pipe. See references)

	(4" pipe)		(2"pipe)			
Flow(GPM)	HL/100ft	(x3.81)	HL/100ft	(x0.20)	+ H static	= TDH
0 GPM	0	0	0	0	160.3	160.3
20	0.03	0.11	0.98	0.19	"	160.6
50	0.18	0.68	5.37	1.07	"	162.0
100	0.66	2.51	19.4	3.88	"	166.7
125	1.00	3.81	29.3	5.86	"	170.0
150	1.41	5.37	41.1	8.22	"	173.9
175	1.87	7.12	54.6	10.92	"	178.3
200	2.40	9.14	70.0	14.00	"	183.4
225	2.98	11.35	87.0	17.40	"	189.0

Plot system curve (Flow and TDH) on manufacturer's pump performance curve:

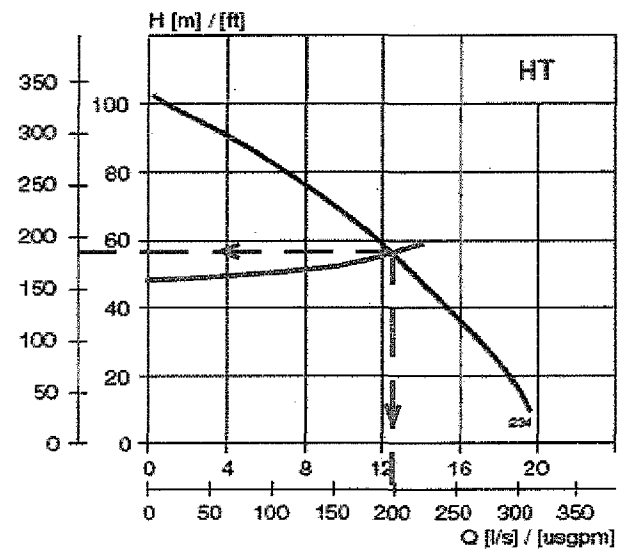

Cont'd...

(Submersible pump, one pump operation, cont'd.....)

System curve based on *estimated* configuration of discharge piping and valves, bends, etc., indicates flow rate at 200± GPM vs. 170 GPM from Con Edison "Tunnel Pump Performance Chart".

Conclusion: It is reasonable to use the flow rate at 170 GPM provided by Con Edison. Relative to the estimated inflow at 60 GPM (see below), this represents a peak factor of 2.8.

Calculated by: ACB
Checked by: GS

Outfall pipe:

Based upon the 170 GPM at which one pump operates, and the 10" HDPE outfall pipe at a slope of 1/8" per foot (according to drawing no. A30102-01):

Slope at 1/8" per ft..... 0.125" / 12" = 0.0104 (1.04%)
Use Manning's equation to solve for full-flow (Q, in cu.ft./sec, or CFS) ....

$$Q = \frac{1.486 A R^{2/3} S^{1/2}}{n}$$

n = roughness coeff. 0.010 for HDPE pipe
A = area of pipe (for 10" pipe, A = 0.545 sq.ft)
R = hydraulic radius (Dia./4 for full pipe....0.83 / 4 = 0.2075 ft.)
(to the 2/3 power...0.35137)

Q = { 1.486 x (0.545 sq.ft) x (0.35137) x [sqr.root (0.0104)] } / 0.010 = 2.90 CFS
(or 1,303 GPM)

Velocity: V = Q / A 2.90 CFS / 0.545 sq.ft. = 5.32 ft/sec
(Full flow)

Max. Conceivable flow is both pumps at adjusted flow rates .... 2 x 170 GPM
(or 340 GPM)

Using typ. computer program looking at partial flow scenarios, if Q = 340 GPM, then flow depth is 0.35 x diameter – i.e., 0.29 ft.....Program calculates that for flow depth @ 0.35 of full depth, velocity is 0.84 x V full.....0.84 x 5.32ft/sec = 4.48 ft/sec.

OK....Capacity of pipe (1,303 GPM) exceeds max. possible flow (340 GPM). Outfall is directly into creek, so there is no danger of erosion (velocity at 4.5± ft/sec is OK)

Calculated by: ACB
Checked by: GS

Mercer and AFL OWS's

Each Mercer OWS (Model No. MI-A200-PP) will, according to the manufacturer, process water flows:

a. not exceeding 200 GPM
b. in a temperature range of 35°F to 165°F
c. within a pH range of 5.0 to 9.0

The Mercer units are installed in parallel; one pump at 170 GPM distributes influent to each unit more or less equally....

170 GPM (total) / 2 Mercer OWSs = 85 GPM into each Mercer OWS

The AFL Industries OWS, VTC 400-A2 (1 unit); will, according to the manufacturer, process water flows not exceeding 400 GPM

The AFL unit receives flow from both Mercer OWSs at 170 GPM.

Assume that temperature of influent is approximately 70°F, the pH falls within manufacturer's range; and the droplet with diameter greater than or equal to 150 microns the following Stoke's law:

$$V_t = (g/18\mu)\,(P_w - P_o)\,D^2$$

Where: V_t is the rise rate of the oil drop;

g is the acceleration due to gravity;
μ is the viscosity of the influent in poise;
P_w is the density of the influent
P_o is the density of the pollutant
D is the diameter of the pollutant droplet

Shall verify the following: V_t > Surface Loading Rate (SLR)

Where: The SLR is the ratio of the flow rate to the separator and the surface area of the separator media.

Finally, the design of the parallel plate separators shall be determined using the following formula:

$$A_h = Qm / 00386\,[(S_w - S_o)/\mu]$$

Where: A_h is the horizontal separator area required, in ft^2:

Q_m is the design flow (ft^3/min); (Inflow, each Mercer OWS= 85 GPM or 11.36 ft^3/min)
S_w is the specific gravity of the influent; (Assume 1.0)
S_o is the specific gravity of the pollutant. (Assume 0.92)
μ is the viscosity of the influent in poise; (Assume 0.01 poise)

A_h = 11.36 ft^3/min / {00386 [(1-0.92)/0.01]} =367.9 sq.ft req'd

(As per discussions with the manufacturer, Mercer Industries, this OWS provides 700 sq.ft. of horizontal separator area.....**OK....Square footage provided exceeds req'd**)

Calculated by: GS
Checked by: ACB

Examining sudden and excessive oil inflows

Under normal operating conditions, the percentage of hydrocarbons / oil / grease is minimal and, according to the DMR provided, their concentrations in the effluent being discharged into the watercourse are well below the allowable concentrations in the SPDES permit.

TRC has assumed oil concentrations of 20%, 50% and 100%, taking into account the flow rate from one pump (170 GPM) and assuming that inflow from a ruptured conduit does not exceed capacity of one (1) pump in operation. The Mercer OWS's are the smaller of the two types of OWS's present at this facility.

Look at scenarios if there was a rupture in any of oil-containing conduits within this tunnel. The volume of Mercer MI-A200-PP OWS is an estimated 1,000± gallons.

At 20% of 170 GPM inflow.....0.20 x 170 GPM = 34 GPM
Time to fill OWS = 1,000 gallons / 34 GPM.....29.4 minutes
(30± MIN.)

At 50% of 170 GPM inflow.....0.50 x 170 GPM = 85 GPM
Time to fill OWS = 1,000 gallons / 85 GPM.....11.8 minutes
(12± MIN.)

At 100% of 170 GPM inflow.....1.00 x 170 GPM = 170 GPM
Time to fill OWS = 1,000 gallons / 170 GPM.....5.9 minutes
(6± MIN.)

The time periods above indicate how much time it will take for an OWS to displace the water that generally occupies its volume and fill up with oil to the point where a "high oil" alarm will activate.

Calculated by: GS
Checked by: ACB

Emergency generator containment

Dimensions of the secondary containment are approximately 4.5ft x 3.7ft, with a total depth of 4.3 feet.

Gross volume: 4.5ft x 3.7ft x 4.3ft = 71.59 cu.ft ....x 7.48 gal/cu.ft = 535 gal.

150% of diesel tank = 375 gal.....**OK....Gross volume of secondary Containment (535 gal.) exceeds 150%of Diesel fuel tank (375 gal.)**

Calculated by: ACB
Checked by: GS

Batteries for emergency generator (containment)

Two (2) lead-acid batteries are connected in series to provide start-up power to the emergency generator. Each battery measures approx. 10"W x 16" L x 10" H, and consists of three (3) cells.

Each cell is approx. 10" x 10" x 5.3".....530 cu.in....0.307 cu.ft.

0.307 cu.ft x (7.48 gal./cu.ft) = 2.3 gal. (GROSS)

(Assume that electrolyte out of gross volume is 1 gallon)

Containment is approx. 1 ft W x 3 ft L x 0.2 ft H .....0.60 cu.ft.

0.60 cu.ft x (7.48 gal./cu.ft) = 4.5 gallons

.....less volume of batteries themselves @ 10" x 16" , 0.2 ft H (convert to feet)...

0.83ft x 1.33ft x 0.2 ft = 0.22 cu.ft.

0.60 cu.ft - 0.22 cu.ft = 0.38 cu.ft. Remaining....x 7.48gal/cu.ft = 2.8 gal.

OK.....Remaining volume in containment (2.8 gal.) is adequate to hold electrolyte that can spill from one cell (1 gal.)

Calculated by: ACB
Checked by: GS

3.5.6 CONCLUSIONS

Based upon the plans and information provided addressing the dewatering system serving the 11th Street Conduit tunnel – i.e., the rate of infiltration into the tunnel, the make and model of the submersible pumps, and the size of the sump pit as measured off of the plans or in the field – an analysis and calculations performed by this office demonstrate that these components have generally been designed in accordance with good engineering practice to meet the needs of this facility. While there is a discrepancy between the pump operating rate as shown on the tunnel pump chart versus the calculated rate, this is relatively minor. (See section 6.0 for recommendations).

Reasonable assumptions were made regarding the characteristics of the liquid flowing into the OWSs based upon discussions with Con Edison personnel, as well as with both manufacturers, Mercer International and AFL Industries. Calculations based upon Stoke's Law were made, demonstrating the adequacy of these OWSs. Given that the inflow rate is 170 GPM and the capacity of the two Mercer units in parallel is 200 GPM each, while that of the single AFL unit is 400 GPM, a reasonable factor of safety (above 2:1) has been provided. The DMR of February 2010 indicates that the effluent discharging into the Newtown Creek has O&G and TSS concentrations well below the allowable maximums as per the SPDES permit and so – in the absence of more detailed information regarding the chemical composition of the inflowing groundwater – the OWSs are fulfilling their intended purpose.

With regard to the emergency generator, secondary containment is in place for both the lead-acid batteries used for start-up and for the diesel fuel tank.

4.0 SYSTEM EVALUATION

4.1 IDENTIFICATION OF TECHNICAL DEFICIENCIES

There appear to be no evident technical deficiencies insofar as how the components described above work together in removing the groundwater that infiltrates into the tunnel at what is assumed (after 45 years of service) to be a relatively consistent flow rate, and treating it via a series of OWSs prior to discharging it into the Newtown Creek. Any recommendations for either improving existing components or introducing new methods and technologies are generally intended as BMP's or good housekeeping measures, and are not mandatory. These are addressed in section 6.0.

4.2 SCENARIOS OF OVERFLOW CONDITIONS

The following are identified as scenarios of overflow conditions:

- In the event that an excessive volume of groundwater reaches the sump pit, this influent will fill up the sump pit, exceeding the operating rate of the lead pump

(170 GPM) and reach the float for "High Water" level. The lag pump will turn on and both pumps (operating at a combined flow rate estimated between 275 and 325 GPM) will either: a) dewater the pit back down to the "Low Level" (pumps off) elevation and the cycle will repeat, or b) reach the "High-High" level, indicating that the inflow rate exceeds the combined operating capacity of both pumps. Alarms both onsite and connected to Con Edison's GOSS system will alert staff that a problem exists and that action is required. Water will build up and inundate the tunnel while both pumps continue to operate and discharge liquid through the system of OWSs (within their 400 GPM inflow capacity) and into the Newtown Creek / East River.

- In the event that the percentage of oil in the liquid pumped out of the tunnel increases dramatically (see calculations for 20-, 50- and 100% concentrations) the pumps will continue operating until either: a) one or more of the three OWS's fills up and one or more of the "High Oil" alarms are activated, or b) the oil stop valve (OSV) located in the downstream chamber of the AFL unit is engaged and closes the discharge end of this OWS. As the alarm systems associated with the OWSs are not interlinked with the control panel for the pumps, Con Edison personnel could only stop the pumps once an alarm in the OWSs is activated; pumped liquid could overflow the hatches of the OWSs if the OSV has engaged and the alarms sounded, but the pumps were not promptly shut down either on site or via GOSS.

4.3 SPILL PATH ANALYSIS

In the event of a catastrophic release of contaminated / oily water within the tunnel, this influent will collect in the tunnel and be pumped out until the "High Oil" alarm in the OWS and the OSV (located in the downstream chamber of the AFL OWS) activate and the pumps are turned off by Con Edison personnel (either on site or via GOSS) in which case the tunnel will begin to fill.

If there is a release from the exposed discharge piping, Mercer OWS's, or AFL OWS above ground, then the contaminated / oily water will leak onto the ground where it has the potential to both infiltrate into the surrounding soils and flow into Newtown Creek.

5.0 STATEMENT OF ADEQUACY

5.1 SUMP PIT, PUMPS AND FITTINGS

The sump pit is appropriately sized to: a) provide an adequate permanent pool of water in which the pump motors and impellers remain submerged, thereby avoiding cavitation/damage to these components; and b) provide a remaining volume that detains the incoming groundwater for a reasonable period of time based upon an approximate inflow of 60 GPM, and allows a single pump to operate for a sufficient amount of time (10 minutes) to avoid wear and tear due to frequent starts / short run cycles.

The pumps are adequately sized to convey the influent into the OWS's which are above grade; with each pump alternating in cycles between "lead' and "lag" positions and operating at or near 170 GPM, this represents a peak factor of 2.8 relative to the typical 60 GPM entering the sump pit. (2.5 is generally accepted as a reasonable minimum peak factor for wastewater / sanitary pump stations). The temperature of the influent from the tunnel is well below the allowable maximum 40° C (104°F) indicated in the pump manufacturer's specifications.

Piping and fittings are adequately sized and appear to be in good condition with a sufficient number of valves appropriately located to allow for piping in the vicinity of the pumps and the OWS's to be isolated and removed/serviced if necessary.

5.2 OIL/WATER SEPARATORS

While the precise composition of the contaminated influent entering the OWS's is not known, each is capable of accepting the anticipated inflows under normal operating circumstances – i.e., one pump at 170 GPM, or both pumps in operation at an estimated 300± GPM (Note: the combined operating rate of both pumps, due to friction losses as effluent merges and diverges again through various fittings, would be less than the sum of their individual operating rates – i.e., the flow rate would not be 340 GPM, or 2 x 170GPM). According to the Discharge Monitoring Report (DMR) for February 2010, O&G and TSS concentrations are < 5 mg/l and 8 mg/l, respectively. These are well below the maximum allowable concentrations as per this facility's SPDES permit (15 mg/l for O&G, 50mg/l for TSS) and so the OWS's in combination can be considered adequate – effluent following treatment by them meet the requirements of this permit.

The circumstances under which the second pump would come into operation would either be: a) excessive groundwater entering the tunnel, or b) a rupture of one of the 5±" heat exchange lines running along its walls. In the event of an excessive inflow of groundwater, the obvious limit as to how much infiltration can be handled before the tunnel begins to fill up is the 300± GPM of the two pumps in action. In the event of a conduit rupture, this may not become apparent until the sump pit has filled up and its contents – i.e., liquid with an increasing concentration of oil – are pumped up and into the OWSs, eventually triggering a high-oil sensor or engaging the OSV in the AFL unit.

5.3 CONTAINMENT SYSTEM

The two Mercer OWS's and the Assman oil recovery tank are both of double-walled construction and are fitted with high liquid and/or high oil sensors, and so no additional secondary containment is required to account for either the gross volume of these two components, or the larger volumes associated with either EPA or NYSDEC safety factors (110- or 150%).

The AFL OWS is only of single-wall construction and does not provide for integral secondary containment. The manufacturer's literature states that their OWS's "are either molded or constructed using a patented duo-wall construction. Constructed units consist

of two fiberglass skins over a plywood and timber frame". Secondary containment is not mandatory for this unit since it is a flow-through treatment device (and not intended for either short- or long term oil storage); any implementation of such measures would generally be considered a best management practice / good housekeeping measure.

The secondary containment provided around the diesel fuel tank for the emergency generator provides an adequate volume (exceeding 150% of the tank volume) in the event of a spill/rupture. Likewise, containment provided for the two (2) lead-acid batteries is adequate, should an individual cell in either one of them leak.

5.4 OUTFALL PIPE

Based upon the 170 GPM at which one pump operates, and the 10" HDPE outfall pipe at a slope of 1/8" per foot (Con Edison drawing no. A30102-01), the capacity of this pipe is adequate. Calculations demonstrate that the full-flow capacity of this pipe (1,303 GPM) is well in excess of the flow that would result from both pumps coming online.

6.0 ENGINEERING RECOMMENDATIONS AND PRELIMINARY COST ESTIMATES

As noted above, the sump pit and pumps are adequate insofar as serving the needs of this facility. Recommendations for improving these components or providing additional safety measures are limited to the following:

a. Currently, there is no link between the alarms/sensors associated with the OWSs and the control panel for the pumps. Consequently – and unless Con Edison personnel monitoring this facility's activities via GOSS act promptly – the pumps have the potential to keep running after the OWS's alarms have activated. These systems should be interlinked such that the activation of a "high liquid" or "high oil" alarm in any of the OWSs will turn the pumps off and allow maintenance personnel to promptly investigate the situation. (Estimated cost, incl. engineering (i.e., plans, specifications, bid documents), materials, labor, and contingencies: $80,000);

b. Influent entering the sump pit consists mostly of groundwater. However, in the event that a rupture of a fuel oil line occurs, its contents will flow into the sump pit and be pumped into the OWS, which will fill up with oil until its "High Oil" level sensor is activated, triggering alarms both onsite and via GOSS. TRC recommends installing a sensor within the sump pit which will detect if the influent consists mostly, or exclusively, of oil. This sensor, relying on the electrical conductivity of water and the lack of conductivity in a typical oil, would be linked to the pumps' control panel, shutting them down and alerting GOSS if an excessive volume of oil is detected (or if a pump continues to run below its normal "off" level and the sensor is entirely within the shallow layer of oil that would normally rise to the top of the effluent. Such an integral sensor is included in pumps manufactured by Stancor, specifically for dewatering elevator shafts and transformer enclosures. Discussions with the manufacturer indicate that this

product can be retrofitted to either the existing pumps or mounted on the wall of the sump pit. (Estimated cost, incl. engineering (i.e., plans, specifications, bid documents), materials, labor, and contingencies: $80,000);

c. While the pump's operating flow rate as per Con Edison's data (170 GPM) did not differ substantially from that calculated by this office (200± GPM), consideration should be given to installing flow meters and hour meters along the pump discharge lines as a means of better monitoring overall pump operations. Not only would this allow Con Edison to establish with certainty the actual flow rate during both one- and two-pump operation, but it would allow for verification that both pumps are alternating between "lead" and "lag" positions, and undergoing wear and tear at an equal rate. Monitoring of these meters – especially if they are linked electronically to either onsite- or GOSS systems – would also allow for a more rapid detection of unusual circumstances which may be an indication of other problems – i.e., sudden longer run cycles, which would indicate inflows greater than normal which, in turn, may indicate either a higher rate of infiltration or an outright rupture. (Estimated cost, incl. engineering (i.e., plans, specifications, bid documents), materials, labor, and contingencies: $80,000).

7.0 REFERENCES

7.1 DRAWING REFERENCES

- EO-12245A 1 – System Gas, Electric, Oil And Steam Tunnels (last rev. 9/30/08)
- EC-11463-15 – Power & Heating Electrical Installation (last rev. 3/21/07)
- A301012-01 – Piping Arrangements Plan, Sections And Details For Oil Water Separator System (8/5/94)
- B301013-00 – Structural Plans, Sections And Details For Oil Water Separator System (8/5/94)
- 360901-00 – Piping Arrangement Oil Water Separator (3/20/07)
- 360558-0 – OWS #1 And #2 Raceway And Cable Block Diagram (3/21/07)

7.2 OTHER REFERENCES

- AFL Industries, Riviera Beach, FL (website: www.aflindustries.com)
- Mercer International, Mendham, NJ (website: www.mercerows.com)
- Oil Skimmers, Inc., Cleveland, OH (website: www.oilskim.com)

- Flygt USA technical specifications for submersible pump B2140, 60Hz (File/Doc. No.894755/1.0)
- Con Edison, Central Gas Operations "Tunnel Maintenance Handbook", Rev 4 – Feb. 1, 2010
- Con Edison, Specification G-11823-19, Volume 1, "General Inspection Procedure for Tunnels and Installed Facilities", 11/25/08
- Con Edison, "Tunnel Pump Performance Chart" (summarizes pump information for six tunnel dewatering systems throughout NYC)
- Con Edison, internal e-mail between Dennis J. Mirda and Warren Miller; Subject: Tunnel inleakage (lists infiltration rates in GPM for seven (7) tunnels), Feb. 22, 2010
- US EPA: 40 CFR 112, 261 & 264, Clean Water Act Sections 301, 304 & 402
- New York Department of Environmental Conservation: 6 NYCRR 373, 595-599 & 612-614
- An online calculator for the Hazen-Williams equation (friction head losses along pressure lines) is available at the website, "Engineering Toolbox". The link for this site is: http://www.engineeringtoolbox.com/hazen-williams-water-d_797.html
- An online calculator for Manning's formula (uniform pipe flow for a given slope and depth) is available at the website, "Free Online Manning Pipe Flow Calculator." The link for this website is: http://hawsedc.com/engcalcs/Manning-Pipe-Flow.php

8.0 PHOTOGRAPHS

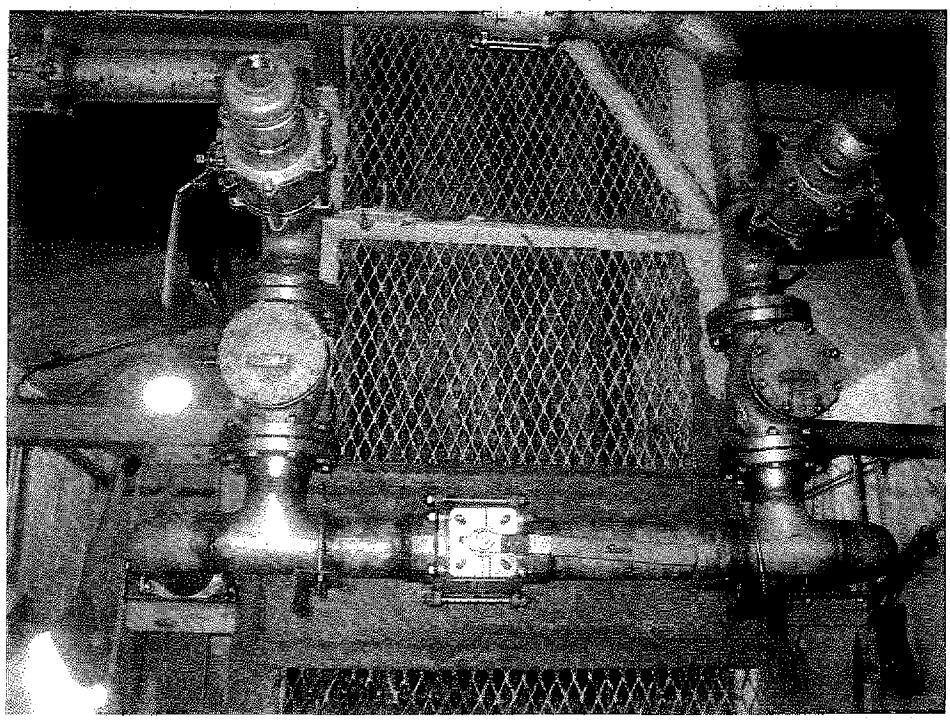

8.0.1 – 4" steel discharge lines and valves near sump pit

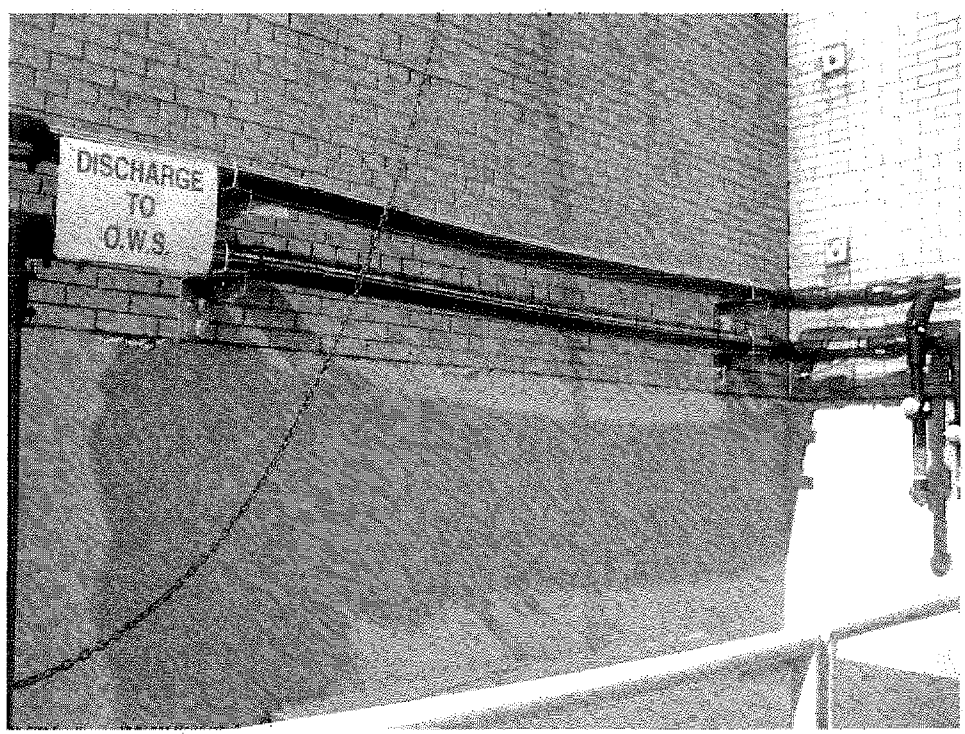

8.0.2 – 4" HDPE pump discharge lines along wall of headhouse

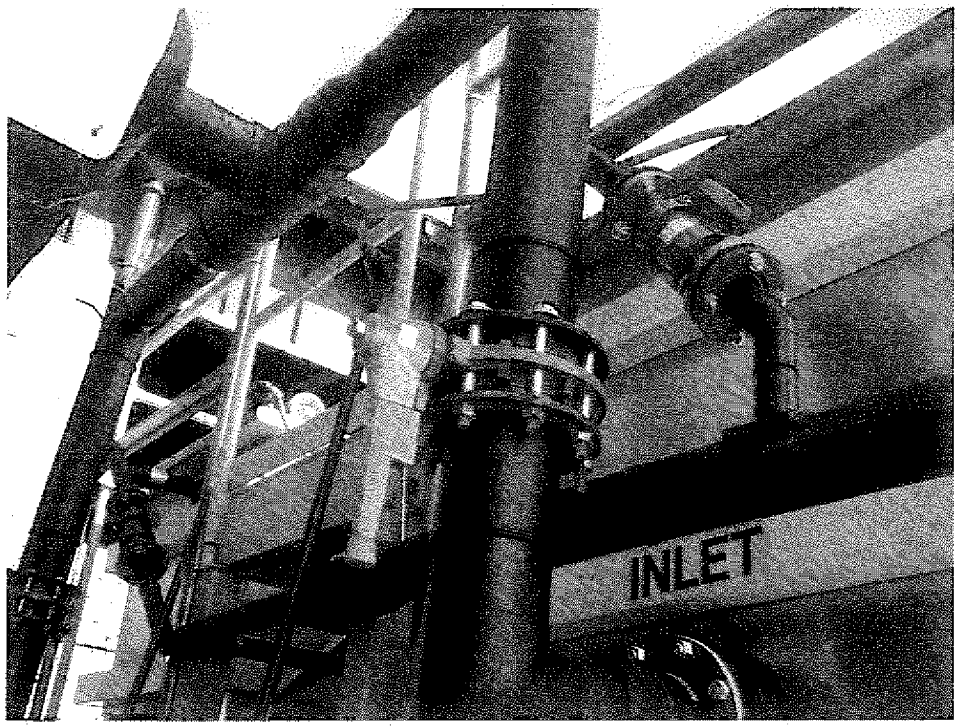

8.0.3 – 6" HDPE inlet and valves into easterly Mercer OWS. (Smaller 2" piping is from oil skimmers to 250 gal. oil recovery tank)

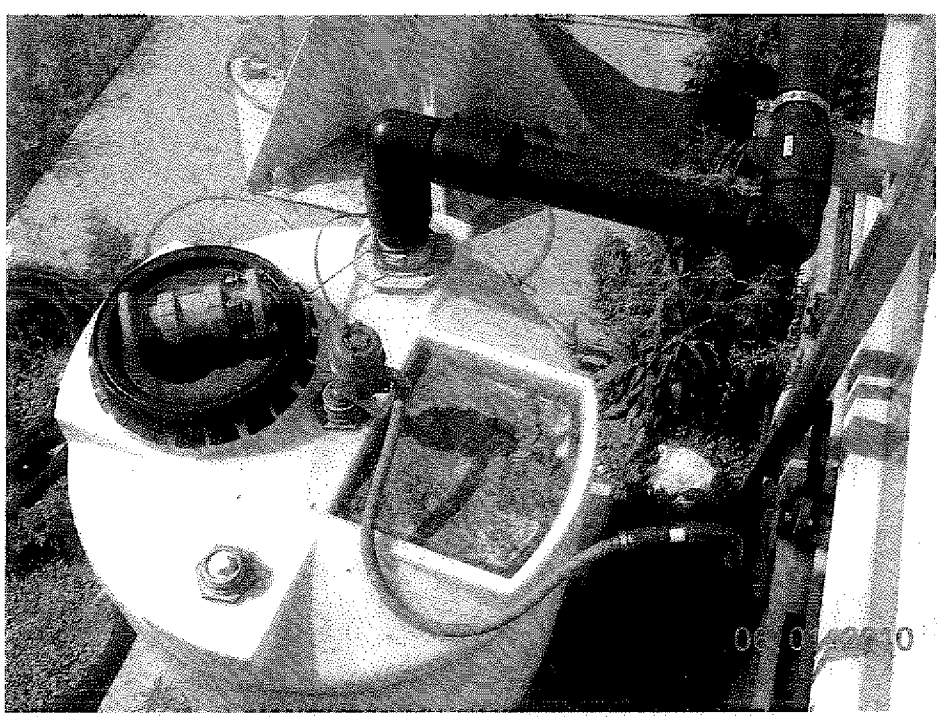

8.0.4 – 250 gal. Double wall oil recovery tank adjacent to easterly Mercer OWS.

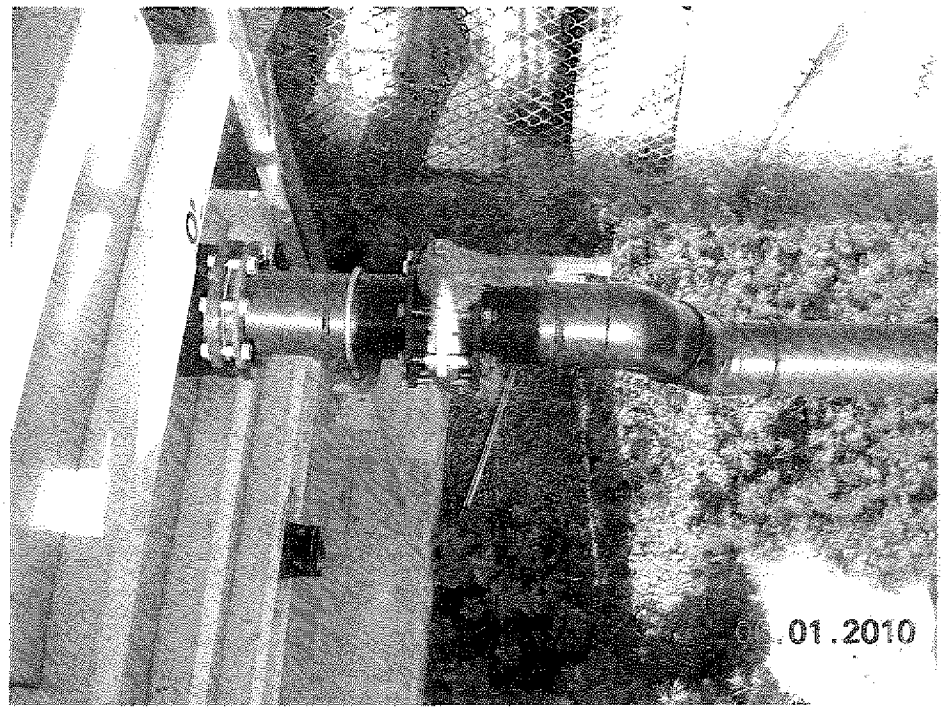

8.0.5 – 6" HDPE outlet pipe and valve from westerly Mercer OWS.

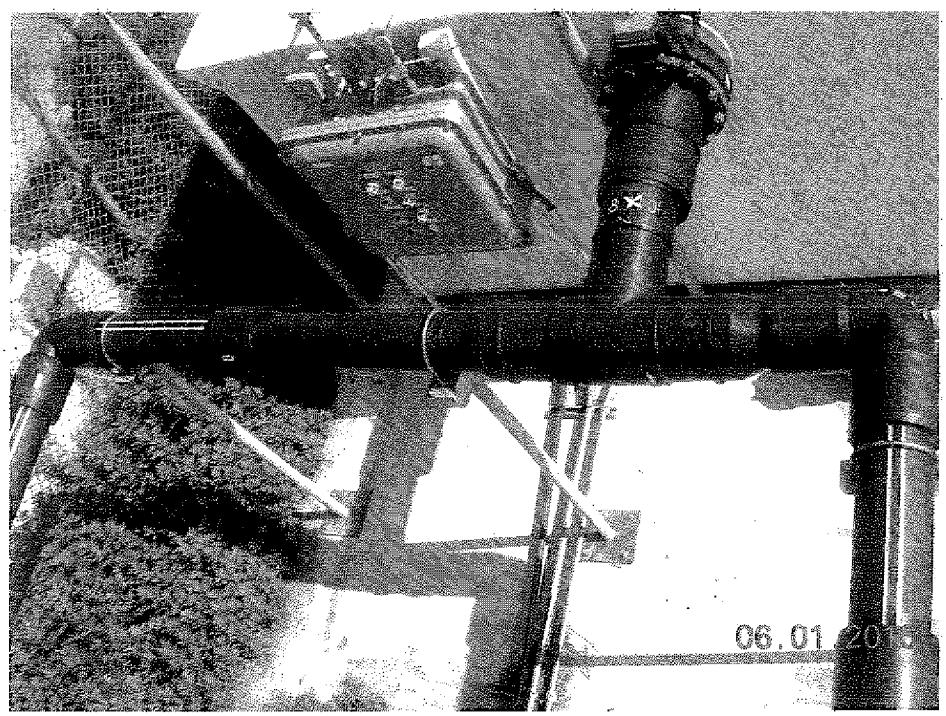

8.0.6 – 6"outlets from Mercer OWS's, 10" inlet to AFL OWS.

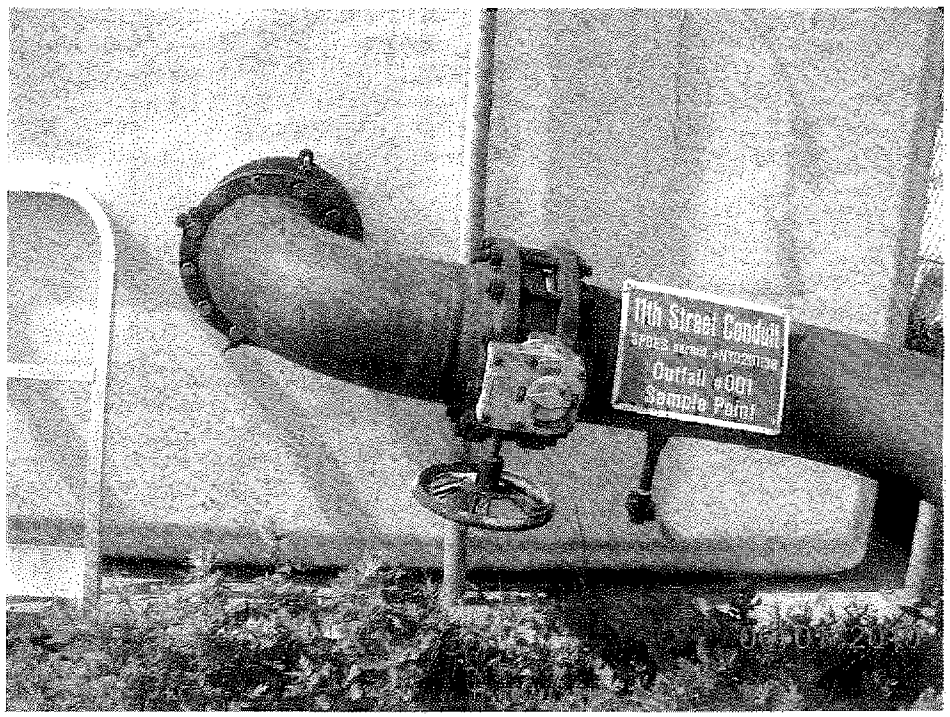

8.0.7 – 10"outlet from AFL OWS, 10" valve, and 3/4" tap / sampling point for SPDES permit.

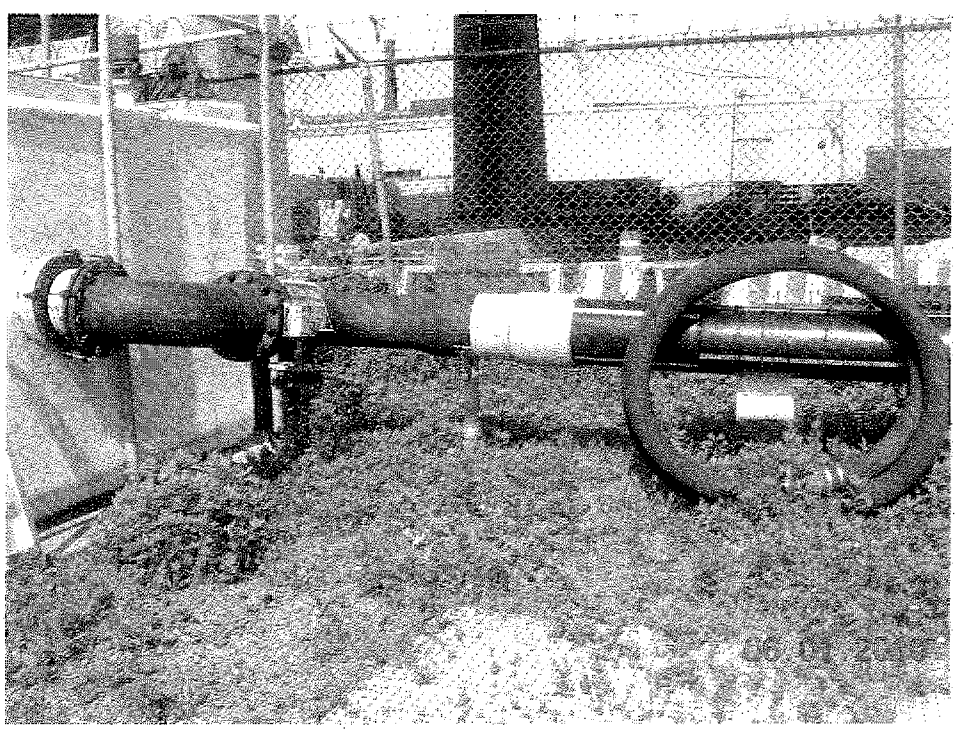

8.0.8 – 10"outlet from AFL OWS and 10" HDPE discharge piping

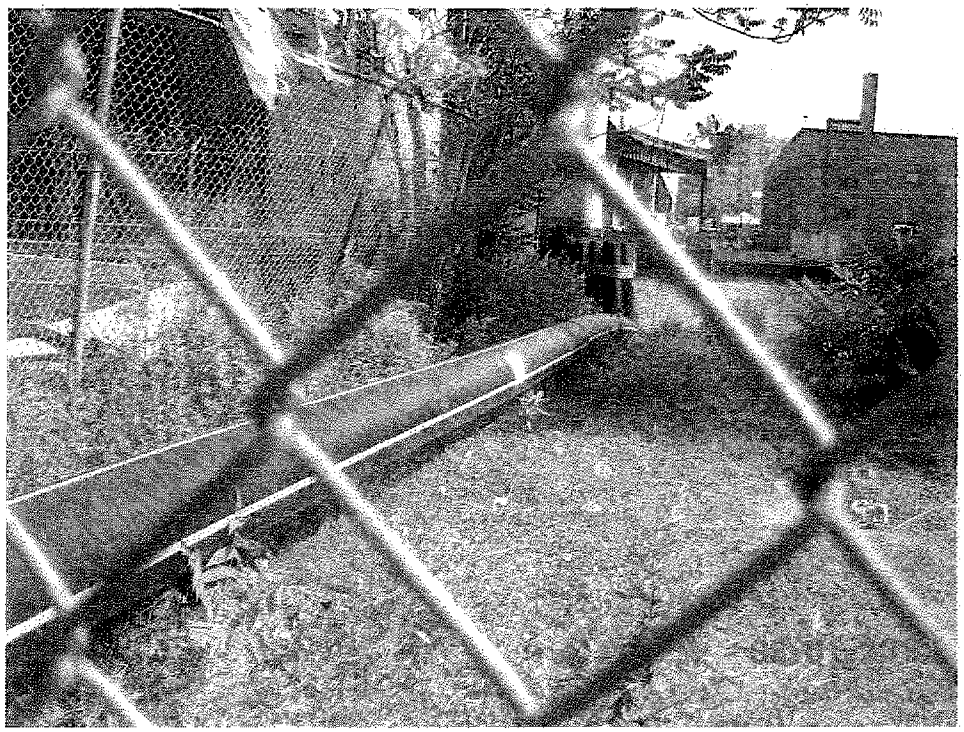

8.0.9 – 10" HDPE discharge piping (continues to the Newtown Creek)

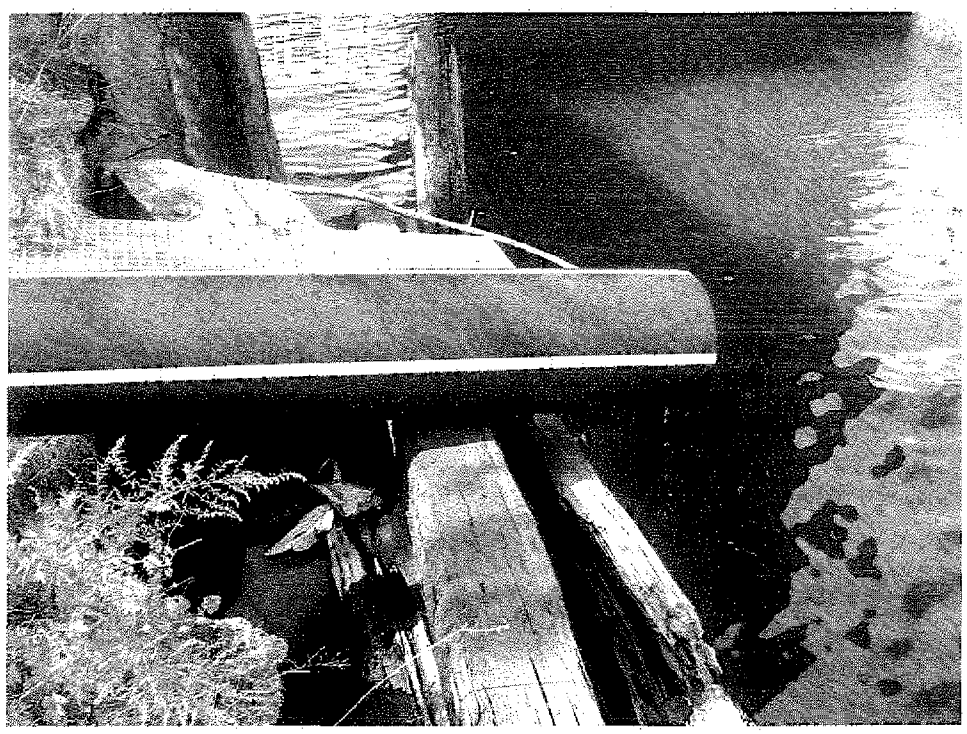

8.0.10 – 10" HDPE outfall at bulkhead along the Newtown Creek

EPA-NC-CE-0000656

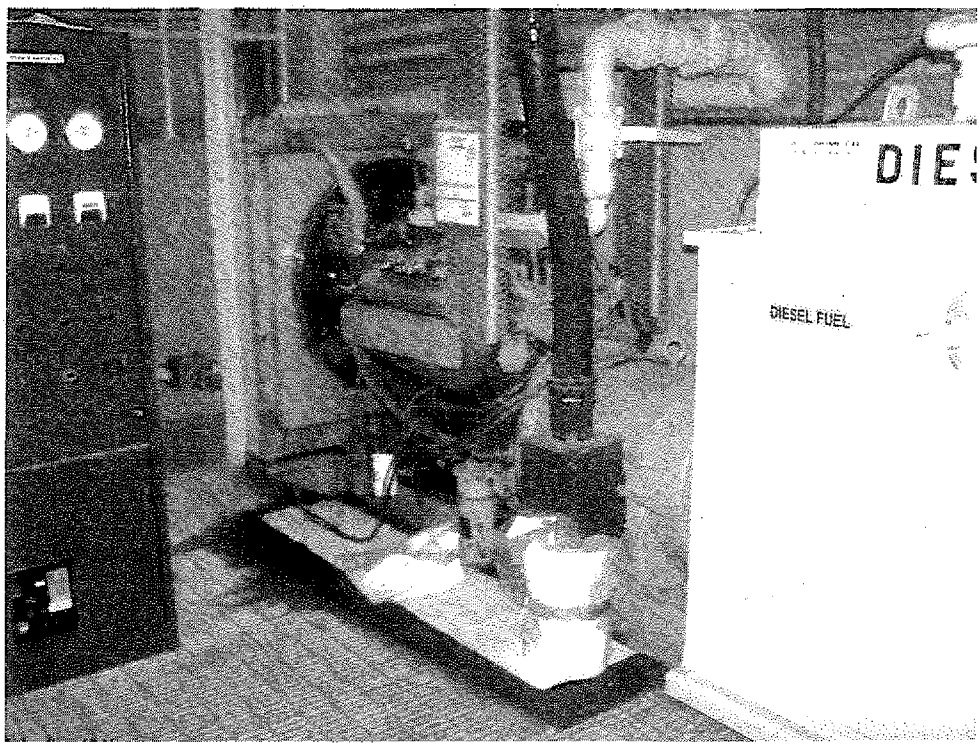

8.0.11 – Emergency generator and a portion of containment for 250 gallon diesel fuel tank

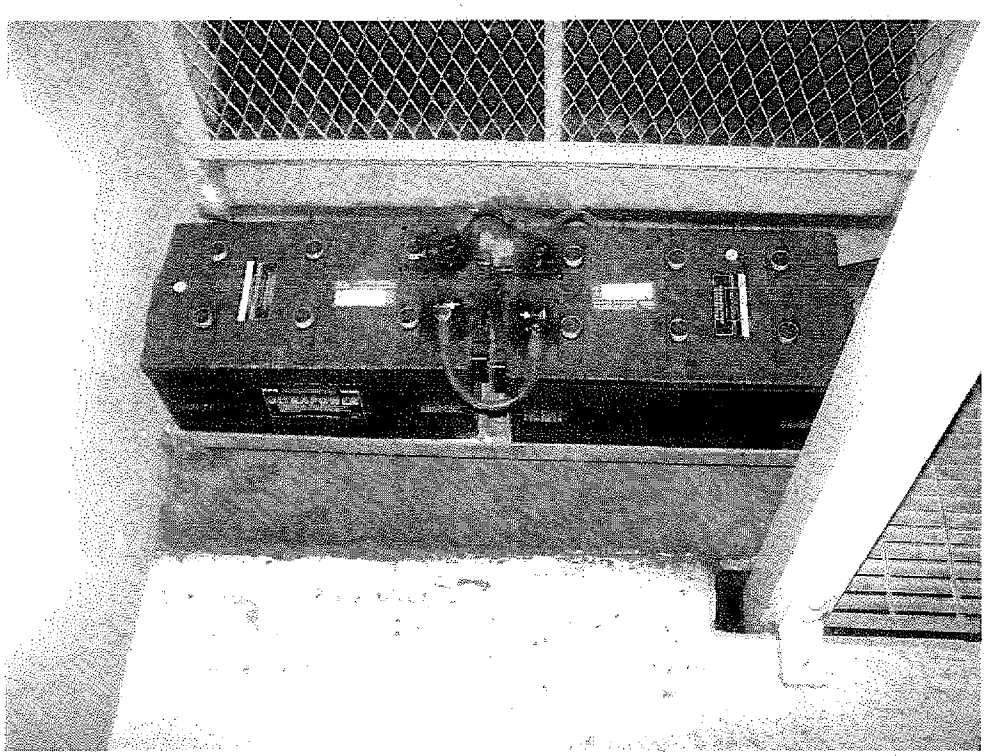

8.0.12 – Lead-acid batteries for generator start-up inside containment

Con Edison

Consolidated Edison Company of New York, Inc.

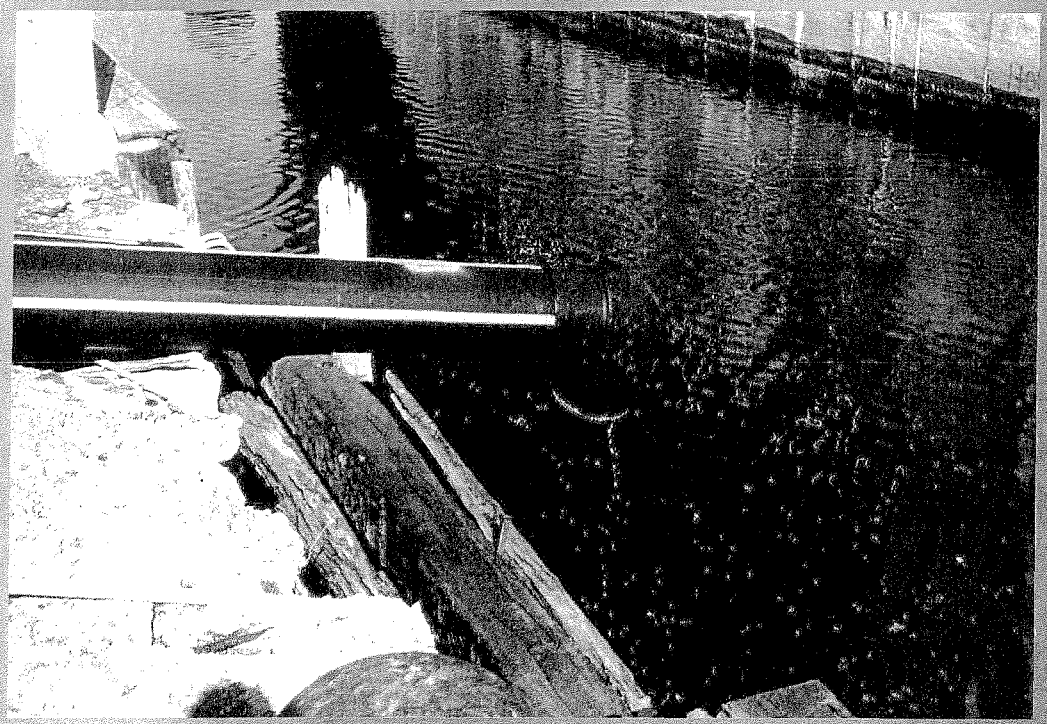

Discharge Outfall Survey

and

Monitoring Locations Evaluations

for

11th Street Conduit

Brooklyn, New York

August 1998

FOSTER WH[illegible] ENVIRONMENTAL CORPORATION

EXECUTIVE SUMMARY

Consolidated Edison Company of New York Inc. (Con Edison) has retained Foster Wheeler Environmental Corporation (Foster Wheeler) to conduct a Discharge Outfall Survey and Monitoring Locations Evaluation in accordance with a follow-up to the 1994 Consent Order issued by the New York State Department of Environmental Conservation (NYSDEC) in October of 1997. The purpose of the investigation is to:

- Verify that the identification and characterization of waste streams is accurately portrayed in the current State Pollutant Discharge Elimination System (SPDES) permit for the site;
- Identify those waste streams, if any, that the site currently discharges to the waters of the State but are not included in the site's SPDES permit;
- Identify the exact locations and physical dimensions of the outfall structures through which the wastewater streams are discharged;
- Identify and describe the current locations of each SPDES monitoring point at the site;
- Evaluate and assess the best locations within the facilities to collect representative samples of these discharges for the purpose of SPDES monitoring ;
- Discuss the tidal effects, if any, on the discharge tunnel, discharge pipes, and on each SPDES monitoring point.

Con Edison is required to survey nine of their facilities under the 1997 Consent Order. These include the Arthur Kill site, Astoria site, East River site, Ravenswood site, 60th Street Steam Plant, North First Street Terminal, Gowanus Gas Turbines, Narrows Gas Turbines and the 11th Street Tunnel Headhouse. This report is the fourth in a series of nine and presents the results of the investigation conducted at the 11th Street Tunnel (Conduit) Headhouse.

The 11th Street Conduit site is currently operating under SPDES NY-0201138 with an effective date of 3/1/97 and an expiration date of 3/1/02. The site contains one permitted outfall structure designated 001. Outfall 001 is designated "groundwater infiltration and stormwater discharge" in the referenced permit.

The survey identified only one discharge condition. This waste stream is a permitted waste stream, previously identified and is part of the SPDES program under this investigation. Highlights of the investigation are listed below:

The evaluation of the discharge system to the State's waters revealed one permitted outfall (001) to the Newtown Creek. The discharged wastewater is generally comprised of groundwater and stormwater infiltration within the tunnel headhouse. Based on the site investigation and information provided by Con Edison representatives, the current SPDES sampling program was deemed adequate. The 11th Street Facility is continuously monitored from a central location center. Monitored activities include dielectric fluid pumping pressure, tunnel house sump meter level and oil level in the oil/water separator. If an alarm condition is detected, Con Edison deploys a team to investigate the condition and mitigate any chances for adverse events such as the release of dielectric fluids. The installation of the phase separator upstream of the discharge point prevents the release of floating product to the Newtown Creek, the sealed, above ground gravity conveyance system prevents stormwater intrusion, etc. The seepage port located downstream from the phase separator and upstream from the discharge point was deemed adequate and representative of the discharged wastewater. Tidal effects are negligible since the sampled wastewater is collected above ground at a location which is not impacted by varying tides.

Con Edison continues to monitor activities from the central monitoring center and performs periodic inspections at the 11th Street Facility. These activities, in conjunction with the SPDES sampling program, warrants no further action at this time.

TABLE OF CONTENTS

TABLE OF CONTENTS

EXECUTIVE SUMMARY
1.0 INTRODUCTION 1
1.1 General Site Description 1
1.2 Waste Stream Identification 4
1.3 Survey and Report Organization 4
2.0 WASTE STREAM ASSESSMENT 8
2.1 Waste Stream Survey 8
2.1.1 Groundwater Seepage and Stormwater Discharge to Outfall 001 8
3.0 SUMMARY OF FINDINGS 10
4.0 REFERENCES 12

List of Figures

FIGURE 1 '11TH STREET CONDUIT SITE LOCATION MAP 2
FIGURE 1A 11TH STREET CONDUIT SITE PLOT PLAN 3
FIGURE 2 FLOW DIAGRAM OF WASTE WATER DISCHARGE 6
FIGURE 3 ONE LINE DRAWING OF WASTE WATER DISCHARGES 7

List of Tables

TABLE 1 - 11TH STREET CONDUIT WASTE STREAM IDENTIFICATION CHART 5

EPA-NC-CE-0000662

1.0 INTRODUCTION

Consolidated Edison Company of New York Inc. (Con Edison) has retained Foster Wheeler Environmental Corporation (Foster Wheeler) to conduct a Discharge Outfall Survey and Monitoring Locations Evaluation in accordance with a follow-up to the 1994 Consent Order issued by the New York State Department of Environmental Conservation (NYSDEC) in March of 1997. The purpose of the investigation is to:

1. Verify that the identification and characterization of waste streams is accurately portrayed in the current State Pollutant Discharge Elimination System (SPDES) permit for the site;
2. Identify those waste streams, if any, that the site currently discharges to the waters of the State but are not included in the site's SPDES permit;
3. Identify the exact locations and physical dimensions of the outfall structures through which the wastewater streams are discharged;
4. Identify and describe the current locations of each SPDES monitoring point at the site;
5. Evaluate and assess the best locations within the facilities to collect representative samples of these discharges for the purpose of SPDES monitoring ;
6. Discuss the tidal effects, if any, on the discharge tunnel, discharge pipes, and on each SPDES monitoring point.

Con Edison is required to survey nine of their facilities under the 1997 Consent Order. These include the Arthur Kill site, Astoria site, East River site, Ravenswood site, 60th Street Steam Plant, North First Street Terminal, Gowanus Gas Turbines, Narrows Gas Turbines and the 11th Street Tunnel Headhouse.

This report is the fourth in the series of nine and presents the results of the investigation conducted at the 11th St. Conduit Headhouse site.

1.1 General Site Description

The 11th Street Conduit site is located in Brooklyn (Kings County), New York, on the southern bank of Newtown Creek. The site is completely fenced in and has one structure, the conduit headhouse granting access to the artificial closed conduit traversing under the Newtown Creek. The artificial closed conduit carries (3) 345 Kv feeder electrical distribution cables and extends from Oakland and Water Streets in Brooklyn to 11th Street and 47th Road in Queens. Distribution pumps supply dielectric fluid in (3) 5" oil return lines which circulate around the (3) feeder distribution electrical cables to dissipate the heat generated by these cables in the tunnel.

Seepage of groundwater through the conduit walls and infiltration of rainwater through the riser shafts at both Oakland and Water Streets and 11th Street and 47th Road led to the installation of a sump pump system. Approximately 85,000 GPD is pumped to the surface from within the conduit and released to the Newtown Creek. This is the only discharge to the state's waterways from this site. To prevent accidental discharge of oil from the dielectric lines with water in the sump, an aboveground 600 gallon capacity oil/water separator was installed to remove any oil contaminants that may be present prior to discharge to the state's waters. Figures 1 and 1A represents the Site Location Map and the Site Plot Plan respectively.

The 11th Street conduit site is currently operating under SPDES NY-0201138 with an effective date of 3/1/97 and an expiration date of 3/1/02. The site contains one permitted outfall structure designated 001. Outfall 001 is designated "groundwater infiltration and stormwater" in the referenced permit.

EPA-NC-CE-0000663

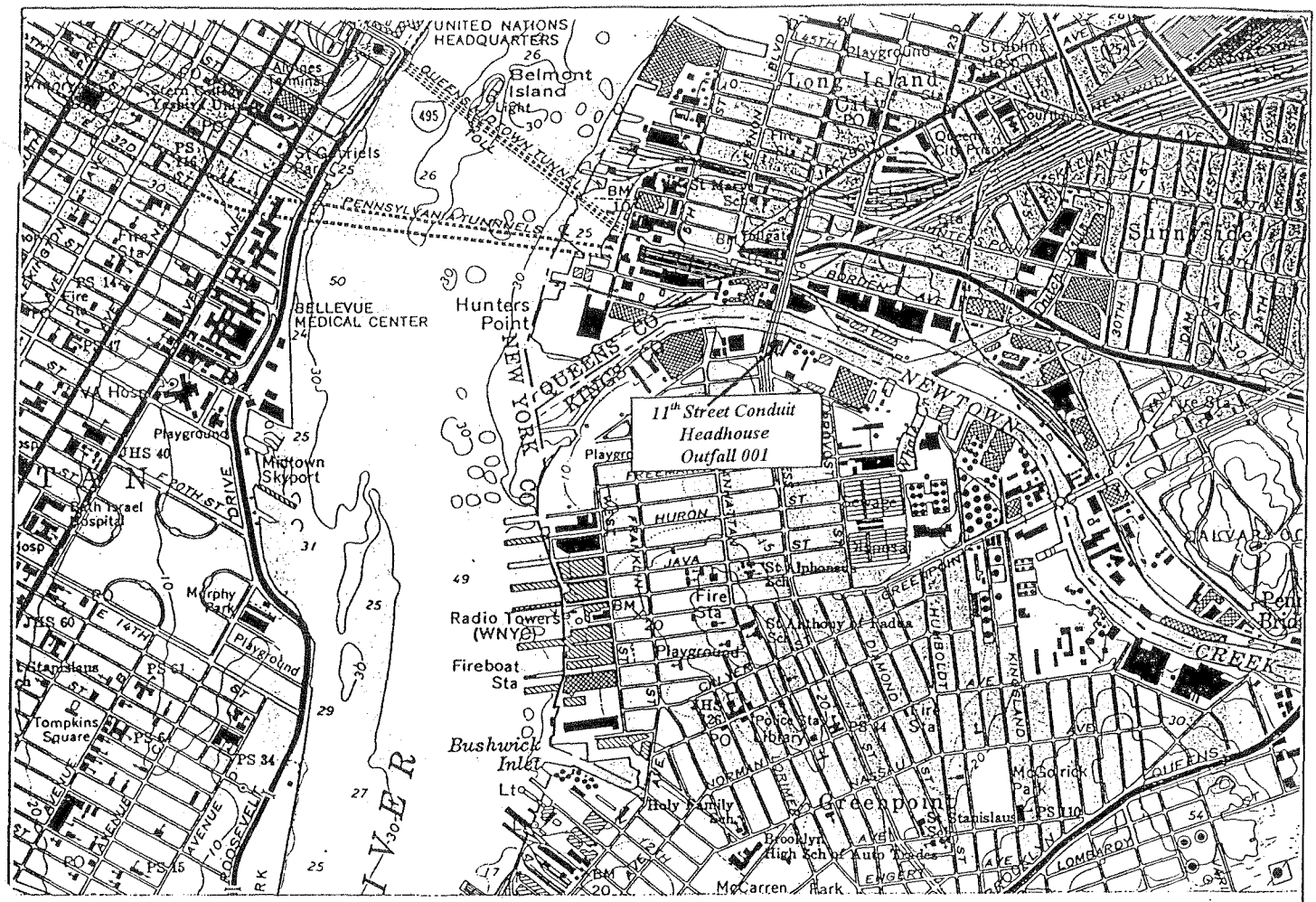

SCALE 1:24 000

1 0 1 MILE

1000 0 1000 2000 3000 4000 5000 6000 7000 FEET

1 .5 0 1 KILOMETER

CONTOUR INTERVAL 10 FEET

NATIONAL GEODETIC VERTICAL DATUM OF 1929

DEPTH CURVES AND SOUNDINGS IN FEET—DATUM IS MEAN LOW WATER

THE RELATIONSHIP BETWEEN THE TWO DATUMS IS VARIABLE

SHORELINE SHOWN REPRESENTS THE APPROXIMATE LINE OF MEAN HIGH WATER

THE MEAN RANGE OF TIDE IS APPROXIMATELY 4.2 FEET IN THE EAST RIVER AND 5.2 FEET IN JAMAICA BAY

MN GN

2° MILS 0°42' 12 MILS

AND 1979 MAGNETIC NORTH ION AT CENTER OF SHEET

BROOKLYN, N. Y.

N4037.5—W7352.5/7.5

1967
PHOTOREVISED 1979
AMS 6265 III NW—SERIES V821

Con Edison	Figure 1 SITE LOCATION MAP	Design	Drafted	Revision	Date
11th Street Conduit Oakland Street & Water Street Brooklyn New York 11222	SCALE: NONE SPDES Discharge Outfall Survey and Monitoring Locations Evaluation				
	This figure is assumed to be accurate and complete based upon the best available relevant information.	FOSTER WHEELER ENVIRONMENTAL CORPORATION LIVINGSTON, NEW JERSEY			

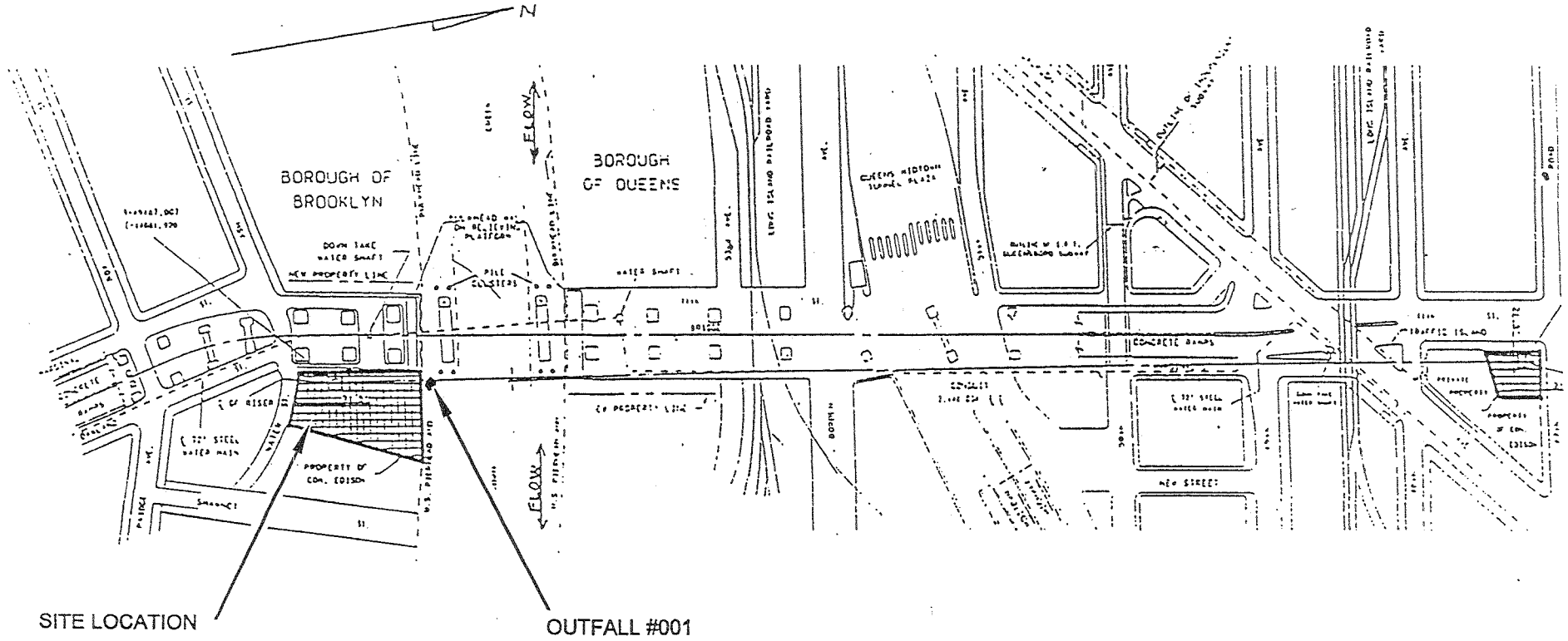

SOURCE: CON EDISON 11th ST. CONDUIT SITE PLOT PLAN EPA FORM 1 XI.MAP FIGURE 2

Con Edison	Figure 1A SITE PLOT PLAN		Design	Drafted	Revision	Date
			BD	HB		
11th Street Conduit Oakland Street & Water Street Brooklyn New York 11222	SCALE: NONE	SPDES Discharge Outfall Survey and Monitoring Locations Evaluation				
	This figure is assumed to be accurate and complete based upon the best available relevant information.		FOSTER WHEELER ENVIRONMENTAL CORPORATION LIVINGSTON, NEW JERSEY			

EPA-NC-CE-000665

1.2 Waste Stream Identification

The survey identified one discharge condition which is illustrated in Table 1. The waste stream has been designated item number 1.

Table 1 identifies the status of the waste stream and identifies whether or not it is a part of the SPDES program under this investigation. Figure 2 is a flow diagram of the waste stream discharge identified in this investigation. Figure 3 is a one-line drawing of the wastewater discharges in this investigation.

1.3 Survey and Report Organization

Foster Wheeler conducted a survey of the 11th Street Conduit Headhouse in March of 1998. The survey was conducted by the representatives from Foster Wheeler and Con Edison listed below:

Representative	Firm
Robert DeGiorgio	Foster Wheeler
Andrew Prophette	Foster Wheeler
Rich Ramon	Con Edison
Charlie Valenti	Con Edison

Section 1.0 of this report describes the purpose and objective of this survey and illustrates the waste streams identified during the investigation

Section 2.0 of this report describes the waste stream associated with Outfall 001. The following salient points are addressed for Outfall 001:

- *Waste Stream Description* - discuss the primary constituents that characterize the waste stream and determines the approximate waste stream flow;
- *Conveyance System Description* - discuss the waste stream conveyance mechanism from the source to the SPDES outfall;
- *SPDES Monitoring Description Evaluation* - discuss the SPDES monitoring established for this waste stream. Table 1 illustrates previous contaminants sampled in accordance with the SPDES Permit and the state's action levels;
- *Tidal Effects* - discuss the tidal effects on the particular waste stream.

Section 3.0 of this report is the recommendations regarding the waste streams at the 11th Street Conduit site. In general, the recommendations address:

- the effectiveness of current SPDES monitoring location;
- the adequacy of the current discharge conveyance system;
- other general considerations as they relate to SPDES monitoring and Best Management Practices.

Section 4.0 of this report summarizes the references used in the analysis. An executive summary is provided in the front of this report.

EPA-NC-CE-0000666

Table 1 - 11th Street Conduit Waste Stream Identification Chart

Item	Waste Stream Identification	Associated Permitted Outfall	Estimated Flow	Possible Contaminants
1	Groundwater Infiltration and Storm Water Discharge.	001	85,000 GPD	Suspended Solids, Oil & Grease, BTEX (Benzene, Toluene, Ethylbenzene and Xylenes)

EPA-NC-CE-0000667

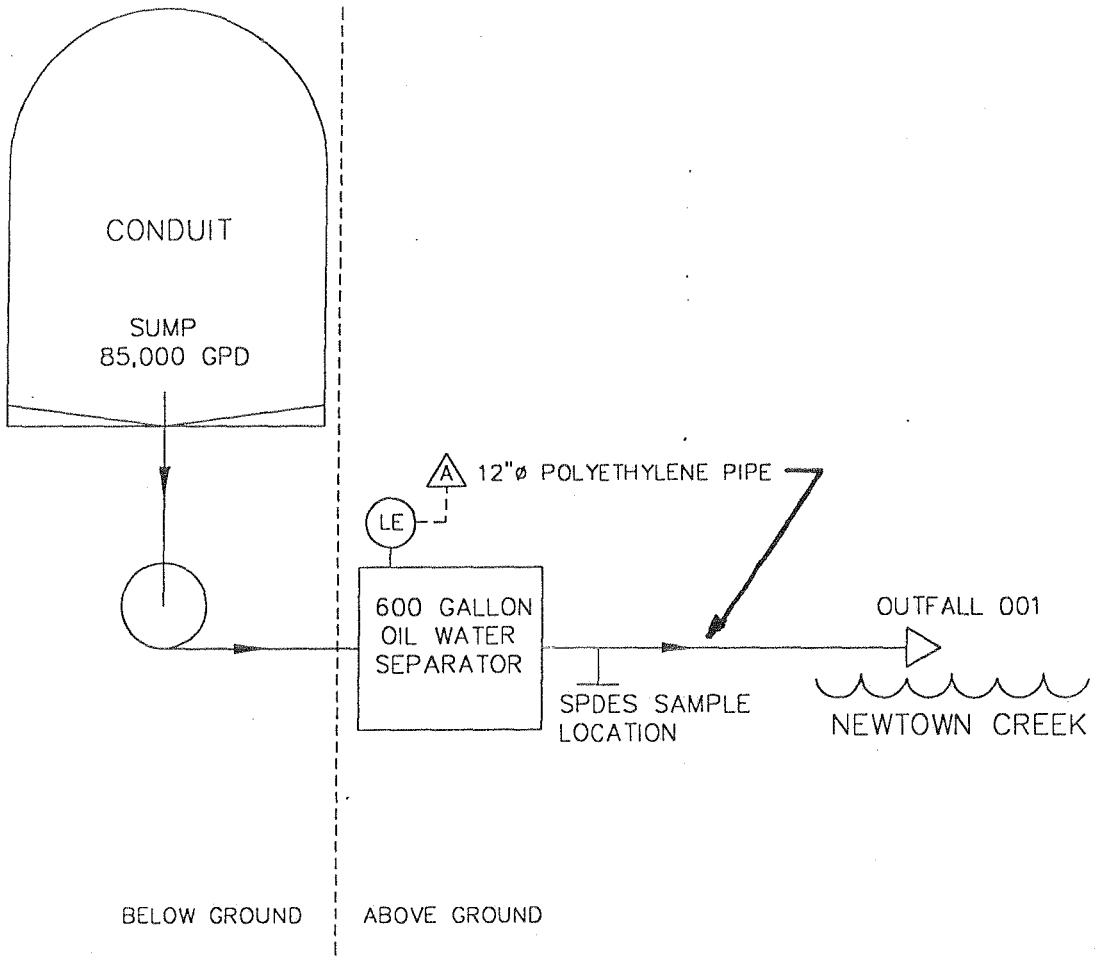

NOTE: WASTEWATER SOURCE FROM SEEPAGE OF GROUNDWATER THROUGH THE CONDUIT WALLS AND INFILTRATION OF RAINWATER THROUGH THE RISER AIR SHAFTS.

LEGEND:

(LE) LEVEL ELEMENT

(A) HIGH OIL LEVEL ALARM TO CENTRAL MONITORING

SOURCE: FLOW DIAGRAM EPA FORM 2D.111.B. FIGURE #3

Con Edison	Figure 2 Flow Diagram of Waste Water Discharge		Design	Drafted	Revision	Date
			BD	J.R.		
11th Street Conduit Oakland Street & Water Street Brooklyn New York 11222	SCALE: NONE	SPDES Discharge Outfall Survey and Monitoring Locations Evaluation				
	This figure is assumed to be accurate and complete based upon the best available relevant information.		FOSTER WHEELER ENVIRONMENTAL CORPORATION LIVINGSTON, NEW JERSEY			

CAD FILE NAME: C06398.DWG DATE: 6/3/98
PLOT SCALE: 1=1 TIME: 8:40 AM

LEGEND:

1. HEAD HOUSE SUMP SYSTEM

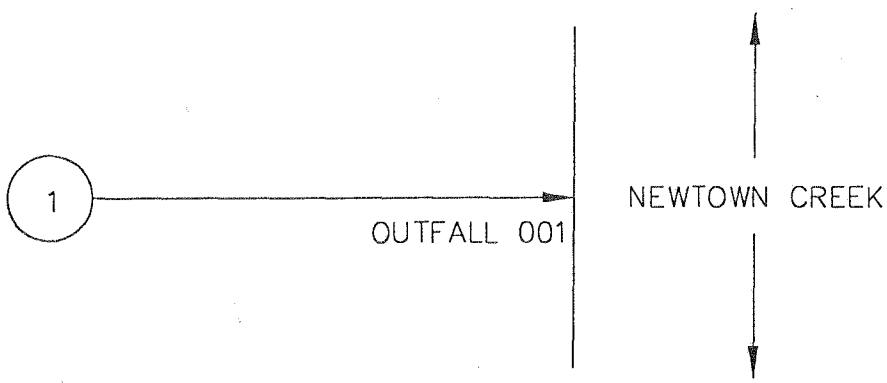

Con Edison	Figure 3 One Line Drawing of Wastewater Discharges		Design	Drafted	Revision	Date
			BD	J.R.		
11th Street Conduit Oakland Street & Water Street Brooklyn New York 11222	SCALE: NONE	SPDES Discharge Outfall Survey and Monitoring Locations Evaluation				
	This figure is assumed to be accurate and complete based upon the best available relevant information.		FOSTER WHEELER ENVIRONMENTAL CORPORATION LIVINGSTON, NEW JERSEY			

CAD FILE NAME: C052898A.DWG DATE: 6/2/98
PLOT SCALE: 1=1 TIME: 4:25 PM

2.0 WASTE STREAM ASSESSMENT

2.1 Waste Stream Survey

This survey identified only one discharge condition which is illustrated in Figures 2 and 3. This waste stream is a permitted waste stream, previously identified as part of the SPDES program under this investigation. Field notes pertaining to the investigation are located in Appendix A of this report. The investigation consisted of site walk downs, photographs and interviews with Con Edison representatives intimately familiar with the 11th Street Conduit site. Once the survey was complete, an exit meeting was held to discuss the results of the findings.

The purpose of this section is to meet the objectives of items 1 through 6 as illustrated in section 1.0 of this report. A discussion of the waste stream including a brief description (source, flow and pollutants), SPDES monitoring locations and procedures and tidal effect on the SPDES monitoring location is provided in this section.

- the results of the investigation presented herein rely upon: the visual observations made at the time of the investigation and substantiated by Con Edison representatives;
- the waste stream characteristics, flow rates, etc. as described by Con Edison;
- the waste stream characteristics, flow rates, etc. as illustrated in the corresponding SPDES permit.

2.1.1 Groundwater Seepage and Stormwater Discharge to Outfall 001

2.1.1.1 Waste Stream Description

The sump in the conduit collects groundwater seepage through the conduit walls and rainwater infiltration through the riser shafts. The 85,000 GPD flow to the Newton Creek is estimated on an approximate pumping rate of 75-88 GPM for approximately 40 minutes per hour. An energy control center monitors oil/water separator operations and cooling efficiency of the dielectric lines around the electrical distribution cables.

If a change in the dielectric pumping pressure is detected, Con Edison immediately deploys a team to investigate the condition and to determine if there is a dielectric fluid leak. Due to the nature of the facility and its activities, potential contaminants include Oil & Grease and Total Suspended Solids (TSS). To date, SPDES sampling at this location have revealed that the potential contaminants were detected at concentrations below the state permit limits.

2.1.1.2 Conveyance System Description

The wastewater is pumped from a sump in the conduit floor through an oil/water separator to the surface via (2) 100 GPM capacity pumps (one active, one stand-by). Once at the surface and through the oil/water separator, gravity flow carries the wastewater downgradient through a 12" diameter polyethylene pipe to the SPDES sample location prior to being discharged to the Newtown Creek. The Outfall 001 discharge point is a drop off from the ground surface into the Newtown Creek.

2.1.1.3 SPDES Monitoring – Description/Evaluation

The groundwater/stormwater discharge is sampled from a sample point in the outfall pipe approximately 45 feet south of the Outfall 001 discharge point. In accordance with the SPDES Discharge Permit, flow is

EPA-NC-CE-0000670

to be calculated monthly and samples for Total Suspended Solids (TSS) and Oil & Grease are to be grabbed at the sampling location monthly. Con Edison also monitors this outfall for (BTEX) due to potential contamination from surrounding industries (gasoline storage/dispensing). Activities associated with Con Edison's operations would not generally include BTEX as a potential contaminant since dielectric fluid is the only source of contamination at the Con Edison facility. However, Con Edison monitors for BTEX at the request of the State in order to verify that surrounding industries are not impacting the State's groundwaters. Con Edison incurs the cost associated with these ancillary sampling activities.

2.1.1.4 Tidal Effects

The opening for the outfall pipe discharges into the Newtown Creek from above ground and never experiences submergence in the State's waters. Although the creek experiences a tidal variation of about +/- 6ft, the magnitude and velocity of the 85,000 GPD volume coupled with the sampling location being being upgradient and 45 feet inland from the pipe outfall greatly minimizes the chances for river water intrusion and/or tidal effects to mix with the discharge waters from the site.

EPA-NC-CE-0000671

3.0 SUMMARY OF FINDINGS

The evaluation of the discharge system to the State's waters revealed one permitted outfall (001) to the Newtown Creek. The discharged wastewater is generally comprised of groundwater and stormwater infiltration within the tunnel headhouse. Based on the site investigation and information provided by Con Edison representatives, the current SPDES sampling program was deemed adequate. The 11th Street facility is continuously monitored from a central location center. Monitored activities include dielectric fluid pumping pressure, tunnel house sump meter level and oil level in the oil/water separator. If an alarm condition is detected, Con Edison deploys a team to investigate the condition and mitigate any chances for adverse events such as the release of dielectric fluid. The installation of the phase separator upstream of the discharge point prevents the release of floating product to the Newtown Creek, the sealed, aboveground gravity conveyance system prevents stormwater intrusion, etc.

The seepage port located downstream from the phase separator and upstream from the discharge point was deemed adequate and representative of the discharged waste water. Tidal effects are negligible since the sampled wastewater is collected above grade at a location which is not impacted by varying tides.

Con Edison continues to monitor activities from the central monitoring center and performs periodic inspections at the 11th Street Facility. These activities, in conjunction with the SPDES sampling program, warrants no further action at this time.

EPA-NC-CE-0000672

SUMMARY OF FINDINGS

Item	Description	Wastewater Description	Estimated Flow Rate	Conveyance Description	Status	Recommendations/ Observations
1	Groundwater Infiltration and Storm Water Discharge	Groundwater seepage through conduit walls and stormwater infiltration through two riser shafts. Potential contaminants include Total Suspended Solids (TSS) and Oil and Greases(O & G) (see NOTE 1)	85000 GPD (88 GPM for approx. 40 minutes per hour	Collection sump to discharge outfall 001 12" polyethylene dedicated pipe (above ground)	Active	• Current SPDES sampling program is representative of wastewater discharges to the State's waters. No further action is required at this time.

NOTES:

1 Con Edison also monitors this outfall for BTEX due to potential contamination from surrounding industries (gasoline storage/dispensing). Activities associated with Con Edison's operations would not generally include BTEX since the dielectric fluids the only source of contamination at the Con Edison Facility. However, Con Edison monitors for BTEX at the request of the State in order to verify that surrounding industries are not impacting the State's groundwater.

EPA-NC-CE-000673

4.0 REFERENCES

1. SPDES Permit No. NY020121138

2. Drawing: B301013-00 Oil/Water Separator System

3. Drawing: C301021-00 Oil Spill Prevention Program - Piping and Instrumentation

4. Con Edison - 11th Street Conduit SPDES Sampling Procedures

EPA-NC-CE-0000674

Shrieve Chemical Products

MATERIAL SAFETY DATA SHEET

24-HOUR EMERGENCY ASSISTANCE
CHEMTREC: 800-424-9300 SHRIEVE: 800-367-4226

GENERAL MSDS ASSISTANCE
SHRIEVE: 281-367-4226

For hazard identification, acute and chronic health effects refer to the discussion in Section 3

SECTION 1	NAME
PRODUCT	**DF 100**
CHEMICAL NAME	Synthetic Lubricant Products
CHEMICAL FAMILY	Dielectric Fluid

SECTION 2 PRODUCT/INGREDIENT

THIS PRODUCT IS CONSIDERED AS NON-HAZARDOUS (SEE SECTION 14).

SECTION 3 HAZARD IDENTIFICATION

EMERGENCY OVERVIEW

Appearance: Clear yellow liquid

Odor: Odorless

Hazardous Material Information System (United States)	Health	1	National Fire Protection Association NFPA (United States)
	Fire	1	
	Reactivity	0	
	Personal protection		

POTENTIAL HEALTH EFFECTS

Primary Route of Exposure: Skin

EFFECTS OF OVEREXPOSURE

EYES: Expected to cause no more than minor eye irritation. Application of a similar product into the eyes of rabbits produced very slight membrane irritation without corneal injury. Avoid eye contact as good industrial practice.

SKIN: Not a primary skin irritant but may cause skin irritation on repeated or prolonged contact. Application of a similar product onto the skin of rabbits produced slight erythmia and edema.

INHALATION: Avoid breathing vapor or mist. Under normal use conditions, this product is not an inhalation hazard. Prolonged exposure to vapors may cause dizziness and headaches.

INGESTION: May cause nausea. Not expected to be acutely toxic by ingestion.

There is no evidence that this product aggravates an existing medical condition.

OTHER REMARKS: None.

EPA-NC-CE-0000675

SECTION 4 FIRST AID MEASURES

EYES: Immediately flush eyes with plenty of water for at least 15 minutes while holding the eyelids open. If irritation persists, see a physician.

SKIN: Remove contaminated clothing. Wash skin thoroughly with soap and water. Launder contaminated clothing. See a doctor if irritation persists.

INGESTION: If swallowed, call a physician immediately. ONLY induce vomiting at the instruction of a physician. Never give anything by mouth to an unconscious person. If medical advice cannot be obtained, take the person, product container and MSDS to the nearest medical emergency center.

INHALATION: Remove to fresh air. If not breathing, give artificial respiration and seek medical attention immediately. Remove material from eyes, skin and clothing.

SECTION 5 FIRE-FIGHTING MEASURES

Auto Ignition Temperature – AIT (degrees C):
> 340 °C (>644 °F)

Flash Point (degrees C), Cleveland Open Cup
>150C (>302 F)

Flammable Limits % (Lower-Upper):
Lower: Not determined
Upper: Not determined.

Recommended Fire Extinguishing Agents and Special Procedures:
Use water spray, dry chemical, foam, or carbon dioxide to extinguish flames. Use water spray to cool fire-exposed containers. Water or foam may cause frothing.

Unusual or Explosive Hazards: None.

Special Protective Equipment for Firefighters:
Wear full protective clothing and positive pressure breathing apparatus.

SECTION 6 ACCIDENTAL RELEASE MEASURES

Procedures in Case of Accidental Release, Breakage or Leakage:
Ventilate area. Avoid breathing vapor. Wear appropriate personal protective equipment, including appropriate respiratory protection. Contain spill if possible. Wipe up or absorb on suitable material and shovel up. Prevent entry into sewers and waterways. Avoid contact with skin, eyes or clothing.

SECTION 7 HANDLING AND STORAGE

Precautions to be Taken in:
Handling: Minimum feasible handling temperatures should be maintained.
Storage: Periods of exposure to high temperatures should be minimized. Water contamination should be avoided.

SECTION 8 EXPOSURE CONTROLS/PERSONAL PROTECTION

Protective Equipment (Type)

Eye/Face Protection:
Safety glasses, chemical type goggles, or face shield recommended to prevent eye contact.

Skin Protection:
Protective clothing such as coveralls or lab coats should be worn. Launder or dry-clean when soiled. Gloves and boots resistant to chemicals and petroleum distillates required. Exposed workers should wash exposed skin several times daily with soap and water.

EPA-NC-CE-0000676

Remove and dry-clean or launder clothing soaked or soiled with this material before reuse. Dry cleaning of contaminated clothing may be more effective than normal laundering. Inform individuals responsible for cleaning of potential hazards associated with handling contaminated clothing.

Respiratory Protection:

Airborne concentrations should be kept to lowest levels possible. If vapor, dust or mist is generated and the occupational exposure limit of the product, or any component of the product, is exceeded, use appropriate NIOSH or MSHA approved air purifying or air-supplied respirator after determining the airborne concentration of the contaminant.

Air supplied respirators should always be worn when airborne concentration of the contaminant or oxygen content is unknown.

Ventilation:

Local exhaust ventilation recommended if generating vapor, dust, or mist. If exhaust ventilation is not available or inadequate, use MSHA or NIOSH approved respirator as appropriate.

Exposure Limit for the Total Product: None established for product

SECTION 9 PHYSICAL AND CHEMICAL PROPERTIES

Appearance:	Clear yellow liquid.
Odor:	Odorless
Boiling point (deg C):	> 300C(>572F) at atmospheric pressure
Melting/Freezing Point (deg C):	Not determined
Specific Gravity (water=1):	.86 - .88
pH:	Not applicable
Vapor Pressure:	Not determined
Viscosity:	18 - 22 cSt at 40 °C
Vapor Density (Air=1):	Not determined
Solubility in Water (%):	Negligible
Other:	None

SECTION 10 STABILITY AND REACTIVITY

Stability:	Stable (thermal, light).
Incompatibility:	May react with strong oxidizing materials.
Hazardous Decomposition Products:	Normal combustion forms carbon dioxide and water vapor. Incomplete combustion can form carbon monoxide.
Hazardous Polymerization:	Will not occur.

SECTION 11 TOXICOLOGICAL INFORMATION

TOXICOLOGICAL INFORMATION (ANIMAL TOXICITY DATA)

Oral:	LD50 believed to be > 5 g/kg (rat) practically non-toxic
Inhalation:	Not determined
Dermal:	LD50 believed to be > 10 g/kg (rabbit) practically non-toxic

IRRITATION INDEX, ESTIMATION OF IRRITATION (SPECIES)

Skin:	(Draize) believed to be between 3-5 (rabbit) moderately irritating (maximum 8)

EPA-NC-CE-0000677

Eyes: (Draize) believed to be < 15 (rabbit) no appreciable effect (maximum 110)
Sensitization: Not determined
Other: This product, or a component of this product, has been shown to damage red blood cells or blood forming organs, and has caused anemia in laboratory animals.

SECTION 12 DISPOSAL CONSIDERATIONS

Waste Disposal Methods:

This product has been evaluated for RCRA characteristics and does not meet the criteria of a hazardous waste if discarded in its purchased form. Under RCRA, it is the responsibility of the user of the product to determine at the time of disposal, whether the product meets RCRA criteria for hazardous waste. This is because product uses, transformations, mixtures, processes, etc. may render the resulting materials hazardous.

Remarks: None.

SECTION 13 TRANSPORT INFORMATION

Transportation

DOT: Not regulated according to DOT.

IMDG: Not regulated according to IMDG.

ICAO/IATA: Not regulated according to ICAO/IATA.

TDG: Not regulated according to TDG.

SECTION 14 REGULATORY INFORMATION

FEDERAL REGULATIONS

This product and/or its components are considered non-hazardous by the following standards:

OSHA Hazard Comm. Standard Classification

SARA Title III Section 311 Hazardous Categorization

No chemicals subject to reporting per the following standards:

SARA Title III Section 302/304 Extremely Hazardous Substances.

SARA Title III Section 313 Toxic Chemical.

CERCLA 102(a)/DOT Hazardous Substances.

California Prop. 65

States Right-to-Know Regulations.

State list: CT (Connecticut), FL (Florida), IL (Illinois), MI (Michigan), LA (Louisiana), MA (Massachusetts), NJ (New Jersey), PA (Pennsylvania), RI (Rhode Island)

INTERNATIONAL REGULATIONS

TSCA Inventory Status: This product, or its components, are listed on, or are exempt from the Toxic Substance Control Act (TSCA) Chemical Substance Inventory.

Canadian Inventory Status: This product, or its components, are listed on or are exempt from the Canadian Domestic Substance List (DSL).

EINECS Inventory Status: This product, or its components, are listed on or are exempt from the European Inventory of Existing Chemical Substances (EINECS) or the European List of Notified Chemical Substances (ELINCS).

Australian Inventory Status: Not determined.

Japan Inventory Status: Not determined.

EPA-NC-CE-0000678

SECTION 15 ENVIRONMENTAL INFORMATION

Biodegradability: Estimated to be less than 40% degradation over a test period of more than 28 days.

Potential to Bioaccumulation: This product is estimated to have a very slow rate of bioaccumulation.

Remarks: None

SECTION 16 OTHER INFORMATION

None

Date of Revision: January 26, 2005
Supersedes: February 20, 2003 and older versions

Shrieve Chemical Products
1755 Woodstead Court
The Woodlands, TX 77380

The information contained herein is based on the data available to us and is believed to be correct. However, Shrieve Chemical Products makes no warranty, expressed or implied regarding the accuracy of these data or the results to be obtained from the use thereof. Shrieve Chemical Products assumes no responsibility for injury from the use of the product described herein.

ConocoPhillips

MATERIAL SAFETY DATA SHEET

No. 2 Diesel Fuel

1. PRODUCT AND COMPANY IDENTIFICATION

Product Name:	No. 2 Diesel Fuel
Synonyms:	CARB Diesel TF3; CARB Diesel; CARB Diesel 10% CARB Diesel Ultra Low Sulfur - Dyed and Undyed EPA Low Sulfur Diesel Fuel - Dyed and Undyed EPA Off Road High Sulfur Diesel - Dyed High Sulfur Diesel Fuel; Low Sulfur Diesel Fuel No. 2 Diesel Fuel Oil No. 2 High Sulfur Diesel - Dyed No. 2 Low Sulfur Diesel - Dyed; No. 2 Low Sulfur Diesel - Undyed No. 2 Low Sulfur Distillate No. 2 Ultra Low Sulfur Diesel - Dyed; No. 2 Ultra Low Sulfur Diesel - Undyed Super Diesel Fuel; Super Diesel Fuel II-LS Virgin Diesel Fuel; No. 2 Distillate Super Diesel Fuel; Super Diesel Fuel II-LS Virgin Diesel Fuel
Intended Use:	Fuel
Chemical Family:	Petroleum Hydrocarbon
Responsible Party:	ConocoPhillips 600 N. Dairy Ashford Houston, Texas 77079-1175
MSDS Information:	800-762-0942 MSDS@conocophillips.com
Customer Service:	800-527-5476
Technical Information:	800-527-5476

Emergency Overview

24 Hour Emergency Telephone Numbers:
Spill, Leak, Fire or Accident Call CHEMTREC:
North America: (800) 424-9300
Others: (703) 527-3887 (collect)

California Poison Control System: (800) 356-3219

Health Hazards/Precautionary Measures: Causes skin irritation. Aspiration hazard if swallowed. Can enter lungs and cause damage. Use with ventilation adequate to keep exposure below recommended limits, if any. Avoid contact with eyes, skin and clothing. Do not taste or swallow. Wash thoroughly after handling.

Physical Hazards/Precautionary Measures: Flammable liquid and vapor. Keep away from heat, sparks, flames, static electricity or other sources of ignition.

Appearance:	Straw colored to dyed red
Physical Form:	Liquid
Odor:	Diesel fuel

NFPA 704 Hazard Class:

Health:	1 (Slight)
Flammability:	2 (Moderate)
Instability:	0 (Least)

2. COMPOSITION / INFORMATION ON INGREDIENTS

HAZARDOUS COMPONENTS					
Component / CAS No:	**Concentration (wt %)**	**ACGIH:**	**OSHA:**	**NIOSH:**	**Other:**
Diesel Fuel No. 2 68476-34-6	100	100 mg/m^3 TWA-SKIN	NE	NE	---
Naphthalene 91-20-3	<1	10 ppm TWA 52 mg/m^3 TWA 15 ppm STEL 79 mg/m^3 STEL	10 ppm TWA 50 mg/m^3 TWA	250 ppm IDLH	---

Note: State, local or other agencies or advisory groups may have established more stringent limits. Consult an industrial hygienist or similar professional, or your local agencies, for further information.

1%=10,000 PPM.
NE=Not Established

3. HAZARDS IDENTIFICATION

Potential Health Effects

Eye: Contact may cause mild eye irritation including stinging, watering, and redness.

Skin: Mild to moderate skin irritant. Contact may cause redness, itching, burning, and skin damage. Prolonged or repeated contact may cause drying and cracking of the skin, dermatitis (inflammation), burns, and severe skin damage. No harmful effects from skin absorption have been reported.

Inhalation (Breathing): No information available. Studies by other exposure routes suggest a low degree of toxicity by inhalation.

Ingestion (Swallowing): Low degree of toxicity by ingestion. ASPIRATION HAZARD - This material can enter lungs during swallowing or vomiting and cause lung inflammation and damage.

Signs and Symptoms: Effects of overexposure may include irritation of the respiratory tract, irritation of the digestive tract, nausea, diarrhea, transient excitation followed by signs of nervous system depression (e.g., headache, drowsiness, dizziness, loss of coordination, disorientation and fatigue).

Cancer: There is inadequate information to evaluate the cancer hazard of this material. See Section 11 for information on the individual components, if any.

Target Organs: Inadequate evidence available for this material. See Section 11 for target-organ toxicity information of individual components, if any.

Developmental: Inadequate data available for this material.

Pre-Existing Medical Conditions: Conditions aggravated by exposure may include skin disorders.

4. FIRST AID MEASURES

Eye: If irritation or redness develops, move victim away from exposure and into fresh air. Flush eyes with clean water. If symptoms persist, seek medical attention.

Skin: Remove contaminated shoes and clothing, and flush affected area(s) with large amounts of water. If skin surface is damaged, apply a clean dressing and seek medical attention. If skin surface is not damaged, cleanse affected area(s) thoroughly by washing with mild soap and water. If irritation or redness develops, seek medical attention.

Inhalation (Breathing): If respiratory symptoms develop, move victim away from source of exposure and into fresh air. If symptoms persist, seek medical attention. If victim is not breathing, clear airway and immediately begin artificial respiration. If breathing difficulties develop, oxygen should be administered by qualified personnel. Seek immediate medical attention.

Ingestion (Swallowing): Aspiration hazard: Do not induce vomiting or give anything by mouth because this material can enter the lungs and cause severe lung damage. If victim is drowsy or unconscious and vomiting, place on the left side with the head down. If possible, do not leave victim unattended and observe closely for adequacy of breathing. Seek medical attention.

5. FIRE-FIGHTING MEASURES

Flammable Properties:

Flash Point:	125-180°F / 52-82°C
Test Method:	Pensky-Martens Closed Cup (PMCC), ASTM D93, EPA 1010
OSHA Flammability Class:	Combustible liquid
LEL%:	0.3
UEL%:	10.0
Autoignition Temperature:	500°F / 260°C

Unusual Fire & Explosion Hazards: This material is flammable and can be ignited by heat, sparks, flames, or other sources of ignition (e.g., static electricity, pilot lights, or mechanical/electrical equipment, and electronic devices such as cell phones, computers, calculators, and pagers which have not been certified as intrinsically safe). Vapors may travel considerable distances to a source of ignition where they can ignite, flash back, or explode. May create vapor/air explosion hazard indoors, in confined spaces, outdoors, or in sewers. Vapors are heavier than air and can accumulate in low areas. If container is not properly cooled, it can rupture in the heat of a fire.

Extinguishing Media: Dry chemical, carbon dioxide, or foam is recommended. Water spray is recommended to cool or protect exposed materials or structures. Carbon dioxide can displace oxygen. Use caution when applying carbon dioxide in confined spaces. Water may be ineffective for extinguishment, unless used under favorable conditions by experienced fire fighters.

Fire Fighting Instructions: For fires beyond the incipient stage, emergency responders in the immediate hazard area should wear bunker gear. When the potential chemical hazard is unknown, in enclosed or confined spaces, or when explicitly required by DOT, a self contained breathing apparatus should be worn. In addition, wear other appropriate protective equipment as conditions warrant (see Section 8).

Isolate immediate hazard area, keep unauthorized personnel out. Stop spill/release if it can be done with minimal risk. Move undamaged containers from immediate hazard area if it can be done with minimal risk.

Water spray may be useful in minimizing or dispersing vapors and to protect personnel. Cool equipment exposed to fire with water, if it can be done with minimal risk. Avoid spreading burning liquid with water used for cooling purposes.

6. ACCIDENTAL RELEASE MEASURES

Flammable. Keep all sources of ignition and hot metal surfaces away from spill/release. The use of explosion-proof electrical equipment is recommended.

Stay upwind and away from spill/release. Notify persons down wind of the spill/release, isolate immediate hazard area and keep unauthorized personnel out. Stop spill/release if it can be done with minimal risk. Wear appropriate protective equipment including respiratory protection as conditions warrant (see Section 8).

Prevent spilled material from entering sewers, storm drains, other unauthorized drainage systems, and natural waterways. Dike far ahead of spill for later recovery or disposal. Use foam on spills to minimize vapors (see Section 5). Spilled material may be absorbed into an appropriate absorbent material.

Notify fire authorities and appropriate federal, state, and local agencies. Immediate cleanup of any spill is recommended. If spill of any amount is made into or upon navigable waters, the contiguous zone, or adjoining shorelines, notify the National Response Center (phone number 800-424-8802).

7. HANDLING AND STORAGE

Handling: Open container slowly to relieve any pressure. Bond and ground all equipment when transferring from one vessel to another. Can accumulate static charge by flow or agitation. Can be ignited by static discharge. The use of explosion-proof electrical equipment is recommended and may be required (see appropriate fire codes). Refer to NFPA-704 and/or API RP 2003 for specific bonding/grounding requirements.

Do not enter confined spaces such as tanks or pits without following proper entry procedures such as ASTM D-4276 and 29CFR 1910.146. The use of appropriate respiratory protection is advised when concentrations exceed any established exposure limits (see Sections 2 and 8).

Do not wear contaminated clothing or shoes. Keep contaminated clothing away from sources of ignition such as sparks or open flames. Use good personal hygiene practices.

"Empty" containers retain residue and may be dangerous. Do not pressurize, cut, weld, braze, solder, drill, grind, or expose such containers to heat, flame, sparks, or other sources of ignition. They may explode and cause injury or death. "Empty" drums should be completely drained, properly bunged, and promptly shipped to the supplier or a drum reconditioner. All containers should be disposed of in an environmentally safe manner and in accordance with governmental regulations.

Before working on or in tanks which contain or have contained this material, refer to OSHA regulations, ANSI Z49.1, and other references pertaining to cleaning, repairing, welding, or other contemplated operations.

Storage: Keep container(s) tightly closed. Use and store this material in cool, dry, well-ventilated areas away from heat, direct sunlight, hot metal surfaces, and all sources of ignition. Post area "No Smoking or Open Flame." Store only in approved containers. Keep away from any incompatible material (see Section 10). Protect container(s) against physical damage. Outdoor or detached storage is preferred. Indoor storage should meet OSHA standards and appropriate fire codes.

8. EXPOSURE CONTROLS / PERSONAL PROTECTION

Engineering controls: If current ventilation practices are not adequate to maintain airborne concentrations below the established exposure limits (see Section 2), additional engineering controls may be required. Where explosive mixtures may be present, electrical systems safe for such locations must be used (see appropriate electrical codes).

Personal Protective Equipment (PPE):

Respiratory: A NIOSH certified air purifying respirator with an organic vapor cartridge may be used under conditions where airborne concentrations are expected to exceed exposure limits (see Section 2).

Protection provided by air purifying respirators is limited (see manufacturer's respirator selection guide). Use a NIOSH approved self-contained breathing apparatus (SCBA) or equivalent operated in a pressure demand or other positive pressure mode if there is potential for an uncontrolled release, exposure levels are not known, or any other circumstances where air purifying respirators may not provide adequate protection.

A respiratory protection program that meets OSHA's 29 CFR 1910.134 and ANSI Z88.2 requirements must be followed whenever workplace conditions warrant a respirator's use.

Skin: The use of gloves impervious to the specific material handled is advised to prevent skin contact, possible irritation, and skin damage. Examples of approved materials are nitrile or Viton® (see glove manufacturer literature for information on permeability). Depending on conditions of use, apron and/or arm covers may be necessary.

Eye/Face: Approved eye protection to safeguard against potential eye contact, irritation, or injury is recommended. Depending on conditions of use, a face shield may be necessary.

Other Protective Equipment: Eye wash and quick-drench shower facilities should be available in the work area. Thoroughly clean shoes and wash contaminated clothing before reuse. It is recommended that impervious clothing be worn when skin contact is possible.

Suggestions for the use of specific protective materials are based on readily available published data. Users should check with specific manufacturers to confirm the performance of their products.

9. PHYSICAL AND CHEMICAL PROPERTIES

Note: Unless otherwise stated, values are determined at 20°C (68°F) and 760 mm Hg (1 atm).

9. PHYSICAL AND CHEMICAL PROPERTIES

Appearance:	Straw colored to dyed red
Physical Form:	Liquid
Odor:	Diesel fuel
Odor Threshold:	No data
pH:	Not applicable
Vapor Pressure (mm Hg):	0.40
Vapor Density (air=1):	> 3
Boiling Point:	300-690°F / 149-366°C
Solubility in Water:	Negligible
Partition Coefficient (n-octanol/water) (Kow):	No data
Specific Gravity:	0.81-0.88@ 60°F (15.6°C)
Bulk Density:	7.08 lbs/gal
Viscosity cSt @ 40°C:	1.7-4.1
Percent Volatile:	Negligible@ ambient conditions
Evaporation Rate (nBuAc=1):	<1
Flash Point:	125-180°F / 52-82°C
Test Method:	Pensky-Martens Closed Cup (PMCC), ASTM D93, EPA 1010
LEL%:	0.3
UEL%:	10.0
Autoignition Temperature:	500°F / 260°C

10. STABILITY AND REACTIVITY

Stability: Stable under normal ambient and anticipated storage and handling conditions of temperature and pressure. Flammable liquid and vapor. Vapor can cause flash fire.

Conditions to Avoid: Avoid all possible sources of ignition (see Sections 5 and 7).

Materials to Avoid (Incompatible Materials): Avoid contact with strong oxidants such as liquid chlorine, concentrated oxygen, sodium hypochlorite, calcium hypochlorite, etc.

Hazardous Decomposition Products: Combustion can yield carbon, nitrogen and sulfur oxides. The use of hydrocarbon fuel in an area without adequate ventilation may result in hazardous levels of combustion products (e.g., oxides of carbon, sulfur and nitrogen, benzene and other hydrocarbons) and/or dangerously low oxygen levels. See Section 11 for additional information on hazards of engine exhaust. IARC has classified Diesel exhaust as probably carcinogenic in humans.

Hazardous Polymerization: Will not occur.

11. TOXICOLOGICAL INFORMATION

Chronic Data:

Diesel Fuel No. 2 (68476-34-6)

Carcinogenicity: Petroleum middle distillates have been shown to cause skin tumors in mice following repeated and prolonged skin contact. Follow-up studies have shown that these tumors are produced through a non-genotoxic mechanism associated with frequent cell damage and repair, and that they are not likely to cause tumors in the absence of prolonged skin irritation. Animal studies have also shown that washing the skin with soap and water can reduce the tumor response. Middle distillates with low polynuclear aromatic hydrocarbon content have not been identified as a carcinogen by NTP, IARC or OSHA.

Target Organs: Limited evidence of renal impairment has been noted from a few older case reports involving excessive exposure to diesel fuel No. 2. However, renal toxicity has not been demonstrated to be a consistent finding of diesel fuel exposure.

Naphthalene (91-20-3)

Carcinogenicity: Naphthalene has been evaluated in two year inhalation studies in both rats and mice. The National Toxicology Program (NTP) concluded that there is clear evidence of carcinogenicity in male and female rats based on increased incidences of respiratory epithelial adenomas and olfactory epithelial neuroblastomas of the nose. NTP found some evidence of carcinogenicity in female mice (alveolar adenomas) and no evidence of carcinogenicity in male mice. Naphthalene has been identified as a carcinogen by IARC and NTP.

Acute Data:

Diesel Fuel No. 2 (68476-34-6)
Dermal LD50= >5ml/kg (Rabbit)
LC50= No data available
Oral LD50= 9 ml/kg (Rat)

Naphthalene (91-20-3)
Dermal LD50= >2.5 g/kg (rat)
LC50= >340 mg/m^3/1H (rat)
Oral LD50= 490 mg/kg; 2.6 g/kg (rat)

12. ECOLOGICAL INFORMATION

When middle distillate hydrocarbons escape into the environment due to leaks or spills, most of their constituent hydrocarbons will evaporate and be photodegraded by reaction with hydroxyl radicals in the atmosphere. The half-lives in air for many of the individual hydrocarbons is less than one day. Less volatile hydrocarbons can persist in the aqueous environment for longer periods. They remain floating on the surface of the water; those that reach soil or sediment biodegrade relatively slowly. Soil contaminated with middle distillates can develop adapted microbial species able to use the fuel as a carbon source; soil aeration and nutrient supplementation can enhance this biodegradation.

Reported LC50/EC50 values for water-soluble fractions of middle distillates are usually in the range of 10 to 100 mg/liter. Adverse effects on the gills, pseudobranch, kidney and nasal mucosa have been reported in fish involved in spills of middle distillates. Juvenile clams may be particularly sensitive to marine sediments contaminated as a result of spilled material. Direct toxicity and fouling of sea birds can occur if birds dive through floating layers of spilled material.

Phytotoxic effects of middle distillate hydrocarbons have been reported following exposure of plants to sprays or vapors. Lack of seed germination and inhibition of seedling growth may also occur. There is evidence for moderate bioaccumulation of the water-soluble hydrocarbons present in middle distillates.

13. DISPOSAL CONSIDERATIONS

This material, if discarded as produced, is not a RCRA "listed" hazardous waste. However, it should be fully characterized for ignitability (D001) and benzene (D018) prior to disposal (40 CFR 261). Use which results in chemical or physical change or contamination may subject it to regulation as a hazardous waste. Along with properly characterizing all waste materials, consult state and local regulations regarding the proper disposal of this material.

Container contents should be completely used and containers should be emptied prior to discard. Container rinsate could be considered a RCRA hazardous waste and must be disposed of with care and in full compliance with federal, state and local regulations. Larger empty containers, such as drums, should be returned to the distributor or to a drum reconditioner. To assure proper disposal of smaller empty containers, consult with state and local regulations and disposal authorities.

14. TRANSPORT INFORMATION

DOT

Shipping Description: Diesel Fuel, Combustible liquid, NA1993, III
Non-Bulk Package Marking: Not regulated in non-bulk quantities
Non-Bulk Package Labeling: Not regulated in non-bulk quantities
Bulk Package/Placard Marking: Combustible/1993
Packaging - References (Exceptions, Non-Bulk, Bulk): 49 CFR 173.150(f), 173.203, 173.241
Hazardous Substance: None
Emergency Response Guide: 128
Note: This product has been reclassified as a Combustible Liquid for domestic land transportation using 49 CFR 173.150(f).

IMDG

Shipping Description: UN1202, Diesel fuel, 3, III (52°C)
Non-Bulk Package Marking: Diesel fuel, UN1202

14. TRANSPORT INFORMATION

Labels: Flammable
Placards/Marking (Bulk): Flammable/1202
Packaging - Non-Bulk: P001, LP01
EMS: F-E, S-E

ICAO/IATA

UN/ID #: UN1202
Proper Shipping Name: Diesel fuel
Hazard Class/Division: 3
Packing Group: III
Subsidiary risk: None
Non-Bulk Package Marking: Diesel fuel, UN1202
Labels: Flammable

	LTD. QTY.	Passenger Aircraft	Cargo Aircraft Only
Packaging Instruction #:	Y309	309	310
Max. Net Qty. Per Package:	10 L	60 L	220 L

15. REGULATORY INFORMATION

U.S. Regulations:

EPA SARA 311/312 (Title III Hazard Categories)

Acute Health: Yes
Chronic Health: No
Fire Hazard: Yes
Pressure Hazard: No
Reactive Hazard: No

SARA - Section 313 and 40 CFR 372:
This material contains the following chemicals subject to the reporting requirements of SARA 313 and 40 CFR 372:
Naphthalene.....91-20-3.....<1%

EPA (CERCLA) Reportable Quantity (in pounds):
EPA's Petroleum Exclusion applies to this material - (CERCLA 101(14)).

CERCLA/SARA - Section 302 Extremely Hazardous Substances and TPQs (in pounds):
This material contains the following chemicals subject to the reporting requirements of SARA 302 and 40 CFR 372:
-- None Known --

California Proposition 65:
Warning: This material contains the following chemicals which are known to the State of California to cause cancer, birth defects or other reproductive harm, and are subject to the requirements of California Proposition 65 (CA Health & Safety Code Section 25249.5):
Benzene -- Cancer, Developmental and Reproductive Toxicant
Naphthalene -- Cancer
Toluene -- Developmental Toxicant

Diesel engine exhaust, while not a component of this material, is on the Proposition 65 list of chemicals known to the State of California to cause cancer.

Carcinogen Identification:
This material has not been identified as a carcinogen by NTP, IARC, or OSHA. See Section 11 for carcinogenicity information of individual components, if any.

Diesel exhaust is a probable cancer hazard based on tests in laboratory animals. It has been identified as a carcinogen by IARC.

TSCA:
All components are listed on the TSCA inventory.

International Regulations:

Canadian Regulations:
This product has been classified in accordance with the hazard criteria of the Controlled Products Regulations (CPR) and the MSDS contains all the information required by the CPR.

Domestic Substances List: Listed
WHMIS Hazard Class:
B2 - Flammable Liquids
D2B - Materials Causing Other Toxic Effects - Toxic Material

16. OTHER INFORMATION

Issue Date:	21-Feb-2006
Previous Issue Date:	13-Feb-2003
Product Code:	Multiple
Previous Product Code:	Multiple
Revised Sections or Basis for Revision:	Product Name / Synonyms (Section 1)
MSDS Code:	001847

Disclaimer of Expressed and implied Warranties:
The information presented in this Material Safety Data Sheet is based on data believed to be accurate as of the date this Material Safety Data Sheet was prepared. HOWEVER, NO WARRANTY OF MERCHANTABILITY, FITNESS FOR ANY PARTICULAR PURPOSE, OR ANY OTHER WARRANTY IS EXPRESSED OR IS TO BE IMPLIED REGARDING THE ACCURACY OR COMPLETENESS OF THE INFORMATION PROVIDED ABOVE, THE RESULTS TO BE OBTAINED FROM THE USE OF THIS INFORMATION OR THE PRODUCT, THE SAFETY OF THIS PRODUCT, OR THE HAZARDS RELATED TO ITS USE. No responsibility is assumed for any damage or injury resulting from abnormal use or from any failure to adhere to recommended practices. The information provided above, and the product, are furnished on the condition that the person receiving them shall make their own determination as to the suitability of the product for their particular purpose and on the condition that they assume the risk of their use. In addition, no authorization is given nor implied to practice any patented invention without a license.

MATERIAL SAFETY DATA SHEET
IDENTITY- ABC DRY CHEMICAL

SECTION I. Chemical Product and Company Identification

Product Name: ABC Dry Chemical Fire Extinguishant
Synonym: Multi-purpose Dry Chemical
Manufacturer: Buckeye Fire Equipment Company
110 Kings Road
Kings Mountain, NC 28086
Telephone: 704.739.7415
Emergency: CHEMTREC 1.800.424.9300

Revision Date: 7/10

SECTION II. Hazard Identification and Emergency Overview

Emergency Overview: Product is a light yellow, fine solid powder that is odorless.

Adverse Health Effects and Symptoms: Product is a moderate irritant to the respiratory system and eyes; a mild irritant to the skin. Symptoms may include shortness of breath, coughing, and irritation to the eyes, lungs, and skin. Ingestion may cause gastric irritation, nausea, and diarrhea.

Exposure Guidelines:

	OSHA PEL	ACGIH TLV
Monoamonium phosphate	Particulates Not Otherwise Classified Total Dust- 15 mg/m³ Respirable Fraction- 5 mg/m³	Particulates Not Otherwise Classified Total Dust- 10 mg/m³ Respirable Fraction- 3 mg/m³
Barium sulfate	Particulates Not Otherwise Classified Total Dust- 15 mg/m³ Respirable Fraction- 5 mg/m³	Particulates Not Otherwise Classified Total Dust- 10 mg/m³ Respirable Fraction- 3 mg/m³
Mica	6 mg/m³	3 mg/m³
Silica	6 mg/m³	10 mg/m³
Stannous octoate	.1 mg/m³	.1 mg/m³
Silicone	Not Regulated	Not Regulated
Pigment	Not Regulated	Not Regulated

Hazard Symbols:

HMIS RATINGS:

Health 1
Flammability 0
Reactivity 0
Personal Protective Equipment: use N-95 dust mask (See Section 8)

WHMIS (Canadian Workplace Hazardous Materials Identification)
D2B- May irritate eyes, mucous membranes, and/or skin

SECTION III. Composition/Information on Ingredients

	Weight %*	CAS #
Monoammonium phosphate	85	7722-76-1
Barium Sulfate	10	7727-43-7
Mica	< 3	12001-26-2
Silica	< 2	7631-86-9
Stannous octoate	< .3	301-10-0
Silicone	< .1	63148-57-2
Pigment	< .1	6358-31-2

* % is rounded to the nearest appropriate number. Values are not to be considered product specifications

EPA-NC-CE-0000688

SECTION IV. First Aid Measures

Eye Exposure- Flush eyes with water until pain-free. If irritation develops or persists, seek medical attention.

Skin Exposure- Wash with plenty of soap and water. If irritation develops or persists, seek medical attention.

Inhalation- Move victim to fresh air. If irritation develops or persists, seek medical attention.

Ingestion- If victim is conscious and alert, give 2-3 glasses of water to drink. Do not induce vomiting. If vomiting occurs and the victim is conscious, give additional water to further dilute the chemical. Prevent aspiration of swallowed product by laying victim on side with head lower than their waist. Seek medical attention. Do not leave victim unattended.

Medical Conditions Possibly Aggravated by Exposure- Inhalation of the product may aggravate existing chronic respiratory conditions such as asthma, emphysema, or bronchitis. Contact with the skin may aggravate an existing skin disease. Chronic overexposure may cause pneumoconiosis ("Dusty Lung" disease).

SECTION V. Firefighting Measures

Extinguishing Media: N/A. This product is an extinguishing agent. It is nonflammable and noncombustible.
Special Firefighting Procedures: N/A
Unusual Fire and Explosion Hazards: This product may decompose in fire and release oxides of carbon, potassium, and nitrogen (Refer to Section X).
Sensitivity to Mechanical Impact or Static Discharge: None

SECTION VI. Accidental Release Measures

In case of accidental release, use the appropriate respiratory protection. Clean up the product using a vacuum or wet sweep and shovel to minimize the generation of dust. Bag or drum the product for disposal. If the product is used and/or contaminated, use personal protective equipment and containment means that are appropriate for the composition of the mixture. Product should be prevented from entering waterways.

SECTION VII. Handling and Storage

Avoid eye, respiratory, and skin exposure. Use the appropriate personal protective equipment when handling. Wash thoroughly after handling (Refer to Section VIII). Product should be stored in its original container or extinguisher. When the product is contained under pressure (e.g., an extinguisher), inspect the container for rust or damage that may compromise the container integrity. Do not store the product in high humidity and do not mix with other extinguishing agents, particularly potassium bicarbonate based agents.

SECTION VIII. Exposure Controls and Personal Protection

During the use of this product on fires, exhaust gases and products of incomplete combustion are the main respiratory hazards. In the manufacture of this product, employers and employees must use their collective judgment in determining the on-the-job settings where the use of a dust mask or respirator is prudent. The need for respiratory protection is not likely for short-term use in well-ventilated areas.

Respiratory Protection: Use an N-95 dust mask for limited exposures and use air-purifying respirators with high efficiency particulate air filters (HEPA filters) for prolonged exposures.

Eye Protection: Wear chemical goggles or full-face air-purifying respirator.

Skin Protection: Use nitrile, latex, or similar gloves and coveralls. Good personal hygiene practices are essential. After handling the product, avoid food, tobacco products, or other means of transferring the product from hand to mouth until after thoroughly washing.

SECTION IX. Physical and Chemical Properties

Appearance and Odor: Light yellow fine powder that is odorless.
Apparent Density: 0.82
Solubility: The product is coated with water repellant silicone. Not immediately soluble in water.
pH: Approximately 4 -5
Flash Point: N/A
Flammability: N/A
Vapor Pressure: N/A
Boiling Point: N/A
Explosive or Oxidizing Properties: None

SECTION X. Stability and Reactivity

Stability: Stable
Incompatibles: Magnesium, strong oxidizers such as calcium hypochlorite (pool chlorine), strong alkalis, and isocyanuric acids.
Decomposition Products: This product may decompose in fire and release carbon monoxide, carbon dioxide, and sulfur dioxide. Oxides of phosphorous and ammonia have been reported.
Hazardous Polymerization: Will not occur
Hazardous Reactions: None

SECTION XI. Toxicological Information

Acute Toxicity: Monoammonium phosphate LD50 (rat): > 1000mg/kg body weight.
Target organs in humans: respiratory system, eyes, and skin. This product is an irritant to epithelial tissue and may aggravate dermatitis. No indication that the product causes sensitization.

Chronic Toxicity: Pneumoconiosis, or "Dusty Lung" disease, may result from chronic exposure to any dust.

Reproductive Toxicity: This product is not known to have any reproductive effects.

SECTION XII. Ecological Information

Ecotoxicity: Negative effects are unknown. Provides nutrient nitrogen and phosphorous to plant life.
Degradability: Degrades rapidly in wet or humid environment.
Bioaccumulation: Unknown extent.
Mobility in Soil: Water-soluble. May leech in to groundwater.

SECTION XIII. Considerations for Disposal

This product is not a RCRA characteristically hazardous or listed hazardous waste. Dispose of according to state or local laws, which may be more restrictive than federal regulations. Be aware that product used on a fire may be altered or contaminated and thereby require different disposal considerations.

SECTION XIV. Transportation Information

This product is not defined as a hazardous material under U.S. Department of Transportation 49 CFR 172, or by Transport Canada "Transportation of Dangerous Goods" regulations.

Please Note: Although this material is not considered hazardous, when contained in a stored pressure fire extinguisher pressurized with a nonflammable gas, the extinguisher itself is considered hazardous material by the U.S. Department of Transportation (USDOT) and Transport Canada (TC). Packaging of the fire extinguisher shall be identified with the Proper Shipping Name (Fire Extinguisher) and the UN Identification Number (UN 1044). The USDOT hazard class/division is 2.2 Nonflammable Gas. Packing Group = N/A

SECTION XV. Regulatory Information

International Inventory Status: All ingredients are on the following inventories

Country	Agency
U.S.A.	TSCA
Canada	DSL
Europe	EINECS/ELINCS
Australia	AICS
Japan	MITI
South Korea	KECL

European Risk and Safety Phrases:

EU Classification- Harmful

R Phrases-
- 22 Harmful if swallowed
- 36/37/38 Irritating to eyes, respiratory system, and skin.

S Phrases-
- 26 In case of contact with eyes, rinse immediately with plenty of water and seek medical advice
- 36 Wear suitable protective clothing

U.S. Federal Regulatory Information:

None of the chemicals in this product are under SARA reporting requirements or have SARA Threshold Planning Quantities or CERCLA Reportable Quantities, or are regulated under TSCA 8(d).

State Regulatory Information:

Chemicals in this product are covered under the specific State regulations noted:

Alaska	Designated Toxic and Hazardous Substances- None
California	Permissible Exposure Limits for Chemical Contaminants- None
Florida	Substance list- Mica dust
Illinois	Toxic Substance List- None
Kansas	Section 302/303 List- None
Massachusetts	Substance list- Mica dust
Minnesota	List of Hazardous Substances- None
Missouri	Employer Information/Toxic Substance List- None
New Jersey	Right to Know Hazardous Substance List- None
North Dakota	List of Hazardous Chemicals, Reportable Quantities- None
Pennsylvania	Hazardous Substance List- None
Rhode Island	Hazardous Substance List- Mica dust
Texas	Hazardous Substance List- No
West Virginia	Hazardous Substance List- None
Wisconsin	Toxic and Hazardous Substances- None

California Proposition 65- No component is listed on the California Proposition 65 List

SECTION XVI. Other Information

This MSDS conforms to the requirements under U.S., U.K., Canadian, Australian, and EU Regulations or Standards. It conforms to the proposed 2003 ANSI Z400.1 format.

The information contained herein is given in good faith as typical values and not as product specifications. No warranty, either expressed or implied, is hereby made.

EPA-NC-CE-0000691

MATERIAL SAFETY DATA SHEET

Form # 853020
Revised: 6/18/07
Supersedes: 2/9/05

I. PRODUCT IDENTIFICATION

Chemical Trade Name (as used on label):
Lead-Acid Battery

Chemical Family/Classification:
Electric Storage Battery

Manufacturer's Name/Address:
EnerSys
P.O. Box 14145
2366 Bernville Road
Reading, PA 19612-4145

Telephone:
For information and emergencies, contact EnerSys'
Environmental, Health & Safety Dept. at 610-208-1996

24-Hour Emergency Response Contact:
CHEMTREC DOMESTIC: 800-424-9300 CHEMTREC INT'L: 703-527-3877

II. HAZARDOUS INGREDIENTS/IDENTIFY INFORMATION

			Air Exposure Limits (ug/m^3)		
Components	**CAS Number**	**Approximate % by Wt. Or Vol.**	**OSHA**	**ACGIH**	**NIOSH**
Inorganic Lead Compound:					
Lead	7439-92-1	60	50	150	100
* Antimony	7440-36-0	2	500	500	--
* Arsenic	7440-38-2	0.2	10	200	--
* Calcium	7440-70-2	0.2	--	--	--
* Tin	7440-31-5	0.2	2000	2000	--
Electrolyte (Sulfuric Acid)	7664-93-9	10-30	1000	1000	1000
Case Material:		5-10	N/A	N/A	N/A
Polypropylene	9003-07-0				
Polystyrene	9003-53-6				
Styrene Acrylonitrile	9003-54-7				
Acrylonitrile Butadiene Styrene	9003-56-9				
Styrene Butadiene	9003-55-8				
Polyvinylchloride	9002-86-2				
Polycarbonate, Hard Rubber, Polyethylene	--				
Other:					
Silicon Dioxide (Gel batteries only)	7631-86-9	20-40	N/A	N/A	N/A
Sheet Molding Compound (Glass reinforced polyester)	--		N/A	N/A	N/A

Inorganic lead and electrolyte (sulfuric acid) are the primary components of every battery manufactured by EnerSys.
Other ingredients may be present dependent upon battery type. Contact your EnerSys representative for additonal information.

III. PHYSICAL DATA

Electrolyte:

Boiling Point:	203 - 240° F	**Specific Gravity (H2O = 1):**	1.215 to 1.350
Melting Point:	N/A	**Vapor Pressure (mm Hg):**	10
Solubility in Water:	100%	**Vapor Density (AIR = 1):**	Greater than 1
Evaporation Rate: (Butyl Acetate = 1)	Less than 1	**% Volatile by Weight:**	N/A
Appearance and Odor:	Manufactured article; no apparent odor. Electrolyte is a clear liquid with a sharp, penetrating, pungent odor.		

IV. FIRE AND EXPLOSION HAZARD DATA

Flash Point: N/A **Flammable Limits:** LEL = 4.1% (Hydrogen Gas) UEL = 74.2%

Extiguishing Media: CO2; foam; dry chemical

Special Fire Fighting Procedures:
If batteries are on charge, shut off power. Use positive pressure, self-contained breathing apparatus. Water applied to electrolyte generates heat and causes it to spatter. Wear acid-resistant clothing.

Unusual Fire and Explosion Hazards:
Highly flammable hydrogen gas is generated during charging and operation of batteries. To avoid risk of fire or explosion, keep sparks or other sources of ignition away from batteries. Do not allow metallic materials to simultaneously contact negative and positive terminals of cells and batteries. Follow manufacturer's instructions for installation and service.

V. REACTIVITY DATA

Stability: Stable

Conditions To Avoid: Prolonged overcharge; sources of ignition

Incompatibility: (Materials to avoid)
Sulfuric Acid: Contact with combustibles and organic materials may cause fire and explosion. Also reacts violently with strong reducing agents, metals, sulfur trioxide gas, strong oxidizers and water. Contact with metals may produce toxic sulfur dioxide fumes and may release flammable hydrogen gas.
Lead Compounds: Avoid contact with strong acids, bases, halides, halogenates, potassium nitrate, permanganate, peroxides, nascent hydrogen and reducing agents.

Hazardous Decomposition Products:
Sulfuric Acid: Sulfur trioxide, carbon monoxide, sulfuric acid mist, sulfur dioxide, and hydrogen.
Lead Compounds: High temperatures likely to produce toxic metal fume, vapor, or dust; contact with strong acid or base or presence of nascent hydrogen may generate highly toxic arsine gas.

EPA-NC-CE-0000692

VI. HEALTH HAZARD DATA

Routes of Entry:

Sulfuric Acid: Harmful by all routes of entry.

Lead Compounds: Hazardous exposure can occur only when product is heated, oxidized or otherwise processed or damaged to create dust, vapor or fume.

Inhalation:

Sulfuric Acid: Breathing of sulfuric acid vapors or mists may cause severe respiratory irritation.

Lead Compounds: Inhalation of lead dust or fumes may cause irritation of upper respiratory tract and lungs.

Ingestion:

Sulfuric Acid: May cause severe irritation of mouth, throat, esophagus and stomach.

Lead Compounds: Acute ingestion may cause abdominal pain, nausea, vomiting, diarrhea and severe cramping. This may lead rapidly to systemic toxicity and must be treated by a physician.

Skin Contact:

Sulfuric Acid: Severe irritation, burns and ulceration.

Lead Compounds: Not absorbed through the skin.

Eye Contact:

Sulfuric Acid: Severe irritation , burns, cornea damage, and blindness.

Lead Components: May cause eye irritation.

Effects of Overexposure - Acute:

Sulfuric Acid: Severe skin irritation, damage to cornea, upper respiratory irritation.

Lead Compounds: Symptoms of toxicity include headache, fatigue, abdominal pain, loss of appetitie, muscular aches and weakness, sleep disturbances and irritability.

Effects of Overexposure - Chronic:

Sulfuric Acid: Possible erosion of tooth enamel, inflammation of nose, throat and bronchial tubes.

Lead Compounds: Anemia; neuropathy, particularly of the motor nerves, with wrist drop; kidney damage; reproductive changes in males and females.

Carcinogenicity:

Sulfuric Acid: The International Agency for Research on Cancer (IARC) has classified "strong inorganic acid mist containing sulfuric acid" as a Category I carcinogen, a substance that is carcinogenic to humans. This classification does not apply to liquid forms of sulfuric acid or sulfuric acid solutions contained within a battery. Inorganic acid mist (sulfuric acid mist) is not generated under normal use of this product. Misuse of the product, such as overcharging, may result in the generation of sulfuric acid mist.

Lead Compounds: Lead is listed as a 2B carcinogen, likely in animals at extreme doses. Proof of carcinogenicity in humans is lacking at present.

Arsenic: Listed by National Toxicology Program (NTP), International Agency for Research on Cancer (IARC), OSHA and NIOSH as a carcinogen only after prolonged exposure at high levels.

Medical Conidtions Generally Aggravated by Exposure:

Overexposure to sulfuric acid mist may cause lung damage and aggravate pulmunary conditions. Contact of sulfuric acid with skin may aggravate diseases such as eczema and contact dermatitis. Lead and its compounds can aggravate some forms of kidney, liver and neurologic diseases.

EMERGENCY AND FIRST AID PROCEDURES:

Inhalation:

Sulfuric Acid: Remove to fresh air immediately. If breathing is difficult, give oxygen.

Lead: Remove from exposure, gargle, wash nose and lips; consult physician.

Ingestion:

Sulfuric Acid: Give large quanitities of water; do not induce vomiting; consult physician.

Lead: Consult physician immediately.

Skin:

Sulfuric Acid: Flush with large amounts of water for at least 15 minutes; remove contaminated clothing completely, including shoes.

Lead: Wash immediately with soap and water.

Eyes:

Sulfuric Acid and Lead: Flush immediately with large amounts of water for a least 15 minutes; consult physician.

Proposition 65:

Warning: Battery posts, terminals and related accessories contain lead and lead compounds, chemicals known to the State of California to cause cancer and reproductive harm. Batteries also contain other chemicals known to the State of California to cause cancer. Wash hands after handling.

VII. PRECAUTIONS FOR SAFE HANDLING AND USE

Spill or Leak Procedures:

Stop flow of material, contain/absorb small spills with dry sand, earth, and vermiculite. Do not use combustible materials. If possible, carefully neutralize spilled electrolyte with soda ash, sodium bicarbonate, lime, etc. Wear acid-resistant clothing, boots, gloves, and face shield. Do not allow discharge of unneutralized acid to sewer.

Waste Disposal Methods:

Spent batteries: Send to secondary lead smelter for recycling.

Place neutralized slurry into sealed containers and handle as applicable with state and federal regulations. Large water-diluted spills, after neutralization and testing, should be managed in accordance with approved local, state and federal requirements. Consult state environmental agency and/or federal EPA.

EPA-NC-CE-0000693

VII. PRECAUTIONS FOR SAFE HANDLING AND USE (Cont.)

Handling and Storage:

Store batteries in cool, dry, well-ventilated areas with impervious surfaces and adequate containment in the event of spills. Batteries should also be stored under roof for protection against adverse weather conditions. Separate from incompatible materials. Store and handle only in areas with adequate water supply and spill control. Avoid damage to containers. Keep away from fire, sparks and heat.

Precautionary Labeling:

POISON - CAUSES SEVERE BURNS

DANGER - CONTAINS SULFURIC ACID

VIII. CONTROL MEASURES

Engineering Controls:

Store and handle in well-ventilated area. If mechanical ventilation is used, components must be acid-resistant.

Work Practices:

Handle batteries cautiously to avoid spills. Make certain vent caps are on securely. Avoid contact with internal components. Wear protective clothing when filling or handling batteries.

Respiratory Protection:

None required under normal conditions. When concentrations of sulfuric acid mist are known to exceed the PEL, use NIOSH or MSHA-approved respiratory protection.

Protective Gloves:

Rubber or plastic acid-resistant gloves with elbow-length gauntlet.

Eye Protection:

Chemical goggles or face shield.

Other Protection:

Acid-resistant apron. Under severe exposure emergency conditions, wear acid-resistant clothing and boots.

Emergency Flushing:

In areas where sulfuric acid is handled in concentrations greater then 1%, emergency eyewash stations and showers should be provided, with unlimited water supply.

IX. OTHER REGULATORY INFORMATION

NFPA Hazard Rating for Sulfuric Acid:

Flammability (Red) = 0

Health (Blue) = 3

Reactivity (Yellow) = 2

Sulfuric acid is water-reactive if concentrated.

U.S. DOT:

The transportation of wet and moist charged (moist active) batteries within the continental United States is regulated by the U.S. DOT through the Code of Federal Regulations, Title 49 (CFR49). These regulations classify these types of batteries as a hazardous material. Refer to CFR 49, 173.159 for more details pertaining to the transportation of wet and moist batteries.

The shipping information is as follows:

Proper Shipping Name: Batteries, wet, filled with acid

Hazardous Class: 8

UN Indentification: UN2794

Packing Group: III

Label/Placard Required: Corrosive

Some EnerSys batteries have been tested and meet the non-spillable criteria listed in CFR 49, 173.159 (d) (3) (i) and (ii).

Non-spillable batteries are excepted from CFR 49, Subchapter C requirements, provided that the following criteria are met:

1. The batteries must be protected against short circuits and securely packaged.
2. The batteries and their outer packaging must be plainly and durably marked "NON-SPILLABLE" or "NON-SPILLABLE BATTERY".

The exception from CFR 49, Subchapter C translates to no proper shipping name, no hazardous class, no UN number, no packing group and no hazardous labels when transporting a non-spillable battery.

Contact your EnerSys representative for additional information regarding the classification of batteries.

IATA:

The international transportation of wet and moist charged (moist active) batteries is regulated by the International Air Transport Association (IATA). These regulations also classify these types of batteries as a hazardous material. The batteries must be packed according to IATA Packing Instruction 800.

The shipping information is as follows:

Proper Shipping Name: Batteries, wet, filled with acid

Hazardous Class: 8

UN Indentification: UN2794

Packing Group: III

Label/Placard Required: Corrosive

Some EnerSys batteries have been tested and meet the non-spillable criteria listed in IATA Packing Instruction 806. Non-spillable batteries must be packed according to IATA Packing Instruction 806.

The shipping information for non-spillable batteries is as follows:

Proper Shipping Name: Batteries, wet, non-spillable

Hazardous Class: 8

UN Identification: UN2800

Packing Group: III

Label/Placard Required: Corrosive

In addition, some EnerSys non-spillable batteries have been tested and meet the non-regulated criteria listed in IATA special provision A67. These batteries are expected from all IATA regulations provided that the batteries' terminals are protected against short circuits.

Contact your EnerSys representative for additional information regarding the classification of batteries.

EPA-NC-CE-0000694

IX. OTHER REGULATORY INFORMATION (Cont.)

IMDG:

The international transporation of wet and moist charged (moist active) batteries is regulated by the International Maritime Dangerous Goods code (IMDG). These regulations also classify these types of batteries as hazardous material. The batteries must be packed according to IMDG code pages 8120 and 8121.

The shipping information is as follows:

Proper Shipping Name: Batteries, wet, filled with acid — Packing Group: III
Hazardous Class: 8 — Label/Placard Required: Corrosive
UN Indentification: UN2794

Some EnerSys batteries have been tested and meet the non-spillable criteria listed on page 8121. Non-spillable batteries must be packed according to IMDG page 8121.

The shipping information for non-spillable batteries is as follows:

Proper Shipping Name: Batteries, wet, non-spillable — Packing Group: III
Hazardous Class: 8 — Label/Placard Required: Corrosive
UN Identification: UN2800

In addition, some EnerSys non-spillable batteries have been tested and meet the non-regulated criteria listed in the IMDG code page. 8121. These batteries are excepted from all IMDG code provided that the batteries' terminals are protected against short circuits.

Contact your EnerSys representative for additional information regarding the classification of batteries.

RCRA:

Spent lead-acid batteries are not regulated as hazardous waste by the EPA when recycled, however state and international regulations may vary.

CERCLA (Superfund) and EPCRA:

(a) Reportable Quantity (RQ) for spilled 100% sulfuric acid under CERCLA (Superfund) and EPCRA (Energency Planning Community Right to Know Act) is 1,000 lbs. State and local reportable quantities for spilled sulfuric acid may vary.

(b) Sulfuric acid is a listed "Extremely Hazardous Substance" under EPCRA, with a Threshold Planning Quantity (TPQ) of 1,000 lbs.

(c) EPCRA Section 302 notification is required if 1,000 lbs. or more of sulfuric acid is present at one site. The quantity of sulfuric acid will vary by battery type. Contact your EnerSys representative for additional information.

(d) EPCRA Section 312 Tier 2 reporting is required for batteries if sulfuric acid is present in quantities of 500 lbs. or more and/or if lead is present in quantities of 10,000 lbs. or more.

(e) Supplier Notification: This product contains toxic chemicals, which may be reportable under EPCRA Section 313 Toxic Chemical Release Inventory (Form R) requirements.

If you are a manufacturing facility under SIC codes 20 through 39, the following information is provdied to enable you to complete the required reports:

Toxic Chemical	CAS Number	Approximate % by Wt.
Lead	7439-92-1	60
Sulfuric Acid	7664-93-9	10 - 30
* Antimony	7440-36-0	2
* Arsenic	7440-38-2	0.2

If you distribute this product to other manufacturers in SIC Codes 20 through 39, this information must be provided with the first shipment of each calendar year.

The Section 313 supplier notification requirement does not apply to batteries, which are "consumer products".

* Not present in all battery types. Contact your EnerSys representative for additional information.

TSCA:

Ingredients in EnerSys' batteries are listed in the TSCA Registry as follows:

	Components	CAS Number	TSCA Status
Electrolyte:	Sulfuric Acid (H_2SO_4)	7664-93-9	Listed
Inorganic Lead Compound:			
	Lead (Pb)	7439-92-1	Listed
	Lead Oxide (PbO)	1317-36-8	Listed
	Lead Sulfate ($PbSO_4$)	7446-14-2	Listed
	Antimony Sb)	7440-36-0	Listed
	Arsenic (As)	7440-38-2	Listed
	Calcium (Ca)	7440-70-2	Listed
	Tin (Sn)	7440-31-5	Listed

CAA:

EnerSys supports preventative actions concerning ozone depletion in the atmosphere due to emissions of CFC's and other ozone depleting chemicals (ODC's), defined by the USEPA as Class I substances. Pursuant to Section 611of the Clean Air Act Amendements (CAAA) of 1990, finalized on January 19, 1993, EnerSys established a policy to eliminate the use of Class I ODC's prior to the May 15, 1993 deadline.

EPA-NC-CE-0000695

EnerSys

MATERIAL SAFETY DATA SHEET

Form # 853024
Revised: 6/18/07
Supersedes: 12/22/04

I. PRODUCT IDENTIFICATION

Chemical Trade Name (as used on label):
Nonspillable Lead-Acid Battery

Chemical Family/Classification:
Electric Storage Battery

Manufacturer's Name/Address:
EnerSys
P.O. Box 14145
2366 Bernville Road
Reading, PA 19612-4145

Telephone:
For information and emergencies, contact EnerSys'
Environmental, Health & Safety Dept. at 610-208-1996

24-Hour Emergency Response Contact:
CHEMTREC DOMESTIC: 800-424-9300 CHEMTREC INT'L: 703-527-3877

II. HAZARDOUS INGREDIENTS/IDENTIFY INFORMATION

			Air Exposure Limits (ug/m^3)		
Components	**CAS Number**	**Approximate % by Wt. Or Vol.**	**OSHA**	**ACGIH**	**NIOSH**
Inorganic Lead Compound:					
Lead	7439-92-1	45 - 60	50	150	100
* Lead Dioxide	1309-60-0	15 - 25	50	150	100
* Antimony	7440-36-0	2	500	500	--
* Arsenic	7440-38-2	0.2	10	200	--
* Calcium	7440-70-2	0.2	--	--	--
* Tin	7440-31-5	0.2	2000	2000	--
Electrolyte (Sulfuric Acid)	7664-93-9	10-30	1000	1000	1000
Case Material:		5-10	N/A	N/A	N/A
Polypropylene	9003-07-0				
Polystyrene	9003-53-6				
Styrene Acrylonitrile	9003-54-7				
Acrylonitrile Butadiene Styrene	9003-56-9				
Styrene Butadiene	9003-55-8				
Polyvinylchloride	9002-86-2				
Polycarbonate, Hard Rubber, Polyethylene	--				
Other:					
Silicon Dioxide (Gel batteries only)	7631-86-9	20-40	N/A	N/A	N/A
Sheet Molding Compound (Glass reinforced polyester)	--		N/A	N/A	N/A

Inorganic lead and electrolyte (sulfuric acid) are the primary components of every battery manufactured by EnerSys.
Other ingredients may be present dependent upon battery type. Contact your EnerSys representative for additional information.

III. PHYSICAL DATA

Electrolyte:

Boiling Point:	203 - 240° F	**Specific Gravity (H2O = 1):**	1.215 to 1.350
Melting Point:	N/A	**Vapor Pressure (mm Hg):**	10
Solubility in Water:	100%	**Vapor Density (AIR = 1):**	Greater than 1
Evaporation Rate: (Butyl Acetate = 1)	Less than 1	**% Volatile by Weight:**	N/A
Appearance and Odor:	Manufactured article; no apparent odor. Electrolyte is a clear liquid with a sharp, penetrating, pungent odor.		

IV. FIRE AND EXPLOSION HAZARD DATA

Flash Point: N/A

Flammable Limits: LEL = 4.1% (Hydrogen Gas) UEL = 74.2%

Extinguishing Media: CO2; foam; dry chemical

Special Fire Fighting Procedures:
If batteries are on charge, shut off power. Use positive pressure, self-contained breathing apparatus. Water applied to electrolyte generates heat and causes it to spatter. Wear acid-resistant clothing.

Unusual Fire and Explosion Hazards:
Highly flammable hydrogen gas is generated during charging and operation of batteries. To avoid risk of fire or explosion, keep sparks or other sources of ignition away from batteries. Do not allow metallic materials to simultaneously contact negative and positive terminals of cells and batteries. Follow manufacturer's instructions for installation and service.

V. REACTIVITY DATA

Stability: Stable

Conditions To Avoid: Prolonged overcharge; sources of ignition

Incompatibility: (Materials to avoid)
Sulfuric Acid: Contact with combustibles and organic materials may cause fire and explosion. Also reacts violently with strong reducing agents, metals, sulfur trioxide gas, strong oxidizers and water. Contact with metals may produce toxic sulfur dioxide fumes and may release flammable hydrogen gas.
Lead Compounds: Avoid contact with strong acids, bases, halides, halogenates, potassium nitrate, permanganate, peroxides, nascent hydrogen and reducing agents.

EPA-NC-CE-0000696

V. REACTIVITY DATA (Cont.)

Hazardous Decomposition Products:

Sulfuric Acid: Sulfur trioxide, carbon monoxide, sulfuric acid mist, sulfur dioxide, and hydrogen.

Lead Compounds: High temperatures likely to produce toxic metal fume, vapor, or dust; contact with strong acid or base or presence of nascent hydrogen may generate highly toxic arsine gas.

VI. HEALTH HAZARD DATA

Routes of Entry:

Sulfuric Acid: Harmful by all routes of entry.

Lead Compounds: Hazardous exposure can occur only when product is heated, oxidized or otherwise processed or damaged to create dust, vapor or fume.

Inhalation:

Sulfuric Acid: Breathing of sulfuric acid vapors or mists may cause severe respiratory irritation.

Lead Compounds: Inhalation of lead dust or fumes may cause irritation of upper respiratory tract and lungs.

Ingestion:

Sulfuric Acid: May cause severe irritation of mouth, throat, esophagus and stomach.

Lead Compounds: Acute ingestion may cause abdominal pain, nausea, vomiting, diarrhea and severe cramping. This may lead rapidly to systemic toxicity and must be treated by a physician.

Skin Contact:

Sulfuric Acid: Severe irritation, burns and ulceration.

Lead Compounds: Not absorbed through the skin.

Eye Contact:

Sulfuric Acid: Severe irritation , burns, cornea damage, and blindness.

Lead Components: May cause eye irritation.

Effects of Overexposure - Acute:

Sulfuric Acid: Severe skin irritation, damage to cornea, upper respiratory irritation.

Lead Compounds: Symptoms of toxicity include headache, fatigue, abdominal pain, loss of appetite, muscular aches and weakness, sleep disturbances and irritability.

Effects of Overexposure - Chronic:

Sulfuric Acid: Possible erosion of tooth enamel, inflammation of nose, throat and bronchial tubes.

Lead Compounds: Anemia; neuropathy, particularly of the motor nerves, with wrist drop; kidney damage; reproductive changes in males and females.

Carcinogenicity:

Sulfuric Acid: The International Agency for Research on Cancer (IARC) has classified "strong inorganic acid mist containing sulfuric acid" as a Category I carcinogen, a substance that is carcinogenic to humans. This classification does not apply to liquid forms of sulfuric acid or sulfuric acid solutions contained within a battery. Inorganic acid mist (sulfuric acid mist) is not generated under normal use of this product. Misuse of the product, such as overcharging, may result in the generation of sulfuric acid mist.

Lead Compounds: Lead is listed as a 2B carcinogen, likely in animals at extreme doses. Proof of carcinogenicity in humans is lacking at present.

Arsenic: Listed by National Toxicology Program (NTP), International Agency for Research on Cancer (IARC), OSHA and NIOSH as a carcinogen only after prolonged exposure at high levels.

Medical Conditions Generally Aggravated by Exposure:

Overexposure to sulfuric acid mist may cause lung damage and aggravate pulmonary conditions. Contact of sulfuric acid with skin may aggravate diseases such as eczema and contact dermatitis. Lead and its compounds can aggravate some forms of kidney, liver and neurologic diseases.

EMERGENCY AND FIRST AID PROCEDURES:

Inhalation:

Sulfuric Acid: Remove to fresh air immediately. If breathing is difficult, give oxygen.

Lead: Remove from exposure, gargle, wash nose and lips; consult physician.

Ingestion:

Sulfuric Acid: Give large quantities of water; do not induce vomiting; consult physician.

Lead: Consult physician immediately.

Skin:

Sulfuric Acid: Flush with large amounts of water for at least 15 minutes; remove contaminated clothing completely, including shoes.

Lead: Wash immediately with soap and water.

Eyes:

Sulfuric Acid and Lead: Flush immediately with large amounts of water for a least 15 minutes; consult physician.

Proposition 65:

Warning: Battery posts, terminals and related accessories contain lead and lead compounds, chemicals known to the State of California to cause cancer and reproductive harm. Batteries also contain other chemicals known to the State of California to cause cancer. Wash hands after handling.

EPA-NC-CE-0000697

VII. PRECAUTIONS FOR SAFE HANDLING AND USE

Spill or Leak Procedures:

Stop flow of material, contain/absorb small spills with dry sand, earth, and vermiculite. Do not use combustible materials. If possible, carefully neutralize spilled electrolyte with soda ash, sodium bicarbonate, lime, etc. Wear acid-resistant clothing, boots, gloves, and face shield. Do not allow discharge of unneutralized acid to sewer.

Waste Disposal Methods:

Spent batteries: Send to secondary lead smelter for recycling.

Place neutralized slurry into sealed containers and handle as applicable with state and federal regulations. Large water-diluted spills, after neutralization and testing, should be managed in accordance with approved local, state and federal requirements. Consult state environmental agency and/or federal EPA.

Handling and Storage:

Store batteries in cool, dry, well-ventilated areas with impervious surfaces and adequate containment in the event of spills. Batteries should also be stored under roof for protection against adverse weather conditions. Separate from incompatible materials. Store and handle only in areas with adequate water supply and spill control. Avoid damage to containers. Keep away from fire, sparks and heat.

Precautionary Labeling:

POISON - CAUSES SEVERE BURNS DANGER - CONTAINS SULFURIC ACID

VIII. CONTROL MEASURES

Engineering Controls:

Store and handle in well-ventilated area. If mechanical ventilation is used, components must be acid-resistant.

Work Practices:

Handle batteries cautiously to avoid spills. Make certain vent caps are on securely. Avoid contact with internal components. Wear protective clothing when filling or handling batteries.

Respiratory Protection:

None required under normal conditions. When concentrations of sulfuric acid mist are known to exceed the PEL, use NIOSH or MSHA-approved respiratory protection.

Protective Gloves:

Rubber or plastic acid-resistant gloves with elbow-length gauntlet.

Eye Protection:

Chemical goggles or face shield.

Other Protection:

Acid-resistant apron. Under severe exposure emergency conditions, wear acid-resistant clothing and boots.

Emergency Flushing:

In areas where sulfuric acid is handled in concentrations greater then 1%, emergency eyewash stations and showers should be provided, with unlimited water supply.

IX. OTHER REGULATORY INFORMATION

NFPA Hazard Rating for Sulfuric Acid:

Flammability (Red) = 0 Reactivity (Yellow) = 2

Health (Blue) = 3 Sulfuric acid is water-reactive if concentrated.

U.S. DOT:

EnerSys batteries that are classified as Nonspillable have been tested and meet the nonspillable criteria listed in CFR 49, 173.159 (d) (3) (i) and (ii).

Nonspillable batteries are excepted from CFR 49, Subchapter C requirements, provided that the following criteria are met:

1. The batteries must be protected against short circuits and securely packaged.
2. Each battery and their outer packaging must be plainly and durably marked "NONSPILLABLE" or "NONSPILLABLE BATTERY".

The exception from CFR 49, Subchapter C translates to no proper shipping name, no hazardous class, no UN number, no packing group and no hazardous labels when transporting a nonspillable battery.

Contact your EnerSys representative for additional information regarding the classification of batteries.

IATA:

EnerSys batteries that are classified as Nonspillable have been tested and meet the nonspillable criteria listed in IATA Packing Instruction 806 and Special Provision A67. Nonspillable batteries must be packed according to IATA Packing Instruction 806.

These batteries are excepted from all IATA regulations provided that the batteries' terminals are protected against short circuits.

Contact your EnerSys representative for additional information regarding the classification of batteries.

IMDG:

EnerSys batteries that are classified as Nonspillable have been tested and meet the nonspillable criteria listed in Special Provision 238. Non-spillable batteries must be packed according to IMDG Packing Instruction P003.

These batteries are excepted from all IMDG code provided that the batteries' terminals are protected against short circuits per PP16.

Contact your EnerSys representative for additional information regarding the classification of batteries.

RCRA:

Spent lead-acid batteries are not regulated as hazardous waste by the EPA when recycled, however state and international regulations may vary.

EPA-NC-CE-0000698

IX. OTHER REGULATORY INFORMATION (Cont.)

CERCLA (Superfund) and EPCRA:

(a) Reportable Quantity (RQ) for spilled 100% sulfuric acid under CERCLA (Superfund) and EPCRA (Emergency Planning Community Right to Know Act) is 1,000 lbs. State and local reportable quantities for spilled sulfuric acid may vary.

(b) Sulfuric acid is a listed "Extremely Hazardous Substance" under EPCRA, with a Threshold Planning Quantity (TPQ) of 1,000 lbs.

(c) EPCRA Section 302 notification is required if 1,000 lbs. or more of sulfuric acid is present at one site. The quantity of sulfuric acid will vary by battery type. Contact your EnerSys representative for additional information.

(d) EPCRA Section 312 Tier 2 reporting is required for batteries if sulfuric acid is present in quantities of 500 lbs. or more and/or if lead is present in quantities of 10,000 lbs. or more.

(e) Supplier Notification: This product contains toxic chemicals, which may be reportable under EPCRA Section 313 Toxic Chemical Release Inventory (Form R) requirements.
If you are a manufacturing facility under SIC codes 20 through 39, the following information is provided to enable you to complete the required reports:

Toxic Chemical	CAS Number	Approximate % by Wt.
Lead	7439-92-1	60
Sulfuric Acid	7664-93-9	10 - 30
* Antimony	7440-36-0	2
* Arsenic	7440-38-2	0.2

If you distribute this product to other manufacturers in SIC Codes 20 through 39, this information must be provided with the first shipment of each calendar year.

The Section 313 supplier notification requirement does not apply to batteries, which are "consumer products".

* Not present in all battery types. Contact your EnerSys representative for additional information.

TSCA:

Ingredients in EnerSys' batteries are listed in the TSCA Registry as follows:

	Components	CAS Number	TSCA Status
Electrolyte:	Sulfuric Acid (H_2SO_4)	7664-93-9	Listed
Inorganic Lead Compound:			
	Lead (Pb)	7439-92-1	Listed
	Lead Oxide (PbO)	1317-36-8	Listed
	Lead Sulfate ($PbSO_4$)	7446-14-2	Listed
	Antimony (Sb)	7440-36-0	Listed
	Arsenic (As)	7440-38-2	Listed
	Calcium (Ca)	7440-70-2	Listed
	Tin (Sn)	7440-31-5	Listed

CAA:

EnerSys supports preventative actions concerning ozone depletion in the atmosphere due to emissions of CFC's and other ozone depleting chemicals (ODC's), defined by the USEPA as Class I substances. Pursuant to Section 611of the Clean Air Act Amendments (CAAA) of 1990, finalized on January 19, 1993, EnerSys established a policy to eliminate the use of Class I ODC's prior to the May 15, 1993 deadline.

EPA-NC-CE-0000699

600 – EH&S PROCEDURES

601 SPDES Requirements

General Information

Three of the company's tunnels, Ravenswood, Hudson Ave, and 11th St are equipped with oil/water separators. The Astoria Tunnel is equipped with a coke filtration bed referred to as the coke pit. 11th St facility is the only facility with an oil water separator system in series with a Mercer filter system. The oil/water separators and coke pit receive sump water discharged by the tunnel de-watering systems. The separators then segregate any content of oil from the water before it is discharged.

This procedure is governed by the State Pollution Discharge Elimination System (SPDES) requirements for the sampling guidelines for discharge water.

Inspection

Weekly visual inspections are conducted on the above referenced equipment to check for any leaking valves/fittings/flanges.

Maintenance

Do to the importance of the above referenced equipment and requirements governed under (SPDES), all oil water separators, mercer filter, coke filter and sumps are cleaned of sediment and oils collected in the filters periodically by trained qualified environmental contractors and documented by outside consultants as per the below schedule:

Maintenance Frequency

	OWS	Mercer Filter	Sump	Coke Filter
11th St. Queens Tunnel	2 mo.	2 mo.	4 mo.	
Hudson Ave. Tunnel	4 mo.		8 mo.	
Astoria Tunnel				5 years.
Ravenswood	3 mo.		6 mo.	

Paper copies of operating documents are uncontrolled and therefore may be outdated. Verify current version prior to use.

EPA-NC-CE-0000700

General Cleaning Procedure

Pump sump down as needed so as to not over flow the sump while doing maintenance on the oil water separator (OWS)/Mercer Filter / Sump. Sump pumps will be shut down after this step.

Lock out/ Tag out sump pumps and OWS/Mercer Filter.
Set up staging area for filters.
Set up splash protection around OWS/Mercer Filter.
Follow confined space procedures.
Remove oil filters and High Pressure Hot Wash.
Remove all sediment in bottom of tank.
Clean out overboard compartment and plunger.
Clean out oil compartment/external oil overflow tank.

Hudson Ave. Oil Water Separator Cleaning Guide

1. Lock out Sump Pumps and Oil Water Separator
    - Open breaker on sump pump panel and tag out.
    - Close inlet valve of OWS and tag out.

2. Set up Staging Area for Filters
    - Place poly on ground where filters will be placed on once washed.

3. Set up Splash Protection Around Oil Water Separator
    - Poly around upper handrails so as to contain any splashing.

4. Follow Confined Space Procedures
    - Contractor to fill out confined space entry forms and conduct air monitoring when entering the OWS tank. (Attachment # 4.)

5. Remove Oil Filters and Hot Wash
    - As filters are removed from the OWS, high pressure hot wash is applied to remove debris from the filter and allowed to drain back into tank. Clean filters are then set on staged poly from step 2.

6. Remove All Sediment from Bottom of Tank/Clean Out Overboard Compartment and Plunger/Cleanout Oil Compartment
    - High pressure and hot wash all said locations and vac suc into tanker truck.

Paper copies of operating documents are uncontrolled and therefore may be outdated. Verify current version prior to use.

11th St. Oil Water Separator/Mercer Filter Cleaning Guide

1. Lock out Sump Pumps and Oil Water Separator/Skimmer/Heating Elements
   - Open breaker on sump pump panel and tag out.
   - Close inlet valve of OWS and inlet valves on both Mercer filter boxes.
   - Mercer Filter Heating Element – Turn breakers off in panel located in head house.
   - Skimmer shut off

2. Set up Staging Area for Filters
   - Place poly on ground where filters will be placed on once washed.

3. Set up Splash Protection Around Oil Water Separator/Mercer Filter
   - Poly around upper handrails so as to contain any splashing.

4. Follow Confined Space Procedures
   - Contractor to fill out confined space entry forms and conduct air monitoring when entering the OWS tank. (Attachment # 4.)

5. Remove Oil Filters and Hot Wash
   - As filters are removed from the OWS, high pressure hot wash is applied to remove debris from the filter and allowed to drain back into tank. Clean filters are then set on staged poly from step 2. Please note that the removal of the Mercer Filter oil filters involves the use of the overhead crane.

6. Remove All Sediment from Bottom of Tank/Clean Out Overboard Compartment and Plunger/Cleanout Oil Compartment/ External Oil Overflow Tank
   - High pressure and hot wash all said locations above and vac suc into tanker truck.

Paper copies of operating documents are uncontrolled and therefore may be outdated. Verify current version prior to use.

Ravenswood Oil Water Separator Cleaning Guide

1. Lock out Sump Pumps and Oil Water Separator
    - Open breaker on sump pump panel and tag out.
    - Close inlet valve of OWS and tag out.

2. Set up Staging Area for Filters
    - Place poly on ground where filters will be placed on once washed.

3. Set up Splash Protection Around Oil Water Separator
    - Poly around upper handrails so as to contain any splashing.

4. Follow Confined Space Procedures
    - Contractor to fill out confined space entry forms and conduct air monitoring when entering the OWS tank. (Attachment # 4.)

5. Remove Oil Filters and Hot Wash
    - As filters are removed from the OWS, high pressure hot wash is applied to remove debris from the filter and allowed to drain back into tank. Clean filters are then set on staged poly from step 2.

6. Remove All Sediment from Bottom of Tank/Clean Out Overboard Compartment and Plunger/Cleanout Oil Compartment
    - High pressure and hot wash all said locations and vac suc into tanker truck.

Cleaning of Tunnel Sumps

11th St. Tunnel

1. Pump sump down ¾ of the way into the oil water separator.
2. Lower pump closest to the floats to the bottom of the sump.
3. Isolate oil water separator and mercer filter by closing isolation valves located on discharge line behind headhouse.
4. Pump remainder of sump liquid into tanker truck via hose connection located on discharge line behind head house.
5. Shut pumps off and complete confine space entry (Attachment 5) paperwork.
6. Contractor now enters into sump to remove sludge/solids via shovels and brooms.
7. Continued water flow into sump is mixed with sump residue and is directed toward the lowered pump and is pumped into connected tanker truck.

Paper copies of operating documents are uncontrolled and therefore may be outdated. Verify current version prior to use.

8. Continue step 7 until sump is satisfactorily cleaned.
9. Return all pumps, valves and piping to normal operation.

Hudson Ave. Tunnel

1. Pump sump down ¾ of the way into the oil water separator.
2. Lower pump closest to the floats to the bottom of the sump.
3. Isolate oil water separator by closing isolation valve located on discharge line of the sump which is connected to oil water separator inlet outside of head house.
4. Pump remainder of sump liquid into tanker truck via hose connection located on discharge line of the sump which is connected to oil water separator inlet outside of head house.
5. Shut pumps off and complete confine space entry (Attachment 5) paperwork.
6. Contractor now enters into sump to remove sludge/solids via shovels and brooms.
7. Continued water flow into sump is mixed with sump residue and is directed toward the lowered pump and is pumped into connected tanker truck.
8. Continue step 7 until sump is satisfactorily cleaned.
9. Return all pumps, valves and piping to normal operation.

Ravenswood Tunnel

1. Pump sump down ¾ of the way into the oil water separator.
2. Lower pump closest to the floats to the bottom of the sump.
3. Isolate oil water separator by closing isolation valve located on discharge line of the sump which is connected to oil water separator inlet inside of head house.
4. Pump remainder of sump liquid into tanker truck via hose connection located on discharge line in head house.
5. Shut pumps off and complete confine space entry (Attachment 5) paperwork.
6. Contractor now to power wash sump and sump walls via power washing equipment from grating elevation.
7. Oil pads used to soak up any remaining oil water in sump and properly disposed of.
8. Return all pumps, valves and piping to normal operation.

SPEDES Facility Alarm Responses

Paper copies of operating documents are uncontrolled and therefore may be outdated. Verify current version prior to use.

Astoria

Coke Filter High Water or High-High Water Alarm:

Response - Upon notification from Gas Control that the High or High-High Water Alarm has been alarmed for the Coke Filter, the "On-Call" Supervisor will take the following steps.

1. Dispatch a crew minimum of 2 mechanics and supervisor to location.
2. Immediately shutdown power to pumps once on location.
3. Physically open "Oil Box Filter Compartment" and visually inspect contents of compartment.
   A. If only excess water has entered the compartment, simply pump contents of compartment into the Coke Filter using a submersible pump and hose.
   B. If Oil is encountered in the "Oil Box Filter Compartment", we immediately check the outfall compartment of the Coke Filter to see if any sheen has entered into it thus notifying us that oil has entered into the waterway. Notification is then given to the "ERC" of our initial findings and an investigation in continued for the source of oil within the tunnel.

11th Street Bklyn.

Mercer Filter/ Oil Water Separator Oil High Alarm:

Response - Upon notification from Gas Control that the Mercer Filter/Oil Water Separator, High Oil Alarm has been alarmed, the "On-Call" Supervisor will take the following steps.

1. Dispatch a crew minimum of 2 mechanics and supervisor to location.
2. Immediately shutdown power to pumps once on location.
3. Visually inspect contents of "Skimmer Overflow".
   A. If water has entered into the Skimmer Overflow, pump contents using a submersible pump and hose into 55 gallon drums within the set up containment. Future disposal through the approved environmental contractor will take place.
   B. If Oil is encountered in the "Skimmer Overflow", we immediately check the discharge outfall to see if any sheen has entered into the waterway. Notification is then given to the "ERC" of our initial findings and an investigation in continued for the source of oil within the tunnel.

Mercer Filter/ Oil Water Separator Water High Alarm:

Response - Upon notification from Gas Control that the Mercer Filter/Oil Water Separator, High Water Alarm has been alarmed, the "On-Call" Supervisor will take the following steps.

1. Dispatch a crew minimum of 2 mechanics and supervisor to location.
2. Immediately shutdown power to pumps once on location.
3. Visually inspect contents of "Skimmer Overflow".
   A. If water has entered into the Skimmer Overflow, pump contents using a submersible pump and hose into 55 gallon drums within the set up containment. Future disposal through the approved environmental contractor will take place.
   B. If Oil is encountered in the "Skimmer Overflow", we immediately check the discharge outfall to see if any sheen has entered into the waterway. Notification is then given to the "ERC" of our initial findings and an investigation in continued for the source of oil within the tunnel.

Hudson Ave.

Oil Water Separator Oil High Alarm:

Paper copies of operating documents are uncontrolled and therefore may be outdated. Verify current version prior to use.

Response - Upon notification from Gas Control that the Oil Water Separator, High Oil Alarm has been alarmed, the "On-Call" Supervisor will take the following steps.

1. Dispatch a crew minimum of 2 mechanics and supervisor to location.
2. Immediately shutdown power to pumps once on location.
3. Visually inspect contents of "Oil Compartment".
   A. If water has entered into the Oil Compartment, pump contents using a submersible pump and hose into 55 gallon drums within the set up containment. Future disposal through the approved environmental contractor will take place.
   B. If Oil has entered into the "Oil Compartment", check the discharge outfall to see if any sheen has entered into the waterway. Notification is then given to the "ERC" of our initial findings and an investigation in continued for the source of oil within the tunnel.

Oil Water Separator Water High Alarm:
Response - Upon notification from Gas Control that the Oil Water Separator, High Water Alarm has been alarmed, the "On-Call" Supervisor will take the following steps.

1. Dispatch a crew minimum of 2 mechanics and supervisor to location.
2. Immediately shutdown power to pumps once on location.
3. Visually inspect contents of "Water Compartment".
   A. If water has entered into the Water Compartment of the Oil Water Separator to the point of overflow, another undesirable media has entered into the system and has caused the specific gravity float to shut the discharge side of the separator and thus contains it within the Oil Water Separator. Further investigation must be given into the source of the non specific media entering into the Oil Water Separator through the tunnel.

Ravenswood Tunnel

Oil Water Separator Oil High Alarm:
Response - Upon notification from Gas Control that the Oil Water Separator, High Oil Alarm has been alarmed, the "On-Call" Supervisor will take the following steps.

1. Dispatch a crew minimum of 2 mechanics and supervisor to location.
2. Immediately shutdown power to pumps once on location.
3. Visually inspect contents of "Oil Compartment".

Paper copies of operating documents are uncontrolled and therefore may be outdated. Verify current version prior to use.

A. If water has entered into the Oil Compartment, pump contents using a submersible pump and hose into 55 gallon drums within the set up containment. Future disposal through the approved environmental contractor will take place.
B. If Oil has entered into the "Oil Compartment", check the discharge outfall to see if any sheen has entered into the waterway. Notification is then given to the "ERC" of our initial findings and an investigation in continued for the source of oil within the tunnel.

Oil Water Separator Water High Alarm:
Response - Upon notification from Gas Control that the Oil Water Separator, High Water Alarm has been alarmed, the "On-Call" Supervisor will take the following steps.

1. Dispatch a crew minimum of 2 mechanics and supervisor to location.
2. Immediately shutdown power to pumps once on location.
3. Visually inspect contents of "Water Compartment".
   A. If water has entered into the Water Compartment of the Oil Water Separator to the point of overflow, another undesirable media has entered into the system and has caused the specific gravity float to shut the discharge side of the separator and thus contains it within the Oil Water Separator. Further investigation must be given into the source of the non specific media entering into the Oil Water Separator through the tunnel.

SPDES Permit

The water discharged from these facilities is subject to effluent limitations and monitoring requirements established by the Department of Environmental Conservation as follows:

Paper copies of operating documents are uncontrolled and therefore may be outdated. Verify current version prior to use.

Tunnel (SPDES#) Expiration Date	**Test**	**Frequency**	**Maximum**
Ravenswood (NY-0201227)	TSS	2 per month	50 ppm
June 28, 2011	oil/grease	2 per month	15 ppm
	pH	monthly	6 - 9
	Flow rate	monthly	21,600 gpd
Hudson Ave (NY-0005151)	TSS	2 per month	100 ppm(daily)
April 30, 2011	oil/grease	2 per month	30 ppm(Mth Avg)
	Flow rate	monthly	4,400 gpd
Astoria (NY-0201219)	TSS	2 per month	50 ppm
January 31, 2012	oil/grease	2 per month	15 ppm
	pH	monthly	6 – 9
	flow rate	monthly	18,700 gpd
11th St (NY-0201138)	TSS	1 per month	50 ppm
February 29, 2012	oil/grease	1 per month	15 ppm
	Flow rate	monthly	108,000 gpd
	BTEX	annually	0.10 Mg/L

NOTES: TSS – total amount of suspended solids
BTEX – Benzene, Toluene, Ethyl Benzene, and XyleneReporting Requirements
Reports to the DEC are done by:
Yi-Chang Shao – Environmental Services, 4 Irving Place (212) 460-4363

Revision

1. Clarified sampling requirements; removed inspection steps since they are addressed in the 200 series Tunnel Handbook

Paper copies of operating documents are uncontrolled and therefore may be outdated. Verify current version prior to use.

EPA-NC-CE-0000708

DEED 4616 PAGE 406

STATUTORY FORM CC

3528—Bargain and Sale Deed. With Covenant against Grantor.—(Corporation)
Title Guarantee and Trust Company

H42

THIS INDENTURE,

made the fifteenth day of September, nineteen hundred and forty-two, between BOHACK REALTY CORPORATION, a corporation organized under the laws of the State of New York, having its principal place of business at Metropolitan and Flushing Avenues, Borough of Queens, City and State of New York, party of the first part, and NEW YORK AND QUEENS ELECTRIC LIGHT AND POWER COMPANY, a corporation organized under the laws of the State of New York, having its principal place of business at 28-19 Bridge Plaza North, Long Island City, Borough of Queens, City and State of New York, party of the second part:

WITNESSETH, that the party of the first part, in consideration of ONE HUNDRED ($100.00) dollars, lawful money of the United States, and other good and valuable consideration paid by the party of the second part, does hereby grant and release unto the party of the second part, its successors and assigns forever,

ALL THAT CERTAIN plot, piece or parcel of land situate, lying and being in the Second Ward of the Borough of Queens, City of New York, County of Queens, and State of New York, bounded and described as follows:

BEGINNING at the Northwesterly corner of Lot No. 34 on a certain map entitled "Map of Joyceville, situate in the Town of Newtown, Queens Co., L. I., belonging to Susan A. Joyce", filed in the Office of the Clerk of the County of Queens on October 20, 1870 as Map No. 669, which point of beginning is at the intersection of the division line between premises herein described and land formerly of Francis T. White; running thence along said land formerly of Francis T. White, North forty-eight degrees fifty-three minutes forty seconds East one hundred and seventy feet and fifty-two one-hundredths of a foot to land now or formerly of National Foundry Company of New York Inc.; thence along said land now or formerly of National Foundry Company of New York Inc., South forty-four degrees twenty-four minutes twenty seconds East fifty-three feet and seventy-one one-hundredths of a foot; thence still along said land now or formerly of National Foundry Company of New York Inc. on a curve to the right having a radius of two thousand and six feet and eight one-hundredths of a foot, fifty-four feet and eighty-five one-hundredths of a foot to lands of the Long Island Railroad Company; thence along the land of The Long Island Railroad Company the following courses and distances: South thirty-eight degrees twenty minutes forty seconds West fifty-one feet; South forty-six degrees five minutes forty seconds West one hundred and one feet and forty-nine one-hundredths of a foot; South eighty-three degrees fifty minutes forty seconds West eighty-seven feet and fifty-five one-hundredths of a foot to land formerly of said Francis T. White; thence along said land formerly of Francis T. White, North forty-four degrees twenty-four minutes twenty seconds West thirty-five feet and ninety-four one-hundredths of a foot to the point or place of beginning.

BEING THE SAME PREMISES which The Long Island Railroad Company by Deed dated January 19, 1932, and recorded in the Office of the Register of the County of Queens, in Liber No. 3557 of Conveyances at page 351, on February 29, 1932, granted and conveyed unto Bohack Realty Corporation in fee.

EPA-NC-CE-0000709

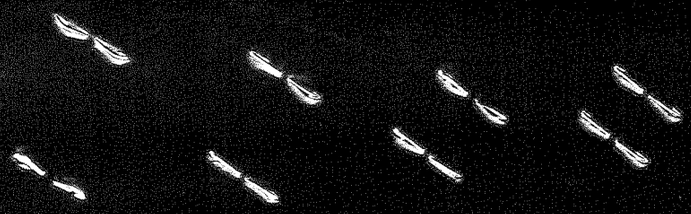

together with the appurtenances and all the estate and rights of the party of the first part in and to said premises.

TO HAVE AND TO HOLD the premises herein granted unto the party of the second part, its successors and assigns forever. PROVIDED always and this conveyance is made on condition that a right or means of ingress, egress or passageway to or from the land hereby conveyed is not hereby granted, specifically or by implication, and that the said party of the first part shall not and will not be liable or obliged to obtain for the said party of the second part, its successors or assigns, such means of ingress, egress or passageway, and also that the said party of the second part, its successors or assigns, will obtain at its or their own cost and expense, such right

EPA-NC-CE-0000710

or means of ingress, egress or passageway to and from the land hereby conveyed as it or they may require.

AND the party of the first part covenants as follows:

First.—That it has not done or suffered anything whereby the said premises have been incumbered in any way whatever.

Second.—That in compliance with Section 13 of the Lien Law, it will receive the consideration for this conveyance and will hold the right to receive such consideration as a trust fund to be applied first for the purpose of paying the cost of the improvement and that it will apply the same first to the payment of the cost of the improvement before using any part of the total of the same for any other purpose.

IN WITNESS WHEREOF, the party of the first part has caused its corporate seal to be hereunto affixed and these presents to be signed by its duly authorized officer the day and year first above written.

BOHACK REALTY CORPORATION

By: Henry C. Bohack
President

BOHACK REALTY CORPORATION N.Y. SEAL 1923

STATE OF NEW YORK }
COUNTY OF NEW YORK } ss.:

On the 15th day of September, one thousand nine hundred and forty-two, before me came Henry C. Bohack, to me known, who, being by me duly sworn, did depose and say that he resides at 87-46 98th St., Woodhaven, Queens in New York City, N.Y.; that he is the President of Bohack Realty Corporation, the corporation described in, and which executed, the foregoing instrument; that he knows the seal of said corporation; that the seal affixed to said instrument is such corporate seal; that it was so affixed by order of the Board of Directors of said corporation, and that he signed his name thereto by like order.

Dorothy Dressel

DOROTHY DRESSEL, Notary Public
Qns. Co. Clk's No. 3746, Reg. No. 4186
N. Y. Co. Clk's No. 798, Reg. No. 4D459
Commission Expires March 30, 1944

EPA-NC-CE-0000711

STATUTORY FORM BB
3526—Bargain and Sale Deed. Without Covenant against Grantor.—(Corporation)
Title Guarantee and Trust Company

E-45

THIS INDENTURE, made the ninth day of April nineteen hundred and forty-six, between CONSOLIDATED EDISON COMPANY OF NEW YORK, INC., (successor by statutory merger to New York and Queens Electric Light and Power Company),

a corporation organized under the laws of the State of New York, with its principal office at No. 4 Irving Place, Borough of Manhattan, City, County and State of New York,

, party of the first part,

and

BOHACK REALTY CORPORATION, a New York corporation with its principal offices at 48-25 Metropolitan Avenue, Borough of Queens, City, County and State of New York,

, party of the second part:

WITNESSETH, that the party of the first part, in consideration of One Hundred ($100) and more - dollars, lawful money of the United States, - paid by the party of the second part, does hereby grant and release unto the party of the second part, its successors and assigns forever,

ALL that certain lot, piece or parcel of land, situate, lying and being in the Second Ward, Borough of Queens, City of New York, County of Queens, State of New York, bounded and described as follows:

BEGINNING at the northwesterly corner of lot numbered 34 as shown and laid out on a certain map entitled, "Map of Joyceville, situate in the Town of Newtown, Queens County, L.I., belonging to Susan A. Joyce, surveyed March 1870, laid out into lots September 1870 by Cornelius Hyatt," and filed in the Office of the Clerk, now Register, of the County of Queens, October 20-1870 as Map No. 669 and which said point of beginning is at the intersection of the division line between premises herein described and land formerly of Francis T. White; running thence along said land formerly of Francis T. White north 49 degrees 46 minutes 40 seconds east 170.50 feet to land now or formerly of National Foundry Company of New York, Inc.; running thence along said land now or formerly of National Foundry Company of New York, Inc. south 43 degrees 31 minutes 20 seconds east 53.71 feet; thence still along said land now or formerly of National Foundry Company of New York, Inc. on a curve bearing to the right and having a radius of 2006.08 feet a distance of 54.85 feet to land of the Long Island Railroad Company; thence along said land of the Long Island Railroad Company the following courses and distances: south 39 degrees 13 minutes 40 seconds west 51 feet; south 46 degrees 58 minutes 40 seconds west 101.49 feet; south 84 degrees 43 minutes 40 seconds west 87.55 feet to land now or formerly of Francis T. White and running thence along said land formerly of said Francis T. White north 43 degrees 31 minutes 20 seconds west 35.94 feet to the point or place of beginning.

TOGETHER with all the right, title and interest, if any, of the party of the first part, of, in and to any land lying in the bed of any street, road or avenue, open or proposed, in front of or adjoining said premises, to the center line thereof.

BEING the same premises conveyed to New York and Queens Electric Light and Power Company by Bohack Realty Corporation by deeds recorded in Liber 4616, page 406, and Liber 4676, page 439.

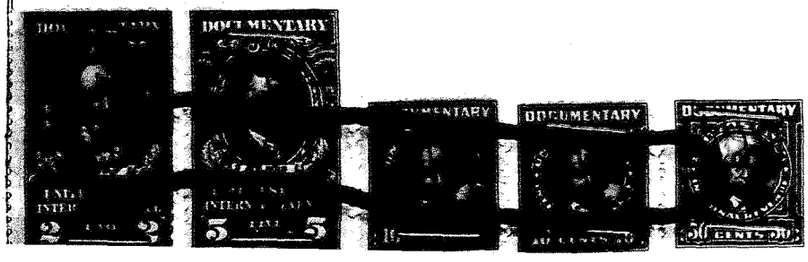

together with the appurtenances and all the estate and rights of the party of the first part in and to said premises.

TO HAVE AND TO HOLD the premises herein granted unto the party of the second part, its successors and assigns forever,

PROVIDED always and this conveyance is made on condition that a right or means of ingress, egress, or passageway to or from the land hereby conveyed is not hereby granted, specifically or by implication, and that the said party of the first part shall not and will not be liable or obliged to obtain for the said party of the second part, its successors or assigns such means of ingress, egress, or passageway,

assigns, will obtain at its or their own cost and expense, such right or means of ingress, egress or passageway to and from the land hereby conveyed as it or they may require.

SUBJECT TO: 1. The state of facts shown on the survey made by William L. Savacool, C.E. & C.S., dated August 3-1942, ~~copy of which is attached hereto~~, and to any state of facts an accurate survey would show since said date.

2. Building restrictions and regulations in resolution or ordinance approved by the Board of Estimate of the City of New York on June 28-1940, and amendments and additions thereto in force as of the date hereof.

The party of the first part, in compliance with Section 13 of the Lien Law, covenants that it will receive the consideration for this conveyance and will hold the right to receive such consideration as a trust fund to be applied first for the purpose of paying the cost of the improvement and that it will apply the same first to the payment of the cost of the improvement before using any part of the total of the same for any other purpose.

IN WITNESS WHEREOF, the party of the first part has caused its corporate seal to be hereunto affixed and these presents to be signed by its duly authorized officer the day and year first above written.

CONSOLIDATED EDISON COMPANY OF NEW YORK, INC

Asst. Sec.

by John Stilwell
John Stilwell, Vice President

ATTEST:

C. M. Breidenbach, Jr.
Assistant Secretary

STATE OF NEW YORK)
COUNTY OF NEW YORK) ss.:

On the 9th day of April, one thousand nine hundred and forty-six, before me came John Stilwell, to me known, who, being by me duly sworn, did depose and say that he resides at 1121 North Broadway, in Yonkers, New York; that he is a Vice President of Consolidated Edison Company of New York, Inc. the corporation described in and which executed the foregoing instrument; that he knows the seal of said corporation; that the seal affixed to said instrument is such corporate seal; that it was so affixed by order of the Board of Trustees of said corporation, and that he signed his name thereto by like order.

DAVID [illegible]

14-3

EPA-NC-CE-0000714

RESERVE THIS SPACE
FOR USE OF RECORDING OFFICE

COMPARED

LIBER

PAGE

No.

CONSOLIDATED EDISON COMPANY
OF NEW YORK, INC.
(successor by statutory
merger to New York and
Queens Electric Light and
Power Company)

TO

BOHACK REALTY CORPORATION

D E E D

THE LAND AFFECTED BY THE WITHIN INSTRUMENT LIES IN BLOCK 1968,
IN SECTION 8 ON THE LAND MAP
OF THE COUNTY OF Queens.

TITLE GUARANTEE AND TRUST COMPANY

OFFICES:

176 BROADWAY, MANHATTAN
175 REMSEN STREET, BROOKLYN
160-08 JAMAICA AVENUE, JAMAICA
6 EAST 45TH STREET, MANHATTAN
370 EAST 149TH STREET, BRONX
BRIDGE PLAZA NORTH, L. I. CITY
MINEOLA, LONG ISLAND
WHITE PLAINS, N. Y.
RIVERHEAD, LONG ISLAND
56 BAY STREET, ST. GEORGE, S. I.

EPA-NC-CE-0000715

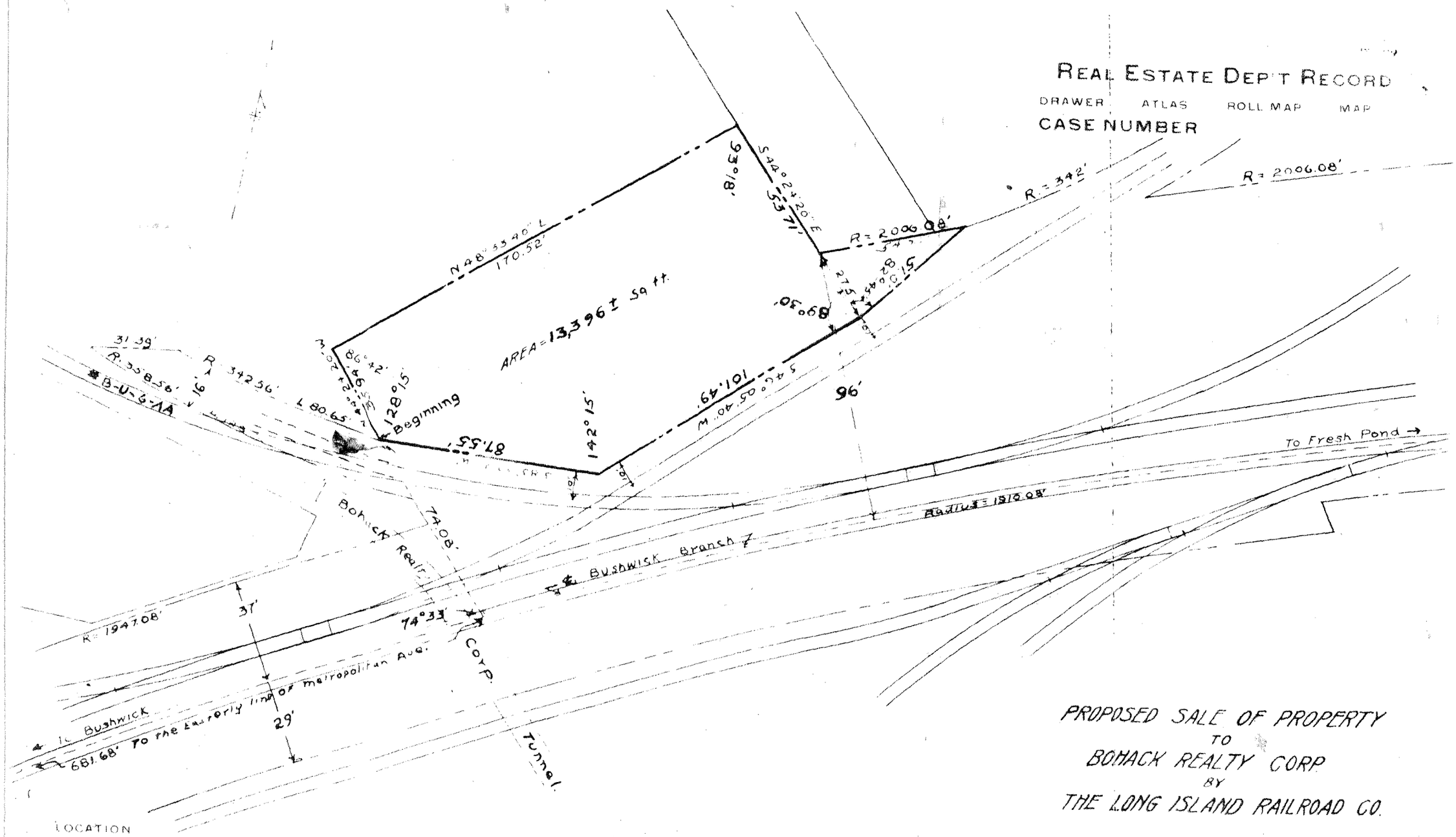

EPA-NC-CE-000716

STATE OF NEW YORK
DEPARTMENT OF ENVIRONMENTAL CONSERVATION

In the Matter of the Alleged Violations of Articles 17
and 27 of the New York State Environmental Conservation Law
and Article 12 of the Navigation Law and of the
regulations promulgated pursuant thereto at
Parts 370, et seq., 610, et seq., 700, et seq. and 750, et seq.
of Title 6 and Part 30, et seq., of Title 17
of the Official Compilation of Codes, Rules and Regulations
of the State of New York,

- by -

Consolidated Edison Company of New York, Inc.,

Respondent.

DEC Index No. D2-0003-96-12, et seq.

ORDER ON CONSENT
(Supplementing
Order on Consent Dated November 4, 1994
DEC Index No. R2-1023-88-06, et seq.)

TABLE OF CONTENTS

ARTICLE I.	PENALTY	5
ARTICLE II.	COMPLIANCE SCHEDULES	6
ARTICLE III.	SUBMITTAL REVIEW AND APPROVAL	6
ARTICLE IV.	STIPULATED PENALTIES	10
ARTICLE V.	DISPUTE RESOLUTION	12
ARTICLE VI.	ACCESS	14
ARTICLE VII.	FORCE MAJEURE	17
ARTICLE VIII.	FAILURE, DEFAULT AND VIOLATION OF ORDER	17
ARTICLE IX.	SUMMARY ABATEMENT	17
ARTICLE X.	INDEMNIFICATION	17
ARTICLE XI.	EFFECTIVE DATE	17
ARTICLE XII.	MODIFICATION	18
ARTICLE XIII.	COMMUNICATIONS	18
ARTICLE XIV.	RESERVATION OF RIGHTS	19
ARTICLE XV.	RELEASE	20
ARTICLE XVI.	BINDING EFFECT OF ORDER	21
ARTICLE XVII.	FORMAL TERMS	21

APPENDIX 1 - Environmental Benefit and Restoration Projects 1
APPENDIX 2 - Environmental Monitors 4
APPENDIX 3 - Fuel Oil Pipeline Upgrades 7
APPENDIX 4 - Facility Outfall Surveys 22
APPENDIX 5 - MOSF Underground Piping Systems 28

EPA-NC-CE-0000765

STATE OF NEW YORK
DEPARTMENT OF ENVIRONMENTAL CONSERVATION

In the Matter of the Alleged Violations of Article 17 of the New York State Environmental Conservation Law and Article 12 of the Navigation Law and of the regulations promulgated pursuant thereto at Parts 610, et seq., 700, et seq. and 750, et seq. of Title 6 and Part 30, et seq., of Title 17 of the Official Compilation of Codes, Rules and Regulations of the State of New York,	ORDER ON CONSENT
- by -	DEC Index No.
	D2-0001-96-11
Consolidated Edison Company of New York, Inc., et seq.	
Respondent.	

WHEREAS,

1. The New York State Department of Environmental Conservation ("Department") is responsible for the enforcement of the Environmental Conservation Law ("ECL") of the State of New York, and Title 6 of the Official Compilation of the Codes, Rules and Regulations of the State of New York ("6 NYCRR") and any Orders issued thereunder.

2. The Department is and has been the agency of the State of New York having sole and, since 1985 as successor to the New York State Department of Transportation, exclusive jurisdiction pursuant to Article 17, Title 10 of the ECL, Section 12 of Chapter 35 of the Laws of 1985, Article 12 of the Navigation Law ("NL") and 6 NYCRR Parts 610, et seq. and 17 NYCRR Part 30, et seq., to regulate the transportation and storage of petroleum products within the State of New York.

3. It is the responsibility of the Department to conserve, improve and protect New York's natural resources and environment and control water, land and air pollution

in order to enhance the health, safety and welfare of the people of the State and their overall economic and social well-being.

4. Consolidated Edison Company of New York, Inc. ("Con Edison"), is a New York Corporation with offices at 4 Irving Place in the City, County and State of New York and a person as that term is defined in NL § 172 and ECL §§ 17-0105, 25-0103 and 27-0901.

5. Con Edison owns and operates Major Oil Storage Facilities ("MOSFs"), Petroleum Bulk Storage Facilities ("PBSs") and other facilities as described in Appendix G of the comprehensive order on consent executed on November 4, 1994 and modified on March 27, 1995.

6. The comprehensive 1994 order requires Con Edison to implement schedules including the following: i) a comprehensive audit program including an independent compliance audit, an environmental management systems evaluation and a self auditing program; ii) remediation of over 50 sites; iii) funding of four environmental monitors; and iv) development and implementation of best management practices plans for its fuel oil pipelines, di-electric cable system, major onshore petroleum storage facilities and facility pollutant discharge systems. Con Edison has made significant progress toward completing the requirements of the comprehensive 1994 order.

7. Con Edison has developed and is implementing environmental projects that exceed the requirements of the comprehensive 1994 order. In developing and implementing an "environmental excellence" program Con Edison has: updated and distributed its corporate environmental policy; established an environmental committee of the board of trustees; established an environmental and safety committee of senior executives; elevated environmental affairs to the vice president level and hired an experienced outsider; developed an environmental awareness training program; hired additional environmental personnel; incorporated environmental related factors into management and employee performance evaluations; expanded the role of the law department in environmental matters; formed an environmental auditing group to perform in-house environmental compliance audits; developed and promulgated over 100

EPA-NC-CE-0000767

Corporate Environmental Procedures and a similar number of General Environmental Instructions which provide hands-on guidance for implementing the Environmental Procedures; installed a computerized incident tracking and reporting system (E2MIS); initiated a series of root cause analyses to discover trends and apply effective corrective actions; developed compliance plans for major facilities; appointed over 70 environmental managers to assist operation's management in environmental compliance and excellence programs and established environmental goals for each Company Department.

8. This Order on Consent is a supplement to the comprehensive Order on Consent executed on November 4, 1994 and reflects Con Edison's policy of open communications and cooperation with the Department and the Company's willingness to commit, through the mechanism of an Order on Consent, to programs that will help achieve full compliance with applicable environmental laws and regulations and also advance the Company's goal of demonstrating leadership land excellence in environmental protection.

9. Despite Con Edison's commitment to full compliance with environmental laws and regulations, and to environmental excellence, and despite the progress the Company has made toward attaining these goals, since November 4, 1994, Con Edison has:

(a) discharged petroleum products into the environment and failed to immediately cntain such discharges. Such discharges include the following events:

(i) DEC spill no. 9411975 where approximately 39,580 gallons of #6 fuel oil was released on December 7, 1994, from an underground pipeline during the transfer of oil from the Rainey Tank Farm to the #30 boiler.

(ii) DEC spill no. 9510743 where approximately 10,000 gallons of #6 fuel oil was released from Con Edison's No. 3 underground fuel oil pipeline on November 27, 1995. As the result of this spill, Con Edison decided to permanently retire the No. 3 fuel oil pipeline.

EPA-NC-CE-0000768

(iii) DEC spill no. 9514484 where 7,546 gallons of #4 fuel oil was released on February 12, 1996, from Con Edison's four (4) inch No. 5 return line which had not been inspected and repaired as required by the comprehensive 1994 order. Subsequent to this release Con Edison replaced the No. 5 fuel oil pipeline and the four (4) inch return line with a new underground fuel oil pipeline constructed of fiber reinforced plastic pipe enclosed in a steel casing made of steel pipe and

(iv) DEC spill no. 9610242 where approximately 4,000 gallons of low pour #6 fuel oil was released from Con Edison's No. 3 underground fuel oil pipeline on November 18, 1996. This release occurred while implementing measures to establish the integrity of the line prior to removing all oil from it with a "cleaning pig".

(b) During the period from May 16, 1995 to November 29, 1995, Con Edison exceeded the SPDES Permit No. NY 005193 limit of 65 parts per trillion of poly chlorinated biphenyls (PCBs) at outfall 004-M of the Rainey Tank Farm at Ravenswood Generating Station a total of six times. In response to the foregoing exceedances, Con Edison installed a carbon filter after its oil/water separator to eliminate the potential for any future PCB violations. Con Edison will keep the carbon filter and existing oil/water separator in service as part of its treatment process for this discharge.

(c) During the period of November 1995 to April 1996, the Ravenswood Steam Plant discharged from its floor drain system to the East River. Con Edison had not previously sought or secured authorization to discharge floor drain wastes from the Ravenswood Steam Plant to the waters of the State of New York.

(d) During the period from January 1, 1995 through January 23, 1996, Con Edison illegally stored more than 250,000 gallons of hazardous waste identified at 6 NYCRR §371.4(e) in an unpermitted area of the Astoria Generating Station in violation of 6 NYCRR §373-1.2 and without secondary containment in violation of [6 NYCRR § 373-2.9(f)(1)].

(e) During the period from September 1992 to April 18, 1997 Con Edison illegally transported hazardous wastes from street locations throughout the city to

EPA-NC-CE-0000769

Central Collection Facilities (Flush Truck Facilities) without using the prescribed hazardous waste manifest form in violation of 6 NYCRR § 372.2(b)(1).

(f) In September 1996, Con Edison engaged the services of an unqualified lead abatement contractor which resulted in the following:

(i) improper disposal of hazardous wastes in violation of 6 NYCRR §372.2(a)(8)(ii)(a);

(ii) release of hazardous wastes to the East River in violation of 6 NYCRR §373-3.3(b);

(iii) a container accumulating hazardous wastes was stored in a manner causing it to lead in violation of 6 NYCRR §373-3.9(d)(2);

(iv) hazardous waste was transported without a hazardous waste manifest in violation of 6 NYCRR §372.2(b)(5)(i); and

(v) hazardous waste was transported by an unpermitted transporter in violation of 6 NYCRR §372.2(b)(5)(ii)(a).

(g) On May 21, 1997 Con Edison reported to the Department that a barge transporting corrosive wastes was moored at the Astoria Facility for more than ten days in violation of 6 NYCRR §373-1.1(d)(1)(xv).

10. Con Edison hereby waives its right to a hearing with respect to this matter in a manner provided for by law and consents to the issuance of this Order and agrees to be bound by the terms, provisions and conditions contained herein.

NOW, THEREFORE, having considered this matter and being duly advised, **IT IS ORDERED THAT:**

ARTICLE I. PENALTY

1. Con Edison shall pay the amount of three hundred eighty five thousand dollars ($385,000.00) to the Department within thirty (30) days of the effective date of this Order by certified checks or money orders made payable as follows: one hundred thousand dollars ($100,000.00) to "Marine Resources Account of the Conservation Fund" and two hundred eighty five thousand ($285,000.00) to "Department of Environmental

EPA-NC-CE-0000770

Conservation" and delivered to the Department's offices, 50 Wolf Road, Albany, NY 12233-5550, Attn: Joseph M. Kowalczyk, Esq.

2. With regard to any penalty due pursuant to this Order which is not paid by the specified due date, Con Edison shall be liable for and shall pay interest from the due date at the rate specified by the New York Civil Practice Law and Rules for interest on a judgment.

3. In the event that Con Edison fails to pay any penalty due pursuant to this order by the date payment is due, this Order together with a notice of noncompliance specifying the amount due may be filed and enforced by trhe Department as a civil judgment pursuant to Civil Practice Law and Rules Article 50, *et seq.*, for the total penalty, including interest, in the amount set forth in the notice of noncompliance, in the State of New York and in any other jurisdiction(s) in which Con Edison is authorized to do business, does business or has any assets, without the need for any further proceeding whatsoever.

ARTICLE II. COMPLIANCE SCHEDULES

Con Edison shall implement the compliance schedules incorporated herein as Appendices in accordance with the terms and schedules provided for in this Order.

ARTICLE III. SUBMITTAL REVIEW AND APPROVAL.

A. Unless otherwise provided, whenever the Department's review and approval is required under the terms of this Order, including the Appendices attached hereto, with respect to any document, plan or other required submission (hereinafter, "Submittal"), the following provisions will apply:

1. Should Con Edison fail to receive any notification due from the Department within the time provided for herein, Con Edison shall write to the Department to determine whether the Department intends to comment on the Submittal or Revised Submittal in question, and wait fifteen (15) days for a response to that letter, before undertaking any of the activities described in and proposed by that Submittal or Revised Submittal.

2. Within sixty (60) days after receipt of a Submittal, the Department will determine if it fulfills the terms of this Order and will provide written notification to Con Edison of its approval or disapproval of the Submittal.

3. In the event that the Department disapproves any Submittal, it will state the reasons for such disapproval with sufficient particularity so as to allow Con Edison to remedy any alleged deficiency.

4. When any Submittal is disapproved by the Department, Con Edison shall submit a revision to such document, plan or other submission ("Revised Submittal") within thirty (30) days of its receipt of the Department's notice of disapproval, or such other reasonable period as the Department may provide upon its own volition or upon written request by Con Edison. Such Revised Submittal shall address each deficiency noted in the Department's notice.

5. Within thirty (30) days of receipt of any Revised Submittal, the Department will review the Revised Submittal and determine if it fulfills the terms of this Order and will provide written notification to Con Edison of its determination that it is approved, disapproved or approved conditioned upon such modifications as may be specified by the Department to make the Revised Submittal approvable.

(a) The Department will disapprove and will not approve a Revised Submittal with conditions if any changes required previously in a notice of disapproval pursuant to ¶A(3) of this Article were not made in the Revised Submittal or substantive or material modifications are required to make the Revised Submittal acceptable.

(b) In the event the Department disapproves any Revised Submittal or approves a Revised Submittal conditioned upon modifications and Con Edison fails to accept the modifications sought by the Department within ten (10) days after its receipt of the Department's written notification, Con Edison shall be considered to be in violation of the terms of this Order, without prejudice to Con Edison's right to contest such determination in accordance with **Article V [DISPUTE RESOLUTION]** of this Order.

6. When the Department approves any Submittal or Revised Submittal, Con Edison shall undertake any actions or activities required under or set forth in the approved Submittal or Revised Submittal, pursuant to the time schedule(s) contained therein.

B. Whenever the Department's review or review and comment (but not approval) is provided for under the terms of this Order, Con Edison may modify the Submittal in accordance with the Department's comments, but shall not be deemed to be in non-compliance with this Order if it does not do so.

C. Either the Department or Con Edison may request that the other party agree to an extension of the time to submit or comment upon a Submittal or Revised Submittal. If the other party agrees to the requested extension, such extension will be memorialized in writing by the Department's Regional Director for Region 2 and by Howard Somers or such other persons designated by Mr. Somers for Con Edison, without the need for a formal modification pursuant to **Article XII [MODIFICATION]** of this Order, unless the requested extension, together with any prior extensions, would postpone a Major Milestone Event by more than sixty (60) days.

D. With respect to any activities required by this Order the completion of which requires approval by a governmental entity other than the Department ("Other Approval");

1. Each time that Con Edison makes a submission or otherwise notifies the Department with respect to such activities, Con Edison shall advise the Department of the Other Approval, and shall provide therewith:

(a) its best estimate at that time of how long the process of obtaining the Other Approval may take;

(b) a description of the steps Con Edison has taken and proposes to take in order to obtain the Other Approval at the earliest possible time; and

(c) its best estimate at that time of the effect, if any, that any anticipated delay in obtaining the Other Approval may have upon Con Edison's commencement or completion of activities governed by this Order.

2. Any schedule established by or pursuant to this Order shall be deemed amended to allow Con Edison sufficient time to secure any necessary Other Approval and to require commencement of the activities for which such Other Approval is needed within thirty (30) days after Con Edison obtains such Other Approval or within the established schedule, whichever is later, and to allow corresponding additional time periods for commencement and completion of other required activities affected by the issuance of the Other Approval.

3. No formally promulgated Modified Order on Consent will be necessary for an extension due solely to the approval processes of other governmental entities.

4. Whenever the Department determines that an extension to any schedule is warranted pursuant to this Paragraph, the respective project managers for the Department and Con Edison will both sign a simple instrument that reflects the extent of the extension.

5. For purposes of this Paragraph, with respect to Con Edison's conduct relative to obtaining any Other Approval, Con Edison shall be held to the same standard as the standard to which it is held relative to the Department and others, as established by **Article III [STIPULATED PENALTIES]**, and **Article VI [ACCESS]**, ¶B of this Order, and a failure to satisfy a governmental entity's requirements for the issuance of any such Other Approval in a timely and good faith manner shall constitute grounds for the Department's refusing to recognize delays occasioned by such governmental entity's approval process as justification for the extension of any schedules established by this Order or the Appendices annexed hereto; provided however, that nothing in this paragraph or this Order shall be construed as obligating Con Edison to accede to any requirements, demands or conditions of a governmental entity that are arbitrary, capricious or otherwise unlawful.

ARTICLE IV. STIPULATED PENALTIES.

A. Failure to Comply Defined.

For purposes of this Article, with respect to activities other than Submittals or Revised Submittals, "fail to comply" or "failure to comply" shall mean the failure by Con Edison to perform a specified act in the manner required by this Order by the date required by this Order or any approved work plan, schedule or protocol. With respect to Submittals and Revised Submittals, the term "fail to comply" or "failure to comply" shall mean the failure by Con Edison to submit an original or revised document within the time limits set forth in or established pursuant to this Order and submission of a document that is of such poor quality as not to qualify as a good faith submission.

B. Classification of Failure to Comply Events.

1. The dates established by this Order and the Appendices hereto by which Con Edison must take, commence or complete required activities are classified as Major Milestone Events, Interim Milestone Events and Other Events, those which are Major or Interim Milestone Events being designated specifically, all others being Other Events.

2. Except for conceptual compliance plans, each work plan, schedule or, if appropriate, protocol to be submitted by Con Edison shall propose one (1) Major Milestone Event per work plan, schedule or protocol and at least one (1) Interim Milestone Event per six-month time period set forth in such work plan, schedule or protocol and may designate other, appropriate compliance dates as Other Events. Such proposed classifications shall be subject to Department approval. As part of its approval of each work plan, schedule or protocol, the Department may in its discretion modify Con Edison's proposed classification of Major Milestone, Interim Milestone and Other Events and shall notify Con Edison of such modification at the same time that it transmits its notice of approval of such work plan, schedule or protocol. Once the Department approves such work plan, schedule or protocol, the classification of Events as approved or modified by the Department shall become part of the approved work plan, schedule or protocol.

C. Imposition of Penalties for Failures to Comply.

1. In the event that Con Edison fails to comply with a compliance date established by or pursuant to this Order, the following stipulated penalties shall be paid by Con Edison:

Event	Period of Non-Compliance	Penalty Per Day
Major Milestone	Day 1-30	$1,500.00
	Day 31-60	$3,000.00
	Day 61 and thereafter	$7,500.00
Interim Milestone	Day 1-15	$ 750.00
	Day 16-30	$1,000.00
	Day 31-60	$1,500.00
	Day 61 and thereafter	$3,000.00
Other	Day 1-30	$ 250.00
	Day 31-60	$ 500.00
	Day 61 and thereafter	$1,000.00

2. Penalties begin to accrue on the day that failure to fulfill any obligation required under this Order occurs, and shall continue to accrue until Con Edison either performs the required activities or completes corrective action satisfactory to the Department. In the event that the Department determines that Con Edison has failed to comply with any term of this Order or any approved work plan, schedule or protocol, the Department will serve upon Con Edison a Notice of Failure to Comply which will set forth the nature of the failure to comply and the calculation of the stipulated penalties due. Within twenty-one (21) days after receipt of a Notice of Failure to Comply, Con Edison shall deliver the full stipulated penalty amount due to the Department, unless Con Edison pursues its rights to contest the penalty assessment as described hereafter in **Article V [DISPUTE RESOLUTION]** of this Order. In the event that Con Edison does not pay the stipulated penalty within such 21-day period and does not contest the penalty

assessment, then this Order together with the Notice of Failure to Comply may be filed and enforced as a confession of judgment for the total penalty amount set forth in the Notice of Failure to Comply plus statutory interest.

3. Additional stipulated penalties may be assessed by the Regional Director (Region 2) in accordance with the provisions of **Article V [DISPUTE RESOLUTION]**, ¶C(5) of this Order.

ARTICLE V. DISPUTE RESOLUTION.

A. Applicability and Effect.

If Con Edison either fails in a Revised Submittal to address the Department's comments to the Department's satisfaction, or refuses to undertake or complete any measures required by the Department pursuant to this Order, then Con Edison shall be in violation of this Order unless it first has invoked the dispute resolution mechanism established by this Article or commenced a proceeding pursuant to Article 78 of the Civil Practice Law and Rules ("Article 78"); provided, however, that invoking the provisions of this Article shall not toll or suspend either Con Edison's obligations or the accrual of stipulated penalties;

1. Parties to Meet and Confer.

In the event that a dispute arises between Con Edison and the Department with respect to any matter specified in ¶A of this Article or with respect to other matters relating to Con Edison compliance with the requirements of this Order, the parties shall confer and endeavor in good faith to resolve any differences that may exist. Con Edison shall request such a meeting by serving a written request therefor in the manner provided by **Article XIII [COMMUNICATIONS]** ¶(B)(1) of this Order within five (5) days of Con Edison's receipt of the Department's Notice of Noncompliance, Disapproval, or Violation or other Department Notice or Demand that Con Edison wishes to dispute. The parties shall attempt to meet and confer within five (5) days of the Department's receipt of Con Edison's written request. If, after conferring together in good faith, the parties are unable to resolve such differences, the matter shall be resolved in accordance with ¶C of this Article or Con Edison may commence an Article 78 proceeding, at its option within 30

EPA-NC-CE-0000777

days of the Department's determination and Con Edison hereby expressly waives its right to the four (4) month period provided in CPLR § 217 for commencing a review of an agency determination.

B. Procedure for Non-Article 78 Resolution if Parties Cannot Agree.

1. Within five (5) business days after the parties have met and conferred as provided by ¶B of this Article, Con Edison may make a written request for an opportunity to meet with the Regional Director of Region 2 and other involved Department staff to discuss the surrounding circumstances by transmitting same to the persons listed in **Article XIII [COMMUNICATIONS]**, ¶¶B(1) and (2) of this Order. Such request shall include a copy of the written Notice or Demand that is being challenged together with an affidavit setting forth with specificity the basis of the challenge. The Regional Director will consider any information presented by Con Edison in resolving the dispute.

2. Department Staff may submit a written response to the petition to the Regional Director within fifteen (15) business days of its receipt of the petition, and will transmit a copy thereof to Con Edison.

3. The Regional Director will meet with Con Edison and Staff representatives as soon as practicable after receipt of the Staff's response to Con Edison's written request, but in no event later than ten (10) business days after receipt of the response and consider any information presented by Con Edison and Staff in resolving the dispute. The Regional Director will notify Con Edison and Staff of the decision in writing within twenty (20) days of such meeting.

4. Stipulated penalties shall be calculated from the day the failure to comply first occurred unless Con Edison prevails with respect to the dispute, in which case, no stipulated penalties shall become due. In the event that Con Edison does not prevail, but the Regional Director finds that the petition was submitted in good faith, the Regional Director may: (1) find that the assessment of stipulated penalties was tolled from the initial date of Con Edison's failure to comply with the terms of this Order to the date of Con Edison's receipt of the Regional Director's decision; or (2) reduce the amount

of stipulated penalties otherwise due and payable pursuant to **Article IV [STIPULATED PENALTIES]**, ¶C(1) of this Order. For purposes of this ¶C, "good faith" shall mean that Con Edison had a reasonable prospect of success on the substantive merits. Con Edison may commence an Article 78 proceeding if it does not prevail before the Regional Director.

5. In the event that the Regional Director finds that Con Edison's request to meet (a) was not made in good faith in the first instance, (b) was wholly without merit or (c) was otherwise frivolous, the Regional Director may double the amount of stipulated penalties otherwise due in accordance with the schedule set forth in **Article IV [STIPULATED PENALTIES]**, ¶C(1) of this Order for the period between the date of failure to comply and the date of compliance.

6. The determination by the Regional Director will be final and binding upon Con Edison in the same manner as an Order by the Commissioner and will be deemed the equivalent of a confession of judgment for the amount determined to be due, and may be filed and enforced as a judgment pursuant to Civil Practice Law and Rules Article 50, et seq., for said amount without the need for any further proceedings whatsoever.

ARTICLE VI. ACCESS.

A. Department Access to Facilities.

Upon presentation of appropriate Department credentials, any duly designated officer, employee, consultant, contractor or agent of the Department shall be permitted by Con Edison to enter upon any of Con Edison's facilities or areas in the vicinity of any of Con Edison's facilities which may be under the control of Con Edison, and any areas under Con Edison's control necessary to gain access thereto, during all hours of operation, for inspection purposes and for the purpose of making or causing to be made such sampling and tests as the Department deems necessary for ascertaining Con Edison's compliance with the provisions of the Environmental Conservation or Navigation laws and the rules, regulations, permits, licenses and administrative orders issued under such laws.

EPA-NC-CE-0000779

B. Con Edison Health and Safety and Operational Requirements

Department Staff will, when present at any Con Edison facility, abide by all of Con Edison's health and safety and operational requirements and policies; provided, however, that this paragraph shall not be construed as limiting staff's powers as otherwise provided for by law and shall not result in staff's being afforded less protection than staff would be if they were to abide by the Department's health and safety requirements. Department staff will be bound by Con Edison's trade secret confidentiality requirements and policies with respect to persons other than the Department or Con Edison, consistent with the principles in 6 NYCRR Part 616.

C. Access

1. Upon presentation of appropriate Department credentials, Department Staff will have access to all Con Edison facilities and to relevant records during all hours of operation, in order to inspect and/or perform such tests or undertake such other actions as the Staff may deem appropriate for ascertaining Con Edison's compliance with the provisions of this Order.

2. Con Edison is prohibited from imposing upon Department Staff a requirement regarding the use of safety apparel or safety equipment that is not strictly enforced by Con Edison with respect to all other persons, regardless of employer, under similar circumstances. Con Edison shall be in violation of this Order if it attempts to impose such a requirement.

3. Without in any way limiting the legal authority that the Department has to enter any regulated premises, Department Staff will undergo safety and health training required of Con Edison personnel or Con Edison contractor personnel prior to being given access to a particular facility or site, subject to the following:

(a) Upon notification by Con Edison to the Department of the mandatory training requirement(s) for such access, Con Edison and the Department shall meet at the earliest possible time thereafter to address the issue of whether such training is reasonable and necessary for purposes of Staff access. In the event that the Department determines that such training is not reasonable and necessary or required under applicable

federal, State or local laws, rules or regulations, access shall be granted without such training, or upon the monitor's presentation of an appropriate certificate of substantially similar training, or upon the monitor's execution and presentation of an appropriate waiver, consent or acknowledgment as are more fully described in ¶E(3)(b) of this Article.

(b) If the Department does not determine that the mandatory training is unreasonable or unnecessary,

(i) Con Edison will accept certification by the Department that the Staff has received training of the nature considered by the Department to be substantially similar to that required for access;

(ii) In the event that the Department determines that staff shall enter such a facility or site without such training, staff shall be given access upon presenting an executed waiver, consent or acknowledgment required of others given access although not having had such training;

(iii) In the event that access to a particular facility or site requires specialized training not received by staff and such training is required under applicable federal, state, or local laws, rules or regulations or the Department determines for any other reason that staff should be trained prior to entry, Con Edison shall at its expense arrange for and provide the necessary training. Con Edison, at its expense, shall arrange for and provide any training, medical, and other examinations required by the Nuclear Regulatory Commission ("NRC") as a condition to entering any Con Edison facility area subject to the jurisdiction of the NRC.

D. Con Edison Entry Onto Property Controlled by Others

Con Edison shall use best efforts to obtain all permits, easements, rights-of-way, rights-of-entry, and approvals required to fulfill its obligations under this Order. If any access required to perform this Order is not obtained despite best efforts, Con Edison shall promptly so notify the Department in writing, and shall include in that notification a summary of the steps that Con Edison has taken to attempt to obtain access.

EPA-NC-CE-0000781

Thereafter, the Department will, as it deems appropriate, assist Con Edison in obtaining access.

ARTICLE VII. FORCE MAJEURE.

Con Edison shall not suffer any penalty under this Order, or be deemed to be in violation hereof or be subject to any proceeding or action, if Con Edison's compliance with any requirements hereof is rendered impossible by a natural event, war, strike, work stoppage, riot or other catastrophe as to which negligence or misconduct on the part of Con Edison was not the proximate cause; provided, however, that Con Edison shall make its best effort to comply nonetheless and shall, within one business day, notify the office of the Regional Director by telephone and the Department in writing, pursuant to the communications provision of this Order, after it obtains knowledge of any such condition or event and request an appropriate extension or modification of this Order.

ARTICLE VIII. FAILURE, DEFAULT AND VIOLATION OF ORDER.

The failure of Con Edison to comply with any provision of this Order shall constitute a default and a failure to perform an obligation under this Order and shall be deemed to be a violation of both this Order and the ECL.

ARTICLE IX. SUMMARY ABATEMENT.

The terms of this Order shall not be construed to prohibit the Commissioner or his duly authorized representative from exercising any summary abatement powers pursuant to Section 71-0301 of the ECL.

ARTICLE X. INDEMNIFICATION.

Con Edison shall indemnify and hold the Department, the State of New York, and their representatives and employees harmless for all claims, suits, actions, damages and costs of every name and description arising out of or resulting from the fulfillment or attempted fulfillment of this Order by Con Edison, its trustees, officers, employees, servants, agents, successors or assigns.

ARTICLE XI. EFFECTIVE DATE.

The effective date of this Order on Consent shall be the date that it is signed by the Commissioner. The Department shall provide Con Edison with a fully executed copy

EPA-NC-CE-0000782

of this Order on Consent as soon as practicable after this Order on Consent has been signed by the Commissioner.

ARTICLE XII. MODIFICATION.

If Con Edison desires that any provision of this Order be changed, Con Edison shall make timely written application therefor to the Commissioner, setting forth reasonable grounds for the relief sought. For purposes of this paragraph, "timely" shall mean that the written application is made as soon as reasonably possible after Con Edison identifies the grounds for such relief. The Commissioner shall have absolute discretion but will not arbitrarily withhold consent to the requested change and will respond promptly to the request. A formally promulgated Modified Order will not be required for a modification to any schedule under this Order that is covered by the provisions of **Article III [SUBMITTAL REVIEW AND APPROVAL]**, ¶D of this Order, or that otherwise modifies any schedule under this Order and does not postpone a Major Milestone Event by more than sixty (60) days.

ARTICLE XIII. COMMUNICATIONS.

A. All communications required by this Order to be made between the Department and Con Edison shall be made in writing and transmitted by United States Postal Service, or hand-delivered to the addressees in ¶¶B and C hereunder. Alternatively, Federal Express, Airborne Express or a comparable courier service may be utilized.

B. Communication to be made from Con Edison to the Department pursuant to this Order shall be made as follows:

1. One copy of the transmittal letter only, unless this order provides otherwise, to the Division of Environmental Enforcement, 50 Wolf Road, Albany, New York 12233-5500. Attention: Joseph M. Kowalczyk, Esq.; and

2. Four copies to the New York State Department of Environmental Conservation, 1 Hunters Point Plaza, 4740 21st Street, Long Island City, New York 11101-5407. Attention: Regional Director; and

EPA-NC-CE-0000783

C. Communication to be made from the Department to Con Edison pursuant to this Order shall be made as follows:

1. One copy to Garrett E. Austin, Esq., Consolidated Edison Co. of New York, Inc., Room 1800, 4 Irving Place, New York, New York 10003; and

2. Four copies to M. Peter Lanahan, Vice President, Environmental Affairs, Consolidated Edison Co. of New York, Inc., 4 Irving Place, New York, New York 10003, attention: Mr. Howard Somers.

D. The Department and Con Edison respectively reserve the right to designate other or different addressees on written notice to the other.

ARTICLE XIV. RESERVATION OF RIGHTS.

Nothing contained in this Order shall be construed as barring, diminishing, adjudicating or in any way affecting:

A. Any legal or equitable rights or claims, actions, proceedings, suits, causes of action or demands whatsoever that the Department may have against Con Edison with respect to investigatory, remedial or corrective action or with respect to claims for natural resources damages as a result of the release or threatened release of hazardous substances, petroleum, or constituents of either at or from Con Edison's facilities or areas in the vicinity of said facilities other than the four (4) petroleum releases identified in Whereas clause 9(a) above;

B. Any legal or equitable rights or claims, actions, proceedings, suits, causes of action or demands whatsoever that the Department may have against anyone other than Con Edison, its officers, trustees, agents, servants, employees, successors and assigns;

C. The Department's right, to the extent provided for by law, to enforce this Order against Con Edison, its officers, trustees, agents, servants, employees, successors or assigns in the event that Con Edison fails to fulfill any of the terms or provisions hereof; and

D. Except as specifically provided in this Order, any legal or equitable rights or claims, actions, proceedings, suits, causes of action or demands whatsoever that the

Department may have against Con Edison for any alleged violations of the ECL, rules or regulations promulgated thereunder or permits issued thereunder.

ARTICLE XV. RELEASE.

A. This Consent Order shall be in full settlement of all civil and administrative claims and liabilities that could be asserted by Staff against Con Edison, its trustees, officers, employees, successors and assigns for any violation of the ECL, the Navigation Law or any associated rules, regulations permits, licenses or certificates either arising from events that occurred at any time prior to the effective date of this Order, except for those events or claims described in ¶B of this Article.

B. This Consent Order shall not be construed as being in settlement of any of the following claims or liabilities that could be asserted by Staff:

1. those based upon events, of which Staff did not have knowledge as of the effective date of this Order . For purposes hereof, "knowledge" shall mean that the person responsible for maintaining official Department records relative to incidents of the nature constituting the alleged violation or investigating events and violations of such nature had actual notice of the event through written or documented verbal means;

2. those legal or equitable rights or claims, actions, proceedings, suits, causes of action or demands whatsoever that the Department may have against Con Edison with respect to any investigatory, remedial or corrective action required or with respect to any claims for natural resources damages resulting from any release or threatened release at any time prior to the effective date of this Order of hazardous substances, petroleum, or constituents of either or discharges in excess of permit or other obligatory limits at or from Con Edison's facilities or areas in the vicinity of said facilities, other than the four (4) petroleum releases identified in Whereas clause number 9(a) above;

3. those based upon events that occurred at any time prior to the effective date of this Order that are determined by the Department to have been either committed with any of the culpable mental states defined in Penal Law §15.05 or caused by reckless conduct or gross negligence;

4. those based upon events occurring after the effective date of this Order.

ARTICLE XVI. BINDING EFFECT OF ORDER.

The provisions of this Order shall inure to the benefit of and be binding upon the Department and Con Edison, its agents, employees, successors and assigns and all persons, firms, and corporations acting subordinate thereto.

ARTICLE XVII. FORMAL TERMS.

The provisions hereof shall constitute the complete and entire Order between Con Edison and the Department. No terms, conditions, understandings or agreements purporting to modify or vary the terms hereof shall be binding unless made in writing and subscribed by the party to be bound, in accordance with the provisions of **Article XII [MODIFICATION]** of this Order. No informal oral or written advice, guidance, suggestions or comments by the Department regarding reports, proposals, plans, specifications, schedules or any other writing submitted by Con Edison shall be construed as relieving Con Edison of its obligations to obtain such formal approvals as may be required by this Order.

DATED: Oct 23, , 1997

NEW YORK STATE DEPARTMENT
OF ENVIRONMENTAL CONSERVATION

JOHN P. CAHILL
Commissioner

EPA-NC-CE-0000786

CONSENT BY RESPONDENT

Consolidated Edison Company of New York, Inc. hereby consents to the issuing and entering of this Order, waives its right to a hearing herein as provided by law, and agrees to be bound by this Order.

By: _____

Title: Vice President, EH&S

Date: 10/17/97

STATE OF NEW YORK)

ss:

COUNTY OF NEW YORK)

On this 17 day of October, 1997, before me personally came M. Peter Lanahan, to me known, who being duly sworn, did depose and say that he is the Vice President, EH&S of Consolidated Edison Company of New York, Inc., described in and which executed the foregoing instrument.

_____

Notary Public

CHARLES J. GALLAGHER
Notary Public, State of New York
No. 41-4694445
Qualified in Queens County
Commission Expires Sept. 30, 1999

APPENDIX 1 - Benefit and RestorationProjects

I. Environmental Benefit Project

A. Objective

Within sixty (60) days of the effective date of this Order, Con Edison shall deposit the amount of three hundred forty five thousand dollars ($345,000.00) with the Nature Conservancy 1500 Broadway, Suite 808, New York, New York 10036, a corporation organized and existing under the New York State Not-For-Profit Corporation Law to be used to fund an Environmental Benefit Project (EBP). The monies will be expended on an EBP that will create a regional Natural Resources and Spills Response Geographic Information System (GIS) as discussed below.

It is extremely important that in the event of an oil or chemical spill that response resources be directed to those areas that are most sensitive and valuable as wildlife habitat. These sensitive areas include tidal wetland complexes where many species of fish are spawned and where many of the Harbor Herons forage and hunt. Unfortunately, the maps of these complexes and areas exist only as hundreds of paper maps or aerial photographs that are fragile and difficult, at times, to interpret. Other natural resource data that is crucial in mounting an adequate response to spills only exists as antiquated paper maps or as tables of data not spatially referenced.

When completed, the GIS will contain all pertinent natural resource and spills response information and maps for the five boroughs of New York City and the lower Hudson River estuary up to the Tappan Zee bridge. Data layers will include Tidal Wetland Maps, Freshwater Wetland Maps, Endangered Species Information, Land Use/Land Cover, Permitting Information, Critical Environmental Areas, Soils, marine Bathymetry, Environmental Sensitivity Indices, significant spill sites, ground elevation contour lines, groundwater depth contour lines, Petroleum Bulk Storage sites, Chemical Bulk Storage sites, and all major fuel oil and natural gas pipelines in New York City. Base map layers will include USGS Topology Maps, USGS Quadrangle maps, Sanborn Maps, Tax Maps, US Census Bureau's TIGER Line file and Census Track and NYC Lion file, and possibly aerial or satellite photography. This project is currently funded through the completion of most of these above layers for the borough of Staten Island.

This system will be an integral tool in planning for and responding to oil and chemical spills in the New York Harbor and lower Hudson River Estuary up to the Tappan Zee bridge. The Natural Resources and Spills Response GIS will allow regulators to quickly make regulatory decisions that might otherwise take hours or days to complete. These tasks include jurisdictional boundary checks, cumulative impact assessment, permit searches, violation tracking and expedited spills clean up decision making. The system will further benefit the public and the regulated community in that this digital information (maps) will be available to local, state, federal agencies, permittees, to Con Edison and to other interested parties pursuant to section 87 of the

EPA-NC-CE-0000788

Public Officers Law (with the exception of sensitive data such as endangered Species locations).

B. Project Scope

This project will require a number of discrete functions to be completed:

1. New York State Tidal Wetland Maps

Map Digitization: there are two hundred and forty (240) tidal wetland maps for New York City.

Map Correction: after digitizing the maps will need to be corrected and transformed to local coordinate systems.

2. New York State Petroleum / Chemical Bulk Storage Facilities

Data Correction and Mapping of Sites: There are over 23,000 active registered sites in the New York City area. About 75% of the Sites are geocoded, but the data is outdated. The remaining sites need to be added to the coverages. Additionally, a subset of the data to be produced would include only EPA-regulated underground storage tanks.

3. New York Critical Environmental Areas

Map Digitization: the number of maps to be digitized is dependent upon the scale of the maps to be used. Large scale maps show more detail but cover less area than small scale maps. Under these constraints the total number of Critical Environmental Area maps to be digitized will fall between 10 and 50.

Map Correction: after digitizing the maps will need to be corrected and transformed to local coordinate systems.

4. New York State Coastal Freshwater Wetlands

Map digitization: there are approximately 15 such areas in New York City. Each area is covered by many small paper maps totaling approximately 75 maps.

Map Correction: after digitizing the maps will need to be corrected and transformed to local coordinate systems.

5. National Oceanic and Atmospheric Administration Bathymetry Data

Data Editing and Correction: this data is already digitized. The data must be edited and corrected to be utilized on DEC's GIS. The data may need to be purchased from a third party vendor.

6. New York State Natural Heritage Database

Data Editing and Correction: this data is generated through a joint effort of The NYSDEC and The Nature Conservancy. Some editing and correction is necessary to have the data conform to Region Two's GIS. Updates are made available frequently.

7. New York State Regional Land Use / Land Cover Maps

Data Editing and Correction: this data currently exists in digital but outdated format. This aspect of the project will include the use of a Global Positioning System (G.P.S.) Receiver (purchased with alternate funding) to ground-truth and update the existing data. Air photography interpretation will also be used. The time needed to undertake this task is predicated on the accuracy of the existing data for each borough.

8. National Oceanic and Atmospheric Administration (NOAA) Environmental Sensitivity Index

EPA-NC-CE-0000789

This data is already digitized but must be edited and corrected to be utilized. This data will be purchased from a third party vendor.

9. Depth of Groundwater

Data Editing and Correction and Digitization: This data can be purchased, but only in its raw form. The raw data will be converted to a useable form before being digitized.

10. Topography

Map Digitization: Maps covering the New York City area currently exist as image files and will be digitized.

Map Correction: After digitizing, the maps will be corrected and transformed to local coordinate sytems.

11. Spill Sites

Data Editing and Correction: Separate minor surface spills from the database, edit address data to conform to guidelines, and convert data. The data must then be digitized.

12. Routine Systems Administration

The GIS will require daily maintenance and updates

13. Network Installation, Configuration and Troubleshoot

Install, configure and troubleshoot a dial-in / dial-out connection for remote access of GIS.

C. **Fiscal Requirements**

Funding for this project will be expended as follows:

1. Staff Requirements

Project Manager, 3 years @ $65,000/year (total cost w/ overhead and benefits)

Project Technician, 3 years @ $35,000/year (total cost w/ overhead and benefits)

2. Material Requirements

Data layer acquisition: $25,000

Plotting, scanning and printing equipment: $20,000

3. Total Costs: $345,000.00

II. Restoration Project

Con Edison shall pay the amount of fifty eight thousand dollars ($58,000) to the Department within thirty (30) days of the effective date of this order, so the Department as Trustee of New York's natural Resources, can restore, replace, or acquire the equivalent of the resources indured as a result of the releases referenced in Whereas clause 9(a) above. Such payment shall be made by certified check made payable to Natural Resources Damages Fund Accound and delivered to the Department's offices at 50 Wolf Road, Albany, NY 12233-5500, Attention: Joseph M. Kowalczyk, Esq.

EPA-NC-CE-0000790

APPENDIX 2 - Environmental Monitors

This Appendix shall supersede any and all previous agreements between the Department and Con Edison regarding environmental monitors, including a memorandum of understanding executed on December 29, 1992 and revised on December 29, 1993 and the comprehensive November 4, 1994 order.

A. Positions

Con Edison shall make payments to the Department in accordance with the provisions of this Appendix for the funding of certain on-site Department Staff environmental monitors (collectively, the "Monitor"). Unless otherwise changed by agreement of the Department and Con Edison, one (1) monitors will be funded through December 31, 1999; a second monitor will be funded until Con Edison completes and the Department accepts work required to be performed pursuant to Appendix 4 of this order; a third monitor will be funded until Con Edison completes and the Department accepts the work required to be performed pursuant to Appendices 3 and 5 of this Order; and a fourth monitor will be funded until Con Edison completes and the Department accepts the work required to be performed pursuant to Appendix B of Order on Consent dated November 4, 1994, DEC Index No. R2-1023-88-06, et seq. Notwithstanding anything to the contrary in this Appendix, the Department reserves the right to impose additional monitors on Con Edison as a condition of a permit issued to Con Edison by the Department or as a result of an enforcement action.

B. Duties

The primary duties of the monitor will be to: (i) enhance the Department's ability to monitor and inspect Con Edison's facilities and thereby facilitate Con Edison's compliance with the requirements of the ECL and any rules and regulations promulgated pursuant thereto, federal requirements enforced by the Department, and any Department permits, Orders and Agreements; and (ii) monitor the implementation of the activities required by this Order and the Environmental Conservation and Navigation Laws. The duties of the Monitor will include, but not be limited to, the following:

1. participating in the processing and review of applications by Con Edison for Department approvals;
2. Monitoring Con Edison's compliance with existing and future Consent Orders, including processing and review of submissions for Department approval;
3. informing Con Edison and its facility operators of deficiencies in operations;
4. monitoring required sampling by Con Edison and assuring that such sampling is carried out in accordance with approved protocol(s)and, when appropriate, sampling;
5. investigating and reporting complaints against Con Edison;

EPA-NC-CE-0000791

6. participating in informational meetings and public hearings regarding Con Edison's facilities;
7. initiating and participating in enforcement actions related to Con Edison's operations; and
8. maintaining records and reports, including a monthly report, for the activities described above.

C. Funding

Additional funds shall be deposited into the existing Con Edison Environmental Monitoring Account as provided by this Paragraph:

1. The sum of two hundred fifty thousand dollars ($250,000.00) shall be maintained with the Department for funding of environmental activities related to Con Edison's operations. This sum is based on an estimate of annual Monitor program costs and is subject to quarterly revision. Subsequent quarterly payments shall be made for the duration of this order to maintain an account balance sufficient to meet the next nine months' anticipated expenses. Quarterly payments shall be made for the duration of this order in accordance with the following provisions.
2. Costs to be covered by this fund include:
   (a) Direct personal service costs and fringe benefits of the Environmental Monitor(s) and full-time Monitor supervisor(s), including the costs of replacement personnel for the person(s) regularly assigned to these positions.
   (b) Direct non-personal service costs, including without being limited to purchase or lease of a vehicle if necessary and its full operating costs, and any appropriate chemical sampling and analysis.
   (c) Inflation increases and negotiated salary increase.
   (d) Indirect support or overhead costs at the New York State Department of Environmental Conservation Federally-approved Indirect Cost Rate.
3. Upon written request by Con Edison, the Department shall make available any records (e.g., vouchers, time records) relating to such Monitor costs, consistent with applicable law.
4. As noted, the Department may revise the required payment on a quarterly basis to include all costs of monitoring to the Department. The quarterly revision may take into account factors such as inflation, salary increases, accrued interest to be applied to the balance, changes in operating hours and procedures and the need for additional On-site Monitors and supervision of such Monitors by full-time Monitor supervisors. Upon written request by Con Edison, the Department shall provide Con Edison with a written explanation of the basis for any modification.

EPA-NC-CE-0000792

5. Within 30 days of written notice by the Department that a payment is due, payment shall be forwarded to the Department. Payment should be sent to:

NYS Department of Environmental Conservation
50 Wolf Road
Albany, NY 12233-8010
Attention: Environmental Monitors

Payments shall be in advance of the period in which they will be expended.

6. Upon a determination by the Department that the Monitor is no longer required and payment of any outstanding costs, the unexpended balance, including interest, will be returned to Con Edison.
7. Failure to make the required payments shall be a violation of this order. The Department reserves all rights to take appropriate action to enforce the above payment provisions.
8. Con Edison shall furnish to the Monitor a current site policy and procedures manual for health and safety issues. Within ten (10) days of any revision to the health and safety plan, Con Edison shall notify the Department, in writing, of such modification.
9. Con Edison shall only be charged for monitor duties that relate to monitoring Con Edison's operations as set forth in this schedule.

D. **Access**

The provisions of **Article VI [ACCESS]** of this order shall apply to the Monitor.

EPA-NC-CE-0000793

APPENDIX 3 - FUEL OIL PIPELINES

A. Objective

This Appendix supplements and supersedes Appendix C of the November 4, 1994 Consent Order. ConEd shall implement best management practices, submitted in accordance with the provisions of the Conceptual Compliance Plan, with respect to the operation, inspection, maintenance and replacement of its pipeline systems used to transport petroleum between and among its various facilities and generating stations. Such improvements and corrective measures are the responsibility of ConEd and shall be accomplished to the greatest extent practicable within the shortest possible time frames.

B. Definitions

For purposes of this Appendix, the following terms shall have the meanings set forth in this Paragraph.

1. **"Aboveground oil pipeline"** means any part or section of pipeline that is not entirely or partially covered with earth or other material, or any part or section of pipeline that can be inspected in a subterranean vault or underground tunnel.

2. **"Material failure"** means degradation of pipeline integrity due to corrosion, erosion or structural failure causing a leak to develop not due to the actions of ConEd, its contractors or other parties related to the pipeline.

3. **" New underground oil pipeline"** means any part or section of pipeline that meets requirements promulgated or approved by the federal, state or local jurisdictional agency as of the effective date of this Order and, at a minimum, has the following attributes[1]:

(a) the pipeline shall be constructed of fiber reinforced plastic ("FRP") pipe enclosed within a steel casing ("secondary containment") made of steel pipe having a wall thickness consistent with ConEd's specifications for the pressure and temperature of the fuel oil to be handled per ASTM Specification A, 106 Grade B.

(b) the pipeline shall be insulated by filling the annular space between the FRP pipe and the steel casing, such insulation to meet or exceed the capabilities of the insulation on existing oil piping within the ConEd Oil Pipeline System;

---

[1] The inner FRP pipe is not subject to electrolytic corrosion and does not require cathodic protection.

EPA-NC-CE-0000794

(c) the steel casing will have at least thirty-year cathodic protection by a system based upon standards that have been established by the National Association of Corrosion Engineers[2];

(d) the pipeline will be designed, installed and tested to assure that its capabilities meet ConEd's Oil Pipeline System requirements and the requirements of this Appendix; and

(e) the inner FRP pipe will be designed, installed and tested to meet ConEd's Oil Pipeline pressure and temperature requirements and the requirements of this Appendix.

4. **"Upgraded Underground Pipeline"** means any part or section of the existing ConEd Oil Pipeline System that is upgraded by ConEd shall be upgraded in accordance with the following provisions:

(a) the previously existing steel pipe that had been the oil carrying pipeline will no longer carry oil and will serve only as a structural mold for the insulating grout around the inner FRP pipe. Since that pipe is insulated, it cannot be cathodically protected;

(b) inserted into the previously existing steel pipeline will be new FRP pipe, which is equivalent to the FRP pipe used for New Underground Oil Pipeline. Since the FRP pipe is not subject to corrosion, it need not be cathodically protected; and

(c) an insulating concrete grout will be inserted into the annular space between the new FRP pipe and the previously existing steel pipeline.

5. **"Permanently Closed Oil Pipeline"** means any part or section of pipeline which has been taken out of service permanently as a fuel oil pipeline in accordance with applicable Federal, State and local regulations and good engineering practices.

6. **"Temporarily Out of Service Oil Pipeline"** means any part or section of pipeline which is out of service for thirty (30) or more days and which is not a Permanently Closed Oil Pipeline.

7. **"Underground Oil Pipeline"** means any part or section of pipeline which is partially or completely covered with earth or other material. Any part or section of a

---

[2] Where ConEd must repair a section of a pipeline, such repair shall be in like kind to the existing pipeline.

EPA-NC-CE-0000795

pipeline within a subterranean vault or tunnel accessible for inspections is considered to be an aboveground oil
pipeline.

8. **"Section"** means that length of the pipeline that exists between two adjacent field welds.

9. **"Smart-Pig"** means a device that contains transducers capable of measuring wall thickness of steel pipe to industry standard tolerances or the use of such device.

C. **Provisions Regarding Pipeline System Requirements**

1. **General Provisions.**

(a) **Implementation Submission - Conceptual Compliance Plan** - Con Ed has submitted its Conceptual Compliance Plan to accomplish the tasks identified at the top of the columns in SCHEDULES C1 and C2, at the end of this Appendix. This submission includes the organizational structure and accountability mechanisms for the management of all tasks required by this Appendix, the purpose of which are to assure the implementation of the protocols and physical plant and operational modifications to the entire pipeline system. The Conceptual Compliance Plan has been approved by the Department, and except as otherwise modified by the
provisions of this Appendix, shall be implemented by Con Ed.

(b) **Department Review and Approval** - Con Ed's submissions required by this Appendix shall be reviewed and approved by the Department in the manner provided by Article VII [SUBMITTAL REVIEW AND APPROVAL] of this Order.

(c) **Temporarily Out of Service Oil Pipelines** - Pipelines that are Temporarily Out of Service are subject to the licensing, inspection and reporting requirements required by this Appendix and by regulations which may be applicable. However, Temporarily Out of Service oil pipelines that have the bulk fuel oil removed from them are not subject to inspection requirements. (See 3(h) below.)

d) **Permanently Closed Oil Pipelines** - Pipelines which have been Permanently Closed in accordance with the provisions of this Appendix are no longer subject to the requirements of this Appendix.

(e) **Quarterly Reports; Semi-Annual Reports; Annual Reports** - Commencing ninety (90) days after execution of the November 4, 1994 comprehensive order, ConEd submitted consolidated, quarterly reports which update SCHEDULES C1 and C2. This quarterly update was submitted until December 31, 1996; thereafter,

EPA-NC-CE-0000796

commencing July 1, 1997, ConEd shall submit consolidated, semi-annual reports concluding with the report due January 1, 2000; thereafter, ConEd shall submit annual reports until all work required to be undertaken by this Appendix (other than periodic, repetitious actions, such as inspections, manual reviews and updates, etc.) has been completed to the satisfaction of the Department, at which time the Department will provide ConEd with written notice of termination of the obligation created by this Paragraph.

(f) **Amendments to SCHEDULES** - SCHEDULES C1 and C2 shall be amended to reflect any additional corrective actions or procedural changes that may be determined to be necessary upon review of the environmental audit, conducted pursuant to Article III (COMPREHENSIVE ENVIRONMENTAL AUDIT PROGRAMS) of this Order and Appendix A or otherwise determined necessary by ConEd or the Department. Changes to be added to SCHEDULES C1 or C2 may include, but not be limited to, improvements or corrective actions related to Operations, Management, Inspection, Maintenance, Upgrade, Repair, Replacement or Closure of ConEd's Oil Pipelines.

(g) **Good Engineering Practices** - Completion of required tasks shall be accomplished in accordance with Department guidance and good engineering practices.

2. **Special Provisions: Operations and Management - SCHEDULE C1**

(a) **Submittal Requirements** - Within ninety (90) days of receipt of notification of Department approval of the Conceptual Compliance Plan implementation submission required by C(1)(a) of this Appendix, ConEd was required by the November 4, 1994 comprehensive order on consent to submit to the Department for review and approval, documents that address the items identified on SCHEDULE C1. Con Ed made such submissions which have received various levels of review by the Department. Within fifteen (15) days of receipt of notification of Department approval of the documents, ConEd is required to commence implementation on the approved time schedule.

(b) **Report on Personnel Training** - In addition to other subject matter, personnel involved in the operation, maintenance and repair of the pipelines are required to be instructed regarding the environmental consequences of actions that violate regulatory requirements and are to be trained in the means of preventing, containing and remediating the effects of accidental releases, and are to be instructed regarding the economic, environmental, infrastructure and health and safety effects of spills and leaks. ConEd has submitted a report on this training program and given its General Awareness Course to over 4000 employees. This report, which is under Department review, is required to include, at a minimum, curricula for and frequency of attendance at training

EPA-NC-CE-0000797

sessions and the means and frequency of testing proficiency and understanding of employees whose responsibilities relate in any way to pipeline operation.

(c) **Pipeline Monitoring Report** - A Pipeline Monitoring Report shall document the manner and frequency of operation oversight and maintenance of each pipeline, associated process control equipment and automatic monitoring equipment as well as the means of determining pipeline stability and performance relative to loss of material from or degradation of the pipeline. The Pipeline Monitoring Report format has been submitted to the Department and is under Department review.

(d) **Spill Response, Emergency Shutdown and Alternate Fuel Contingency Drills** - A spill response and emergency shutdown drill program is required in which spill response drills, incorporating emergency pipeline shutdown and an alternate fuel supply contingency, are performed as frequently as necessary to assure the most rapid cessation, containment and remediation response possible in the event of a discharge. These drills shall test the plans required in paragraph C.2(f) of this appendix.

To satisfy the requirements of this paragraph, Con Ed has submitted an "Oil Spill Response Exercise Program" as part of a submission entitled "Emergency Shutdown/Spill Response Drills", to the Department for review and approval.

(e) **Operations Manual Review and Update** - ConEd's oil pipeline operations manual shall be reviewed and updated for the purpose of determining that the pipeline operations and management programs and the inspection and maintenance programs required by this Appendix will be carried into effect and become an integral part of ConEd's standard practices. The oil pipeline operations manual shall include current information on the operation and maintenance of the entire oil pipeline system. This manual shall include a section on management approval which specifically identifies all ConEd departments that are responsible for the reviewing, updating and implementing the procedures established by the manual. Con Ed has previously submitted the administrative procedures for the development of a Fuel Oil Pipeline Operations Manual and the Operations Manual to the Department for review and approval.

(f) **Spill Response Plans Review and Update** - Spill response plans are
required which include emergency pipeline shutdown plans and fuel supply contingency plans designed to deliver oil to generating stations for continued operation, while a leaking pipeline is out of service for repair or replacement.

Con Ed has submitted its "Emergency Fuel Supply and alternative Fuel Contingency Plans" which are under Department review.

EPA-NC-CE-0000798

Con Ed's spill response plan for its fuel oil pipelines was prepared in accordance with the interim final rule effective January 5, 1993, issued pursuant to OPA 90 by the Research and Special Programs Administration (RSPA) of the Department of Transportation. This plan is to be submitted for Department review and approval within ninety (90) days of the effective date of this order. In the event that OPA-approved spill response plans do not include the provisions required by this Appendix, they shall be revised, re-submitted to the Department for review and approval and, upon approval by the Department, re-submitted to United States Department of Transportation for approval. Administrative procedures to oversee the implementation of the requirements of this paragraph have previously been submitted to the Department for review and approval.

3. **Special Provisions: Inspection and Maintenance - SCHEDULE C2**

(a) **Submittal Requirements** - Within ninety (90) days of receipt of notification of Department approval of the Conceptual Compliance Plan implementation submission required by ¶C(1)(a) of this Appendix, ConEd was required to submit to the Department for review and approval, in the manner provided by Article VII [SUBMITTAL REVIEW AND APPROVAL] of this Order, documents that address the items identified on SCHEDULE C2 and the qualifications of personnel who will implement those tasks. Con Ed made such submissions which have received various levels of review by the Department. Within fifteen (15) days of receipt of notification of Department approval of the documents, ConEd has been required to or shall commence implementation in accordance with the approved time schedule.

(b) **Smart Pigging** - ConEd completed "smart-pigging" of the No. 4 pipeline in 1995 and shall smart pig it every three years thereafter if ConEd elects to repair it, as described in paragraph C(4)(b)(i-iv) of this appendix, rather than upgrade it, as described in paragraph B.4 of this appendix. Con Ed is not required to "smart pig" new underground oil pipelines or pipelines that have been designated for permanent closure.

(c) **Cathodic Protection System Inspections** - ConEd is required to submit to the Department, for review and approval, procedures to document and implement cathodic protection system inspections, tests and maintenance. These procedures shall include procedures for the monthly inspections of cathodic protection rectifiers. ConEd shall make its inspection, testing and maintenance records available to the Department upon request. Administrative procedures for implementing the requirements of this paragraph and updated annual inspection and test procedures have previously been submitted to the Department for review and approval.

(d) **Leak Detection System Testing** - ConEd shall conduct pressure decay testing on all active pipelines monthly and, as appropriate, evaluate its mass flow meter based leak detection systems on its fuel oil pipelines and submit evaluations

EPA-NC-CE-0000799

quarterly. Administrative procedures to implement the requirements of this paragraph and technical procedures have previously been submitted the Department for review and approval.

(e) **Equipment, Pump and Valve Maintenance** - The maintenance procedures will identify inspections or tests along with their required frequency, and the required maintenance activities along with their required frequency. Updated or newly developed maintenance procedures for ConEd's fuel oil pipeline equipment, pumps, heaters and valves have previously been submitted to the Department for review and approval. Upon their approval, Con Ed shall implement such procedures on all oil containing pipelines, both active and Temporarily Out of Service pipelines.

(f) **Spill Response Equipment Inspection** - ConEd shall inspect spill response equipment and document such inspections in accordance with its current OPA-90 Spill Response Plan. Documentation of these inspections shall be made available to the Department upon request. Con Ed has submitted Administrative procedures to the Department for review and approval to ensure that these inspections are conducted.

(g) **Inspection of Aboveground Pipelines and Street Valves** - Regular inspections shall be performed on the aboveground sections of pipelines and street valves on all pipelines containing oil, both active and Temporarily Out of Service oil pipelines. Inspection procedures for the aboveground pipelines and street valves have been reviewed, updated and submitted to the Department for review and approval.

(h) **Inspection of Temporarily Out of Service Oil Pipelines** - ConEd shall continue to inspect its Temporarily Out of Service Oil Pipelines until ConEd removes the bulk fuel oil from the pipeline. Documentation of these inspections shall be made available to the Department upon request. Within 60 days of the effective date of this Order, ConEd shall submit their procedure for inspecting the Temporarily Out of Service Oil Pipelines.

4. **Special Provisions: Corrective Actions**

(a) **Replaced Pipelines** - The following sections of the pipeline system have been replaced with New Underground Oil Pipeline:

(i) the underground section of the No. 2 line from the Manhattan Headhouse at 71st Street to the 74th Street Station; and

(ii) the No. 5 pipeline from Kips Bay to the Waterside Generating station. This replacement included both the fuel oil supply line and the return line.

EPA-NC-CE-0000800

(b) **Upgrade, Replacement or Repair of the No. 4 Pipeline** - Pipeline No. 4 is temporarily out of service and shall not be returned to service until it has been either upgraded, replaced or repaired. If ConEd decides to upgrade, replace or repair the No. 4 pipeline, ConEd shall notify the Department within 60 days of its decision and provide for Department review and approval a conceptual plan and proposed schedule to upgrade, replace or repair this pipeline. If ConEd decides to upgrade the pipeline, it will do so in accordance with the provisions specified in paragraph B.4 of this appendix, in which case there shall be no requirement thereafter to "smart-pig" the line. If ConEd decides to replace the pipeline, it will do so in accordance with the provisions specified in B.3 of this appendix, in which case there shall be no requirement thereafter to "smart pig" the line. If ConEd decides to repair the pipeline, it will do so in accordance with the following provisions:

(i) replace with new pipe all areas of pipe which, based on the results of the "smart-pigging," indicate that less than 60% of the original pipe thickness remains. Replacements will be made in accordance with ConEd Procedure FOPL-100;

(ii) inspect all buried elbows and repair or replace them, as necessary;

(iii) remove insulating joints and replace them with new pipe;

(iv) remove sleeves and replace them with new pipe.

(c) **Temporary/Permanent Pipeline Closures**

(i) **Bulk Oil Removal** - ConEd shall submit to the Department, for review and approval, ConEd's proposed methods and schedules for the bulk oil removal from its fuel oil pipelines in accordance with the following schedule.

(a) **No. 3 Pipeline** - The No. 3 pipeline (from Hudson Avenue Generating Station to East River Generating Station) is now classified as temporarily out of service and shall be permanently closed. Within 90 days of the effective date of this Consent Order, ConEd shall submit to the Department, for review and approval, ConEd's proposed method and schedule for the implementation of the bulk oil removal from this pipeline.

(b) **Nos. 1 and 7 Pipelines** - The No. 1 pipeline (from Astoria Generating Station to Ravenswood Generating Station) and the No. 7 pipeline (from the North First Street fuel oil terminal to the Rainey tank farm) are now temporarily out of service and shall be permanently closed. Within 60 days of the completion of the bulk oil removal from the No. 3 pipeline, ConEd shall submit to the

EPA-NC-CE-0000801

Department, for review and approval, ConEd's proposed methods and schedules for the bulk oil removal from Nos. 1 and 7 pipelines.

(c) **No. 2 Pipeline** - The portion of the No. 2 pipeline from the Head House at 71st Street, along the east side of the FDR Drive, to the 74th Street Generating Station, is temporarily out of service and shall be permanently closed. (This portion has been replaced by a new portion of pipeline, now in service, which runs alone the west side of the FDR.) The bulk oil has been removed and the pipeline has been cut and capped at each end. Within sixty (60) days of the bulk oil removal from pipelines 1,3,7 (whichever is completed last), ConEd shall submit a plan to the Department for review and approval to permanently close this pipeline.

(ii) Pipeline Integrity Test - ConEd shall perform a pipeline integrity test to identify and locate any leaks and potential areas of concern in the pipeline in accordance with the following schedule.

(a) **No. 3 Pipeline** - Within 60 days of removing the bulk oil from the No.3 pipeline, ConEd shall submit, for Department review and approval, a description of the method and schedule to perform the Pipeline Integrity Test on the No. 3 pipeline.

(b) **No. 1 Pipeline** - Within 60 days of removing the bulk oil from the No. 1 pipeline, ConEd shall submit, for Department review and approval, a description of the method and schedule to perform the Pipeline Integrity Test on the No. 1 pipeline.

(c) **No. 7 Pipeline** - Within 60 days of removing the bulk oil from the No. 7 pipeline, ConEd shall submit, for Department review and approval, a description of the method and schedule to perform the Pipeline Integrity Test on the No. 7 pipeline.

(iii) Removing Residual Fuel Oil and Cleaning the Pipelines

(a) **No. 3 Pipeline** - Within 30 days of the completion of the integrity test on the No. 3 pipeline, ConEd shall submit to the Department, for review and approval, ConEd's proposed method and schedule for removing the residual fuel oil and cleaning the pipeline.

(b) **No. 1 Pipeline** - Within 30 days of the completion of the integrity test on the No. 1 pipeline, ConEd shall submit to the Department, for review and approval, ConEd's proposed method and schedule for removing the residual fuel oil and cleaning the pipeline.

EPA-NC-CE-0000802

(c) **No. 7 Pipeline** - Within 30 days of the completion of the integrity test on the No. 7 pipeline, ConEd shall submit to the Department, for review and approval, ConEd's proposed method and schedule for removing the residual fuel oil and cleaning the pipeline.

(iv) **Reuse, Removal/Capping/Filling**

(a) **No. 3 Pipeline** - Within 90 days of the completion of removing the residual fuel oil and cleaning the No. 3 pipeline, ConEd shall submit to the Department, for review and approval, either a proposed method and schedule for removing sections of the pipeline from the ground or capping and filling the pipeline, or sections thereof, with an inert materialor ConEd's plan that describes the future use of the pipeline.

(b) **No. 1 Pipeline** - Within 90 days of the completion of removing the residual fuel oil and cleaning the No. 1 pipeline, ConEd shall submit to the Department, for review and approval, either a proposed method and schedule for removing sections of the pipeline from the ground or capping and filling the pipeline, or sections thereof, with an inert materialor ConEd's plan that describes the future use of the pipeline..

(c) **No. 7 Pipeline** - Within 90 days of the completion of removing the residual fuel oil and cleaning the No. 7 pipeline, ConEd shall submit to the Department, for review and approval, either a proposed method and schedule for removing sections of the pipeline from the ground or capping and filling the pipeline, or sections thereof, with an inert material or ConEd's plan that describes the future use of the pipeline.

(d) **No. 4 Pipeline** - The No. 4 pipeline (from East River Generating Station to Kips Bay oil storage tank) is temporarily out of service. The bulk oil has been removed and the pipeline has been purged with water. If ConEd decides to permanently close the No. 4 pipeline, ConEd shall notify the Department within 60 days of its decision and submit for Department review and approval, either a proposed method and schedule for removing sections of the pipeline from the ground or capping and filling the pipeline, or sections thereof, with an inert material, or ConEd's plan that describes the future use of the pipeline. A 20-foot section of pipeline has been removed from the pipeline on 25th Street.

(v) **Interim Remedial Measures (IRM) or Removal Actions** - While ConEd is cleaning, filling, removing or capping a section of pipeline, it may be appropriate to undertake certain IRM or removal actions prior to the submittal of a formal remedial work plan described in paragraph (viii) below. Prior to conducting such IRM or

EPA-NC-CE-0000803

removal actions, ConEd shall provide the Department with verbal notification and subsequent written confirmation describing the IRM or removal actions. With the exception of circumstances outside the control of ConEd, ConEd shall make best efforts to provide the Department with an opportunity to visually inspect the site prior to backfilling excavations.

(vi) **Pipeline Right-of-Way (ROW) Investigation and Remediation** - As part of paragraph (v), ConEd will identify areas of potential environmental concern based on information presently known or obtained upon subsequent investigation of historic or current leaks. For each pipeline proposed for closure, ConEd shall submit work plans for the investigation and, if necessary, remediation of the ROW and adjacent areas of each pipelineor any non-adjacent areas that are contaminated by a former leak from the pipeline.

The investigation and, if necessary, remediation of spill sites along the pipelines' ROW identified in Appendix B of the November 4, 1994 Consent Order, and known spills that have occurred between November 4, 1994 and the effective date of this order, shall be addressed in each pipeline's investigation work plan submitted in accordance with the requirements of this Appendix. The pipelines' ROW investigation and, if necessary, remediation will be performed in accordance with the manner discussed in Appendix B of the November 4, 1994 Consent Order and in accordance with the schedules submitted with the investigation work plans.

(vii) **Pipeline Closure** - A pipeline shall be considered Permanently Closed upon the completion of all the work described in section C.4(c) of this appendix.

(d) **Repair Actions for Problem Sections of Piping** - In the event that there are two leaks due to material failure in any section of any of its operating or Temporarily Out of Service Pipelines within a calendar year, ConEd will sleeve, remove or replace the entire section in which such leaks occurred. In all instances in which a thin wall condition is determined to exist on a pipeline, ConEd will repair the thin wall in accordance with the requirements of Specification FOPL 100.

(e) **Provisions for Cleaning** - The "New Underground Oil Pipeline", the "Upgraded Underground Pipeline" and the repaired underground pipeline shall be capable of being cleaned using an internal pig device.

(f) **Leak Detection Systems** - On October 6, 1995 ConEd submitted to the Department a preliminary engineering evaluation of the leak detection systems for ConEd's fuel oil pipelines. This evaluation included a review of the performance of the micro motion mass flow meters that have been installed on the No. 4 and No. 5 lines, a review of the performance of the positive displacement flow meter system on the No. 2,

EPA-NC-CE-0000804

No. 3 and No.7 lines and ConEd's and recommendation(s) for a new leak detection system to be installed on the Nos. 2, 3 and 7 lines. The evaluation revealed that there was no known technology, including the micro motion mass flow meters, capable of detecting typical ConEd fuel oil pipeline leaks.

ConEd will continue to engage in meaningful Research and Development efforts to develop new technologies for improved fuel oil leak detection systems. ConEd will submit a progress report on its R&D efforts to the Department for review and approval on December 31, 1997 and semi-annually thereafter. This progress report shall include the actual or potential performance capabilities of any leak detection system that ConEd learns of or tests.

If ConEd develops or learns of a technology that may be capable of accurately and reliably detecting fuel oil leaks with rate leaks comparable to the typical pinhole leaks that have developed on ConEd's fuel oil pipelines in the past, ConEd shall notify the Department within 30 days after developing or learning of such a technology. Within 90 days after notifying the Department, ConEd shall submit for the Department's review and approval a report evaluating the new technology and a schedule for conducting any field testing necessary to ensure that the technology will perform as intended or, if the evaluation indicates that the technology is capable of meeting the performance criteria of this subdivision, a proposed schedule for installing the technology on ConEd's active fuel oil pipelines.

EPA-NC-CE-0000805

OIL PIPELINE OPERATIONS AND MANAGEMENT SCHEDULE

Pipeline System Description	Report on Personnel Training	Pipeline Monitoring Report	Emergency Shutdown/Spill Response Drills	Operations Manual - Review & Update	Spill Response Plans Review & Update
Line No. 1 Astoria GS to Ravenswood GS					
Line No. 2 74th St GS to Ravenswood GS					
Line No. 3 Hudson Ave GS to East River GS					
Line No. 4 East River GS to Kips Bay Station					
Line No. 5 Waterside GS to Kips Bay Station					
Line No. 7 North 1st St Terminal to Ravenswood GS					

EPA-NC-CE-0000806

SCHEDULE C2

OIL PIPELINE AND MAINTENANCE SCHEDULE

Pipeline System Description	Smart Pigging	Cathodic Protection System Inspection	Leak Detection System Testing	Equipment, Pump and Valve Maintenance	Spill Response Equipment Inspection	Inspection of Aboveground Pipelines and Street Valves
Line No. 1 Astoria GS to Ravenswood GS						
Line No. 2 74th St GS to Ravenswood GS						
Line No. 3 Hudson Ave GS to East River GS						
Line No. 4 East River GS to Kips Bay Station						
Line No. 5 Waterside GS to Kips Bay Station						
Line No. 7 North 1st St Terminal to Ravenswood GS						

EPA-NC-CE-0000807

D. Department Response to NonCompliance

1. Penalty Adjustment In the event that the Department institutes an enforcement action for any discharge of oil from Con Edison's fuel oil pipelines, the Department will, in determining the amount of the penalty to be assessed or imposed against Con Edison, take into consideration, to the maximum extent consistent with the Department's penalty policies and guidance, Con Edison's cooperation in the negotiation of this Order and its efforts to improve the environmental performance of its fuel oil pipeline system.

2. Limited Immunity - Except as provided in subdivision (3) of this section, the Department will not seek any civil or administrative penalties from Con Edison for the following discharges of oil to the environment from Con Edison's fuel oil pipelines:

A. any past discharge discovered during the ROW investigation for a pipeline;

B. any past discharge discovered during the repair, replacement, upgrading, or permanent closure work for a pipeline; and

C. any discharge of 100 gallons or less of oil that occurs prior to the completion of the repair, replacement, upgrading, or permanent closure work required by this Appendix, for the section of pipeline from which the discharge has occurred.

3. Exclusions - Notwithstanding anything to the contrary in this Order, the provisions of subdivisions 1 and 2 of this section shall not apply to the following :

(a) Discharges that are determined by the Department to have been committed with any of the culpable mental states defined in Penal Law Section 15.05 or caused by reckless conduct or gross negligence;

(b) Discharges caused by failure to comply with the requirements of this Order;

(c) Discharges for which Con Edison fails to provide notification to the Department in the manner specified in this Order orapplicable regulations;

(d) Discharges for which Con Edison fails to conduct remediation in the manner specified by the Department; and

(e) Discharges that contaminate the waters of the State or any sewer draining into the wastes of the State.

EPA-NC-CE-0000808

APPENDIX 4 - Facility Outfall Surveys

A. Objective

The objective of the outfall survey and follow up corrective action requirements of this Appendix is to ensure: (1) that the SPDES permits for Con Edison facilities for which such requirements were not previously imposed by the comprehensive 1994 order include and authorize all discharges of pollutants to the waters of the State from those facilities and all outfall structures through which they discharge pollutants to the waters of the State; and (2) that the required SPDES monitoring for those discharges is conducted at locations where best representative samples of the discharges can be collected for analysis.

B. Required Facility Surveys

Con Edison shall survey the discharge outfalls and discharge tunnels of the facilities listed below in Table 1 and shall, by the dates specified in that table, submit to the Department for its review and approval in accordance with the provisions of **ARTICLE II [SUBMITTAL REVIEW AND APPROVAL]** of this Order an acceptable and complete outfall survey report for each such facility.

C. Report Contents

To be deemed acceptable and complete for the purposes of this Appendix and **ARTICLE III [SUBMITTAL REVIEW AND APPROVAL]** of this Order, the outfall survey report for a facility listed below in Table 1 must:

(a) Identify every waste stream that the facility currently discharges or could reasonably be expected to discharge to the waters of the State and specify for each such waste stream its source, estimated flow, and the pollutants associated with its discharge to the waters of the State;

(b) Identify, on the basis of dye tests or other appropriate means, the exact location and approximate physical dimensions of the sump, pipe, discharge tunnel, or other outfall structure through which each such waste stream is discharged to the waters of the State;

(c) Identify and describe the location of the current SPDES monitoring point for each of the facility's discharges of pollutants to the waters of the State;

(d) Identify and describe the effects, if any, that surface water tidal action have on the facility's outflow pipes, discharge tunnels, and/or other outfall structures and on each of the facility's SPDES monitoring points;

(e) Recommend and justify, on the basis of the information specified above, the best representative SPDES monitoring point for each waste stream that the facility discharges to the waters of the State;

EPA-NC-CE-0000809

(f) Contain drawings identifying the location of the recommended best SPDES monitoring point for each such waste stream;

(g) Contain Con Edison's proposed timetable for installing and using each new best representative SPDES monitoring point recommended in the report;

(h) Contain Con Edison's proposed corrective action plan and implementation schedule for obtaining SPDES authorization from the Department for any unauthorized discharges of pollutants to the waters of the State or unauthorized outfall structures discovered at the facility during the required survey or eliminating any such discharges or outfall structures; and

(i) Contain Con Edison's proposed corrective action plan and implementation schedule for ensuring its compliance with the applicable effluent limitations of the facility's SPDES permit in the event that sampling at any new best representative SPDES monitoring point recommended in the report is expected to detect pollutants in concentrations exceeding such effluent limitations.

D. Follow Up Corrective Action

1 Implementation of Approved Plans

Upon the Department's approval of the outfall survey report for a facility listed below in Table 1, Con Edison shall in accordance with the approved report's timetable and/or corrective action plan implementation schedules:

(a) commence and complete the installation of each new best representative SPDES monitoring point identified in the approved report and begin using each such new monitoring point;

(b) eliminate each unauthorized discharge of pollutants to the waters of the State and each unauthorized outfall structure identified in the approved report or apply to the Department for SPDES permits or SPDES permit modifications authorizing such discharges and outfall structures; and

(c) commence and complete the approved report's corrective action plan for ensuring compliance with applicable effluent limitations at the required new best representative SPDES monitoring points, unless the plan calls for the installation or modification of water pollution control equipment, in which case, Con Edison shall implement the plan as provided below in subdivision (2) of this section.

2 Water Pollution Control Equipment

Notwithstanding anything to the contrary in this Appendix, if any corrective action plan contained in an approved outfall survey report calls for the installation of new water pollution control equipment or the modification of existing water pollution control equipment, the plan shall be implemented as follows:

(a) Upon the Department's approval of the outfall survey report containing the plan, Con Edison shall begin designing the new or modified equipment called for in the

EPA-NC-CE-0000810

plan and shall, in accordance with the approved implementation schedule for the plan, file with the Department for its review and approval engineering drawings and specifications for the new or modified equipment along with an application for permission to install and use the equipment and a proposed timetable setting forth the dates by which the equipment will be ordered, fabricated, installed or modified , tested, and placed into operation; and

(b) Upon the Department's approval of the application and proposed drawings, specifications, and timetable, Con Edison shall, in accordance with the approved timetable, commence and complete the installation or modification of the equipment and begin using the new or modified equipment.

E. Drawings, Diagrams, and Labels

1 Water Pollution Control Equipment

Within ninety (90) days after Con Edison completes the installation or modification of any water pollution control equipment called for in the corrective action plan of an approved outfall survey report, Con Edison shall file with Department final "as built" drawings for the new or modified equipment.

2 SPDES Monitoring Points

Within thirty (30) days after the Department's approval of an outfall survey report for a facility, or within thirty (30) days after Con Edison completes the installation of each new best representative SPDES monitoring point identified in the approved report, whichever is later, Con Edison shall clearly label each best representative SPDES monitoring point at the facility and shall submit to the Department a facility diagram identifying the location of each such monitoring point.

F. Temporary Authorization

1 SPDES Monitoring Points

The Department's approval of the outfall survey report for a facility listed below in Table 1 shall constitute temporary authorization for Con Edison to conduct the discharge monitoring specified in the facility's SPDES permit at the facility's existing SPDES monitoring points until such time as the new best representative SPDES monitoring points identified in the approved report have been installed. This temporary authorization to conduct discharge monitoring at locations other than the best representative SPDES monitoring points identified in an approved report is conditioned on Con Edison's compliance with the approved report's timetable for installing and using the new best representative SPDES monitoring points and shall extend until no later than the date specified in the approved report's timetable as the deadline for commencing the

EPA-NC-CE-0000811

use of the new best representative SPDES monitoring points, unless that date is extended pursuant to the provisions of **ARTICLE III [SUBMITIAL REVIEW AND APROVAL], ARTICLE VII [FORCE MAJEURE], or ARTICLE XII [MODIFICATION]** of this Order, in which case, the temporary authorization provided for herein shall expire on the revised deadline date.

2 Discharges and Outfall Structures

Except as otherwise provided in subdivision (3) of this subsection, the Department's approval of the outfall survey report for a facility listed below in Table 1 shall constitute temporary authorization for Con Edison:

(a) to operate any unauthorized outfall structures identified in the approved report until such time as it completes the approved report's corrective action plan for such outfall structures;

(b) to discharge to the waters of the State any unauthorized discharges of pollutants identified in the approved report until such time as it completes the approved report's corrective action plan for such discharges; and

(c) to discharge to the waters of the State, until such time as it completes the approved report's corrective action plan for ensuring compliance with effluent limitations, any discharges of pollutants that the approved report indicates are expected to exceed applicable effluent limitations at the new best representative SPDES monitoring points identified in the approved report.

During Con Edison's implementation of an approved report's corrective action plan for discharges expected to exceed applicable effluent limitations, Con Edison's compliance with the effluent limitations for such discharges shall be determined on the basis of monitoring conducted at the existing SPDES monitoring points for the discharges. If the monitoring results from the existing SPDES monitoring points do not detect pollutants in concentrations exceeding the applicable effluent limitations, Con Edison shall be deemed to have complied with those effluent limitations.

The temporary authorization provided for in this subdivision is conditioned upon Con Edison's compliance with the requirements of this Appendix and its timely implementation and completion of an approved report's corrective action plans for such outfall structures and discharges. For corrective action plans, other than those calling for the submission of applications to the Department for SPDES permits, SPDES permit modifications, or permission to install and use new or modified water pollution control equipment, such temporary authorization shall continue in effect until no later than the date specified in the corrective action plan's approved implementation schedule as the deadline for completing the plan, unless that date is extended pursuant to the provisions of **ARTICLE III [SUBMITTAL REVIEW AND APPROVAL], ARTICLE VII [FORCE MAJEURE], or ARTICLE XII [MODIFICATION]** of this Order, in which case, such temporary authorization shall continue until no later than the revised deadline date.

For any corrective action plan calling for the submission of an application requesting a SPDES permit or SPDES permit modification by the Department, temporary authorization for the unauthorized discharges or unauthorized outfall structures

EPA-NC-CE-0000812

for which such SPDES permit or permit modification were requested shall expire when the Department issues it final decision and determination on the application. In the event that the Department denies the application, Con Edison shall, within 30 days after receipt of the Department's final decision and determination, cease operating the unauthorized outfall structures or discharging to the waters of the State the unauthorized discharges for which the application was filed.

For any corrective action plan calling for the installation or modification of water pollution control equipment, the temporary authorization provided for herein shall continue in effect until no later than the date specified in the plan's approved timetable as the deadline for commencing the operation of such equipment, unless that date is extended pursuant to the provisions of **ARTICLE III [SUBMITTAL REVIEW AND APPROVAL], ARTICLE VII [FORCE MAJEURE], or ARTICLE XII [MODIFICATION]** of this Order, in which case, the temporary authorization shall remain in effect until no later than the revised deadline date.

3 Special Circumstances

The temporary authorization provided for in subdivision (2) of this section shall not extend to any discharge of pollutants to the waters of the State or outfall structure that the Department determines poses a risk of harm to public health or the environment, poses a threat to navigation, or may cause personal injuries, property damage, or adversely impacts natural resources. In the event that the Department makes such a determination for any discharge of pollutants or outfall structure described in subdivision (2), it shall set forth the reasons for such determination in its written notice of approval for the outfall survey report in which the discharge or outfall structure was identified. Unless Con Edison pursues its rights to contest the Department's determination pursuant to the provisions of Article IV [DISPUTE RESOLUTION] of this Order, it shall cease discharging to the waters of the State such discharge of pollutants or using such outfall structure within the time specified in the Department's written approval notification for the outfall survey report.

G Department Response to Noncompliance

1. In the event that the Department institutes enforcement proceedings for instances of non-compliance disclosed in an approved outfall survey report, it will consider, among other things, Con Edison's cooperation in the negotiation of this Order, its good faith efforts in correcting any such instances of non-compliance pursuant to the provisions of this Appendix, and the efforts that it has made since the issuance of the comprehensive 1994 order to foster its compliance with environmental laws and regulations and to improve the environmental performance of its facilities and operations.

2. In the event that the Department finds that penalties are warranted for any instances of non-compliance disclosed in an approved outfall survey report, the Department will not in determining the duration of the non-compliance for the purpose of calculating the penalties to be assessed include any period during which Con Edison continued an unauthorized discharge or continued operating an unauthorized discharge

EPA-NC-CE-0000813

pursuant to any temporary authorization provided to it under the provisions of Section F(2) of this Appendix.

TABLE 1

Deadline for Submitting Outfall Survey Report to the Department from Effective Date of Order

270 days	Astoria Site
270 days	East River Site
270 days	Arthur Kill Site
365 days	Ravenswood Site
365 days	60th Street Steam Plant
365 days	North First Street Terminal
365 days	Gowanus Gas Turbines
365 days	Narrow Gas Turbines
365 days	11th Street Tunnel

EPA-NC-CE-0000814

APPENDIX 5 - MOSF AND GENERATING STATION UNDERGROUND PIPING SYSTEMS

A. Objective

Con Edison shall develop and implement a periodic tightness testing program for all underground petroleum piping systems at its MOSF facilities, including No. 6 oil piping systems for which such testing is not required under the Department's bulk oil storage requirements, to minimize, to the greatest extent practicable, the potential for discharges of petroleum from such piping systems into the environment. The development and implementation of the required program is the responsibility of Con Edison and shall be accomplished to the greatest extent practicable within the shortest possible time frame.

B. Applicability

The tightness testing and other requirements of this Appendix apply only to the underground fuel oil piping systems associated with the petroleum fuel oil tanks at Con Edison's MOSFs. The requirements of this Appendix do not apply to Con Edison pipelines tested in the compliance schedules of Appendix 3 of this Order.

C. Underground Piping Testing

Within five (5) years of the effective date of this Order, and either every five (5) years thereafter for underground piping associated with underground tanks or every ten (10) years thereafter for underground piping associated with aboveground tanks, Con Edison shall tightness test all sections of underground petroleum piping at its MOSF facilities by a method meeting the requirements of the Department and the United States Environmental Protection Agency (EPA), as described in NYSDEC SPOTS Memo #2 - Tightness Testing Underground Petroleum Storage Tank Systems. (Note: The tightness test methods listed in the SPOTS Memo #2 can identify known leaks, but may be unable to identify holes in the piping that are sealed by coagulated No. 6 fuel oil.)

If the tightness test methods listed in the SPOTS Memo #2 prove to be inapplicable to the underground piping associated with ConEd's petroleum tanks, ConEd shall request Department approval to discontinue such tightness testing. If the Department agrees, ConEd shall submit an alternative method and schedule to the Department to tightness test the underground piping.

Any section of underground petroleum piping that is not currently equipped with the necessary fittings or access structures to perform tightness testing shall be retrofitted with such fittings and structures, as provided below in Section D.

D. Required Submissions April 23, 1998.

1. **Conceptual Compliance Plan** - Within 180 days of the effective date of this Order, Con Edison shall submit to the Department for its review and approval in accordance with the provisions of Appendix II [Submittal Review and Approval] of this Order, a Conceptual Compliance Plan that contains the following:

(a) a list of the Con Edison departments responsible for the development and the implementation of the testing program;

(b) a description of all major tasks involved in the implementation of the testing program for each piping system or combination of interconnecting piping systems, including, but not limited to, piping retrofitting and actual tightness testing; and

(c) a schedule for implementing the tightness test for each section of piping within five (5) years of the effective date of this Order.

2. **Engineering Work Plans for Retrofitting the Underground Piping** - In the event that retrofitting is required for the tightness testing of an underground piping system, Con Edison shall, within the times specified in the approved Conceptual Compliance Plan, submit for the Department's review and approval, Engineering Work Plans for such work. In addition to engineering specifications, the Engineering Work Plans shall specify the procedures that will be used to prevent discharges of petroleum into the environment during retrofitting work.

3. **Tightness Test Reports** - Within thirty (30) days of the completion of tightness testing on any section of underground petroleum piping, Con Edison shall submit for Department review and approval a report describing the results of the testing and any necessary proposed corrective actions. The reports shall include copies of the original data sheets and test results. Such reports shall be submitted in accordance with the provisions of Appendix II [Submittal Review and Approval] of this Order for as long as there remains at least one Department environmental monitor. Thereafter, reports are to be submitted to the Region 2 Petroleum Bulk Storage Unit for Department review.

E. Piping Tightness Testing Failure

In the event that a section of underground petroleum piping fails a tightness test, Con Edison must notify the Department within two (2) hours of discovery of the failed test. Upon confirmation of a fuel oil leak, ConEd must initiate corrective actions, locate

EPA-NC-CE-0000816

the fuel oil leak and either repair or replace the piping. The piping must be repaired or replaced in accordance with State regulations and pass a Department-approved tightness test before being put back into service. Alternatively, the piping can be taken out of service and closed in accordance with State and Federal regulations.

F. **Department Response to Noncompliance**

1. **Penalty Adjustment** - In the event that the Department institutes an enforcement action for any discharges of petroleum from the underground piping systems subject to the requirements of this Appendix, the Department will, in determining the amount of the penalty to be imposed or assessed against Con Edison, take into consideration, to the maximum extent consistent with the Department's penalty policies and guidance, Con Edison's cooperation in the negotiation of this Order and its efforts to improve the environmental performance of its underground piping systems .

2. **Limited Immunity** - Except as provided in subdivision (3) of this section, the Department will not seek civil or administrative penalties from Con Edison for the following discharges of petroleum to the environment from the underground piping systems subject to the requirements of this Appendix:

(a) any discharge from a leaking section of an underground piping system that occurs prior to the first required tightness test for the leaking section of pipe; and

(b) any discharge from a leaking section of an underground piping system that is discovered as a result of the first required tightness test for the leaking section of piping;

3. **Exclusions** - Notwithstanding anything to the contrary in this Order, the provisions of subdivisions (1) and (2) of this section do not apply to the following:

(a) Discharges that are determined by the Department to have been caused by any of the culpable mental states defined in Penal Law Section 15.05 or were caused by reckless conduct or gross negligence;

(b) Discharges caused by failure to comply with the requirements of this order;

(c) Discharges for which Con Edison fails to provide notification to the Department in the manner specified in this Order or the Department's regulations; and

(d) Discharges for which Con Edison fails to conduct remediation in the manner specified by the Department; and

(e) Discharges that contaminate the waters of the State, or any sewer discharging into the waters of the State.

EPA-NC-CE-0000817

conEdison

E2MIS Detail Incident Report

11th Street

DETAIL: **Incident ID: 128225/19** **Closed (agency approval received & Resolved date entered)**

Report Type: Preliminary Rev. #: 19

Incident Type: Permit Exceedence - SPDES

Brief Description: CE - oil & grease sample exceeded the limit of 15 ppm

Administrative Site: 11th Street

Responsible Operation: 11th Street Conduit

Street: 11 St Conduit

No. of Injuries: 0

Any Outside Impact: N

Immediate Abatement/Containment Actions: clean the separator and the sump

Start (Incident First Discovered): 10/04/1999 09:00

First Reported: 10/02/1999

First Reported to CIG:

Cleanup Completed/Stopped: 10/05/1999 7:30

Resolved (administrative closure): 01/09/2008

Duration Hours (discovery to closure): 22 Hours

Detailed Description: Logger: J. Behrmann #46290
A sample was taken at the 11th Street Conduit for oil & grease the test revealed that the limit was exceeded by 2 ppm. the limit is 15 ppm and thest showed 17 ppm.

Updated: Oct. 7, 1999 By John Behrmann
Miller Environmental Group was disptached to the location to clean the sump and the oil water separator.
The oil water separator was clean on October 5, 1999. The unit was placed back in service and is operational. PCB samples were taken, test results indicate less than 1 PPM PCB's. The source of the oily substance entering is external to the tunnel and is unknown. Oil ID analysis doen not match any known Con Ed Standard. It has similar characterictics to fuel oil but is too degraded for a conclusive ID.
==========
update, vic basso,52420,10/12/99. unit placed back in service, O&G samples to be taken at the end of the month.
==========
update,Vic Basso,52420,11/16/99. closed job ,entered resolve date. SPDES sample taken 11/03/99 results =6.30ppm. DEC notified of results.

==========
loger vbasso, 52420, 1-22-04 - removed resolve date and changed open status to clean, ok to send to DEC for review.
==========
Logger Chris McCallion (86578) 22-JAN-2004 - Reviewed incident. Changed Opn Status to "-CLODE" for closure by DEC.

EPA-NC-CE-000818

DETAIL: Incident ID: **128225/19** **Closed (agency approval received & Resolved date entered)**

==========

Substances, Material Property	Amount	UOM	Medium_Description
OIL, OTHER	17.00	PPM	Possible Waterway

Notifications	Date	Agency Asgnd. #	Employee Reporting (Last Name)
CE Environmental Affairs	10/04/1999		SHAH
CE Law	10/04/1999		CAROL
Con Edison	10/04/1999		OLSEN
New York, State Department of Environmental Conservation	10/04/1999	9908111	#312

Causes	Primary Cause Indicator	Comments	Equipment Name	Tag #	Opn
Equipment - Other (Specify in "Comments")	N	equipment is oil water separtor			

Involved Roles	Phone #	Emp	Last Name
Email Notification	(212) 460-4093	E	DAVIDOWITZ
Email Notification	(212) 579-1247	E	OCONNOR
Email Notification	(718) 204-4025	E	MASTRODICASA
Email Notification	(718) 579-1288	E	WESTFALL

Comment	Date
CIG RECVD., 1356HRS., NYS DEC FAX.	10/04/1999
Closed by NYSDEC on 1/9/2008	01/11/2008

Event Property Description	Effective Date	Expire Date	Comments
EHS Closeout Review - Conducted	01/22/2004 0:00		ok - Chris McCallion
Operations Initial Incident Review	01/22/2004 0:00		ok vbasso

EPA-NC-CE-000819

11th Street

DETAIL: **Incident ID: 128225/19** **Closed (agency approval received & Resolved date entered)**

Sample Id	Parameter Type	Parameter Description	Numeric Result	Unit	Collect Date	Result Date	Comments
121,658	SUBSTN	AROCLOR 1242	1.00	PPM	10/05/1999	10/07/1999	
121,658	SUBSTN	AROCLOR 1254	1.00	PPM	10/05/1999	10/07/1999	
121,658	SUBSTN	AROCLOR 1260	1.00	PPM	10/05/1999	10/07/1999	
121,659	SUBSTN	AROCLOR 1242	1.00	PPM	10/07/1999	10/07/1999	
121,659	SUBSTN	AROCLOR 1254	1.00	PPM	10/07/1999	10/07/1999	
121,659	SUBSTN	AROCLOR 1260	1.00	PPM	10/07/1999	10/07/1999	
121,849	SUBSTN	ARSENIC	0.00	PPM	10/07/1999	10/14/1999	
121,849	SUBSTN	BARIUM	2.00	PPM	10/07/1999	10/14/1999	
121,849	SUBSTN	CADMIUM	0.00	PPM	10/07/1999	10/14/1999	
121,849	SUBSTN	CARBON TETRACHLORIDE	0.00	PPM	10/07/1999	10/14/1999	
121,849	SUBSTN	CHROMIUM	0.00	PPM	10/07/1999	10/14/1999	
121,849	SUBSTN	HEXACHLOROBENZENE	0.00	PPM	10/07/1999	10/14/1999	
121,849	SUBSTN	HEXACHLOROBUTADIENE	0.00	PPM	10/07/1999	10/14/1999	
121,849	SUBSTN	HEXACHLOROETHANE	0.00	PPM	10/07/1999	10/14/1999	
121,849	SUBSTN	LEAD	0.00	PPM	10/07/1999	10/14/1999	
121,849	SUBSTN	MERCURY	0.00	PPM	10/07/1999	10/14/1999	
121,849	SUBSTN	METHYL ETHYL KETONE	0.00	PPM	10/07/1999	10/14/1999	
121,849	SUBSTN	PENTACHLOROPHENOL	0.00	PPM	10/07/1999	10/14/1999	
121,849	SUBSTN	SELENIUM	0.00	PPM	10/07/1999	10/14/1999	
121,849	SUBSTN	SILVER	0.00	PPM	10/07/1999	10/14/1999	
121,849	SUBSTN	TRICHLOROETHYLENE	0.00	PPM	10/07/1999	10/14/1999	

EPA-NC-CE-000820

Please FAX ID No TO: DAN PANETTA, GASOPS 7185898646 (FAX #)

EPA PROVISIONAL NUMBER

ID Number issued: NYP 004 046 157 Date 11/8/99

NAME OF GENERATOR: CON EDISON Log #

SITE OF SPILL/INCIDENT

Street: 11TH ST CONDUIT (Tunnel) MH/Vault/Transformer #
ASH + McGUINESS BLVDS Gas Drip/Gas Main/Excavation
City: BROOKLYN State: NY Zip: 11222

RESPONSIBLE PARTY

Contact Name: VICTOR BASSO — GASEMS
Title: Telephone: (718) 575-1247

MAILING ADDRESS

Company Name : CON EDISON
Street: 4 Irving Place - Room 300
City: New York, NY State: NY Zip: 10003

DESCRIPTION OF INCIDENT

Time: 9 AM Date: 10/4/99 Incident: E2MIS # 128225

Material involved and quantity: 31 DRUMS of CREOSOTE — HAZARDOUS WASTE

Clean Up Contractor: Con Edison

Transporter & ID #: 1) Con Edison/Astoria NYD006982359 Material CREOSOTE
2) Material

TSD & ID#: 1) Chem Waste NYD077444263 Material Creosote
2) Material

Date of expected clean-up completion: 10/25/99
Does the site have an ID number? NO
The number is good for only 30 days.
Generator to return the follow-up questionnaire and notification form packet to this office within 10 days, (when required).
Is the site within the boundaries of Region II? Yes
Are you the generator? Yes - GAS OPERATIONS NO
If not: Who requested the ID#? NAME: Mike Kessler
Company: Con Edison Title: Environmental Response Team(ERT) Date: 11/8/99
Phone: 212 580 8383 Recorded by:

Upon completion: The ERT will send a copy of the completed form to:
Jack Hoyt, EPA Region II, 290 Broadway NY, NY 10007-1866, 22FL Telephone: 212-637-4106

I certify under penalty of law, that this document was prepared by proper personnel. The information submitted is, to the best of my knowledge, true accurate and complete. I am aware that there are significant penalties for the submitting of false information, including the possibility of fine and imprisonment for knowing violations.

EPA REGION 2
HAZ-WASTE DIV
NYP004046157

TOTAL P.01

NEWT-0038517
NC 001760

EPA-NC-CE-0000821

RCM Technologies
The Source of Smart Solutions

RCM Technologies, Inc.
811 W. Jericho Turnpike
Smithtown, NY 11787
Tel: 516.361.8787
Fax: 516.361.2110
eng.smithtown@rcmt.com
www.rcmt.com

Resources & Solutions:
Information Technology
Professional Engineering
Government Services

October 26, 1999

Consolidated Edison Company of New York, Inc.
Bruckner Operations Center
1560 Bruckner Boulevard
Bronx, New York 10473

ATTENTION: Mr. John O'Connor

SUBJECT: Sample Test Results for 11th Street Conduit

Dear Mr. O'Connor:

Enclosed please find the test results for the samples taken at the 11th Street Conduit.

Very truly yours,

Jim Pearlstein

YORK
ANALYTICAL LABORATORIES, INC.

Technical Report

prepared for

Environmental Concepts Inc.
142 Ferry Rd.
Suite 5
Old Saybrook, CT 06475
Attention: Mr. Hansen Cummins

Report Date: 10/18/1999
Re: Client Project ID: 11th St. Tunnel
York Project No.: 99100313

CT License No. PH-0723 New York License No. 10854 Mass. License No. M-CT106 Rhode Island License No. 93 EPA I.D. No. CT00106

ONE RESEARCH DRIVE STAMFORD, CT 06906 (203) 325-1371 FAX (203) 357-0166

Report Date: 10/18/1999
Client Project ID: 11th St. Tunnel

York Project No.: 99100313

Environmental Concepts Inc.
142 Ferry Rd.
Suite 5
Old Saybrook, CT 06475
Attention: Mr. Hansen Cummins

Purpose and Results

This report contains the analytical data for the sample(s) identified on the attached chain-of-custody received in our laboratory on 10/14/99. The project was identifed as your project "11th St. Tunnel ".

The analysis was conducted utilizing appropriate EPA, Standard Methods, and ASTM methods as detailed in the data summary tables .

The results of the analysis are summarized in the following table(s).

Analysis Results

Client Sample ID			54		West	
York Sample ID			99100313-01		99100313-02	
Matrix			LIQUID		LIQUID	
Parameter	Method	Units	Results	MDL	Results	MDL
PCB	SW846/EPA	mg/kG	---	---	---	---
PCB 1016			Not detected	5.0	Not detected	5.0
PCB 1221			Not detected	5.0	Not detected	5.0
PCB 1232			Not detected	5.0	Not detected	5.0
PCB 1242			Not detected	5.0	Not detected	5.0
PCB 1248			Not detected	5.0	Not detected	5.0
PCB 1254			Not detected	5.0	Not detected	5.0
PCB 1260			Not detected	5.0	Not detected	5.0
PCB, Total			Not detected	5.0	Not detected	5.0
Oil Identification	GC/FID	---	Coal Tar	---	Coal Tar	---
BNA-8270 List soil	SW846-8270	ug/Kg	---	---	---	---
Acenaphthene			9300000	170000	7100000	170000
Acenaphthylene			710000	170000	530000	170000
Anthracene			3300000	170000	3200000	170000
Benzo(a)anthracene			2000000	170000	2200000	170000
Benzo(b)fluoranthene			1000000	170000	1200000	170000
Benzo(k)fluoranthene			1100000	170000	1200000	170000
Benzo(g,h,i)perylene			250000	170000	280000	170000
Benzo(a)pyrene			1000000	170000	1100000	170000

YORK

EPA-NC-CE-0000824

Client Sample ID			54		West	
York Sample ID			99100313-01		99100313-02	
Matrix			LIQUID		LIQUID	
Parameter	Method	Units	Results	MDL	Results	MDL
Benzyl alcohol			Not detected	170000	Not detected	170000
Bis(2-chloroethoxy)methane			Not detected	170000	Not detected	170000
Bis(2-chloroethyl)ether			Not detected	170000	Not detected	170000
Bis(2-chloroisopropyl)ether			Not detected	170000	Not detected	170000
Bis(2-ethylhexyl)phthalate			Not detected	170000	Not detected	170000
4-Bromophenyl phenyl ether			Not detected	170000	Not detected	170000
Butyl benzyl phthalate			Not detected	170000	Not detected	170000
4-Chloroaniline			Not detected	170000	Not detected	170000
2-Chloronaphthalene			Not detected	170000	Not detected	170000
4-Chloro-3-methyl phenol			Not detected	170000	Not detected	170000
2-Chlorophenol			Not detected	170000	Not detected	170000
4-Chlorophenyl phenyl ether			Not detected	170000	Not detected	170000
Chrysene			1900000	170000	2100000	170000
Dibenz(a,h)anthracene			Not detected	170000	Not detected	170000
Dibenzofuran			6200000	170000	5200000	170000
Di-n-butylphthalate			Not detected	170000	Not detected	170000
1,3-Dichlorobenzene			Not detected	170000	Not detected	170000
1,4-Dichlorobenzene			Not detected	170000	Not detected	170000
1,2-Dichlorobenzene			Not detected	170000	Not detected	170000
3,3'-Dichlorobenzidine			Not detected	170000	Not detected	170000
2,4-Dichlorophenol			Not detected	170000	Not detected	170000
Diethylphthalate			Not detected	170000	Not detected	170000
2,4-Dimethylphenol			Not detected	170000	Not detected	170000
Dimethylphthalate			Not detected	170000	Not detected	170000
4,6-Dinitro-2-methylphenol			Not detected	850000	Not detected	850000
2,4-Dinitrophenol			Not detected	850000	Not detected	850000
2,4-Dinitrotoluene			Not detected	170000	Not detected	170000
2,6-Dinitrotoluene			Not detected	170000	Not detected	170000
Di-n-octylphthalate			Not detected	170000	Not detected	170000
Fluoranthene			8000000	170000	8100000	170000
Fluorene			8800000	170000	7300000	170000
Hexachlorobenzene			Not detected	170000	Not detected	170000
Hexachlorobutadiene			Not detected	170000	Not detected	170000
Hexachlorocyclopentadiene			Not detected	170000	Not detected	170000
Hexachloroethane			Not detected	170000	Not detected	170000
Indeno(1,2,3-cd)pyrene			210000	170000	230000	170000
Isophorone			Not detected	170000	Not detected	170000
2-Methylnaphthalene			12000000	170000	6100000	170000
2-Methylphenol			Not detected	170000	Not detected	170000
4-Methylphenol			Not detected	170000	Not detected	170000
Naphthalene			26000000	170000	6100000	170000
2-Nitroaniline			Not detected	850000	Not detected	850000
3-Nitroaniline			Not detected	850000	Not detected	850000
4-Nitroaniline			Not detected	850000	Not detected	850000
Nitrobenzene			Not detected	170000	Not detected	170000
2-Nitrophenol			Not detected	170000	Not detected	170000
4-Nitrophenol			Not detected	850000	Not detected	850000
N-Nitrosodiphenylamine			Not detected	170000	Not detected	170000
N-Nitrosodi-n-propylamine			Not detected	170000	Not detected	170000
Pentachlorophenol			Not detected	850000	Not detected	850000
Phenanthrene			18100000	170000	17100000	170000

YORK

Client Sample ID			54		West	
York Sample ID			99100313-01		99100313-02	
Matrix			LIQUID		LIQUID	
Parameter	Method	Units	Results	MDL	Results	MDL
Phenol			Not detected	170000	Not detected	170000
Pyrene			7700000	170000	8000000	170000
1,2,4-Trichlorobenzene			Not detected	170000	Not detected	170000
2,4,5-Trichlorophenol			Not detected	170000	Not detected	170000
2,4,6-Trichlorophenol			Not detected	170000	Not detected	170000
BNA Tentatively ID Compounds	SW846-8270	ug/kg	---	---	---	---
Trimethyl benzene isomer			1600000			
Indane			2600000			
Indene			1600000			
Benzo thiophene isomer			370000			
1-Methyl naphthalene			1200000		1300000	
Biphenyl			2500000		2500000	
Ethyl naphthalene isomer			1500000		1600000	
Dimethyl naphthalene isomers			10000000		10300000	
Trimethyl naphthalene isomers			1600000		3700000	
Cycloalkyl substituted benzene isomers			1600000		2100000	
2-Methyl-1,1'-Biphenyl			1600000		2500000	
Alkenyl substituted naphthalene isomers			920000		1260000	
Methyl dibenzofuran isomers			1900000		2200000	
Methyl fluorene isomer			290000		180000	
Dibenzothiophene			550000		350000	
Carbazole			250000		250000	
Methyl anthracene isomers			360000		560000	
Methyl phenanthrene isomers			790000		470000	
2-Phenyl naphthalene			200000		130000	
Benzo fluorene isomers			2800000		2200000	
o-Terphenyl					480000	

Discussion

Based upon the analyses presented herein and the characteristic odor of the material, the constituents found appear to be those common to coal tar and/or creosote from coal tar. Coal tar contains numerous polynuclear aromatic hydrocarbons, the predominant compounds being naphthalenes, anthracenes, phenanthrenes and other such species. Coal tar and creosote from coal tar are used mainly in the preservation of wood to prevent rot. Typical applications include railroad ties, telephone poles and marine pilings.

Units Key: For Waters/Liquids: mg/L = ppm ; ug/L = ppb For Soils/Solids: mg/kg = ppm ; ug/kg = ppb

Notes:

1. The MDL (Minimum Detectable Limit) reported is adjusted for any dilution necessary due to the levels of target and/or non-target analytes and matrix interference. If dilution factor is reported at the end of the compound list, the MDL is determined by multiplying the MDL times the listed dilution factor.
2. Samples are retained for a period of thirty days after submittal of report, unless other arrangements are made.
3. York's liability for the above data is limited to the dollar value paid to York for the referenced project.

Approved By: Robert Q. Bradley
Robert Q. Bradley
Managing Director

Date: 10/18/1999

YORK

YORK
ANALYTICAL LABORATORIES, INC.
ONE RESEARCH DRIVE
STAMFORD, CT 06906
(203) 325-1371 FAX (203) 357-0166

Page 1 of ___

Field Chain-of-Custody Record

Company Name	Report To:	Invoice To:	Project ID/No.	Samples Collected By (Signature) / Name (Printed)
ECI	Hansen Cummins	ECI	11th St. Tunnel	[signature] Hansen Cummins

Sample No.	Location/ID	Date Sampled	Sample Matrix: Water	Soil	Air	OTHER	ANALYSES REQUESTED	Container Description(s)
	54	10/14/99				X	PCB, BNA, BNA-TIC	
	WEST	10/14/99				X	PCB " " "	
							+ I. Burn bath	

Chain-of-Custody Record

Bottles Relinquished from Lab by	Date/Time	Sample Relinquished by	Date/Time	Sample Received by	Date/Time
		[signature]	10/14/99 3:25 p	[signature]	10/14/99 3:[illegible]
Bottles Received in Field by	Date/Time	Sample Relinquished by	Date/Time	Sample Received in LAB by	Date/Time
		[signature]		[signature]	10/14/99 1528

Comments/Special Instructions
* 3 DAY TURNAROUND TIME

Turn-Around Time
___ Standard X RUSH(define) 3 Day

YORK
ANALYTICAL LABORATORIES, INC.

Technical Report

prepared for

Environmental Concepts Inc.
142 Ferry Rd.
Suite 5
Old Saybrook, CT 06475
Attention: Mr. Hansen Cummins

Report Date: 10/22/1999
Re: Client Project ID: 11th St. Tunnel
York Project No.: 99100339

CT License No. PH-0723 New York License No. 10854 Mass License No. M-CT106 Rhode Island License No. 93 EPA I.D No. CT00106

ONE RESEARCH DRIVE STAMFORD, CT 06906 (203) 325-1371 FAX (203) 357-0166

Report Date: 10/22/1999
Client Project ID: 11th St. Tunnel

York Project No.: 99100339

Environmental Concepts Inc.
142 Ferry Rd.
Suite 5
Old Saybrook, CT 06475
Attention: Mr. Hansen Cummins

Purpose and Results

This report contains the analytical data for the sample(s) identified on the attached chain-of-custody received in our laboratory on 10/14/99. The project was identifed as your project "11th St. Tunnel ".

The analysis was conducted utilizing appropriate EPA, Standard Methods, and ASTM methods as detailed in the data summary tables .

The results of the analysis are summarized in the following table(s).

Analysis Results

Client Sample ID			Drain A		Trough A	
York Sample ID			99100339-01		99100339-02	
Matrix			WATER		WATER	
Parameter	Method	Units	Results	MDL	Results	MDL
pH	EPA 150.1	units	7.24	---	7.59	---
Chloride	SM407B	mg/L	6350	1.0	3250	1.0
Sulfate	EPA375.3	mg/L	83.7	10.0	73.9	10.0
Sulfide	EPA376.1	mg/L	Not detected	5.0	Not detected	5.0
Alkalinity-Total	SM403	mg/L	704	2.0	412	2.0
Hardness, total	SM314B	mg/L CaCO3	1780	1.0	1090	1.0
Calcium	SW846-6010	mg/L	262	0.020	251	0.020
Magnesium	SW846-6010	mg/L	274	0.020	157	0.020
Sodium	SW846-6010	mg/L	3480	0.10	1760	0.10
Potassium	SW846-6010	mg/L	109	0.500	64.2	0.500
Iron	SW846-6010	mg/L	0.558	0.005	0.690	0.005
Manganese	SW846-6010	mg/L	0.757	0.005	1.03	0.005
Total Petroleum Hydrocarbons	EPA 418.1	mg/L	Not detected	0.5	0.9	0.5
BNA-8270 List water	SW846-8270	ug/L	---	---	---	---
Acenaphthene			14	10	110	10
Acenaphthylene			Not detected	10	Not detected	10
Anthracene			Not detected	10	30	10
Benzo(a)anthracene			Not detected	10	18	10
Benzo(b)fluoranthene			Not detected	10	12	10

YORK

Client Sample ID			Drain A		Trough A	
York Sample ID			99100339-01		99100339-02	
Matrix			WATER		WATER	
Parameter	Method	Units	Results	MDL	Results	MDL
Benzo(k)fluoranthene			Not detected	10	Not detected	10
Benzo(g,h,i)perylene			Not detected	10	Not detected	10
Benzo(a)pyrene			Not detected	10	Not detected	10
Benzyl alcohol			Not detected	10	Not detected	10
Bis(2-chloroethoxy)methane			Not detected	10	Not detected	10
Bis(2-chloroethyl)ether			Not detected	10	Not detected	10
Bis(2-chloroisopropyl)ether			Not detected	10	Not detected	10
Bis(2-ethylhexyl)phthalate			Not detected	10	Not detected	10
4-Bromophenyl phenyl ether			Not detected	10	Not detected	10
Butyl benzyl phthalate			Not detected	10	Not detected	10
4-Chloroaniline			Not detected	10	Not detected	10
2-Chloronaphthalene			Not detected	10	Not detected	10
4-Chloro-3-methyl phenol			Not detected	10	Not detected	10
2-Chlorophenol			Not detected	10	Not detected	10
4-Chlorophenyl phenyl ether			Not detected	10	Not detected	10
Chrysene			Not detected	10	17	10
Dibenz(a,h)anthracene			Not detected	10	Not detected	10
Dibenzofuran			Not detected	10	Not detected	10
Di-n-butylphthalate			Not detected	10	Not detected	10
1,3-Dichlorobenzene			Not detected	10	Not detected	10
1,4-Dichlorobenzene			Not detected	10	Not detected	10
1,2-Dichlorobenzene			Not detected	10	Not detected	10
3,3'-Dichlorobenzidine			Not detected	10	Not detected	10
2,4-Dichlorophenol			Not detected	10	Not detected	10
Diethylphthalate			Not detected	10	Not detected	10
2,4-Dimethylphenol			Not detected	10	Not detected	10
Dimethylphthalate			Not detected	10	Not detected	10
4,6-Dinitro-2-methylphenol			Not detected	50	Not detected	50
2,4-Dinitrophenol			Not detected	50	Not detected	50
2,4-Dinitrotoluene			Not detected	10	Not detected	10
2,6-Dinitrotoluene			Not detected	10	Not detected	10
Di-n-octylphthalate			Not detected	10	Not detected	10
Fluoranthene			Not detected	10	70	10
Fluorene			Not detected	10	97	10
Hexachlorobenzene			Not detected	10	Not detected	10
Hexachlorobutadiene			Not detected	10	Not detected	10
Hexachlorocyclopentadiene			Not detected	10	Not detected	10
Hexachloroethane			Not detected	10	Not detected	10
Indeno(1,2,3-cd)pyrene			Not detected	10	Not detected	10
Isophorone			Not detected	10	Not detected	10
2-Methylnaphthalene			Not detected	10	100	10
2-Methylphenol			Not detected	10	Not detected	10
4-Methylphenol			Not detected	10	Not detected	10
Naphthalene			11	10	69	10
2-Nitroaniline			Not detected	50	Not detected	50
3-Nitroaniline			Not detected	50	Not detected	50
4-Nitroaniline			Not detected	50	Not detected	50
Nitrobenzene			Not detected	10	Not detected	10
2-Nitrophenol			Not detected	10	Not detected	10
4-Nitrophenol			Not detected	50	Not detected	50
N-Nitrosodiphenylamine			Not detected	10	Not detected	10

YORK

Client Sample ID			Drain A		Trough A	
York Sample ID			99100339-01		99100339-02	
Matrix			WATER		WATER	
Parameter	Method	Units	Results	MDL	Results	MDL
N-Nitrosodi-n-propylamine			Not detected	10	Not detected	10
Pentachlorophenol			Not detected	50	Not detected	50
Phenanthrene			Not detected	10	180	10
Phenol			Not detected	10	Not detected	10
Pyrene			Not detected	10	79	10
1,2,4-Trichlorobenzene			Not detected	10	Not detected	10
2,4,5-Trichlorophenol			Not detected	10	Not detected	10
2,4,6-Trichlorophenol			Not detected	10	Not detected	10

Units Key:

For Waters/Liquids: mg/L = ppm ; ug/L = ppb For Soils/Solids: mg/kg = ppm ; ug/kg = ppb

Notes:

1. The MDL (Minimum Detectable Limit) reported is adjusted for any dilution necessary due to the levels of target and/or non-target analytes and matrix interference. If dilution factor is reported at the end of the compound list, the MDL is determined by multiplying the MDL times the listed dilution factor.
2. Samples are retained for a period of thirty days after submittal of report, unless other arrangements are made.
3. York's liability for the above data is limited to the dollar value paid to York for the referenced project.

Approved By: Robert Q. Bradley, P.E. **Date:** 10/22/1999

Robert Q. Bradley
Managing Director

YORK

YORK
ANALYTICAL LABORATORIES, INC.
ONE RESEARCH DRIVE
STAMFORD, CT 06906
(203) 325-1371 FAX (203) 357-0166

Page 1 of ___

Field Chain-of-Custody Record

Company Name	Report To:	Invoice To:	Project ID/No.	Samples Collected By (Signature) / Name (Printed)
ECI	Hansen Cummins	ECI	11th ST. TUNNEL	[signature] Hansen Cummins

Sample No.	Location/ID	Date Sampled	Sample Matrix: Water	Soil	Air	OTHER	ANALYSES REQUESTED	Container Description(s)
	DRAIN A	10/14/99	X				pH, CHLORIDE, SULFATE, SULFIDE, ALKALINITY, HARDNESS, CALCIUM, MAGNESIUM, SODIUM, POTASSIUM, IRON, [redacted] MANGANESE TPH 4, 418.1	2 Liter Ambers 1 750 Ambers 1 [illegible] Volatiles
	TROUGH A	10/14/99	X					" "
							add BNA to each 10/14/99 per A Cummins	

Chain-of-Custody Record

Bottles Relinquished from Lab by	Date/Time	Sample Relinquished by	Date/Time	Sample Received by	Date/Time
		[signature]	10/14/99 3:25 pm	[signature]	10/14/99 3:25 pm
Bottles Received in Field by	Date/Time	Sample Relinquished by	Date/Time	Sample Received in LAB by	Date/Time
				Linda A LaBlanc	10/14/99 1525

Comments/Special Instructions

Turn-Around Time
___Standard ___RUSH(define)_____

317

- LOG -

11th STREET CONDUIT

8/16/71	9:00 AM	Received call from Henry Chu, Electrical Engineering stating that a 345 KV feeder which runs through the Conduit is loosing oil and asking how long it takes to dewater.
	9:30 AM	E. Palmer, Central Construction, called to check situation.
	10:00 AM	I arrived at the Brooklyn headhouse and checked the water; no oil present.
	10:15 AM	I went to the Queens headhouse and lowered a bucket. It came up full of oil. I brought a cup of the oil to E. Palmer at the Cushman Building.
	11:00 AM	I arrived at 3rd Ave. Yard in Brooklyn to check if materials which had been delivered were still there.
	12:00 NOON	I arranged with G A Fleet to check if rental of Flygt pumps was possible.
	1:00 PM	I began to arrange for two pumps from Norwalk complete with cable on a rental basis at $1500/mo per pump + $215/mo for cables per pump. This would save a great deal of time because only one frame is available for lowering the Johnston Pump and this would take 3 days. Using two Flygt pumps the job could be done in half that time.
	2:00 PM	Meeting with Frank E. Fischer. He insisted we dewater as fast as possible. Approximately 100 gal/min. was being lost into the tunnel, and 5000 gallons total of oil were already lost. He said that pressure should be reduced on the feeder to spare some of the oil. Positive pressure is required not to let water enter the feeder.
	2:30 PM	R. Scholz and W. Wall went to the Tunnel.

3:00 PM — I arranged for a truck and cherry picker to go to the 3rd Ave. Yard to get the discharge hose.

4:00 PM — I arranged for two pumps with cables to be ready at 5:30 at the Norwalk Plant, and for a Transportation Department truck to be there and bring the pumps back to the tunnel. I also arranged for a crane to be at the tunnel at Midnight.

David Dandeneau

8/16/71

- LOG -

11th STREET CONDUIT

8/16/71 - Monday - 12 Midnight - Operations for emergency dewatering began. By 1 AM, 8/17/71, crane, major materials, pumps, electrical Construction Bureau (ECB), Underground Transmission Facilities Bureau (Construction), I & A Bureau, Transportation Dept. were coordinated.

8/17/71 - Tuesday - We worked all night setting up one Flygt pump model b-2250 on the new hose. Started pumping at 9 AM Tuesday morning. Pumped all day and began setting up second Flygt pump. We had both pumps operating that day. A representative from G.A. Fleet, distributor for our rented Flygt pumps, arrived and suggested to Construction to put a check valve on one of the hoses. I was off duty at the time. I would not have allowed this due to its undue strain on the hose. Construction put the check valve on pump #2, and also ordered a 4" Flygt pump from G.A. Fleet in order to pump off some of the oil which had been collecting at the top of the Queens shaft. They removed about 9,000 gallons of oil in two tank trucks.

8/18/71 - Wednesday - I came into the office during the pumping operations. R. Scholz and I met with Hartley Grimm; he agreed to perform the required work for the tunnel restoration. At 3:30 PM, we met with P. Schmidt and E. Palmer at the Cushman Building to discuss the operations. At 4:00 PM I climbed down the Brooklyn Shaft to see if oil was present because pumping operations had been stopped by Construction because they thought we were pumping oil into Newtown Creek. We didn't think so because the Creek is usually full of oil, and the water level in the tunnel was still too high. The Coast Guard maintained regular checks on us. Climbing down the shaft, I found the water level to be about 25 feet deep (one ladder length), and no oil on the surface as we had not yet dropped the water level below the portal.

EPA-NC-CE-0000835

8/18/71 - Wednesday - (Cont'd)

I then requested to resume pumping with both pumps. E. Palmer ordered a barge to cart away the oil - water mixture when it would be reached. An 800,000 gallon capacity barge would not fit our small bulkhead, so a 300,000 gallon barge was ordered with more barges on standby. Each barge cost about $2,000 for filling and discarding the oil. I instructed Construction that any accounts such as this one which is chargeable to the oil leak should be charged under 3108 and not our job account for restoration.

At this point, we estimated that 2,000,000 gallons of water was still in the tunnel, while 350 GPM of water and some amount of oil was still entering the tunnel. We returned to the Cushman Building to resume our discussion of the details of operation.

8/19/71 - Thursday - The check valve requested by G.A. Fleet had broken the section of old hose we had at the top of the shaft. The weight of water in the hose not only broke it but removing the hose containing a column of water was nearly impossible. As a result the hose dropped off the crane turing the attempt to remove it. The riggers ordered earlier had not arrived. We were pumping with one pump into the barge as construction felt we should be safe and not risk the blame for dumping oil. I examined the discharge water and requested pumping to proceed into the Creek because there was no trace of oil, and also we would need 10 barges to cart away all this water. In order to protect the job, Construction insisted on pumping into barges until the Company's Environmental people were on the job to answer any Coast Guard charges which might arise. I met with the enviromental people and the Coast Guard and showed them sample jars showing that our water was clean while the Creek water was oily. We all agreed that we could pump into the Creek. We maintained discharge water samples every hour and constant oil watch at the Creek discharge.

EPA-NC-CE-0000836

8/19/71 - Thursday - (Cont'd)
That morning I had called the Johnston Pump Company to send us a missing part and a field representative to shown us how to assemble the motor to the pump. They did so. I had also called the Goodall Rubber Company and ordered 350 feet of their stock hose which included 150 feet of the type we need for the shaft and 200 feet of a cheaper type to be used at grade level. The Transportation Dept. truck sent out for the hose (to Trenton N.J.) broke down twice and so we didn't receive the hose until the nest day. We pumped with one pump.

The leak was found at Station 18 + 60 (near the Queens end of the tunnel), and an Adams clamp was applied for a temporary repair. The leak occured at a roller support.

8/20/71 - Friday - I went to 3rd Ave. Yard with a truck to collect the remaining materials, I discovered that four beams were missing since Monday. Since replacements for these were not in stock, Construction ordered them from a vendor. We received them that afternoon.

At 7:15 A.M., we sighted oil in our discharge and resumed barge operations. There was a 3 hour delay from when the first barge was full until the second barge (ordered for in advance) arrived. Pumping halted for 3 hours and the level in the tunnel rose 14 inches.

At 5:00 PM we were set up at station 18 + 60 to repair the oil leak permanently. Construction had prepared a welding patch containing a nipple and valve. We burned off the roller support at which the leak occurred after we temporarily supported the pipe with 2 jacks and a coffin hoist. The leak was a 1/16" pinhole in a 2" diameter crater. It appeared to me to be a damaged section of pipe (either a mill slug or field damage), rather than solely corrosion, because the crater was not badly pitted nor were there any other pits throughout the tunnel. In addition, it should be noted that defects like this have been discovered

EPA-NC-CE-0000837

8/20/71 - Friday - (Cont'd)

prior to pipe coating on gas pipe by means of magnetic particle and ultrasonic inspection. Since these tests are not performed on cable pipe, this defect could have gone unnoticed from the mill. In the future, when ordering cable pipe for tunnel use, I suggest that we (Gas Engineering) order the above mentioned inspections. Pictures were taken of this repair operation.

H. Chu of Electrical Engineering disagreed with me, and believes the crater was caused soley by corrosion. The leak was not caused by abrasion against a jammed roller because even though the roller was jammed, none of the neoprepe coating had been damaged.

I measured the oil leak at approximately 10 gallons/ hour, indicating that oil had been leaking for some time; perhaps over a month. When water was in the tunnel, the back pressure would have slowed the leak below the 10GPH, but the increased line pressure would have increased the flow somewhat. At best guess, about a month went by since the leak occurred.

I walked through the tunnel to within 50 feet of the Brooklyn shaft and observed the water level down around the middle of the pump, which was not situated in the sump as we had thought. The low level around the pump caused load noises (indicating cavitation). I returned to the Brooklyn Headhouse and requested them to allow the water level to rise a foot or so and to maintain the level during the night until a full complement of people working on the oil leak could be returned to the Brooklyn side. Prefabrication began on the beam supports for the permanent pumps. Welders were maintained around the clock.

EPA-NC-CE-0000838

8/21/71 - Saturday - At 9:00 AM I was informed that an electrical problem on a pump lead had caused a 5 hour delay but pumping had now resumed. We discharged into the Creek again with ½ hour water sample checks. At 4:00 PM I called A. Jones at the Conduit and was informed that the water level was 8" above the floor. At 8:00 PM I arrived at the Conduit and found that the pump had been moved into the sump and that the water level was completely down. Construction was flushing the sump area with a fire hose to wash away the oil. At 10:30 PM the man operating the hydrant accidentally opened the hydrant fully. The man holding the nozzle in the tunnel couldn't hold it, and as it whipped, it cut him above the eye. The injured man was sent back, and the job of lowering the beams was temporarily postponed.

8/22/71 - Sunday - By 5:30 PM a Johnston pump was installed on the 6" steel discharge and wired into starter #2.

By 10:30 PM the floats were installed and both the Flygt (pump #1) and the Johnston (pump #2) were alternating on automatic operation. The Flygt pump was discharging about 1000 GPM, the Johnston pump about 500 GPM; the inflow was about 370 GPM. During the night some steel work was prefabricated for the second pump. The floats began to operate unusually, and ECB began checking the relays. Construction had installed a 6" tee at the outlet of the Johnston pump in order to use the 6" line in the event the 4" line was not operable. However, since this tee was installed before the check valve, this tie would force pressure against the Johnston pump and damage it. Therefore I had the welder tack weld the blind flange to the tee so that no one would accidently tie into it. I also noticed that the check valve does not operate properly (it passes). This valve was to be checked later.

EPA-NC-CE-0000839

8/23/71 - Monday - At 7:00 AM ths second Johnston pump was installed without the motor. ECB was still checking the automatic relay operation.

At noon, the Flygt pump kicked out and continued to kick out at each attempt to restore it. I called H. Knischewski of the Electrical Engineering Department, and requested him to go to the Conduit and investigate problem. At 1:00 PM I couldn't find him so I call R. Wolff to check if someone was coming. He complied. I arrived at the Conduit at 2:00 PM. The Flygt pump was still out and the Johnstom pump was unable to keep ahead of the inflow. It was decided to jump the CT overload on the Flygt controller. The Flygt resumed normal operation, We found that, as had happened before, the Flygt pump developed uneven amperages on its phases. The highest amperage phase had tripped out the overloads. We expected that when the lesser powered Johnston pump would be hooked up, this controller would operate normally and we could place the overloads back in operation.

NOTE: It should be noted here that the controllers which were designed for this tunnel by the Flygt Corp. have stated on them a 50 HP rating. The pumps for which these were designed were 75 HP, which accounts for several of our operating problems last year. The present rented Flygt pumps are 88 HP each, so it soon became necessary to by-pass the overloads.

Since our permanent pumps are 50 HP, the controllers should operate normally at last.

I called the Johnston Pump Co. for advice or service on our slowed up pump (#2). They suggested a clogged strainer, reinforcing our opinion. With the Flygt pump operational we pumped the sump down and were able to remove rags, paper, and burlap from the strainer.

EPA-NC-CE-0000840

8/23/71 - Monday - (Cont'd)

The pump resumed normal operation. The burlap condition was my own fault, as I had suggested leaving on the burlap which came sewn around the new hose for abrasion protection. Due to handling, this burlap had shredded at places and some had gotten into the sump.

At 4:00 PM, the motor for the second Johnston pump was lowered.

8/24/71 - Tuesday - Both Johnston pumps were permanently installed and running on alternating automatic operation. Pump #1 is on the 4" CI discharge, and pump #2 is on the 6" Steel discharge. The seepage inflow rate is 370 GPM. Pump #1 is pumping about 490 GPM. Pump #2 is pumping about 500 GPM. At 2:30 PM I met with A. Jones, P. Schmidt, E. Palmer, and T.C. Weber to discuss the sump expansion. At 3:30 PM we presented the drawing and information to M. Ingram of Ingram and Greene. Transmission Projects will arrange the contract on a "Time and Materials" basis. Mr. Weber and Mr. Ingram will meet on Thursday for a field visit.

I called H. Knischewski of Electrical Engineering to confirm that the electrical drawings and materials are being prepared for release for construction as soon as possible. These items include lighting, alarms, telephones, third starter, and permanent conduits.

Central Construction mentioned that they might purchase one of our rented Flygt pumps for standby use as opposed to our original plan of having the third frame-mounted Johnston pump as a spare.

8/25/71 - Wednesday - The check valve on the 6" discharge was repaired. I met with Mr. Knischewski to discuss plans for the electrical work. I suggested increasing the capacity of the third starter box to 88 HP rather than 75 HP, since we would no longer use a 75 HP pump in the Conduit.

David Davidson
8/27/71

EPA-NC-CE-0000841

conEdison

E2MIS Detail Incident Report

Brooklyn 345kV Feeders

DETAIL: **Incident ID: 126392/1** **Investigation Work Plans To Be Prepared**

Report Type: Preliminary Rev. #: 1

Incident Type: Spill - Dielectric, Transmission Feeder

Brief Description: Spill- Dielectric Fluid

Administrative Site: Brooklyn 345kV Feeders

Responsible Operation: EHS Remediation

Street: 11th St/Conduit

No. of Injuries: 0

Any Outside Impact: N

Immediate Abatement/Containment Actions:

Start (Incident First Discovered): 07/02/1988 00:00

First Reported:

First Reported to CIG:

Cleanup Completed/Stopped:

Resolved (administrative closure):

Duration Hours (discovery to closure):

Detailed Description: 12-JUL-1999
On 7/2/88, 10000 gallons of Dielectric Fluid was spilled from 345kV Feeder 62 at 11th Street/Conduit.
no DEC #
Site 60

This spill is included in Appendix B of the Administrative Consent Order with the New York State Department of Environmental Conservation (NYSDEC).

If more information is needed, please contact the Remediation Dept. of EH&S.
Detailed files are located in the Remediation Dept. Central Filing System in Astoria, Queens.
Call Troy Meyer, the Director, at 718-204-4292.

Entry made by Margaret Karla
#85368

Substances, Material Property	Amount	UOM	Medium_Description
DIELECTRIC FLUID	10,000.00	GAL	Remediation Appendix B Spill

EPA-NC-CE-000842

DETAIL: **Incident ID: 126392/1** **Investigation Work Plans To Be Prepared**

Event Property Description	Effective Date	Expire Date	Comments
Remediation Appendix B - Site Number			60

EPA-NC-CE-000843

conEdison
a conEdison, inc. company

Consolidated Edison Company
of New York, Inc.
31-01 20th Avenue
Long Island City NY 11105-2048
www.conEd.com

July 29, 2008

Mr. Joseph O'Connell
NYSDEC – Region 2
Division of Environmental Remediation
47-40 21st Street
Long Island City, NY 11101-5407

RE: Site 60
Appendix B, Order on Consent
Index No. R2-1023-88-06

Dear Mr. O'Connell:

Appendix B Site 60 consists of one dielectric fluid release that occurred on July 2, 1988, from Feeder 62 (DEC #8810168). When the release location was identified, dielectric fluid was found to be leaking into the 11th Street Conduit (tunnel shaft on the Brooklyn side) from the shaft wall where the feeder's sleeve passes through the wall. Based on interviews conducted with employees who implemented the repairs, the wall and sleeve were broken out, a barrel repair placed on the feeder and the wall repaired. This work required substantial excavation on the exterior of the tunnel shaft due to the depth of the feeder where it passes through the wall (approximately 10 feet). According to employees present at the time of the repairs, the release was on the inside of the tunnel wall and no soil impacts were noted during the repair work.

On February 25, 2003, a similar release occurred from Feeder 61 into the tunnel shaft of the 11th Street Conduit (DEC #0211699). Feeder 61 passes through the shaft wall in close proximity to Feeder 62. During the 2003 release, a repair similar to the Feeder 62 repair was conducted. The area to the outside of the shaft wall was excavated and the wall and sleeve were broken out to facilitate a barrel repair to the feeder. According to personnel present at the time of the repairs, no impacts to soil from the current or historic releases were noted. Attached are copies of the spill report follow up letter to the New York City Department of Environmental Protection (unsigned copy), E2MIS Report # 147288, the Tunnel Head House Wall Repair Procedure, and photographs taken during the repair work.

In addition to the above noted excavation work in the area adjacent to the tunnel shaft, excavation was also conducted about three years ago to repair a leaking water line. According to employees present at the time of the repairs, the excavation was initially flooded due to the leaking water line and no sheen was noted on the water in the excavation. No other indications of impacted soil were noted during excavation and repair work in this area.

Based upon the information provided by employees present at the time of the feeder repair, the closed status of the subsequent feeder release in this area and the additional excavation that was done during the water line repair, we are requesting that you close out spill #8810168 and, as this is the only spill associated with the site, Appendix B Site 60 as well.

If you have any questions, please contact me at 718.267.3866.

Sincerely,

Matthew Madsen
Con Edison - EH&S
Remediation Programs

c: Mr. Barry Cohen, Con Edison