SDMS US EPA REGION V

COLOR - RESOLUTION - 3

IMAGERY INSERT FORM

Multiple pages of this document include color or resolution variations and may be illegible in SDMS due to bad source documents. Unless otherwise noted, these pages are available in monochrome. (The source document page(s) are more legible than the images.) The original document is available for viewing at the Superfund Records Center.

SITE NAME	Johns Mansville Corp.
DOC ID #	154732
DOCUMENT VARIATION	___ COLOR **OR** __X_ RESOLUTION
PRP	IL Dept. of Transportation
PHASE	E6
OPERABLE UNITS	
PHASE (AR DOCUMENTS ONLY)	___ Remedial ___ Removal ___ Deletion Docket ___ ___ Original ___ Update # ___ Volume ___ of ___

COMMENT(S)

Maps

154732

WKGN.

424

FEDERAL-AID ROUTE NO.	SECTION
42 437	8-HB 8-VB
FED. ROAD DIV. NO. 4	ILLINOIS

P-91-224-00

STATE OF ILLINOIS
DEPARTMENT OF PUBLIC WORKS AND BUILDINGS
DIVISION OF HIGHWAYS
PLANS FOR PROPOSED
FEDERAL AID HIGHWAY

FOR INDEX OF SHEETS, SEE SHEET NO. 4

INCLUDES THE FURNISHING OF LABOR AND MATERIALS NECESSARY TO COMPLETE THE CONSTRUCTION OF DETOURS, GRADING, DRAINAGE STRUCTURES, A RETAINING WALL, TWO BRIDGES CARRYING GREENWOOD AVENUE OVER F.A. 42 AND THE CHICAGO AND NORTH WESTERN RAIL ROAD, AND GREENWOOD AVENUE AND SAND STREET INCLUDING ALL APPURTENANT AND COLLATERAL WORK AS SHOWN ON THE PLANS.

SCALES: PLAN 1 INCH = 20 FT.; PROFILE HOR. 1 INCH = 50 FT.; PROFILE VERT. 1 INCH = 5 FT.; CROSS SECTION HOR. 1 INCH = 10 FT.; CROSS SECTION VERT. 1 INCH = 5 FT.

F.A. ROUTE ~~42~~ 437 - SECTION 8-HB & 8-VB LAKE COUNTY

C-91-344-64

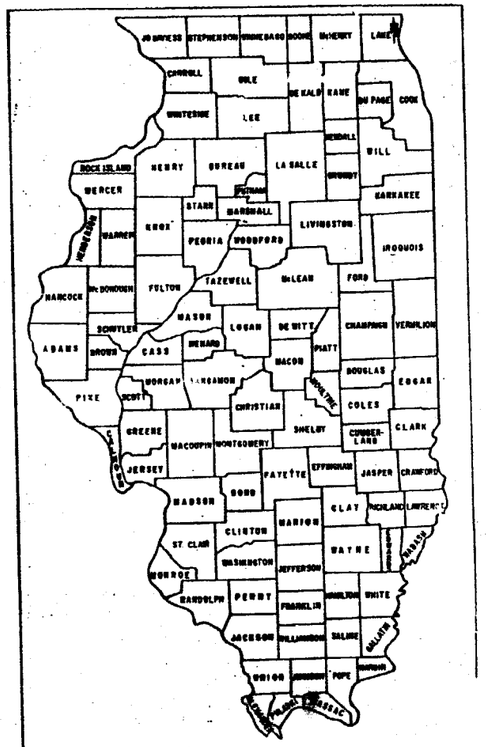

LOCATION OF SECTION INDICATED THUS:

APPROVED
FOR STRUCTURAL DESIGN
Carl E. Thomas
ENGINEER OF BRIDGES

STATE OF ILLINOIS
DEPARTMENT OF PUBLIC WORKS AND BUILDINGS
DIVISION OF HIGHWAYS

SUBMITTED	9/9 1970 — Sigmund C. Zilinski, DIRECTOR OF DIVISION
EXAMINED	Dec. 17 1970 — Arthur C. Coombs, CHIEF OF ROAD PLANS AND CONTRACTS
PASSED	Dec. 17 1970 — [illegible], ASSISTANT DIRECTOR OF DIVISION
APPROVED	Dec. 17 1970 — [illegible], DIRECTOR OF DIVISION
APPROVED	Dec. 17 1970 — [illegible], SECRETARY

CITY OF WAUKEGAN
SECTION 129- CS

LAKE COUNTY
SECTION 162

AS BUILT

Built 1971 - 1975
Contractor Eric Bolander
Res. Engr. D. Mapes
Built According to Plans
changes shown in red

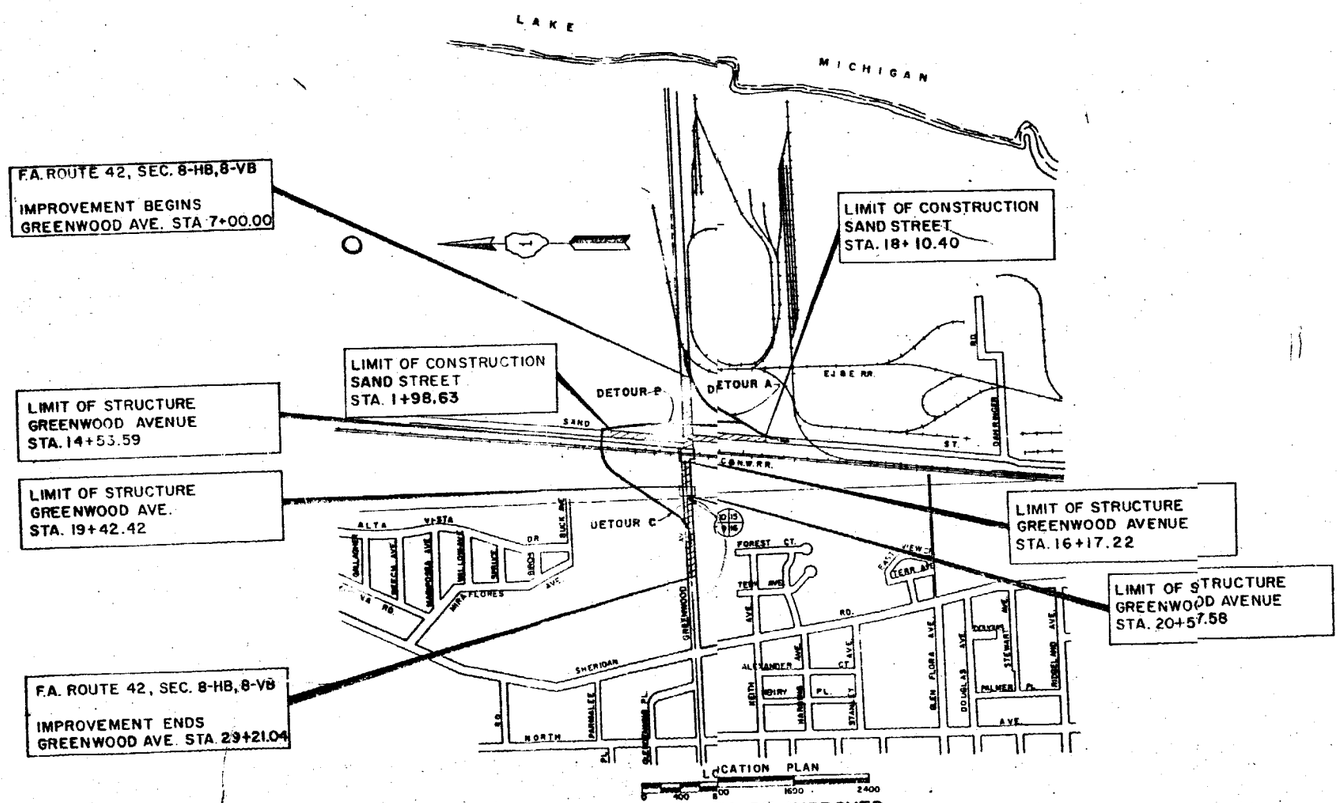

LENGTH TO BE IMPROVED

FEDERAL-AID ROUTE No.	SECTION	COUNTY	TOTAL SHEETS	SHEET No.
~~42~~ 437	8-HB, 8-VB	LAKE	81	2
FED. ROAD DIV. No. 4	ILLINOIS	PROJECT		

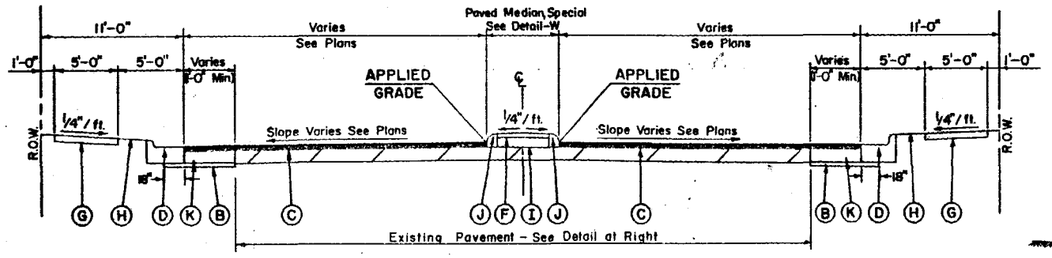

GREENWOOD AVENUE WIDENING & RESURFACING

STA. 26+93.02 TO STA 29+21.04

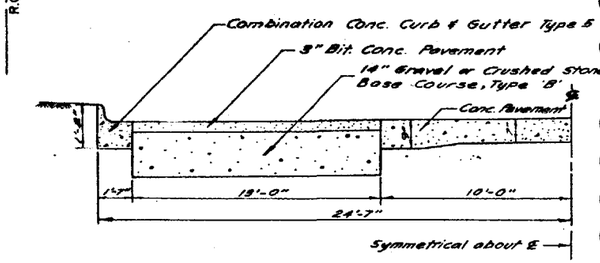

EXISTING PAVEMENT
GREENWOOD AVENUE

LEGEND

- (B) SUB-BASE GRANULAR MATERIAL TYPE B, 4"
- (C) 1½" BITUMINOUS CONCRETE SURFACE COURSE, CLASS I
  3" BITUMINOUS CONCRETE BINDER COURSE
- (D) COMBINATION CONCRETE CURB & GUTTER, TYPE B-6.24
- (F) 4" PORTLAND CEMENT CONCRETE MEDIAN SURFACE
- (G) PORTLAND CEMENT CONCRETE SIDEWALK (5" THICK)
- (H) SEEDING
- (I) GRAVEL OR CRUSHED STONE BASE COURSE, TYPE B
- (J) CONCRETE CURB, TYPE B (MODIFIED)
- (K) STABILIZED BASE COURSE (BAM) 11"
- (L) COMBINATION CONCRETE CURB & GUTTER, TYPE B-9.12
- (S) STEEL PLATE BEAM GUARD RAIL
- (V) SODDING (2:1 OR STEEPER)

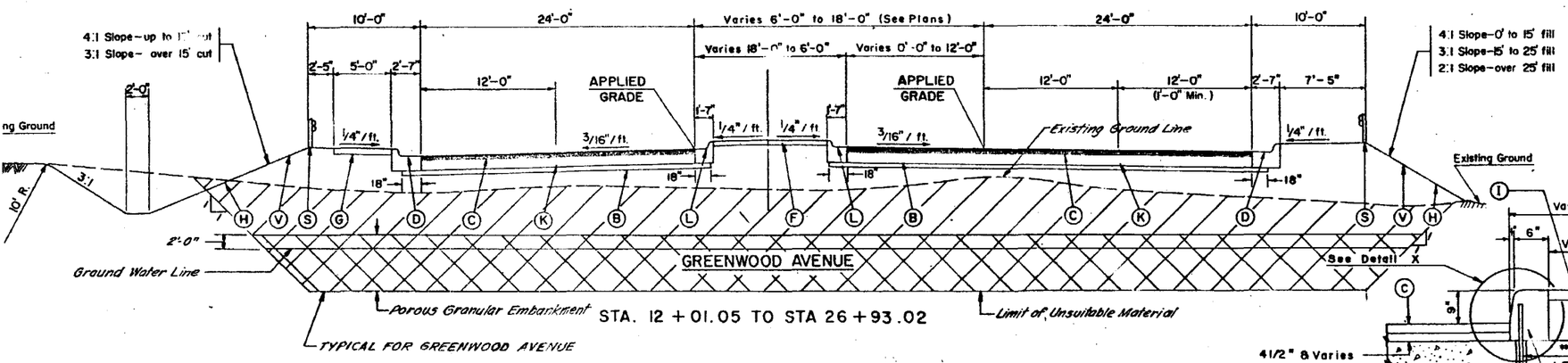

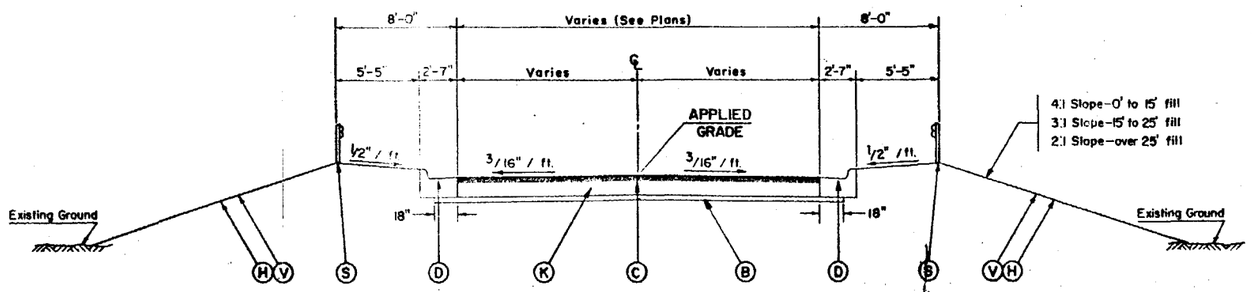

GREENWOOD AVENUE

STA. 7+60 TO STA 12+01.05

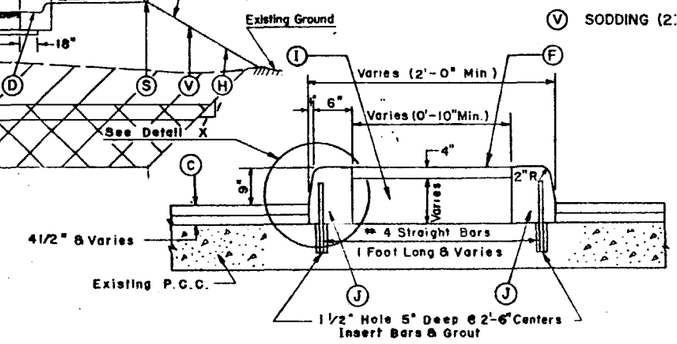

DETAIL-W

DETAIL WITH BOTH CURBS ON EXISTING PAVEMENT

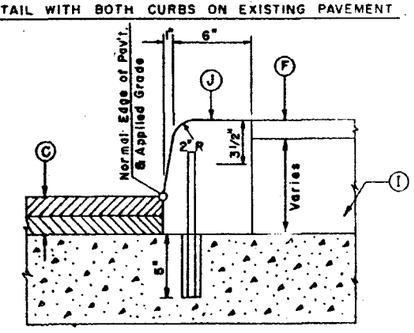

DETAIL-X

Not to Scale

THE NOMINAL THICKNESS FOR SUB-BASE GRANULAR MATERIAL AND GRAVEL OR CRUSHED STONE; BASE AND SURFACE COURSES ARE SHOWN ON THE TYPICAL SECTIONS, STANDARDS, SCHEDULES OR SPECIAL DETAILS. THE CONSTRUCTED THICKNESS OF THE ABOVE ITEMS SHALL NOT BE LESS THAN 90 PER CENT OF THE NOMINAL THICKNESS AT ANY LOCATION.

THE THICKNESS OF BITUMINOUS MIXTURE SHOWN ON THE PLANS IS THE NOMINAL THICKNESS. DEVIATIONS FROM THE NOMINAL THICKNESS WILL BE PERMITTED WHEN SUCH DEVIATIONS OCCUR DUE TO IRREGULARITIES IN THE EXISTING SURFACE OR BASE ON WHICH THE BITUMINOUS MIXTURE IS PLACED.

STATE OF ILLINOIS
DEPARTMENT OF PUBLIC WORKS & BUILDINGS
DIVISION OF HIGHWAYS

TYPICAL PAVEMENT SECTIONS

GREENWOOD AVENUE

DETAIL OF PAVED MEDIAN SPECIAL

NOT TO SCALE

FEDERAL-AID ROUTE No.	SECTION	COUNTY	TOTAL SHEETS	SHEET No.
437 ~~42~~	8-HB, 8-VB	LAKE	81	3
FED. ROAD DIV. No. 4	ILLINOIS	PROJECT		

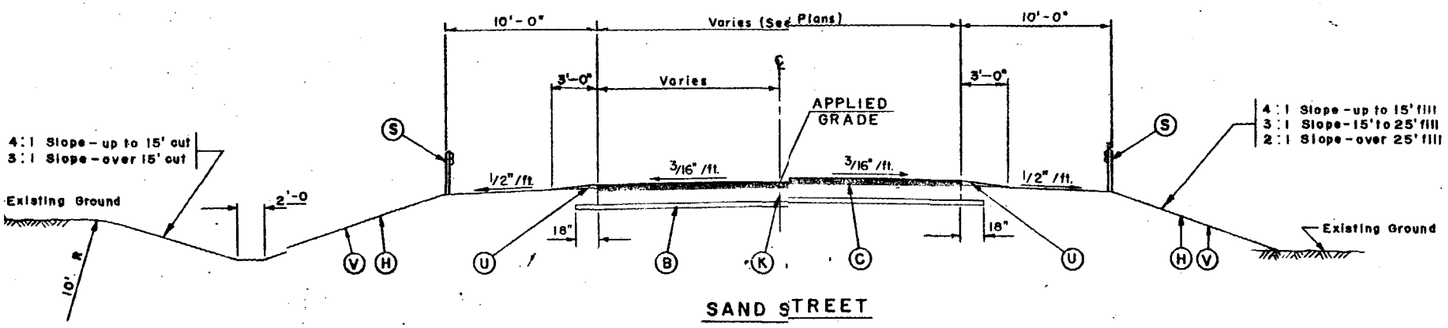

SAND STREET

STA. 2+65 TO STA. 8+26.60

STA 11+73.02 TO STA 17+50

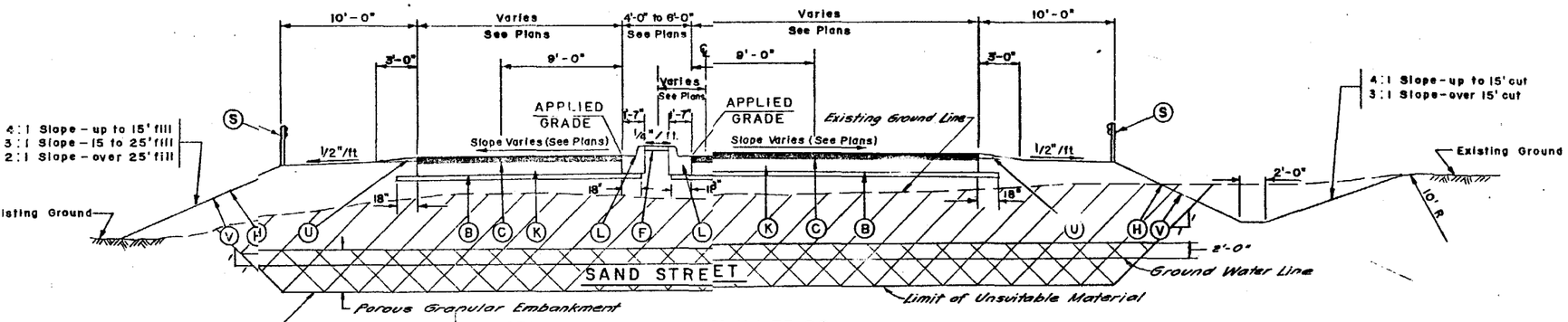

STA. 8+26.60 TO STA 11+73.02

LEGEND

- (B) SUB-BASE GRANULAR MATERIAL TYPE B, 4"
- (C) 1½" BITUMINOUS CONCRETE SURFACE COURSE, CLASS I
  3" BITUMINOUS CONCRETE BINDER COURSE
- (D) COMBINATION CONCRETE CURB & GUTTER, TYPE B-6.24
- (F) 4" PORTLAND CEMENT CONCRETE MEDIAN SURFACE
- (G) PORTLAND CEMENT CONCRETE SIDEWALK -(5" THICK)
- (H) SEEDING
- (I) GRAVEL OR CRUSHED STONE BASE COURSE, TYPE B
- (J) CONCRETE CURB, TYPE B (MODIFIED)
- (K) STABILIZED BASE COURSE (BAM) 11"
- (L) COMBINATION CONCRETE CURB & GUTTER, TYPE B-9.12
- (S) STEEL PLATE BEAM GUARD RAIL
- (U) GRAVEL OR CRUSHED STONE SHOULDERS, TYPE B
- (V) SODDING (2:1 OR STEEPER)

NOTES

1. For Details of Paved Median Special See Sheet No. 2

Structural Design Traffic: 1976 ADT = 12,480 S.U. = 910 P.C. = 11,388 M.U. = 182

Class I Street
Minimum Soil Support: CBR = 3
Percent of S.D.T. in Design Lane : Up = 32 US = 45 UM = 45

T.F. = 0.92; DT = 5.5 (Min. Design)
Pavement Structural Materials:

Surface Course Type : Cl. I; 4½" a1 = 0.40
Base Course Type: BAM; 11"; a2 = 0.30
Sub-base Type: B; 4", a3 = 0.11

Resurfacing of Existing Pavement = 4½" Total Class I

THE NOMINAL THICKNESS FOR SUB-BASE GRANULAR MATERIAL AND GRAVEL OR CRUSHED STONE; BASE AND SURFACE COURSES ARE SHOWN ON THE TYPICAL SECTIONS, STANDARDS, SCHEDULES OR SPECIAL DETAILS. THE CONSTRUCTED THICKNESS OF THE ABOVE ITEMS SHALL NOT BE LESS THAN 90 PER CENT OF THE NOMINAL THICKNESS AT ANY LOCATION.

THE THICKNESS OF BITUMINOUS MIXTURE SHOWN ON THE PLANS IS THE NOMINAL THICKNESS. DEVIATIONS FROM THE NOMINAL THICKNESS WILL BE PERMITTED WHEN SUCH DEVIATIONS OCCUR DUE TO IRREGULARITIES IN THE EXISTING SURFACE OR BASE ON WHICH THE BITUMINOUS MIXTURE IS PLACED.

STATE OF ILLINOIS
DEPARTMENT OF PUBLIC WORKS & BUILDINGS
DIVISION OF HIGHWAYS

TYPICAL PAVEMENT SECTIONS
SAND STREET
EMBANKMENT, SPECIAL

NOT TO SCALE

FEDERAL-AID ROUTE No.	SECTION	COUNTY	TOTAL SHEETS	SHEET No.
42 437	8-HB, 8-VB	LAKE	81	4
FED. ROAD DIV. No. 4	ILLINOIS	PROJECT		

INDEX OF SHEETS

1	TITLE SHEET
2	TYPICAL PAVEMENT SECTIONS - GREENWOOD AVENUE
3	TYPICAL PAVEMENT SECTIONS - SAND STREET
4	INDEX OF SHEETS, GENERAL NOTES
5	SUMMARY OF QUANTITIES
6, 7	SCHEDULE OF QUANTITIES
	PLAN AND PROFILE SHEETS
8	PLAN - GREENWOOD AVENUE - STA. 7+00 TO STA. 12+10
9	PLAN - GREENWOOD AVENUE - STA. 12+10 TO STA. 17+50 - SAND STREET - STA. 8+00 TO STA. 12+00
10	PLAN - GREENWOOD AVENUE - STA. 17+50 TO STA. 22+00
11	PLAN - GREENWOOD AVENUE - STA. 22+00 TO STA. 33+00
12	PLAN - SAND STREET - STA. 1+98.63 TO STA. 8+00
13	PLAN - SAND STREET - STA. 12+00 TO STA. 18+10.40
14	PROFILES - GREENWOOD AVENUE AND SERVICE ROAD 'B'
15	PROFILES - F.A. ROUTE 42 AND SAND STREET
16	PLAN AND PROFILE - SERVICE ROAD 'A' AND ACCESS ROAD
17	PAVEMENT ELEVATIONS AND GEOMETRICS - GREENWOOD AVENUE - STA. 7+00 TO STA. 12+10
18	PAVEMENT ELEVATIONS AND GEOMETRICS - GREENWOOD AVENUE - STA. 12+10 TO STA. 17+50 SAND STREET - STA. 8+00 TO STA. 12+00
19	PAVEMENT ELEVATIONS AND GEOMETRICS - GREENWOOD AVENUE - STA. 17+50 TO STA. 22+00
20	PAVEMENT ELEVATIONS AND GEOMETRICS - GREENWOOD AVENUE - STA. 22+00 TO STA. 33+00
21	PAVEMENT ELEVATIONS AND GEOMETRICS - SAND STREET - STA. 1+98.63 TO STA. 8+00
22	PAVEMENT ELEVATIONS AND GEOMETRICS - SAND STREET - STA. 12+00 TO STA. 18+10.40
23	ALIGNMENT PLAN, REFERENCE POINTS, BENCH MARKS
24	PLAN AND PROFILE - DETOUR ROAD A
25	PLAN AND PROFILE - DETOUR ROAD B
26	PLAN AND PROFILE - DETOUR ROAD C
27	SOIL PROFILES
28	R.O.W. STRIP MAP
29	APPROACH SLAB - GREENWOOD AVENUE OVER C & NW RAILROAD - STA. 15+43.11
30	APPROACH SLAB - GREENWOOD AVENUE OVER F.A. ROUTE 42 - STA. 20+00.00
31	DETAIL OF CONCRETE STEPS AND PIPE HANDRAIL
32, 33	RETAINING WALL DETAIL
34	CULVERT PROFILES
	STRUCTURAL PLANS
35-50	GREENWOOD AVENUE OVER C & NW RAILROAD - SECTION 8-VB
51-70	GREENWOOD AVENUE OVER F.A. ROUTE 42 - SECTION 8-HB

CROSS SECTIONS

71	GREENWOOD AVENUE STA. 7+00 TO STA. 9+00
72	GREENWOOD AVENUE STA. 10+00 TO STA. 12+00
73	GREENWOOD AVENUE STA. 13+00 TO STA. 14+53
74	GREENWOOD AVENUE STA. 16+18 TO STA. 17+00
75	GREENWOOD AVENUE STA. 18+00 TO STA. 19+00
76	GREENWOOD AVENUE STA. 21+00 TO STA. 22+00
77	GREENWOOD AVENUE STA. 23+00 TO STA. 27+00
78	SAND STREET STA. 1+98.63 TO STA. 5+00
79	SAND STREET STA. 6+00 TO STA. 9+00
80	SAND STREET STA. 11+00 TO STA. 14+00
81	SAND STREET STA. 15+00 TO STA. 17+00

REQUIRED STATE STANDARDS

STD. NO.	TITLE
1514-6	CATCH BASIN TYPE A
1536-3	CATCH BASIN TYPE C
1683-2	INLET, TYPE A
1686-3	STANDARD SYMBOLS AND ABBREVIATIONS
1744-2	RIGHT OF WAY MARKERS
1909-10	BRIDGE APPROACHES
1914-5	TYPE B GUTTER
1973	PLAIN CONCRETE HEADWALLS
1976	REINFORCED CONCRETE HEADWALLS
2051	REINFORCED CONCRETE HEADWALLS
2113-1	NAME PLATE FOR BRIDGES
2122-4	CONCRETE MEDIANS
2130-3	CONCRETE CURB AND COMBINATION CONRETE CURB AND GUTTER
2168-5	CHAIN LINK FENCE
2214-2	FRAME AND GRATES TYPE 3
2220-2	FRAME AND GRATES TYPE 11
2230-7	STEEL PLATE BEAM GUARD RAIL
2251-3	
2298-2	TYPICAL APPLICATION OF TRAFFIC CONTROL DEVICES
2299-1	DESIGN OF TRAFFIC CONTROL DEVICES
2300	FLAGMEN TRAFFIC CONTROL SIGN
2303-2	TRAFFIC CONTROL AND PROTECTION
2310-1	TRAFFIC CONTROL AND PROTECTION
2315-2	TRAFFIC CONTROL AND PROTECTION
2323	

GENERAL NOTES

THE "STANDARD SPECIFICATIONS FOR ROAD AND BRIDGE CONSTRUCTION" ADOPTED JANUARY 2, 1971, SHALL GOVERN CONSTRUCTION.

ALL ELEVATIONS REFER TO U.S.C.&G.S. MEAN SEA LEVEL DATUM.

THE FOLLOWING UTILITY COMPANIES HAVE FACILITIES WITHIN THE LIMITS OF CONSTRUCTION WHICH MAY REQUIRE ADJUSTMENTS:

NORTH SHORE GAS COMPANY
ILLINOIS BELL TELEPHONE COMPANY
NORTH SHORE SANITARY DISTRICT
COMMONWEALTH EDISON COMPANY
CITY OF WAUKEGAN WATER DEPARTMENT

WHERE SECTION OR SUBSECTION MONUMENTS ARE ENCOUNTERED, THE ENGINEER SHALL BE NOTIFIED BEFORE SUCH MONUMENTS ARE REMOVED. THE CONTRACTOR SHALL PROTECT AND CAREFULLY PRESERVE ALL PROPERTY MARKS AND MONUMENTS UNTIL THE OWNER, AN AUTHORIZED SURVEYOR OR AGENT HAS WITNESSED OR OTHERWISE REFERENCED THEIR LOCATION.

THE PROFILE GRADE REFERS TO THE GRADE ELEVATION AT THE JOINT SHOWN ON THE TYPICAL SECTIONS AND PLANS.

THE SEEDING SHOULD BE DONE IN ACCORDANCE WITH THE SEEDING POLICY AND SPECIAL PROVISIONS.

THE LOCATION OF UNDERGROUND UTILITIES SHOWN ON THE PLANS REPRESENTS THE BEST KNOWLEDGE OF THE DEPARTMENT AND THE INDICATED ADJUSTMENTS OR RECONSTRUCTION ARE CONSIDERED TO BE REASONABLY ACCURATE. IT SHALL BE THE CONTRACTOR'S RESPONSIBILITY, AS DETAILED IN SECTION 611 OF THE STANDARD SPECIFICATIONS TO VERIFY LOCATIONS OF UNDERGROUND INSTALLATIONS BEFORE STARTING CONSTRUCTION OPERATIONS. THE CONTRACTOR SHALL INDEMNIFY THE DEPARTMENT, ITS OFFICERS AND EMPLOYEES AGAINST ALL CLAIMS DUE TO DAMAGE TO CORPORATE OR PRIVATE PROPERTY RESULTING FROM HIS CONSTRUCTION OPERATIONS AS DESCRIBED IN ARTICLES 107.19 AND 107.23 OF THE STANDARD SPECIFICATIONS.

WHEREVER A PORTION OF THE EXISTING P.C.C. OR BITUMINOUS PAVEMENT, SIDEWALK OR CURB HAS TO BE REMOVED, THE REMOVAL SHALL BE DONE ALONG THE EXISTING JOINT OR THE PROPOSED EDGE SHALL BE NEATLY SAWED. THIS WORK SHALL BE CONSIDERED INCIDENTAL TO SPECIAL EXCAVATION.

THE REMOVAL OF BITUMINOUS SURFACING NOT ON A RIGID TYPE BASE, REMOVED IN CONJUNCTION WITH THE BASE, SHALL BE REMOVED AS SPECIAL EXCAVATION. THE REMOVAL OF BITUMINOUS SURFACING ON A RIGID TYPE BASE AND REMOVED IN CONJUNCTION WITH THE BASE SHALL BE CONSIDERED INCIDENTAL TO PAVEMENT REMOVED.

UNDERGROUND GASOLINE TANKS WITHIN THE LIMITS OF THE RIGHT OF WAY WHICH HAVE NOT BEEN REMOVED AND WILL NOT INTERFERE WITH CONSTRUCTION SHALL BE FILLED WITH A FREE FLOWING SAND AT THE DIRECTION OF THE ENGINEER. COST OF THIS WORK SHALL BE CONSIDERED INCIDENTAL TO THE COST OF THIS CONTRACT.

EXCAVATION OF UNSUITABLE MATERIAL AT THE STRUCTURE CARRYING GREENWOOD AVENUE OVER THE CHICAGO AND NORTH WESTERN RAILWAY SHALL BE DONE AS SHOWN ON THE STRUCTURE PLAN.

THE INSTALLATION OF RAILROAD PROTECTIVE DEVICES AND THE CONSTRUCTION OF DETOUR C AT THE RAILROAD SHALL BE DONE BY RAILROAD FORCES.

STATE OF ILLINOIS
DEPARTMENT OF PUBLIC WORKS AND BUILDINGS
DIVISION OF HIGHWAYS
DISTRICT NO. 1
REVIEWED BY: J. J. Kelly
DISTRICT ENGINEER OF DESIGN
DATE: 9-3-70
EXAMINED BY: R. E. Jarnes
DISTRICT ENGINEER OF CONSTRUCTION
William R. Stahl
DISTRICT ENGINEER OF MAINTENANCE
Lou Jaramillo
DISTRICT ENGINEER OF MATERIALS
D. P. Larson 1966
DISTRICT ENGINEER OF TRAFFIC

STATE OF ILLINOIS
DEPARTMENT OF PUBLIC WORKS & BUILDINGS
DIVISION OF HIGHWAYS

INDEX OF SHEETS AND GENERAL NOTES

H. W. LOCHNER, INC.
ENGINEERS
CHICAGO, ILL.

FEDERAL-AID ROUTE No.	SECTION	COUNTY	TOTAL SHEETS	SHEET No.
~~42~~ 437	8-1B, 8-VB	LAKE	81	5
FED. ROAD DIV. No. 4	ILLINOIS	PROJECT		

LOCATION OF WORK	(A) Road Sta.	(O) Road Sta.	(B) Road Sta.	(A) Bridge Sta.	(B) Bridge Sta.
	7+00 to 18+20 Greenwood 1+98.63 to 18+10.40 Sand		18+20 to 29+21.04 Greenwood	15+43.11 Greenwood	20+00 Greenwood

SUMMARY OF QUANTITIES				CONSTRUCTION TYPE CODE				
CODE NO.	ITEM	UNIT	QUANTITY	6203		6203	X171	X731
201001	XX TREE REMOVAL (6 TO 15 INCH DIAMETER)	IN DIA	100	50		50		
201002	XX TREE REMOVAL (OVER 15 INCH DIAMETER)	IN DIA	100	50		50		
201005	TREE REMOVAL, ACRES	ACRE	4.2	2.5		1.7		
202008*	REMOVAL & DISPOSAL OF UNSUITABLE MATERIAL	CU YD	44,809	31,969		12,840		
204001	BORROW EXCAVATION	CU YD	262,540	177,379		85,161		
205001	SPECIAL EXCAVATION	CU YD	19,228	18,050		1,178		
207005*	WATER APPLIED	UNIT	5	4		1		
209002	POROUS GRANULAR EMBANKMENT	CU YD	20,431	18,484		1,947		
210001	TRENCH BACKFILL	CU YD	116	89		27		
213029	SUB-BASE GRANULAR MATERIAL, TYPE B (4)	SQ YD	13,983	9,414		4,569		
213004	AGGREGATE SHOULDERS, TYPE B	TON	79	79				
301018	STABILIZED BASE COURSE 9"	SQ YD	14,229	11,133		3,096		
301020*	STABILIZED BASE COURSE 11	SQ YD	11,001	6,878		4,123		
301024	AGGREGATE BASE COURSE TYPE A "6"	SQ YD	1,366	1,153		213		
406001	BITUMINOUS MATERIALS (PRIME COAT)	GALLON	3,615	2,531		1,084		
406007	BITUMINOUS CONCRETE BINDER COURSE	TON	2,076	1,395		681		
406008	BITUMINOUS CONCRETE SURFACE COURSE, CLASS I	TON	1,289	919		370		
408006	PORTLAND CEMENT CONCRETE PAVEMENT 16 1/2-10 1/2-16 1/2	SQ YD	2,129	703		1,426		
408014	PROTECTIVE COAT	SQ YD	9,395	2,267		3,271	1,590	2,267
502001	CLASS A EXCAVATION FOR STRUCTURES	CU YD	205			205		
503002	CLASS X CONCRETE HEADWALLS	CU YD	9.6	9.6				
504003	CLASS X CONCRETE	CU YD	3,283.5	20.4		213.8	818.4	2,230.9
507030*	FURNISHING AND ERECTING STRUCTURAL STEEL	L SUM	1				0.4 **	0.6 **
508006	ALUMINUM RAILING TYPE L ALTERNATE A	LIN FT	703				323	380
~~508007~~	~~STEEL RAILING TYPE M ALTERNATE B~~	~~LIN FT~~	~~703~~				~~323~~	~~380~~
511046	PIPE CULVERTS, TYPE 1 RCCP 15	LIN FT	38	38				
511129	PIPE CULVERTS, TYPE 2 RCCP 24	LIN FT	62	62				
511131	PIPE CULVERTS, TYPE 2 RCCP 36	LIN FT	179	179				
511370	PIPE CULVERTS, TYPE 5 RCCP 30	LIN FT	189	189				
511E07	PIPE CULVERTS, TYPE 1 36 (DETOUR)	LIN FT	164	164				
511E09	PIPE CULVERTS, TYPE 1 48 (DETOUR)	LIN FT	220	220				
512001	REINFORCEMENT BARS	POUND	685078	46,560		113,328	186470	338,720
513005	FURNISHING CREOSOTED PILES 20.1 TO 38 FT	LIN FT	3131				856	2,275
513013	FURNISHING STEEL PILES 10BP42	LIN FT	~~6,298~~ 7778			754	1,500	5,544
513022	DRIVING TIMBER PILES	LIN FT	3,131				856	2,275
513026	DRIVING STEEL PILES	LIN FT	~~6,298~~ 7778			754	1,500	5,544
513033	TEST PILE STEEL 10BP42	EACH	~~6~~ 8			1	2	5
514001	NAME PLATES	EACH	3				2	1
603005	STORM SEWERS, TYPE 1 12"	LIN FT	169	169				
603030	STORM SEWERS, TYPE 2 12"	LIN FT	466	257		209		
607153	PIPE UNDERDRAINS 8"	LIN FT	611			611		
612003	CATCH BASINS, TYPE A, 3'-DIAMETER, TYPE 3 FRAME AND GRATE	EACH	4	3		1		
612055	CATCH BASINS, TYPE C TYPE 3 FRAME AND GRATE	EACH	1	1				
612154	INLETS, TYPE A, TYPE 3 FRAME AND GRATE	EACH	3	2		1		
612165	INLETS, TYPE A, TYPE 11 FRAME AND GRATE	EACH	2	2				
612239	MANHOLES TO BE ADJUSTED	EACH	3	1		2		
612250	INLETS TO BE ADJUSTED	EACH	2			2		
615001	FILLING EXISTING MANHOLES	EACH	11	7		4		

CONT'D

SUMMARY OF QUANTITIES				(A)	(O)	(B)	(A)	(B)
				CONSTRUCTION TYPE CODE				
CODE NO.	ITEM	UNIT	QUANTITY	6203	Y080	6203	X171	X731
615003	FILLING EXISTING INLETS	EACH	6	2		4		
616006	CONCRETE CURB, TYPE B	LIN FT	180	180				
~~616024~~	~~CONCRETE GUTTER, TYPE B~~	~~LIN FT~~	~~50~~			~~50~~		
616041	COMBINATION CONCRETE CURB AND GUTTER, TYPE B-6.24	LIN FT	3,709	2,092		1,617		
616047	COMBINATION CONCRETE CURB AND GUTTER, TYPE B-9.12	LIN FT	2,444	1,150		1,294		
616137	CONCRETE MEDIAN, TYPE C-4	SQ FT	1,537	1,168		369		
616139*	CONCRETE MEDIAN, TYPE C-4(SPECIAL)	SQ FT	912			912		
616202*	CONCRETE MEDIAN SURFACE, 4 INCH	SQ FT	6,058	2,173		3,885		
623002	PORTLAND CEMENT CONCRETE DRIVEWAY 6 INCH	SQ YD	101	44		57		
624003	PORTLAND CEMENT CONCRETE SIDEWALK 5 INCH	SQ FT	4,425	1,265		3,160		
628001	STEEL PLATE BEAM GUARD RAIL, SINGLE RAIL	LIN FT	1,662.5	659		1,003.5		
X628001	TERMINAL SECTION, SINGLE RAIL	EACH	10	8		2		
629003	CHAIN LINK FENCE, 6'	LIN FT	1,477	505		972		
629076	CHAIN LINK GATES, 6'X 12' DOUBLE	EACH	2	1		1		
629079	CHAIN LINK GATES, 6'X 18' DOUBLE	EACH	1	1				
629110	TEMPORARY FENCING	LIN FT	928	928				
639001	PIPE HANDRAIL	LIN FT	4.4	4.4				
639001	FURNISHING AND ERECTING RIGHT OF WAY MARKERS	EACH	47	28		19		
642002	SEEDING, CLASS II	ACRE	0.5			0.5		
642003	SEEDING, CLASS III	ACRE	5.5	4.7		0.8		
642004	NITROGEN FERTILIZER NUTRIENT	POUND	318	202		116		
642005	PHOSPHORUS FERTILIZER NUTRIENT	POUND	550	406		144		
642006	POTASSIUM FERTILIZER NUTRIENT	POUND	537	406		131		
642007	AGRICULTURAL GROUND LIMESTONE	TON	13.8	10.1		3.7		
643002	ASPHALT COATED MULCH	TON	1.1			1.1		
643005	EMULSIFIED ASPHALT	GALLON	94			94		
644001	SODDING	SQ YD	10,442	7,728		2,714		
644002	SUPPLEMENTAL WATERING	UNIT	31	12		19		
646001	ENGINEER'S FIELD OFFICE, TYPE A	EACH	1			1		
646003	ENGINEER'S FIELD LABORATORY	EACH	1			1		
Z10010	BARRICADES	LIN FT	114	58		56		
Z10036	BUILDING REMOVAL	L SUM	1	0.7		0.3		
XZ1011 $	TRAFFIC CONTROL AND PROTECTION, STD. 2310 (SPEC)	EACH	3	2		1		
XZ1088	TRAFFIC CONTROL AND PROTECTION, STD. 2315	LUMP SUM	1	.5		.5		
Z10138	CAISSON CONCRETE	CU YD	131.7				131.7	
507025	STUD SHEAR CONNECTORS	EACH	3,180				3,180	
~~513021~~	~~FURNISHING CONCRETE PILES~~	~~LIN FT~~	~~1,376~~				~~1,376~~	
~~513027~~	~~DRIVING CONCRETE PILES~~	~~LIN FT~~	~~1,376~~				~~1,376~~	
~~513041~~	~~TEST PILE CONCRETE~~	~~EACH~~	~~2~~				~~2~~	
513052*	TEMPORARY SHEET PILING	SQ FT	6,300				6,300	
618001	SLOPE WALL 4 INCH	SQ YD	1,205				1,205	
XZ1073	BRIDGE SEAT SEALER	L SUM	1				1	

* SEE SPECIAL PROVISIONS

(A) CITY & COUNTY PARTICIPATION

(B) STATE PARTICIPATION

XX QUANTITY SHOWN FOR BID PURPOSES ONLY

** POUNDS OF STRUCTURAL STEEL FOR INFORMATION ONLY (TOTAL - 784,240 POUNDS)

STATE OF ILLINOIS
DEPARTMENT OF PUBLIC WORKS & BUILDINGS
DIVISION OF HIGHWAYS

SUMMARY OF QUANTITIES

H. W. LOCHNER, INC.
ENGINEERS
CHICAGO, ILL.

FEDERAL-AID ROUTE No.	SECTION	COUNTY	TOTAL SHEETS	SHEET No.
42 437	6-HB, 8-VB	LAKE	81	6
FED. ROAD DIV. No. 4	ILLINOIS	PROJECT		

DRAINAGE SCHEDULE

LOCATION	TRENCH BACK-FILL	CLASS X CONC. (HDWL)	PIPE CULVERTS TYPE 1 15" RCCP	TYPE 2 24" RCCP	TYPE 2 36" RCCP	TYPE 5 30" RCCP	TYPE 1 36" (DETOUR)	TYPE 1 48" (DETOUR)	STORM SEWER TYPE 1 10"	TYPE 1 12"	TYPE 2 12"	PIPE UNDER-DRAINS 8"	CATCH BASIN TYPE A T3F&G	TYPE C T3F&G	INLET TYPE A T3F&G	TYPE A T11F&G	M.H. TO BE ADJ.	INLETS TO BE ADJ.	M.H. TO BE ADJ.	INLETS TO BE ADJ.	REBARS
	C.Y.	C.Y.	L.F.	L.F.	L.F.	L.F.	L.F.	L.F.	L.F.	L.F.	L.F.	L.F.	EACH	EACH	EACH	EACH	EACH	EACH	EACH	EACH	POUND
STATION OFFSET ST.	210001	503002	511046	511129	511131	511970	511507	511609	603004	603004	603029	607133	612003	612055	612154	612165	612233	612250	615001	615003	512001
SHEET NO. 8																					
7+65 12' RT. 6	4.1	—	—	—	—	—	—	—		25	—	—	—	—	1	—	—	—	—	—	—
7+65 12' LT. 6	—	0.5	—	—	—	—	—	—	—	22	—	—	—	1	—	—	—	—	—	—	—
7+98 39' LT. 6	—	—	38	—	—	—	—	—	—	—	—	—	—	—	—	—	—	—	—	—	—
SHEET NO. 9																					
12+50 22' RT. 6	5.3	—	—	—	—	—	—	—		53	—	—	—	—	1	—	—	—	—	—	—
12+50 30' LT. 6	—	—	—	—	—	—	—	—		69	—	—	1	—	—	—	—	—	—	—	—
14+94 ℄ 6	—	4.5	—	—	179	—	—	—	—	—	—	—	—	—	—	—	—	—	—	—	130
8+57 1' LT. 5	3.4	—	—	—	—	—	—	—	—	—	29	—	—	—	—	1	—	—	—	—	—
8+75 20' RT. 5	—	—	—	—	—	—	—	—	—	—	101	—	1	—	—	—	—	—	—	—	—
11+25 21' RT. 5	—	—	—	—	—	—	—	—	—	—	102	—	1	—	—	—	—	—	—	—	—
11+43 5' RT. 5	2.5	—	—	—	—	—	—	—	—	—	25	—	—	—	—	1	—	—	—	—	—
11+50 ℄ 3	17.9	2.6	—	—	—	189	—	—	—	—	—	—	—	—	—	—	—	—	—	—	80
13+71 ℄ 6	—	—	—	—	—	—	—	—	—	—	—	—	—	—	—	—	—	—	1	—	—
14+50 25' LT. 6	—	—	—	—	—	—	—	—	—	—	—	—	—	—	—	—	—	—	1	—	—
14+52 29' RT. 6	—	—	—	—	—	—	—	—	—	—	—	—	—	—	—	—	—	—	1	—	—
18+82 35' LT. 6	—	—	—	—	—	—	—	—	—	—	—	—	—	—	—	—	—	—	1	—	—
9+27 38' RT. 5	—	—	—	—	—	—	—	—	—	—	—	—	—	—	—	—	—	—	—	—	—
SHEET NO. 10																					
18+04 13' LT. 6	—	—	—	—	—	—	—	—	—	—	—	—	—	—	—	—	—	—	1	—	—
18+17 30' RT. 6	—	—	—	—	—	—	—	—	—	—	—	—	—	—	—	—	—	—	1	—	—
20+08 26' LT. 6	—	—	—	—	—	—	—	—	—	—	—	—	—	—	—	—	—	—	1	—	—
20+18 32' RT. 6	—	—	—	—	—	—	—	—	—	—	—	—	—	—	—	—	—	—	1	—	—
21+13 17' LT. 6	—	—	—	—	—	—	—	—	—	—	—	260	—	—	—	—	—	—	—	—	—
19+40± ℄ 6	—	—	—	—	—	—	—	—	—	—	—	260	—	—	—	—	—	—	—	—	—
20+60± ℄ 6	—	—	—	—	—	—	—	—	—	—	—	—	—	—	—	—	—	—	—	1	—
17+80 23' LT. 6	—	—	—	—	—	—	—	—	—	—	—	—	—	—	—	—	—	—	—	1	—
17+80 23' RT. 6	—	—	—	—	—	—	—	—	—	—	—	—	—	—	—	—	—	—	—	1	—
21+03 23' LT. 6	—	—	—	—	—	—	—	—	—	—	—	—	—	—	—	—	—	—	—	1	—
21+03 23' RT. 6	—	—	—	—	—	—	—	—	—	—	—	—	—	—	—	—	—	—	—	1	—
SHEET NO. 11																					
22+15 TO 22+73 RT. 6	—	—	—	—	—	—	—	—	—	—	—	91	—	—	—	—	—	—	—	—	—
23+23 33' RT. 6	6.7	—	—	—	—	—	—	—	—	—	67	—	—	—	1	—	—	—	—	—	—
23+23 33' LT. 6	20.0	—	—	—	—	—	—	—	—	—	142	—	1	—	—	—	—	—	—	—	—
2[illegible]+70 43' LT. 6	—	—	—	—	—	—	—	—	—	—	—	—	—	—	—	—	1	—	—	—	—
26+65 19' LT. 6	—	—	—	—	—	—	—	—	—	—	—	—	—	—	—	—	1	—	—	—	—
26+83 23' LT. 6	—	—	—	—	—	—	—	—	—	—	—	—	—	—	—	—	—	1	—	—	—
26+83 23' RT. 6	—	—	—	—	—	—	—	—	—	—	—	—	—	—	—	—	—	—	1	—	—
24+05 17' LT. 6	—	—	—	—	—	—	—	—	—	—	—	—	—	—	—	—	—	—	—	1	—
24+02 23' LT. 6	—	—	—	—	—	—	—	—	—	—	—	—	—	—	—	—	—	—	—	1	—
24+02 23' RT. 6	—	—	—	—	—	—	—	—	—	—	—	—	—	—	—	—	—	—	—	1	—
SHEET NO. 12																					
2+86 18' RT. 5	—	—	—	—	—	—	—	—	—	—	—	—	—	—	—	—	1	—	—	—	—
4+00 ℄ 5	5.0	2.0	—	62	—	—	—	—	—	—	—	—	—	—	—	—	—	—	—	—	70
SHEET NO. 26																					
211+70 ℄ DETOUR C	16.9	—	—	—	—	—	—	220	—	—	—	—	—	—	—	—	—	—	—	—	—
214+88 ℄ DETOUR C	12.2	—	—	—	—	—	76	—	—	—	—	—	—	—	—	—	—	—	—	—	—
215+86 ℄ DETOUR C	21.7	—	—	—	—	—	88	—	—	—	—	—	—	—	—	—	—	—	—	—	—
TOTAL	115.7	9.6	38	62	179	189	164	220		169	468	611	4	1	3	2	3	2	11	6	280
CITY - COUNTY	89.0	9.6	38	62	179	189	164	220		169	247	—	3	1	2	2	1	—	7	2	280
STATE	26.7	—	—	—	—	—	—	—		—	209	611	1	—	1	—	2	2	4	4	—

5 - SAND STREET
6 - GREENWOOD AVENUE

CURB, GUTTER, CURB & GUTTER, & MEDIAN SURFACE SCHEDULE

LOCATION	CONC. CURB TYPE B	CONC. GUTTER TYPE B	COMB. CONC. CURB & GUTTER TB 6.24	TB 9.12	CONC. MED. SURFACE 4"
	L.F.	L.F.	L.F.	L.F.	SQ. FT.
STATION	616006	616024	616041	616047	616202
SHEET NO. 8					
7+45 - 12+10 RT.	—	—	465	—	—
7+45 - 12+10 LT.	—	—	465	—	—
12+01 - 12+10 LT.	—	—	—	18	7
SHEET NO. 9					
12+10 - 13+95 ℄	—	—	—	251	988
12+10 - 11+51° LT.	—	—	215	—	—
12+10 - 8+58° RT.	—	—	218	—	—
8+48° - 14+62 RT.	—	—	159	—	—
11+56° - 14+66 LT.	—	—	164	—	—
18+13 - 17+50 RT.	—	—	187	—	—
18+21 - 17+50 LT.	—	—	129	—	—
8+26.6° - 9+60.6° ℄	—	—	—	266	250
10+39.0° - 11+73.0° ℄	—	—	—	266	250
13+97 - 14+12.1 RT.	—	—	—	31	30
13+93 - 13+44 RT.	44	—	—	—	44
13+27 - 13+42 LT.	45	—	—	—	44
19+89 - 14+02 LT.	51	—	—	—	68
19+89 - 14+09 RT.	40	—	—	—	40
18+61.23 - 17+50 ℄	—	—	—	178	253
SHEET NO. 10					
17+50 - 18+20 LT.	—	—	70	—	—
17+50 - 18+20 RT.	—	—	70	—	—
17+50 - 18+20 ℄	—	—	—	140	199
18+20 - 19+02.4 ℄	—	—	—	165	234
8+20 - 19+18 RT.	—	—	172	—	—
8+20 - 19+18 LT.	—	—	1[illegible]0	—	—
20+97.6 - 22+00 ℄	—	—	—	205	288
20+82 - 22+00 RT.	—	—	140	—	—
20+82 - 22+00 LT.	—	—	143	—	—
SHEET NO. 11					
22+00 - 27+46 LT.	—	—	546	—	—
22+00 - 27+46 RT.	—	—	546	—	—
22+00 - 25+49.9 ℄	—	—	—	694	3093
25+80 - 26+98.02 ℄	—	—	—	290	270
22+14 - 22+64 RT.	—	50	—	—	—
TOTAL	180	50	3,709	2,444	6,058

* STATION ON SAND ST. ALL OTHER STATIONS ON GREENWOOD AVE.

APPROACH SLABS
(16½ - 10½ - 16½)

LOCATION	PAVE-MENT
STATION	CU. YD.
14+12.06 TO 14+53.59	379
16+17.32 TO 16+61.23	323
19+02.42 TO 19+42.42	713.3
20+57.58 TO 20+97.58	713.3
TOTAL	2,129

STATE OF ILLINOIS
DEPARTMENT OF PUBLIC WORKS & BUILDINGS
DIVISION OF HIGHWAYS

SCHEDULE OF QUANTITIES

N. W. LOCHNER, INC.
ENGINEERS
CHICAGO, ILL.

FEDERAL-AID ROUTE No.	SECTION	COUNTY	TOTAL SHEETS	SHEET No.
42 ~~437~~	8-HB, 8-VB	LAKE	81	7
FED. ROAD DIV. No. 4	ILLINOIS	PROJECT		

SUB-BASE, BASE, PAVEMENT & SHOULDER SCHEDULE

LOCATION	SUB-BASE GRANULAR MATERIAL TYPE B 4" SQ.YD.	AGGREGATE SHOULDER TYPE B TON	STABILIZED BASE COURSE 9"	STABILIZED BASE COURSE 11"	AGGREGATE BASE COURSE TYPE A 6" SQ.YD.	BITUMINOUS MATERIALS PRIME COAT GALLON	BITUMINOUS CONCRETE BINDER COURSE	BITUMINOUS CONCRETE SURFACE COURSE CLASS I TON
STATION OFFSET	213029	215004	301018	301020	301024	406001	406007	406008
SHEET NO. 8								
7+00 TO 7+59.41	—	3.2	—	—	—	34	—	16.9
7+59.41 TO 12+10	1482	—	—	1307	—	327	215.6	107.8
7+98 ℄ LT.	—	—	—	—	82	21	—	11.3
SHEET NO. 9								
GREENWOOD AVE.								
12+10 TO 13+45.22	1059	—	—	917	—	229	151.4	75.7
13+87 TO 14+12.06	420	—	—	473	—	105	69.2	34.6
16+61.23 TO 17+50	651	—	—	592	—	148	97.7	48.8
16+61 RT.	—	—	—	—	714	179	—	98.2
17+43 LT.	—	—	—	—	357	89	—	49.1
SAND STREET				1632				
8+12 TO 12+00	1786	7.1	—	—	—	408	269.2	134.6
SHEET NO. 10								
17+50 TO 18+20	513	—	—	467	—	117	77	38.5
18+20 TO 19+02.42	683	—	—	621	—	158	104.2	52.1
20+97.58 TO 22+00	748	—	—	683	—	171	112.7	56.4
SHEET NO. 11								
22+00 TO 26+91.02	3138	—	—	2809	—	703	463.6	231.8
22+38.02 LT.	—	—	—	—	213	53	—	29.3
SHEET NO. 12								
1+98.63 TO 2+65	—	1.9	—	—	—	50	—	24.6
2+65 TO 8+00	1793	31.2	—	1542	—	385	254.4	127.2
SHEET NO. 13								
12+00 TO 17+50	1776	32.1	—	1580	—	395	260.7	130.3
17+50 TO 18+10.40	—	3.5	—	—	—	44	—	21.9
SHEET NO. 24								
DETOUR 'A' 1+00 – 15+40.78	—	—	3842	—	—	—	—	—
SHEET NO. 25								
DETOUR 'B' 100+25 – 114+04	—	—	3677	—	—	—	—	—
SHEET NO. 26								
DETOUR 'C' 200+00 – 207+74	—	—	3096	—	—	—	—	—
DETOUR 'C' 207+74 – 217+01.06	—	—	3614	—	—	—	—	—
TOTAL	13,983	79	14,229	11,001	1,366	3,615	2075.7	1,289.1

12,623

STEEL PLATE BEAM GUARD RAIL

LOCATION		CITY & COUNTY LIN. FT.	CITY & COUNTY TERMINAL SECTION EACH	STATE LIN. FT.	STATE TERMINAL SECTION EACH
STATION	OFFSET				
SHEET NO. 9					
8+93* TO 14+40	RT.	62.5	1	—	—
11+00* TO 14+55	LT.	62.5	1	—	—
16+29 TO 16+48	RT.	25.0	—	—	—
16+75 TO 17+50	RT.	75.0	—	—	—
16+35 TO 17+35	LT.	100.0	—	—	—
ACCESS ROAD	RT. & LT.	50.0	2	—	—
SERVICE ROAD "A"	RT. & LT.	50.0	2	—	—
SHEET NO. 10					
17+50 TO 18+20	RT.	70.0	—	—	—
17+56 TO 18+20	LT.	64.0	—	—	—
18+20 TO 19+03	RT.	—	—	92.5	—
18+20 TO 19+00	LT.	—	—	86.0	—
18+80 TO 21+16	RT.	—	—	237.5	—
18+80 TO 21+13	LT.	—	—	237.5	—
21+05 TO 22+00	RT.	—	—	100.0	—
20+99 TO 21+78	LT.	—	—	62.5	1
SHEET NO. 11					
22+00 TO ~~24+18.5~~ 23+70	RT.	—	—	187.5	1
SHEET NO. 13					
18+37.5 TO 18+87.5	LT.	100.0	2	—	—
COLUMN TOTALS		639.0	8	1003.5	2
TOTAL		1642.5 LIN. FT.	10 EACH		
SHEET NO. 26					
201+65 TO 204+15	RT.	—		250	
211+90 TO 211+50	LT.	50		—	
211+70 TO 212+20	RT.	50		—	
214+75 TO 215+00	LT. & RT.	50		—	
215+75 TO 216+00	LT. & RT.	50		—	
** TOTAL		200		250	
		450			

* SAND STREET STATION
** TO BE SALVAGED-SEE SPEC. PROV.

MEDIAN SCHEDULE

LOCATION			CONC. MEDIAN TYPE C-4 SQ.FT.	CONC. MEDIAN TYPE C-4 SPECIAL SQ.FT.
STATION	OFFSET	ST.	616137	616139
SHEET NO. 8				
11+35 TO 12+10	℄	S	414	—
SHEET NO. 9				
12+10 TO 12+63.4	RT.	S	194	—
8+00 TO 8+49.37	LT.	S	178	—
11+58.85 TO 12+00	RT.	S	159	—
SHEET NO. 11				
25+42.89 TO 25+79.37	℄	S	369	—
26+93.02 TO 29+21.04	℄	S	—	912
SHEET NO. 12				
7+60.60 TO 8+00	LT.	S	117	—
SHEET NO. 13				
12+00 TO 12+39.02		S	117	—
TOTAL			1,537	912

SIDEWALK

LOCATION		QUANTITY
STATION	OFFSET	SQ. FT.
SHEET NO. 8		
9+83 – 10+09	RT.	26 X 5 = 130
SHEET NO. 9		
14+14 – 14+54	LT.	44 X 5 = 220
16+22 – 17+35	LT.	113 X 5 = 565
SHEET NO. 10		
17+50 – 18+20		70 X 5 = 350
18+20 – 19+01		83 X 5 = 415
20+98 – 22+00		107 X 5 = 535
SHEET NO. 11		
22+00 – 22+62		62 X 5 = 310
22+78 – 23+45		265 X 5 = 1325
25+80 – 26+93.02		113.02 X 5 = 565
TOTAL		4,425

SEEDING

LOCATION			QUANTITY CLASS II ACRE	QUANTITY CLASS I ACRE
STATION	OFFSET	ST.	64203	64202
SHEET NO. 8				
7+00 TO 12+10	RT.		0.28	—
7+00 TO 12+10	LT.		0.75	—
SHEET NO. 9				
12+10 TO 8+00	RT.		0.21	—
12+10 TO 12+00*	LT.		0.33	—
8+00 TO 15+18	RT.		0.18	—
12+00* TO 15+18	LT.		0.13	—
15+86 TO 17+50	RT.		0.09	—
15+86 TO 17+50	LT.		0.16	—
SHEET NO. 10				
17+50 TO 18+20	RT.		0.08	—
17+50 TO 18+20	LT.		0.02	—
18+20 TO 19+60	RT.	S	—	0.30
18+20 TO 19+60	LT.	S	—	0.11
20+40 TO 22+00	RT.	S	—	0.14
20+43 TO 22+00	LT.	S	—	0.00
SHEET NO. 11				
22+00 TO 27+46.02	RT.	S	0.5	—
22+00 TO 27+46.02	LT.	S	0.26	—
SHEET NO. 12				
1+98.63 TO 8+00	RT.		0.65	—
1+98.63 TO 8+00	LT.		0.13	—
SHEET NO. 13				
12+00 TO 18+10.40	RT.		0.67	—
12+00 TO 18+10.40	LT.		0.43	—
TOTAL			5.47	0.53

* SAND STREET STATION

SCHEDULE OF REINFORCEMENT BARS & CLASS X CONCRETE

LOCATION		REINFORCEMENT BARS LBS.	CLASS X CONCRETE CU. YD.
STATION	OFFSET		
APPROACH SLABS			
14+12.06 TO 14+53.59		25,530	10.2
16+17.22 TO 16+61.23		20,700	9.4
19+02.42 TO 19+42.42		53,461	52.9
20+57.58 TO 20+97.58		53,461	52.9
HEADWALLS			
14+94 ℄ GREENWOOD AVE.		130	—
11+50 ℄ SAND ST.		80	—
4+00 ℄ SAND ST.		70	—
RETAINING WALL		6,400	108.0
STAIRS		50	0.8
STRUCTURES			
8 VB		177,400	814.4
8 HB		338,720	2,230.9
TOTAL		676,008	3,283.5

SODDING

LOCATION			QUANTITY
STATION	OFFSET	ST.	SQ. YD.
SHEET NO. 9			
12+70 TO 8+50*	RT.		708
11+50* TO 12+00*	LT.		350
8+50* TO 15+26	RT.		1064
11+50* TO 15+26	LT.		1027
15+53 TO 17+50	RT.		1746
15+53 TO 17+50	LT.		1368
SHEET NO. 10			
17+50 TO 18+20	RT.		467
17+50 TO 18+20	LT.		467
18+20 TO 19+10	RT.	S	448
18+20 TO 19+10	LT.	S	478
20+70 TO 22+00	RT.	S	576
20+70 TO 22+00	LT.	S	511
SHEET NO. 11			
22+00 TO 23+50	RT.	S	701
SHEET NO. 13			
12+00 TO 13+25	LT.		536
TOTAL			10,442

* SAND STREET STATION

FENCE

LOCATION			QUANTITY CHAIN LINK FENCE 6' LIN. FT.	CHAIN LINK GATE 6X12' DOUBLE EACH	CHAIN LINK GATE 6X18' DOUBLE EACH
STATION	OFFSET	ST.			
SHEET NO. 9					
15+70.20 TO 17+50	RT.		183	—	1
16+10.21 TO 17+50	LT.		202	1	—
SHEET NO. 10					
17+50 TO 18+20	RT.		79	—	—
17+50 TO 18+20	LT.		79	—	—
18+20 TO 18+93.08	RT.	S	58	—	—
21+60 TO 22+00	RT.	S	162	—	—
18+20 TO 18+58.15	LT.	S	38	—	—
2+50 TO 22+00	LT.	S	50	—	—
SHEET NO. 11					
22+00 TO 25+00	RT.	S	381	—	—
22+00 TO 24+86.06	LT.	S	281	1	—
TOTAL			1,477	2	1

STATE OF ILLINOIS
DEPARTMENT OF PUBLIC WORKS & BUILDINGS
DIVISION OF HIGHWAYS

SCHEDULE OF QUANTITIES

H. W. LOCHNER, INC.
ENGINEERS

FEDERAL-AID ROUTE NO.	SECTION	COUNTY	TOTAL SHEETS	SHEET NO.
437 ~~42~~	8-HB, 8-VB	LAKE	81	8
FED. ROAD DIV. No. 4	ILLINOIS	PROJECT		

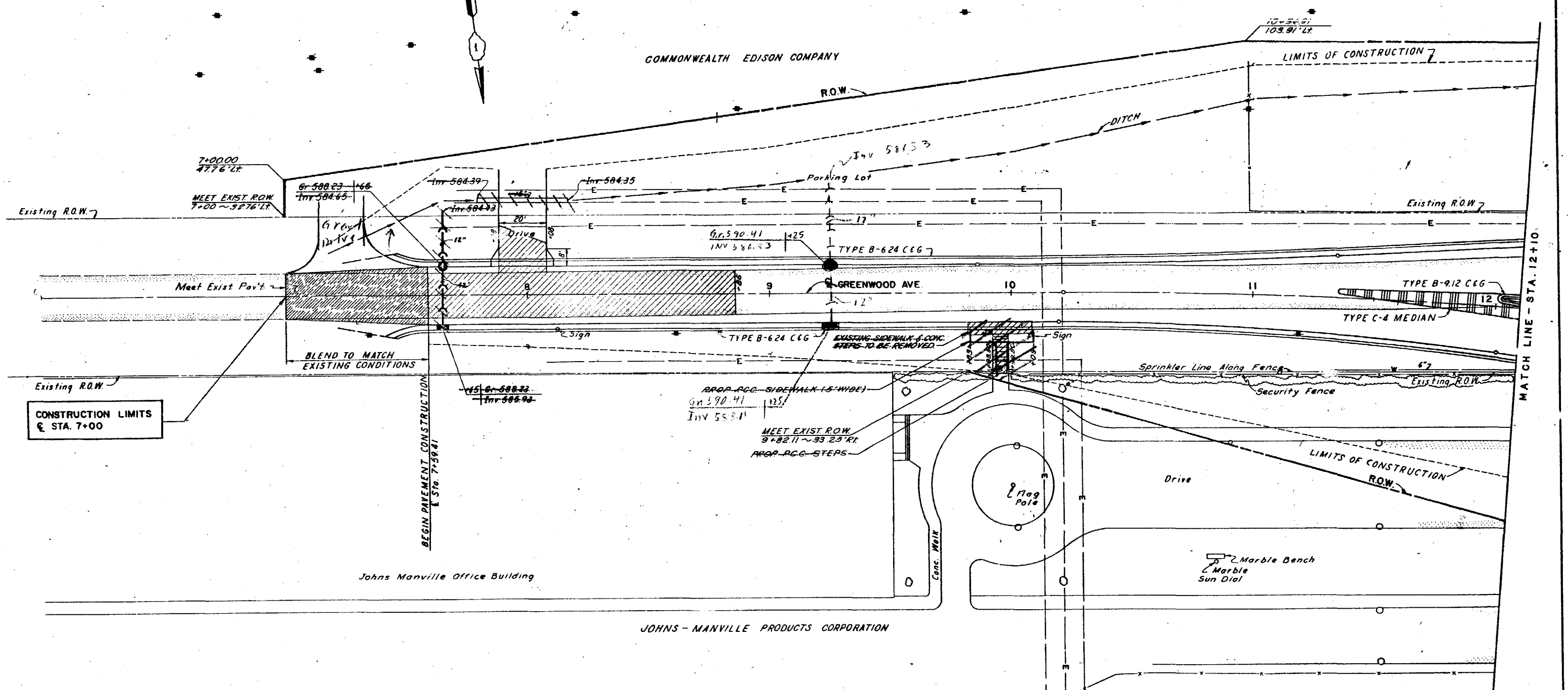

CONSTRUCTION LIMITS
℄ STA. 7+00

NOTES

FOR PAVEMENT ELEVATIONS & GEOMETRICS, SEE SHEET NO. 17
FOR R.O.W. DETAILS, SEE SHEET NO. 28
FOR DRIVEWAY DETAILS, SEE SHEET NO. 17
FOR DETAILS OF PCC STEPS, SEE SHEET NO. 31
FOR PROFILE, SEE SHEET NO. 14

LEGEND

- SIZE — STORM SEWER TO BE CONSTRUCTED
- SIZE — TREE TO BE REMOVED
- EXISTING PAVEMENT EDGE
- BIT. SURFACE COURSE (VAR. THICK.)
- PAVEMENT, DRIVEWAY PAVEMENT, SIDEWALK, CURB AND CURB & GUTTER REMOVAL
- —w— EXISTING WATER LINE
- —e— EXISTING ELECTRIC LINE

9+25
STA. 7+65 (12' RT)
1-INLET TYPE 'A' WITH TYPE 3 FRAME & GRATE
25'-12" STORM SEWER TYPE 1
4.1 -C.Y. TRENCH BACKFILL

9+25
STA. ~~7+65~~ (12' LT.)
1-CATCH BASIN TYPE 'C' WITH TYPE 3 FRAME & GRATE
31' ~~22'~~-12" STORM SEWER TYPE 1
~~1-HDWL STD 1973 D12.2~~
~~0.50 C.Y. CLASS X CONCRETE~~

~~STA. 7+08 (30' LT.)~~
~~30' PIPE CULVERT, TYPE 1, RCCP, 15"~~

STATE OF ILLINOIS
DEPARTMENT OF PUBLIC WORKS & BUILDINGS
DIVISION OF HIGHWAYS

PLAN

GREENWOOD AVENUE
STA. 7+00 TO STA. 12+10

SCALE: 1"=20'

H. W. LOCHNER, INC.
ENGINEERS
CHICAGO, ILL.

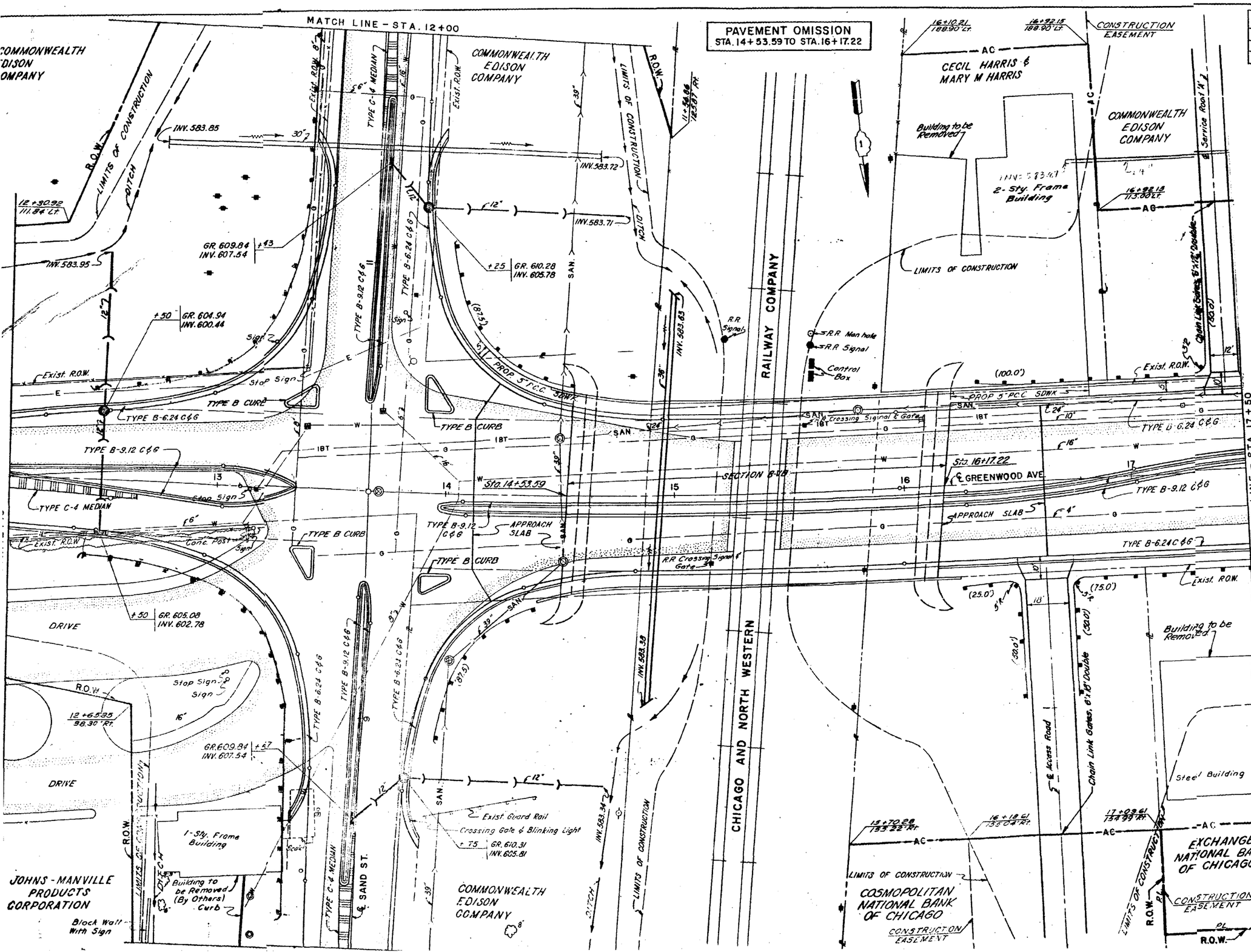

FEDERAL-AID ROUTE No.	SECTION	COUNTY	TOTAL SHEETS	SHEET No.
437 ~~412~~	8-HB, 8-VB	LAKE	81	9
FED. ROAD DIV. No. 4	ILLINOIS	PROJECT		

NOTES

FOR PAVEMENT ELEVATIONS & GEOMETRICS, SEE SHEET NO. 18
FOR R.O.W. DETAILS, SEE SHEET NO. 28
~~FOR DRIVEWAY DETAILS SEE SHEET NO.~~
FOR APPROACH SLAB DETAILS, SEE SHEET NO. 29
FOR DETAILS OF ACCESS & SERVICE ROADS, SEE SHEET NO. 16
FOR PROFILES, SEE SHEET NOS. 14 & 16
STA 13+83 LT. HYDRANT TO BE REMOVED BY OTHERS

STA. 11+50 SAND ST. (℄)
189'-PIPE CULVERT, TYPE 5, RCCP, 30"
2-HDWLS. STD. 1976 D 30-2
2.6 C.Y. CLASS X CONCRETE
80 LBS. REINFORCEMENT BARS
17.9 C.Y. TRENCH BACKFILL

STA. 14+94 GREENWOOD AVE. (℄)
179'-PIPE CULVERT, TYPE 2, RCCP, 36"
SKEW 5° RT.
2-HDWLS. STD. 2051 DS 36-2-
4.5 C.Y. CLASS X CONCRETE
130 LBS. REINFORCEMENT BARS

STA. 8+57 SAND ST. (1' LT.)
1-INLET TYPE 'A' WITH TYPE 11 FRAME & GRATE
29'-12" STORM SEWER TYPE 2
3.4 C.Y. TRENCH BACKFILL

STA. 8+75 SAND ST. (20' RT.)
1-CATCH BASIN TYPE 'A' WITH TYPE, 3 FRAME & GRATE
101'-12" STORM SEWER TYPE 2

STA. 11+43 SAND ST. (5' RT.)
1-INLET TYPE 'A' WITH TYPE 11 FRAME & GRATE
25'-12" STORM SEWER TYPE 2
2.5 C.Y. TRENCH BACKFILL

STA. 11+25 SAND ST. (21' RT.)
1-CATCH BASIN TYPE 'A' WITH TYPE, 3 FRAME & GRATE
102'-12" STORM SEWER TYPE 2

MANHOLES TO BE FILLED (5)
STA. 13+71 GREENWOOD AVE. (℄)
STA 14+50 GREENWOOD AVE. (25' LT.)
STA. 14+52 GREENWOOD AVE. (29' RT.)
STA. 15+82 GREENWOOD AVE. (35' LT.)
STA 9+27 SAND ST. (38' RT.)

STA 12+50 GREENWOOD AVE. (22' RT.)
1-INLET TYPE 'A' WITH TYPE 3 FRAME & GRATE
53'-12" STORM SEWER TYPE 1
5.3 -C.U. TRENCH BACKFILL

STA. 12+50 GREENWOOD AVE. (30' LT.)
1-CATCH BASIN TYPE 'A' WITH TYPE, 3 FRAME & GRATE
69'-12" STORM SEWER TYPE 1

LEGEND

- STEEL PLATE BEAM GUARD RAIL
- EXISTING SANITARY SEWER
- STORM SEWER TO BE CONSTRUCTED
- EXISTING PAVEMENT EDGE
- EXISTING WATER LINE
- EXISTING GAS LINE
- EXISTING ELECTRIC LINE
- ILLINOIS BELL TELEPHONE LINE
- LIGHT POLE
- POWER POLE
- COMBINED POWER & TELEPHONE POLE
- TELEPHONE POLE
- TREE TO BE REMOVED
- STUMP

STATE OF ILLINOIS
DEPARTMENT OF PUBLIC WORKS & BUILDINGS
DIVISION OF HIGHWAYS

PLAN

GREENWOOD AVE. STA. 12+10 TO STA. 17+50
SAND STREET STA. 8+00 TO STA. 12+00
SCALE: 1" = 20'

FEDERAL-AID ROUTE No.	SECTION	COUNTY	TOTAL SHEETS	SHEET No.
437 ~~42~~	8-HB, 8-VB	LAKE	81	10
FED. ROAD DIV. No. 4	ILLINOIS	PROJECT		

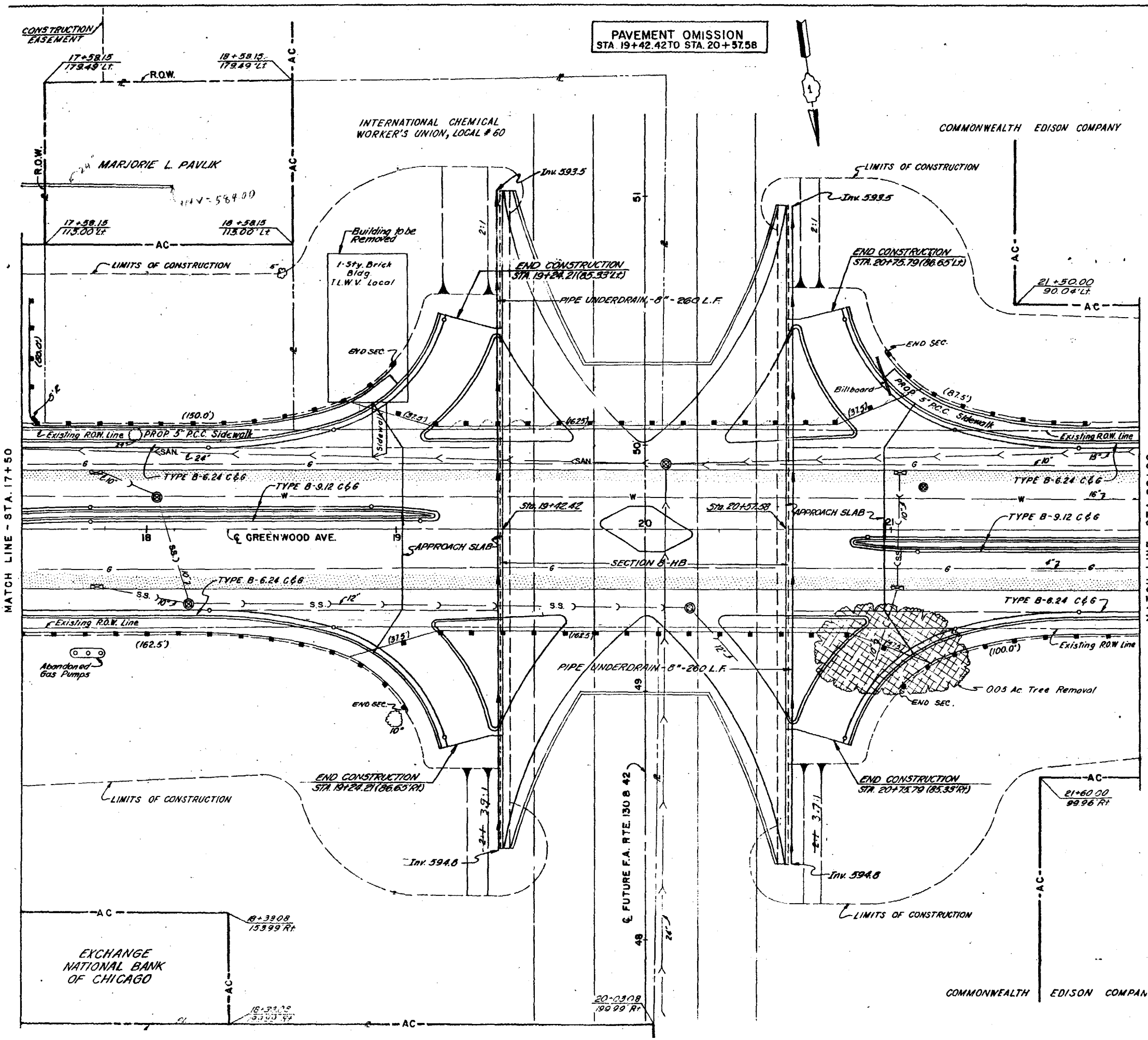

Sta 17+43 (138 Lt)
132' Pipe Culv. 2 RCCP 24"

MANHOLES TO BE FILLED (5)	INLETS TO BE FILLED (4)
STA. 18+04 (13' LT.)	STA. 17+80 (23' LT.)
STA. 18+17 (30' RT.)	STA. 17+80 (23' RT.)
STA. 20+08 (26' LT.)	STA. 21+03 (23' LT.)
STA. 20+18 (32' RT.)	STA. 21+03 (23' RT.)
STA. 21+13 (17' LT.)	

PIPE UNDERDRAIN - 8" ——— 520 LIN. FT.

STEEL PLATE BEAM GUARD RAIL ——— 475 LIN. FT. TO BE PLACED ON THE STRUCTURE TO PREVENT TURNING MOVEMENTS. SOUTH SIDE MAY BE DEDUCTED BY ENGINEER IF RAMPS OF SEC. 8 ARE COMPLETE.

NOTES

FOR PAVEMENT ELEVATIONS AND GEOMETRICS, SEE SHEET NO. 19
FOR APPROACH SLAB DETAILS, SEE SHEET NO. 30
FOR R.O.W. DETAILS, SEE SHEET NO. 28

LEGEND

- LENGTH — STEEL PLATE BEAM GUARD RAIL
- SIZE — EXISTING SANITARY SEWER
- SIZE — EXISTING STORM SEWER
- SIZE — TREE TO BE REMOVED
- EXISTING PAVEMENT EDGE
- TREE REMOVAL, ACRES
- EXISTING GAS LINE
- EXISTING WATER LINE

STATE OF ILLINOIS
DEPARTMENT OF PUBLIC WORKS & BUILDINGS
DIVISION OF HIGHWAYS

PLAN

GREENWOOD AVENUE
STA. 17+50 TO STA. 22+00

SCALE: 1" = 20'

H. W. LOCHNER, INC.
ENGINEERS
CHICAGO, ILL.

FEDERAL-AID ROUTE No.	SECTION	COUNTY	TOTAL SHEETS	SHEET No.
437 42	8-HB, 8-VB	LAKE	81	11
FED. ROAD DIV. No. 4	ILLINOIS	PROJECT		

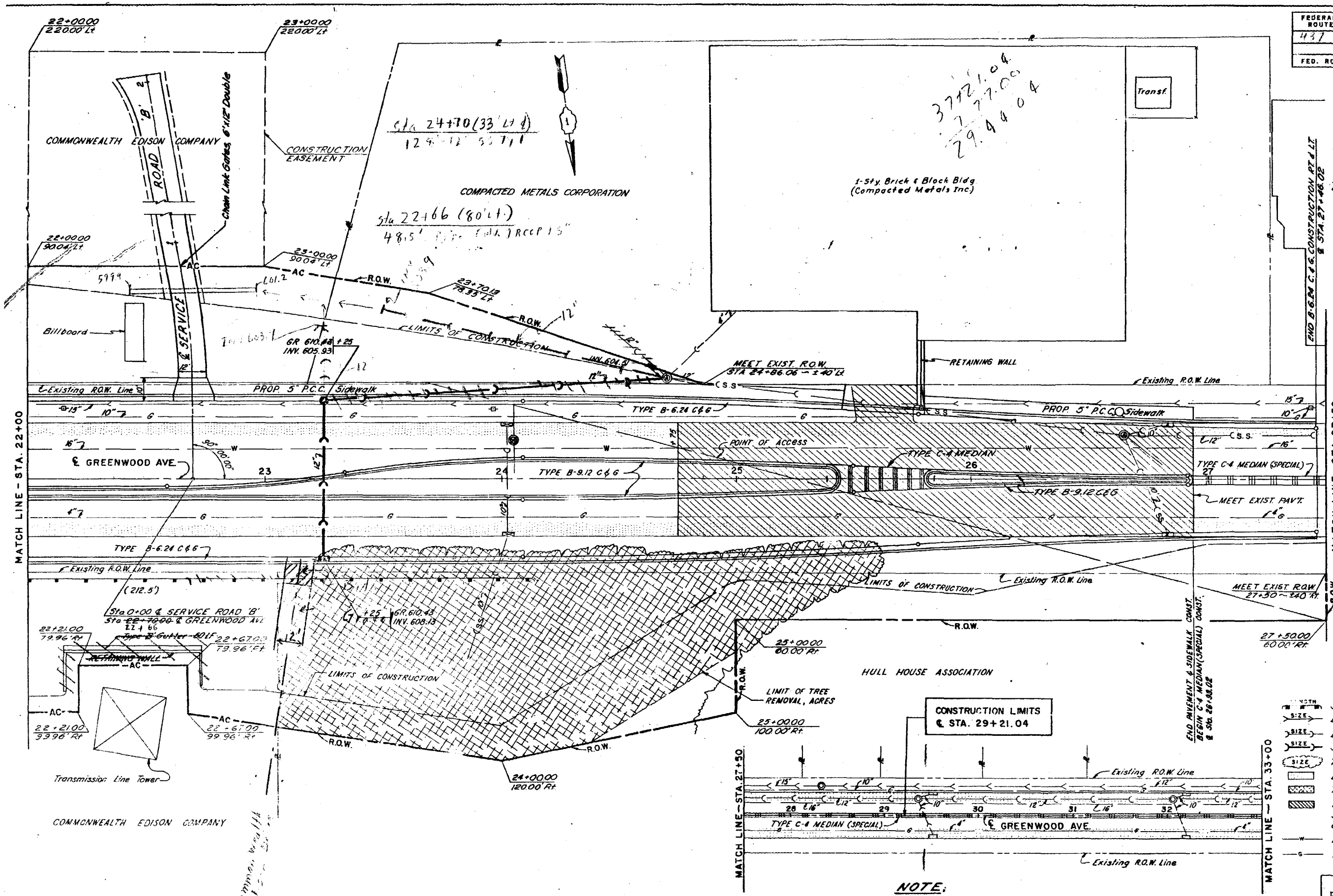

STA. 23+25 (33' RT.)
1-STD. INLET TYPE 'A' WITH TYPE 3 FRAME & GRATE
67'-12" STORM SEWER TYPE 2
6.7 C.Y. TRENCH BACKFILL

STA. 23+25 (33' LT.)
1-CATCH BASIN TYPE 'A' WITH TYPE 3 FRAME & GRATE
~~142'-12" STORM SEWER TYPE 1~~
~~20.0 C.Y. TRENCH BACKFILL~~

MANHOLES TO BE ADJUSTED (2)
STA. 24+70 (43' LT.)
STA. 26+65 (19' LT.)

INLETS TO BE ADJUSTED (2)
STA. 26+83 (23' LT.)
STA. 26+83 (23' RT.)

MANHOLES TO BE FILLED (1)
STA. 24+05 (17' LT.)

INLETS TO BE FILLED (2)
STA. 24+02 (23' LT.)
STA. 24+02 (23' RT.)

NOTES

FOR PAVEMENT ELEVATION AND GEOMETRICS, SEE SHEET NO. 20
FOR R.O.W. DETAILS, SEE SHEET NO. 28
FOR DRIVEWAY DETAILS, SEE SHEET NO. 17
FOR TYPE C-4 MEDIAN (SPECIAL) DETAILS, SEE SHEET NO. 31
FOR RETAINING WALL DETAILS, SEE SHEET NO. 32 & 33
STA. 26+62 LT. HYDRANT TO BE REMOVED BY OTHERS.

LEGEND

- STEEL PLATE BEAM GUARD RAIL
- EXISTING SANITARY SEWER
- EXISTING STORM SEWER
- STORM SEWER TO BE CONSTRUCTED
- TREE TO BE REMOVED
- EXISTING PAVEMENT EDGE
- TREE REMOVAL, ACRES
- PAVEMENT, DRIVEWAY PAVEMENT, SIDEWALK, CURB AND CURB & GUTTER REMOVAL.
- EXISTING WATER LINE
- EXISTING GAS LINE

NOTE:
EXISTING DRAINAGE
STA. 27+50 TO 33+00
SCALE: 1" = 50'

STATE OF ILLINOIS
DEPARTMENT OF PUBLIC WORKS & BUILDINGS
DIVISION OF HIGHWAYS

PLAN

GREENWOOD AVENUE
STA. 22+00 TO STA. 33+00

SCALE: 1" = 20'

H. W. LOCHNER, INC.

FEDERAL-AID ROUTE No.	SECTION	COUNTY	TOTAL SHEETS	SHEET No.
437 42	8-HB, 8-VB	LAKE	81	12
FED. ROAD DIV. No. 4	ILLINOIS	PROJECT		

MANHOLES TO BE ADJUSTED (1)
STA. 2+86 (13' RT.)

STA. 4+00 (℄)
62'-PIPE CULVERT, TYPE 2, RCCP, 24"
2-HDWLS. STD. 1976 D24-2
2.0 C.Y. CLASS X CONCRETE
70 LBS. REINFORCEMENT BARS
5.0 C.Y. TRENCH BACKFILL

JOHNS-MANVILLE PRODUCTS CORPORATION

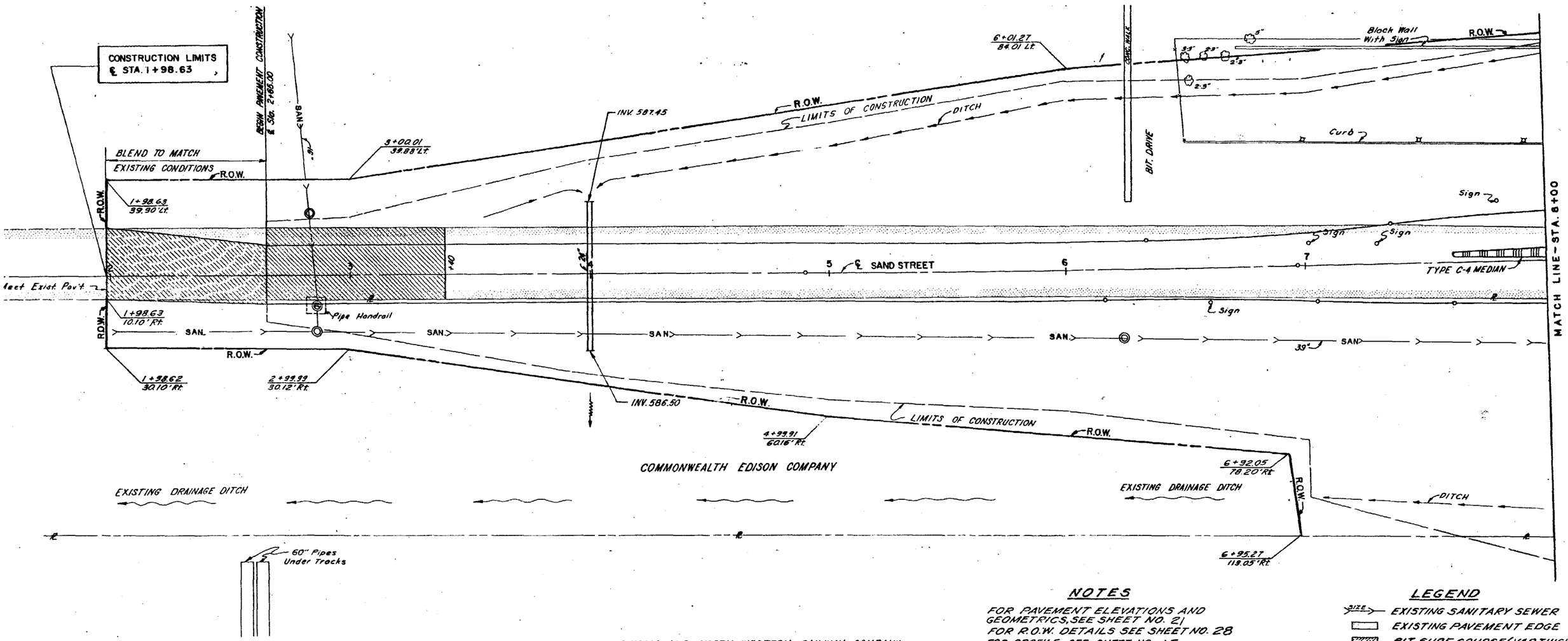

NOTES

FOR PAVEMENT ELEVATIONS AND GEOMETRICS, SEE SHEET NO. 21
FOR R.O.W. DETAILS SEE SHEET NO. 28
FOR PROFILE, SEE SHEET NO. 15

LEGEND

- SIZE — EXISTING SANITARY SEWER
- EXISTING PAVEMENT EDGE
- BIT. SURF. COURSE (VAR. THICK.)
- PAVEMENT, DRIVEWAY PAVEMENT, SIDEWALK, CURB AND CURB & GUTTER REMOVAL.

STATE OF ILLINOIS
DEPARTMENT OF PUBLIC WORKS & BUILDINGS
DIVISION OF HIGHWAYS

PLAN

SAND STREET
STA. 1+98.63 TO STA. 8+00

SCALE: 1" = 20'

H. W. LOCHNER, INC.
ENGINEERS
CHICAGO, ILL.

FEDERAL-AID ROUTE No.	SECTION	COUNTY	TOTAL SHEETS	SHEET No.
437 42	8-HB, 8-VB	LAKE	81	13
FED. ROAD DIV. No. 4	ILLINOIS	PROJECT		

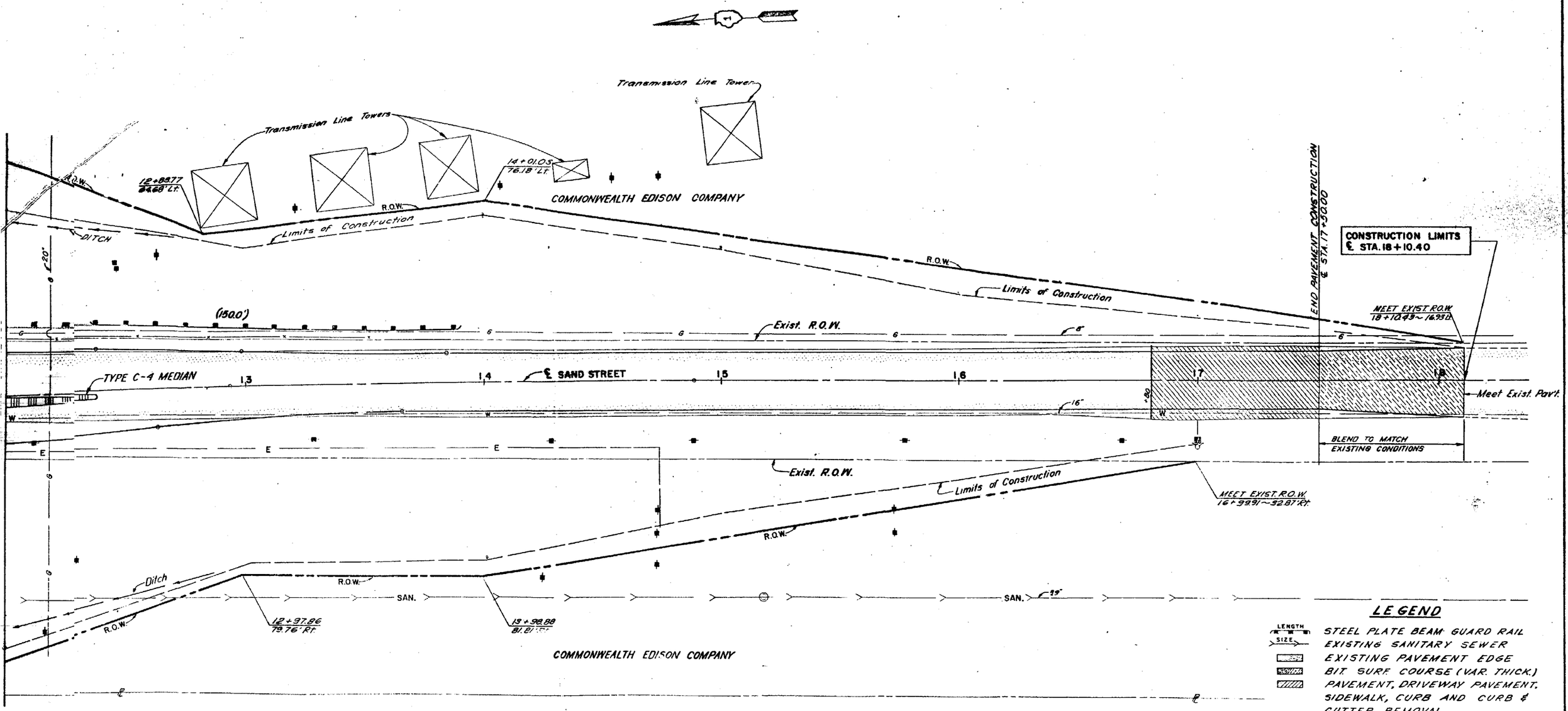

LEGEND

- LENGTH / SIZE — STEEL PLATE BEAM GUARD RAIL
- EXISTING SANITARY SEWER
- EXISTING PAVEMENT EDGE
- BIT. SURF. COURSE (VAR. THICK.)
- PAVEMENT, DRIVEWAY PAVEMENT, SIDEWALK, CURB AND CURB & GUTTER REMOVAL.
- —W— EXISTING WATER LINE
- —G— EXISTING GAS LINE
- —E— EXISTING ELECTRIC LINE
- POWER POLE

NOTES

FOR PAVEMENT ELEVATIONS AND GEOMETRICS, SEE SHEET NO. 22

FOR R.O.W. DETAILS, SEE SHEET NO. 28

STA. 17+00 RT. HYDRANT TO BE REMOVED BY OTHERS.

STATE OF ILLINOIS
DEPARTMENT OF PUBLIC WORKS & BUILDINGS
DIVISION OF HIGHWAYS

PLAN

SAND STREET
STA. 12+00 TO STA. 18+10.40

SCALE 1" = 20'

H. W. LOCHNER, INC.

FEDERAL-AID ROUTE No.	SECTION	COUNTY	TOTAL SHEETS	SHEET No.
437	8-HB, 8-VB	LAKE	81	14
FED. ROAD DIV. No. 4	ILLINOIS	PROJECT		

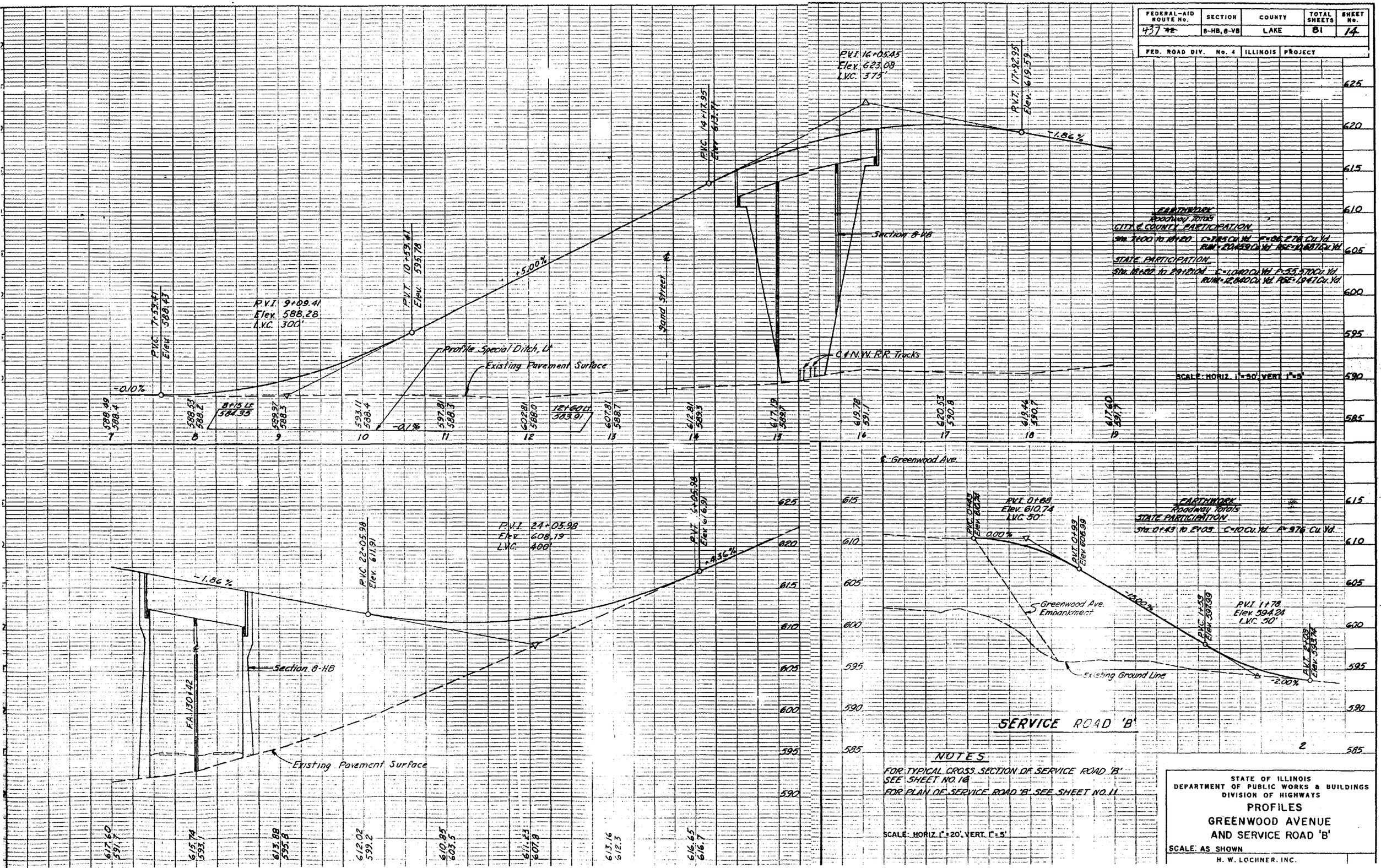

STATE OF ILLINOIS
DEPARTMENT OF PUBLIC WORKS & BUILDINGS
DIVISION OF HIGHWAYS

PROFILES
GREENWOOD AVENUE AND SERVICE ROAD 'B'

SCALE: AS SHOWN

H. W. LOCHNER, INC.

FEDERAL-AID ROUTE No.	SECTION	COUNTY	TOTAL SHEETS	SHEET No.
F.A.I. 42	8-HB, 8-VB	LAKE	81	15
FED. ROAD DIV. No. 4	ILLINOIS	PROJECT		

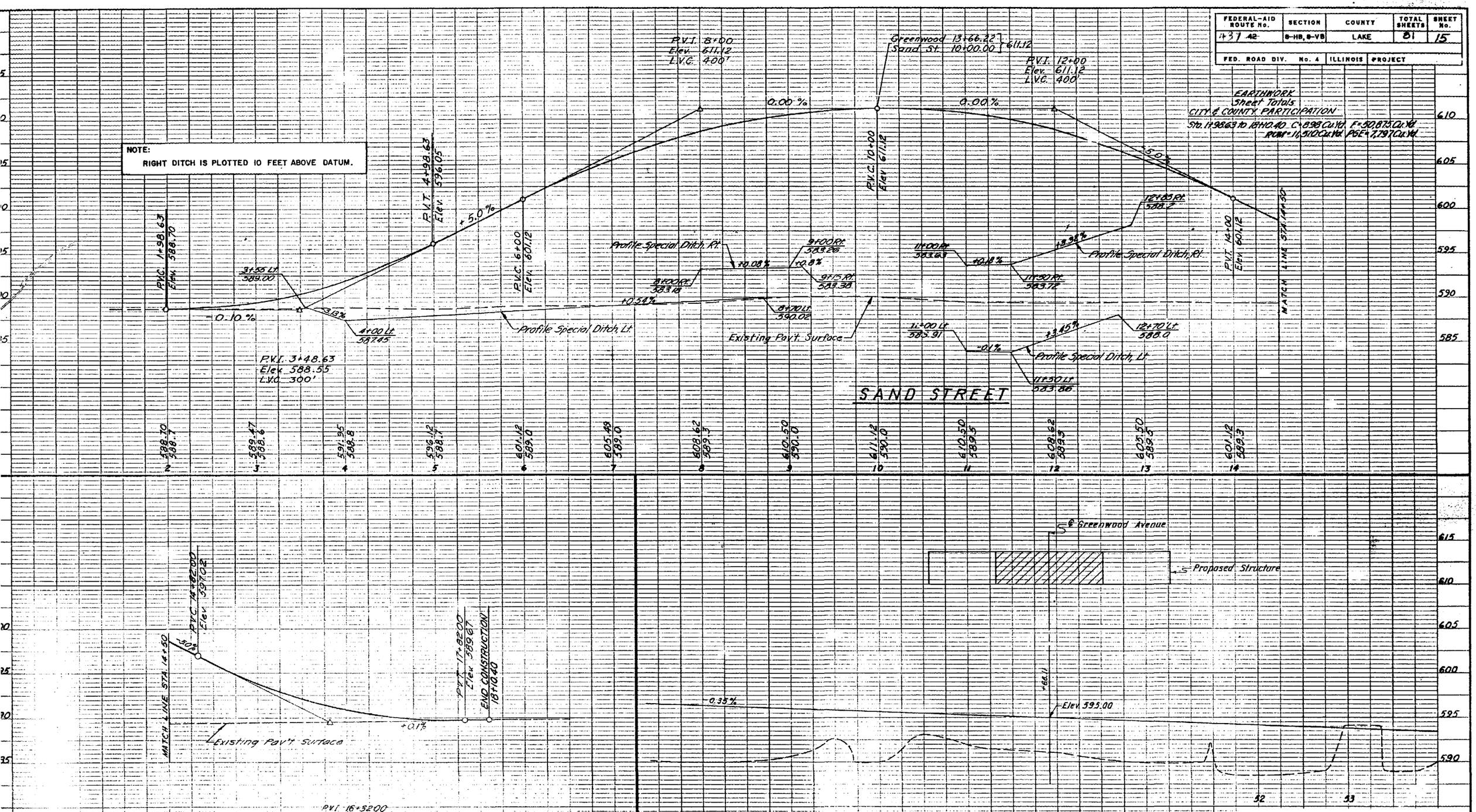

STATE OF ILLINOIS
DEPARTMENT OF PUBLIC WORKS & BUILDINGS
DIVISION OF HIGHWAYS

PROFILES

F.A. ROUTE ~~42-8~~ 437

SAND STREET

SCALE: HORIZ. 1" = 50', VERT. 1" = 5'

H. W. LOCHNER, INC.
ENGINEERS

FEDERAL-AID ROUTE No.	SECTION	COUNTY	TOTAL SHEETS	SHEET No.
42 431	8-HB, 8-VB	LAKE	81	16
FED. ROAD DIV. No. 4	ILLINOIS	PROJECT		

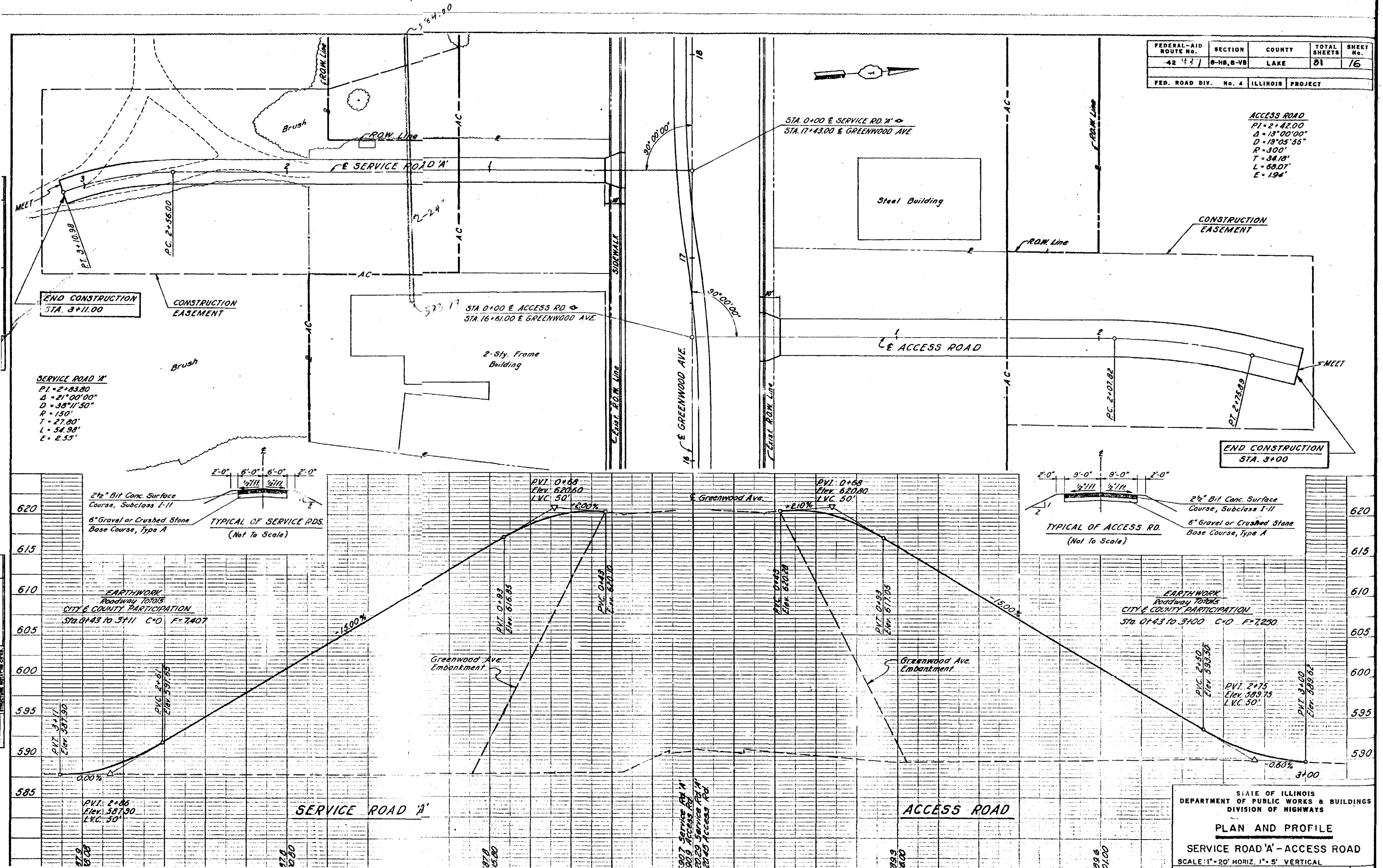

FEDERAL-AID ROUTE No.	SECTION	COUNTY	TOTAL SHEETS	SHEET No.
437	S-HB, S-VB	LAKE	81	17
FED. ROAD DIV. No. 4	ILLINOIS	PROJECT		

CURVE G-1

P.I. = 11+66.50
Δ = 6°-36'-32"
D = 2°-17'-31"
R = 2500
T = 144.34'
L = 288.36'
E = 4.16

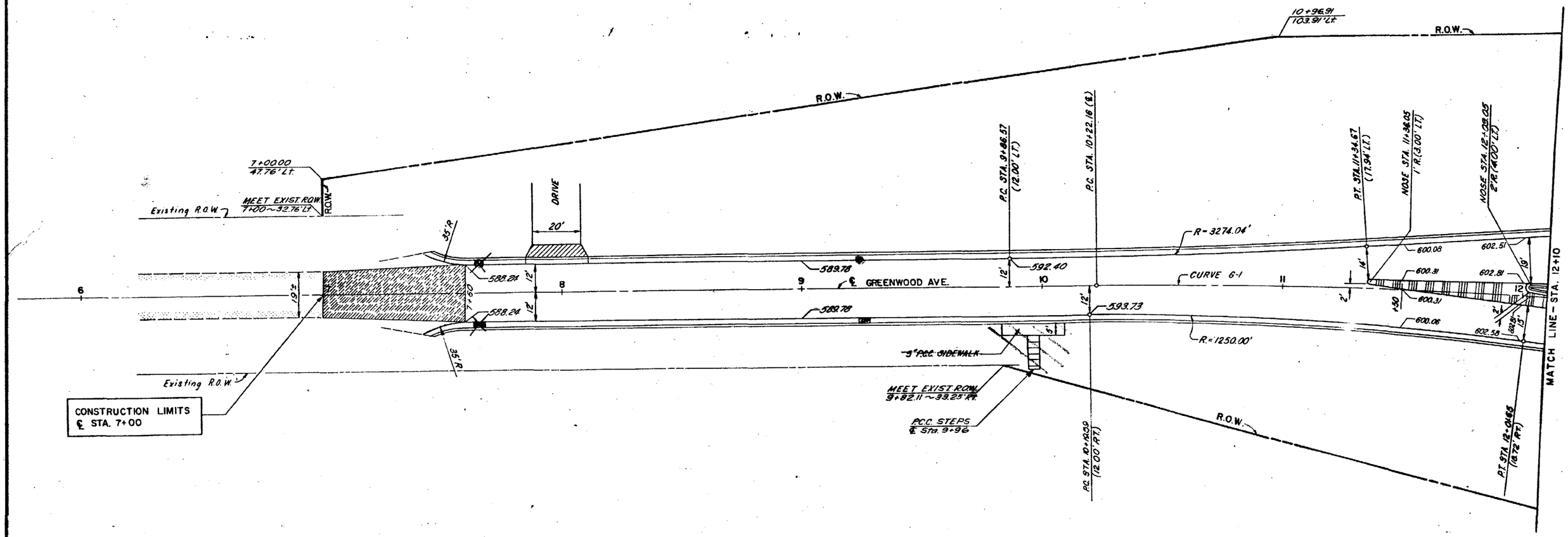

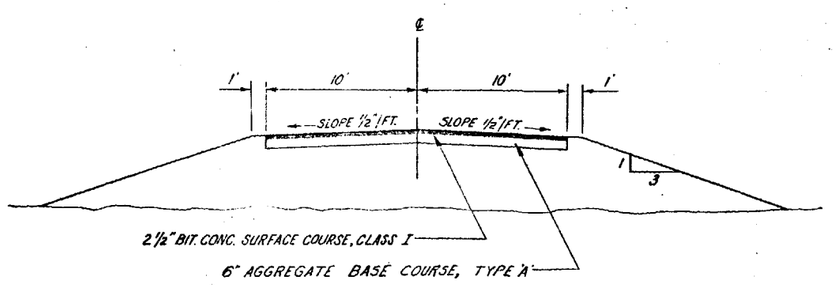

TYPICAL SECTION
DRIVEWAY RECONSTRUCTION
STA. 7+98 (LT.)

NOTES

FOR DRAINAGE DETAILS, SEE SHEET NO. 8
FOR PROFILE, SEE SHEET NO. 14

LEGEND

- BIT. SURF. COURSE (VAR. THICK.)
- NEW DRIVEWAY PAVEMENT
- EXISTING PAVEMENT EDGE

STATE OF ILLINOIS
DEPARTMENT OF PUBLIC WORKS & BUILDINGS
DIVISION OF HIGHWAYS

PAVEMENT ELEVATIONS & GEOMETRICS

GREENWOOD AVENUE
STA. 7+00 TO STA. 12+10

SCALE 1"=20'

H. W. LOCHNER, INC.
ENGINEERS
CHICAGO, ILL.

FEDERAL-AID ROUTE No.	SECTION	COUNTY	TOTAL SHEETS	SHEET No.
131 42	8-HB, 8-VB	LAKE	81	18
FED. ROAD DIV. No. 4	ILLINOIS	PROJECT		

NOTES

FOR DRAINAGE DETAILS, SEE SHEET NO. 9
~~FOR TRAFFIC ISLAND DETAILS, SEE SHEET NO.~~
FOR APPROACH SLAB DETAILS, SEE SHEET NO. 29

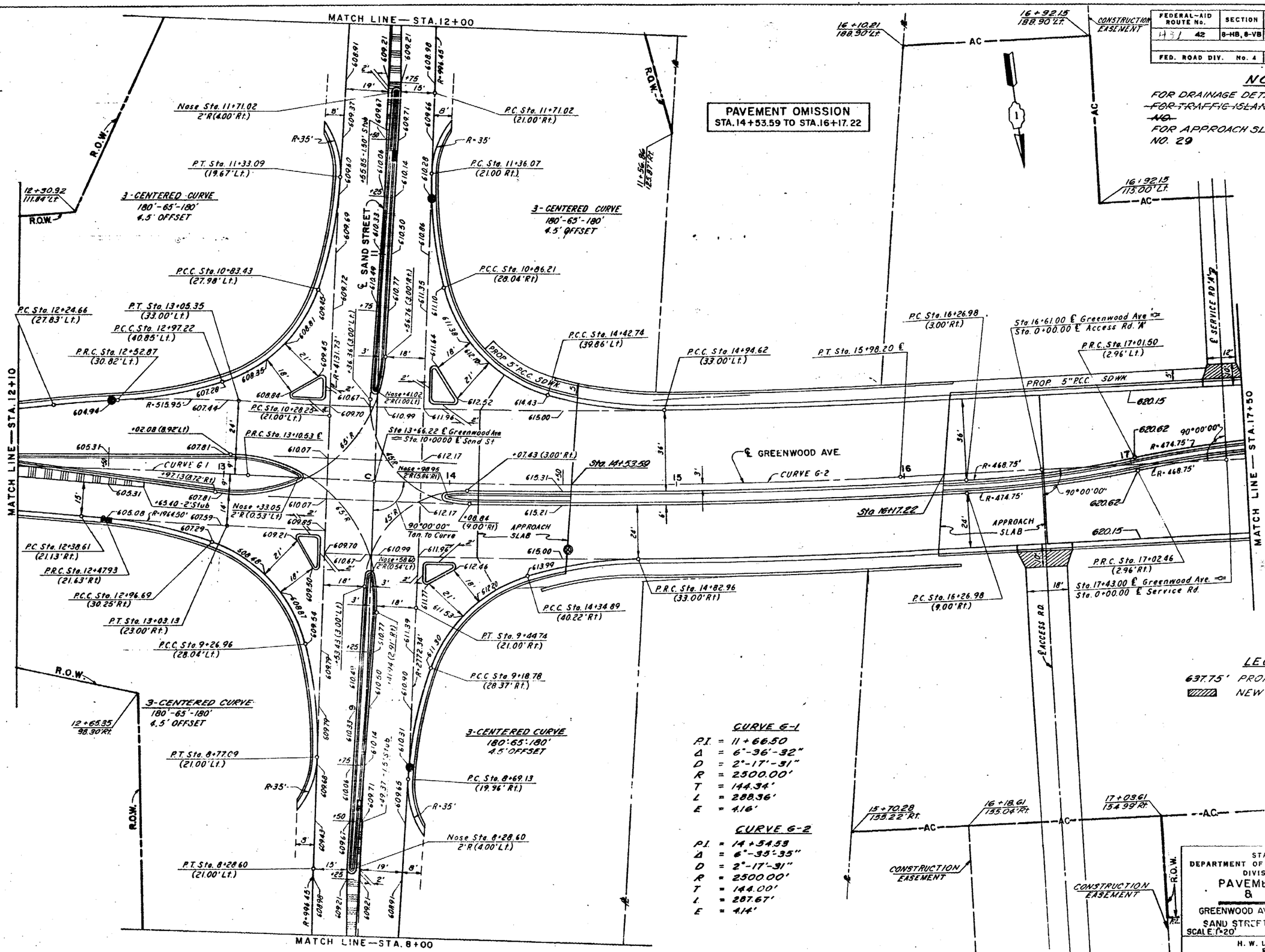

LEGEND

637.75' PROPOSED ELEVATION
NEW DRIVEWAY PAVEMENT

CURVE G-1

P.I. = 11+66.50
Δ = 6°-36'-32"
D = 2°-17'-31"
R = 2500.00'
T = 144.34'
L = 288.36'
E = 4.16'

CURVE G-2

P.I. = 14+54.59
Δ = 6°-35'-35"
D = 2°-17'-31"
R = 2500.00'
T = 144.00'
L = 287.67'
E = 4.14'

STATE OF ILLINOIS
DEPARTMENT OF PUBLIC WORKS & BUILDINGS
DIVISION OF HIGHWAYS

PAVEMENT ELEVATIONS & GEOMETRICS

GREENWOOD AVE STA 12+10 TO STA. 17+50
SAND STREET STA. 8+00 TO STA. 12+00
SCALE: 1"=20'

H. W. LOCHNER, INC.
ENGINEERS

FEDERAL-AID ROUTE No.	SECTION	COUNTY	TOTAL SHEETS	SHEET No.
437 ~~40~~	8-HB, 8-VB	LAKE	81	19
FED. ROAD DIV. No. 4	ILLINOIS	PROJECT		

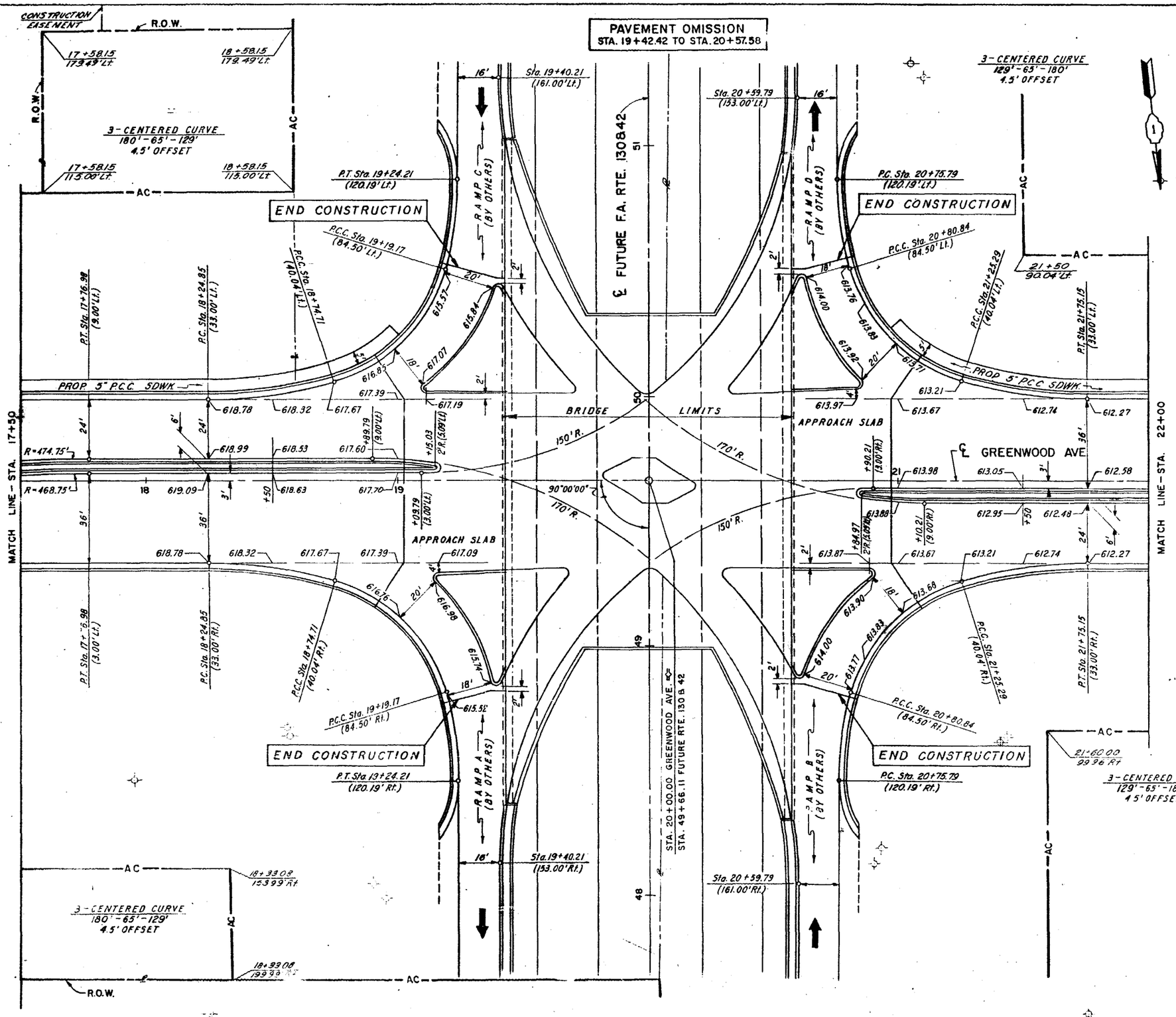

STATE OF ILLINOIS
DEPARTMENT OF PUBLIC WORKS & BUILDINGS
DIVISION OF HIGHWAYS

PAVEMENT ELEVATIONS & GEOMETRICS

GREENWOOD AVENUE
STA. 17+50 TO STA. 22+00

SCALE: 1"=20'

H. W. LOCHNER, INC.
ENGINEERS
CHICAGO, ILL.

FEDERAL-AID ROUTE No.	SECTION	COUNTY	TOTAL SHEETS	SHEET No.
431 ~~42~~	8-HB, 8-VB	LAKE	81	20
FED. ROAD DIV. No. 4	ILLINOIS	PROJECT		

NOTES

FOR DRAINAGE DETAILS, SEE SHEET NO. 11

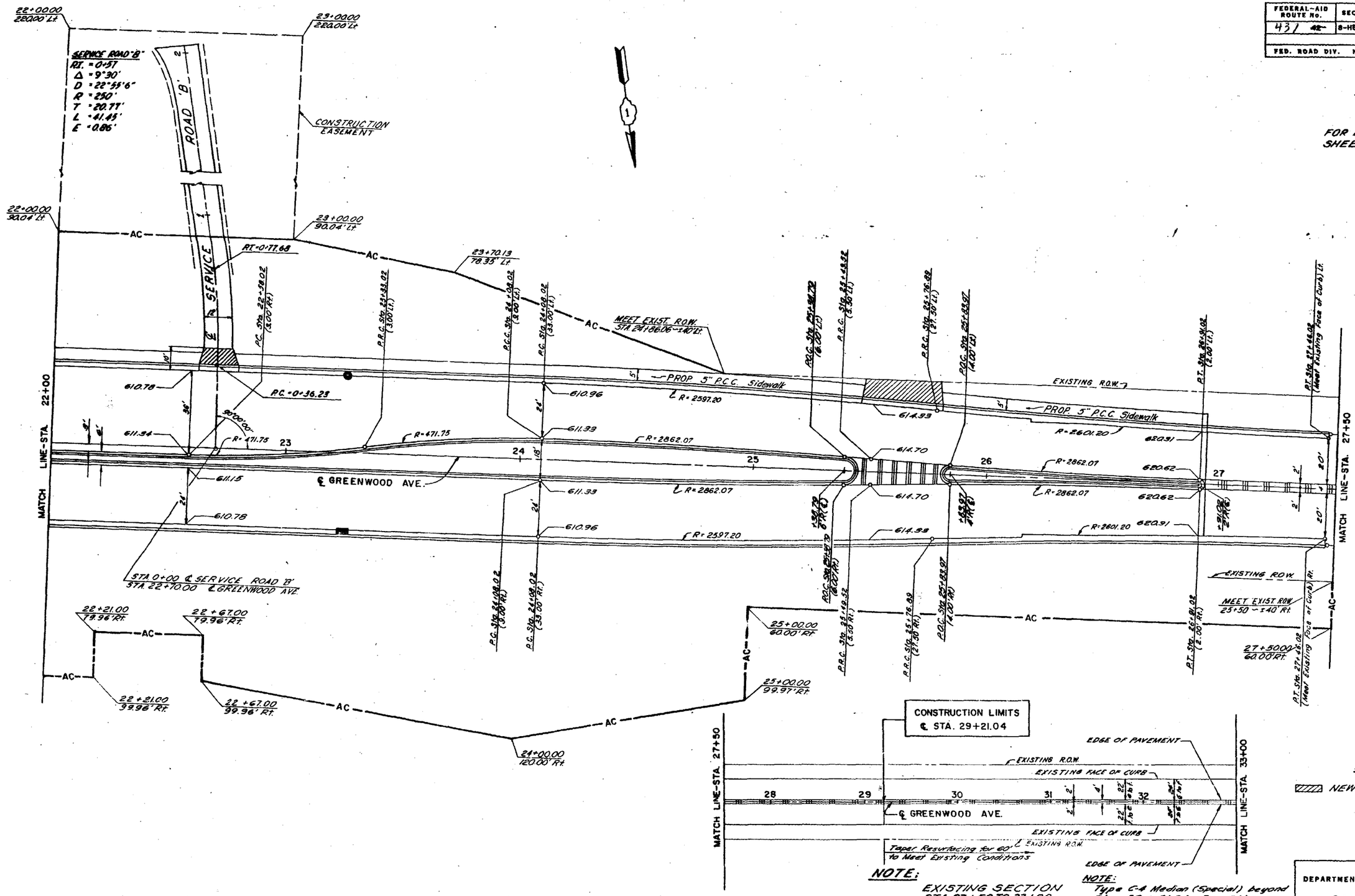

NOTE:

EXISTING SECTION
STA. 27+50 TO 33+00
SCALE. 1" = 50'

NOTE:

Type C-4 Median (Special) beyond Sta. 29 + 21.04 By Others.

LEGEND

NEW DRIVEWAY PAVEMENT

STATE OF ILLINOIS
DEPARTMENT OF PUBLIC WORKS & BUILDINGS
DIVISION OF HIGHWAYS

PAVEMENT ELEVATIONS & GEOMETRICS

GREENWOOD AVENUE
STA. 22+00 TO STA. 33+00

SCALE 1" = 50'

H. W. LOCHNER, INC.
ENGINEERS
CHICAGO, ILL.

Revised 8-11-71 R.J.B.

FEDERAL-AID ROUTE No.	SECTION	COUNTY	TOTAL SHEETS	SHEET No.
437 42	8-HR, 8-VB	LAKE	81	21
FED. ROAD DIV. No. 4	ILLINOIS	PROJECT		

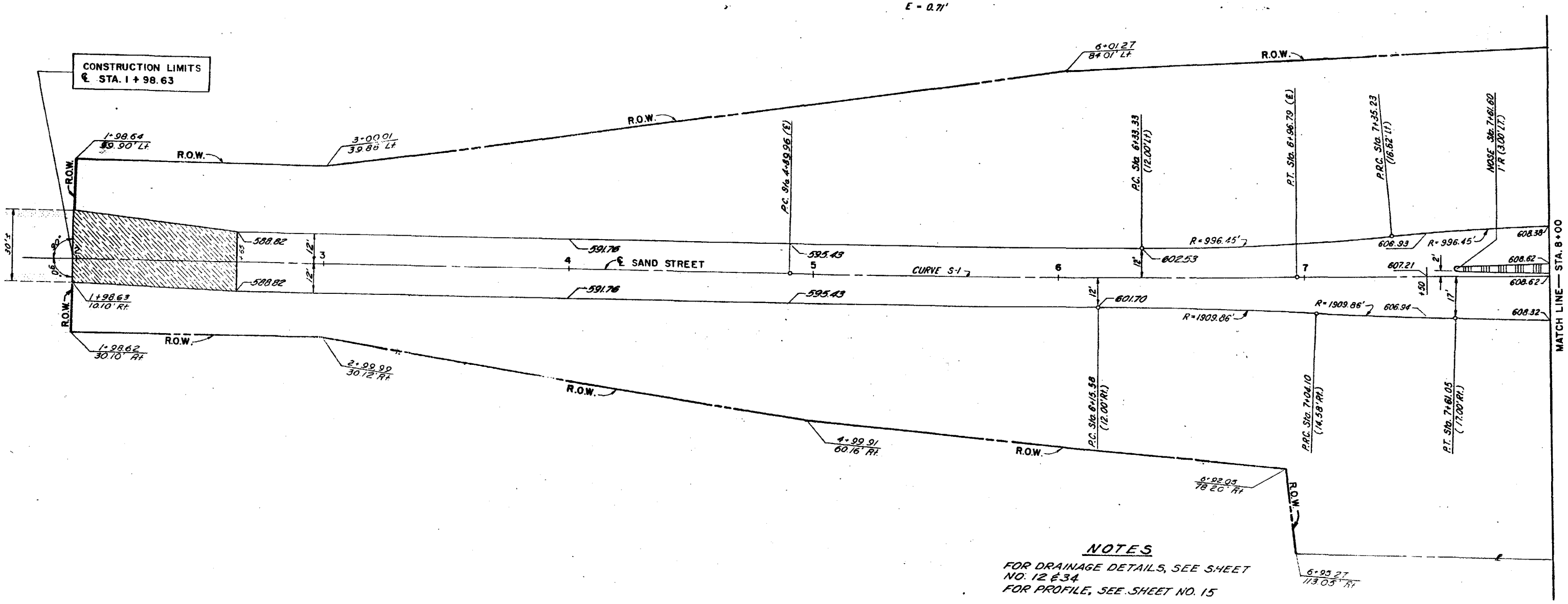

NOTES

FOR DRAINAGE DETAILS, SEE SHEET NO. 12 & 34
FOR PROFILE, SEE SHEET NO. 15

LEGEND

637.75' PROPOSED ELEVATION
EXISTING PAVEMENT EDGE
BIT. SURFACE COURSE (VAR. THICK)

STATE OF ILLINOIS
DEPARTMENT OF PUBLIC WORKS & BUILDINGS
DIVISION OF HIGHWAYS

PAVEMENT ELEVATIONS & GEOMETRICS

SAND STREET
STA. 1+98.63 TO STA. 8+00

SCALE 1"=20'

H. W. LOCHNER, INC.
ENGINEERS
CHICAGO, ILL.

FEDERAL-AID ROUTE No.	SECTION	COUNTY	TOTAL SHEETS	SHEET No.
437	8-HB, 8-VB	LAKE	81	22
FED. ROAD DIV. No. 4	ILLINOIS	PROJECT		

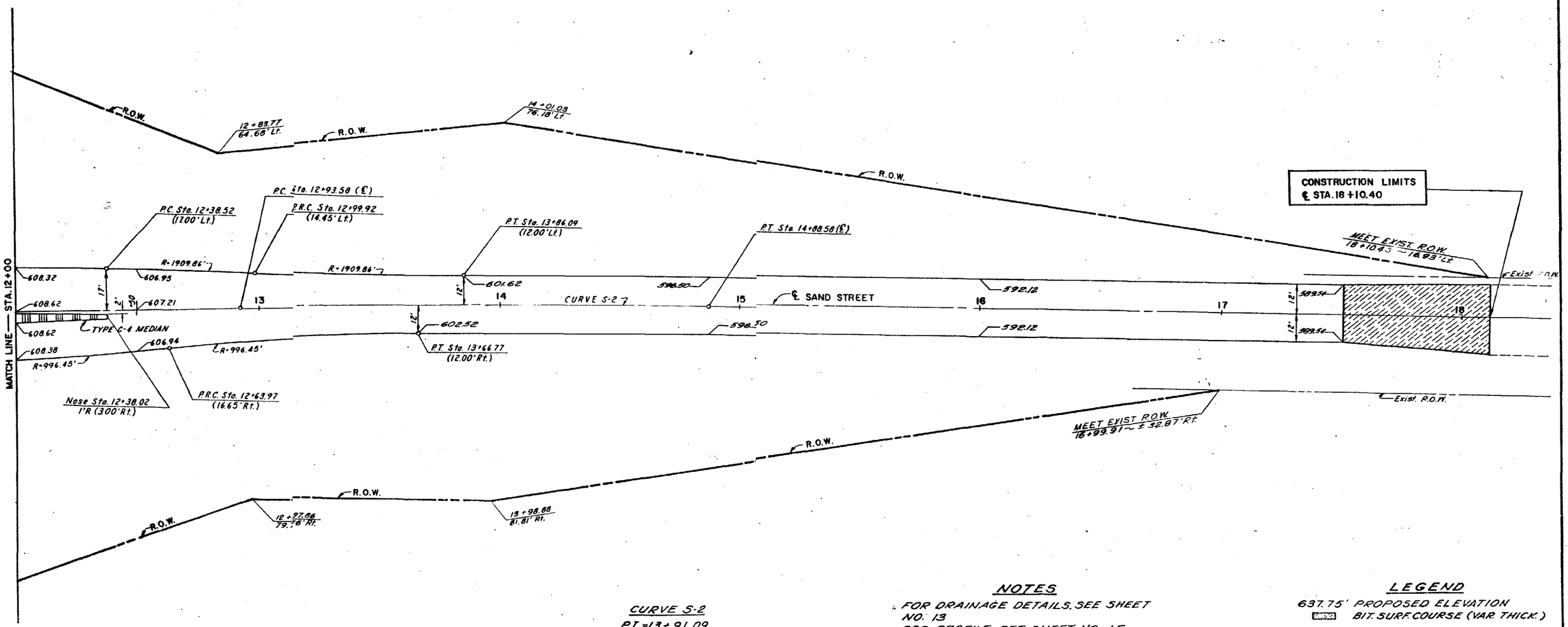

CURVE S-2

P.I. = 13+91.09
Δ = 1°-29'-23"
D = 0°-45'-50"
R = 7500.00'
L = 195.00'
T = 97.51'
E = 0.63'

NOTES

FOR DRAINAGE DETAILS, SEE SHEET NO. 13
FOR PROFILE, SEE SHEET NO. 15

LEGEND

637.75' PROPOSED ELEVATION
BIT. SURF. COURSE (VAR. THICK.)

STATE OF ILLINOIS
DEPARTMENT OF PUBLIC WORKS & BUILDINGS
DIVISION OF HIGHWAYS

PAVEMENT ELEVATIONS & GEOMETRICS

SAND STREET

STA. 12+00 TO STA. 18+10.40

SCALE: 1"=20'

H. W. LOCHNER, INC.
ENGINEERS
CHICAGO, ILL.

FEDERAL-AID ROUTE No.	SECTION	COUNTY	TOTAL SHEETS	SHEET No.
137 ~~42~~	8-H8, 8-VB	LAKE	81	23
FED. ROAD DIV. No. 4	ILLINOIS	PROJECT		

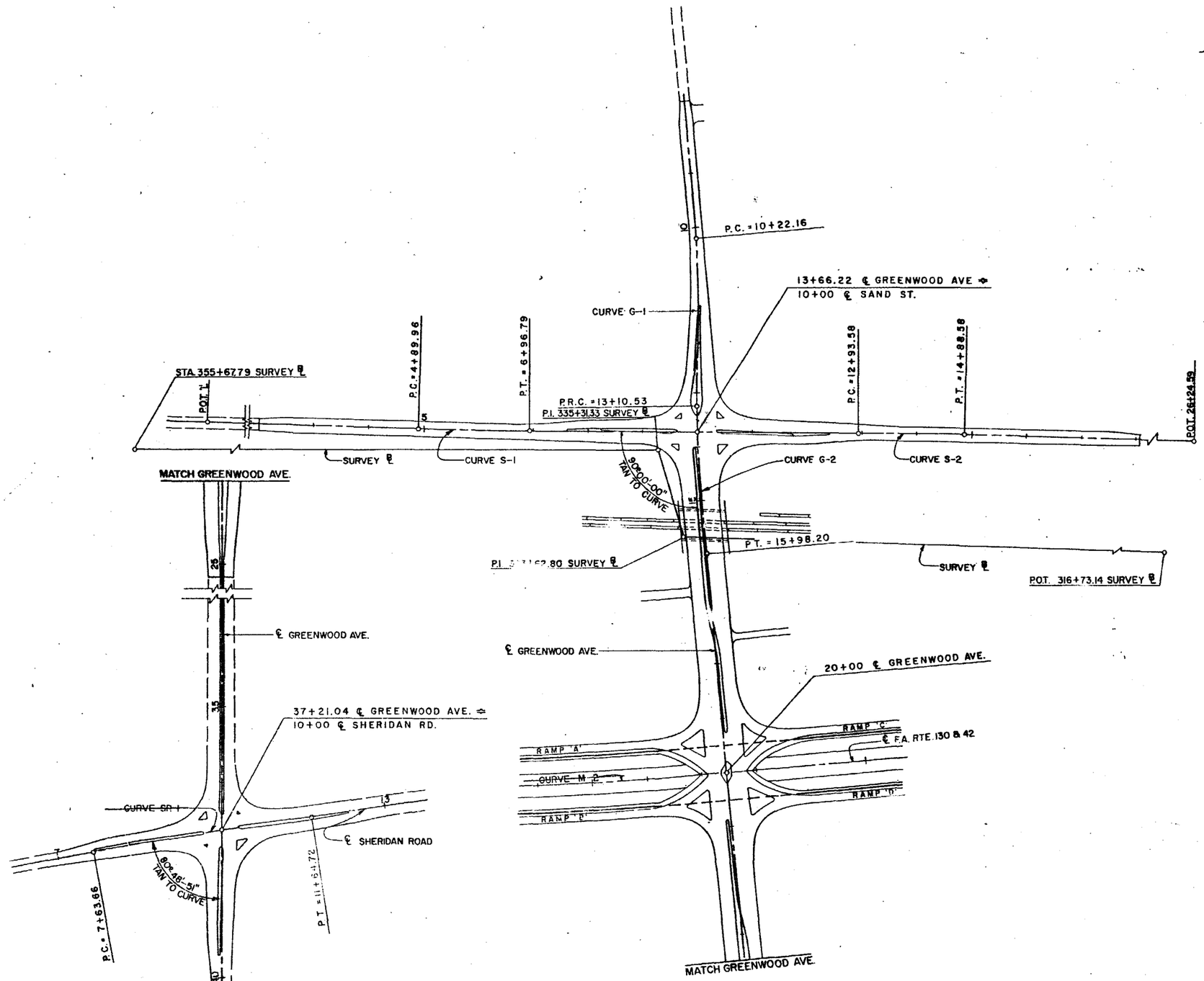

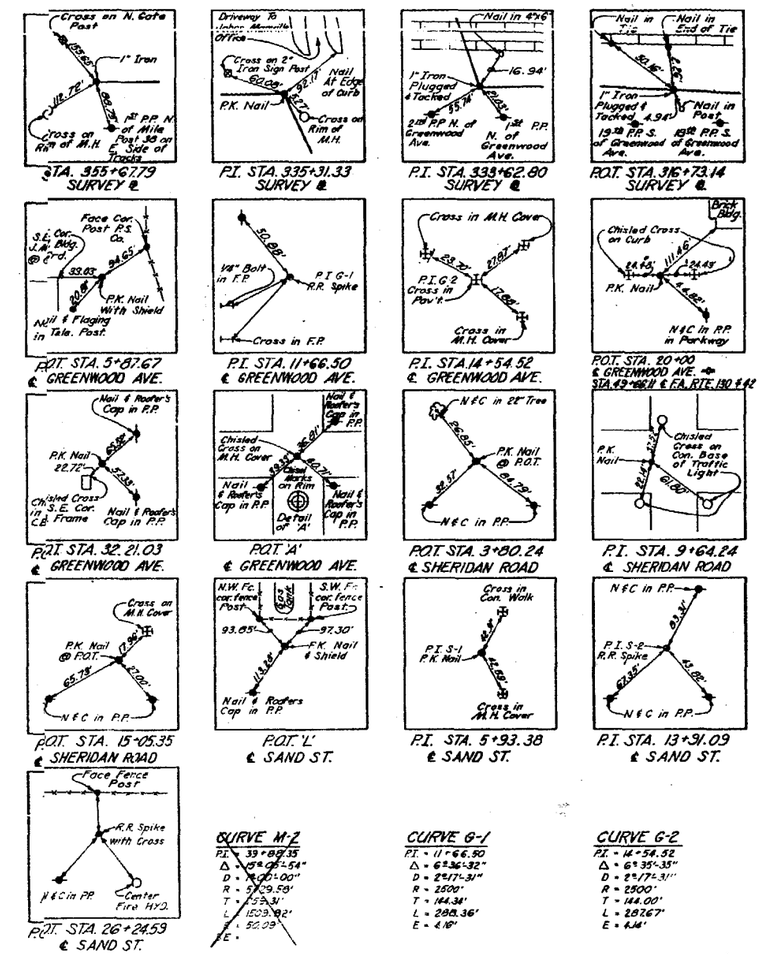

CURVE M-2
P.I. = 39+89.35
Δ = 15°06'-54"
D = 1°00'-00"
R = 5729.58'
T = 753.31'
L = 1503.92'
E = 50.09'

CURVE G-1
P.I. = 11+66.50
Δ = 6°36'-32"
D = 2°17'-31"
R = 2500'
T = 144.38'
L = 288.36'
E = 4.18'

CURVE G-2
P.I. = 14+54.52
Δ = 6°35'-35"
D = 2°17'-31"
R = 2500'
T = 144.00'
L = 287.67'
E = 4.14'

CURVE SR-1
P.I. = 8+61.84
Δ = 3°03'-50"
D = 0°45'-50"
R = 7500'
T = 100.58'
L = 201.06'
E = 0.67'

CURVE S-1
P.I. = 15+93.38
Δ = 1°34'-48"
D = 0°45'-50"
R = 7500'
T = 103.42'
L = 206.82'
E = 0.71'

CURVE S-2
P.I. = 13+91.09
Δ = 1°29'-23"
D = 0°45'-50"
R = 7500'
T = 97.51'
L = 195.00'
E = 0.63'

B.M. N-35 ELEVATION 590.460
CHISELED SQUARE ON THE CONCRETE BASE OF A SIGNAL BOX 18' WEST OF THE WEST C & N.W. TRACK & 40' SOUTH OF THE ℄ GREENWOOD AVE.

B.M. N.-36 ELEVATION 646.805
R.R. SPIKE IN THE 4TH POWER POLE EAST OF SHERIDAN ROAD AND 30' SOUTH OF THE ℄ GREENWOOD AVE.

STATE OF ILLINOIS
DEPARTMENT OF PUBLIC WORKS & BUILDINGS
DIVISION OF HIGHWAYS

ALIGNMENT PLAN
REFERENCE POINTS
BENCH MARKS

H. W. LOCHNER, INC.
ENGINEERS
CHICAGO, ILL.

FEDERAL-AID ROUTE No.	SECTION	COUNTY	TOTAL SHEETS	SHEET No.
437 ~~42~~	8-HB, 8-VB	LAKE	81	24
FED. ROAD DIV. No. 4	ILLINOIS	PROJECT		

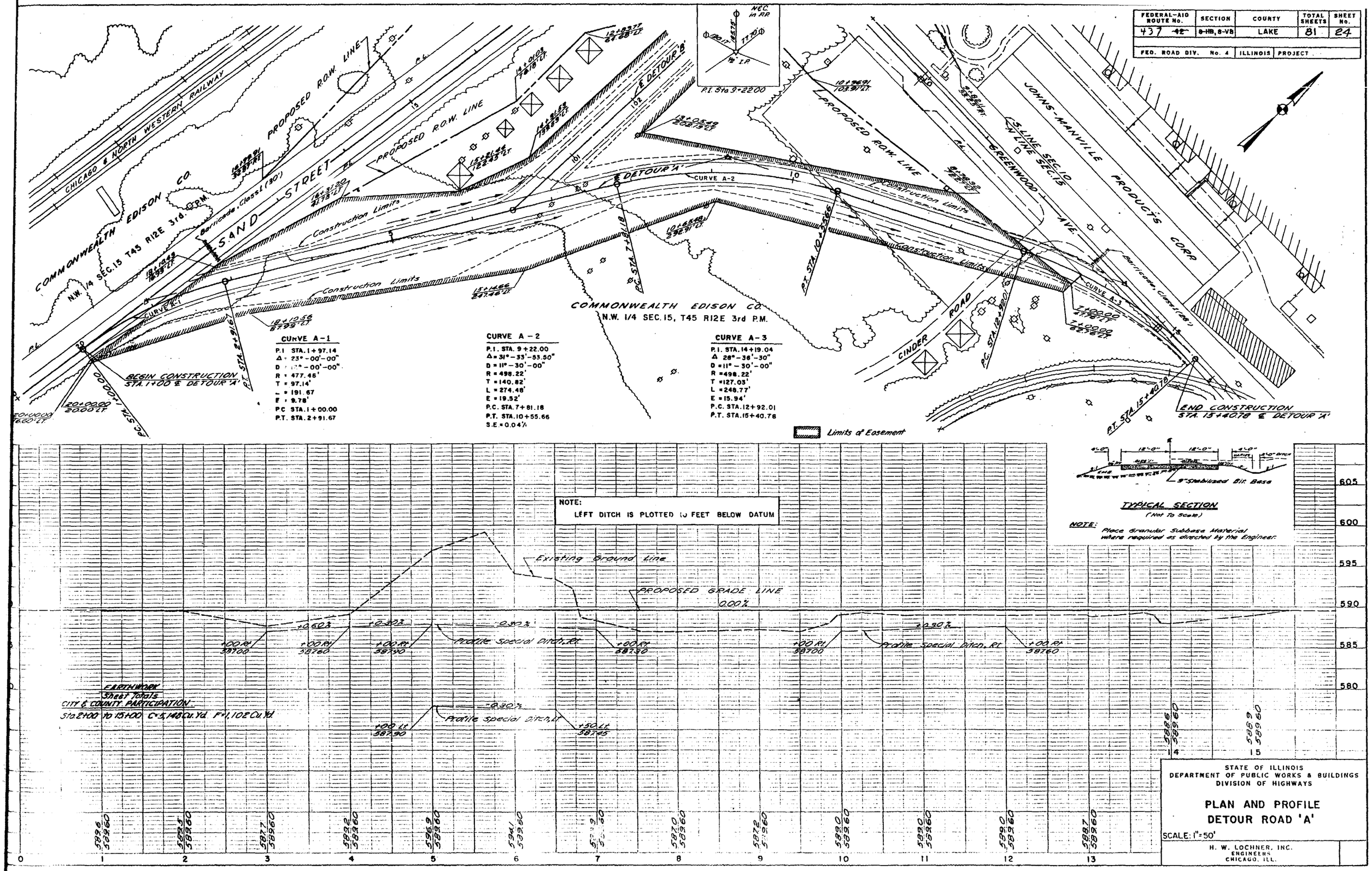

CURVE A-1

P.I. STA. 1+97.14
Δ = 23°-00'-00"
D = 12°-00'-00"
R = 477.46'
T = 97.14'
L = 191.67
E = 9.78'
P.C. STA. 1+00.00
P.T. STA. 2+91.67

CURVE A-2

P.I. STA. 9+22.00
Δ = 31°-33'-53.50"
D = 11°-30'-00"
R = 498.22'
T = 140.82'
L = 274.48'
E = 19.52'
P.C. STA. 7+81.18
P.T. STA. 10+55.66
S.E. = 0.04%

CURVE A-3

P.I. STA. 14+19.04
Δ 28°-36'-30"
D = 11°-30'-00"
R = 498.22'
T = 127.03'
L = 248.77'
E = 15.94'
P.C. STA. 12+92.01
P.T. STA. 15+40.78

TYPICAL SECTION
(Not To Scale)

NOTE: Place Granular Subbase Material where required as directed by the Engineer.

STATE OF ILLINOIS
DEPARTMENT OF PUBLIC WORKS & BUILDINGS
DIVISION OF HIGHWAYS

PLAN AND PROFILE
DETOUR ROAD 'A'

SCALE: 1"=50'

H. W. LOCHNER, INC.
ENGINEERS
CHICAGO, ILL.

FEDERAL-AID ROUTE NO.	SECTION	COUNTY	TOTAL SHEETS	SHEET NO.
437 4E	8-HB, 8-VB	LAKE	81	25
FED. ROAD DIV. No. 4	ILLINOIS	PROJECT		

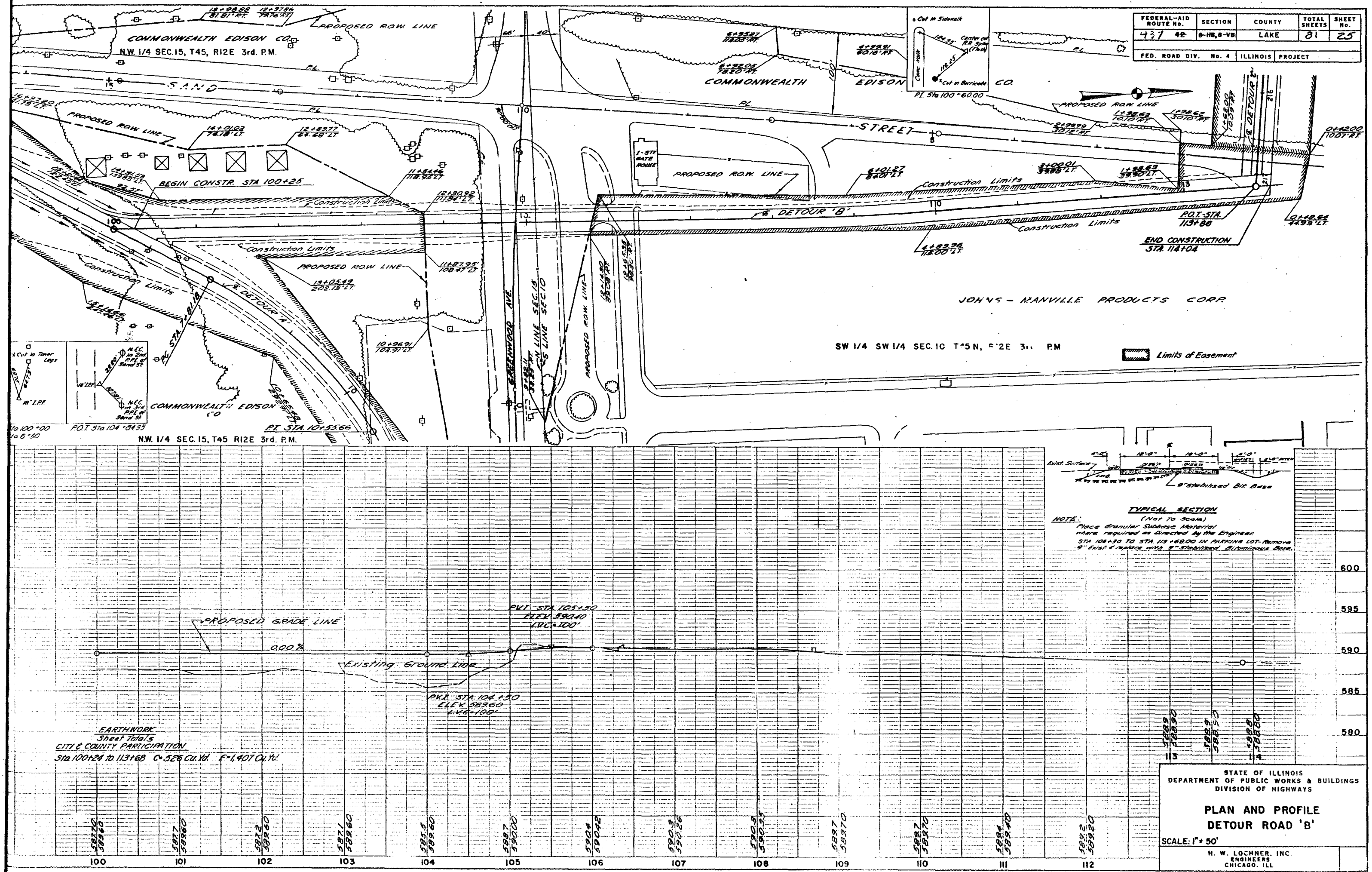

STATE OF ILLINOIS
DEPARTMENT OF PUBLIC WORKS & BUILDINGS
DIVISION OF HIGHWAYS

PLAN AND PROFILE
DETOUR ROAD 'B'

SCALE: 1" = 50'

H. W. LOCHNER, INC.
ENGINEERS
CHICAGO, ILL.

FEDERAL-AID ROUTE NO.	SECTION	COUNTY	TOTAL SHEETS	SHEET No.
137 42	8-HB, 8-VB	LAKE	81	26
FED. ROAD DIV. No. 4	ILLINOIS	PROJECT		

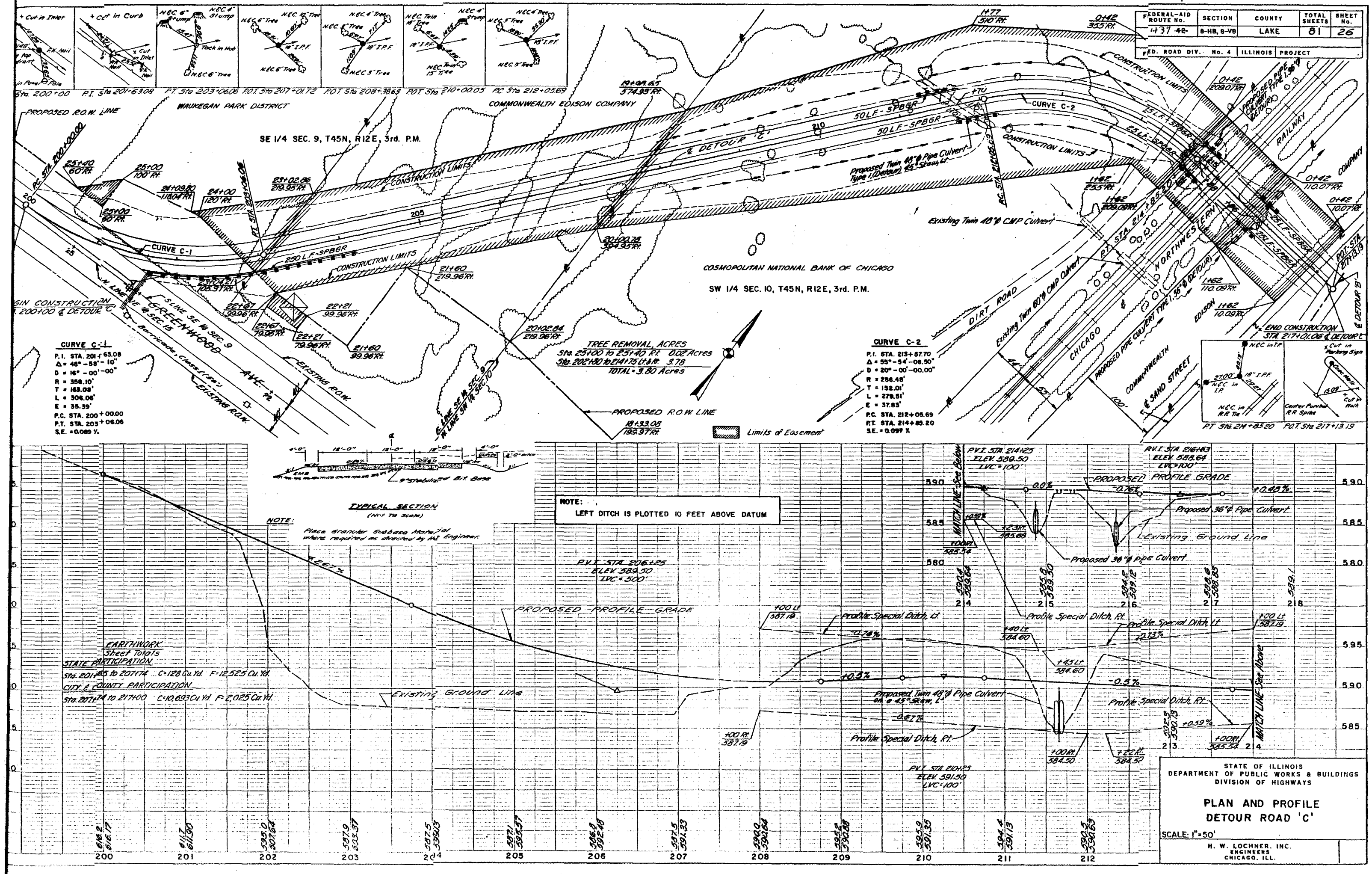

FEDERAL-AID ROUTE No.	SECTION	COUNTY	TOTAL SHEETS	SHEET No.
F.A. 42 437	8-HB, 8-VB	LAKE	81	27
FED. ROAD DIV. No. 4	ILLINOIS	PROJECT		

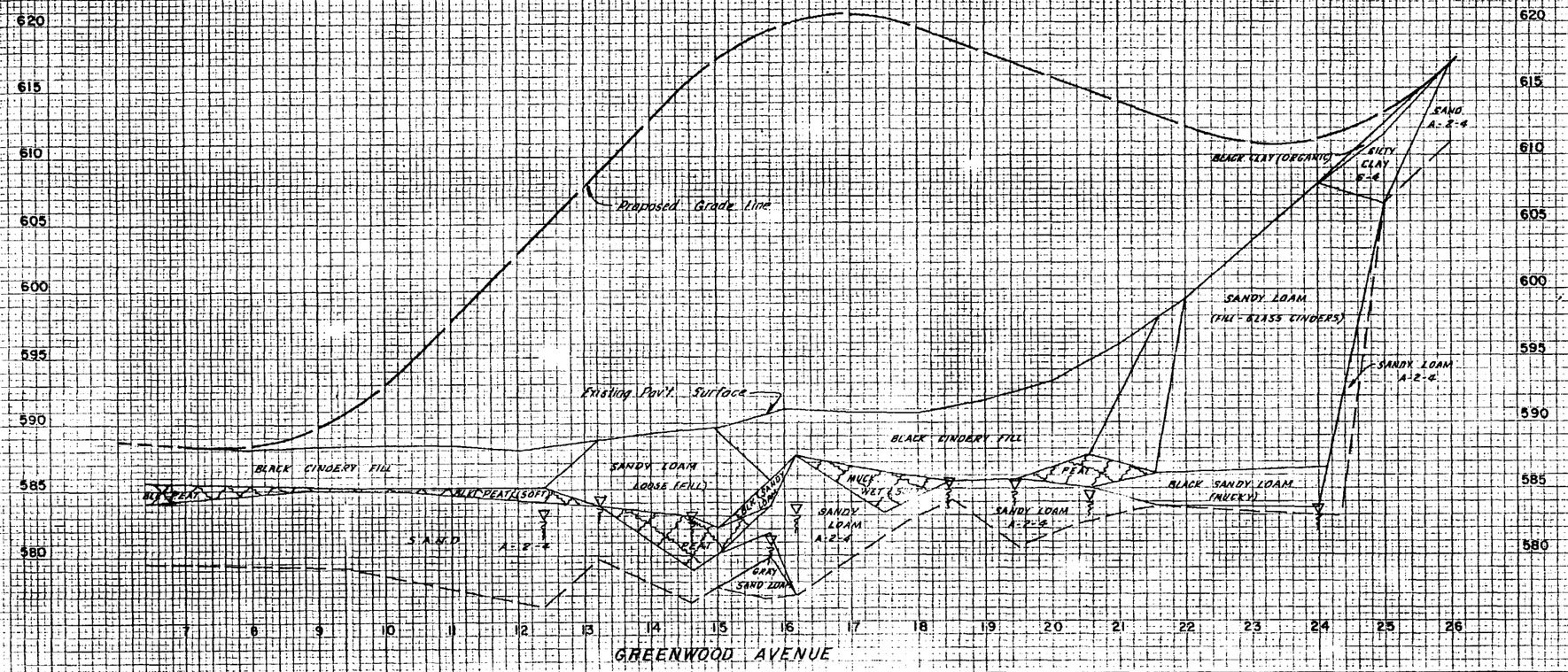

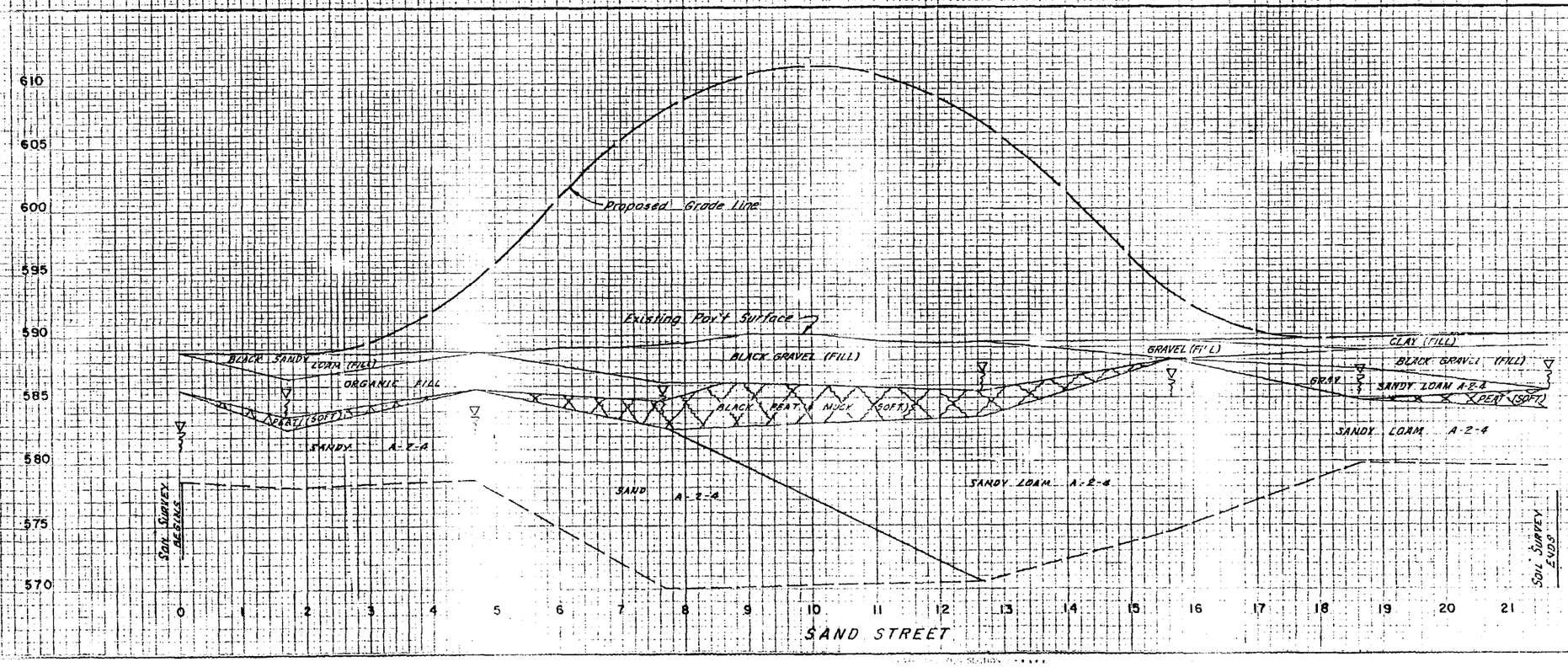

NOTE

THE SOIL COLOR IS BROWN UNLESS OTHERWISE INDICATED

0-1 INDICATES DEPTH OF FIELD MOISTURE SAMPLE

(14) INDICATES FIELD MOISTURE CONTENT IN PERCENT

(7) INDICATES SAMPLE NUMBER

INDICATES WATER LEVEL

INDICATES UNSUITABLE MATERIAL TO BE REMOVED

FOR INFORMATION ONLY

STATE OF ILLINOIS
DEPARTMENT OF PUBLIC WORKS & BUILDINGS
DIVISION OF HIGHWAYS

F.A. ROUTE ~~42~~ 437

SOIL PROFILES

GREENWOOD AVENUE
& SAND STREET

H. W. LOCHNER, INC.
ENGINEERS
CHICAGO, ILL.

FEDERAL-AID ROUTE No.	SECTION	COUNTY	TOTAL SHEETS	SHEET No.
437 ~~42~~	8-HB, 8-VP	LAKE	81	28
FED. ROAD DIV. No. 4		ILLINOIS	PROJECT	

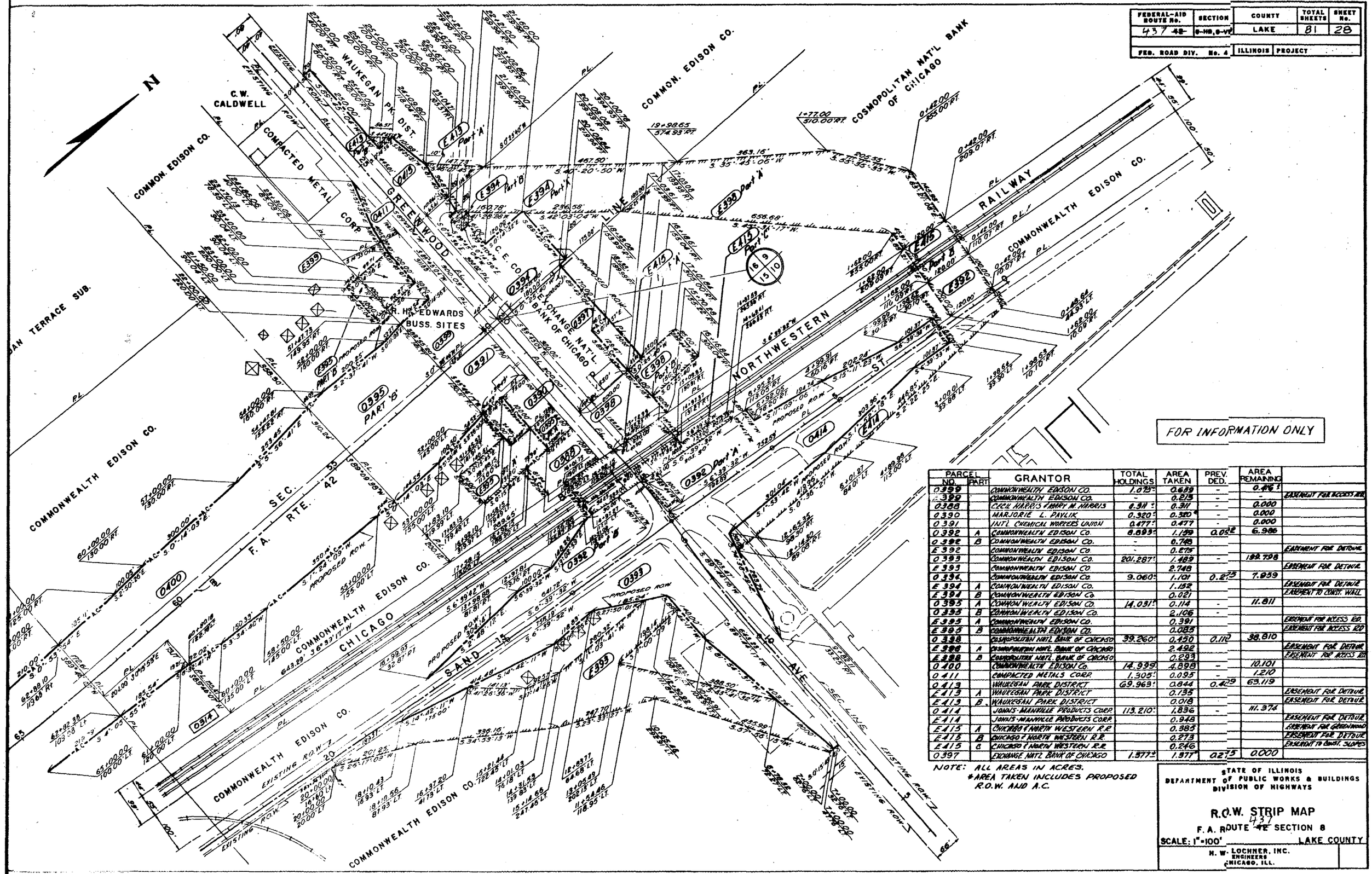

PARCEL NO.	PART	GRANTOR	TOTAL HOLDINGS	AREA TAKEN	PREV. DED.	AREA REMAINING	
0399		COMMONWEALTH EDISON CO.	1.073*	0.689	-	0.476*	
0389		COMMONWEALTH EDISON CO.	-	0.215	-	-	EASEMENT FOR ACCESS RD.
0388		CECIL HARRIS & MARY M. HARRIS	0.311*	0.311	-	0.000	
0390		MARJORIE L. PAVLIK	0.320*	0.320*	-	0.000	
0391		INTL. CHEMICAL WORKERS UNION	0.477*	0.477	-	0.000	
0392	A	COMMONWEALTH EDISON Co.	8.893*	1.159	0.028	6.986	
0392	B	COMMONWEALTH EDISON Co.	-	0.748			
E392		COMMONWEALTH EDISON Co	-	0.275			EASEMENT FOR DETOUR
0393		COMMONWEALTH EDISON CO.	201.287*	1.489	-	199.798	
E393		COMMONWEALTH EDISON CO.		2.748			EASEMENT FOR DETOUR
0394		COMMONWEALTH EDISON Co.	9.060*	1.101	0.275	7.959	
E394	A	COMMONWEALTH EDISON Co.		1.152			EASEMENT FOR DETOUR
E394	B	COMMONWEALTH EDISON Co		0.021			EASEMENT TO CONST. WALL
0395	A	COMMONWEALTH EDISON CO.	14.031*	0.114	-	11.811	
0395	B	COMMONWEALTH EDISON CO.		2.106	-		
E395	A	COMMONWEALTH EDISON CO.		0.391			EASEMENT FOR ACCESS RD.
E395	B	COMMONWEALTH EDISON CO.		0.085			EASEMENT FOR ACCESS RD
0398		COSMOPOLITAN NATL. BANK OF CHICAGO	39.260*	0.450	0.110	38.810	
E398	A	COSMOPOLITAN NATL. BANK OF CHICAGO		2.492			EASEMENT FOR DETOUR
E398	B	COSMOPOLITAN NATL. BANK OF CHICAGO		0.293			EASEMENT FOR ACCESS RD
0400		COMMONWEALTH EDISON Co.	14.999	4.898	-	10.101	
0411		COMPACTED METALS CORP.	1.305*	0.095	-	1.210	
0413		WAUKEGAN PARK DISTRICT	69.963*	0.844	0.409	69.119	
E413	A	WAUKEGAN PARK DISTRICT		0.135			EASEMENT FOR DETOUR
E413	B	WAUKEGAN PARK DISTRICT		0.018			EASEMENT FOR DETOUR
0414		JONES-MANVILLE PRODUCTS CORP.	113.210*	1.836	-	111.374	
E414		JONES-MANVILLE PRODUCTS CORP.		0.948			EASEMENT FOR DETOUR
E415	A	CHICAGO & NORTH WESTERN R.R.		0.385			EASEMENT FOR GREENWOOD
E415	B	CHICAGO & NORTH WESTERN R.R.		0.273			EASEMENT FOR DETOUR
E415	C	CHICAGO & NORTH WESTERN R.R.		0.246			EASEMENT TO CONST. SLOPES
0397		EXCHANGE NATL BANK OF CHICAGO	1.577*	1.577*	0.275	0.000	

NOTE: ALL AREAS IN ACRES.
*AREA TAKEN INCLUDES PROPOSED R.O.W. AND A.C.

STATE OF ILLINOIS
DEPARTMENT OF PUBLIC WORKS & BUILDINGS
DIVISION OF HIGHWAYS

R.O.W. STRIP MAP

F.A. ROUTE ~~42~~ 437 SECTION 8

SCALE: 1"=100' LAKE COUNTY

H. W. LOCHNER, INC.
ENGINEERS
CHICAGO, ILL.

ROUTE NO.	SECTION	COUNTY	TOTAL SHEETS	SHEET NO.
~~48~~ 437	8-VB	LAKE	81	29
FED. ROAD DIV. NO. 4	ILLINOIS	PROJECT		

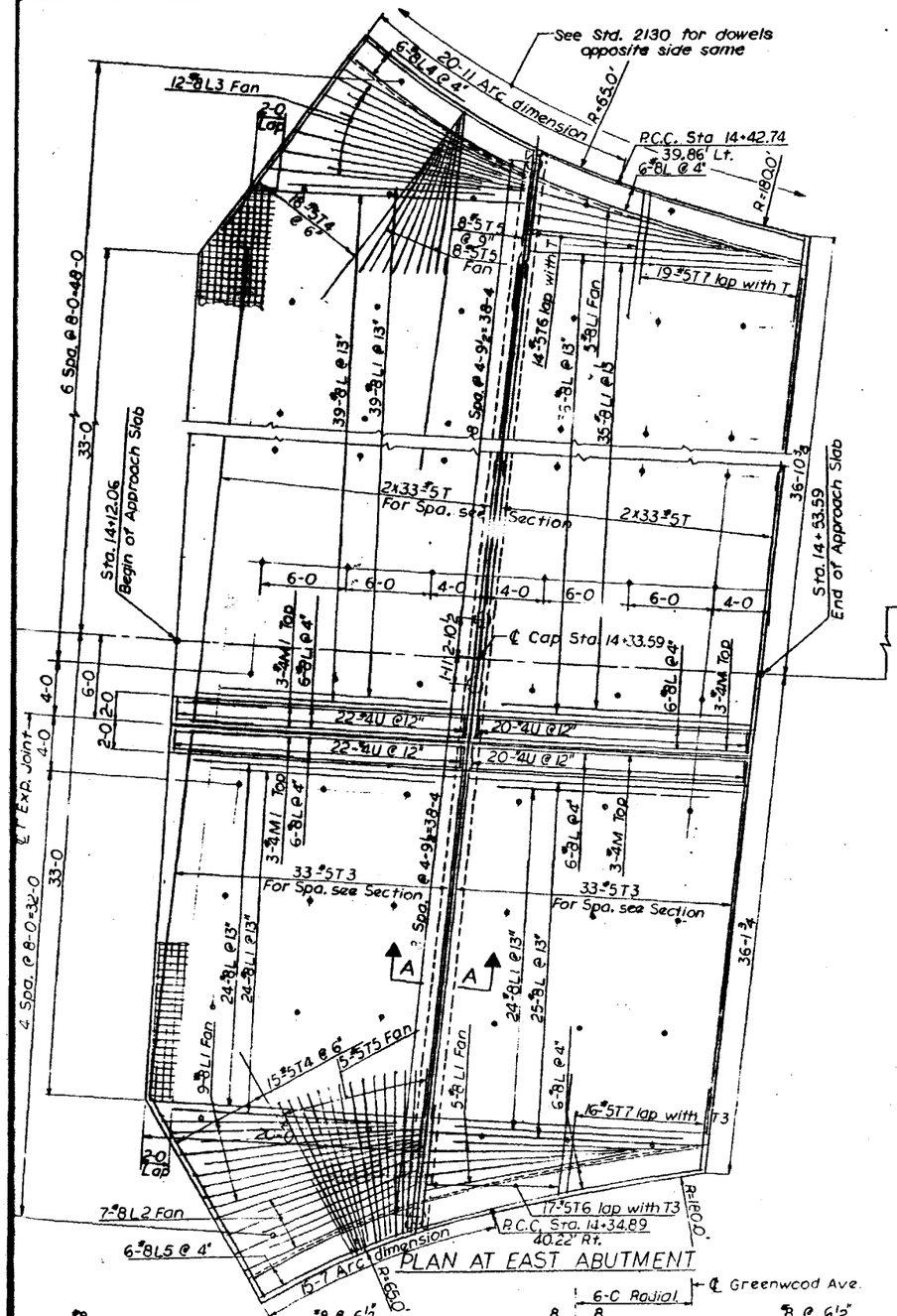

PLAN AT EAST ABUTMENT

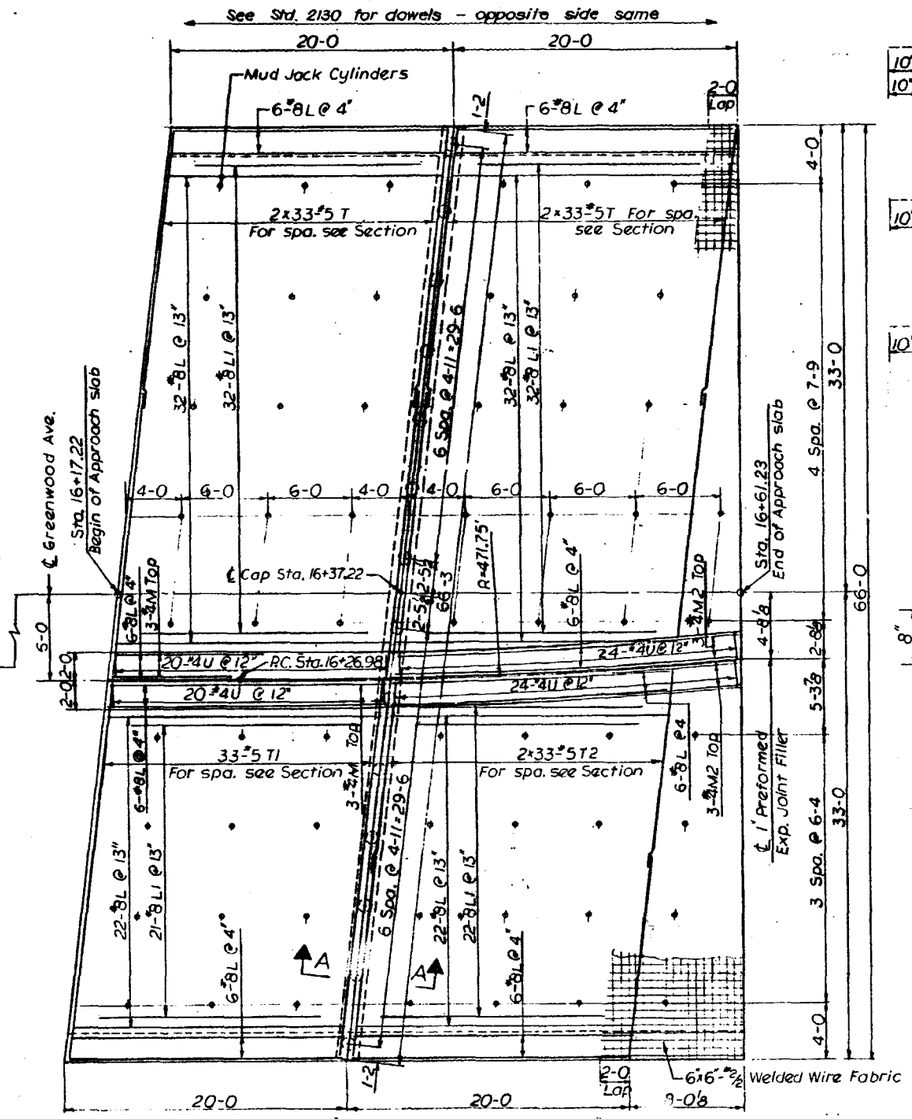

PLAN AT WEST ABUTMENT

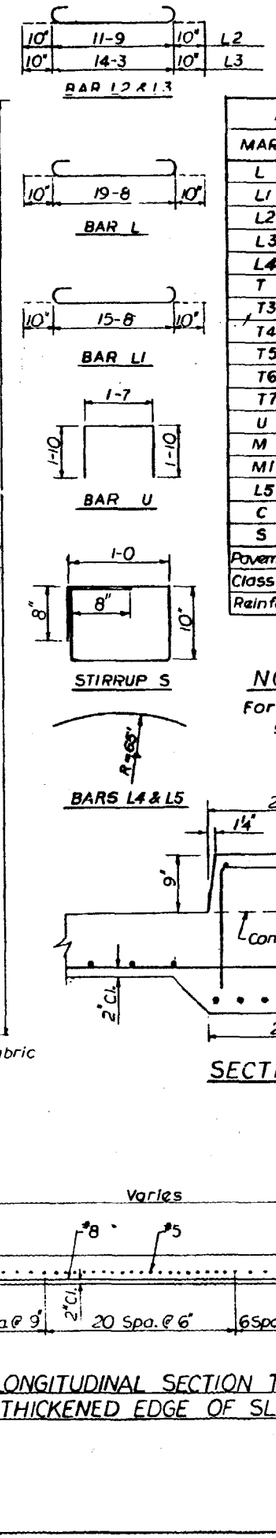

BILL OF MATERIAL

AT EAST ABUTMENT				AT WEST ABUTMENT			
MARK	NO	SIZE	LENGHT	MARK	NO	SIZE	LENGHT
L	160	#8	21-4	L	156	#8	21-4
L1	141	#8	17-4	L1	107	#8	17-4
L2	7	#8	13-5				
L3	12	#8	15-11	T	132	#5	20-0
L4	6	#8	15-11	T1	33	#5	26-11
T	132	#5	20-0	T2	66	#5	14-6
T3	66	#5	27-0	U	88	#4	5-3
T4	33	#5	16-6	M	6	#4	19-8
T5	31	#5	12-0	M2	6	#4	24-3
T6	31	#5	9-0				
T7	35	#5	6-0	C1	24	#8	23-9
U	84	#4	5-3	S	54	#4	5-0
M	6	#4	19-8				
M1	6	#4	20-9				
L5	6	#8	13-5	Pavement (16½-10½-16½) Sq.Yd.			323
C	24	#8	29-6	Class "X" Concrete Cu.Yd.			* 9.4
S	70	#4	5-0	Reinforcement Bars Lbs			20,700
Pavement (16½-10½-16½) Sq.Yd.			379				
Class "X" Concrete Cu.Yds.			* 10.2				
Reinforcement Bars Lbs.			25,530				

*Cap & Median Concrete

NOTES:

For General Notes and Details not shown see Standard 1909-6 (Method II)

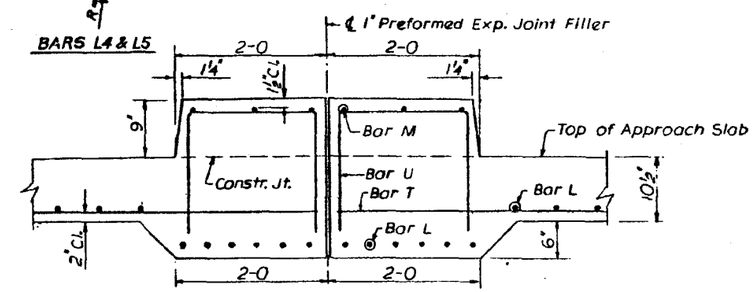

SECTION THRU MEDIAN

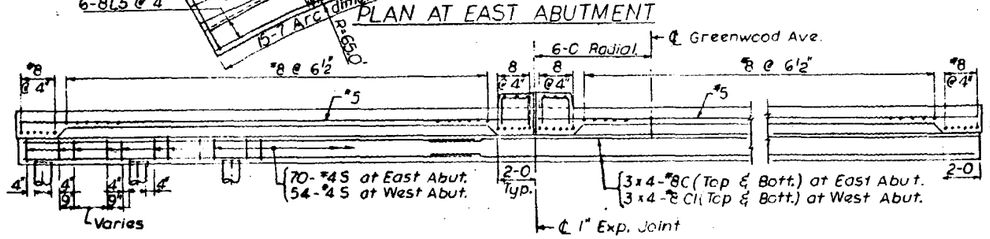

SECTION VIEW OF CONCR. SLAB AND CAP

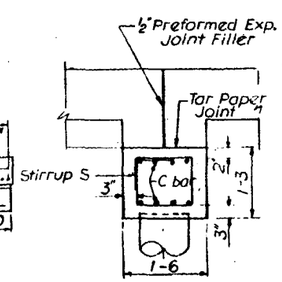

SECTION A-A

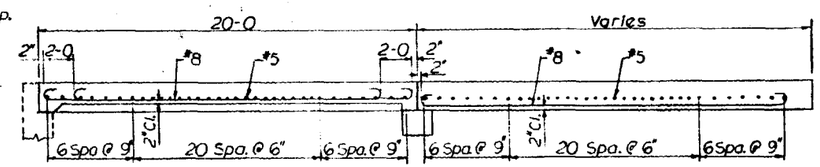

LONGITUDINAL SECTION THRU CENTER OF SLAB

LONGITUDINAL SECTION THRU THICKENED EDGE OF SLAB

DESIGNED BY V.B.
DRAWN BY V.B.
CHECKED BY
APPROVED BY

STATE OF ILLINOIS
DEPARTMENT OF PUBLIC WORKS & BLDGS.
DIVISION OF HIGHWAYS

APPROACH SLAB

GREENWOOD AVE. OVER
C. & N. W. R. R.

STATION 15 + 43.11

F. A. RT. 92 (437) LAKE COUNTY SECTION 8-VB

H. W. LOCHNER, INC.
ENGINEERS
CHICAGO, ILLINOIS

SHEET
OF

ROUTE NO.	SECTION	COUNTY	TOTAL SHEETS	SHEET NO.
42 437	8-HB	LAKE	81	30
FED. ROAD DIV. NO. 4	ILLINOIS	PROJECT		

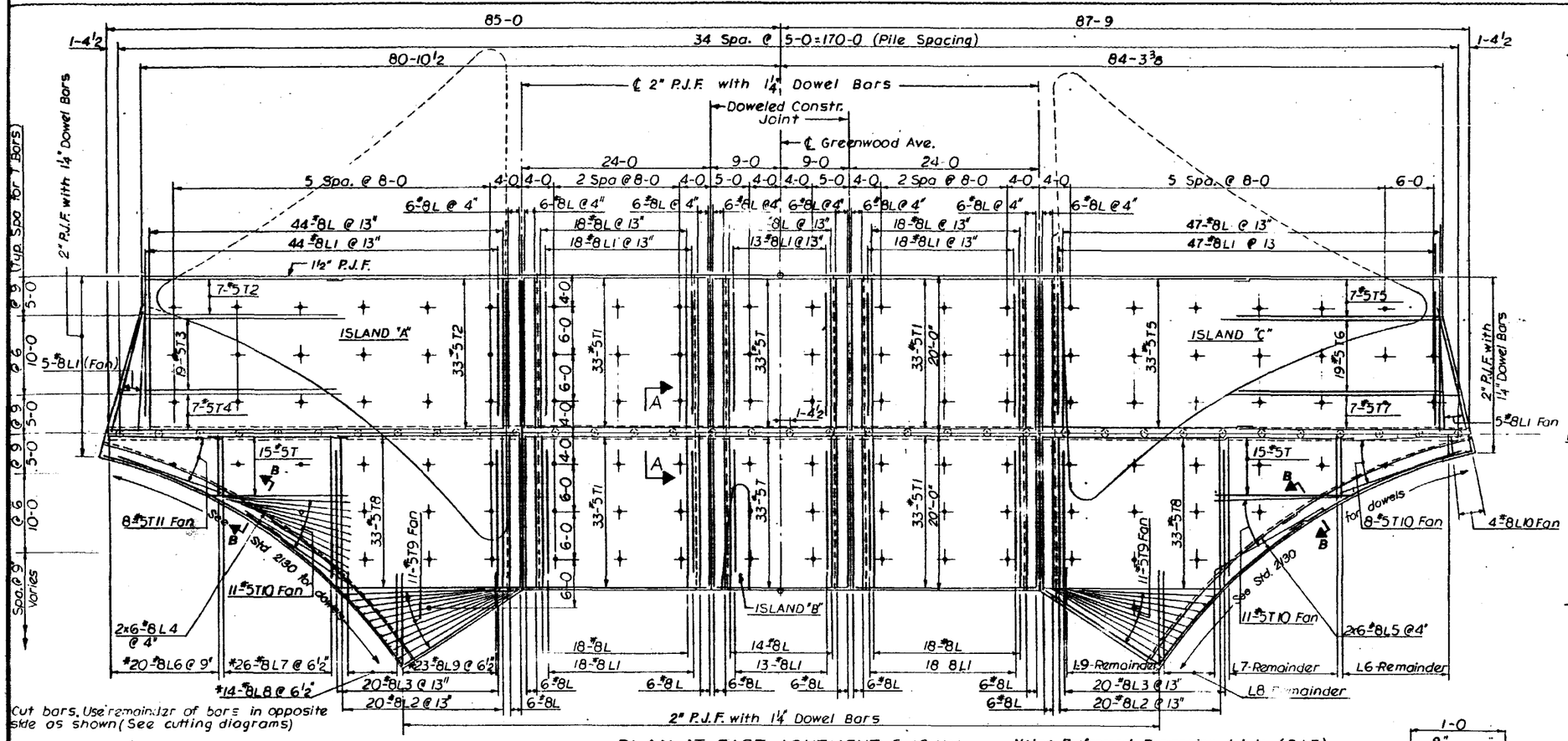

PLAN AT EAST ABUTMENT SHOWN
(AT WEST ABUTMENT SAME BY 180° ROTATION)

Note: Preformed Expansion Joints (P.J.F.) shall be considered incidental to the cost of Pavement (16½-10½-16½)

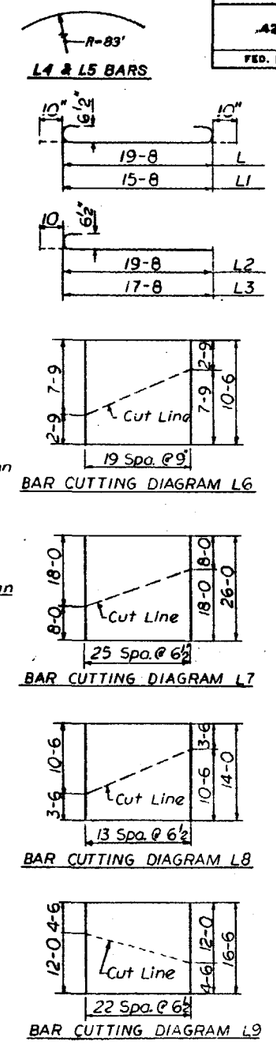

BILL OF MATERIAL

MARK	NO.	SIZE	LENGTH
L	281	#8	21-4
L1	199	#8	17-4
L2	40	#8	20-6
L3	40	#8	18-6
L4	12	#8	25-6
L5	12	#8	26-9
L6	20	#8	10-6
L7	26	#8	26-0
L8	14	#8	14-0
L9	23	#8	16-6
L10	4	#8	2-6
T	96	#5	17-8
T1	132	5	23-8
T2	40	5	24-6
T3	19	5	26-6
T4	7	5	28-3
T5	40	5	26-2
T6	19	5	28-0
T7	7	5	29-6
T8	66	5	23-3
T9	22	5	17-6
T10	30	5	16-0
T11	8	5	14-0
L11	30	#4	19-6
L12	5	4	11-6
Band L13	12	4	18-6 to 10-3
Band L14	13	4	10-0 to 4-6
Band L15	9	4	10-8 to 2-0
L16	1	4	31-0
L17	1	4	17-0
L18	1	4	3-9
L19	1	4	3-0
L20	1	4	26-6
L21	10	4	7-0
Band L22	16	4	18-4½ to 10-3
Band L23	13	4	9-9 to 5-9
Band L24	4	4	5-0 to 3-0
L25	2	4	18-0
L26	2	4	12-6
T12	22	4	22-0
Band T13	9	4	17-0 to 2-4
Band T14	5	4	20-2 to 15-6
Band T15	12	4	14-1 to 4-0
T16	22	4	21-0
Band T17	12	4	18-2 to 3-6
Band T18	7	4	18-0 to 3-0
T19	5	4	5-0
d	189	4	3-4
d1	16	4	3-10
r	3	4	8-3
r1	1	4	10-6
C	48	8	30-9
S	138	4	5-0
Pavement (16½-10½-16½) Sq. Yds.			713.3
Class "X" Concr. (Cap & Islands) Cu. Yd.			52.9
Reinforcement Bars Lbs			53,464

Bill of Material for one Approach only.

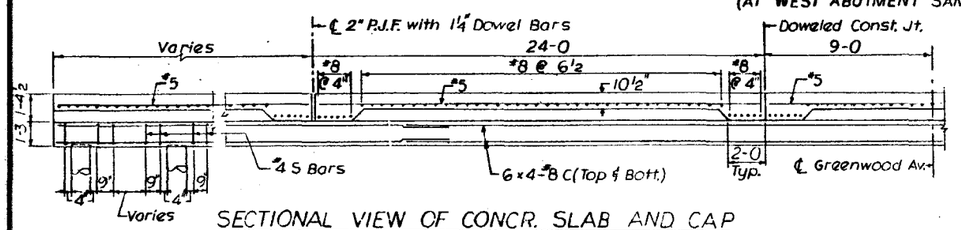

SECTIONAL VIEW OF CONCR. SLAB AND CAP

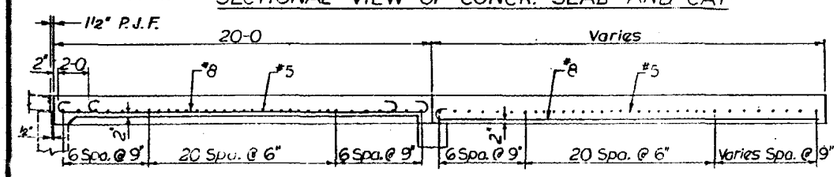

LONGITUDINAL SECTION THRU CENTER OF SLAB

LONGITUDINAL SECTION THRU THICKENED EDGE OF SLAB

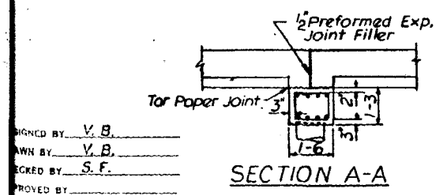

SECTION A-A

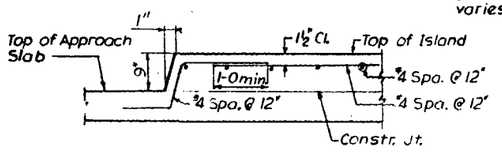

SECTION THRU ISLAND

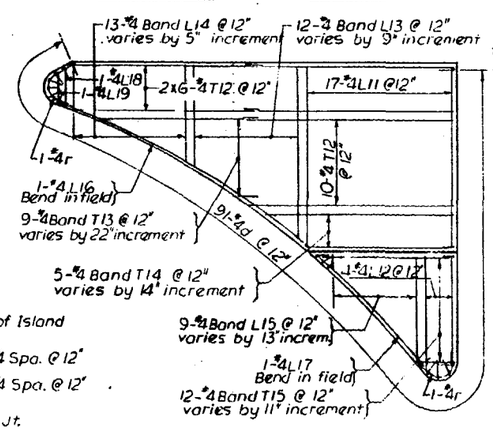

ISLAND "A"

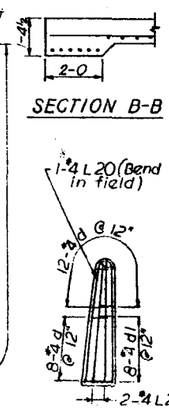

ISLAND "B"

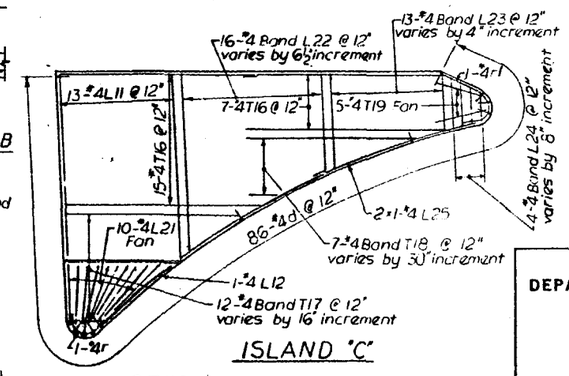

ISLAND "C"

NOTES:
For Geometric Layout and Elevations see Sh
For General Notes and Details not shown see Standard 1909 (Method II)
For Details of 2" P.J.F. with 1¼" Dowel Bars see Standard 2224

SIGNED BY V. B.
DRAWN BY V. B.
CHECKED BY S. F.
APPROVED BY

STATE OF ILLINOIS
DEPARTMENT OF PUBLIC WORKS & BLDGS.
DIVISION OF HIGHWAYS

APPROACH SLAB

GREENWOOD AVE. OVER
F.A. ROUTE 42

437 STATION 20 + 00.00
F.A. RT. 42 LAKE COUNTY SECTION 8-HB

H. W. LOCHNER, INC.
ENGINEERS
CHICAGO, ILLINOIS

SHEET
OF

FEDERAL-AID ROUTE No.	SECTION	COUNTY	TOTAL SHEETS	SHEET No.
43 / 42	6-H6, 8-VB	LAKE	81	31
FED. ROAD DIV. No. 4	ILLINOIS	PROJECT		

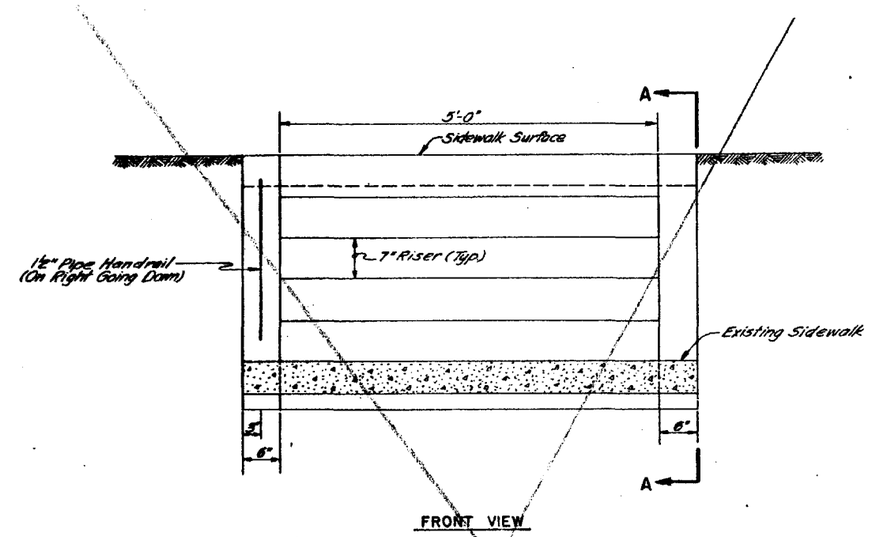

FRONT VIEW

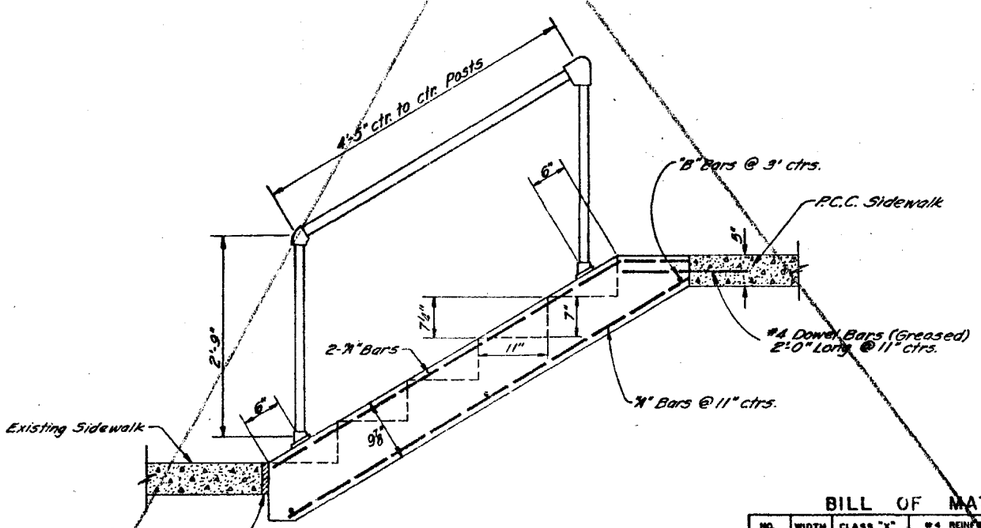

ELEVATION - VIEW A-A

BILL OF MATERIALS

NO. OF STEPS	WIDTH IN.	CLASS "X" CONCRETE CU. YDS.	#4 REINFORCEMENT BARS				PIPE ✱ HANDRAIL LENGTH
			BAR	NO.	LENGTH	POUNDS	
5	60	0.8	A	9	6'-0"	50	4'-5"
			B	3	5'-9"		

Use ¾" Premoulded Joint, 60 Lin. Ft.
Class "X" Concrete shall be used throughout.

NOTES:

Connections of Railing to Posts may be made either by the use of fittings or by continuous welding without fittings.

✱ This Quantity is included in Total "Pipe Hand Rail" Quantity on Sheet No. 5

DETAIL OF CONCRETE STEPS & PIPE HANDRAIL - 7" RISER - 11" TREAD

SCALE: 1" = 1'-0"

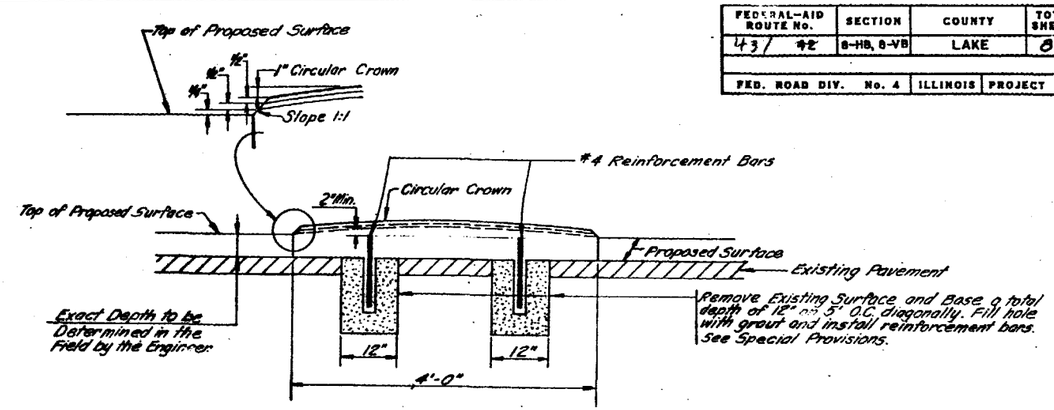

TRANSVERSE SECTION

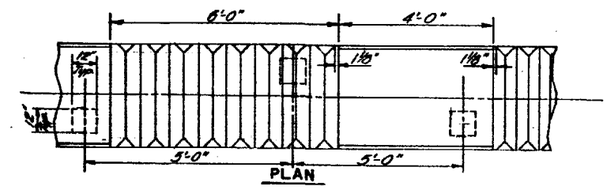

PLAN

DETAIL OF CONCRETE MEDIAN TYPE C-4 (SPECIAL)

NOT TO SCALE

STATE OF ILLINOIS
DEPARTMENT OF PUBLIC WORKS & BUILDINGS
DIVISION OF HIGHWAYS

DETAIL OF CONCRETE STEPS & PIPE HANDRAIL AND CONCRETE MEDIAN TYPE C-4 (SPECIAL)

SCALE: AS SHOWN

H. W. LOCHNER, INC.
ENGINEERS
CHICAGO, ILL.

ROUTE NO.	SECTION	COUNTY	TOTAL SHEETS	SHEET NO.
41/42	6-HB, 6-VB	LAKE	81	32
FED. ROAD DIV. NO. 4	ILLINOIS	PROJECT		

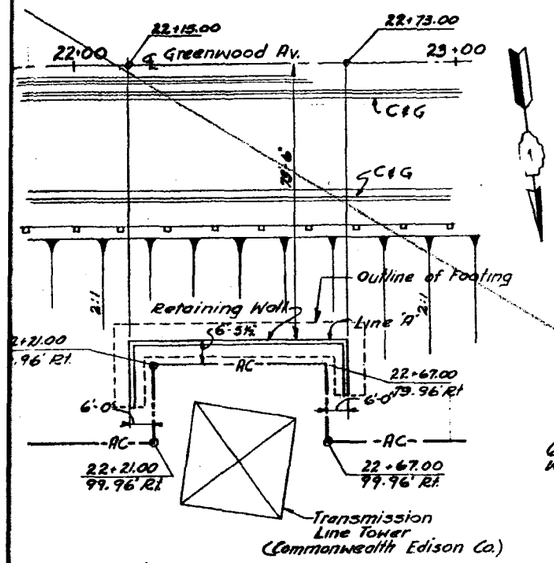

LOCATION PLAN

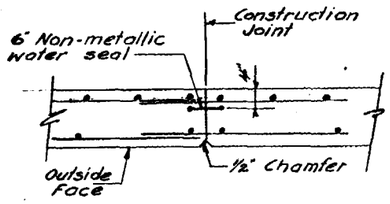

CONSTRUCTION JOINT

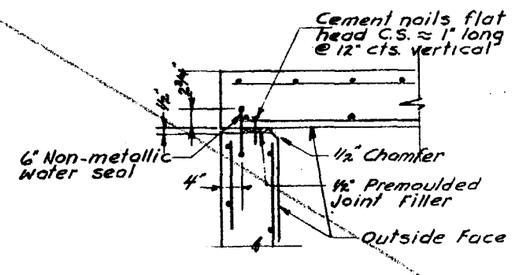

EXPANSION JOINT

GENERAL NOTES

All reinforcement bars shall be lapped 24 diameters unless otherwise shown

The Contractor shall drive one steel test pile in a permanent location, as directed by the Engineer before ordering the remainder of piles.

The backs of the retaining wall shall be waterproofed from top of footing to finish grade in accordance with Article 503.12 of the Standard Specifications. Cost incidental to Class X Concrete.

DESIGN STRESSES

fc = 1000 psi.
fs = 20,000 psi. reinforcement
V = 75 psi (footing)
Py = Equivalent fluid pressure = 40 p.c.f. horiz. Fill
= 64 p.c.f. sloping Fill

PILE DATA

Type: Steel H Piles (10BP-42)
Required Capacity : 36 tons
Estimated Length : 26 feet
Number required : 29
Test Pile : 1

BILL OF MATERIAL		
Item	Unit	Total
Class "X" Concrete	Cu. Yds	108
Reinforcement Bars	Lbs.	6,400
Furnishing Steel H Piles (10BP-42)	Lin. Ft.	754
Driving Steel Piles	Lin. Ft.	754
Test Pile Steel	Each	1
8" ϕ Perforated C.M.P.	Lin. Ft	91
Class "A" Excavation for Structures	Cu. Yds.	205

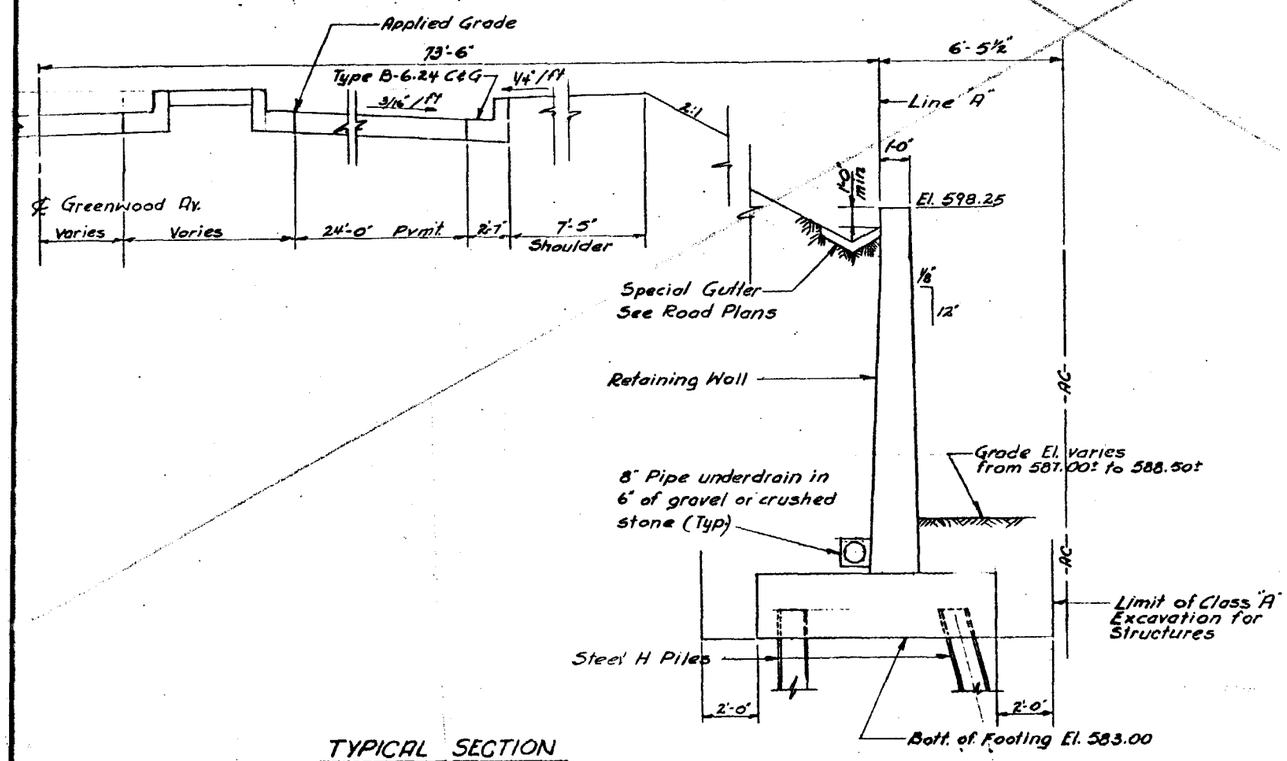

TYPICAL SECTION

Note: For Wall Details see sheet 33

STATE OF ILLINOIS
DEPARTMENT OF PUBLIC WORKS & BLDGS.
DIVISION OF HIGHWAYS

RETAINING WALL DETAIL

H. W. LOCHNER, INC.
ENGINEERS
CHICAGO, ILLINOIS

SHEET
OF

ED BY PX
BY ECM
D BY PX

ROUTE NO.	SECTION	COUNTY	TOTAL SHEETS	SHEET NO.
41 / 42	8-HB, 8-VB	LAKE	81	33
FED. ROAD DIV. NO. 4	ILLINOIS	PROJECT		

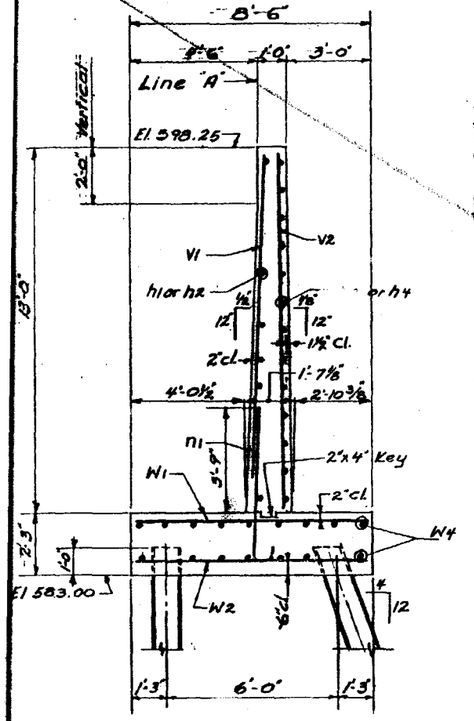

SECTION D-D

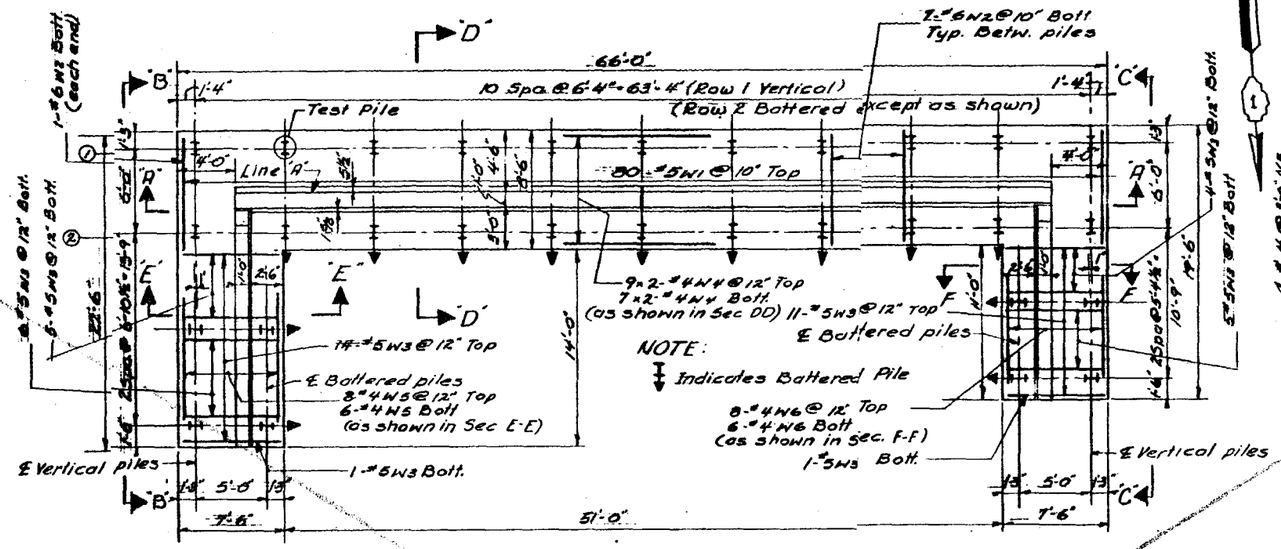

PLAN

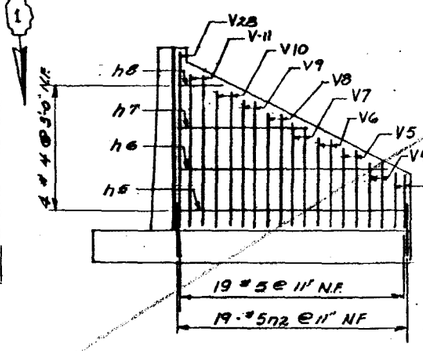

VIEW B-B

Showing reinforcement in Near Face

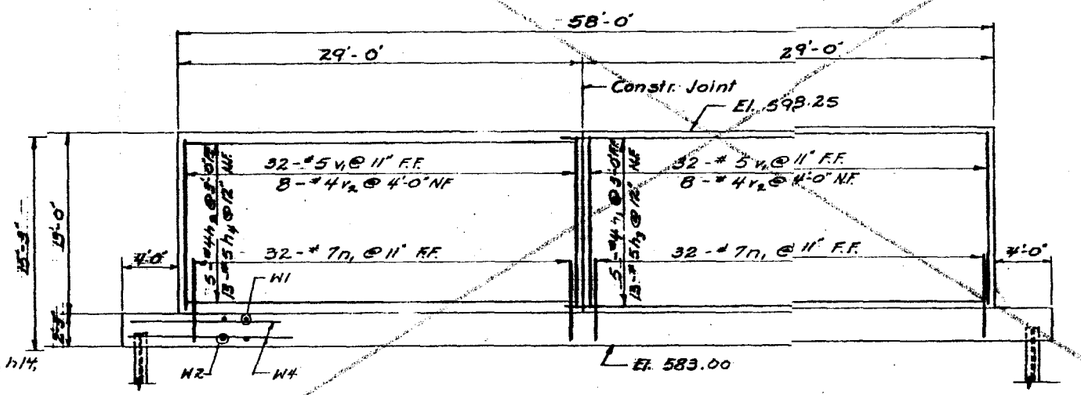

VIEW A-A

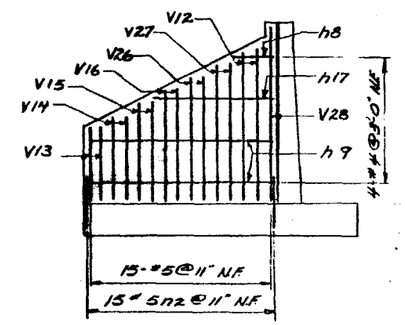

VIEW C-C

Showing reinforcement in Near Face

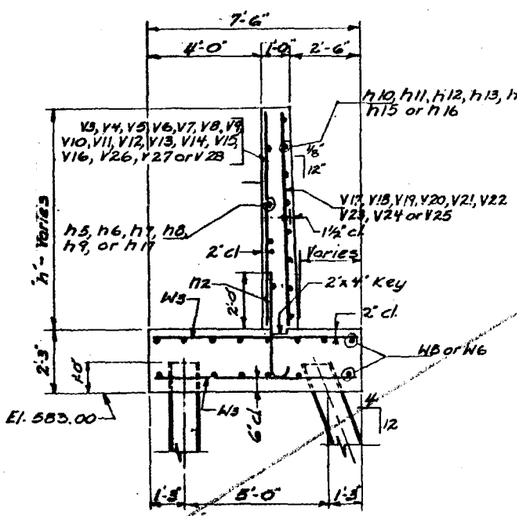

SECTION E-E

SECTION F-F

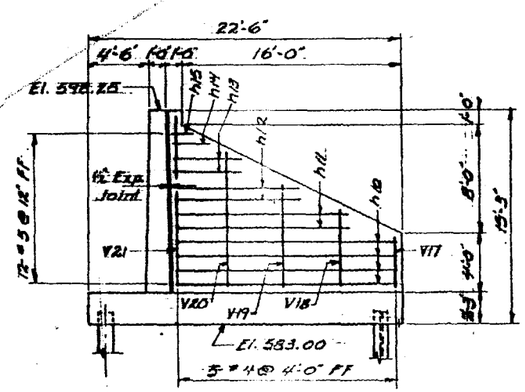

VIEW B-B

Showing dimensions and reinforcement in Far Face

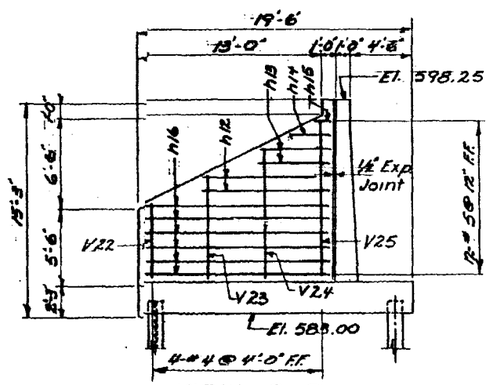

VIEW C-C

Showing dimensions and reinforcement in Far Face

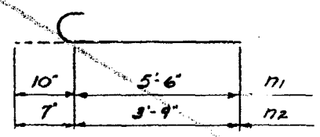

Bars n1 and n2

Note: For Bill of Materid and additional Details see sheet 32

BILL OF REINFORCEMENT

Mark	Size	No	Length	Type
n1	#7	64	6'-4"	
n2	#5	34	9'-4"	
V1	#5	64	11'-0"	
V2	#4	16	12'-10"	
V3	#5	2	3'-11"	
V4	#5	2	4'-9"	
V5	#5	2	5'-9"	
V6	#5	2	6'-7"	
V7	#5	2	7'-6"	
V8	#5	2	8'-5"	
V9	#5	2	9'-4"	
V10	#5	2	10'-3"	
V11	#5	2	11'-2"	
V12	#5	2	10'-10"	
V13	#5	2	5'-5"	
V14	#5	2	6'-4"	
V15	#5	2	7'-2"	
V16	#5	2	8'-1"	
V17	#4	1	4'-0"	
V18	#4	1	6'-0"	
V19	#4	1	8'-0"	
V20	#4	1	10'-0"	
V21	#4	1	12'-10"	
V22	#4	1	5'-7"	
V23	#4	1	7'-7"	
V24	#4	1	7'-7"	
V25	#4	1	11'-9"	
V26	#5	2	9'-0"	
V27	#6	2	9'-11"	
V28	#5	2	12'-10"	
h1	#7	5	30'-0"	
h2	#7	5	28'-9"	
h3	#5	13	30'-3"	
h4	#5	13	28'-7"	
h5	#4	1	16'-6"	
h6	#4	1	15'-4"	
h7	#4	1	9'-4"	
h8	#4	2	3'-5"	
h9	#4	2	13'-6"	
h10	#5	4	16'-6"	
h11	#5	2	13'-6"	
h12	#5	4	9'-6"	
h13	#5	4	5'-6"	
h14	#5	2	5'-6	
h15	#5	2	1'-6	
h16	#5	6	13'-6"	
h17	#4	1	9'-3"	
W1	#5	80	8'-2"	
W2	#6	92	8'-2"	
W3	#5	47	7'-2"	
W4	#4	32	33'-4"	
W5	#4	14	16'-0"	
W6	#4	14	13'-0"	

KEY TO NOTATION

N.F. = Near Face
F.F. = Far Face
Bar notation 9x2 etc. indicates 9 lines of Bars with 2 lengths per line

STATE OF ILLINOIS
DEPARTMENT OF PUBLIC WORKS & BLDGS.
DIVISION OF HIGHWAYS

RETAINING WALL DETAIL

H. W. LOCHNER, INC.
ENGINEERS
CHICAGO, ILLINOIS

SHEET
OF

DESIGNED BY FFK
DRAWN BY R.C.M.
CHECKED BY Br. B

FEDERAL-AID ROUTE No.	SECTION	COUNTY	TOTAL SHEETS	SHEET No.
FAP 42	8-HB, 8-VB	LAKE	81	34
FED. ROAD DIV. No. 4	ILLINOIS	PROJECT		

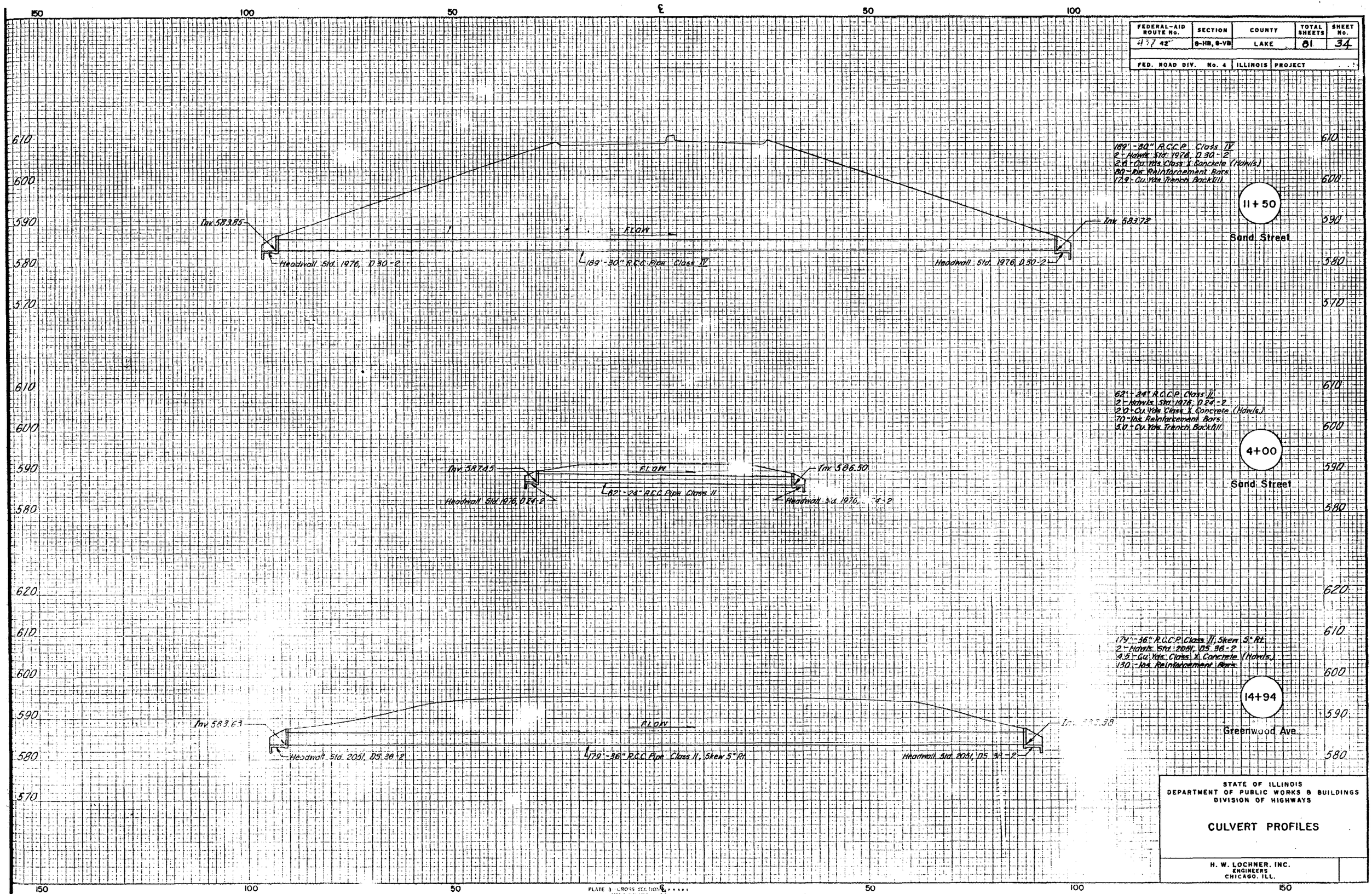

STATE OF ILLINOIS
DEPARTMENT OF PUBLIC WORKS & BUILDINGS
DIVISION OF HIGHWAYS

CULVERT PROFILES

H. W. LOCHNER, INC.
ENGINEERS
CHICAGO, ILL.

PLATE 3 CROSS SECTIONS

MADE AND PRINTED IN U.S.A. CHARLES BRUNING COMPANY

ROUTE NO.	SECTION	COUNTY	TOTAL SHEETS	SHEET NO.
F.A.-~~42~~ 437	8-VB	LAKE	81	35
FED. ROAD DIV. NO. 4	ILLINOIS	PROJECT		

M. "N-35 El. 590.46 Chiseled square on the Northwest corner of the concrete base of a signal box 18' West of the ℄ of the West C. & N.W. Track & 40' South of ℄ Greenwood Ave.

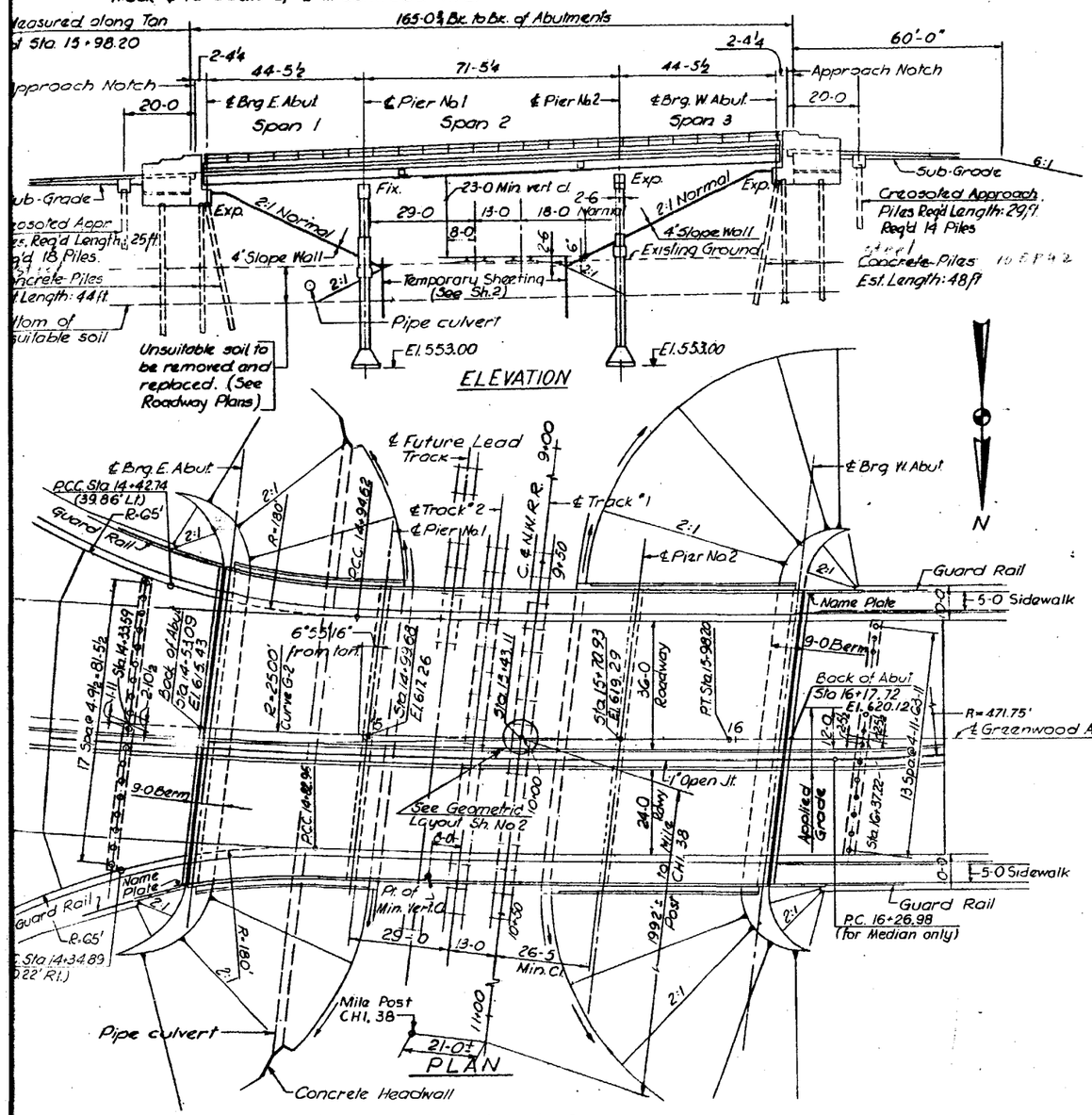

Note: See Roadway Plans for Pipe Culvert and Concrete Headwalls.

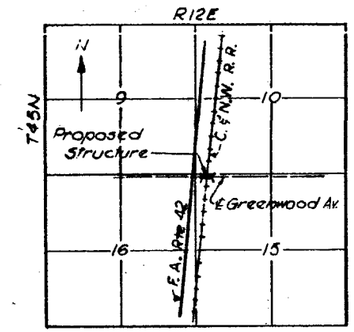

LOCATION PLAN

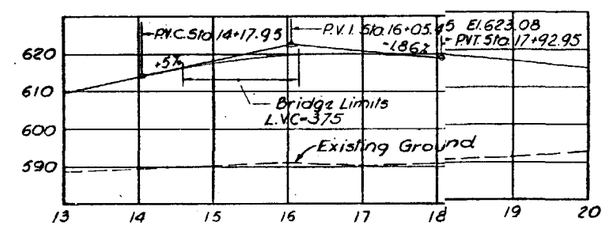

PROFILE OF GREENWOOD AVE. AT APPLIED GRADE

Scale Horiz 1" = 100', Vert 1" = 20'

GENERAL NOTES

All reinforcement bars shall be lapped 24 diameters unless otherwise shown.

Fasteners shall be high strength bolts. Bolts ¾" ϕ; open holes 13/16" ϕ, unless otherwise noted.

Calculated weight of Structural Steel = 299,730 Lbs.

Diaphragm connections may be adapted to shop welding subject to approval by the Engineer.

The Basic Lead Silico Chromate paint system shall be used for shop and field painting of structural steel.

Field welding of construction accessories will not be permitted to the bottom flange of beams or girders nor to the top flange for a distance equal, to one-fourth the span length each way from the pier supports. Field welding in other areas will be permitted only when approved by the Engineer.

Anchor bolts shall be set before riveting diaphragms (bolting cross frames) over supports.

Slope wall shall be reinforced with welded wire fabric 6" x 6" mesh, weighing 58 # per 100 sq. ft.

The Contractor shall drive one (1) concrete test pile in a permanent location at each Abutment as directed by the Engineer before ordering the remainder of piles.

The concrete rail section above the mandatory construction joint at the top of the slab shall be constructed of Class X Concrete, except the aggregates shall conform to the requirements of Handrail Concrete.

~~Concrete~~ piles at abutments shall be driven in holes precored through the embankment in accordance with Article 513.09(c) of the Standard Specifications.

The embankment configuration shown shall be the minimum embankment that must be constructed prior to construction of the abutments.

TOTAL BILL OF MATERIAL

Item	Unit	Superstructure	Substructure	Total
Temporary Sheet Piling	Sq. Ft.	—	6300	6300
Caisson Concrete	Cu. Yds.	—	131.7	131.7
Class "X" Concrete	Cu. Yds.	435.9	382.5	818.4
Protective Coat	Sq. Yds.	1590	—	1590
Furnishing and Erecting Structural Steel	Lump Sum	1	—	1
Reinforcement Bars	Lbs.	115,520	70,950	186,470
Furnishing ~~Concrete Piles~~ Steel Piles 14B42	Lin. Ft.	—	~~1,376~~	~~1,376~~
Driving ~~Concrete Piles~~ Steel Piles 14B42	Lin. Ft.	—	1,376	~~1,376~~
Test Pile ~~(Concrete)~~ Steel Piles 14B42	Each	—	2	2
Furnishing Creosoted Piles (20.1' to 38')	Lin. Ft.	—	856	856
Driving Timber Piles	Lin. Ft.	—	856	856
Name Plates	Each	—	2	2
Slope Wall 4"	Sq. Yds.	—	1,205	1,205
Aluminum Railing Type L	Lin. Ft.	323	—	323
Bridge Seat Sealer *	Lump Sum	—	1	1
Stud Shear Connectors	Each	3,180	—	3,180
~~Steel Railing Type M~~	~~Lin. Ft.~~	~~323~~	—	~~323~~

* Bridge Seat Sealer to be used at Abutments.

DESIGN STRESSES

f_c = 1400 #/□" Super & Substr.
f_s = 20,000 #/□" Reinf.
f_s = 20,000 #/□" Struct. (A-36 Steel)
v_c = 75 #/□" Footings n = 10
Allowable ℄ Defl. = L/800 center
Span Composite Grd L/1000
end spans Non-comp.
Allow. Fut. W.S. 25 #/□'
Loading : HS20-44

CURVE DATA G-2

P.I.: Sta. 14+54.53
Δ = 6°35'35"
D = 2°17'31"
T = 144.00'
R = 2500'
L = 287.67'
E = 4.14'
PC = 13+10.53
PT = 15+98.20

TOP OF RAIL ELEVATIONS

Sta.	8+50	9+00	9+50	10+00	10+50	11+00	11+50
Track #1	591.36	591.29	591.19	591.24	591.24	591.27	591.25
Track #2	591.22	591.20	591.21	591.27	591.24	591.17	591.17

SIGNED BY R.M.R.
DRAWN BY F.F.
CHECKED BY R.M.R.

STATE OF ILLINOIS
DEPARTMENT OF PUBLIC WORKS & BLDGS.
DIVISION OF HIGHWAYS

GENERAL PLAN

GREENWOOD AVE. OVER C. & N.W. R.R.

STATION 15 + 43.11

F.A. RT. ~~42~~ 437 LAKE COUNTY SECTION 8-VB

H. W. LOCHNER, INC. ENGINEERS CHICAGO, ILLINOIS

SHEET 1 OF 16

Rev. Cr. Bars Sub from 69,850# to 70,950# and Total from 177,400# to 178,500# 1-20-71 J.M.J.

Rev. Reinf. Bars Supr. from 107,550# to 115,520# Total from 178,500# to 186,470# 1-20-71 J.M.J.

ROUTE NO.	SECTION	COUNTY	TOTAL SHEETS	SHEET NO.
F.A.-42 437	8-VB	LAKE	81	36
FED. ROAD DIV. NO. 4	ILLINOIS	PROJECT		

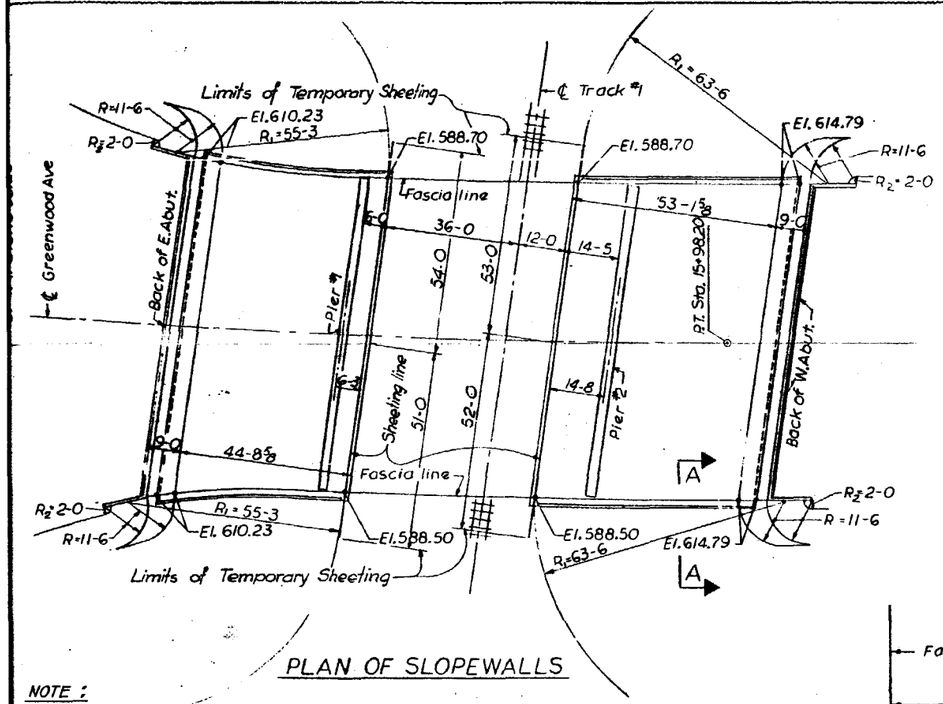

PLAN OF SLOPEWALLS

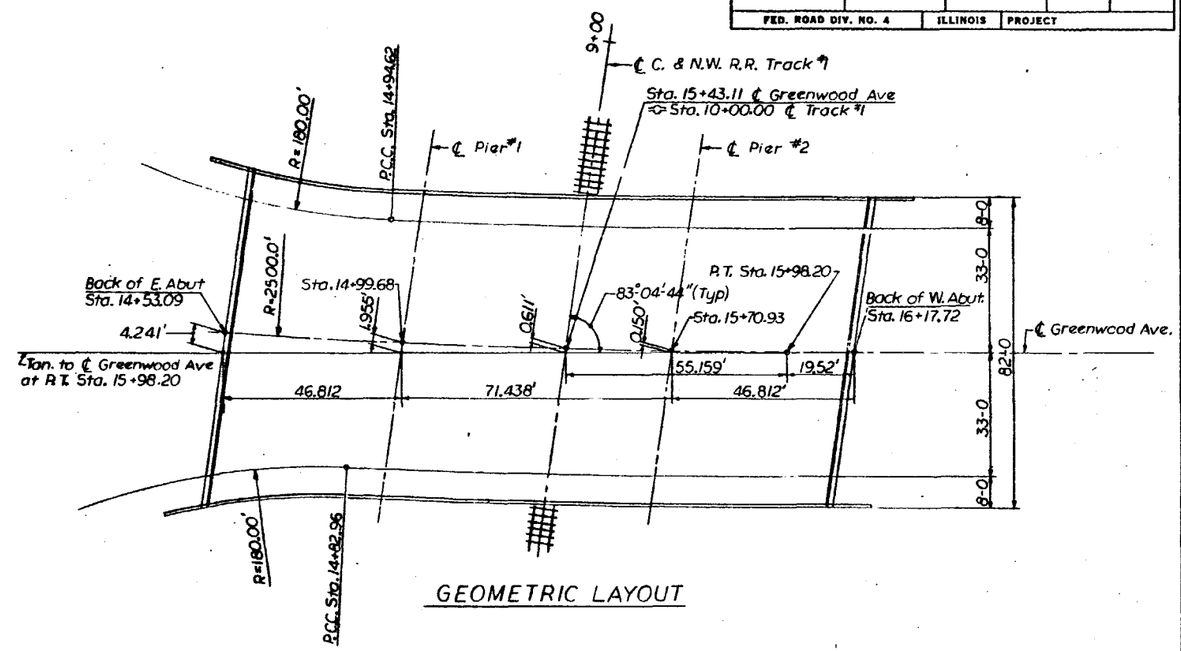

GEOMETRIC LAYOUT

NOTE:

Temporary sheeting shall be driven at the location shown on the plan, or as directed by the Engineer before any work is started on the structure foundations and on the removal and replacement of unsuitable material adjacent to tracks. See Special Provisions.

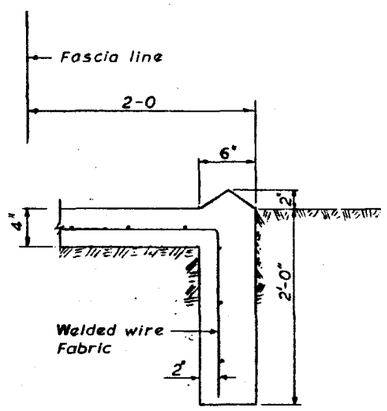

SECTION A-A

STATION 15 + 43.11
BUILT 197 BY
STATE OF ILLINOIS
F.A. RT. 42 437 SEC. 8-VB
LOADING · HS20

NAME PLATE DETAIL

NOTES: Name Plates to be placed at location shown on Sheet No. 1
See Standard 2113-1 for additional information

BILL OF MATERIAL

Item	Unit	Quantity
Slope Wall 4"	Sq. Yds.	1205
Name Plates	Each	2
Temporary Sheet Piling	Sq. Ft.	6300

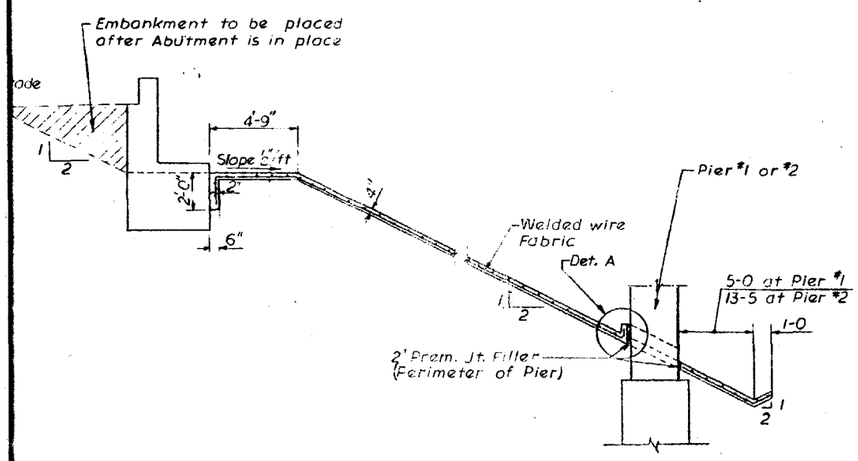

SLOPE WALL DETAIL

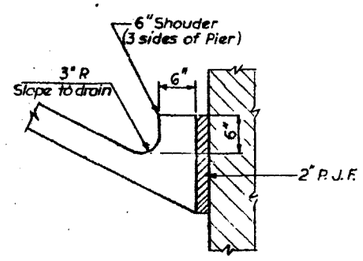

DETAIL A

V. B.
V. B.
R.M.R.

STATE OF ILLINOIS
DEPARTMENT OF PUBLIC WORKS & BLDGS.
DIVISION OF HIGHWAYS

EMBANKMENT LAYOUT AND SLOPE WALLS

GREENWOOD AVE. OVER
C. & N. W. R. R.

STATION 15 + 43.11

F. A. RT. 42 437 LAKE COUNTY SECTION 8-VB

H. W. LOCHNER, INC.
ENGINEERS
CHICAGO, ILLINOIS

SHEET 2 OF 16

ROUTE NO.	SECTION	COUNTY	TOTAL SHEETS	SHEET NO.
F.A.— 437	8—VB	LAKE	81	37
FED. ROAD DIV. NO. 4	ILLINOIS	PROJECT		

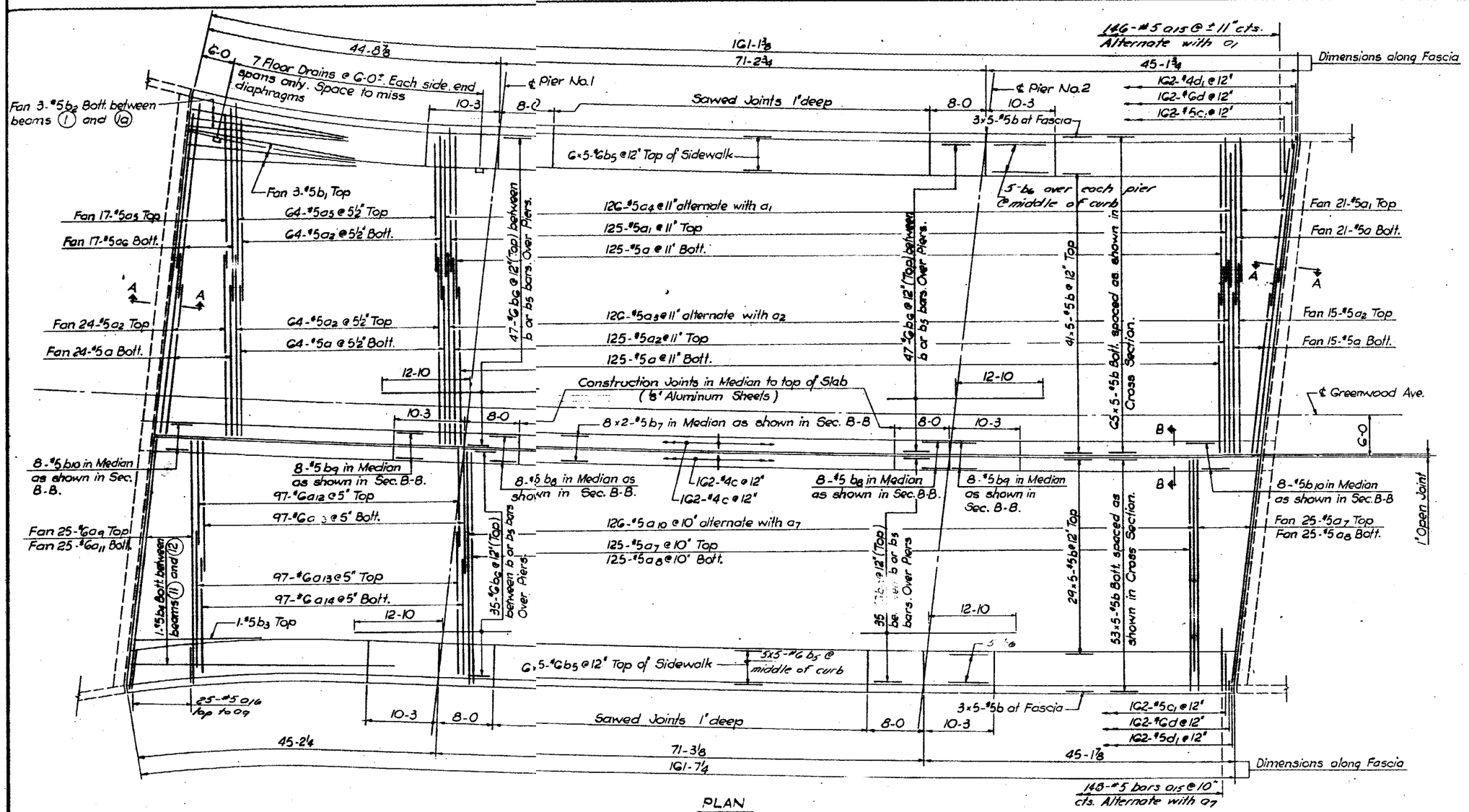

PLAN

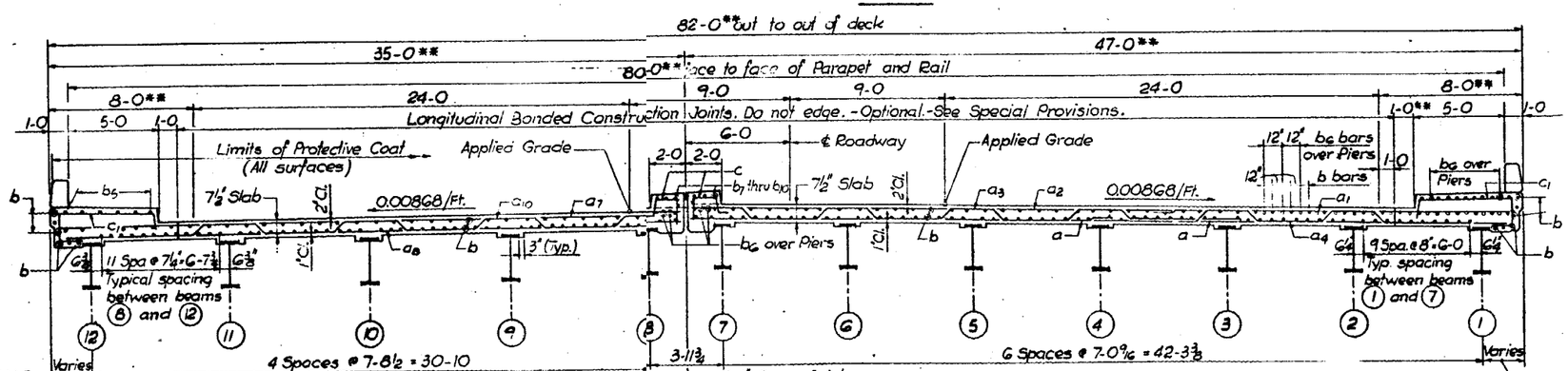

CROSS SECTION
(Looking East)

Beam (1a) not shown. See Plan for reinforcement between Beams (1a) and (1).

BILL OF MATERIAL

Mark	No. Req'd	Size	Length	Shape
a	374	#5	24-0	
a1	146	#5	21-0	
a2	292	#5	27-6	
a3	126	#5	31-6	
a4	126	#5	18-6	
a5	81	#5	25-0	
a6	17	#5	27-9	
a7	150	#5	34-6	
a8	150	#5	34-0	
a9	25	#6	37-0	
a10	126	#5	34-0	
a11	25	#6	35-6	
a12	97	#6	13-6	
a13	194	#6	24-0	
a14	97	#6	17-0	
a15	148	#5	8-0	
a16	25	#5	6-0	
b	970	#5	33-1	
b1	3	#5	24-0	
b2	3	#5	22-6	
b3	1	#5	18-6	
b4	1	#5	36-0	
b5	110	#6	33-3	
b6	182	#6	22-10	
b7	16	#5	28-0	
b8	16	#5	7-9	
b9	16	#5	10-0	
b10	16	#5	34-4	
c	324	#4	4-0	
c1	324	#5	10-7	
d	324	#6	3-4	
d1	324	#4	2-6	

Item	Unit	Total
Reinforcement bars	Lbs.	114,200
Structural Steel	Lump Sum	1
Class "X" Concrete	Cu. Yds	419.4
Protective Coat	Sq. Yds	1590

NOTES: For Sections, Details and Geometric Layout see Sh. 4.
The lengths and quantities of longitudinal reinforcement and Class "X" Concrete in parapets are not included in Bill of Material for slab. See Sh. 5.
Bars indicated thus 29×5 etc. indicates 29 lines of bars with 5 lengths per line.
Minimum bar laps = 24 dia.

** Dimensions are constant and as shown from West Abutment to Edge of Pavement P.C.C. stations, then vary to East Abutment. See Geometric Layout - Sh. 4.

STATE OF ILLINOIS
DEPARTMENT OF PUBLIC WORKS & BLDGS.
DIVISION OF HIGHWAYS

SUPERSTRUCTURE PLAN

GREENWOOD AVE. OVER
C. & N. W. R. R.

STATION 15+43.11

F. A. RT. 437 LAKE COUNTY SECTION 8—VB

H. W. LOCHNER, INC.
ENGINEERS
CHICAGO, ILLINOIS

SHEET 3 OF 16

DESIGNED BY R.M.R.
DRAWN BY E.C.
CHECKED BY V.B.

Rev. Reinf. Bars from 106,230 # to [illegible] # 1-17-71 J.M.J.

48211

ROUTE NO.	SECTION	COUNTY	TOTAL SHEETS	SHEET NO.
F.A.-~~42~~ 437	8-VB	LAKE	81	38
FED. ROAD DIV. NO. 4	ILLINOIS	PROJECT		

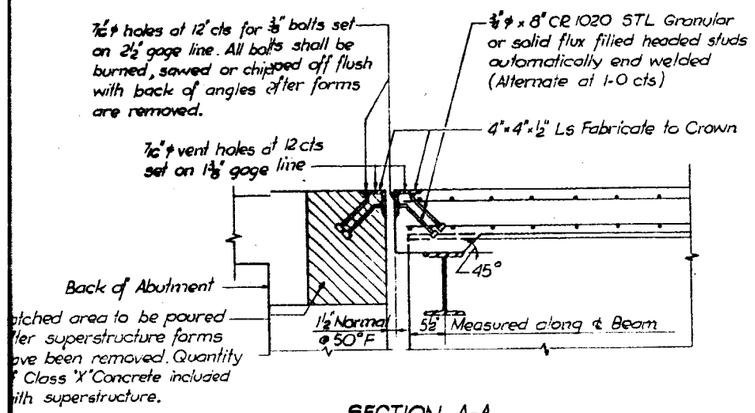

SECTION A-A

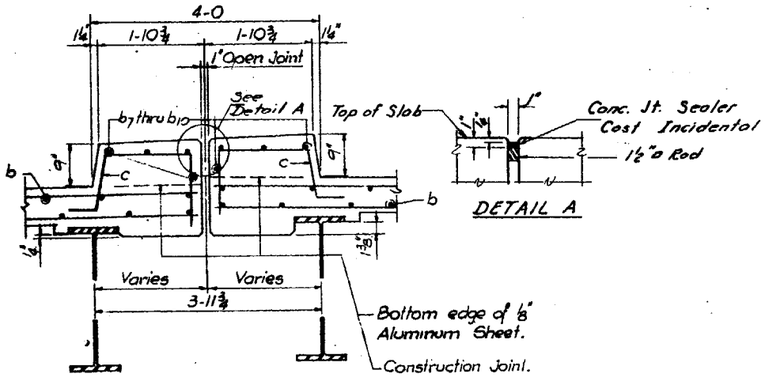

SECTION B-B

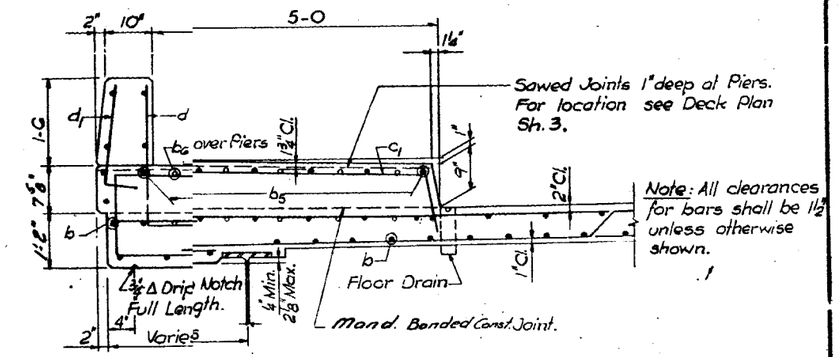

SIDEWALK DETAIL

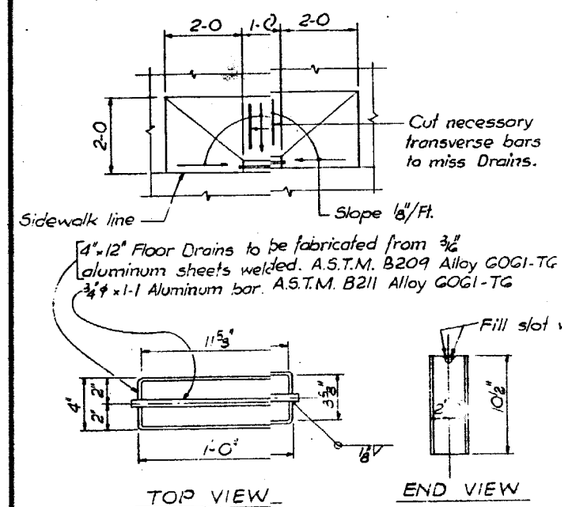

FLOOR DRAIN DETAIL
(Cost incidental to Class 'X' Concrete)

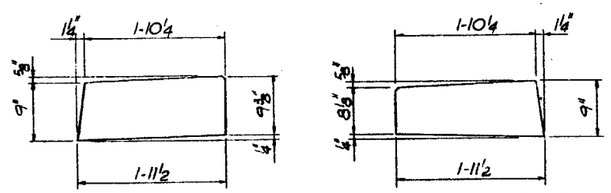

DETAIL OF ⅛" ALUMINUM SHEET
A.S.T.M. B209 Alloy 3003-H14
(Cost incidental to Class 'X' Concrete)

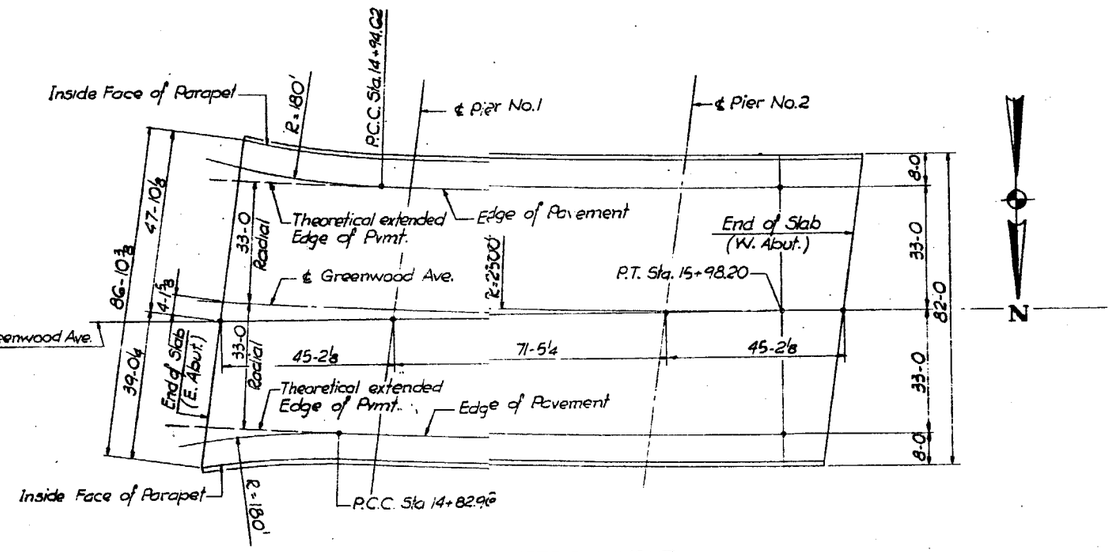

SLAB - GEOMETRIC LAYOUT

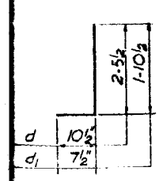

Bars d & d1

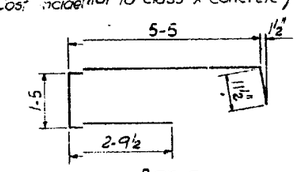

Bar c1

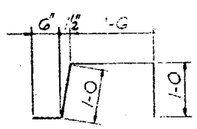

Bar c

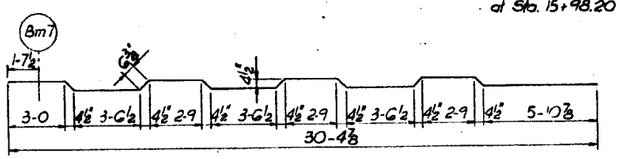

Bar a3

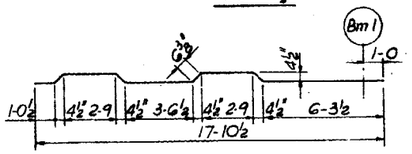

Bar a4

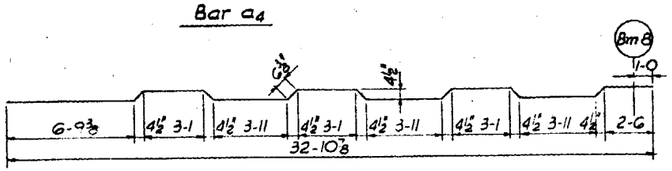

Bar a10

BY R.M.R.
E.C.
BY V.B.

STATE OF ILLINOIS
DEPARTMENT OF PUBLIC WORKS & BLDGS.
DIVISION OF HIGHWAYS

SUPERSTRUCTURE DETAILS

GREENWOOD AVE. OVER
C. & N. W. R. R.

437 STATION 15 + 43.11

F. A. RT. ~~42~~ LAKE COUNTY SECTION 8-VB

H. W. LOCHNER, INC.
ENGINEERS
CHICAGO, ILLINOIS

SHEET 4 of 16

ROUTE NO.	SECTION	COUNTY	TOTAL SHEETS	SHEET NO.
F.A.—~~42~~ 437	8-VB	LAKE	81	39
FED. ROAD DIV. NO. 4	ILLINOIS	PROJECT		

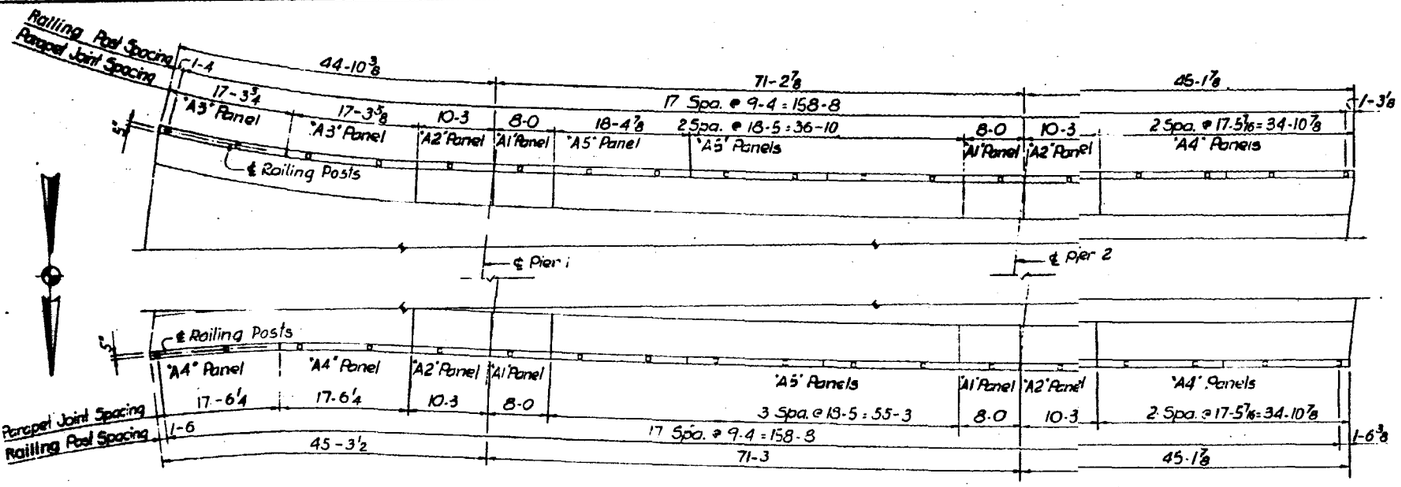

Note: All dimensions are given along ℄ Railing Posts

PLAN

NOTES:

All Posts shall be normal to parapet.

All Aluminum Alloy Extruded Rail shall be supplied in modular lengths of 30 feet, except at the end of bridge or over open joints in bridge deck where the rail shall be attached to a minimum of 2 posts. If the rail is on a horizontal curve of 2300 foot radius or less, the modular lengths may be reduced but shall be attached to a minimum of 2 posts.

All joints in rail shall be spliced per detail.

Provide 1-⅛" and 2-1/16" Aluminum Shims for 25% of the Posts. Rail elements shall be parallel to Grade – high spots shall be ground and low spots shimmed.

Railing shall be in accordance with Section 508 of the Standard Specifications, except as noted, and shall be paid for at the contract unit price per lineal foot for ALUMINUM RAILING, TYPE L.

Aluminum alloy rail shall conform to ASTM B 221 alloy 6061-T6 or 6351-T5 with min. yield 35 ksi, tensile 38 ksi, and elongation of 10% in 2 inches.

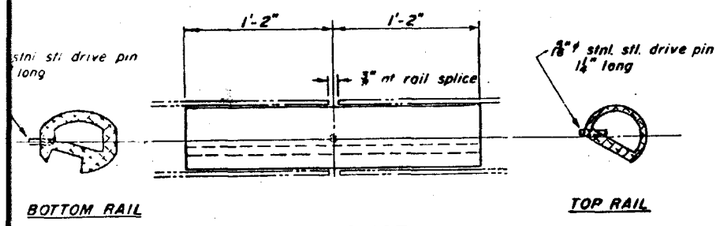

RAIL SPLICE

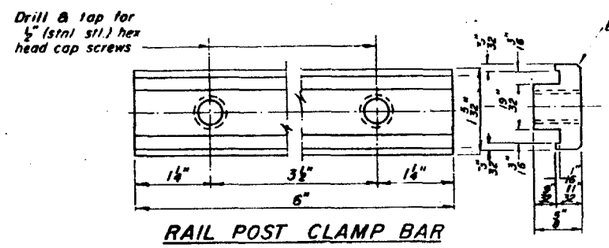

RAIL POST CLAMP BAR

For Top Rail

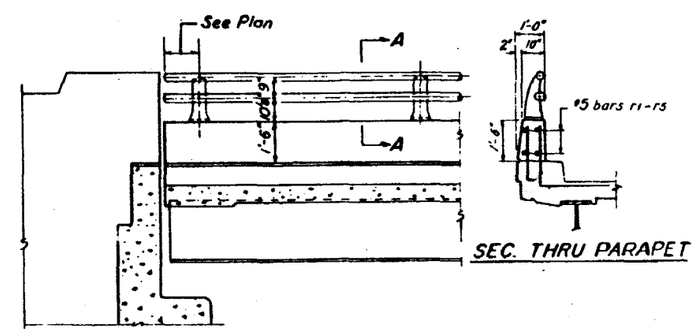

ELEVATION - END POST

SEC. THRU PARAPET

Two component non-staining gray sealing compound with polysulfide liquid polymers – gun grade with primer.

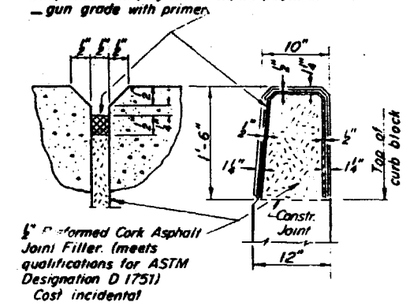

½" Preformed Cork Asphalt Joint Filler. (meets qualifications for ASTM Designation D 1751) Cost incidental

PARAPET JOINT DETAIL

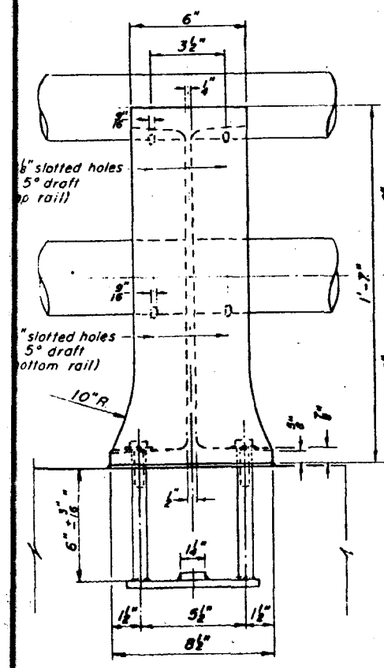

VIEW B-B

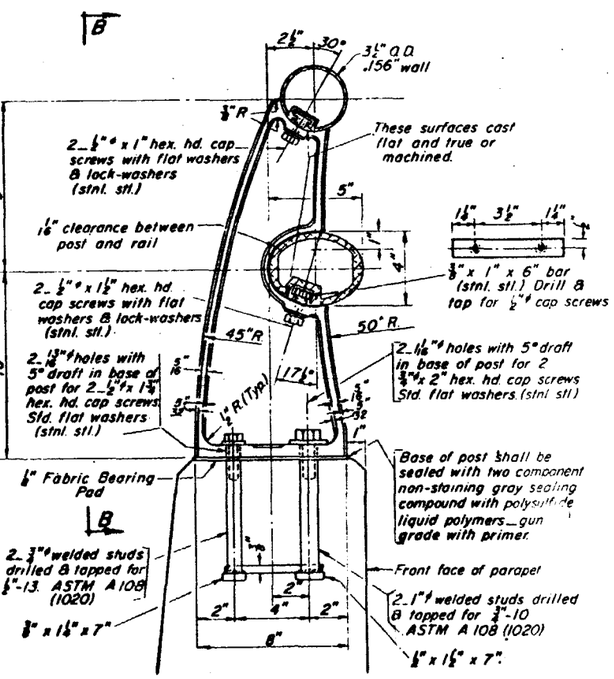

SECTION A-A

RAIL POST DETAILS

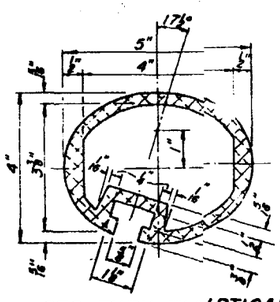

SEC. THRU ELLIPTICAL RAIL SECTION

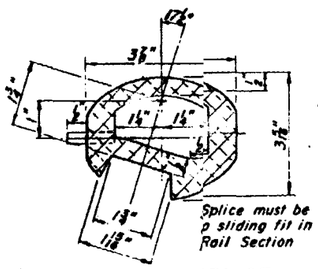

SEC. THRU SPLICE

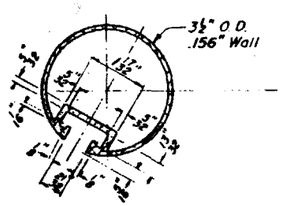

SECTION THRU TOP RAIL

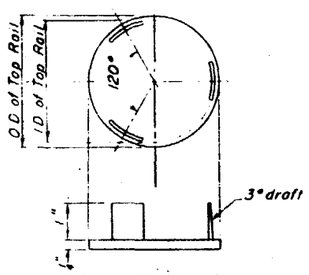

CAST END CAP

For Top Rail

4 Required

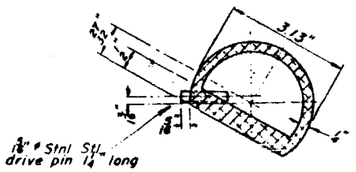

SECTION THRU SPLICE

TOP RAIL

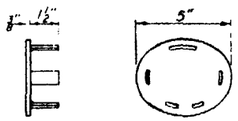

CAST END CAP

For Bottom Rail

DRIVE FIT TYPE

4 Required

BILL OF MATERIAL

Panel	No. of Panels	Mark	Bars Req'd	Size	Length	Shape
"A1"	4	r1	16	#5	7-9	—
"A2"	4	r2	16	#5	10-0	—
"A3"	2	r3	8	#5	17-0	—
"A4"	6	r4	24	#5	17-2	—
"A5"	6	r5	24	#5	18-2	—
						—
						—

Item	Unit	Quantity
Class "X" Concrete	C.Y.	16.5
Reinforcement Bars	Lbs.	1,320
Aluminum Railing Type L	Ln.Ft	323

STATE OF ILLINOIS
DEPARTMENT OF PUBLIC WORKS & BLDGS.
DIVISION OF HIGHWAYS

RAILING DETAILS

GREENWOOD AVE. OVER C.& N.W.R.R.

STATION 15+43.11

F.A. RT. 42 LAKE COUNTY SECTION 8-VB

H. W. LOCHNER, INC. ENGINEERS CHICAGO, ILLINOIS

SHEET 5 OF 16

SIGNED BY V.B.
DRN BY V.B.
CHKD BY R.M.R.

STATE OF ILLINOIS
DEPARTMENT OF PUBLIC WORKS & BUILDINGS
DIVISION OF HIGHWAYS

ROUTE NO.	SECTION	COUNTY	TOTAL SHEETS	SHEET NO.
F.A.P. 437	8-VB	LAKE	81	39A
FED. ROAD DIST. NO. 7	ILLINOIS	FED. AID PROJECT-		

SHEET NO.
SHEETS

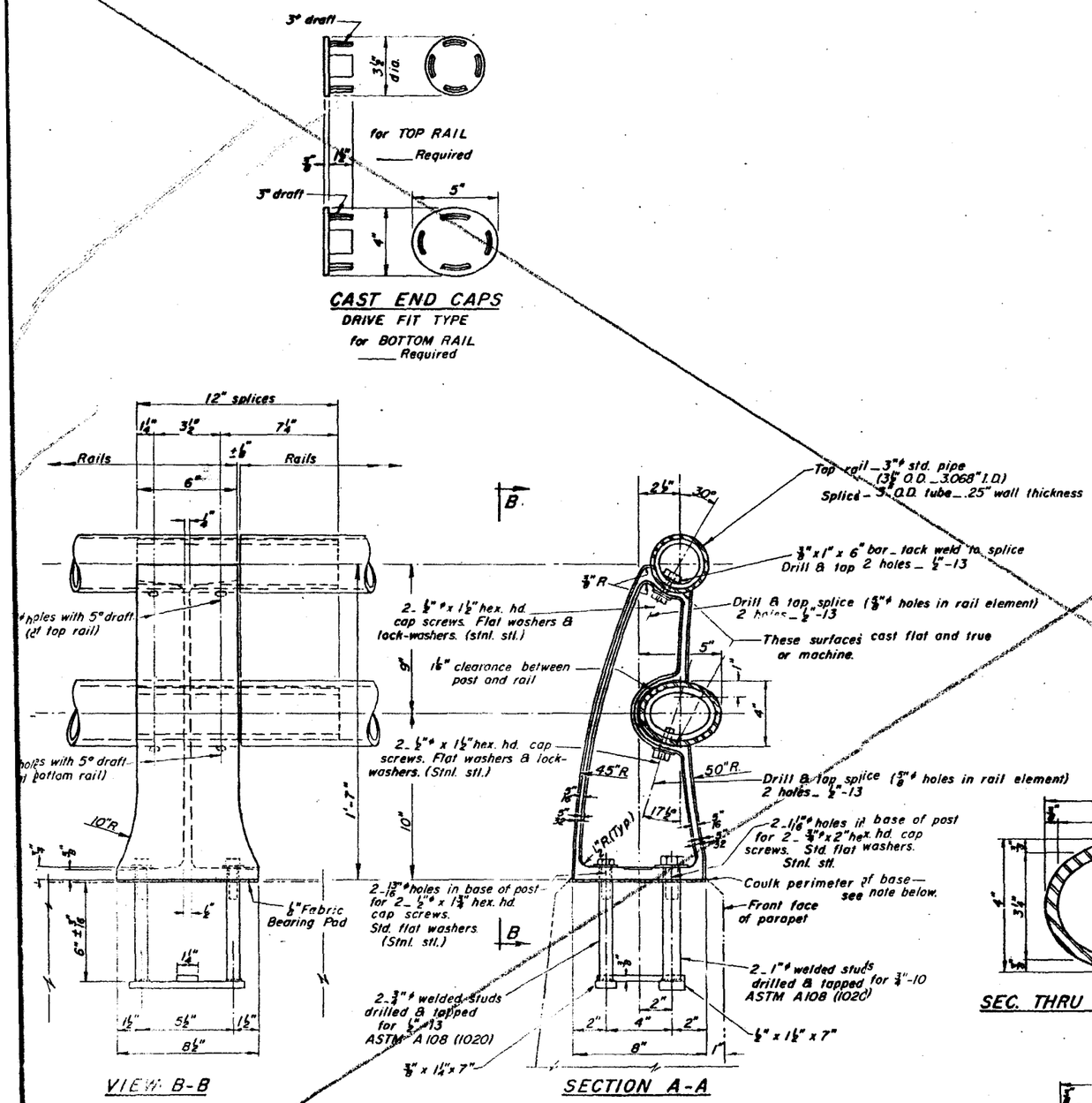

RAIL POST DETAILS

NOTES:

All Posts shall be normal to parapet.

All Posts shall be malleable cast iron conforming to ASTM A-47, Grade 35018, galvanized to ASTM A-153.

All Rail Tubing shall conform to applicable requirements of ASTM A-53, Grade B, (pipe or tube) galvanized to ASTM A-120.

Provide 1-⅛" and 2-1/16" galvanized sheet steel shims for 25% of the Posts. Rail element shall be parallel to Grade - high spots shall be ground and low spots shimmed.

If any of the galvanizing coat is damaged or removed during erection, the affected area shall be painted with one coat of zinc paint in accordance with Military Specification MIL-P-26915 Type I, air-dry cure.

Railing shall be in accordance with Section 508 of the Standard Specifications, except as noted, and shall be paid for at the contract unit price per lineal foot for STEEL RAILING, TYPE M.

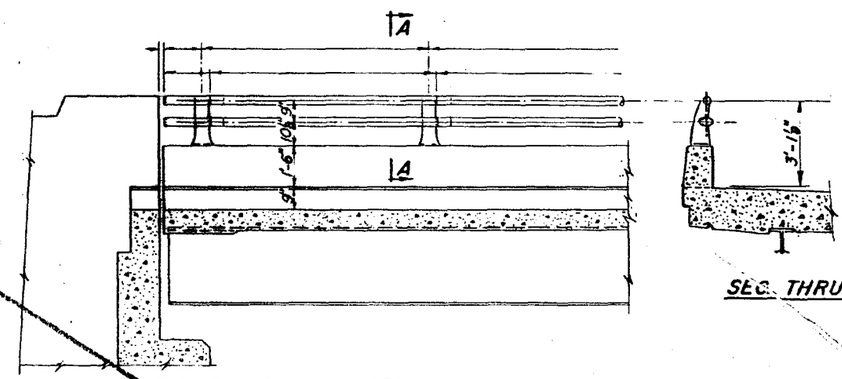

INSIDE VIEW AT ABUTMENT

SEC. THRU CURB

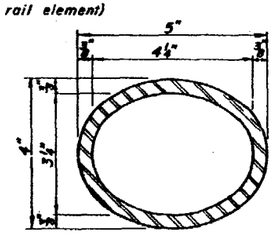

SEC. THRU BOTTOM RAIL

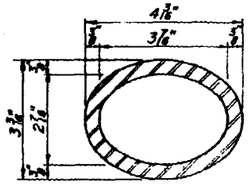

SEC. THRU BOTTOM SPLICE

Note!
Seal base of post to parapet with two component non-staining gray sealing compound with polysulfide liquid polymers — gun grade with primer.

Note!
Splice must be sliding fit in Rail Section.

BILL of MATERIAL

Item	Unit	Quantity
STEEL RAILING, TYPE M	Lin. Ft.	323

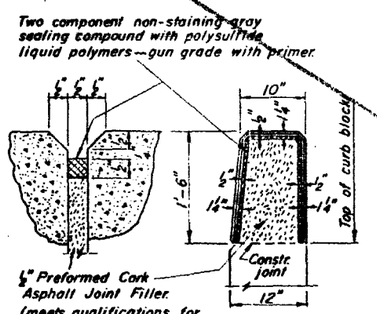

PARAPET JOINT DETAIL

TYPE M
STEEL RAILING
GREENWOOD AVE. OVER
C.&N.W. R.R.
F.A. RT. 42 - SEC. 8-VB
LAKE COUNTY
STA. 15+43.11

437

DESIGNED
CHECKED
DRAWN Wm. M. Best
CHECKED

EXAMINED 19
ENGINEER OF BRIDGE AND TRAFFIC STRUCTURES
PASSED
ENGINEER OF DESIGN
APPROVED
CHIEF HIGHWAY ENGINEER

Dwn. 8-20-64 Rev. 7-23-65 8-18-65 5-20-68

ROUTE NO.	SECTION	COUNTY	SHEETS	NO.
F. A.-~~42~~ 437	8-VB	LAKE	81	40
FED. ROAD DIV. NO. 4	ILLINOIS	PROJECT		

SPAN 1

ELEV LINE	BEAM NO.	STATION	OFFSET	THEO. TOP OF ROAD	THEO. ADJ. FOR D.L.
℄ BEARING EAST ABUTMENT	1a	1458.180	- 42.402	615.279	615.279
	1	1457.851	- 37.412	615.308	615.308
	2	1457.388	- 30.344	615.349	615.349
	3	1456.927	- 23.275	615.391	615.391
	4	1456.469	- 16.206	615.433	615.433
	5	1456.014	- 9.138	615.474	615.474
	6	1455.561	- 2.069	615.516	615.516
	7	1455.111	5.000	615.524	615.524
	8	1454.857	8.992	615.426	615.426
	9	1454.369	18.727	615.338	615.338
	10	1453.884	24.461	615.249	615.249
	11	1453.402	32.196	615.161	615.161
	12	1452.876	40.679	615.085	615.085
A	1a	1468.222	- 40.965	615.710	615.718
	1	1467.998	- 37.758	615.729	615.736
	2	1467.505	- 30.691	615.770	615.774
	3	1467.016	- 23.625	615.811	615.816
	4	1466.529	- 16.558	615.852	615.857
	5	1466.045	- 9.491	615.894	615.898
	6	1465.563	- 2.424	615.935	615.940
	7	1465.085	4.643	615.955	615.959
	8	1464.816	8.634	615.851	615.855
	9	1464.297	16.366	615.762	615.766
	10	1463.781	24.099	615.673	615.678
	11	1463.269	31.832	615.585	615.589
	12	1462.719	40.181	615.489	615.497
B	1a	1478.252	- 39.488	616.123	616.129
	1	1478.147	- 38.063	616.131	616.137
	2	1477.625	- 30.999	616.172	616.175
	3	1477.107	- 23.934	616.213	616.216
	4	1476.591	- 16.869	616.254	616.257
	5	1476.078	- 9.804	616.295	616.299
	6	1475.569	- 2.739	616.337	616.340
	7	1475.062	4.326	616.367	616.370
	8	1474.777	8.316	616.257	616.260
	9	1474.227	16.046	616.168	616.171
	10	1473.681	23.776	616.079	616.082
	11	1473.138	31.507	615.990	615.994
	12	1472.565	39.723	615.896	615.902

ELEV. LINE	BEAM NO.	STATION	OFFSET	THEO. TOP OF ROAD	THEO. ADJ. FOR D.L.
C	1				
	2				
	3				
	4				
	5				
	6				
	7				
	8				
	9				
	10				
	11				
	12				
D	1	1498.452	- 38.553	616.881	616.[illegible]
	2	1497.872	- 31.493	616.922	616.918
	3	1497.296	- 24.433	616.962	616.959
	4	1496.723	- 17.372	617.003	617.000
	5	1496.153	- 10.312	617.044	617.041
	6	1495.586	- 3.251	617.085	617.082
	7	1495.023	3.810	617.126	617.123
	8	1494.706	7.797	617.018	617.014
	9	1494.095	15.523	616.925	616.921
	10	1493.488	23.249	616.836	616.832
	11	1492.885	30.975	616.747	616.744
	12	1492.268	38.922	616.656	616.649
℄ PIER No. 1	1	1502.881	- 38.639	617.035	617.035
	2	1502.289	- 31.580	617.075	617.075
	3	1501.700	- 24.521	617.116	617.116
	4	1501.114	- 17.461	617.157	617.157
	5	1500.532	- 10.402	617.198	617.198
	6	1499.953	- 3.342	617.239	617.239
	7	1499.377	3.718	617.280	617.280
	8	1499.053	7.705	617.175	617.175
	9	1498.429	15.429	617.081	617.081
	10	1497.809	23.154	61[illegible]	616.992
	11	1497.192	30.879	616.903	616.903
	12	1496.566	38.768	616.812	616.81[illegible]

SPAN 2

ELEV. LINE	BEAM NO.	STATION	OFFSET	THEO. TOP OF ROAD	THEO. ADJ. FOR D.L.
A	1	1513.051	- 38.808	617.374	617.404
	2	1512.429	- 31.750	617.415	617.432
	3	1511.811	- 24.693	617.456	617.473
	4	1511.197	- 17.636	617.497	617.514
	5	1510.586	- 10.578	617.538	617.555
	6	1509.978	- 3.521	617.579	617.595
	7	1509.374	3.536	617.621	617.638
	8	1509.035	7.522	617.522	617.539
	9	1508.380	15.244	617.424	617.441
	10	1507.729	22.966	617.335	617.353
	11	1507.082	30.688	617.247	617.264
	12	1506.436	38.444	617.158	617.188
B	1	1523.195	- 38.932	617.694	617.763
	2	1522.544	- 31.878	617.735	617.775
	3	1521.897	- 24.823	617.777	617.816
	4	1521.254	- 17.769	617.818	617.857
	5	1520.615	- 10.714	617.859	617.898
	6	1519.979	- 3.659	617.901	617.940
	7	1519.346	3.396	617.942	617.981
	8	1518.991	7.380	617.848	617.887
	9	1518.305	15.099	617.749	617.788
	10	1517.624	22.819	617.660	617.699
	11	1516.947	30.538	617.571	617.611
	12	1516.274	38.258	617.483	617.552
C	1	1533.353	- 39.017	617.996	618.092
	2	1532.673	- 31.966	618.038	618.092
	3	1531.997	- 24.914	618.080	618.134
	4	1531.325	- 17.862	618.121	618.176
	5	1530.657	- 10.810	618.163	618.217
	6	1529.993	- 3.758	618.204	618.259
	7	1529.332	3.295	618.246	618.301
	8	1528.961	7.278	618.156	618.210
	9	1528.245	14.994	618.055	618.110
	10	1527.533	22.711	617.967	618.021
	11	1526.826	30.428	617.879	617.933
	12	1526.122	38.145	617.790	617.886

ELEV. LINE	BEAM NO.	STATION	OFFSET	THEO. TOP OF ROAD	THEO. ADJ. FOR D.L.
D	1	1543.511	- 39.062	618.280	618.377
	2	1542.802	- 32.013	618.322	618.377
	3	1542.098	- 24.964	618.364	618.419
	4	1541.397	- 17.915	618.406	618.461
	5	1540.701	- 10.865	618.448	618.503
	6	1540.008	- 3.816	618.490	618.545
	7	1539.319	3.234	618.532	618.587
	8	1538.932	7.215	618.444	618.500
	9	1538.185	14.929	618.343	618.398
	10	1537.443	22.643	618.255	618.310
	11	1536.705	30.357	618.167	618.223
	12	1535.972	38.071	618.080	618.176
E	1	1553.670	- 39.065	618.545	618.618
	2	1552.932	- 32.020	618.588	618.629
	3	1552.199	- 24.973	618.630	618.672
	4	1551.469	- 17.927	618.673	618.715
	5	1550.744	- 10.881	618.715	618.757
	6	1550.023	- 3.834	618.758	618.800
	7	1549.306	3.213	618.801	618.842
	8	1548.903	7.193	618.714	618.755
	9	1548.126	14.903	618.613	618.654
	10	1547.353	22.614	618.525	618.567
	11	1546.585	30.325	618.438	618.480
	12	1545.822	38.036	618.351	618.424
F	1	1563.828	- 39.029	618.792	618.827
	2	1563.062	- 31.986	618.835	618.855
	3	1562.300	- 24.943	618.878	618.898
	4	1561.542	- 17.899	618.921	618.941
	5	1560.788	- 10.856	618.965	618.984
	6	1560.039	- 3.812	619.008	619.028
	7	1559.293	3.232	619.051	619.071
	8	1558.874	7.210	618.964	618.984
	9	1558.087	14.917	618.864	618.884
	10	1557.264	22.625	618.777	618.797
	11	1556.465	30.333	618.691	618.711
	12	1555.672	38.041	618.604	618.639

SPAN 3

ELEV. LINE	BEAM NO.	STATION	OFFSET	THEO. TOP OF ROAD	THEO. ADJ. FOR D.L.
℄ PIER No. 2	1	1575.289	- 38.938	619.048	619.048
	2	1574.490	- 31.899	619.092	619.092
	3	1573.695	- 24.859	619.136	619.136
	4	1572.905	- 17.820	619.180	619.180
	5	1572.119	- 10.779	619.224	619.224
	6	1571.338	- 3.739	619.268	619.268
	7	1570.561	3.301	619.312	619.312
	8	1570.124	7.277	619.223	619.223
	9	1569.282	14.981	619.125	619.125
	10	1568.445	22.685	619.039	619.039
	11	1567.613	30.389	618.954	618.954
	12	1566.786	38.094	618.868	618.868
A	1	1585.447	- 38.815	619.255	619.247
	2	1584.618	- 31.779	619.300	619.296
	3	1583.795	- 24.743	619.345	619.340
	4	1582.976	- 17.706	619.390	619.385
	5	1582.162	- 10.669	619.435	619.430
	6	1581.352	- 3.632	619.480	619.475
	7	1580.547	3.405	619.524	619.520
	8	1580.095	7.380	619.432	619.428
	9	1579.222	15.080	619.337	619.332
	10	1578.354	22.780	619.252	619.248
	11	1577.492	30.481	619.167	619.163
	12	1576.635	38.182	619.083	619.079
B	1	1595.603	- 38.651	619.444	619.445
	2	1594.746	- 31.618	619.490	619.490
	3	1593.893	- 24.585	619.535	619.536
	4	1593.046	- 17.552	619.581	619.582
	5	1592.203	- 10.519	619.627	619.628
	6	1591.366	- 3.485	619.673	619.674
	7	1590.532	3.549	619.719	619.720
	8	1590.064	7.522	619.622	619.623
	9	1589.161	15.218	619.530	619.531
	10	1588.263	22.916	619.447	619.448
	11	1587.370	30.613	619.363	619.364
	12	1586.483	38.311	619.279	619.281

ELEV. LINE	BEAM NO.	STATION	OFFSET	THEO. TOP OF ROAD	THEO. ADJ. FOR D.L.
C	1	1605.645	- 38.458	619.612	619.620
	2	1604.791	- 31.426	619.659	619.664
	3	1603.938	- 24.394	619.707	619.712
	4	1603.084	- 17.363	619.754	619.759
	5	1602.231	- 10.331	619.801	619.806
	6	1601.377	- 3.299	619.848	619.853
	7	1600.524	3.732	619.895	619.900
	8	1600.042	7.703	619.793	619.798
	9	1599.108	15.397	619.706	619.710
	10	1598.174	23.090	619.623	619.628
	11	1597.252	30.784	619.540	619.545
	12	1596.335	38.478	619.458	619.466
D	1	1615.843	- 38.263	619.761	619.765
	2	1614.789	- 31.231	619.810	619.812
	3	1613.936	- 24.200	619.859	619.861
	4	1613.082	- 17.168	619.908	619.910
	5	1612.229	- 10.136	619.957	619.959
	6	1611.375	- 3.105	620.005	620.008
	7	1610.522	3.927	620.054	620.056
	8	1610.040	7.898	619.946	619.948
	9	1609.106	15.591	619.863	619.866
	10	1608.172	23.285	619.782	619.785
	11	1607.238	30.978	619.701	619.704
	12	1606.304	38.672	619.620	619.624
℄ BEARING WEST ABUTMENT	1	1620.004	- 38.178	619.820	619.820
	2	1619.150	- 31.147	619.870	619.870
	3	1618.297	- 24.115	619.920	619.920
	4	1617.443	- 17.083	619.969	619.969
	5	1616.590	- 10.052	620.019	620.019
	6	1615.736	- 3.020	620.068	620.068
	7	1614.883	4.012	620.117	620.117
	8	1614.401	7.983	620.007	620.007
	9	1613.467	15.676	619.926	619.926
	10	1612.533	23.370	619.846	619.846
	11	1611.599	31.063	619.766	619.766
	12	1610.665	38.757	619.685	619.685

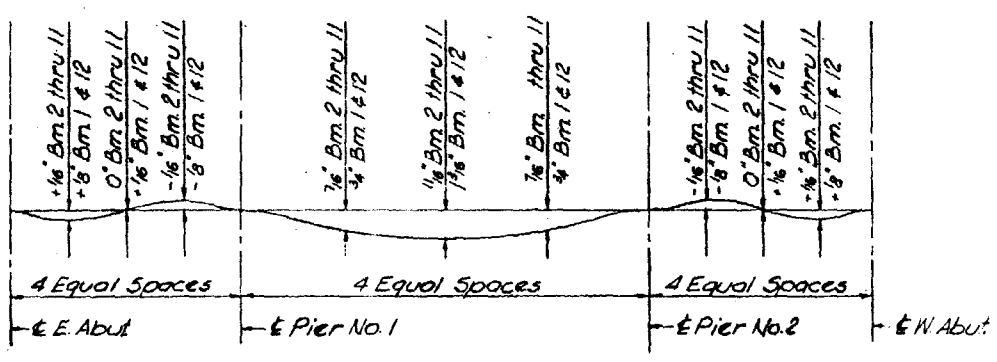

DEAD LOAD DEFLECTION DIAGRAM
(Includes weight of concrete only)

NOTE:
The above deflections are not to be used in the field if the Engineer is working from the grade elevations adjusted for Dead Load Deflections as shown in Tables.

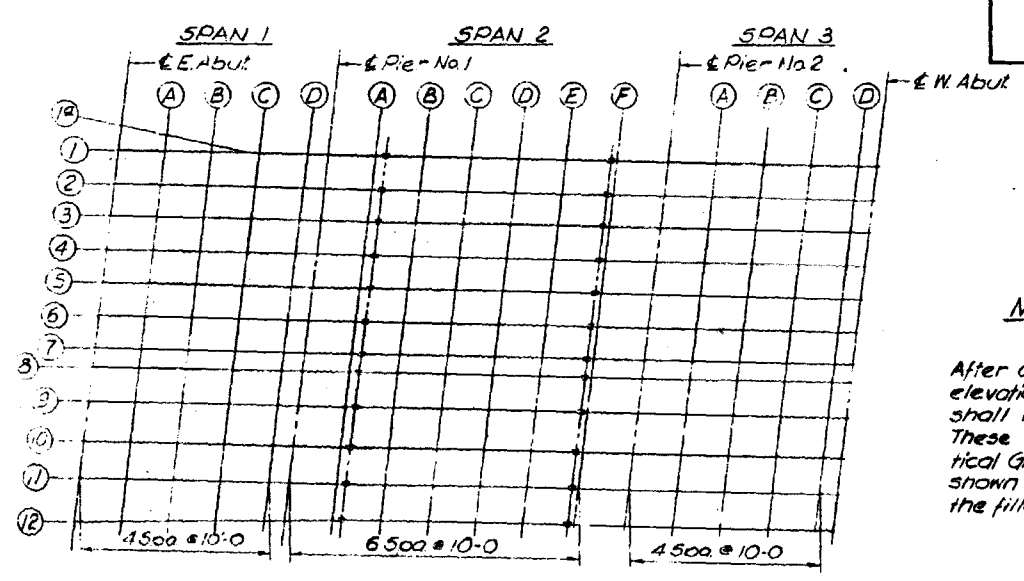

PLAN
Measured along parallel beams.

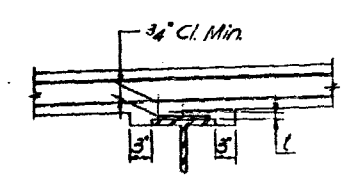

METHOD OF DETERMINING FILLET HEIGHTS "L"

After all Structural Steel has been erected elevations of the top flanges of the beams shall be taken at the intervals shown in Plan. These elevations subtracted from the "Theoretical Grade Elevations Adjusted for Dead Load" shown above minus floor thickness equals the fillet heights "L" above top flange of beams.

Note:
Elevations in the Tables are given to the extended Roadway slope where the points are under sidewalks.

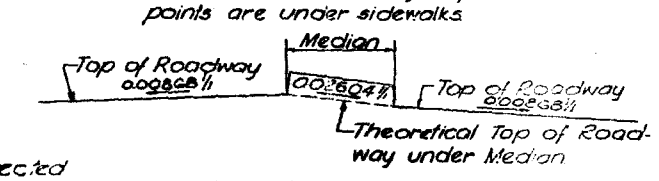

DESIGNED BY R.M.R.
DRAWN BY E.F.
CHECKED BY V.B.

STATE OF ILLINOIS
DEPARTMENT OF PUBLIC WORKS & BLDGS.
DIVISION OF HIGHWAYS

TABLES OF ELEVATIONS

GREENWOOD AVE. OVER
C. & N. W. R. R.

STATION 15 + 43.11

F. A. RT. ~~42~~ 437 LAKE COUNTY SECTION 8-VB

H. W. LOCHNER, INC.
ENGINEERS
CHICAGO, ILLINOIS

SHEET 6 OF 16

ROUTE NO.	SECTION	COUNTY	TOTAL SHEETS	SHEET NO.
F.A.-42 (431)	8-VB	LAKE	81	41
FED. ROAD DIV. NO. 4	ILLINOIS	PROJECT		

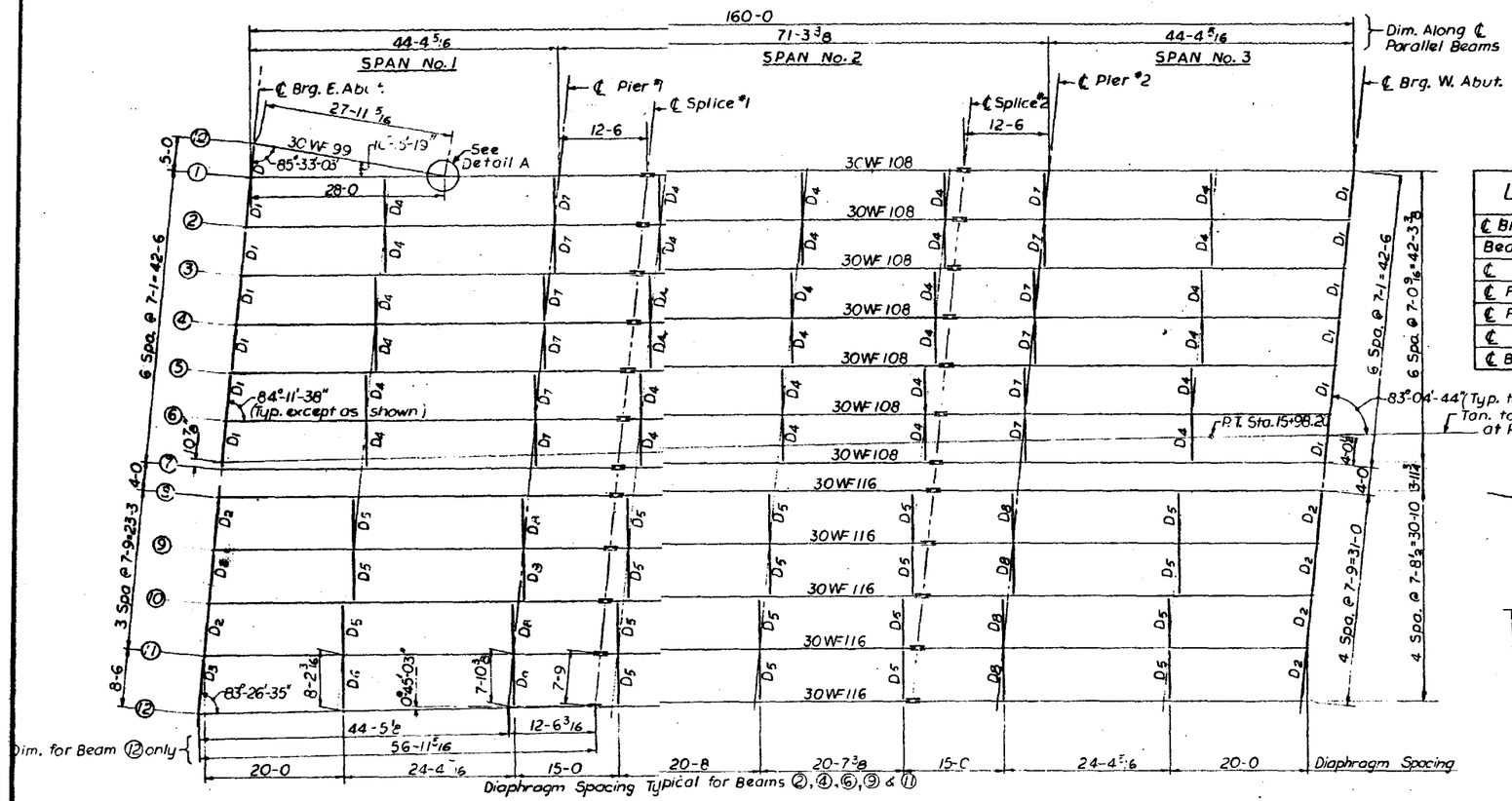

FRAMING PLAN

TOP OF FLANGE ELEVATION FOR FABRICATION
(DEFLECTION NOT INCLUDED)

LOCATION	BEAM NO. 12	1	2	3	4	5	6	7	8	9	10	11	12
℄ Brg. East Abutment	614.607	614.607	614.648	614.690	614.731	614.772	614.813	614.854	614.757	614.659	614.570	614.481	614.481
Beam 12 Connection	615.671	615.671	—	—	—	—	—	—	—	—	—	—	—
℄ Pier #1	—	616.292	616.333	616.375	616.416	616.457	616.498	616.539	616.442	616.344	616.255	616.166	616.166
℄ Field Splice #1	—	616.767	616.808	616.850	616.891	616.932	616.973	617.014	616.917	616.819	616.730	616.641	616.641
℄ Field Splice #2	—	618.087	618.128	618.170	618.211	618.252	618.293	618.334	618.237	618.139	618.050	617.961	617.961
℄ Pier #2	—	618.324	618.365	618.407	618.448	618.489	618.530	618.571	618.474	618.376	618.287	618.198	618.198
℄ Brg. West Abutment	—	619.167	619.208	619.250	619.291	619.332	619.373	619.414	619.317	619.219	619.130	619.041	619.041

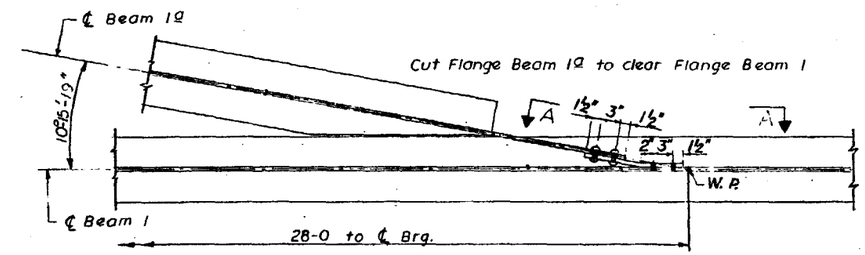

DETAIL A

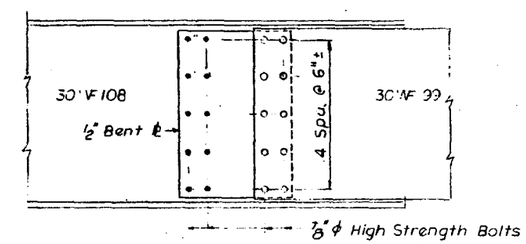

VIEW A-A

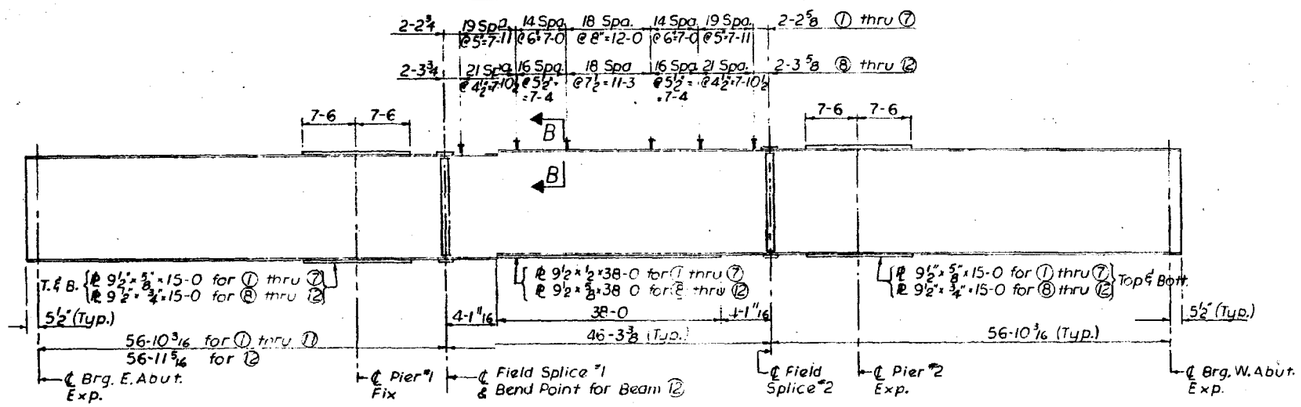

BEAM ELEVATION

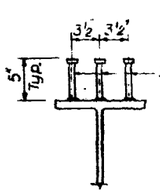

SECTION B-B

NOTES: Stud shear connectors on the beam flanges shall be placed in the field after the steel has been erected and the deck forms are in place.

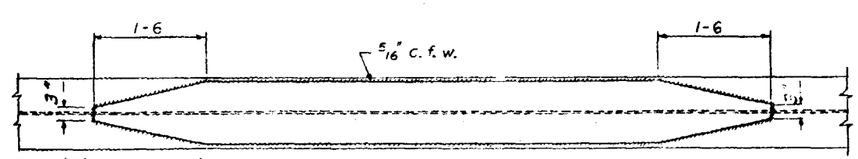

DETAIL OF COVER PLATE
TYPICAL

STATE OF ILLINOIS
DEPARTMENT OF PUBLIC WORKS & BLDGS.
DIVISION OF HIGHWAYS

FRAMING PLAN AND STEEL DETAILS

GREENWOOD AVE. OVER
C. & N. W. R. R.

STATION 15 + 43.11

F. A. RT 42 LAKE COUNTY SECTION 8-VB

H. W. LOCHNER, INC.
ENGINEERS
CHICAGO, ILLINOIS

SHEET 7 OF 16

PLTD BY RMR
CK BY V. B.
REVD BY R.M.R.

48211

ROUTE NO.	SECTION	COUNTY	TOTAL SHEETS	SHEET NO.
F.A.-42 (437)	8-VB	LAKE	81	42
FED. ROAD DIV. NO. 4	ILLINOIS	PROJECT		

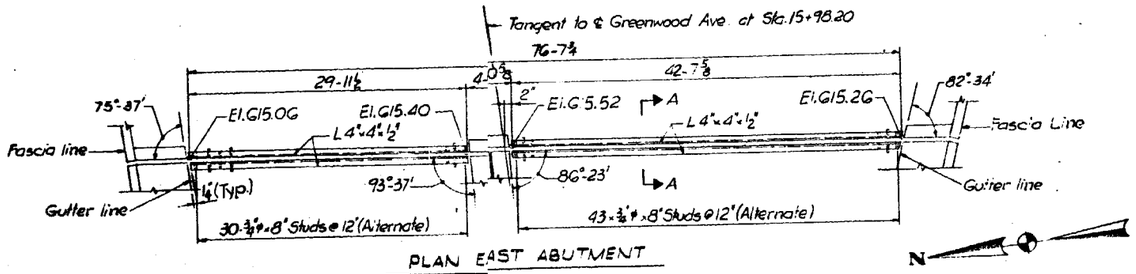

PLAN EAST ABUTMENT

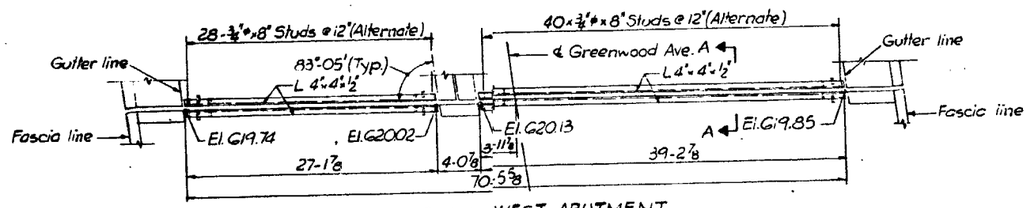

PLAN WEST ABUTMENT

EXPANSION GUARDS

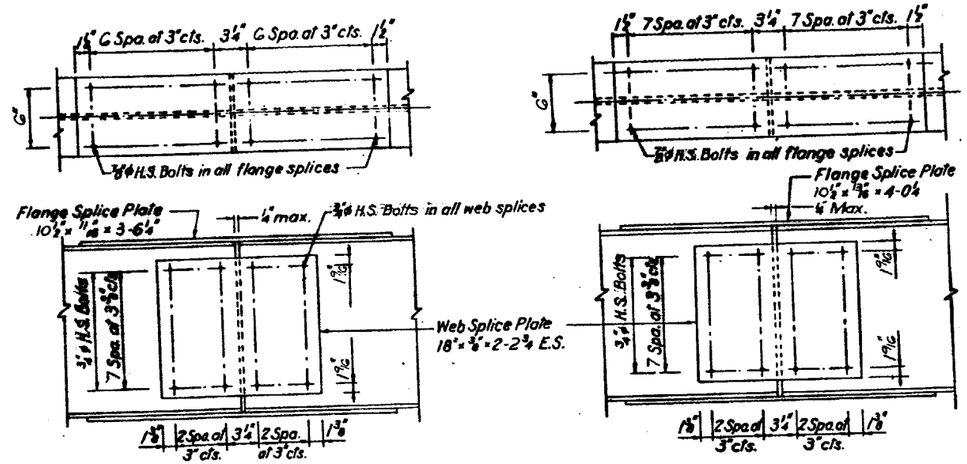

DETAIL OF SPLICE FOR 30WF 108

DETAIL OF SPLICE FOR 30WF 116

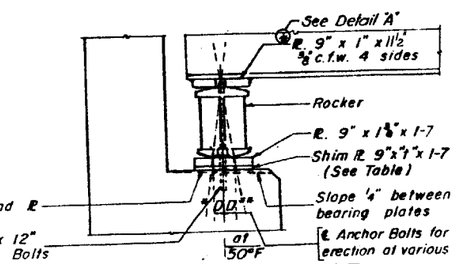

SECTION AT ABUTMENT

East Abutment as shown
West Abutment opp. hand.

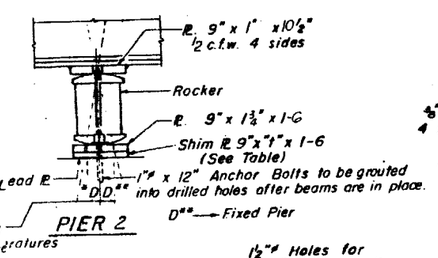

PIER 2

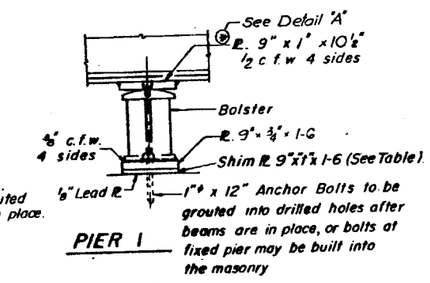

PIER 1

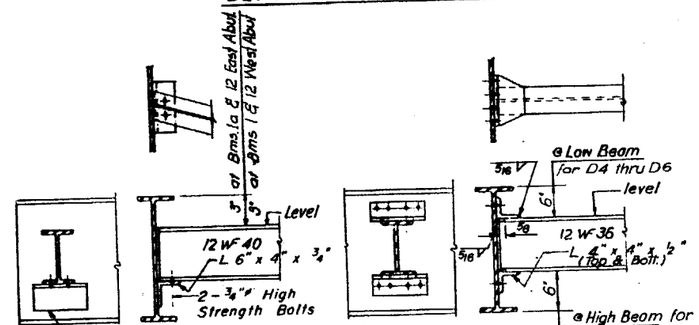

DIAPHRAGM D thru D3

21 Required

DIAPHRAGM D4 thru D9

70 Required

SHIM PLATE TABLE

(Thickness "t")

Location	Beam 2	Beam 4	Beam 6	Beam 10
East Abutment	½"	9/16"	7/16"	¼"
Pier 1	7/16"	½"	½"	—
Pier 2	7/16"	½"	½"	—
West Abutment	½"	9/16"	7/16"	—

Note:
For Section A-A see Sh. No. 4

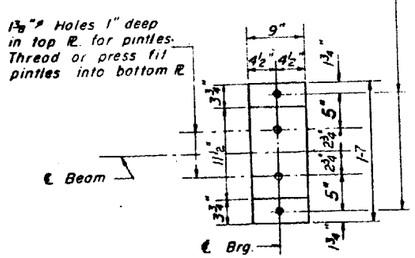

PLAN

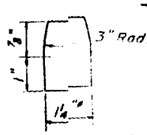

DETAIL OF PINTLE

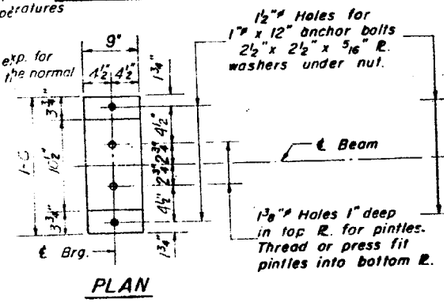

PLAN

*D = 1/8" / 100 ft. of exp. for every 15° below the normal temp. of 50°.
D** = 1/8" / 100 ft. of exp. for every 15° above the normal temp. of 50°.

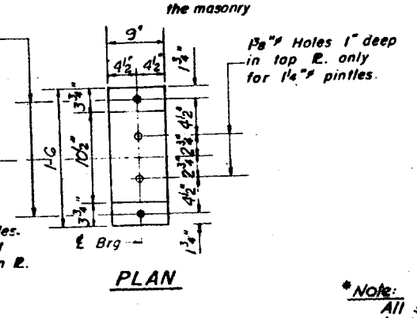

PLAN

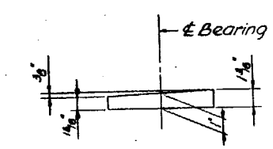

DETAIL "A"

*Note:
All sole plates at E. Abutment & Pier No. 1 to be beveled as shown in Detail "A".

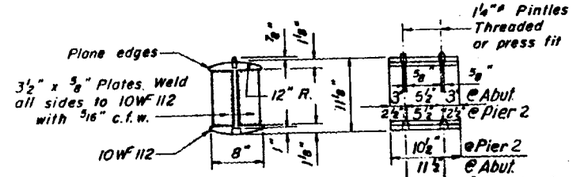

DETAIL OF ROCKER AT ABUTS. & PIER 2

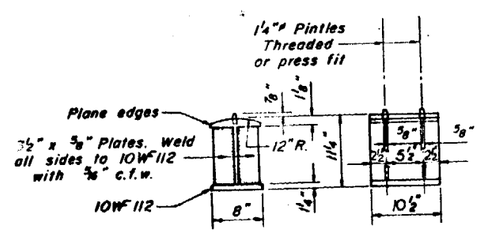

DETAIL OF BOLSTER AT PIER 1 (FIXED)

DESIGNED BY RMR
DRAWN BY E.C.
CHECKED BY V.B.

STATE OF ILLINOIS
DEPARTMENT OF PUBLIC WORKS & BLDGS.
DIVISION OF HIGHWAYS

STEEL DETAILS

GREENWOOD AVE. OVER C. & N. W. R. R.

STATION 15 + 43.11

F.A. RT. 42 (437) LAKE COUNTY SECTION 8-VB

H. W. LOCHNER, INC.
ENGINEERS
CHICAGO, ILLINOIS

SHEET 8 OF 16

ROUTE NO.	SECTION	COUNTY	TOTAL SHEETS	SHEET NO.
F.A. 437	8-VB	LAKE	181	43
FED. ROAD DIV. NO. 4	ILLINOIS	PROJECT		

INTERIOR BEAMS ② THRU ⑥
Composite Section Span No 2

MOMENTS (Ft-Kips)		SHEARS (Kips)			
	Steel Section Max. Moment		Point of D.L. Contra-flexure	¼ Point Pos. Area	½ Point Pos. Area
D.L.	208	S.D.L.	6	3	0
	Composite Section Max. Moment	L.L.	34	27	23
		Impact	8	7	5
S.D.L.	76	Total	48	37	28
L.L.	492				
Impact	120				
Total	688				

PROPERTIES

Steel Section	
Is	5411
Sst	321
Sbs	403
Composite Section	
Ic	16065
Stc	4664
Sbc	598

INTERIOR BEAMS ⑨ THRU ⑪
Composite Section-Span No 2

MOMENTS (Ft-Kips)		SHEARS (Kips)			
	Steel Section Max. Moment		Point of D.L. Contra-flexure	¼ Point Pos. Area	½ Point Pos. Area
D.L.	225	S.D.L.	7	3	0
	Composite Section Max. Moment	L.L.	38	30	24
		Impact	9	8	7
S.D.L.	88	Total	54	41	31
L.L.	541				
Impact	131				
Total	760				

PROPERTIES

Steel Section	
Is	6105
Sst	353
Sbs	453
Composite Section	
Ic	18078
Stc	4840
Sbc	672

EXTERIOR BEAM ①
Composite Section - Span No 2

MOMENTS (Ft-Kips)		SHEARS (Kips)			
	Steel Section Max. Moment		Point of D.L. Contra-flexure	¼ Point Pos. Area	½ Point Pos. Area
D.L.	339	S.D.L.	2	1	0
	Composite Section Max. Moment	L.L.	5	4	3
		Impact	2	1	1
S.D.L.	27	Total	9	6	4
L.L.	87				
Impact	18				
Total	132				

PROPERTIES

Steel Section	
Is	5411
Sst	321
Sbs	403
Composite Section	
Ic	26433
Stc	9915
Sbc	801

EXTERIOR BEAM ⑫
Composite Section-Span No 2

MOMENTS (Ft-Kips)		SHEARS (Kips)			
	Steel Section Max. Moment		Point of D.L. Contra-flexure	¼ Point Pos. Area	½ Point Pos. Area
D.L.	370	S.D.L.	3	2	0
	Composite Section Max. Moment	L.L.	9	7	5
		Impact	3	2	1
S.D.L.	38	Total	15	11	6
L.L.	139				
Impact	29				
Total	206				

PROPERTIES

Steel Section	
Is	6105
Sst	353
Sbs	453
Composite Section	
Ic	29135
Stc	12985
Sbc	886

KEY TO NOTATION
D.L. - Dead Load
S.D.L. - Superimposed Dead Load acting on Composite Section.
L.L. - Live Load (Including Sidewalk L.L.)
Is - Moment of Inertia Steel Section.
Sts - Section Modulus top Steel Section.
Sbs - Section Modulus bott. Steel Section.
Ic - Moment of Inertia Composite Section.
Stc - Section Modulus top Comp. Section.
Sbc - Section Modulus bott. Comp. Section.
S.M. - Section Modulus

INTERIOR BEAMS ② THRU ⑥
Non-composite

	MOMENTS (Ft-Kips)		REACTIONS (Kips)	
	0.4 Span No 1	Pier No 1	E. Abut.	Pier No 1
D.L.	103	401	15	72
L.L.	276	293	36	51
Impact	79	76	10	13
Total	458	770	61	136
S.M. (in³)	299	463	—	—

INTERIOR BEAMS ⑨ THRU ⑪
Non-composite

	MOMENTS (Ft-Kips)		REACTIONS (Kips)	
	0.4 Span No 1	Pier No 1	E. Abut.	Pier No 1
D.L.	113	443	16	78
L.L.	302	326	40	56
Impact	86	84	11	14
Total	501	853	67	148
S.M. (in³)	328	526	—	—

EXTERIOR BEAM ①
Non-composite

	MOMENTS (Ft-Kips)		REACTIONS (Kips)	
	0.4 Span No 1	Pier No 1	E. Abut.	Pier No 1
D.L.	133	557	20	95
L.L.	47	46	6	8
Impact	12	8	2	2
Total	192	611	28	105
S.M. (in³)	299	463	—	—

EXTERIOR BEAM ⑫
Non-composite

	MOMENTS (Ft-Kips)		REACTIONS (Kips)	
	0.4 Span No 1	Pier No 1	E. Abut.	Pier No 1
D.L.	149	618	22	108
L.L.	75	70	9	12
Impact	19	13	3	2
Total	243	701	34	122
S.M. (in³)	328	526	—	—

DESIGNED BY P.M.R.
DRAWN BY E.F.
CHECKED BY R.H.R.

STATE OF ILLINOIS
DEPARTMENT OF PUBLIC WORKS & BLDGS.
DIVISION OF HIGHWAYS

STRESS TABLES

GREENWOOD AVE. OVER
C. & N. W. R. R.

STATION 15 + 43.11

F.A. RT. 437 LAKE COUNTY SECTION 8-VB

H. W. LOCHNER, INC.
ENGINEERS
CHICAGO, ILLINOIS

SHEET 9 OF 16

4821

ROUTE NO.	SECTION	COUNTY	TOTAL SHEETS	SHEET NO.
F.A. ~~42~~ 437	8-VB	LAKE	81	44
FED. ROAD DIV. NO. 4	ILLINOIS	PROJECT		

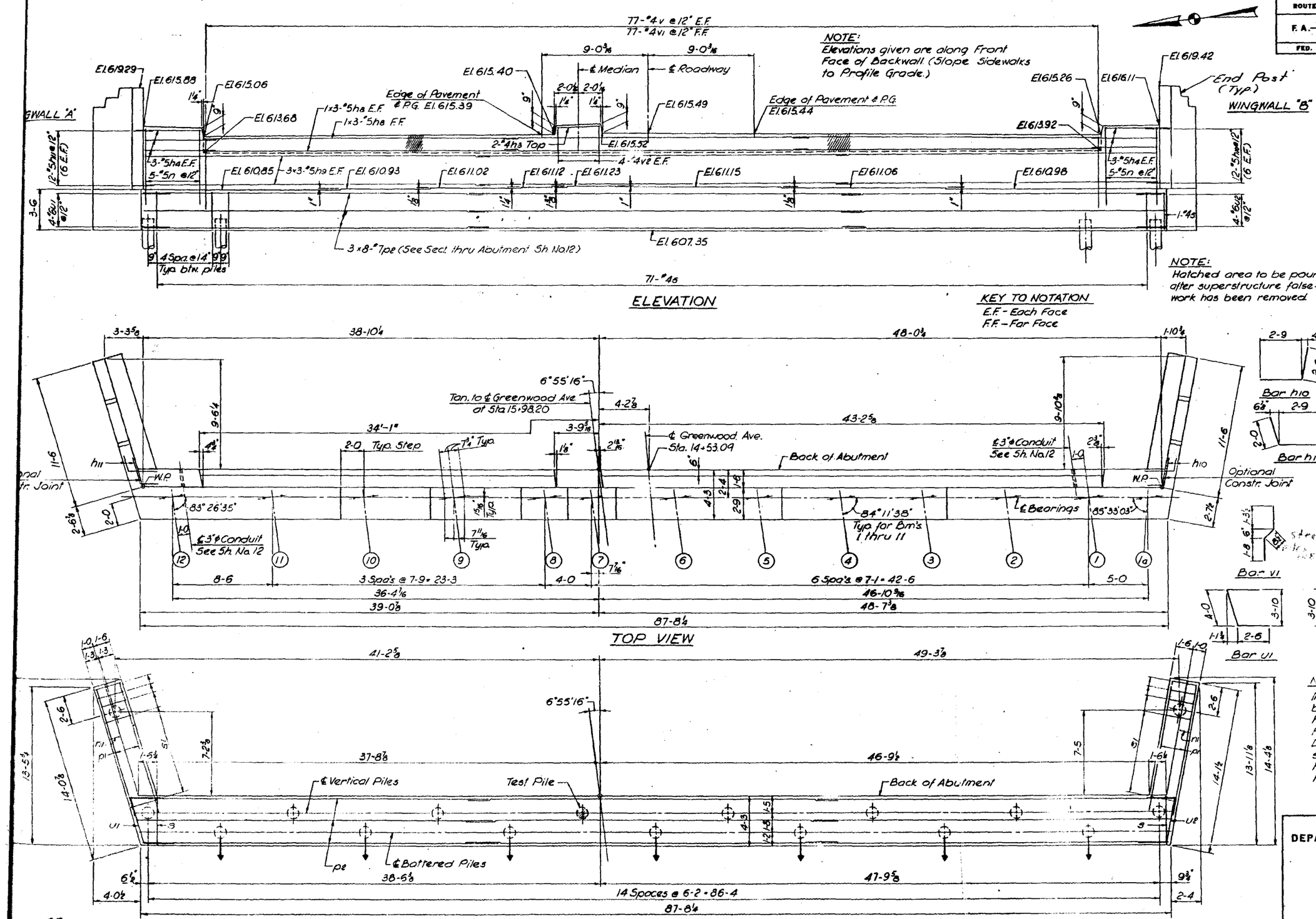

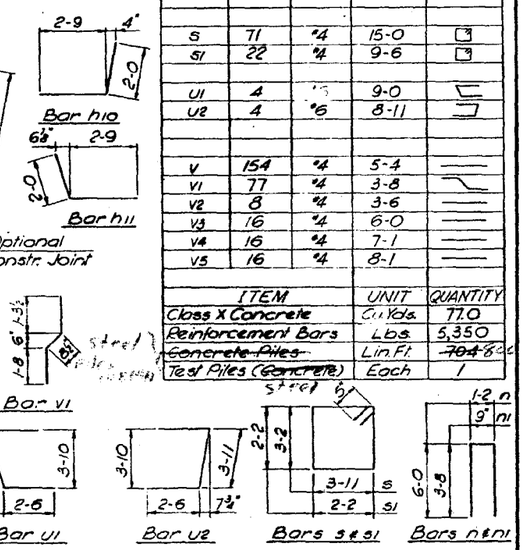

BILL OF MATERIAL

BAR	NO.	SIZE	LENGTH	SHAPE
h3	2	#4	3-8	
h4	12	#5	5-8	
h5	4	#4	3-7	
h6	4	#4	7-5	
h7	32	#4	11-3	
h8	9	#5	26-6	
h9	18	#5	30-6	
h10	12	#5	4-9	
h11	12	#5	4-9	
n	10	#5	13-2	
n1	24	#5	8-1	
p1	12	#7	11-3	
p2	24	#7	30-9	
s	71	#4	15-0	
s1	22	#4	9-6	
u1	4	#6	9-0	
u2	4	#6	8-11	
v	154	#4	5-4	
v1	77	#4	3-8	
v2	8	#4	3-6	
v3	16	#4	6-0	
v4	16	#4	7-1	
v5	16	#4	8-1	

ITEM	UNIT	QUANTITY
Class X Concrete	Cu. Yds.	77.0
Reinforcement Bars	Lbs.	5,350
~~Concrete Piles~~	Lin. Ft.	~~704~~ 800
Test Piles (~~Concrete~~)	Each	1

NOTES:

In placing reinforcement bars care shall be taken to clear Anchor Bolts.
For Expansion Guard see Sh. No. 8.
For Wingwall Elevations, Sections, and Detail of 3"φ Conduit location at Abutment see Sh. No. 12.
For Pile Details see Sh. No. 16.
Pour steps monolithically with cap.

PILE DATA

Type: ~~Concrete~~ Steel
Capacity: 32 Tons
Estimated Length ~~4 of 5~~ 5 of 7
*No. Required 16
Test Piles 1

*Does not include Test Pile.

STATE OF ILLINOIS
DEPARTMENT OF PUBLIC WORKS & BLDGS.
DIVISION OF HIGHWAYS

EAST ABUTMENT

GREENWOOD AVE. OVER
C. & N. W. R. R.

STATION 15+43.11

F.A. RT. ~~42~~ 437 LAKE COUNTY SECTION 8-VB

H. W. LOCHNER, INC.
ENGINEERS
CHICAGO, ILLINOIS

SHEET 10 OF 16

ED BY S.F.
BY E.F.
ED BY V.B.

ROUTE NO.	SECTION	COUNTY	TOTAL SHEETS	SHEET NO.
F.A. ~~42~~ 437	8-VB	LAKE	81	45
FED. ROAD DIV. NO. 4	ILLINOIS	PROJECT		

NOTE:
Elevations given are along Front Face of Backwall. (Slope Sidewalks to Profile Grade.)

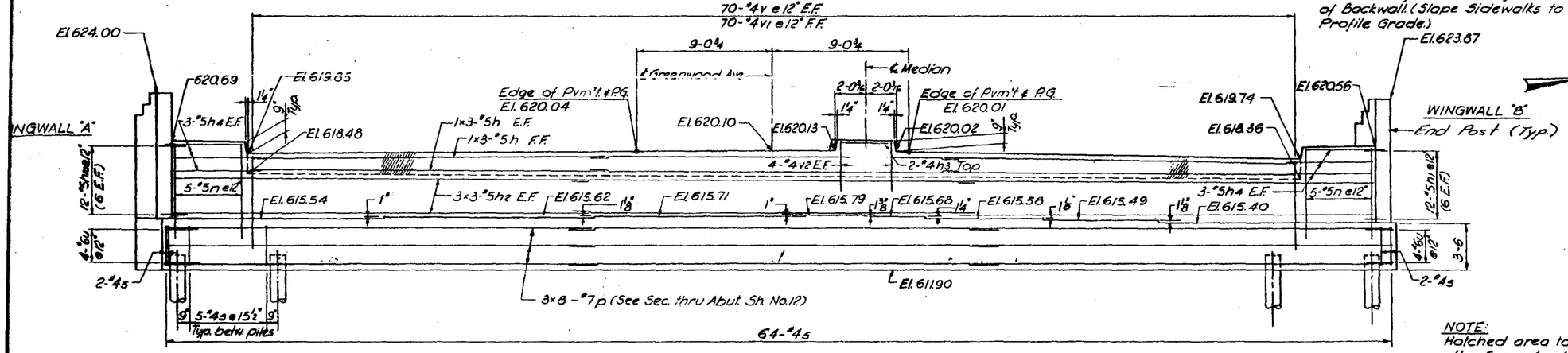

ELEVATION

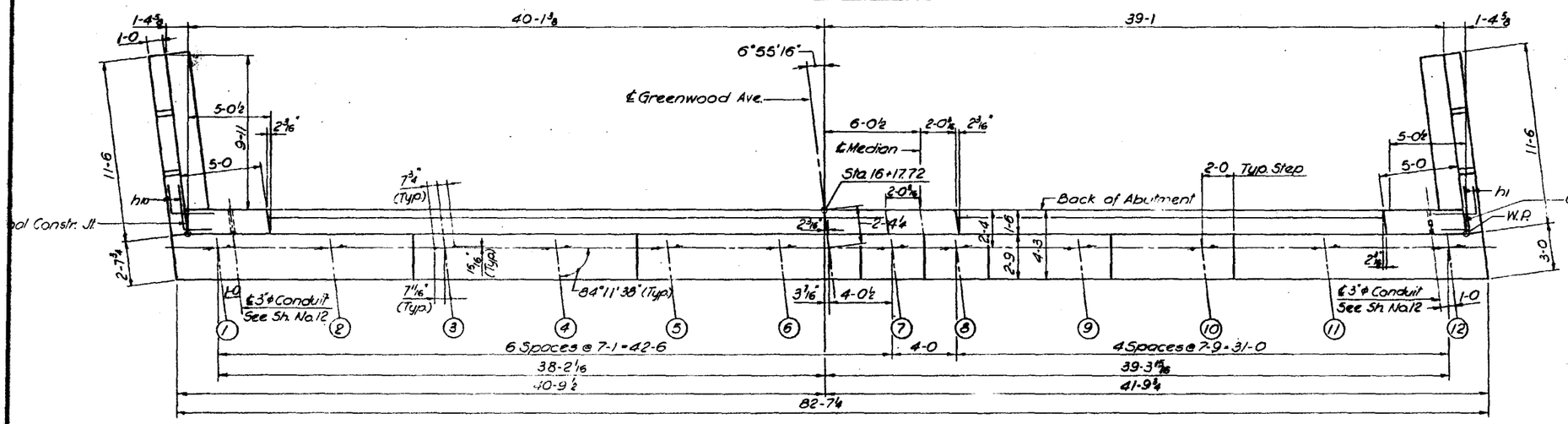

TOP VIEW

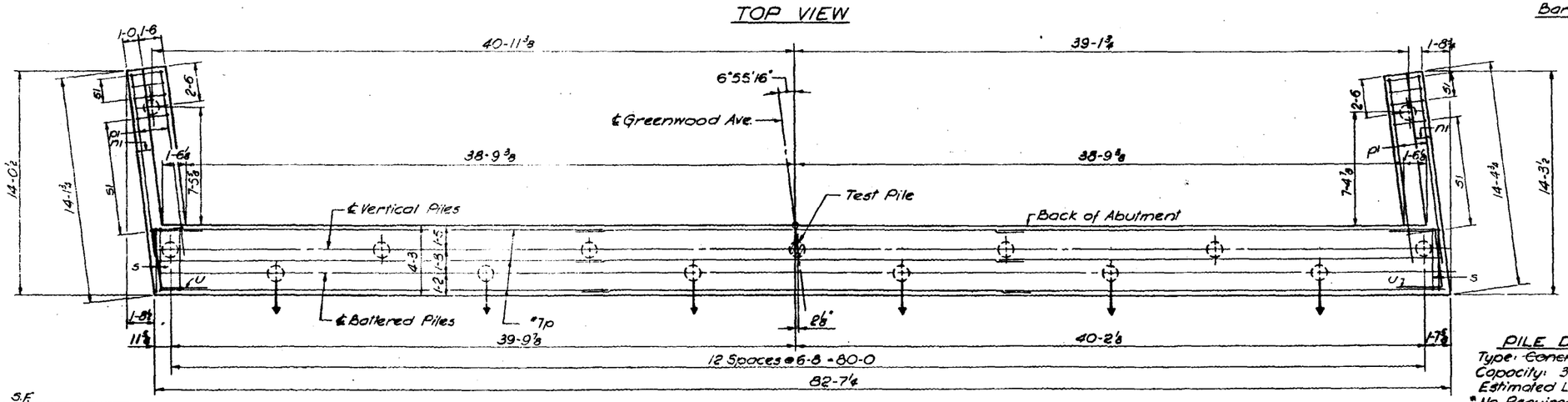

PLAN-PILE CAP

NOTE:
Hatched area to be poured after Superstructure falsework has been removed.

KEY TO NOTATION
E.F. - Each Face
N.F. - Near Face
F.F. - Far Face

BILL OF MATERIAL

BAR	NO.	SIZE	LENGTH	SHAPE
h	9	#5	23-8	
h1	12	#5	4-9	
h2	18	#5	27-7	
h3	2	#4	3-8	
h4	12	#5	5-8	
h5	4	#4	3-7	
h6	4	#4	7-5	
h7	32	#4	11-3	
h10	12	#5	4-9	
n	10	#5	13-2	
n1	24	#5	8-1	
p	24	#7	28-11	
p1	12	#7	11-3	
s	64	#4	15-0	
s1	22	#4	9-6	
u	8	#6	8-10	
v	140	#4	5-4	
v1	70	#4	3-8	
v2	8	#4	3-6	
v6	16	#4	6-7	
v7	16	#4	7-5	
v8	16	#4	8-3	

ITEM	UNIT	TOTAL
Class X Concrete	Cu. Yds.	73.2
Reinforcement Bars	Lbs.	5,050
~~Concrete Piles~~ Steel Piles	Lin. Ft.	~~672~~ 720
Test Piles (~~Concrete~~ Steel)	Each	1

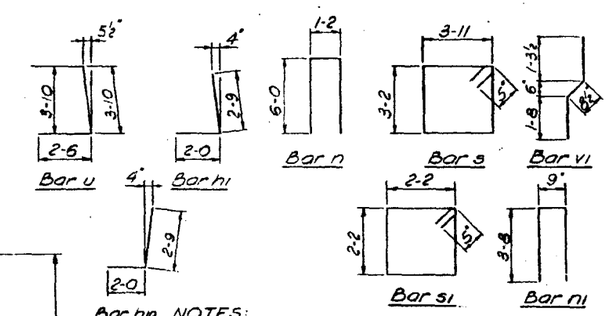

NOTES:
In placing reinforcement bars care shall be taken to clear Anchor Bolts.
For Expansion Guard see Sh. No. 8.
For Wingwall Elevations, Sections, and Detail of 3"φ Conduit location at Abutment see Sh. No. 12.
For Pile Details See Sh. No. 16.
Pour steps monolithically with cap.

PILE DATA
Type: ~~Concrete~~ Steel (HP 12 x 53)
Capacity: 32 Tons
Estimated Length: 48 ft. ± 3.0
*No. Required: 14
Test Pile: 1
*Does not include Test Pile.

STATE OF ILLINOIS
DEPARTMENT OF PUBLIC WORKS & BLDGS.
DIVISION OF HIGHWAYS

WEST ABUTMENT

GREENWOOD AVE. OVER C. & N.W. R.R.

STATION 15 + 43.11

F.A. RT. ~~42~~ 437 LAKE COUNTY SECTION 8-VB

H. W. LOCHNER, INC.
ENGINEERS
CHICAGO, ILLINOIS

SHEET 11 OF 16

BY S.F.
F.F.
BY V.B.

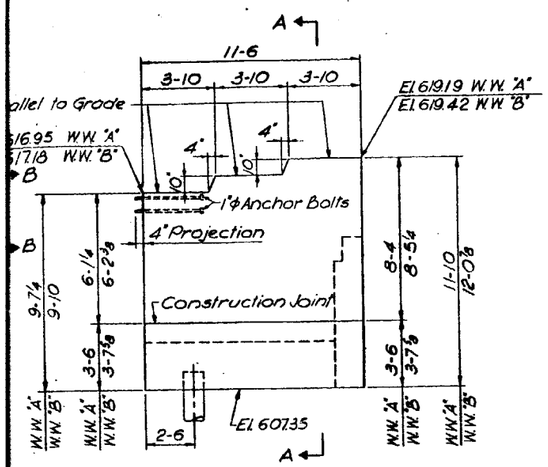

WINGWALL
(Dimensions)
East Abutment

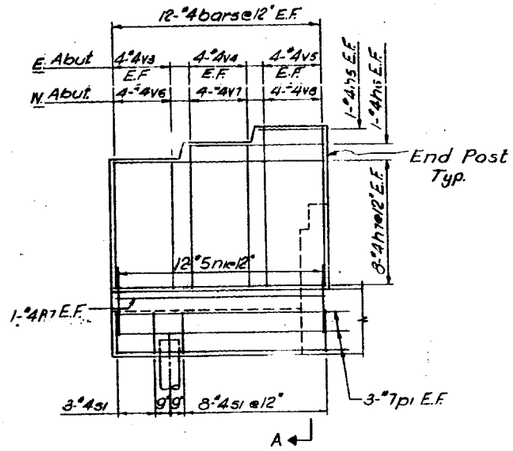

TYPICAL WINGWALL
REINFORCEMENT

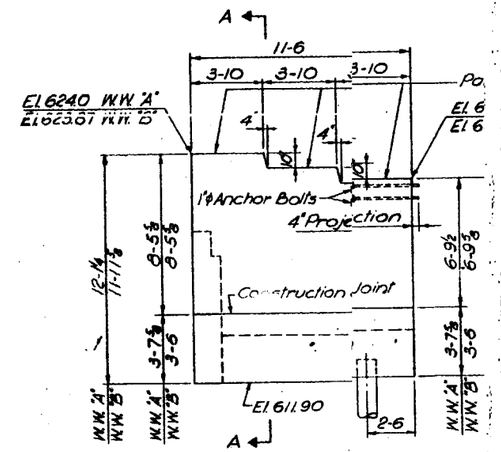

WINGWALL
(Dimensions)
West Abutment

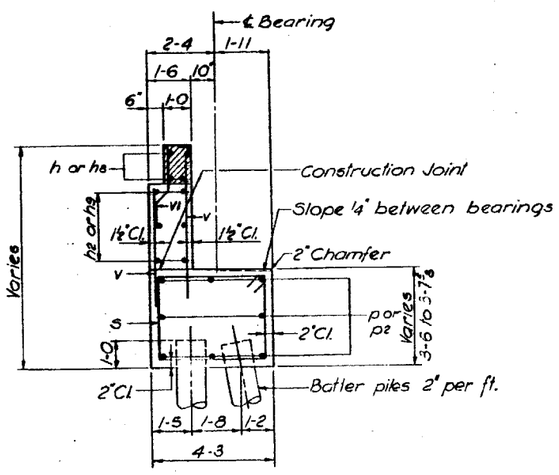

SECTION THRU ABUTMENT

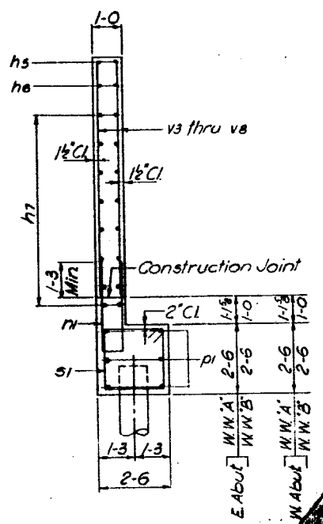

SECTION A-A

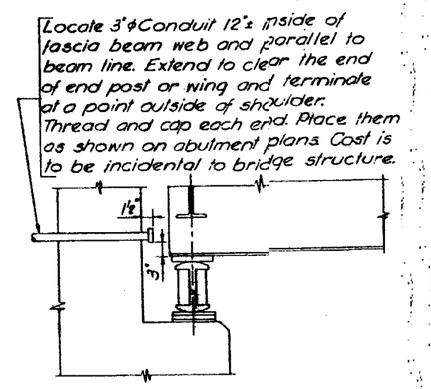

CONDUIT LOCATION AT ABUTME

NOTE:
Hatched area to be poured after superstructure falsework has been removed

GNED BY SE
WN BY FE
CKED BY VB

ROUTE NO.	SECTION	COUNTY	TOTAL SHEETS	SHEET NO.
F. A.— 42 437	8-VB	LAKE	81	47
FED. ROAD DIV. NO. 4	ILLINOIS	PROJECT		

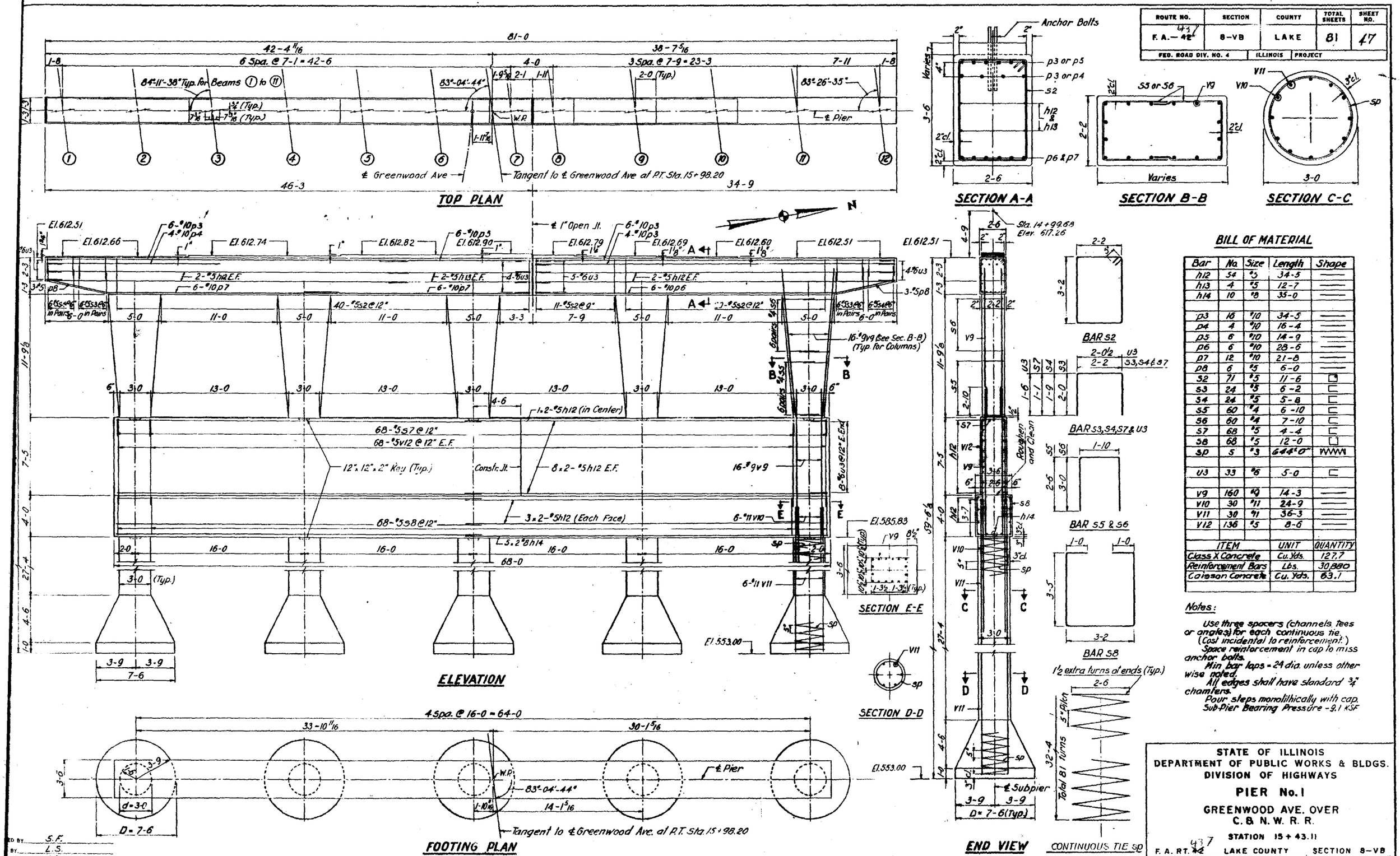

BILL OF MATERIAL

Bar	No.	Size	Length	Shape
h12	54	#5	34-5	
h13	4	#5	12-7	
h14	10	#8	35-0	
p3	16	#10	34-5	
p4	4	#10	16-4	
p5	6	#10	14-9	
p6	6	#10	28-6	
p7	12	#10	21-8	
p8	6	#5	6-0	
S2	71	#5	11-6	
S3	24	#5	6-2	
S4	24	#5	5-8	
S5	60	#4	6-10	
S6	60	#4	7-10	
S7	68	#5	4-4	
S8	68	#5	12-0	
SP	5	#3	644'-0"	
U3	33	#6	5-0	
V9	160	#9	14-3	
V10	30	#11	24-9	
V11	30	#11	36-3	
V12	136	#5	8-6	

ITEM	UNIT	QUANTITY
Class X Concrete	Cu. Yds.	127.7
Reinforcement Bars	Lbs.	30,880
Caisson Concrete	Cu. Yds.	63.1

Notes:

Use three spacers (channels, tees or angles) for each continuous tie. (Cost incidental to reinforcement.)
Space reinforcement in cap to miss anchor bolts.
Min bar laps = 24 dia. unless otherwise noted.
All edges shall have standard 3/4" chamfers.
Pour steps monolithically with cap.
Sub-Pier Bearing Pressure - 9.1 KSF

STATE OF ILLINOIS
DEPARTMENT OF PUBLIC WORKS & BLDGS.
DIVISION OF HIGHWAYS

PIER No. 1

GREENWOOD AVE. OVER
C. & N. W. R. R.

STATION 15 + 43.11

F. A. RT. 42 437 LAKE COUNTY SECTION 8-VB

H. W. LOCHNER, INC.
ENGINEERS
CHICAGO, ILLINOIS

SHEET 13 OF 16

ED BY S.F.
BY L.S.
ED BY V.B.

Reinf. Bars from 30,350# to 30,880# 10-6-70 J.M.J.

48211

ROUTE NO.	SECTION	COUNTY	TOTAL SHEETS	SHEET NO.
F.A. 437	8-VB	LAKE	81	48
FED. ROAD DIV. NO. 4	ILLINOIS	PROJECT		

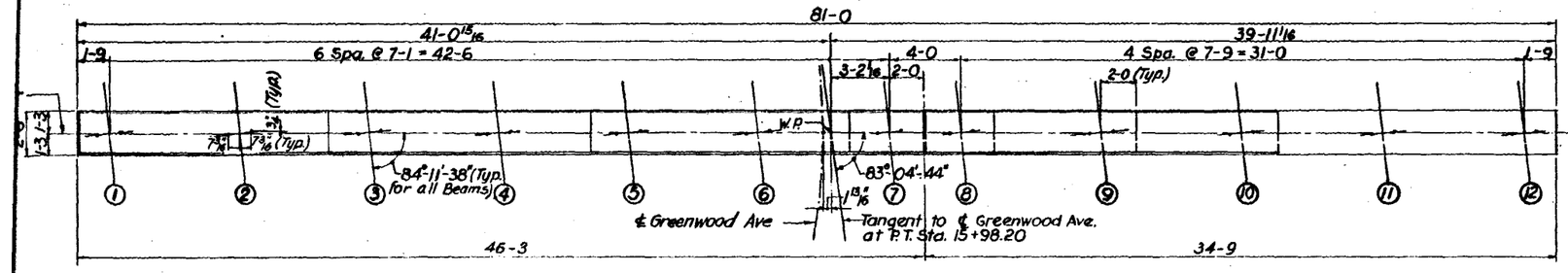

TOP PLAN

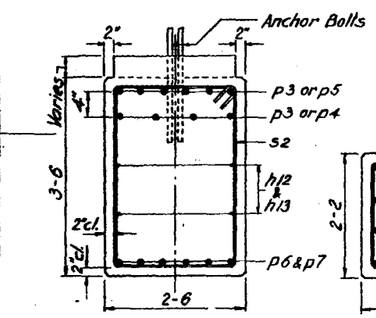

SECTION A-A

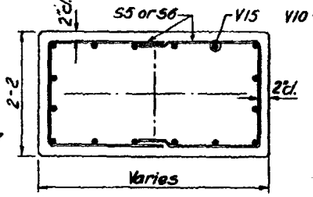

SECTION B-B

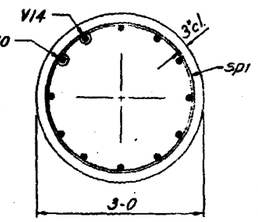

SECTION C-C

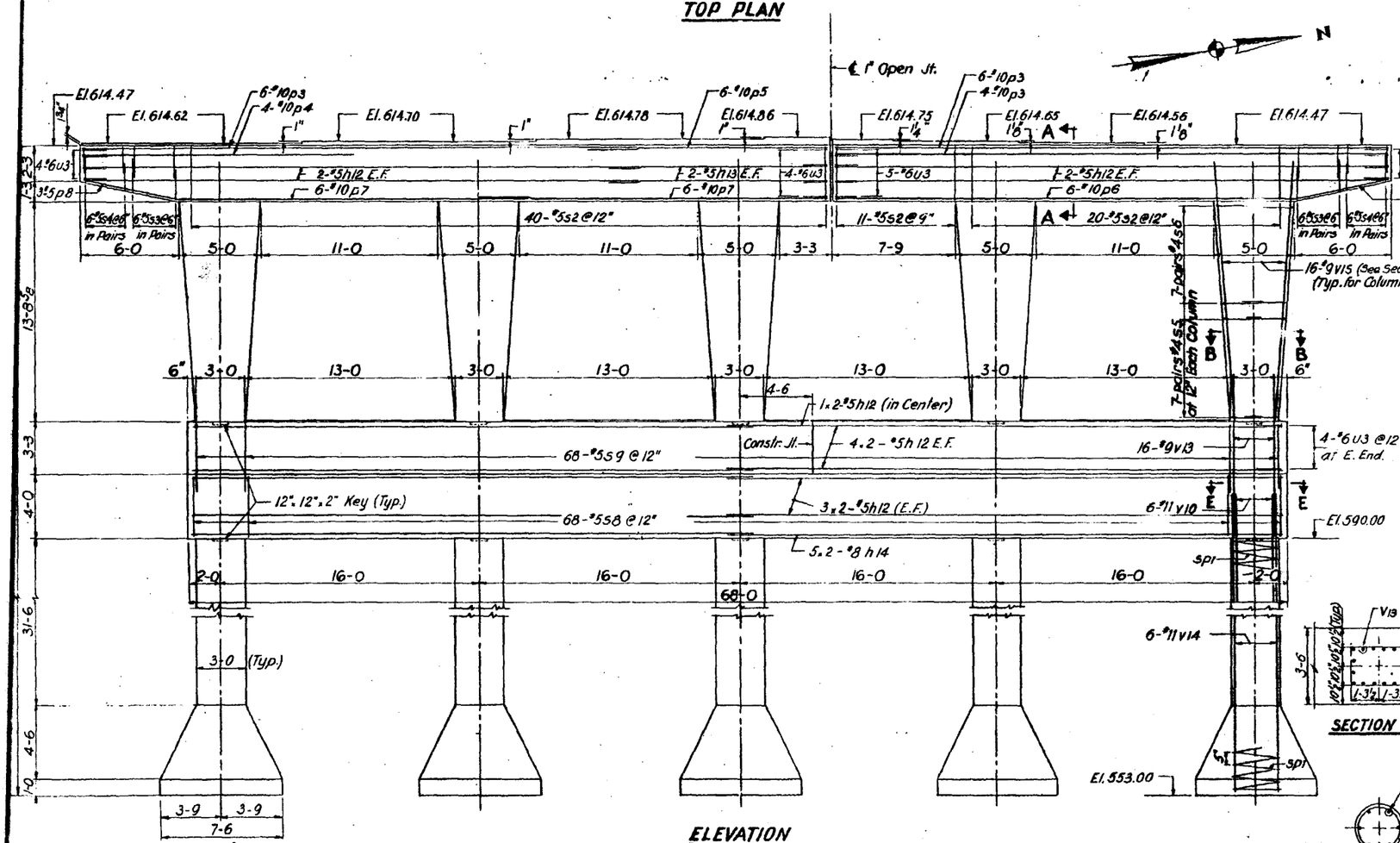

ELEVATION

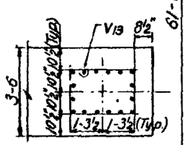

SECTION E-E

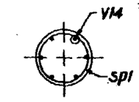

SECTION D-D

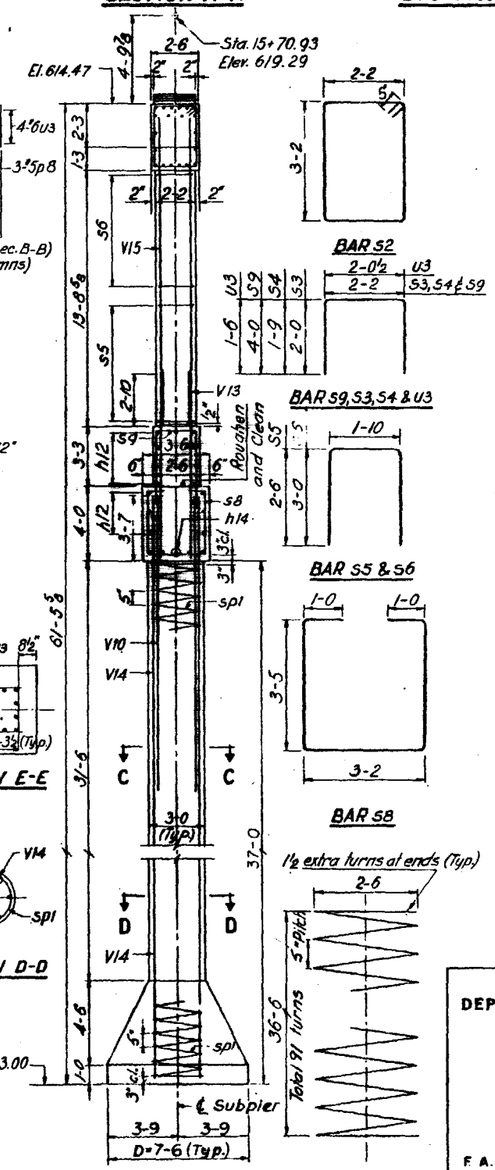

END VIEW

CONTINUOUS TIE sp1

BILL OF MATERIAL

Bar	No.	Size	Length	Shape
h12	38	#5	34-5	
h13	4	#5	12-7	
h14	10	#8	35-0	
p3	18	#10	34-5	
p4	4	#10	16-4	
p5	6	#10	14-0	
p6	6	#10	28-6	
p7	12	#10	21-8	
p8	6	#5	6-0	
s2	71	#5	11-6	
s3	24	#5	6-2	
s4	24	#5	5-8	
s5	70	#4	6-10	
s6	70	#4	7-10	
s8	68	#5	12-0	
s9	68	#5	10-2	
sp1	5	#3	714±0"	
u3	25	#6	5-0	
v10	30	#11	24-9	
v13	80	#9	10-0	
v14	30	#11	40-3	
v15	80	#9	16-2	

ITEM	UNIT	QUANTITY
Class X Concrete	Cu. Yds.	164.6
Reinforcement Bars	Lbs.	29,670
Caisson Concrete	Cu. Yds.	68.6

Notes:

Use three spacers (channels, tees or angles) for each continuous tie. (Cost incidental to reinforcement.)
Space reinforcement in cap to miss anchor bolts.
Min bar laps = 24 dia. unless other wise noted.
All edges shall have standard ¾" chamfers.
Pour steps monolithically with cap.
Sub-Pier Bearing Pressure - 9.1 KSF

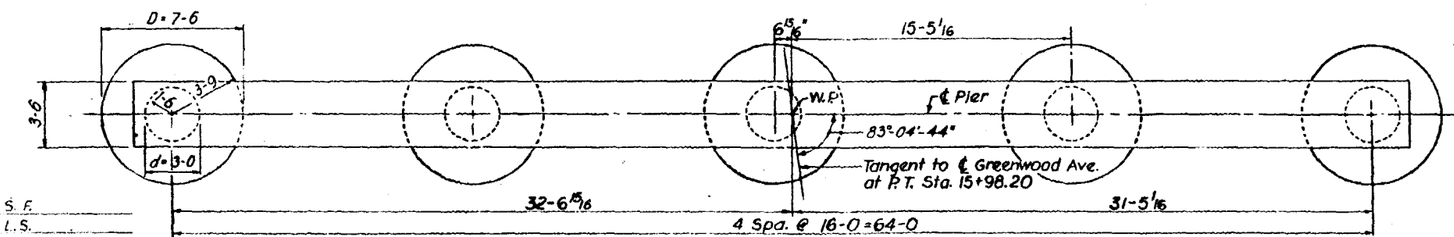

FOOTING PLAN

STATE OF ILLINOIS
DEPARTMENT OF PUBLIC WORKS & BLDGS.
DIVISION OF HIGHWAYS

PIER No. 2

GREENWOOD AVE. OVER
C. & N. W. R. R.

STATION 15 + 43.11

F.A. RT 42 LAKE COUNTY SECTION 8-VB

H. W. LOCHNER, INC.
ENGINEERS
CHICAGO, ILLINOIS

SHEET 14 OF 16

SIGNED BY S.F.
DRAWN BY L.S.
CHECKED BY V.B.

Paint Bars from 29,100# to 29,670# 10-6-70 J.M.J.

ROUTE NO.	SECTION	COUNTY	TOTAL SHEETS	SHEET NO.
F.A. ~~42~~ 437	8-VB	LAKE	81	49
FED. ROAD DIV. NO. 4	ILLINOIS	PROJECT		

BORING No. B-15

COUNTY Lake
Boring No. B-15 (E. Abut.)
Station 14+63
Offset 40.0' Lt. ℄ Greenwood Rd.

Description	Elevation	N	Qu t/s.f.	w (%)
Ground Surface	589.39			
Very Loose Pebbly Brown SANDY LOAM Fill	-5			
	582.89	3		
Very Soft Brown PEAT	-10	13		307
	578.89	2		376
Very Dense Fine to Medium Grained Pebbly Gray SANDY LOAM		100		
	575.39			
Loose Fine Grained Brown SAND	-15	6	No Recovery	
	572.89			
Very Dense Medium Grained Gray SAND		100		
	570.39			
Medium Dense Fine Grained Gray SAND	-20	26		
	567.89			
Loose Gray SAND		6	No Recovery	
	565.39			
Very Dense Fine Grained Gray SAND	-25	100		
	562.89			
Very Dense Gray SILTY LOAM		100		19
	-30	100		17
	556.89			
Hard Pebbly Gray SILTY CLAY LOAM		100	E 3.54	16
	555.39			
Hard Pebbly Gray CLAY LOAM Till	-35	80	9.70+	10
	553.39			

BORING No. B-16

COUNTY Lake
Boring No. B-16 (W. Pier)
Station 15+75
Offset 41.0' Lt. ℄ of Greenwood Rd.

Description	Elevation	N	Qu t/s.f.	w (%)
Ground Surface	590.31			
Gray SANDY LOAM with Gravel Fill	-5			
	585.31			
Mucky Black SANDY LOAM with Fibers				
	583.31			
Medium Dense Fine Grained Brown SANDY LOAM		15		
	581.31			
Very Dense Medium Grained Brown SAND	-10	100		
	579.31			
Very Dense Fine to Medium Grained Gray SANDY LOAM		64		
	576.31			
Medium Dense Fine Grained Gray SANDY LOAM	-15	26	No Recovery	
	573.81			
Very Dense Fine to Medium Grained Gray SAND		100		
	-20	100		
		81		
	-25			
	564.81			
Very Dense Gray SILTY LOAM	564.31	100		

BORING No. B-17

COUNTY Lake
Boring No. B-17 (E. Pier)
Station 14+95
Offset 34.0' Rt. ℄ of Greenwood Rd.

Description	Elevation	N	Qu t/s.f.	w (%)
Ground Surface	590.36			
Black Cinders FILL	-5			
	585.86	4		
Loose Fine Grained Brown SANDY LOAM with Peat Seams 7.0-7.5'		5		489
	580.86			
Medium Dense Fine to Medium Grained Brown SAND	-10			
	578.36	17		
Very Dense Fine to Medium Grained Brown SAND		64		
	-15	93		
		100		
	-20			
	568.36	100	No Recovery	
Dense Fine Grained Brown SAND		31		
	565.86			
Very Dense Fine to Medium Grained Brown SAND	-25			
	563.86	100		
Hard Gray SILTY LOAM		100	E 9.68	12
	-30			
	559.36			
Hard Gray SILTY CLAY	558.86	58	E 6.79	17

BORING No. B-18

COUNTY Lake
Boring No. B-18 (W. Abut.)
Station 16+15
Offset 34.0' Rt. ℄ of Greenwood Rd.

Description	Elevation	N	Qu t/s.f.	w (%)
Ground Surface	589.87			
Black Cinders FILL				
	586.37			
Medium Dense Brown SANDY LOAM Topsoil	-5			
	582.87			
Medium Dense Fine Grained Brown SANDY LOAM		21		
	-10			
		33	No Recovery	
	575.87			
Dense Fine to Medium Grained Brown SAND	-15	Sample Omitted		
		38		
		38		
	569.87			
	-20			
Very Dense Fine Grained Brown SAND		67	No Recovery	
	564.87	85	No Recovery	
	-25			
Hard Gray SILTY LOAM		100	E 5.82	17
	-30	100	E 5.85	16
	557.87	67	E 5.00	15

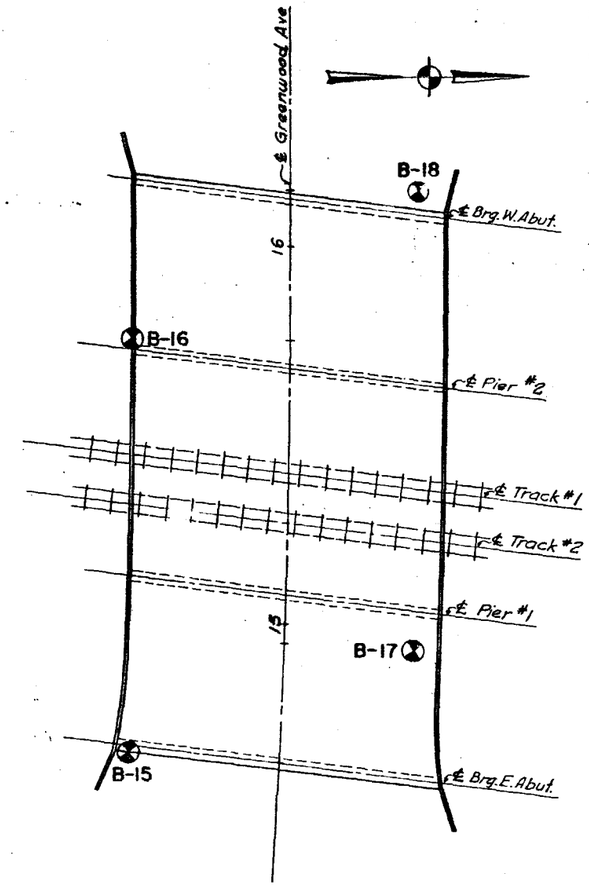

PLAN
SCALE 1" = 20'

N – Standard Penetration Test – Blows per foot to drive 2" O.D. Split Spoon Sampler 12" with 140# hammer falling 30".

Qu – Unconfined Compressive Strength – t/sf

w – Water Content – percentage of oven dry weight – %.

Type failure
B – Bulge Failure
S – Shear Failure
E – Estimated Value

STATE OF ILLINOIS
DEPARTMENT OF PUBLIC WORKS & BLDGS.
DIVISION OF HIGHWAYS

BORING LOGS

GREENWOOD AVE. OVER
C.& N.W. R.R.

STATION 15 + 43.11 437
F. A. RT. 42 LAKE COUNTY SECTION 8-VB

H. W. LOCHNER, INC.
ENGINEERS
CHICAGO, ILLINOIS

SHEET 15 OF 16

ROUTE NO.	SECTION	COUNTY	TOTAL SHEETS	SHEET NO.
F.A. - 42	8 - VB	LAKE	81	50
FED. ROAD DIV. NO. 4		ILLINOIS	PROJECT	

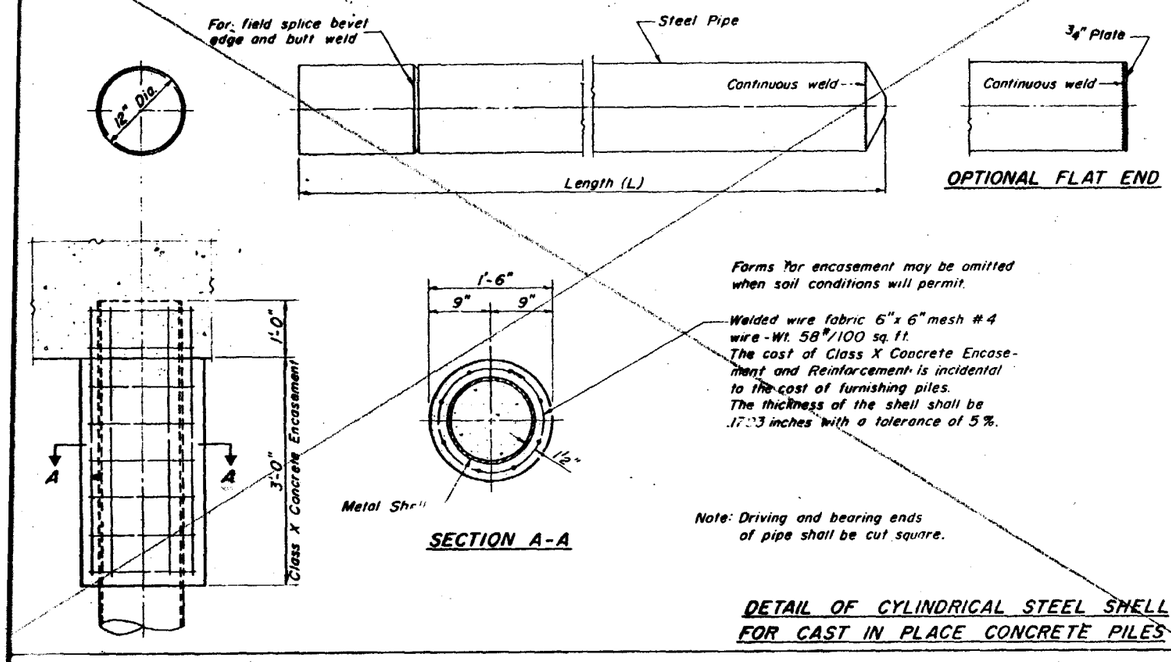

DETAIL OF CYLINDRICAL STEEL SHELL FOR CAST IN PLACE CONCRETE PILES

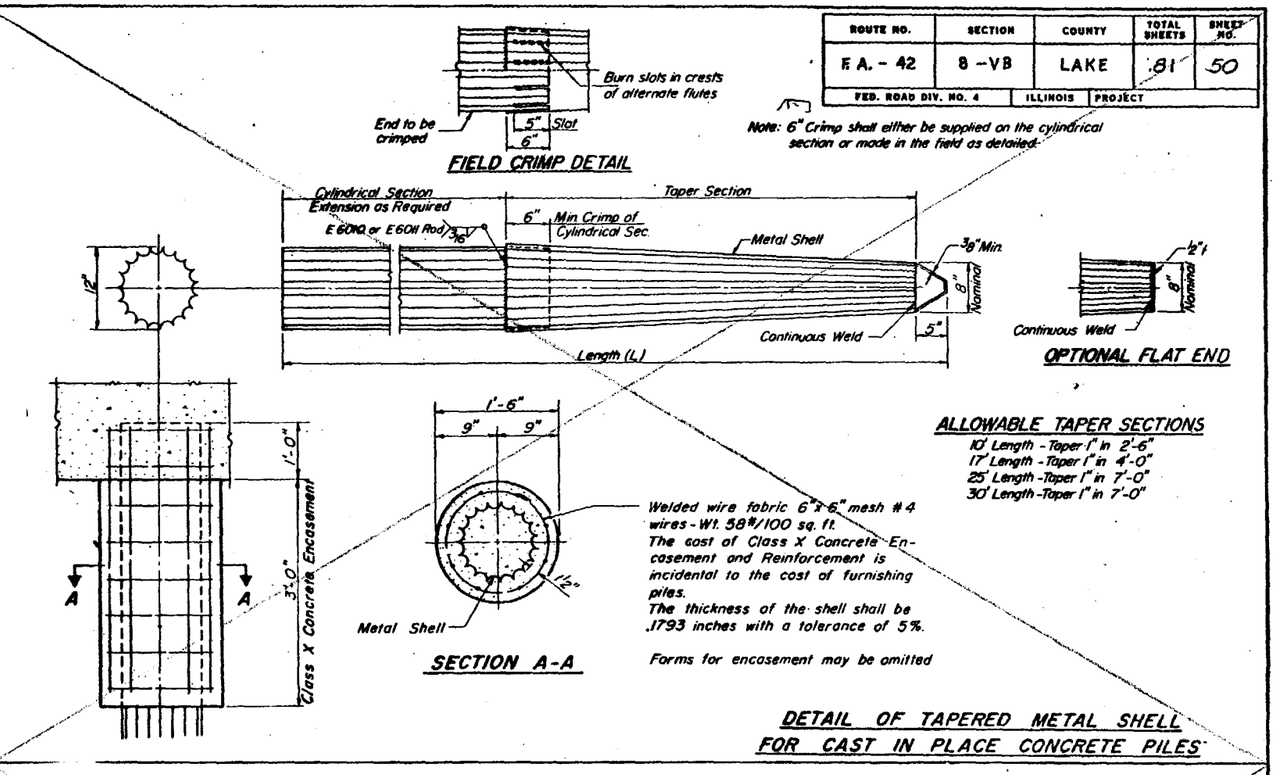

DETAIL OF TAPERED METAL SHELL FOR CAST IN PLACE CONCRETE PILES

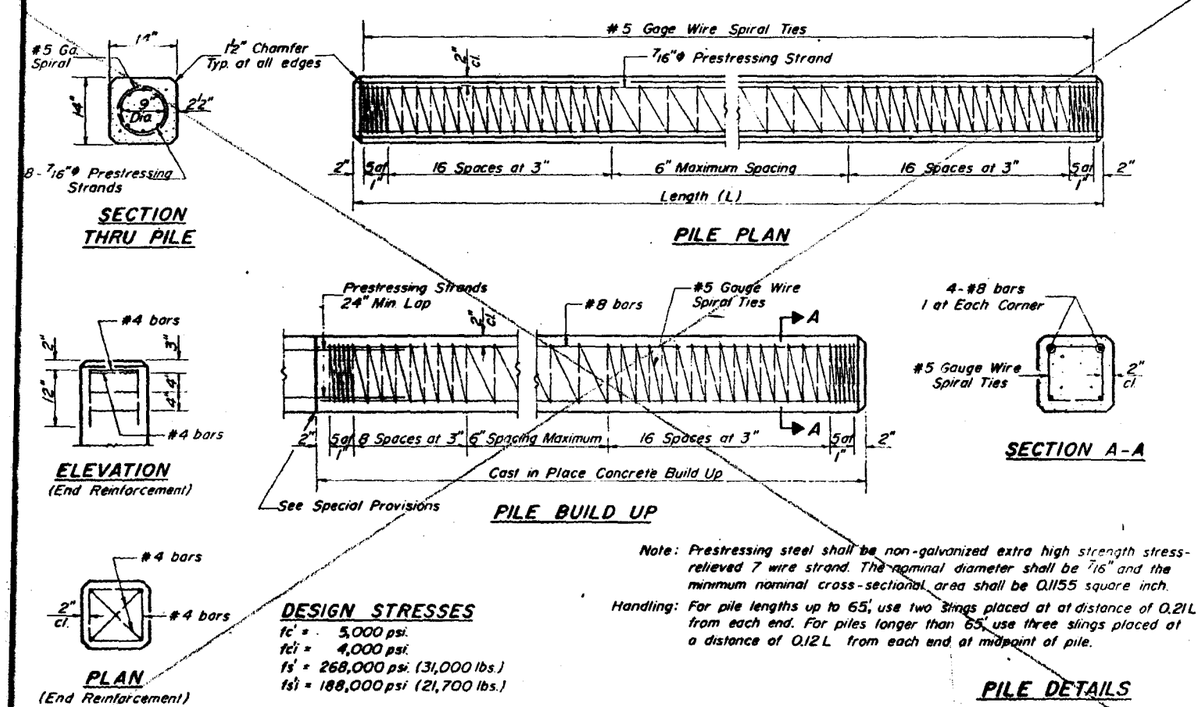

DETAIL OF PRECAST PRESTRESSED CONCRETE PILES

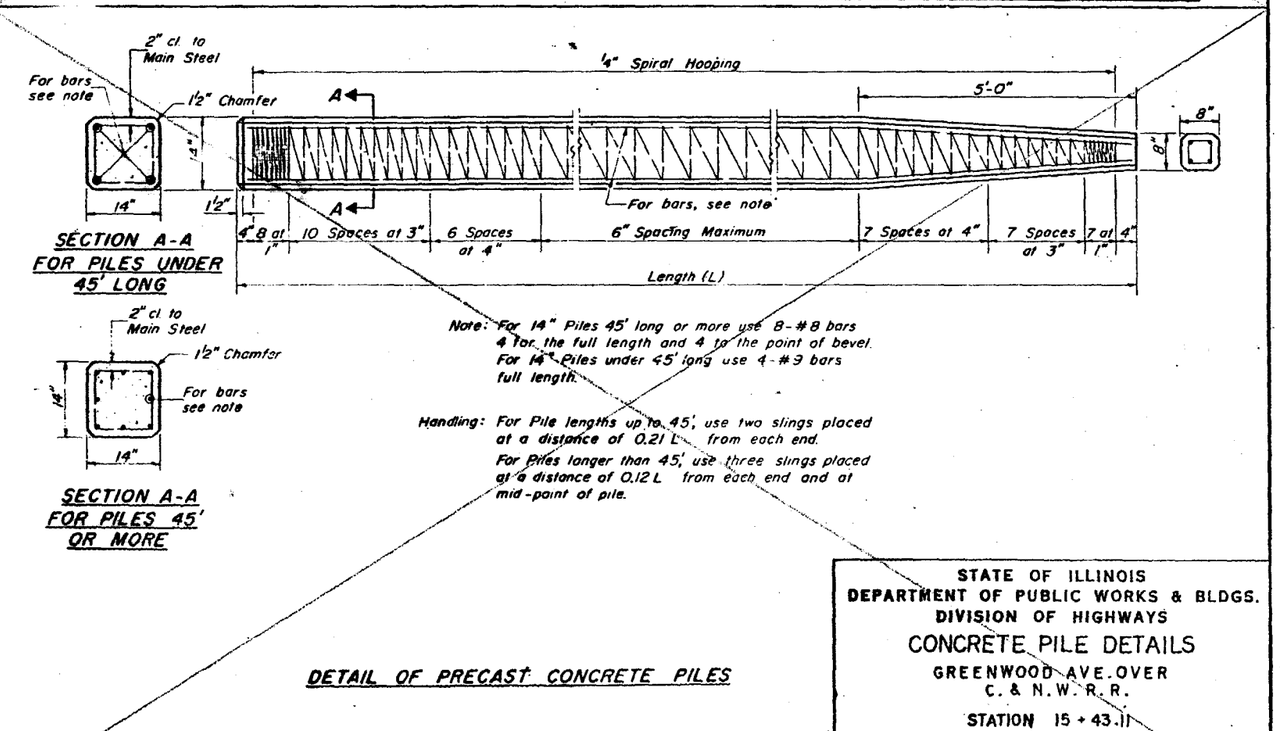

DETAIL OF PRECAST CONCRETE PILES

STATE OF ILLINOIS
DEPARTMENT OF PUBLIC WORKS & BLDGS.
DIVISION OF HIGHWAYS

CONCRETE PILE DETAILS

GREENWOOD AVE. OVER
C. & N.W. R.R.

STATION 15 + 43.11

F.A. RT. 42 LAKE COUNTY SECTION 8-VB

H. W. LOCHNER, INC.
ENGINEERS
CHICAGO, ILLINOIS

SHEET 16 of 16

ROUTE NO.	SECTION	COUNTY	TOTAL SHEETS	SHEET NO.
F.A.-42	8-HB	LAKE	81	51
FED. ROAD DIV. NO. 4	ILLINOIS	PROJECT		

B.M. #N-35 El. 590.460
Chiseled Square on the concrete base of a Signal box. 18' west of the west ℄ N.W. Track & 40' south of the ℄ Greenwood Ave.

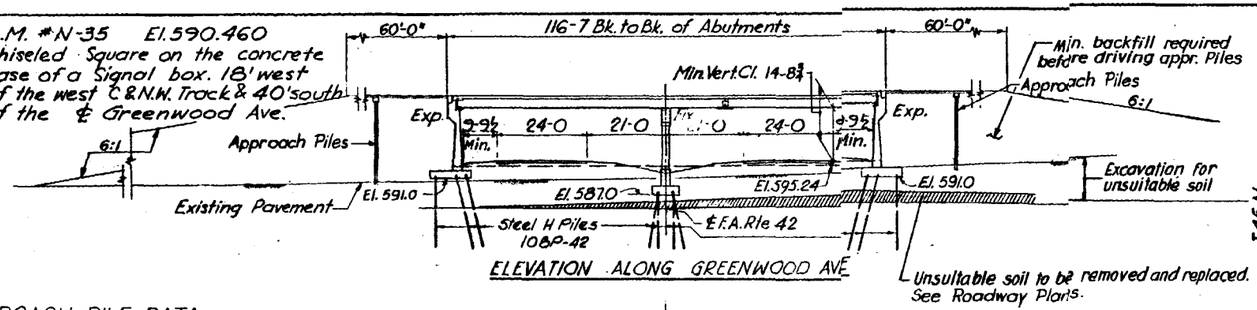

ELEVATION ALONG GREENWOOD AVE

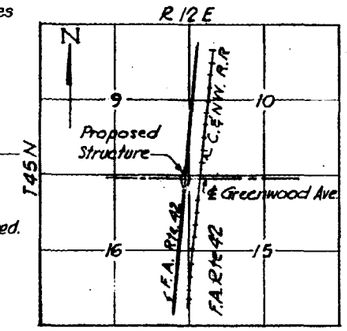

Location Plan

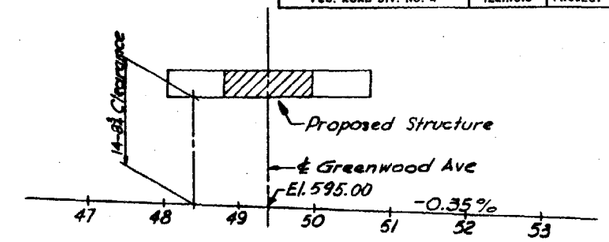

Profile of F.A. Rte. 42
Scale: Horiz. 1" = 100'; Vert. 1" = 10'

APPROACH PILE DATA

Type: Creosoted Timber Piles
Required Length: East Abut. 34 Ft.
West Abut. 31 Ft.
Piles Required: 70 (35 at Ea. Abut.)

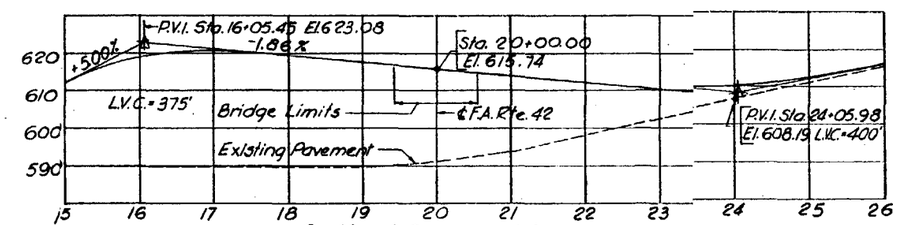

Profile of Greenwood Ave.
Scale: Horiz. 1" = 100'; Vert. 1" = 20'

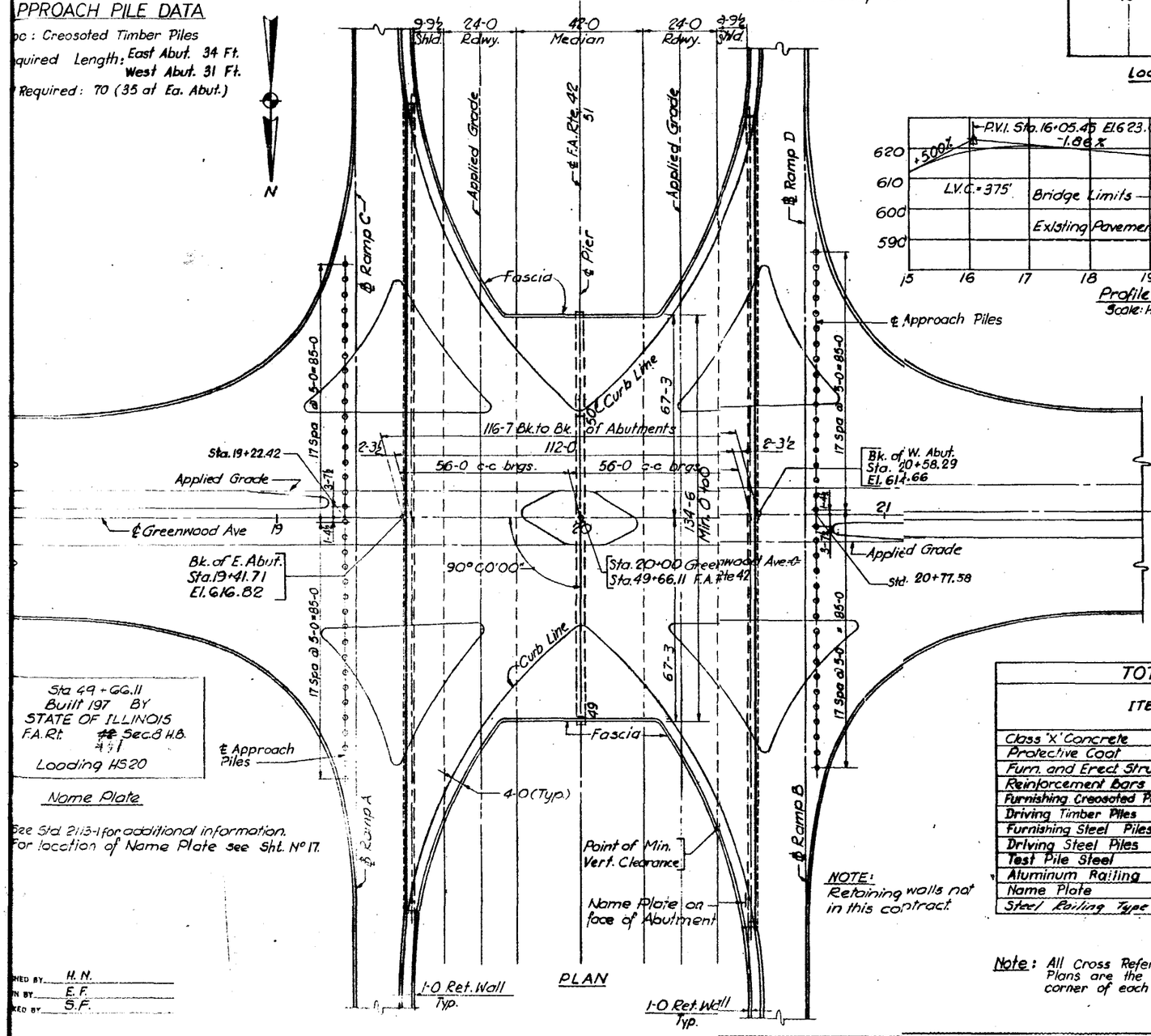

PLAN

Sta. 49 + 66.11
Built 197 BY
STATE OF ILLINOIS
F.A. Rt. 42 Sec. 8 H.B.
Loading H520

Name Plate

See Std. 2113-1 for additional information.
For location of Name Plate see Sht. No. 17.

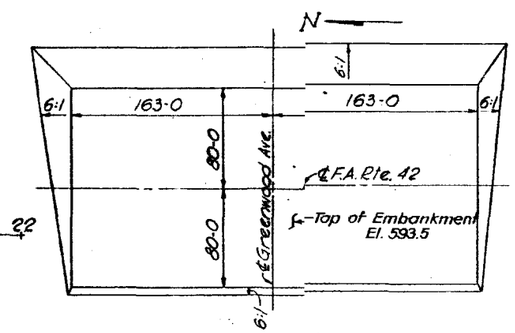

Embankment Plan
This embankment required before construction of Piers and Abutments.

GENERAL NOTES

All reinforcement bars shall be lapped 24 diameters unless otherwise shown.

Fasteners shall be high strength. Bolts ¾" ϕ, open holes 13/16" ϕ, unless otherwise noted.

Calculated weight of Structural Steel = 484,510 Lbs.

Diaphragm connections may be adapted to shop welding subject to approval by the Engineer.

The Basic Lead Silico Chromate paint system shall be used for shop and field painting of Structural Steel.

Field welding of construction accessories will not be permitted to the bottom flange of beams or girders nor to the flange for a distance equal to one-fourth the span length each way from the pier supports. Field welding in other areas will be permitted only when approved by the Engineer.

Anchor bolts shall be set before riveting diaphragms (bolting cross frames) over supports.

The Contractor shall drive five steel test piles in permanent location two at each abutment and one at the pier as directed by the Engineer before ordering the remainder of piles.

Excavation for portions of structures in the embankments shall not be classified.

The concrete rail section above the mandatory construction joint at the top of the slab shall be constructed of Class X Concrete, except the aggregates shall conform to the requirements of Handrail Concrete.

TOTAL BILL OF MATERIALS

ITEM	UNIT	SECTION 8-HB SUPER-STRUCTURE	SUB-STRUCTURE	TOTAL
Class 'X' Concrete	Cu. Yds.	647.8	1583.1	2,230.9
Protective Coat	Sq. Yds.	2267	—	2,267
Furn. and Erect. Structural Steel	Lump Sum	1	—	1
Reinforcement Bars	Lbs.	169,950	168,770	338,720
Furnishing Creosoted Piles 20.1 to 38 Ft.	Lin. Ft.	—	2275	2,275
Driving Timber Piles	Lin. Ft.	—	2275	2,275
Furnishing Steel Piles 10 BP 42	Lin. Ft.	—	5544	5,544
Driving Steel Piles	Lin. Ft.	—	5544	5,544
Test Pile Steel	Each	—	5	5
Aluminum Railing Type L	Lin. Ft.	380	—	380
Name Plate	Each	—	1	1
Steel Railing Type M	Lin. Ft.	380		380

NOTE: Retaining walls not in this contract.

Note: All Cross Reference Sheet Numbers shown on the Bridge Plans are the numbers located in the lower right hand corner of each Sheet.

DESIGN STRESSES

fc – 1400 #/□" Super. & 1000 #/□" Sub.
fs – 20,000 #/□" Reinf.
fs – 20,000 #/□" Struct. (A-36 Steel)
vc – 75 #/□" Footings
n – 10
Loading H520-44
Allowance for future W.S. = 25 #/ft.²
Allowable Live Load Deflection for WF Beams = 1/1000 of Span Length.

STATE OF ILLINOIS
DEPARTMENT OF PUBLIC WORKS & BLDGS.
DIVISION OF HIGHWAYS

GENERAL PLAN

GREENWOOD AVE. OVER
F.A. ROUTE 42

437 STATION 49 + 66.11

F.A. RT. 42 LAKE COUNTY SECTION 8-HB

H. W. LOCHNER, INC.
ENGINEERS
CHICAGO, ILLINOIS

SHEET 1 of 20

DESIGNED BY H. N.
DRAWN BY E. F.
CHECKED BY S. F.

ROUTE NO.	SECTION	COUNTY	TOTAL SHEETS	SHEET NO.
F.A. ~~42~~ 437	8-HB	LAKE	81	52
FED. ROAD DIV. NO. 4	ILLINOIS	PROJECT		

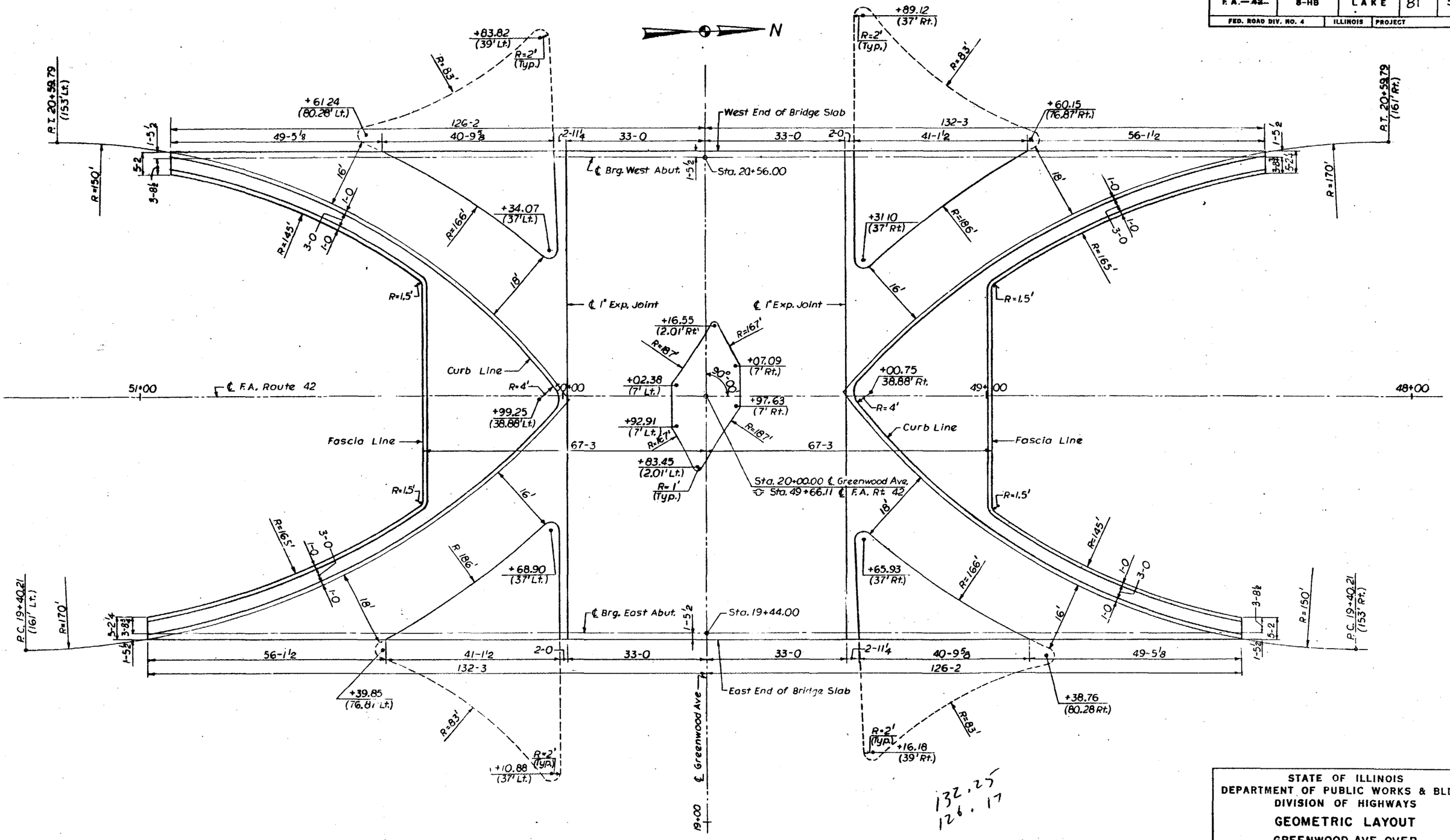

DESIGNED BY V.B.
DRAWN BY V.B.
CHECKED BY S.F.

STATE OF ILLINOIS
DEPARTMENT OF PUBLIC WORKS & BLDGS.
DIVISION OF HIGHWAYS

GEOMETRIC LAYOUT

GREENWOOD AVE. OVER
F.A. ROUTE 42

STATION 49+66.11

F.A. RT. ~~42~~ 437 LAKE COUNTY SECTION 8-HB

H. W. LOCHNER, INC.
ENGINEERS
CHICAGO, ILLINOIS

SHEET 2 OF 20

ROUTE NO.	SECTION	COUNTY	TOTAL SHEETS	SHEET NO.
F.A.-~~42~~ 437	8-HB	LAKE	81	53
FED. ROAD DIV. NO. 4	ILLINOIS	PROJECT		

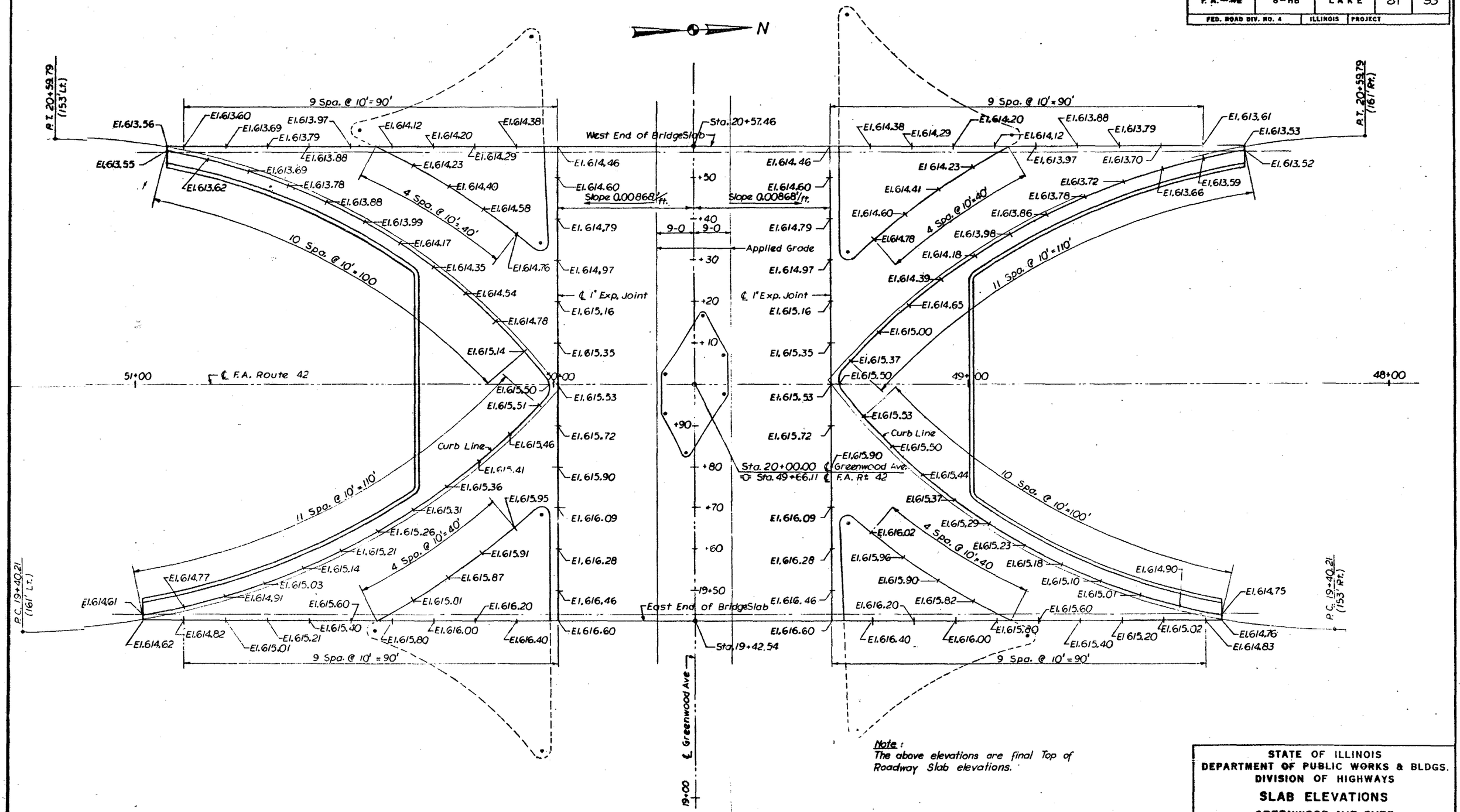

Note:
The above elevations are final Top of Roadway Slab elevations.

V. B. _____
V. B. _____
S. F. _____

STATE OF ILLINOIS
DEPARTMENT OF PUBLIC WORKS & BLDGS.
DIVISION OF HIGHWAYS

SLAB ELEVATIONS

GREENWOOD AVE. OVER
F.A. ROUTE 42

STATION 49 + 66.11

F.A. RT. ~~42~~ 437 LAKE COUNTY SECTION 8-HB

H. W. LOCHNER, INC.
ENGINEERS
CHICAGO, ILLINOIS

SHEET 3 OF 20

ROUTE NO.	SECTION	COUNTY	TOTAL SHEETS	SHEET NO.
F.A.—42 (437)	8—HB	LAKE	81	54
FED. ROAD DIV. NO. 4	ILLINOIS	PROJECT		

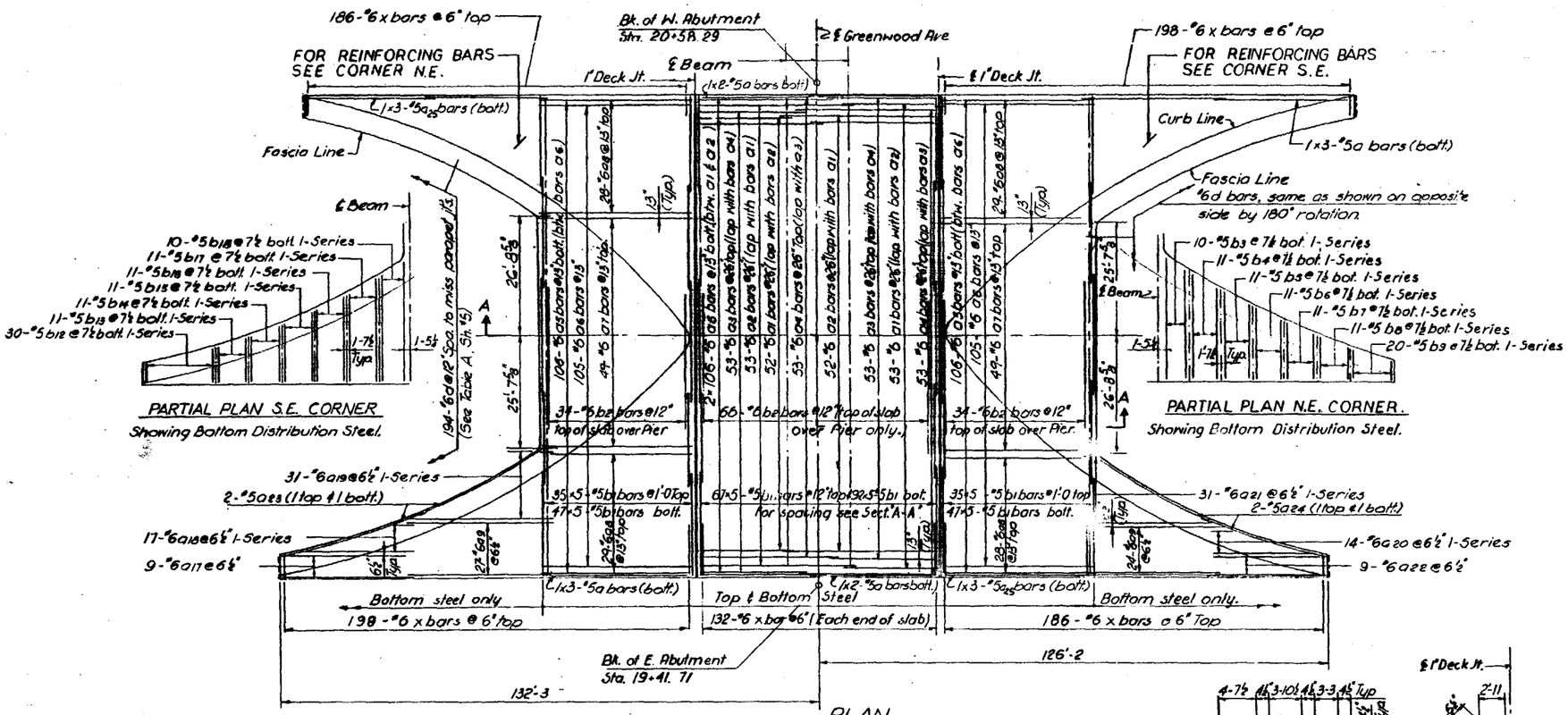

Mark	L	H	D
a3	29'-10	8"	6"
a4	37'-9	8"	6"
a7	33'-10	8"	6"
a8	30'-1	8"	6"
X	4-4	1'-2	7"

BAR LIST

Mark	No. Reqd	Size	Length	Length Series Bar	Increm	Shape
a1	105	#6	28-11	—	—	
a2	105		49-4	—	—	
a3	106		30-6	—	—	
a4	106		38-5	—	—	
a5	424		33-10	—	—	
a6	210		35-3	—	—	
a7	98		34-6	—	—	
a8	114		30-9	—	—	
a9	102		33-2	—	—	
a10	34		2-Series	4-3 to 30-3	1-7½	
a11	56		2-Series	6-0 to 31-4	11¼"	
a12	72		32-6	—	—	
a13	18		32-0	—	—	
a14	30		2-Series	4-9 to 28-6	1-8½	
a15	52		34-6	—	—	
a16	64		2-Series	5-8 to 36-0	11¼"	
a17	18		35-3	—	—	
a18	34		2-Series	2-9 to 33-5	1-11	
a19	62		2-Series	2-3 to 31-11	11⅛"	
a20	28		2-Series	3-3 to 27-1	1-10	
a21	62		2-Series	3-0 to 32-0	11⅛"	
a22	18	#6	29-2	—	—	
a23	8	#5	36-6	—	—	
a24	8	#5	33-6	—	—	
a25	6	#5	31-6	—	—	
b1	1615	#5	23-6	—	—	
b2	134	#6	23-0	—	—	
b3	20	#5	2-Series	26-0 to 30-0	5¼"	
b4	22		21-6 to 25-6		4¼"	
b5	22		17-0 to 20-6		4¼"	
b6	22		14-0 to 16-6		3"	
b7	22		10-6 to 12-9		2¼"	
b8	22		8-0 to 10-1		2⅛"	
b9	40		4-9 to 7-6		1¼"	
b10	58		13-7 to 28-9		6½"	
b11	60		3-6 to 13-2		4"	
b12	60		4-6 to 8-9		1¾"	
b13	22		9-4 to 11-6		2⅛"	
b14	22		11-9 to 14-6		3¼"	
b15	22		15-1 to 17-10		3¼"	
b16	22		18-7 to 21-9		3¾"	
b17	22		22-7 to 26-4		4½"	
b18	20		27-0 to 31-1		5⅛"	
b19	68		3-7 to 13-2		3½"	
b20	62	#5	2-Series	13-4 to 29-7	6½"	
d	388	#6	4-0	—	—	
X	1032	#6	5-6			

NOTE:
For additional notes, sections and details see Sheet No. 5.
For deck geometry & dimensions see Sheet No. 2.

DESIGNED BY L.K.
DRAWN BY J.B. & E.F.
CHECKED BY L.K.

STATE OF ILLINOIS
DEPARTMENT OF PUBLIC WORKS & BLDGS.
DIVISION OF HIGHWAYS

SLAB REINFORCEMENT

GREENWOOD AVE. OVER
F.A. ROUTE 42

STATION 49+66.11

F.A. RT. 42 (437) LAKE COUNTY SECTION 8-HB

H. W. LOCHNER, INC.
ENGINEERS
CHICAGO, ILLINOIS

SHEET 4 OF 80

ROUTE NO.	SECTION	COUNTY	TOTAL SHEETS	SHEET NO.
F.A.-42 (437)	8-HB	LAKE	81	55
FED. ROAD DIV. NO. 4	ILLINOIS	PROJECT		

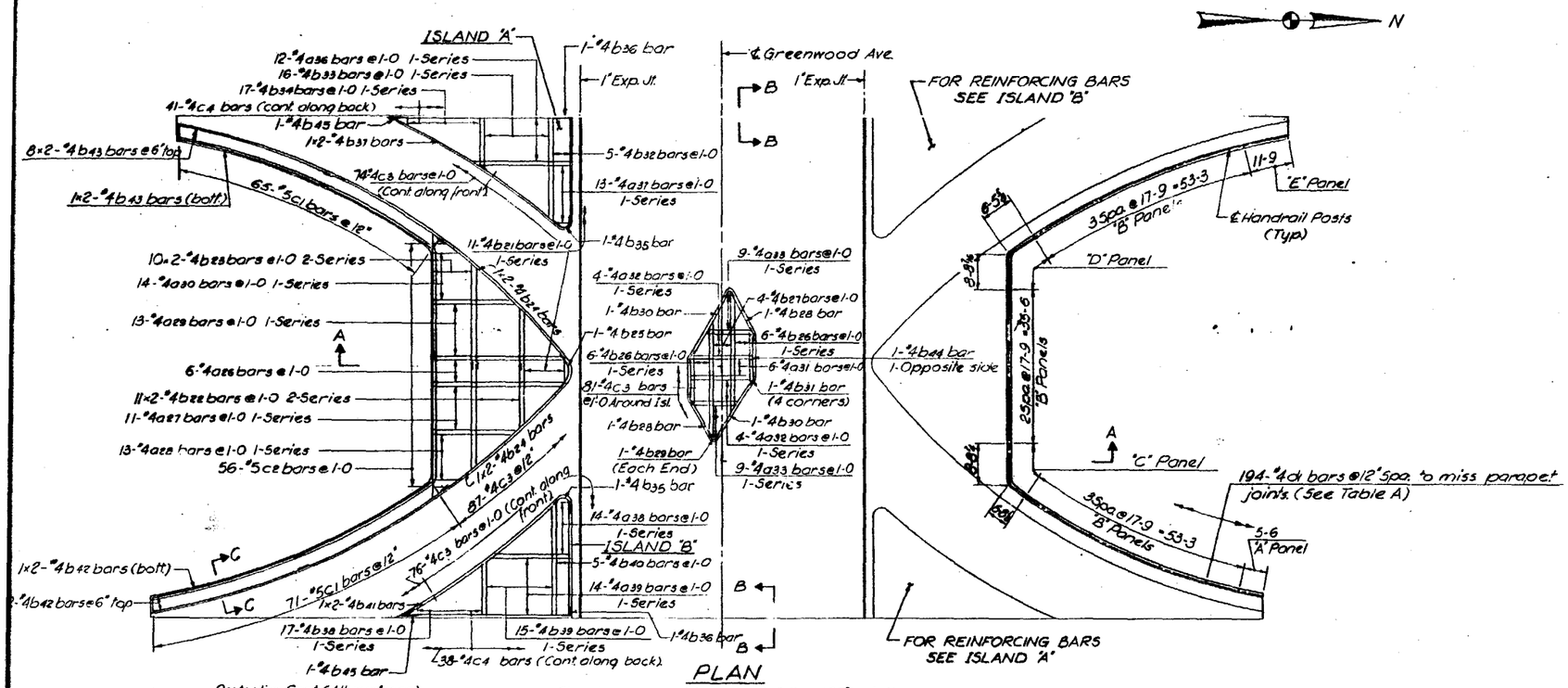

PLAN

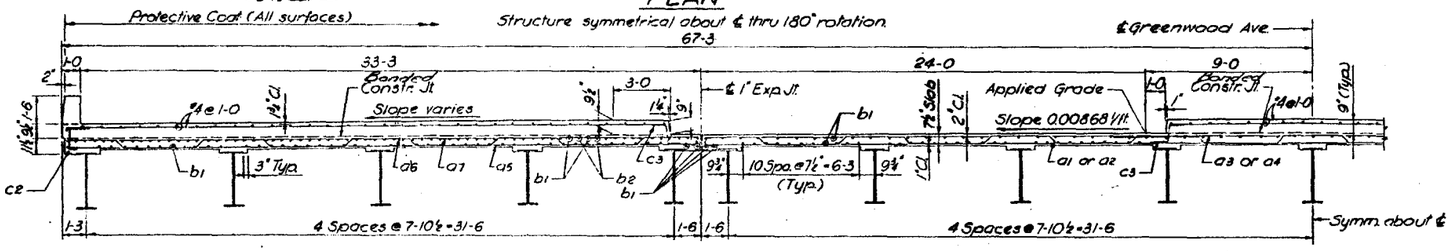

HALF SECTION A-A

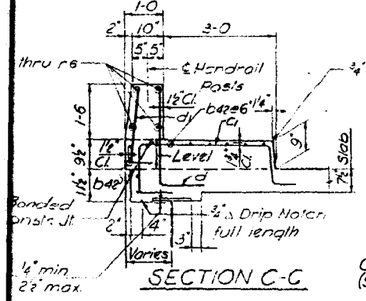

SECTION C-C

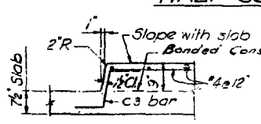

TYPICAL SECTION THRU ISLANDS

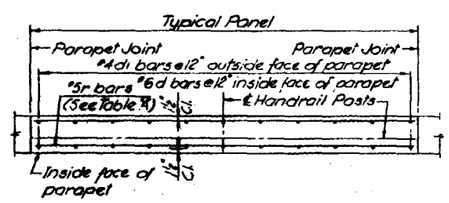

All Panel spacing (parapet joint spacing) is measured along ℄ handrail posts.

TYPICAL PLAN OF PARAPET PANEL REINFORCEMENT

(See Table A)

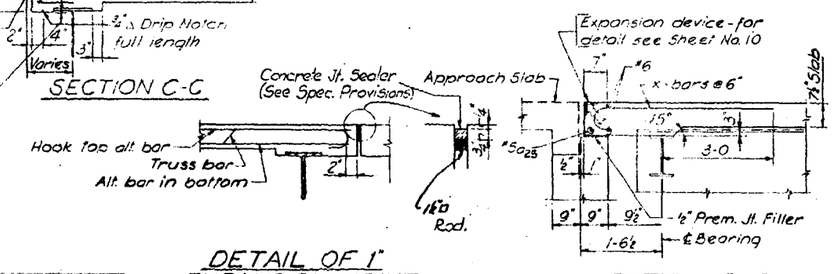

DETAIL OF 1" EXPANSION JOINT

SECTION B-B

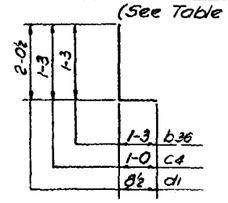

Bars b36, c4 & d1

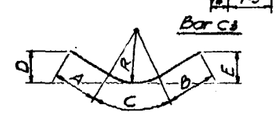

Bars b25, b29, b33, r2, r3, r4 & r5

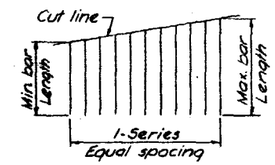

No. req'd in bar list equals total bars for number of series ie. 12 bars 2-series equals 6 bars each series.

SHOP CUT SKETCH

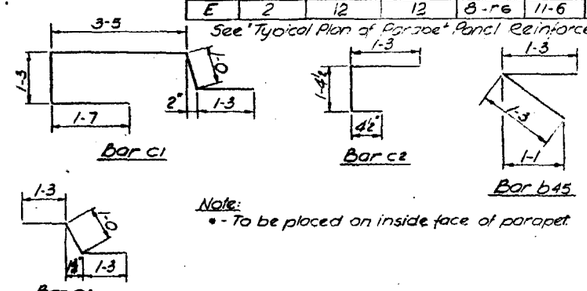

Note:
* - To be placed on inside face of parapet.

General Slab Notes:
Bars indicated thus 8x2-#5 etc. indicate 8 lines of bars with 2 lengths per line.
Minimum bar laps - 24 diameters.
For Standard Fillet Detail and Dead Load Deflection Diagram see Sh. No. 7
No reinforcement shall pass through parapet joints.
For Parapet joint detail see Sh. No. 6

BAR BENDS

Mark	A	B	C	D	E	R
b25	1-3	1-3	5-6	1-9	1-9	3-9
b29	1-0	1-0	1-6	1-3	1-3	9"
b31	1-0	1-0	6"	3 5/32"	3 5/32"	9"
b35	1-3	1-3	4-3	2-4	2-4	1-9
r2	7-4	5-4	2-3	3-7¼	2-8¼	2-4½
r3	7-4	5-4	1-8	3-7	2-8¼	1-9
r4	5-1	7-4	2-3	2-7¼	3-8	2-4½
r5	5-1	7-4	1-8	2-7	3-7¼	1-9

TABLE "A"

Panels		#6d & #4d1 ea. panel		BAR LIST #5 "r" bars		
Mark	No. Req'd	#6d	#4d1	No. Req'd	Length	Shape
A	2	6	6	8-r	5-3	—
B	16	18	18	64-r1	17-6	—
C	2	16	16	*4-r2 4-r3	14-11 14-4	⌵
D	2	16	16	*4-r4 4-r5	14-8 14-1	⌵
E	2	12	12	8-r6	11-6	—

See "Typical Plan of Parapet Panel Reinforcement."

BAR LIST

Mark	No. Req'd	Size	Length	Length Series Bars	Increm.	Shape
a26	12	#4	31-0	—	—	—
a27	22		2-Series	20-0 to 30-0	1-0	—
a28	26		2-Series	4-0 to 19-0	1-3	—
a29	26		2-Series	19-3 to 30-0	10¾"	—
a30	28		2-Series	3-3 to 18-5	1-2	—
a31	6		15-7	—	—	—
a32	8		2-Series	10-9 to 14-8	7⅝"	—
a33	18	#4	2-Series	2-9 to 12-0	1-1⅛	—
a36	24	#4	2-Series	20-0 to 39-6	1-9¼	—
a37	26		2-Series	3-3 to 19-5	1-4⅛	—
a38	28		2-Series	3-0 to 18-2	1-2	—
a39	28	#4	2-Series	19-6 to 39-0	1-6	—
c1	272	#5	8-6	—	—	⌐
c2	112	#5	3-0	—	—	⌐
c3	555	#4	3-6	—	—	⌐
c4	158	#4	2-3	—	—	⌐
b21	22	#4	2-Series	5-0 to 26-6	2-1¾	—
b22	44		4-Series	15-0 to 23-8	10⅜"	—
b23	40		4-Series	24-5 to 31-2	9"	—
b24	8		22-6	—	—	—
b25	2		8-0	—	—	V
b26	12		2-Series	10-3 to 27-6	3-5⅜	—
b27	4		29-3	—	—	—
b28	2		10-6	—	—	—
b29	2		3-6	—	—	V
b30	2		16-6	—	—	—
b31	4		2-6	—	—	V
b32	10		23-6	—	—	—
b33	32		2-Series	11-6 to 22-7	8⅛"	—
b34	34		2-Series	1-9 to 10-9	6⅝"	—
b35	4		6-9	—	—	V
b36	4		2-6	—	—	⌐
b37	4		24-3	—	—	—
b38	34		2-Series	2-0 to 13-0	8¼"	—
b39	30		2-Series	14-0-25-3	10"	—
b40	10		26-6	—	—	—
b41	4		24-3	—	—	—
b42	36	↑	36-6	—	—	—
b43	36	#4	33-6	—	—	—
b44	2	#4	9-6	—	—	—
b45	4	#4	2-6	—	—	<
d1	388	#4	2-9	—	—	⌐

BILL OF MATERIAL

Item	Unit	Quantity
Class "X" Concrete	Cu. Yds.	647.8
Reinforcement Bars	Lbs.	169,950
Structural Steel	Lump Sum	1
Protective Coat	Sq. Yds.	2,267

STATE OF ILLINOIS
DEPARTMENT OF PUBLIC WORKS & BLDGS.
DIVISION OF HIGHWAYS

PARAPET, CURB AND ISLAND REINFORCEMENT

GREENWOOD AVE. OVER F.A. ROUTE 42

STATION 49+66.11

F.A. RT. 42 LAKE COUNTY SECTION 8-HB

H. W. LOCHNER, INC. ENGINEERS CHICAGO, ILLINOIS

SHEET 5 OF 20

DESIGNED BY L.H.
DRAWN BY E.E.
CHECKED BY L.K.

ROUTE NO.	SECTION	COUNTY	TOTAL SHEETS	SHEET NO.
F.A. 42	8-HB	LAKE	81	56
FED. ROAD DIV. NO. 4	ILLINOIS	PROJECT		

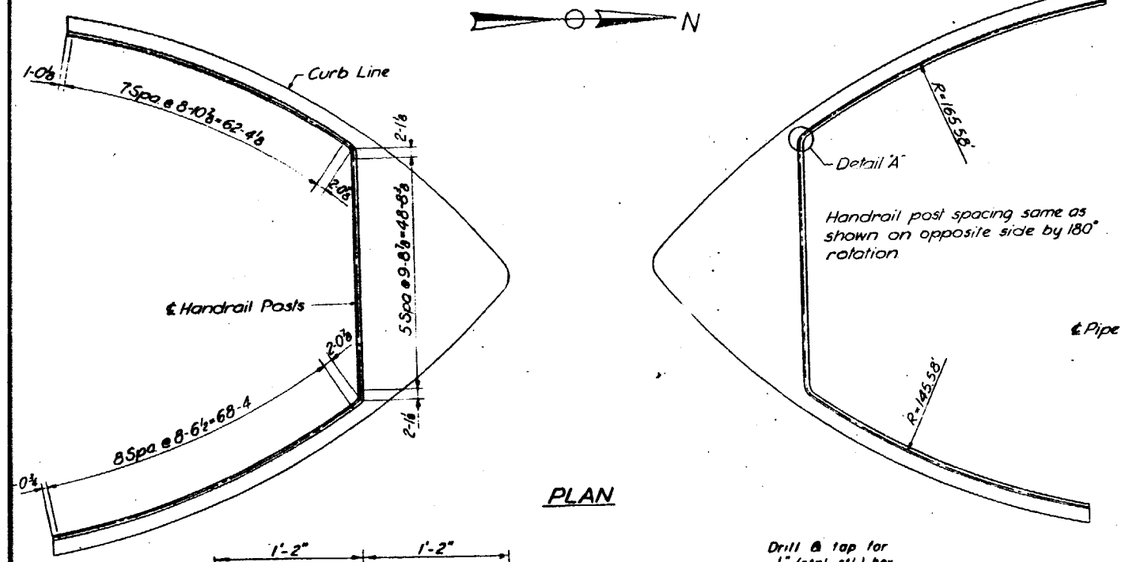

PLAN

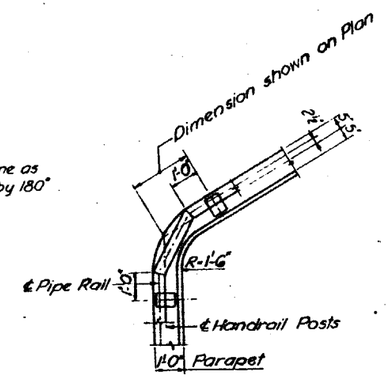

DETAIL "A"
Typ. 4 Corners

NOTES:

All Posts shall be normal to parapet

All Aluminum Alloy Extruded Rail shall be supplied in modular lengths of 30 feet, except at the end of bridge or over open joints in bridge deck where the rail shall be attached to a minimum of 2 posts. If the rail is on a horizontal curve of 2300 foot radius or less, the modular lengths may be reduced but shall be attached to a minimum of 2 posts

All joints in rail shall be spliced per detail

Provide 1-⅛" and 2-⅛" Aluminum Shims for 25% of the Posts. Rail elements shall be parallel to Grade - high spots shall be ground and low spots shimmed.

Railing shall be in accordance with Section 508 of the Standard Specifications, except as noted, and shall be paid for at the contract unit price per lineal foot for ALUMINUM RAILING, TYPE L

Aluminum alloy rail shall conform to ASTM B 221 alloy 6061-T6 or 6351-T5 with min. yield 35 ksi, tensile 38 ksi, and elongation of 10% in 2 inches.

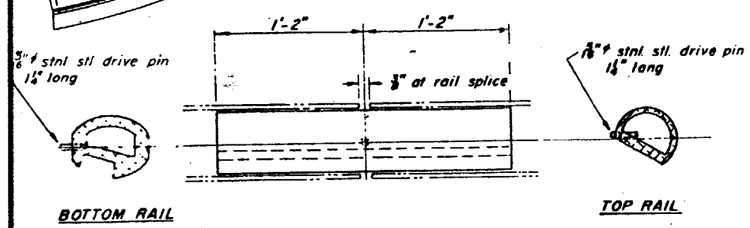

BOTTOM RAIL

TOP RAIL

RAIL SPLICE

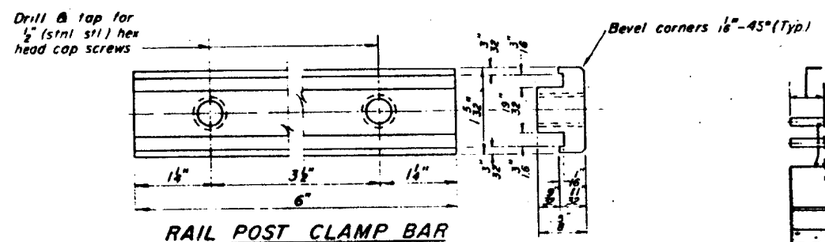

RAIL POST CLAMP BAR
For Top Rail

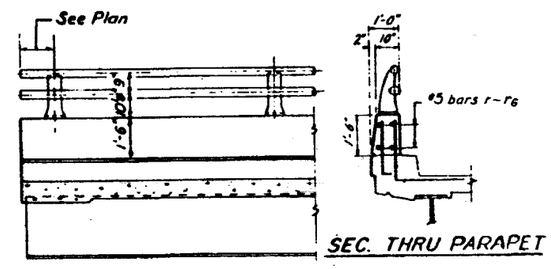

SEC. THRU PARAPET

ELEVATION

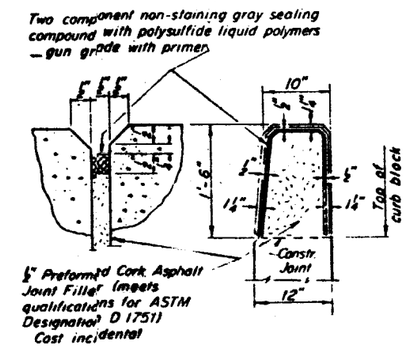

PARAPET JOINT DETAIL

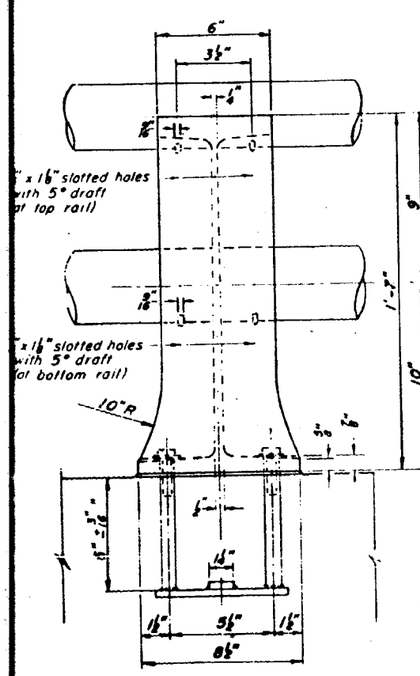

VIEW B-B

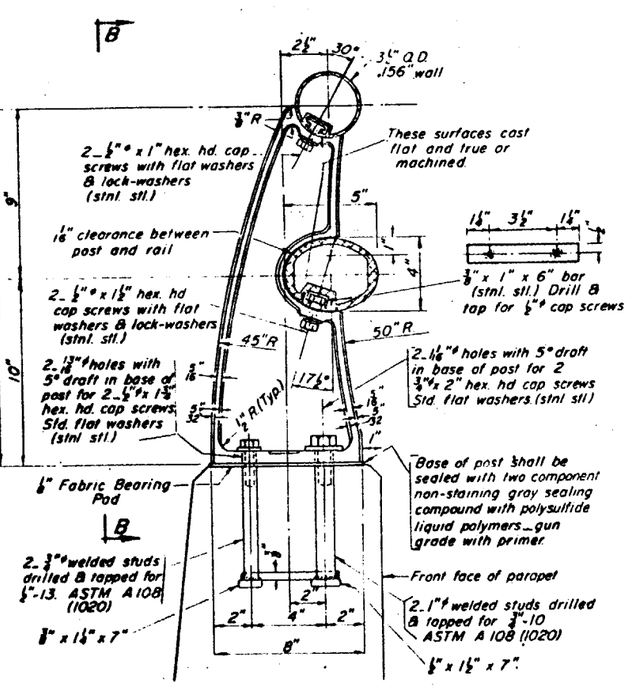

SECTION A-A

RAIL POST DETAILS

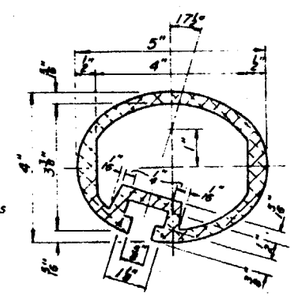

SEC. THRU ELLIPTICAL RAIL SECTION

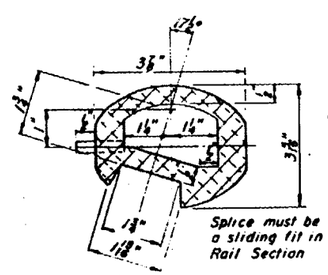

SEC. THRU SPLICE

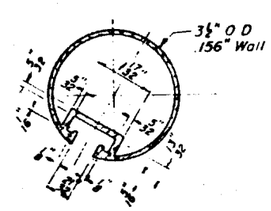

SECTION THRU TOP RAIL

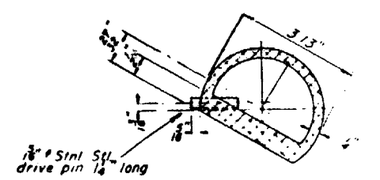

SECTION THRU SPLICE
TOP RAIL

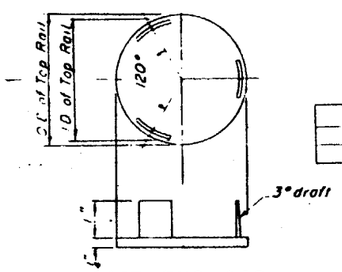

CAST END CAP
For Top Rail
4 Required

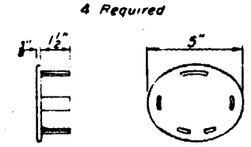

CAST END CAP
For Bottom Rail
DRIVE FIT TYPE
4 Required

BILL OF MATERIAL

Item	Unit	Quantity
Aluminum Railing Type L	Lin Ft	380

STATE OF ILLINOIS
DEPARTMENT OF PUBLIC WORKS & BLDGS.
DIVISION OF HIGHWAYS

ALUMINUM RAILING

GREENWOOD AVE. OVER
F.A. ROUTE 42

STATION 49+66.11

F.A.R.T. 42 — LAKE CO. — SECTION 8-HB

H. W. LOCHNER, INC.
ENGINEERS
CHICAGO, ILLINOIS

SHEET 6 of 20

DESIGNED BY H.N.
DRAWN BY E.F.
CHECKED BY S.F.

STATE OF ILLINOIS
DEPARTMENT OF PUBLIC WORKS & BUILDINGS
DIVISION OF HIGHWAYS

ROUTE NO.	SECTION	COUNTY	TOT. SHEETS	SHEET NO.
F.A. 42	8-HB	LAKE	81	56A
FED. ROAD DIST. NO. 9	ILLINOIS	FED. AID PROJECT-		

SHEET NO.
SHEETS

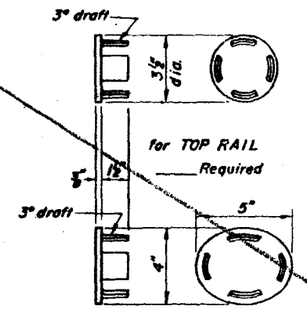

CAST END CAPS
DRIVE FIT TYPE
for BOTTOM RAIL
Required

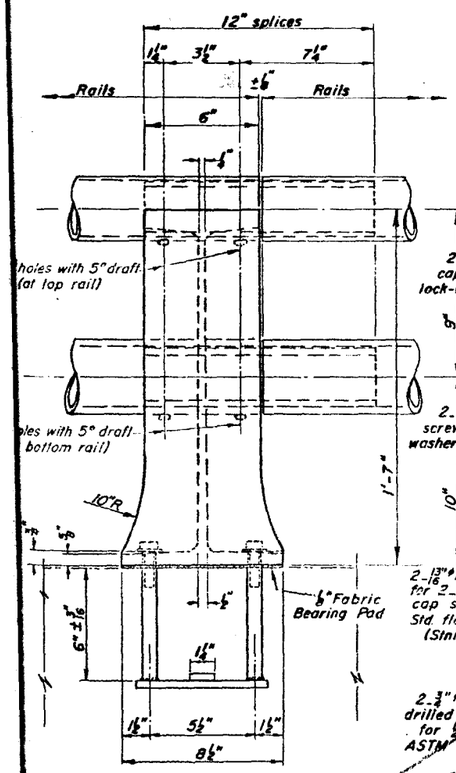

VIEW B-B

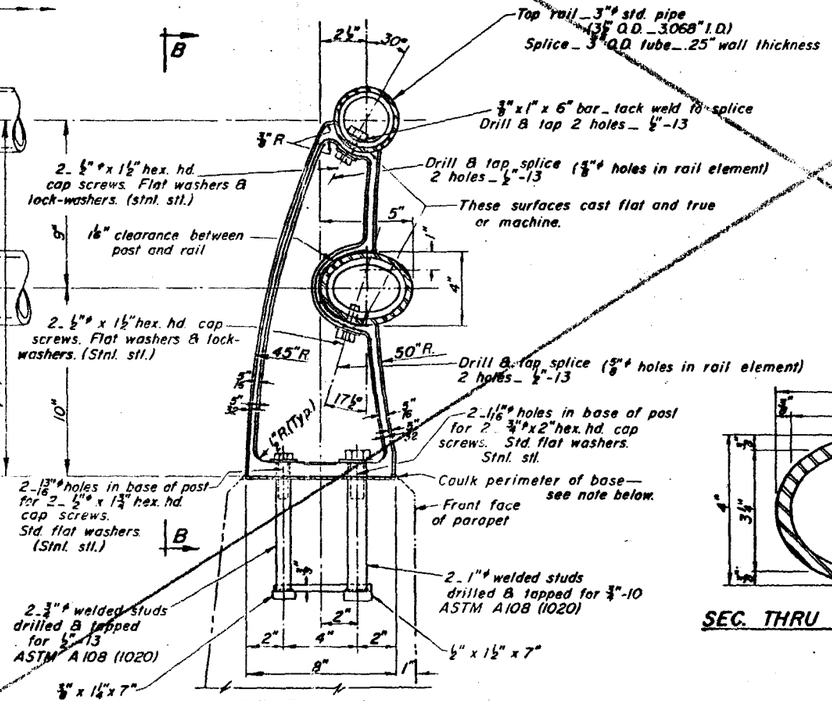

SECTION A-A

RAIL POST DETAILS

NOTES:

All Posts shall be normal to parapet.

All Posts shall be malleable cast iron conforming to ASTM A-47, Grade 35018, galvanized to ASTM A-153.

All Rail Tubing shall conform to applicable requirements of ASTM A-53, Grade B, (pipe or tube) galvanized to ASTM A-120.

Provide 1 _ ⅛" and 2 _ 1/16" galvanized sheet steel shims for 25% of the Posts. Rail element shall be parallel to Grade _ high spots shall be ground and low spots shimmed.

If any of the galvanizing coat is damaged or removed during erection, the affected area shall be painted with one coat of zinc paint in accordance with Military Specification MIL-P-26915 Type I, air-dry cure.

Railing shall be in accordance with Section 508 of the Standard Specifications, except as noted, and shall be paid for at the contract unit price per lineal foot for STEEL RAILING, TYPE M.

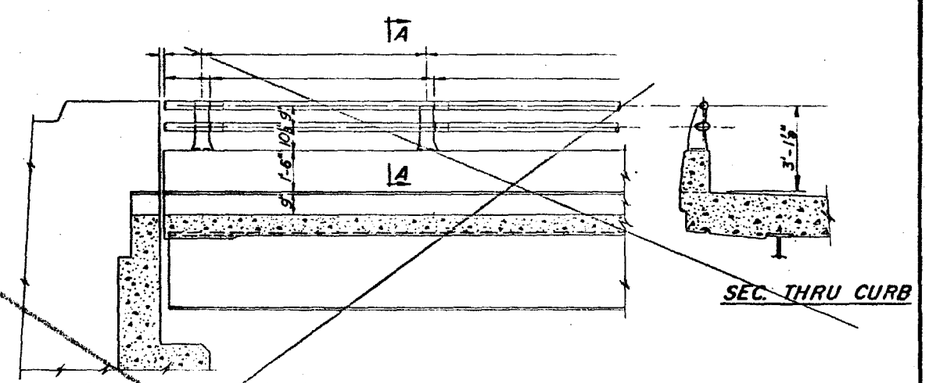

INSIDE VIEW AT ABUTMENT

SEC. THRU CURB

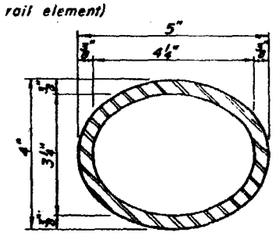

SEC. THRU BOTTOM RAIL

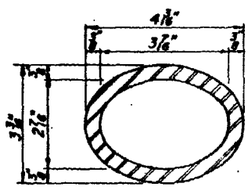

SEC. THRU BOTTOM SPLICE

BILL of MATERIAL

Item	Unit	Quantity
STEEL RAILING, TYPE M	Lin. Ft.	380

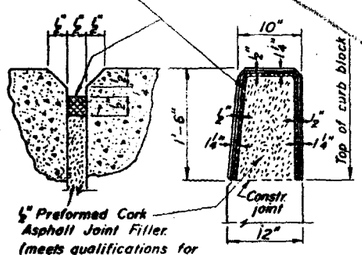

PARAPET JOINT DETAIL

TYPE M
STEEL RAILING
GREENWOOD AVE. OVER
F.A. ROUTE 42
F.A. RT. 42 ~ SECTION 8-HB
LAKE COUNTY
STA. 49+66.11

SHEET 6A of 80

SIGNED	
CHECKED	
DRAWN Wm. M. Best	
CHECKED	

19
EXAMINED — ENGINEER OF BRIDGE AND TRAFFIC STRUCTURES
PASSED — ENGINEER OF DESIGN
APPROVED — CHIEF HIGHWAY ENGINEER

Note!
Seal base of post to parapet with two component non-staining gray sealing compound with polysulfide liquid polymers—gun grade with primer.

Note!
Splice must be sliding fit in Rail Section.

Dwn. 8-20-64 Rev 7-23-65 8-18-65 5-20-68

ROUTE NO.	SECTION	COUNTY	TOTAL SHEETS	SHEET NO.
F. A. — 42 (437)	8-HB	LAKE	81	57
FED. ROAD DIV. NO. 4	ILLINOIS	PROJECT		

SPAN No. 1

ELEV. LINES	BEAM NO.	STATION	OFFSET	THEO. TOP OF ROAD	THEO. ADJ. FOR D.L.
℄ Brg. East Abutment	7	1944.000	- 66.000	615.912	615.912
	8	1944.000	- 58.125	616.071	616.071
	9	1944.000	- 50.250	616.228	616.228
	10	1944.000	- 42.375	616.386	616.386
	11	1944.000	- 34.500	616.543	616.543
	12	1944.000	- 31.500	616.586	616.586
	13	1944.000	- 23.625	616.655	616.655
	14	1944.000	- 15.750	616.723	616.723
	15	1944.000	- 7.875	616.791	616.791
	16	1944.000	- .000	616.860	616.860
	17	1944.000	7.875	616.791	616.791
	18	1944.000	15.750	616.723	616.723
	19	1944.000	23.625	616.655	616.655
	20	1944.000	31.500	616.586	616.586
	21	1944.000	34.500	616.543	616.543
	22	1944.000	42.375	616.386	616.386
	23	1944.000	50.250	616.228	616.228
	24	1944.000	58.125	616.070	616.070
	25	1944.000	66.000	615.912	615.912
A	7	1950.00	- 66.000	615.802	615.825
	8	1950.000	- 58.125	615.959	615.970
	9	1950.000	- 50.250	616.117	616.127
	10	1950.000	- 42.375	616.274	616.285
	11	1950.000	- 34.500	616.432	616.442
	12	1950.000	- 31.500	616.475	616.485
	13	1950.000	- 23.625	616.543	616.554
	14	1950.000	- 15.750	616.611	616.622
	15	1950.000	- 7.875	616.680	616.690
	16	1950.000	- .000	616.748	616.759
	17	1950.000	7.875	616.680	616.690
	18	1950.000	15.750	616.611	616.622
	19	1950.000	23.625	616.543	616.554
	20	1950.000	31.500	616.475	616.485
	21	1950.000	34.500	616.432	616.442
	22	1950.000	42.375	616.274	616.285
	23	1950.00	50.250	616.116	616.127
	24	1950.00	58.125	615.959	615.970
	25	1950.00	66.000	615.802	615.825
B	7	1960.00	- 66.000	615.560	615.614
	8	1960.00	- 58.125	615.740	615.763
	9	1960.00	- 50.250	615.930	615.953
	10	1960.000	- 42.375	616.088	616.111
	11	1960.000	- 34.500	616.246	616.269
	12	1960.000	- 31.500	616.289	616.312
	13	1960.000	- 23.625	616.357	616.380
	14	1960.000	- 15.750	616.425	616.448
	15	1960.000	- 7.875	616.494	616.517
	16	1960.000	- .000	616.562	616.585
	17	1960.000	7.875	616.494	616.517
	18	1960.000	15.750	616.425	616.448
	19	1960.000	23.625	616.357	616.380
	20	1960.000	31.500	616.289	616.312
	21	1960.000	34.500	616.246	616.269
	22	1960.000	42.375	616.088	616.111
	23	1960.00	50.250	615.930	615.953
	24	1960.00	58.125	615.750	615.773
	25	1960.00	66.000	615.560	615.614

ELEV. LINES	BEAM NO.	STATION	OFFSET	THEO. TOP OF ROAD	THEO. ADJ. FOR D.L.
C	7	1970.00	- 66.000	615.325	615.388
	8	1970.00	- 58.125	615.510	615.535
	9	1970.00	- 50.250	615.695	615.720
	10	1970.00	- 42.375	615.885	615.910
	11	1970.000	- 34.500	616.060	616.085
	12	1970.000	- 31.500	616.103	616.128
	13	1970.000	- 23.625	616.171	616.196
	14	1970.000	- 15.750	616.239	616.265
	15	1970.000	- 7.875	616.308	616.333
	16	1970.000	- .000	616.376	616.401
	17	1970.000	7.875	616.308	616.333
	18	1970.000	15.750	616.239	616.265
	19	1970.000	23.625	616.171	616.196
	20	1970.000	31.500	616.103	616.128
	21	1970.000	34.500	616.060	616.085
	22	1970.00	42.375	615.895	615.920
	23	1970.00	50.250	615.720	615.745
	24	1970.00	58.125	615.525	615.550
	25	1970.00	66.000	615.330	615.393
D	7	1980.00	- 66.000	615.150	615.196
	8	1980.00	- 58.125	615.300	615.318
	9	1980.00	- 50.250	615.470	615.488
	10	1980.00	- 42.375	615.670	615.688
	11	1980.00	- 34.500	615.865	615.883
	12	1980.000	- 31.500	615.917	615.934
	13	1980.000	- 23.625	615.985	616.003
	14	1980.000	- 15.750	616.053	616.071
	15	1980.000	- 7.875	616.122	616.139
	16	1980.000	- .000	616.190	616.208
	17	1980.000	7.875	616.122	616.139
	18	1980.000	15.750	616.053	616.071
	19	1980.000	23.625	615.985	616.003
	20	1980.000	31.500	615.917	615.934
	21	1980.00	34.500	615.870	615.888
	22	1980.00	42.375	615.715	615.733
	23	1980.00	50.250	615.525	615.[illegible]
	24	1980.00	58.125	615.310	615.328
	25	1980.00	66.000	615.140	615.186
E	7	1990.00	- 66.000	614.970	614.985
	8	1990.00	- 58.125	615.110	615.116
	9	1990.00	- 50.250	615.250	615.256
	10	1990.00	- 42.375	615.445	615.451
	11	1990.00	- 34.500	615.675	615.681
	12	1990.000	- 31.500	615.731	615.737
	13	1990.000	- 23.625	615.799	615.805
	14	1990.000	- 15.750	615.867	615.873
	15	1990.000	- 7.875	615.936	615.942
	16	1990.000	- .000	616.004	616.010
	17	1990.000	7.875	615.936	615.942
	18	1990.000	15.750	615.867	615.873
	19	1990.000	23.625	615.799	615.805
	20	1990.000	31.500	615.731	615.737
	21	1990.00	34.500	615.690	615.696
	22	1990.00	42.375	615.515	615.521
	23	1990.00	50.250	615.305	615.311
	24	1990.00	58.125	615.110	615.116
	25	1990.00	66.000	614.960	614.975

SPAN NO. 2

ELEV. LINES	BEAM NO.	STATION	OFFSET	THEO. TOP OF ROAD	THEO. ADJ. FOR D.L.
℄ Brg. Pier	7	2000.00	- 66.000	614.800	614.800
	8	2000.00	- 58.125	614.925	614.925
	9	2000.00	- 50.250	615.050	615.050
	10	2000.00	- 42.375	615.240	615.240
	11	2000.00	- 34.500	615.500	615.500
	12	2000.000	- 31.500	615.545	615.545
	13	2000.000	- 23.625	615.613	615.613
	14	2000.000	- 15.750	615.681	615.681
	15	2000.000	- 7.875	615.750	615.750
	16	2000.000	- .000	615.818	615.818
	17	2000.000	7.875	615.750	615.750
	18	2000.000	15.750	615.681	615.681
	19	2000.000	23.625	615.613	615.613
	20	2000.000	31.500	615.545	615.545
	21	2000.00	34.500	615.500	615.500
	22	2000.00	42.375	615.310	615.310
	23	2000.00	50.250	615.070	615.070
	24	2000.00	58.125	614.910	614.910
	25	2000.00	66.000	614.770	614.770
F	7	2010.00	- 66.000	614.630	614.645
	8	2010.00	- 58.125	614.740	614.746
	9	2010.00	- 50.250	614.840	614.846
	10	2010.00	- 42.375	615.050	615.056
	11	2010.00	- 34.500	615.310	615.316
	12	2010.000	- 31.500	615.359	615.365
	13	2010.000	- 23.625	615.427	615.433
	14	2010.000	- 15.750	615.495	615.501
	15	2010.000	- 7.875	615.564	615.570
	16	2010.000	- .000	615.632	615.638
	17	2010.000	7.875	615.564	615.570
	18	2010.000	15.750	615.495	615.501
	19	2010.000	23.625	615.427	615.433
	20	2010.000	31.500	615.359	615.365
	21	2010.00	34.500	615.310	615.316
	22	2010.00	42.375	615.110	615.116
	23	2010.00	50.250	614.870	614.876
	24	2010.00	58.125	614.710	614.716
	25	2010.00	66.000	614.585	614.600
G	7	2020.00	- 66.000	614.460	614.506
	8	2020.00	- 58.125	614.550	614.568
	9	2020.00	- 50.250	614.670	614.688
	10	2020.00	- 42.375	614.900	614.918
	11	2020.00	- 34.500	615.110	615.128
	12	2020.000	- 31.500	615.173	615.190
	13	2020.000	- 23.625	615.241	615.259
	14	2020.000	- 15.750	615.309	615.327
	15	2020.000	- 7.875	615.378	615.395
	16	2020.000	- .000	615.446	615.464
	17	2020.000	7.875	615.378	615.395
	18	2020.000	15.750	615.309	615.327
	19	2020.000	23.625	615.241	615.259
	20	2020.000	31.500	615.173	615.190
	21	2020.00	34.500	615.110	615.128
	22	2020.00	42.375	614.930	614.948
	23	2020.00	50.250	614.690	614.708
	24	2020.00	58.125	614.500	614.518
	25	2020.00	66.000	614.405	614.451

ELEV. LINES	BEAM NO.	STATION	OFFSET	THEO. TOP OF ROAD	THEO. ADJ. FOR D.L.
H	7	2030.00	- 66.000	614.270	614.333
	8	2030.00	- 58.125	614.490	614.485
	9	2030.00	- 50.250	614.630	614.655
	10	2030.00	- 42.375	614.800	614.825
	11	2030.000	- 34.500	614.961	614.986
	12	2030.000	- 31.500	614.987	615.012
	13	2030.000	- 23.625	615.055	615.080
	14	2030.000	- 15.750	615.123	615.148
	15	2030.000	- 7.875	615.192	615.217
	16	2030.000	- .000	615.260	615.285
	17	2030.000	7.875	615.192	615.217
	18	2030.000	15.750	615.123	615.149
	19	2030.000	23.625	615.055	615.080
	20	2030.000	31.500	614.987	615.012
	21	2030.000	34.500	614.961	614.986
	22	2030.00	42.375	614.840	614.865
	23	2030.00	50.250	614.660	614.685
	24	2030.00	58.125	614.440	614.465
	25	2030.00	66.000	614.230	614.293
K	7	2040.00	- 66.000	614.280	614.334
	8	2040.00	- 58.125	614.440	614.463
	9	2040.00	- 50.250	614.610	614.633
	10	2040.00	- 42.375	614.700	614.723
	11	2040.000	- 34.500	614.775	614.798
	12	2040.000	- 31.500	614.801	614.824
	13	2040.000	- 23.625	614.869	614.892
	14	2040.000	- 15.750	614.937	614.960
	15	2040.000	- 7.875	615.006	615.029
	16	2040.000	- .000	615.074	615.097
	17	2040.000	7.875	615.006	615.029
	18	2040.000	15.750	614.937	614.960
	19	2040.000	23.625	614.869	614.892
	20	2040.000	31.500	614.801	614.824
	21	2040.000	34.500	614.775	614.798
	22	2040.000	42.375	614.706	614.729
	23	2040.000	50.250	614.638	614.661
	24	2040.00	58.125	614.440	614.463
	25	2040.00	66.000	614.250	614.304
L	7	2050.00	- 66.000	614.280	614.303
	8	2050.000	- 58.125	614.384	614.394
	9	2050.000	- 50.250	614.492	614.492
	10	2050.000	- 42.375	614.520	614.531
	11	2050.000	- 34.500	614.589	614.599
	12	2050.000	- 31.500	614.615	614.625
	13	2050.000	- 23.625	614.683	614.694
	14	2050.000	- 15.750	614.751	614.762
	15	2050.000	- 7.875	614.820	614.830
	16	2050.000	- .000	614.888	614.899
	17	2050.000	7.875	614.820	614.830
	18	2050.000	15.750	614.751	614.762
	19	2050.000	23.625	614.683	614.694
	20	2050.000	31.500	614.615	614.625
	21	2050.000	34.500	614.589	614.599
	22	2050.000	42.375	614.520	614.531
	23	2050.000	50.250	614.492	614.492
	24	2050.00	58.125	614.383	614.394
	25	2050.00	66.000	614.275	614.298

ELEV. LINES	BEAM NO.	STATION	OFFSET	THEO. TOP OF ROAD	THEO. ADJ. FOR D.L.
℄ Brg. West Abutment	7	2056.000	- 66.000	614.203	614.203
	8	2056.000	- 58.125	614.272	614.272
	9	2056.000	- 50.250	614.340	614.340
	10	2056.000	- 42.375	614.409	614.409
	11	2056.000	- 34.500	614.477	614.477
	12	2056.000	- 31.500	614.503	614.503
	13	2056.000	- 23.625	614.571	614.571
	14	2056.000	- 15.750	614.640	614.640
	15	2056.000	- 7.875	614.708	614.708
	16	2056.000	- .000	614.777	614.777
	17	2056.000	7.875	614.708	614.708
	18	2056.000	15.750	614.640	614.640
	19	2056.000	23.625	614.571	614.571
	20	2056.000	31.500	614.503	614.503
	21	2056.000	34.500	614.477	614.477
	22	2056.000	42.375	614.409	614.409
	23	2056.000	50.250	614.340	614.340
	24	2056.000	58.125	614.271	614.271
	25	2056.000	66.000	614.208	614.208

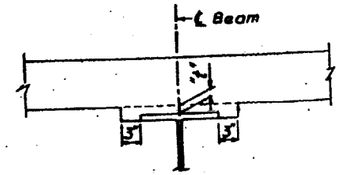

STANDARD FILLET DETAIL

To determine "t": After all structural steel has been erected, elevations of the top flanges of the beams shall be taken at intervals shown on sheet #8. These elevations subtracted from the "Grade Elevation Adjusted for Dead Load Deflections" minus slab thickness equal fillet height "t" above top of beams.

NOTE: Elevations in the Tables are given to the extended roadway, when the points are under the Sidewalk or Island.

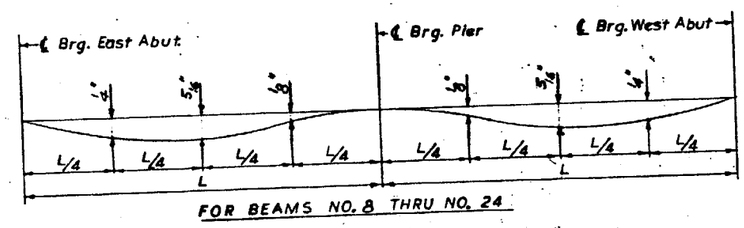

FOR BEAMS NO. 8 THRU NO. 24

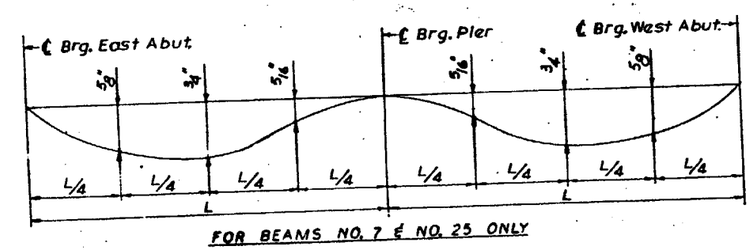

FOR BEAMS NO. 7 & NO. 25 ONLY

DEAD LOAD DEFLECTION DIAGRAM

(Includes weight of concrete only)

NOTE: The above deflections are not to be used in the field if the engineer is working from the grade elevations adjusted for dead load deflections.

For location of Points see Sh. No 8.

STATE OF ILLINOIS
DEPARTMENT OF PUBLIC WORKS & BLDGS.
DIVISION OF HIGHWAYS

TABLES OF ELEVATIONS

GREENWOOD AVE. OVER
F. A. ROUTE 42

STATION 49+66.11

F. A. RT. 42 LAKE COUNTY SECTION 8-HB

H. W. LOCHNER, INC.
ENGINEERS
CHICAGO, ILLINOIS

SHEET 7 OF 20

DESIGNED BY V. B.
DRAWN BY V. B.
CHECKED BY S. F.

ROUTE NO.	SECTION	COUNTY	TOTAL SHEETS	SHEET NO.
F.A. — ~~42~~ 437	8-HB	LAKE	81	58
FED. ROAD DIV. NO. 4	ILLINOIS	PROJECT		

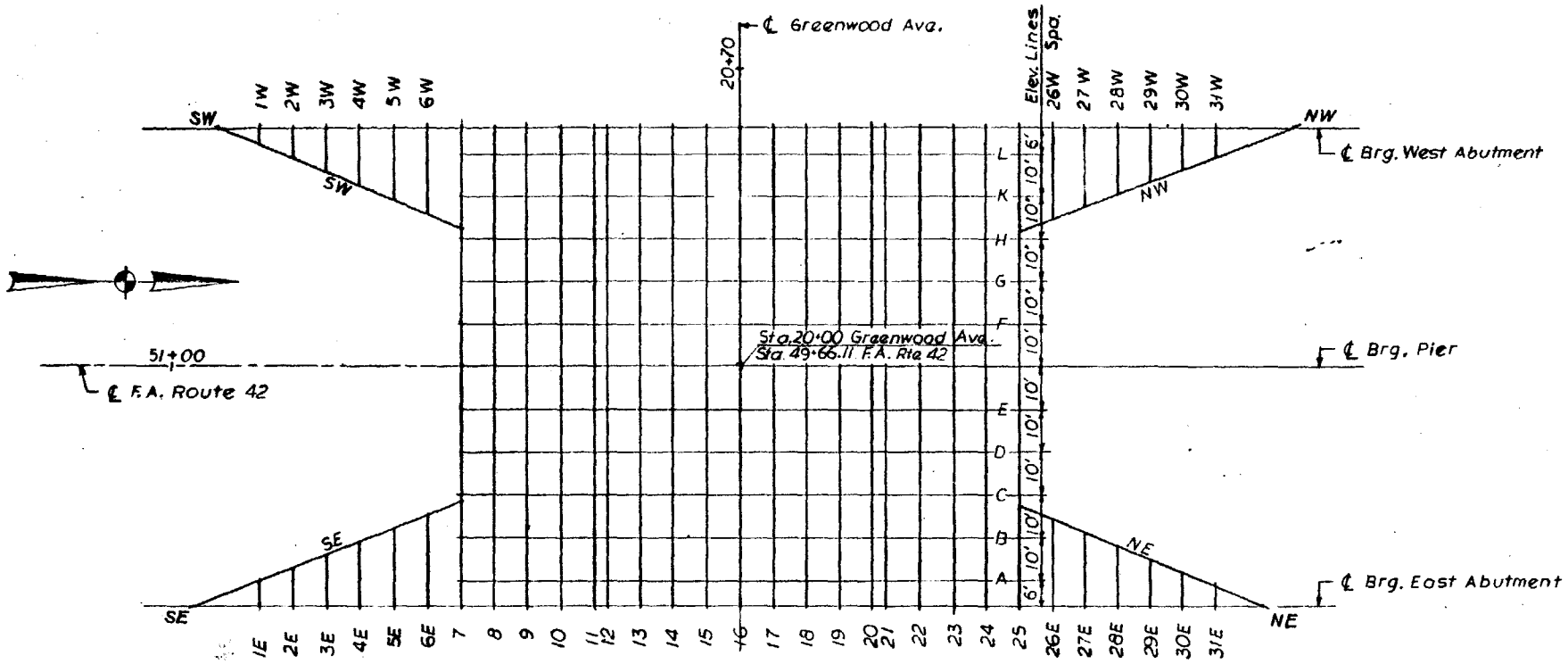

ELEVATION LOCATION PLAN

LOCATION		Thoretical Top of Road	Theor. Adjust. For Dead L.	LOCATION		Thoretical Top of Road	Theor. Adjust. For Dead L.
℄ Brg's West Abutment	SW	613.570	613.570	℄ Brg's East Abutment	SE	614.640	614.640
	1W	613.675	613.675		1E	614.980	614.980
	2W	613.760	613.760		2E	615.135	615.135
	3W	613.835	613.835		3E	615.290	615.290
	4W	613.915	613.915		4E	615.440	615.440
	5W	613.990	613.990		5E	615.595	615.595
	6W	614.134	614.134		6E	615.754	615.754
	26W	614.134	614.134		26E	615.754	615.754
	27W	613.975	613.975		27E	615.595	615.595
	28W	613.900	613.900		28E	615.440	615.440
	29W	613.825	613.825		29E	615.280	615.280
	30W	613.755	613.755		30E	615.120	615.120
	31W	613.685	613.685		31E	614.980	614.980
	NW	613.535	613.535		NE	614.790	614.790
Beam SW	1W	613.640	613.713	Beam SE	1E	614.915	615.040
	2W	613.705	613.817		2E	615.020	615.181
	3W	613.790	613.927		3E	615.115	615.293
	4W	613.875	614.016		4E	615.175	615.350
	5W	613.975	614.099		5E	615.230	615.382
	6W	614.110	614.208		6E	615.290	615.402
	7	614.280	614.340		[illegible]	615.375	615.435
Beam NW	25	614.230	614.290	Beam NE	25E	615.395	615.455
	26W	614.040	614.152		26E	615.275	615.373
	27W	613.895	614.047		27E	615.225	615.349
	28W	613.830	614.005		28E	615.165	615.308
	29W	613.770	613.948		29E	615.110	615.247
	30W	613.715	613.876		30E	615.035	615.147
	31W	613.660	613.785		31E	614.945	615.018

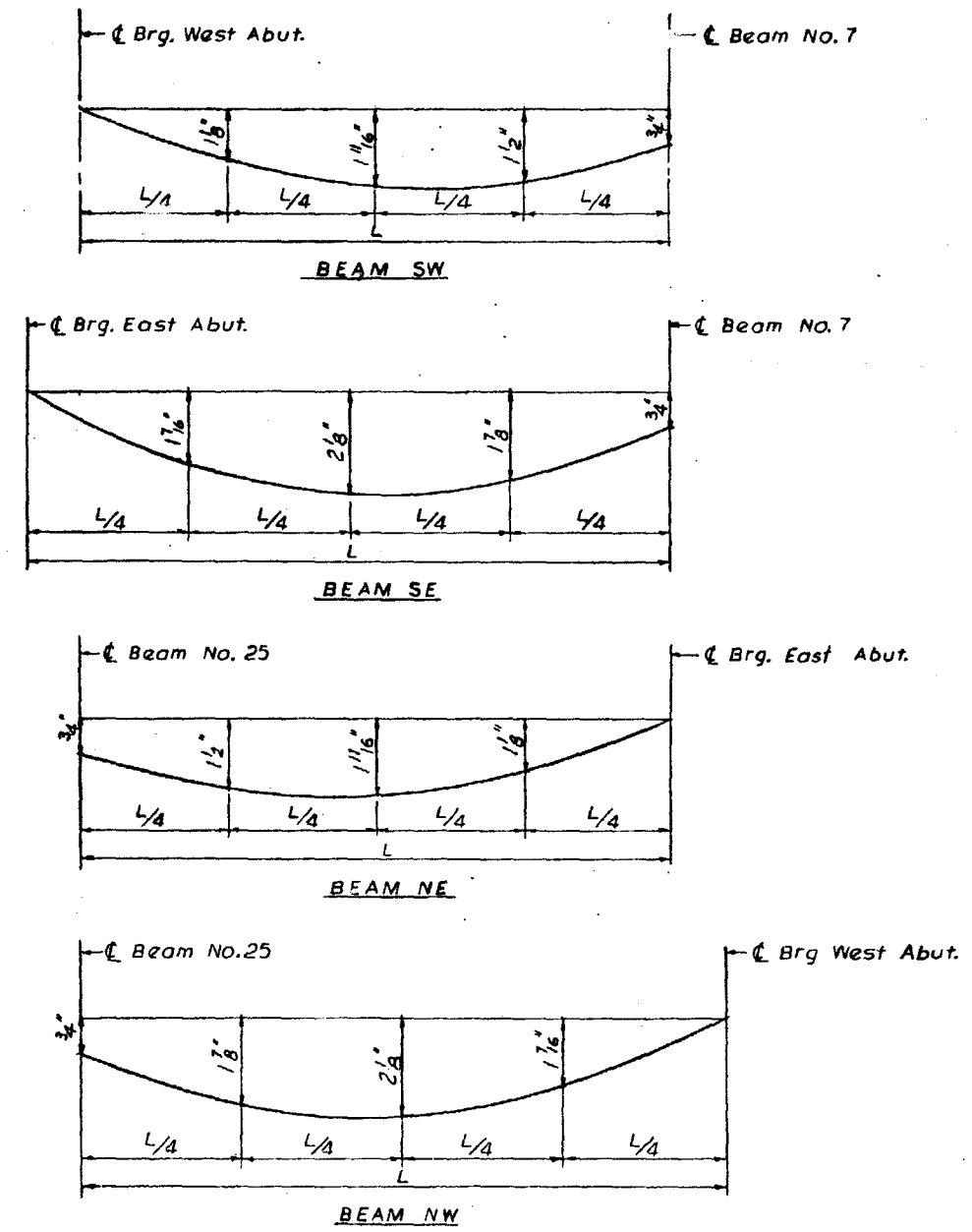

DEAD LOAD DEFLECTION DIAGRAM
(Includes weight of concrete only)

For notes see Sheet No 7

DESIGNED BY V. B.
DRAWN BY V. B.
CHECKED BY S. F.

STATE OF ILLINOIS
DEPARTMENT OF PUBLIC WORKS & BLDGS.
DIVISION OF HIGHWAYS

TABLES OF ELEVATIONS

GREENWOOD AVE. OVER
F.A. ROUTE 42

437 STATION 49+66.11
F.A. RT. ~~42~~ LAKE COUNTY SECTION 8-HB

H. W. LOCHNER, INC.
ENGINEERS
CHICAGO, ILLINOIS

SHEET 8 OF 20

ROUTE NO.	SECTION	COUNTY	TOTAL SHEETS	SHEET NO.
F.A. 437 42	8-HB	LAKE	81	59
FED. ROAD DIV. NO. 4	ILLINOIS	PROJECT		

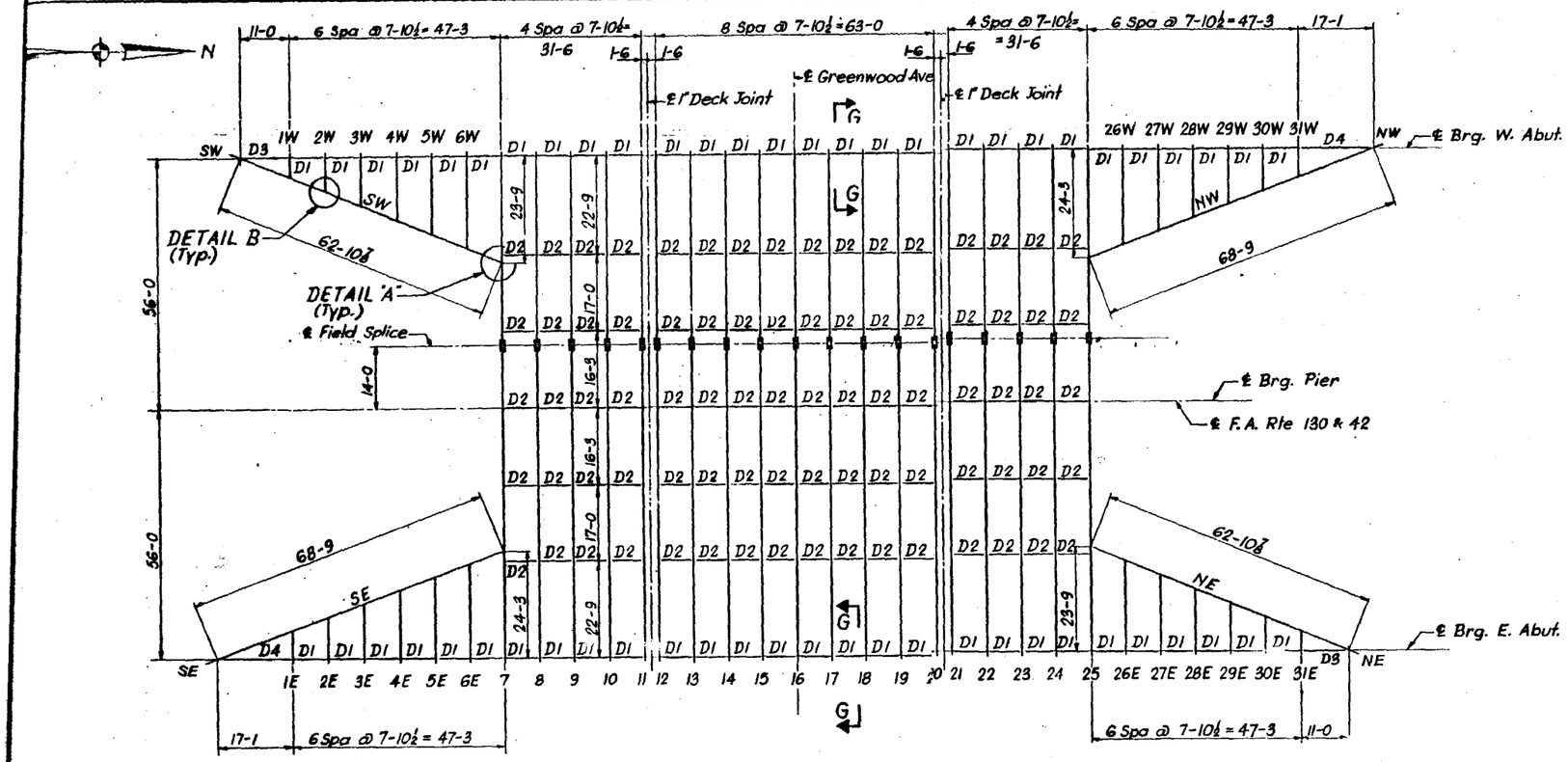

FRAMING PLAN

2 Span Continuous Beam				
TABLE OF MOMENTS AND REACTIONS INTERIOR BEAMS Nº 8 THRU Nº 24				
	MOMENTS (Ft×K)		REACTIONS (Kips)	
	.4 Span	Pier	Abut.	Pier
Dead Load	210	455	20.4	71.0
Live Load	412	342	40.9	53.3
Impact	115	95	11.3	14.7
Total	737	892	72.6	139.0

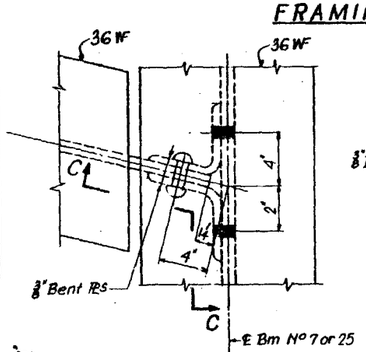

DETAIL "A"

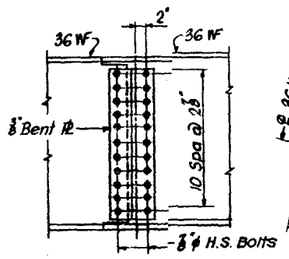

SECTION C-C

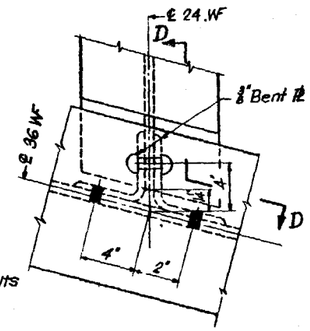

DETAIL "B"

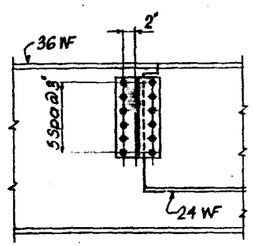

SECTION D-D

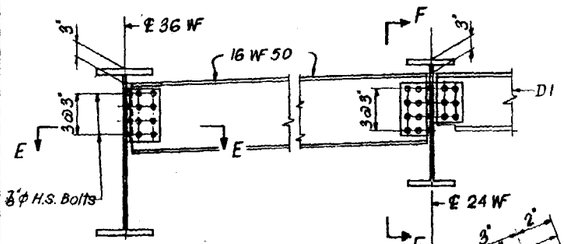

END DIAPHRAGM D3 OR D4

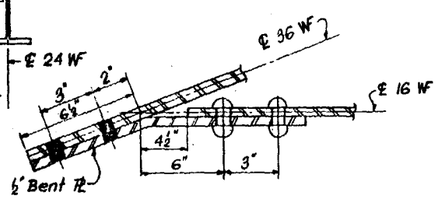

SECTION E-E

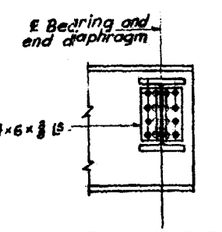

SECTION F-F

Beam Nº	℄ Brg. East Abutment Top of WF Elev.	Type of Brg.	Shim Pl.	℄ Pier Top of WF Elev.	Type of Brg.	Shim Pl. "t"	℄ Splice Top of WF Elev.	℄ Brg. West Abutment Top of WF Elev.	Type of Brg.	Shim Pl. "t"	Size of Beam
SE	613.97	E3	—	—	—	—	—	—	—	—	36 WF 160
1E	614.31	E2	—	—	—	—	—	—	—	—	24 WF 68
2E	614.47	E2	—	—	—	—	—	—	—	—	"
3E	614.62	E2	—	—	—	—	—	—	—	—	"
4E	614.77	E2	—	—	—	—	—	—	—	—	"
5E	614.93	E2	—	—	—	—	—	—	—	—	"
6E	615.08	E2	—	—	—	—	—	—	—	—	"
SW	—	—	—	—	—	—	—	612.90	E3	—	36 WF 160
1W	—	—	—	—	—	—	—	613.01	E2	—	24 WF 68
2W	—	—	—	—	—	—	—	613.09	E2	—	"
3W	—	—	—	—	—	—	—	613.17	E2	—	"
4W	—	—	—	—	—	—	—	613.23	E2	—	"
5W	—	—	—	—	—	—	—	613.31	E2	—	"
6W	—	—	—	—	—	—	—	613.46	E2	—	"
7	615.14	E1	—	614.02	F	¼"	613.74	613.44	E1	—	36 WF 170
8	615.38	E1	—	614.22	F	—	613.93	613.56	E1	—	36 WF 135
9	615.55	E1	—	614.36	F	—	614.06	613.63	E1	—	"
10	615.71	E1	—	614.57	F	—	614.28	613.73	E1	—	"
11	615.83	E1	—	614.82	F	—	614.57	613.78	E1	⅝"	"
12	615.92	E1	—	614.88	F	—	614.62	613.83	E1	—	"
13	615.99	E1	—	614.94	F	—	614.68	613.90	E1	—	"
14	616.05	E1	—	615.01	F	—	614.75	613.97	E1	—	"
15	616.12	E1	—	615.08	F	—	614.82	614.04	E1	—	"
16	616.19	E1	—	615.15	F	—	614.89	614.11	E1	—	"
17	616.12	E1	—	615.08	F	—	614.82	614.04	E1	—	"
18	616.05	E1	—	615.01	F	—	614.75	613.97	E1	—	"
19	615.99	E1	—	614.94	F	—	614.68	613.90	E1	—	"
20	615.92	E1	—	614.88	F	—	614.62	613.83	E1	—	"
21	615.83	E1	—	614.81	F	—	614.55	613.78	E1	—	"
22	615.71	E1	—	614.61	F	—	614.33	613.73	E1	⅝"	"
23	615.56	E1	—	614.38	F	—	614.08	613.68	E1	—	"
24	615.40	E1	—	614.20	F	—	613.90	613.53	E1	—	"
25	615.20	E1	—	614.00	F	—	613.70	613.51	E1	—	36 WF 170
26E	615.08	E2	—	—	—	—	—	—	—	—	24 WF 68
27E	614.93	E2	—	—	—	—	—	—	—	—	"
28E	614.77	E2	—	—	—	—	—	—	—	—	"
29E	614.62	E2	—	—	—	—	—	—	—	—	"
30E	614.47	E2	—	—	—	—	—	—	—	—	"
31E	614.31	E2	—	—	—	—	—	—	—	—	"
NE	614.12	E3	—	—	—	—	—	—	—	—	36 WF 160
26W	—	—	—	—	—	—	—	613.46	E2	—	24 WF 68
27W	—	—	—	—	—	—	—	613.31	E2	—	"
28W	—	—	—	—	—	—	—	613.23	E2	—	"
29W	—	—	—	—	—	—	—	613.17	E2	—	"
30W	—	—	—	—	—	—	—	613.09	E2	—	"
31W	—	—	—	—	—	—	—	613.01	E2	—	"
NW	—	—	—	—	—	—	—	612.87	E3	—	36 WF 160

Notes:
Work this Sheet with Sheets Nº 10 and 11.

DESIGNED BY S.F.
DRAWN BY S.F.
CHECKED BY V.B.

STATE OF ILLINOIS
DEPARTMENT OF PUBLIC WORKS & BLDGS.
DIVISION OF HIGHWAYS

FRAMING PLAN

GREENWOOD AVE. OVER
F.A. ROUTE 42

437 STATION 49+66.11

F.A. RT. 42 LAKE COUNTY SECTION 8-HB

H. W. LOCHNER, INC.
ENGINEERS
CHICAGO, ILLINOIS

SHEET 9 OF 20

ROUTE NO.	SECTION	COUNTY	TOTAL SHEETS	SHEET NO.
F.A. — ~~42~~ 437	8-HB	LAKE	81	60
FED. ROAD DIV. NO. 4	ILLINOIS	PROJECT		

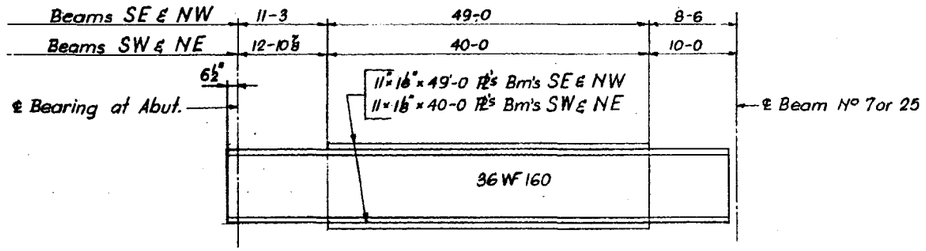

BEAMS SE, SW, NE & NW

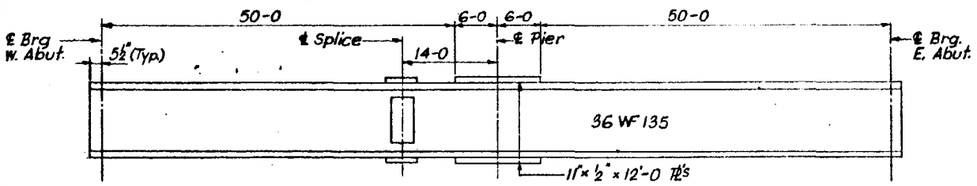

BEAMS No 8 THRU 24

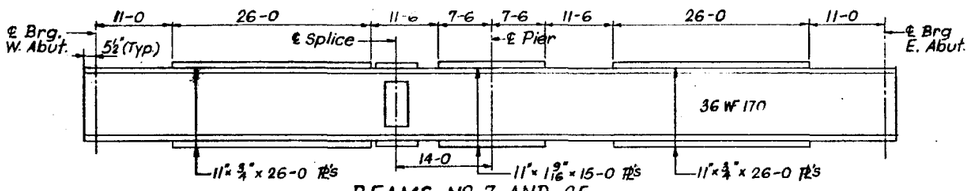

BEAMS No 7 AND 25

BEAM ELEVATIONS

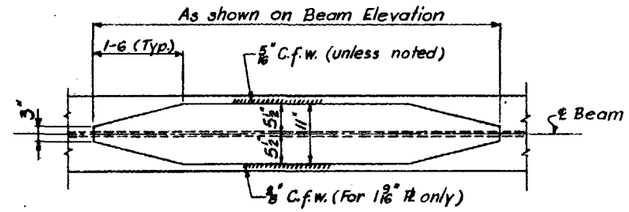

COVER PLATE DETAIL

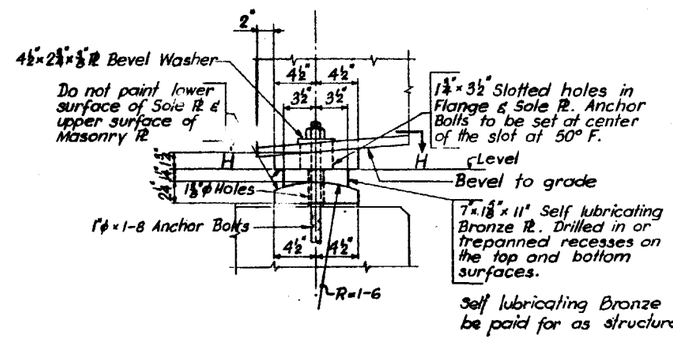

Self lubricating Bronze Pls shall be paid for as structural steel.

EXPANSION BEARING E-3

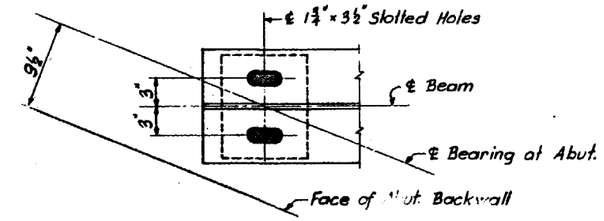

SECTION H-H

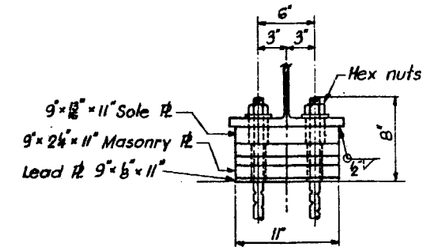

Note "A": Nuts to be drawn up finger tight; then backed off ⅙ turn and threads of Anchor Bolts burred off at face of nut with a pointed tool.

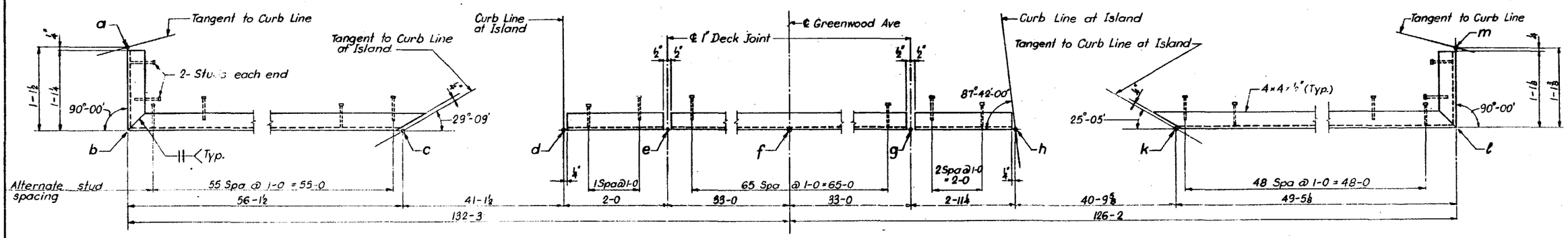

EXPANSION GUARD DETAIL

EAST ABUTMENT SHOWN
WEST ABUTMENT SAME BY 180° ROTATION

ELEVATIONS FOR EXPANSION GUARD

E. ABUTMENT		W. ABUTMENT	
Point	Elevation	Point	Elevation
a	614.61	a	613.52
b	614.62	b	613.53
c	615.74	c	614.07
d	616.56	d	614.44
e	616.60	e	614.46
f	616.89	f	614.75
g	616.60	g	614.46
h	616.54	h	614.43
k	615.72	k	614.06
ℓ	614.76	ℓ	613.56
m	614.75	m	613.55

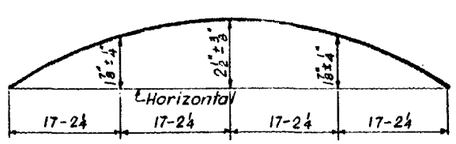

CAMBER DIAGRAM
BEAM "SE" only

Notes:
Work this Sheet with Sheets No 9 and No 11

DESIGNED BY S.F.
DRAWN BY S.F.
CHECKED BY V.B.

STATE OF ILLINOIS
DEPARTMENT OF PUBLIC WORKS & BLDGS.
DIVISION OF HIGHWAYS

STEEL DETAILS

GREENWOOD AVE. OVER
F.A. ROUTE 42

437 STATION 49+66.11

F.A. RT. ~~42~~ LAKE COUNTY SECTION 8-HB

H. W. LOCHNER, INC.
ENGINEERS
CHICAGO, ILLINOIS

SHEET 10 OF 20

ROUTE NO.	SECTION	COUNTY	TOTAL SHEETS	SHEET NO.
F.A. 42	8-HB	LAKE	81	61
FED. ROAD DIV. NO. 4	ILLINOIS	PROJECT		

Note "A": Shim PL 9" x t x 1-8½
See Framing Plan for location & "t" dimensions.

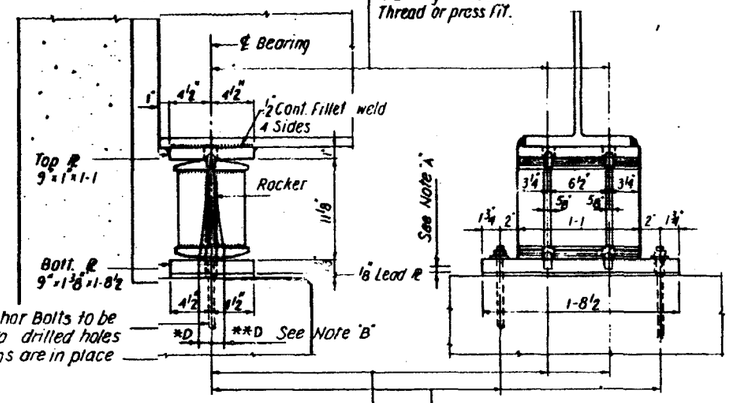

ϕ x 12" Anchor Bolts to be grouted into drilled holes after beams are in place

Note "B": Anchor Bolts for steel erection at various temperatures.
*D = ⅛"/100 ft. of exp. for every 15° below the normal temp. of 50°F.
D = ⅛"/100 ft. of exp. for every 15° above the normal temp. of 50°F

ABUTMENT EXPANSION BEARING E-1

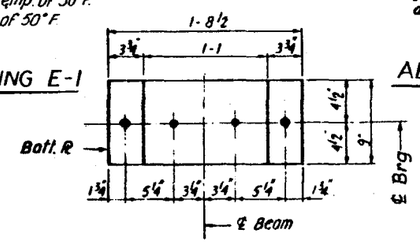

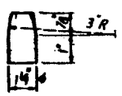

PINTLE DETAIL

1⅜" ϕ holes in Top PL for 1¼" ϕ Pintles. 1¼" ϕ Pintles 1⅞" long in Rocker. Thread or press fit

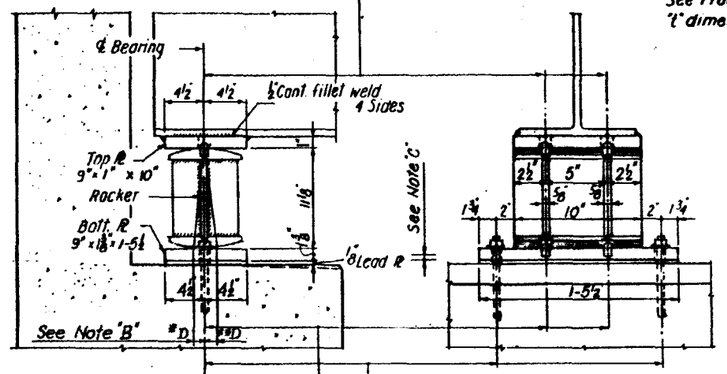

1⅜" ϕ holes - 1" deep in Rocker for 1¼" ϕ Pintles 1¼" ϕ Pintles - 1⅞" long in Bott. PL. Thread or press fit

1½" ϕ holes for 1" ϕ x 12" Anchor Bolts 2½" x 2½" x 5/16" PL Washer under nut

1" ϕ x 12" Anchor Bolts to be grouted into drilled holes after beams are in place

ABUTMENT EXPANSION BEARING E-2

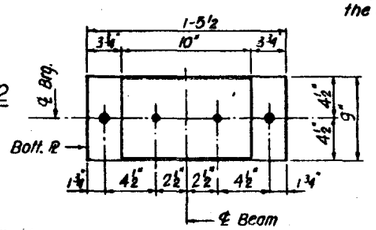

Note "C"
Shim PL 9" x t x 1-5½
See Framing Plan for "t" dimensions.

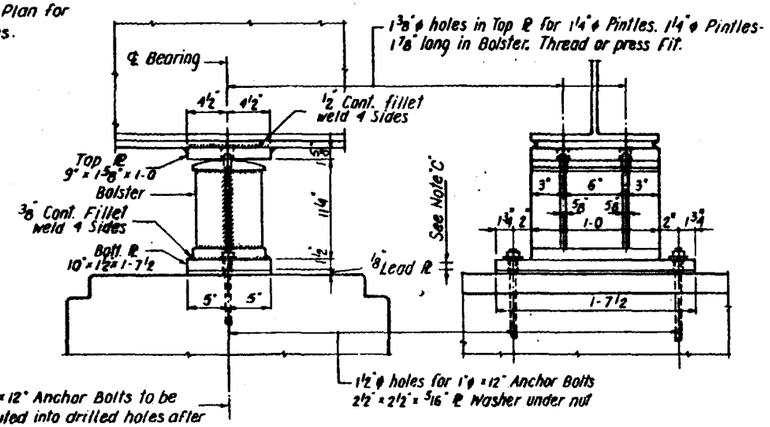

ϕ x 12" Anchor Bolts to be grouted into drilled holes after beams are in place, or bolts at fixed Pier may be built into the masonry.

FIXED BEARING F PIER

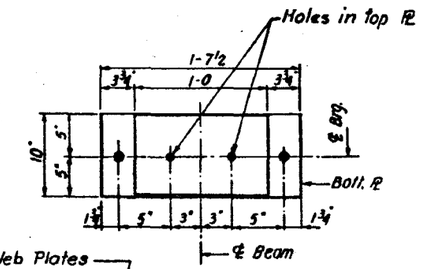

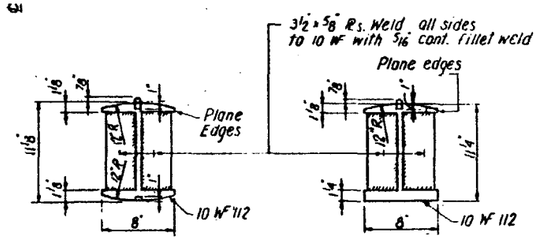

DETAIL OF ROCKER AT EXPANSION BEARING

DETAIL OF BOLSTER AT FIXED BEARING

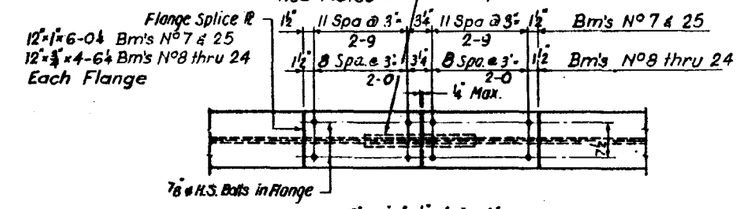

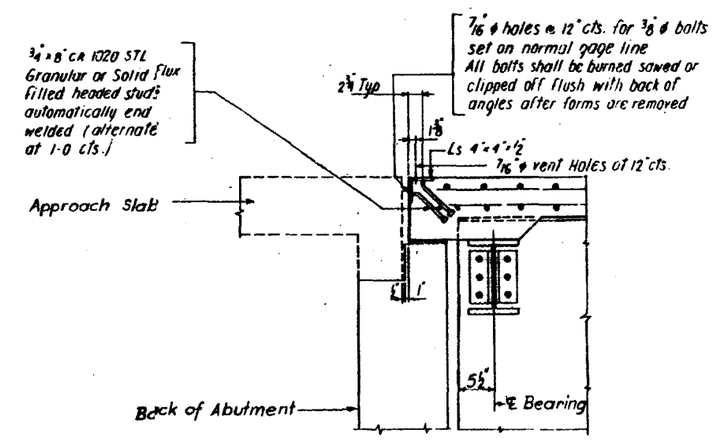

SECTION G-G

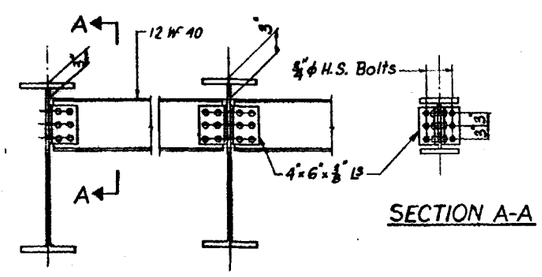

END DIAPHRAGM D-1.

SECTION A-A

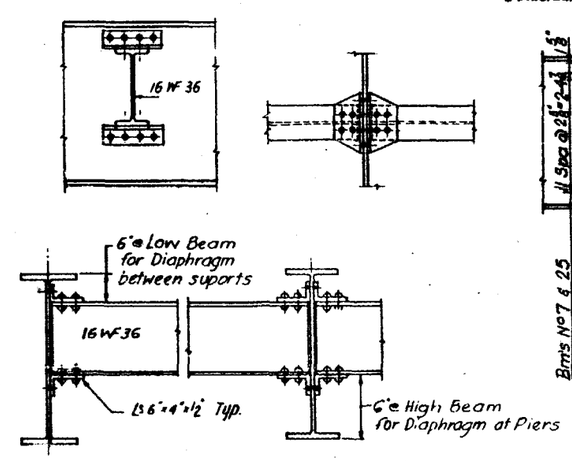

INTERMEDIATE DIAPHRAGM D-2

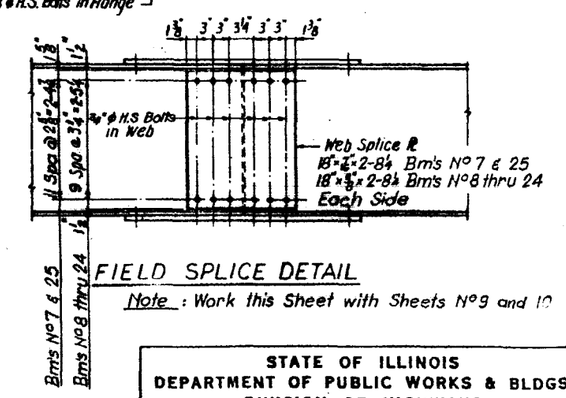

FIELD SPLICE DETAIL

Note: Work this Sheet with Sheets No 9 and 10

DESIGNED BY S.F.
DRAWN BY S.F.
CHECKED BY V.B.

STATE OF ILLINOIS
DEPARTMENT OF PUBLIC WORKS & BLDGS.
DIVISION OF HIGHWAYS

STEEL DETAILS

GREENWOOD AVE. OVER
F.A. ROUTE 42

437 STATION 49 + 66.11

F.A. RT. 64 LAKE COUNTY SECTION 8-HB

H. W. LOCHNER, INC.
ENGINEERS
CHICAGO, ILLINOIS

SHEET 11 of 20

ROUTE NO.	SECTION	COUNTY	TOTAL SHEETS	SHEET NO.
F.A.—42 (437)	8-HB	LAKE	81	62
FED. ROAD DIV. NO. 4	ILLINOIS	PROJECT		

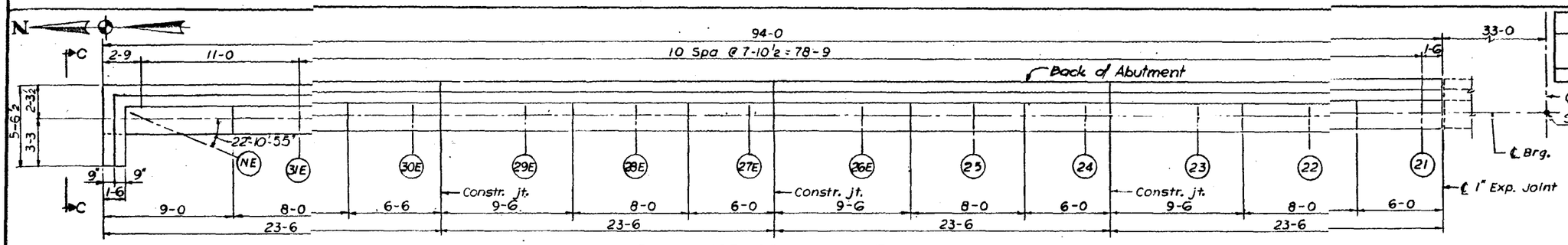

PLAN TOP OF ABUTMENT

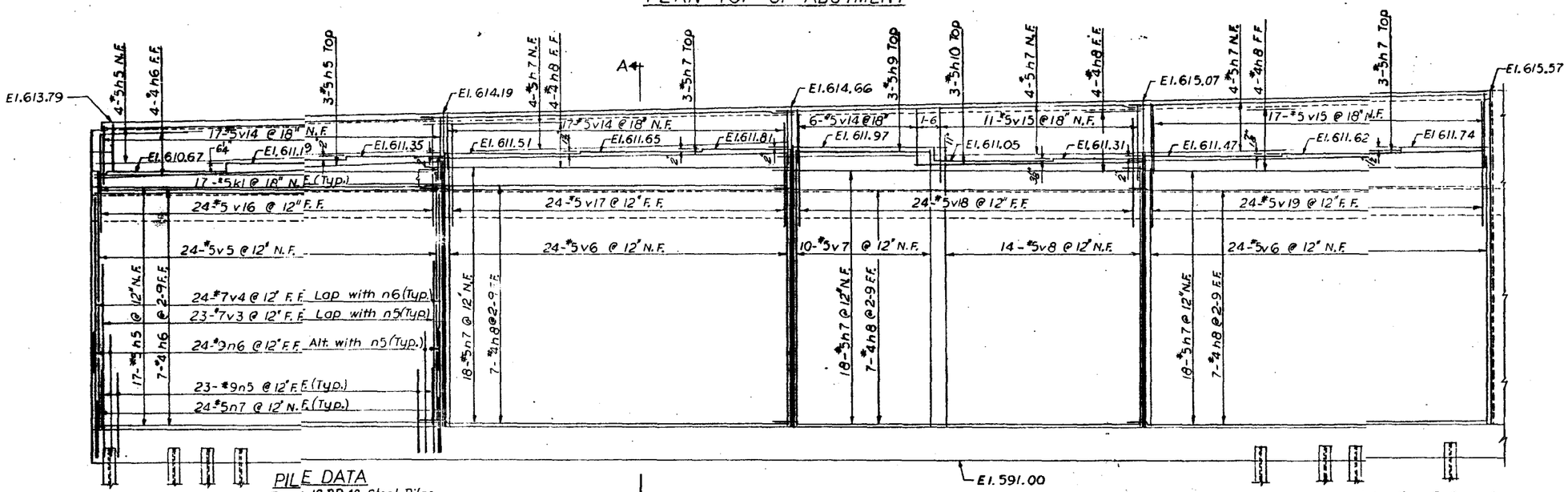

ELEVATION

PILE DATA

Type: 10 BP 42 Steel Piles
Required Capacity: 45 Tons.
Minimum length: 26 Ft.
No Required: 100* Test Piles: 2
* Does not include Test Piles

Notes: For Notes, Section A-A, View C-C and Joint Details see Sht. No 13.
For Anchor Bolt Setting Diagrams see Sht. No 14

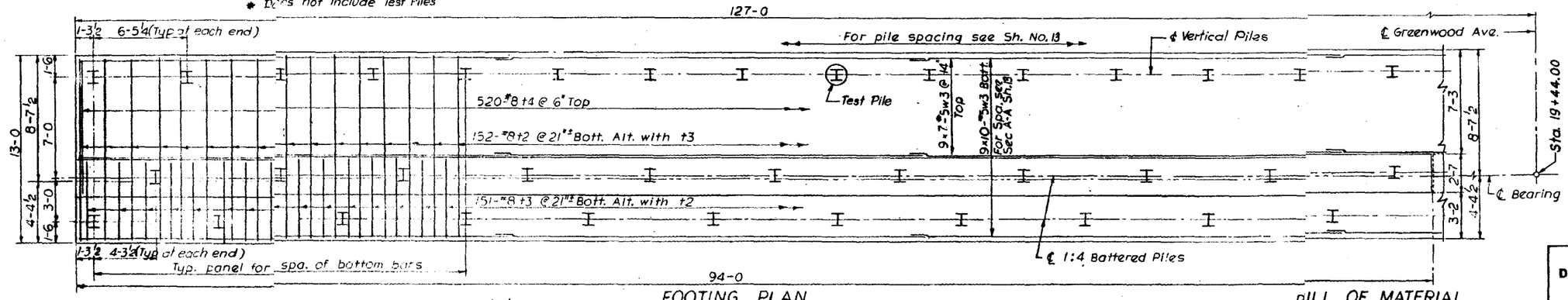

FOOTING PLAN

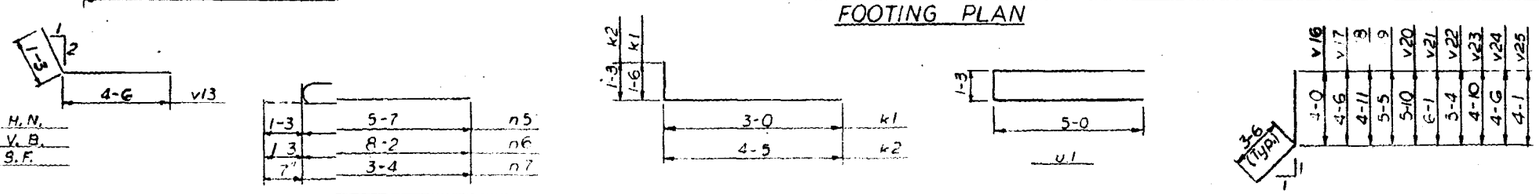

BAR LIST

Mark	No. Req'd	Size	Length	Shape
t2	152	#8	12-6	
t3	151	#8	5-6	
t4	520	#8	9-9	
w3	153	#5	29-10	
n5	257	#9	6-10	
n6	268	#9	9-5	
n7	268	#5	3-11	
v3	257	#7	11-1	
v4	268	#7	11-6	
v5	24	#5	17-2	
v6	48	#5	18-0	
v7	10	#5	18-6	
v8	23	#5	17-6	
v9	85	#5	18-4	
v10	53	#5	17-10	
v11	8	#5	17-8	
v12	17	#5	17-0	
v13	4	#5	5-9	
v14	92	#5	4-3	
v15	99	#5	5-0	
v16	24	#5	7-6	
v17	24	#5	8-0	
v18	24	#5	8-5	
v19	24	#5	8-11	
v20	46	#5	9-4	
v21	23	#5	9-7	
v22	28	#5	8-10	
v23	25	#5	8-4	
v24	25	#5	8-0	
v25	25	#5	7-7	
h5	24	#5	23-2	
h6	11	#4	23-2	
h7	72	#5	24-9	
h8	33	#4	24-6	
h9	3	#5	9-2	
h10	3	#5	15-3	
h11	50	#5	23-3	
h12	22	#4	23-0	
h13	25	#5	26-9	
h14	11	#4	26-9	
h15	69	#5	25-7	
h16	33	#4	25-4	
h17	3	#5	10-6	
h18	4	#5	15-8	
h19	3	#5	9-0	
h20	3	#5	17-6	
h21	25	#5	21-9	
h22	11	#4	21-9	
k1	183	#5	4-6	
k2	4	#5	5-8	
u1	4	#5	11-3	

BILL OF MATERIAL

Item	Unit	Quantity
Class "X" Concrete	Cu. Yds.	732.6
Reinforcement Bars	Lbs.	71590
Steel Piles 10BP42	Lin. Ft	2600
Steel Test Piles	Each	2

DESIGNED BY H.N.
DRAWN BY V.B.
CHECKED BY S.F.

STATE OF ILLINOIS
DEPARTMENT OF PUBLIC WORKS & BLDGS.
DIVISION OF HIGHWAYS

EAST ABUTMENT — NORTH SECTION

GREENWOOD AVE. OVER
F.A. ROUTE 42

STATION 49 + 66.11 (437)

F.A. RT. 42 LAKE COUNTY SECTION 8-HB

H. W. LOCHNER, INC.
ENGINEERS
CHICAGO, ILLINOIS

SHEET 12 OF 20

ROUTE NO.	SECTION	COUNTY	TOTAL SHEETS	SHEET NO.
F.A. ~~42~~ 437	8-HB	LAKE	81	63
FED. ROAD DIV. NO. 4	ILLINOIS	PROJECT		

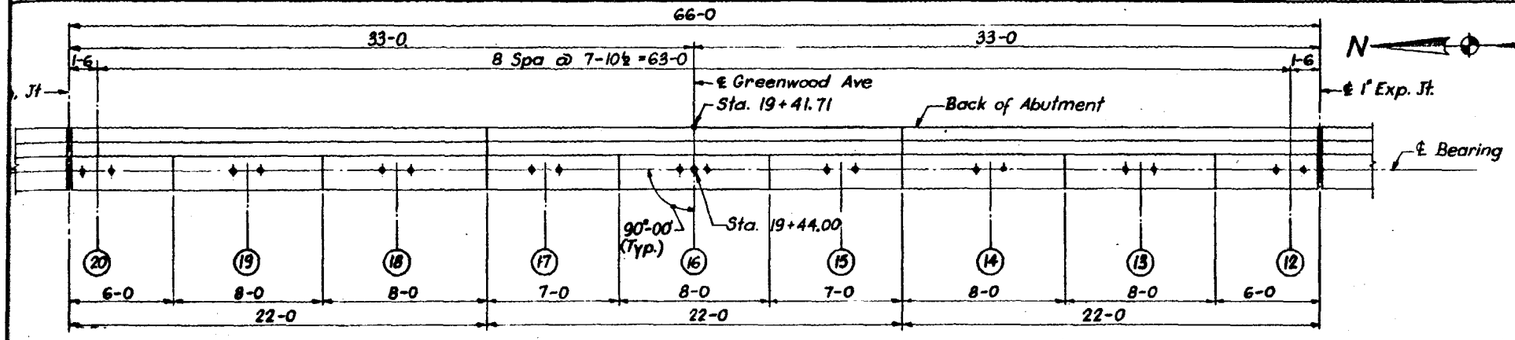

PLAN TOP OF ABUTMENT

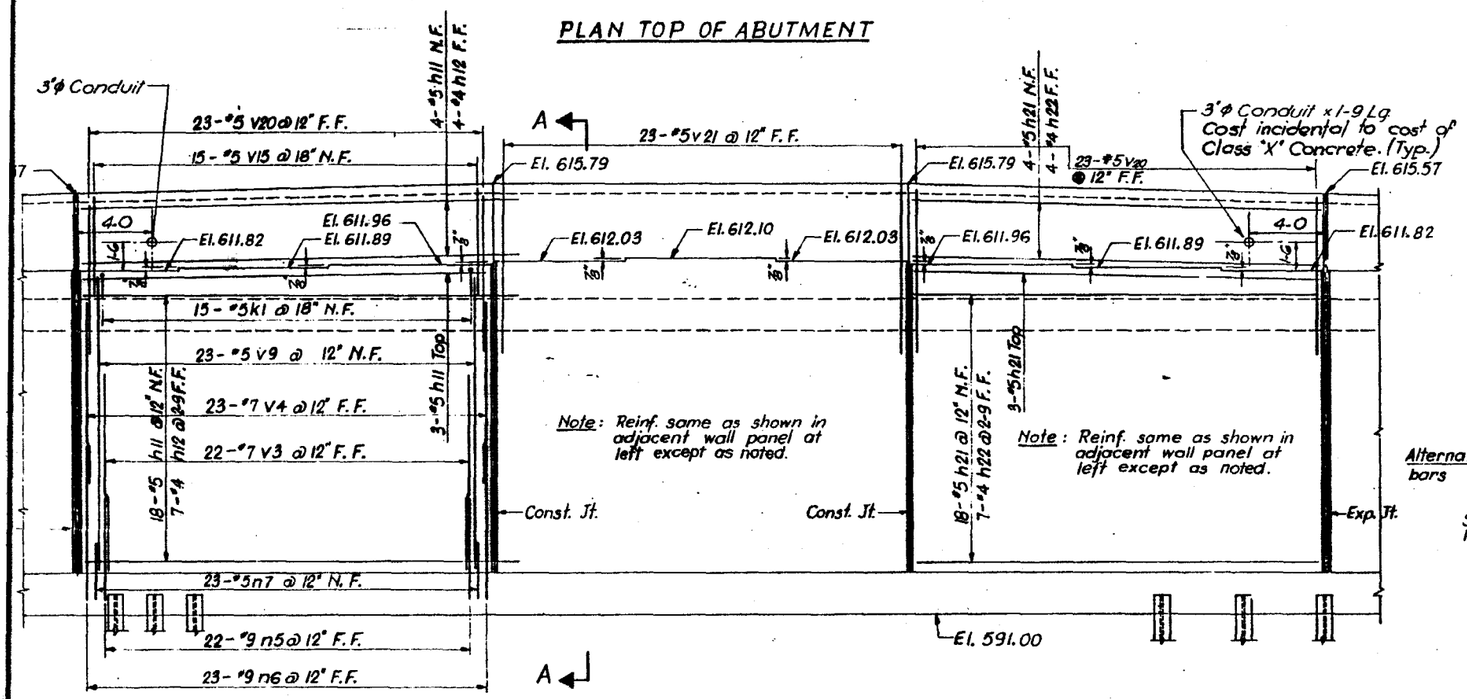

ELEVATION

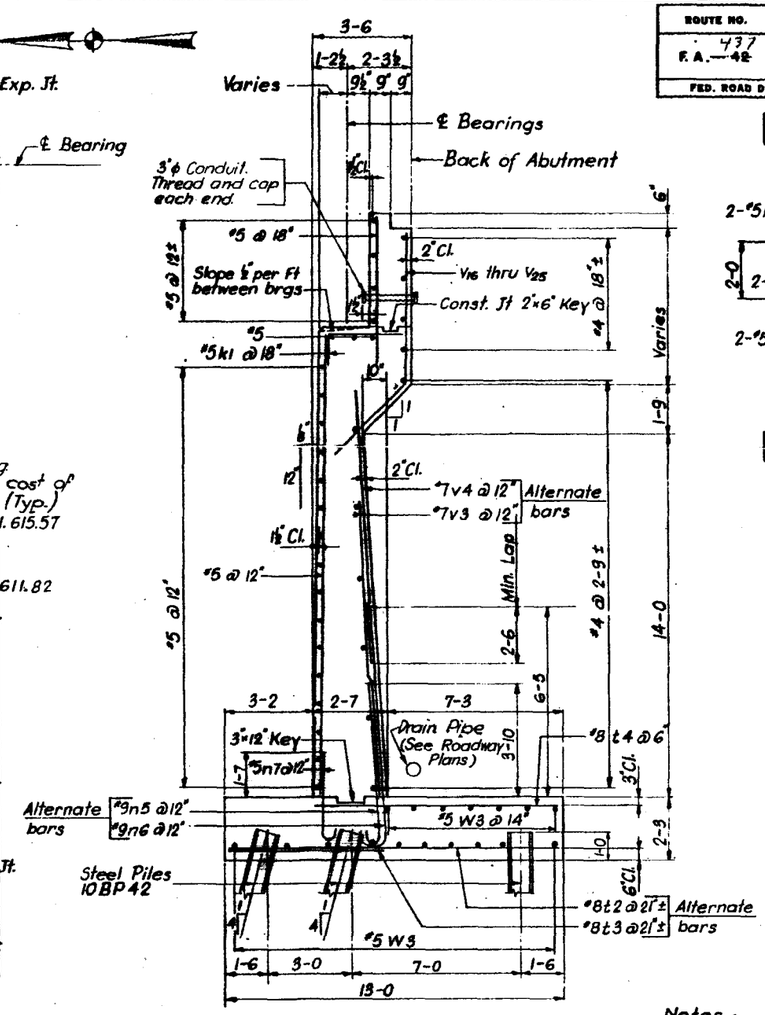

SECTION A-A

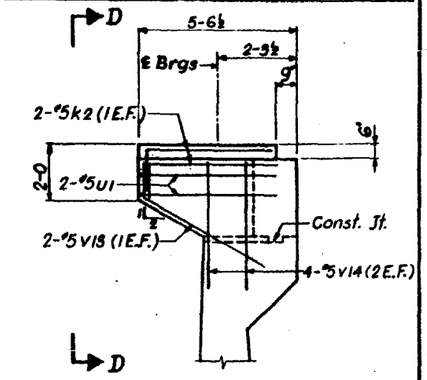

VIEW B-B as shown

VIEW C-C opp. hand

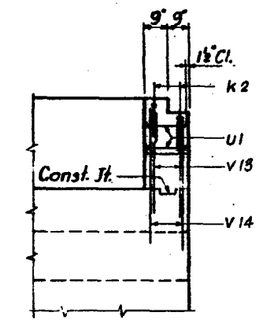

VIEW D-D

Notes:

The back of Abutment shall be waterproofed from top of footing to ground surface in accordance with SEC. 503.12 of the Standard Specifications.

In placing reinforcement care shall be taken to miss Anchor Bolts.

For Reinforcement Bar List see Sht. - No 12

For Anchor Bolt Details see Sht. No 14

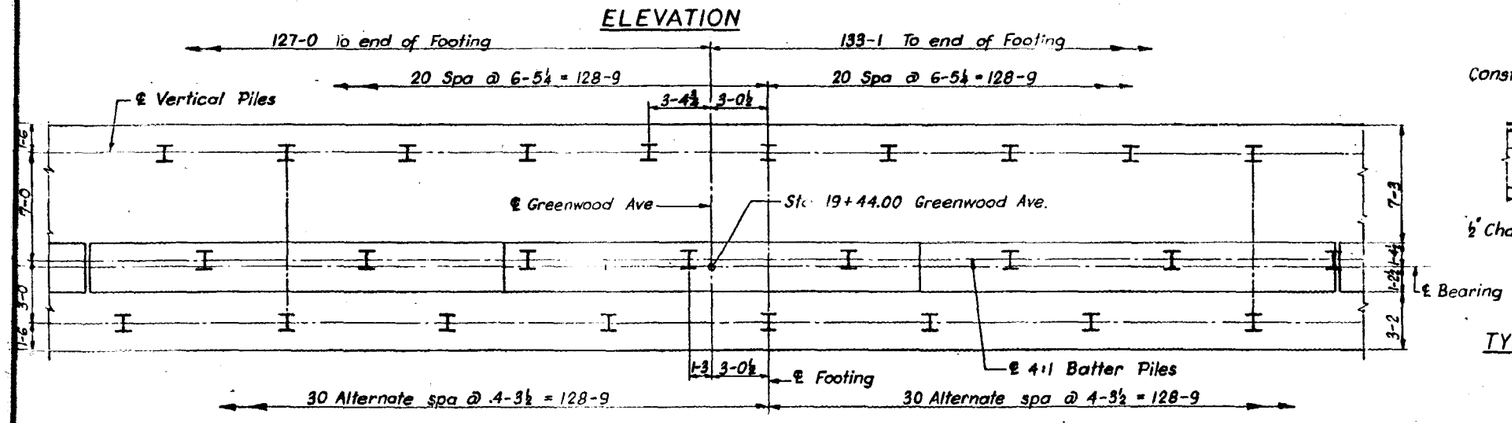

FOOTING PLAN

Note: Footing Reinforcement billed on Sht. No 12

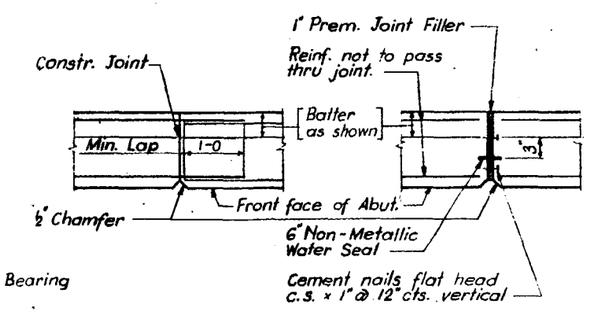

TYPICAL CONSTRUCTION JOINT

TYPICAL EXPANSION JOINT

BY H. N.
BY E. F.
BY S. F.

STATE OF ILLINOIS
DEPARTMENT OF PUBLIC WORKS & BLDGS.
DIVISION OF HIGHWAYS

EAST ABUTMENT — CENTER SECTION

GREENWOOD AVE. OVER
F.A. ROUTE 42

437 STATION 49 + 66.11

F.A. RT. 42 LAKE COUNTY SECTION 8-HB

H. W. LOCHNER, INC.
ENGINEERS
CHICAGO, ILLINOIS

SHEET 13 OF 20

ROUTE NO.	SECTION	COUNTY	TOTAL SHEETS	SHEET NO.
F. A. — 42	8-HB	LAKE	81	64
FED. ROAD DIV. NO. 4	ILLINOIS	PROJECT		

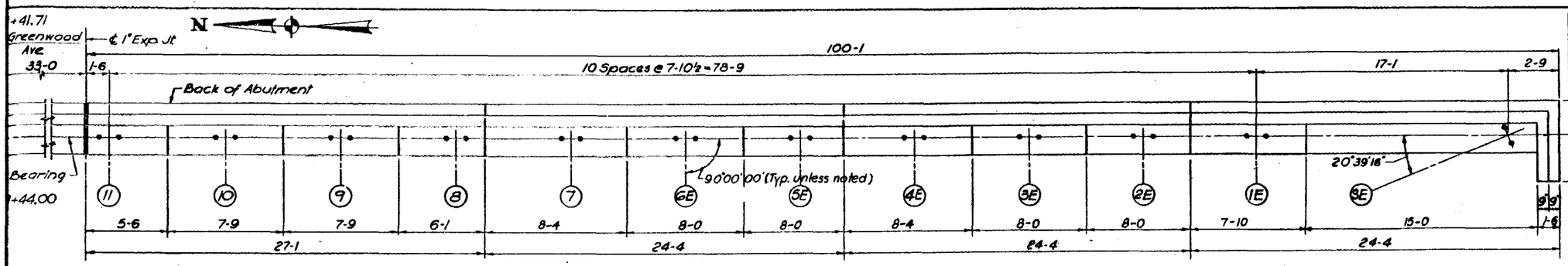

PLAN TOP OF ABUTMENT

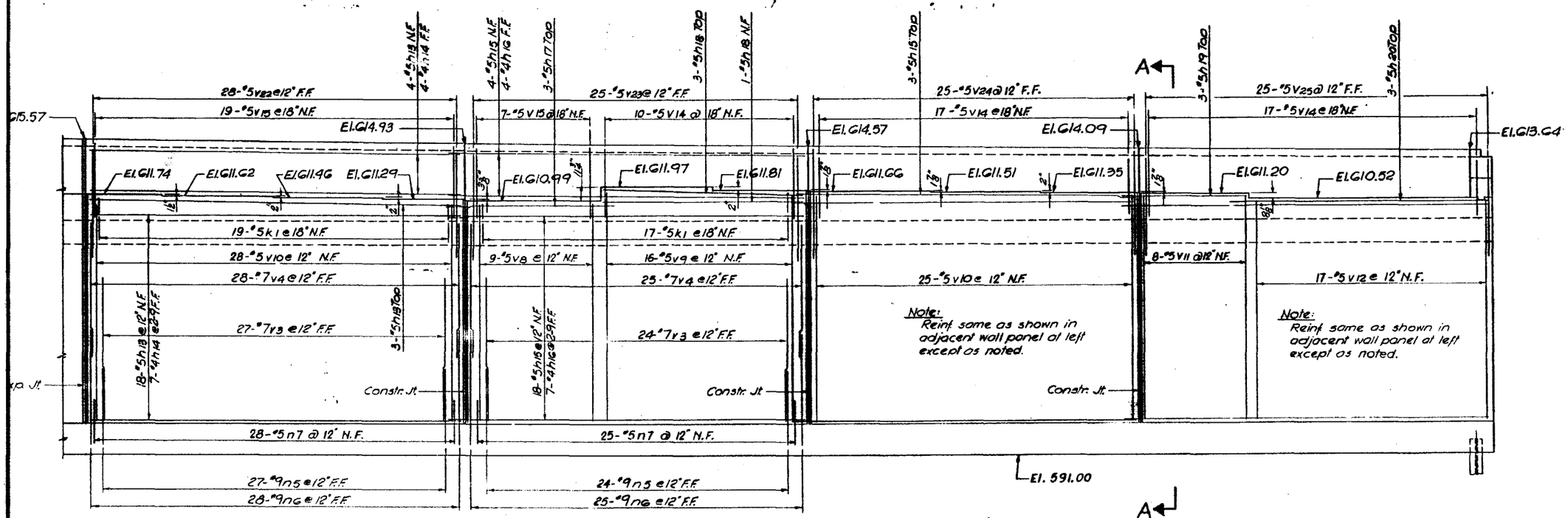

ELEVATION

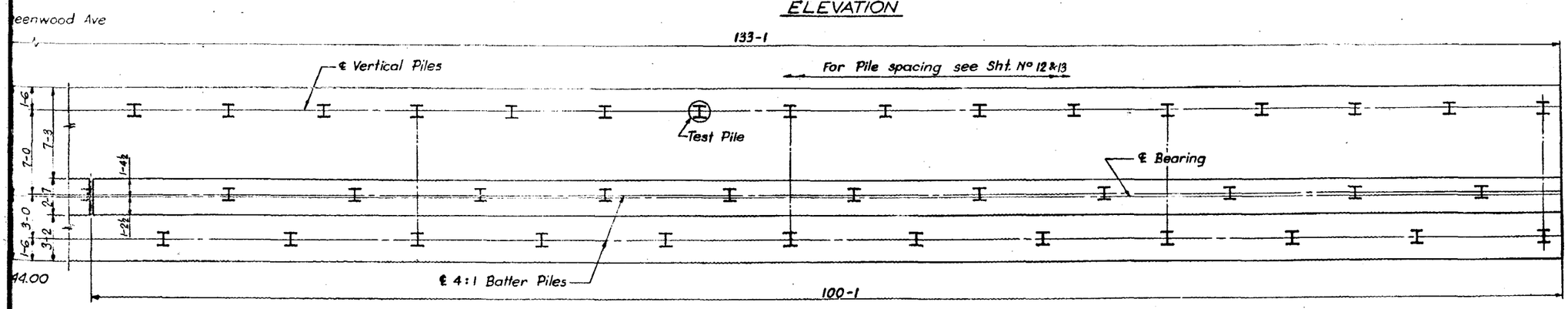

Note: Footing Reinforcement billed on Sht. No 12

FOOTING PLAN

Notes: For Notes, Section A-A, Section B-B and Joint Details see Sht. No 13
For Reinforcement Bar List see Sht. No 12

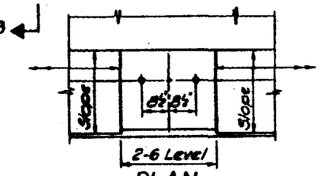

PLAN

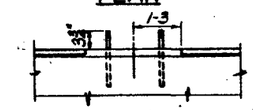

ELEVATION
For Beams No 7 thru 25

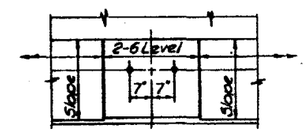

PLAN

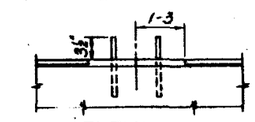

ELEVATION
For Beams No 1E thru 6E and No 26E thru 31E

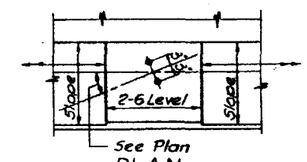

PLAN

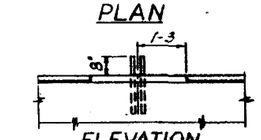

ELEVATION
For Beams SE and NE

ANCHOR BOLT SETTING DIAGRAMS

H. N.
E. F.
S. F.

STATE OF ILLINOIS
DEPARTMENT OF PUBLIC WORKS & BLDGS.
DIVISION OF HIGHWAYS

EAST ABUTMENT — SOUTH SECTION
GREENWOOD AVE. OVER
F. A. ROUTE 42

437 STATION 49 + 66.11

F. A. RT. 42 LAKE COUNTY SECTION 8-HB

N. W. LOCHNER, INC.
ENGINEERS
CHICAGO, ILLINOIS

SHEET 14 OF 20

ROUTE NO.	SECTION	COUNTY	TOTAL SHEETS	SHEET NO.
F.A. — 42 (4-1)	8-HB	LAKE	81	65
FED. ROAD DIV. NO. 4	ILLINOIS	PROJECT		

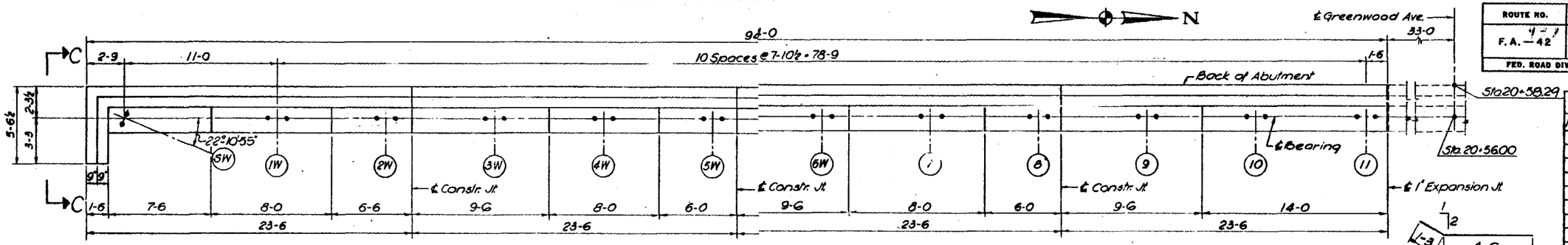

PLAN TOP OF ABUTMENT

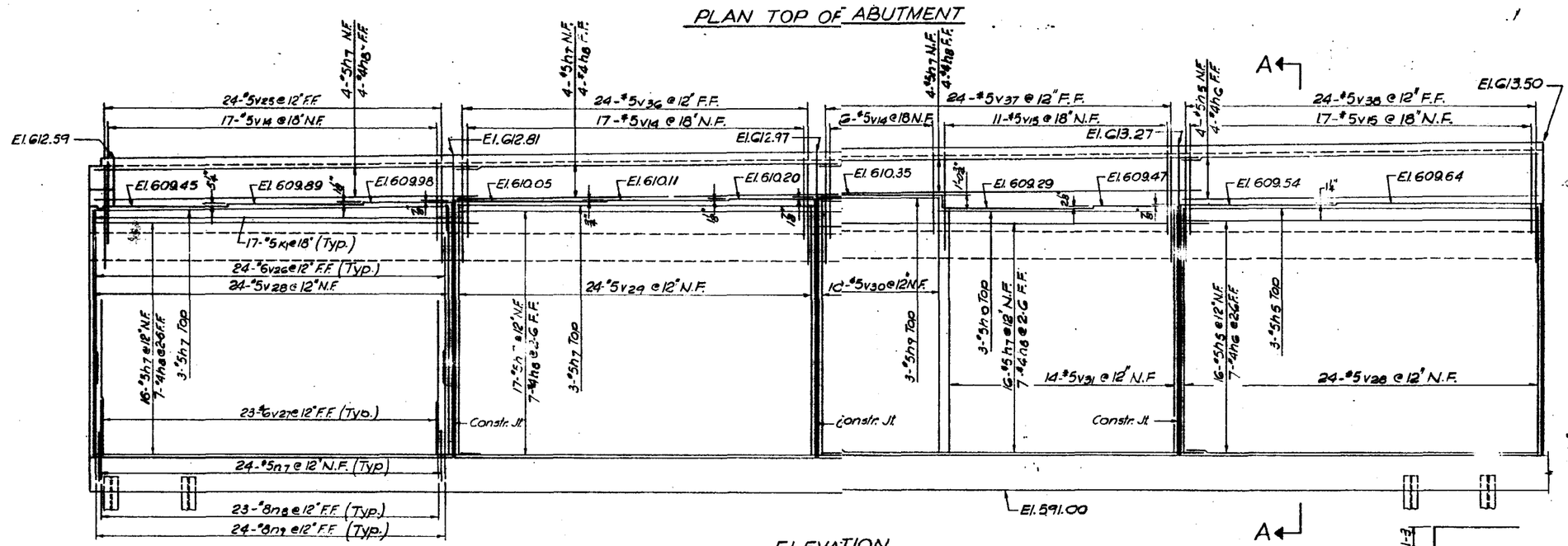

ELEVATION

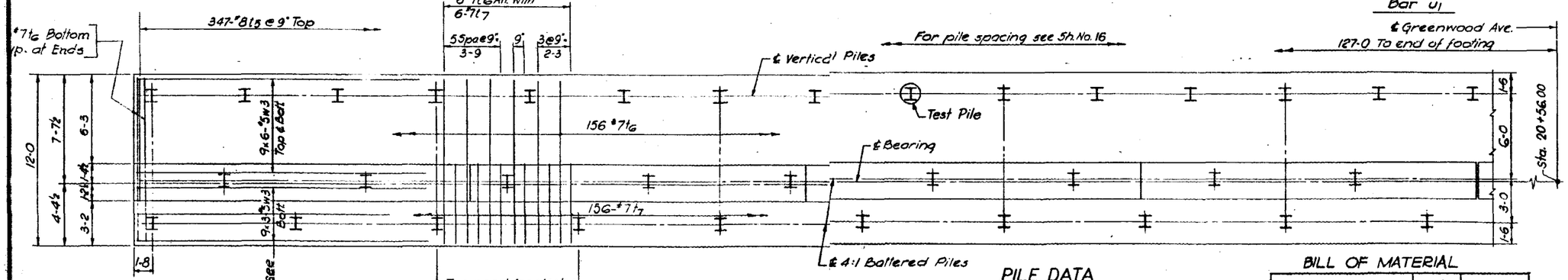

FOOTING PLAN

PILE DATA

Type : 10 BP 42 Steel Piles
Required Capacity : 45 Tons
Minimum length : 23 Ft.
Nº Required : 91 * Test Piles 2
* Does not include Test Piles

BILL OF MATERIAL

Item	Unit	Total
Class "X" Concrete	C.Y.	670.4
Reinforcement Bars	Lbs.	55580
Steel Piles 10BP42'	L.F.	2093
Test Steel Piles	Ea.	2

BAR SCHEDULE

Mark	No. Req.	Size	Length	Shape
h5	347	#8	8-9	—
h6	160	#7	11-6	—
h7	156	#7	5-6	—
w3	135	#5	29-10	—
n7	268	#5	3-11	⊂
n8	257	#8	6-10	⊂
n9	268	#8	9-7	⊂
v26	268	#6	9-8	—
v27	257	#6	10-6	—
v28	76	#5	16-0	—
v29	24	#5	16-7	—
v30	26	#5	16-10	—
v31	23	#5	15-9	—
v32	69	#5	16-3	—
v33	25	#5	16-6	—
v34	8	#5	16-5	—
v35	17	#5	15-11	—
v36	24	#5	7-8	—
v37	24	#5	7-11	—
v38	52	#5	8-1	—
v39	46	#5	8-4	—
v40	23	#5	8-7	—
v41	25	#5	7-7	—
v13	4	#5	5-9	—
v14	92	#5	4-3	—
v15	99	#5	5-0	—
v24	25	#5	7-10	—
v25	49	#5	7-7	—
h5	23	#5	23-2	—
h6	11	#4	23-2	—
h7	67	#5	24-9	—
h8	33	#4	24-6	—
h9	3	#5	9-2	—
h10	3	#5	15-3	—
h11	48	#5	23-3	—
h12	22	#4	23-0	—
h13	23	#5	26-9	—
h14	11	#4	26-9	—
h15	63	#5	25-7	—
h16	33	#4	25-4	—
h17	3	#5	10-6	—
h18	4	#5	15-8	—
h19	3	#5	9-0	—
h20	3	#5	17-6	—
h21	24	#5	21-9	—
h22	11	#4	21-9	—
k1	183	#5	4-6	⊏
k2	4	#5	5-8	⊏
u1	4	#5	11-3	⊏

Bar v13

7	3-4	n7
11	5-9	n8
11	8-6	n9

Bars n7, n8 & n9

4-4	v24
4-1	v25
4-2	v36
4-5	v37
4-7	v38
4-10	v39
5-1	v40
4-1	v41

Bars v24, v25 & v36 – v41

3-0	k1
4-5	k2

Bars k1 & k2

5-0

Bar u1

Notes:

For Notes, Section A-A, View C-C and Joint Details see Sht. Nº 16
For Anchor Bolt Setting Diagrams see Sht. Nº 17

STATE OF ILLINOIS
DEPARTMENT OF PUBLIC WORKS & BLDGS.
DIVISION OF HIGHWAYS

WEST ABUTMENT — SOUTH SECTION

GREENWOOD AVE. OVER
F.A. ROUTE 42

437 STATION 49 + 66.11

F.A. RT. 42 LAKE COUNTY SECTION 8-HB

H. W. LOCHNER, INC.
ENGINEERS
CHICAGO, ILLINOIS

SHEET 15 OF 20

SIGNED BY H.N.
DRAWN BY E.F.
CHECKED BY S.F.

ROUTE NO.	SECTION	COUNTY	TOTAL SHEETS	SHEET NO.
F. A. — 42 (437)	8-HB	LAKE	81	66
FED. ROAD DIV. NO. 4	ILLINOIS	PROJECT		

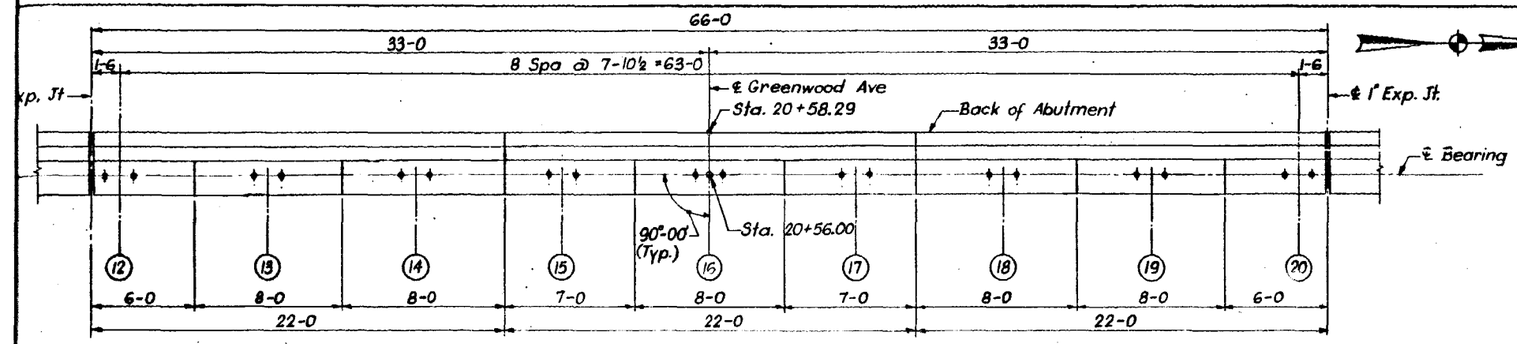

PLAN TOP OF ABUTMENT

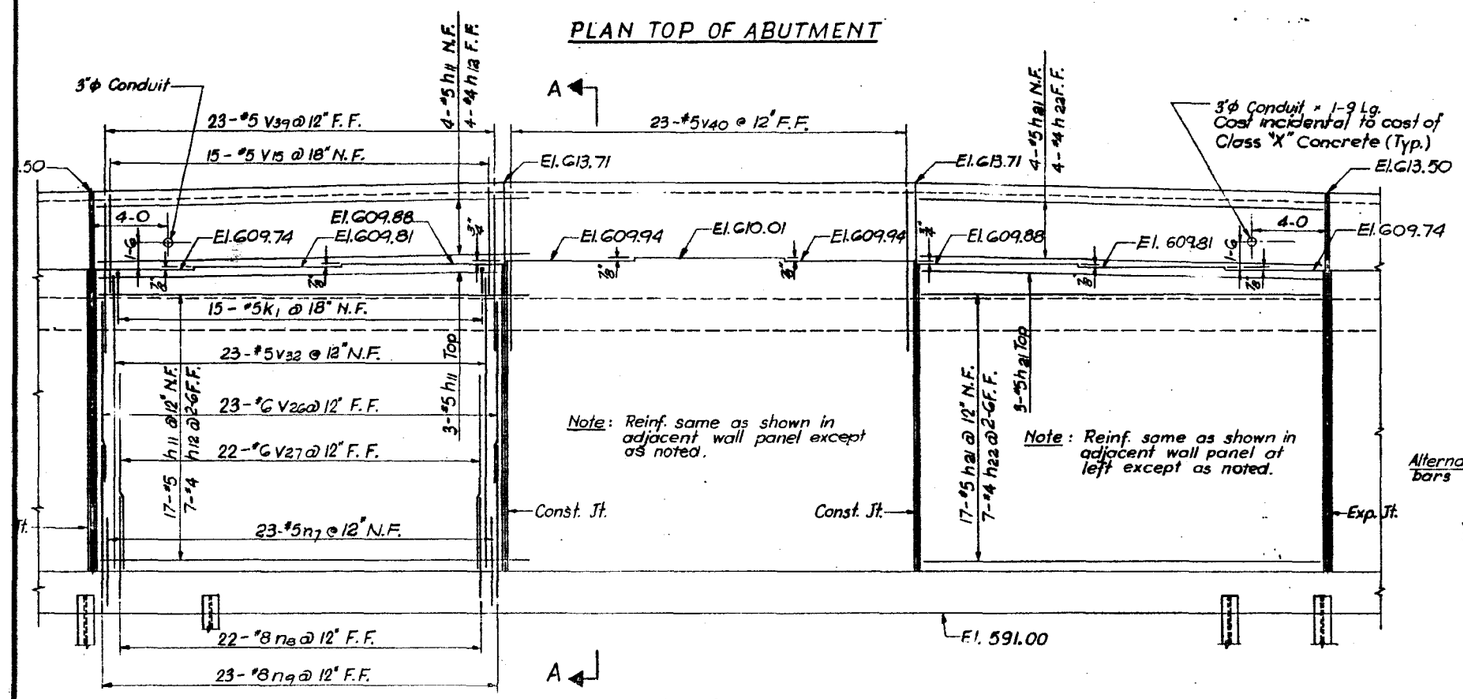

ELEVATION

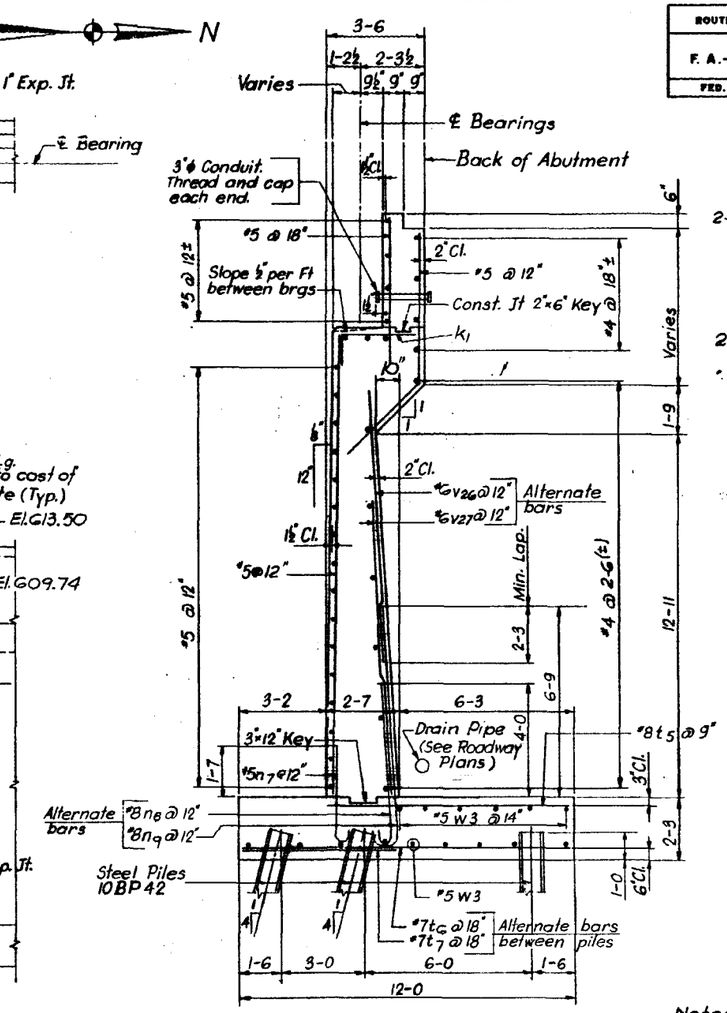

SECTION A-A

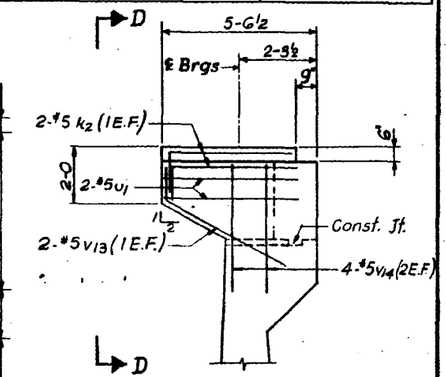

VIEW B-B as shown
VIEW C-C opp. hand

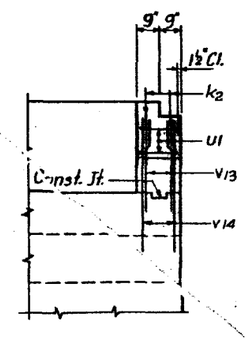

VIEW D-D

Notes:

The back of Abutment shall be waterproofed from top of footing to ground surface in accordance with SEC. 503.12 of the Standard Specifications.

In placing reinforcement care shall be taken to miss Anchor Bolts.

For Reinforcement Bar List see Sht. No 15

For Anchor Bolt Details see Sht. No 17

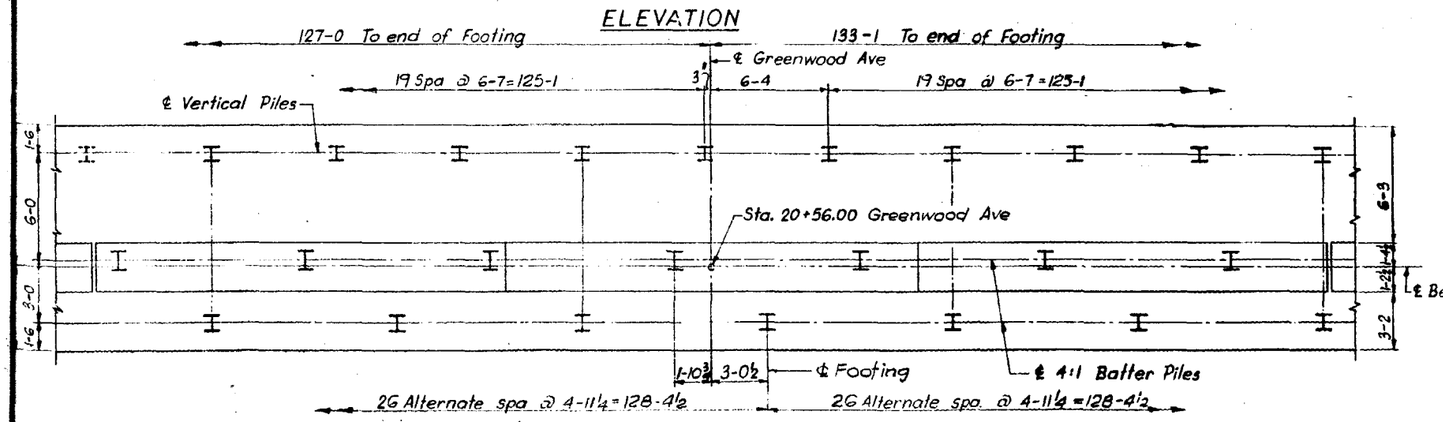

FOOTING PLAN

Note: Footing Reinforcement billed on Sht. No 15

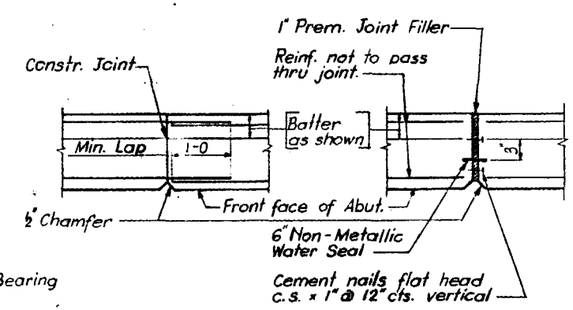

TYPICAL CONSTRUCTION JOINT

TYPICAL EXPANSION JOINT

ED BY H. N.
BY E. F.
ED BY S. F.

STATE OF ILLINOIS
DEPARTMENT OF PUBLIC WORKS & BLDGS.
DIVISION OF HIGHWAYS

WEST ABUTMENT — CENTER SECTION

GREENWOOD AVE. OVER
F.A. ROUTE 42

STATION 49+66.11 (437)

F.A. RT. 42 LAKE COUNTY SECTION 8-HB

H. W. LOCHNER, INC.
ENGINEERS
CHICAGO, ILLINOIS

SHEET 16 OF 20

ROUTE NO.	SECTION	COUNTY	TOTAL SHEETS	SHEET NO.
F. A. — 42 (437)	8-HB	LAKE	81	67
FED. ROAD DIV. NO. 4	ILLINOIS	PROJECT		

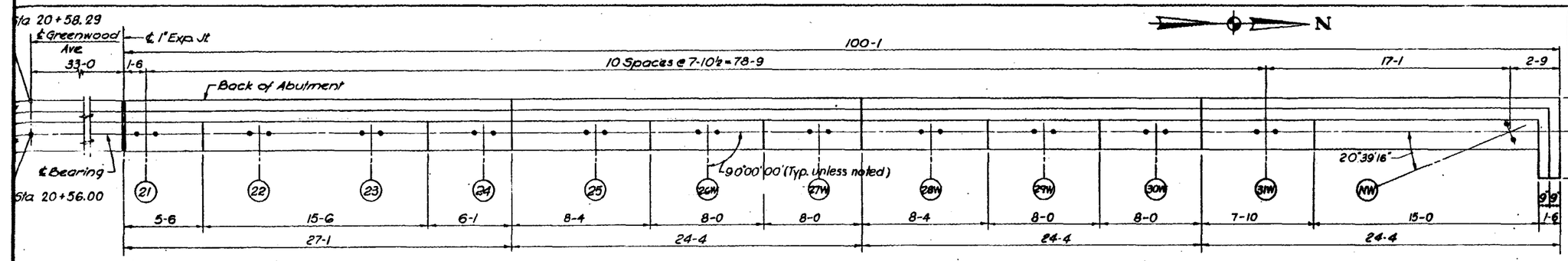

PLAN TOP OF ABUTMENT

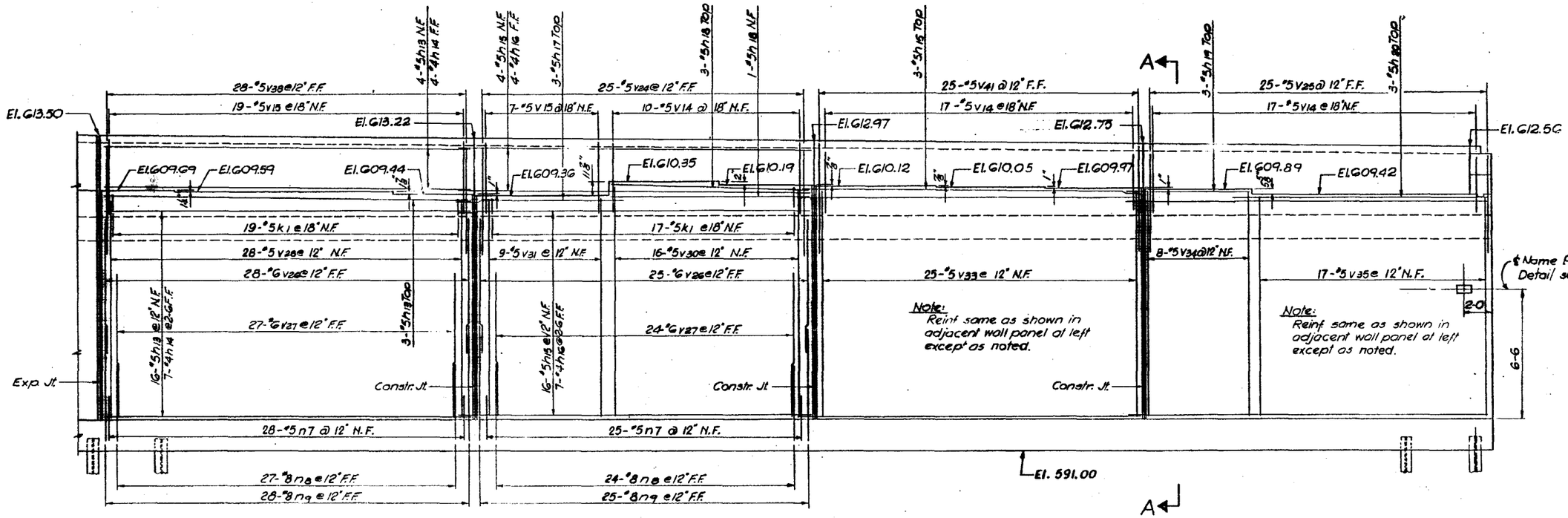

ELEVATION

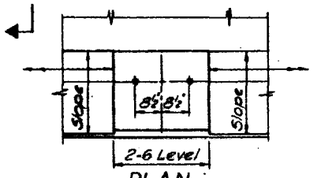

PLAN

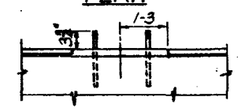

ELEVATION
For Beams No 7 thru 25

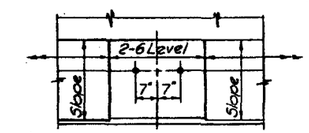

PLAN

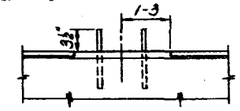

ELEVATION
For Beams No 1W thru 6W and 26W thru 31W

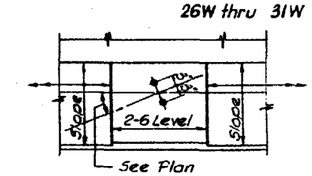

PLAN

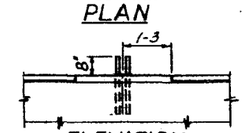

ELEVATION
For Beams SW and NW

ANCHOR BOLT SETTING DIAGRAMS

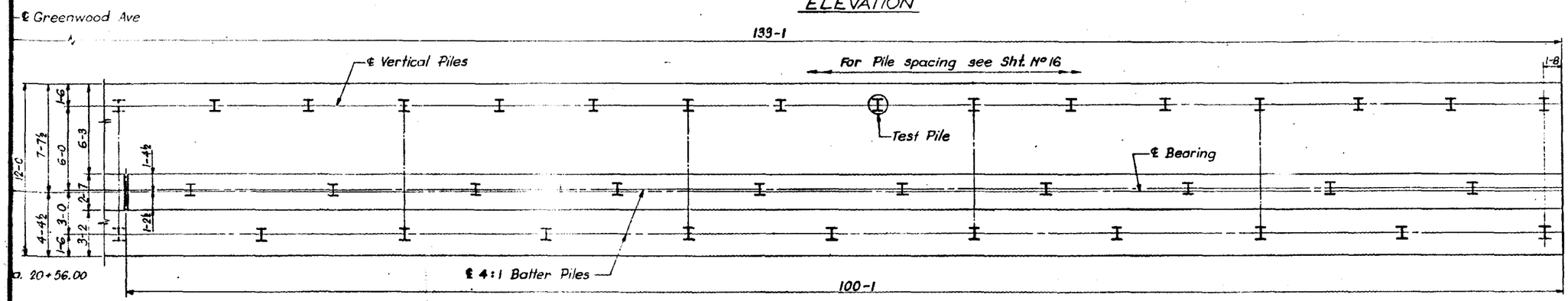

Note: Footing Reinforcement billed on Sht. No 15

FOOTING PLAN

Notes: For Notes, Section A-A, Section B-B and Joint Details see Sht. No 16
For Reinforcement Bar List see Sht. No 15

CHECKED BY H. N.
DRAWN BY E. F.
CHECKED BY S. F.

STATE OF ILLINOIS
DEPARTMENT OF PUBLIC WORKS & BLDGS.
DIVISION OF HIGHWAYS

WEST ABUTMENT — NORTH SECTION

GREENWOOD AVE. OVER
F. A. ROUTE 42

STATION 49+66.11

F. A. RT. 42 (437) LAKE COUNTY SECTION 8-HB

H. W. LOCHNER, INC.
ENGINEERS
CHICAGO, ILLINOIS

SHEET 17 OF 20

ROUTE NO.	SECTION	COUNTY	TOTAL SHEETS	SHEET NO.
F.A.-~~42~~ 437	8-HB	LAKE	81	68
FED. ROAD DIV. NO. 4	ILLINOIS	PROJECT		

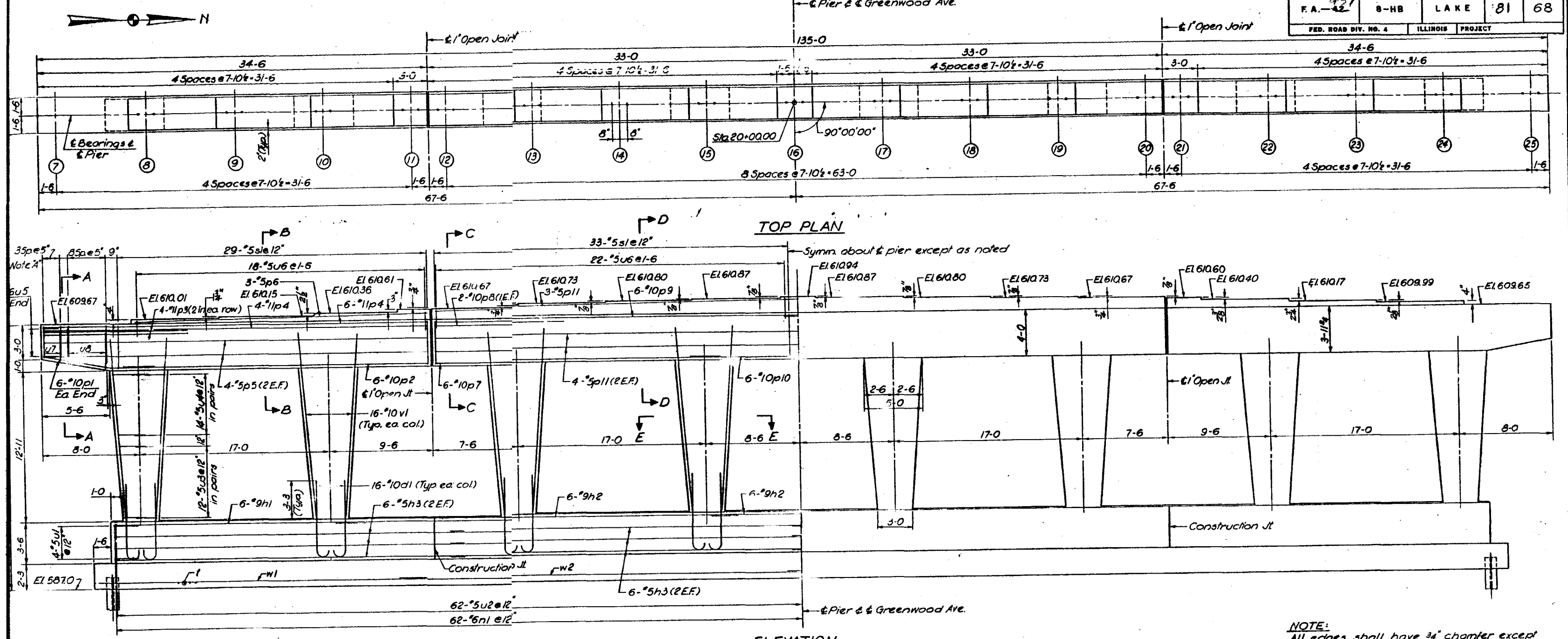

Note "A":
4 Sets of 4-#5u7
9 Sets of 9-#5u8

NOTE:
All edges shall have ¾" chamfer except footing.
Pour steps monolithically with pier cap.
In placing reinforcement bars care shall be taken to clear anchor bolts.

For Sections, Bill of Materials, Pile Data see Sheet No. 19

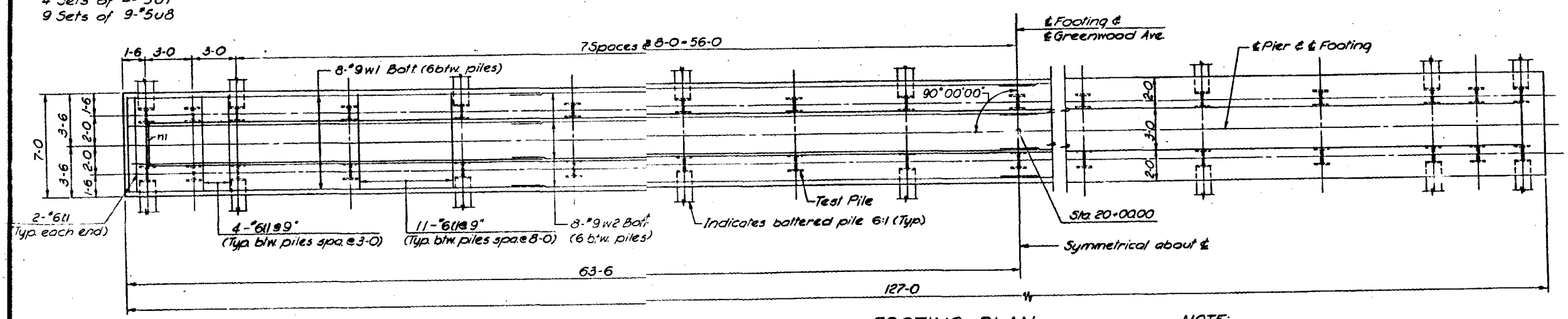

NOTE:
Spacing of H piles and placement of reinforcement bars, except for h1 bars, symmetrical about ℄ pier.

DESIGNED BY S.F.
DRAWN BY E.F.
CHECKED BY L.K.

STATE OF ILLINOIS
DEPARTMENT OF PUBLIC WORKS & BLDGS.
DIVISION OF HIGHWAYS

PIER

GREENWOOD AVE. OVER
F.A. ROUTE 42
STATION 49+66.11

F.A. RT. ~~42~~ 437 LAKE COUNTY SECTION 8-HB

H. W. LOCHNER, INC.
ENGINEERS
CHICAGO, ILLINOIS

SHEET 18 OF 20

ROUTE NO.	SECTION	COUNTY	TOTAL SHEETS	SHEET NO.
F.A.-~~42~~ 437	8-HB	LAKE	81	69
FED. ROAD DIV. NO. 4	ILLINOIS	PROJECT		

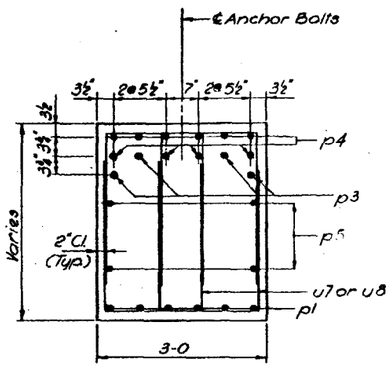

SECTION A-A

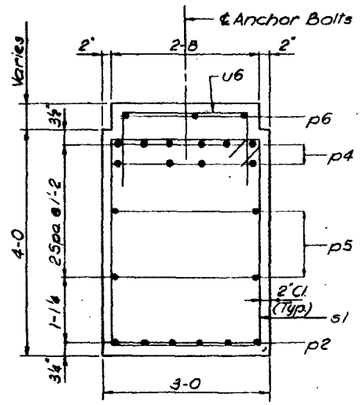

SECTION B-B

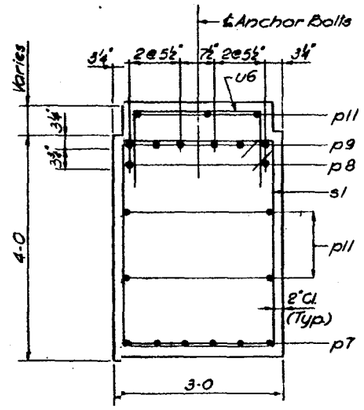

SECTION C-C

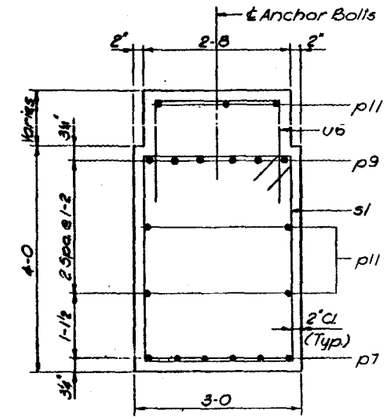

SECTION D-D

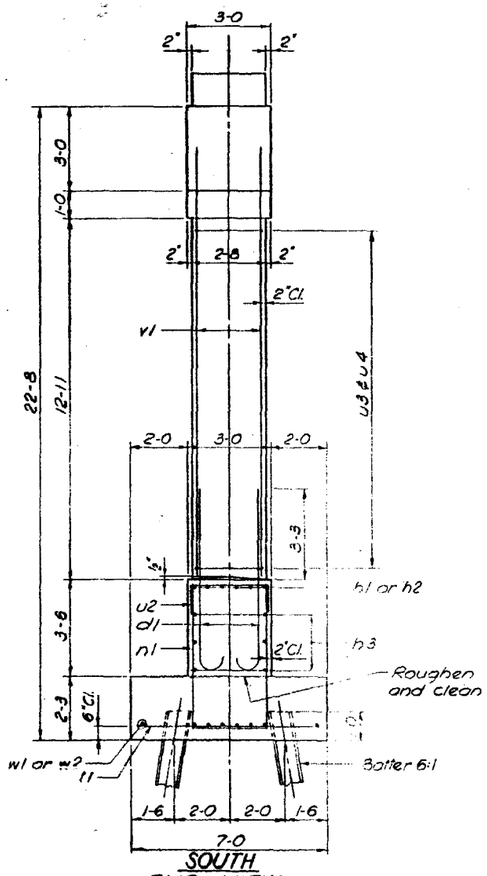

SOUTH END VIEW

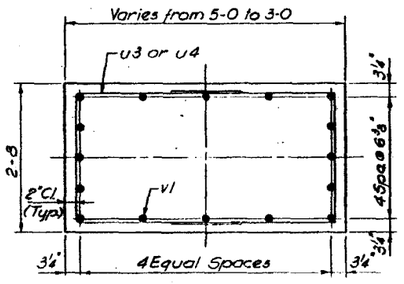

SECTION E-E

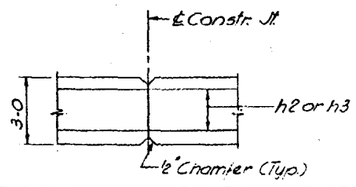

TYPICAL CONSTRUCTION JOINT

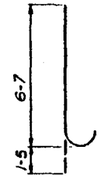

Bar d1

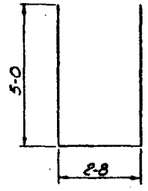

Bar n1

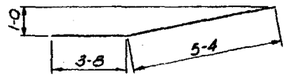

Bar p1

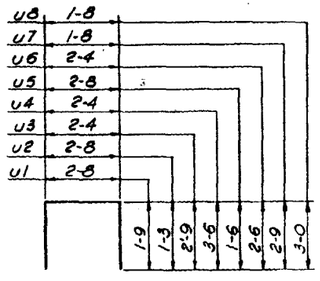

Bars u1 thru u8

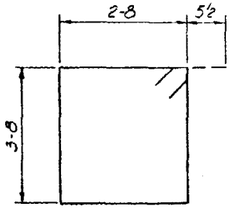

Bar s1

PILE DATA

Type: Steel H10BP42
Capacity: 50 Tons
Minimum Length: 23 Ft.
* No. Required: 37
Test Piles: 1

* Does not include test pile.

NOTE:
Work this sheet with sheet No. 18

BILL OF MATERIAL

BAR	NO.	SIZE	LENGTH	SHAPE
h1	6	#9	22-3	—
h2	18	#9	36-0	—
h3	24	#5	31-10	—
n1	124	#6	12-8	
d1	128	#10	8-0	
p1	12	#10	9-0	
p2	12	#10	27-9	—
p3	8	#11	12-0	—
p4	20	#11	34-2	—
p5	8	#5	34-2	—
p6	6	#5	26-3	—
p7	12	#10	25-9	—
p8	4	#10	11-0	—
p9	12	#10	34-0	—
p10	12	#10	19-6	—
p11	14	#5	33-6	—
s1	124	#5	13-7	
u1	8	#5	6-2	
u2	124	#5	5-2	
u3	96	#5	7-10	
u4	112	#5	9-4	
u5	6	#6	5-8	
u6	80	#5	7-4	
u7	32	#5	7-2	
u8	72	#5	7-8	
t1	174	#6	6-6	—
v1	128	#10	16-3	—
w1	16	#9	30-9	—
w2	16	#9	36-0	—

ITEM	UNIT	QUANTITY
Class X Concrete	Cu. Yds.	180.1
Reinforcement Bars	Lbs.	41,600
Steel H Piles (10BP42)	Lin. Ft.	851
Test Pile Steel	Each	1

STATE OF ILLINOIS
DEPARTMENT OF PUBLIC WORKS & BLDGS.
DIVISION OF HIGHWAYS

PIER DETAILS

GREENWOOD AVE. OVER
F.A. ROUTE 42

STATION 49+66.11

F.A. RT. 42 LAKE COUNTY SECTION 8-HB

H. W. LOCHNER, INC.
ENGINEERS
CHICAGO, ILLINOIS

SHEET 19 OF 20

CHECKED BY S.F.
DRAWN BY E.F.
CHECKED BY L.K.

ROUTE NO.	SECTION	COUNTY	TOTAL SHEETS	SHEET NO.
F.A. ~~42~~ 437	8-HB	LAKE	81	70
FED. ROAD DIV. NO. 4	ILLINOIS	PROJECT		

BORING No. 19

COUNTY Lake
Boring No. 19
Station 19+45
Offset 140' Lt. ℄ of Greenwood Ave.

Ground Surface 590.91

Description	Elevation	N	Qu t/s.f.	w (%)
Black CINDERS Fill	586.41			
Soft Black PEAT	584.91			
Medium Dense Fine to Medium Grained Gray SAND LOAM	578.91	5		164
Dense Medium Grained Gray SAND	576.41	15		
Very Dense Medium Grained Brown SAND	573.91	31		
Medium Dense Medium Grained Brown SAND	571.41	100		
Very Dense Medium Grained Brown SAND		26	No Recovery	
Hard Gray SILT LOAM	564.41	100	S 5.33	15
		100	P 4.5+	17

Surface Water El. ——
Groundwater El. at Completion 583.41
After —— Hours ——

BORING No. 20

COUNTY Lake
Boring No. 20
Station 20+55
Offset 120' Lt. ℄ of Greenwood Ave.

Ground Surface 594.58

Description	Elevation	N	Qu t/s.f.	w (%)
Very Loose Black CINDERS Fill	585.08	3		
Very Soft Brown PEAT	582.58	1		
Medium Dense Fine Grained Gray SAND	580.08	1		444
Very Dense Fine to Medium Grained Gray SAND	575.08	15		
Dense Fine to Medium Grained Brown SAND	572.58	100	No Recovery	
Very Dense Fine to Medium Grained Brown SAND	568.08	49		
		100		

Surface Water El. ——
Groundwater El. at Completion 582.58
After —— Hours ——

BORING No. 21

COUNTY Lake
Boring No. 21
Station 19+45
Offset 33' Rt. ℄ of Greenwood Ave.

Ground Surface 591.86

Description	Elevation	N	Qu t/s.f.	w (%)
Very Loose Black CINDERS Fill	585.36	2		
Very Loose Brown SAND LOAM	582.86	1		
Loose Brown SAND LOAM	580.36	6		
Medium Dense Medium Grained Brown SAND	577.86	11		
Dense Medium Grained Brown SAND	575.36	35	E	
Very Dense Medium Grained Brown SAND	572.86	100		
Medium Dense Medium Grained Brown SAND	570.36	21		
Hard Pebbly Gray SILTY CLAY LOAM Till	567.86	35	S 6.40	13
Hard Gray SILT LOAM	565.86	88	S 6.32	15

Surface Water El. ——
Groundwater El. at Completion 584.86
After —— Hours ——

BORING No. 22

COUNTY Lake
Boring No. 22
Station 20+55
Offset 48' Lt. ℄ of Greenwood Ave.

Ground Surface 594.28

Description	Elevation	N	Qu t/s.f.	w (%)
Black CINDERS Fill	590.78			
Brown GRAVEL Fill with Broken Concrete	589.78			
Very Loose Brown CINDERS Fill	587.28	2		
Very Loose Brown PEAT	584.78	2		226
Loose Fine Grained Brown SAND LOAM	582.28	10		
Very Dense Fine Grained Gray SAND	577.28	100		
Dense Fine Grained Gray SAND	574.78	49		
Very Dense Fine Grained Gray SAND	569.78	73		
Hard Pebbly Gray SILT LOAM Till	567.78	100	S 5.07	16

BORING No. 23

COUNTY Lake
Boring No. 23
Station 19+45
Offset 125' Rt. ℄ of Greenwood Ave.

Ground Surface 591.98

Description	Elevation	N	Qu t/s.f.	w (%)
Very Loose CINDERS Fill	585.48	1		
Very Loose Sandy FILL	582.48	3	No Recovery	
Loose Medium Grained Brown SAND LOAM	580.48	7		
Medium Dense Fine Grained Gray GRAVEL	577.98	20		
Dense Fine to Medium Grained Brown SAND	575.48	34		
Medium Dense Fine Grained Brown SAND	572.48	15	No Recovery	
Loose Fine Grained Brown SAND	570.48	8		
Very Dense Fine to Medium Grained Brown SAND	567.98	100		
Very Dense Gray SILT	565.98	100		18

Surface Water El. ——
Groundwater El. at Completion 582.98
After —— Hours ——

BORING No. 24

COUNTY Lake
Boring No. 24
Station 20+55
Offset 116' Rt. ℄ of Greenwood Ave.

Ground Surface 598.28

Description	Elevation	N	Qu t/s.f.	w (%)
Black CINDERS Fill	597.28			
Very Soft Black PEAT	592.28	3		86
Loose Fine Grained Gray SAND LOAM	588.78	6		
Medium Dense Fine Grained Gray SAND LOAM	586.28	14	No Recovery	
Very Dense Fine to Medium Grained Gray SAND	583.78	100		
Dense Fine to Medium Grained Gray SAND	580.78	35		
Hard Pebbly Gray SILTY CLAY	578.78	48	B/S 8.65	12
Hard Gray SILT LOAM	575.78	75	F 4.50+	17
		100	S 5.99	17
	571.78	100		18

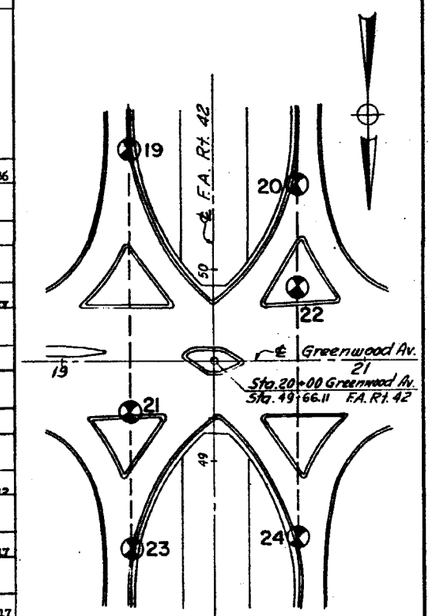

PLAN
SCALE: 1" = 30'

N – Standard Penetration Test – Blows per foot to drive 2" O.D. Split Spoon Sampler 12" with 140# hammer falling 30".

Qu – Unconfined Compressive Strength – t/sf

w – Water Content – percentage of oven dry weight – %.

Type failure:
B – Bulge Failure
S – Shear Failure
E – Estimated Value

STATE OF ILLINOIS
DEPARTMENT OF PUBLIC WORKS & BLDGS.
DIVISION OF HIGHWAYS

BORING LOGS

GREENWOOD AVE. OVER
F.A. ROUTE 42

STATION 53 + 39.07
F.A. RT. ~~42~~ 437 LAKE COUNTY SECTION 8-HB

H. W. LOCHNER, INC.
ENGINEERS
CHICAGO, ILLINOIS

SHEET 20 OF 20

STATE OF ILLINOIS
DEPARTMENT OF PUBLIC WORKS & BUILDINGS
DIVISION OF HIGHWAYS

CROSS SECTIONS

GREENWOOD AVENUE

STA 7+00 to STA 9+00

SCALE: VERT. 1"=5' HORIZ. 1"=10'

H. W. LOCHNER, INC.
ENGINEERS
CHICAGO, ILL.

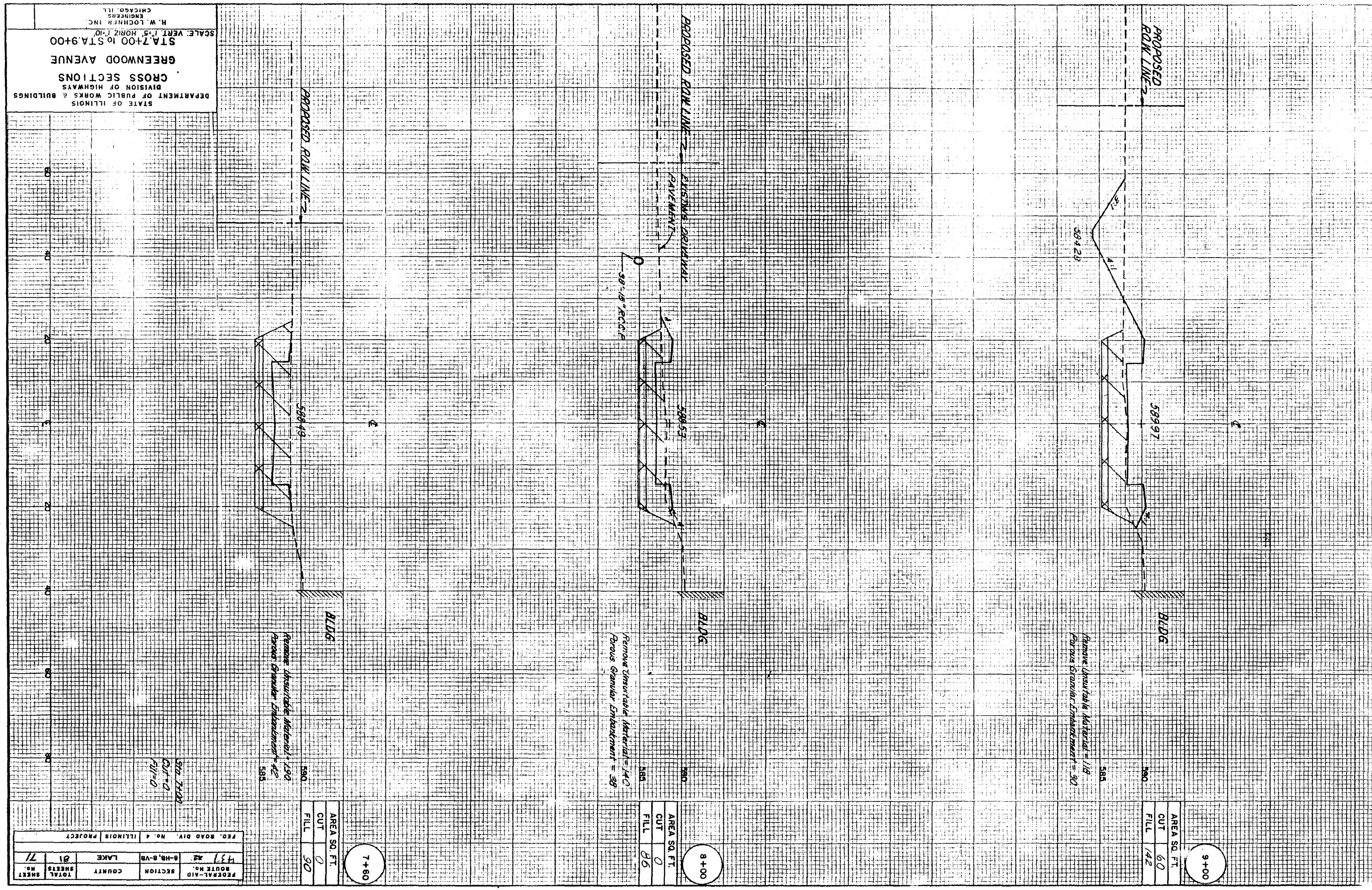

FEDERAL-AID ROUTE NO.	SECTION	COUNTY	TOTAL SHEETS	SHEET NO.
137 42	8-HB, 8-VB	LAKE	81	71

FED. ROAD DIV. No. 4 ILLINOIS PROJECT

FEDERAL-AID ROUTE No.	SECTION	COUNTY	TOTAL SHEETS	SHEET No.
437	8-HB, 8-VB	LAKE	81	72
FED. ROAD DIV. No. 4	ILLINOIS	PROJECT		

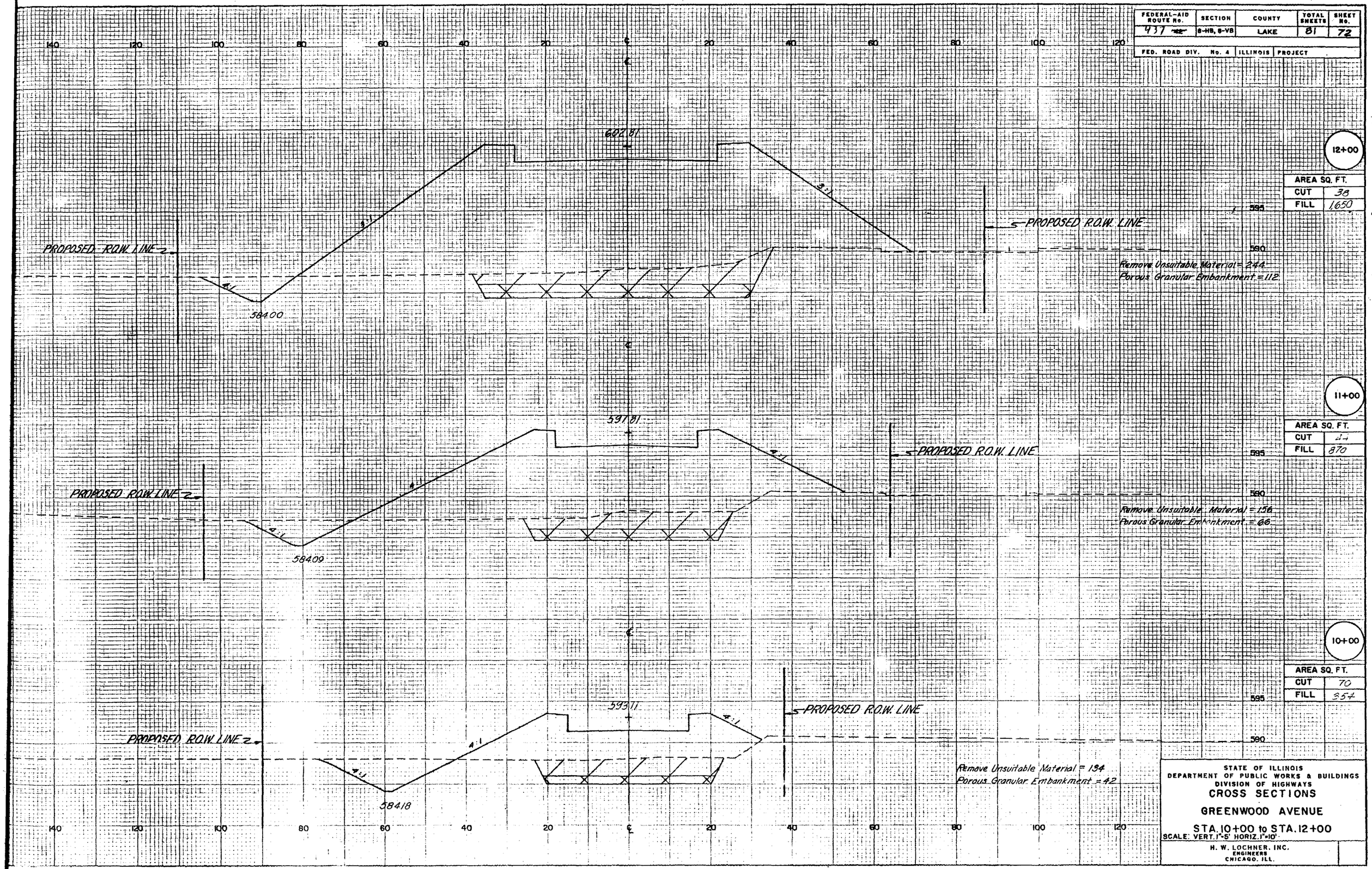

12+00	AREA SQ. FT.
CUT	38
FILL	1,650

11+00	AREA SQ. FT.
CUT	44
FILL	870

10+00	AREA SQ. FT.
CUT	70
FILL	354

STATE OF ILLINOIS
DEPARTMENT OF PUBLIC WORKS & BUILDINGS
DIVISION OF HIGHWAYS

CROSS SECTIONS

GREENWOOD AVENUE

STA. 10+00 to STA. 12+00

SCALE: VERT. 1"=5' HORIZ. 1"=10'

H. W. LOCHNER, INC.
ENGINEERS
CHICAGO, ILL.

FEDERAL-AID ROUTE No.	SECTION	COUNTY	TOTAL SHEETS	SHEET No.
137 ~~42~~	8-HB, 8-VB	LAKE	81	73
FED. ROAD DIV. No. 4	ILLINOIS	PROJECT ..		

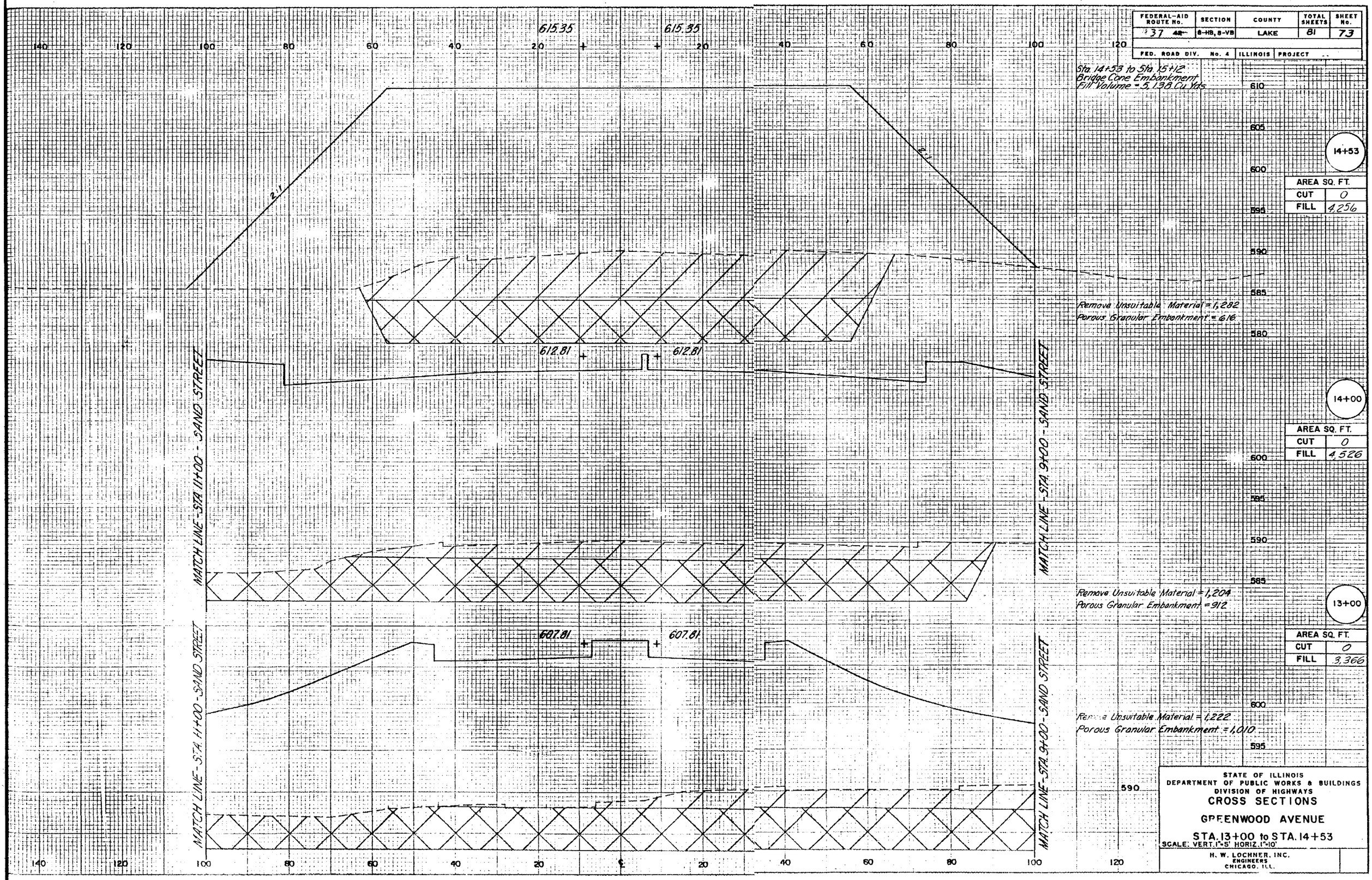

STATE OF ILLINOIS
DEPARTMENT OF PUBLIC WORKS & BUILDINGS
DIVISION OF HIGHWAYS

CROSS SECTIONS

GREENWOOD AVENUE

STA. 13+00 to STA. 14+53

SCALE: VERT. 1"=5' HORIZ. 1"=10'

H. W. LOCHNER, INC.
ENGINEERS
CHICAGO, ILL.

FEDERAL-AID ROUTE No.	SECTION	COUNTY	TOTAL SHEETS	SHEET No.
431 / 42	8-HB, 8-VB	LAKE	81	74
FED. ROAD DIV. No. 4	ILLINOIS	PROJECT		

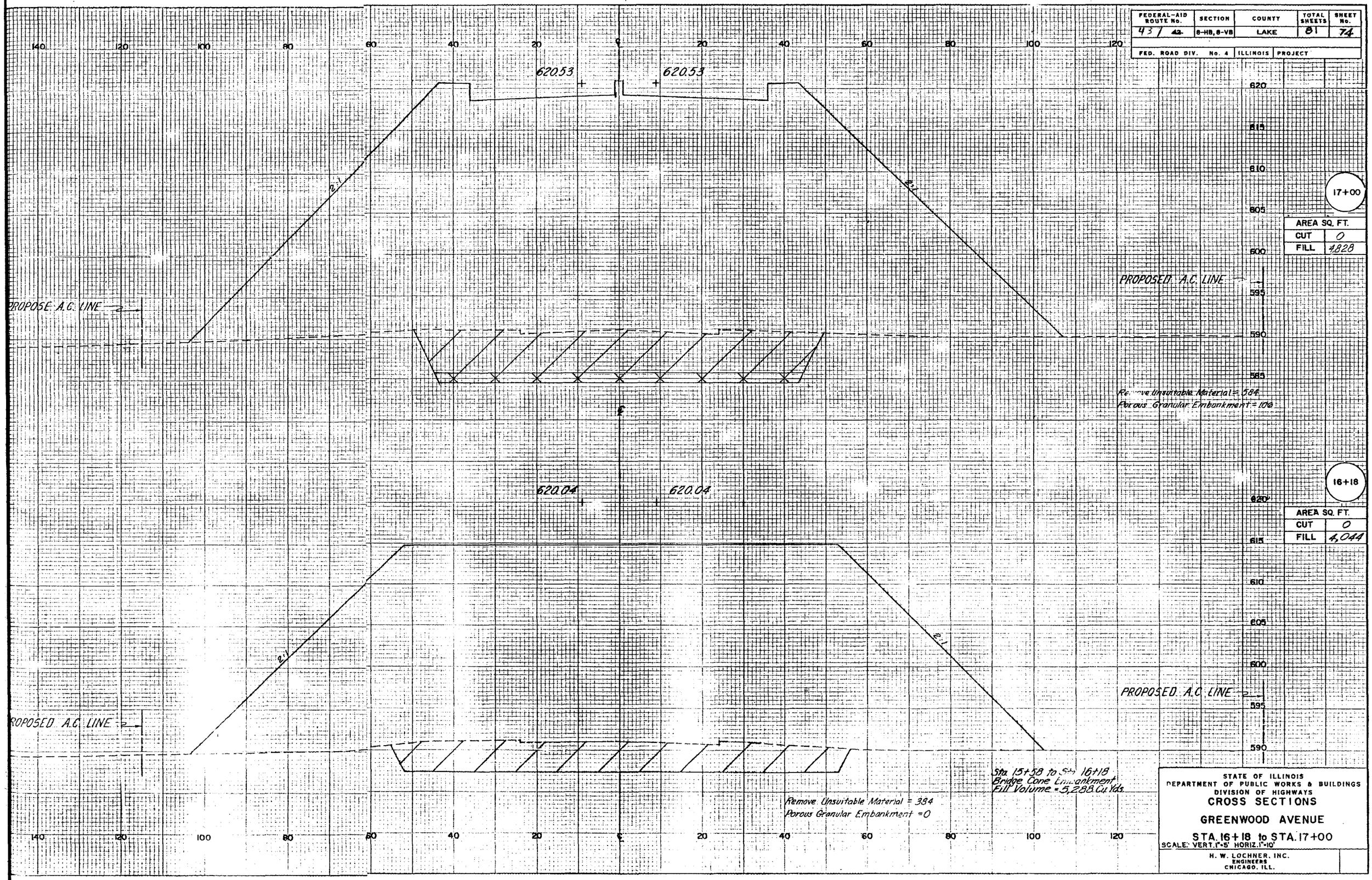

STATE OF ILLINOIS
DEPARTMENT OF PUBLIC WORKS & BUILDINGS
DIVISION OF HIGHWAYS

CROSS SECTIONS

GREENWOOD AVENUE

STA. 16+18 to STA. 17+00

SCALE: VERT. 1" = 5' HORIZ. 1" = 10'

H. W. LOCHNER, INC.
ENGINEERS
CHICAGO, ILL.

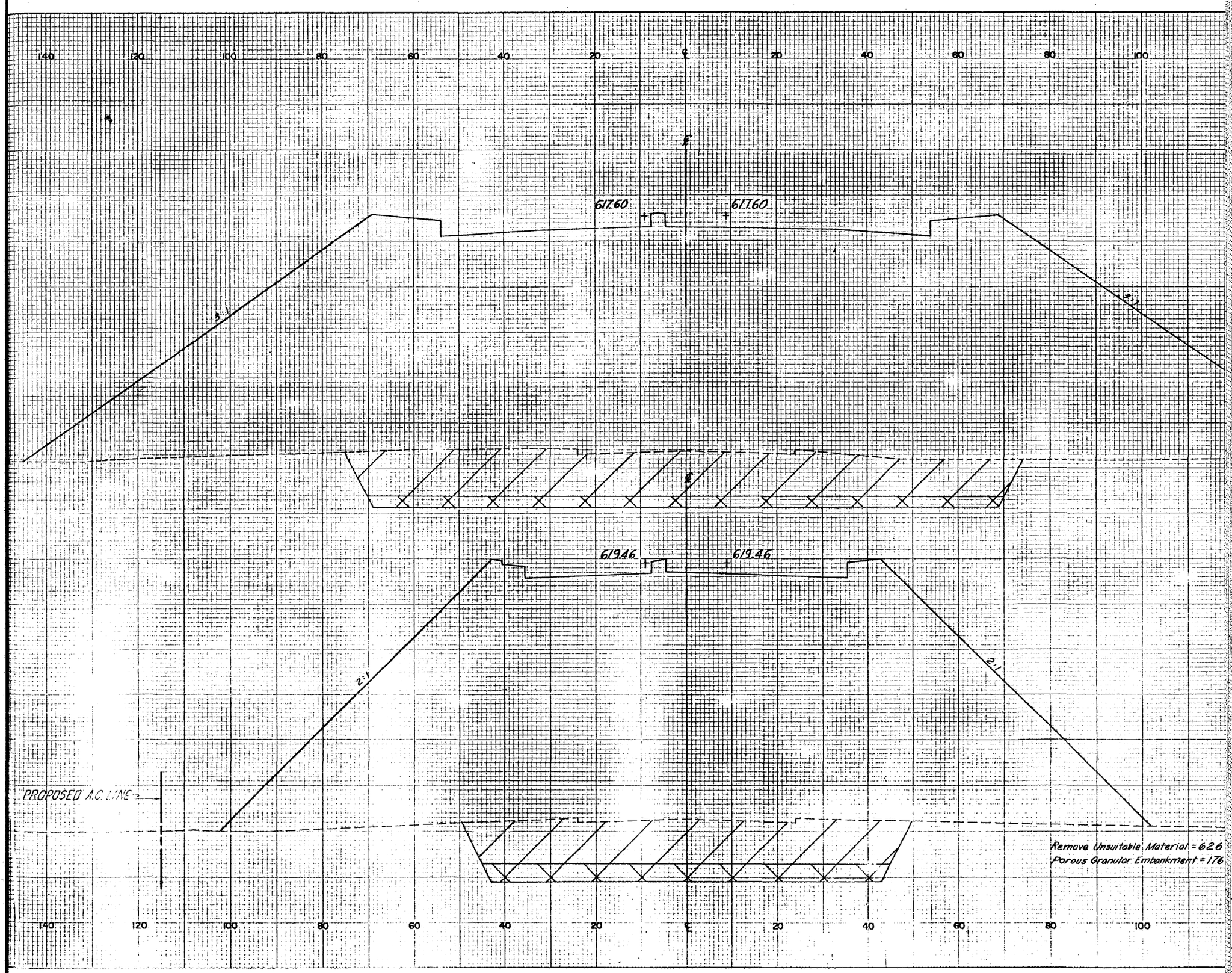
140
120
100
80
60
40
20
℄
20
40
60
80
100
617.60
617.60
3:1
3:1
619.46
619.46
2:1
2:1
PROPOSED A.C. LINE
Remove Unsuitable Material = 626
Porous Granular Embankment = 176

FEDERAL-AID ROUTE No.	SECTION	COUNTY	TOTAL SHEETS	SHEET No.
437 ~~42~~	8-HB, 8-VB	LAKE	81	76
FED. ROAD DIV. No. 4	ILLINOIS	PROJECT		

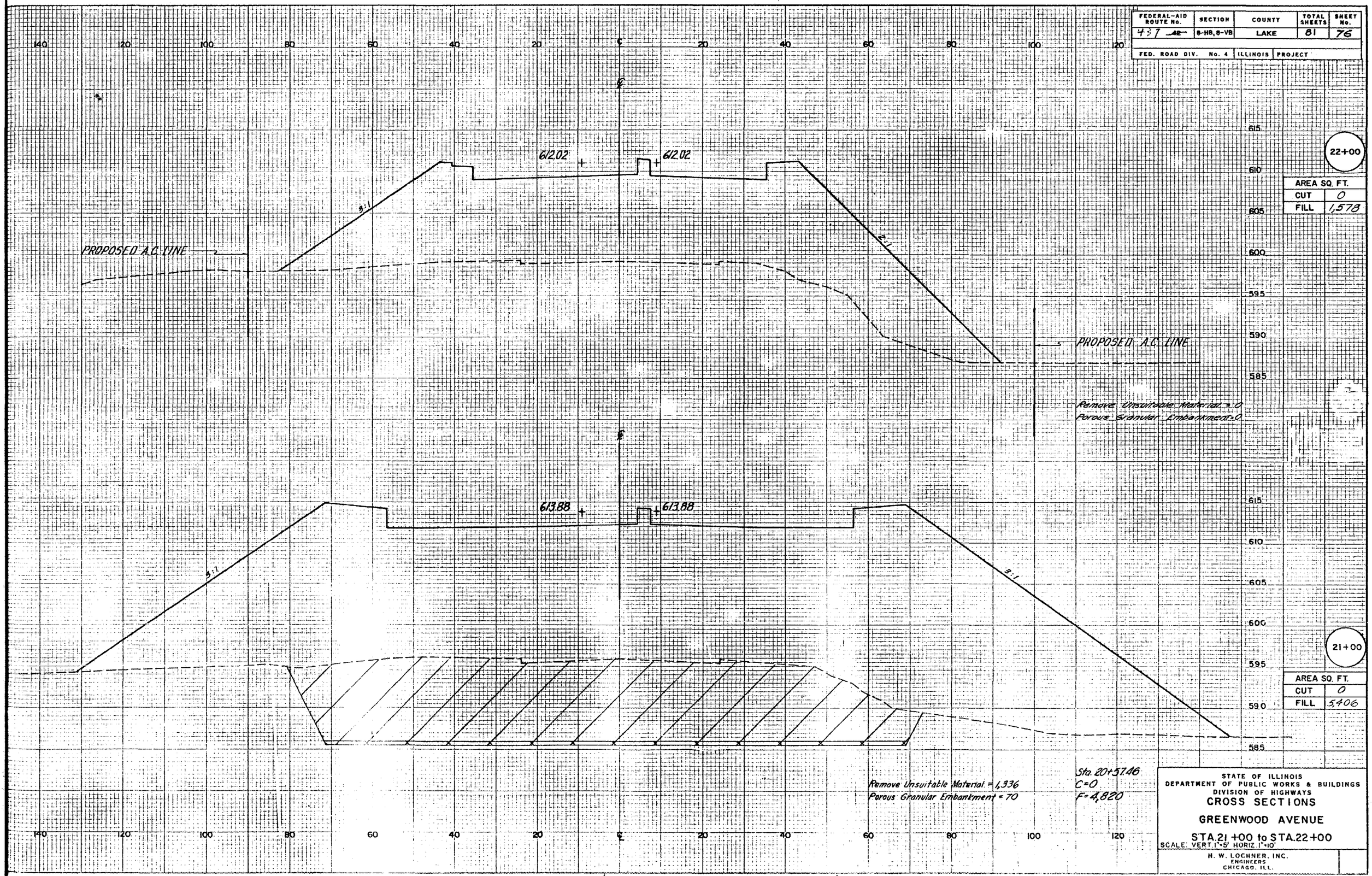

STATE OF ILLINOIS
DEPARTMENT OF PUBLIC WORKS & BUILDINGS
DIVISION OF HIGHWAYS

CROSS SECTIONS

GREENWOOD AVENUE

STA. 21+00 to STA. 22+00

SCALE: VERT. 1"=5' HORIZ. 1"=10'

H. W. LOCHNER, INC.
ENGINEERS
CHICAGO, ILL.

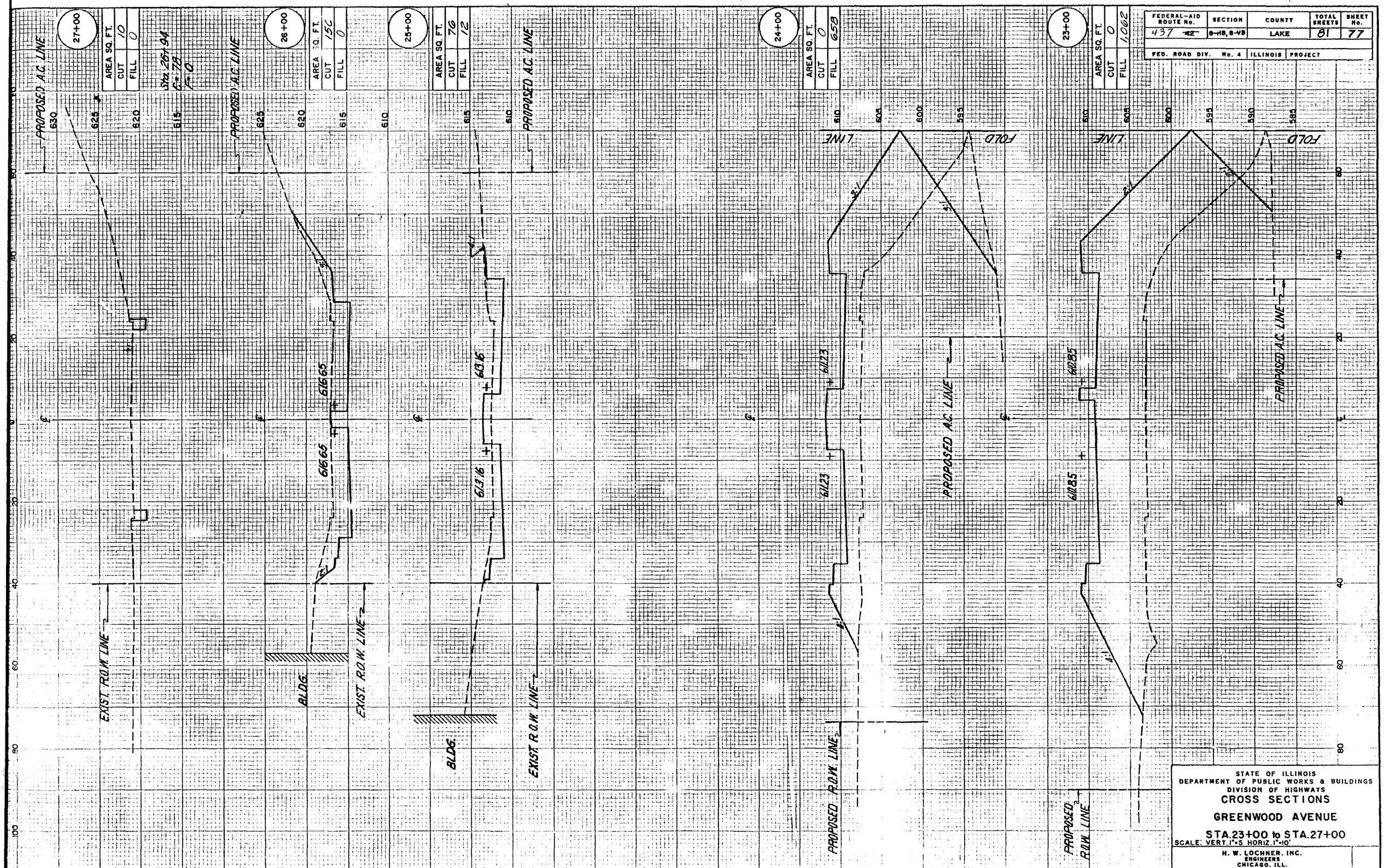

FEDERAL-AID ROUTE No.	SECTION	COUNTY	TOTAL SHEETS	SHEET No.
437 ~~42~~	8-HB, 8-VB	LAKE	81	77

FED. ROAD DIV. No. 4 | ILLINOIS | PROJECT

STATE OF ILLINOIS
DEPARTMENT OF PUBLIC WORKS & BUILDINGS
DIVISION OF HIGHWAYS

CROSS SECTIONS

GREENWOOD AVENUE

STA.23+00 to STA.27+00

SCALE: VERT. 1"=5 HORIZ. 1"=10'

H. W. LOCHNER, INC.
ENGINEERS
CHICAGO, ILL.

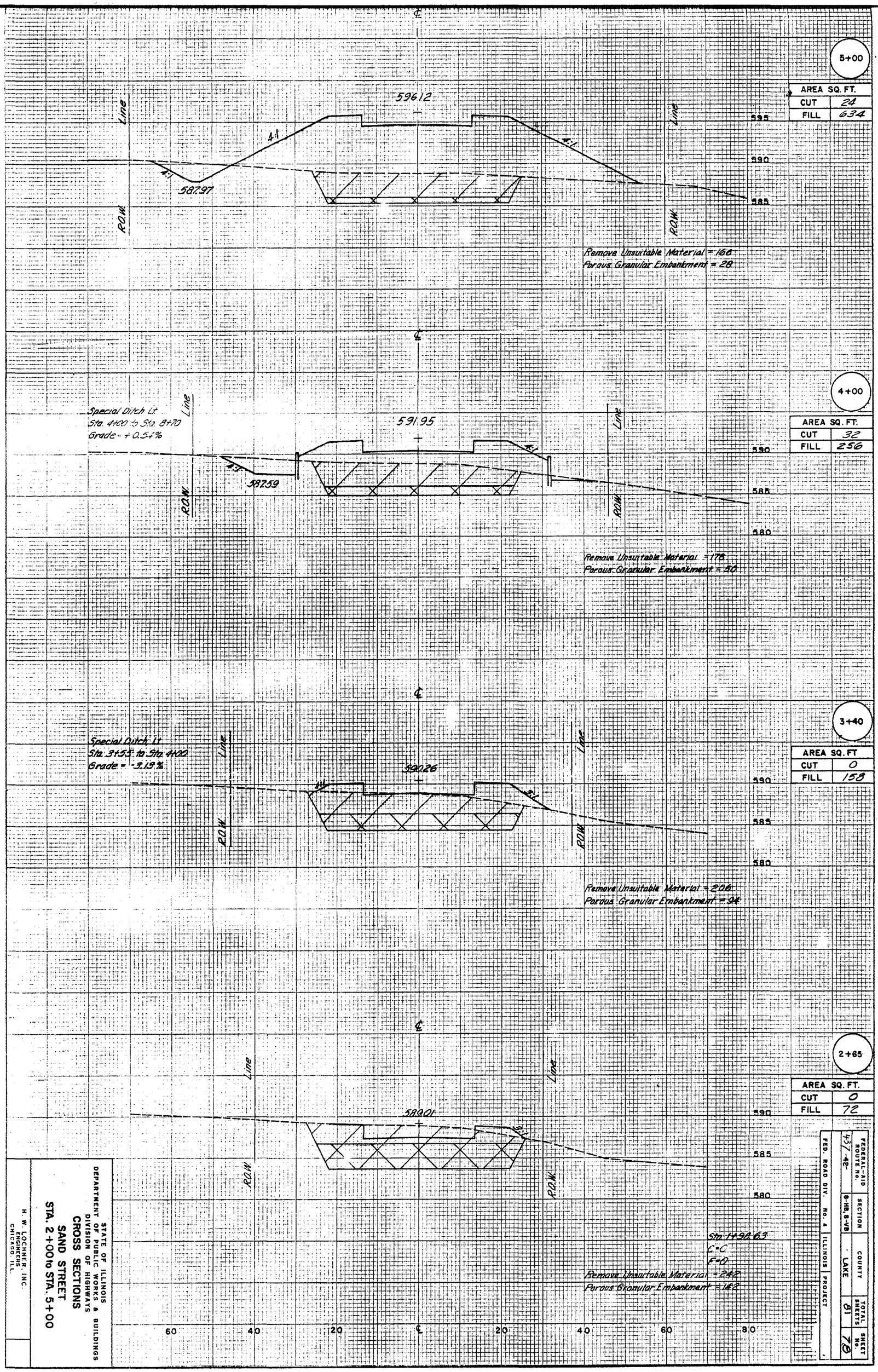
5+00
AREA SQ. FT.
CUT 24
FILL 634
596.12
587.97
4:1
Line
R.O.W.
595
590
585
Remove Unsuitable Material = 166
Porous Granular Embankment = 28
4+00
AREA SQ. FT.
CUT 32
FILL 256
Special Ditch Lt.
Sta. 4+00 to Sta. 8+70
Grade = +0.54%
591.95
587.59
590
585
580
Remove Unsuitable Material = 178
Porous Granular Embankment = 50
3+40
AREA SQ. FT
CUT 0
FILL 158
Special Ditch Lt.
Sta. 3+55 to Sta. 4+00
Grade = -3.19%
590.26
590
585
580
Remove Unsuitable Material = 206
Porous Granular Embankment = 94
2+65
AREA SQ. FT.
CUT 0
FILL 72
589.01
590
585
580
Sta. 1+98.63
C=0
F=0
Remove Unsuitable Material = 242
Porous Granular Embankment = 142
60
40
20
20
40
60
80
STATE OF ILLINOIS
DEPARTMENT OF PUBLIC WORKS & BUILDINGS
DIVISION OF HIGHWAYS
CROSS SECTIONS
SAND STREET
STA. 2+00 to STA. 5+00
H. W. LOCHNER, INC.
ENGINEERS
CHICAGO, ILL.
FEDERAL-AID ROUTE NO. 437-42
SECTION 8-HB, 8-VB
COUNTY LAKE
TOTAL SHEETS 81
SHEET NO. 78
FED. ROAD DIV. No. 4
ILLINOIS
PROJECT

FEDERAL-AID ROUTE No.	SECTION	COUNTY	TOTAL SHEETS	SHEET No.
FAU 431	8-HB, 8-VB	LAKE	81	79
FED. ROAD DIV. No. 4	ILLINOIS	PROJECT		

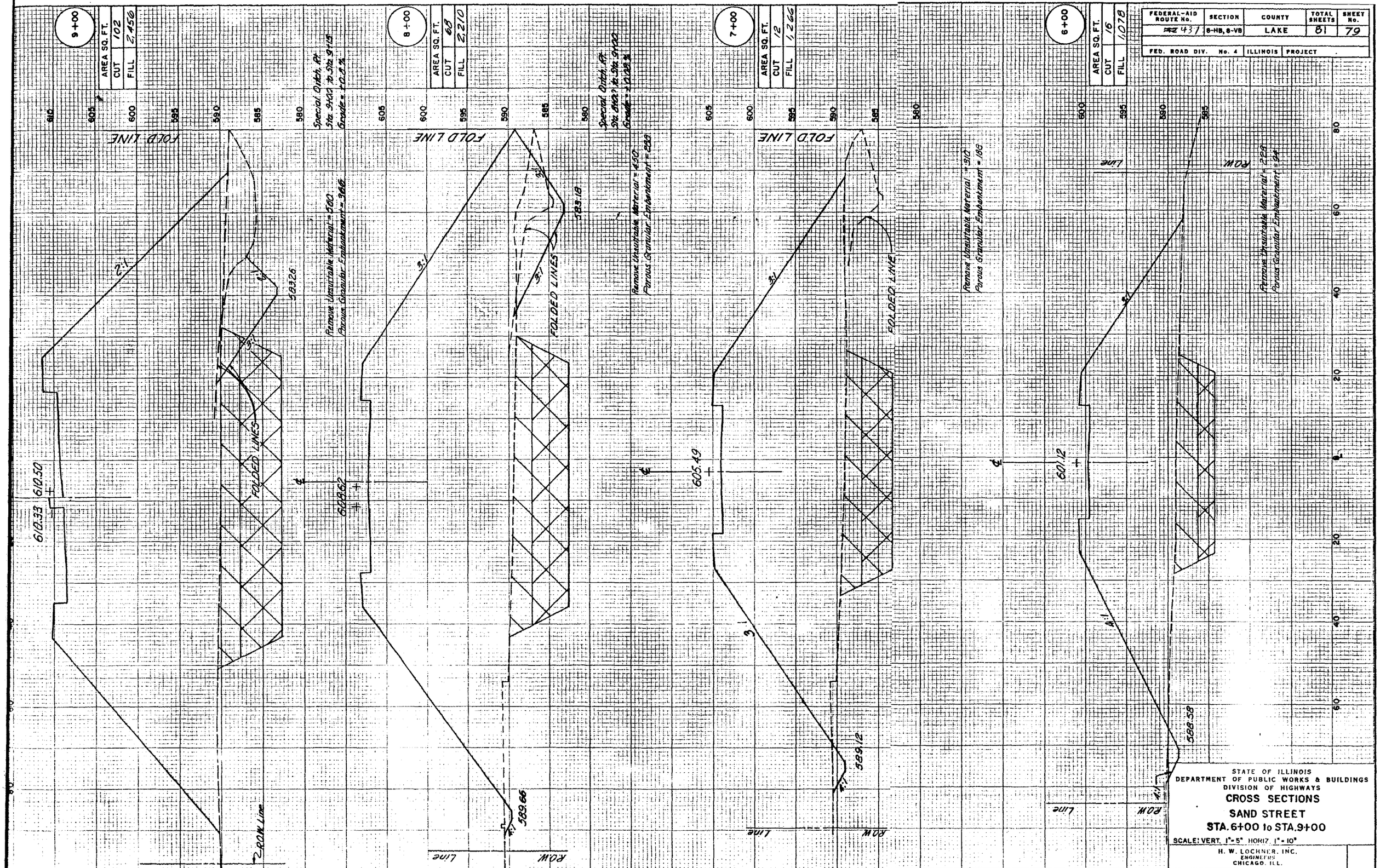

STATE OF ILLINOIS
DEPARTMENT OF PUBLIC WORKS & BUILDINGS
DIVISION OF HIGHWAYS

CROSS SECTIONS

SAND STREET

STA. 6+00 to STA. 9+00

SCALE: VERT. 1" = 5" HORIZ. 1" = 10'

H. W. LOCHNER, INC.
ENGINEERS
CHICAGO, ILL.

FEDERAL-AID ROUTE No.	SECTION	COUNTY	TOTAL SHEETS	SHEET No.
~~42~~ 431	8-HB, 8-VB	LAKE	81	80
FED. ROAD DIV. No. 4	ILLINOIS	PROJECT		

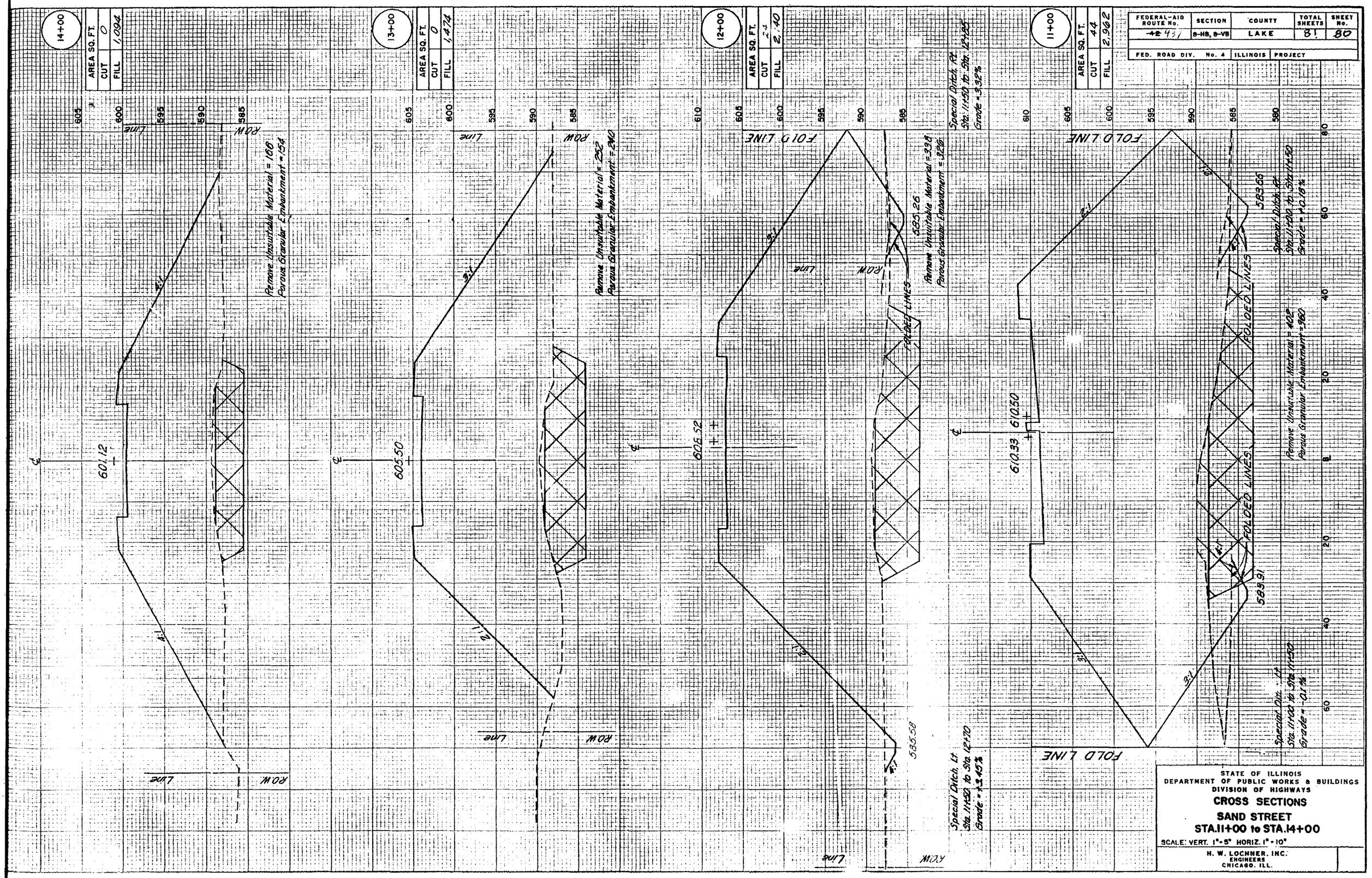

FEDERAL-AID ROUTE No.	SECTION	COUNTY	TOTAL SHEETS	SHEET No.
437 ~~42~~	8-HB, 8-VB	LAKE	81	81
FED. ROAD DIV. No. 4	ILLINOIS	PROJECT		

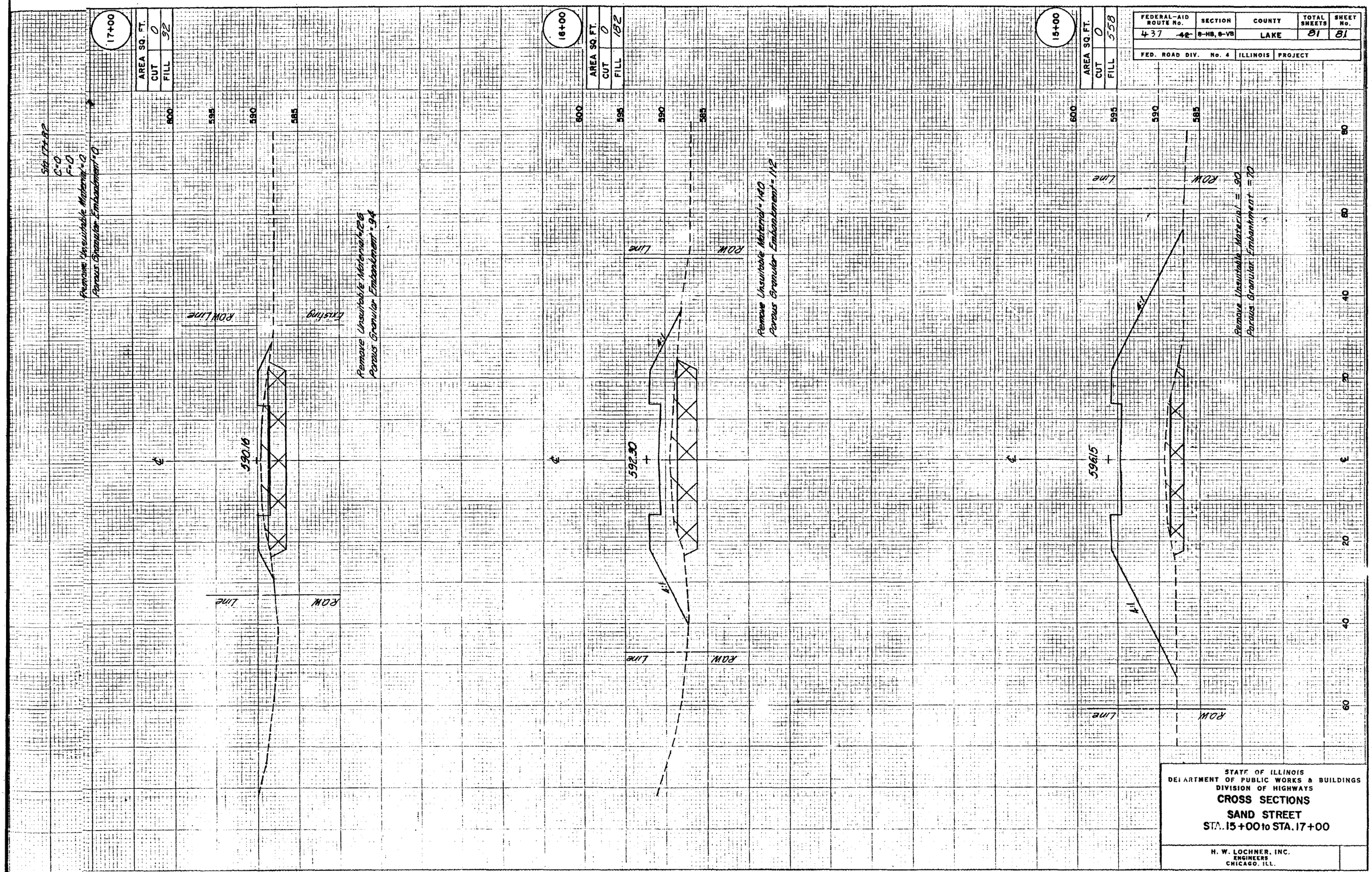

STATE OF ILLINOIS
DEPARTMENT OF PUBLIC WORKS & BUILDINGS
DIVISION OF HIGHWAYS

CROSS SECTIONS

SAND STREET

STA. 15+00 to STA. 17+00

H. W. LOCHNER, INC.
ENGINEERS
CHICAGO, ILL.

STANDARD DESIGN

CATCH BASINS TYPE A AND TYPE B

CATCH BASIN TYPE A

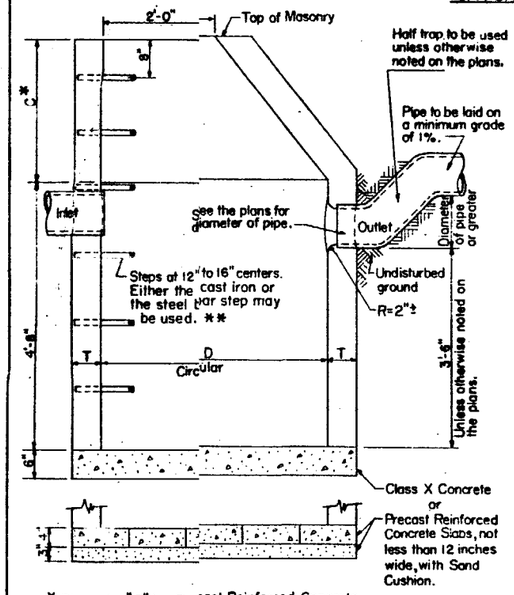

* Dimension "C" for Precast Reinforced Concrete Risers may vary from the dimension given to plus 6 inches.

Notes:
All Catch Basins shall be 4'-0" in diameter unless otherwise noted on plans.

ALTERNATE MATERIALS FOR WALLS	D	C	T (Min.)
Concrete Masonry Units	4'-0"	2'-6"	5"
	5'-0"	3'-9"	5"
Building Brick, Grade SW, from Clay or Shale	4'-0"	2'-6"	8"
	5'-0"	3'-9"	8"
Precast Reinforced Concrete Risers	4'-0"	2'-6"	4"
	5'-0"	3'-9"	5"
Monolithic Concrete	4'-0"	2'-6"	6"
	5'-0"	3'-9"	6"
Concrete Building Brick, Grade A	4'-0"	2'-6"	8"
	5'-0"	3'-9"	8"

Type A Catch Basin to be provided with:

Type 1 Frame, Open Lid	or Type 10 Frame
	or Type 11 Frame
or Type 3 Frame	or Type 12 Frame
or Type 5 Frame, Open Lid	or Type 15 Frame
or Type 6 Frame	
or Type 8 Grate	
or Type 9 Frame	

The steps shall be omitted for work in Cook County.

The contract unit price for Catch Basins, Type A, shall include the frame and lid or grate specified; also, furnishing and placing the metal steps and sand cushion when required.

Steps shall be embedded into wall a minimum of 4 inches. Steps shall not be extended on the outside.

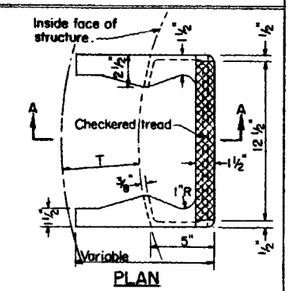

PLAN

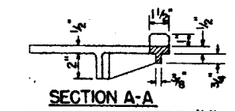

SECTION A-A

CAST IRON STEPS **

Cast iron steps shall be Gray Iron conforming to the requirements of Article 710.17 of the Standard Specifications.

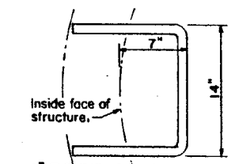

1" ROUND GALVANIZED STEEL BAR STEP **

CATCH BASIN TYPE B

(To be constructed of Class X Concrete)

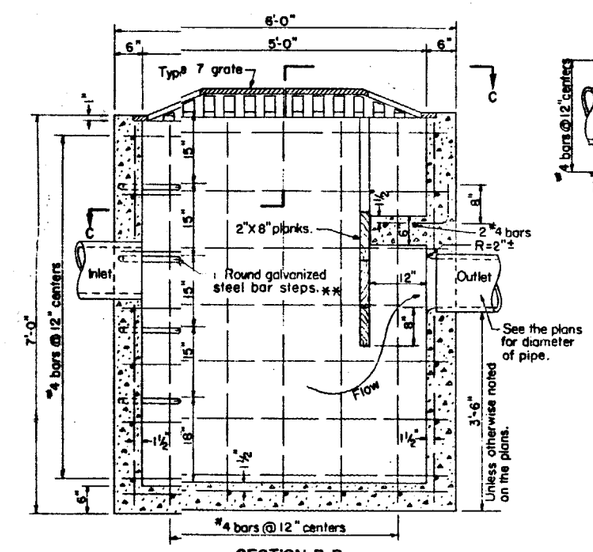

SECTION B-B

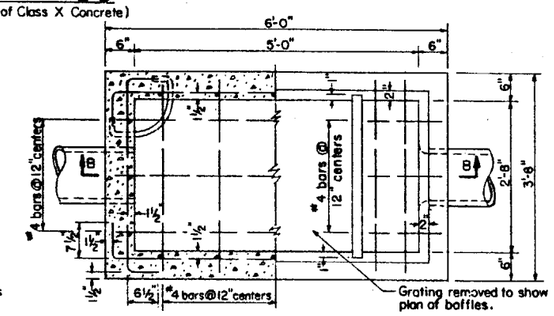

SECTION C-C

Notes:
Lumber shall be 1600 f dense southern pine or 1700 f dense douglas fir, S4S, untreated, meeting the requirements of Section 711 of the Standard Specification.

The contract unit price for Catch Basins, Type B, shall include the Type 7 Grate; also, furnishing and placing the metal steps.

** The cast iron and steel bar steps as detailed hereon are typical. Steps of other design and material that will conform to the minimum requirements of the steps shown, may be used when approved by the Engineer.

STATE OF ILLINOIS
DEPARTMENT OF PUBLIC WORKS & BUILDINGS
DIVISION OF HIGHWAYS

PASSED Dec. 1 1970
Engineer of Road Plans And Contracts
APPROVED Dec. 1 1970
Engineer of Design

ISSUED 12-2-52	
REVISIONS	
WHF	6-30-61
W.F.	4-8-65
W.F.	6-10-66
G.R.	8-1-68
W.F.	12-1-70

STANDARD 1514-6

Redrawn 6-30-61 W.H.F.

STANDARD DESIGN

CATCH BASIN TYPE C

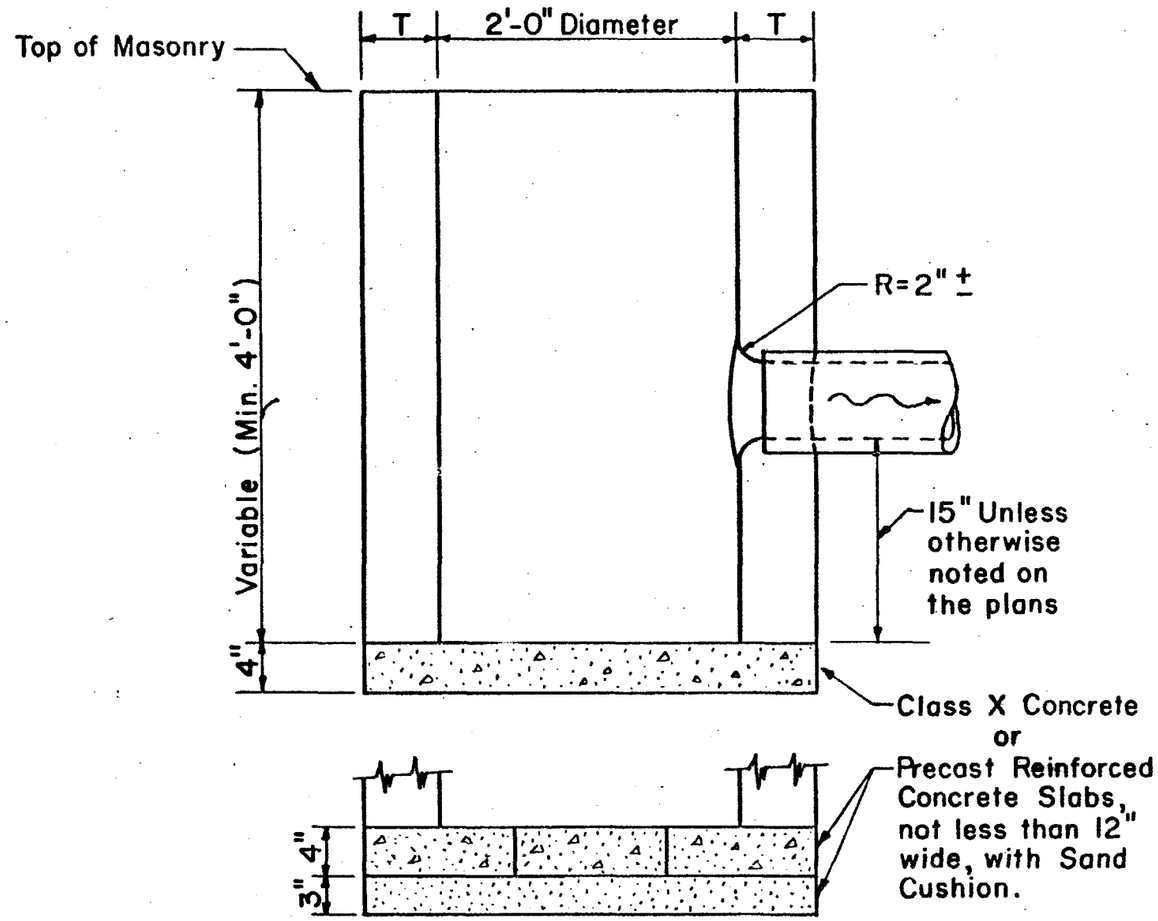

ALTERNATE MATERIALS FOR WALLS	T
Precast Reinforced Concrete Risers	3"
Concrete Masonry Units	5"
Monolithic Concrete	6"
Building Brick, Grade SW, from Clay or Shale	8"
Concrete Building Brick, Grade A	8"

Type C Catch Basin to be provided with:

Type 1 Frame, Open Lid
or Type 3 Frame
or Type 5 Frame, Open Lid
or Type 6 Frame
or Type 8 Grate
or Type 9 Frame
or Type 10 Frame
or Type 11 Frame
or Type 12 Frame
or Type 15 Frame

The contract unit price for Catch Basin, Type C shall include the frame and lid or grate specified; also, furnishing and placing sand cushion when required.

STATE OF ILLINOIS DEPARTMENT OF PUBLIC WORKS & BUILDINGS DIVISION OF HIGHWAYS	REVISIONS	
	BY	DATE
PASSED July 7, 1961	W.H.F.	7-7-61
A V Van Ausdall Engineer of Road Plans And Contracts	W.F.	4-8-65
APPROVED July 7, 1961		
C. T. Sheerly Engineer of Design		

STANDARD 1538-3

Drawn 7-23-52 Redrawn 7-7-61 W.H.F.

STANDARD DESIGN FOR INLET, TYPE A

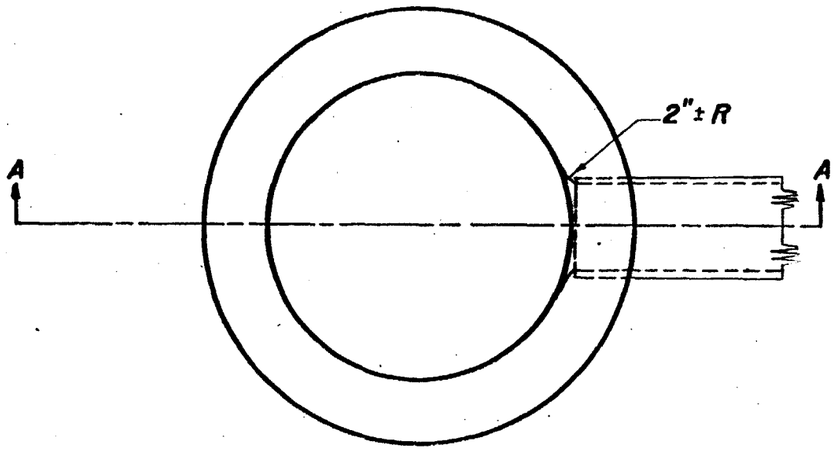

PLAN

ALTERNATE MATERIALS FOR WALLS	T
PRECAST REINFORCED CONCRETE RISERS	3"
CONCRETE MASONRY UNITS	5"
MONOLITHIC CONCRETE	6"
BUILDING BRICK, GRADE SW FROM CLAY OR SHALE	8"
CONCRETE BUILDING BRICK, GRADE A	8"

Type A Inlet to be provided with
Type 1 Frame & Open Lid

or Type 3 Frame
or Type 5 Frame & Open Lid
or Type 6 Frame
or Type 8 Grate
or Type 9 Frame
or Type 10 Frame
or Type 11 Frame
or Type 12 Frame
or Type 15 Frame

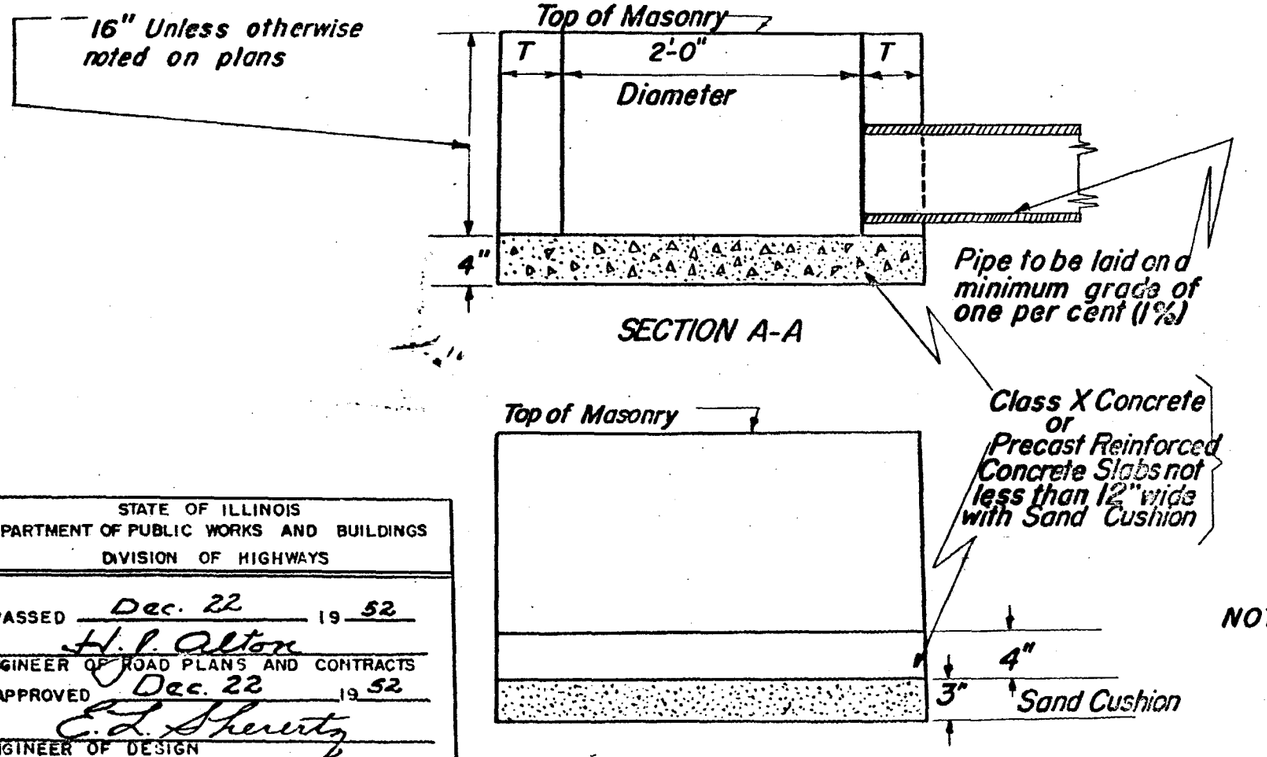

SECTION A-A

The Contract Unit Price for Inlets, Type A shall include the frame and lid or grate specified.

NOTE: Furnishing & Installing sand cushion to be included in the contract unit price for Inlets, Type A

STATE OF ILLINOIS
DEPARTMENT OF PUBLIC WORKS AND BUILDINGS
DIVISION OF HIGHWAYS

PASSED Dec. 22 19 52
H. P. Alton
ENGINEER OF ROAD PLANS AND CONTRACTS
APPROVED Dec. 22 19 52
E. L. Sheuritz
ENGINEER OF DESIGN

STANDARD 1683-2

Revised 9-9-59 W.F. GMM 12-19-52 Revised JFL 11-13-58
Revised 4-8-65 W.F. Revised WFH 12-20-57 Traced WMS
Revised JTM 6-20-58 1-29-59

STANDARD SYMBOLS AND ABBREVIATIONS

THESE SYMBOLS AND ABBREVIATIONS ARE USED THROUGHOUT THESE PLANS UNLESS OTHERWISE NOTED

SYMBOLS

- State Line
- County Line
- Township Line
- City, Village or Town Limits
- Section or Grant Line
- Section Corner
- Quarter Corner
- Same Ownership
- Unfenced Property Line
- Fenced Property Line
- Fence Line
- Construction Identification Sign
- Right of Way Marker
- Existing Right of Way Line
- Existing Fenced Right of Way Line
- Proposed Right of Way Line
- Proposed Right of Way Line coincident with access control line
- Access Control Line (Not coincident with Right of Way Line)
- Proposed Right of Way Dimension
- Construction Limits
- Base or Survey Line
- Channel Change Easement
- Temporary Easement (Detour, Grading etc.)
- Stream
- Lake or Pond
- Marsh
- Levee
- Summit
- Deciduous Trees
- Evergreen Trees
- Hedge
- Railroad or Utility Tracks
- Curb Wall
- Retaining Wall
- Existing Drive or Traveled Way
- Pipe Lines: Gas, Water, Oil
- North Arrow
- Centerline
- Roadway
- Traffic Direction Arrow
- Longitudinal Construction Joint
- Longitudinal Metal Joint
- Contraction Joint
- Expansion Joint
- Guard Rail
- Existing Pavement, Curb & Gutter, Driveway Pavement & Sidewalk to be removed
- Existing Culvert
- Culvert to be Constructed
- Culvert with Drop Inlet
- P 936.25 Elevation of Surface of Finished Pavement at Point Indicated
- C 936.50 Elevation of Top of Curb at Point Indicated
- G 936.00 Elevation of Flow Line of Gutter at Point Indicated
- 19.46 Storm Sewer (Direction of Flow & Invert Elevation Indicated)
- 31.9 Tile Drain (Direction of Flow & Invert Elevation Indicated)
- Existing Inlet, Inlet to be Adjusted, or Inlet to be Reconstructed
- Inlet to be Constructed
- Inlet to be filled with Sand & Connection Sealed
- Existing Catch Basin, Catch Basin to be Adjusted, or Catch Basin to be Reconstructed
- Catch Basin to be Constructed
- Catch Basin to be filled with Sand & Connection Sealed
- Existing Manhole, Manhole to be Adjusted, or Manhole to be Reconstructed
- Manhole to be Constructed
- Manhole to be filled with Sand & Connection Sealed
- Existing Valve Vault, Valve Vault to be Adjusted, or Valve Vault to be Reconstructed
- Valve Vault to be Constructed
- Valve Vault to be filled with Sand & Connection Sealed
- Existing Fire Hydrant or Fire Hydrant to be Adjusted
- Gas Marker & Service Line (Symbol with Letter Indicates New Location)
- Existing Light Standard or Light Standard to be Adjusted
- Light Standard & Conduit (Symbol with Letter Indicates New Location)
- Existing Stop & Go Light, or Stop & Go Light to be Adjusted
- Stop & Go Light to be Moved (Symbol with Letter Indicates New Location)
- Existing Traffic Sign, or Traffic Sign to be Adjusted
- Traffic Sign to be Moved (Symbol with Letter Indicates New Location)
- Existing House Service Box or House Meter Vault, or House Service Box or House Meter Vault to be Adjusted
- House Service Box or House Meter Vault to be Moved (Symbol with Letter Indicates New Location)
- Existing Main Service Box or Main Meter Vault, or Main Service Box or Main Meter Vault to be Adjusted
- Main Service Box or Main Meter Vault to be Moved (Symbol with Letter Indicates New Location)
- Trolley Pole
- Telephone or Telegraph Pole
- Power Line Pole
- H House
- T Church
- S Shed
- Business Building
- B Barn
- P School
- TH Town Hall

ABBREVIATIONS

T.D.	Tile Drain	℄-B.	Centerline to Back of Curb	R.P.S.	Reference Point Stake	Sec.	Section
S.S.	Storm Sewer (Existing)	Δ	Central Angle	I.P.	Iron Pipe	Sta.	Station
S.S. 18"x24' TYPE 1	Storm Sewer (Size, Length and Type)	D.	Degree of Curve	N&W	Nail & Washer	P.L.	Property Line
S.S. 18"x24' TYPE 1 RCP	Storm Sewer (Size, Length, Type and Material)	T.	Tangent Length	T.P.	Telephone Pole	F.E	Field Entrance
		L.	Curve Length	P.P.	Power Pole	P.E.	Private Entrance
		R.	Radius of Curve	F.P.	Fence Post	F.A.I.	Federal-aid Interstate
C.M.P.	Corrugated Metal Pipe	E.	External Distance	F.H.	Fire Hydrant	F.A.	Federal-aid
C.I.P.	Cast Iron Pipe	S.	Superelevation (ft. per ft. of width)	B.M.	Bench Mark	F.A.S.	Federal-aid Secondary
P.C.	Pipe Culvert (Existing)	P.C.	Point of Curvature	R.R.S.	Railroad Spike	S.B.I.	State Bond Issue
P. 18"x24' TYPE 1	Pipe Culvert (Size, Length and Type)	P.I.	Point of Intersection	R.O.W.	Right of Way	M.F.T.	Motor Fuel Tax
		P.T.	Point of Tangency	Inv.	Invert	S.A.	State-aid Road
P. 18"x24' TYPE 1 CMCP	Pipe Culvert (Size, Length, Type and Material)	P.O.T.	Point on Tangent	F.L.	Flow Line	C.H.	County Highway
		P.C.C.	Point of Compound Curvature	S.M.	State of Illinois Survey Marker	T.R.	Township Road
P.C.C.	Portland Cement Concrete	P.R.C.	Point of Reverse Curvature	U.S.C.&G.S.	U.S. Coast & Geodetic Survey	C.S.	City Street
F.-F.	Face to Face of Curb	V.C.	Vertical Curve	U.S.G.S.	U.S. Geological Survey	Proj.	Project
B.-B.	Back to Back of Curb	X.	External Distance of Vertical Curve	Elev.	Elevation	A.C.	Access Control
℄-F.	Centerline to Face of Curb			Rt.	Route		

STATE OF ILLINOIS
DEPARTMENT OF PUBLIC WORKS & BUILDINGS
DIVISION OF HIGHWAYS

PASSED May 12 1966
R. Van Quadalle
Engineer of Road Plans and Contracts

APPROVED May 12 1966
Engineer of Design

REVISIONS BY	DATE
J.F.L.	11-18-58
W.F.	9-3-59
W.F.	11-19-62
W.F.	5-2-66

● If it is definitely known that adjustment or reconstruction is required, place A or R inside the symbol. If a new casting is required, show the casting number. Use P for open, C for closed lid. Example – Catch Basin to be reconstructed with new type 5 frame, open lid = Ⓡ 5P.

●● First character denotes type of structure. Use Sp. for special design. Second character denotes number of frame or grate. Example - Type A manhole with type 1 frame and closed lid = ● A-1C

Drawn 3-[illegible]-53 Redrawn 11-19-62

STANDARD 1686-3
(Half Size) W.F.

STANDARD DESIGN FOR RIGHT OF WAY MARKERS

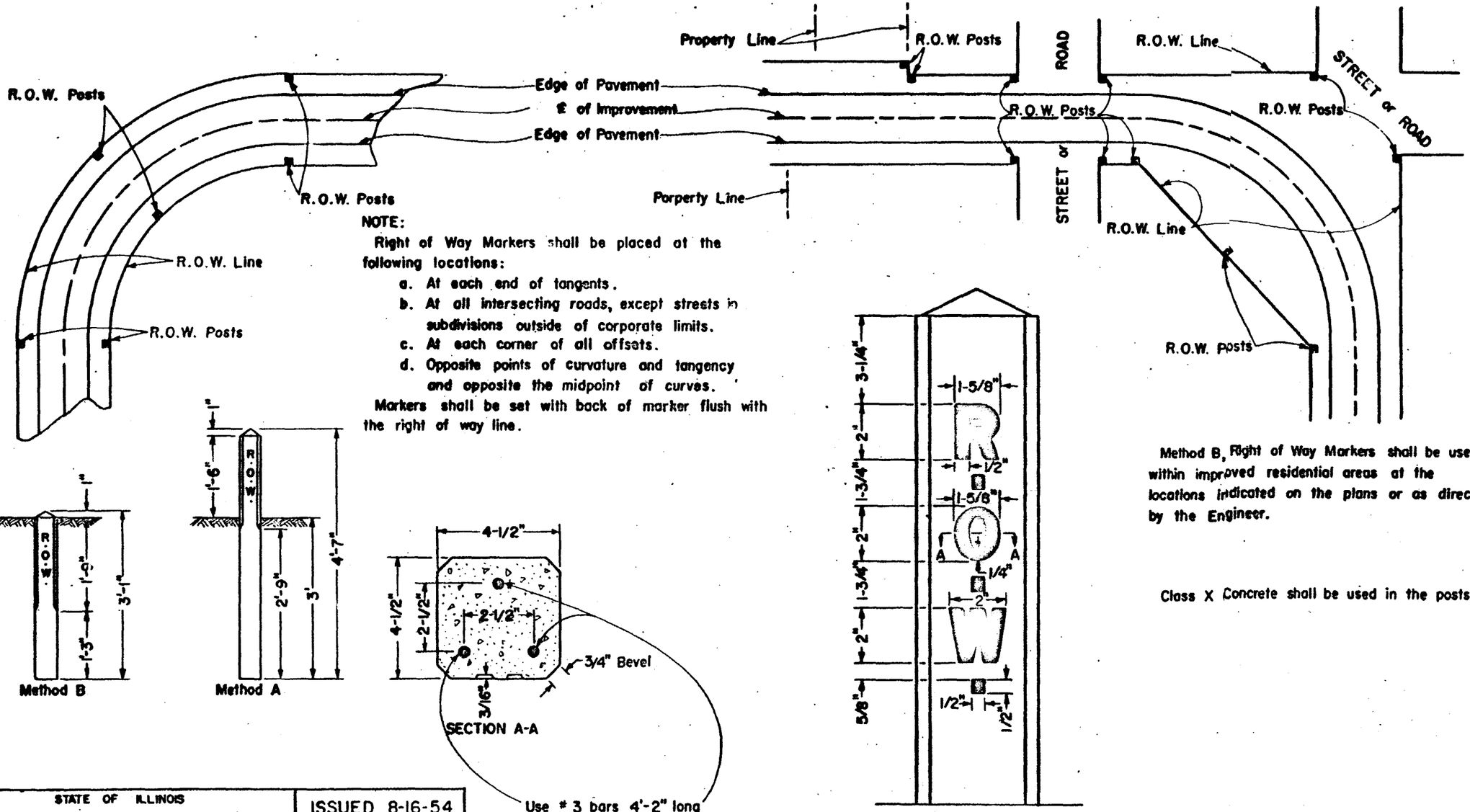

NOTE:

Right of Way Markers shall be placed at the following locations:

a. At each end of tangents.
b. At all intersecting roads, except streets in subdivisions outside of corporate limits.
c. At each corner of all offsets.
d. Opposite points of curvature and tangency and opposite the midpoint of curves.

Markers shall be set with back of marker flush with the right of way line.

Method B, Right of Way Markers shall be used within improved residential areas at the locations indicated on the plans or as directed by the Engineer.

Class X Concrete shall be used in the posts.

STATE OF ILLINOIS DEPARTMENT OF PUBLIC WORKS AND BLDGS. DIVISION OF HIGHWAYS	ISSUED 8-16-54	
	REVISIONS	
PASSED August 1, 1968 A N Van Arsdall ENGINEER OF ROAD PLANS AND CONTRACTS	J.F.L.	11-19-58
	G.R.	8-1-68
APPROVED August 1, 1968 W E Baumann ENGINEER OF DESIGN		

STANDARD 1744-2

1/4 Size

DETAILS OF BRIDGE APPROACHES

P.C.C. PAVEMENT (16½"-10½"-16½")
AND
P.C.C. BASE COURSE (16½"-10½"-16½")

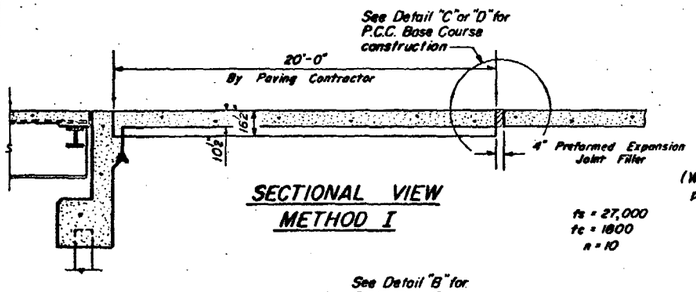

SECTIONAL VIEW
METHOD I

fs = 27,000
fc = 1800
n = 10

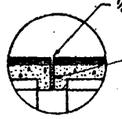

DETAIL "B"
(When bituminous surface is being placed on bridge and approach)

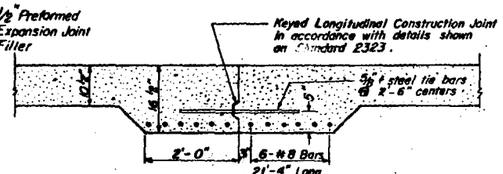

OPTIONAL LONGITUDINAL CONSTRUCTION JOINT

As approved by the Engineer, the Contractor may elect to reduce the widths of pour by use of the Optional Longitudinal Construction Joint shown. Joints shall be located at the edge of a Traffic Lane.

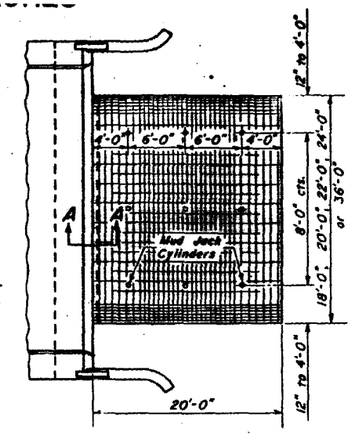

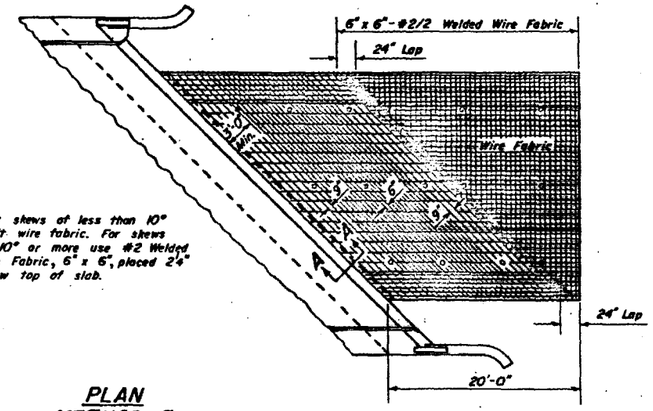

For skews of less than 10° omit wire fabric. For skews of 10° or more use #2 Welded Wire Fabric, 6" x 6", placed 2" below top of slab.

PLAN
METHOD I

Expanded Metal weighing not less than 78 Lbs. per 100 sq. ft. or a welded bar mat weighing not less than 78 Lbs. per 100 sq. ft. having members of equal size in both directions and spaced not over 8" apart may be used instead of the #2 Welded Wire Fabric, 6" x 6", provided the expanded metal or bar mat is furnished at no additional cost to the State.

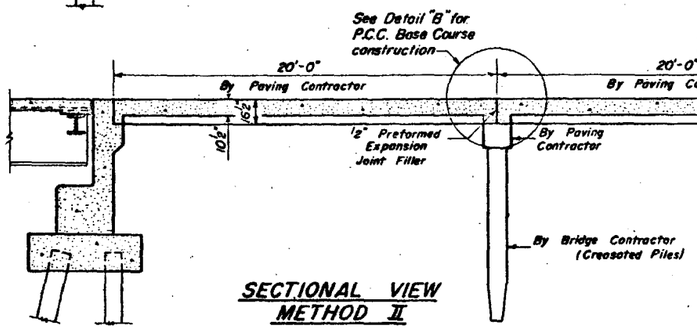

SECTIONAL VIEW
METHOD II

fs = 27,000
fc = 1800
n = 10
(Both Spans)

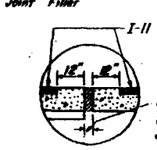

DETAIL "C"
(When bituminous surface is being placed on bridge and approach)

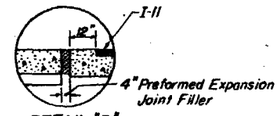

DETAIL "D"
(When bituminous surface is not being placed on bridge and approach)

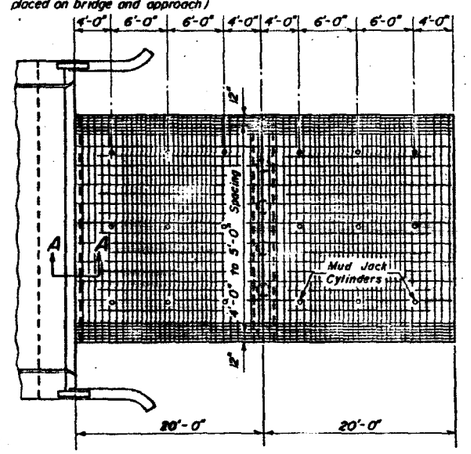

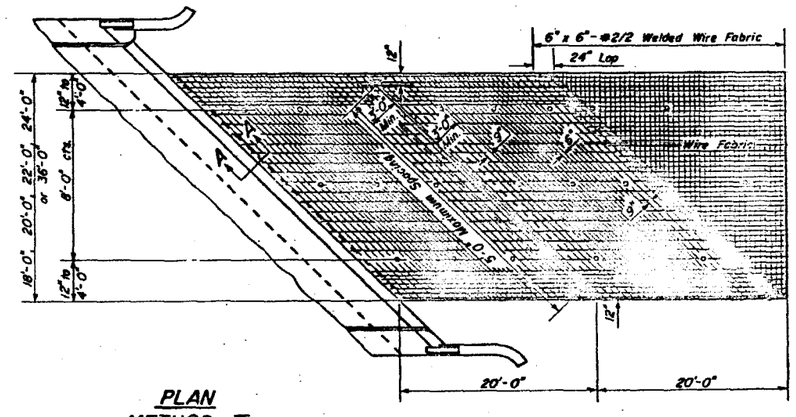

PLAN
METHOD II

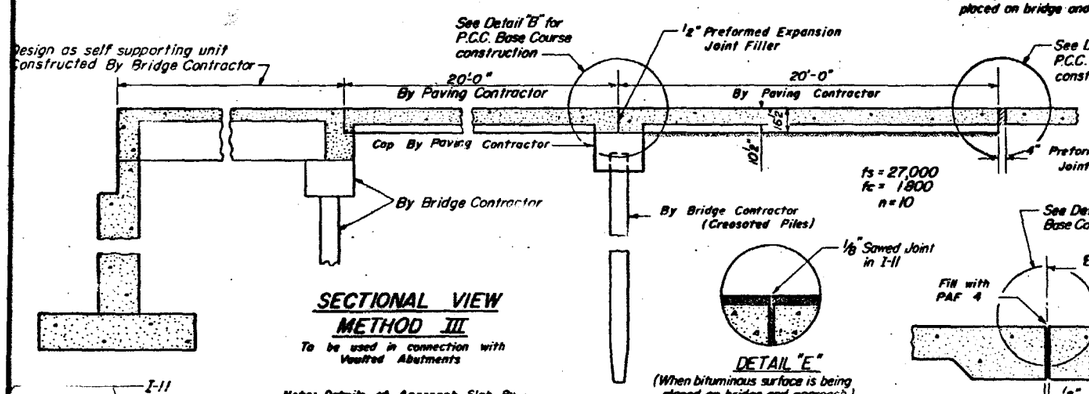

SECTIONAL VIEW
METHOD III

To be used in connection with Vaulted Abutments

Note: Details of Approach Slab By Paving Contractor same as shown for Method II

DETAIL "E"
(When bituminous surface is being placed on bridge and approach)

LONGITUDINAL EXPANSION JOINT

To be used when Approach Slabs are greater than 36'-0" wide. Joint shall be placed at edge of Traffic Lane nearest to the ℄ of the total width of Approach Slab.

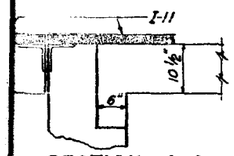

SECTION A-A
(When bituminous surface is being placed on bridge and approach)

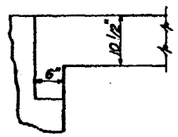

SECTION A-A
(P.C.C. Pavement construction)

Cylinder shall be filled with clay and clay shall be tamped

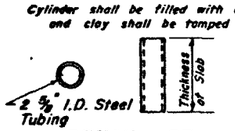

DETAIL OF
MUD JACK CYLINDER

Mud Jack Cylinders not required for P.C.C. Base Course

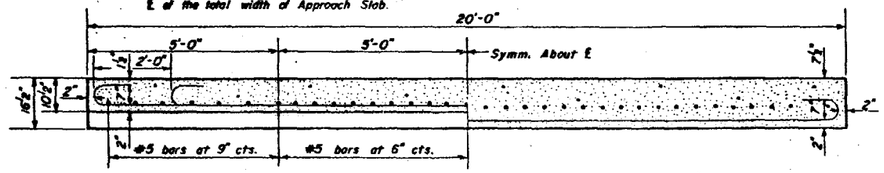

LONGITUDINAL SECTION THRU
CENTER OF SLAB

LONGITUDINAL SECTION THRU
THICKENED EDGE OF SLAB

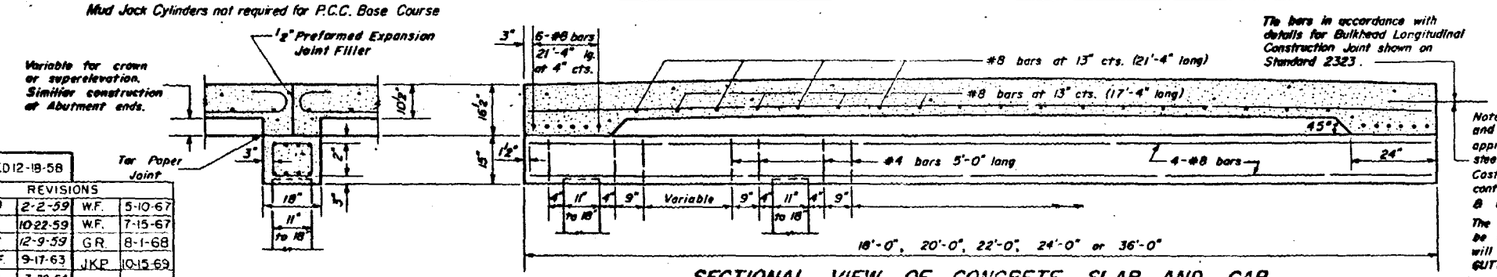

Tie bars in accordance with details for Bulkhead Longitudinal Construction Joint shown on Standard 2323.

SECTIONAL VIEW OF CONCRETE SLAB AND CAP

Note: When road plans show curb and gutter or gutter adjacent to approach slabs place ½" ϕ steel tie bars at 2'-6" cts. Cost of tie bars included in contract unit price for Curb & Gutter or Gutter.

The transition for gutter shall be made in 100 feet and will be paid for as CONCRETE GUTTER, of the type specified.

The transition for curb and gutter shall be made in 20 feet and will be paid for as COMBINATION CURB and GUTTER, of the type specified.

GENERAL NOTES

FOR P.C.C. PAVEMENT

The slab or slabs will be paid for at the contract unit price for PORTLAND CEMENT CONCRETE PAVEMENT (16½"-10½"-16½").

The concrete cap will be paid for at the contract unit price for CLASS X CONCRETE.

All Reinforcement Bars will be paid for at the contract unit price for REINFORCEMENT BARS, except as noted.

The Welded Wire Fabric, Mud Jack Cylinders, and Preformed Expansion Joint Filler shall be included in the unit price bid for PORTLAND CEMENT CONCRETE PAVEMENT (16½"-10½"-16½").

Preformed Expansion Joint Filler shall conform to Section 715 of the Standard Specification.

Width of Bridge Approach Slab pours shall be determined before the reinforcement bars are fabricated.

The Contractor shall, after completion of the finishing operations, mark the location of the Mud Jack Cylinders.

FOR P.C.C. BASE COURSE

The slab or slabs will be paid for at the contract unit price for PORTLAND CEMENT CONCRETE BASE COURSE (16½"-10½"-16½").

The concrete cap will be paid for at the contract unit price for CLASS X CONCRETE.

All Reinforcement Bars will be paid for at the contract unit price for REINFORCEMENT BARS, except as noted.

The Welded Wire Fabric, Concrete Headers, and Preformed Expansion Joint Filler shall be included in the unit price bid for PORTLAND CEMENT CONCRETE BASE COURSE (16½"-10½"-16½").

Preformed Expansion Joint Filler shall conform to Section 715 of the Standard Specification.

Width of Bridge Approach Slab pours shall be determined before the reinforcement bars are fabricated.

STATE OF ILLINOIS
OF PUBLIC WORKS AND BUILDINGS
DIVISION OF HIGHWAYS

Oct. 15 1969
Chief Engineer
OF BRIDGE AND TRAFFIC STRUCTURES

Oct. 15 1969
Engineer of Design

ISSUED 12-19-58

REVISIONS			
WAJ	2-2-59	W.F.	5-10-67
CET	10-22-59	W.F.	7-15-67
WAS	12-9-59	G.R.	8-1-68
W.H.F.	9-17-63	J.K.P.	10-15-69
K.H.W.	7-29-64		
W.F.	10-28-64		

STANDARD 1909-10

DESIGNED: CET JR. CHECKED: WAS JR. DRAWN: WAS JR. 25 NOV. 1958

STANDARD DESIGN FOR TYPE B GUTTER

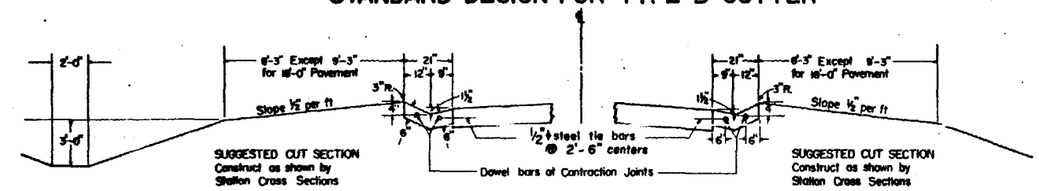

STANDARD INLET FOR TYPE B GUTTER

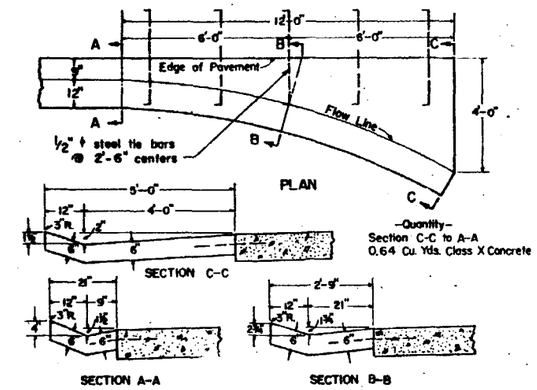

—Quantity—
Section C-C to A-A
0.64 Cu. Yds. Class X Concrete

STANDARD ENTRANCE FOR TYPE B GUTTER

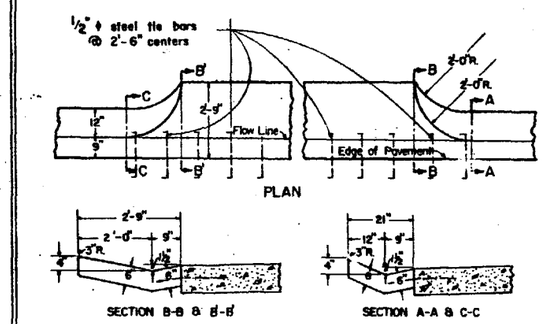

—Quantities—
Section B'-B' to B-B = 0.051 cu. yd. per lineal ft.
Section C-C to B'-B' + B-B to A-A = 0.176 cu. yd.

STANDARD OUTLET FOR TYPE B GUTTER

-NOTE-
If the average grade of pavement for the distance A-D exceeds 2% this distance shall be increased 6 feet for each 1% increase in grade.

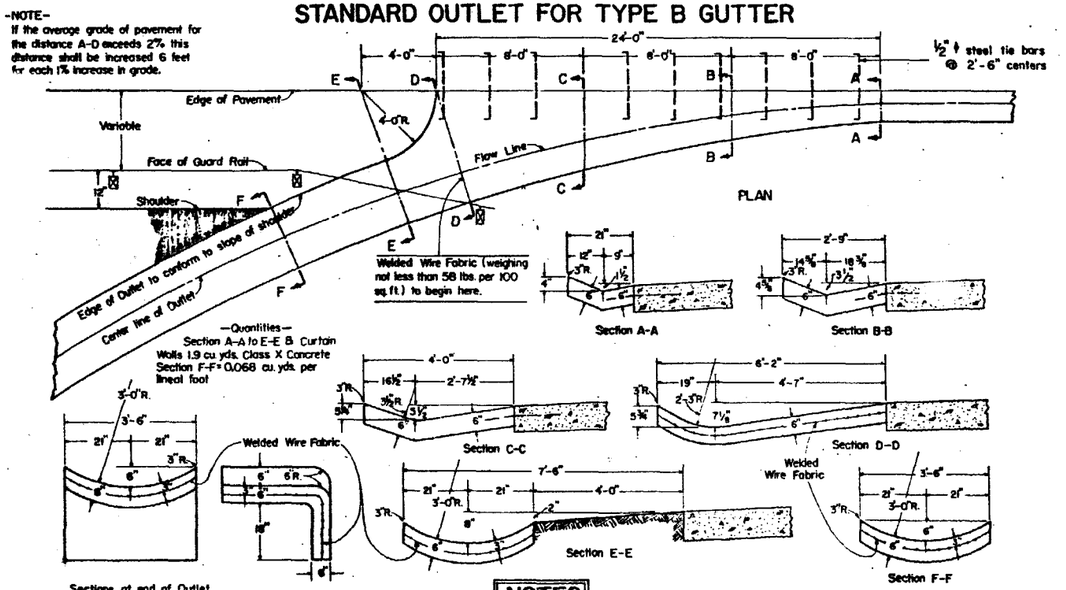

—Quantities—
Section A-A to E-E & Curtain Walls 1.9 cu. yds. Class X Concrete
Section F-F = 0.068 cu. yds. per lineal foot

NOTES

Class X Concrete shall be used throughout.

Gutter, Gutter Inlet, Gutter Outlet and Gutter Entrance shall be tied to the pavement in accordance with details for Bulkhead Longitudinal Construction Joint shown on Standard 2323.

The gutter will be paid for at the contract unit price per lineal foot for Concrete Gutter Type B, which price shall include the cost of the tie bars. The Gutter Inlet, Gutter Outlet and Gutter Entrance will be paid for at the contract unit price per cubic yard for Class X Concrete, which price shall include the cost of the tie bars and the welded wire fabric reinforcement.

Contraction Joints of a type similar to that used in the adjacent pavement shall be installed in the Type B Gutter in prolongation with the joints in the pavement. The details of the transverse joints in the Type B Gutter shall be approved by the Engineer. If contraction joints are not provided in the pavement, contraction joints are not required in the Type B Gutter.

The cost of contraction joints, including dowel bars, shall be included in the contract unit price per lineal foot for Concrete Gutter Type B and the contract unit price per cubic yard for Class X Concrete.

STATE OF ILLINOIS DEPARTMENT OF PUBLIC WORKS & BUILDINGS DIVISION OF HIGHWAYS	ISSUED 3-22-46	
	REVISIONS	
PASSED Oct. 15 1969	KHW	7-31-64
A V Von Quadell, Engineer of Road Plans And Contracts	JKP	10-15-69
APPROVED Oct. 15 1969		
W E Baumann, Engineer of Design		

STANDARD 1914—5

(Half Size) Redrawn 7-31-64

STATE OF ILLINOIS
DEPARTMENT OF PUBLIC WORKS & BUILDINGS
DIVISION OF HIGHWAYS

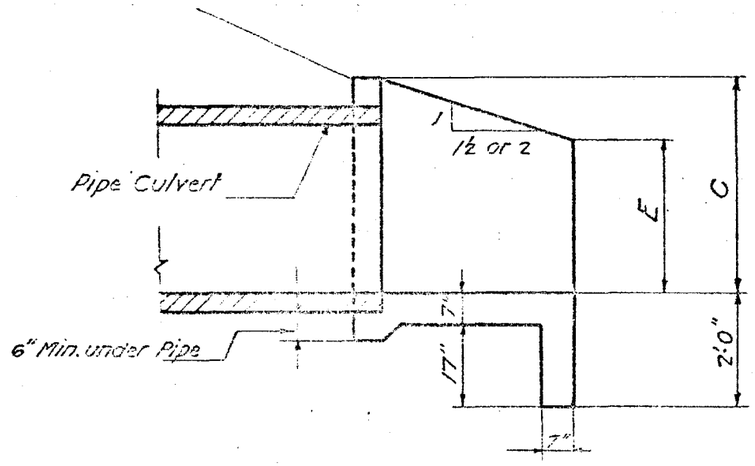

SECTION F-F

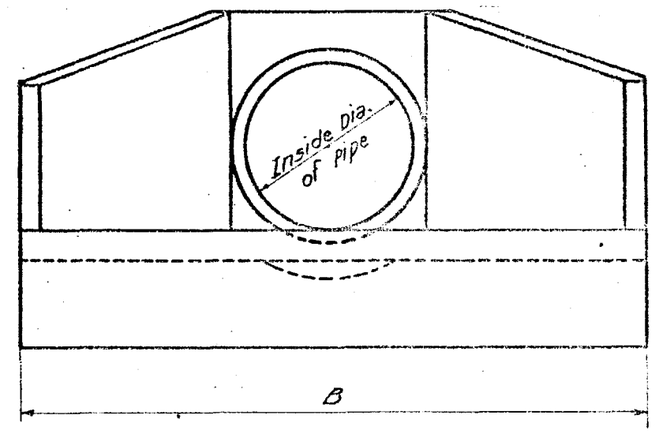

END VIEW

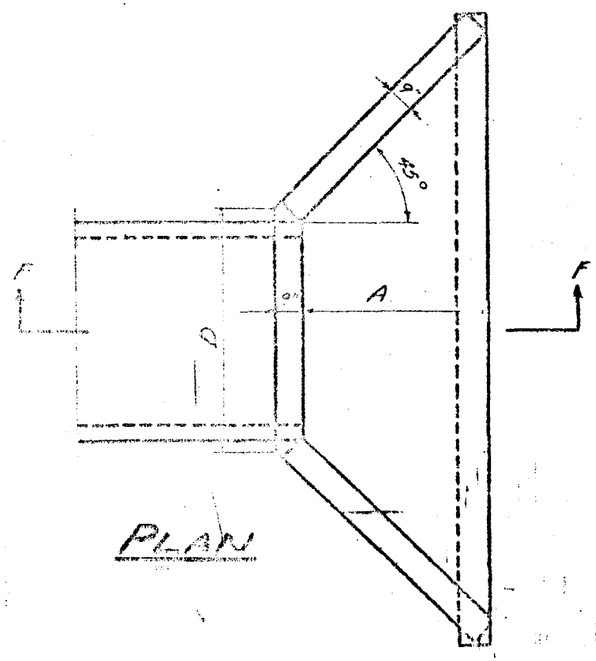

PLAN

NOTES

Build tops of headwalls parallel to grade line.
Class-X-Concrete shall be used throughout.
Entire headwall shall be poured monolithically.

TABLE OF DIMENSIONS

Design Number	Inside Dia. of Pipe	Slope of Fill	Dimensions A	B	C	D	E	Cl.-X-Conc. 2 Hdwls. Cu. Yds.	Design Number
D12-1½	12"	1½:1	10"	4'-1"	20"	2'-0"	12"	0.8	D12-1½
D12-2	12"	2:1 or 3:1	15"	4'-11"	20"	2'-0"	12"	1.0	D12-2
D15-1½	15"	1½:1	12"	4'-8"	23"	2'-3"	14"	0.9	D15-1½
D15-2	15"	2:1 or 3:1	18"	5'-8"	23"	2'-3"	13"	1.3	D15-2
D18-1½	18"	1½:1	14"	5'-3"	2'-2"	2'-6"	15"	1.2	D18-1½
D18-2	18"	2:1 or 3:1	21"	6'-5"	2'-2"	2'-6"	15"	1.5	D18-2
D24-1½	24"	1½:1	19"	6'-9"	2'-9"	3'-2"	19"	1.7	D24-1½
D24-2	24"	2:1 or 3:1	2'-4"	8'-3"	2'-9"	3'-2"	18"	2.3	D24-2
D30-1½	30"	1½:1	2'-0"	8'-1"	3'-3"	3'-8"	22"	2.3	D30-1½
D30-2	30"	2:1 or 3:1	2'-10"	9'-9"	3'-3"	3'-8"	21"	3.1	D30-2
D36-1½	36"	1½:1	2'-5"	9'-7"	3'-10"	4'-4"	2'-1"	3.1	D36-1½
D36-2	36"	2:1 or 3:1	3'-5"	11'-7"	3'-10"	4'-4"	2'-1"	4.2	D36-2

Standard		
	Computed	
	Drawn	Miller
	Checked	

Examined SEPT. 30, 1958
Passed [illegible] Graphic Structures
Approved [illegible] Design
Chief Highway Engineer

PLAIN CONCRETE HEADWALLS FOR 12-15-18-24-30" & 36" DIA. PIPE CULVERTS AT RIGHT ANGLES WITH ROADWAY

RE-DRAWN - JAN. 1958

STANDARD 1973

STATE OF ILLINOIS
DEPARTMENT OF PUBLIC WORKS & BUILDINGS
DIVISION OF HIGHWAYS

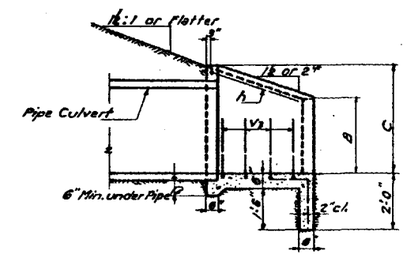

SECTION A-A

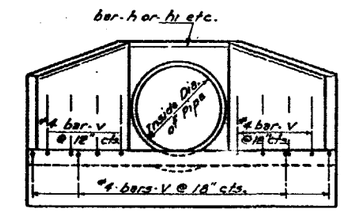

END VIEW

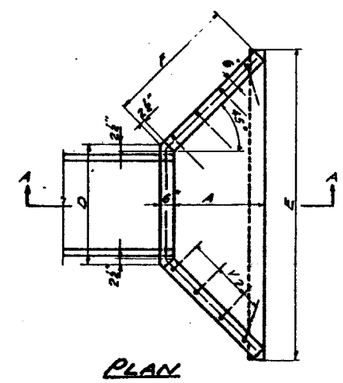

PLAN

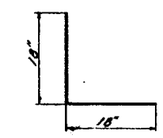

BAR V

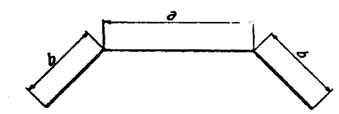

BARS h TO h9

Bend in [illegible]
One Req'd. in each headwall

Mark	a	b
h	1'-10"	2'-5½"
h1	1'-10"	3'-2½"
h2	2'-1"	2'-5½"
h3	2'-1"	3'-2½"
h4	2'-9"	3'-3"
h5	2'-9"	4'-7½"
h6	3'-3"	3'-10½"
h7	3'-3"	4'-10½"
h8	3'-11"	4'-8"
h9	3'-11"	5'-9½"

TABLE OF DIMENSIONS

Design No.	Inside dia. of Pipe	Slope of * Fill	Dimensions A	B	C	D	E	F	Cl. X Con. 2 Hdwls. Cu. Yds.	Reinforcement Bars h-Bars Mark	Length	V-Bars No.	Total Wt. 2-Hdwls.
D15-½	15"	½:1	1'-7"	10"	1'-11"	2'-0"	3'-3½"	2'-3½"	0.9	h	6'-9"	16	40
D15-2	15"	2:1	2'-2"	10"	1'-11"	2'-0"	6'-7½"	3'-3½"	1.2	h1	8'-3"	22	60
D18-½	18"	½:1	1'-7"	1'-1"	2'-2"	2'-3"	3'-8½"	2'-3½"	1.0	h2	7'-0"	16	40
D18-2	18"	2:1	2'-2"	1'-1"	2'-2"	2'-3"	6'-10½"	3'-3½"	1.3	h3	8'-6"	22	60
D24-½	24"	½:1	2'-1"	1'-4"	2'-9"	2'-11"	7'-4½"	3'-2"	1.5	h4	9'-3"	22	60
D24-2	24"	2:1	2'-10"	1'-4"	2'-9"	2'-11"	8'-10½"	4'-2½"	2.0	h5	11'-0"	28	70
D30-½	30"	½:1	2'-6"	1'-7"	3'-3"	3'-3"	8'-8½"	3'-9"	2.0	h6	11'-0"	28	70
D30-2	30"	2:1	3'-4"	1'-7"	3'-3"	3'-3"	10'-4½"	4'-11"	2.6	h7	13'-0"	34	80
D36-½	36"	½:1	3'-0"	1'-10"	3'-10"	4'-1"	10'-4½"	4'-5½"	2.6	h8	13'-3"	30	80
D36-2	36"	2:1	4'-0"	1'-10"	3'-10"	4'-1"	12'-4½"	5'-10½"	3.5	h9	15'-6"	40	100

Note:
Class-X Concrete shall be used throughout.

* If embankment slope above headwall is flatter than 2:1, provide wings for 2:1 slope.

OCT. 5 1959

EXAMINED [signature]
ENGINEER OF BRIDGE AND TRAFFIC STRUCTURES

PASSED [signature]
ENGINEER OF DESIGN

APPROVED [signature]
CHIEF HIGHWAY ENGINEER

M. Miller Sign's. Rev. Nov 58

REINFORCED CONCRETE HEADWALLS FOR 15"-18"-24"-30" & 36" DIAMETER PIPE CULVERTS AT RIGHT ANGLES WITH ROADWAY

STANDARD 1976

STATE OF ILLINOIS
DEPARTMENT OF PUBLIC WORKS & BUILDINGS
DIVISION OF HIGHWAYS

ROUTE NO.	SECTION	COUNTY	TOTAL SHEETS	SHEET NO.
F. A.				
FED. ROAD DIST. NO. 7	ILLINOIS	FED. AID PROJECT		

SHEET NO.
SHEETS

WINGS FOR 1½:1 SLOPE

Skew Angle	Design No.	Ins. Dia. of Pipe	A	B	C	D	E	F	G	H	J	K	M	N	∝	Conc. 2-H.W. Cu.Yds.	Reinf. Bars - 2-H.W. h-bars o	p	q	Lgth.	V-bars No.	Bars 2-H.W. Lbs.
			Dimensions for Concrete																			
5°	DS 15-1½	15"	2'-4	0'-10	2'-5	1'-7	6'-11¾	3'-5¼	3'-2	1'-7	3'-5¾	3'-6	0'-2¾	0'-2¼	85°	1.4	3'-6	1'-9	3'-9	9'-0	28	70
	DS 18-1½	18"	2'-4	1'-1	2'-8	1'-10	7'-2¾	3'-5¼	3'-2	1'-10	3'-7¼	3'-7½	"	"	"	1.6	3'-6	2'-0	3'-9	9'-3	28	70
	DS 24-1½	24"	2'-10	1'-4	3'-3	2'-6	8'-10¾	4'-2¼	3'-10	2'-6	4'-5¼	4'-5½	"	"	"	2.2	4'-3	2'-8	4'-7	11'-6	32	80
	DS 30-1½	30"	3'-3	1'-7	3'-9	3'-0	10'-3	4'-9¾	4'-5	3'-0	5'-1¼	5'-1¾	"	"	"	2.7	4'-10	3'-3	5'-2	13'-3	36	90
	DS 36-1½	36"	3'-9	1'-10	4'-4	3'-8¼	11'-11	5'-6½	5'-1	3'-8	5'-11¼	5'-11¾	0'-2¾	0'-2¼	85°	3.3	5'-7	3'-11	6'-0	15'-6	42	100
10°	DS 15-1½	15"	2'-4	0'-10	2'-5	1'-7¼	7'-0½	3'-7½	3'-0½	1'-7	3'-6	3'-6½	0'-2¾	0'-2¼	80°	1.5	3'-4	1'-10	3'-10	9'-0	28	70
	DS 18-1½	18"	2'-4	1'-1	2'-8	1'-10¼	7'-3¾	3'-7½	3'-0½	1'-10	3'-7½	3'-8¼	"	"	"	1.6	3'-4	2'-1	3'-10	9'-3	28	70
	DS 24-1½	24"	2'-10	1'-4	3'-3	2'-6½	9'-0	4'-3	3'-8½	2'-6	4'-5¾	4'-6¼	"	"	"	2.2	4'-1	2'-9	4'-8	11'-6	34	80
	DS 30-1½	30"	3'-3	1'-7	3'-9	3'-0½	10'-4¼	5'-0¾	4'-3	3'-0	5'-1¾	5'-2¼	"	"	"	2.8	4'-9	3'-3	5'-6	13'-6	36	90
	DS 36-1½	36"	3'-9	1'-10	4'-4	3'-8¾	12'-0½	5'-10	4'-10¾	3'-8	6'-0	6'-0½	0'-2¾	0'-2¼	80°	3.5	5'-6	3'-11	6'-4	15'-9	42	110
15°	DS 15-1½	15"	2'-4	0'-10	2'-5	1'-7¾	7'-2	3'-10	2'-11¼	1'-7	3'-6½	3'-7½	0'-3	0'-2	75°	1.5	3'-4	1'-10	4'-1	9'-3	28	70
	DS 18-1½	18"	2'-4	1'-1	2'-8	1'-10¾	7'-5½	3'-10	2'-11¼	1'-10	3'-8	3'-9¼	"	"	"	1.7	3'-4	2'-1	4'-1	9'-6	28	70
	DS 24-1½	24"	2'-10	1'-4	3'-3	2'-7	9'-2	4'-3¾	3'-6¾	2'-6	4'-6½	4'-7¼	"	"	"	2.3	4'-0	2'-10	4'-11	11'-9	34	80
	DS 30-1½	30"	3'-3	1'-7	3'-9	3'-1¼	10'-4½	5'-4	4'-1¼	3'-0	5'-2¾	5'-3¼	"	"	"	2.9	4'-8	3'-4	5'-9	13'-9	40	100
	DS 36-1½	36"	3'-9	1'-10	4'-4	3'-9¼	12'-3¼	6'-2	4'-8¾	3'-8	6'-1	6'-2¼	0'-3	0'-2	75°	3.8	5'-3	4'-0	6'-6	15'-9	46	110
20°	DS 15-1½	15"	2'-4	0'-10	2'-5	1'-8¼	7'-4	4'-0¾	2'-10¼	1'-7	3'-7½	3'-8¾	0'-3	0'-2	70°	1.6	3'-3	1'-11	4'-4	9'-6	28	70
	DS 18-1½	18"	2'-4	1'-1	2'-8	1'-11½	7'-7½	4'-0¾	2'-10¼	1'-10	3'-9	3'-10½	"	"	"	1.7	3'-3	2'-2	4'-4	9'-9	28	70
	DS 24-1½	24"	2'-10	1'-4	3'-3	2'-8	9'-4½	4'-11¼	3'-5½	2'-6	4'-7½	4'-9	"	"	"	2.4	3'-11	2'-11	5'-2	12'-0	38	90
	DS 30-1½	30"	3'-3	1'-7	3'-9	3'-2¼	10'-9¾	5'-8	3'-11½	3'-0	5'-4¼	5'-5¼	"	"	"	3.1	4'-5	3'-5	5'-11	13'-9	42	100
	DS 36-1½	36"	3'-9	1'-10	4'-4	3'-10¼	12'-7	6'-6½	4'-7	3'-8	6'-2¾	6'-4¼	0'-3	0'-2	70°	4.0	5'-3	4'-1	6'-11	18'-3	50	120
25°	DS 15-1½	15"	2'-4	0'-10	2'-5	1'-9	7'-7	4'-4	2'-9¾	1'-7	3'-8½	3'-10½	0'-3¼	0'-1¾	65°	1.6	3'-3	1'-11	4'-7	9'-9	28	70
	DS 18-1½	18"	2'-4	1'-1	2'-8	2'-0¼	7'-10¼	4'-4	2'-9¾	1'-10	3'-10¼	4'-0	"	"	"	1.8	3'-2	2'-3	4'-7	10'-0	32	80
	DS 24-1½	24"	2'-10	1'-4	3'-3	2'-9	9'-8½	5'-3¼	3'-4¼	2'-6	4'-9¼	4'-11¼	"	"	"	2.5	3'-10	2'-11	5'-6	12'-3	38	90
	DS 30-1½	30"	3'-3	1'-7	3'-9	3'-3¾	11'-2	6'-0½	3'-10¼	3'-0	5'-6	5'-8	"	"	"	3.3	4'-5	3'-6	6'-4	14'-3	44	110
	DS 36-1½	36"	3'-9	1'-10	4'-4	4'-0¾	13'-0¾	6'-11¾	4'-5¾	3'-8	6'-5¾	6'-7	0'-3¼	0'-1¾	65°	4.3	5'-0	4'-3	7'-3	16'-6	50	120
30°	DS 15-1½	15"	2'-4	0'-10	2'-5	1'-10	7'-10¾	4'-8	2'-8¼	1'-7	3'-10¼	4'-0½	0'-3½	0'-1½	60°	1.7	3'-1	2'-0	4'-11	10'-0	36	90
	DS 18-1½	18"	2'-4	1'-1	2'-8	2'-1½	8'-2¼	4'-8	2'-8¼	1'-10	4'-0	4'-2¼	"	"	"	1.9	3'-2	2'-4	5'-0	10'-6	36	90
	DS 24-1½	24"	2'-10	1'-4	3'-3	2'-10¾	10'-1¼	5'-8	3'-3¼	2'-6	4'-11½	5'-1¾	"	"	"	2.7	3'-9	3'-1	5'-11	12'-9	40	100
	DS 30-1½	30"	3'-3	1'-7	3'-9	3'-5½	11'-7¾	6'-6	3'-9	3'-0	5'-8¾	5'-11	"	"	"	3.5	4'-4	3'-8	6'-9	14'-9	46	110
	DS 36-1½	36"	3'-9	1'-10	4'-4	4'-2¾	13'-7	7'-6	4'-4	3'-8	6'-8½	6'-10½	0'-3½	0'-1½	60°	4.6	5'-0	4'-5	7'-10	17'-3	54	130
35°	DS 15-1½	15"	2'-4	0'-10	2'-5	1'-11¾	8'-3¾	5'-0¾	2'-7½	1'-7	4'-0½	4'-3	0'-3¾	0'-1½	55°	1.8	3'-1	2'-2	5'-3	10'-6	36	90
	DS 18-1½	18"	2'-4	1'-1	2'-8	2'-3	8'-7½	5'-0¾	2'-7½	1'-10	4'-2¼	4'-5	"	"	"	2.0	3'-1	2'-5	5'-3	10'-9	36	90
	DS 24-1½	24"	2'-10	1'-4	3'-3	3'-0¼	10'-7¾	6'-1¾	3'-2¼	2'-6	5'-2½	5'-5¼	"	"	"	2.9	3'-8	3'-3	6'-4	13'-3	40	100
	DS 30-1½	30"	3'-3	1'-7	3'-9	3'-6	12'-3¼	7'-0¼	3'-8	3'-0	6'-0½	6'-3	"	"	"	3.7	4'-2	3'-11	7'-2	15'-3	50	120
	DS 36-1½	36"	3'-9	1'-10	4'-4	4'-8¾	14'-3¾	8'-1¾	4'-2¾	3'-8	7'-0½	7'-3½	0'-3¾	0'-1½	55°	4.9	4'-11	4'-8	8'-5	18'-0	56	140
40°	DS 15-1½	15"	2'-4	0'-10	2'-5	2'-0¾	8'-10	5'-6¼	2'-7	1'-7	4'-3½	4'-6½	0'-3¾	0'-1¼	50°	1.9	3'-1	2'-3	5'-8	11'-0	38	90
	DS 18-1½	18"	2'-4	1'-1	2'-8	2'-4¾	9'-1¾	5'-6¼	2'-7	1'-10	4'-5½	4'-8¼	"	"	"	2.2	3'-0	2'-7	5'-8	11'-3	38	90
	DS 24-1½	24"	2'-10	1'-4	3'-3	3'-3¾	11'-4	6'-9¾	3'-1½	2'-6	5'-6¼	5'-9½	"	"	"	3.1	3'-8	3'-6	6'-10	14'-0	48	110
	DS 30-1½	30"	3'-3	1'-7	3'-9	3'-11	13'-0¾	7'-8¼	3'-7	3'-0	6'-5	6'-7¾	"	"	"	4.0	4'-2	4'-2	7'-11	16'-3	54	130
	DS 36-1½	36"	3'-9	1'-10	4'-4	4'-9½	15'-3	8'-10½	4'-1¾	3'-8	7'-6	7'-9	0'-3¾	0'-1¼	50°	5.3	4'-10	5'-0	9'-2	19'-0	62	150
45°	DS 15-1½	15"	2'-4	0'-10	2'-5	2'-3	9'-6	6'-1¾	2'-6¼	1'-7	4'-7½	4'-10½	0'-4	0'-1¼	45°	2.1	3'-0	2'-5	6'-1	11'-6	40	100
	DS 18-1½	18"	2'-4	1'-1	2'-8	2'-7	9'-10¼	6'-1¾	2'-6¼	1'-10	4'-9½	5'-0¾	"	"	"	2.4	3'-0	2'-10	6'-2	12'-0	44	100
	DS 24-1½	24"	2'-10	1'-4	3'-3	3'-6½	12'-2½	7'-4¾	3'-0¾	2'-6	5'-11½	6'-3	"	"	"	3.4	3'-8	3'-9	7'-7	15'-0	50	120
	DS 30-1½	30"	3'-3	1'-7	3'-9	4'-3	14'-1	8'-6	3'-6½	3'-0	6'-11	7'-2	"	"	"	4.4	4'-2	4'-5	8'-8	17'-3	62	150
	DS 36-1½	36"	3'-9	1'-10	4'-4	5'-2¼	16'-5¼	9'-9½	4'-0¾	3'-8	8'-1	8'-4¼	0'-4	0'-1¼	45°	5.7	4'-10	5'-5	10'-0	20'-3	66	160
50°	DS 15-1½	15"	2'-4	0'-10	2'-5	2'-5½	10'-4½	6'-10	2'-5¾	1'-7	5'-0½	5'-4	0'-4½	0'-1	40°	2.3	2'-11	2'-8	6'-11	12'-6	46	110
	DS 18-1½	18"	2'-4	1'-1	2'-8	2'-10½	10'-9	6'-10	2'-5¾	1'-10	5'-2¾	5'-6¼	"	"	"	2.6	3'-0	3'-1	6'-11	13'-0	46	110
	DS 24-1½	24"	2'-10	1'-4	3'-3	3'-10¾	13'-4¼	8'-3½	3'-0¼	2'-6	6'-6¼	6'-10	"	"	"	3.7	3'-7	4'-1	8'-4	16'-0	56	130
	DS 30-1½	30"	3'-3	1'-7	3'-9	4'-8	15'-5	9'-6	3'-5½	3'-0	7'-6½	7'-10¼	"	"	"	4.8	4'-1	4'-10	9'-7	18'-6	66	160
	DS 36-1½	36"	3'-9	1'-10	4'-4	5'-8½	18'-0¼	10'-11½	4'-0	3'-8	8'-10½	9'-2	0'-4½	0'-1	40°	6.3	4'-9	5'-11	11'-1	21'-9	74	180
55°	DS 15-1½	15"	2'-4	0'-10	2'-5	2'-9	11'-6¼	7'-9	2'-5¼	1'-7	5'-7¼	5'-11	0'-4½	0'-1	35°	2.6	2'-11	3'-0	7'-10	13'-9	50	120
	DS 18-1½	18"	2'-4	1'-1	2'-8	3'-2¼	11'-11½	7'-9	2'-5¼	1'-10	5'-9¾	6'-1¾	"	"	"	2.9	3'-0	3'-5	7'-10	14'-3	50	120
	DS 24-1½	24"	2'-10	1'-4	3'-3	4'-4¼	14'-10½	9'-5	2'-11¾	2'-6	7'-3¼	7'-7¼	"	"	"	4.2	3'-6	4'-7	9'-5	17'-6	62	150
	DS 30-1½	30"	3'-3	1'-7	3'-9	5'-2¾	17'-2¼	10'-9¾	3'-5	3'-0	8'-5¼	8'-9	"	"	"	5.4	4'-1	5'-6	10'-11	20'-6	74	180
	DS 36-1½	36"	3'-9	1'-10	4'-4	6'-4¾	20'-1¼	12'-5¾	3'-11¼	3'-8	9'-10¾	10'-2½	0'-4½	0'-1	35°	7.1	4'-9	6'-7	12'-8	24'-0	86	200
60°	DS 15-1½	15"	2'-4	0'-10	2'-5	3'-2	13'-1¼	9'-0¼	2'-5	1'-7	6'-4½	6'-8¾	0'-4½	0'-0¾	30°	2.9	2'-10	3'-5	9'-0	15'-3	54	130
	DS 18-1½	18"	2'-4	1'-1	2'-8	3'-8	13'-7¼	9'-0¼	2'-5	1'-10	6'-7½	6'-11¾	"	"	"	3.2	2'-10	3'-11	9'-0	15'-9	58	140
	DS 24-1½	24"	2'-10	1'-4	3'-3	5'-0	16'-1¼	10'-11¼	2'-11¼	2'-6	8'-3½	8'-7¾	"	"	"	4.7	3'-6	5'-3	11'-0	19'-9	72	170
	DS 30-1½	30"	3'-3	1'-7	3'-9	6'-0	19'-7¼	12'-6¾	3'-4½	3'-0	9'-7½	9'-11¾	"	"	"	6.1	4'-1	6'-3	12'-8	23'-0	82	200
	DS 36-1½	36"	3'-9	1'-10	4'-4	7'-4	22'-1¼	14'-5¾	3'-10½	3'-8	11'-3½	11'-7¾	0'-4½	0'-0¾	30°	8.1	4'-7	7'-7	14'-7	26'-9	98	230
Skew Angle	Design No.	Ins. Dia. of Pipe	A	B	C	D	E	F	G	H	J	K	M	N	∝	Conc. 2-H.W. Cu.Yds.	o	p	q	Lgth.	V-bars No.	Bars 2-H.W. Lbs.
			Dimensions for Concrete														h-bars					
																	Reinf. Bars - 2-H.W.					

WINGS FOR 2:1 SLOPE

Skew Angle	Design No.	Ins. Dia. of Pipe	A	B	C	D	E	F	G	H	J	K	M	N	∝	Conc. 2-H.W. Cu.Yds.	Reinf. Bars - 2-H.W. h-bars o	p	q	Lgth.	V-bars No.	Bars 2-H.W. Lbs.
			Dimensions for Concrete																			
5°	DS 15-2	15"	3'-2	0'-10	2'-5	1'-7	8'-7¾	4'-8¼	4'-3½	1'-7	4'-3¾	4'-4	0'-2¾	0'-2¼	85°	1.9	4'-7	1'-9	4'-11	11'-3	34	80
	DS 18-2	18"	3'-2	1'-1	2'-8	1'-10	8'-10¾	4'-8¼	4'-3½	1'-10	4'-5¼	4'-5½	"	"	"	2.0	4'-7	2'-0	4'-11	11'-6	34	80
	DS 24-2	24"	3'-10	1'-4	3'-3	2'-6	11'-11	5'-8	5'-2½	2'-6	5'-5¼	5'-5¾	"	"	"	2.9	5'-5	2'-8	5'-11	14'-0	42	100
	DS 30-2	30"	4'-4	1'-7	3'-9	3'-0	12'-5	6'-5	5'-10½	3'-0	6'-2¼	6'-2¾	"	"	"	3.7	6'-3	3'-3	6'-9	16'-3	48	120
	DS 36-2	36"	5'-0	1'-10	4'-4	3'-8¼	14'-5	7'-4¾	6'-9¼	3'-8	7'-2¼	7'-2¾	0'-2¾	0'-2¼	85°	4.5	7'-2	3'-11	7'-8	18'-9	54	130
10°	DS 15-2	15"	3'-2	0'-10	2'-5	1'-7¼	8'-9	4'-11	4'-1½	1'-7	4'-4	4'-5	0'-2¾	0'-2¼	80°	2.0	4'-4	1'-10	5'-1	11'-3	34	80
	DS 18-2	18"	3'-2	1'-1	2'-8	1'-10¼	9'-0	4'-11	4'-1½	1'-10	4'-5¾	4'-6¼	"	"	"	2.1	4'-4	2'-1	5'-1	11'-6	34	80
	DS 24-2	24"	3'-10	1'-4	3'-3	2'-6½	11'-0¼	5'-11½	5'-0	2'-6	5'-5¾	5'-6½	"	"	"	3.0	5'-4	2'-9	6'-2	14'-3	42	100
	DS 30-2	30"	4'-4	1'-7	3'-9	3'-0½	12'-6¾	6'-9	5'-8	3'-0	6'-3	6'-3¾	"	"	"	3.8	6'-0	3'-3	7'-0	16'-3	48	120
	DS 36-2	36"	5'-0	1'-10	4'-4	3'-8¾	14'-7	7'-9¼	6'-6¼	3'-8	7'-3	7'-4	0'-2¾	0'-2¼	80°	4.7	7'-0	3'-11	8'-1	19'-0	54	130
15°	DS 15-2	15"	3'-2	0'-10	2'-5	1'-7¾	8'-10¾	5'-2¼	4'-0	1'-7	4'-4¾	4'-6	0'-3	0'-2	75°	2.0	4'-3	1'-10	5'-5	11'-6	34	80
	DS 18-2	18"	3'-2	1'-1	2'-8	1'-10¾	9'-2	5'-2¼	4'-0	1'-10	4'-6½	4'-7¼	"	"	"	2.2	4'-3	2'-1	5'-5	11'-9	34	80
	DS 24-2	24"	3'-10	1'-4	3'-3	2'-7	11'-2¾	6'-3¼	4'-10	2'-6	5'-6¾	5'-8	"	"	"	3.1	5'-2	2'-10	6'-6	14'-6	42	100
	DS 30-2	30"	4'-4	1'-7	3'-9	3'-1¼	12'-9¼	7'-1½	5'-5½	3'-0	6'-4	6'-5¼	"	"	"	3.9	5'-10	3'-4	7'-4	16'-6	52	130
	DS 36-2	36"	5'-0	1'-10	4'-4	3'-9¼	14'-10¼	8'-2½	6'-3½	3'-8	7'-4½	7'-5¾	0'-3	0'-2	75°	5.0	6'-9	4'-0	8'-6	19'-3	56	140
20°	DS 15-2	15"	3'-2	0'-10	2'-5	1'-8	9'-1½	5'-6¼	3'-10½	1'-7	4'-6	4'-7½	0'-3	0'-2	70°	2.1	4'-2	1'-11	5'-8	11'-9	38	90
	DS 18-2	18"	3'-2	1'-1	2'-8	1'-11½	9'-4½	5'-6¼	3'-10½	1'-10	4'-7½	4'-9	"	"	"	2.3	4'-2	2'-2	5'-8	12'-0	36	90
	DS 24-2	24"	3'-10	1'-4	3'-3	2'-8	11'-6¼	6'-8¼	4'-8¼	2'-6	5'-8½	5'-9¾	"	"	"	3.2	5'-0	2'-11	6'-10	14'-9	48	120
	DS 30-2	30"	4'-4	1'-7	3'-9	3'-2¼	13'-1¾	7'-8½	5'-3½	3'-0	6'-6	6'-7¾	"	"	"	4.1	5'-9	3'-5	7'-10	17'-0	52	130
	DS 36-2	36"	5'-0	1'-10	4'-4	3'-10¼	15'-3	8'-8½	6'-1¼	3'-8	7'-6¾	7'-8¼	0'-3	0'-2	70°	5.3	6'-6	4'-1	8'-11	19'-6	58	140
25°	DS 15-2	15"	3'-2	0'-10	2'-5	1'-9	9'-5	5'-10¾	3'-9	1'-7	4'-7½	4'-9	0'-3¼	0'-1¾	65°	2.2	4'-1	1'-11	6'-0	12'-0	38	90
	DS 18-2	18"	3'-2	1'-1	2'-8	2'-0¼	9'-8½	5'-10¾	3'-9	1'-10	4'-9¼	4'-11¼	"	"	"	2.4	4'-0	2'-3	6'-0	12'-3	42	100
	DS 24-2	24"	3'-10	1'-4	3'-3	2'-9	11'-11	7'-1½	4'-6½	2'-6	5'-10½	6'-0½	"	"	"	3.4	4'-11	3'-0	7'-4	15'-3	48	120
	DS 30-2	30"	4'-4	1'-7	3'-9	3'-3¾	13'-6¾	8'-0¾	5'-1¾	3'-0	6'-8½	6'-10¼	"	"	"	4.3	5'-6	3'-6	8'-3	17'-3	52	130
	DS 36-2	36"	5'-0	1'-10	4'-4	4'-0½	15'-9¼	9'-3¾	6'-11¼	3'-8	7'-9¾	7'-11½	0'-3¼	0'-1¾	65°	5.6	6'-5	4'-3	9'-7	20'-3	60	150
30°	DS 15-2	15"	3'-2	0'-10	2'-5	1'-10	9'-9¾	6'-4	3'-8	1'-7	4'-9¾	5'-0	0'-3½	0'-1½	60°	2.3	4'-0	2'-0	6'-6	12'-6	42	100
	DS 18-2	18"	3'-2	1'-1	2'-8	2'-1½	10'-1½	6'-4	3'-8	1'-10	4'-11½	5'-2	"	"	"	2.5	4'-0	2'-4	6'-5	12'-9	42	100
	DS 24-2	24"	3'-10	1'-4	3'-3	2'-10¾	12'-5	7'-8	4'-5	2'-6	6'-1½	6'-3½	"	"	"	3.6	4'-10	3'-1	7'-10	15'-9	52	130
	DS 30-2	30"	4'-4	1'-7	3'-9	3'-5½	14'-1¾	8'-8	5'-0	3'-0	6'-11¾	7'-2	"	"	"	4.5	5'-6	3'-8	8'-10	18'-0	56	140
	DS 36-2	36"	5'-0	1'-10	4'-4	4'-2¾	16'-3½	10'-0	5'-9¼	3'-8	8'-1¾	8'-3¾	0'-3½	0'-1½	60°	5.9	6'-4	4'-5	10'-3	21'-0	66	160
35°	DS 15-2	15"	3'-2	0'-10	2'-5	1'-11½	10'-4	6'-10½	3'-6¾	1'-7	5'-0¾	5'-3¼	0'-3½	0'-1½	55°	2.4	3'-11	2'-2	6'-11	13'-0	44	110
	DS 18-2	18"	3'-2	1'-1	2'-8	2'-3	10'-7¾	6'-10¼	3'-6¾	1'-10	5'-2¼	5'-5¼	"	"	"	2.6	3'-11	2'-5	6'-11	13'-3	44	110
	DS 24-2	24"	3'-10	1'-4	3'-3	3'-0½	13'-1	8'-3½	4'-3½	2'-6	6'-5¼	6'-7¾	"	"	"	3.6	4'-8	3'-3	8'-4	16'-3	52	130
	DS 30-2	30"	4'-4	1'-7	3'-9	3'-8	14'-11	9'-4½	4'-10½	3'-0	7'-4¾	7'-6¾	"	"	"	4.8	5'-4	3'-11	9'-6	18'-9	60	150
	DS 36-2	36"	5'-0	1'-10	4'-4	4'-5¾	17'-4¾	10'-10	5'-7¾	3'-8	8'-6¾	8'-9½	0'-3¾	0'-1½	55°	6.3	6'-1	4'-8	11'-0	21'-9	70	170
40°	DS 15-2	15"	3'-2	0'-10	2'-5	2'-0¾	11'-0	7'-6	3'-6	1'-7	5'-4½	5'-7½	0'-3¾	0'-1¼	50°	2.6	3'-10	2'-4	7'-7	13'-9	48	120
	DS 18-2	18"	3'-2	1'-1	2'-8	2'-4¾	11'-4	[illegible]	3'-6	1'-10	5'-6½	5'-9½	"	"	"	2.8	3'-10	2'-7	7'-7	14'-0	48	120
	DS 24-2	24"	3'-10	1'-4	3'-3	3'-3½	13'-11½	9'-0¾	4'-2¾	2'-6	6'-10¼	7'-1	"	"	"	4.1	4'-7	3'-6	9'-2	17'-3	58	140
	DS 30-2	30"	4'-4	1'-7	3'-9	3'-11	15'-10¾	10'-3	4'-9¾	3'-0	7'-10	8'-0¾	"	"	"	5.2	5'-3	4'-2	10'-4	19'-9	64	160
	DS 36-2	36"	5'-0	1'-10	4'-4	4'-9½	18'-6	11'-10	5'-6¼	3'-8	9'-1½	9'-4¼	0'-3¾	0'-1¼	50°	6.8	6'-0	5'-0	12'-0	23'-0	78	190
45°	DS 15-2	15"	3'-2	0'-10	2'-5	2'-3	11'-10¾	8'-3¼	3'-5¼	1'-7	5'-9½	6'-0¾	0'-4	0'-1¼	45°	2.8	3'-9	2'-5	8'-4	14'-6	48	120
	DS 18-2	18"	3'-2	1'-1	2'-8	2'-7	12'-2¼	8'-3¼	3'-5¼	1'-10	5'-11½	6'-3	"	"	"	3.1	3'-10	2'-10	8'-4	15'-0	52	120
	DS 24-2	24"	3'-10	1'-4	3'-3	3'-6½	15'-0¼	10'-0¼	4'-1¾	2'-6	7'-3¼	7'-7¾	"	"	"	4.4	4'-6	3'-9	10'-0	18'-3	60	140
	DS 30-2	30"	4'-4	1'-7

DEPARTMENT OF PUBLIC WORKS & BUILDINGS
DIVISION OF HIGHWAYS

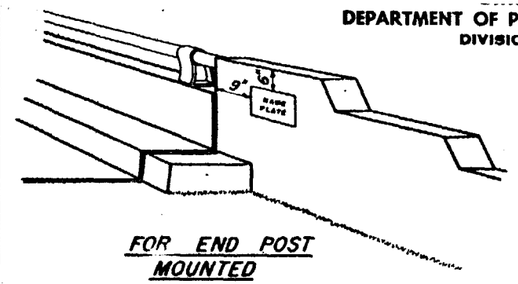

FOR END POST MOUNTED

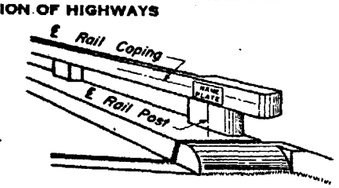

FOR CONCRETE RAILS

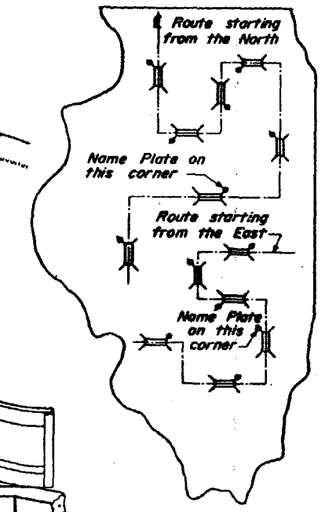

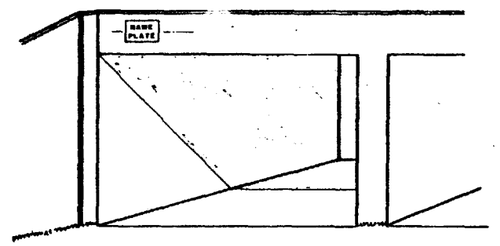

FOR MULTI-SPAN CULVERTS

Note: Unless otherwise noted on the plans, Name Plates are not required for single box culverts.

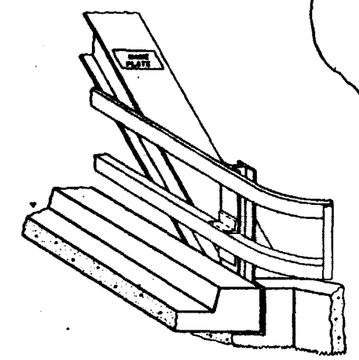

FOR TRUSSES

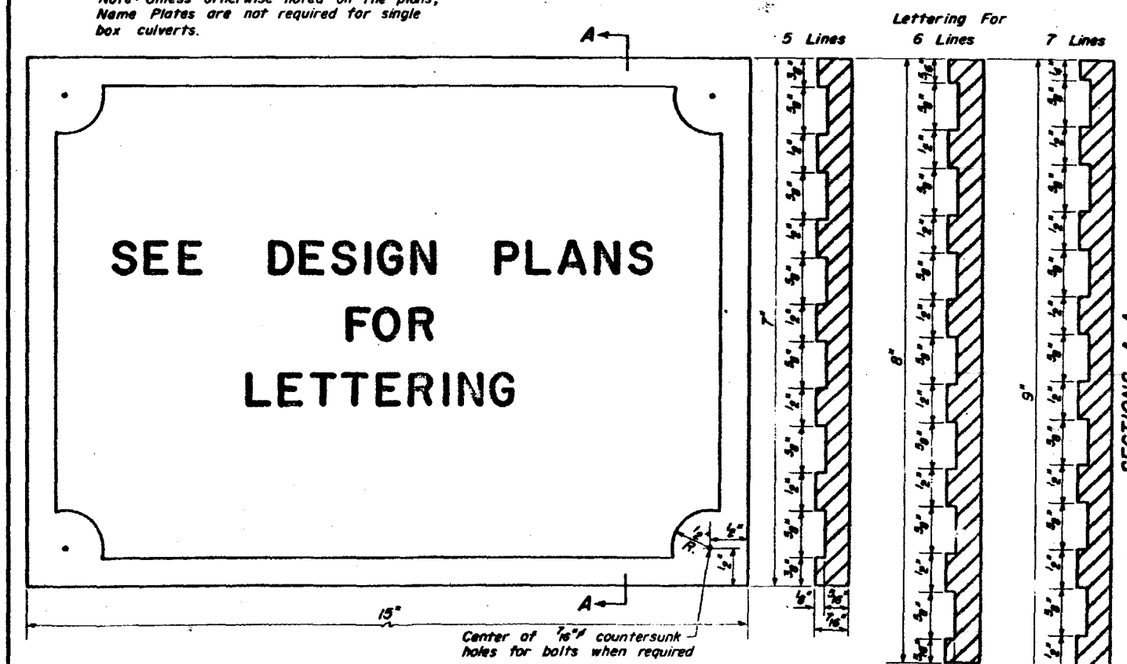

Material: Best quality brass or bronze.

Border & Lettering: Raised 1/8 inch. Square cut and not tapered. Top surface polished.

Fastenings:
- For Concrete Rails, Culvert Headwalls & Subways -- Four lugs at least three inches long, cast on back of plate.
- For Steel Truss Span - - - - Plate to be fastened on steel member at fabricating shop by brazing around entire perimeter of plate.
- For Steel Rails - - - - - - - Plate to be bolted on with 4 - 3/8"ϕ brass or bronze machine bolts with countersunk head.

Placings:
- For Concrete Rails - - - - - Plate to be centered on ℄ of rail post and ℄ of handrail coping.
- For Steel Truss Span - - - Braze to end post about five feet above roadway.
- For Steel Rails - - - - - - Place midway between horizontal rail members.
- For Subways - - - - - - - - See design plans for location.

STATE OF ILLINOIS
DEPARTMENT OF PUBLIC WORKS & BUILDINGS
DIVISION OF HIGHWAYS

PASSED NOVEMBER 15, 1963
A. V. Van Auskall
Engineer of Road Plans And Contracts

APPROVED NOVEMBER 15, 1963
E. L. Sheets
Engineer of Design

DETAIL OF NAME PLATE FOR BRIDGES

Rev. 11-15-63 23d (Half size) STD. 2113-1

STANDARD DESIGN
CONCRETE MEDIANS

TYPE C-4

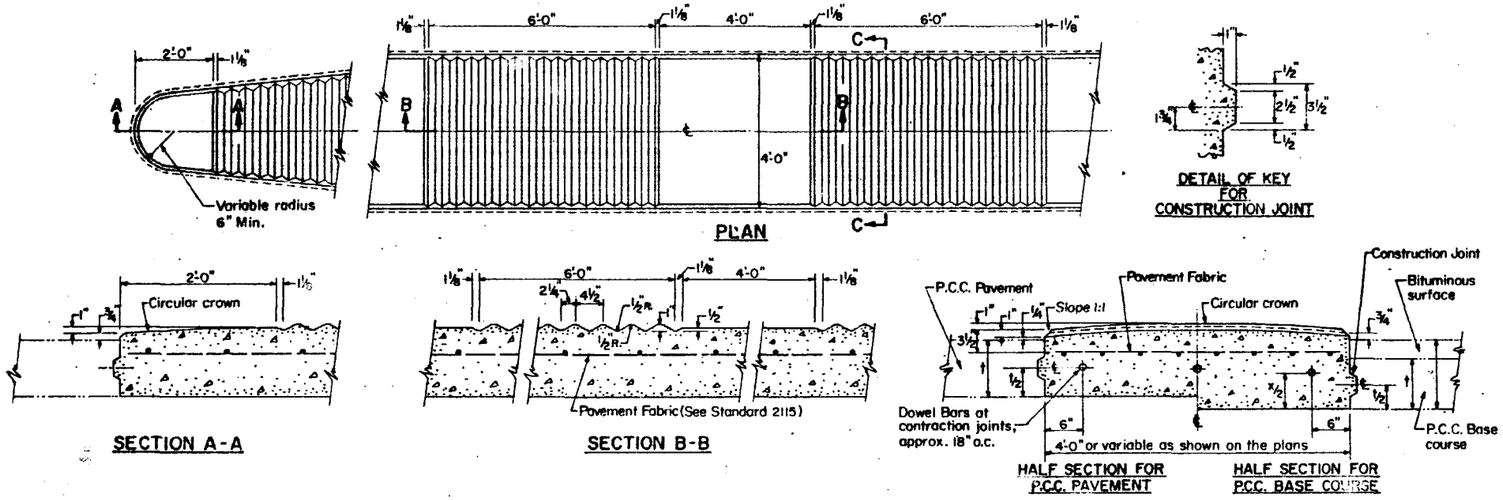

TYPE P

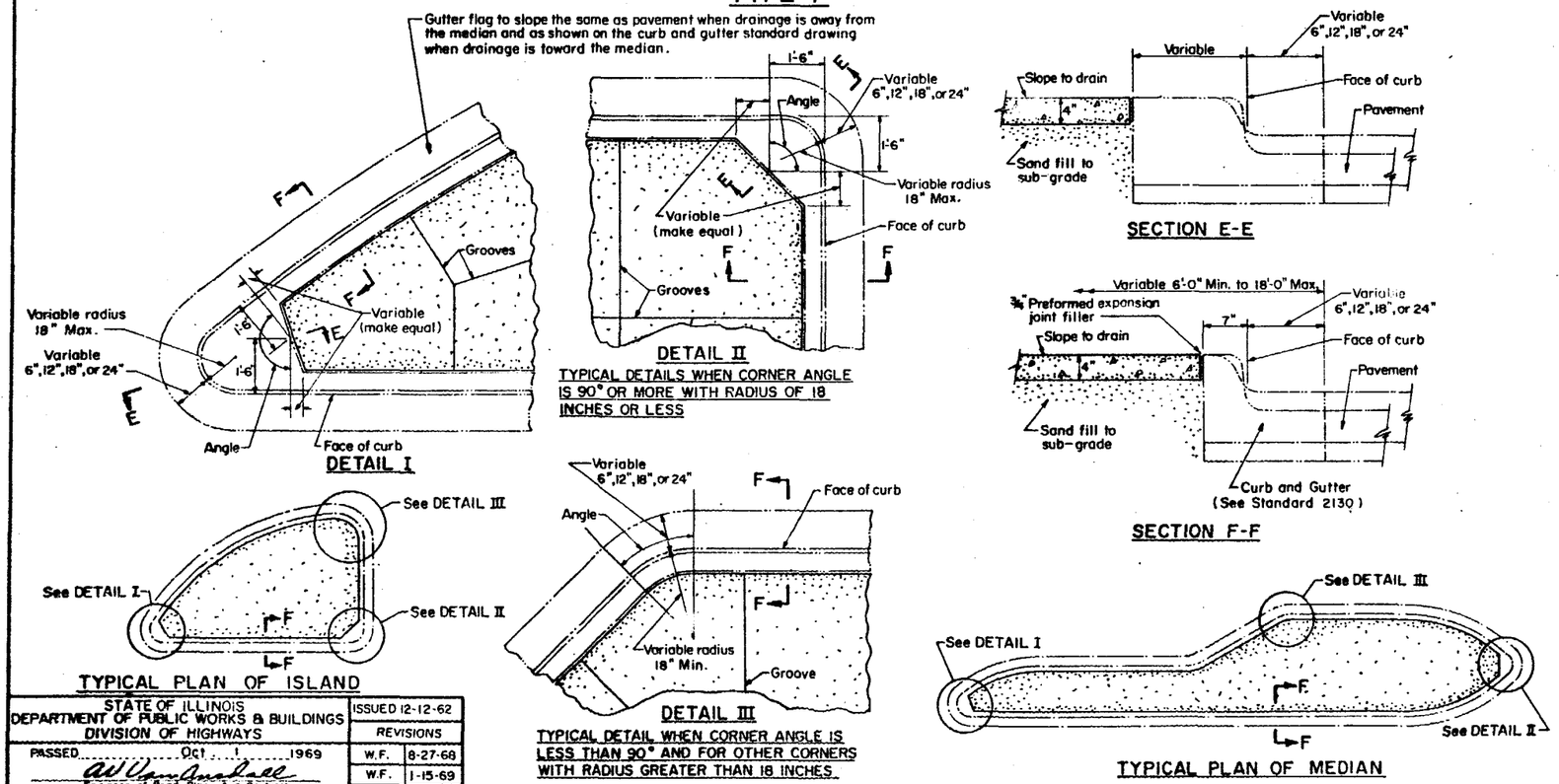

STATE OF ILLINOIS DEPARTMENT OF PUBLIC WORKS & BUILDINGS DIVISION OF HIGHWAYS	ISSUED 12-12-62	
	REVISIONS	
PASSED Oct. 1 1969	W.F.	8-27-68
Engineer of Road Plans And Contracts	W.F.	1-15-69
APPROVED Oct. 1 1969	W.F.	10-1-69
Engineer of Design		

Redrawn 8-27-68

TYPES SM-6.06, SM-6.12, SB-6.12 & SB-9.12

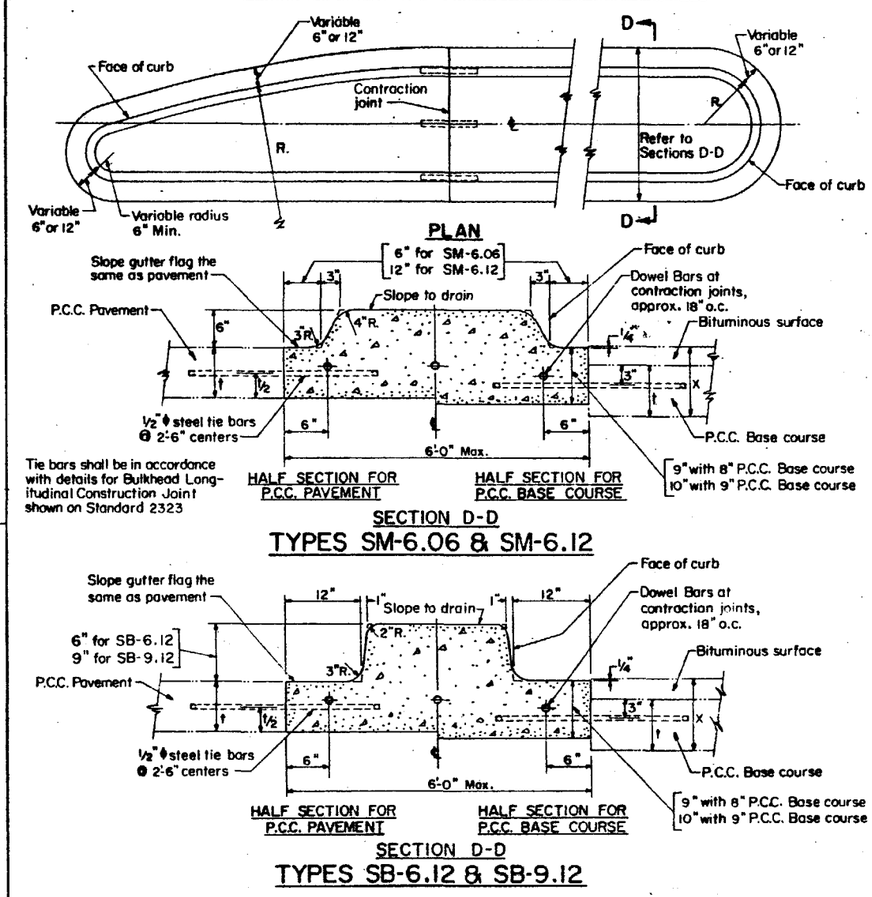

GENERAL NOTES

Dimension "t" is equal to the adjacent pavement edge thickness or base course edge thickness.

Dimension "X" is equal to the adjacent base course edge thickness plus the bituminous surface edge thickness.

Contraction joints of a type similar to that used in the adjacent pavement shall be installed in the concrete median in prolongation with the joints in the pavement. The details of the transverse joints in the concrete median shall be approved by the Engineer. If contraction joints are not provided in the pavement, contraction joints will not be required in the concrete median. The cost of contraction joints including furnishing and placing dowel bars shall be included in the unit price bid per square foot for the particular type of Concrete Median specified.

The cost of furnishing and placing pavement fabric in the median Type C-4 shall be included in the unit price bid per square foot for CONCRETE MEDIAN, TYPE C-4.

The Type P median 4 inch concrete surface shall be constructed in accordance with the applicable provisions of Section 624 of the Standard Specifications. This work shall be measured in place, and the area computed in square feet; payment will be made at the contract unit price per square foot for CONCRETE MEDIAN SURFACE 4 INCHES which price shall include the cost of furnishing and placing the expansion joints and sand fill.

The curb and gutter adjacent to the Type P median shall be constructed and paid for in accordance with Section 616 of the Standard Specifications which price shall include the cost of providing the solid concrete corners as shown.

The earth work shall be considered as being incidental to Earth Excavation.

Plan views of medians shown are typical. Median layout and radii shall be as shown on the plans.

STANDARD 2122-4

(Full Size)

W.F.

STANDARD DESIGN

CONCRETE CURB AND COMBINATION CONCRETE CURB AND GUTTER

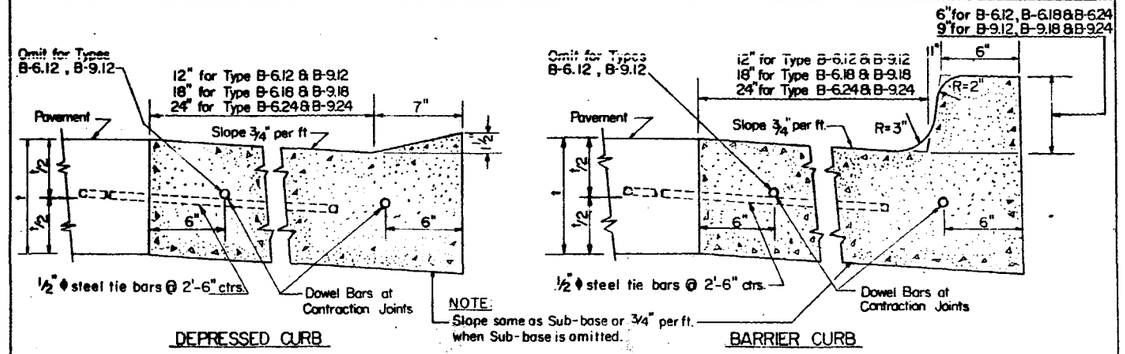

COMBINATION CONCRETE CURB AND GUTTER TYPES B-6.12, B-6.18, B-6.24, B-9.12, B-9.18, AND B-9.24

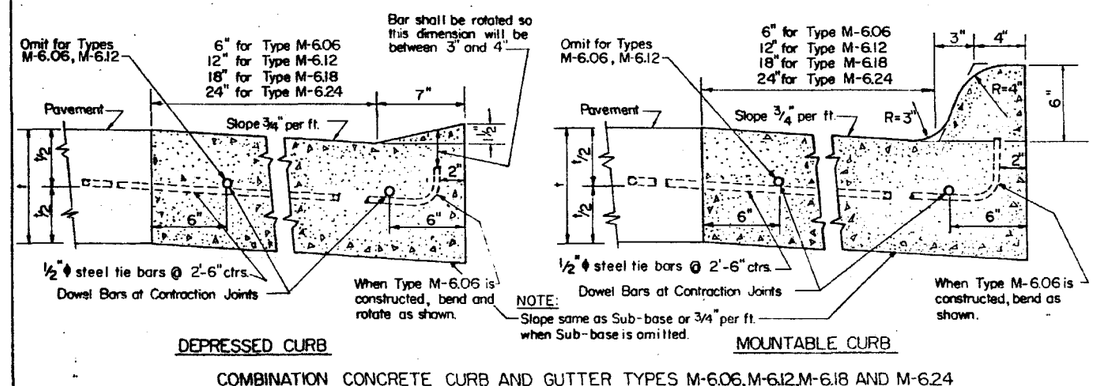

COMBINATION CONCRETE CURB AND GUTTER TYPES M-6.06, M-6.12, M-6.18 AND M-6.24

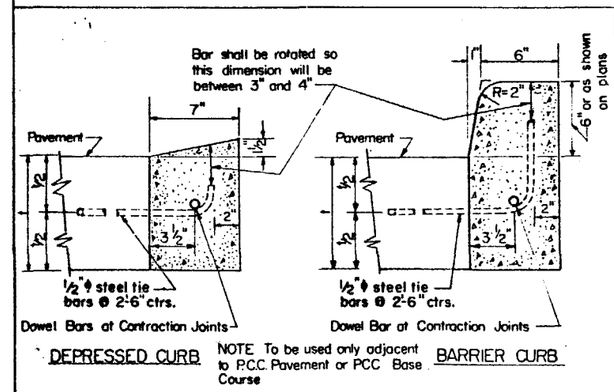

CONCRETE CURB TYPE B

TYPICAL SECTION SHOWING CONSTRUCTION OF COMBINATION CONCRETE CURB AND GUTTER ADJACENT TO P.C. CONCRETE BASE COURSE AND BITUMINOUS SURFACING

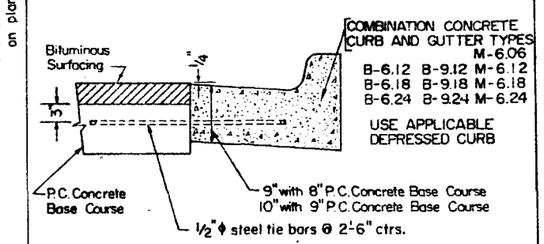

NOTE
When tie bars are placed in existing base, the cost of furnishing, drilling, setting tie bars, mortaring, etc. shall be included in the unit price bid per lineal foot for the type of Combination Concrete Curb and Gutter constructed.

Tie bars shall be in accordance with details for Bulkhead Longitudinal Construction Joint shown on Standard 2323

GENERAL NOTES

"t" = Thickness of pavement

DEPRESSED CURBS — The top of curbs shall be depressed where the curb and gutter is constructed across alleys and for private drives or where directed by the Engineer.

CONTRACTION JOINTS — Contraction Joints of a type similar to that used in the adjacent pavement shall be installed in the Curb or Curb and Gutter in prolongation with the joints in the pavement. The details of the transverse joints shall be approved by the Engineer. If contraction joints are not provided in the pavement, contraction joints will not be required in the Curb or Curb and Gutter. The cost of contraction joints including dowel bars and the cost of furnishing and installing tie bars shall be included in the unit price bid per lineal foot for CONCRETE CURB or for the particular type of COMBINATION CONCRETE CURB AND GUTTER.

Where Curb and Gutter are not adjacent to P.C. Concrete Pavement or P.C. Concrete Base Course, tie bars, contraction joints and dowel bars shall be omitted.

STATE OF ILLINOIS
DEPARTMENT OF PUBLIC WORKS & BUILDINGS
DIVISION OF HIGHWAYS

PASSED Oct. 15, 1969
R. V. Van Ausdall
Engineer of Road Plans and Contracts

APPROVED Oct. 15, 1969
M. E. Barnes
Engineer of Design

ISSUED 11-27-61	
REVISIONS	
W.F.	8-1-68
G.R.	10-1-68
W.F.	10-15-69

STANDARD 2130-3

(Half Size) WMS

STANDARD DESIGN
CHAIN LINK FENCE

NOTE- For 4-foot fence, the horizontal braces and truss rods adjacent to terminal posts and gate posts shall be omitted. *Omit post top on the 3½" x 3½" roll formed terminal and gate posts.*

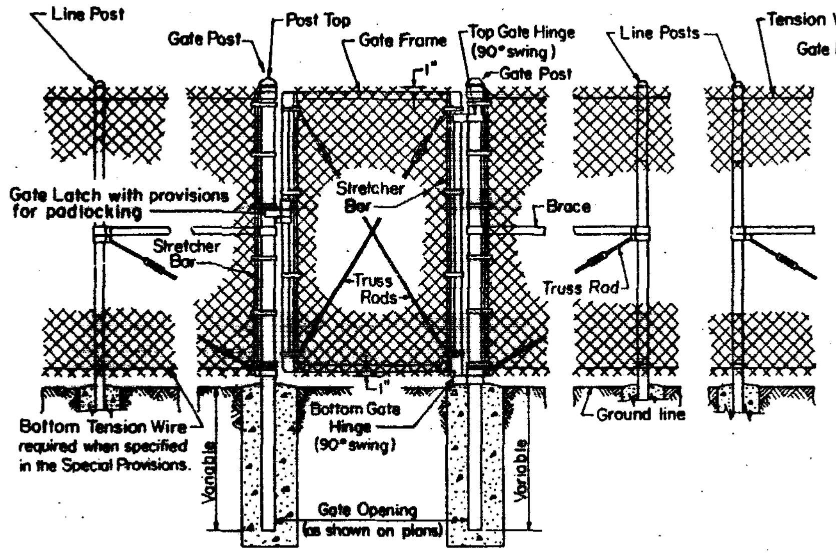

PEDESTRIAN GATE ARRANGEMENT

Gate Keepers shall be provided to hold gates in open position and they shall be located and installed as directed by the Engineer.

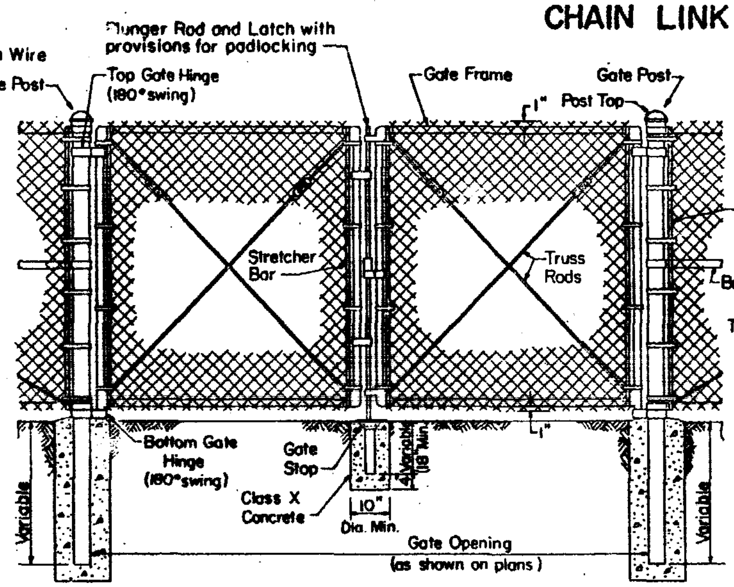

VEHICLE GATE ARRANGEMENT

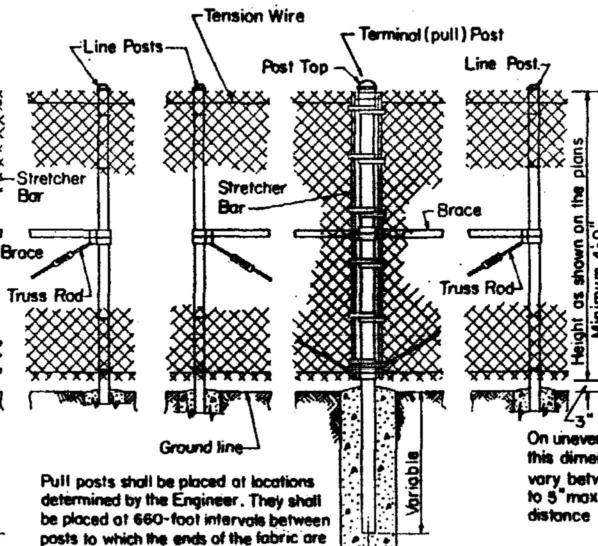

Pull posts shall be placed at locations determined by the Engineer. They shall be placed at 660-foot intervals between posts to which the ends of the fabric are clamped or midway between such posts when the distance is less than 1320' and greater than 660'.

PULL POST ARRANGEMENT

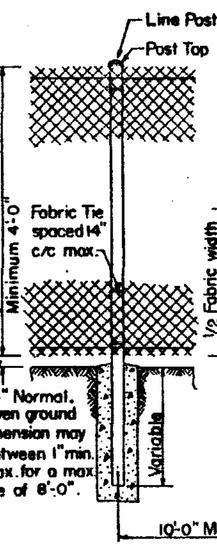

3" Normal. On uneven ground this dimension may vary between 1" min. to 5" max. for a max. distance of 8'-0".

LINE POST ARRANGEMENT

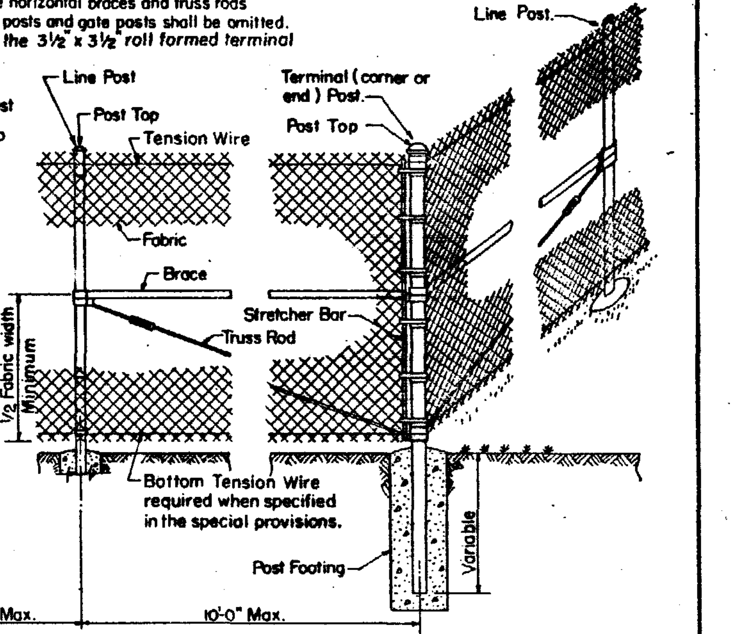

CORNER OR END POST ARRANGEMENT

GENERAL NOTES

LINE POSTS— The line posts shall be either galvanized steel pipe or galvanized structural shapes of sizes and weights specified in Table I.

TERMINAL POSTS (End, Corner, or Pull) — The terminal posts shall be either 2⅜" O.D. galvanized steel pipe weighing 3.65# per lineal foot or 2½" square galvanized hollow structural tubing weighing 4.32# per lineal foot or 3½" x 3½" galvanized roll formed section as detailed. The tubing shall be galvanized inside and outside in accordance with the requirements stipulated for structural shapes.

GATE POSTS— The gate posts shall be either 3½" x 3½" galvanized roll formed section as detailed or the galvanized steel pipe or galvanized square hollow structural tubing of sizes and weights specified in Table II. The tubing shall be galvanized inside and outside in accordance with the requirements stipulated for structural shapes.

HORIZONTAL BRACES— The horizontal braces shall be either 1.66" O.D galvanized steel pipe weighing 2.27# per lineal foot or 1.31" x 1.5" galvanized "H" section structural shape weighing 2.25# per lineal foot or 1⅝" x 1¼" galvanized roll formed section as detailed.

TENSION WIRE — The tension wire shall be stretched tight with galvanized turnbuckles spaced at intervals of not more than 1,000 feet.

GATE FRAME—The gate frames shall be 1.66" O.D. galvanized steel pipe weighing 2.27# per lineal foot.

STRETCHER BARS— The stretcher bars shall be galvanized flat steel bar not less than ¼" x ¾" and the stretcher bar bands shall be galvanized flat steel bar not less than ⅛" x 1" with a ⅜" ϕ galvanized carriage bolt.

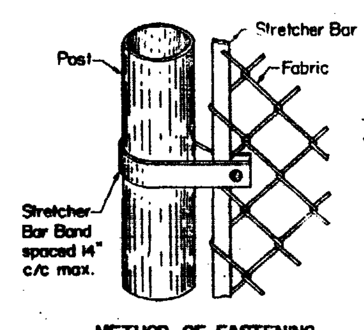

METHOD OF FASTENING STRETCHER BAR TO POST

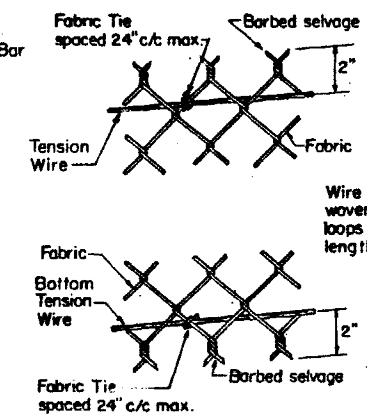

METHOD OF TIEING FABRIC TO TENSION WIRES

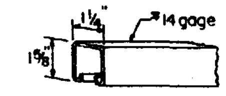

ROLL FORMED SECTION OF BRACE
SEE NOTE #1

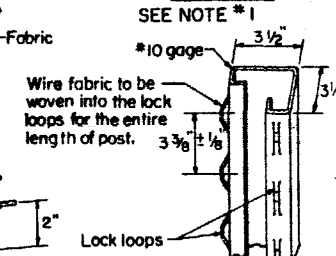

ROLL FORMED SECTION OF TERMINAL & GATE POST
SEE NOTE #1

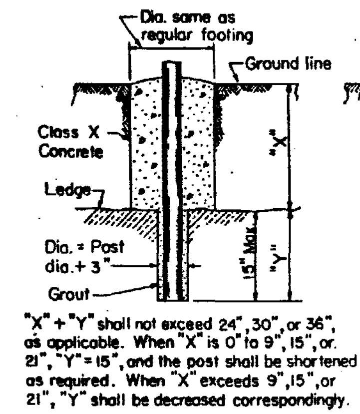

"X" + "Y" shall not exceed 24", 30", or 36", as applicable. When "X" is 0" to 9", 15", or 21", "Y" = 15", and the post shall be shortened as required. When "X" exceeds 9", 15", or 21", "Y" shall be decreased correspondingly.

FOOTING FOR POST WHEN ROCK LEDGE IS ENCOUNTERED

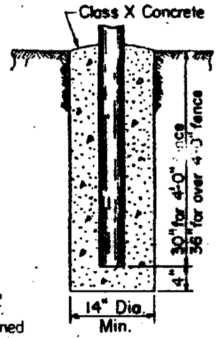

FOOTING FOR GATE & TERMINAL POST

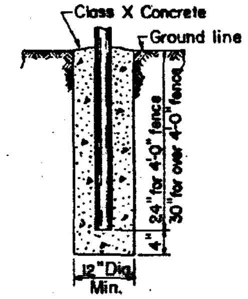

FOOTING FOR LINE POST

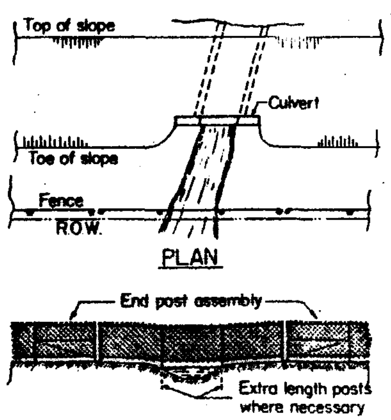

ELEVATION

FENCE INSTALLATION OVER STREAMS

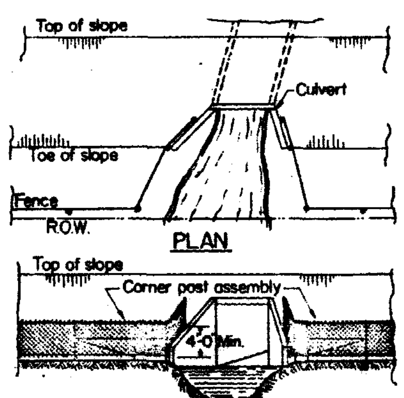

ELEVATION

FENCE INSTALLATION TO HEADWALLS

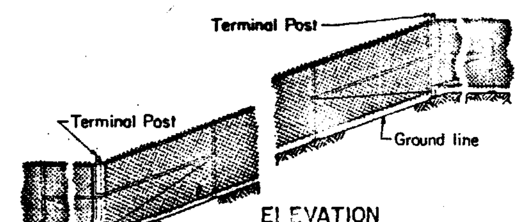

ELEVATION

FENCE INSTALLATION ON SLOPES

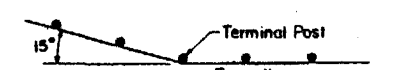

Where fence line has a change in direction of 15 degrees or more, a terminal post shall be placed as shown above.

Where angle is less than 15 degrees and existing conditions require terminal post, they shall be placed as directed by the Engineer.

* The 3½" x 3½" Roll formed section as detailed may be used as gate posts for single gate up to 6 foot and double gate up to 12 foot.

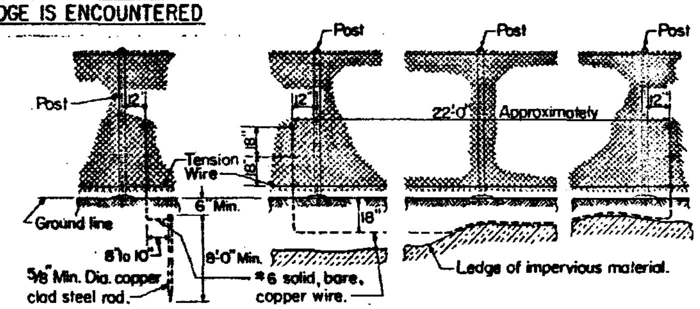

STANDARD GROUND

COUNTERPOISE GROUND (ALTERNATE)

PROTECTIVE ELECTRICAL GROUNDS

NOTE-

Continuous fence shall be grounded at intervals not exceeding 500 feet in urban areas and 1000 feet in rural areas. Except there shall be a ground not exceeding 100 feet from a gate in each section of the fence adjacent to a gate.

Fence under a power line shall be grounded by three grounds, one directly under the crossing and one on each side, 25 to 50 feet away. A single ground shall be located directly under each telephone wire or cable crossing.

The counterpoise ground shall be used only where it is impossible to drive a ground rod because of an impervious earth structure.

The ground wire shall be connected to the fabric and the ground rod by a mechanical clamp of cast bronze body and bronze or stainless steel bolts and washers. When a tension wire is required, the bottom connection of the ground wire shall be made to the tension wire.

NOTE #1

The roll formed sections shall be fabricated from material having a tensile strength of 45,000 to 53,000 p.s.i. and a yield strength of 30,000 to 38,000 p.s.i.

The roll formed sections shall be galvanized in accordance with the requirements stipulated for structural shapes.

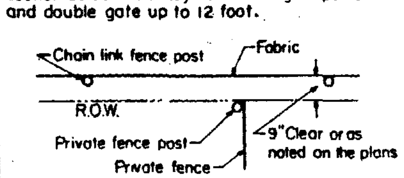

PRIVATE FENCE TERMINAL

TABLE I

Line Posts — Sizes & Weights	
Section	Lbs./Lin. Ft.
Pipe 1.90" O.D.	2.72
"H" (1.875" x 1.625")	2.72
"U"	2.72
"I"	2.30

TABLE II

Gate Posts — Sizes & Weights *					
Gate Opening *		Pipe		Sq. Tubing	
Single	Double	Size	Lbs./Lin.Ft.	Size	Lbs./Lin.Ft.
Up to 4 Ft.	Up to 8 Ft.	2.375" O.D.	3.65	2½"	4.32
Over 4 Ft. to 8 Ft.	Over 8 Ft. to 16 Ft.	2.875" O.D.	5.79	3"	5.78
Over 8 Ft. to 12 Ft.	Over 16 Ft. to 24 Ft.	3½" O.D.	7.58	3"	8.80

STATE OF ILLINOIS DEPARTMENT OF PUBLIC WORKS & BUILDINGS DIVISION OF HIGHWAYS	ISSUED 11-27-61	
	REVISIONS	
PASSED Aug. 5 1970	W.H.F.	4-1-64
[signature] Engineer of Road Plans And Contracts	G.R.	8-1-68
	W.F.	12-1-69
APPROVED Aug. 5, 1970	W.F.	2-10-70
[signature] Engineer of Design	W.F.	8-5-70

STANDARD 2168-5
(Full Size)

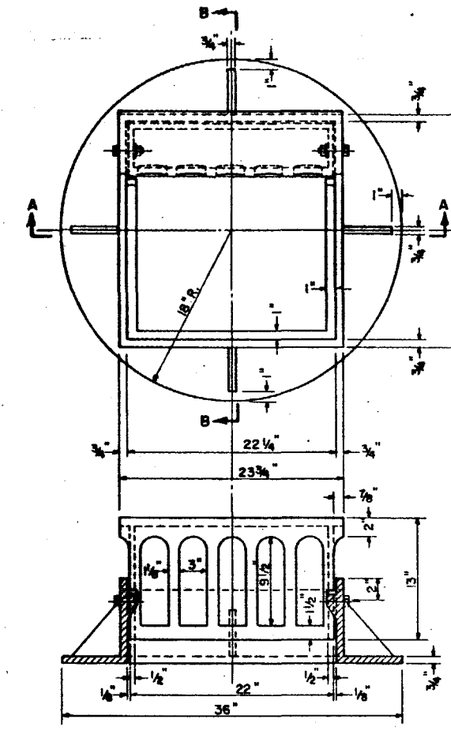

SECTION A-A

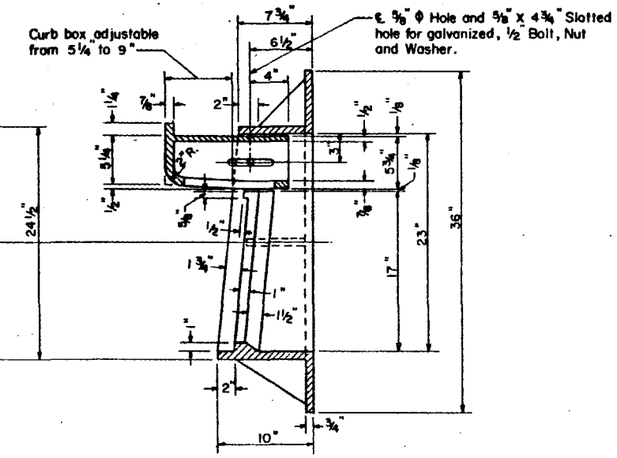

SECTION B-B

CAST IRON FRAME

WT. 374 Lbs.

The use of either a cast iron grate or a steel grate with the cast iron frame shall be the option of the Contractor.

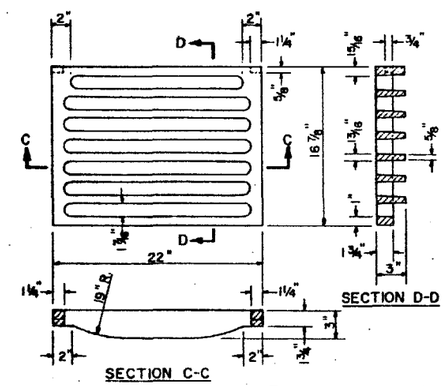

SECTION C-C

CAST IRON GRATE

WT. 101 Lbs.

The cast iron grate may be made of either Gray Iron conforming to the Standard Specifications or Ductile Iron conforming to the Specifications for Ductile Iron Casting, A.S.T.M. Designation: A536, Grade 65-45-12.

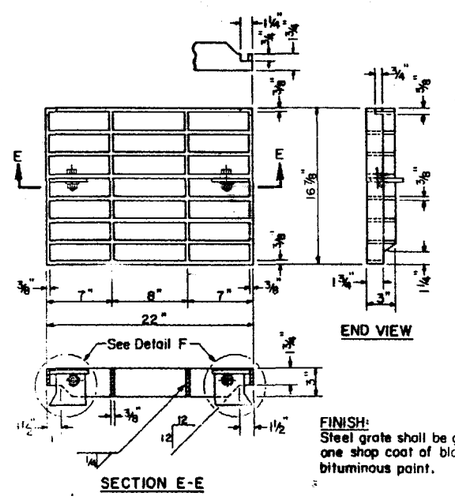

END VIEW

SECTION E-E

FINISH:
Steel grate shall be given one shop coat of black bituminous paint.

STEEL GRATE

WT. 67 Lbs.

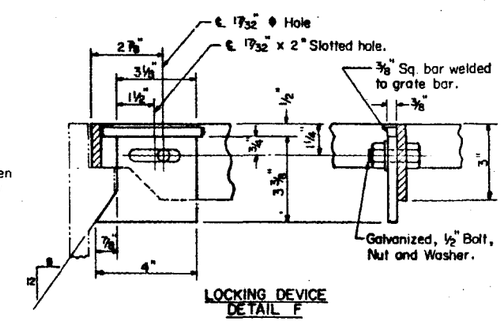

LOCKING DEVICE
DETAIL F

NOTE:
The material for steel grate shall conform to the Specifications for Structual Steel, A.S.T.M. Designation: A36.

STATE OF ILLINOIS DEPARTMENT OF PUBLIC WORKS & BUILDINGS DIVISION OF HIGHWAYS	ISSUED 1-4-65	
	REVISIONS	
PASSED March 11 1968	W.F.	9-15-65
Engineer of Road Plans And Contracts	W.F.	3-11-68
APPROVED March 11 1968		
Engineer of Design		

STANDARD 2214-2

(Half Size) W.F.

STANDARD DESIGN
FRAME AND GRATES TYPE II

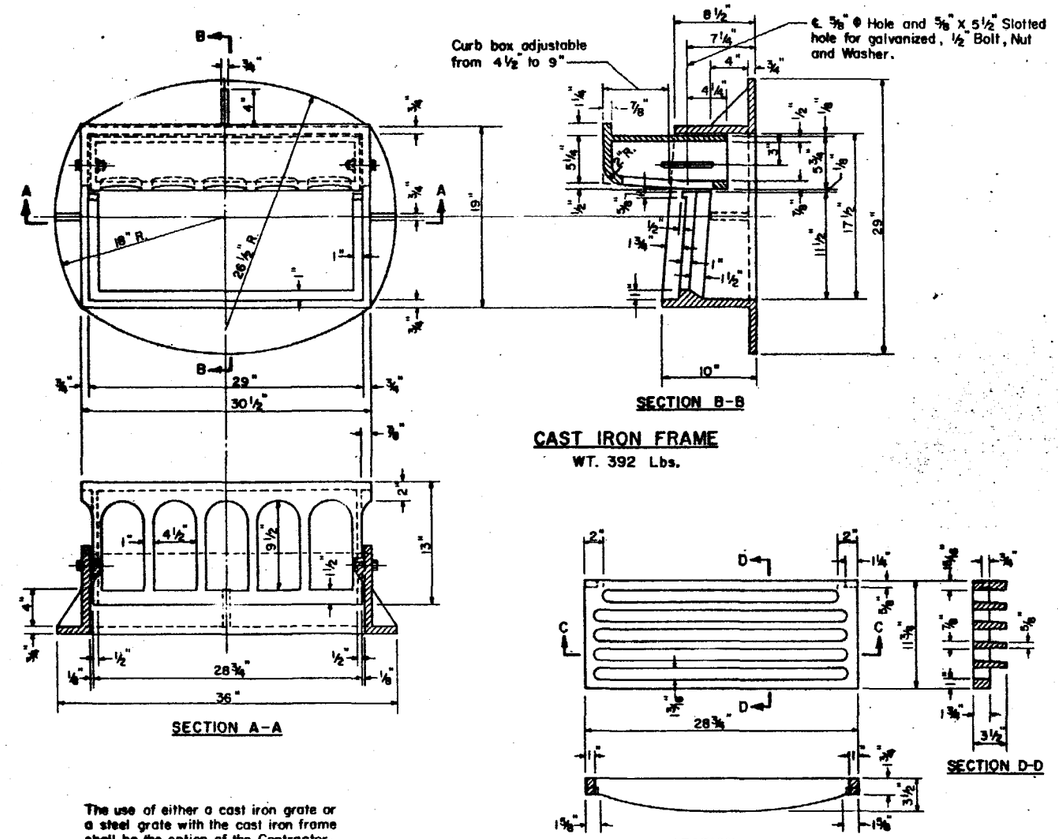

CAST IRON FRAME
WT. 392 Lbs.

CAST IRON GRATE
WT. 108 Lbs.

The use of either a cast iron grate or a steel grate with the cast iron frame shall be the option of the Contractor.

The cast iron grate may be made of either Gray Iron conforming to the Standard Specifications or Ductile Iron conforming to the Specifications for Ductile Iron Casting, A.S.T.M. Designation: A536, Grade 65-45-12.

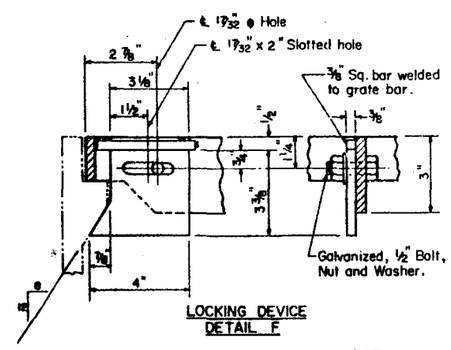

LOCKING DEVICE
DETAIL F

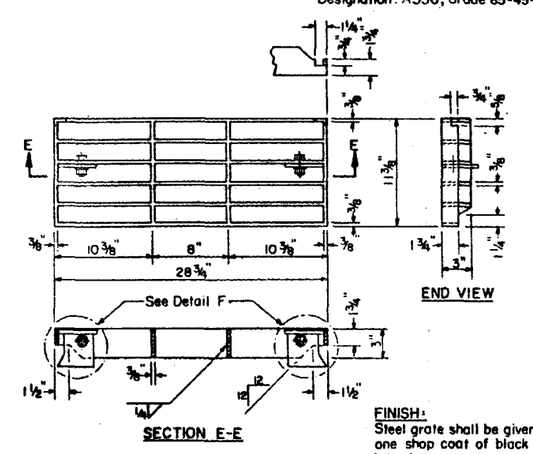

STEEL GRATE
WT. 55 Lbs.

NOTE:
The material for steel grate shall conform to the Specifications for Structural Steel, A.S.T.M. Designation: A36

FINISH:
Steel grate shall be given one shop coat of black bituminous paint.

STATE OF ILLINOIS DEPARTMENT OF PUBLIC WORKS & BUILDINGS DIVISION OF HIGHWAYS	ISSUED 1-4-65	
	REVISIONS	
PASSED March 11 1968	W.F.	9-15-65
Engineer of Road Plans And Contracts	W.F.	3-11-68
APPROVED March 11 1968		
Engineer of Design		

STANDARD 2220-2
(Half Size) W.F.

STANDARD DESIGN
STEEL PLATE BEAM GUARD RAIL

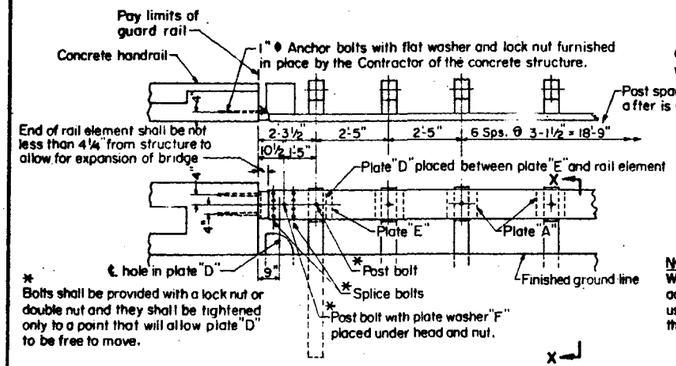

ANCHORING RAIL ELEMENT TO CONCRETE HANDRAIL ON BRIDGE WITH OPEN EXPANSION JOINT

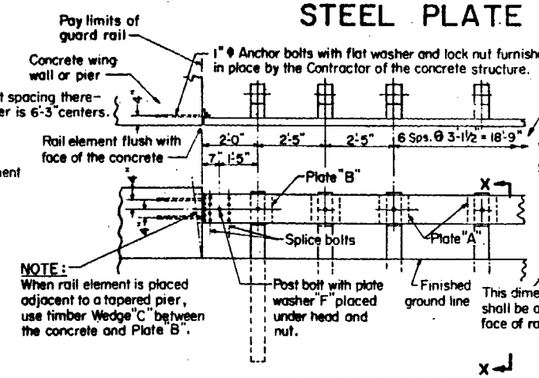

ANCHORING RAIL ELEMENT TO CONCRETE WING WALL AND PIER

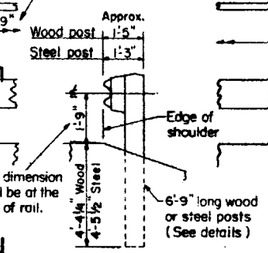

SECTION X-X

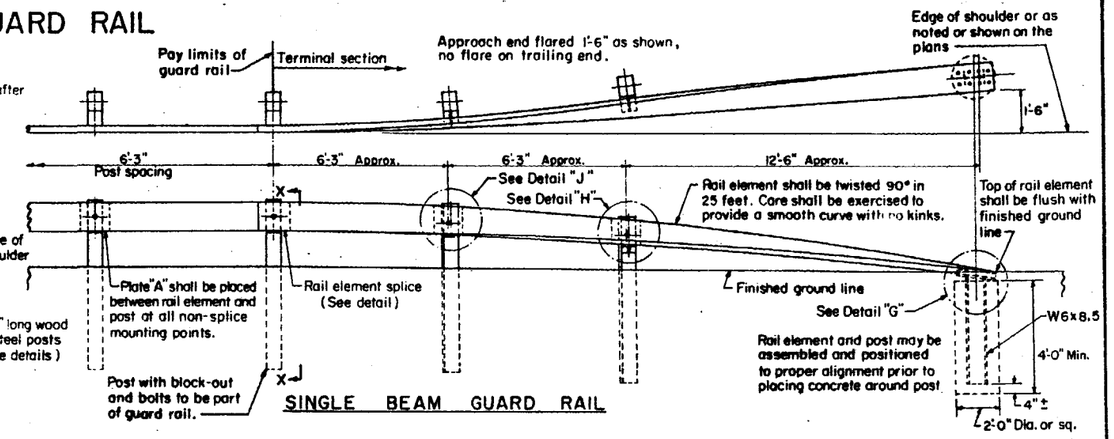

SINGLE BEAM GUARD RAIL

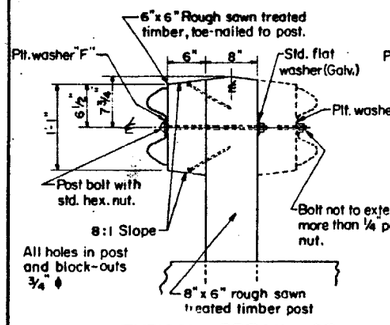

TYPICAL DETAIL OF WOOD POST CONSTRUCTION

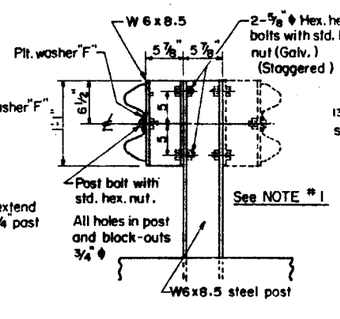

TYPICAL DETAIL OF STEEL POST CONSTRUCTION

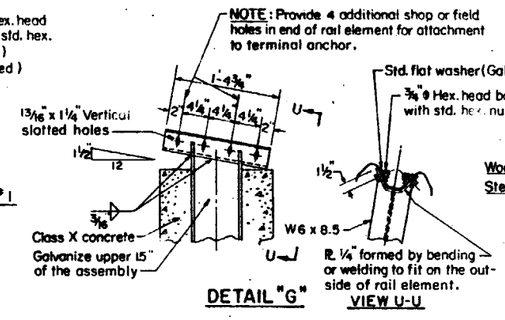

DETAIL "G"

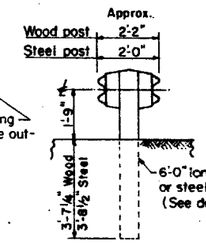

SECTION Y-Y

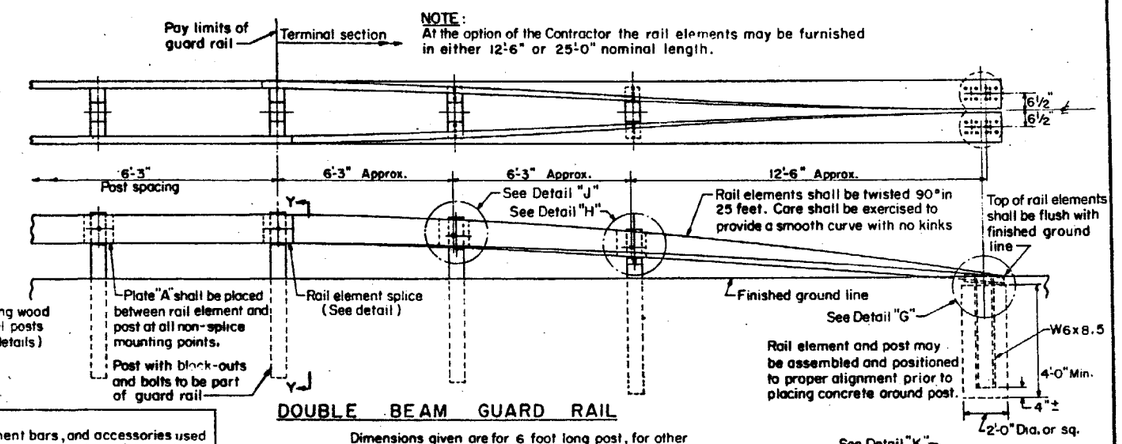

DOUBLE BEAM GUARD RAIL

DETAIL "H"

See NOTE #1

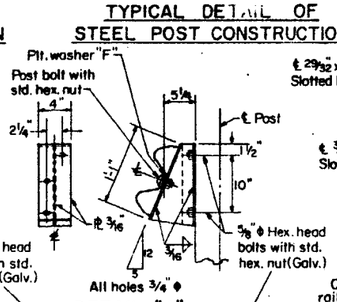

DETAIL "J"

For Double Beam Guard Rail with wood posts, bolts shall be ⅝" ϕ stud bolts with std. hex. nut at each end

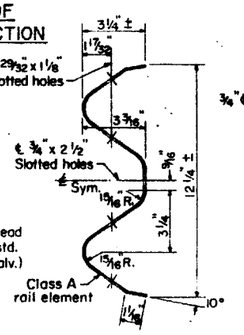

SECTION THROUGH RAIL ELEMENT

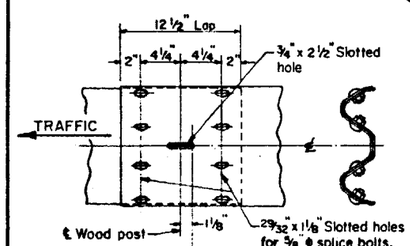

RAIL ELEMENT SPLICE

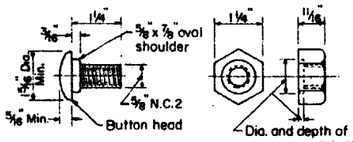

SPLICE BOLT & NUT (Galv.)

POST BOLT IS THE SAME EXCEPT FOR LENGTH AND WITH STANDARD HEX. NUT

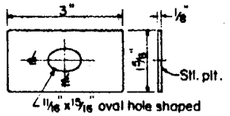

PLATE WASHER "F" (Galv.)

NOTE

Plate washer "F" shall be used at all locations where rail element is bolted to a post.

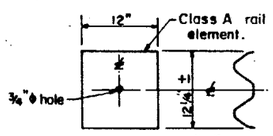

PLATE "A"

NOTE:

All concrete, reinforcement bars, and accessories used in the placing of the guard rail shall be incidental to the contract.

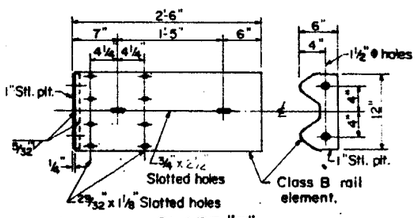

PLATE "B"

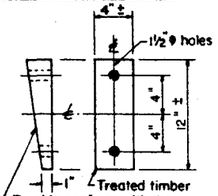

WEDGE "C"

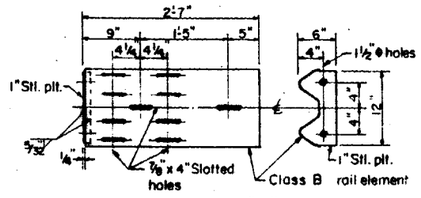

PLATE "D"

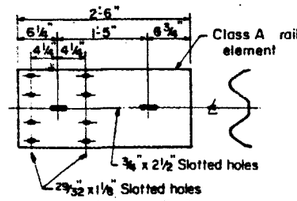

PLATE "E"

NOTE #1

Rail element, steel posts, and all the steel supports, fastenings and accessories shall be galvanized.

Steel brackets Detail "H" and "J", steel block-outs, and steel posts may be provided with additional holes so that these items will not be required to be made right and left handed.

Steel brackets Detail "H" and "J" may be fabricated from W6x8.5 beam in lieu of the 3/16" plate specified, by cutting web of beam as shown dotted and welding together on both sides.

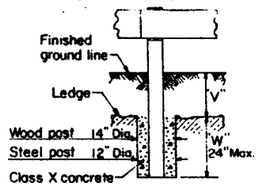

Dimensions given are for 6 foot long post, for other length post change the "V" dimension correspondingly

"V" + "W" shall not exceed 44½". When "V" is 0" to 20½", "W" = 24", and the post shall be shortened as required. When "V" exceeds 20½", "W" shall be decreased correspondingly. When "V" is 6" or less, post hole shall be filled to ground line with concrete.

Ledge line is top of a rock ledge or hard slag fill.

FOOTING FOR POST WHEN IMPERVIOUS MATERIAL IS ENCOUNTERED

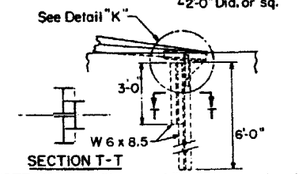

SECTION T-T

NOTE: When conditions prohibit driving, end post shall be constructed as shown above.

ALTERNATE FOR DRIVEN END POST

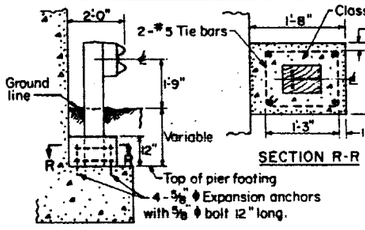

SECTION R-R

POST ANCHOR AT PIERS

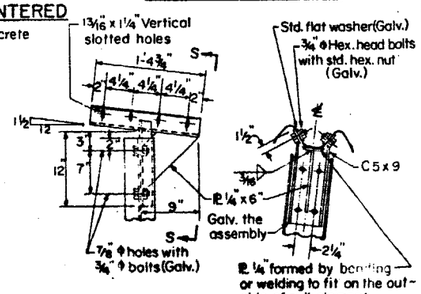

DETAIL "K"

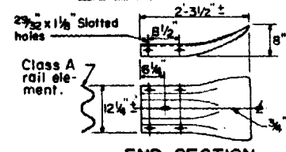

END SECTION

NOTE:

End section shall be used only when specified on the contract plans. Cost incidental to guard rail.

See Standard 2231 for Typical Applications of the Steel Plate Beam Guard Rail

STATE OF ILLINOIS
DEPARTMENT OF PUBLIC WORKS & BUILDINGS
DIVISION OF HIGHWAYS

PASSED Mar. 22, 1971
A V Vondendall
Engineer of Road Plans And Contracts
APPROVED Mar. 22, 1971
H E Bergmann
Engineer of Design

ISSUED 2-11-66		W.F.	10-26-70
REVISIONS		W.F.	3-22-71
W.F.	8-4-67		
W.F.	8-9-67		
W.F.	12-1-69		
W.F.	3-2-70		
WF	7-29-70		

REDRAWN 5-4-67

STANDARD 2230-7

(Full Size) W.F

STANDARD DESIGN

TYPICAL APPLICATIONS OF STEEL PLATE BEAM GUARD RAIL

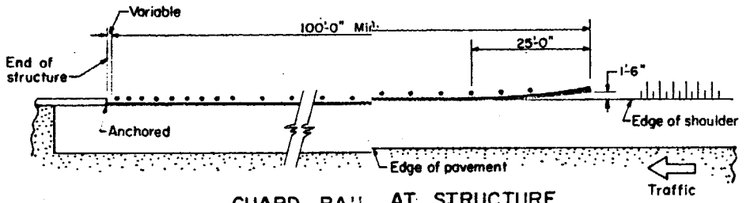

GUARD RAIL AT STRUCTURE
INSIDE FACE OF STRUCTURE IS FULL WIDTH OF SHOULDER

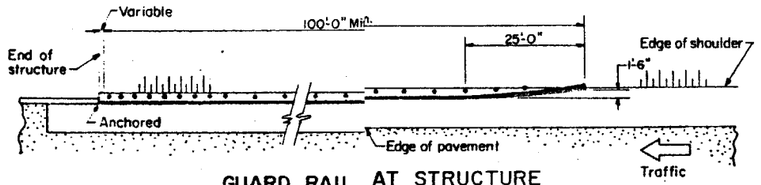

GUARD RAIL AT STRUCTURE
INSIDE FACE OF STRUCTURE IS LESS THAN FULL WIDTH OF SHOULDER

The first 25 feet of Guard Rail that is adjacent to and anchored to a structure or pier shall have the close post spacing as noted and shown on Standard 2230

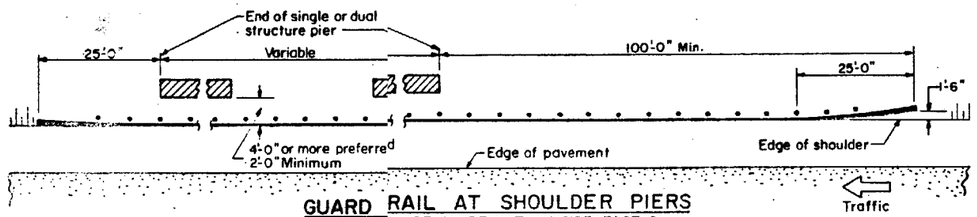

GUARD RAIL AT SHOULDER PIERS
PIER ON SIDE SLOPE WITH INSIDE FACE 2 FEET OR MORE FROM EDGE OF SHOULDER

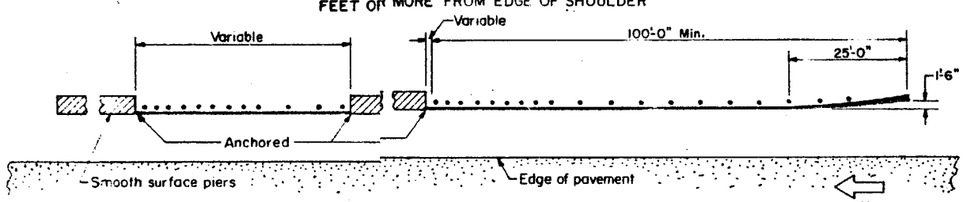

GUARD RAIL AT SHOULDER PIERS
INSIDE FACE OF PIER AT EDGE OF SHOULDER OR LESS THAN FULL WIDTH OF SHOULDER

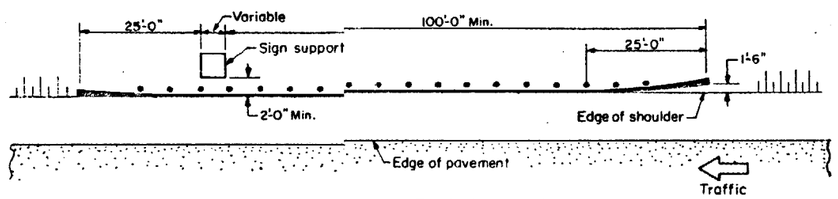

GUARD RAIL AT SIGN SUPPORT

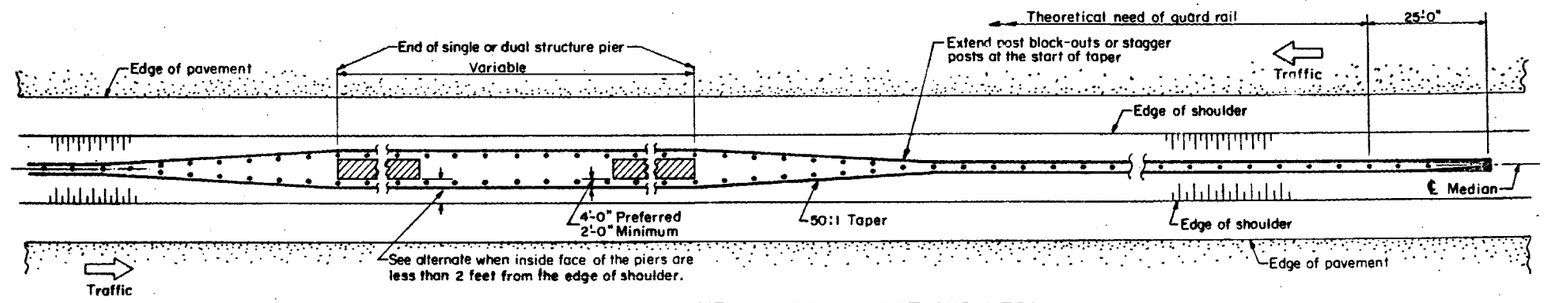

GUARD RAIL IN MEDIAN OF 30 FEET AND LESS

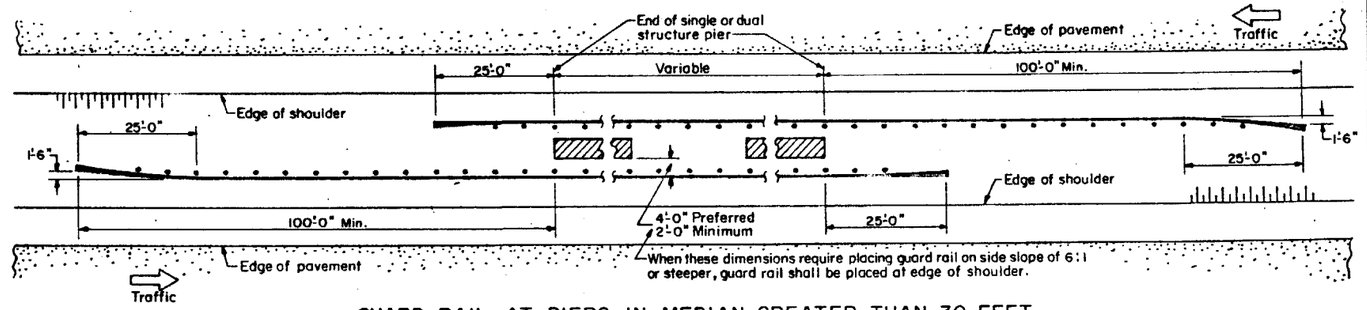

GUARD RAIL AT PIERS IN MEDIAN GREATER THAN 30 FEET

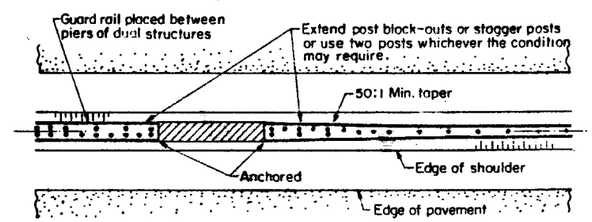

ALTERNATE MEDIAN GUARD RAIL

NOTE: Alternate to be used only when clearance will not permit guard rail on outside of pier.

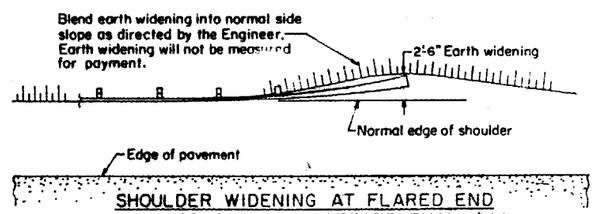

SHOULDER WIDENING AT FLARED END WHEN SIDE SLOPE IS STEEPER THAN 6:1

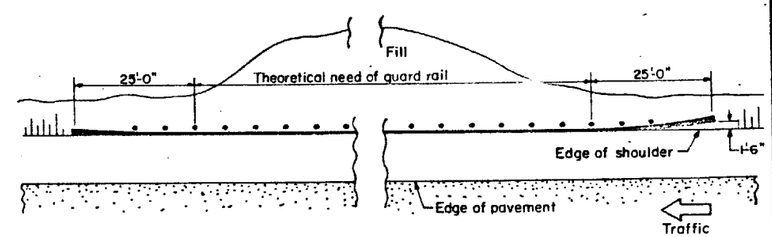

GUARD RAIL AT FILL

GUARD RAIL TREATMENT AT STRUCTURES:

For two-lane, two-way highway a minimum of 100 feet of single beam guard rail shall be placed at both ends of the structure and on both sides of the highway.

For dual highways where roadways have independent alignment place guard rail at approach end of the structure only, in accordance with the requirements for two-lane, two-way highway. Where roadways are separated by a median see Standard 2253 for guard rail placement on left shoulder.

GUARD RAIL TREATMENT AT SHOULDER PIERS:

Single beam guard rail shall be placed as shown at shoulder piers when the face of pier is less than 30 feet from edge of pavement.

GUARD RAIL TREATMENT AT MEDIAN:

Single beam guard rail shall be placed as shown at median piers when the face of pier is less than 30 feet from edge of pavement.

Double beam guard rail shall be placed as shown in medians having a width of 30 feet or less on multi-lane Trunk, Major, Area Service, and Collector class highways.

STATE OF ILLINOIS DEPARTMENT OF PUBLIC WORKS & BUILDINGS DIVISION OF HIGHWAYS	ISSUED 2-11-66	
	REVISIONS	
PASSED Dec. 1 1969	W.F.	12-1-69
Engineer of Road Plans And Contracts		
APPROVED Dec. 1 1969		
Engineer of Design		
	Redrawn	12-1-69

For details of the Steel Plate Beam Guard Rail see Standard 2230

STANDARD 2231-3

(Full Size) W.F.

STANDARD DESIGN

TYPICAL APPLICATION OF TRAFFIC CONTROL DEVICES FOR HIGHWAY CONSTRUCTION AND MAINTENANCE

TYPICAL APPLICATIONS OF CLASS I BARRICADES CLOSING A ROAD

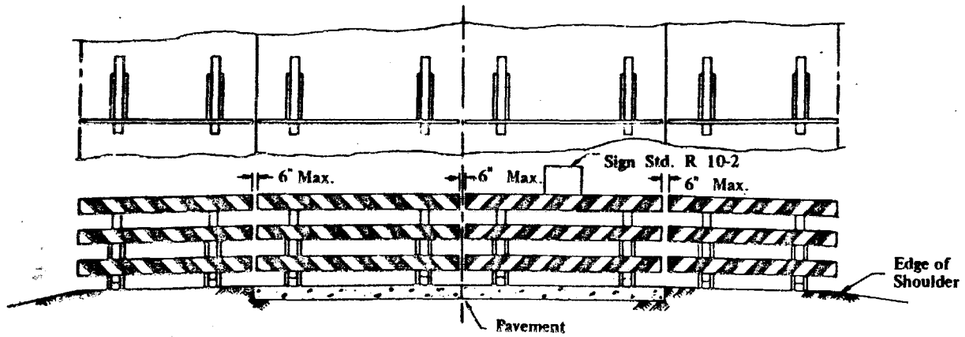

ROAD CLOSED FOR LOCAL TRAFFIC

The barricades shall be to the edge of the shoulders except when otherwise directed by the Engineer or shown on the detailed construction plans.

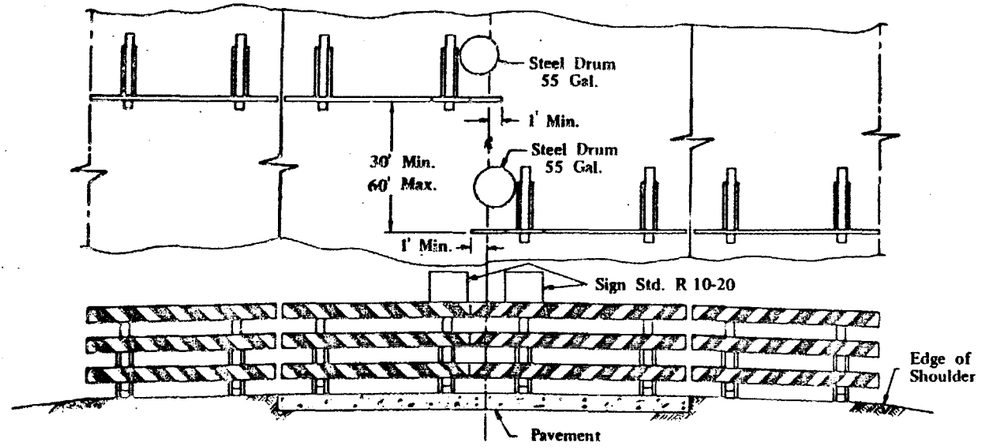

ROAD OPEN FOR LOCAL TRAFFIC

Striping shall appear on both sides of barricades. The barricades shall be to the edge of the shoulders except when otherwise directed by the Engineer or shown on the detailed construction plans.

TYPICAL SIGN INSTALLATIONS

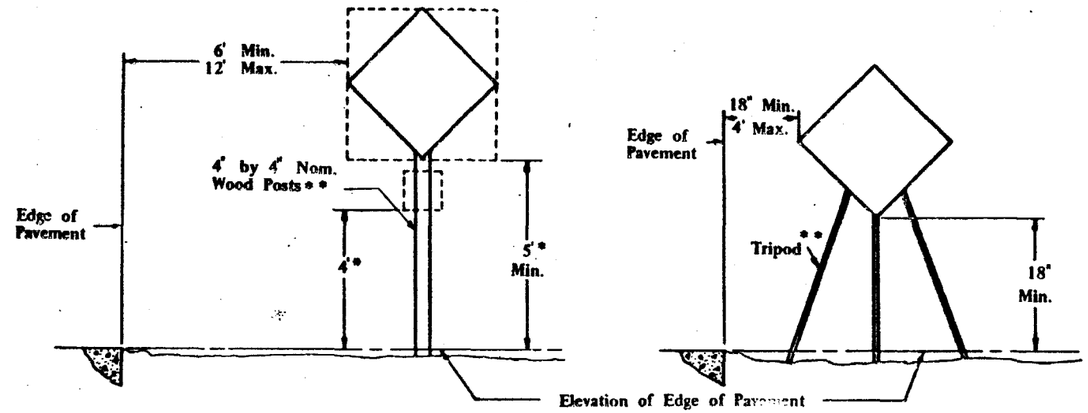

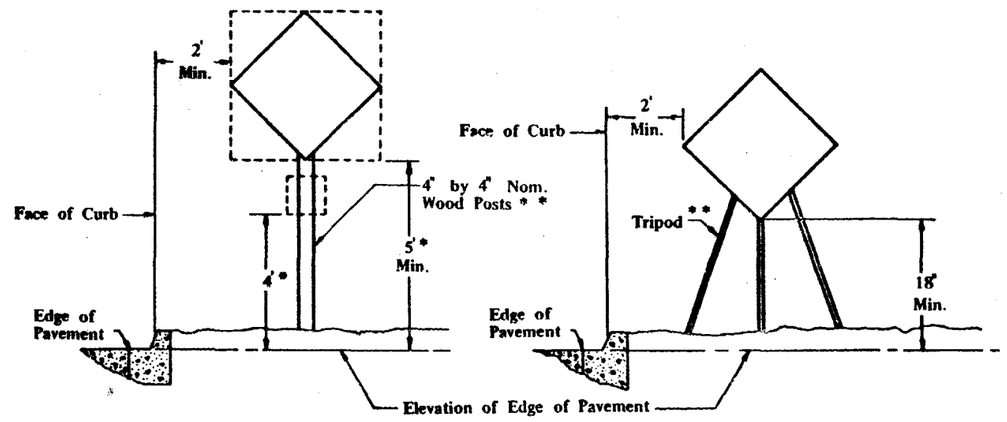

*Add 2 ft. if parking exists within 200 ft. in advance of the sign location at any time during the project.

**Alternate designs and/or materials may be permitted when authorized by the District Engineer. All materials shall be substantial and durable.

Signs on temporary supports shall be within 20° of a vertical position.

STATE OF ILLINOIS DEPARTMENT OF PUBLIC WORKS & BUILDINGS DIVISION OF HIGHWAYS	REVISED BY	DATE
APPROVED April 3, 1969	D.A.B.	12-8-69
W. A. Frick Engineer of Traffic	D.A.B.	6-19-70

STANDARD 2298-2

STANDARD DESIGN

DESIGN OF TRAFFIC CONTROL DEVICES FOR HIGHWAY CONSTRUCTION AND MAINTENANCE

CLASS I BARRICADES

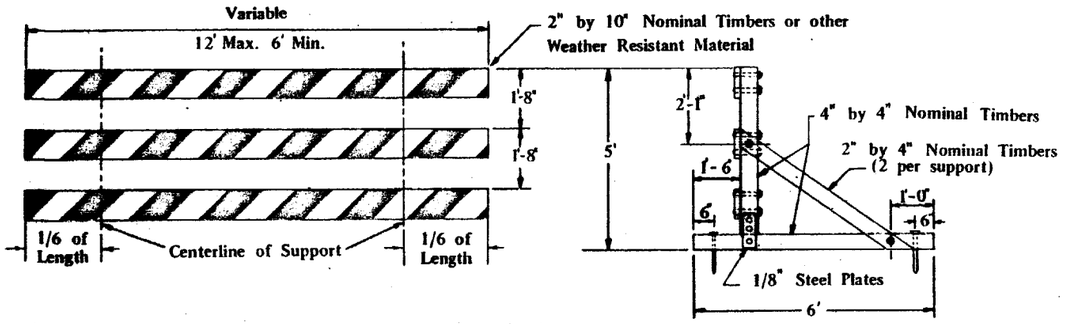

Wood Supports

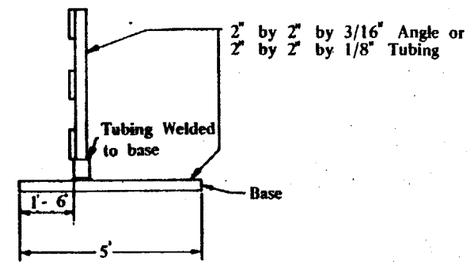

Steel Supports

CONES

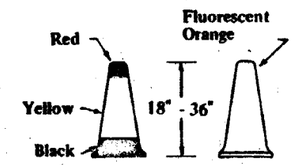

CLASS II BARRICADE

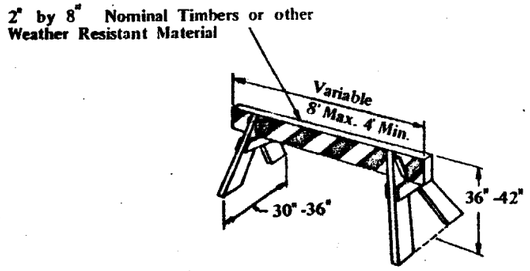

CLASS III BARRICADES

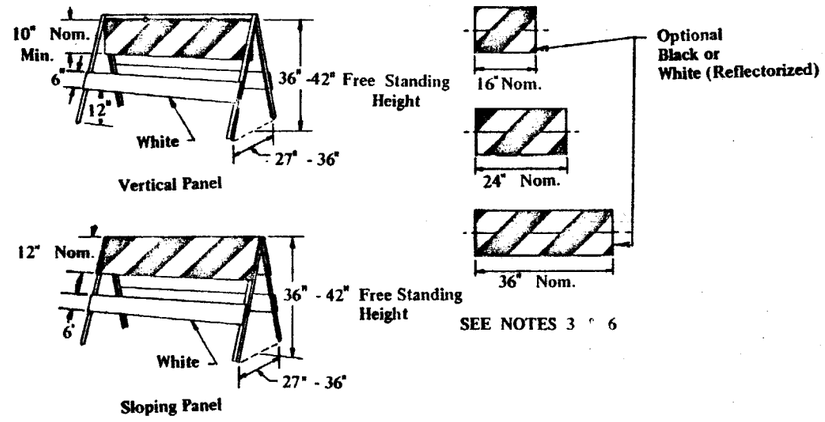

STEEL DRUMS

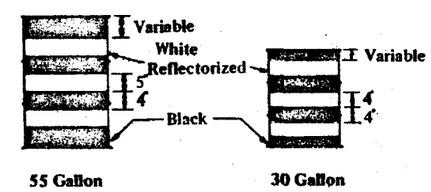

GENERAL NOTES

1. Barricade legs or supports shall be constructed of either timber or steel and shall be galvanized or painted white or black.
2. All reflectorized material shall have a smooth sealed surface covering the reflective elements.
3. The 36 inch wide panel is considered standard and will be used at all locations unless otherwise specified on the plans or directed by the District Engineer.
4. Swinging panels may be divided in two pieces either horizontally or vertically but the combined surface area must be not less than 10 times the required width.
5. **All barricades shall have alternating white reflectorized and black stripes at 45° from the vertical. All stripes shall be 6 in. in width.**
6. Stripe placement is shown for 12 inch panels. If a vertical panel of less than 12 inches is used the stripe placement along the horizontal center line of the panel shall be the same as shown for 12 inch panels.
7. Class II and Class III Barricades shall be striped on both sides.
8. Diagonal stripes on the Class II and Class III Barricades shall slope downward toward the side of the Barricade on which traffic will pass.
9. Barricades may be identified with a legend that does not exceed one inch in height at a location not visible to traffic.
10. Alternate designs and or materials may be permitted when authorized in writing by the District Engineer. All materials shall be substantial and durable.

STATE OF ILLINOIS DEPARTMENT OF PUBLIC WORKS & BUILDINGS DIVISION OF HIGHWAYS	REVISED BY	DATE
APPROVED April 3, 1969 W. A. Frick Engineer of Traffic	D.A.B.	12-8-69

STANDARD 2299-1

STANDARD DESIGN FOR FLAGMAN TRAFFIC CONTROL SIGN

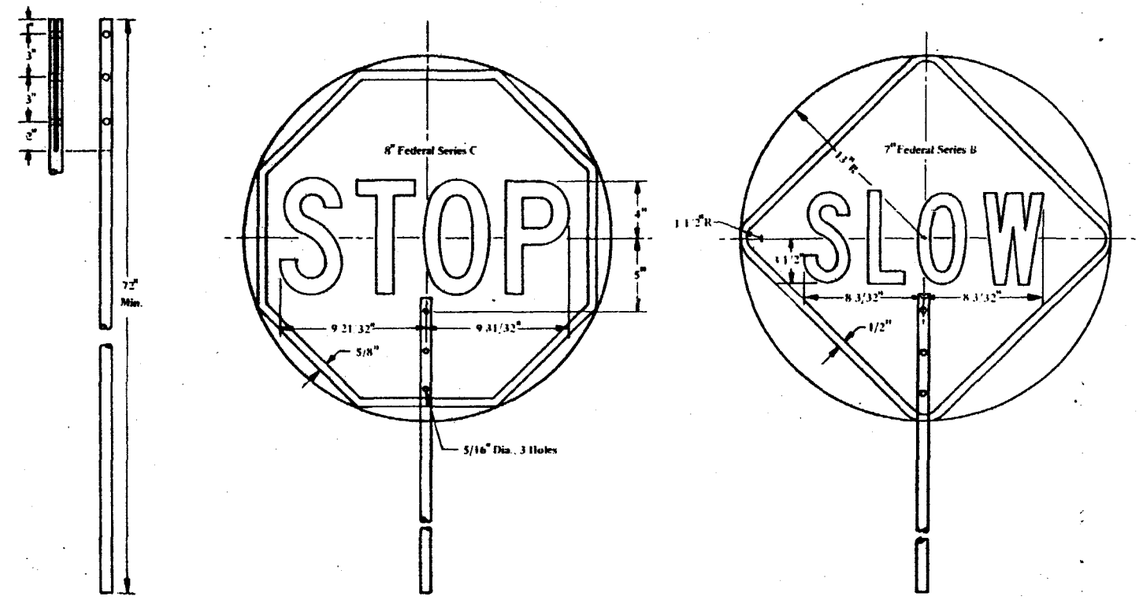

STAFF FRONT SIDE REVERSE SIDE

GENERAL NOTES

1. The "STOP" face shall consist of white letters and border on a red reflectorized background.
2. The "SLOW" face shall consist of black letters and border on a orange reflectorized background.
3. Areas outside sign borders shall be light blue.
4. The portion of the staff within the sign face shall match the sign colors.
5. All colors and letters shall meet applicable federal standards.
6. The sign shall be attached to the staff with rust resistant 1/4 in. hardware.
7. The sign base material shall be 0.08 aluminum. The staff shall consist of two sections of 3/4 in. galvanized steel conduit joined by a coupling located 60 in. from the bottom of the staff. Alternate designs and/or materials may be used when approved by the District Engineer. All materials shall be substantial and durable.
8. This sign shall be furnished by the contractor and shall be used by the flagman in lieu of flags or other signaling devices. The cost of furnishing and maintaining the sign shall be considered incidental to the contract and no additional compensation will be allowed.

STATE OF ILLINOIS DEPARTMENT OF PUBLIC WORKS & BUILDINGS DIVISION OF HIGHWAYS	REVISED	
APPROVED April 8, 1969	BY	DATE
K. A. Frick Engineer of Traffic		

STANDARD 2300

STANDARD DESIGN

TYPICAL APPLICATION OF TRAFFIC CONTROL DEVICES FOR HIGHWAY CONSTRUCTION AND CONTRACT MAINTENANCE

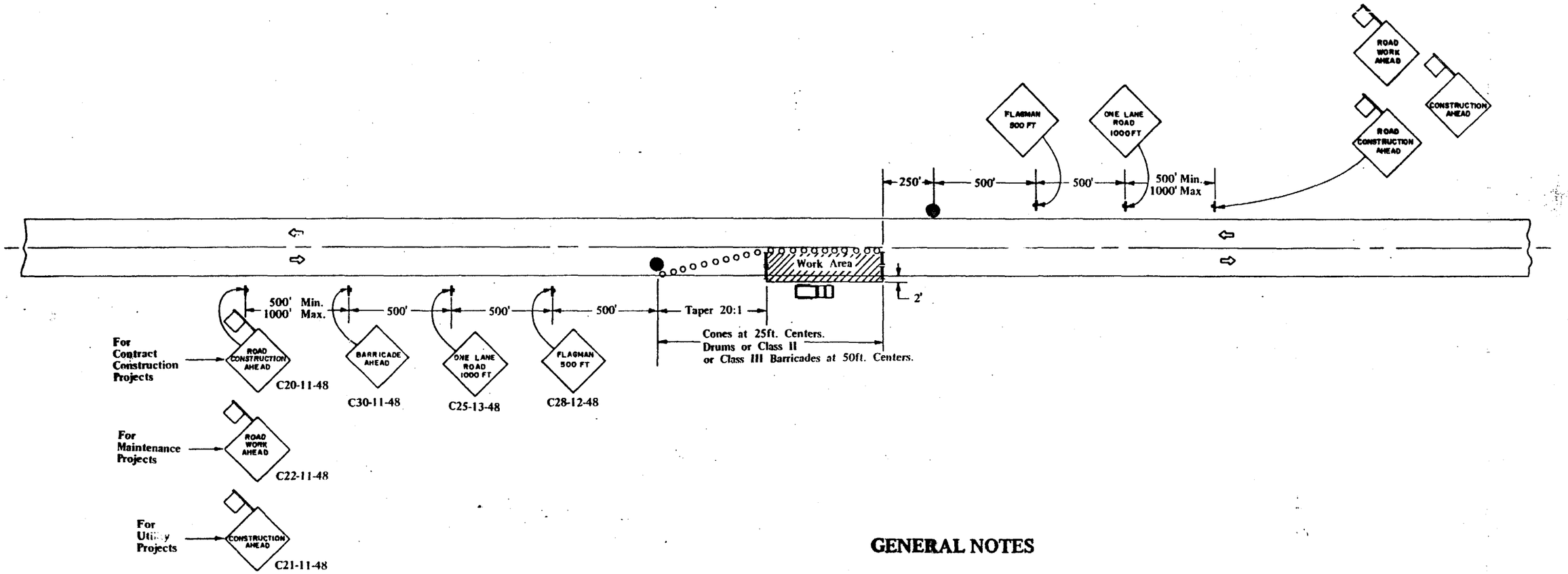

GENERAL NOTES

1. Construction operations shall be confined to one traffic lane, leaving the opposite lane open to traffic. At least 500 ft. of both traffic lanes shall be available for traffic movement at intervals not greater than 1,000 ft. A complete traffic control plan must be approved for any project expected to exceed 1,000 ft. in length including both taper and work areas.
2. If the work operation does not exceed 60 minutes, traffic control will be in conformance with Case VII.
3. The flagmen shall be in sight of each other or in direct communication at all times.
4. When there is no work being performed, FLAGMAN 500 FT sign(s) and the flagmen will not be required. ONE LANE ROAD 500 FT sign(s) shall be installed in place of the FLAGMAN 500 FT sign(s).
5. All signs are to be removed at completion of the day's operations.
6. When a side road intersects the highway on which work is being performed additional traffic control devices shall be erected as directed by the District Engineer.
7. Longitudinal dimensions may be adjusted slightly to fit field conditions.
8. All warning signs shall have minimum dimensions of 48 in. by 48 in. and have black legend and border on an orange reflectorized background.
9. All vehicles, equipment, men (except flagmen) and their activities are restricted at all times to one side of the pavement unless otherwise authorized by the District Engineer.
10. Forms BT 725 & BT 726 are not required.

SYMBOLS

- Work Area.
- Sign with 18 in. by 18 in. (minimum) red flag attached.
- Cone, Steel Drum (55 or 30 gallon), Class II or Class III Barricade.
- Sign on portable or permanent support.
- Flagman with Traffic Control sign.
- Class II or Class III Barricade.

TYPICAL APPLICATIONS

Pavement Patch
Utility Operations

CASE III

TWO-LANE, TWO WAY TRAFFIC, RURAL DAY OPERATIONS ONLY

Where, at any time, any vehicle, equipment, men or their activities will encroach in the area between the center line and a line [illegible] ft. outside the edge of pavement.

STATE OF ILLINOIS DEPARTMENT OF PUBLIC WORKS & BUILDINGS DIVISION OF HIGHWAYS	REVISED BY	DATE
APPROVED April 3, 1969 W. A. Finch Engineer of Traffic	D.A.B.	12-8-69
	D.A.B.	4-22-70

STANDARD 2303-2

STANDARD DESIGN

TYPICAL APPLICATION OF TRAFFIC CONTROL DEVICES FOR HIGHWAY CONSTRUCTION AND MAINTENANCE

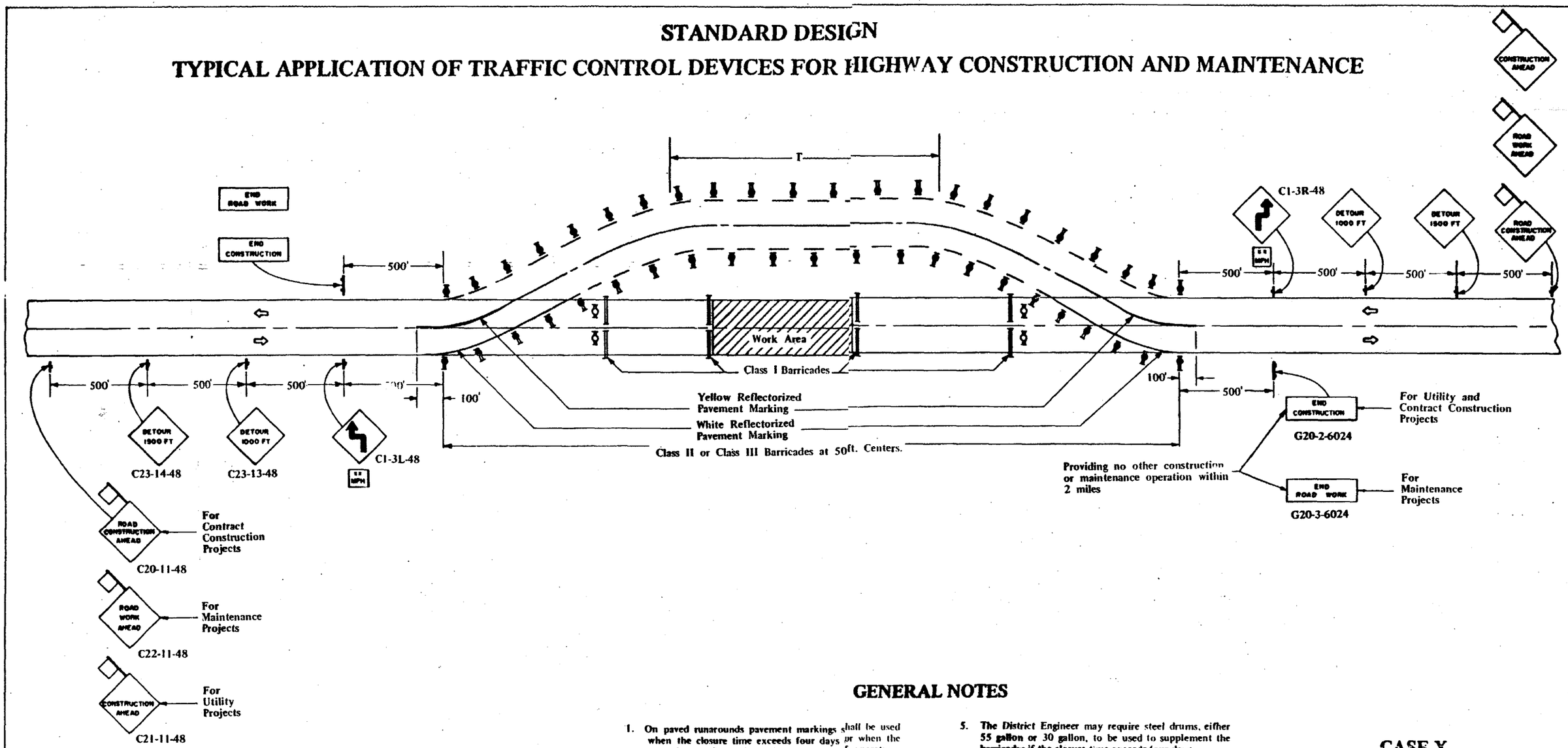

TYPICAL APPLICATIONS

Bridge Construction
Culvert Construction

SYMBOLS

- Class II or Class III Barricade with flashing light.
- Work Area.
- Sign with 18 in. by 18 in. (minimum) red flag attached.
- Sign on portable or permanent support.
- Class II or Class III Barricade with steady burning light.

GENERAL NOTES

1. On paved runarounds pavement markings shall be used when the closure time exceeds four days or when the normal posted speed outside the area of operations exceeds 50 m.p.h. Temporary pavement marking tape shall be used for marking a new center line and edge line on the existing pavement. All existing markings which conflict with the revised traffic pattern will be covered with black nonreflectorized pavement marking tape, or painted out. On the paved runarounds either temporary reflectorized pavement marking tape or reflectorized painted pavement marking shall be used.
2. Where the tangent distance (T) on the temporary runaround exceeds 600 ft., amber delineators at 50-foot centers may be substituted for the Class II or Class III Barricades or spacing between barricades may be increased to 100 ft. within the limits of the tangent. Within these same limits the yellow reflectorized marking used to indicate the center line of the traveled way may be replaced with white reflectorized marking in a dashed pattern, if no passing sight distance restriction exists.
3. The advisory safe speed to be shown below the reverse curve (turn) signs shall be determined at the site and approved by the District Engineer.
4. Steady burning lights used on Class II or Class III Barricades will not be required for day operations.
5. The District Engineer may require steel drums, either 55 gallon or 30 gallon, to be used to supplement the barricades if the closure time exceeds four days.
6. All signs shall be post mounted if the closure time exceeds four days.
7. A minimum of two flashing lights shall be used at night on each approach in advance of the work area. Flashing lights shall be installed above the first two signs in the series or, if less than two signs are present, may be installed on barricades. If one or both lights are installed on barricades, the minimum distance between lights shall be 500 ft.
8. Torches may be substituted for flashing lights. When used, torches must be placed on the ground.
9. When a side road intersects the highway on which work is being performed additional traffic control devices shall be erected as directed by the District Engineer.
10. Longitudinal dimensions may be adjusted slightly to fit field conditions.
11. All warning signs shall have minimum dimensions of 48 in. by 48 in. and have black legend and border on an orange reflectorized background. All signs other than warning signs shall have as a minimum the dimensions shown and shall have a black legend and border on a white reflectorized background.
12. Forms BT 725 and BT 726 are required.

CASE X

TWO-LANE, TWO WAY TRAFFIC, RURAL TEMPORARY RUNAROUND DAY OR NIGHT OPERATIONS

Where, at any time, any vehicle, equipment, men or their activities require the closure of both lanes and a temporary runaround is constructed.

STANDARD 2310-1

STATE OF ILLINOIS DEPARTMENT OF PUBLIC WORKS & BUILDINGS DIVISION OF HIGHWAYS	REVISED BY	DATE
APPROVED April 3, 1969 W. A. Frick Engineer of Traffic	D.A.B.	12-8-69