152368

GENERAL INDUSTRIAL
TREATMENT WORKS APPROVAL
PERMIT APPLICATION PACKAGE

NEW JERSEY
DEPARTMENT OF ENVIRONMENTAL PROTECTION
DIVISION OF WATER QUALITY

SCCC Site and Diamond Site
Kearny, New Jersey

Prepared for:
Standard Chlorine Chemical Co., Inc.
and
Tierra Solutions, Inc.

Prepared by:
Key Environmental, Inc.
456 Route 22 West, Suite D
Whitehouse Station, New Jersey 08889

FEBRUARY 2010

KEY ENVIRONMENTAL INCORPORATED

TABLE OF CONTENTS

CHECKLIST ITEM NUMBER	DESCRIPTION
--	Checklist for Administrative Completeness
Item 1	Application Form TWA-1 Attachment A, Supplement Attachment B, Additional Documentation ▸ General Remediation Cleanup (BGR) Permit Authorization, NJPDES #NJG0175102 ▸ Soil Conservation District Approval
Item 2	**2a)** Licensed Operator Grading Sheet, Form DWR-175 **2b)** Engineer's Certification, Form WFR-006GI **2c)** Engineer's Abstract
Item 3	Consent Form WQM-003
Item 4	Application Review Fee
Item 5	N/A
Item 6	Receipts of Public Notification
Item 7	USGS Quadrangle Map
Item 8	Final Plans and Profiles
Item 9	Construction Specifications 9a) Professional Engineer Signature Page 9b) Hydraulic Control Treatment System (HCTS) Specifications

Specifications	Description
▸ 40 05 23.73	PROCESS VALVES
▸ 44 23 19	PROCESS PLANT PIPING
▸ 44 42 23	CLARIFIERS
▸ 44 42 56	PUMPS
▸ 44 42 73	TANKS
▸ 44 43 13	FILTERS
▸ 44 44 13	CHEMICAL FEED EQUIPMENT
▸ 44 44 43	HEAVY METALS REMOVAL

9c) Temporary Construction Treatment System (TCTS) Specifications (section numbers listed above)

TREATMENT WORKS APPROVAL
CHECKLIST FOR ADMINISTRATIVE COMPLETENESS

The submittal of an administratively complete Treatment Works Approval (TWA) application is essential for a quick and timely review. If the TWA application is not administratively complete at the time of submittal, **the review of the application will be delayed**. Therefore, please make sure that you have provided the items listed in N.J.A.C.7:14A-22.8(a). Below is a checklist that you may use.

- ☒ ❶ Original Application Form TWA-1, signed and sealed.

- ☒ ❷ Original Engineer's Report Form WQM-006, signed and sealed. (For All General Industrial TWAs, see [❋] below.)
  NOTE: Project specific Engineer's Report in lieu of the Form WQM-006 is required for Sewage Treatment Plants.

- ☒ ❸ Original completed Consent Form WQM-003.
  NOTE: Resolutions authorizing appropriate signature from Municipalities and Sewerage Authorities (as applicable) on ALL submitted forms (TWA-1, WQM-003) are required.

- ☒ ❹ Application Review Fee, payable to "Treasurer, State of New Jersey, Environmental Services Fund". See Fee Schedule for fee calculation.
  NOTE: For General Industrial TWAs, the minimum Application Review Fee is required.

- ☐ ❺ A breakdown of the Construction Cost Estimate for the proposed sewerage facilities.

- ☒ ❻ Copies of Receipts of Public Notification from the Municipal Planning Board and the Municipal Environmental Commission.
  NOTE: If the municipality does not have an Environmental Commission, a receipt from the County Environmental Commission must be obtained. If neither exists, then a letter stating such must be submitted.

- ☒ ❼ Copy of appropriate USGS Quadrangle Map with project site clearly delineated.

- ☒ ❽ One (1) set of Final Plans and Profiles signed and sealed by a New Jersey Licensed Professional Engineer on each sheet. Plans must be marked "FINAL" or "FINAL FOR SEWER DESIGN". Plans are to include standard details of sewerage appurtenances.

- ☒ ❾ One (1) set of Construction Specifications, signed and sealed by a New Jersey Licensed Professional Engineer.

- ☐ ❿ Copy of Sewer Connection Ban Exemption Approval, if the project is located in a ban area.

[❋] For All General Industrial TWAs ONLY, the following additional items will be required:

a) A Completed Licensed Operator Grading Sheet Form DWR-175;

b) An Engineer's Certification for General Industrial TWAs, signed and sealed by a New Jersey Licensed Professional Engineer; in accordance with N.J.A.C. 7:14A-22.6(a)3;

c) An Engineer's Abstract containing, at a minimum, the following:
   - i. A description of waste treatment system;
   - ii. The ultimate destination of all wastewater and residuals;
   - iii. Listing of all pollutants, including regular and intermittent flows, which may enter the system;
   - iv. The average and peak flow requirements; and
   - v. The expected composition of effluent from the treatment system.

d) For direct dischargers to surface or groundwater, or for indirect dischargers required to obtain a NJPDES/SIU permit from the Department, a copy of a valid NJPDES permit and/or a General NJPDES permit authorization.

Please submit application to
NJDEP, Division of Water Quality
Bureau of Permit Management
401 East State Street, 3rd Floor East Wing
PO Box 029
Trenton, New Jersey 08625-0029
Attention - John Maselli (TWA Program)

TREATMENT WORKS APPROVAL (TWA)

State of New Jersey Department of Environmental Protection

CHECKLIST Item 1

Application Form TWA-1

STATE OF NEW JERSEY
DEPARTMENT OF ENVIRONMENTAL PROTECTION
Division of Water Quality

TREATMENT WORKS APPROVAL PERMIT APPLICATION

—Refer to Instructions on Page 4 and Provide All Applicable Information. Please Print or Type. —

1. APPLICANT/OWNER*

Name: SCCC Inc. and Tierra Solutions, Inc. Telephone: See Attachment A

Permanent Legal Address: See Attachment A

City or Town: State: Zip Code:

** Applicant/Owner should be the eventual owner of the proposed Treatment Works.*

2. LOCATION OF ACTIVITY

Name of Facility/Site: SCCC Site and Diamond Site

Street Address/Location: 1025-1035 and 1015 Belleville Turnpike

Block No.: 287 Lot No.: See Attachment A

City or Town: Kearny State: NJ Zip Code: 07032

Municipality: Town of Keany County: Hudson

3. NEW JERSEY LICENSED PROFESSIONAL ENGINEER

Name: Alan E. Briggs N.J. License No.: 24GE 03878500

Name of Firm, if employee: Key Environmental, Inc.

Mailing Address: 200 Third Avenue

City or Town: Carnegie State: PA Zip Code: 15106

Telephone: 412-279-3363 Telefax: 412-279-4332

4. ESTIMATED CONSTRUCTION COST AND APPLICATION FEE

A. Cost of treatment works proposed in this application $ Not Applicable
(attach a breakdown of the cost of all items related to the construction of the proposed treatment works)

B. Application Fee $ 850
(in accordance with N.J.A.C. 7:1C-1.5 et seq., made payable to Treasurer, State of NJ, Environmental Services Fund)

5. OTHER REQUIRED PERMITS

If any of the following applications have been submitted for this project, provide the applicable information.

Permit Type	Application Status Pending (check one)	Application Status Approved* (check one)	Application Date (or Application No.)
Treatment Works Approval	✓		February 2010 (this application)
Exemption From Sewer Ban			
Water Quality Management Plan Amendment			
CAFRA			
Stream Encroachment			
Freshwater Wetlands			
Tidal or Coastal Wetlands			
Waterfront Development	✓		September 14, 2009
NJPDES (DSW, DGW or SIU)		✓	NJG0175102
Pinelands Certificate			
Delaware & Raritan Canal Commission			
Hackensack/Meadowlands Commission	✓		January 15, 2020
Other Related Approvals: See Attachment A			

(* - *If any of the above applications were approved, please provide a copy of the approval with this application)* See Attachment B

6. PROJECT DESCRIPTION (Brief Description of Proposed Treatment Works and Intended Use)

SCCC and/or Tierra are required to remediate the SCCC and Diamond Sites, and portions of the former Koppers Seaboard Site. The IRAW (October, 2008) requires construction of a barrier wall with hydraulic control via groundwater extraction. Two treatment plants will be constructed: 1) Hydraulic Control Treatment System (HCTS) to treat extracted groundwater, and 2) Temporary Construction Treatment System (TCTS) to treat waters generated during construction activities. Treated waters will be discharged into the Hackensack River via NJPDES / DSW Permit, Category BGR. The HCTS maximum flow rate is 50 GPM and the TCTS maximum flow rate is <0.099 MGD. Process & Instrumentation Diagrams (P&IDs) detailing the HCTS and TCTS are provided in Attachment A of Checklist Item 2.

7. APPLICANT'S AGENT (Optional)

I, SCCC Inc./Tierra Solutions, Inc.
(Applicant/Owner's Name)

authorize to act as my agent/representative in all matters pertaining to my application the following person:

Name: Peter W. Sawchuck Position: Principal Engineer

Address: 456 US Highway 22 West, Suite 3 City: Whitehouse Station

State: NJ Zip Code: 08889 Telephone: 908-534-4501/207-772-8100

Signature of Agent — Date: 2/23/10

Signature of Applicant/Owner — Date: 2/17/10

Signature of Applicant / Owner — Date: 2/18/10

8. PROPERTY OWNER'S CERTIFICATION

I hereby certify that SCCC Inc./Tierra Solutions, Inc.
(Property Owner's Name)

owns the property identified in this application. As owner, I grant permission for the activity to be permitted under this application and authorize the Department of Environmental Protection to conduct on-site inspections, if necessary. If the construction activity will take place in an easement, I certify that with this application, I presently have or will obtain permission of the property owner(s) prior to initiation of construction of this proposed treatment works.

Signature of Owner — Date: 2.18.10

Signature of Owner — Date: 2/17/10

Name / Position: Margaret W. Kelly, V.P./General Counsel
Standard Chlorine Chemical Co., Inc.

Name / Position: David Rabbe, President
Tierra Solutions, Inc.

9. STATEMENT OF PREPARER OF PLANS, SPECIFICATIONS AND ENGINEER'S REPORT AND/OR ABSTRACT

I hereby certify that the engineering plans, specifications, and engineer's report and/or abstract applicable to this project comply with the current rules and regulations of the Department of Environmental Protection with the exceptions as noted.

Signature of Engineer — Date: 2/22/10

Professional Engineer's — Name: Alan E. Briggs, P.E.

Embossed Seal — Position: Principal Engineer

10. Proper Construction and Operation Clause

I, the Applicant/Owner, SCCC Inc./Tierra Solutions, Inc. , agree that the treatment works will be properly constructed and operated in accordance with the engineering plans, specifications and conditions under which approval is granted by the Department of Environmental Protection.

Margaret W. Kelly 2/18/10
Signature of Applicant/Owner Date

2/17/10
Signature of Applicant/Owner Date

Name / Position: Margaret W. Kelly, V.P./General Counsel
Standard Chlorine Chemical Co., Inc.

Name / Position: David Rabbe, President
Tierra Solutions, Inc.

11. Certification by Applicant/Owner

I certify, under penalty of law, that the information provided in this application and the attachments is true, accurate, and complete. I am aware that there are significant civil and criminal penalties for submitting false, inaccurate, or incomplete information, including fines and/or imprisonment.

Margaret W. Kelly 2.18.10
Signature of Applicant/Owner Date

2/17/10
Signature of Owner Date

Name / Position: Margaret W. Kelly, V.P./General Counsel
Standard Chlorine Chemical Co., Inc.

Name / Position: David Rabbe, President
Tierra Solutions, Inc.

Instructions for Completing Form TWA - 1

This form should accompany all Treatment Works Approval permit applications.

1. **General Information** - (items #1 through #4, #6) Complete the requested applicant and project information.
2. **Other Required Permits** (item # 5) - Please list all permits issued for the subject project (in addition to the permits being applied for at this time).
3. **Signatures** (items #7 through #11) - All signatures must comply with N.J.A.C. 7:14A-4.9 and N.J.A.C. 7:14A-22.8(c). Where indicated under items #1, #10 and #11, the applicant/owner should be the eventual owner of the proposed treatment works. Item #8 shall be completed by the owner of the property.

Should you need assistance in completing the application, please call the appropriate phone number listed below:

- **Bureau of Permit Management**
  (609) 984-4429
  Municipal Treatment Works, Industrial Treatment Works, Sewer Extension, Sewer Ban Exemption, Subsurface Disposal Systems
- **Bureau of Non-Point Pollution Control**
  (609) 292-0407
  Alternate Design Septic Systems (design flow less than 2,000 GPD)

CHECKLIST ITEM 1

APPLICATION FORM TWA-1

ATTACHMENT A

SUPPLEMENT TO FORM TWA-1

1. APPLICANT(S)/OWNER

Name	Standard Chlorine Chemical Company, Inc.	Tierra Solutions, Inc.
Permanent Legal Address	1035 Belleville Turnpike Kearny, NJ 07032	Two Tower Center Boulevard -10 F East Brunswick, NJ 08816
Telephone	201-997-1700/212-249-0616	732-247-3400/732-246-5858
Email	mwkscc1@aol.com	drabbe@tierra-inc.com

2. LOCATION OF ACTIVITY

Name of Facility/Site	SCCC Site and Diamond Site
Street Address/Location	1025-1035 and 1015 Belleville Turnpike Kearny, Hudson County NJ 07032
Block No.	287
Lot Numbers	♦ *SCCC Site*: 32.01, 48, 49, 50, 51, 52, and 52R ♦ *Diamond Site*: 32.02, 46, 47, and 47 R ♦ *Portions of Former Koppers Site*: 32.01, 54, 55, 56, 61B and 62

5. OTHER REQUIRED PERMITS *[continued]*

Permit Type	Application Status		Application Date (or Application No.)
	Pending	Approved	
➢ Minor Source Air Permit (TCTS)	✓		January 8, 2010
➢ Department of the Army Permit	✓		Not required per letter of October 5, 2009
➢ NJMC Zoning Certificate	✓		January 15, 2010
➢ Tidelands Grant Permit	✓		SCCC - December 18, 2009 Diamond - December 22, 2009
➢ Soil Conservation District Certification	✓	✓	September 29, 2009; No. 209-H 2713
➢ Town of Kearny – Construction Permit	✓		To be submitted
➢ NJ Division of Land Use Regulation (DLUR) Permit - includes Waterfront Development Permit, Water Quality Consistency Determination, and Flood Hazard Area Individual Permit.	✓		September 14, 2009 No. WFD 090001
➢ US EPA, Applicable or Relevant and Appropriate Requirements (ARARs) Consistency Review (SCCC Site only).	✓		Submitted September 14, 2009; number to be assigned

CHECKLIST ITEM 1

APPLICATION FORM TWA-1

ATTACHMENT B

ADDITIONAL DOCUMENTATION

- General Remediation Cleanup (BGR) Permit Authorization, NJPDES #NJG0175102
- Soil Conservation District Approval

State of New Jersey

CHRIS J. CHRISTIE
Governor

DEPARTMENT OF ENVIRONMENTAL PROTECTION

BOB MARTIN
Acting Commissioner

Division of Water Quality
P.O. Box 029 Trenton, NJ 08625-0029
Phone: (609) 292-4860
Fax: (609) 984-7938

CERTIFIED MAIL
RETURN RECEIPT REQUESTED

Margaret W. Kelly, Esq
Standard Chlorine Chemical Co Inc
1035 Belleville Tpke
Kearny, NJ 07032

FEBRUARY 8, 2010
7007 0220 0002 1034 5384

Re: Surface Water GPA New
Category: BGR -General Remediation Clean-up (GP)
NJPDES Permit No. NJG0175102
STANDARD CHLORINE CHEMICAL CO
Kearny Town, Hudson County

Dear Ms. Kelly:

Enclosed is an Individual NJPDES/DSW General Permit Authorization under the General Remediation Cleanup (BGR) permit which was issued by the Department on April 21, 2005. This General Permit Authorization is issued in accordance with the New Jersey Pollutant Discharge Elimination System (NJPDES) Regulations N.J.A.C. 7:14A-1 et seq. This permit authorizes the discharge of remediated groundwater to surface waters of the state.

This individual General Permit Authorization allows for the discharge of treated groundwater through the discharge outfalls specified on your permit authorization page. The Violation of any condition of this authorization may subject the permittee to significant penalties.

Outfall DSN001 is for the remediation clean-up which is for greater than 6-months and DSN002A and DSN003A are for the temporary discharge of construction dewatering. The limits and monitoring requirements in Part III of the permit are included in accordance with N.J.A.C. 7:14A-12, Appendix B and are based on the groundwater data submitted with the BGR application. While limits have not been imposed at this time for manganese and magnesium, monitoring requirements have been included due to the presence of these compounds.

The individual General Permit Authorization also sets forth residuals (sludge) monitoring required under the Sludge Quality Assurance Regulations (SQAR, N.J.A.C. 7:14C). Analysis of the industrial sludge for the parameters found on Table III-D-1 and Table III-E-1 of Part III is required because they are parameters required to be analyzed for the discharge to surface water. The frequency of monitoring is dependent on the amount of sludge produced. Since the amount of sludge generated is less than 290 dry metric tons per year the frequency of monitoring is annually.

The enclosed Authorization to discharge groundwater under the General Permit shall expire on May 31, 2010. Applications for renewal of this Authorization must be submitted to the Department at least 180 days prior to expiration of the Individual Authorization pursuant to N.J.A.C. 7:14A-4.2(e)3. Because your application was submitted at a time so close to the renewal of the master permit, your recent application will serve as a renewal application. As a result, the Department will automatically renew this authorization as part of the master renewal process unless you direct us otherwise.

If you have questions or comments regarding the final action, please contact Brian Salvo at (609) 292-4860.

Sincerely,

Melisse Carasia-Auriti, Supervising Environmental Specialist
Bureau of Surface Water Permitting

Enclosures
c: Permit Distribution List
Masterfile #: 37720; PI #: 46937

New Jersey Department of Environmental Protection

Bureau of Surface Water Permitting
Division of Water Quality
PO Box 029
Trenton, NJ 08625-0029
(609) 292-4860

AUTHORIZATION TO DISCHARGE
BGR -General Remediation Clean-up (GP)

Facility Name: Standard Chlorine Chemical Company

Facility Address:
1035 Belleville Turnpike
Kearny, NJ 07032-0000

NJPDES #: NJG0175102

Type of Activity: Surface Water GPA New

Owner:
Standard Chlorine Chemical Co. Inc.
1035 Belleville Turnpike
Kearny, NJ 07032

Operating Entity:
Standard Chlorine Chemical Co. Inc.
1035 Belleville Turnpike
Kearny, NJ 07032

Authorizations Covered Under This Approval	Issuance Date	Effective Date	Expiration Date
Category BGR- New (DSN001A, long term)	01/12/2009	02/01/2010	5/31/2010
Category BGR- New (DSN002A, short term)	01/12/2009	02/01/2010	5/31/2010
Category BGR- New (DSN003A, short term)	01/12/2009	02/01/2010	5/31/2010

Outfall Number	Latitude	Longitude	Receiving Stream	Classification
DSN001A	40° 44' 58.75"	74° 05' 43.40"	Hackensack River	SE2
DSN002A	40° 44' 58.84"	74° 05' 43.46"	Hackensack River	SE2
DSN003A	40° 45' 03.59 "	74° 05' 47.12"	Hackensack River	SE2

Your Request for Authorization under NJPDES General Permit No. NJ00155438 has been approved by the New Jersey Department of Environmental Protection.

Melisse Carasia-Auriti **Date:**

Melisse Carasia-Auriti, Supervising Environmental Specialist
Bureau of Surface Water Permitting
Division of Water Quality
New Jersey Department of Environmental Protection

NEW JERSEY POLLUTANT DISCHARGE ELIMINATION SYSTEM

The New Jersey Department of Environmental Protection hereby grants you a NJPDES permit for the facility/activity named in this document. This permit is the regulatory mechanism used by the Department to help ensure your discharge will not harm the environment. By complying with the terms and conditions specified, you are assuming an important role in protecting New Jersey's valuable water resources. Your acceptance of this permit is an agreement to conform with all of its provisions when constructing, installing, modifying, or operating any facility for the collection, treatment, or discharge of pollutants to waters of the state. If you have any questions about this document, please feel free to contact the Department representative listed in the permit cover letter. Your cooperation in helping us protect and safeguard our state's environment is appreciated.

Permit Number: NJ0155438

Final: Surface Water Master General Permit

Permittee:
NJPDES Master General Permit Program Interest
Category BGR
Per Individual Notice of Authorization
Division of Water Quality
P.O. Box 029, 401 East State Street
Trenton, NJ 08625

Co-Permittee:

Property Owner:
NJPDES Master General Permit Program Interest
Category BGR
Per Individual Notice of Authorization
Division of Water Quality
P.O. Box 029, 401 East State Street
Trenton, NJ 08625

Location Of Activity:
NJPDES Master General Permit Program Interest
Category BGR
Per Individual Notice of Authorization
Division of Water Quality
P.O. Box 029, 401 East State Street
Trenton, NJ 08625

Authorization(s) Covered Under This Approval	Issuance Date	Effective Date	Expiration Date
BGR -General Permit GW Remediation Cleanup	4/20/2005	6/1/2005	5/31/2010
BGR –Typographical Error Correction	5/25/2005	6/1/2005	5/31/2010

By Authority of:
Commissioner's Office

DEP AUTHORIZATION
Pilar Patterson, Chief
Bureau of Point Source Permitting – Region 2
Division of Water Quality

DEP AUTHORIZATION
Howard Tompkins, Chief
Bureau of Point Source Permitting – Region 1
Division of Water Quality

(Terms, conditions and provisions attached hereto)

New Jersey Natural Resources Conservation Program

HUDSON-ESSEX-PASSAIC SOIL CONSERVATION DISTRICT

15 BLOOMFIELD AVENUE
NORTH CALDWELL, NJ 07006
Telephone: (973) 364-0786
Fax: (973) 364-0784
information@hepscd.org

October 30, 2009

Ms. Margaret W. Kelly, Esq.
Standard Chlorine Chemical, Inc.
1025-1035 Belleville Tpk.
Kearny, NJ 07032

Re: **Interim Response Action SCCC & Diamond Site**
1015, 1025-1035 Belleville Tpk, Kearny, NJ
Block 287, Lots 32.01, 32.02, 46, 47, 47R, 48-52,52R
HEP File #209-H-2713, Plan dated: 9/1/09

Dear Sir/Madam:

The District has completed the review of the soil erosion and sediment control plan for the above referenced project and hereby reports that the plan meets the Standards for Soil Erosion and Sediment Control in New Jersey (N.J.A.C.290-1.1 et seq., promulgated pursuant to the New Jersey Soil Erosion and Sediment Control Act, N.J.S.A.4-24-39 et seq.). Accordingly, the plan is **certified** by the Hudson-Essex-Passaic Soil Conservation District subject to the following conditions:

- The District must be notified by mail 48 hours prior to the commencement of any construction activity.
- A copy of the certified plan must be kept on the job site at all times.
- The applicant or contractor must request a final inspection (once landscaping and final soil stabilization is complete) prior to seeking a temporary or permanent Certificate of Occupancy.
- The District must be provided with written notification of any conveyance of this project, subject property, or portions thereof, including individual residential lots if applicable. Said notice must provide the names, addresses, and telephone numbers of subsequent owners.
- The District must be informed of address and or telephone number changes of owners, agents responsible for site construction, and job supervisors.

Please be advised that the Soil Erosion and Sediment Control Act authorizes the issuance of stop construction orders and penalties of up to $3000 per day for violations of the certified plan or for failure to comply with the aforementioned requirements. Please be further advised that any conveyance of this project or portions thereof will transfer full responsibility for compliance with the certified plan to subsequent owners. Please contact the District if you require assistance implementing the certified soil erosion and sediment control plan. This certification is valid for **3-1/2 years** from the date of this letter and is limited to the controls specified in this plan. It is not authorization to engage in proposed land use unless such use has been previously approved by the municipality or other controlling agency.

Yours truly,

Carl Quazza
Chairman

AUTHORIZATION TO DISCHARGE STORMWATER

N.J. Department of Environmental Protection
Bureau of Nonpoint Pollution Control
in cooperation with the
N.J. Department of Agriculture
State Soil Conservation Committee
and Soil Conservation Districts

New Jersey Natural Resources Conservation Program

Received
NOV 16 2009
Tierra Solutions

NJPDES General Permit No. NJG0088323
Stormwater Discharge Associated with Construction Activity

Is this a Ch. 251 Project? Yes, App. # 209-H-2713 ; SCD RFA# 09-07-10-013

1. Project or Facility Name and Address

Interim Response Action - SCCC & Diamond Sites
1025-1035 and 1015 Belleville Tpk.
Kearny, NJ 07032

2. Permittee Name and Address

David Rabbe
Tierra Solutions Inc.
Two Tower Center Blvd., 10 FL
East Brunswick, NJ 08816

3. Owner Name and Address

Margaret W. Kelly, Esq.
Standard Chlorine Chemical Co., Inc.
1025-1035 Belleville Tpk
Kearny NJ 07032

4. Proposed Land Use (check appropriate category(ies)):

a. Residential Dwelling _____ Single Family _____ Multi-Family;
b. Commercial Facility _____; c. Industrial Facility X; d. Mining or Quarry _____;
e. Public School, Religious or Charitable Institutions _____; f. Other (specify) _____

Effective Date 10/30/2009 **Expiration Date** 4/30/2013

Your Request for authorization under NJPDES General Permit No. NJG0088323 has been certified in accordance with the provisions of N.J.A.C. 7:14A and the New Jersey Stormwater Permitting Program in coordination with the New Jersey Department of Agriculture, the State Soil Conservation Committee and the Soil Conservation District.

Barry Chalofsky, P.P. Chief
Bureau of Nonpoint Pollution Control
New Jersey Department of Environmental Protection

CERTIFIED BY:

Signature — Date 10-30-09

Carl Quazza
Chairman
Title

HEP-SCD, 15 Bloomfield Ave.
North Caldwell, NJ 07006

FOR DISTRICT USE ONLY

NJ Natural Resources Conservation Program
Expiration of Authorization to Discharge Stormwater

Reason for Expiration:
- ☐ Project Completed (Final Report of Compliance Issued)
- ☐ Application Withdrawn by Applicant
- ☐ Application Denied by District or SSCC
- ☐ Project SESC Plan Certification Expired

Date of Expiration _____

Authorized by _____
District Official

TREATMENT WORKS APPROVAL (TWA)

State of New Jersey Department of Environmental Protection

CHECKLIST Item 2

- **2a) - Form DWR-175**
  Licensed Operator Grading Sheets
- **2b) - Form WFR-006GI**
  Engineer's Certification,
- **2c) - Engineer's Abstract**

CHECKLIST ITEM 2

ENGINEER'S REPORT FORM

GENERAL INDUSTRIAL TWA

2a) Form DWR-175

Licensed Operator Grading Sheet

DWR-175 08/97

STATE OF NEW JERSEY
DEPARTMENT OF ENVIRONMENTAL PROTECTION
Division of Water Quality

INDUSTRIAL WASTEWATER TREATMENT SYSTEM - LICENSED OPERATOR GRADING SHEET

NJPDES PERMIT NO.: _____ FACILITY NAME: SCCC/Diamond Sites Outfall 001

LOCATION OF FACILITY: 1025-1035, 1015 Belleville Turnpike, Kearny NJ 07032

FACILITY CLASS :	N1	N2	N3	N4
RANGE OF POINTS :	6 to 19	20 to 49	50 to 69	70 or more

POINTS ARE ASSIGNED TO EACH ITEM LISTED BELOW THAT APPLIES TO THE INDUSTRIAL TREATMENT SYSTEM	POINTS RATING	POINTS ACTUAL
A. TOXICITY GROUP		
I	1	
II	5	
III	10	
IV	15	15
V	20	
VI	25	
B. RECEIVING WATER (DTW's)		
Surface Water-FW or DRZ 1, 2 or 3	5	
Surface Water-SE or DRZ 4, 5 or 6	3	3
Surface Water-SC	2	
Ground Water	5	
Discharge into POTW	2	
C. HYDRAULIC LOAD		
Indirect Discharge < 0.0008 MGD	0	
Less than 0.1 MGD	2	2
0.1 - 1.0 MGD	4	
1.0 - 10.0 MGD	6	
Greater than 10.0 MGD	10	
D. PRIMARY		
pH Adjustment	1	1
Equalization	1	
Oil Separator	3	
Dissolved Air Flotation	3	
Chemical Coagulation/Flocculation	5	5
Sedimentation/Clarification	3	3
Chemical Addition	2	2
Simple Filtration (bag, cartridge)	2	
Disinfection	2	
Air Stripping/Cooling Towers	5	
E. SECONDARY		
Activated Sludge	15	
Bio-Filtration w/ Sec. Clarifiers (incl. Trickling Filters & RBCs)	10	
Stabilization	5	
Disinfection	2	
Spray Irrigation/Overland Flow	10	
Oxidation Ditches	10	
Subtotal		31

POINTS ARE ASSIGNED TO EACH ITEM LISTED BELOW THAT APPLIES TO INDUSTRIAL TREATMENT SYSTEM	POINTS RATING	POINTS ACTUAL
F. ADVANCED		
Ammonia Removal	10	
Nutrient Removal	10	
Advanced Filtration	5	
Carbon Adsorption	10	10
Ion Exchange	10	
Post Aeration	2	
Reverse Osmosis Ultra Filtration	10	
Ultraviolet-Peroxide Reactor	5	
G. SLUDGE HANDLING/DISPOSAL		
Digestion	5	
Sludge Conditioning	2	
Mechanical Dewatering	4	4
Drying Beds/Lagoons	2	
Thickening or Dissolved Air Floatation	3	
On-Site Landfill	2	
Composting	7	
Incineration/Wet Oxidation	10	
Subtotal		14
Grand Total		45

I hereby certify that the treatment units, as noted above, comprise the entire treatment process for the above referenced facility, and subsequently the operator licensing requirement has been accurately determined.

Alan E. Briggs, P.E.
Typed Name of Certifying Engineer

Alan E. Briggs 2/23/10
Signature and Date

Professional Engineer's

Embossed Seal

DWR-175 08/97

STATE OF NEW JERSEY
DEPARTMENT OF ENVIRONMENTAL PROTECTION
Division of Water Quality

INDUSTRIAL WASTEWATER TREATMENT SYSTEM - LICENSED OPERATOR GRADING SHEET

NJPDES PERMIT NO.:_____ FACILITY NAME: SCCC/Diamond Sites Outfall 002/003

LOCATION OF FACILITY: 1025-1035, 1015 Belleville Turnpike, Kearny NJ 07032

FACILITY CLASS :	N1	N2	N3	N4
RANGE OF POINTS :	6 to 19	20 to 49	50 to 69	70 or more

POINTS ARE ASSIGNED TO EACH ITEM LISTED BELOW THAT APPLIES TO THE INDUSTRIAL TREATMENT SYSTEM	POINTS RATING	POINTS ACTUAL
A. TOXICITY GROUP		
I	1	
II	5	
III	10	
IV	15	15
V	20	
VI	25	
B. RECEIVING WATER (DTW's)		
Surface Water-FW or DRZ 1, 2 or 3	5	
Surface Water-SE or DRZ 4, 5 or 6	3	3
Surface Water-SC	2	
Ground Water	5	
Discharge into POTW	2	
C. HYDRAULIC LOAD		
Indirect Discharge < 0.0008 MGD	0	
Less than 0.1 MGD	2	2
0.1 - 1.0 MGD	4	
1.0 - 10.0 MGD	6	
Greater than 10.0 MGD	10	
D. PRIMARY		
pH Adjustment	1	1
Equalization	1	1
Oil Separator	3	
Dissolved Air Flotation	3	
Chemical Coagulation/Flocculation	5	5
Sedimentation/Clarification	3	3
Chemical Addition	2	2
Simple Filtration (bag, cartridge)	2	2
Disinfection	2	
Air Stripping/Cooling Towers	5	
E. SECONDARY		
Activated Sludge	15	
Bio-Filtration w/ Sec. Clarifiers (incl. Trickling Filters & RBCs)	10	
Stabilization	5	
Disinfection	2	
Spray Irrigation/Overland Flow	10	
Oxidation Ditches	10	
Subtotal		34

POINTS ARE ASSIGNED TO EACH ITEM LISTED BELOW THAT APPLIES TO INDUSTRIAL TREATMENT SYSTEM	POINTS RATING	POINTS ACTUAL
F. ADVANCED		
Ammonia Removal	10	
Nutrient Removal	10	
Advanced Filtration	5	
Carbon Adsorption	10	10
Ion Exchange	10	
Post Aeration	2	
Reverse Osmosis Ultra Filtration	10	
Ultraviolet-Peroxide Reactor	5	
G. SLUDGE HANDLING/DISPOSAL		
Digestion	5	
Sludge Conditioning	2	
Mechanical Dewatering	4	4
Drying Beds/Lagoons	2	
Thickening or Dissolved Air Floatation	3	
On-Site Landfill	2	
Composting	7	
Incineration/Wet Oxidation	10	
Subtotal		14
Grand Total		48

I hereby certify that the treatment units, as noted above, comprise the entire treatment process for the above referenced facility, and subsequently the operator licensing requirement has been accurately determined.

Alan E. Briggs, P.E.
Typed Name of Certifying Engineer

Alan E. Briggs 2/23/10
Signature and Date

Professional Engineer's

Embossed Seal

2b) Form-WFR-006GI

Engineer's Certification Form

STATE OF NEW JERSEY
DEPARTMENT OF ENVIRONMENTAL PROTECTION
Division of Water Quality

PROFESSIONAL ENGINEER'S CERTIFICATION FOR GENERAL INDUSTRIAL TREATMENT WORKS APPROVAL (TWA) APPLICATIONS

Name of Project: SCCC, Inc. / Diamond Sites

Municipality: Town of Kearny

County: Hudson County

Description of Project: Hydraulic Control Treatment System and Temporary Construction

Treatment System to support remediation projects of the SCCC / Diamond/Seaboard Sites in accordance with the NJDEP-approved Interim Response Action Workplan (IRAW) dated October 2008.

1. The proposed treatment works, as designed, will enable the facility to meet the applicable Federal, State and local effluent limitations, conditions and/or requirements.

2. The proposed treatment works or contributing facility will not dilute any portion of its waste stream for the purpose of meeting any applicable NJPDES effluent limitation or condition.

3. The permittee currently holds a valid final NJPDES permit, General Permit authorization, or for indirect dischargers, the applicant is specifically exempted by the Department to obtain such an approval.

In accordance with N.J.A.C. 7:14A-22.6(a)3, I hereby certify that the above statements are true and correct for the proposed treatment works identified above.

Professional Engineer's Embossed Seal

Alan E. Briggs - NJ PE License # 24GE 03878500
Engineer Name and N.J.P.E. License No.

Alan E. Briggs 2/23/10
Signature and Date

Key Environmental, Inc. - Principal Engineer
Name of Firm and Position

2c)

Engineer's Abstract

KEY

ENGINEER'S ABSTRACT

Applicant Names:	SCCC, Inc. and Tierra Solutions, Inc.
Property Owners:	SCCC, Inc. and Tierra Solutions, Inc
Property Operators:	Field & Technical Services
Location of Project:	Standard Chlorine Chemical Co., Inc. Site and Diamond Site, and portions of Former Seaboard Site. 1015, 1025-1035 Belleville Turnpike, Kearny, NJ 07032
Project Description:	Construction of Hydraulic Control Treatment System (HCTS) and Temporary Construction Treatment System (TCTS)
Municipality:	Kearny, New Jersey
Municipal Notification:	Town of Kearny Municipal Clerk, Kearny Beautification Environmental Commission
County:	Hudson County
Engineering Firm:	Key Environmental, Inc.
Nature of Wastewater:	HCTS - Groundwater from site remediation activities; TCTS - Groundwater and surface water from construction activities
Description of Waste Treatment System:	See Engineer's Abstract and Engineer's Abstract, Attachment A
Listing of Pollutants:	See Engineer's Abstract, Attachment B
Expected Effluent Composition:	See Engineer's Abstract, Attachment B
Residuals Management:	See Engineer's Abstract, Attachment B
Treatment Plants:	
(a) Classification	Remediation [N2 Operator Required]
(b) Design Capacity	HCTS…..40 gpm TCTS…..< 0.099 MGD
(c) Average Flow	HCTS…..20 gpm TCTS…..65 gpm
(d) Peak Flow	HCTS…..50 gpm TCTS….< 0.099 mgd
Receiving Water:	Hackensack River
Classification of Water:	SE2

Background

Standard Chlorine Chemical Co., Inc. (SCCC) and Tierra Solutions, Inc. (Tierra) are submitting a General Industrial Treatment Works Approval (TWA) Permit Application to the State of New Jersey Department of Environmental Protection's (NJDEP) Division of Water Quality for the remedial activities at the SCCC Site and Diamond Shamrock (Diamond) Site, as well as portions of the former Koppers Seaboard Site (collectively the "Sites"), located in Kearny, Hudson County, New Jersey.

An Interim Response Action Work Plan[1] (IRAW), approved by the NJDEP by letter dated March 27, 2008 establishes the remediation requirements for the Sites. The IRAW requires construction of a Barrier Wall System, to include a slurry wall enclosing the Sites. A Hydraulic Control System is required to maintain hydraulic control (i.e., to prevent flooding as a result of groundwater mounding within the barrier wall system and to maintain an inward hydraulic gradient between the outside and inside of the barrier).

To support IRAW implementation, two treatment systems will be constructed:

1. Hydraulic Control Treatment System (HCTS) to treat extracted groundwater, and
2. Temporary Construction Treatment System (TCTS) to treat water and groundwater generated during construction of the HCTS and implementation of IRAW remediation activities.

Final effluent will be discharged to the Hackensack River in accordance with BGR permit requirements.

The facility diagram, HCTS and TCTS Line Diagrams, monitoring well locations, and Process & Instrumentation Diagrams (P&IDs) for the proposed HCTS and TCTS are provided in Attachment A. Expected influent and effluent data, off-site residual management facilities, and expected effluent composition tables are provided in Attachment B. The Final Plans and Profiles and Construction Specifications for the HCTS and TCTS, signed and stamped by a State of New Jersey Professional Engineer, are included in ***Item 8 - Final Plans and Profiles*** and ***Item 9 - Construction Specifications*** in this application package. Final outfall locations and outfall construction details, including profiles of the discharge lines, are detailed in Drawings TWA-08 and TWA-09 in Item 8, respectively.

The Construction Specifications and submissions for the proposed HCTS and TCTS are submitted to fulfill the requirements of N.J.A.C. 7:14A-Subchapter 22, ***Treatment Works Approvals, Sewer Bans, Sewer Ban Exemptions,*** and N.J.A.C. 7:14A-Subchapter 23, ***Technical Requirements for Treatment Works Approval Applications***. The Construction Specifications include engineering (including hydraulic) features of significance to applicable discharge limits and protection of the environment. The Specifications do not include structural, mechanical or

[1] Key Environmental, Inc., October 17, 2008, Final Interim Response Action Work Plan, Standard Chlorine Chemical Company Site and Diamond Site, Kearny, New Jersey.

electrical design, as specified in N.J.A.C. 7:14A-22.5 (h), since these items are not included in the Department's review of applications and submissions.

The treatment systems will be constructed and installed by a Contractor, who will provide a complete installation including all labor, equipment, materials, machinery, tools, transportation, certificates and other incidental services required pursuant to the IRAW and applicable permits. The Contractor will provide a satisfactorily operating installation for demonstrating that the system meets and satisfies the conditions specified.

Both the HCTS and the TCTS may be modified during operation of each respective system to include less or more treatment units, depending on the ability of individual systems to achieve BGR Permit discharge limits.

Additional items included in the Engineer's Abstract, as required by the TWA Checklist, are detailed below.

Description of Waste Treatment Systems

The proposed HCTS and TCTS are designed to remove Total Suspended Solids (TSS), hexavalent chromium (Cr-VI) and other heavy metals. Cr(VI) reduction will be accomplished by the addition of the reducing agents ferrous sulfate and sodium sulfide to a target pH of 10 to 12 ($NaOH/H_2SO_4$ as required). Next, the pH will be lowered with sulfuric acid to a target pH of 8.7 to 8.9 for Cr(III) and other metals removal. Cationic and anionic polymers will be added in the flocculation tank to obtain large settleable floc. Solids will be settled in a clarifier and/or tube settler. A pH of 7 to 8 will be achieved in the final effluent tank by the addition of sulfuric acid and sodium hydroxide to ensure that the discharge pH is within discharge permit limits of 6.0 – 9.0. Trace amounts of dissolved Volatile and Semi-volatile Organic Compounds (VOCs and SVOCs) and Dense Non-Aqueous Phase Liquids (DNAPL) will be removed by a series of Granular Activated Carbon (GAC) adsorption units.

Solids/sludges that have settled in the clarifier/tube settler will be dewatered by pressure filtration. Filtrate will be returned to the process for treatment. Sludges and/or residual will be transported off site for recycle, treatment, and/or disposal, as appropriate, depending on characterizations, as specified in Attachment B – Table 4.

The treatment processes will be controlled by pH, ORP, level, flow and pressure sensors, pressure regulators, and controllers. Instrumentation and controls, pumps, motors, vessels, and filters are detailed in the P&IDs in ***Item 8 - Final Plans and Profiles*** and in the ***Item 9 - Construction Specifications*** in this application package. The Construction Specifications include information on type of materials, construction, installation, and manufacturers' cut sheets for major system components. Specific information for HCTS and TCTS are provided below.

Hydraulic Control Treatment System (HCTS)

The proposed HCTS will treat groundwater extracted from Hydraulic Control Wells and DNAPL Recovery Wells pumping operations. Separation of DNAPL will occur in the wells, and recovered DNAPL will be removed on a routine basis from the wells and transported off site for recycle, incineration and/or disposal. The locations of the groundwater control and recovery wells, treatment building, and Outfall 001 are shown in Attachment A - Figure 1.

The HCTS average flow is 20 gpm, and the maximum flow is 50 gpm. Principal features of the HCTS work to be performed include installation/operations of:

- Primary DNAPL phase separation by GAC/clay pretreatment;
- Heavy metal removal system, including hexavalent chromium reduction, pH control, metals precipitation and coagulation/flocculation;
- Inclined plate clarifier for solids separation and settling;
- GAC media filters and GAC polishing units for organics removal;
- Final pH control;
- Discharge of treated water into the Hackensack River via Outfall 001;
- Metal hydroxide sludge dewatering by plate and frame filter press;
- DNAPL recovery as a separate phase directly from the recovery wells into a portable storage container. The recovered DNAPL will be recycled or disposed off site as appropriate; and
- Off site transport of residuals for recycle, treatment, and/or disposal, as appropriate, depending on characterizations.

The HCTS Line Diagram is shown in Attachment A – Figure 2, and the P&ID in Figure 5. Construction details and hydraulic profile are included in ***Item 8 - Final Plans*** and ***Profiles*** and ***Item 9 - Construction Specifications.***

Temporary Construction Treatment System (TCTS)

The proposed Temporary Construction Treatment System (TCTS) will be constructed as an interim system to treat water and groundwater generated during construction of the HCTS and implementation of the other remediation activities required by the IRAW, including but not limited to water from slurry wall construction, trench dewatering, sediment dewatering, decontamination water, well-development water, and lagoon surface water from dewatering and backfilling the SCCC lagoons. The TCTS maximum daily flow is <0.099 MGD, with an average flow rate of 65 gpm. Treated water will be discharged into the Hackensack River via Outfall 002/003, in accordance with BGR permit requirements.

The TCTS is planned to be constructed with the capability of being moved to different locations on the SCCC Site as necessary to complete HCTS construction and IRAW remediation activities. The approximate limits of the TCTS and the locations of Outfalls 002/003 are shown in

Attachment A - Figure 1. Treated effluent will be discharged at one of two locations (Outfalls 002/003) depending on the location of the TCTS at the time of discharge. Principal features of the TCTS work to be performed include installation/operations of:

- Conveyance of water from construction activities to the equalization/frac tank(s);
- Heavy metal removal system, including hexavalent chromium reduction, pH control, metals precipitation and coagulation/flocculation;
- Tube settler(s) for solids separation and settling;
- GAC adsorption for removal of organic compounds;
- Discharge of treated water into the Hackensack River via Outfall 002/003;
- Solids dewatering by pressure filtration; and
- Off site transport of residuals for recycle, treatment, and/or disposal, as appropriate, depending on characterizations.

The TCTS Line Diagram is shown in Attachment A – Figure 3, and the P&ID in Figure 6. Construction details and hydraulic profile are included in ***Item 8 - Final Plans*** and ***Profiles*** and ***Item 9 - Construction Specifications.***

Ultimate Destination of Wastewater and Residuals

Treated water from the HCTS and TCTS will be discharged into the Hackensack River in accordance with NJPDES / Discharge to Surface Water Permit, Category BGR, General Remediation Clean-up, Permit No. NJG0175102. Construction details for the final outfalls for HCTS (Outfall 001) and TCTS (Outfalls 002/003) are included in Items 8: ***TWA-09 - Treated Water Effluent Pipe Details***.

Expected residuals and generation rates in dry metric tons/day are shown in Attachment A- Figures 2 and 3 for the HCTS and TCTS, respectively. Expected residuals include dewatered sludge, bag filters, spent carbon, and recovered DNAPL. Sludge and/or residuals will be accumulated on site and transported off site for treatment, recycling, disposal, and/or incineration, depending on characterization. The actual quantities generated will depend on the actual operation of the systems, the conditions observed in the field at the time of pumping, and the pumping scenarios used to meet individual treatment system objectives.

Ultimate destinations of residuals for treatment, recycling, disposal, and/or incineration are shown in Attachment B - Table 4. Residuals will be handled in accordance with NJDEP sludge management plan requirements. Sludge haulers will be licensed haulers, as required by the NJDEP, for the type and composition of sludge and/or residuals being transported. Destination of residual streams may change based upon approved profiling of the material after additional characterization, actual quantities, and the contracts in-place at time of operation. Frequency and parameters for analysis of sludge/and or residuals will be determined based on requirements by NJDEP, haulers and receiving facilities, once the residuals have been characterized and ultimate destination is determined.

Expected Influent Composition

The expected composition of influent water was obtained from groundwater and surface water sampling and analysis. Samples were collected from groundwater monitoring wells on the SCCC, Diamond, and Seaboard Sites, and surface water from the lagoon on the SCCC Site and analyzed by New Jersey certified laboratories. Monitoring well locations and the lagoon are identified in Attachment A, Figure 4. The groundwater and water samples were analyzed by a New Jersey certified laboratory for VOCs, SVOCs, Pesticides, PCBs, Metals, and Wet Chemistry. The listing of expected pollutants and analytical results are summarized in the following tables located in Attachment B:

- Table 1: Summary of Representative Influent Data SCCC and Diamond Sites
- Table 2: Summary of Representative Influent Data from the Seaboard Site
- Table 3: Summary of Representative Influent Data from Lagoon Water

The data reported in the tables lists the expected pollutants and composition, including regular and intermittent flows, that is believed to be representative of expected influent to the treatment systems. The pollutants may vary depending on well pumping rates, well locations, and remediation activities being performed.

Average and Peak Flow Requirements

The average and peak flow requirements of the HCTS were determined by two factors:

1. Groundwater pumping rates needed to accomplish the IRAW remediation activities, and
2. DNAPL recovery extraction well pumping rates.

To determine the hydraulic control pumping rates, groundwater modeling was performed in September 2008 by Geotrans, Inc. The model simulated the groundwater levels that would be anticipated as a result of barrier wall construction, and the groundwater pumping rates required to maintain hydraulic control (i.e., to prevent flooding as a result of groundwater mounding within the barrier wall system and to maintain an inward hydraulic gradient between the outside and inside of the barrier). According to the model simulation, twenty-seven pumping wells at flows ranging from 0.3 to 1.0 gpm for a total of 14.5 GPM would maintain drawdown and hydraulic capture within the containment barrier wall surrounding the Diamond and SCCC sites and a portion of the Seaboard site. The resulting design for the HCTS utilizes 26 groundwater wells at a pumping rate of approximately 14.5 gpm. The sixteen DNAPL recovery wells will be pumped at an average rate of approximately 0.5 gpm. The total combined flow to the HCTS is approximately 20 gpm average. Assuming the peak flow is approximately 2.5 times the average, the maximum flow expected is approximately 50 gpm.

The flow requirements for the TCTS are based on maintaining a maximum flow rate below 0.099 MGD. The average flow rate for a 24-hr period would be < 69 gpm. Therefore the TCTS was designed for a maximum flow rate of 65 gpm. The flow through the plant will vary depending on construction activities being performed at the time.

Expected Effluent Composition

The expected effluent composition for the treatment systems is based on results from treatability work performed in April/May 2008. Samples were collected from twenty-four (24) groundwater monitoring wells from the SCCC, Diamond, and portions of the Seaboard sites. The well locations are shown in ***Attachment A - Figure 4: Monitoring Well Locations.*** Individual groundwater samples were composited to form a typical influent for evaluation ("Well Mix") that is representative of typical influent to the HCTS and TCTS. The treatability testing utilized bench-scale unit operations including chrome reduction, metals precipitation, clarification, and Granular Activated Carbon (GAC) adsorption. The Well Mix influent and treatability testing effluent were analyzed by New Jersey certified laboratories for VOCs, SVOCs, Pesticides, PCBs, Metals, and Wet Chemistry parameters. Influent and effluent data from treatability testing is shown in ***Attachment B - Table 5: Expected Effluent Composition, SCCC and Diamond Sites***.

The full-scale treatment system design for both HCTS and TCTS was based on the unit operations employed in the treatability study. The full-scale system will employ additional GAC adsorption units for removal of dissolved organic compounds. Table 5 also shows the expected effluent composition of dissolved organic compounds by utilizing two additional GAC units that will be employed in the full-scale systems. The removal efficiencies of 85% are conservative estimates based on engineering experience. Actual removal efficiencies achieved in the treatability study for organics removal were in the range of >90%.

The data in Table 5 also lists the NJPDES BGR Final Effluent Limits, Monthly Average and Daily Maximum, to demonstrate that the expected effluent composition is well within BGR permit discharge requirements. The data shown in the table is believed to be representative of the expected influent and effluent for both the HCTS and TCTS. The influent may vary depending on pumping rates and construction activities being performed at the time.

2c) Engineer's Abstract

ATTACHMENT A

- **Figure 1** — **Facility Diagram**
- **Figure 2** — **Hydraulic Control Treatment System**
- **Figure 3** — **Temporary Construction Treatment System**
- **Figure 4** — **Monitoring Well Locations**
- **Figure 5** — **HCTS Process & Instrumentation Diagram**
- **Figure 6** — **TCTS Process & Instrumentation Diagram**

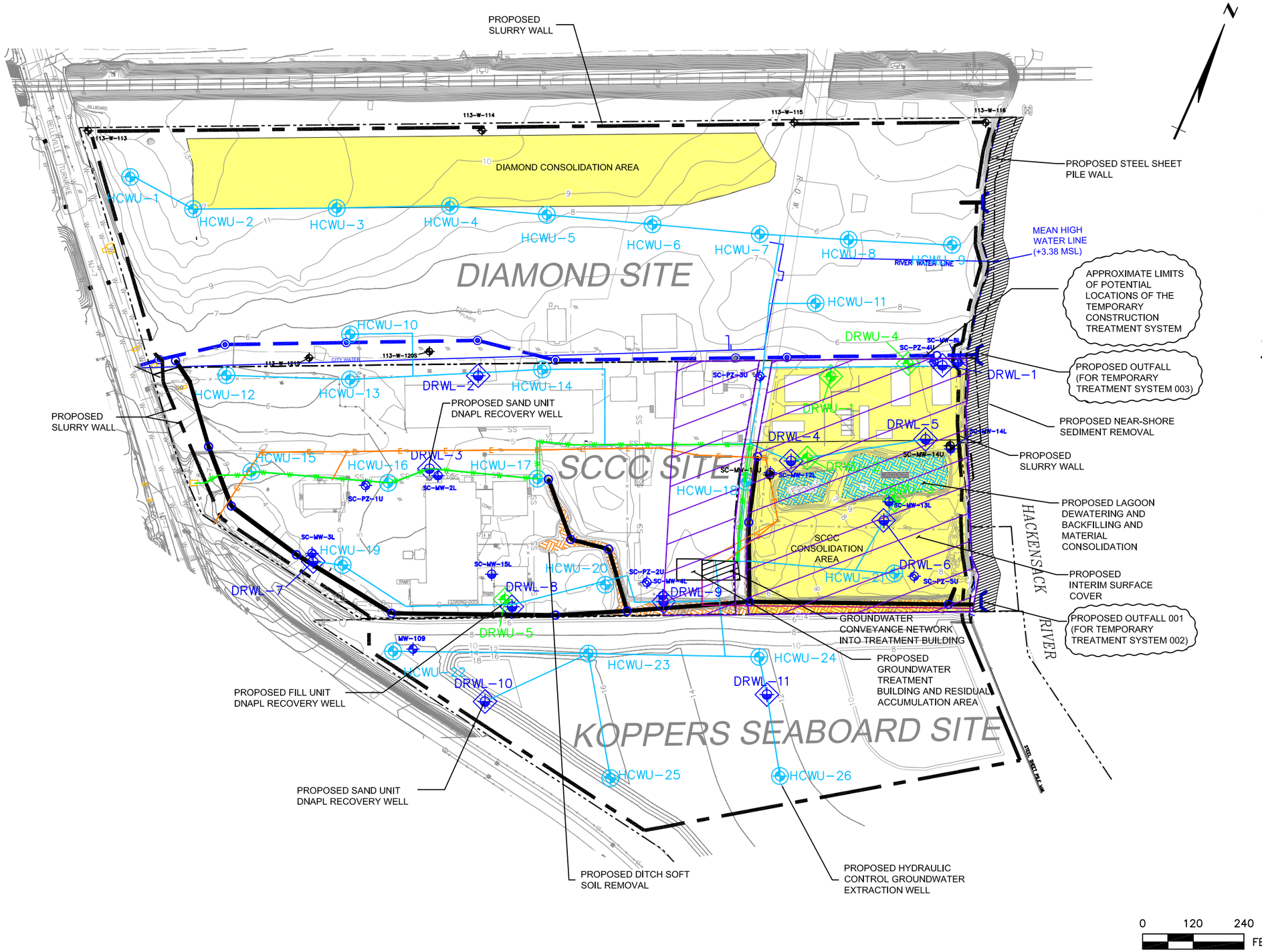

LEGEND

- EXISTING ACCESS ROAD
- EXISTING NEW JERSEY TRANSIT RAILROAD (ACTIVE)
- EXISTING FENCE
- EXISTING STRUCTURES
- EXISTING UTILITY POLES
- EXISTING LIGHT STANDARD
- STORM — EXISTING STORM DRAIN
- SS — EXISTING STORM SEWER
- G — EXISTING GAS LINE
- PROPERTY BOUNDARY
- EXISTING CONCRETE PAD
- EXISTING GROUND SURFACE ELEVATION CONTOURS
- EXISTING VEGETATION
- EXISTING STREAM, POND AND RIVER BANK
- EXISTING ELEVATION (FEET–MSL)
- PROPOSED SLURRY WALL LOCATION
- PROPOSED STEEL SHEET PILE WALL LOCATION
- PROPOSED GROUNDWATER CONVEYANCE PIPING TRENCH ALIGNMENT
- PROPOSED FILL UNIT GROUNDWATER EXTRACTION (HYDRAULIC CONTROL) WELL LOCATION
- PROPOSED FILL UNIT DNAPL RECOVERY WELL LOCATION
- PROPOSED SAND UNIT DNAPL RECOVERY WELL LOCATION
- PROPOSED LAGOON DEWATERING AND BACKFILLING
- PROPOSED NEAR–SHORE SEDIMENT REMOVAL
- PROPOSED DRAINAGE DITCH REMEDIATION (EXCAVATION AND BACKFILL)
- PROPOSED INTERIM SURFACE COVER
- APPROXIMATE LIMITS OF POTENTIAL LOCATIONS FOR THE TEMPORARY CONSTRUCTION TREATMENT SYSTEM
- PROPOSED TREATED WATER PERMITTED DISCHARGE
- EXISTING STORM DRAIN (48" PIPE)
- PROPOSED CULVERT(S)
- EXISTING DROP INLET
- PROPOSED DROP INLET
- PROPOSED CULVERT OUTFALL
- E — PROPOSED POWER AND PHONE LINES (OVERHEAD)
- W — PROPOSED WATER LINE TO TREATMENT BUILDING

SCCC, INC. AND TIERRA SOLUTIONS INC.

DRWN: SCC	DATE: 08/24/09	KEY ENVIRONMENTAL INCORPORATED
CHKD: JAB	DATE: 08/24/09	
APPD: PWS	DATE: 08/24/09	
SCALE: 1"= 2000'		

SCCC INC. AND DIAMOND SITES
KEARNY, NEW JERSEY

FACILITY DIAGRAM

PROJECT NO: 09–964
FIGURE 1

REV #	DATE	DESCRIPTION	APPD
3			
2			
1			

REFERENCE: EXISTING GROUND SURFACE CONTOURS PER AIR SURVEY, DULLES, VIRGINIA, APRIL 14, 2001. HORIZONTAL REFERENCE: NEW JERSEY STATE PLANE COORDINATES (NAD 1927). VERTICAL REFERENCE: NATIONAL GEODETIC VERTICAL DATUM (NGVD 1929).

ISSUE DATE:

KEY ENVIRONMENTAL, INC.
200 THIRD AVENUE
CARNEGIE, PA 15106

y:\00civil\kearny\ra design\production drawings\discharge to surface water permit application\09-964 phase 03\figure 1 - facility diagram.dwg Last Saved By: Tdebogovich 1/25/2010 9:38 AM Plotted By: Travis Debogovich 2/3/2010 2:58 PM Scale: 1:2

HYDRAULIC CONTROL TREATMENT SYSTEM (HCTS)[1]

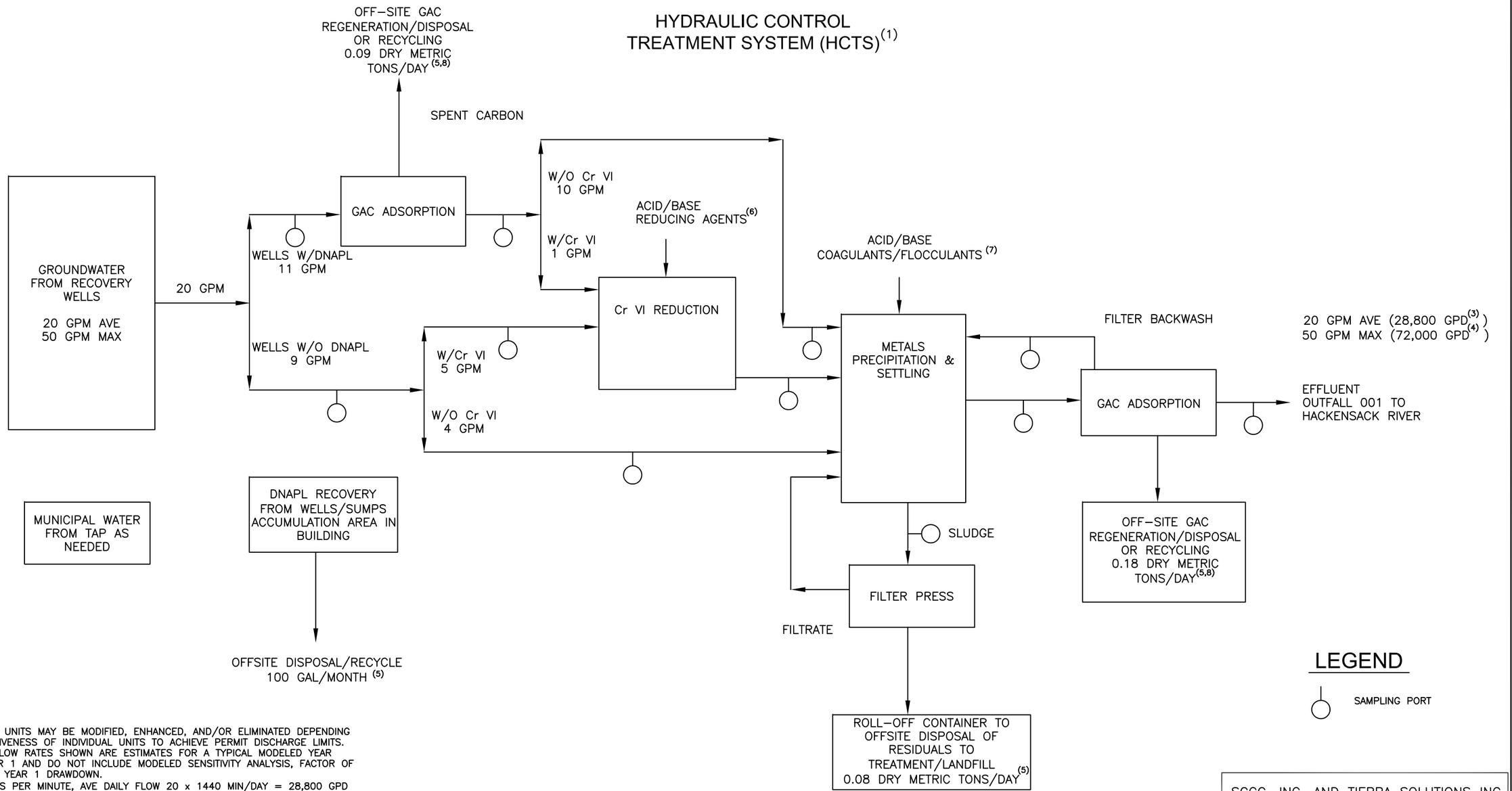

NOTES:

1. TREATMENT UNITS MAY BE MODIFIED, ENHANCED, AND/OR ELIMINATED DEPENDING ON EFFECTIVENESS OF INDIVIDUAL UNITS TO ACHIEVE PERMIT DISCHARGE LIMITS.
2. AVERAGE FLOW RATES SHOWN ARE ESTIMATES FOR A TYPICAL MODELED YEAR AFTER YEAR 1 AND DO NOT INCLUDE MODELED SENSITIVITY ANALYSIS, FACTOR OF SAFETY OR YEAR 1 DRAWDOWN.
3. 20 GALLONS PER MINUTE, AVE DAILY FLOW 20 x 1440 MIN/DAY = 28,800 GPD
4. 50 GALLONS PER MINUTE, MAX DAILY FLOW 50 x 1440 MIN/DAY = 72,000 GPD
5. RESIDUALS – ESTIMATED AMOUNTS, ACTUAL QUANTITIES MAY VARY. RESIDUALS WILL BE HANDLED AS NON-HAZARDOUS OR HAZARDOUS WASTE, DEPENDING ON CHARACTERIZATION RESULTS.
6. FERROUS SULFATE AND SODIUM SULFIDE ADDED TO REDUCE CHROMIUM FROM THE HEXAVALENT TO TRIVALENT FORM.
7. CATIONIC AND ANIONIC POLYMERS, AND/OR FLOCCULATION AID, SUCH AS FERRIC CHLORIDE, FOR COAGULATION AND FLOCCULATION.
8. GAC TRANSPORTED OFFSITE FOR RECYCLE, REGENERATION OR DISPOSAL.

GPM = GALLONS PER MINUTE
GPD = GALLONS PER DAY
GAC = GRANULAR ACTIVATED CARBON
DNAPL = DENSE NON-AQUEOUS PHASE LIQUID
Cr VI = HEXAVALENT CHROMIUM

REV #	DATE	DESCRIPTION	APPD
3			
2			
1			

REFERENCE:

ISSUE DATE:

KEY ENVIRONMENTAL, INC.
200 THIRD AVENUE
CARNEGIE, PA 15106

SCCC, INC. AND TIERRA SOLUTIONS INC.

DRWN: SCC	DATE: 08/24/09	KEY ENVIRONMENTAL INCORPORATED
CHKD: JAB	DATE: 08/24/09	
APPD: PWS	DATE: 08/24/09	
SCALE: AS SHOWN		

SCCC INC. AND DIAMOND SITES
KEARNY, NEW JERSEY

LINE DRAWING
HYDRAULIC CONTROL
TREATMENT SYSTEM

PROJECT NO: 09-964

FIGURE 2

y:\00civil\kearny\ira design\production drawings\discharge to surface water permit application\09-964 phase 03\figure 2 line drawing hydraulic control.dwg Last Saved By: Tdebogovich 1/25/2010 9:39 AM Plotted By: Travis Debogovich 2/3/2010 2:57 PM Scale: 1:1

TEMPORARY CONSTRUCTION TREATMENT SYSTEM (TCTS)[1]

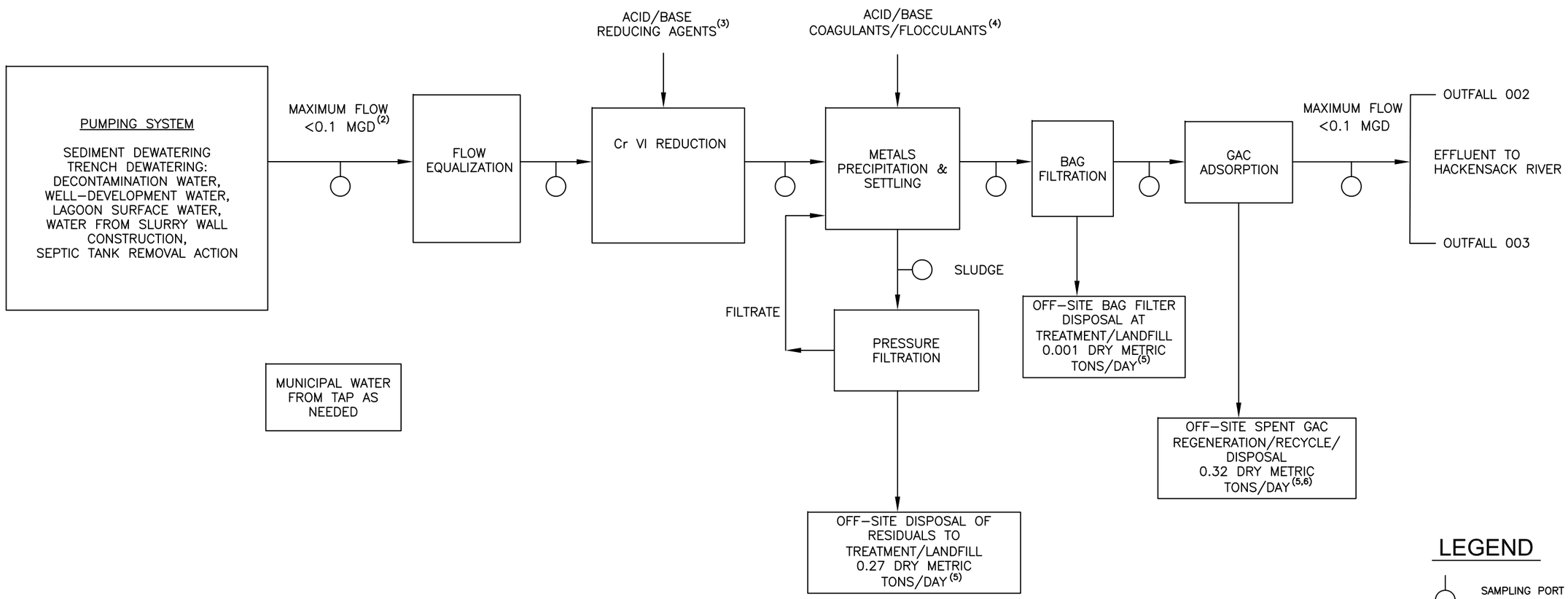

NOTES:

1. TREATMENT UNITS MAY BE MODIFIED, ENHANCED, AND/OR ELIMINATED DEPENDING ON EFFECTIVENESS OF INDIVIDUAL UNITS TO ACHIEVE PERMIT DISCHARGE LIMITS.
2. MAXIMUM DAILY FLOW LESS THAN 0.1 MGD.
3. FERROUS SULFATE AND SODIUM SULFIDE ADDED TO REDUCE CHROMIUM FROM THE HEXAVALENT TO TRIVALENT FORM.
4. CATIONIC AND ANIONIC POLYMERS, AND/OR FLOCCULATION AID, SUCH AS FERRIC CHLORIDE, FOR COAGULATION AND FLOCCULATION.
5. RESIDUAL–ESTIMATED AMOUNT, ACTUAL QUANTITIES MAY VARY. RESIDUALS WILL BE HANDLED AS NON–HAZARDOUS OR HAZARDOUS WASTE, DEPENDING ON CHARACTERIZATION RESULTS.
6. GAC TRANSPORTED OFFSITE FOR RECYCLE, REGENERATION OR DISPOSAL

GPM = GALLONS PER MINUTE
GPD = GALLONS PER DAY
GAC = GRANULAR ACTIVATED CARBON
DNAPL = DENSE NON–AQUEOUS PHASE LIQUID
Cr VI = HEXAVALENT CHROMIUM

REV #	DATE	DESCRIPTION	APPD
1			
2			
3			

REFERENCE:

ISSUE DATE:

KEY ENVIRONMENTAL, INC.
200 THIRD AVENUE
CARNEGIE, PA 15106

SCCC, INC. AND TIERRA SOLUTIONS INC.

DRWN: SCC	DATE: 08/24/09	KEY ENVIRONMENTAL INCORPORATED
CHKD: JAB	DATE: 08/24/09	
APPD: PWS	DATE: 08/24/09	
SCALE: AS SHOWN		

SCCC INC. AND DIAMOND SITES
KEARNY, NEW JERSEY

LINE DRAWING
TEMPORARY CONSTRUCTION
TREATMENT SYSTEM

PROJECT NO: 09–964

FIGURE 3

y:\00civil\kearny\ira design\production drawings\discharge to surface water permit application\09–964 phase 03\figure 3 line drawingtreatment system.dwg Last Saved By: Tdebogovich 1/25/2010 9:43 AM Plotted By: Travis Debogovich 2/3/2010 2:59 PM Scale: 1:1

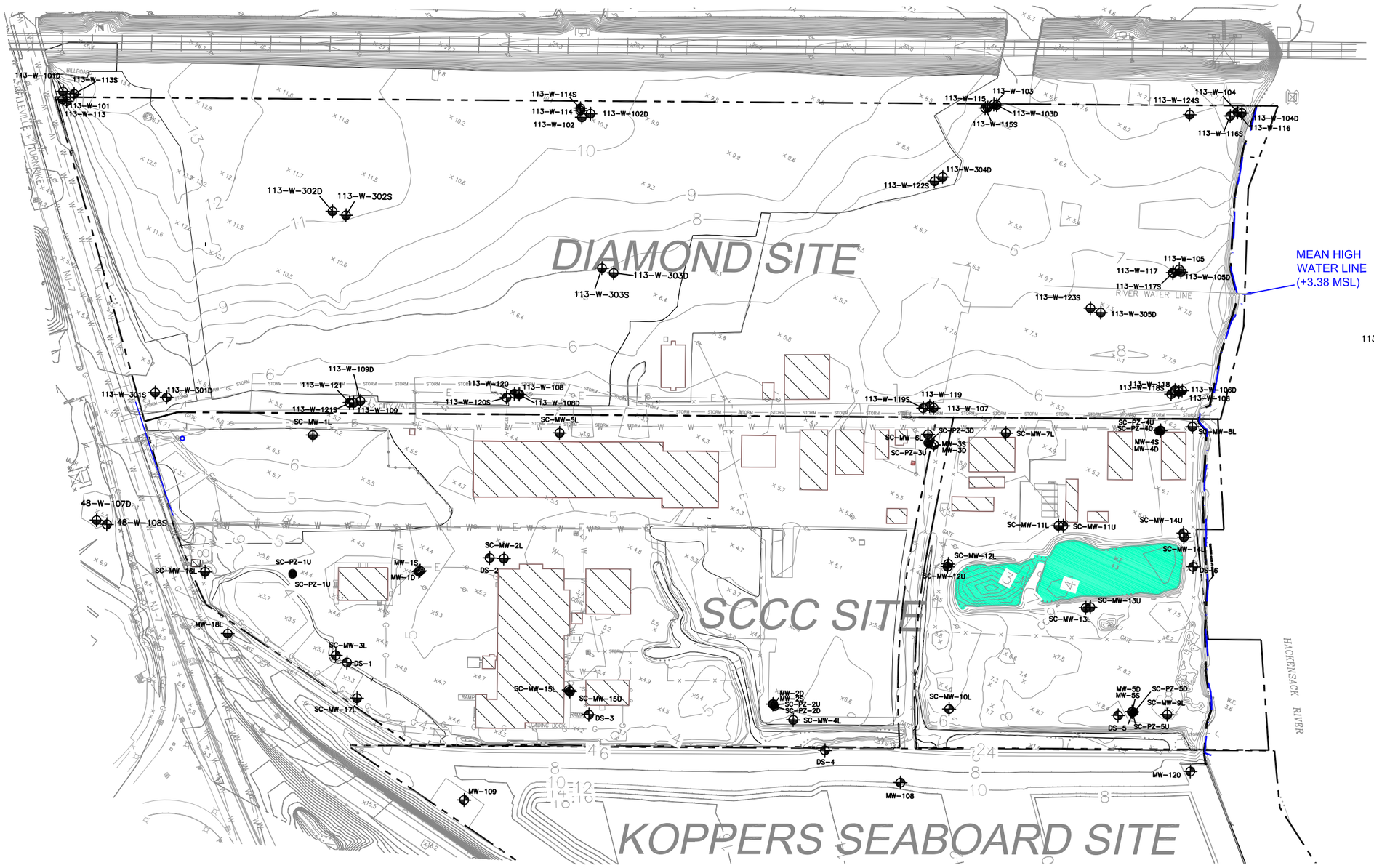

LEGEND

- EAST AND WEST LAGOONS
- EXISTING BUILDING
- 113-W-118S 113-W-118 — SHALLOW GROUNDWATER MONITORING WELL
- 113-W-106D — DEEP GROUNDWATER MONITORING WELL
- PIEZOMETER LOCATION
- PROPERTY BOUNDARY
- EXISTING UTILITY POLES
- EXISTING LIGHT STANDARD
- E — EXISTING OVERHEAD POWER LINE
- W — W — EXISTING WATER LINES
- G — G — EXISTING GAS LINES
- STORM — EXISTING STORM DRAIN

0 200 400 FEET

SCCC, INC. AND TIERRA SOLUTIONS INC.

DRWN: SCC	DATE: 08/24/09	KEY ENVIRONMENTAL INCORPORATED	
CHKD: JAB	DATE: 08/24/09		
APPD: PWS	DATE: 08/24/09		
SCALE: AS SHOWN			

SCCC INC. AND DIAMOND SITES
KEARNY, NEW JERSEY

MONITORING WELL LOCATIONS

PROJECT NO: 09-964

FIGURE 4

REV #	DATE	DESCRIPTION	APPD
3			
2			
1			

REFERENCE: EXISTING GROUND SURFACE CONTOURS PER AIR SURVEY, DULLES, VIRGINIA, APRIL 14, 2001. HORIZONTAL REFERENCE: NEW JERSEY STATE PLANE COORDINATES (NAD 1927). VERTICAL REFERENCE: NATIONAL GEODETIC VERTICAL DATUM (NGVD 1929).

ISSUE DATE:

KEY ENVIRONMENTAL, INC.
200 THIRD AVENUE
CARNEGIE, PA 15106

y:\00civil\kearny\ira design\production drawings\discharge to surface water permit application\09-964 phase 03\figure 4 monitoring well locations.dwg Last Saved By: Tdebogovich 1/25/2010 9:44 AM Plotted By: Travis Debogovich 2/3/2010 3:01 PM Scale: 1:1

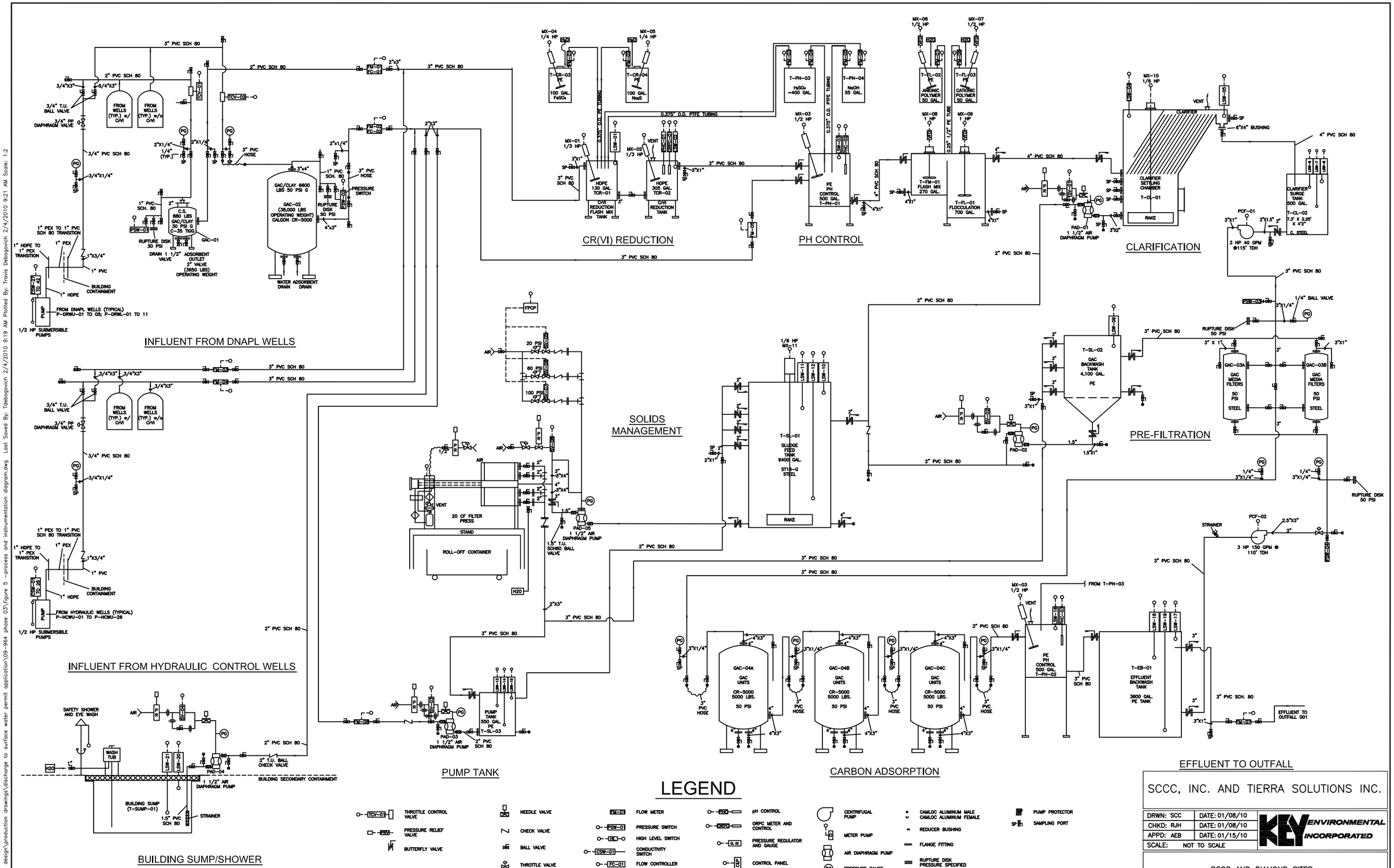

REV #	DATE	DESCRIPTION	APPD

REFERENCE:

ISSUE DATE:

KEY ENVIRONMENTAL, INC.
200 THIRD AVENUE
CARNEGIE, PA 15106

SCCC, INC. AND TIERRA SOLUTIONS INC.

DRWN: SCC	DATE: 01/08/10
CHKD: RJH	DATE: 01/08/10
APPD: AEB	DATE: 01/15/10
SCALE: NOT TO SCALE	

KEY ENVIRONMENTAL INCORPORATED

SCCC AND DIAMOND SITES
KEARNY, NEW JERSEY

HCTS PROCESS AND INSTRUMENTATION DIAGRAM

PROJECT NO: 09-964

FIGURE 5

y:\00civil\kearny\ira design\production drawings\discharge to surface water permit application\09-964 phase 03\figure 5 -process and instrumentation diagram.dwg Last Saved By: Tdebogovich 2/4/2010 9:19 AM Plotted By: Travis Debogovich 2/4/2010 9:21 AM Scale: 1:2

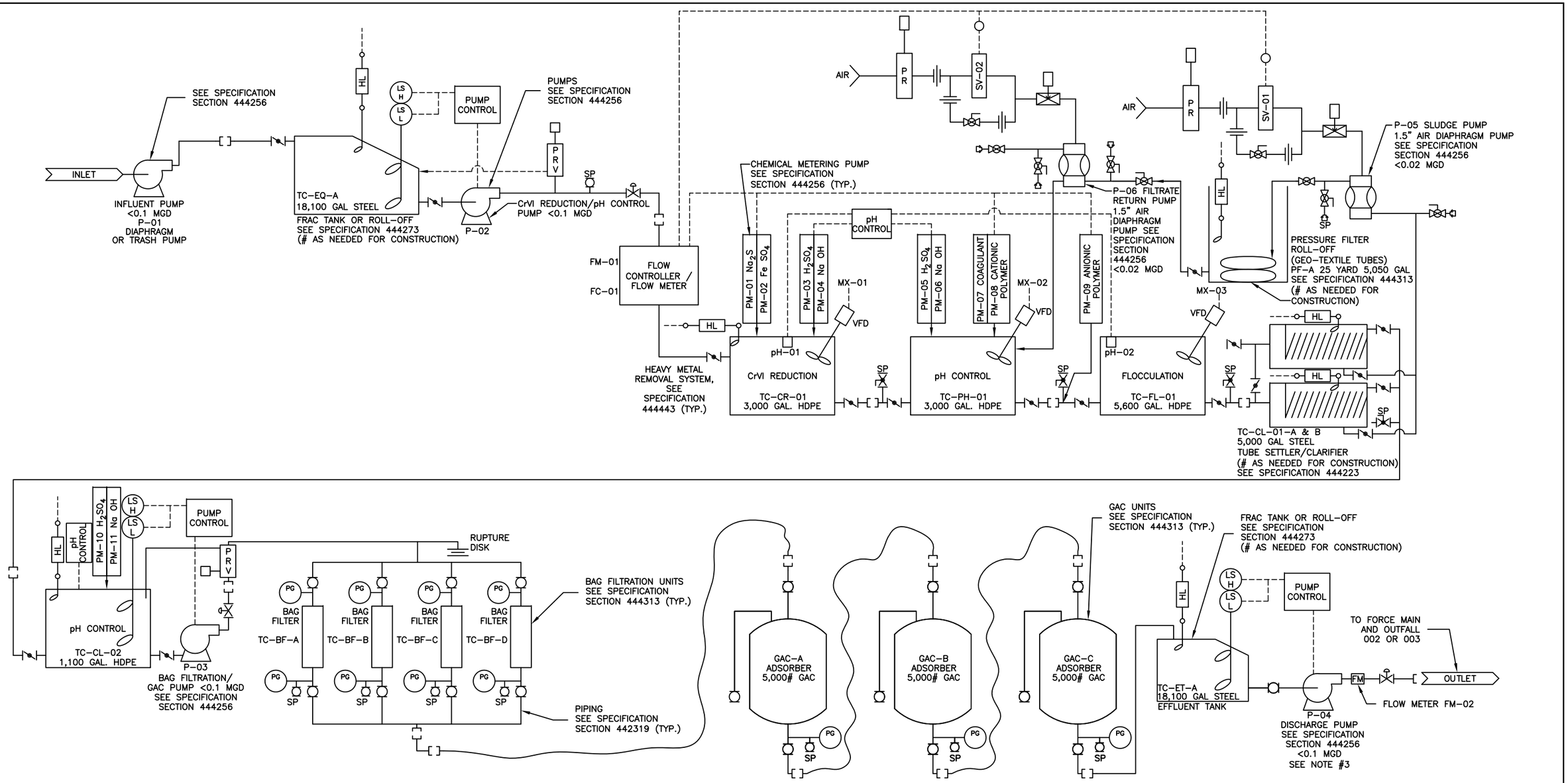

LEGEND

- ELECTRICAL LINE
- BUTTERFLY VALVE
- CHECK VALVE
- FLOW CONTROL VALVE
- BALL VALVE
- PG — PRESSURE GAUGE
- HL — HIGH LEVEL ALARM/ SHUT OFF
- SP — SAMPLE PORT
- LS — LEVEL SWITCH
- PRV — PRESSURE RELIEF VALVE
- FLEX/CAMLOCK CONNECTION
- PR — PRESSURE REGULATOR
- pH — pH CONTROL
- SV — SOLENOID VALVE
- CENTRIFUGAL PUMP
- AIR DIAPHRAGM PUMP
- PM — CHEMICAL METERING PUMP
- NEEDLE VALVE
- RUPTURE DISK
- FLANGE FITTING
- UNION

TEMPORARY CONSTRUCTION TREATMENT SYSTEM

NOTES:

1. TREATMENT UNITS SHOWN MAY BE MODIFIED, ENHANCED, AND/OR ELIMINATED DEPENDING ON EFFECTIVENESS OF INDIVIDUAL COMPONENTS IN ACHIEVING PERMIT DISCHARGE LIMITS.
2. EQUALIZATION TANK(S), TUBE SETTLER/CLARIFER, EFFLUENT TANK AND PRESSURE FILTER ROLL-OFF MAY INCLUDE ADDITIONAL TANKS, AS NEEDED.
3. DEPENDING ON TREATMENT SYSTEM LOCATION AND CONFIGURATION, GRAVITY FEED/DISCHARGE MAY BE CONSIDERED.
4. THE CONTRACTOR MAY RECOMMEND POTENTIAL SYSTEM MODIFICATIONS TO THE ENGINEER.

REV #	DATE	DESCRIPTION	APPD
△			
△			
△			

REFERENCE:

ISSUE DATE:

KEY ENVIRONMENTAL, INC.
200 THIRD AVENUE
CARNEGIE, PA 15106

SCCC, INC. AND TIERRA SOLUTIONS INC.

DRWN: WAA	DATE: 02/27/09	KEY ENVIRONMENTAL INCORPORATED
CHKD: AEB	DATE: 02/27/09	
APPD: PWS	DATE: 02/27/09	
SCALE: NOT TO SCALE		

SCCC AND DIAMOND SITES
KEARNY, NEW JERSEY

TEMPORARY CONSTRUCTION TREATMENT PROCESS AND INSTRUMENTATION DIAGRAM

PROJECT NO: 09-964

FIGURE 6

y:\00civil\kearny\ra design\production drawings\discharge to surface water permit application\09-964 phase 03\figure 6 - temporary construction treatment system process and instrumentation diagram.dwg Last Saved By: Tdebogovich 2/3/2010 1:26 PM Plotted By: Travis Debogovich 2/3/2010 3:00 PM Scale: 1:2

2c) Engineer's Abstract

ATTACHMENT B

- **Table 1** **Summary of Representative Influent Data, SCCC and Diamond Sites**
- **Table 2** **Summary of Representative Influent Data from Seaboard Site**
- **Table 3** **Summary of Representative Influent Data from Lagoon Water, SCCC and Diamond Sites**
- **Table 4** **Sludge and/or Residuals Off-site Treatment, Recycling, Disposal, and/or Incineration Facilities**
- **Table 5** **Expected Effluent Composition, SCCC and Diamond Sites**

TABLE 1
SUMMARY OF REPRESENTATIVE INFLUENT DATA*
SCCC AND DIAMOND SITES - KEARNY, NEW JERSEY

CONSTITUENT	UNITS	113-W-113	113-W-114	113-W-115	113-W-116	SC-MW-12U	SC-MW-13L	SC-MW-15L
VOLATILE ORGANIC COMPOUNDS								
1,1,1-Trichloroethane	(ug/l)	0.79U	0.79U	0.79U	0.79U	0.79U	20U	200U
1,1,2,2-Tetrachloroethane	(ug/l)	0.63U	0.63U	0.63U	0.63U	0.63U	16U	160U
1,1,2-Trichloroethane	(ug/l)	0.79U	0.79U	0.79U	0.79U	0.79U	20U	200U
1,1,2-Trichloro-1,2,2-trifluoroethane	(ug/l)	1.2U	1.2U	1.2U	1.2U	1.2U	31U	310U
1,1-Dichloroethane	(ug/l)	1.0U	1.0U	1.0U	1.0U	1.0U	25U	250U
1,1-Dichloroethylene	(ug/l)	0.87U	0.87U	0.87U	0.87U	0.87U	22U	220U
1,2,4-Trichlorobenzene	(ug/l)	0.42U	0.42U	0.42U	0.42U	0.42U	2400	440J
1,2-Dibromoethane (EDB)	(ug/l)	0.64U	0.64U	0.64U	0.64U	0.64U	16U	160U
1,2-Dichlorobenzene	(ug/l)	0.65U	0.65U	0.65U	0.82J	4.0J	700	36000
1,2-Dichloroethane	(ug/l)	0.64U	0.64U	0.64U	0.64U	0.64U	16U	160U
1,2-Dichloropropane	(ug/l)	0.67U	0.67U	0.67U	0.67U	0.67U	17U	170U
1,3-Dichlorobenzene	(ug/l)	0.66U	0.66U	0.66U	0.66U	10	160	26000
1,4-Dichlorobenzene	(ug/l)	0.60U	0.62J	0.60U	0.60U	35	380	42000
2-Butanone	(ug/l)	7.3	0.73U	10	12	0.73U	18U	180U
2-Hexanone	(ug/l)	0.96J	0.45U	0.45U	0.45U	0.45U	11U	110U
4-Methyl-2-pentanone	(ug/l)	0.46U	0.46U	0.46U	0.46U	0.46U	12U	120U
Acetone	(ug/l)	85	51	66	160	5.0U	280J	1200U
Benzene	(ug/l)	0.81U	0.81U	0.81U	1.2J	0.81U	20U	350J
Bromodichloromethane	(ug/l)	0.58U	0.58U	0.58U	0.58U	0.58U	15U	150U
Bromoform	(ug/l)	0.37U	0.37U	0.37U	0.37U	0.37U	9.2U	92U
Bromomethane	(ug/l)	0.75U	0.75U	0.75U	0.75U	0.75U	19U	190U
Carbon disulfide	(ug/l)	1.1U	1.1U	1.1U	1.1U	1.1U	27U	270U
Carbon Tetrachloride	(ug/l)	0.91U	0.91U	0.91U	0.91U	0.91U	23U	230U
Chlorobenzene	(ug/l)	0.71U	0.71U	0.71U	0.71U	37	33J	7800
Chloroethane	(ug/l)	1.1U	1.1U	1.1U	1.1U	1.1U	28U	280U
Chloroform	(ug/l)	0.78U	0.78U	0.78U	0.78U	0.78U	19U	190U
Chloromethane	(ug/l)	0.87U	0.87U	0.87U	0.87U	0.87U	22U	220U
cis-1,2-Dichloroethylene	(ug/l)	1.0U	1.0U	1.0U	1.0U	1.0U	25U	250U
cis-1,3-Dichloropropene	(ug/l)	0.79U	0.79U	0.79U	0.79U	0.79U	20U	200U
Cyclohexane	(ug/l)	1.1U	1.1U	1.1U	1.1U	1.1U	27U	270U
Dibromochloropropane	(ug/l)	1.3U	1.3U	1.3U	1.3U	1.3U	31U	310U
Dibromochloromethane	(ug/l)	0.50U	0.50U	0.50U	0.50U	0.50U	12U	120U
Dichlorodifluoromethane	(ug/l)	1.0U	1.0U	1.0U	1.0U	1.0U	26U	260U
Ethylbenzene	(ug/l)	0.58U	0.58U	0.58U	0.58U	0.58U	15U	150U
Isopropylbenzene	(ug/l)	0.72U	0.72U	0.72U	0.72U	0.72U	18U	180U

TABLE 1
SUMMARY OF REPRESENTATIVE INFLUENT DATA*
SCCC AND DIAMOND SITES - KEARNY, NEW JERSEY

CONSTITUENT	UNITS	113-W-113	113-W-114	113-W-115	113-W-116	SC-MW-12U	SC-MW-13L	SC-MW-15L
Methyl Acetate	(ug/l)	0.47U	0.47U	0.47U	0.47U	0.47U	12U	120U
Methylcyclohexane	(ug/l)	1.1U	1.1U	1.1U	1.1U	1.1U	27U	270U
Methylene chloride	(ug/l)	0.75U	0.75U	0.75U	0.75U	0.75U	19U	190U
Methyltert-butylether	(ug/l)	0.77U	0.77U	0.77U	0.77U	0.77U	19U	190U
Styrene	(ug/l)	0.80U	0.80U	0.80U	0.80U	0.80U	20U	200U
Tetrachloroethylene	(ug/l)	0.57U	0.57U	0.57U	0.57U	0.57U	14U	140U
Toluene	(ug/l)	0.80U	0.80U	0.80U	4.5J	0.80U	20U	200U
trans-1,2-Dichloroethene	(ug/l)	0.90U	0.90U	0.90U	0.90U	0.90U	23U	230U
Trans-1,3-Dichloropropene	(ug/l)	0.57U	0.57U	0.57U	0.57U	0.57U	14U	140U
Trichloroethylene	(ug/l)	0.88U	0.88U	0.88U	0.88U	0.88U	22U	220U
Trichlorofluoromethane	(ug/l)	0.80U	0.80U	0.80U	0.80U	0.80U	20U	200U
Vinyl chloride	(ug/l)	0.94U	0.94U	0.94U	0.94U	0.94U	24U	240U
Xylene (total)	(ug/l)	2.4U	2.4U	2.4U	2.4U	2.4U	61U	610U

TABLE 1
SUMMARY OF REPRESENTATIVE INFLUENT DATA*
SCCC AND DIAMOND SITES - KEARNY, NEW JERSEY

CONSTITUENT	UNITS	113-W-113	113-W-114	113-W-115	113-W-116	SC-MW-12U	SC-MW-13L	SC-MW-15L
SEMIVOLATILE ORGANIC COMPOUNDS								
1,1'-Biphenyl	(ug/l)	0.69U	0.69U	0.69U	0.66U	1.2J	140	0.63U
2,2'-oxybis(1-chloropropane)	(ug/l)	0.30U	0.30U	0.30U	0.29U	0.30U	1.4U	0.27U
2,4,5-Trichlorophenol	(ug/l)	0.71U	0.71U	0.71U	0.69U	0.71U	3.4U	0.66U
2,4,6-Trichlorophenol	(ug/l)	0.65U	0.65U	0.65U	0.62U	0.65U	170	0.60U
2,4-Dichlorophenol	(ug/l)	0.55U	0.55U	0.55U	0.53U	1.4J	2.6U	48
2,4-Dimethylphenol	(ug/l)	0.59U	7.9J	0.59U	0.57U	12	3100J	3.9J
2,4-Dinitrophenol	(ug/l)	15U	15U	15U	14U	15U	70U	13U
2,4-Dinitrotoluene	(ug/l)	0.51U	0.51U	0.51U	0.50U	0.51U	2.5U	0.47U
2,6-Dinitrotoluene	(ug/l)	0.58U	0.58U	0.58U	0.56U	0.58U	2.8U	0.53U
2-Chloronaphthalene	(ug/l)	0.50U	0.50U	0.50U	0.49U	0.50U	2.4U	0.46U
2-Chlorophenol	(ug/l)	0.52U	0.52U	0.52U	0.50U	0.52U	2.5U	0.48U
2-Methylnaphthalene	(ug/l)	0.53U	0.66J	0.53U	0.51U	0.69J	790	0.89J
2-Methylphenol	(ug/l)	0.58U	9.7J	0.58U	1.1J	3.5J	4000J	1.4J
2-Nitroaniline	(ug/l)	0.54U	0.54U	0.54U	0.52U	0.54U	2.6U	0.50U
2-Nitrophenol	(ug/l)	0.62U	0.62U	0.62U	0.59U	0.62U	2.9U	0.57U
3,3-Dichlorobenzidine	(ug/l)	0.47U	0.47U	0.47U	0.45U	0.47U	2.2U	0.43U
3-Nitroaniline	(ug/l)	0.46U	0.46U	0.46U	0.44U	0.46U	2.2U	0.42U
4,6-Dinitro-2-methylphenol	(ug/l)	16U	16U	16U	16U	16U	77U	15U
4-Bromophenylphenyl ether	(ug/l)	0.56U	0.56U	0.56U	0.55U	0.56U	2.7U	0.52U
4-Chloroaniline	(ug/l)	0.53U	0.53U	0.53U	0.51U	0.53U	2.5U	0.49U
4-Chlorophenyl phenyl ether	(ug/l)	0.49U	0.49U	0.49U	0.47U	0.49U	2.3U	0.45U
4-Chloro-3-methylphenol	(ug/l)	0.67U	0.67U	0.67U	0.65U	0.67U	3.2U	0.62U
4-Methylphenol	(ug/l)	0.84U	39	10J	9.5J	16	19000	5.6J
4-Nitroaniline	(ug/l)	0.29U	0.29U	0.29U	0.28U	0.29U	1.4U	0.27U
4-Nitrophenol	(ug/l)	0.80U	0.80U	0.80U	0.77U	0.80U	3.8U	0.74U
Acenaphthene	(ug/l)	0.60U	1.6J	0.60U	0.57U	3.4J	11000U	1.0J
Acenaphthylene	(ug/l)	0.53U	0.53U	0.53U	0.51U	0.59J	78	0.49U
Acetophenone	(ug/l)	0.53U	1.2J	0.53U	2.4J	0.53U	2.5U	0.49U
Anthracene	(ug/l)	0.58U	0.58U	0.58U	0.56U	0.66J	77	0.53U
Atrazine	(ug/l)	0.44U	0.44U	0.44U	0.43U	0.44U	2.1U	0.41U
Benzaldehyde	(ug/l)	0.62U	3.2J	0.62U	0.60U	0.62U	2.9U	0.57U
Benzo(a)anthracene	(ug/l)	0.47U	0.47U	0.47U	0.45U	0.47U	2.2U	0.43U
Benzo(a)pyrene	(ug/l)	0.50U	0.50U	0.50U	0.48U	0.50U	2.4U	0.46U
Benzo(b)fluoranthene	(ug/l)	0.36U	0.36U	0.36U	0.34U	0.36U	1.7U	0.33U
Benzo(ghi)perylene	(ug/l)	0.31U	0.31U	0.31U	0.30U	0.31U	1.5U	0.29U

TABLE 1
SUMMARY OF REPRESENTATIVE INFLUENT DATA*
SCCC AND DIAMOND SITES - KEARNY, NEW JERSEY

CONSTITUENT	UNITS	113-W-113	113-W-114	113-W-115	113-W-116	SC-MW-12U	SC-MW-13L	SC-MW-15L
Benzo(k)fluoranthene	(ug/l)	0.45U	0.45U	0.45U	0.43U	0.45U	2.1U	0.41U
Bis(2-chloroethoxy)methane	(ug/l)	1.4U	1.4U	1.4U	1.3U	1.4U	6.6U	1.3U
Bis(2-chloroethyl)ether	(ug/l)	0.52U	0.52U	0.52U	0.51U	0.52U	2.5U	0.48U
Bis(2-ethylhexyl)phthalate	(ug/l)	1.4U	2.2J	2.4J	3.0J	1.5J	6.5U	1.8J
Butyl benzyl phthalate	(ug/l)	1.6U	1.6U	1.6U	1.5U	1.6U	7.5U	2.5J
Caprolactam	(ug/l)	2.4J	6.8J	2.1U	13	3.8J	10U	5.1J
Carbazole	(ug/l)	0.60U	0.60U	0.60U	0.57U	0.60U	36J	2.0J
Chrysene	(ug/l)	0.41U	0.41U	0.41U	0.39U	0.41U	1.9U	0.37U
Dibenzo(a,h)anthracene	(ug/l)	0.40U	0.40U	0.40U	0.38U	0.40U	1.9U	0.37U
Dibenzofuran	(ug/l)	0.61U	0.61U	0.61U	0.59U	3.0J	2.9U	0.56U
Diethyl phthalate	(ug/l)	2.8U	2.8U	2.8U	2.7U	2.8U	13U	2.6U
Dimethyl phthalate	(ug/l)	0.48U	0.48U	0.48U	0.46U	0.48U	2.3U	0.44U
Di-n-butyl phthalate	(ug/l)	0.53U	0.53U	0.53U	0.51U	0.53U	2.5U	0.49U
Di-n-octyl phthalate	(ug/l)	0.49U	0.49U	0.49U	0.47U	0.49U	2.3U	0.45U
Fluoranthene	(ug/l)	0.56U	0.56U	0.56U	0.54U	1.1J	13J	0.61J
Fluorene	(ug/l)	0.62U	1.2J	0.62U	0.60U	2.1J	170	0.57U
Hexachlorobenzene	(ug/l)	0.50U	0.50U	0.50U	0.48U	0.50U	2.4U	0.46U
Hexachlorobutadiene	(ug/l)	0.43U	0.43U	0.43U	0.41U	0.43U	2.0U	0.39U
Hexachlorocyclopentadiene	(ug/l)	0.91U	0.91U	0.91U	0.88U	0.91U	4.4U	0.84U
Hexachloroethane	(ug/l)	0.50U	0.50U	0.50U	0.48U	0.50U	2.4U	0.46U
Indeno(1,2,3-cd)pyrene	(ug/l)	0.54U	0.54U	0.54U	0.52U	0.54U	2.6U	0.50U
Isophorone	(ug/l)	0.54U	0.54U	0.54U	0.52U	0.54U	2.6U	0.50U
Naphthalene	(ug/l)	1.8J	6.9J	0.83J	1.1J	6.2J	1700J	24
Nitrobenzene	(ug/l)	0.73U	0.73U	0.73U	0.70U	0.73U	3.5U	0.67U
N-Nitrosodiphenylamine	(ug/l)	0.56U	0.56U	0.56U	0.54U	0.56U	2.7U	0.51U
N-Nitrosodipropylamine	(ug/l)	0.68U	0.68U	0.68U	0.65U	0.68U	3.2U	0.62U
Pentachlorophenol	(ug/l)	0.95U	0.95U	0.95U	0.91U	0.95U	4.5U	0.87U
Phenanthrene	(ug/l)	0.63U	0.63U	0.63U	0.61U	1.0J	19J	0.85J
Phenol	(ug/l)	0.25U	48	120	17	5.1J	19000	7.2J
Pyrene	(ug/l)	0.64U	0.64U	0.64U	0.62U	0.77J	31J	0.59U
1,2,4-Trichlorobenzene	(ug/l)	0.45U	NA	NA	NA	NA	NA	NA
1,4-Dichlorobenzene	(ug/l)	0.55U	NA	NA	NA	NA	NA	NA

TABLE 1
SUMMARY OF REPRESENTATIVE INFLUENT DATA*
SCCC AND DIAMOND SITES - KEARNY, NEW JERSEY

CONSTITUENT	UNITS	113-W-113	113-W-114	113-W-115	113-W-116	SC-MW-12U	SC-MW-13L	SC-MW-15L
METALS								
Aluminum	(ug/l)	99.2BJ	72100	3020J	785J	40.3B	390000J	123B
Antimony	(ug/l)	2.9U	14.5U	2.9U	2.9U	2.9U	2.9U	2.9U
Arsenic	(ug/l)	2.2U	11.2U	27.1	5.6B	2.2U	56.5	2.2U
Barium	(ug/l)	809	28.2BJ	49.2B	594	19.2BJ	44.5B	88.9B
Beryllium	(ug/l)	0.32U	0.32U	0.32U	0.32U	0.32U	14.4	0.32U
Cadmium	(ug/l)	0.23U	0.23U	0.33B	0.23U	0.23U	0.23U	0.23U
Calcium	(ug/l)	633000J	93800J	24200J	568000J	45700J	443000J	57600J
Chromium	(ug/l)	5440	39400	2660	6340	32.6	6930	4.3B
Cobalt	(ug/l)	2.2B	5.7B	1.2B	9.6B	0.74B	162	0.70U
Copper	(ug/l)	0.72U	8.5B	48.3	6.0B	2.5B	0.72U	1.3B
Iron	(ug/l)	20.5B	123	925	212	673	309000	8120
Lead	(ug/l)	2.4U	2.4U	69	3.1	2.4U	401	79.4
Magnesium	(ug/l)	9.3BJ	12.7BJ	529BJ	97.8BJ	30300J	133000J	27400J
Manganese	(ug/l)	0.32U	0.32U	5.4B	3.1B	35	3590	268
Mercury	(ug/l)	0.055U	0.055U	0.055U	0.055U	0.055U	0.085B	0.055U
Nickel	(ug/l)	2.4B	11.5B	64.1	75.5	1.2B	1980	1.2B
Potassium	(ug/l)	117000E	48900	19000	43200	2410B	200000	13600
Selenium	(ug/l)	2.5U	2.5U	2.5U	2.5U	2.5U	34.3	2.5U
Silver	(ug/l)	0.59U	0.59U	1.2B	0.59U	0.59U	0.83B	0.59U
Sodium	(ug/l)	605000	798000	223000	841000	36600	1010000	64200
Thallium	(ug/l)	3.4BJ	14.8J	3.1U	3.4BJ	4.8BJ	15.4U	3.1U
Vanadium	(ug/l)	1.0U	4.7BJ	98.2	1.0U	4.8BJ	386	6.4B
Zinc	(ug/l)	2.1B	2.7B	20.1	3.7B	1.3U	818	1.5B

TABLE 1
SUMMARY OF REPRESENTATIVE INFLUENT DATA*
SCCC AND DIAMOND SITES - KEARNY, NEW JERSEY

CONSTITUENT	UNITS	113-W-113	113-W-114	113-W-115	113-W-116	SC-MW-12U	SC-MW-13L	SC-MW-15L
PESTICIDES/PCBS								
Aroclor 1016	(ug/l)	0.10U	0.12U	0.10U	0.10U	0.11U	7.5	0.10U
Aroclor 1221	(ug/l)	0.10U	0.12U	0.10U	0.10U	0.11U	1.0U	0.10U
Aroclor 1232	(ug/l)	0.12U	0.14U	0.12U	0.12U	0.13U	1.2U	0.12U
Aroclor 1242	(ug/l)	0.076U	0.086U	0.076U	0.077U	0.085U	0.76U	0.076U
Aroclor 1248	(ug/l)	0.093U	0.11U	0.093U	0.095U	0.10U	0.93U	0.093U
Aroclor 1254	(ug/l)	0.093U	0.11U	0.093U	0.095U	0.10U	0.93U	0.093U
Aroclor 1260	(ug/l)	0.055U	0.063U	0.055U	0.056U	0.062U	0.55U	0.055U
Aroclor 1262	(ug/l)	0.084U	0.096U	0.084U	0.086U	0.094U	0.84U	0.084U
Aroclor 1268	(ug/l)	0.11U	0.13U	0.11U	0.11U	0.12U	1.1U	0.11U
4,4'-DDD	(ug/l)	0.0079U	0.0090U	0.0079U	0.0080U	0.0088U	0.079U	0.0079U
4,4'-DDE	(ug/l)	0.0069U	0.0078U	0.0069U	0.0070U	0.0077U	0.069U	0.0069U
4,4'-DDT	(ug/l)	0.014U	0.016U	0.014U	0.014U	0.016U	0.14U	0.014U
Aldrin	(ug/l)	0.011U	0.013U	0.011U	0.012U	0.013U	0.12JPG	0.011U
alpha-BHC	(ug/l)	0.015U	0.018U	0.015U	0.039J	0.017U	0.15U	0.015U
alpha-Chlordane	(ug/l)	0.014J	0.013U	0.011U	0.012U	0.013U	0.38J	0.011U
beta-BHC	(ug/l)	0.015U	0.017U	0.015U	0.015U	0.017U	0.15U	0.015U
delta-BHC	(ug/l)	0.0097U	0.011U	0.015J	0.0098U	0.011U	0.24J	0.0097U
Dieldrin	(ug/l)	0.0082U	0.0093U	0.0082U	0.0083U	0.0091U	0.082U	0.0082U
Endosulfan I	(ug/l)	0.0076U	0.0086U	0.0076U	0.0077U	0.0085U	0.076U	0.0076U
Endosulfan II	(ug/l)	0.015U	0.017U	0.015U	0.016U	0.017U	0.15U	0.015U
Endosulfan sulfate	(ug/l)	0.016U	0.018U	0.016U	0.017U	0.018U	0.16U	0.016U
Endrin	(ug/l)	0.0078U	0.0088U	0.0078U	0.0079U	0.0087U	0.078U	0.0078U
Endrin aldehyde	(ug/l)	0.012U	0.014U	0.012U	0.013U	0.014U	0.12U	0.012U
Endrin ketone	(ug/l)	0.010U	0.012U	0.010U	0.010U	0.011U	0.10U	0.010U
gamma-Chlordane	(ug/l)	0.0077U	0.0088U	0.0077U	0.0079U	0.0086U	0.077U	0.0077U
Heptachlor	(ug/l)	0.014U	0.016U	0.014U	0.014U	0.016U	0.17JPG	0.014U
Heptachlor epoxide	(ug/l)	0.010U	0.011U	0.010U	0.010U	0.011U	0.10U	0.010U
Lindane	(ug/l)	0.015U	0.018U	0.015U	0.045J	0.017U	0.15U	0.015U
Methoxychlor	(ug/l)	0.019U	0.021U	0.019U	0.019U	0.021U	0.19U	0.019U
Toxaphene	(ug/l)	0.42U	0.48U	0.42U	0.43U	0.47U	4.2U	0.42U

TABLE 1
SUMMARY OF REPRESENTATIVE INFLUENT DATA*
SCCC AND DIAMOND SITES - KEARNY, NEW JERSEY

CONSTITUENT	UNITS	113-W-113	113-W-114	113-W-115	113-W-116	SC-MW-12U	SC-MW-13L	SC-MW-15L
WET CHEMISTRY								
BOD	(mg/l)	10.9	14.2	22.3	34.3	63.6	457	129
Total Organic Carbon (TOC)	(mg/l)	6.0J	1.3J	27.1J	18.7J	46.6J	7050J	18.4J
Chemical Oxygen Demand (COD)	(mg/l)	27	33.3	121	98.8	156	23900	66
Chromium (Hexavalent)	(ug/l)	4930	19300	100U	3630	10.0U	20.0U	10.0U
Cyanide	(ug/l)	NA	NA	NA	NA	NA	NA	NA
Ferrous Iron	(mg/l)	NA	NA	NA	NA	NA	NA	NA
Oil & Grease (HEM)	(mg/l)	0.54U	0.56U	0.51U	0.52U	0.51U	15.9	0.52U
Residue, filterable	(mg/l)	3200	1860	236	3910	424	21700	454
Residue, non-filterable	(mg/l)	4.0U	16.8	4.0U	18.8	4.0U	30.8	8
Total Alkalinity	(mg/l)	3000J	1980J	533J	2800J	73.0J	0.41U	316J
Total Sulfide	(mg/l)	NA	NA	NA	NA	NA	NA	NA

Qualifiers:

U - The compound was not detected at the indicated concentration.
J - Qualified non-detect due to lab interfernce.
NR - Not analyzed.
N/L - No Limit
*The monitoring well sample collection locations are shown in Attachment A - Figure 4.

TABLE 2
SUMMARY OF REPRESENTATIVE INFLUENT DATA FROM SEABOARD SITE*
SCCC AND DIAMOND SITES
KEARNY, NEW JERSEY

CONSTITUENT	UNITS	MW-108 12/11/2008	MW-109 12/11/2008	MW-120 12/11/2008
VOLATILE COMPOUNDS (GC/MS)				
1,1,1-Trichloroethane	(ug/l)	<5.0	<1.3	<0.25
1,1,2,2-Tetrachloroethane	(ug/l)	<3.1	<0.77	<0.15
1,1,2-Trichloroethane	(ug/l)	<3.9	<0.98	<0.20
1,1-Dichloroethane	(ug/l)	<4.9	<1.2	<0.24
1,1-Dichloroethylene	(ug/l)	<5.6	<1.4	<0.28
1,2-Dichloroethane	(ug/l)	<4.3	<1.1	<0.21
1,2-Dichloropropane	(ug/l)	<3.6	<0.90	<0.18
2-Butanone	(ug/l)	<10	<2.5	<0.50
2-Hexanone	(ug/l)	<11	<2.7	<0.53
4-Methyl-2-pentanone	(ug/l)	<4.5	<1.1	<0.23
Acetone	(ug/l)	<50	<12	<2.5
Benzene	(ug/l)	410	<1.4	0.28J
Bromodichloromethane	(ug/l)	<4.0	<1.0	<0.20
Bromoform	(ug/l)	<4.9	<1.2	<0.25
Bromomethane	(ug/l)	<6.1	<1.5	<0.30
Carbon disulfide	(ug/l)	<3.9	<0.98	<0.20
Carbon Tetrachloride	(ug/l)	<6.1	<1.5	<0.30
Chlorobenzene	(ug/l)	310	120	<0.23
Chloroethane	(ug/l)	<5.0	<1.2	<0.25
Chloroform	(ug/l)	<4.8	<1.2	<0.24
Chloromethane	(ug/l)	<5.3	<1.3	<0.27
cis-1,2-Dichloroethylene	(ug/l)	<5.5	<1.4	<0.27
cis-1,3-Dichloropropene	(ug/l)	<3.9	<0.97	<0.19
Dibromochloromethane	(ug/l)	<3.3	<0.82	<0.16
Ethylbenzene	(ug/l)	6.0J	<0.91	<0.18
Methylene chloride	(ug/l)	<6.4	<1.6	<0.32
Styrene	(ug/l)	<4.4	<1.1	<0.22
Tetrachloroethylene	(ug/l)	<4.7	<1.2	<0.24
Toluene	(ug/l)	9.5J	<1.2	0.61J
trans-1,2-Dichloroethene	(ug/l)	<5.4	<1.4	<0.27
Trans-1,3-Dichloropropene	(ug/l)	<3.7	<0.92	<0.18
Trichloroethylene	(ug/l)	<5.9	<1.5	<0.29
Vinyl chloride	(ug/l)	<5.8	<1.5	<0.29
Xylene (total)	(ug/l)	27J	<3.1	<0.62
SEMIVOLATILE COMPOUNDS (GC/MS)				
1,2,4-Trichlorobenzene	(ug/l)	<3.0	<0.75	<0.15
1,2-Dichlorobenzene	(ug/l)	<4.4	<1.1	<0.22
1,3-Dichlorobenzene	(ug/l)	<3.3	2.4J	<0.16
1,4-Dichlorobenzene	(ug/l)	460	3.7J	<0.18
2,4,5-Trichlorophenol	(ug/l)	<0.14	<0.014	<0.014
2,4,6-Trichlorophenol	(ug/l)	<0.086	<0.0086	<0.0086
2,4-Dichlorophenol	(ug/l)	<0.13	<0.013	<0.013
2,4-Dimethylphenol	(ug/l)	91	<0.0076	<0.0075
2,4-Dinitrophenol	(ug/l)	<5.8	<0.58	<0.58
2,4-Dinitrotoluene	(ug/l)	<0.16	<0.016	<0.016
2,6-Dinitrotoluene	(ug/l)	<0.18	<0.018	<0.018
2-Chloronaphthalene	(ug/l)	<0.14	<0.014	<0.014
2-Chlorophenol	(ug/l)	<0.20	0.54J	<0.020

TABLE 2
SUMMARY OF REPRESENTATIVE INFLUENT DATA FROM SEABOARD SITE*
SCCC AND DIAMOND SITES
KEARNY, NEW JERSEY

CONSTITUENT	UNITS	MW-108 12/11/2008	MW-109 12/11/2008	MW-120 12/11/2008
2-Methylnaphthalene	(ug/l)	130	<0.015	0.026J
2-Methylphenol	(ug/l)	100	<0.013	<0.013
2-Nitroaniline	(ug/l)	<0.16	<0.016	<0.016
2-Nitrophenol	(ug/l)	<0.13	<0.013	<0.013
3,3-Dichlorobenzidine	(ug/l)	<0.34	<0.034	<0.034
3-Nitroaniline	(ug/l)	<0.25	<0.025	<0.024
4,6-Dinitro-2-methylphenol	(ug/l)	<7.4	<0.74	<0.73
4-Bromophenylphenyl ether	(ug/l)	<0.18	<0.018	<0.018
4-Chloro-3-methylphenol	(ug/l)	<0.24	<0.024	<0.024
4-Chloroaniline	(ug/l)	<1.0	<0.10	<0.10
4-Chlorophenyl phenyl ether	(ug/l)	<0.099	<0.0099	<0.0098
4-Methylphenol	(ug/l)	36	<0.017	<0.017
4-Nitroaniline	(ug/l)	<0.22	<0.022	<0.021
4-Nitrophenol	(ug/l)	<3.7	<0.37	<0.37
Acenaphthene	(ug/l)	44	0.058J	1.6
Acenaphthylene	(ug/l)	<0.081	<0.0081	1.9
Anthracene	(ug/l)	0.99J	<0.0082	0.7
Benzo(a)anthracene	(ug/l)	<0.17	<0.017	0.37
Benzo(a)pyrene	(ug/l)	<0.11	<0.011	0.23
Benzo(b)fluoranthene	(ug/l)	<0.15	<0.015	0.29
Benzo(ghi)perylene	(ug/l)	<0.14	<0.014	0.21
Benzo(k)fluoranthene	(ug/l)	<0.16	<0.016	0.31
Bis(2-chloroethoxy)methane	(ug/l)	<0.13	<0.013	<0.013
Bis(2-chloroethyl)ether	(ug/l)	<0.25	<0.025	<0.025
Bis(2-ethylhexyl)phthalate (BEH	(ug/l)	<0.44	0.22J	0.35J
Butyl benzyl phthalate	(ug/l)	<2.9	<0.29	0.48J
Carbazole	(ug/l)	<0.13	<0.013	1.3
Chrysene	(ug/l)	<0.10	<0.010	0.36
Dibenzo(a,h)anthracene	(ug/l)	<0.12	<0.012	0.28
Dibenzofuran	(ug/l)	13	0.041J	0.93J
Diethyl phthalate	(ug/l)	<0.43	0.37J	0.19J
Dimethyl phthalate	(ug/l)	<0.13	<0.013	<0.013
Di-n-butyl phthalate	(ug/l)	<0.28	<0.028	0.31J
Di-n-octyl phthalate	(ug/l)	<0.15	0.053J	0.25J
Fluoranthene	(ug/l)	0.89J	<0.0095	2.4
Fluorene	(ug/l)	7.6	<0.0094	<0.0093
Hexachlorobenzene	(ug/l)	<0.17	<0.017	<0.017
Hexachlorobutadiene	(ug/l)	<0.11	<0.011	<0.011
Hexachlorocyclopentadiene	(ug/l)	<0.11	<0.011	<0.011
Hexachloroethane	(ug/l)	<0.073	<0.0073	<0.0072
Indeno(1,2,3-cd)pyrene	(ug/l)	<0.15	<0.015	0.31
Isophorone	(ug/l)	<0.27	<0.027	<0.027
Naphthalene	(ug/l)	4900	<0.027	0.2
Nitrobenzene	(ug/l)	<0.17	<0.017	<0.017
N-Nitrosodiphenylamine	(ug/l)	<0.13	<0.013	<0.013
N-Nitrosodipropylamine	(ug/l)	<0.37	<0.037	<0.036
Pentachlorophenol	(ug/l)	<1.8	<0.18	0.93J
Phenanthrene	(ug/l)	3.2	<0.027	0.23
Phenol	(ug/l)	17	<0.023	<0.022
Pyrene	(ug/l)	0.67J	<0.011	1.3

TABLE 2
SUMMARY OF REPRESENTATIVE INFLUENT DATA FROM SEABOARD SITE*
SCCC AND DIAMOND SITES
KEARNY, NEW JERSEY

CONSTITUENT	UNITS	MW-108 12/11/2008	MW-109 12/11/2008	MW-120 12/11/2008
METALS				
Aluminum	(ug/l)	1990	694	50.1
Antimony	(ug/l)	2.2	0.20U	0.55J
Arsenic	(ug/l)	22.8	1.3B	2.6B
Barium	(ug/l)	7.7J	224	41.3
Beryllium	(ug/l)	0.33J	<0.068	<0.068
Cadmium	(ug/l)	<0.11	<0.11	<0.11
Calcium	(ug/l)	6900	63600	312000
Chromium	(ug/l)	3500	6.8B	49.5
Cobalt	(ug/l)	2.6	0.78	3.4
Copper	(ug/l)	12.7	2.5	2.1
Iron	(ug/l)	244	15500	23100
Lead	(ug/l)	11.3	1	69
Magnesium	(ug/l)	16700	22500	171000
Manganese	(ug/l)	26.4	2280	853
Mercury	(ug/l)	0.14J	<0.016	0.016J
Nickel	(ug/l)	23.4	2.8	23.7
Potassium	(ug/l)	25100	6290	67000
Selenium	(ug/l)	6.8	0.39U	7.7
Silver	(ug/l)	<0.077	<0.077	<0.077
Sodium	(ug/l)	754000	62400	978000
Thallium	(ug/l)	<0.018	<0.018	0.35J
Vanadium	(ug/l)	234	3.6B	3.4B
Zinc	(ug/l)	13.9	14	6.8B
WET CHEMISTRY	**SEE UNITS**			
Alkalinity	(mg/l)	1100	265	510
Total Organic Carbon (TOC)	(ug/l)	<210	37000	84000
Chloride	(mg/l)	526	123	1690
Cyanide, available	(mg/l)	0.018	<0.0015	<0.0015
Cyanide, total	(mg/l)	0.011	0.0091U	0.044
DO	(mg/l)	0.21	0.31	0.37
Ferrous Iron	(mg/l)	0.72	16.2	20.4
Methane	(ug/l)	3100	1900	190
Nitrate (as N)	(mg/l)	<0.0077	<0.0077	0.24J
Oxidation Reduction Potential	mV	-361.5	-74.6	-10.4
pH	S.U.	8.81	6.3	6.16
Specific Conductivity	ms/cm	2.53	0.651	6.029
Sulfate	(mg/l)	84.4	4.8	867
Temperature	C	8.65	11.01	12.47
Turbidity	NTU	1.27	27	2.27

NOTES:

< - Constituent not detected at reported concentration
U - Qualified non-detect due to lab interference
J - Result estimated
B - Blank contamination

*Monitoring well locations are shown in Attachment A - Figure 4.

TABLE 3
SUMMARY OF REPRESENTATIVE INFLUENT DATA FROM LAGOON WATER*
SCCC AND DIAMOND SITES
KEARNY, NEW JERSEY

CONSTITUENT	UNITS	ELWS-01 4/25/2008	ELWS-02 4/25/2008	ELWS-DUP 4/25/2008	WLWS-01 4/25/2008	WLWS-02 4/25/2008
VOLATILE COMPOUNDS (GC/MS)						
1,1,1-Trichloroethane	(ug/l)	0.79U	0.79U	0.79U	0.79U	0.79U
1,1,2,2-Tetrachloroethane	(ug/l)	0.63U	0.63U	0.63U	0.63U	0.63U
1,1,2-Trichloroethane	(ug/l)	0.79U	0.79U	0.79U	0.79U	0.79U
1,1,2-Trichloro-1,2,2-trifluoroethane	(ug/l)	1.2U	1.2U	1.2U	1.2U	1.2U
1,1-Dichloroethane	(ug/l)	1.0U	1.0U	1.0U	1.0U	1.0U
1,1-Dichloroethylene	(ug/l)	0.87U	0.87U	0.87U	0.87U	0.87U
1,2,4-Trichlorobenzene	(ug/l)	5.3	13	12	0.74J	1.4J
1,2-Dibromoethane (EDB)	(ug/l)	0.64U	0.64U	0.64U	0.64U	0.64U
1,2-Dichlorobenzene	(ug/l)	0.65U	0.65U	0.65U	0.65U	0.65U
1,2-Dichloroethane	(ug/l)	0.64U	0.64U	0.64U	0.64U	0.64U
1,2-Dichloropropane	(ug/l)	0.67U	0.67U	0.67U	0.67U	0.67U
1,3-Dichlorobenzene	(ug/l)	6.4	16	17	2.5J	6.4
1,4-Dichlorobenzene	(ug/l)	12	44	45	1.6J	11
2-Butanone	(ug/l)	0.73U	0.73U	0.73U	0.73U	0.73U
2-Hexanone	(ug/l)	0.45U	0.45U	0.45U	0.45U	0.45U
4-Methyl-2-pentanone	(ug/l)	0.46U	0.46U	0.46U	0.46U	0.46U
Acetone	(ug/l)	5.0U	5.0U	5.0U	5.0U	5.0U
Benzene	(ug/l)	0.81U	0.81U	0.81U	0.81U	0.81U
Bromodichloromethane	(ug/l)	0.58U	0.58U	0.58U	0.58U	0.58U
Bromoform	(ug/l)	0.37U	0.37U	0.37U	0.37U	0.37U
Bromomethane	(ug/l)	0.75U	0.75U	0.75U	0.75U	0.75U
Carbon disulfide	(ug/l)	1.1U	1.1U	1.1U	1.1U	1.1U
Carbon Tetrachloride	(ug/l)	0.91U	0.91U	0.91U	0.91U	0.91U
Chlorobenzene	(ug/l)	0.71U	1.4J	1.4J	1.8J	5.2
Chloroethane	(ug/l)	1.1U	1.1U	1.1U	1.1U	1.1U
Chloroform	(ug/l)	0.78U	0.78U	0.78U	0.78U	0.78U
Chloromethane	(ug/l)	0.87U	0.87U	0.87U	0.87U	0.87U
cis-1,2-Dichloroethylene	(ug/l)	1.0U	1.0U	1.0U	1.0U	1.0U
cis-1,3-Dichloropropene	(ug/l)	0.79U	0.79U	0.79U	0.79U	0.79U
Cyclohexane	(ug/l)	1.1U	1.1U	1.1U	1.1U	1.1U
Dibromochloropropane	(ug/l)	1.3U	1.3U	1.3U	1.3U	1.3U
Dibromochloromethane	(ug/l)	0.50U	0.50U	0.50U	0.50U	0.50U
Dichlorodifluoromethane	(ug/l)	1.0U	1.0U	1.0U	1.0U	1.0U
Ethylbenzene	(ug/l)	0.58U	0.58U	0.58U	0.58U	0.58U
Isopropylbenzene	(ug/l)	0.72U	0.72U	0.72U	0.72U	0.72U
Methyl Acetate	(ug/l)	0.47U	0.47U	0.47U	0.47U	0.47U
Methylcyclohexane	(ug/l)	1.1U	1.1U	1.1U	1.1U	1.1U
Methylene chloride	(ug/l)	0.75U	0.75U	0.75U	0.75U	0.75U
Methyltert-butylether	(ug/l)	0.77U	0.77U	0.77U	0.77U	0.77U
Styrene	(ug/l)	0.80U	0.80U	0.80U	0.80U	0.80U
Tetrachloroethylene	(ug/l)	0.57U	0.57U	0.57U	0.57U	0.57U
Toluene	(ug/l)	0.80U	0.80U	0.80U	0.80U	0.80U
trans-1,2-Dichloroethene	(ug/l)	0.90U	0.90U	0.90U	0.90U	0.90U
Trans-1,3-Dichloropropene	(ug/l)	0.57U	0.57U	0.57U	0.57U	0.57U
Trichloroethylene	(ug/l)	0.88U	0.88U	0.88U	0.88U	0.88U
Trichlorofluoromethane	(ug/l)	0.80U	0.80U	0.80U	0.80U	0.80U
Vinyl chloride	(ug/l)	0.94U	0.94U	0.94U	0.94U	0.94U
Xylene (total)	(ug/l)	2.4U	2.4U	2.4U	2.4U	2.4U

TABLE 3
SUMMARY OF REPRESENTATIVE INFLUENT DATA FROM LAGOON WATER*
SCCC AND DIAMOND SITES
KEARNY, NEW JERSEY

CONSTITUENT	UNITS	ELWS-01 4/25/2008	ELWS-02 4/25/2008	ELWS-DUP 4/25/2008	WLWS-01 4/25/2008	WLWS-02 4/25/2008
SEMIVOLATILE COMPOUNDS (GC/MS)						
1,1'-Biphenyl	(ug/l)	2.0J	2.4J	2.4J	0.67U	0.66U
2,2'-oxybis(1-chloropropane)	(ug/l)	0.27U	0.29U	0.28U	0.29U	0.29U
2,4,5-Trichlorophenol	(ug/l)	0.66U	0.70U	0.68U	0.69U	0.69U
2,4,6-Trichlorophenol	(ug/l)	0.60U	0.64U	0.62U	0.63U	0.62U
2,4-Dichlorophenol	(ug/l)	0.51U	0.54U	0.91J	0.54U	0.53U
2,4-Dimethylphenol	(ug/l)	0.55U	24	19	5.1J	8.0J
2,4-Dinitrophenol	(ug/l)	14U	14U	14U	14U	14U
2,4-Dinitrotoluene	(ug/l)	0.48U	0.51U	0.49U	0.50U	0.50U
2,6-Dinitrotoluene	(ug/l)	0.54U	0.57U	0.55U	0.56U	0.56U
2-Chloronaphthalene	(ug/l)	0.47U	0.50U	0.48U	0.49U	0.49U
2-Chlorophenol	(ug/l)	0.48U	0.51U	0.49U	0.50U	0.50U
2-Methylnaphthalene	(ug/l)	0.63J	0.52U	0.51U	0.52U	0.55J
2-Methylphenol	(ug/l)	13	15	14	8.5J	9.1J
2-Nitroaniline	(ug/l)	0.50U	0.53U	0.52U	0.53U	0.52U
2-Nitrophenol	(ug/l)	0.57U	0.61U	0.59U	0.60U	0.59U
3,3-Dichlorobenzidine	(ug/l)	0.43U	0.46U	0.45U	0.45U	0.45U
3-Nitroaniline	(ug/l)	0.43U	0.45U	0.44U	0.45U	0.44U
4,6-Dinitro-2-methylphenol	(ug/l)	15U	16U	15U	16U	16U
4-Bromophenylphenyl ether	(ug/l)	0.53U	0.56U	0.54U	0.55U	0.55U
4-Chloroaniline	(ug/l)	0.49U	0.52U	0.50U	0.51U	0.51U
4-Chlorophenyl phenyl ether	(ug/l)	0.45U	0.48U	0.46U	0.47U	0.47U
4-Chloro-3-methylphenol	(ug/l)	0.63U	0.66U	0.64U	0.66U	0.65U
4-Methylphenol	(ug/l)	27	50	47	14	18
4-Nitroaniline	(ug/l)	0.27U	0.28U	0.28U	0.28U	0.28U
4-Nitrophenol	(ug/l)	0.74U	0.79U	0.76U	0.78U	0.77U
Acenaphthene	(ug/l)	2.5J	1.7J	1.5J	3.9J	2.6J
Acenaphthylene	(ug/l)	0.53J	0.64J	0.50U	0.51U	0.51U
Acetophenone	(ug/l)	2.2J	2.3J	2.3J	0.51U	0.51U
Anthracene	(ug/l)	0.85J	1.0J	1.7J	0.56U	0.56U
Atrazine	(ug/l)	0.41U	0.44U	0.42U	0.43U	0.43U
Benzaldehyde	(ug/l)	0.57U	0.61U	0.59U	0.60U	0.60U
Benzo(a)anthracene	(ug/l)	0.44U	0.46U	0.45U	0.46U	0.45U
Benzo(a)pyrene	(ug/l)	0.46U	0.49U	0.48U	0.49U	0.48U
Benzo(b)fluoranthene	(ug/l)	0.33U	0.35U	0.34U	0.35U	0.34U
Benzo(ghi)perylene	(ug/l)	0.29U	0.31U	0.30U	0.30U	0.30U
Benzo(k)fluoranthene	(ug/l)	0.42U	0.44U	0.43U	0.44U	0.43U
Bis(2-chloroethoxy)methane	(ug/l)	1.3U	1.4U	1.3U	1.4U	1.3U
Bis(2-chloroethyl)ether	(ug/l)	0.49U	0.52U	0.50U	0.51U	0.51U
Bis(2-ethylhexyl)phthalate	(ug/l)	1.3U	1.3U	1.3U	1.3U	1.3U
Butyl benzyl phthalate	(ug/l)	1.5U	1.5U	1.5U	1.5U	1.5U
Caprolactam	(ug/l)	2.0U	2.1U	2.0U	2.1U	2.1U
Carbazole	(ug/l)	0.55U	0.59U	0.57U	0.58U	0.57U
Chrysene	(ug/l)	0.38U	0.40U	0.39U	0.39U	0.39U
Dibenzo(a,h)anthracene	(ug/l)	0.37U	0.39U	0.38U	0.39U	0.38U
Dibenzofuran	(ug/l)	0.57U	0.60U	1.2J	0.59U	0.59U
Diethyl phthalate	(ug/l)	2.6U	2.7U	2.7U	2.7U	2.7U
Dimethyl phthalate	(ug/l)	0.45U	0.47U	0.46U	0.47U	0.46U
Di-n-butyl phthalate	(ug/l)	0.49U	0.52U	0.51U	0.51U	0.51U

TABLE 3
SUMMARY OF REPRESENTATIVE INFLUENT DATA FROM LAGOON WATER*
SCCC AND DIAMOND SITES
KEARNY, NEW JERSEY

CONSTITUENT	UNITS	ELWS-01 4/25/2008	ELWS-02 4/25/2008	ELWS-DUP 4/25/2008	WLWS-01 4/25/2008	WLWS-02 4/25/2008
Di-n-octyl phthalate	(ug/l)	0.45U	0.48U	0.46U	0.47U	0.47U
Fluoranthene	(ug/l)	0.52U	0.57J	0.54U	0.55U	0.54U
Fluorene	(ug/l)	0.79J	0.61U	0.98J	0.68J	0.60U
Hexachlorobenzene	(ug/l)	0.46U	0.49U	0.47U	0.48U	0.48U
Hexachlorobutadiene	(ug/l)	0.40U	0.42U	0.41U	0.42U	0.41U
Hexachlorocyclopentadiene	(ug/l)	0.85U	0.90U	0.87U	0.89U	0.88U
Hexachloroethane	(ug/l)	0.46U	0.49U	0.47U	0.48U	0.48U
Indeno(1,2,3-cd)pyrene	(ug/l)	0.50U	0.53U	0.52U	0.53U	0.52U
Isophorone	(ug/l)	0.50U	0.53U	0.52U	0.53U	0.52U
Naphthalene	(ug/l)	6.6J	2.3J	2.0J	8.4J	7.3J
Nitrobenzene	(ug/l)	0.68U	0.72U	0.70U	0.71U	0.70U
N-Nitrosodiphenylamine	(ug/l)	0.52U	0.55U	0.53U	0.54U	0.54U
N-Nitrosodipropylamine	(ug/l)	0.63U	0.67U	0.65U	0.66U	0.65U
Pentachlorophenol	(ug/l)	0.88U	0.93U	0.90U	0.92U	0.91U
Phenanthrene	(ug/l)	0.85J	1.1J	0.90J	0.61U	0.61U
Phenol	(ug/l)	24	24	21	22	20
Pyrene	(ug/l)	0.60U	0.63U	0.62U	0.63U	0.62U
1,2,4-Trichlorobenzene	(ug/l)	5.1	NA	NA	NA	NA
1,4-Dichlorobenzene	(ug/l)	10	NA	NA	NA	NA
METALS						
Aluminum	(ug/l)	63.0BJ	71.2BJ	61.7B	45.1BJ	54.3BJ
Antimony	(ug/l)	2.9U	2.9U	2.9U	2.9U	2.9U
Arsenic	(ug/l)	2.2U	2.2U	2.2U	2.2U	2.2U
Barium	(ug/l)	15.9B	14.7B	15.0B	9.0B	9.2B
Beryllium	(ug/l)	0.32U	0.32U	0.32U	0.32U	0.32U
Cadmium	(ug/l)	0.23U	0.23U	0.23U	0.23U	0.23U
Calcium	(ug/l)	47500J	46600J	47600J	39300J	40100J
Chromium	(ug/l)	118	115	118	61	61.2
Cobalt	(ug/l)	1.9B	1.9B	1.5B	0.83B	0.87B
Copper	(ug/l)	6.7B	6.5B	6.6B	3.5B	3.7B
Iron	(ug/l)	1240	1280	1300	279	319
Lead	(ug/l)	57.5	56.3	57.7	5.9	7.2
Magnesium	(ug/l)	72900J	71400J	72800J	49900J	50500J
Manganese	(ug/l)	112	113	115	38.1	39.2
Mercury	(ug/l)	0.24	0.23	0.22	0.074B	0.085B
Nickel	(ug/l)	17.8B	17.9B	18.0B	9.8B	9.6B
Potassium	(ug/l)	2680B	2580B	2620B	1710B	1710B
Selenium	(ug/l)	2.5U	2.5U	2.5U	2.5U	2.5U
Silver	(ug/l)	0.78B	0.59U	0.59U	0.69B	0.59U
Sodium	(ug/l)	48100	46600	47200	32600	32800
Thallium	(ug/l)	3.1U	3.1U	3.1U	3.1U	3.1U
Vanadium	(ug/l)	17.6B	16.4B	17.6B	12.1B	11.9B
Zinc	(ug/l)	6.6B	7.4B	6.5B	7.9B	3.6B
PCBS						
Aroclor 1016	(ug/l)	0.10U	0.10U	0.10U	0.10U	0.10U
Aroclor 1221	(ug/l)	0.10U	0.10U	0.10U	0.10U	0.10U
Aroclor 1232	(ug/l)	0.12U	0.12U	0.12U	0.12U	0.12U
Aroclor 1242	(ug/l)	0.077U	0.077U	0.076U	0.077U	0.077U
Aroclor 1248	(ug/l)	0.095U	0.095U	0.093U	0.094U	0.095U

TABLE 3
SUMMARY OF REPRESENTATIVE INFLUENT DATA FROM LAGOON WATER*
SCCC AND DIAMOND SITES
KEARNY, NEW JERSEY

CONSTITUENT	UNITS	ELWS-01 4/25/2008	ELWS-02 4/25/2008	ELWS-DUP 4/25/2008	WLWS-01 4/25/2008	WLWS-02 4/25/2008
Aroclor 1254	(ug/l)	0.095U	0.095U	0.093U	0.094U	0.095U
Aroclor 1260	(ug/l)	0.056U	0.056U	0.055U	0.056U	0.056U
Aroclor 1262	(ug/l)	0.086U	0.086U	0.084U	0.085U	0.086U
Aroclor 1268	(ug/l)	0.11U	0.11U	0.11U	0.11U	0.11U
PESTICIDES						
4,4'-DDD	(ug/l)	0.0080U	0.0080U	0.0079U	0.0080U	0.0080U
4,4'-DDE	(ug/l)	0.0070U	0.0070U	0.0069U	0.0070U	0.0070U
4,4'-DDT	(ug/l)	0.014U	0.014U	0.014U	0.014U	0.014U
Aldrin	(ug/l)	0.012U	0.012U	0.011U	0.011U	0.012U
alpha-BHC	(ug/l)	0.016U	0.016U	0.015U	0.016U	0.016U
alpha-Chlordane	(ug/l)	0.012U	0.012U	0.011U	0.012U	0.012U
beta-BHC	(ug/l)	0.015U	0.015U	0.015U	0.015U	0.015U
delta-BHC	(ug/l)	0.022JPG	0.047JPG	0.049J	0.0097U	0.0098U
Dieldrin	(ug/l)	0.0083U	0.0083U	0.0082U	0.0082U	0.0083U
Endosulfan I	(ug/l)	0.0077U	0.0077U	0.0076U	0.0076U	0.0077U
Endosulfan II	(ug/l)	0.016U	0.016U	0.015U	0.016U	0.016U
Endosulfan sulfate	(ug/l)	0.017U	0.017U	0.016U	0.016U	0.017U
Endrin	(ug/l)	0.0094JPG	0.010JPG	0.011J	0.0079U	0.018JPG
Endrin aldehyde	(ug/l)	0.013U	0.013U	0.012U	0.012U	0.013U
Endrin ketone	(ug/l)	0.010U	0.010U	0.010U	0.010U	0.010U
gamma-Chlordane	(ug/l)	0.0079U	0.0079U	0.0077U	0.0078U	0.0079U
Heptachlor	(ug/l)	0.014U	0.014U	0.014U	0.014U	0.014U
Heptachlor epoxide	(ug/l)	0.010U	0.010U	0.010U	0.010U	0.010U
Lindane	(ug/l)	0.016U	0.016U	0.015U	0.016U	0.016U
Methoxychlor	(ug/l)	0.019U	0.13	0.12	0.019U	0.019U
Toxaphene	(ug/l)	0.43U	0.43U	0.42U	0.42U	0.43U
WET CHEMISTRY	**SEE UNITS**					
BOD	(mg/l)	78	74.9	69.8	33.1	32
Total Organic Carbon (TOC)	(mg/l)	138J	134J	NA	68.2J	69.6J
Chemical Oxygen Demand (COD)	(mg/l)	411	397	NA	187	192
Chromium (Hexavalent)	(ug/l)	10.0U	10.0U	10.0U	10.0U	10.0U
Cyanide	(ug/l)	2.0B	1.7U	NA	1.7U	1.7U
Ferrous Iron	(mg/l)	0.15	0.13	0.18	0.1U	0.1U
Oil & Grease (HEM)	(mg/l)	0.54U	0.54U	NA	0.54U	0.52U
Residue, filterable	(mg/l)	823	888	NA	565	522
Residue, non-filterable	(mg/l)	4.0U	4.0U	NA	4.0U	4.0U
Total Alkalinity	(mg/l)	213J	207J	NA	172J	174J
Total Sulfide	(mg/l)	1.2U	1.2U	NA	1.2U	1.2U

Qualifiers:

B - Reported value is less than the Reporting Limit but greater than the Instrument Detection Limit.
J – Estimated result less than the reporting limit
PG – The percent difference between the original and conformation analyses is greater than 40%.
U - The compound was not detected at the indicated concentration.
NR - Not Analyzed
N/L - No Limit
*The Lagoon location is shown in Attachment A - Figure 4.

TABLE 4
TREATMENT, RECYCLING, DISPOSAL AND/OR INCINERATION FACILITIES
SCCC, INC. AND DIAMOND SITES - KEARNY, NEW JERSEY

Residual Type[+]	(a) Name of Receiving Facility[++]	(b) Facility Contact	(c) Facility Mailing Address	(d) Total dry metric tons per 365-day period	
				Hydraulic Control Treatment System (HCTS)	Temporary Construction Treatment System (TCTS)
Spent GAC	Calgon Carbon Corp. Big Sandy Plant	Joseph Conte Process Engineer (606) 739-8681	15024 US Route 23 Catlettsburgh, KY 41129	84	99.3
Sludge Cake and/or Spent Filters***	CWM Chemical Services, LLC	Pat Stauffer Techical Services Representative (716) 754-0451	1550 Balmer Road Model City, NY 14107	26*	85.1**
DNAPL from Recovery Wells	Clean Harbors Deer Park Facility	Mike Khatri Facility Maketing Mgr. (281) 930-2341	2027 Batteground Rd. Deer Park, TX 77536	100 gal/month	N/A
	and/or Clean Habors El Dorado LLC	Theresa Evans Plant Manager (870) 863-7173	309 American Circle El Dorado, AR 71780		

Notes:

*Metals Precipitation Sludge

**Approximately 84.7 Dry Metric Tons of Metals Precipitation Sludge and 0.4 Dry Metric Tons of Pressure Filtration Solids

*** Spent bag filters included with sludge cake tonnage.

[+] All residuals and streams are estimates only. Actual quantities will depend on the actual operation of the system, the conditions observed in the field at the time of pumping, and the pumping scenarios used to meet the individual treatment system pumping objectives.

[++] Destination of residual streams may change based upon approved profiling of the materials after additional characterization, actual quantities, and the contracts in-place at the time of operation.

(d) Assume six days per week operation.

TABLE 5
EXPECTED EFFLUENT COMPOSITION
SCCC AND DIAMOND SITES - KEARNY, NEW JERSEY

CONSTITUENT	Well Mix Influent ug/L		Treatability Test Effluent ug/L	Secondary GAC Unit-B (Expected Removal[1]) ug/L	Secondary GAC Unit-C (Expected Removal[1]) ug/L	NJ0155438 Effluent Limitation Monthly Ave. ug/L	NJ0155438 Effluent Limitation Daily Max. ug/L
Relative Removal Percentage (%) = removal/influent to unit				**85.00**	**85.00**		
Relative Removal Percentage (%) = removal/influent to first unit				**85.00**	**12.75**		
Accumulated Removal (%)				**85.00**	**97.75**		
PARAMETER/COMPOUND							
VOLATILE COMPOUNDS (GC/MS)							
1,1,1-Trichloroethane	3.8	U	0.4	0.06	0.01	21	54
1,1,2,2-Tetrachloroethane	3.5	U	0.4	0.06	0.01	NL	10
1,1,2-Trichloroethane	2.2	U	0.2	0.03	0.00	21	54
1,1-Dichloroethane	2.6	U	0.3	0.05	0.01	22	59
1,1-Dichloroethene	4.6	U	0.5	0.08	0.01	16	25
1,2-Dichloroethane	2.7	U	0.3	0.05	0.01	68	211
1,2-Dichloropropane	4.9	U	0.5	0.08	0.01	153	230
2-ChloroethylVinylEther	2.5	U	0.2	0.03	0.00	***	***
Acrolein	66	U	6.6	0.99	0.15	NL	100
Acrylonitrile	31	U	3.1	0.47	0.07	NL	100
Benzene	36		0.7	0.11	0.02	37	136
Bromodichloromethane	2.5	U	0.2	0.03	0.00	NL	12
Bromoform	2.1	U	0.2	0.03	0.00	29	58
Bromomethane	4.4	U	0.4	0.06	0.01	20	40
CarbonTetrachloride	3.4	U	0.3	0.05	0.01	8.8	NL
Chlorobenzene	230		2.2	0.33	0.05	15	28
Chloroethane	4.3	U	0.4	0.06	0.01	104	268
Chloroform	2.0	U	0.2	0.03	0.00	21	46
Chloromethane	4.4	U	0.4	0.06	0.01	86	190
cis-1,3-Dichloropropene	1.3	U	0.1	0.02	0.00	29	44
Dibromochloromethane	2.7	U	0.3	0.05	0.01	NL	14

KEY ENVIRONMENTAL INCORPORATED

TABLE 5
EXPECTED EFFLUENT COMPOSITION
SCCC AND DIAMOND SITES - KEARNY, NEW JERSEY

CONSTITUENT	Well Mix Influent ug/L		Treatability Test Effluent ug/L	Secondary GAC Unit-B (Expected Removal[1]) ug/L	Secondary GAC Unit-C (Expected Removal[1]) ug/L	NJ0155438 Effluent Limitation Monthly Ave. ug/L	NJ0155438 Effluent Limitation Daily Max. ug/L
Ethylbenzene	7.5		0.4	0.06	0.01	32	108
MethyleneChloride	66		7.0	1.05	0.16	40	89
Tetrachloroethene	7.1		0.4	0.06	0.01	22	56
Toluene	23		0.3	0.05	0.01	26	80
trans-1,2-Dichloroethene	3.9	U	0.4	0.06	0.01	21	54
trans-1,3-Dichloropropene	1.6	U	0.2	0.03	0.00	29	44
Trichloroethene	36		0.5	0.08	0.01	21	54
Vinyl Chloride	2.4	U	0.2	0.03	0.00	104	268
SEMIVOLATILE COMPOUNDS (GC/MS)							
1,2,4-Trichlorobenzene	160		1.0	0.15	0.02	68	140
1,2-Dichlorobenzene	1600		3.7	0.56	0.08	77	163
1,2-Diphenylhydrazine	22	U		0.00	0.00	***	***
1,3-Dichlorobenzene	790		1.5	0.23	0.03	31	44
1,4-Dichlorobenzene	1400		2.7	0.41	0.06	NL	28
2,4,5-Trichlorophenol	NR		1.3	0.20	0.03	***	***
2,4,6-Trichlorophenol	51	U	2.3	0.35	0.05	NL	20
2,4-Dichlorophenol	34	U	1.5	0.23	0.03	39	112
2,4-Dimethylphenol	120		4.2	0.63	0.09	18	36
2,4-Dinitrophenol	21	U	1.0	0.15	0.02	71	123
2,4-Dinitrotoluene	27	U	1.2	0.18	0.03	NL	18.5
2,6-Dinitrotoluene	30	U	1.4	0.21	0.03	255	641
2-Chloronaphthalene	25	U	1.2	0.18	0.03	***	***
2-Chlorophenol	25	U	1.2	0.18	0.03	31	98
2-Methylnaphthalene	NR		1.2	0.18	0.03	***	***
2-Methylphenol	NR		2.3	0.35	0.05	***	***
2-Nitroaniline	NR		0.7	0.11	0.02	***	***
2-Nitrophenol	37	U	1.7	0.26	0.04	72	124
3,3'-Dichlorobenzidine	120	U	5.3	0.80	0.12	NL	60
3-Nitroaniline	NR		1.1	0.17	0.02		

TABLE 5
EXPECTED EFFLUENT COMPOSITION
SCCC AND DIAMOND SITES - KEARNY, NEW JERSEY

CONSTITUENT	Well Mix Influent ug/L		Treatability Test Effluent ug/L	Secondary GAC Unit-B (Expected Removal[1]) ug/L	Secondary GAC Unit-C (Expected Removal[1]) ug/L	NJ0155438 Effluent Limitation Monthly Ave. ug/L	NJ0155438 Effluent Limitation Daily Max. ug/L
4,6-Dinitro-2-methylphenol	29	U		0.00	0.00	78	277
4-Bromophenyl-phenylether	28	U	1.3	0.20	0.03	***	***
4-Chloro-3-methylphenol	38	U	1.8	0.27	0.04	***	***
4-Chloroaniline	NR		0.7	0.11	0.02	***	***
4-Chlorophenyl-phenylether	25	U	1.1	0.17	0.02	***	***
4-Methylphenol	NR		1.2	0.18	0.03	***	***
4-Nitroaniline	NR		0.7	0.11	0.02	***	***
2-Nitrophenol	20	U	1.3	0.20	0.03	41	69
4-Nitrophenol	NR		0.9	0.14	0.02	72	124
Acenaphthene	9.8		0.1	0.02	0.00	***	***
Acenaphthylene	2.8	U	0.1	0.02	0.00	***	***
Anthracene	2.8	U	0.1	0.02	0.00	22	59
Benzidine	170	U		0.00	0.00	NL	50
Benzo(a)anthracene	1.2	U	0.054	0.01	0.00	NL	10
Benzo(a)pyrene	1.4	U	0.064	0.01	0.00	NL	20
Benzo(b)fluoranthene	3.0	U	0.1	0.02	0.00	NL	10
Benzo(g,h,i)perylene	2.1	U	0.097	0.01	0.00	***	***
Benzo(k)fluoranthene	2.1	U	0.097	0.01	0.00	NL	20
bis(2-Chloroethoxy)methane	20	U	0.9	0.14	0.02	***	***
bis(2-Chloroethyl)ether	20	U	0.9	0.14	0.02	NL	10
bis(2-chloroisopropyl)ether	20	U	0.9	0.14	0.02	301	757
bis(2-Ethylhexyl)phthalate	24	U	1.1	0.17	0.02	59	118
Butylbenzylphthalate	25	U	1.2	0.18	0.03	NL	24
Carbazole	NR		1.0	0.15	0.02	***	***
Chrysene	4.5	U	0.2	0.03	0.00	NL	20
Dibenzo(a,h)anthracene	2.4	U	0.1	0.02	0.00	NL	20
Dibenzofuran	NR		1.0	0.15	0.02	***	***
Diethylphthalate	18	U	0.8	0.12	0.02	81	203
Dimethylphthalate	26	U	1.2	0.18	0.03	19	47

TABLE 5
EXPECTED EFFLUENT COMPOSITION
SCCC AND DIAMOND SITES - KEARNY, NEW JERSEY

CONSTITUENT	Well Mix Influent ug/L		Treatability Test Effluent ug/L	Secondary GAC Unit-B (Expected Removal[1]) ug/L	Secondary GAC Unit-C (Expected Removal[1]) ug/L	NJ0155438 Effluent Limitation Monthly Ave. ug/L	NJ0155438 Effluent Limitation Daily Max. ug/L
Di-n-butylphthalate	24	U	1.1	0.17	0.02	27	57
Di-n-octylphthalate	24	U	1.1	0.17	0.02	***	***
Fluoranthene	3.0	U	0.1	0.02	0.00	25	68
Fluorene	3.8	U	0.2	0.03	0.00	22	59
Hexachlorobenzene	7.5	U	0.3	0.05	0.01	NL	10
Hexachlorobutadiene	14	U	0.6	0.09	0.01	20	49
Hexachlorocyclopentadiene	15	U	0.7	0.11	0.02	NL	1800
Hexachloroethane	21	U	1.0	0.15	0.02	21	54
Indeno(1,2,3-cd)pyrene	1.9	U	0.086	0.01	0.00	NL	20
Isophorone	22	U	1.0	0.15	0.02	NL	20
Naphthalene	4.9	U	0.2	0.03	0.00	***	***
Nitrobenzene	22	U	1.0	0.15	0.02	27	68
N-Nitrosodimethylamine	17	U		0.00	0.00	NL	20
N-Nitroso-di-n-propylamine	17	U	0.8	0.12	0.02	NL	20
N-Nitrosodiphenylamine	25	U	1.1	0.17	0.02	NL	20
Pentachlorophenol	49	U	2.2	0.33	0.05	NL	30
Phenanthrene	1.9	U	0.086	0.01	0.00	22	59
Phenol	3700		0.7	0.11	0.02	15	26
Pyrene	3.0	U	0.1	0.02	0.00	25	67
PESTICIDES/PCBs							
Aldrin	0.010	U	0.010	0.00	0.00	NL	0.04
alpha-BHC	0.010	U	0.010	0.00	0.00	NL	0.02
beta-BHC	0.010	U	0.010	0.00	0.00	NL	0.92
delta-BHC	0.010	U	0.010	0.00	0.00	***	***
gamma-BHC(Lindane)	0.010	U	0.010	0.00	0.00	NL	0.03
Chlordane	0.18	U	0.18	0.03	0.00	NL	0.2
4,4'-DDD	0.010	U	0.010	0.00	0.00	NL	0.04
4,4'-DDE	0.010	U	0.010	0.00	0.00	NL	0.04
4,4'-DDT	0.010	U	0.010	0.00	0.00	NL	0.06

TABLE 5
EXPECTED EFFLUENT COMPOSITION
SCCC AND DIAMOND SITES - KEARNY, NEW JERSEY

CONSTITUENT	Well Mix Influent ug/L		Treatability Test Effluent ug/L	Secondary GAC Unit-B (Expected Removal[1]) ug/L	Secondary GAC Unit-C (Expected Removal[1]) ug/L	NJ0155438 Effluent Limitation Monthly Ave. ug/L	NJ0155438 Effluent Limitation Daily Max. ug/L
Dieldrin	0.010	U	0.010	0.00	0.00	NL	0.03
EndosulfanI	0.041	U	0.010	0.00	0.00	NL	0.02
EndosulfanII	0.010	U	0.010	0.00	0.00	NL	0.04
Endosulfan sulfate	0.010	U	0.010	0.00	0.00	2	4
Endrin	0.097	U	0.010	0.00	0.00	NL	0.04
Endrin aldehyde	0.010	U	0.010	0.00	0.00	0.81	1.62
Endrinketone	0.030	U	0.030	0.00	0.00	***	***
Heptachlor	0.010	U	0.010	0.00	0.00	NL	0.02
Heptachlorepoxide	0.010	U	0.010	0.00	0.00	NL	0.4
Methoxychlor	0.010	U	0.010	0.00	0.00	***	***
Toxaphene	0.31	U	0.31	0.05	0.01	NL	1
Aroclor-1016	0.23	U	0.23	0.03	0.01	NL	0.5
Aroclor-1221	0.36	U	0.36	0.05	0.01	NL	0.5
Aroclor-1232	0.26	U	0.26	0.04	0.01	NL	0.5
Aroclor-1242	0.21	U	0.21	0.03	0.00	NL	0.5
Aroclor-1248	0.36	U	0.36	0.05	0.01	NL	0.5
Aroclor-1254	0.34	U	0.34	0.05	0.01	NL	0.5
Aroclor-1260	0.20	U	0.20	0.03	0.00	NL	0.5
Aroclor-1262	0.18	U	0.18	0.03	0.00	***	***
Aroclor-1268	0.18	U	0.18	0.03	0.00	***	***
DIOXIN	**See Units**		**See Units**	**See Units**	**See Units**		
2,3,7,8-TCDD - pg/L	88		6.0	13.20	1.98	***	***
METALS							
Aluminum	24100		77.6			***	***
Antimony	5.8	U	5.8			***	***
Arsenic	32.7		3.2			50	100
Barium	296		67.1			***	***
Beryllium	1.3	B	0.3			***	***
Boron	144		123			***	***

TABLE 5
EXPECTED EFFLUENT COMPOSITION
SCCC AND DIAMOND SITES - KEARNY, NEW JERSEY

CONSTITUENT	Well Mix Influent ug/L		Treatability Test Effluent ug/L	Secondary GAC Unit-B (Expected Removal[1]) ug/L	Secondary GAC Unit-C (Expected Removal[1]) ug/L	NJ0155438 Effluent Limitation Monthly Ave. ug/L	NJ0155438 Effluent Limitation Daily Max. ug/L
Cadmium	0.40	U	0.4			50	100
Chromium	4760		5.7			50	100
Cobalt	10.2	B	1.8			***	***
Copper	17.3	B	3.7			50	100
Iron	29100		947			***	***
Lead	49.7		2.7			50	100
Manganese	716		501			***	***
Mercury	0.36		0.1			NL	1
Molybdenum	5.1	B	4.4			***	***
Nickel	104		28.3			50	100
Selenium	4.2	U	4.2			50	100
Silver	1.4	U	1.4			25	50
Thallium	4.7	U	4.7			***	***
Tin	8.1	B	4.7			***	***
Titanium	469		3.9			***	***
Zinc	186		5.8			100	200
WET CHEMISTRY	**See Units**		**See Units**				
Ammonia as Nitrogen - mg/ l	6.2		5.6			***	***
BOD - mg/l	158		5.0	0.75	0.11	***	***
Chlorine Res. - mg/l	0.2	U	0.2			***	***
Chromium VI(7196A) - ug/l	582		10			***	***
COD - mg/l	1350		130	19.50	2.93	***	***
Free Cyanide - mg/l	0.015		0.019			100	200
Nitrate as Nitrogen - mg/l	0.31		0.22			***	***
Nitrite as Nitrogen - mg/l	0.26		0.2			***	***
pH - std units	8.53		8.9			***	6.0 - 9.0
Total Cyanide - mg/l	0.011		0.01			***	***
Total Organic Carbon - mg/l	358		33.8	5.07	0.76	***	20 mg/L
Total Phenols - mg/l	0.64					***	***

TABLE 5
EXPECTED EFFLUENT COMPOSITION
SCCC AND DIAMOND SITES - KEARNY, NEW JERSEY

CONSTITUENT	Well Mix Influent ug/L		Treatability Test Effluent ug/L	Secondary GAC Unit-B (Expected Removal[1]) ug/L	Secondary GAC Unit-C (Expected Removal[1]) ug/L	NJ0155438 Effluent Limitation Monthly Ave. ug/L	NJ0155438 Effluent Limitation Daily Max. ug/L
Total Phosphorus - mg/l	0.75		0.03			***	***
Total Suspended Solids - mg/l	700		10			***	40 mg/L
Bromide - mg/l	0.89					***	***
Fluoride - mg/l	0.27					***	***
SGT/HEM1664 - mg/l	5.0	U	5.0			***	***
TKN - mg/l	1.7					***	***

Qualifiers:

U - The compound was not detected at the indicated concentration.
NR - Not Analyzed
NL - No Limit
B - Reported value is less than the Reporting Limit but greater than the Instrument Detection Limit.

*Notes
The influent well mix was collected from 24 monitoring wells at the SCCC, Diamond, and Seaboard Sites.
The groundwater monitoring well locations are shown in Figure 4. The work was completed in April/May 2008.
The samples were composited to obtain the Well Mix to represent typical influent for this treatability study.
The data shown in this table is believed to be representative of the expected influent and effluent
for the treatment system. The influent may vary depending on well pumping rates.

General assumptions:

1. Relative removal percentage is the removal efficiency for a unit when it is operated alone. The value is given based on engineering experience
2. Estimated concentration of each compound in the unit is assumed to be the concentration after removal
3. GAC unit operated in series

TREATMENT WORKS APPROVAL (TWA)

State of New Jersey Department of Environmental Protection

CHECKLIST Item 3

Consent Form WQM-003

STATE OF NEW JERSEY
DEPARTMENT OF ENVIRONMENTAL PROTECTION
Division of Water Quality

STATEMENTS OF CONSENT

A supplement to the TWA-1 or NJPDES-1 Forms

General Information

Applicant/Owner/Operator: Standard Chlorine Chemical Co., Inc. and Tierra Solutions, Inc.

Location of Work Site: 1025-1035 and 1015 Belleville Turnpike, Kearny NJ 07032

Name of Project/Facility: Standard Chlorine Chemical Co. Site and Diamond Site

Type of permit application (TWA, NJPDES/SIU): General Industrial Treatment Works Approval

NJPDES Permit Number (if applicable): NJG0175102

A-1 Consent By Governing Body**

(Consent by the municipality in which the project is located.)

As an authorized representative of the governing body, I hereby certify that the

Town of Kearny

(Name of Municipality or Municipal Authority)

consents to the submission of the above listed application to the Department of Environmental Protection for approval. I further certify that the project as proposed conforms with the requirements of all municipal ordinances.

Signed*_____ Date_____

Type Name and Position: Joseph D'Arco, Municipal Clerk

*** Cite authorization to sign for the governing body**

Resolution#_____ Dated_____

(Submit the resolution with the application. If no such resolution granting authority to sign exists, the Governing Body's full resolution, consenting to the project, must be submitted with the application.)

** Note

For most Treatment Works Approval (TWA) applications, this section may be omitted if a sewerage entity (for example, sewerage authority, utilities authority, municipal utilities authority, joint meeting, etc.) has responsibility for regulating the construction and operation of wastewater treatment and conveyance facilities within the municipality. In such cases, the governing body consent requirement may be satisfied by completing Section A-2. Applicants for TWAs for industrial/commercial facilities discharging pursuant to NJPDES/DSW or DGW permits must complete section A-1.

A-2 Consent by Sewerage Authority** Not Applicable

As an authorized representative of this agency, I hereby certify that the

(Name of Agency)

consents to the submission of the above listed application to the Department of Environmental Protection for approval. I further certify that the project as proposed conforms with the requirements of this agency.

Signed*_____ Date_

Type Name and Position_

*** Cite authorization to sign for the agency**

Resolution#_ Dated_
(Submit the resolution with the application. If no such resolution granting authority to sign exists, the Governing Body's full resolution, consenting to the project, must be submitted with the application.)

** Note
For TWA applications, this section must be completed when a sewerage entity (for example, sewerage authority, utilities authority, municipal utilities authority, joint meeting, etc.) has responsibility for regulating the construction and operation of wastewater treatment and conveyance facilities within the municipality.

A-3 Consent by Owner of Wastewater Treatment Facility** Not Applicable

(For NJPDES/SIU applications only)

As an authorized representative of this agency, I hereby certify that the

(Name of Agency)

consents to the submission of the above listed application to the Department of Environmental Protection for approval. I further certify that the project as proposed conforms with the requirements of this agency and the agency agrees to accept wastewater from the project for treatment.

Signed*_____ Date_

Type Name and Position

*** Cite authorization to sign for the agency**

Resolution#_ Dated_
(Submit the resolution with the application. If no such resolution granting authority to sign exists, the Agency's full resolution, consenting to the project, must be submitted with the application.)

** Note
For NJPDES/SIU applications, this section must be completed when the owner of the receiving wastewater treatment plant is different that the entity listed under A-2.

B. Certification by Wastewater Conveyance System Owner** Not Applicable

By agreeing to accept wastewater from the project, I (we) hereby certify that to the best of my (our) knowledge the wastewater conveyance system, into which the project proposed under this application will connect, has adequate capacity in accordance with N.J.A.C. 7:14A-1.2 ("Adequate conveyance capacity"). Furthermore, I (we) am (are) not aware of inadequate conveyance capacity conditions in any portion of the downstream facilities necessary to convey the wastewater from this project to the treatment plant.

Name of Municipality or Authority_____

Signed*_____ Date_____

Type Name and Position _____

*** Cite authorization to sign for the governing body**

Resolution#_____ Dated_____

(Submit the resolution with the application. If no such resolution granting authority to sign exists, the governing body's full resolution, consenting to the project, must be submitted with the application.)

** Note

1. For TWA applications, this section must be completed by the owner/operator of the wastewater conveyance system into which the project named herein will directly connect.
2. For NJPDES/SIU applications, this section must be completed when the owner/operator wastewater conveyance system into which the project named herein will directly connect is different that the entity listed under A-3.

C. Certification by Wastewater Treatment Facility Owner** Not Applicable

(For TWA applications that include a sewer connection/extension.)

I (we) hereby certify that the committed flow* to the**

_____

(Name of Wastewater Treatment Plant)

does not exceed the presently permitted design capacity and with the additional flow proposed by this application, the permitted design capacity is not anticipated to be exceeded. I (we) further certify that the treatment plant is currently complying with its conventional and non-conventional NJPDES permit requirements (see N.J.A.C. 7:14A-22.17(b)-(d), percent removal and toxicity requirements excluded from this certification) as determined by a rolling average of the three most recent monthly discharge monitoring reports that were required to be submitted to the Department as of this date, and based upon my (our) assessment of all information pertinent to this permit request, is anticipated to continue to do so with the additional flow from this project.

Accepted for Treatment by_____

(Name of Treating Authority)

Signed*_____ Date_____

Type Name and Position _____

Name of project and/or location_____

*** Cite authorization to sign for the governing body**

Resolution#_____ Dated_____

(Submit the resolution with the application. If no such resolution granting authority to sign exists, the governing body's full resolution, consenting to the project, must be submitted with the application.)

** For TWA applications, this section must be completed by the owner of the wastewater treatment facility receiving the wastewater identified in this application.

*** For the purposes of this certification, committed flow means the sum of the 1) actual metered flow, 2) flow from DEP approved TWA applications (not yet operational), and 3) flow from locally approved projects that do not require DEP approval.

Additional Information (For TWA Applications)

1. Approvals, permits, service contracts, or other reservations of flow capacity issued or agreed to by any participating municipality or sewerage agency do not constitute the required approval of the DEP.

2. For computation of actual flow at the receiving wastewater treatment plant, the average flow processed by the facility for the three (3) month period immediately preceding the submission of the application shall be used. Pursuant to the NJPDES regulations (N.J.A.C. 7:14A), no application shall be submitted to the DEP if the wastewater treatment facility is not meeting its discharge permit requirements.

Lack of Consent*

1. The affected sewerage authority or municipality must consent to the application or submit comments to the DEP within 60 days of the applicant's request for consent. Prior to the expiration of the 60-day period to respond to a request for a written statement of consent, the municipality or sewerage authority may request a 30-day time extension.

2. Any document issued by a sewerage authority or municipality which is a tentative, preliminary, or conditional approval shall not be considered a statement of consent.

3. When the affected sewerage authority or municipality does not consent to a project, it shall state all reasons for rejection or disapproval in a resolution and send a certified copy of the resolution to the DEP.

4. When the affected sewerage authority or municipality expressly denies a request for a written statement of consent for a project, the permit application may be determined by the DEP to be incomplete for processing; or in the alternative, the DEP may review the reasons for denial. Any such reasons shall be considered by the DEP in determining whether to issue a draft permit in accordance with N.J.A.C. 7:14A-15.6, or a Treatment Works Approval or sewer connection approval in accordance with N.J.A.C. 7:14A-22.

5. When the affected sewerage authority or municipality does not issue a written statement of consent in accordance with (1) above, or a denial in accordance with (3) above, the DEP, upon receipt of proof that the applicant has delivered to the affected agency a written request for a statement of consent, shall review the reasons therefore, if known on the basis of reasonably reliable information. Any such reasons shall be considered by the DEP in determining whether to issue a draft permit in accordance with N.J.A.C. 7:14A-15.6, or a Treatment Works Approval in accordance with N.J.A.C. 7:14A-22. The DEP, may in its discretion, deem the application to be incomplete pending the expiration of the time period set forth in (1) above.

* This section has been excerpted from the NJPDES regulations for guidance purposes only. Please refer to N.J.A.C. 7:14A-22.8(a)3 for the complete requirements concerning statements of consent.

Notice: False statements, representations, or certifications, in any application, record, or document are subject to fines and penalties as set forth in the Water Pollution Control Act (N.J.S.A. 58:10A-10F 2 and 3.

TREATMENT WORKS APPROVAL (TWA)

State of New Jersey Department of Environmental Protection

CHECKLIST Item 4

Application Review Fee

NEW JERSEY DEPARTMENT OF ENVIRONMENTAL PROTECTION
DIVISION OF WATER QUALITY
PO BOX 029
TRENTON, NEW JERSEY 08625-0029

TREATMENT WORKS APPROVAL FEE SCHEDULE

The fee schedule for the Treatment Works Approval applications processed by the Department of Environmental Protection has been revised, in accordance with N.J.A.C. 7:1C-1.5. The changes to the permit fees were published in the New Jersey Register on May 5, 2008. **The minimum review fee remains $850.00**. As before, the below fee formulas base the permit fees on a percentage of the construction costs on the portion of the project for which a Treatment Works Approval is requested. The fee formulas are based upon the following categories:

CATEGORY I: *(Projects with a construction cost exceeding $1,000,000)*

FEE = 4**P**($250,000) + 2**P**($750,000) + **P**(**C.C.** - $1,000,000)

CATEGORY II: *(Projects with a construction cost exceeding $250,000 but less than or equal to $1,000,000)*

FEE = 4**P**($250,000) + 2**P**(**C.C.** - $250,000)

CATEGORY III: *(Projects with a construction cost less than or equal to $250,000)*

FEE = 4**P**(**C.C.**)

For all three categories, "**C.C**." is the construction cost on the portion of the project for which a Treatment Works Approval is requested and as of July 1, 2008, the new value for "P" has been calculated to be equal to .0044. Please note that **$850.00 is the minimum permit fee.** *Please also be aware that the minimum review fee for Treatment Works Approval modifications continues at $500.00.*

TREATMENT WORKS APPROVAL
☑ CONTACT PEOPLE ☑

➲ NARINDER K. AHUJA, P.E., P.P., DIRECTOR, DIVISION OF WATER QUALITY

☑ **GAUTAM R. PATEL** **(609) 984-6840**	**CHIEF, BUREAU OF FINANCING AND CONSTRUCTION PERMITS** **TREATMENT WORKS APPROVALS – TECHNICAL REVIEW**
☑ **JOHN MASELLI** **(609) 984-4429**	**BUREAU OF PERMIT MANAGEMENT** **TREATMENT WORKS APPROVALS - ADMINISTRATIVE REVIEW**
☑ **NICK HORIATES** **(609) 984-4429**	**SUPERVISOR, BUREAU OF PERMIT MANAGEMENT** **GENERAL INDUSTRIAL TWA PROCESSING**
☑ **ELEANOR KRUKOWSKI** **(609) 633-7021**	**SUPERVISOR, BUREAU OF NON-POINT POLLUTION CONTROL** **ALTERNATE DESIGN SEPTIC SYSTEMS** *(Septic systems with a design flow of 2,000 gallons per day or less)*

☎ If you have any questions on the administrative submission of a Treatment Works Approval application, please call ☎
Bureau of Permit Management *(609) 984-4429*
Bureau of Non-Point Pollution Control *(609) 633-7021*

revised 07/2008

TREATMENT WORKS APPROVAL (TWA)

State of New Jersey Department of Environmental Protection

CHECKLIST Item 5

Not Applicable

TREATMENT WORKS APPROVAL (TWA)

State of New Jersey Department of Environmental Protection

CHECKLIST Item 6

Receipts of Public Notification

KEY ENVIRONMENTAL INCORPORATED

February 24, 2010

Joseph D'Arco
Town Clerk
Town of Kearny
402 Kearny Avenue
Kearny, NJ 07032

RE: **Notification of General Industrial-TWA Permit Application**
Standard Chlorine Chemical Co., Inc. Site (SCCC) -
Block 287, Lots 32.01, 48, 49, 50, 51, 52, and 52R;
Diamond Site - Block 287, Lots 32.02, 46, 47, and 47 R, and
Portions of Former Koppers Site - Block 287, 32.01, 54, 55, 56, 61B and 62

Dear Sir:

On behalf of Standard Chlorine Chemical Co., Inc. (SCCC) and Tierra Solutions, Inc. (Tierra), this letter is to provide you with written notification that General Industrial Treatment Works Approval (TWA) Permit Application will be submitted to the New Jersey Department of Environmental Protection, Department of Water Quality. This Permit will allow SCCC and Tierra to conduct remediation associated with the SCCC Site, Diamond Site and a portion of the former Koppers Site. Remediation at the Sites is being conducted in accordance with the NJDEP approved Interim Remediation Action Workplan (IRAW) prepared to comply with N.J.A.C.7:26E.

The TWA Checklist requires that the following Township Boards also be notified:

- Ms. Susan Evanchick, Secretary, Town of Kearny Planning Board, and
- Ms. Cecilia Lindenselser, Chairperson, Kearny Environmental and Beautification Commission

To this end, copies of this letter have been attached for their review.

One (1) copy of the permit application package, in which the activities are proposed, is being provided to the Municipality and attached herewith. **As part of the permit requirements, please provide consent to the Application by signing the Form WQM-003 Statement of Consent** (Checklist Item 3) **and returning the original signed form to Key Environmental, Inc., 456 Route 22W, Whitehouse Station, NJ 08889, with a copy to the NJDEP.**

The Department of Environmental Protection welcomes comments and any information that you may provide concerning the proposed development at the Sites. Along with the copy of the signed Statement of Consent, please submit a copy of this letter and your written comments within 60 days of receiving this notice and application package to:

New Jersey Department of Environmental Protection
Bureau of Financing and Construction Permits
P.O. Box 0425, Trenton, NJ 08625-0029
Attn: Administrative Review Unit

Thank you for your prompt attention to this matter. Do not hesitate to contact me if you have any questions.

Sincerely,

Key Environmental, Inc.

Peter Sawchuck, PE
Vice President

Enclosures

cc: Ms. Susan Evanchick, Secretary
Town of Kearny Planning Board (w/o enclosures)

Ms. Cecilia Lindenselser, Chairperson
Kearny Environmental and Beautification Commission (w/o enclosures)

From: Origin ID: JVIA (908) 534-4501
Peter Sawchuck
Key Environmental, Inc.
456 US Highway 22 West
Suite 3
Whitehouse Station, NJ 08889

J10101002050224

Ship Date: 24FEB10
ActWgt: 5.0 LB
CAD: 3846666/INET3010

Delivery Address Bar Code

Ref # 09803/09804 ph.12
Invoice # General Industrial TWA
PO # Permit Application
Dept #

SHIP TO: (201) 955-7400 **BILL SENDER**

JOSEPH DARCO, MUNICIPAL CLERK
TOWN OF KEARNY
402 KEARNY AVE

KEARNY, NJ 07032

TRK# 0201 7984 1580 0162

FRI - 26 FEB A1
** 2DAY **

07032
NJ-US
EWR

K1 VAKA

505G2/C733/5FE8

After printing this label:
1. Use the 'Print' button on this page to print your label to your laser or inkjet printer.
2. Fold the printed page along the horizontal line.
3. Place label in shipping pouch and affix it to your shipment so that the barcode portion of the label can be read and scanned.

Warning: Use only the printed original label for shipping. Using a photocopy of this label for shipping purposes is fraudulent and could result in additional billing charges, along with the cancellation of your FedEx account number.
Use of this system constitutes your agreement to the service conditions in the current FedEx Service Guide, available on fedex.com.FedEx will not be responsible for any claim in excess of $100 per package, whether the result of loss, damage, delay, non-delivery,misdelivery,or misinformation, unless you declare a higher value, pay an additional charge, document your actual loss and file a timely claim.Limitations found in the current FedEx Service Guide apply. Your right to recover from FedEx for any loss, including intrinsic valueof the package, loss of sales, income interest, profit, attorney's fees, costs, and other forms of damage whether direct, incidental,consequential, or special is limited to the greater of $100 or the authorized declared value. Recovery cannot exceed actual documented loss.Maximum for items of extraordinary value is $500, e.g. jewelry, precious metals, negotiable instruments and other items listed in our ServiceGuide. Written claims must be filed within strict time limits, see current FedEx Service Guide.

Global Home | Small Business Center | Service Info | About FedEx | Investor Relations | Careers | fedex.com Terms of Use | Security & Privacy | Site Map |
This site is protected by copyright and trademark laws under US and International law. All rights reserved.© 1995- 2010 FedEx

TREATMENT WORKS APPROVAL (TWA)

State of New Jersey Department of Environmental Protection

CHECKLIST Item 7

USGS Quadrangle Map

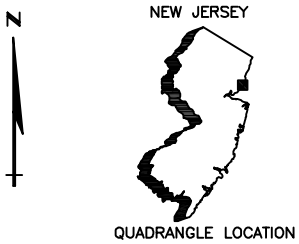

SCCC, INC. AND TIERRA SOLUTIONS INC.

DRWN: SCC	DATE: 10/23/09	KEY ENVIRONMENTAL INCORPORATED
CHKD: RJH	DATE: 10/23/09	
APPD: JSZ	DATE: 10/23/09	
SCALE:	1"= 2000'	

GENERAL INDUSTRIAL TREATMENT WORKS
APPROVAL PERMIT APPLICATION
SCCC INC. AND DIAMOND SITES
KEARNY, NEW JERSEY

REFERENCE: USGS 7.5 MINUTE TOPOGRAPHIC QUADRANGLES OF JERSEY CITY, AND WEEHAWKEN, NEW JERSEY

ISSUE DATE:

KEY ENVIRONMENTAL, INC.
200 THIRD AVENUE
CARNEGIE, PA 15106

USGS QUADRANGLE MAP

PROJECT NO: 09-803/804

FIGURE 7-1

y:\00civil\kearny\tra design\production drawings\general industrial treatment works approval permit application\figure 7-1 - usgs quad map.dwg Last Saved By: Scomer 10/23/2009 6:08 AM Plotted By: Shelly Comer 10/23/2009 8:45 AM Scale: 1:1

TREATMENT WORKS APPROVAL (TWA)

State of New Jersey Department of Environmental Protection

CHECKLIST Item 8

Final Plans and Profiles

VICINITY MAP

PROCESS ENGINEERING DESIGN DRAWINGS
SCCC AND DIAMOND SITES
KEARNY, NEW JERSEY

Prepared for:

PENINSULA RESTORATION GROUP

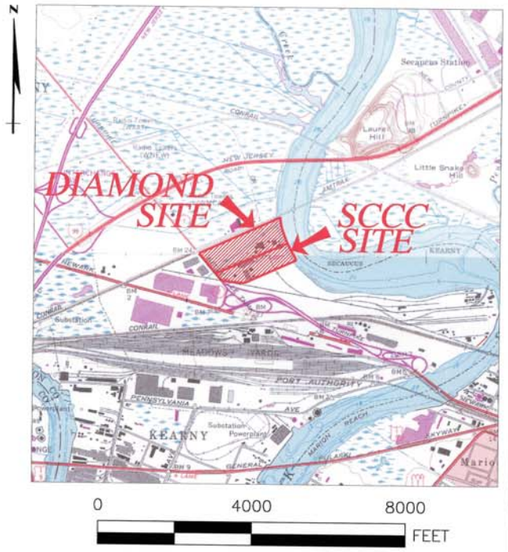

LOCATION MAP

DRAWING NO.	TITLE
TTL-01	TITLE SHEET
TWA-01	FACILITY DIAGRAM
TWA-02	HYDRAULIC CONTROL TREATMENT SYSTEM BLOCK DIAGRAM
TWA-03	HCTS PROCESS AND INSTRUMENTATION DIAGRAM
TWA-04	HCTS HYDRAULIC PROFILE
TWA-05	HYDRAULIC CONTROL TREATMENT SYSTEM PLAN
TWA-06	TEMPORARY CONSTRUCTION TREATMENT SYSTEM PROCESS AND INSTRUMENTATION DIAGRAM
TWA-07	TEMPORARY CONSTRUCTION TREATMENT SYSTEM HYDRAULIC PROFILE
TWA-08	FINAL OUTFALL LOCATIONS
TWA-09	TREATED WATER EFFLUENT PIPE DETAILS

REV #	DATE	DESCRIPTION	APPD
△			
△			
△			

REFERENCES: USGS 7.5 MINUTE TOPOGRAPHIC QUADRANGLES OF JERSEY CITY, AND WEEHAWKEN, NJ–NY.
AAA, NEW JERSEY AND PENNSYLVANIA ROAD MAP, 1997.

ISSUE DATE: 2/23/10

KEY ENVIRONMENTAL, INC.
200 THIRD AVENUE
CARNEGIE, PA 15106

PLAN PREPARER:
ALAN E. BRIGGS PROFESSIONAL ENGINEER
N.J. LICENSE NUMBER: 24GE03878500

SIGNATURE — DATE 2/23/10

FINAL

STATE OF NEW JERSEY
CERTIFICATE OF AUTHORIZATION
TO OFFER ENGINEERING SERVICES
24GA27961400

SCCC, INC. AND TIERRA SOLUTIONS INC.

DRWN:	SCC	DATE:	01/08/10
CHKD:	RJH	DATE:	01/08/10
APPD:	AEB	DATE:	01/15/10
SCALE:	AS SHOWN		

KEY ENVIRONMENTAL INCORPORATED

INTERIM RESPONSE ACTION DESIGN
SCCC AND DIAMOND SITES
KEARNY, NEW JERSEY

TITLE SHEET

PROJECT NO: 09–803/04

TTL–01

y:\Office\Kearny\ira design\production drawings\process engineering design drawings\ira application\ttl-01 title sheet.dwg Last Saved By: Scomer 2/23/2010 12:50 PM Plotted By: Shelly Comer 2/23/2010 3:03 PM Scale: 1:0.5

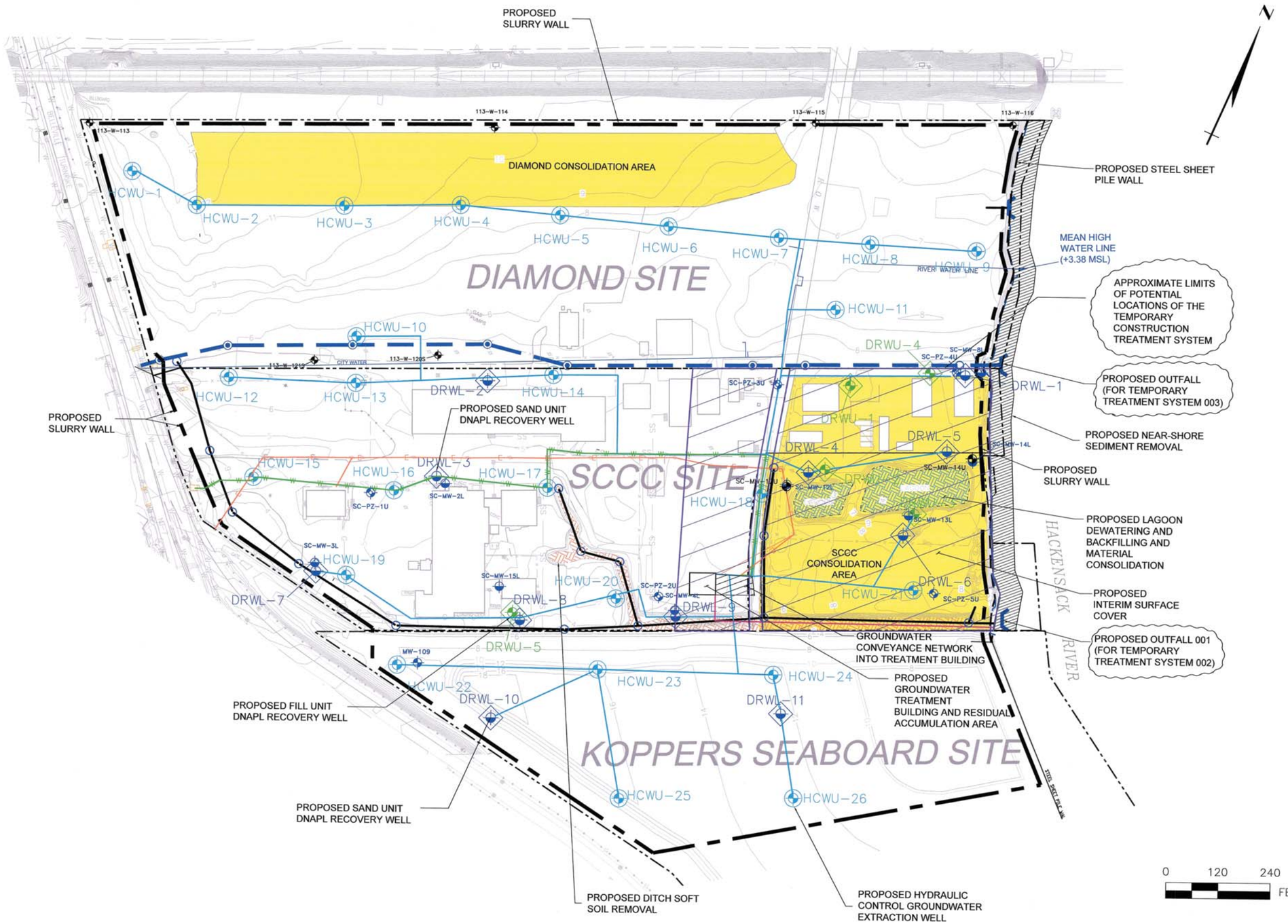

LEGEND

- EXISTING ACCESS ROAD
- EXISTING NEW JERSEY TRANSIT RAILROAD (ACTIVE)
- EXISTING FENCE
- EXISTING STRUCTURES
- EXISTING UTILITY POLES
- EXISTING LIGHT STANDARD
- EXISTING STORM DRAIN
- EXISTING STORM SEWER
- EXISTING GAS LINE
- PROPERTY BOUNDARY
- EXISTING CONCRETE PAD
- EXISTING GROUND SURFACE ELEVATION CONTOURS
- EXISTING VEGETATION
- EXISTING STREAM, POND AND RIVER BANK
- EXISTING ELEVATION (FEET–MSL)
- PROPOSED SLURRY WALL LOCATION
- PROPOSED STEEL SHEET PILE WALL LOCATION
- PROPOSED GROUNDWATER CONVEYANCE PIPING TRENCH ALIGNMENT
- PROPOSED FILL UNIT GROUNDWATER EXTRACTION (HYDRAULIC CONTROL) WELL LOCATION
- PROPOSED FILL UNIT DNAPL RECOVERY WELL LOCATION
- PROPOSED SAND UNIT DNAPL RECOVERY WELL LOCATION
- PROPOSED LAGOON DEWATERING AND BACKFILLING
- PROPOSED NEAR–SHORE SEDIMENT REMOVAL
- PROPOSED DRAINAGE DITCH REMEDIATION (EXCAVATION AND BACKFILL)
- PROPOSED INTERIM SURFACE COVER
- APPROXIMATE LIMITS OF POTENTIAL LOCATIONS FOR THE TEMPORARY CONSTRUCTION TREATMENT SYSTEM
- PROPOSED TREATED WATER PERMITTED DISCHARGE
- EXISTING STORM DRAIN (48" PIPE)
- PROPOSED CULVERT(S)
- EXISTING DROP INLET
- PROPOSED DROP INLET
- PROPOSED CULVERT OUTFALL
- PROPOSED POWER AND PHONE LINES (OVERHEAD)
- PROPOSED WATER LINE TO TREATMENT BUILDING

0 120 240 FEET

REV #	DATE	DESCRIPTION	APPD
△			
△			
△			

REFERENCE: EXISTING GROUND SURFACE CONTOURS PER AIR SURVEY, DULLES, VIRGINIA, APRIL 14, 2001. HORIZONTAL REFERENCE: NEW JERSEY STATE PLANE COORDINATES (NAD 1927). VERTICAL REFERENCE: NATIONAL GEODETIC VERTICAL DATUM (NGVD 1929).

ISSUE DATE: 2/23/10

KEY ENVIRONMENTAL, INC.
200 THIRD AVENUE
CARNEGIE, PA 15106

PLAN PREPARER:
ALAN E. BRIGGS PROFESSIONAL ENGINEER
N.J. LICENSE NUMBER: 24GE03878500

SIGNATURE — DATE 2/23/10

FINAL

STATE OF NEW JERSEY
CERTIFICATE OF AUTHORIZATION
TO OFFER ENGINEERING SERVICES
24GA27961400

SCCC, INC. AND TIERRA SOLUTIONS INC.

DRWN: SCC	DATE: 08/24/09	KEY ENVIRONMENTAL INCORPORATED
CHKD: JAB	DATE: 08/24/09	
APPD: PWS	DATE: 08/24/09	
SCALE: 1"= 2000'		

INTERIM RESPONSE ACTION DESIGN
SCCC AND DIAMOND SITES
KEARNY, NEW JERSEY

FACILITY DIAGRAM

PROJECT NO: 09–803/804
TWA–01

I:\00civil\kearny\ira design\production drawings\process engineering design drawings\ira application\wa-01 - facility diagram.dwg Last Saved By: Scomer 2/23/2010 11:26 AM Plotted By: Shelly Comer 2/23/2010 3:21 PM Scale: 1:1

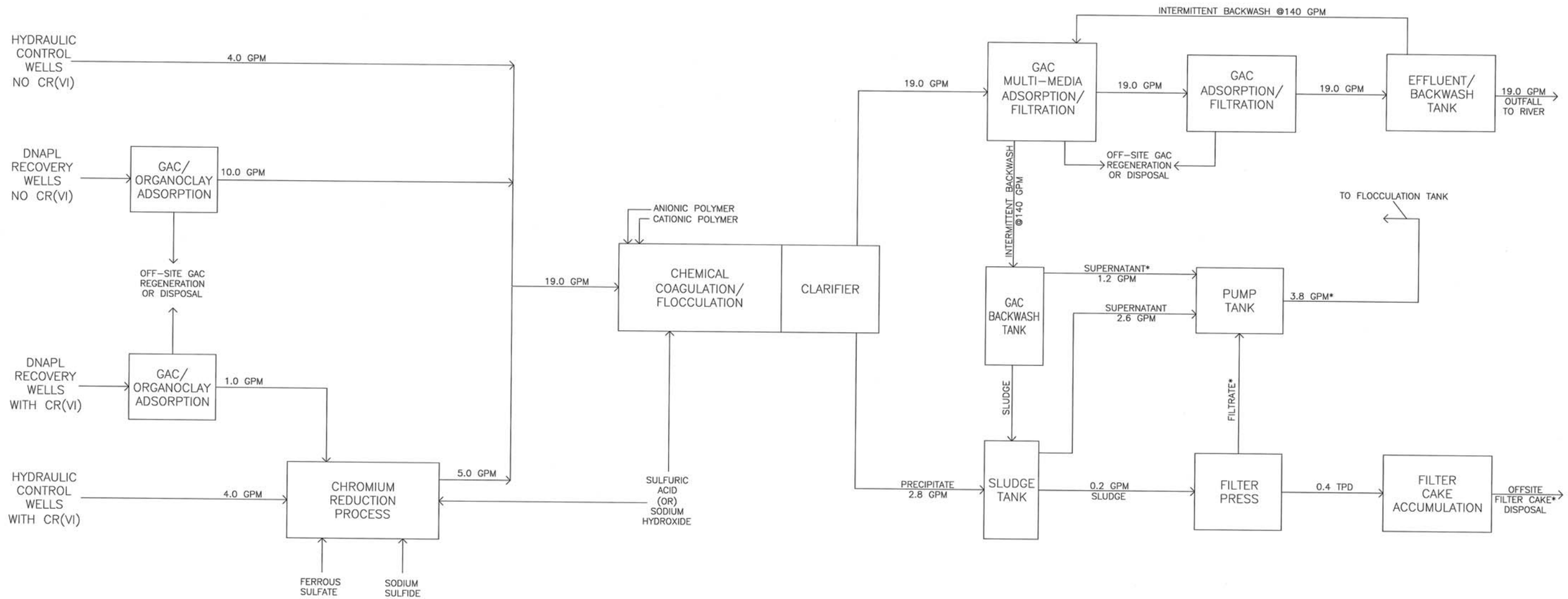

NOTES:

1. FLOW RATES SHOWN ARE ESTIMATED FOR A TYPICAL MODELED YEAR AFTER ONE YEAR OF OPERATION AND DO NOT INCLUDE MODELED SENSITIVITY ANALYSES, FACTOR OF SAFETY, OR DRAWDOWN DURING YEAR 1.
2. MULTIPLY FLOW RATES BY 2 TO OBTAIN ESTIMATED MAXIMUM DESIGN FLOWS FOR SENSITIVITY AND FACTOR OF SAFETY. 50 GPM IS THE MAXIMUM EFFLUENT PERMIT REQUESTED FLOW RATE.
3. ESTIMATED INTERMITTENT BACKWASH MAKE-UP FLOW RATE TO REMAIN CONSTANT AS A FUNCTION OF FILTER DIAMETER AND MEDIA. AN ASTERISK INDICATES THAT THE SUPERNATANT, FILTRATE, PUMP TANK, AND FILTER CAKE FLOW RATES ARE INTERMITTENT, OR FLUCTUATE.

REV #	DATE	DESCRIPTION	APPD
3			
2			
1			

REFERENCE:

ISSUE DATE: 2/23/10

KEY ENVIRONMENTAL, INC.
200 THIRD AVENUE
CARNEGIE, PA 15106

PLAN PREPARER:
ALAN E. BRIGGS PROFESSIONAL ENGINEER
N.J. LICENSE NUMBER: 24GE03878500

SIGNATURE — DATE 2/23/10

FINAL

STATE OF NEW JERSEY
CERTIFICATE OF AUTHORIZATION
TO OFFER ENGINEERING SERVICES
24GA27961400

SCCC, INC. AND TIERRA SOLUTIONS INC.

DRWN: SCC	DATE:01/08/10
CHKD: RJH	DATE:01/08/10
APPD: AEB	DATE:01/15/10
SCALE: AS SHOWN	

KEY ENVIRONMENTAL INCORPORATED

INTERIM RESPONSE ACTION DESIGN
SCCC AND DIAMOND SITES
KEARNY, NEW JERSEY

HYDRAULIC CONTROL TREATMENT SYSTEM BLOCK DIAGRAM

PROJECT NO: 09-803/804

TWA-02

y:\0Civil\kearny\ira design\production drawings\process engineering design drawings\twa application\twa-02 process flow diagram.dwg Last Saved By: Scamer 2/23/2010 11:23 AM Plotted By: Shelly Corner 2/23/2010 3:18 PM Scale: 1:1

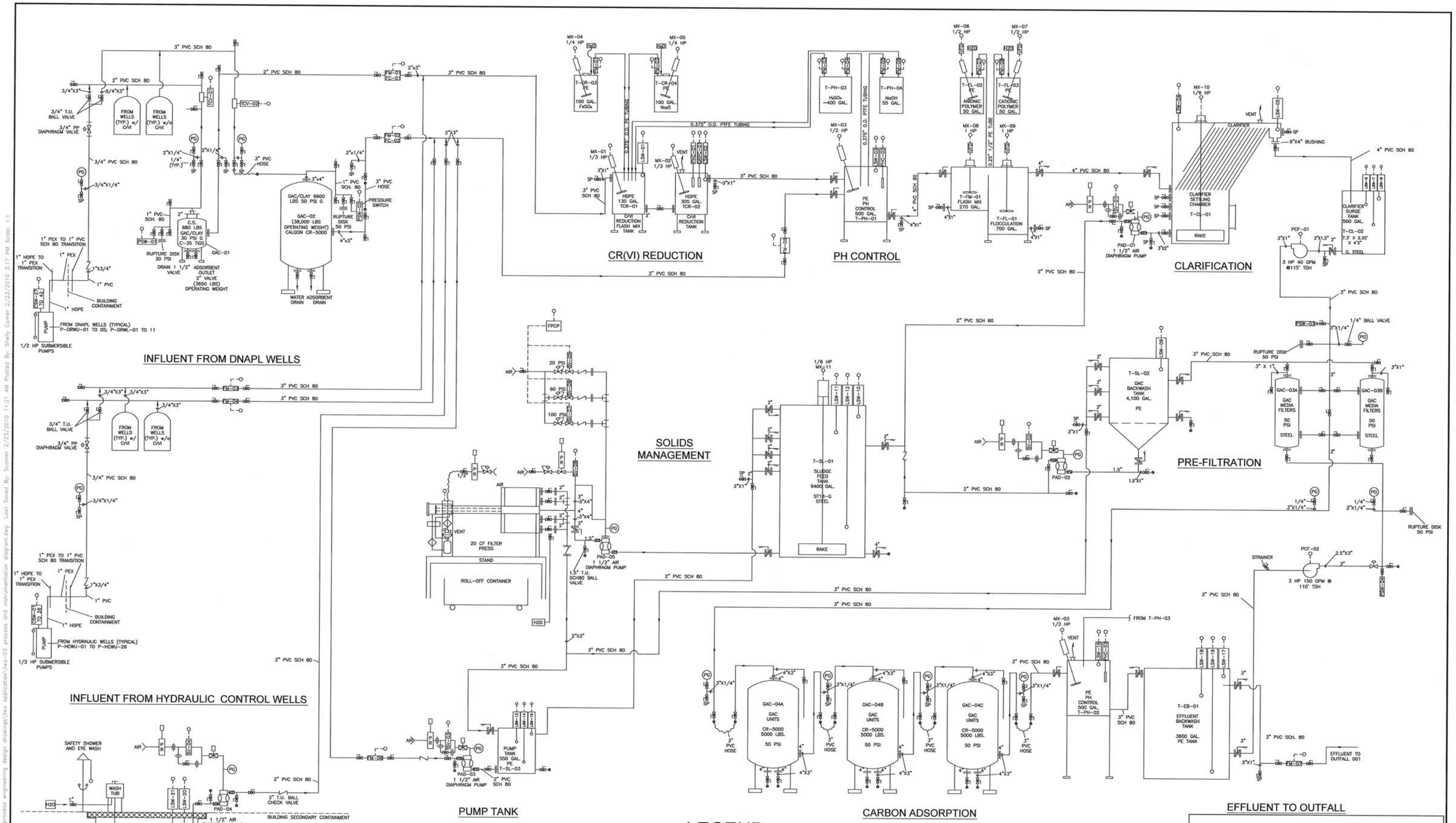

FINAL

REV #	DATE	DESCRIPTION	APPD
3			
2			
1			

REFERENCE:

ISSUE DATE: 2/23/10

KEY ENVIRONMENTAL, INC.
200 THIRD AVENUE
CARNEGIE, PA 15106

STATE OF NEW JERSEY
CERTIFICATE OF AUTHORIZATION
TO OFFER ENGINEERING SERVICES
24GA27961400

PLAN PREPARER:
ALAN E. BRIGGS PROFESSIONAL ENGINEER
N.J. LICENSE NUMBER: 24GE03878500

SIGNATURE DATE 2/23/10

SCCC, INC. AND TIERRA SOLUTIONS INC.

DRWN: SCC	DATE: 01/08/10
CHKD: RJH	DATE: 01/08/10
APPD: AEB	DATE: 01/15/10
SCALE: NOT TO SCALE	

KEY ENVIRONMENTAL INCORPORATED

INTERIM RESPONSE ACTION DESIGN
SCCC AND DIAMOND SITES
KEARNY, NEW JERSEY

HCTS PROCESS AND INSTRUMENTATION DIAGRAM

PROJECT NO: 09-803/804
TWA-03

Last Saved By: Scomer 2/23/2010 11:21 AM Plotted By: Shelly Comer 2/23/2010 3:17 PM Scale: 1:1

\\Oscar\kearny\kra design\production drawings\process engineering design drawings\kra application\tw-04 hydraulic profile.dwg Last Saved By: Scorner 2/23/2010 11:19 AM Plotted By: Shelly Corner 2/23/2010 3:16 PM Scale: 1:1

Hydraulic Profile - With Chromium With DNAPL (WCWD)

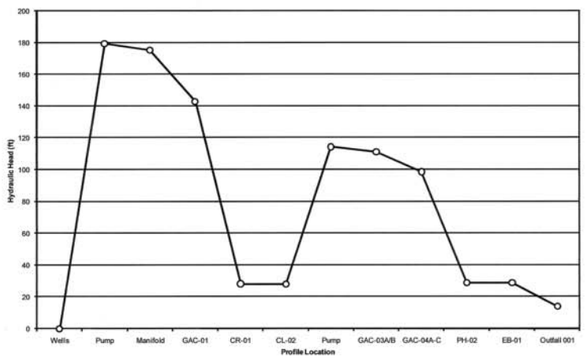

Hydraulic Profile Calculations (Wells With Chromium and With DNAPL - WCWD)

Description	Design Flow Rate (gpm)	Pipe Diameter (in)	Elevation Head[1] (ft)	Pressure Head (psig)	Pressure Head (ft)	Pump Head (ft)	Friction Head (ft)	Total Head (ft)
Wells	0.0	0.0	0.0	0.0	0.0	0.0	0.0	0.0
Pump	1.0	0.937	26.5	0.0	0.0	210	4.11	179.4
Manifold	1.0	2.864	30.5	0.0	0.0	0.0	0.06	175.3
GAC-01	1.0	NA	28.5	50.0	115.4	0.0	1.1	142.8
CR-01	10	2.864	28.1	0.0	0.0	0.0	0.00	28.1
CL-02	40	2.864	28.0	0.0	0.0	0.0	0.00	28.0
Pump	40	2.864	28.0	0	0.0	115	0.74	114.3
GAC-03A/B	40	NA	27.0	48.1	111.1	0.0	2.2	111.1
GAC-04A-C	40	2.864	31.0	42.7	98.6	0.0	8.5	98.6
PH-02	40	2.864	28.8	0.0	0.0	0.0	0.0	28.8
EB-01	40	2.864	28.7	0.0	0.0	0.0	0.1	28.7
Outfall 001	40	2.864	15.1	0.0	0.0	0.0	1.1	14.0

Hydraulic Profile - With Chromium No DNAPL (WCND)

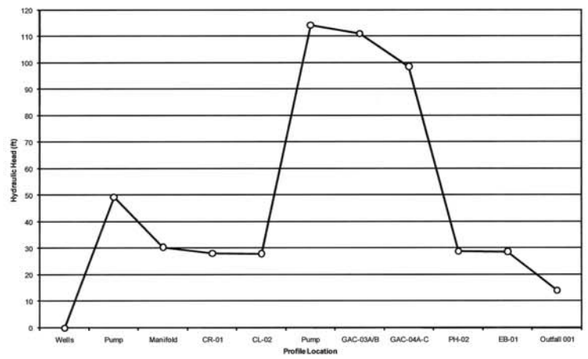

Hydraulic Profile Calculations (Wells No Chromium and With DNAPL - NCWD)

Description	Design Flow Rate (gpm)	Pipe Diameter (in)	Elevation Head (ft)	Pressure Head (psig)	Pressure Head (ft)	Pump Head (ft)	Friction Head (ft)	Total Head (ft)
Wells	0.0	0.0	0.0	0.0	0.0	0.0	0.0	0.0
Pump	1.0	0.937	26.5	0.0	0.0	210	4.11	179.4
Manifold	20	2.864	30.5	0.0	0.0	0.0	0.09	175.3
GAC-02	20	NA	28.5	50.0	115.4	0.0	1.1	142.8
PH-01	40	2.864	28.1	0.0	0.0	0.0	0.00	28.1
CL-02	40	2.864	28.0	0.0	0.0	0.0	0.00	28.0
Pump	40	2.864	28.0	0	0.0	115	0.74	114.3
GAC-03A/B	40	NA	27.0	48.1	111.1	0.0	2.2	111.1
GAC-04A-C	40	2.864	31.0	42.7	98.6	0.0	8.5	98.6
PH-02	40	2.864	28.8	0.0	0.0	0.0	0.0	28.8
EB-01	40	2.864	28.7	0.0	0.0	0.0	0.1	28.7
Outfall 001	40	2.864	15.1	0.0	0.0	0.0	1.1	14.0

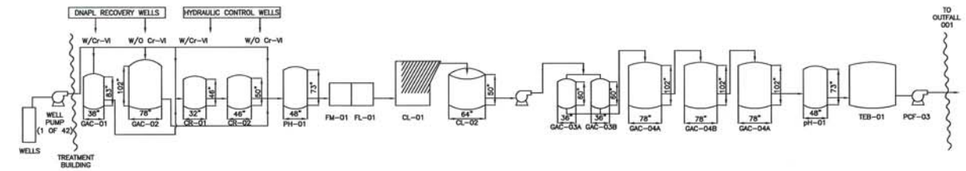

Hydraulic Profile - Gravity Flow Components

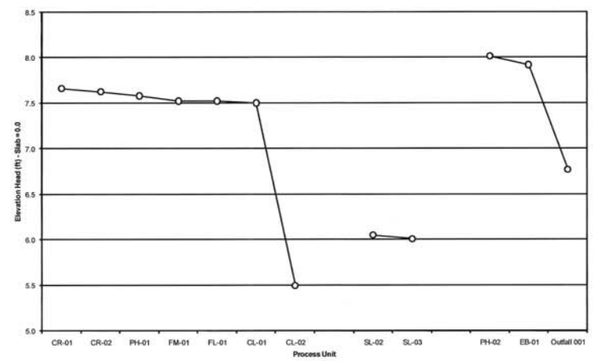

Description	Design Flow Rate (gpm)	Friction Head (ft)	Elevation Head (ft)
CR-01	40.0	0.000	7.660
CR-02	40.0	0.034	7.625
PH-01	40.0	0.046	7.579
FM-01	40.0	0.057	7.522
FL-01	40.0	0.011	7.522
CL-01	40.0	0.022	7.500
CL-02	40.0	0.011	5.500
SL-02	40.0	0.000	6.050
SL-03	40.0	0.040	6.010
PH-02	40.0	0.000	8.013
EB-01	40.0	0.096	7.917
Outfall 001	40.0	1.144	6.733

1. Elevation head for lowest of three (3) ports.

Hydraulic Profile - No Chromium With DNAPL (NCWD)

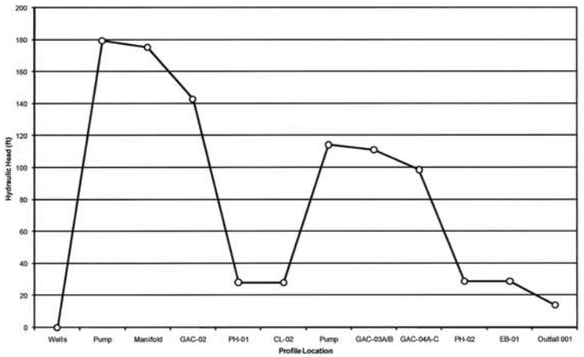

Hydraulic Profile Calculations (Wells With Chromium and No DNAPL - WCND)

Description	Design Flow Rate (gpm)	Pipe Diameter (in)	Elevation Head[1] (ft)	Pressure Head (psig)	Pressure Head (ft)	Pump Head (ft)	Friction Head (ft)	Total Head (ft)
Wells	0.0	0.0	0.0	0.0	0.0	0.0	0.0	0.0
Pump	1.0	0.937	26.5	0.0	0.0	80	4.11	49.4
Manifold	1.0	2.864	30.5	0.0	0.0	0.0	0.06	30.4
CR-01	10	2.864	28.1	0.0	0.0	0.0	0.00	28.1
CL-02	40	2.864	28.0	0.0	0.0	0.0	0.00	28.0
Pump	40	2.864	28.0	0	0.0	115	0.74	114.3
GAC-03A/B	40	NA	27.0	48.1	111.1	0.0	2.2	111.1
GAC-04A-C	40	2.864	31.0	42.7	98.6	0.0	8.5	98.6
PH-02	40	2.864	28.8	0.0	0.0	0.0	0.0	28.8
EB-01	40	2.864	28.7	0.0	0.0	0.0	0.1	28.7
Outfall 001	40	2.864	15.1	0.0	0.0	0.0	1.1	14.0

Hydraulic Profile - No Chromium No DNAPL (NCND)

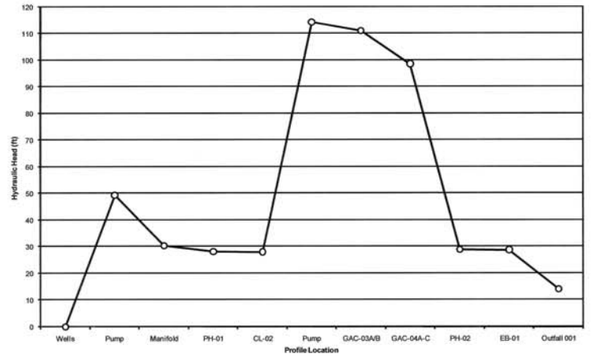

Hydraulic Profile Calculations (Wells No Chromium No DNAPL - NCND)

Description	Design Flow Rate (gpm)	Pipe Diameter (in)	Elevation Head[1] (ft)	Pressure Head (psig)	Pressure Head (ft)	Pump Head (ft)	Friction Head (ft)	Total Head (ft)
Wells	0.0	0.0	0.0	0.0	0.0	0.0	0.0	0.0
Pump	1.0	0.937	26.5	0.0	0.0	80	4.11	49.4
Manifold	20.0	2.864	30.5	0.0	0.0	0.0	0.09	30.4
PH-01	40	2.864	28.1	0.0	0.0	0.0	0.00	28.1
CL-02	40	2.864	28.0	0.0	0.0	0.0	0.00	28.0
Pump	40	2.864	28.0	0	0.0	115	0.74	114.3
GAC-03A/B	40	NA	27.0	48.1	111.1	0.0	2.2	111.1
GAC-04A-C	40	2.864	31.0	42.7	98.6	0.0	8.5	98.6
PH-02	40	2.864	28.8	0.0	0.0	0.0	0.0	28.8
EB-01	40	2.864	28.7	0.0	0.0	0.0	0.1	28.7
Outfall 001	40	2.864	15.1	0.0	0.0	0.0	1.1	14.0

Tank Dimensions, Operating Water Levels, and Required Height of Tank, Inlets, and Outlets

Tank Information	Units	Tank T-CR-01	T-CR-02	T-PH-01	T-FL-01	T-CL-01	T-CL-02	T-SL-01	T-SL-02[2]	T-SL-03	T-PH-02	T-EB-01
Working Level[5]	in	91.92	91.50	90.95	90.27	90.00	66.00	180.00	185.25	60.00	96.15	95.00
Tank Height	in	40	50	73	48	94.25	50	192	197.25	66	73	107
Freeboard	in	4.1	4.5	5.0	3.7	4.25	6	12	12	6	6.8	12
Leg Height[3]	in	56	46	23	46	NA	46	NA	NA	NA	30	NA
Inlet Height[4]	in	50	16	68	45	60	50	144	129.5	81	73	81.6
Outlet Height[5]	in	6	90	6	43	90	4	186 150 126 102	186.6 130.6 72.6	10	6	95

1. Top of slab (not groundwater intake level) treated as base elevation and set equal to zero (0) for this table.
2. T-SL-02 - Cone bottomed tank supplied with legs - total height reflects legs and tank.
3. NA - Not Applicable. Tank rests on slab.
4. Inlet and outlet heights are inverts relative to tank bottom. Pipe centerlines shown on drawings. NA - Not Applicable. Inlet via top of tank.
5. Outlet height for clarifier is weir height relative to slab.

NOTES:

1. CALCULATIONS BASED ON PUMP TOTAL DYNAMIC HEAD, ELEVATION HEAD, PRESSURE HEAD, AND FRICTIONAL HEAD LOSSES. KINETIC ENERGY COMPONENTS (VELOCITY HEAD) IGNORED. BASIS FOR HYDRAULIC PROFILES IS ANTICIPATED MAXIMUM DEPTH OF WELL PUMP INTAKES (−10 FT MSL). THIS ELEVATION SET EQUAL TO ZERO. ELEVATIONS FOR GRAVITY FLOW COMPONENTS BASED ON SLAB = 0.0,

SCCC, INC. AND TIERRA SOLUTIONS INC.

DRWN: SCC	DATE: 01/08/10	KEY ENVIRONMENTAL INCORPORATED
CHKD: RJH	DATE: 01/08/10	
APPD: AEB	DATE: 01/15/10	
SCALE: AS SHOWN		

INTERIM RESPONSE ACTION DESIGN
SCCC AND DIAMOND SITES
KEARNY, NEW JERSEY

HCTS HYDRAULIC PROFILE

PROJECT NO: 09-803/804
TWA-04

REV #	DATE	DESCRIPTION	APPD
1			
2			
3			

REFERENCE:

ISSUE DATE: 2/23/10
KEY ENVIRONMENTAL, INC.
200 THIRD AVENUE
CARNEGIE, PA 15106

PLAN PREPARER:
ALAN E. BRIGGS PROFESSIONAL ENGINEER
N.J. LICENSE NUMBER: 24GE03878500
SIGNATURE DATE 2/23/10

FINAL

STATE OF NEW JERSEY
CERTIFICATE OF AUTHORIZATION
TO OFFER ENGINEERING SERVICES
24GA27961400

TREATMENT SYSTEM PLAN

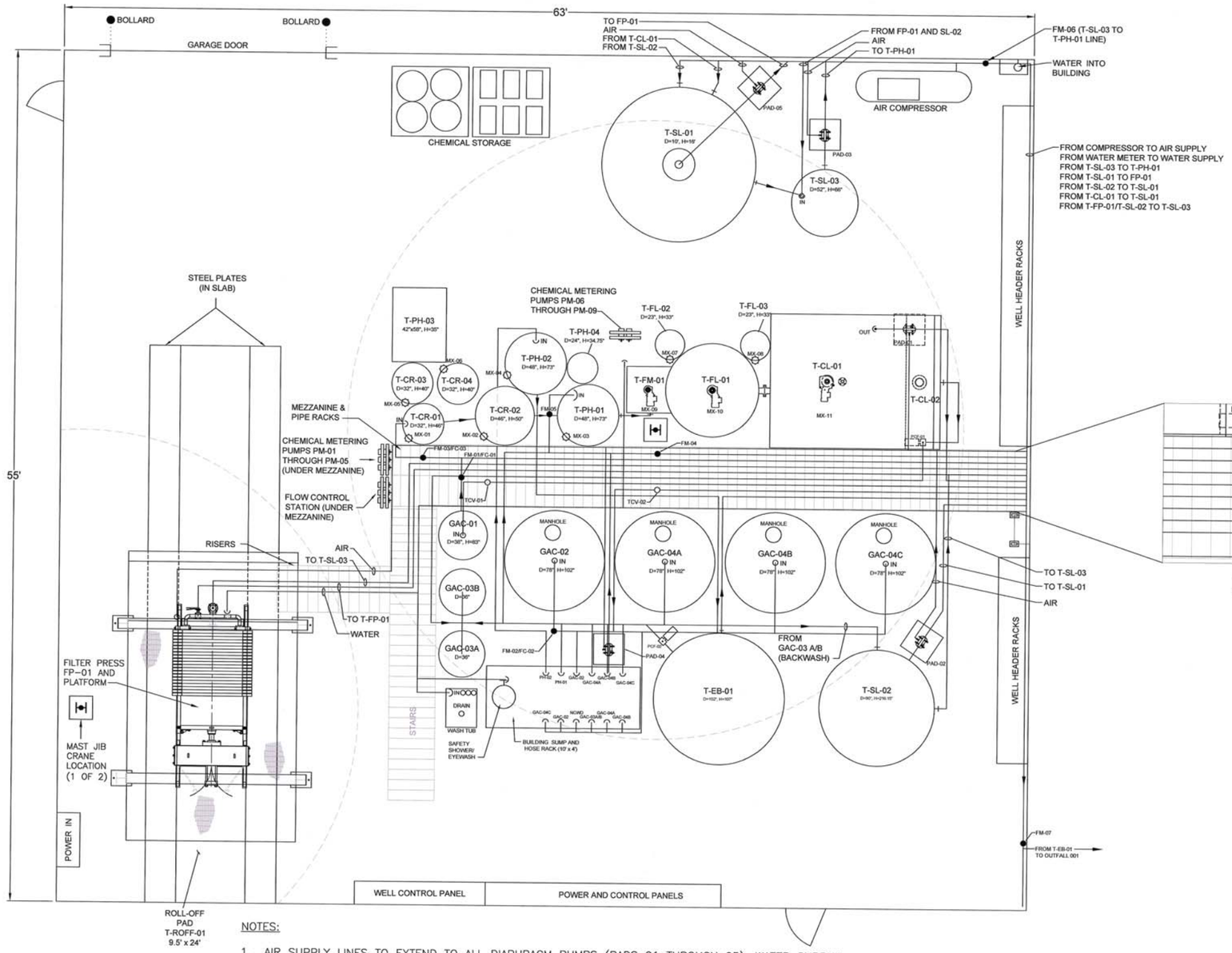

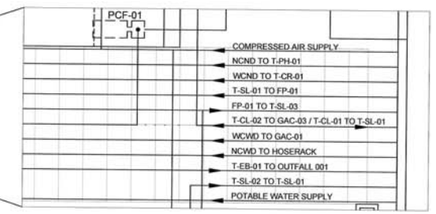

MEZZANINE PIPING

NOTES:

1. AIR SUPPLY LINES TO EXTEND TO ALL DIAPHRAGM PUMPS (PADS 01 THROUGH 05). WATER SUPPLY LINES TO EXTEND TO TANKS T–FL–02, T–FL–03 AND THE WASH TUB AND SAFETY SHOWER/EYEWASH.
2. HOSE RACK AND GAC UNIT PIPING LAYOUT AND DETAILS SHOWN ON SUBSEQUENT DRAWINGS. PIPE SUPPORT STRUCTURES TO BE INSTALLED FOR ALL NON–MEZZANINE PIPE RUNS.
3. IN GENERAL, PIPING PARALLEL TO MEZZANINE CENTER LINE RUNS ABOVE CROSS MEMBERS. LINES RUNNING PERPENDICULAR TO THE MEZZANINE CENTERLINE RUN BELOW CROSS MEMBERS.
4. LOCATION OF EQUIPMENT RELATIVE TO BUILDING WALLS SHOWN ON DRAWING PLN–02.
5. MEZZANINE ELEVATION (TOP OF GRATING) = 8 FT ABOVE SLAB. FILTER PRESS PLATFORM ELEVATION (TOP OF GRATING) = 10 FT ABOVE SLAB. STEPS REQUIRED BETWEEN WEST WING OF MEZZANINE AND FILTER PRESS PLATFORM

0 4 8 FEET

REV #	DATE	DESCRIPTION	APPD
3			
2			
1			

ISSUE DATE: 2/23/10

KEY ENVIRONMENTAL, INC.
200 THIRD AVENUE
CARNEGIE, PA 15106

PLAN PREPARER:
ALAN E. BRIGGS PROFESSIONAL ENGINEER
N.J. LICENSE NUMBER: 24GE03878500

SIGNATURE DATE 2/23/10

FINAL

STATE OF NEW JERSEY
CERTIFICATE OF AUTHORIZATION
TO OFFER ENGINEERING SERVICES
24GA27961400

SCCC, INC. AND TIERRA SOLUTIONS INC.

DRWN: TDD	DATE: 01/08/10	KEY ENVIRONMENTAL INCORPORATED
CHKD: RJH	DATE: 01/08/10	
APPD: AEB	DATE: 01/08/10	
SCALE: AS SHOWN		

INTERIM RESPONSE ACTION DESIGN
SCCC AND DIAMOND SITES
KEARNY, NEW JERSEY

HYDRAULIC CONTROL TREATMENT SYSTEM PLAN

PROJECT NO: 09–803/804
TWA–05

y:\00civil\kearny\wa design\production drawings\process engineering design drawings\twa application\twa-05 treatment system plan.dwg Last Saved By: Scanner 2/23/2010 3:15 PM Plotted By: Shelly Comer 2/23/2010 3:15 PM Scale: 1:1

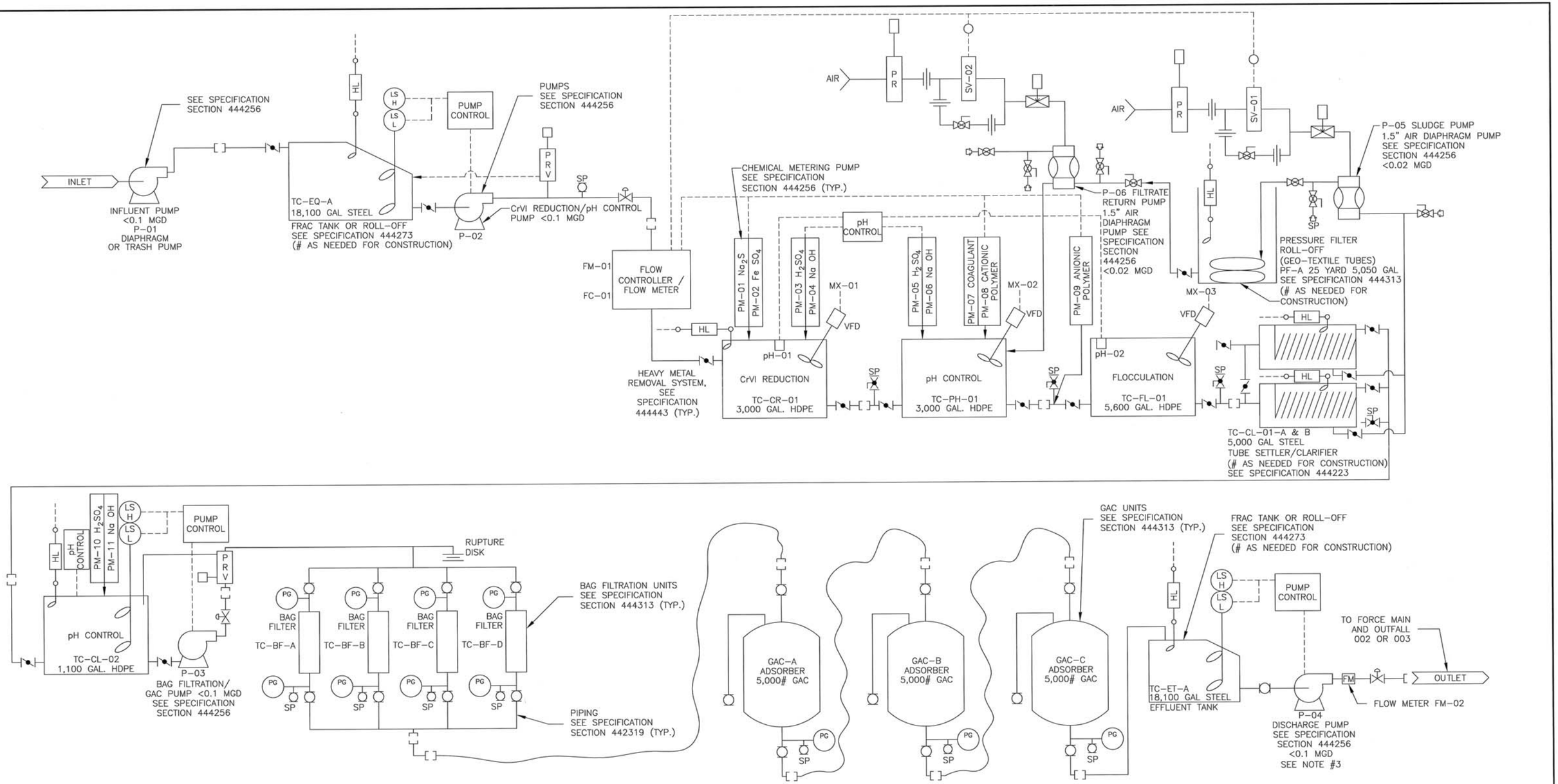

LEGEND

- ELECTRICAL LINE
- BUTTERFLY VALVE
- CHECK VALVE
- FLOW CONTROL VALVE
- BALL VALVE
- PG — PRESSURE GAUGE
- HL — HIGH LEVEL ALARM/ SHUT OFF
- SP — SAMPLE PORT
- LS — LEVEL SWITCH
- PRV — PRESSURE RELIEF VALVE
- FLEX/CAMLOCK CONNECTION
- PR — PRESSURE REGULATOR
- pH — pH CONTROL
- SV — SOLENOID VALVE
- CENTRIFUGAL PUMP
- AIR DIAPHRAGM PUMP
- PM — CHEMICAL METERING PUMP
- NEEDLE VALVE
- RUPTURE DISK
- FLANGE FITTING
- UNION

TEMPORARY CONSTRUCTION TREATMENT SYSTEM

NOTES:

1. TREATMENT UNITS SHOWN MAY BE MODIFIED, ENHANCED, AND/OR ELIMINATED DEPENDING ON EFFECTIVENESS OF INDIVIDUAL COMPONENTS IN ACHIEVING PERMIT DISCHARGE LIMITS.
2. EQUALIZATION TANK(S), TUBE SETTLER/CLARIFER, EFFLUENT TANK AND PRESSURE FILTER ROLL-OFF MAY INCLUDE ADDITIONAL TANKS, AS NEEDED.
3. DEPENDING ON TREATMENT SYSTEM LOCATION AND CONFIGURATION, GRAVITY FEED/DISCHARGE MAY BE CONSIDERED.
4. THE CONTRACTOR MAY RECOMMEND POTENTIAL SYSTEM MODIFICATIONS TO THE ENGINEER.

REV #	DATE	DESCRIPTION	APPD
0	12/22/09	ISSUED FOR BID	AEB

REFERENCE:

ISSUE DATE: 2/23/10

KEY ENVIRONMENTAL, INC.
200 THIRD AVENUE
CARNEGIE, PA 15106

PLAN PREPARER:
ALAN E. BRIGGS PROFESSIONAL ENGINEER
N.J. LICENSE NUMBER: 24GE03878500

SIGNATURE — DATE 2/23/10

FINAL

STATE OF NEW JERSEY
CERTIFICATE OF AUTHORIZATION
TO OFFER ENGINEERING SERVICES

24GA27961400

SCCC, INC. AND TIERRA SOLUTIONS INC.

DRWN: WAA	DATE: 02/27/09	KEY ENVIRONMENTAL INCORPORATED
CHKD: AEB	DATE: 02/27/09	
APPD: PWS	DATE: 02/27/09	
SCALE: NOT TO SCALE		

INTERIM RESPONSE ACTION DESIGN
SCCC AND DIAMOND SITES
KEARNY, NEW JERSEY

TEMPORARY CONSTRUCTION TREATMENT PROCESS AND INSTRUMENTATION DIAGRAM

PROJECT NO: 09-803/804
TWA-06

Y:\0Civil\kearny\tra design\production drawings\process engineering design drawings\twa application\twa-06 temporary construction treatment system process and instrumentation diagram.dwg Last Saved By: Scanner 2/23/2010 11:14 AM Plotted By: Shelly Comer 2/23/2010 3:14 PM Scale: 1:1

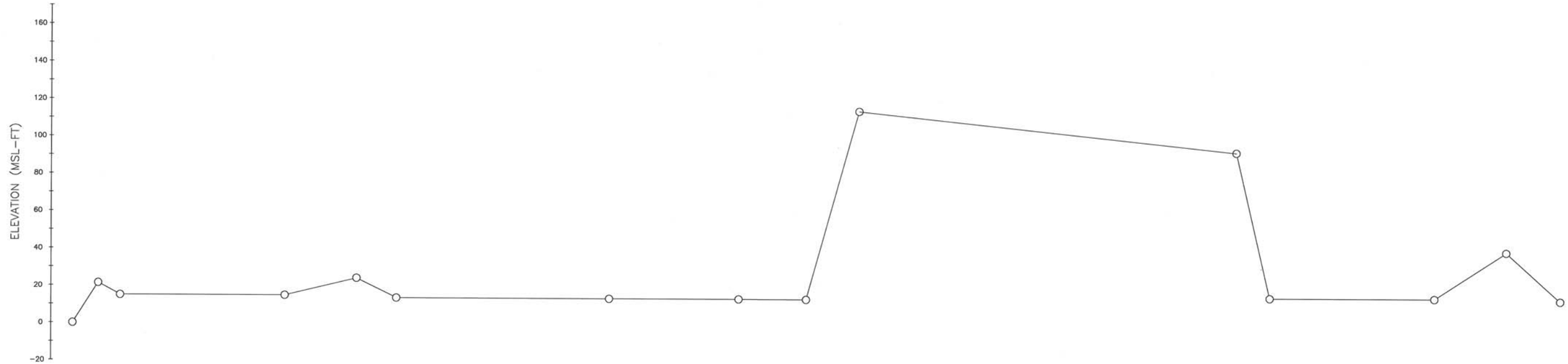

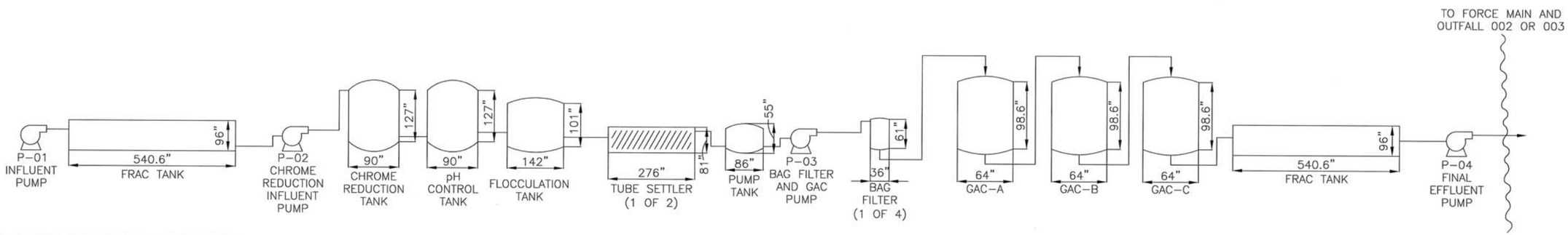

Description	Elevation Head[1] (ft)	Pressure Head (psig)	Pressure Head (ft)	Pump Head (ft)	Friction Head (ft)	Total Head (ft)
Surface	0.0	0.0	0.0	0.0	0.0	0.0
Pump, P-01	15	0.0	0.0	40	3.60	21.4
TC-EQ-A	15	0.0	0.0	0	0.10	15.0
Pump, P-02	15.0	0	0.0	40	0.74	24.3
TC-CR-01	13.8	0.0	0.0	0.0	0.00	13.8
TC-PH-01	13.8	0.0	0.0	0.0	0.10	13.7
TC-FL-01	13.7	0.0	0.0	0.0	0.10	13.6
TC-CL-01	13.6	0.0	0.0	0.0	0.00	13.6
TC-CL-02	13.6	0.0	0.0	0.0	0.10	13.5
Pump, P-03	13.5	0	0.0	115	0.74	114.4
TC-BF-A,B,C,D	11.0	46.3	106.9	0.0	10.0	106.9
GAC-A, B, C, D	15.2	40.1	92.7	0.0	10.0	92.7
TC-ET-A	15.0	0.0	0.0	0.0	0.1	14.9
Pump, P-04	14.9	0.0	0.0	40	0.00	39.9
Outfall 002/003	15.0	0.0	0.0	40.0	1.1	13.9

REV #	DATE	DESCRIPTION	APPD
△			
△			
△			

REFERENCE:

ISSUE DATE: 2/23/10

KEY ENVIRONMENTAL, INC.
200 THIRD AVENUE
CARNEGIE, PA 15106

PLAN PREPARER:
ALAN E. BRIGGS PROFESSIONAL ENGINEER
N.J. LICENSE NUMBER: 24GE03878500

SIGNATURE 2/23/10 DATE

FINAL

CERTIFICATE OF AUTHORIZATION TO OFFER ENGINEERING SERVICES
24GA27961400

SCCC, INC. AND TIERRA SOLUTIONS INC.

DRWN: SCC	DATE: 10/28/09	KEY ENVIRONMENTAL INCORPORATED
CHKD: JB	DATE: 10/28/09	
APPD: JAB	DATE: 10/28/09	
SCALE: N.T.S.		

INTERIM RESPONSE ACTION DESIGN
SCCC AND DIAMOND SITES
KEARNY, NEW JERSEY

TEMPORARY CONSTRUCTION TREATMENT SYSTEM HYDRAULIC PROFILE

PROJECT NO: 09-803/804
TWA-07

Y:\Office\kearny\ira design\production drawings\process engineering design drawings\two application\twa-07 tcts hydraulic profile.dwg Last Saved By: Tadbogovich 2/23/2010 3:17 PM Plotted By: Travis Debogovich 2/23/2010 3:21 PM Scale: 1:1

LEGEND

- EXISTING ACCESS ROAD
- EXISTING NEW JERSEY TRANSIT RAILROAD (ACTIVE)
- EXISTING FENCE
- EXISTING STRUCTURES
- EXISTING UTILITY POLES
- EXISTING LIGHT STANDARD
- EXISTING OVERHEAD POWER LINE
- PROPERTY BOUNDARY
- EXISTING GROUND SURFACE ELEVATION CONTOURS
- EXISTING VEGETATION
- EXISTING STREAM, POND AND RIVER BANK
- PROPOSED SLURRY WALL LOCATION
- SCCC CONSOLIDATION AREA CONTOURS
- RIPARIAN ZONE BUFFER (50 FEET LANDWARD FROM MHW)
- DIVERSION BERM
- 3.38 — MEAN HIGH WATER (MHW)
- 14 — PROPOSED FINAL SURFACE CONTOUR
- PROPOSED STORM SEWER PIPE
- PROPOSED DROP INLETS
- PROPOSED TREATED WATER PERMITTED DISCHARGE
- PROPOSED FILL (SOUTH DITCH)
- A A' — CROSS-SECTION LOCATION
- PROPOSED STEEL SHEET PILE WALL LOCATION
- PROPOSED RIPRAP APRON
- PROPOSED CONTAINMENT DIKE
- EXISTING WETLANDS
- PROPOSED INTERIM SURFACE COVER
- PROPOSED DRAINAGE CHANNEL
- CHANNEL REACH POINT

0 50 100 FEET

NOTES:

1. TIDAL ELEVATION DATA CALCULATIONS WERE PROVIDED BY GEOD CORPORATION DERIVED BY UTILIZING INFORMATION FOR TIDAL STATIONS 853-0696 AND 853-0772 USING THE 1983-2001 TIDAL EPOCH AND ARE REFERENCED TO THE NATIONAL GEODETIC VERTICAL DATUM OF 1929 (NGVD 1929).
2. SIGNIFICANT PORTIONS OF THE SITE ARE LOCATED WITHIN THE 100-YEAR FLOODPLAIN (SEE FEMA MAPS IN LURP APPLICATION FOR LOCATION OF FLOOD HAZARD ELEVATION). THE FLOOD HAZARD ELEVATION IS +9 FT MSL.

REV #	DATE	DESCRIPTION	APPD
△			
△			
△			

REFERENCE:

1. EXISTING GROUND SURFACE CONTOURS PER AIR SURVEY, DULLES, VIRGINIA, APRIL 14, 2001. HORIZONTAL REFERENCE: NEW JERSEY STATE PLANE COORDINATES (NAD 1927). VERTICAL REFERENCE:NATIONAL GEODETIC VERTICAL DATUM (NGVD 1929).
2. PROPERTY BOUNDARY SHOWN HEREON FROM SHEET 1 OF 1 TITLED "SURVEY OF PROPERTY, TAX LOTS 32.02, 46, 47 & 47R, BLOCK 287, TAX LOTS 48, 49, 50, 51, 52 AND 52R, BLOCK 287, TOWN OF KEARNY, HUDSON COUNTY, NEW JERSEY," DATED JULY 1, 2009 (REVISION 2: JULY 29, 2009), PREPARED BY DYKSTRA ASSOCIATES, PC.
3. EXISTING WETLANDS PER WETLAND DELINEATION BY PRINCETON HYDRO, LLC FOR KEY ENVIRONMENTAL, INC. PERFORMED IN MARCH 2009.

ISSUE DATE: 2/23/10

KEY ENVIRONMENTAL, INC.
200 THIRD AVENUE
CARNEGIE, PA 15106

PLAN PREPARER:
ALAN E. BRIGGS PROFESSIONAL ENGINEER
N.J. LICENSE NUMBER: 24GE03878500

SIGNATURE DATE 2/23/10

FINAL

CERTIFICATE OF AUTHORIZATION
TO OFFER ENGINEERING SERVICES
24GA27961400

SCCC, INC. AND TIERRA SOLUTIONS INC.

DRWN: WAA	DATE: 04/15/09	KEY ENVIRONMENTAL INCORPORATED
CHKD: JAB	DATE: 04/15/09	
APPD: AEB	DATE: 04/15/09	
SCALE: AS SHOWN		

INTERIM RESPONSE ACTION DESIGN
SCCC AND DIAMOND SITES
KEARNY, NEW JERSEY

FINAL OUTFALL LOCATIONS

PROJECT NO: 09-803/804
TWA-08

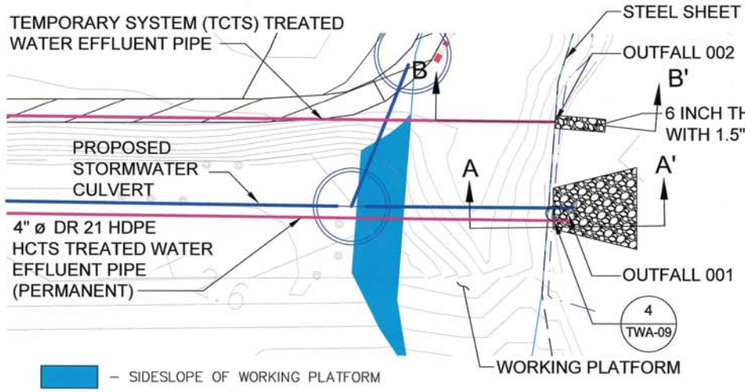

1 TWA-09 OUTFALL 001 AND 002 PLAN (TYP.) (SEE NOTE 1)
N.T.S.

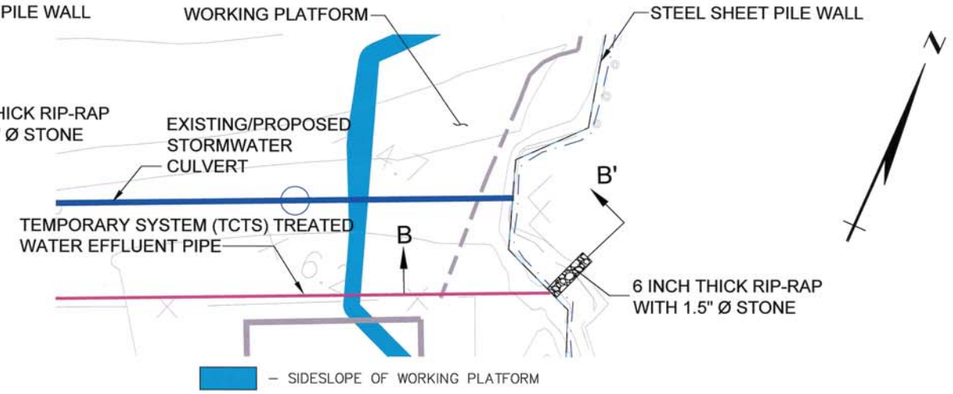

2 TWA-09 OUTFALL 003 PLAN (TYP.) (SEE NOTE 1)
N.T.S.

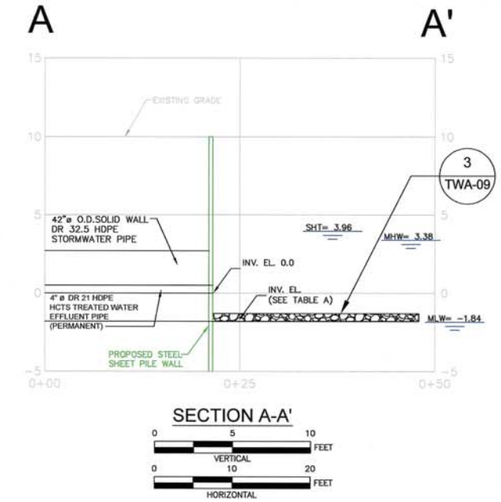

TABLE A

LOCATION	INVERT ELEVATION (FT-MSL)
OUTFALL 001	0.0
OUTFALL 002	3.4
OUTFALL 003	3.4

NOTES:

1. OUTFALL PLAN VIEWS SHOW LOCATION FOR OUTFALL 001 (PERMANENT) AND TENTATIVE LOCATIONS FOR OUTFALLS 002 AND 003 (BOTH TEMPORARY). FINAL LOCATIONS FOR OUTFALLS 002 AND 003 WILL BE IDENTIFIED BASED ON SITE CONDITIONS AND REMEDIAL ACTIVITIES IN THE AREAS. FINAL LOCATIONS WILL BE WITHIN THE PROXIMITY AND SHALL COMPLY WITH DISCHARGE PERMIT REQUIREMENTS.
2. APPROPRIATE ANCHORS WILL BE PROVIDED TO AVOID VANDALISM OF TEMPORARY TREATED SYSTEM WATER EFFLUENT PIPING.

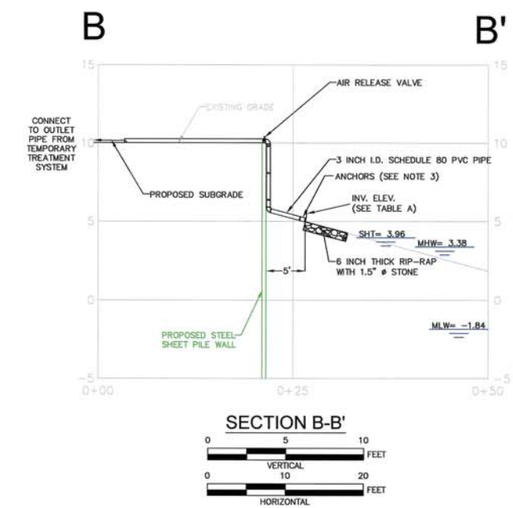

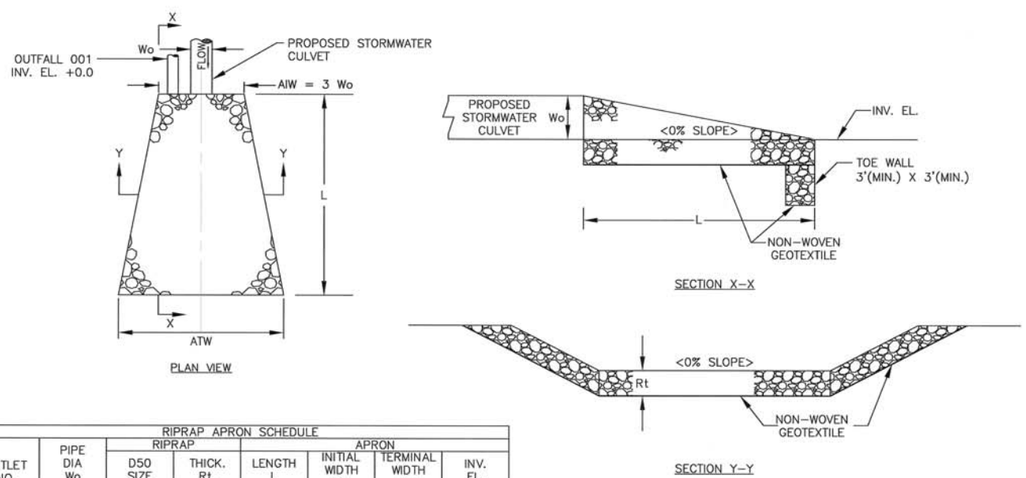

RIPRAP APRON SCHEDULE							
		RIPRAP		APRON			
OUTLET NO.	PIPE DIA Wo (IN)	D50 SIZE (R IN)	THICK. Rt. (IN)	LENGTH L (FT)	INITIAL WIDTH Aiw (FT)	TERMINAL WIDTH Atw (FT)	INV. EL. (FT)
1	39.3	6	12	16.5	10	26.5	−1.8

3 TWA-09 RIPRAP APRON DETAIL AND SCHEDULE - OUTFALL 001
N.T.S.

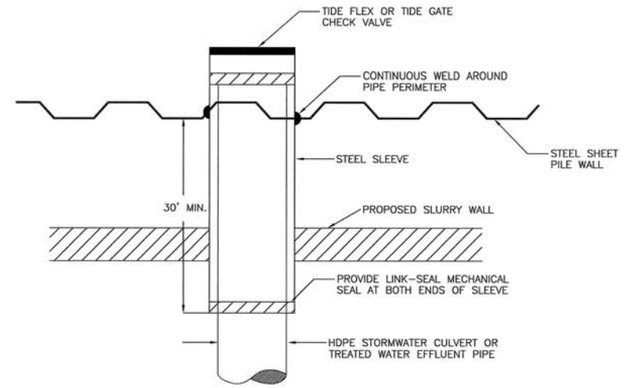

4 TWA-09 SSP BARRIER WALL PENETRATION DETAIL
N.T.S

REV #	DATE	DESCRIPTION	APPD
△			
△			
△			

REFERENCE:

1. EXISTING GROUND SURFACE CONTOURS PER AIR SURVEY, DULLES, VIRGINIA, APRIL 14, 2001. HORIZONTAL REFERENCE: NEW JERSEY STATE PLANE COORDINATES (NAD 1927). VERTICAL REFERENCE: NATIONAL GEODETIC VERTICAL DATUM (NGVD 1929).
2. EXISTING WETLANDS PER WETLAND DELINEATION BY PRINCETON HYDRO, LLC FOR KEY ENVIRONMENTAL, INC. PERFORMED IN MARCH 2009.

ISSUE DATE: 2/23/10

KEY ENVIRONMENTAL, INC.
200 THIRD AVENUE
CARNEGIE, PA 15106

PLAN PREPARER:
ALAN E. BRIGGS PROFESSIONAL ENGINEER
N.J. LICENSE NUMBER: 24GE03878500

SIGNATURE — DATE 2/23/10

FINAL

STATE OF NEW JERSEY
CERTIFICATE OF AUTHORIZATION
TO OFFER ENGINEERING SERVICES
24GA27961400

SCCC, INC. AND TIERRA SOLUTIONS INC.

DRWN: SCC	DATE: 02/02/10
CHKD: GWB	DATE: 02/02/10
APPD: AEB	DATE: 02/02/10
SCALE: AS SHOWN	

KEY ENVIRONMENTAL INCORPORATED

INTERIM RESPONSE ACTION DESIGN
SCCC AND DIAMOND SITES
KEARNY, NEW JERSEY

TREATED WATER EFFLUENT PIPE DETAILS

PROJECT NO: 09-803/04
TWA-09

x:\Docs\kearny\ira design\production drawings\process engineering design drawings\twa application\twa-09 treated water effluent details.dwg Last Saved By: Scanner 2/23/2010 3:04 PM Plotted By: Shelly Comer 2/23/2010 3:05 PM Scale: 1:1

TREATMENT WORKS APPROVAL (TWA)

State of New Jersey Department of Environmental Protection

CHECKLIST Item 9

Construction Specifications

PROFESSIONAL ENGINEER SIGNATURE PAGE

The Construction/Performance Specifications for the Hydraulic Control Treatment System (HCTS) and the Temporary Construction Treatment System (TCTS) for inclusion into the General Industrial Treatment Works Approval (TWA) Application were prepared under my direction with good engineering practices in accordance with applicable TWA requirements.

KEY ENVIRONMENTAL, INC.

Alan E. Briggs

Alan E. Briggs, P.E.
State of New Jersey PE Number: 24GE 03878500
Expiration Date: April 30, 2010

2/23/10
Date

HYDRAULIC CONTROL TREATMENT SYSTEM
(HCTS)
CONSTRUCTION / PERFORMANCE SPECIFICATIONS

GENERAL INDUSTRIAL TREATMENT WORKS APPLICATION

SCCC SITE AND DIAMOND SITE
KEARNY, NEW JERSEY

Prepared for:

Standard Chlorine Chemical Co., Inc.

and

Tierra Solutions, Inc.

Prepared by:

Key Environmental, Inc.
456 Route 22 West, Suite D
Whitehouse Station, New Jersey 08889

FEBRUARY 2010

KEY ENVIRONMENTAL INCORPORATED

TABLE OF CONTENTS

CONSTRUCTION/PERFORMANCE SPECIFICATIONS
HYDRAULIC CONTROL TREATMENT SYSTEM (HCTS)

Section	Description
44 05 23.73	PROCESS VALVES
44 23 19	PROCESS PLANT PIPING
44 42 23	CLARIFIERS
44 42 56	PUMPS
44 42 73	TANKS
44 43 13	FILTERS
44 44 13	CHEMICAL FEED EQUIPMENT
44 44 43	HEAVY METALS REMOVAL

Attached under separate cover

TEMPORARY CONSTRUCTION TREATMENT SYSTEM (TCTS)
CONSTRUCTION/PERFORMANCE SPECIFICATIONS

GENERAL INDUSTRIAL TREATMENT WORKS APPLICATION

SCCC SITE AND DIAMOND SITE
KEARNY, NEW JERSEY

Prepared for:
Standard Chlorine Chemical Co., Inc.
and
Tierra Solutions, Inc.

Prepared by:
Key Environmental, Inc.
456 Route 22 West, Suite D
Whitehouse Station, New Jersey 08889

FEBRUARY 2010

TABLE OF CONTENTS

CONSTRUCTION/PERFORMANCE SPECIFICATIONS
TEMPORARY CONSTRUCTION TREATMENT SYSTEM (TCTS)

Section	Description
44 05 23.73	PROCESS VALVES
44 23 19	PROCESS PLANT PIPING
44 42 23	CLARIFIERS
44 42 56	PUMPS
44 42 73	TANKS
44 43 13	FILTERS
44 44 13	CHEMICAL FEED EQUIPMENT
44 44 43	HEAVY METALS REMOVAL

Attached under separate cover

HYDRAULIC CONTROL TREATMENT SYSTEM
(HCTS)
CONSTRUCTION / PERFORMANCE SPECIFICATIONS

GENERAL INDUSTRIAL TREATMENT WORKS APPLICATION

SCCC SITE AND DIAMOND SITE
KEARNY, NEW JERSEY

Prepared for:

Standard Chlorine Chemical Co., Inc.

and

Tierra Solutions, Inc.

Prepared by:

Key Environmental, Inc.
456 Route 22 West, Suite D
Whitehouse Station, New Jersey 08889

FEBRUARY 2010

KEY ENVIRONMENTAL INCORPORATED

TABLE OF CONTENTS

CONSTRUCTION/PERFORMANCE SPECIFICATIONS
HYDRAULIC CONTROL TREATMENT SYSTEM (HCTS)

Section	Description
44 05 23.73	PROCESS VALVES
44 23 19	PROCESS PLANT PIPING
44 42 23	CLARIFIERS
44 42 56	PUMPS
44 42 73	TANKS
44 43 13	FILTERS
44 44 13	CHEMICAL FEED EQUIPMENT
44 44 43	HEAVY METALS REMOVAL

SECTION 40 05 23.73

Specification for Hydraulic Control Treatment System (HCTS)

PROCESS VALVES

PART 1 GENERAL

1.1 SECTION INCLUDES

A. Polyvinyl Chloride (PVC) Valves including:
   1. Flow Control Valves.
   2. Check Valves.
   3. Automated Throttle or Solenoid Valves.
   4. Ball Valves.
   5. Needle Valves.
   6. Pressure Relief Valves.
   7. Butterfly Valves.
   8. Strainers.

1.2 RELATED SECTIONS

A. Section 40 23 19 – Process Plant Water Piping
B. Section 44 42 56 – Water Treatment Pumps

1.3 DESCRIPTION

A. General
   1. The valves shall be installed for the hydraulic control treatment system (HCTS).
   2. The HCTS shall be operated to treat extracted groundwater pumped from hydraulic control wells and DNAPL recovery wells. The treated effluent shall be discharged to the Hackensack River in accordance with discharge permit requirements.

B. Design Criteria
   1. As shown in the Contract Documents.

C. Performance Requirements
   1. To convey the process water as part of the HCTS.
   2. Schedule 40 PVC valves shall not be permitted.
   3. PVC valves shall not be permitted for compressed air service.

1.4 SUBMITTALS

A. Manufacturer's installation information.
B. Shop Drawings: Show valve connection details.
C. Quality Control information.
   1. Valve installation logs.
D. Proposed changes or modifications.

1.5 QUALITY ASSURANCE

A. Quality assurance activities are described in the document titled "Construction Quality Assurance Plan, SCCC and Diamond Site, Kearny New Jersey."

1.6 QUALITY CONTROL

A. The Contractor shall be responsible for quality control activities during installation of the valves and associated appurtenances.

B. The Contractor shall perform routine performance monitoring by collecting samples from the in-system sample ports.

C. The Contractor shall comply with all applicable Federal, State and local laws or ordinances as well as applicable codes, standards and regulations.

1.7 DELIVERY, STORAGE, AND HANDLING

A. Store products in Manufacturer's unopened packaging until ready for installation.

B. Use proper equipment and methods during unloading and transporting material to ensure safety and to prevent damage.

C. Handle and store materials in accordance with Manufacturer's recommendations.

PART 2 PRODUCTS

2.1 VALVES

A. The Valve Schedule is provided below.
B. The valves shall be as shown on the Valve Schedule or Engineer-approved equal.

TABLE 400523.73-A

SCHEDULE OF HCTS VALVES

Service	Description	Materials Options	Pipe Size
Ball Valves	Open/close valve to shut-off flow, liquid and air-line piping	PVC, Brass, Steel, and/or Aluminum	Variable
Butterfly Valve	Control flow through HCTS	PVC and/or steel	Variable
Check Valves	Prevent water from back-flowing	PVC and/or Stainless Steel	Variable
Diaphragm Valves	Control flow through HCTS	PVC	Variable
Flow Control Valves	Control flow through HCTS	PVC	Variable
Needle Valve	Control air flow from compressor to diaphragm pumps	Brass or steel	Variable
Pressure Relief	Relieve pressure to protect piping systems and equipment	Brass or steel	Variable
Sampling Ports	Sample water in treatment system	PVC	Variable
Solenoid Valves	Receive signal from control system to start/stop diaphragm pumps	Polyester Coil Housing	Variable
Throttle Control Valve	Control flow through HCTS	PVC	Variable
Y-Strainer	Protect pump intake from debris	PVC	Variable

PART 3 EXECUTION

3.1 INSTALLATION

A. The Contractor shall furnish and install the valves, incidentals and associated appurtenances in accordance with Manufacturers' instructions.

3.2 OPERATION

A. The Contractor shall be responsible for the satisfactory operation, maintenance and troubleshooting of the HCTS valves needed for the duration of the construction Work.

B. Following completion of the installation, the HCTS valves shall be performance tested. All valves shall be adjusted and analyzed for misalignment, leaks, excessive vibration, safety protocol and overall performance.

C. The Contractor shall provide replacement parts as needed.

D. The Contractor shall provide the services of a qualified Operator for the equipment in accordance with NJDEP requirements.

E. The Contractor shall monitor the performance of the valves and repair leaks and replace valves as needed.

F. The Manufacturer recommended pressure ratings for valves shall not be exceeded.

END OF SECTION

SECTION 44 23 19

Specification for Hydraulic Control Treatment System (HCTS)

PROCESS PLANT WATER PIPING

PART 1 GENERAL

1.1 SECTION INCLUDES

A. High density polyethylene (HDPE) Piping
B. Polyethylene (PE) Tubing
C. Polyvinyl Chloride (PVC) Piping and Tubing
D. Galvanized Steel Piping
E. Stainless Steel Piping
F. Reinforced PVC Hoses
G. Fittings and couplings

1.2 RELATED SECTIONS

A. Division 40 05 23 – Valves
B. Section 44 42 56 – Water Treatment Pumps

1.3 DESCRIPTION

A. General

1. The Hydraulic Control Treatment System (HCTS) shall be operated to treat extracted groundwater pumped from hydraulic control wells and DNAPL recovery wells. The treated effluent shall be discharged to the Hackensack River in accordance with discharge permit requirements.
2. The solid wall PVC piping and flexible wall PVC piping shall be installed for the HCTS. HDPE piping is also acceptable.
3. The PE tubing shall be installed for the HCTS chemical feed units associated with the Cr(VI) removal system.
4. Galvanized Steel or Stainless Steel shall be utilized for compressed air service.

B. Design Criteria

1. As shown in the Contract Documents.

C. Performance Requirements

1. To convey the process water as part of the HCTS.
2. To convey treated process water to Outfall 001 for discharge into the Hackensack River in accordance with permit requirements.

3. The HCTS shall be operated by the Contractor in order to achieve New Jersey Pollution Discharge Elimination System (NJPDES) discharge limits.

1.4 SUBMITTALS

A. Manufacturer's installation information
B. Shop Drawings: Piping (including type and sizes) and connection details.
C. Quality Control information
   1. Pipe and fittings installation Logs
D. Proposed changes or modifications

1.5 QUALITY ASSURANCE

A. Quality assurance activities are described in the document titled "Construction Quality Assurance Plan, SCCC and Diamond Site, Kearny New Jersey."

1.6 QUALITY CONTROL

A. The Contractor shall be responsible for quality control activities during installation of the piping and associated appurtenances.

B. The Contractor shall perform routine performance monitoring by collecting samples from the in-system sample ports.

C. The Contractor shall comply with all applicable Federal, State and local laws or ordinances as well as applicable codes, standards and regulations.

D. The Contractor shall not backfill subgrade piping until the trench has been inspected by the Engineer.

E. The Contractor shall provide Quality Control documentation to the Engineer.

1.7 DELIVERY, STORAGE, AND HANDLING

A. Store products in Manufacturer's unopened packaging until ready for installation.

B. Use proper equipment and methods during unloading and transporting material to ensure safety and to prevent damage.

C. Handle and store materials in accordance with Manufacturer's recommendations.

PART 2 PRODUCTS

2.1 PIPING

A. The Piping Schedule is provided below.
B. The Piping shall be as shown on the Piping Schedule or Engineer approved equal.
C. All Piping shall be Schedule 80.

2.2 FITTINGS AND COUPLINGS

A. The Fittings and Couplings are described below.
1. Threaded pipe fittings and flanges to connect PVC piping and appurtenances shall be Schedule 80 and/or metal fittings.

TABLE 442319-A

SCHEDULE OF HCTS PIPING

Service	Description	Materials Options	Pipe Size and/or Pressure Ratings
Process Water Conveyance	Convey process water through the treatment system	Solid Wall Polyvinyl Chloride (PVC) Pipe Schedule 80 and/or High Density Polyethylene (HDPE)	1", 2", 3" and/or 4" 150 psi
Treatment Chemicals for Cr(VI) Removal and pH Control Systems,	Convey treatment chemicals to process tanks	Polyethylene (PE) or Teflon Tubing Chemical Resistant	0.25” - 0.375" 150 psi
Pressure Hose for Granular Activated Carbon (GAC) Units	Convey water between GAC vessels	Flexible Wall Polyvinyl Chloride (PVC) Pipe	3" 150 psi
Air line from compressor to air-operated diaphragm pumps	Provide compressed air for diaphragm pump operations	Stainless Steel	1/4" 150 psi
Temporary Process Water Line	Provide water for mixing chemicals, GAC wet-out, decontamination, etc.	High Density Polyethylene (HDPE)	Variable 150 psi

TABLE 442319-C

SCHEDULE OF HCTS FITTINGS AND COUPLINGS

Service	Description	Materials Options	Pipe Size
Air Line Disconnect Flanges and Fittings	Flanges and fittings for line providing air from compressor to diaphragm pumps	Steel, Brass, and/or Aluminum	Variable
Barb Fittings	Fittings for tubing, low pressure applications	Nylon	Variable
Camlock Fittings, Aluminum	Cam and groove couplings to connect hoses and lines	Aluminum	Variable
Flexible Connectors, Pipe Couplings and Expansion Joints	Expansion Joints to reduce stress, vibrations and noise in piping.	Viton or nitrile gaskets. Expansion joints same material as piping, depending on configuration	Variable
PVC Fittings	Thick-Wall (Schedule 80) CPVC threaded Pipe Fittings and Flanges to connect piping Viton gaskets where applicable	PVC Schedule 80. Stainless steel bolts/nuts/washer sets for all flanges	1", 2", 3" and 4"
Reducer Bushings	Thick-Wall (Schedule 80) CPVC threaded Pipe Fittings and Flanges	PVC Schedule 80	Variable
Transition Fittings	Transition from HDPE to Stainless Steel Piping	High Density Polyethylene (HDPE) and/or Stainless Steel	Variable
Water Line Fittings	Flanges and fittings for temporary water line	Brass	Variable

PART 3 EXECUTION

3.1 INSTALLATION

A. The Contractor shall furnish and install the piping, incidentals and associated appurtenances in accordance with Manufacturers instructions (e.g. weld temperatures, pipe cleaning/pipe preparation/welding).

B. Subgrade piping shall be installed in accordance with the Site Work Technical Specifications provided herein and Drawings.

C. Piping runs shall be hydrostatic tested by the Contractor using potable water or clean air prior to start up. The pressure shall be at or below rated pressures. Air lines shall also be leak tested using design compressor pressures. The testing shall be documented as part of the Quality Control Program.

D. All welds shall be inspected. The inspections shall be documented as part of the Quality Control Program.

E. Viton gaskets shall be installed for all flange connections.

F. Piping shall be selected to reduce head loss.

G. The Contractor shall protect the installed products until completion of the Work.

3.2 OPERATION

A. The Contractor shall be responsible for the satisfactory operation, maintenance and troubleshooting of the HCTS piping needed for the duration of the HCTS Work.

B. Following completion of the installation, the HCTS piping shall be performance tested. All piping shall be adjusted and analyzed for misalignment, leaks, excessive vibration, safety protocol and overall performance.

C. The Contractor shall provide replacement parts as needed.

D. The Contractor shall provide the services of a qualified Operator for the equipment in accordance with NJDEP requirements.

E. The Contractor shall monitor the performance of the piping and replace the repair leaks and replace piping as needed. The piping and associated appurtenances shall be routinely inspected for wear, tear and ultraviolet damage.

F. The Manufacturer recommended pressure ratings for piping shall not be exceeded.

G. Systems shall be protected from vehicular traffic, worker slip, trips and fall hazards.

END OF SECTION

SECTION 44 42 23

Specification for Hydraulic Control Treatment System (HCTS)

WATER TREATMENT CLARIFIERS

PART 1 GENERAL

1.1 SECTION INCLUDES

A. Inclined Plate Settler/Clarifier (Clarifier).

1.2 RELATED SECTIONS

A. Division 40 05 23 – Valves
B. Section 44 42 56 – Water Treatment Pumps

1.3 DESCRIPTION

A. General
   1. The Hydraulic Control Treatment System (HCTS) shall be operated to treat extracted groundwater pumped from hydraulic control wells and DNAPL recovery wells. The treated effluent shall be discharged to the Hackensack River in accordance with discharge permit requirements.

B. Design Criteria
   1. As shown in the Contract Documents.
   2. Refer to Hoffland Environmental, Inc. Clarifier product literature.

C. Performance Requirements
   1. Clarifier – to reduce the solids loading from the flocculation unit.
   2. The treatment system shall be operated by the Contractor in order to achieve New Jersey Pollution Discharge Elimination System (NJPDES) discharge limits.
   3. The Contractor shall install and operate the system in accordance with all applicable New Jersey Department of Environmental Protection (NJDEP), Treatment Works Approval (TWA) and the project-specific Air Permit requirements.

1.4 SUBMITTALS

A. Manufacturer's installation information.
B. Shop Drawings: Show product and connection details.
C. O&M Manuals.

D. Quality Control information.
   1. Unit operation analytical data – for performance testing.
   2. Operation Logs.

E. Proposed changes or modifications.

1.5 QUALITY ASSURANCE

A. Quality assurance activities are described in the document titled "Construction Quality Assurance Plan, SCCC and Diamond Site, Kearny New Jersey."

B. The Engineer will collect the discharge sample to evaluate compliance with the NJPDES permit conditions.

1.6 QUALITY CONTROL

A. The Contractor shall be responsible for quality control activities during installation, start up and operation of the HCTS.

B. The Contractor shall perform routine performance monitoring by collecting samples from the in-system sample ports. The Contractor shall change out components and service the Clarifier as needed based on the analytical results.

C. The Contractor shall comply with all applicable Federal, State and local laws or ordinances as well as applicable codes, standards and regulations.

D. The Contractor shall provide QC documentation to the Engineer.

1.7 DELIVERY, STORAGE, AND HANDLING

A. Store products in Manufacturer's unopened packaging until ready for installation.

B. Use proper equipment and methods during unloading and transporting material to ensure safety and to prevent damage.

C. Handle and store materials in accordance with Manufacturer's recommendations.

PART 2 PRODUCTS

2.1 CLARIFIER

A. The Clarifier shall be an inclined plate settler/clarifier as furnished by Hoffland Environmental, Inc. or Engineer-approved equal. Parallel plate or lamella clarifiers may be considered.

PART 3 EXECUTION

3.1 INSTALLATION

A. The Contractor shall furnish and install the Clarifier, piping, electrical, controls, incidentals and associated appurtenances in accordance with Manufacturer's instructions.

3.2 OPERATION

A. The Contractor shall be responsible for the satisfactory operation, maintenance and troubleshooting of the Clarifier as needed for the duration of the HCTS Work.

B. Following completion of the installation, the Clarifier shall be performance-tested. All equipment shall be adjusted and analyzed for misalignment, leaks, excessive vibration, safety protocol and overall performance, and the installation shall be subject to approval by the Engineer.

C. The Contractor shall provide replacement parts as needed.

D. The Contractor shall provide the services of a qualified Operator for the equipment in accordance with NJDEP requirements.

E. The Contractor shall set the clarifier weir height, flow rate and underflow sludge pump rate to optimize treatment efficiency.

F. Covers shall be maintained on the clarifier at all times.

G. The Contractor shall evaluate the clarifier effluent and modify the system as needed.

H. The clarifier shall be fitted with a overflow shut off switch in the tank.

END OF SECTION

CHECKLIST ITEM 9

CONSTRUCTION SPECIFICATIONS CUT SHEETS

GENERAL INDUSTRIAL TWA

Inclined Plate Clarifier, T-CL-01
Hoffland 250/60/MA Clarifier

Hoffland Environmental Inc.

Wastewater Treatment Systems

Hoffland Environmental, Inc.
10391 Silver Springs Road
Conroe TX 77303-1602 USA
E-mail: hoffland@flex.net

Phone: 936-856-4515
Fax: 936-856-4589

Model 250/60/MA

ACAD 14 format »

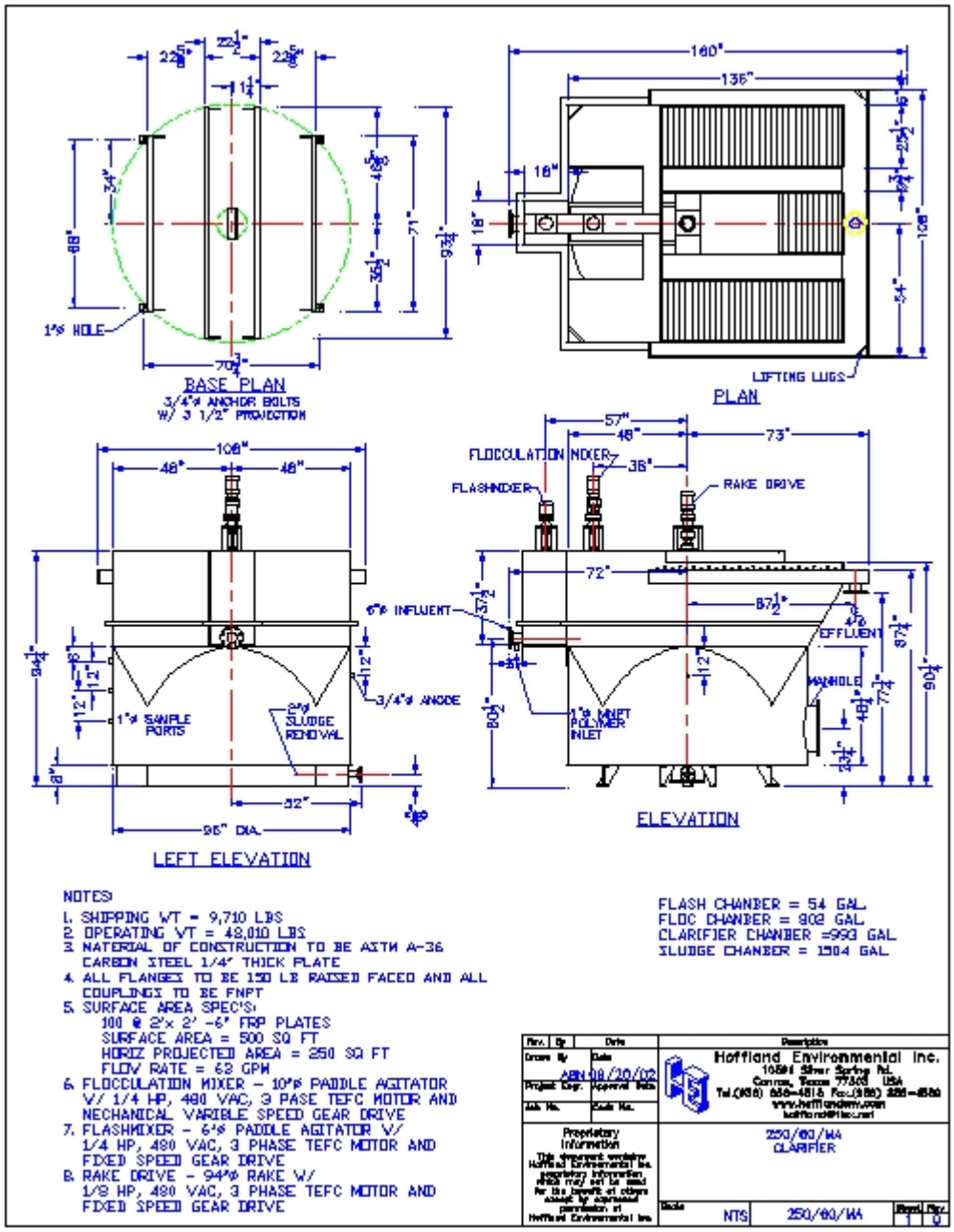

SECTION 44 42 56

Specification for Hydraulic Control Treatment System (HCTS)

WATER TREATMENT PUMPS

PART 1 GENERAL

1.1 SECTION INCLUDES

A. Hydraulic Control Treatment System (HCTS) Pumps.

1. HCTS Transfer Pumps.
2. HCTS Chemical Metering Pumps.

1.2 RELATED SECTIONS

A. Division 26 - Electrical

B. Division 40 05 23 – Valves

1.3 DESCRIPTION

A. General

1. The HCTS shall be operated to treat extracted groundwater to maintain hydraulic control. The treated effluent shall be discharged to the Hackensack River in accordance with BGR permit requirements.

B. Design Criteria

1. As shown in the Contract Documents.
2. As shown on Pump product literature and Pump Schedules.
3. As shown on Pump Design Summary Table.

C. Performance Requirements

1. Pump process water between HCTS unit operations.
2. Pump treatment chemicals to the CR(VI) reduction system.
3. The Contractor shall install and operate the pumps in accordance with all applicable New Jersey Department of Environmental Protection (NJDEP), Treatment Works Approval (TWA) and the project-specific Air Permit requirements.

1.4 SUBMITTALS

A. Provide submittals as per Section 01 33 00.

B. Manufacturer's installation information.

C. Shop Drawings: Show pumps and connection details.

D. O&M Manuals.

E. Quality Control information.

1. Pump performance testing.
2. Operation Logs.

F. Proposed changes or modifications.

1.5 QUALITY ASSURANCE

A. Quality assurance activities are described in the document titled "Construction Quality Assurance Plan, SCCC and Diamond Site, Kearny New Jersey.

B. The Engineer will collect the discharge sample to evaluate compliance with the NJPDES permit conditions.

1.6 QUALITY CONTROL

A. The Contractor shall be responsible for quality control activities during installation, start up and operation of the HCTS.

B. The Contractor shall perform routine performance monitoring by collecting samples from the in-system sample ports.

C. The Contractor shall change out Pumps and fittings as needed based on performance.

D. The Contractor shall comply with all applicable Federal, State and local laws or ordinances as well as applicable codes, standards and regulations.

E. The Contractor shall provide QC documentation to the Engineer.

1.7 DELIVERY, STORAGE, AND HANDLING

A. Store products in Manufacturer's unopened packaging until ready for installation.

B. Use proper equipment and methods during unloading and transporting material to ensure safety and to prevent damage.

C. Handle and store materials in accordance with Manufacturer's recommendations.

PART 2 PRODUCTS

2.1 PUMPS

A. The Pump Schedules are provided below.

B. The Contractor shall provide the pumps as shown on the Pump Schedule or Engineer-approved equal.

Table 444256 – A

Schedule of HCTS Transfer Pumps

Pump No.	**Item**	**Supplier / Manufacturer Option**	**Model Option**	**Material**	**Operating Pt.**	**Power, Motor**	**Max Flow, gpm**	**Max Head ft**	**Max Pressure, psi**
PCF-01	GAC Filter Feed	Gould	1SS1G5A5	Stainless Steel	40 gpm @ 115 ft	440, 3P 3 HP	86	131	57
PCF-02	GAC Backwash	Gould	GWP-50HX	Stainless Steel	150 gpm @ 110 ft	440, 3P 3 HP	174	50	22
PAD-01 PAD-02 PAD-03 PAD-04 PAD-05	Clarifier Sludge GAC Backwash Solids Pump Tank Building Sump Filter Press Feed	Ingersoll Rand	PE15P-FPS-PVV	Polypropylene with Viton diaphragms and balls	20 gpm @ 65 ft	440, 3P	123	277	120

Table 444256 – B

Schedule of HCTS Chemical Metering Pumps

Number	Item	Description	Model # Option	Vendor Option	GPH	Control	Voltage
PM-01	Metering Pump	Ferrous Sulfide	AA961-363HI	Milton Roy	2.0	External 4-20 mA or pulse	120 VAC
PM-02	Metering Pump	Sodium Sulfide	AA961-363HI	Milton Roy	2.0	External 4-20 mA or pulse	120 VAC
PM-03	Metering Pump	Acid Feed to Chrome Reduction	AA941-155S	Milton Roy	0.58	External 4-20 mA or pulse	120 VAC
PM-04	Metering Pump	Acid Feed to pH Control Tank	AA961-65S	Milton Roy	2.0	External 4-20 mA or pulse	120 VAC
PM-05	Metering Pump	Sodium Hydroxide Feed to pH Tank	AA961-363HI	Milton Roy	2.0	External 4-20 mA or pulse	120 VAC
PM-06	Metering Pump	Sodium Hydroxide Feed to Chrome Reduction	AA961-363HI	Milton Roy	2.0	External 4-20 mA or pulse	120 VAC
PM-07	Metering Pump	Anionic Polymer	AA941-156HV	Milton Roy	0.58	External 4-20 mA or pulse	120 VAC
PM-08	Metering Pump	Cationic Polymer	AA941-156HV	Milton Roy	0.58	External 4-20 mA or pulse	120 VAC

PART 3 EXECUTION

3.1 INSTALLATION

A. The Contractor shall furnish and install the HCTS pumps, piping, controls, electrical, incidentals and associated appurtenances in accordance with Manufacturers' instructions.
B. The Contractor shall select HCTS pump sizes to meet planned operations (e.g. hours per day).

3.2 OPERATION

A. The Contractor shall be responsible for the satisfactory operation, maintenance and troubleshooting of the Pumps as needed for the duration of the HCTS Work.

B. Following completion of the installation, the Pumps shall be performance tested. All equipment shall be adjusted and analyzed for misalignment, leaks, excessive vibration, safety protocol and overall performance, and the installation shall be subject to approval by the Engineer.

C. The Contractor shall provide replacement parts as needed.

D. The Contractor shall provide the services of a qualified Operator for the HCTS pumps in accordance with NJDEP requirements.

END OF SECTION

CHECKLIST ITEM 9

CONSTRUCTION SPECIFICATIONS CUT SHEETS

GENERAL INDUSTRIAL TWA

GAC Filter Feed Pump, PCF-01
Goulds 1SS1G5A5
ICS Closed Coupled
End Suction Stainless Steel Pump

GOULDS PUMPS

Submittal Data

ICS Close Coupled
End Suction Stainless Steel Pumps

MODEL : 1SS1G5A5

Hydraulic Data					Motor Data	ICS/ICSF	Qty.
Maximum Flow	Flow at Duty Point	Maximum TDH	TDH at Duty Point	$NPSH_R$	Voltage / Phase / Enclosure	Model	
86 US g.p.m.	40 US g.p.m.	131 ft	115 ft	7 ft	460V 3PH TEFC	1SS1G5A5	1

Submittal Prepared for:
Engineer:
Submittal Prepared by:
Submittal Date: 2009-06-03

Job:
Contractor:
Company:
Approved by: Date:

Engineering Data

Pump Code:1SS1G5A5
Pump Size: 1 x 1 1/4 - 5
Pump Max Horsepower: 3.5431 hp
Pump Horsepower at Rating Point: 2.21 hp
Pump Shut Off Head: 131 ft
Motor Speed: 3500 rpm
Max. Temperature:212 °F
Liquid: Water
Motor Code: C09876
System Input Power: 3~ 460 V
Motor Rated Horsepower:3.00 hp
Max. Frequency60
Electrical EnclosuresTEFC
Motor Standard:NEMA
Suction Flange StandardNPT
Suction Flange Rating: 175 PSI
Suction Size: 1 1/4"
Discharge Flange StandardNPT
Discharge Flange Rating175 PSI
Discharge:1"
Approximate Net Weight: 75 lb
Impeller Size:5 3/8"
Impeller Construction:Open
Impeller Type:Radial impeller
Impeller Material:
AISI 316 Stainless Steel
Sense of Rotation:Clockwise from the drive end
Shaft Seal: Sil-Carbide/Sil-Carbide/Viton

Standard Equipment / Capability:

Superior Materials of Construction: Precision invest-ment cast 316 stainless steel liquid end components for corrosion resistance and strength.
Frame Mounted Design: Flexibility of installation and driver arrangements.
Open Impeller Design: Spherical handling to 3/8" reduces chance of clogging and required maintenance time.
Back Pull-Out Design: Simplifies maintenance by allowing the casing to remain in the piping during disassembly.
Close-Coupled Design: Compact design saves space and simplifies installation.
Casing Features: Investment cast 316 stainless steel construction with NPT threaded suction and discharge, optional drain and vent with stainless steel plugs. Four position discharge orientation.
Mechanical Seals: Standard Flowserve 31 seal with carbon versus silicon-carbide faces, Viton elastomers and 316 stainless steel metal parts. Optional seals are available for high temperature and mild abrasive services.
Drive Motors: NEMA standard 56J frame motors with rugged ball bearing design for continuous duty. Versions are available in both single and three phase with a variety of enclosures and voltage to match your service requirements.

GOULDS PUMPS

Performance Data

ICS Close Coupled
End Suction Stainless Steel Pumps

MODEL : 1SS1G5A5

Hydraulic Data					Motor Data	ICS/ICSF	Qty.
Maximum Flow	Flow at Duty Point	Maximum TDH	TDH at Duty Point	$NPSH_R$	Voltage / Phase / Enclosure	Model	
86 US g.p.m.	40 US g.p.m.	131 ft	115 ft	7 ft	460V 3PH TEFC	1SS1G5A5	1

Submittal Prepared for: _____ Job: _____
Engineer: _____ Contractor: _____
Submittal Prepared by: _____ Company: _____
Submittal Date: 2009-06-03 Approved by: _____ Date: _____

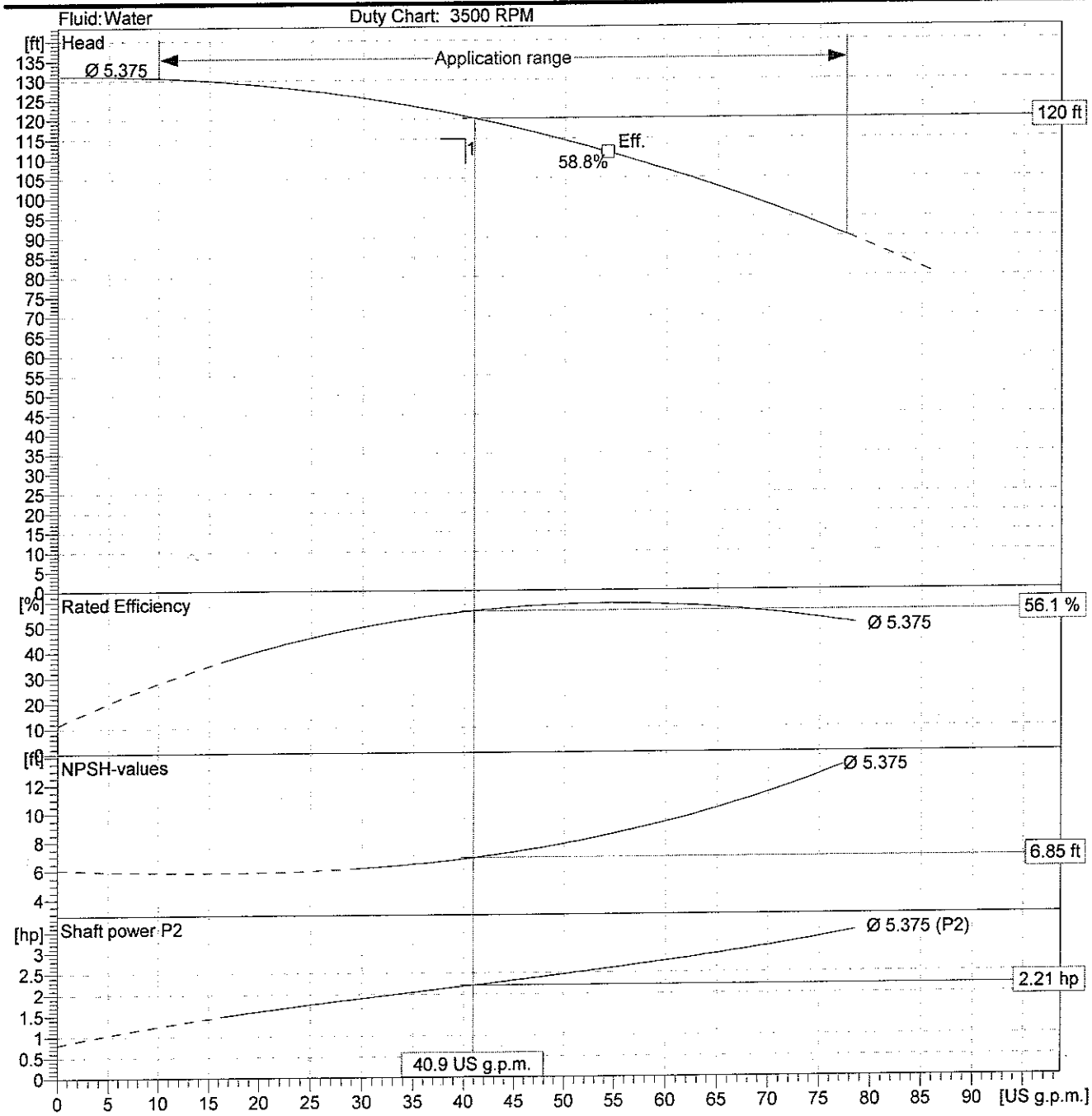

Printed from data file
2009-06-03

GOULDS PUMPS

Unit Dimensions

ICS Close Coupled
End Suction Stainless Steel Pumps

MODEL : 1SS1G5A5

Hydraulic Data					Motor Data	ICS/ICSF	Qty.
Maximum Flow	Flow at Duty Point	Maximum TDH	TDH at Duty Point	$NPSH_R$	Voltage / Phase / Enclosure	Model	
86 US g.p.m.	40 US g.p.m.	131 ft	115 ft	7 ft	460V 3PH TEFC	1SS1G5A5	1

Submittal Prepared for: _____ Job: _____
Engineer: _____ Contractor: _____
Submittal Prepared by: _____ Company: _____
Submittal Date: 2009-06-03 Approved by: _____ Date: _____

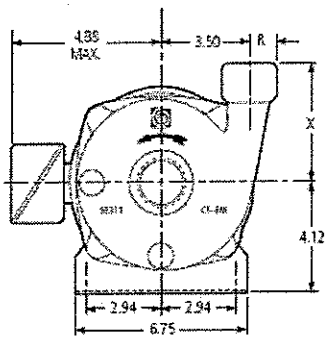

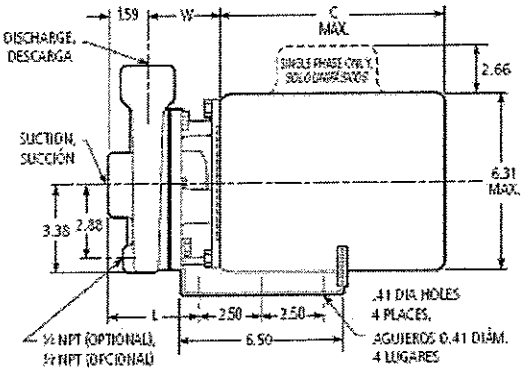

Dimension	Value	Dimension	Value
Discharge	1 NPT		
L	$5^3/_4$		
R	$^{15}/_{16}$		
Suction	1.25 NPT		
W	3		
X	$4^5/_8$		

Printed from data file
2009-06-03

CHECKLIST ITEM 9

CONSTRUCTION SPECIFICATIONS CUT SHEETS

GENERAL INDUSTRIAL TWA

GAC Backwash Pump, PCF-02
Goulds 4AI2H5B4
3656 S All Iron
End Suction Cast Iron Pump

GOULDS PUMPS

Submittal Data

3656 S All Iron
End Suction Cast Iron Pumps

MODEL : 4AI2H5B4

Hydraulic Data					Motor Data	3656/3756 S Group	Qty.
Maximum Flow	Flow at Duty Point	Maximum TDH	TDH at Duty Point	$NPSH_R$	Voltage / Phase / Enclosure	Model	
174 US g.p.m.	141 US g.p.m.	50 ft	40 ft	5 ft	460V 3PH TEFC	4AI2H5B4	1

Submittal Prepared for: _____ Job: _____
Engineer: _____ Contractor: _____
Submittal Prepared by: _____ Company: _____
Submittal Date: 2009-06-05 Approved by: _____ Date: _____

Engineering Data

Pump Code:4AI2H5B4
Pump Size: 2 1/2 x 3 - 7
Pump Max Horsepower: 2.2893 hp
Pump Horsepower at Rating Point: 2.07 hp
Pump Shut Off Head: 50 ft
Motor Speed: 1750 rpm
Max. Temperature:
Liquid: Water
Motor Code: C09732
System Input Power: 3~ 460 V
Motor Rated Horsepower:3.00 hp
Max. Frequency60
Electrical EnclosuresTEFC
Motor Standard:NEMA
Suction Flange StandardNPT
Suction Flange Rating: 175 PSI
Suction Size: 3"
Discharge Flange StandardNPT
Discharge Flange Rating:175 PSI
Discharge:2 1/2"
Approximate Net Weight: 81 lb
Impeller Size:6 7/8"
Impeller Construction:Closed
Impeller Type:Radial impeller
Impeller Material:
Cast Iron ASTM A48 CL20
Sense of Rotation:Clockwise from the drive end
Shaft Seal:

Standard Equipment / Capability:

Features and Benefits
The 3656 and 3756 S-Group pumps from Goulds have been designed with technical benefits to meet the needs of users in a variety of water supply, recirculation, and cooling applications.
The model 3656 offers close coupled design for space saving and simplified maintenance.
The model 3756 offers a bearing frame mounted design for flexibility of installation and drive arrangements. Back pull-out to reduce maintenance down time.
Standard Type 21 mechanical seal for both reliability and availability. Carbon/ceramic/ BUNA standard, with other faces and elastomers available.
3656/3756 available in all iron, bronze fitted or all bronze construction for application versatility.
Replaceable wearing components include stainless steel shaft sleeve and casing and hub wear rings to maintain peak efficiency.
Packed box sealing is also available as an option.
Enclosed impeller design, dynamic balancing and renewable wear rings reduce losses affecting performance and pump life.
Suction and discharge pipe connections are NPT threaded, except 3 x 4 7 which has 125 lb. ANSI flat faced flanges.
Rigid cast iron motor adapter provides support and registered fits maintain positive unit alignment.
Standard NEMA motor frame, JM or JP shaft extension, C-face mounting, single phase or three phase, 3500 or 1750 RPM. Open drip proof and totally enclosed fan cooled.
Optional explosion proof or high efficiency motors available.
Optional rigid carbon steel bedplate, sheet metal coupling guard and T. B. Woods spacer coupling for 3756 models.

GOULDS PUMPS

Performance Data

3656 S All Iron

End Suction Cast Iron Pumps

MODEL : 4AI2H5B4

Hydraulic Data					Motor Data	3656/3756 S Group	Qty.
Maximum Flow	Flow at Duty Point	Maximum TDH	TDH at Duty Point	$NPSH_R$	Voltage / Phase / Enclosure	Model	
174 US g.p.m.	141 US g.p.m.	50 ft	40 ft	5 ft	460V 3PH TEFC	4AI2H5B4	1

Submittal Prepared for: _____ Job: _____

Engineer: _____ Contractor: _____

Submittal Prepared by: _____ Company: _____

Submittal Date: 2009-06-05 Approved by: _____ Date: _____

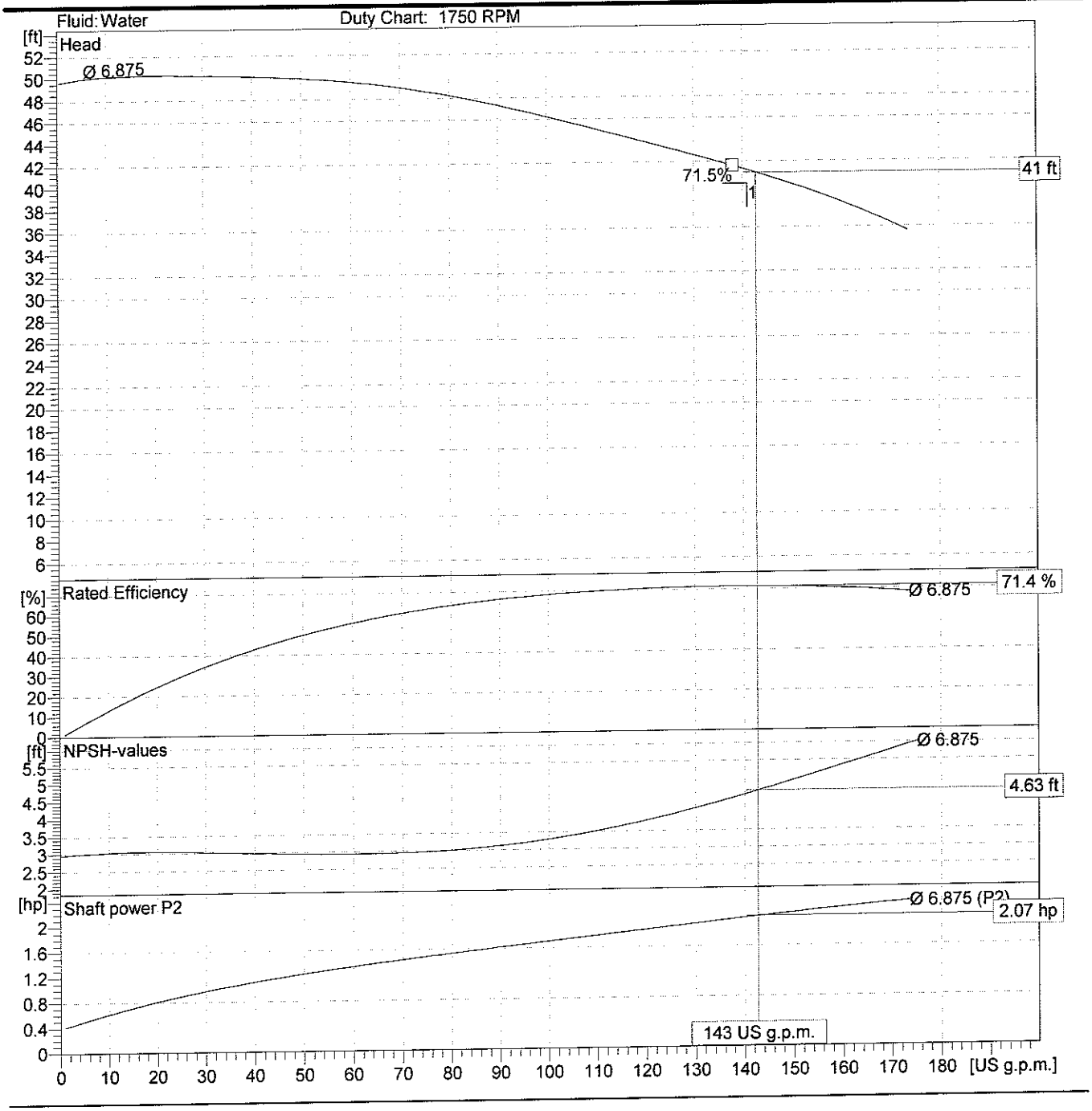

Printed from data file
2009-06-05

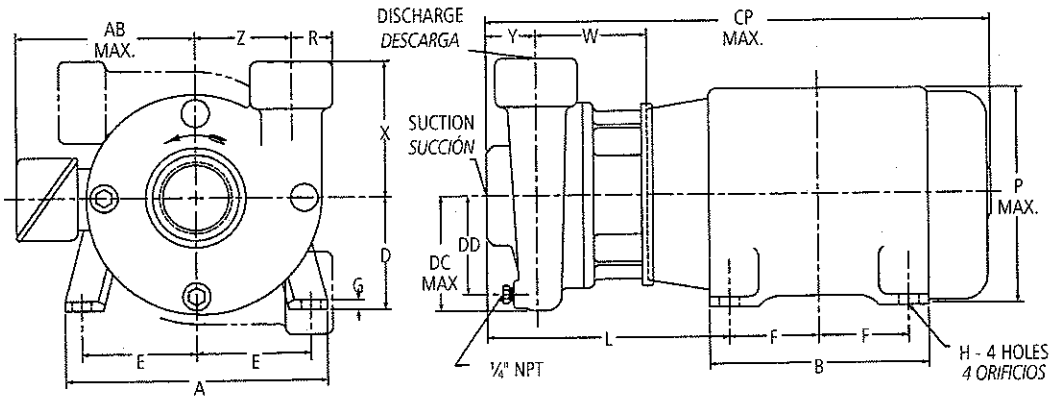

Pump Dimensions and Weights (Dimension "L" determined by Pump and Motor)
Peso y dimensiones de la bomba *(la dimensión "L" está determinada por la bomba y el motor)*

Pump *Bomba*	Suction *Succión*	Discharge *Descarga*	CP Max.	DC Max.	DD	R	W	X	Y	Z	Wt. (lbs.) *Pesos (libras)*	Motor Frame Size, *Bastidor* 140	180	210	250
												L			
1 x 2 – 7	2	1	27	4¼	3½	1 1/16	4⅛	5½	3	4	52	10	10¾	—	—
1 x 2 – 8					4		3 15/16	5¾	3 3/16	4¼	52			—	—
1½ x 2 – 6		1½	23¾		3½	1¼	4¼	4½	2⅝	3½	34	9¾	10½	—	—
1½ x 2 – 8			27⅛	5⅜	4⅝			5		4¼	54			11⅜	11⅝
2½ x 3 – 7	3	2½	25⅝	5⅛	4½	1 13/16		6	3	4	49	10⅛	10¾	11¾	—
3 x 4 – 7	4*	3*	25¼	5¾	5⅛	3¾	4⅜		2½	4½	82	9¾	10⅜	11⅜	—

*For use with ANSI class 150 mating flange. All others are NPT connections.
** Para uso con brida de contacto ANSI clase 150. Todas las demás son conexiones NTP*

Motor Dimensions and Weights (may vary with manufacturer)*
Peso y dimensiones del motor *(pueden variar de acuerdo al fabricante)* *

Frame Size JM *Tamaño del bastidor JM*	A	AB (Max.)	B	D	E	F	G	H	P (Max.)	Weight (lbs.) *Pesos (libras)*
143	6½	5¼	6	3½	2¾	2	⅛	11/32	6⅝	41
145						2½				57
182	8½	5⅞	6½	4½	3¾	2¼	3/16	13/32	7⅞	77
184						2¾				97
213	9½	7⅜	8	5¼	4¼	2¾	7/32	13/32	9⅝	122
215						3½				155
254 TCZ	11¼	9	9½	6¼	5	4⅛	¼	17/32	11½	265
256 TCZ			11¾			5				320

NOTE:
All pumps shipped in vertical discharge position. May be rotated in 90° increments. Tighten casing bolts to 25 ft./lbs. torque.

NOTA:
Todas las bombas se embarcan con la descarga en posición vertical. Esta posición puede rotarse en incrementos de 90°. Ajustar los pernos de la carcasa a una torsión de 25 pies/libras.

Motor Frames and Horsepower
Bastidores del motor y potencia en HP

Motor Frame *Bastidor del motor*	3500 RPM 1 Phase ODP	3500 RPM 1 Phase TEFC	3500 RPM 3 Phase ODP	3500 RPM 3 Phase TEFC	1750 RPM 1 Phase ODP	1750 RPM 1 Phase TEFC	1750 RPM 3 Phase ODP	1750 RPM 3 Phase TEFC
143	—	¾, 1, 1½	¾, 1, 1½	¾, 1, 1½	—	½, ¾	½, ¾, 1	½, ¾, 1
145	—	2	2, 3	2, 3	—	1, 1½	1½, 2	1½, 2
182	3	3	5	3	3	2, 3	3	3
184	5	3, 5	7½	5	—	—	5	5
213	7½	—	10	7½	5	—	7½	7½
215	10	—	15	10, 15	—	—	—	—
254TCZ	—	—	20	—	—	—	—	—
256TCZ	—	—	25	20, 25	—	—	—	—

All dimensions in inches and weights in lbs. Do not use for construction purposes.
Todas las dimensiones están en pulgadas, el peso en libras. No utilizar para fines de construcción.

CHECKLIST ITEM 9

CONSTRUCTION SPECIFICATIONS CUT SHEETS

GENERAL INDUSTRIAL TWA

Chemical Metering Pumps, PM-01 to 07
LMI Milton Roy A961-363HI and 65S, AA941-156HV and 155S
Electronic Metering Pumps

DataSheet
Series AA
Electronic Metering Pumps

Configuration Data

Model AA 9 4 1 - 358HI

Control Code
1 --- **Manual Control:** Speed (stroking frequency) and stroke length manually adjustable.
7 --- **Instrument Responsive/Manual Control:** Manual adjustment features of Control Code 1 plus switch conversion to external control for automatic systems.
9 --- **Microprocessor/Instrument Responsive:** External 4-20mA or pulse or x direct; manual stroke length control.

Output/Size Code
4 --- 0.58 GPH (2.2 l/h) --- 250 psi (17.3 Bar)
5 --- 1.00 GPH (3.8 l/h) --- 110 psi (7.6 Bar)
6 --- 2.00 GPH (7.6 l/h) --- 50 psi (3.5 Bar)
7 --- 0.42 GPH (1.6 l/h) --- 140 psi (9.7 Bar)
8 --- 0.75 GPH (2.8 l/h) --- 80 psi (5.5 Bar)

Voltage Code
1 --- 120 VAC, US Plug
2 --- 240 VAC, US Plug
3 --- 220-240 VAC, DIN Plug
5 --- 240-250 VAC, UK Plug
6 --- 240-250 VAC, Aust./NZ Plug
7 --- 220-240 VAC, Swiss Plug

Liquid End
See next page for complete liquid end specifications and selection.

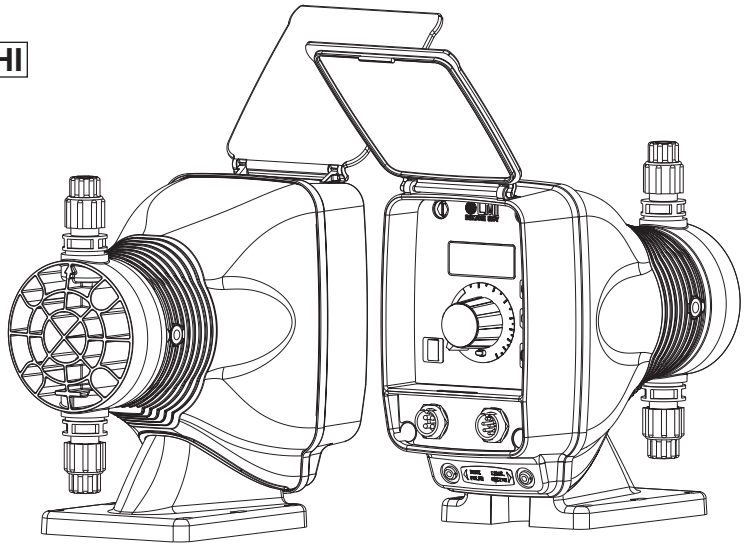

Dimensions

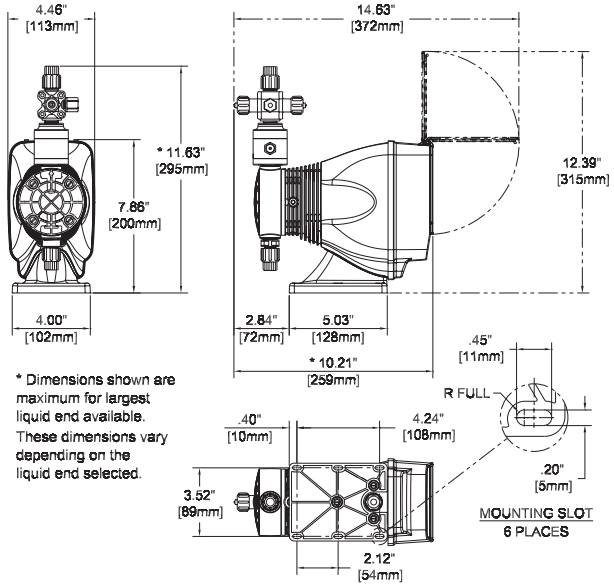

* Dimensions shown are maximum for largest liquid end available. These dimensions vary depending on the liquid end selected.

Specifications

Series	Strokes Per Minute (Adjustable) Min	Max	Stroke Length (Adjustable) Recommended Minimum	Average Input Power @ Max Speed	Shipping Weight
AA14, AA74, AA94* AA15, AA75, AA95* AA16, AA76, AA96*	1	100	20%	22 watts	10 lbs (4.55 kg)
AA17, AA77, AA97* AA18, AA78	1	100	30%		

*Series 9 pumps may be programmed for strokes per hour for lower outputs.

LMI MILTON ROY

201 Ivyland Road
Ivyland, PA 18974 USA
TEL: (215) 293-0401
FAX: (800) 327-7563
http://www.lmipumps.com

ISO 9001 Certified

1978.A 08/03

Configuration Data & Materials of Construction

Drive Assembly	Liquid End No.	Size Code	Head & Fittings	Materials of Construction: Balls	Liquifram“	Check Valve	Accessory	Tubing & Connections: Discharge	Suction
	458HI	0.5	PVC / PVC	Ceramic	Fluorofilm“	PVDF / Polyprel¤	4FV + AV	PE .250" O.D.	
AA97 ■ -	450FI	0.5	Acrylic / PVC	PTFE	Fluorofilm“	PVDF / Polyprel¤	4FV	PE .250" O.D.	
AA94 ■ -	450HI	0.5	Acrylic / PVC	Ceramic	Fluorofilm“	PVDF / Polyprel¤	4FV + AV	PE .250" O.D.	
AA77 ■ -	358HI	0.5	PVC / PVC	Ceramic	Fluorofilm“	PVDF / Polyprel¤	4FV + AV	PE .250" O.D.	
AA74 ■ -	353HI	0.5	PVDF / PVDF	Ceramic	Fluorofilm“	PVDF / PTFE	4FV + AV	PE .250" O.D.	
AA17 ■ -	352HI	0.5	PVDF / PVDF	Ceramic	Fluorofilm“	PVDF / Polyprel¤	4FV + AV	PE .250" O.D.	
AA14 ■ -	155HV	0.5	Polypropylene	316 S.S.	Fluorofilm“	PTFE		PE .5" O.D.	Vinyl .938" O.D.
	155S**	0.5	Polypropylene	Ceramic	Fluorofilm“	PTFE	4FV	PE .250" O.D.	
	156HV	0.5	Acrylic/PP	316 S.S.	Fluorofilm“	Hypalon¤		PE .5" O.D.	Vinyl .938" O.D.
	257	0.5	316 S.S.	316 S.S.	Fluorofilm“	316 S.S.		Pipe 1/4" NPT M	
	498HI	0.9	PVC / PVC	Ceramic	Fluorofilm“	PVDF / Polyprel¤	4FV + AV	PE .375" O.D.	
AA95 ■ -	490HI	0.9	Acrylic / PVC	Ceramic	Fluorofilm“	PVDF / Polyprel¤	4FV + AV	PE .375" O.D.	
AA78 ■ -	490FI	0.9	Acrylic / PVC	PTFE	Fluorofilm“	PVDF / Polyprel¤	4FV	PE .375" O.D.	
AA75 ■ -	398HI	0.9	PVC / PVC	Ceramic	Fluorofilm“	PVDF / Polyprel¤	4FV + AV	PE .375" O.D.	
AA18 ■ -	392HI	0.9	PVDF / PVDF	Ceramic	Fluorofilm“	PVDF / Polyprel¤	4FV + AV	PE .375" O.D.	
AA15 ■ -	393HI	0.9	PVDF / PVDF	Ceramic	Fluorofilm“	PVDF / PTFE	4FV + AV	PE .375" O.D.	
	85HV	0.9	Polypropylene	316 S.S.	Fluorofilm“	PTFE		PE .5" O.D.	Vinyl .938" O.D
	86HV	0.9	Acrylic / PP	316 S.S.	Fluorofilm“	Hypalon¤		PE .5" O.D.	Vinyl .938" O.D..
	89	0.9	UHMW PE	Ceramic	Hypalon¤	Hypalon¤		PE .5" O.D.	Vinyl .5" O.D.
	95S**	0.9	Polypropylene	Ceramic	Fluorofilm“	PTFE	4FV	PE .375" O.D.	
	297	0.9	316 S.S.	316 S.S.	Fluorofilm“	316 S.S.		Pipe 1/4" NPT M	
	468HI	1.8	PVC / PVC	Ceramic	Fluorofilm“	PVDF / Polyprel¤	4FV + AV	PE .375" O.D..	
	460HI	1.8	Acrylic / PVC	Ceramic	Fluorofilm“	PVDF / Polyprel¤	4FV + AV	PE .375" O.D.	
	460FI	1.8	Acrylic / PVC	PTFE	Fluorofilm“	PVDF / Polyprel¤	4FV	PE .375" O.D.	
AA96 ■ -	368HI	1.8	PVC / PVC	Ceramic	Fluorofilm“	PVDF / Polyprel¤	4FV + AV	PE .375" O.D.	
AA76 ■ -	362HI	1.8	PVDF / PVDF	Ceramic	Fluorofilm“	PVDF / Polyprel¤	4FV + AV	PE .375" O.D.	
AA16 ■ -	363HI	1.8	PVDF / PVDF	Ceramic	Fluorofilm“	PVDF / PTFE	4FV + AV	PE .375" O.D.	
	65S**	1.8	Polypropylene	Ceramic	Fluorofilm“	PTFE	4FV	PE .375" O.D.	
	75HV	1.8	Polypropylene	316 S.S.	Fluorofilm“	PTFE		PE .5" O.D.	Vinyl .938" O.D.
	76HV	1.8	Acrylic / PP	316 S.S.	Fluorofilm“	Hypalon¤		PE .5" O.D.	Vinyl .938" O.D.
	79	1.8	UHMW PE	Ceramic	Hypalon¤	Hypalon¤		PE .5" O.D.	Vinyl .5" O.D.
	277	1.8	316 S.S.	316 S.S.	Fluorofilm“	316 S.S.		Pipe 1/4" NPT M	

■ See front page for voltage code specifications.

** These Liquid Ends are available without a 4FV, by removing the S from the liquid end code.

To specify 1/4 NPT male, change 'I' to 'P'.
To specify black, UV resistant tubing, change 'I' to 'U'.
To specify Bleed 4FV, change 'H' to 'B'.
To specify 3FV, change 'H' to 'T'.
To specify 4FV only, change 'H' to 'S'.
To specify Auto Prime Valve only, change 'H' to 'A'.

3FV indicates that the pump is equipped with an LMI Three Function Valve (pressure relief, priming aid, line drain).

4FV indicates that the pump is equipped with an LMI Four Function Valve. This diaphragm type, anti-syphon/pressure relief valve is installed on the pump head. It provides anti-syphon protection and aids priming, even under pressure.

AV indicates that the pump is equipped with an LMI Auto Prime Valve. This valve allows for the constant removal of vapors and gases present in applications such as sodium hypochlorite and hydrogen peroxide.

Fluorofilm“ is a copolymer of PTFE and PFA. Polyprel¤ is an elastomeric PTFE copolymer.

Polyprel is a registered trademark of Liquid Metronics Incorporated. Fluorofilm and Liquifram are trademarks of Liquid Metronics Incorporated. Hypalon is a registered trademark of E. I. du Pont de Nemours & Co., Inc.

Output Information

Series	Gallons per Hour: Min	Max	Liters per Hour: Min	Max	mL/cc per Minute: Min	Max	mL/cc per Stroke: Min	Max	Maximum Injection Pressure
AA94*, AA74*, AA14	0.001	0.58	0.004	2.2	0.07	37	0.07	0.37	250 psi (17.3 Bar)
AA95*, AA75*, AA15	0.002	1.00	0.008	3.8	0.13	63	0.13	0.63	110 psi (7.6 Bar)
AA96*, AA76*, AA16	0.004	2.00	0.015	7.6	0.25	126	0.25	1.26	50 psi (3.5 Bar)
AA97*, AA77*, AA17	0.001	0.42	0.005	1.6	0.08	26	0.08	0.26	140 psi (9.7 Bar)
AA78*, AA18	0.002	0.75	0.009	2.8	0.14	47	0.14	0.47	80 psi (5.5 Bar)

* Minimum output is based on one stroke per minute. Minimum output can be reduced further in external mode. Series AA9 pumps may be programmed for strokes per hour for lower outputs.

' 2003 LMI Milton Roy - All Rights Reserved
Printed in USA
Specifications subject to change without notice.

CHECKLIST ITEM 9

CONSTRUCTION SPECIFICATIONS CUT SHEETS

GENERAL INDUSTRIAL TWA

Sludge Pumps PAD-01 – PAD-05
Ingersol Rand PE15P-FPS-PVV
1.5” Double Diaphragm Pump

SALES & ENGINEERING DATA

RATIO SERIES:	1:1
FLUID P.S.I. RANGE:	20 - 120

PD15P-XXS-XXX and PE15P-XXS-XXX

1-1/2” NON-METALLIC DIAPHRAGM PUMP

RELEASED: 9-5-03
REVISED: 3-1-05
(REV. 04) S-1280

DIMENSIONAL DATA

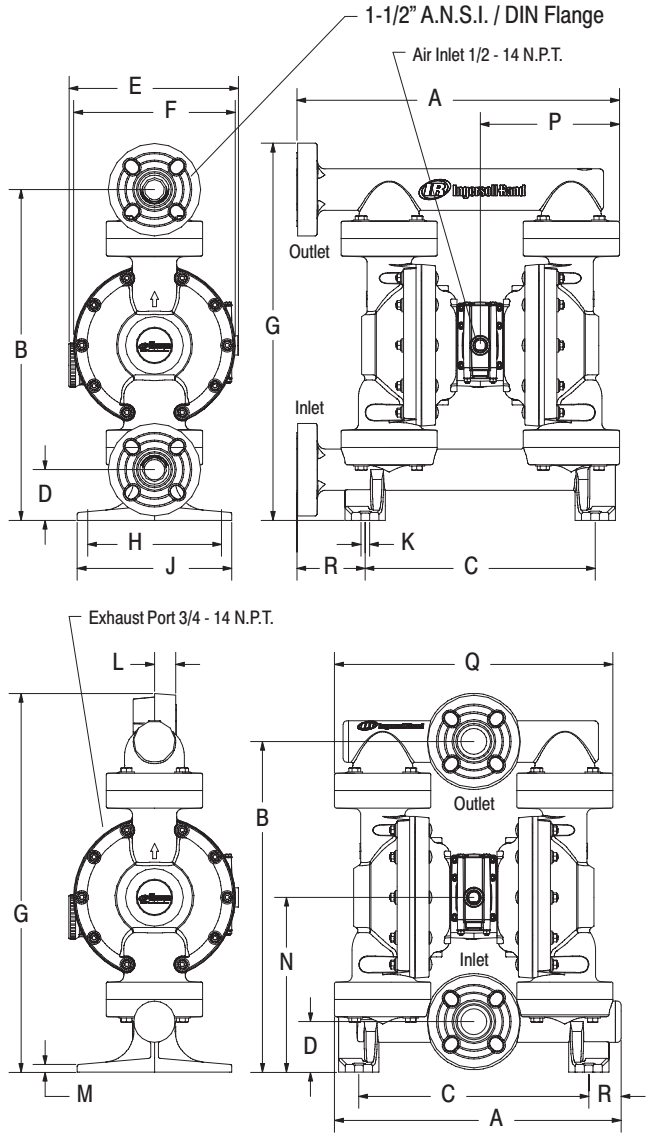

DIMENSIONS

A - see below	G - see below	N - 11-3/8” (288.4 mm)
B - 21-15/32” (545.3 mm)	H - 8-11/16” (220.7 mm)	P - 9-1/32” (229.5 mm)
C - 14-15/16” (379.4 mm)	J - 10-1/32” (254.8 mm)	Q - see below
D - 3-9/32” (83.3 mm)	K - 9/16” (14.3 mm)	R - see below
E - 11” (279.5 mm)	L - see below	
F - 10-1/2” (266.3 mm)	M - 17/32” (13.0 mm)	

	PX15P-FXS-XXX (End Flange)	PX15P-YXS-XXX (Center Flange)
A -	20-15/16” (531.6 mm)	18-19/32” (472.3 mm)
G -	24-15/32” (621.5 mm)	24-19/32” (624.5 mm)
L -	-----	1-3/8” (34.9 mm)
Q -	-----	18-3/32” (459.0 mm)
R -	4-7/16” (112.4 mm)	2-3/32” (53.1 mm)

SPECIFICATIONS

CONSTRUCTION

Model Series	PD15P-XXS-XXX PE15P-XXS-XXX
Pump Type	Non-Metallic, Air Operated, Double Diaphragm
Ratio	1:1
Material Inlet / Outlet (female)	1-1/2” A.N.S.I. / DIN Flange
Air Inlet (female)	1/2 - 14 N.P.T.
Air Exhaust (female)	3/4 - 14 N.P.T.
Weight PX15P-FKS-XXX	63.94 lbs (29.00 kgs)
PX15P-FPS-XXX	42.60 lbs (19.32 kgs)
PX15P-YKS-XXX	55.94 lbs (25.37 kgs)
PX15P-YPS-XXX	42.30 lbs (19.19 kgs)
Air Section Service Kit	637389
Major Air Valve Assembly	
PD15P-XXS-XXX	637390-1
PE15P-XXS-XXX	637390-2
Fluid Section Service Kit	637391-XX

PX15P-XXS-X X X
637391 - X X
Diaphragm Material
Ball Material

EXAMPLE: Model # PD15P-FPS-PAA
Fluid Section Service Kit is 637391-AA

PERFORMANCE

Air Inlet Pressure Range	20 - 120 p.s.i. (1.4 - 8.3 bar)
Maximum Material Inlet Pressure	10 p.s.i. (0.69 bar)
Fluid Pressure Range	20 - 120 p.s.i. (1.4 - 8.3 bar)
Maximum Flow Rate (flooded inlet)	123.1 g.p.m. (465.9 l.p.m.)
Displacement / Cycle @ 100 p.s.i.	0.617 gal. (2.34 lit.)
Maximum Particle Size	1/4” dia. (6.4 mm)
Maximum Temperature Limits (diaphragm / ball / seal material)	
E.P.R. / EPDM	-60° to 280° F (-51° to 138° C)
Hytrel	-20° to 150° F (-29° to 66° C)
Nitrile	10° to 180° F (-12° to 82° C)
Polypropylene	35° to 150° F (2° to 66° C)
P.V.D.F. (Kynar)	10° to 200° F (-12° to 93° C)
Santoprene	-40° to 225° F (-40° to 107° C)
T.F.E. (Teflon)	40° to 225° F (4° to 107° C)
Viton	-40° to 350° F (-40° to 177° C)
Noise Level @ 70 p.s.i. - 60 c.p.m.	81.0 db(A)①

① The pump sound pressure level has been updated to an Equivalent Continuous Sound Level (L_{Aeq}) to meet the intent of ANSI S1. 13-1971, CAGI-PNEUROP S5.1 using four microphone locations.

INGERSOLL-RAND COMPANY
P.O. BOX 151 • ONE ARO CENTER • BRYAN, OHIO 43506-0151
(800) 276-4658 • FAX (800) 266-7016

©2005
CCN 15198997

ARO® Ingersoll-Rand

PX15P-XXS-XXX 1-1/2" NON-METALLIC DIAPHRAGM PUMP

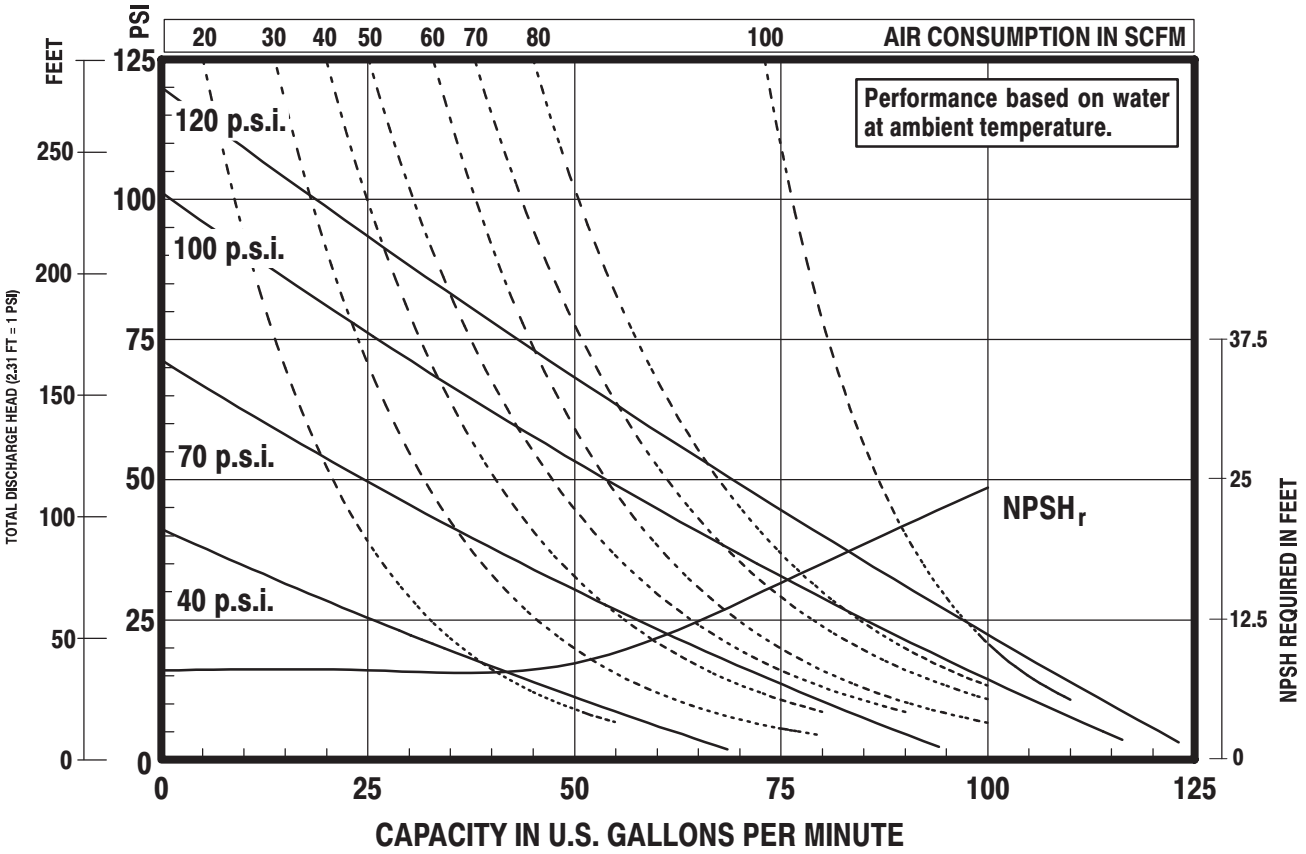

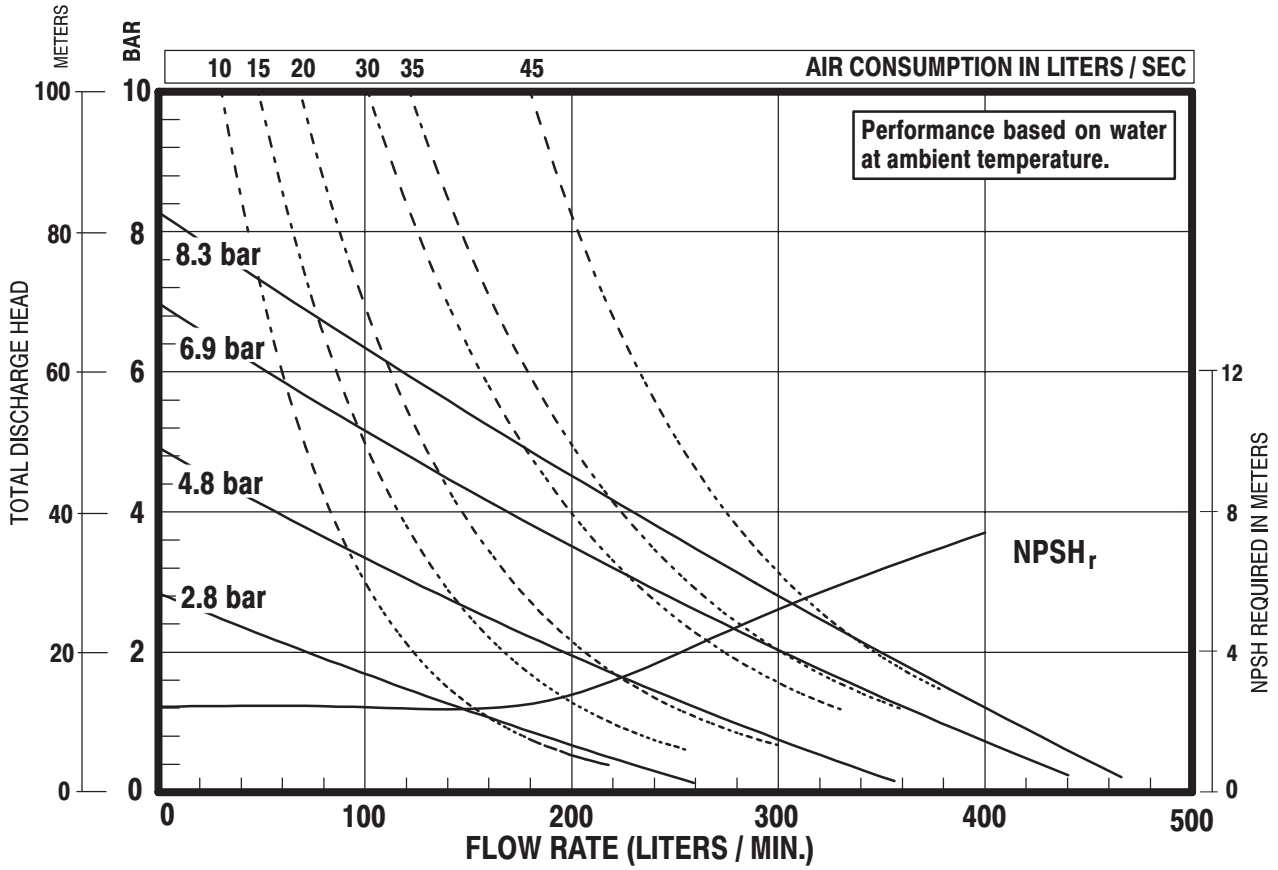

SECTION 44 42 73

Specification for Hydraulic Control Treatment System (HCTS)

WATER TREATMENT TANKS

PART 1 GENERAL

1.1 SECTION INCLUDES

A. Water Treatment Tanks (Tanks).

1.2 RELATED SECTIONS

A. Division 40 05 23 – Valves

B. Section 44 42 56 – Water Treatment Pumps

1.3 DESCRIPTION

A. General

1. The Hydraulic Control Treatment System (HCTS) shall be operated to treat extracted groundwater pumped from hydraulic control wells and DNAPL recovery wells. The treated effluent shall be discharged to the Hackensack River in accordance with discharge permit requirements.

B. Design Criteria

1. As shown in the Contract Documents.
2. Refer to Tank product literature.

C. Performance Requirements

1. The Tanks and associated appurtenances shall be installed in order to perform the following functions:
   a. CrVI reduction
   b. pH control
   c. Flocculation
   d. Pump tank(s)
   e. GAC backwash
   f. Sludge feed
   g. Sludge pump tank
   h. Sludge accumulation

2. The treatment system shall be operated by the Contractor in order to achieve NJDPES discharge limits.

1.4 SUBMITTALS

A. Manufacturer's installation information

B. Shop Drawings: Show Tank and connection details

C. Tank specification information

D. O&M Manuals

E. Quality Control information.
   1. Unit operation analytical data – for performance testing
   2. Tank installation Logs

F. Proposed changes or modifications

1.5 QUALITY ASSURANCE

A. Quality assurance activities are described in the document titled "Construction Quality Assurance Plan, SCCC and Diamond Site, Kearny New Jersey."

B. The Engineer will collect the discharge sample to evaluate compliance with the NJPDES permit conditions.

1.6 QUALITY CONTROL

A. The Contractor shall be responsible for quality control activities during installation, start up and operation of the HCTS.

B. The Contractor shall perform routine performance monitoring by collecting samples from the in-system sample ports. The sampling ports are shown on the Drawings.

C. The Contractor shall comply with all applicable Federal, State and local laws or ordinances as well as applicable codes, standards and regulations.

D. The Contractor shall provide QC documentation to the Engineer.

1.7 DELIVERY, STORAGE, AND HANDLING

A. Store products in Manufacturer's unopened packaging until ready for installation.

B. Use proper equipment and methods during unloading and transporting material to ensure safety and to prevent damage.

C. Handle and store materials in accordance with Manufacturer's recommendations.

PART 2 PRODUCTS

2.1 TANKS

A. The Water Treatment Tank Schedule is provided in Table 444273 – A below.

B. The Tanks shall be as shown on the Water Treatment Tank Schedule or Engineer-approved equal.

Table 444273 – A

Schedule of Water Treatment Tanks

Tank Designation	Tank Description		Supplier/ Manufacturer	Model	Approx. Dimensions	Approx. Volume (gal)	Cover	Material
T-CR-01	Chrome Flash Mix	Cylindrical with Mixer	Plastic Mart	VTO110-32	32"D x 40"H	110	Yes	HDPE
T-CR-02	Chrome Reduction Tank	Cylindrical with Mixer	Plastic Mart	NW305VERT	46"D x 40"H	305	Yes	HDPE
T-CR-03	Ferrous Sulfate Mix Tank	Cylindrical with Mixer	Plastic Mart	VTO110-32	32"D x 40"H	110	Yes	HDPE
T-CR-04	Sodium Sulfide Mix Tank	Cylindrical with Mixer	Plastic Mart	VTO110-32	32"D x 40"H	110	Yes	HDPE
T-PH-01	pH Control Tank	Cylindrical with Mixer	Plastic Mart	NW500VERT	48"D x 73"H	500	Yes	HDPE
T-FM-01	Flash Mix Tank	Cylindrical with Mixer	Hoffland			270	Yes	Carbon Steel
T-FL-01	Flocculation Tank	Cylindrical with Mixer	Hoffland			700	Yes	Carbon Steel
T-FL-02	Anionic Polymer	Cylindrical with Mixer	Plastic Mart	50VERT	23"D x 33"H	50	Yes	HDPE
T-FL-03	Cationic Polymer	Cylindrical with Mixer	Plastic Mart	50VERT	23"D x 33"H	50	Yes	HDPE
T-CL-01	Clarifier	Parallel Plate Separator w/ Sludge Rake	Hoffland				Yes	Carbon Steel
T-CL-02	Clarifier Surge Tank	Cylindrical	Hoffland		2.25’ x 7.3’ x 50”	512	Yes	HDPE
T-EB-01	Effluent Backwash	Cylindrical	Plastic Mart	VT3400-102	102"D x 107"H	3,400	Yes	HDPE w/stand
T-SL-01	Sludge Feed	Cylindrical w/Rake	Hoffland		10' D x 16' H	9,400	Yes	Carbon Steel
T-SL-02	GAC Backwash	Cylindrical Cone Bottom	Snyder Industries	5180	90" D x 200.14" H	4,100	Yes	HDPE
T-SL-03	Sludge Pump Tank	Cylindrical	Plastic Mart	VT0550-52	52" D x 66" H	550	Yes	HDPE

PART 3 EXECUTION

3.1 INSTALLATION

A. The Contractor shall furnish and install the Tanks, piping, controls, level switches, electrical, incidentals and associated appurtenances in accordance with Manufacturers instructions.

B. Confined Space Entry placards shall be placed on the tanks.

3.2 OPERATION

A. The Contractor shall be responsible for the satisfactory operation, maintenance (e.g. remove solids that have accumulated) and troubleshooting of the Tanks as needed for the duration of the HCTS Work.

B. Following completion of the installation, the Tanks will be performance tested. All equipment shall be adjusted and analyzed for misalignment, leaks, excessive vibration, safety protocol and overall performance, and the installation shall be subject to approval by the Engineer.

C. The Contractor shall provide replacement parts as needed.

D. The Contractor shall provide the services of a qualified Operator for the Tanks in accordance with NJDEP requirements.

E. Covers shall be maintained on the tanks at all times.

F. Level control switches shall be maintained in order to regulate the water levels and prevent overflow.

G. Ladders shall be maintained to facilitate inspection.

END OF SECTION

CHECKLIST ITEM 9

CONSTRUCTION SPECIFICATIONS CUT SHEETS

GENERAL INDUSTRIAL TWA

Plastic Mart Tanks

T-FL-02 and T-FL-03 - 50VERT

T-CR-01, T-CR-03, T-CR-04 - VTO110-32

T-CR-02 - NW305VERT

T-PH-01 - NW500VERT

T-EB-01 - VT3400-102

T-SL-03 - VT0550-52

PLASTIC-MART.com

Lowest Prices Guaranteed!

Please Call toll free 866-310-2556

Home | About Us | Products | Custom | Contact Us | General Info | View Cart

Live chat by LivePerson

Search Our Site ▶ SEARCH

Underground Water Storage Tanks
- Underground Water Cisterns

RV TANKS
- RV FRESH-WATER TANKS
- RV HOLDING TANKS

Marine Boat Tanks
- Marine Water Tanks
- Marine Holding Tanks

ABOVE GROUND STORAGE TANKS
- WATER STORAGE TANKS
- PLASTIC STORAGE TANKS
  - SNYDER INDUSTRIES Industrial Water Tanks
- CONE BOTTOM TANKS
- Horizontal Storage Tanks
- Home & Garden Rain Barrels for Sale
- Low Profile Water Hauling Truck Tanks
- PORTABLE FLAT BOTTOM UTILITY TANKS
- Portable Truck Bed Water Tanks
- Rectanglar Water & Waste Tanks
- Open Top Plastic Storage Tanks
- CONTAINMENT BASINS
- DOUBLE WALL STORAGE TANKS
- SPILL CONTAINMENT TRAYS
- Plastic Stock Tanks
- Steel Cradle Tanks
- Pressure Washer Auto Detailing Tanks
- FULLY DRAINING TANKS
- WASTE OIL DOUBLE WALL TANKS
- DOORWAY WATER TANKS (29"wide
- Brine Storage Tanks
- Forkliftable Pallet Paks
- Solar Hot Water Storage Tanks
- SPOT SPRAYER TANKS
- POLY DRUM SPILL PALLETS
- POLY PCO STORAGE TANKS
- Stackable Water Tanks
- PolyPropylene Hot Water Storage Tanks
- Stackable Oil Totes

Below Ground Septic Waste Tanks
- PLASTIC SEPTIC TANKS FOR SALE
- NORWESCO BRUISER TANKS

PLASTIC GENERATOR FUEL TANKS
- Plastic Fuel Tanks

Bulkhead Fittings - Lids - Gaskets

ABOVE GROUND STORAGE TANKS

PLASTIC STORAGE TANKS

See list below. Main Category

SNYDER INDUSTRIES
Industrial Water Tanks

(SEE LIST BELOW)
VERTICAL STORAGE TANKS are most frequently used for bulk storage of water, fertilizer, and agricultural and industrial chemicals,& Reverse Osmosis Industrial Water Tank. They feature tie-down slots, centered & offset self-vented, slosh-proof lids.
VERTICAL STORAGE TANK walls are translucent for level viewing and equipped with gallon indicators.
(s.g.) = specific gravity (lb.s per gallon)
water = (1.0 s.g.)

CROSSLINK, POLYPROPYLENE, HEAVY DUTY (1.9) TANKS AVAILABLE BY REQUEST

Name	Capacity	Size	Part Number
CLICK ON PRICE FOR DETAILS	LISTED IN U.S. GALLONS	U.S. INCHES	ITEM #
Plastic Storage Tank	20 Gallon Vertical Poly Storage Tank	16" dia. x 28"H	VT0020-16
Plastic Storage Tank	25 Gallon Vertical Poly Storage Tank	18" dia. x 30"H	VT0025-18
Plastic Storage Tank 49.99***SALE***	25 Gallon Vertical Poly Storage Tank	23"dia x 16"H	VERT25
Plastic Storage Tank	40 Gallon Vertical Poly Storage Tank	18" dia. x 43"H	VT0040-18
Plastic Storage Tank	50 Gallon Vertical Poly Storage Tank	18" dia. x 53"H	41865
Two Polymer Mix Tanks ***SALE***	50 Gallon Vertical Poly Storage Tank	23"dia x 33"H	50VERT
	55 Gallon Vertical Poly Storage Tank	20" dia. x 47"H	VT0055-20
Plastic Storage Tank	65 Gallon Vertical Poly Storage Tank	23" dia. x 42"H	VT0065-23
Plastic Storage Tank 109.99 ****SALE****	75 Gallon Vertical Poly Storage Tank	23" dia. x 50"H	75VERT
Plastic Storage Tank 124.99 ***SALE***	100 Gallon Vertical Poly Storage Tank	23" dia. x 64" H	100VERT
Plastic Storage Tank	100 Gallon Vertical Poly Storage Tank	28" dia. x 45"H	VT0100-28
CrVI Rapid Mix, Ferrous Sulfate, & Na2S, Mix Tanks	110 Gallon Vertical Poly Storage Tank	32" dia. x 40"H	VT0110-32
	120 Gallon Vertical Poly Storage Tank	38" dia. x 31"H	NW120MINI
SUPER SALE**	130 Gallon Vertical Poly Storage Tank	23" dia. x 77" H	130VERT
Plastic Storage Tank	135 Gallon Vertical Poly Storage Tank	28" dia. x 59"H	VT0135-28
Plastic Storage Tank 149.99***SALE***	150 Gallon Vertical Poly Storage Tank	36" dia. x 41" H	150VERT
Plastic Storage Tanks	150 Gallon Vertical Poly Storage Tank	30" dia. x 56"H	NW150VERT
Plastic Storage Tank	160 Gallon Vertical Poly Storage Tank	28" dia. x 68"H	VT0160-28
Plastic Storage Tank	165 Gallon Vertical Poly Storage Tank	31" dia. x 56"H	NW165VERT
Plastic Storage Tank	175 Gallon Vertical Poly Storage Tank	31" dia. x 61"H	VT0175-31
Plastic Storage Tank	175 Gallon Vertical Poly Storage Tank	29" dia. x 66"H	6324VERT
Plastic Storage Tank	180 Gallon Vertical Poly Storage Tank	40" dia. x 45"H	VT0180-40
Plastic Storage Tank	200 Gallon Vertical Poly Storage Tank	30" dia. x 72"H	NW200VERT
Plastic Storage Tank	200 Gallon Vertical Poly Storage Tank	34" dia. x 57"H	6332VERT
Plastic Storage Tank	210 Gallon Vertical Poly Storage Tank	32" dia. x 67"H	NW210VERT

- Ball Valves
- Bulkhead & Bolted fittings
- Strainer Baskets
- Lids
- Inspection Lids
- Viton Gaskets

CUSTOM PLASTIC FABRICATION

Industrial Application

Fluorinated Tanks

Cross+Linked Polyethelene Tanks

Heat Tracing / Foam Insulation

Yard Sale Water Tanks for Sale

- Potable Water Tanks-Blems
- Vertical Poly Storage Tank-Blems
- OTHER MISCELLANEOUS

Manufacturers

New Order Cancellation P

Shipping Policy

Privacy Policy

CrVI Reduction Tank

pH Control Tank

Clarifier Surge Tank

Plastic Storage Tank	210 Gallon Vertical Poly Storage Tank	40" dia. x 49"H	VT0210-40
Plastic Storage Tank	220 Gallon Vertical Poly Storage Tank	42" dia. x 44"H	NW220MINI
Plastic Storage Tank 189.99 Ships in 24Hrs	220 Gallon Vertical Poly Storage Tank	31" dia. x 74"H	220VERT
Plastic Storage Tank	225 Gallon Vertical Poly Storage Tank	31" dia. x 76"H	VT0225-31
Plastic Storage Tank	250 Gallon Vertical Poly Storage Tank	30" dia. x 89"H	NW250VERT
Plastic Storage Tank	250 Gallon Vertical Poly Storage Tank	36" dia. x 53" H	6327VERT
Plastic Storage Tank	265 Gallon Vertical Poly Storage Tank	31" dia. x 88"H	VT0265-31
Plastic Storage Tank 199.99 ***Ships in 24Hrs***	270 Gallon Vertical Poly Storage Tank	31" dia. x 85"H	270VERT
Plastic Storage Tank	300 Gallon Vertical Poly Storage Tank	35" dia. x 81"H	VT0300-35
Plastic Storage Tank 209.99***SALE***	300 Gallon Vertical Poly Storage Tank	42" dia. x 57"H	300VERT
Plastic Storage Tank	300 Gallon Vertical Poly Storage Tank	36" dia. x 79"H	NW300VERT
Plastic Storage Tank	300 Gallon Vertical Poly Storage Tank	34" dia. x 82" H	6329VERT
	305 Gallon Vertical Poly Storage Tank	46" dia. x 50"H	NW305VERT
	310 Gallon Vertical Poly Storage Tank	32" dia.x 93"H	6328VERT
Plastic Storage Tank	330 Gallon Vertical Poly Storage Tank	47" dia. x 53"H	6330VERT
Plastic Storage Tank	405 Gallon Vertical Poly Storage Tank	52" dia. x 48"H	VT0405-52
Plastic Storage Tank	425 Gallon Vertical Poly Storage Tank	42" dia. x 75"H	VT0425-42
Plastic Storage Tank 299.99 ***SALE***	450 Gallon Vertical Poly Storage Tank	42" dia. x 80"H	450VERT
Plastic Storage Tank	500 Gallon Vertical Poly Storage Tank	46" dia. x 77"H	VT0500-46
Plastic Storage Tank	500 Gallon Vertical Poly Storage Tank	48" dia. x 73"H	NW500VERT
Plastic Storage Tank	500 Gallon Vertical Poly Storage Tank	60" dia. x 51" H	6333VERT
Plastic Storage Tank	505 Gallon Vertical Poly Storage Tank	46" dia. x 80"H	VT0505-46
Plastic Storage Tanks 329.99***SALE***	525 Gallon Vertical Poly Storage Tank	45" dia x 82" H	525VERT
Plastic Storage Tank	550 Gallon Vertical Poly Storage Tank	52" dia. x 66"H	VT0550-52
Plastic Storage Tank	550 Gallon Vertical Poly Storage Tank	67" dia. x 44"H	NW550VERT
Plastic Storage Tank	550 Gallon Vertical Poly Storage Tank	47" dia. x 78"H	6336VERT
Plastic Storage Tank	600 Gallon Vertical Poly Storage Tank	46" dia. x 91"H	VT0600-46
Plastic Storage Tank	625 Gallon Vertical Poly Storage Tank	64" dia. x 50"H	VT0625-64
Plastic Storage Tank	700 Gallon Vertical Poly Storage Tank	60" dia. x 66"H	6341VERT
Plastic Storage Tank	750 Gallon Vertical Poly Storage Tank	48" dia. x 103"H	NW750VERT
Plastic Storage Tank	800 Gallon Vertical Poly Storage Tank	46" dia. x 118"H	VT0800-46
Plastic Storage Tank	850 Gallon Vertical Poly Storage Tank	48" dia. x 118"H	NW850VERT
Plastic Storage Tank	850 Gallon Vertical Poly Storage Tank	54" dia. x 94"H	VT0850-54
Plastic Storage Tank	900 Gallon Vertical Poly Storage Tank	46" dia. x 132"H	VT0900-46
Plastic Storage Tank	1,000 Gallon Vertical Poly Storage Tank	64" dia. x 80"H	NW1000VERT
Plastic Storage Tank	1,000 Gallon Vertical Poly Storage Tank	64" dia. x 81"H	VT1000-64
Plastic Storage Tank	1,050 Gallon Vertical Poly Storage Tank	86" dia. x 54"H	VT1050-86
Plastic Storage Tank	1,050 Gallon Vertical Poly Storage Tank	60" dia. x 95"H	RM1050VERT
Plastic Storage Tank	1,100 Gallon Vertical Poly Storage Tank	87" dia. x 53"H	NW1100VERT
Plastic Storage Tank	1,000 Gallon Vertical Poly Storage Tank	72" dia. x 66" H	6350VERT
Plastic Storage Tank	1,200 Gallon Vertical Poly Storage Tank	64" dia. x 97"H	VT1200-64
Plastic Storage Tank	1,200 Gallon Vertical Poly Storage Tank	90" dia. x 53"H	6357VERT
Plastic Storage Tank	1,350 Gallon Vertical Poly Storage Tank	86" dia. x 65"H	VT1350-86
Plastic Storage Tank	1,500 Gallon Vertical Poly Storage Tank	86" dia. x 69"H	VT1500-86
Plastic Storage Tank	1,500 Gallon Vertical Poly Storage Tank	64" dia. x 115"H	VT1500-64
Plastic Storage Tank	1,500 Gallon Vertical Poly Storage Tank	64" dia. x 116"H	NW1500VERT
Plastic Storage Tank	1,525 Gallon Vertical Poly Storage Tank	64" dia. x 122"H	VT1525-64
Plastic Storage Tank	1,550 Gallon Vertical Poly Storage Tank	87" dia. x 67"H	NW1550VERT
Plastic Storage Tank	1,550 Gallon Vertical Poly Storage Tank	60" dia. x 136"H	6368VERT
Plastic Storage Tank	1,600 Gallon Vertical Poly Storage Tank	90" dia. x 68"H	6370VERT
Plastic Storage Tank	1,650 Gallon Vertical Poly Storage Tank	86" dia. x 74"H	VT1650-86
Plastic Storage Tank	1,700 Gallon Vertical Poly Storage Tank	87" dia. x 74"H	NW1700VERT

Plastic Storage Tank	2,000 Gallon Vertical Poly Storage Tank	90" dia. x 84"H	VT2000-90
Plastic Storage Tank	2,000 Gallon Vertical Poly Storage Tank	90" dia. x 79"H	6378VERT
Plastic Storage Tank	2,000 Gallon Vertical Poly Storage Tank	64" dia. x 153"H	VT2000-64
Plastic Storage Tank	2,000 Gallon Vertical Poly Storage Tank	64" dia. x 152"H	NW2000VERT-64
Plastic Storage Tank	2,100 Gallon Vertical Poly Storage Tank	87" dia. x 89" H	NW2100VERT-87
Plastic Storage Tank	2,100 Gallon Vertical Poly Storage Tank	102" dia. x 69"H	NW2100VERT-102
Plastic Storage Tank	2,150 Gallon Vertical Poly Storage Tank	102" dia. x 71"H	VT2150-102
Plastic Storage Tank	2500 Gallon Vertical Poly Storage Tank	96" dia. x 92"H	6386VERT
Plastic Storage Tank	2,500 Gallon Vertical Poly Storage Tank	90" dia. x 103"H	VT2500-90
Plastic Storage Tank	2,500 Gallon Vertical Poly Storage Tank	95" dia. x 91"H	NW2500VERT-95
Plastic Storage Tank	2,500 Gallon Vertical Poly Storage Tank	102" dia. x 79"H	NW2500VERT-102
Plastic Storage Tank	3,000 Gallon Vertical Poly Storage Tank	90" dia. x 120"H	VT3000-90
Plastic Storage Tank	3,000 Gallon Vertical Poly Storage Tank	102" dia. x 93"H	NW3000VERT-102
Plastic Storage Tank	3,000 Gallon Vertical Poly Storage Tank	95" dia. x 109"H	NW3000VERT-95
Plastic Storage Tank	3,000 Gallon Vertical Poly Storage Tank	91" dia. x 119"H	NW3000VERT-91
Plastic Storage Tank	3,000 Gallon Vertical Poly Storage Tank	96" dia. x 108"H	6390VERT
Plastic Storage Tank	3,100 Gallon Vertical Poly Storage Tank	102" dia. x 103"H	VT3100-102
Effluent Backwash Tank	3,400 Gallon Vertical Poly Storage Tank	102" dia. x 107"H	VT3400-102
Plastic Storage Tank	4,000 Gallon Vertical Poly Storage Tank	96" dia. x 140"H	VT4000-96
Plastic Storage Tank	4,000 Gallon Vertical Poly Storage Tank	96" dia. x 141"H	6397VERT
Plastic Storage Tank	4,000 Gallon Vertical Poly Storage Tank	102" dia. x 125"H	NW4000VERT
Plastic Storage Tank	4,200 Gallon Vertical Poly Storage Tank	96" dia. x 148"H	VT4200-96
Plastic Storage Tank	4,200 Gallon Vertical Poly Storage Tank	102" dia. x 131"H	NW4200VERT
Plastic Storage Tank	5,000 Gallon Vertical Poly Storage Tank	102" dia. x 152"H	NW5000VERT
Plastic Storage Tank	5,150 Gallon Vertical Poly Storage Tank	102" dia. x 161"H	VT5150-102
Plastic Storage Tank	5,200 Gallon Vertical Poly Storage Tank	96" dia. x 185"H	6409VERT
Plastic Storage Tank	5,500 Gallon Vertical Poly Storage Tank	138" dia. x 92"H	NW5500VERT
Plastic Storage Tank	6,000 Gallon Vertical Poly Storage Tank	102" dia. x 182"H	NW6000VERT
Plastic Storage Tank	6,100 Gallon Vertical Poly Storage Tank	119" dia. x 140"H	NW6100VERT
Plastic Storage Tank	6,250 Gallon Vertical Poly Storage Tank	102" dia. x 194"H	VT6250-102
Plastic Storage Tank	6,500 Gallon Vertical Poly Storage Tank	119" dia. x 150"H	NW6500VERT-119
Plastic Storage Tank	7,000 Gallon Vertical Poly Storage Tank	142" dia. x 125"H	VT7000-142
Plastic Storage Tank	7,800 Gallon Vertical Poly Storage Tank	120" dia. x 176"H	VT7800-120
Plastic Storage Tank	7,800 Gallon Vertical Poly Storage Tank	119" dia. x 176"H	NW7800VERT
Plastic Storage Tank	8,000 Gallon Vertical Poly Storage Tank	120" dia. x 180"H	VT8000-120
Plastic Storage Tank	8,400 Gallon Vertical Poly Storage Tank	119" dia. x 188"H	NW8400VERT
Plastic Storage Tank	9,000 Gallon Vertical Poly Storage Tank	141" dia. x 146"H	NW9000VERT
Plastic Storage Tank	9,150 Gallon Vertical Poly Storage Tank	120" dia. x 203"H	VT9150-120
Plastic Storage Tank	10,000 Gallon Vertical Poly Storage Tank	141" dia. x 160"H	NW10000VERT
Plastic Storage Tank	10,500 Gallon Vertical Poly Storage Tank	142" dia. x 177"H	VT10500-2500
Plastic Storage Tank	12,000 Gallon Vertical Poly Storage Tank	141" dia. x 193"H	NW12000VERT
Plastic Storage Tank	15,000 Gallon Vertical Poly Storage Tank	141" dia. x 244"H	NW15000VERT
Plastic Storage Tank	15,000 Gallon Vertical Poly Storage Tank	142" dia. x 237"H	SN15000CT
	1.9 (S.G.) AVAILABLE PLEASE CALL	1 866 310 2556	New #

All content © **Plastic-Mart**
Toll Free 866-310-2556

CHECKLIST ITEM 9

CONSTRUCTION SPECIFICATIONS CUT SHEETS

GENERAL INDUSTRIAL TWA

Hoffland Environmental, Inc.

Sludge Feed Tank, T-SL-01
Model No. ST10-9000-R1
9400 gallon, Coated Carbon Steel

Hoffland Environmental Inc.

Wastewater Treatment Systems

Hoffland Environmental, Inc.
10391 Silver Springs Road
Conroe TX 77303-1602 USA
E-mail: hoffland@flex.net

Phone: 936-856-4515
Fax: 936-856-4589

Sludge Thickener

ACAD 14 format »

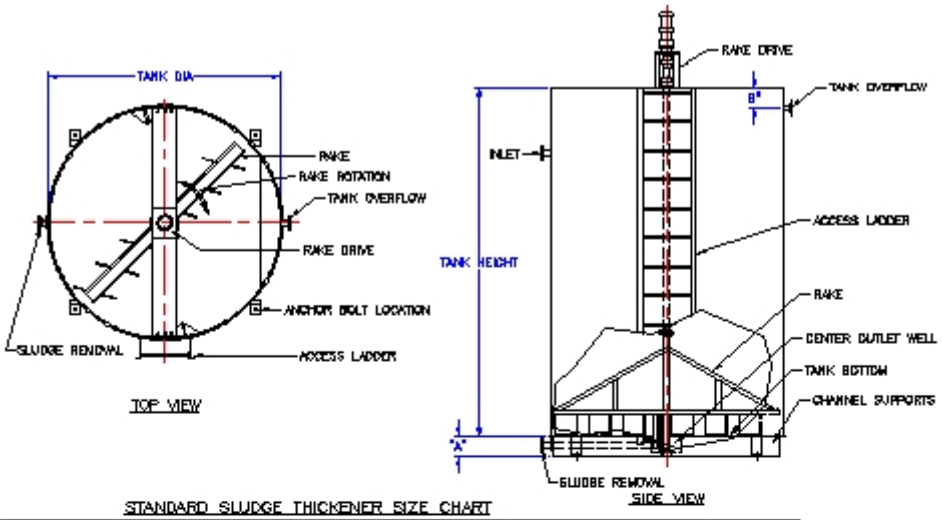

STANDARD SLUDGE THICKENER SIZE CHART

MODEL NUMBER	TANK DIA	TANK HEIGHT	TANK VOLUME GALLONS	TANK OVERFLOW	SLUDGE REMOVAL	SHIPPING WEIGHT	OPERATING WEIGHT	DIST "A"
ST/6/1700	6'ø	8'	1,892	2"	2"	3,800 LBS	18,315 LBS	8"
ST/6/2500	6'ø	12'	2,538	2"	2"	4,500 LBS	26,000 LBS	8"
ST/6/3300	6'ø	16'	3384	2"	2"	5,200 LBS	34,000 LBS	8"
ST/8/3000	8'ø	8'	3,008	2"	2"	4,500 LBS	28,000 LBS	8"
ST/8/4500	8'ø	12'	4,512	3"	3"	5,500 LBS	43,000 LBS	10"
ST/8/6000	8'ø	16'	6,016	3"	3"	6,500 LBS	56,150 LBS	10"
ST/8/9000	8'ø	24'	9,024	3"	3"	8,800 LBS	80,380 LBS	10"
ST/10/4700	10'ø	8'	4,700	3"	3"	5,300 LBS	43,100 LBS	10"
ST/10/7000	10'ø	12'	7,050	3"	3"	6,500 LBS	64,000 LBS	10"
ST/10/9500	10'ø	16'	9,400	3"	3"	8,500 LBS	85,000 LBS	10"
ST/10/14000	10'ø	24'	14,100	3"	3"	9,500 LBS	127,000 LBS	10"
ST/10/19000	10'ø	32'	18,800	4"	4"	19,000 LBS	178,000 LBS	10"
ST/12/10000	11' –10"ø	12'	10,152	4"	4"	8,500 LBS	91,200 LBS	10"
ST/12/13500	11' –10"ø	16'	13,536	4"	4"	10,000 LBS	121,000 LBS	10"
ST/12/20000	11' –10"ø	24'	20,300	4"	4"	12,500 LBS	180,500 LBS	10"
ST/12/27000	11' –10"ø	32'	27,100	4"	4"	22,500 LBS	252,575 LBS	10"
ST/14/18000	13' –10"ø	16'	18,000	4"	6"	10,500 LBS	161,000 LBS	12'
ST/14/27000	13' –10"ø	24'	27,000	4"	6"	15,000 LBS	240,000 LBS	12"
ST/16/24000	15' –10"ø	16'	24,000	4"	6"	13,000 LBS	215,000 LBS	12'
ST/16/36000	15' –10"ø	24'	36,000	4"	6"	17,000 LBS	320,000 LBS	12"

NOTES
1. MATERIAL OF CONSTRUCTION TO BE ASTM A-36 CARBON STEEL 1/4" THICK PLATE, EXCEPT 32' HIGH TANKS ARE 3/8" THICK PLATE.
2. ALL FLANGES TO BE 150 LB RAISED FACED AND ALL COUPLINGS TO BE FNPT

Hoffland Environmental Inc.
STANDARD SLUDGE THICKENER
ALL SIZES
NTS SLUDGE THICKENER

CHECKLIST ITEM 9

CONSTRUCTION SPECIFICATIONS CUT SHEETS

GENERAL INDUSTRIAL TWA

Snyder Industries, Inc.

GAC Backwash Tank, T-SL-02
Model No. 5180
4100 gal, 45^0 Cone Bottom

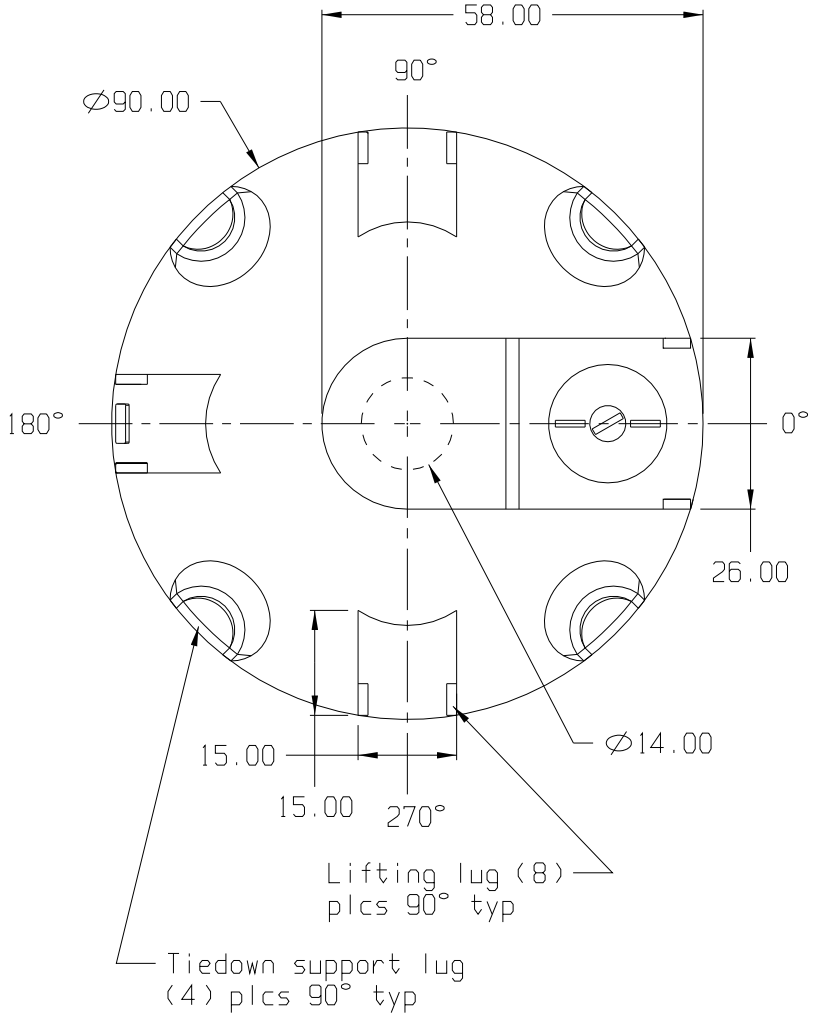

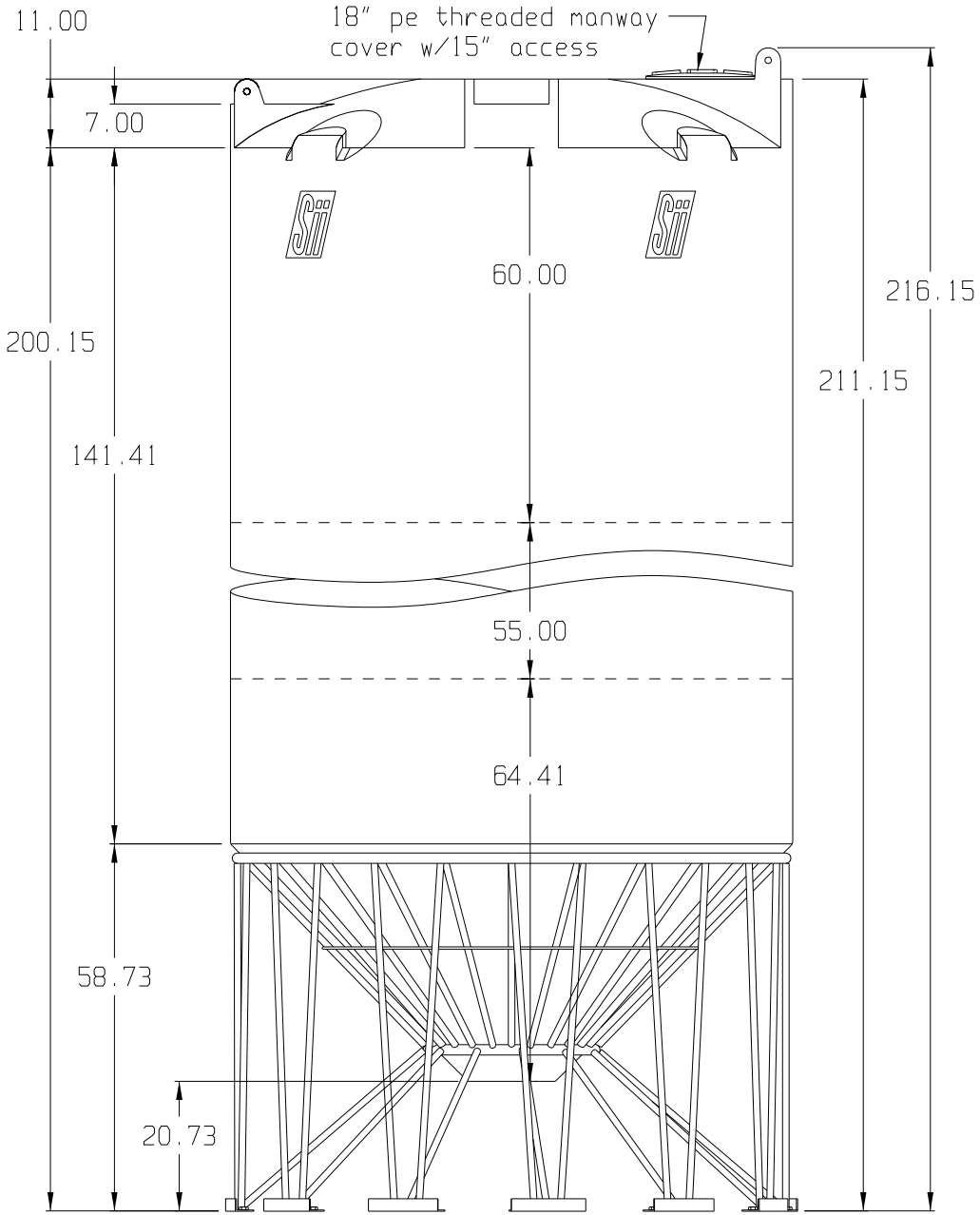

SNYDER INDUSTRIES INC.

(all dimensions in inches)

BASE FITTINGS TO BE LEFT INSTALLED AT TIME OF SHIPMENT PER SII PROCEDURE

4,100 GALLON 45° CONE BOTTOM TANK W/STAND

PART #S TANK: 5180--
STAND: 79400

REF#: 0000

03/06/03

SECTION 44 43 13

Specification for Hydraulic Control Treatment System (HCTS)

FILTERS

PART 1 GENERAL

1.1 SECTION INCLUDES

A. Granular Activated Carbon (GAC) Filters, including GAC, GAC/Organoclay, and GAC/Media Filters
B. Plate and Frame Filter Press

1.2 RELATED SECTIONS

A. Division 40 05 23 – Valves
B. Section 44 42 56 – Water Treatment Pumps

1.3 DESCRIPTION

A. General
1. The Hydraulic Control Treatment System (HCTS) shall be operated to treat extracted groundwater pumped from hydraulic control wells and DNAPL recovery wells. The treated effluent shall be discharged to the Hackensack River in accordance with discharge permit requirements.

B. Design Criteria
1. As shown in the Contract Documents.
2. Refer to Calgon Carbon Corporation (Calgon) GAC carbon adsorption vessel product literature.
3. Refer to Tigg Corporation (Tigg) GAC carbon adsorption vessel product literature.
4. Refer to Hoffland Environmental, Inc. filter press product literature

C. Performance Requirements
1. GAC filters - to remove organic constituents of concern (COC) from the wastewater.
2. Plate and Frame filter press – to dewater metal hydroxide sludges for offsite disposal.
3. The treatment system shall be operated by the Contractor in order to achieve New Jersey Pollution Discharge Elimination System (NJPDES) discharge limits.
4. The Contractor shall install and operate the system in accordance with all applicable New Jersey Department of Environmental Protection (NJDEP), Treatment Works Approval (TWA) and the project-specific Air Permit requirements.

1.4 SUBMITTALS

A. Manufacturer's installation information
B. Shop Drawings: Show product and connection details
C. GAC specification information
D. O&M Manuals
E. Quality Control information
   1. Unit operation analytical data – for performance testing
   2. Operation Logs
F. Proposed changes or modifications

1.5 QUALITY ASSURANCE

A. Quality assurance activities are described in the document titled "Construction Quality Assurance Plan, SCCC and Diamond Site, Kearny, New Jersey."

B. The Engineer will collect the discharge sample to evaluate compliance with the NJPDES permit conditions.

1.6 QUALITY CONTROL

A. The Contractor shall be responsible for quality control activities during installation, start up and operation of the HCTS filters.

B. The Contractor shall perform routine performance monitoring by collecting samples from the in-system sample ports. And, the Contractor shall change out GAC media and filters as needed based on the analytical results.

C. The Contractor shall comply with all applicable Federal, State and local laws or ordinances as well as applicable codes, standards and regulations.

D. The Contractor shall provide QC documentation to the Engineer.

1.7 DELIVERY, STORAGE, AND HANDLING

A. Store products in Manufacturer's unopened packaging until ready for installation.

B. Use proper equipment and methods during unloading and transporting material to ensure safety and to prevent damage.

C. Handle and store materials in accordance with Manufacturer's recommendations.

PART 2 PRODUCTS

2.1 GAC WATER FILTERS

A. The GAC filters GAC-02, and GAC-04A, B, and C shall be Calgon Model CR5000 Adsorbers or Engineer-approved equal.
B. The GAC filter GAC-01 shall be Tigg Corporation Model C-35 or Engineer-approved equal.
C. The GAC/media filters GAC-03A and 03B shall Tigg Corporation custom models, or Engineer-approved equal. GAC media filters will include GAC media on top of a gravel layer.
D. GAC filters shall be provided filled to design capacity with Calgon Filtrasorb 300 or Filtrasorb 400 or Engineer-approved equal.

2.1 PLATE AND FRAME FILTER PRESS

A. The Plate and Frame shall be a Hoffland Environmental, Inc. 20 CF Pneumatic / Hydraulic sludge press, or Engineer-approved equal.

PART 3 EXECUTION

3.1 INSTALLATION

A. The Contractor shall furnish and install the filters, plate and frame filter press, filter press stand, piping, electrical, controls, incidentals and associated appurtenances in accordance with Manufacturer's instructions.

B. Pressure relief valves and rupture disks shall be placed on filter influent pipes.

C. Automatic vent valves shall be installed on top of the GAC filters to remove captured air.

E. The dewatering press and appurtenances shall be furnished and installed to provide a complete and functional system.

F. Material and equipment shall be the standard products of a manufacturer regularly engaged in the manufacture of such products.

3.2 OPERATION

A. The Contractor shall be responsible for the satisfactory operation, maintained and troubleshooting of the filters as needed for the duration of the HCTS Work.

B. Following completion of the installation, the filters shall be performance tested. All equipment shall be adjusted and analyzed for misalignment, leaks, excessive vibration, safety protocol and overall performance, and the installation shall be subject to approval by the Engineer.

C. The Contractor shall provide replacement parts as needed.

D. The Contractor shall provide the services of a qualified Operator for the equipment in accordance with NJDEP requirements.

E. The Contractor shall monitor the performance of the filter media and replace the spent media as needed.

F. The spent GAC media and dewatered filter sludge shall be characterized for offsite disposal or regeneration in accordance with NJDEP and United States Environmental Protection Agency (USEPA) requirements.

G. The Manufacturer recommended pressure drops for filters shall not be exceeded.

H. Covers shall be maintained on filters during operation.

I. The Contractor shall monitor the performance of the filter press and operate in accordance with manufacturer's data for the dewatering press and related control equipment, safety features, and appurtenances.

END OF SECTION

CHECKLIST ITEM 9

CONSTRUCTION SPECIFICATIONS CUT SHEETS

GENERAL INDUSTRIAL TWA

GAC Organoclay Adsorber, GAC-01
Tigg C-35-RX

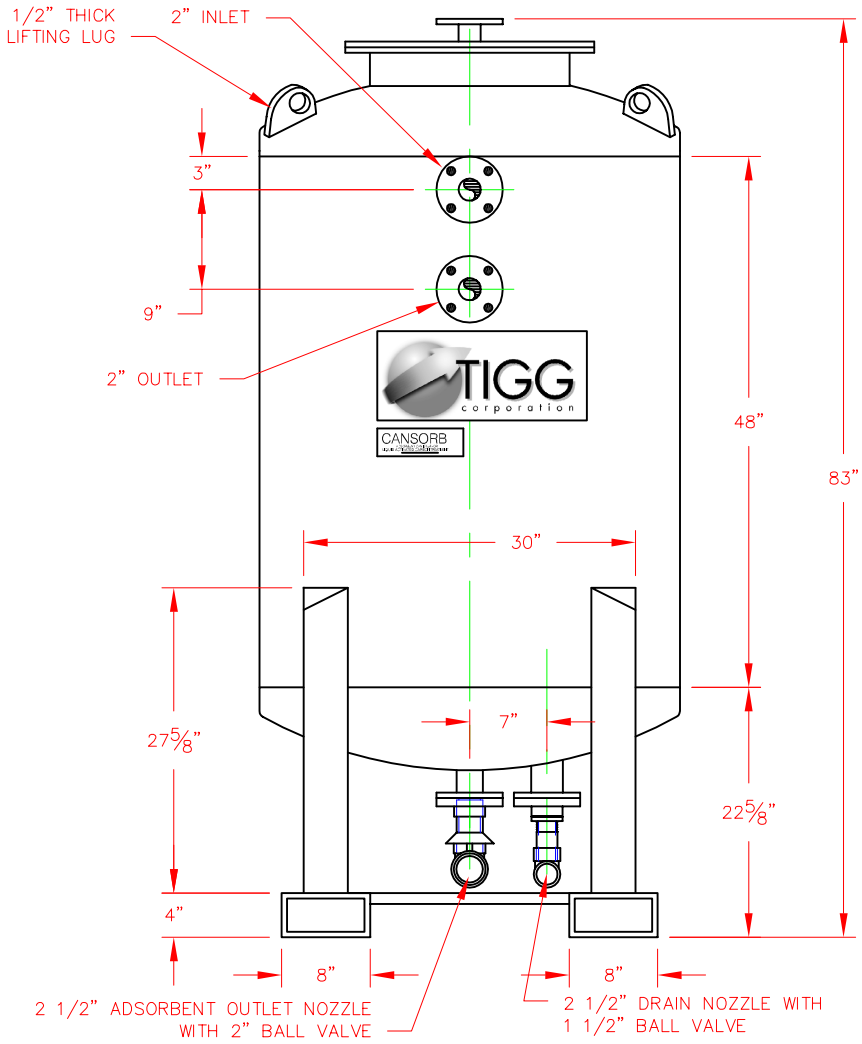

ELEVATION

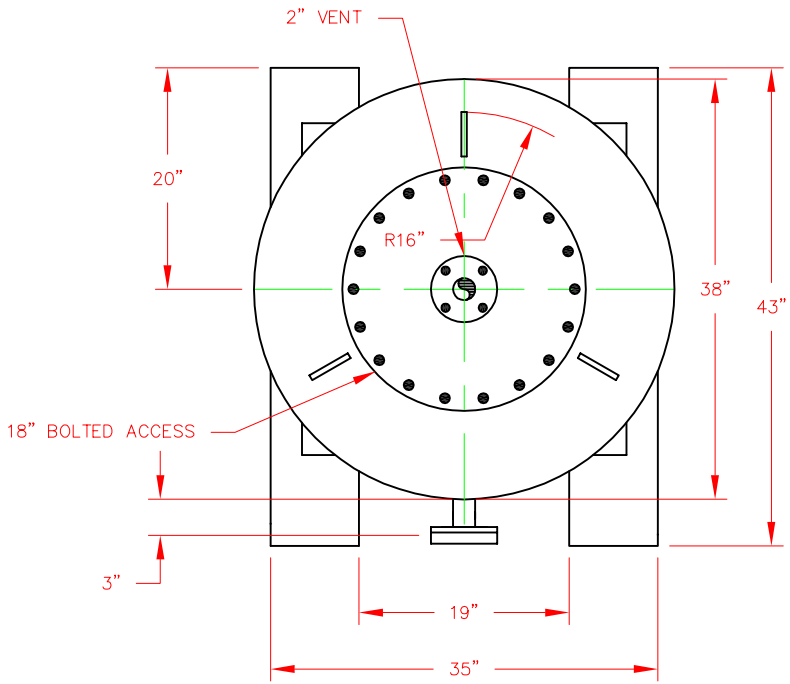

PLAN

VESSEL STANDARDS

VESSEL MATERIALS : A36 CARBON STEEL	LIQUID DRAIN ASSEMBLY : SCHEDULE 80 PVC
LINING : POLYETHYLENE	VOLUME OF VESSEL : 34 FT.^{3} NOT INCLUDING TOP HEAD
EXTERIOR PAINT : ACRYLIC ALKYD ENAMEL	STANDARD/MAX CARBON FILL : 660 LBS / 875 LBS
HEAD THICKNESS : 3/16"	SHIP WT. OPERATING WT.STD.FILL : 1380 LBS / 3500 LBS
SHELL THICKNESS : 3/16"	CARBON TYPE : TIGG 5D 1240 LIQUID PHASE
INTERNALS : SCHEDULE 40 PVC	MAX. OPERATING PRESSURE : 30 PSIG
ADSORBENT OUTLET ASSEMBLY : SCHEDULE 80 PVC	MAX. OPERATING TEMP. : 115°F

NO.	REVISION	BY	DATE
3	CHANGE EXTERIOR PAINT	JB	1/21/03
2	REVISE HEIGHT	JB	12/19/02
1	REVISE TITLE BLOCK	JB	9/3/02

PROJECT

STANDARD

PROJ. NO. SALES

P.O. NO.

THIS DRAWING AND DESIGN ARE THE PROPERTY OF TIGG CORP. AND SHALL NOT BE REPRODUCED IN WHOLE OR IN PART, NOR EMPLOYED FOR ANY PURPOSE OTHER THAN SPECIFICALLY PERMITTED IN WRITING BY TIGG CORP. THIS DRAWING LOANED SUBJECT TO RETURN ON DEMAND.

DRAWN BY	JB
DESIGN BY	BL
CHKD. BY	BL
DATE	8/01/00
SCALE	NTS

TIGG corporation

C-35-RX

DWG. NO. C-35-1001

REV. 3

CHECKLIST ITEM 9

CONSTRUCTION SPECIFICATIONS CUT SHEETS

GENERAL INDUSTRIAL TWA

GAC Organoclay Adsorber, GAC-02
GAC Adsorber, GAC 04A, B, C
Calgon Carbon Cr-5000

CALGON

CALGON CARBON CORPORATION

Making Water and Air Safer and Cleaner

CR2000 AND CR5000 ADSORBERS

Granular Activated Carbon Adsorption Vessel

Adsorber Vessel Specifications

- Carbon steel pressure vessel
- Pressure rating 50 psig at 100°F (based on ASME design)
- Manway on top head for internal access and carbon fill
- Skid support / fork truck channels
- Lifting lugs
- Internal epoxy lining
- Splash plate inlet distributor
- PVC pipe underdrain with PPL water collection nozzles, nozzle count is one per square foot of cross sectional area
- Exterior epoxy paint finish
- Stainless steel carbon discharge piping fitted with a bronze ball valve

Dimensions:	CR2000	CR5000
Height	92″	98 5/8″
Plot Area	51″x45″	72″x64″
Weights:		
Typical weight of GAC	2,000 lbs.*	5,000 lbs.*
Empty	1,500 lbs.	2,200 lbs.
Shipping with Dry GAC	3,500 lbs.*	7,200 lbs.*
Operating	8,300 lbs.	17,200 lbs.
Connections:	3″, 150 lbs. FLG.	4″, 150 lbs. FLG.

*Approximate weights. May be less depending on type and density of carbon.

General Description

Calgon Carbon's CR2000 and CR5000 are pressure vessels designed to treat water using granular activated carbon (GAC). The vessels arrive filled with granular activated carbon for the removal of organic compounds from a variety of applications including: waste water streams, ground water remediation, pump tests, air stripper polishing, and pump and treat systems. The CR2000 is filled with 2,000 lbs.* of GAC and can treat up to 100 gpm. The CR5000 is filled with 5,000 lbs.* of GAC and can treat up to 250 gpm.

Features and Benefits

Flexibility. The CR vessels treat water downflow through a fixed bed of granular activated carbon, and therefore, can handle varying flows and on-off operating conditions. When multiple vessels and the optional pipe rack are purchased, the vessels can be arranged in parallel to treat higher flows or can be connected in series to optimize carbon usage.

High Operating Pressures. The CR vessels are designed to operate at pressures up to 50 psig at 100°F (baed on ASME design).

High Flow Rates. The CR vessels are designed with large process connections to allow for higher flow rates while maintaining reasonable pressure drops.

High Performance Underdrain. The CR vessels have a corrosion resistant underdrain with a nozzle count of one per square foot of bed area for even collection of treated water.

Granular Activated Carbon. The CR vessels can be provided with any of Calgon Carbon Corporation's extensive product line of granular activated carbon. A Technical Sales Representative can assist in selecting the most cost effective carbon for your application.

Easy to Install. The CR vessels are fitted with supports for ease of off-loading and positioning at the treatment location using either a fork truck or crane. The vessels can also be secured to a foundation for a permanent installation.

Ready to use. The CR vessels are delivered pre-loaded with GAC to minimize start-up time and installation costs.

CR2000 AND CR5000 ADSORBERS

Granular Activated Carbon Adsorption Vessel

Caution!

1. A pressure relief device is not supplied with this vessel. It is recommended that the user provide a suitable relief device in the system piping connected directly to the vessel without restriction or valves. The pressure relief device must not be plugged or restricted in any manner.
2. Wet activated carbon removes oxygen from air. In closed or partially closed containers and vessels, oxygen depletion may reach hazardous levels. If workers are to enter a vessel containing activated carbon, appropriate sampling and work procedures for potentially low oxygen spaces should be followed including all applicable federal and state requirements.

Wetted Parts

- Epoxy lining
- Stainless steel GAC discharge pipe
- PVC distributor and collector pipe
- PPL water collection nozzles
- Bronze, chrome plated steel, and TFE in the carbon discharge valve

Available Options

- PVC Pipe Manifold for series or parallel operation (Refer to Bulletin Number ES-0007-1003)

Site Services

Calgon Carbon Corporation can provide a full range of services including:

- equipment selection
- assistance with vessel carbon installation
- start-up assistance
- supply of virgin and reactivated carbon
- carbon exchange
- carbon disposal and reactivation

Pressure Drop 8x30 GAC, 60°F

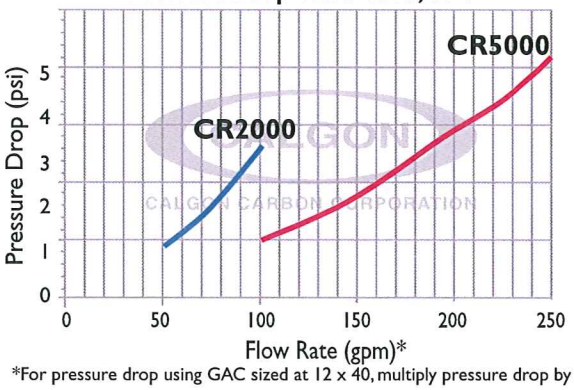

*For pressure drop using GAC sized at 12 x 40, multiply pressure drop by 1.6

Warranty: Calgon Carbon Corporation (Seller) warrants that the CR vessels shall be free from defects in materials and workmanship for a period of one hundred eighty (180) days from the date of shipment or thirty (30) days from the date of startup (defined as the first day water flows into the vessel) whichever occurs first. This warranty does not apply to problems associated with normal wear and tear, improper maintenance, negligence, misuse, or the failure to operate in strict accordance with the operating and maintenance plan provided. All other warranties, either express or implied, are hereby disclaimed including but not limited to the warranty of merchantability and fitness for a particular purpose.

Seller warrants that any/all activated carbon provided hereunder shall conform to the specifications for such grade as published from time to time by the Seller. There are no warranties made with regard to the activated carbon or equipment to be sold hereunder other than those contained in this paragraph or stated elsewhere in the proposal. All other warranties, either express or implied, are hereby disclaimed including, but not limited to, the warranty of merchantability and fitness for a particular purpose.

This warranty is limited to the replacement and/or repair by the Seller of any part, parts or material, which in the Seller's determination are defective. This warranty does not cover any charges by the Buyer for replacement of parts, adjustments or repairs, or any other work unless such charges shall be assumed or authorized in advance in writing by the Seller.

Limitation of Liability: Seller's liability and the Purchaser's exclusive remedy for any cause of action arising out of purchase and use of the CR vessels, including but not limited to breach of warranty, negligence and/or indemnification is expressly limited to a maximum of the purchase price of the CR vessel as sold. All claims of whatsoever nature shall be deemed waived unless made in writing within forty-five (45) days of the occurrence giving rise to the claim. In no event shall the Seller for any reason or pursuant to any provision of these warranties be liable for incidental or consequential damages, or damages in excess of the purchase price of the CR vessel, nor shall the Seller be liable for loss of profits or fines imposed by Governmental agencies.

Visit our website at **www.calgoncarbon.com**

CALGON
CALGON CARBON CORPORATION

Calgon Carbon Corporation
P.O. Box 717
Pittsburgh, PA USA 15230-0717
1-800-422-7266
Tel: 412-787-6700
Fx: 412-787-6713

Chemviron Carbon

European Operations of Calgon Carbon Corporation
Zoning Industriel C de Feluy
B-7181 Feluy, Belgium
Tel: + 32 (0) 64 51 18 11
Fx: + 32 (0) 64 54 15 91

Your local office

ES-0003-0205

©Copyright 2005 Calgon Carbon Corporation, all rights reserved.

CHECKLIST ITEM 9

CONSTRUCTION SPECIFICATIONS CUT SHEETS

GENERAL INDUSTRIAL TWA

Hoffland Environmental, Inc.
Plate and Frame Filter Press. D-25
3-Stage Press with Plate Spreader

NOTES:

ALL WELDING PROCEDURES TO BE ACCORDING TO AMERICAN WELDING SOCIETY (AWS) PUBLICATION D 1.1-90 STEEL STRUCTURAL WELDING CODE

ALL STEEL PLATES TO BE CARBON STEEL ASTM A-36. ALL STRUCTURAL MEMBERS TO BE CARBON STEEL ASTM A-36.

PAINTING: TOTAL 7-8 MILS.

FILTER PRESS "D" SPECIFICATIONS
1200 MM (48 1/4"x 48 1/4") PLATES
PLATE WEIGHT = 102 LBS.
(FURON)
1.25" FILTER CAKE THICKNESS

QTY. OF PLATES = 1 HEAD,
25 CU FT = 1 HEAD, 18 INTERMEDIATES, & 1 TAIL

AIR SERVICE:
OPERATING PRESSURE: 100 PSIG
HYDRAULIC PRESSURE: OPERATION = 4,800 PSIG
MAXIMUM = 5,000 PSIG

25 CU FT WEIGHTS:
SHIPPING WEIGHT = 14,500 LBS.
WORKING WEIGHT = 16,500 LBS.

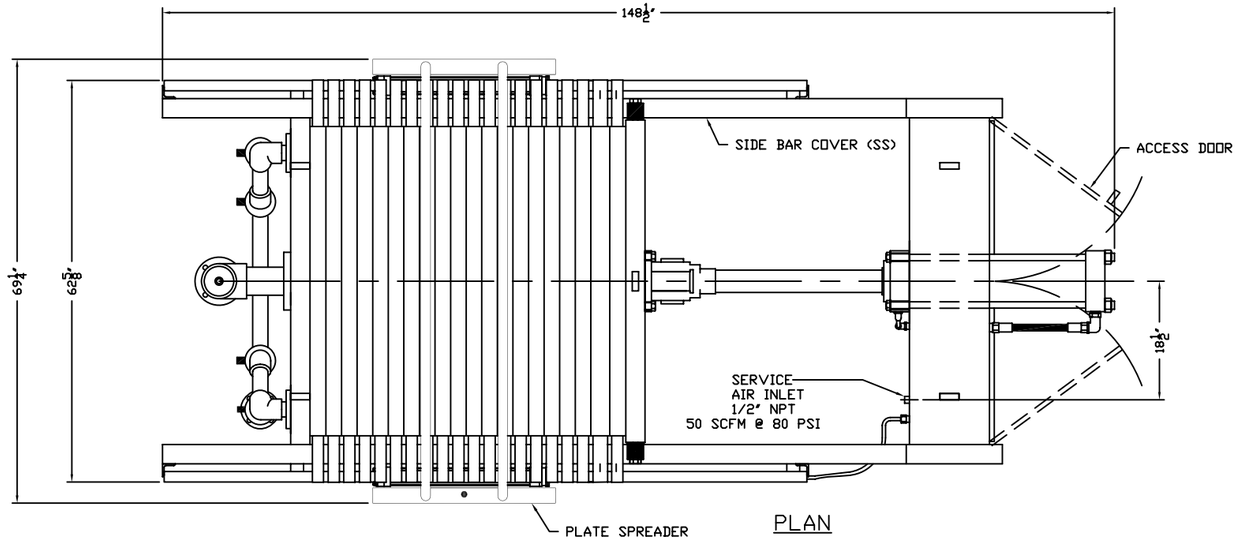

PLAN

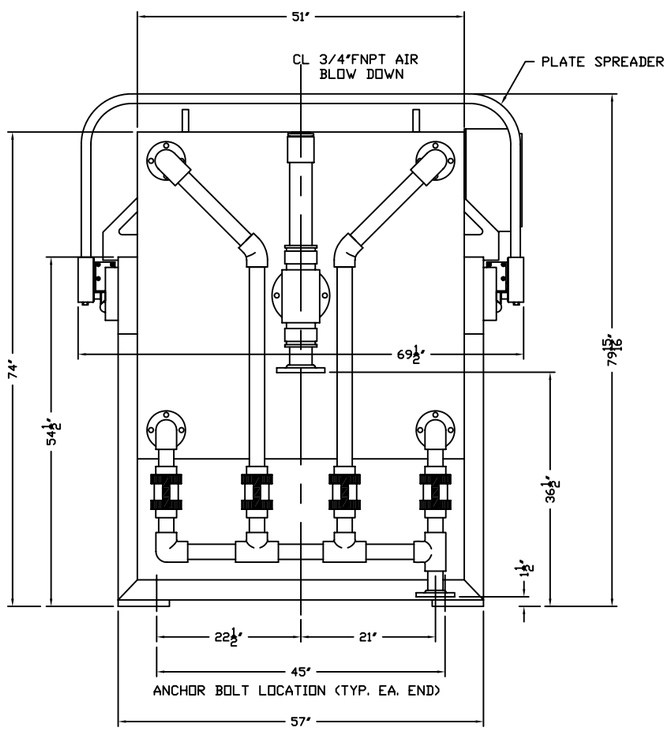

LEFT ELEVATION

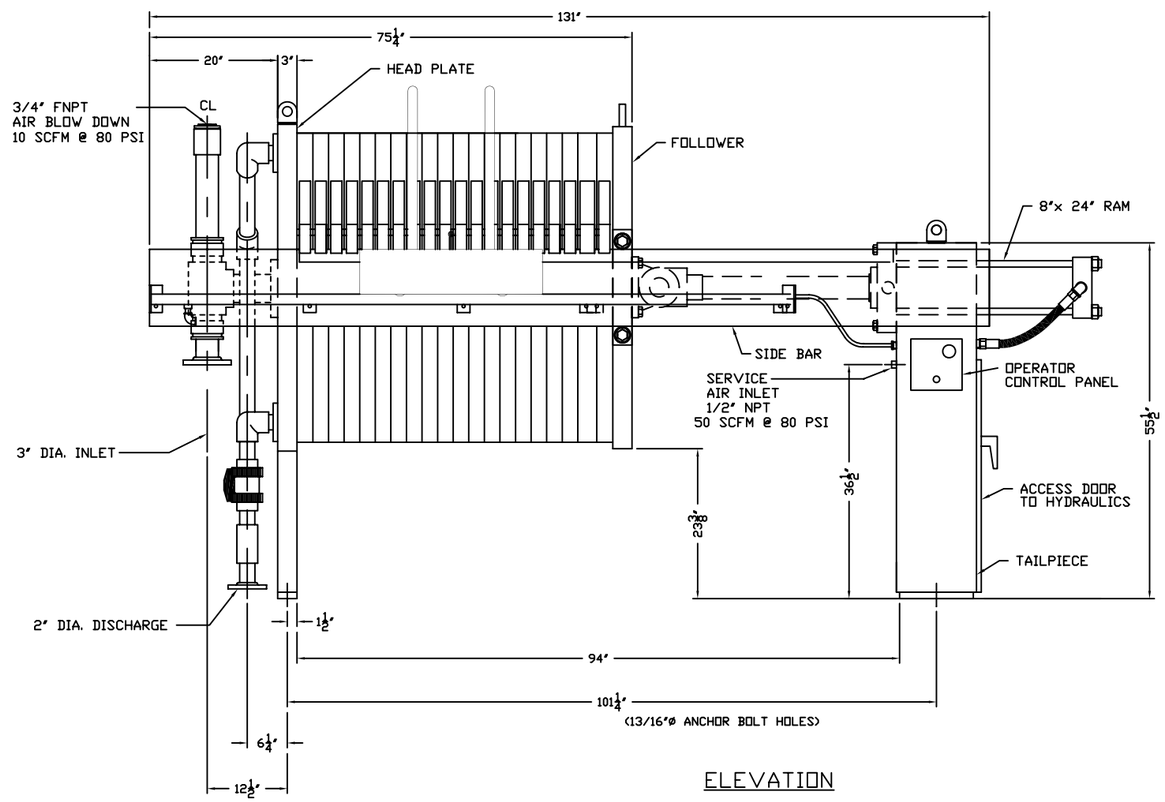

ELEVATION

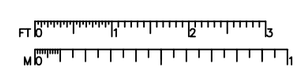

Rev.	By	Date	Description
Drawn By ABN		Date 07/01/03	Hoffland Environmental Inc. 303 Silver Spring Rd. Conroe, Texas 77303 USA Tel.(409) 856-4515 Fax.(409) 856-4589
Project Engr.		Approval Date	
Job No. ASM-84		Code No. 023	

Proprietary Information
This document contains Hoffland Environmental Inc. proprietary information which may not be used for the benefit of others except by expressed permission of Hoffland Environmental Inc.

D-25
FILTER PRESS WITH PLATE SPREADER
FP-1
TECHNOLOGIA DELTA

Scale		Sheet	Rev
1=12	C-033-FP-01	1	0

SECTION 44 44 13

Specification for Hydraulic Control Treatment System (HCTS)

WATER TREATMENT CHEMICAL FEED EQUIPMENT

PART 1 GENERAL

1.1 SECTION INCLUDES

A. Cr(VI) reduction - chemical feed equipment.
B. pH control - chemical feed equipment.

1.2 RELATED SECTIONS

A. Division 40 05 23 – Valves
B. Section 44 42 56 – Water Treatment Pumps
C. Section 44 42 73 – Water Treatment Tanks
D. Section 44 44 43 – Water Heavy Metal Treatment Equipment

1.3 DESCRIPTION

A. General
1. The Hydraulic Control Treatment System (HCTS) shall be operated to treat extracted groundwater pumped from hydraulic control wells and DNAPL recovery wells. The treated effluent shall be discharged to the Hackensack River in accordance with discharge permit requirements.

B. Design Criteria
1. As shown on the Drawings.

C. Performance Requirements
1. To deliver the reducing chemicals and pH control chemicals to the Cr(VI) reduction system.
2. The treatment system shall be operated by the Contractor in order to achieve New Jersey Pollution Discharge Elimination System (NJPDES) discharge limits.
3. The Contractor shall install and operate the system in accordance with all applicable New Jersey Department of Environmental Protection (NJDEP), Treatment Works Approval (TWA) and the project-specific Air Permit requirements.
4. The tubing used for the chemical feed system shall be chemically compatible.

1.4 SUBMITTALS

A. Manufacturer's installation information.

B. Shop Drawings: Show product and connection details.

D. O&M Manuals.

E. Quality Control information.
   1. Unit operation analytical data – for performance testing.
   2. Operation Logs.

F. Proposed changes or modifications.

1.5 QUALITY ASSURANCE

A. Quality assurance activities are described in the document titled "Construction Quality Assurance Plan, SCCC and Diamond Site, Kearny, New Jersey."

B. The Engineer will collect the discharge sample to evaluate compliance with the NJPDES permit conditions.

1.6 QUALITY CONTROL

A. The Contractor shall be responsible for quality control activities during installation, start up and operation of the HCTS.

B. The Contractor shall perform routine performance monitoring by collecting samples from the in-system sample ports. And, the Contractor shall maintain the chemical feed equipment as needed based on the analytical results.

C. The Contractor shall comply with all applicable Federal, State and local laws or ordinances as well as applicable codes, standards and regulations.

D. The Contractor shall provide QC documentation to the Engineer.

1.7 DELIVERY, STORAGE, AND HANDLING

A. Store products in Manufacturer's unopened packaging until ready for installation.

B. Use proper equipment and methods during unloading and transporting material to ensure safety and to prevent damage.

C. Handle and store materials in accordance with Manufacturer's recommendations.

PART 2 PRODUCTS

2.1 CHEMICAL FEED

1. Na_2S and $FeSO_4$ feed system – The Contractor shall furnish the feed system chemicals and pump.

2. H_2SO4 and NaOH feed systems – The Contractor shall furnish the feed system chemicals and pump.

3. Anionic polymer and cationic polymer coagulant feed systems – The Contractor shall furnish the feed system chemicals and pump.

PART 3 EXECUTION

3.1 INSTALLATION

A. The Contractor shall furnish and install the chemical feed equipment, controls, piping, electrical, incidentals and associated appurtenances in accordance with Manufacturer's instructions.

B. The Contractor shall provide temporary secondary containment for the treatment chemicals, in accordance with applicable rules and regulations.

3.2 OPERATION

A. The Contractor shall be responsible for the satisfactory operation, maintenance and troubleshooting of the chemical feed equipment as needed for the duration of the HCTS Work.

B. Following completion of the installation, the chemical feed equipment shall be performance tested. All equipment shall be adjusted and analyzed for misalignment, leaks, excessive vibration, safety protocol and overall performance, and the installation shall be subject to approval by the Engineer.

C. The Contractor shall provide replacement parts as needed.

D. The Contractor shall provide the services of a qualified Operator for the equipment in accordance with NJDEP requirements.

E. The Contractor shall monitor the performance of the chemical feed equipment and maintain the equipment as needed.

F. The Contractor shall furnish an adequate chemical supply and mix tanks/feed tanks.

G. The chemicals shall to be segregated to prevent comingling of incompatible chemicals.

H. The probes shall be calibrated, maintained, and cleaned during operation in accordance with Manufacturer's recommendations.

I. The Contractor shall regulate the flow and dosages of feed chemicals to facilitate treatment.

END OF SECTION

SECTION 44 44 43

Specification for Hydraulic Control Treatment System (HCTS)

WATER HEAVY METALS TREATMENT EQUIPMENT

PART 1 GENERAL

1.1 SECTION INCLUDES

A. Cr(VI) reduction system.
B. pH control system.
C. Coagulant system.

1.2 RELATED SECTIONS

A. Division 40 05 23 – Valves
B. Section 44 42 56 – Water Treatment Pumps
C. Section 44 44 13 – Water Treatment Chemical Feed Equipment
D. Section 44 42 73 – Water Treatment Tanks

1.3 DESCRIPTION

A. General

1. The Hydraulic Control Treatment System (HCTS) shall be operated to treat extracted groundwater pumped from hydraulic control wells and DNAPL recovery wells. The treated effluent shall be discharged to the Hackensack River in accordance with discharge permit requirements.

B. Design Criteria

1. As shown in the Contract Documents.

C. Performance Requirements

1. Cr(VI) reduction system – to reduce Cr(VI) to Cr(III) via the addition of reducing agents, pH control and flocculation.
2. The treatment system shall be operated by the Contractor in order to achieve New Jersey Pollution Discharge Elimination System (NJPDES) discharge limits.
3. The Contractor shall install and operate the system in accordance with all applicable New Jersey Department of Environmental Protection (NJDEP), Treatment Works Approval (TWA) and the project-specific Air Permit requirements.

1.4 SUBMITTALS

A. Manufacturer's installation information.
B. Shop Drawings and Cut Sheets: Show product and connection details.
C. O&M Manuals.
D. Quality Control information.
   1. Unit operation analytical data – for performance testing.
   2. Operation Logs.
E. Proposed changes or modifications.

1.5 QUALITY ASSURANCE

A. Quality assurance activities are described in the document titled "Construction Quality Assurance Plan, SCCC and Diamond Site, Kearny, New Jersey".

B. The Engineer will collect the discharge sample to evaluate compliance with the NJPDES permit conditions.

1.6 QUALITY CONTROL

A. The Contractor shall be responsible for quality control activities during installation, equipment calibration, start up and operation of the HCTS Cr reduction system.

B. The Contractor shall perform routine performance monitoring by collecting samples from the in-system sample ports. And, the Contractor shall add treatment chemicals to the Cr reduction system as needed based on the analytical results.
C. The Contractor shall comply with all applicable Federal, State and local laws or ordinances as well as applicable codes, standards and regulations.

D. The Contractor shall provide QC documentation to the Engineer.

1.7 DELIVERY, STORAGE, AND HANDLING

A. Store products in Manufacturer's unopened packaging until ready for installation.

B. Use proper equipment and methods during unloading and transporting material to ensure safety and to prevent damage.

C. Handle and store materials in accordance with Manufacturer's recommendations.

PART 2 PRODUCTS

2.1 TANKS

A. Tank Nos. T-CR-01 to 04, TC-PH-01 to 04, T-FM-01, T-FL-01 to 04, CL-01 and CL-02, SL-01 to 03.

2.2 MIXERS

A. The mixers shall be Chemineer, Inc., Model No. 10XPC-0.25 for T-CR-03 and -04, 10XPC-0.5 for T-PH-01, T-PH-02and 30XPC-1 for T-FM-01 and T-FL-01, or Engineer-approved equal. T-CR-01 and T-CR-02 shall be 10XPC-0.5 or 1/3 HP models or Engineer-approved equal. Mixers for CL-01 and SL-01 shall be 1/6 HP rakes provided with the tanks by Hoffland Environmental, Inc., or Engineer-approved equal.

2.3 INSTRUMENTATION

A. The Instrumentation Schedule is provided in Table 444443 below.

B. The Instruments shall be as shown in the Instrumentation Schedule or Engineer-approved equal.

Table 444443 - A

Schedule of Instruments

Instrument	ID No.	Vendor	Description	Model #
Flow Meter	FM-01 to 04	Omega	Transit Time Ultrasonic Flowmeter	FDT-30
Flow Meter	FM-05 to 07	Signet	Magmeter Flow Sensor	2551
Flow Controller	FC-01 to 04	Cole Parmer	Multi-Parameter Controller	R-05627-71
pH and ORP Electrodes	Unspecified	Cole Parmer	Self-Cleaning Flat pH and ORP Electrodes	R-27003-24
pH/ORP Controller	ORPC-01 PHC-01 to 03	Eutech Instruments	Eutech 2000 pH/ORP Controller	PH2000
Level Switches	LSW-01 to 21	Cole Parmer	Flowline Submersible Float Switch	R-43299-24
Pressure Gauges Pressure Regulators Pressure Switches	PG (unspecified) PR (unspecified) PSW-01 to 04	McMaster-Carr	Various	Unspecified

PART 3 EXECUTION

3.1 INSTALLATION

A. The Contractor shall furnish and install the reactors, mixers, piping, controls, electrical, incidentals and associated appurtenances in accordance with Manufacturer's instructions.

3.2 OPERATION

A. The Contractor shall be responsible for the satisfactory operation, maintained and troubleshooting of the reactors as needed for the duration of the HCTS Work.

B. Following completion of the installation, the reactors shall be performance tested. All equipment shall be adjusted and analyzed for misalignment, seals, leaks, excessive vibration, safety protocol and overall performance, and the installation shall be subject to approval by the Engineer.

C. The Contractor shall provide replacement parts as needed.

D. The Contractor shall conduct jar testing to determine the treatment chemical doses for the various impacted water sources to be treated.

E. The Contractor shall provide the services of a qualified Operator for the equipment in accordance with NJDEP requirements.

F. The Contractor shall monitor the performance of the reactors and chemical feed systems and maintain the systems as needed.

G. Covers shall be maintained on the tanks at all times.

H. The Contractor shall provide acceptable chemical mix tanks and connect the mix tanks to the treatment tanks.

I. The system shall be operated in order to obtain large settleable floc.

J. The target pH for Cr(VI) reduction is 10 to 12. The target pH for Cr(III) and other metals removal is 8.7 to 8.9 at the discharge of the flocculation tank.

K. A pH of 7 to 8 shall be achieved in the Pump Tank to ensure that the discharge pH is in the discharge limit of 6-9.

END OF SECTION

CHECKLIST ITEM 9

CONSTRUCTION SPECIFICATIONS CUT SHEETS

GENERAL INDUSTRIAL TWA

Flow Meter, FM-03 to FM-04
Omega, FDT-30 Portable
Transit-Time Ultrasonic Flow Meter

TRANSIT-TIME ULTRASONIC FLOWMETER

FDT-30 Series
Starts at
$1277

1 YEAR WARRANTY · MADE IN USA · CE

- Compact Enclosure
- Large Digital Display
- 4 to 20 mA, TTL and Turbine Simulated Outputs
- Rate and Total Displays
- Clean Liquid Compatible

FDT-31, $1277, shown smaller than actual size.

The FDT-30 Series provides easy and low cost installation by clamping to the outside of existing piping systems. Non-invasive transit time system allows solids to pass through the pipe with no affect on the meter. Y-strainers or filtering devices are not needed. Greater accuracy can be attained in applications consisting of entrained gases. The FDT-30 Series will automatically correct displayed flow rates and electronic outputs. Direct interface is provided to data collection systems via 4 to 20 mA output and either TTL-pulse or simulated turbine meter outputs that are proportional to fluid flow rate. Designed to replace mechanical flowmeters in applications where liquid conditions tend to damage or impede mechanical flow meter operation. No maintenance is required. The FDT-30 Series can be used on applications such as well water and other liquids with moderate amounts of suspended solids or aeration.

FDT-30 Series is housed in an enclosure suitable for outdoor mounting. Integral mount transducers are available for pipes 50 mm (2") and smaller.

SPECIFICATION

Liquid Types: Most clean liquids, or liquids containing moderate amounts of suspended solids
Power: 11 to 30 Vdc @ 0.25 A
Velocity: 0.03 to 12.4 MPS (0.1 to 40 FPS)
4 to 20 mA Output (Standard): 12-bit resolution; source power; 5V max insertion loss; 900 Ω max loop impedance; can share ground common with power supply-isolated from piping system
Turbine Frequency Output (TTL Pulse): Switch selectable; non-ground referenced AC, ground referenced squarewave; 100 mV pp min/5 Vdc amplitude; 0 to 1 kHz range; 50% ±10% duty cycle
Display: 2 line x 8 character LCD alternates between rate and total in 10 second intervals
Top Row: 18 mm (0.7"), 7-segment
Bottom Row: 9 mm (0.35"), 14-segment
Rate: 8 digits max
Totalizer: 8 digits max; exponential multipliers from -1 to +6
Units: Feet, gallons, ft^3, million-gal, barrels (liquid and oil), acre-feet, lbs, meters, m^3, liters, million-liters, kg; rates programmable for per: sec, min, hr, or day
Operating Ambient: -40 to 85°C (-40 to 185°F)
Enclosure: NEMA 3 ABS, PVC and Ultem, brass or SS hardware
Dimensions: 75 W x 150 L x 63 mm D (3 x 6 x 2.5")
Transducer Type: Clamp-on for pipe mount; time of flight ultrasonic
Accuracy: ±1% rdg @ rates > 0.3 MPS (1 FPS); ±0.003 MPS (0.01 FPS) @ rates < 0.3 MPS (1 FPS)
Repeatability: ±0.5% rdg
Response Time: 0.3 to 30 sec, adjustable
Protection: Reverse polarity, surge suppression
Pipe Sizes: 12 to 50 mm (0.5 to 2")
Pipe Materials: Carbon steel, stainless steel, copper and plastic

CHECKLIST ITEM 9

CONSTRUCTION SPECIFICATIONS CUT SHEETS

GENERAL INDUSTRIAL TWA

Flow Meter, FM-01, 02, 05, 06 and 07
Signet 2551
GF Magmeter Flow Sensor

Signet 2551 Magmeter Flow Sensor

Available in a variety of wetted materials and ideal for pipe sizes up to DN900 (36 in.)

Description

The Signet 2551 Magmeter is an insertion style magnetic flow sensor that features no moving parts. The patented* sensor design is available in corrosion-resistant materials to provide long-term reliability with minimal maintenance costs. Material options include PP with stainless steel, PVDF with stainless steel, PVDF with Hastelloy-C, or PVDF with Titanium. Utilizing the comprehensive line of Signet installation fittings, sensor alignment and insertion depth is automatic. These versatile, simple-to-install sensors deliver accurate flow measurement over a wide dynamic range in pipe sizes ranging from DN15 to DN900 (½ to 36 inches), satisfying the requirements of many diverse applications.

Signet 2551 Magmeters offer many output options of frequency/digital (S^3L) or 4 to 20 mA which are available on both the blind and display versions. The frequency or digital (S^3L) sensor output can be used with Signet's extensive line of flow instruments while the 4 to 20 mA output can be used for a direct input to PLCs, chart recorders, etc. Both the 4 to 20 mA output and digital (S^3L) sensor interface is available for long distance signal transmission. An additional benefit is the empty pipe detection which features a zero flow output when the sensors are not completely wetted. Also, the frequency output is bi-directional while the 4 to 20 mA output can be set for uni- or bi-directional flow using the display or the 3-0250 USB to Digital (S^3L) Configuration/ Diagnostic setup tool which connects to PCs for programming capabilities.

In addition the display version of the 2551 Magmeter is available with relays and features permanent and resettable totalizer values which can be stored and seen on the display. Also, the display contains multi-languages with English, Spanish, German, French, Italian and Portuguese menu options.

System Overview

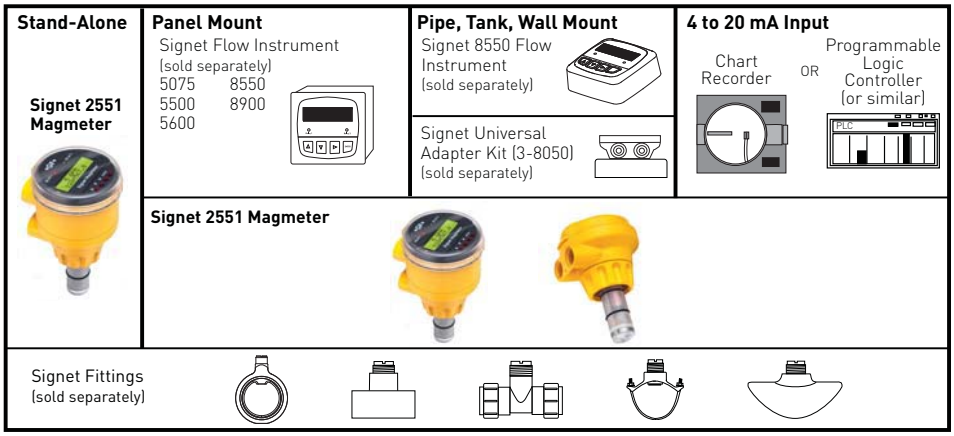

Features

- **Test certificate included for -X0, -X1**
- **Patented Magmeter technology**
- **No moving parts**
- **Bi-directional flow**
- **Empty pipe detection**
- **Installs into pipe sizes DN15 to DN900 (0.5 to 36 in.)**
- **Operating range 0.05 to 10 m/s (0.15 to 33 ft/s)**
- **Accurate measurement even in dirty liquids**
- **Blind 4 to 20 mA, digital/frequency, relay output**
- **No pressure drop**
- **Corrosion resistant materials; PP or PVDF with SS, Hastelloy-C, or Titanium**
- **Multi-language display menu available**

Applications

- **Chemical Processing**
- **Water and Waste Water Monitoring**
- **Metal Recovery and Landfill Leachate**
- **Commercial Pools, Spas, and Aquariums**
- **HVAC**
- **Irrigation**
- **Scrubber Control**
- **Neutralization Systems**
- **Industrial Water Distribution**

LISTED
MEASURING EQUIPMENT
77CJ

* U.S. Patent No: 7,055,396 B1

CHECKLIST ITEM 9

CONSTRUCTION SPECIFICATIONS CUT SHEETS

GENERAL INDUSTRIAL TWA

Flow Controllers FC-01 to 04
Cole Parmer R-0527071
Multi-Parameter Controller for Flow, Temperature, Pressure, and pH

D Multi-Parameter Controller for Flow, Temperature, Pressure, and pH

- Customizable modular controller fits a wide range of applications
- Replacement for +GF+® flow-only controller
- Accepts inputs from flow sensors plus any other parameter sensor/transmitter input

This modular device includes card slots to accept various input and output cards to match the demands of almost any application. The base unit includes an I/O module to accept two inputs, either frequency or 4 to 20 mA (using the optional signal converter); cards for up to six inputs are available, call our Application Specialists for assistance.

The display is a two-line, 16-digit alphanumeric backlit LCD. Select from any of 30 different display units for flow, pressure, temperature, level, volume, pH, ORP, and conductivity; derived units with custom display labels are also available for many applications. For flow, a resettable and a nonresettable totalizer are available. All programming is done through the four-button keypad on the unit face.

By selecting from the optional output cards listed at right, numerous monitoring and control options are available. Up to two relay cards may be ordered for a total of four relay outputs. You may also add a dual analog output card (ordered below) with 4 to 20 mA or 0 to 5/0 to 10 V signals; instead of analog outputs the card slot may also be used with the RS-232 output card. Controller may ultimately be configured for (8) relay plus (4) analog outputs—call our Application Specialists for more information.

Specifications

Input signal
Frequency: 0 to 1500 Hz
Analog: 4 to 20 mA (with optional converter)
Output signal: see optional module table
Relay hysteresis: settable for high, low or window
Display resolution: user settable
Display update rate: one second
Wiring connections: screw clamp
Power consumption: AC is 24 VA max; DC is 0.7 A max
Operating temperature: 14 to 131°F (–10 to 55°C)
Accuracy: 0.5% of reading
Enclosure rating: NEMA 4X (IP65)
Dimensions: 3.8"H x 3.8"W x 5.6"D
Panel cutout: 3.6"H x 3.6"W

Catalog number	Power	Price
R-05627-71 R-05627-73	85 to 264 VAC, 50/60 Hz 12 to 24 VDC ±10%	

R-05660-68 Input signal converter, to convert a transmitter 4 to 20 mA output for input to the multi-parameter controller, for use with a single transmitter signal/ controller input .....

D 05627-71

Output Cards

Cat. no.	Output card type	Price
R-05660-69	Dry-contact relays, SPDT, 5 A at 30 VDC or 250 VAC max‡	
R-05660-73	4 to 20 mA analog, (2) outputs/card††	
R-05660-77	0 to 5/0 to 10 V analog (selectable), (2) outputs/card††	
R-05660-78	RS-232 communications††	

‡Controller accepts (2) card total; (2) outputs/card.
††Controller accepts (1) card total.

GO to page(s) 746
For +GF+ Signet flow sensors that are compatible with these monitors and controllers, see page 746.

E Batch Controller

- Dual relays provide external control of pumps, valves, or alarms
- Remote start/stop/resume capabilities let you control system from your computer

Controller is specifically designed for simple, single-function batching system. User-selectable menu provides easy configuration of current and relay options. Use the 4 to 20 mA output signal to send data to a recorder or data acquisition system, or to proportionally control a valve. Relays provide a simple on/off control of alarms, pumps, or valves. Pulse output lets you start, stop, or resume controller from your computer.

Front panel features a reversible analog dial (0 to 100% or 100 to 0%); a microprocessor based alphanumeric LCD; and four-button keypad. Controller even features a backlit LCD for reading display in dimly lit areas. Security code access sequence protects your programmed settings from tampering; nonvolatile memory saves data in case of power failure.

Controller operates on 12 to 24 VDC/VAC—order AC power supply 26900-10 separately. Controller is compatible with all flow sensors on page 746. Unit includes mounting brackets, panel gaskets, and a self-adhesive template for easy mounting; see "Mounting Accessories" below for additional mounting options.

Specifications

Accuracy: ±0.5% of reading
Operating temp: 14 to 131°F (–10 to 55°C)
Input signal: 0.5 to 1000 Hz, optically isolated
Relays: two SPDT; 125 VAC or 30 VDC, 5 A max; resistive
Output signal
Current: 4 to 20 mA, nonisolated
EOB pulse: remote start, stop, resume
Power: 12 to 24 VDC/VAC, 50/60 Hz
Display: analog dial (0 to 100% or 100 to 0%); 2-line, 16-character alphanumeric LCD (0 to 999,999 batch size)
Dimensions: 3½"W x 3½"H x 3½"D

Catalog number	Description	Price
R-05628-00	Batch controller	

R-26900-10 Industrial-grade power supply with current limit protection. Converts 115 VAC to 24 VDC .....

E 05628-00

Mounting Accessories for Flow Monitors and Controllers on pages 764–765

Use these accessories for mounting options other than the standard ¼-DIN panel mounting. For information on additional options, see our "Enclosures" section on pages 520 to 523 .

R-05629-50 NEMA 4X (IP65) rear cover kit; includes knock-out ports for cable access .....

R-05629-60 Surface-mount kit for flat surface or pipe mounting; use with the NEMA 4X (IP56) rear cover kit 05629-50 .....

R-05629-55 Liquid-tight connector kit. Includes three watertight connectors to run sensor and/or controller wires to and from the NEMA 4X rear cover kit .....

CHECKLIST ITEM 9

CONSTRUCTION SPECIFICATIONS CUT SHEETS

GENERAL INDUSTRIAL TWA

High / Low Level Switches
LSW-01 to 15
Cole Parmer R-43299-24
Flowline Submersible Float Level Switches

Self-Sealing Float Switches

Mount float switch without entering the tank

- Insert float switch externally
- Self-sealing grommet works with tank walls up to 5⁄32" (4 mm)
- Reed switch reliability

Take the headache out of float-switch installation. This design allows you to mount the switch very easily. No need to enter the tank. Just slide the switch though the hole and tighten the nut. The compression grommet forms a seal on the inside of the tank.

Mount the horizontal switch for normally open or closed by simply rotating through 180°. The vertical and right-angled switches operate as normally open or closed by reversing the float.

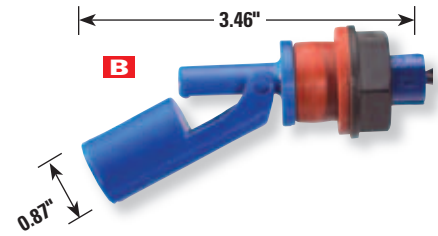

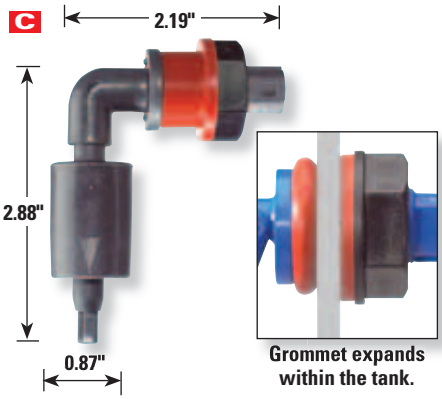

Catalog number	Wetted materials (float/grommet)	Max rating (resistive load)†			Operating temperature	Max psi	Minimum SG	Price
		Volts	Amps	Watts				
A Vertical float switches								
R-43301-21 R-43301-22	PP/silicone Nylon/nitrile	100 VDC, 250 VAC	1	15	–22 to 230°F (–30 to 110°C) –22 to 266°F (–30 to 130°C)	70	0.70 0.85	
B Horizontal float switches								
R-43301-23 R-43301-24	PP/silicone Nylon/nitrile	100 VDC, 250 VAC	1	15	–22 to 230°F (–30 to 110°C) –22 to 266°F (–30 to 130°C)	70	0.70 0.85	
C Right-angled float switches								
R-43301-25 R-43301-26	PP/silicone Nylon/nitrile	100 VDC, 250 VAC	1	15	–22 to 230°F (–30 to 110°C) –22 to 266°F (–30 to 130°C)	70	0.70 0.85	

†If your application exceeds the max amp rating in above table, you must use a controller; see page 982 to order.

FLOWLINE™ Mini-Float Level Switches

Excellent for simple, noncritical applications with clean, non-coating or non-scaling liquids

- Reliable reed switch output for interface with PLC or relay control devices

These mini-float level switches consist of a float, magnet, and reed switch component designed to detect liquid level in tanks. As the probe becomes immersed in liquid, the float becomes buoyant and the magnet elevates, causing the reed switch to change state.

Level switches feature all-plastic construction with PP or PVDF materials for corrosive environments. Your liquid must have a specific gravity of 0.8 or greater.

What's included: submersible float with 2-ft cable.

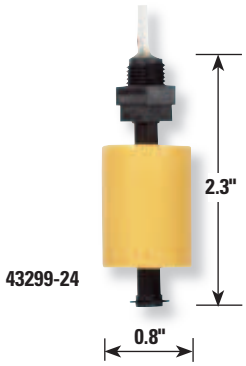

Catalog number	Wetted materials	Mounting threads	Reed output rating	Operating temperature	Max psi	Minimum specific gravity	Price
R-43299-24	PP	⅛" NPT(M)	120 VAC/VDC at 50 VA	–40 to 194°F (–40 to 90°C)	25	0.80	
R-43299-26	PVDF						

Controllers accept all Flowline point level sensors and allow you to control external devices like pumps, valves, or alarms. SPDT relays are rated 250 VAC, 10 A, resistive. Adjustable time delay: 0.15 to 60 seconds. Max temp: 158°F (70°C). Dimensions: 3⅞"L x 2¾"W x 3⅝"H. Power: 120/240 VAC, 50/60 Hz.

43300-30

R-43300-30 Flowline single-sensor controller
allows the use of one sensor via one relay channel.....

R-43300-32 Flowline dual-sensor controller
allows the use of two sensors via one relay channel.....

R-43300-34 Flowline tri-sensor controller
allows the use of three sensors via two relay channels.....

Cylindrical Closed-Dome Tanks

- FDA-compliant

All tanks have a threaded screw closure with gasket that securely fits the 6¼" fill well. Two mounting flats near the bottom, set 180° apart, permit installation of a bulkhead fitting up to 2". Domed bottom drains fluid into narrow trough around base rim.

High-Density Polyethylene (HDPE) Tanks have a 2" bung with cap on the top that permits access for tubing or piping. All tanks comply with FDA Regulation 177.1520.
Polypropylene Tanks can be repeatedly autoclaved.

Gallons (liters)	Dimensions (H x OD)	Graduations gal. (liters)	Shpg wt lb (kg)	HDPE closed-dome tanks			PP closed-dome tanks		
				Cat. no.	Wall	Price	Cat. no.	Wall	Price
30 (114)	36¾" x 18"	2.5 (10)	21 (9.6)	ED-06318-70	0.187"		ED-50301-52	0.250"	
55 (208)	39½" x 22"	2.5 (10)	40 (14.6)	ED-06318-75	0.250"		ED-50301-54	0.250"	
100 (379)	51¼" x 28½"	10 (50)	61 (27.7)†	ED-06318-90	0.250"		ED-50301-56	0.312"	

†Ship by motor freight only.

06318-70

CHECKLIST ITEM 9

CONSTRUCTION SPECIFICATIONS CUT SHEETS

GENERAL INDUSTRIAL TWA

ORP Probe, ORP-01 and-02
pH Probe, pH -01, 02, 03
Cole Parmer R-27003-24
Self-Cleaning Flat pH/ORP Electrodes

pH Industrial Electrodes

¾" NPT In-Line, Submersible

***Discounts available!**

Save 10% on 6–10 probes of any assortment. 15% on 11–24 probes, 20% on 25–50 probes. Call us for discount information orders or 50 probes or more.

Cole-Parmer®

Self-Cleaning Flat pH and ORP Electrodes

Flat electrode surface prevents buildup of solids

- Double junctions for difficult applications
- Annular junction reduces reference cell fouling

Flat surface does not collect suspended solids—fluid flow across the electrode provides a cleaning action that extends electrode life and improves performance.

Choose either a CPVC housing or chemical-resistant PPS housing. Both electrode types have a Viton® O-ring to hold glass bulb in place. Built-in ATC elements and pH BNC connectors match a variety of meters and controllers.

Specifications

Thread size: ¾" NPT(M)
Insertion depth: 1.75"
Housing length: 6.75"
Housing material: CPVC or PPS
Cable: 10 ft, with BNC pH connector
Temperature range
CPVC: 32 to 176°F (0 to 80°C)
PPS: 32 to 212°F (0 to 100°C)
Maximum pressure: 100 psi

pH Electrodes

pH electrodes with CPVC housing, 0 to 12 pH		pH electrodes with PPS housing, 0 to 12 pH		ATC element	ATC connector
Catalog number	Price*	Catalog number	Price*		
R-27003-00		R-27003-20		None	None
R-27003-02		R-27003-22		100 Ω RTD	Mini audio plug
R-27003-12		R-27003-23		100 Ω RTD	Tinned ends
R-27003-04		R-27003-24		1 kΩ RTD	Spade lugs
R-27003-06		R-27003-26		100 kΩ thermistor	¼" phone plug
R-27003-10		R-27003-30		3 kΩ Balco	Spade lugs

ORP Electrodes

Catalog number	Housing material	Band type	Price*
R-27003-40	CPVC	Platinum	
R-27003-50	PPS	Platinum	
R-27003-60	PPS	Gold	

PPS electrode
27003-22

Cole-Parmer®

Semi-Domed Rugged pH Electrodes

Unique design protects bulb

- Reduce electrolyte leakage and sample contamination—stand up to viscous samples better than PTFE junctions
- Extended life in severe applications
- Graphite-tipped models eliminate electrical noise from your system

These double-junction electrodes have a revolutionary annular ceramic reference-junction and a uniform pore size that reduces contamination and clogging. All electrodes are threaded for insertion into a pipe tee or a submersion pipe. Choose between chemical-resistant PPS or graphite-tipped electrodes with solution ground.

Specifications

Thread size: ¾" or 1" NPT(M)
Insertion depth: 0.9"
Housing length: 5.9"
Housing material: PPS
Cable: 10 ft, with BNC pH connector
Temperature range: 32 to 230°F (0 to 110°C)
Maximum pressure: 150 psi

pH electrodes		pH electrodes with graphite tips		ATC element	ATC connector
Catalog number	Price*	Catalog number	Price*		
¾" NPT(M) threading, hexagonal body, PPS, 0 to 12 pH					
R-27020-00		R-27020-40		None	None
R-27020-02		R-27020-42		100 Ω RTD	Mini audio plug
R-27020-03		R-27020-43		100 Ω RTD	Tinned ends
R-27020-06		—	—	1 kΩ RTD	Spade lugs
1" NPT(M) threading, round body, PVDF, 0 to 12 pH					
R-27020-20		—	—	None	None
R-27020-22		—	—	100 Ω RTD	Mini audio plug
R-27020-23		—	—	100 Ω RTD	Tinned ends

Electrode
27020-00

Graphite-tipped electrode
27020-60

Cole-Parmer®

pH and ORP Electrodes with Probe Guard

Guard allows full-sized pH bulb, but protects against damage

- Economical single-junction or rugged double-junction designs

These combination electrodes have ¾" NPT(M) threads on both ends for use as a submersion or in-line sensor.

Select either a single- or double-junction reference and your choice of temperature compensating (ATC) elements. Double-junction electrodes resist contamination from heavy metals, organics, or compounds that might react with the AgCl reference solution.

Specifications

Thread size: ¾" NPT(M)
Insertion depth: 1.75"
Housing length: 6.75"
Housing material: CPVC
Cable: 10 ft, with BNC pH connector
Temperature range: 32 to 176°F (0 to 80°C)
Maximum pressure: 100 psi

Catalog number	ATC element	ATC connector	Price*
Insertion/submersion, single-junction pH electrodes, 0 to 12 pH			
R-05993-10	None	None	
R-27300-21	100 Ω RTD	Mini audio plug	
R-27300-23	100 Ω RTD	Tinned ends	
Insertion/submersion, double-junction pH electrodes, 0 to 12 pH			
R-27301-20	None	None	
R-27301-21	100 Ω RTD	Mini audio plug	
R-27301-23	100 Ω RTD	Tinned ends	
R-27301-24	1 kΩ RTD	Spade lugs	
Insertion/submersion, single-junction ORP electrode			
R-27300-19	None	None	
Insertion/submersion, double-junction ORP electrode			
R-27301-19	None	None	

05993-10

CHECKLIST ITEM 9

CONSTRUCTION SPECIFICATIONS CUT SHEETS

GENERAL INDUSTRIAL TWA

pH / ORP Controllers,
PHC-01 and PHC-02, ORPC-01
Cole Parmer 56715-10
Eutech Instruments 2000
Advanced pH/ORP PI Controllers

EUTECH INSTRUMENTS pH 2000 Advanced pH/ORP PI Controllers

56715-00

Most advanced features of any controller in its price range

- Programmable for on/off, proportional, and PI (proportional integral) control
- Proportional pulse frequency and pulse length control
- Two-point pH calibration with automatic or manual buffer recognition; controller recognizes a wide range of buffer sets.

Controllers are ideal for industries that require accurate and precise pH or ORP control. The ½-DIN wall mount model is IP66 (NEMA 4X)-rated and suitable for wall, panel, or pipe mounting. Large backlit display provides easy reading of pH/mV and temperature measurements, even in low light conditions. Universal power supply input from 80 to 250 VAC/DC allows for use at multiple sites.

The pH 2000 controllers feature removable terminal strips for simple installation. The controller allows asymmetrical or symmetrical electrode inputs and operation. Symmetrical mode eliminates electrical noise problems when used with a potential matching pin as a solution ground.

Two programmable relay outputs for set points, delay, hysteresis, or control functions, and separate programmable alarm relay provide multiple options for control. Individually adjustable high and low set point dead bands prevent rapid contact switching if the value fluctuates near the set point. Programmable relay delay minimizes false alarms caused by minor fluctuations. Both models feature two galvanically isolated and scaleable 0 to 20/4 to 20 mA outputs for pH/ORP and temperature.

Order pH/ORP electrodes with 100 or 1000 Ω Pt RTD ATC elements listed on pages 1317–1329.

56715-10

ISO 9001:2000 CERTIFIED SUPPLIER CE

(56715-00 only)

Catalog number		R-56715-00	R-56715-10
Description		½-DIN wall-mount	¼-DIN panel-mount
Range	pH	–2.00 to 16.00	
	mV	±0 to 100.0%; –1000 to 1000	
	Temperature	–9.9 to 125.0°C	
Resolution	pH	0.01	
	mV	0.1%; 1	
	Temperature	0.1°C	
Accuracy	pH	±0.01	
	mV	±2	
	Temperature	±0.5°C	
Temperature compensation		Automatic or manual, 100 Ω or 1000 Ω Pt RTD, 2-or 3-wire system	
Control type		On/off (limit); proportional; proportional integral (PI)	
Number of set points		Two	
Display		Dual-line backlit LCD; 4-digit upper and 3½-digit lower	
Output	Control	Three SPST relays, 3 A, 250 VAC/600 W max	
	Alarm	One SPDT relay, 3 A, 250 VAC/600 W max	
	Current	Two channels; isolated 0 to 20/4 to 20 mA, 600 Ω max load	
	Voltage	12 VDC, 50 mA	
Wash contact relay		Latching/pulse (switchable); max 250 VAC, 3 A, 600 W, programmable for interval (0 to 199.9 hours) and duration (0 to 1999 sec)	
Electrode use		Glass or antimony	
Password protection		Two-level password protection	
Power		80 to 250 VAC/DC, 48 to 62 Hz	
Housing		½-DIN, IP66 (NEMA 4X)	¼-DIN, IP54 (front panel)
Dimensions		5 11/16"W x 5 11/16"H x 4¼"D (144 x 144 x 108 mm)	3¾"W x 3¾"H x 6 15/16"D (96 x 96 x 175 mm)
Price			

R-27020-43 Industrial pH electrode with solution ground .....
R-50001-00 Power cord; U.S. standard plug, 6 ft, 120 VAC.....

Technical info

End users sometimes assume a problem with the pH transmitter, controller, or electrode when the system calibrates successfully but gives erratic measurements when on-line. pH/ORP meters are essentially specialized millivolt meters, so any stray voltage can cause significant errors. The best way to determine if electrical interferences exist is to measure the process fluid off-line in a beaker. If there are no erratic measurements in a similar time frame as interferences occurred on-line, there is an excellent chance that stray electrical interference is the problem.

Properly grounded equipment can solve the problem, but even with grounding interferences can still exist. Another option, and a wise precautionary in choice industrial applications, is to use a system that accepts electrodes with a solution ground, also called a potential matching pin. Many manufacturers' controllers accept pH/ORP electrodes with solution grounds including Eutech Instruments 500, 600, 800, 1000, and 2000 series transmitters/controllers.

GO to page(s) 384–392

Looking for more electrochemistry controllers? Go to pages

Conductivity Control 384–392
Oxygen Control 1208–1212
Turbidity 2240
Chlorine/Chlorine Dioxide.....2409–2410

CHECKLIST ITEM 9

CONSTRUCTION SPECIFICATIONS CUT SHEETS

GENERAL INDUSTRIAL TWA

Chemical Mixers, MX-01 to MX-07
Chemineer 10XPC-0.25
Chemineer 10XPC-0.5
Chemineer 30XPC-0.5
Chemineer 30XPC-1

Chemineer

Portable Mixing Solutions

For Industrial

Applications

Optimum Agitation Design

... for Batch and Continuous Processing

Successful processes involve performance on many levels—from the design process through construction, commissioning and onto process operation—Chemineer is poised to consistently provide high quality products and services.

Effective solutions for your mechanical and process specifications are accomplished using a solid range of Chemineer top, bottom and side entry mixers. Exceptional engineering capabilities also enable us to provide custom solutions for your mixing and mechanical challenges.

Rapid response: Industry-leading, sophisticated process and mechanical design software quickly generates solutions complete with quotations, custom assembly/dimension drawings and design loads in paper or electronic formats. Computational Fluid Mixing and Laser Doppler Anemometry can also be used to address process challenges.

Mechanical spectrum:

- Continuous or batch mixing
- Flexible selection of output speeds
- Mixers up through 5 HP
- Shaft diameters through 1 1/2 inches
- Positive shaft attachment eliminates inherent problems with grip spring designs
- 316/316L stainless as standard. High alloys, finishes and coatings available upon request
- Impellers: Many types available for water-like and viscous mixing
- NEMA electric and air (dry or lubricated) motors
- Controls and monitoring devices available
- Wash down duty gear reducers available: If the motor is washdown duty, make sure the gear drive is as well

Gear-Reduced DT Mixer

1. Industry standard, off-the-shelf, NEMA electric or air motor
2. Advanced, heat-treated gearing
3. Gear drive is permanently lubricated with high-performance, synthetic grease
4. Sealed gear drive prevents both product and lubricant contamination
5. Helical, AGMA quality gears provide smooth, quiet operation
6. Elastomeric lip seal
7. Heavy-duty, permanently lubricated and sealed-for-life bearings
8. Chuck coupling with dual set-screws or bolted flange coupling (also available), allow for shaft removal without disassembling the unit

Open Tank Models

- DTD models
- Flexible configurations to meet your requirements
- Easy installation
- Low maintenance
- Direct or gear drive capability
- Shaft attachment: Chuck, flanged or threaded couplings
- Operating speed flexibility: Ask for designs below first critical speed as they eliminate the need for programming speed avoidance ranges
- Right angle drives offer low head room for tight spaces
- In-line mixers have small footprints for minimum interference with nozzles and process piping

Gear-Reduced Mixers are available with clamp, cup plate, vibration insulation plate, or 10º angle riser (pictured).

Dimensions

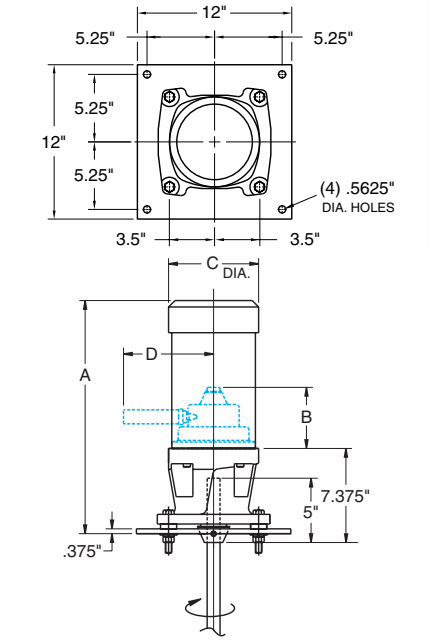

30DTD

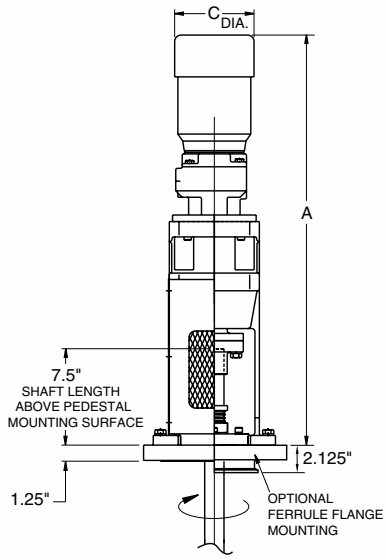

40DTNS

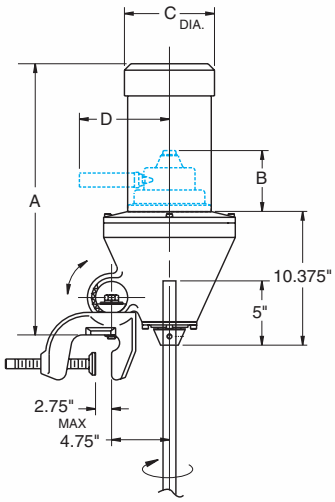

50DTC

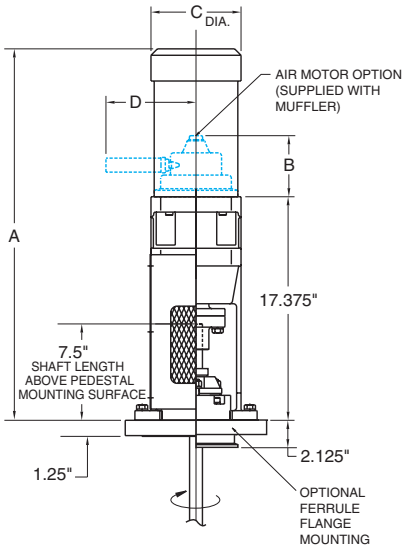

30DTN

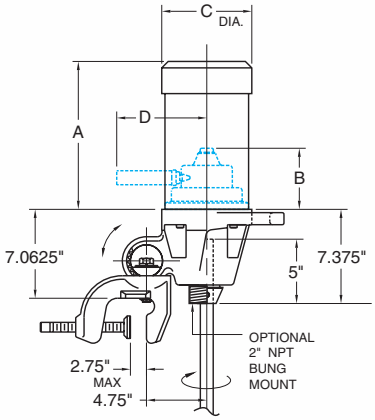

10/30XPC

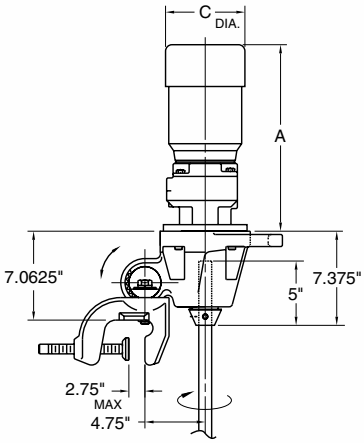

40XPC

Quick Selection Chart

Typical Product	Viscosity (CP)	Volume (Gallons)								
		25	50	100	200	500	1,000	2,000	3,000	5,000
Water, Kerosene	1	10XP-0.25	10XP-0.25	10XP-0.25	10XP-0.25	30XP-0.50	40XP-0.25	40XP-0.25	40XP-0.50	40XP-1.0
Olive Oil	100	10XP-0.25	10XP-0.25	10XP-0.25	30XP-0.25	40XP-0.25	40XP-0.25	40XP-0.50	40XP-1.0	40XP-1.0
Glucose, Latex Paint	250	10XP-0.25	10XP-0.50	10XP-0.50	40XP-0.25	40XP-0.25	40XP-0.50	40XP-1.0	40XP-1.0	40XP-1.0
Glycerin	500	10XP-0.25	10XP-0.50	40XP-0.25	40XP-0.50	40XP-0.25	40XP-1.0	40XP-1.0	50DT-1.5	
Castor Oil	1000	30XP-0.50	20DTD-0.25	20DTD-0.25	50DTD-1.0	40XP-0.50	50DT-1.5	50DT-1.5	50DT-2.0	

Dimensions

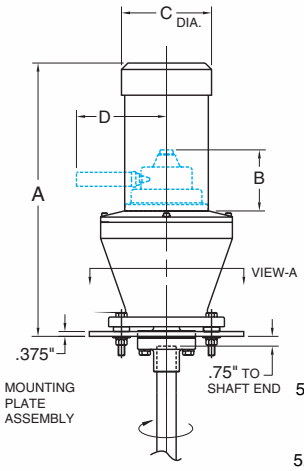

50DTD

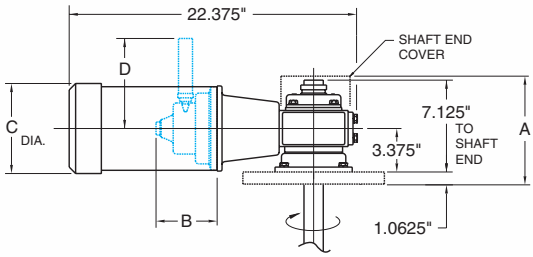

60DTD/DTL

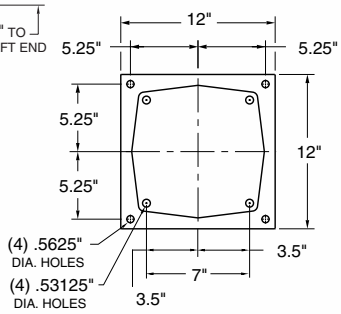

View-A

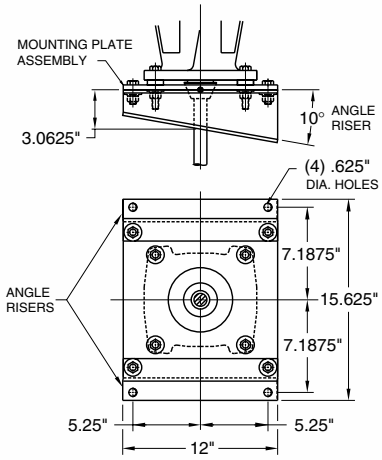

Optional 10° Angle Riser

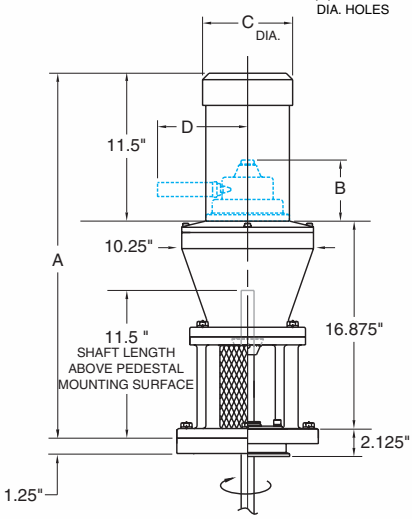

50DTN/NS

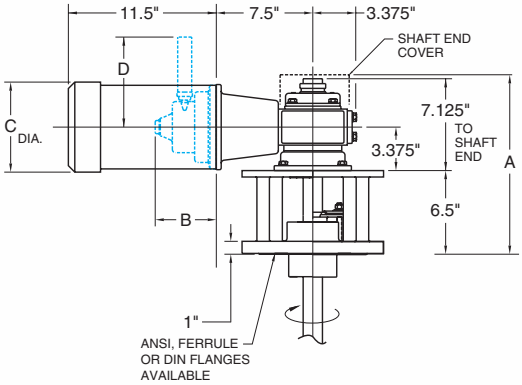

60DTA/DTL

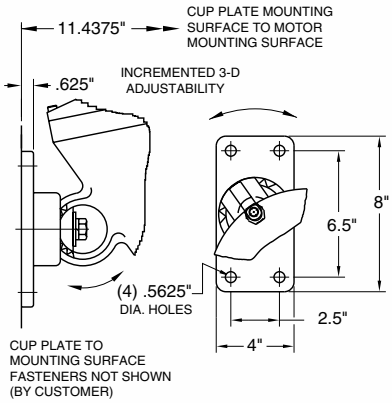

Optional Cup Plate Mount

Dimensions Chart

Dimensions in Inches	Model									
	30XPC	30DTD	30DTN	40XPC	40DTNS	50DTC	50DTD	50DTN/NS	60DTA	60DTD & DTL
A	13.25	19.875	30.625	14.5	31.875	25.125	25.25	28.375	14	8.4375
B	4.75	6.25	6.25	—	—	6.25	6.25	6.25	4.75	4.75
C	7	7	7	6.5	6.5	9.5	9.5	7	7	7
D	7	4.5	4.5	—	—	4.5	4.5	4.5	7	7

Sealed Tank Models

- DTNS, DTN, DTA, DTL models
- Mechanical seals
  - — Dry or wet running
  - — Single, double or gas lift-off designs
  - — Others available upon request
- Optional shaft drop collar to facilitate seal removal
- Lip seals and stuffing boxes
- Shaft attachment: Flanged or threaded couplings
- Operating speed flexibility: Request designs below the first critical speed as they eliminate the need for programming inverter speed lock-outs
- Mounting flanges: ANSI, ferrule (tri-clamp), DIN, special

Portable Models

- Rugged cast aluminum housing
  - — High strength, low weight design
  - — Integral handle for ease of positioning
- Multi-directional clamp for horizontal and vertical adjustment
- Optional mounts
  - — Cup plate mounting for increased stability
  - — Threaded bung mount for drum mixing with collapsible impeller that fits through opening
- Shaft attachment: Chuck or flanged couplings
- All stainless housings and motors available for superior cleanliness and corrosion protection

Express Mixer Program

Chemineer offers 24–48 hour delivery on an extensive number of standard mixer configurations in order to quickly and efficiently meet your application needs. By selecting one of the off-the-shelf, standard models that are stocked and readily available through the Chemineer Express Mixer Program, you can reduce your downtime and the associated costs.

Optional cup plate allows for periodic shaft angle adjustment while still permanently affixed.

An optional 2" NPT Bung Mount is also available for mixing the contents of standard drums.

Impeller Process Technology

Chemineer's impeller process technology is effectively applied across your spectrum of applications ensuring successful, repeatable results from lab scale to full scale operations.

Chemineer's mixing expertise includes low shear liquid-liquid/solids blending, gas dispersion, high shear blending and viscous mixing. Whether it is R&D or production phase, we have the expertise to solve your mixing challenges.

An impeller brochure, B710, is available with additional information.

HE-3

SC-3

Maxflo W

BT-6 Gas Dispersion Impeller

JP-3 Marine Propeller

Dispersion Blade

Collapsible Prop

Chemineer, Inc.
P.O. Box 1123
Dayton, Ohio 45401
Telephone: (937) 454-3200
Fax: (937) 454-3379

Chemineer, Ltd.
7 Cranmer Road
West Meadows
Derby DE21 6XT
England
Telephone: 44-1-332-546700
Fax: 44-1-332-290323

Chemineer, Inc.
605 Hangtian North Building
222 Cao Xi Road
Shanghai 200235
China
Telephone: 86-21-6482-8036
Fax: 86-21-6482-8035

Chemineer, Inc.
125 Flagship Drive
North Andover, MA 01845
Telephone: (978) 687-0101
Fax (978) 687-8500
www.kenics.com
www.greercomixers.com

Prochem, Inc.
994 Westport Crescent Unit #A3
Mississauga, Ontario L5T 1G1
Canada
Telephone: (905) 670-9486
Fax: (905) 670-9120

Your Local Contact:

Bulletin 709

For the nearest sales office call 1-800-643-0641 or go to www.chemineer.com

© 2004 by Chemineer, Inc.
® Chemineer is a registered trademark of Chemineer, Inc.

Printed in U.S.A.
5M EDG 304

TEMPORARY CONSTRUCTION TREATMENT SYSTEM (TCTS)
CONSTRUCTION/PERFORMANCE SPECIFICATIONS

GENERAL INDUSTRIAL TREATMENT WORKS APPLICATION

SCCC SITE AND DIAMOND SITE
KEARNY, NEW JERSEY

Prepared for:
Standard Chlorine Chemical Co., Inc.
and
Tierra Solutions, Inc.

Prepared by:
Key Environmental, Inc.
456 Route 22 West, Suite D
Whitehouse Station, New Jersey 08889

FEBRUARY 2010

TABLE OF CONTENTS

CONSTRUCTION/PERFORMANCE SPECIFICATIONS
TEMPORARY CONSTRUCTION TREATMENT SYSTEM (TCTS)

Section	Description
44 05 23.73	PROCESS VALVES
44 23 19	PROCESS PLANT PIPING
44 42 23	CLARIFIERS
44 42 56	PUMPS
44 42 73	TANKS
44 43 13	FILTERS
44 44 13	CHEMICAL FEED EQUIPMENT
44 44 43	HEAVY METALS REMOVAL

SECTION 40 05 23.73

Specification for Temporary Construction Treatment System (TCTS)

PROCESS VALVES

PART 1 GENERAL

1.1 SECTION INCLUDES

A. Polyvinyl Chloride (PVC) Valves including:
   1. Flow Control Valves.
   2. Check Valves.
   3. Automated Throttle or Solenoid Valves.
   4. Ball Valves.
   5. Needle Valves.
   6. Pressure Relief Valves.
   7. Butterfly Valves.
   8. Strainers.

1.2 RELATED SECTIONS

A. Section 40 23 19 – Process Plant Water Piping
B. Section 44 42 56 – Water Treatment Pumps

1.3 DESCRIPTION

A. General
   1. The valves shall be installed for the temporary construction treatment system (TCTS).
   2. The TCTS shall be operated to treat impacted water that is managed during construction activities. The treated effluent shall be discharged to the Hackensack River.

B. Design Criteria
   1. As shown in the Contract Documents.

C. Performance Requirements
   1. To convey the process water as part of the TCTS.
   2. Schedule 40 PVC valves shall not be permitted.
   3. PVC valves shall not be permitted for compressed air service.

1.4 SUBMITTALS

A. Manufacturer's installation information.
B. Shop Drawings: Show valve connection details.
C. Quality Control information.
   1. Valve installation logs.
D. Proposed changes or modifications.

1.5 QUALITY ASSURANCE

A. Quality assurance activities are described in the document titled "Construction Quality Assurance Plan, SCCC and Diamond Site, Kearny New Jersey."

1.6 QUALITY CONTROL

A. The Contractor shall be responsible for quality control activities during installation of the valves and associated appurtenances.

B. The Contractor shall perform routine performance monitoring by collecting samples from the in-system sample ports.

C. The Contractor shall comply with all applicable Federal, State and local laws or ordinances as well as applicable codes, standards and regulations.

1.7 DELIVERY, STORAGE, AND HANDLING

A. Store products in Manufacturer's unopened packaging until ready for installation.

B. Use proper equipment and methods during unloading and transporting material to ensure safety and to prevent damage.

C. Handle and store materials in accordance with Manufacturer's recommendations.

PART 2 PRODUCTS

2.1 VALVES

A. The Valve Schedule is provided below.
B. The valves shall be as shown on the Valve Schedule or Engineer-approved equal.

TABLE 400523.73-A

SCHEDULE OF TCTS VALVES

Service	Description	Materials Options	Pipe Size
Ball Valves	Open/close valve to shut-off flow, liquid and air-line piping	PVC, Brass, Steel, and/or Aluminum	Variable
Butterfly Valve	Control flow through TCTS	PVC and/or steel	Variable
Check Valves	Prevent water from back-flowing	PVC and/or Stainless Steel	Variable
Diaphragm Valves	Control flow through TCTS	PVC	Variable
Flow Control Valves	Control flow through TCTS	PVC	Variable
Needle Valve	Control air flow from compressor to diaphragm pumps	Brass or steel	Variable
Pressure Relief Valve	Relieve pressure to protect piping systems and equipment	Brass or steel	Variable
Sampling Ports	Sample water in treatment system	PVC	Variable
Solenoid Valves	Receive signal from control system to start/stop diaphragm pumps	Polyester Coil Housing	Variable
Y-Strainer	Protect pump intake from debris	PVC	Variable

PART 3 EXECUTION

3.1 INSTALLATION

A. The Contractor shall furnish and install the valves, incidentals and associated appurtenances in accordance with Manufacturers' instructions.

3.2 OPERATION

A. The Contractor shall be responsible for the satisfactory operation, maintenance and troubleshooting of the TCTS valves needed for the duration of the construction Work.

B. Following completion of the installation, the TCTS valves shall be performance tested. All valves shall be adjusted and analyzed for misalignment, leaks, excessive vibration, safety protocol and overall performance.

C. The Contractor shall provide replacement parts as needed.

D. The Contractor shall provide the services of a qualified Operator for the equipment in accordance with NJDEP requirements.

E. The Contractor shall monitor the performance of the valves and repair leaks and replace valves as needed.

F. The Manufacturer recommended pressure ratings for valves shall not be exceeded.

END OF SECTION

SECTION 44 23 19

Specification for Temporary Construction Treatment System (TCTS)

PROCESS PLANT WATER PIPING

PART 1 GENERAL

1.1 SECTION INCLUDES

A. High density polyethylene (HDPE) Piping.
B. Polyethylene (PE) Tubing.
C. Polyvinyl Chloride (PVC) Piping and Tubing.
D. Galvanized Steel Piping.
E. Stainless Steel Piping.
F. Reinforced PVC Hoses.
G. Fittings and couplings.

1.2 RELATED SECTIONS

A. Division 40 05 23 – Valves
B. Section 44 42 56 – Water Treatment Pumps

1.3 DESCRIPTION

A. General

1. The solid wall PVC piping and flexible wall PVC piping shall be installed for the temporary construction treatment system (TCTS). HDPE piping is also acceptable.
2. The PE tubing shall be installed for the TCTS chemical feed units associated with the Cr(VI) removal system.
3. The TCTS shall be operated to treat impacted water that is managed during construction activities. The treated effluent shall be discharged to the Hackensack River.
4. Galvanized Steel or Stainless Steel shall be utilized for compressed air service.

B. Design Criteria

1. As shown in the Contract Documents.

C. Performance Requirements

1. To convey the process water as part of the TCTS.
2. To convey treated process water to Outfall 002/003 for discharge into the Hackensack River in accordance with permit requirements.

3. The TCTS shall be operated by the Contractor in order to achieve New Jersey Pollution Discharge Elimination System (NJPDES) discharge limits.

1.4 SUBMITTALS

A. Manufacturer's installation information
B. Shop Drawings: Piping (including type and sizes) and connection details.
C. Quality Control information
   1. Pipe and fittings installation Logs
D. Proposed changes or modifications

1.5 QUALITY ASSURANCE

A. Quality assurance activities are described in the document titled "Construction Quality Assurance Plan, SCCC and Diamond Site, Kearny New Jersey."

1.6 QUALITY CONTROL

A. The Contractor shall be responsible for quality control activities during installation of the piping and associated appurtenances.

B. The Contractor shall perform routine performance monitoring by collecting samples from the in-system sample ports.

C. The Contractor shall comply with all applicable Federal, State and local laws or ordinances as well as applicable codes, standards and regulations.

D. The Contractor shall provide Quality Control documentation to the Engineer.

1.7 DELIVERY, STORAGE, AND HANDLING

A. Store products in Manufacturer's unopened packaging until ready for installation.

B. Use proper equipment and methods during unloading and transporting material to ensure safety and to prevent damage.

C. Handle and store materials in accordance with Manufacturer's recommendations.

PART 2 PRODUCTS

2.1 PIPING

A. The Piping Schedule is provided below.
B. The Piping shall be as shown on the Piping Schedule or Engineer approved equal.
C. All Piping shall be Schedule 80.

2.2 FITTINGS AND COUPLINGS

A. The Fittings and Couplings are described below.
   1. Threaded pipe fittings and flanges to connect PVC piping and appurtenances shall be Schedule 80 and/or metal fittings.
      (see tables on following pages)

PART 3 EXECUTION

3.1 INSTALLATION

A. The Contractor shall furnish and install the piping, incidentals and associated appurtenances in accordance with Manufacturers instructions (e.g. weld temperatures, pipe cleaning/pipe preparation/welding).

B. Piping runs shall be hydrostatic tested by the Contractor using potable water or clean air prior to start up. The pressure shall be at or below rated pressures. Air lines shall also be leak tested using design compressor pressures. The testing shall be documented as part of the Quality Control Program.

C. All welds shall be inspected. The inspections shall be documented as part of the Quality Control Program.

D. Viton gaskets shall be installed for all flange connections.

E. Piping shall be selected to reduce head loss.

F. The contractor shall protect the installed products until completion of the Work.

TABLE 442319-A
SCHEDULE OF TCTS PIPING

Service	Description	Materials Options	Pipe Size and/or Pressure Ratings
Process Water Conveyance	Convey process water through the treatment system	Solid Wall Polyvinyl Chloride (PVC) Pipe Schedule 80 and/or High Density Polyethylene (HDPE)	1", 2", 3" and/or 4" 150 psi
Treatment Chemicals for Cr(VI) Removal and pH Control Systems,	Convey treatment chemicals to process tanks	Polyethylene (PE) Tubing Chemical Resistant	0.375" 150 psi
Pressure Hose for Granular Activated Carbon (GAC) Units	Convey water between GAC vessels	Flexible Wall Polyvinyl Chloride (PVC) Pipe	2-4" 150 psi
Air line from compressor to air-operated diaphragm pumps	Provide compressed air for diaphragm pump operations	Stainless Steel	1/4" 150 psi
Temporary Process Water Line	Provide water for mixing chemicals, GAC wet-out, decontamination, etc.	High Density Polyethylene (HDPE)	Variable 150 psi

TABLE 442319-B
SCHEDULE OF TCTS FITTINGS AND COUPLINGS

Service	Description	Materials Options	Pipe Size
Air Line Disconnect Flanges and Fittings	Flanges and fittings for line providing air from compressor to diaphragm pumps	Steel, Brass, and/or Aluminum	Variable
Barb Fittings	Fittings for tubing, low pressure applications	Nylon	Variable
Camlock Fittings, Aluminum	Cam and groove couplings to connect hoses and lines	Aluminum	Variable
Flexible Connectors, Pipe Couplings and Expansion Joints	Expansion Joints to reduce stress, vibrations and noise in piping.	Viton or nitrile gaskets. Expansion joints same material as piping, depending on configuration	Variable
PVC Fittings	Thick-Wall (Schedule 80) CPVC threaded Pipe Fittings and Flanges to connect piping Viton gaskets where applicable	PVC Schedule 80. Stainless steel bolts/nuts/washer sets for all flanges	1", 2", 3" and 4"
Reducer Bushings	Thick-Wall (Schedule 80) CPVC threaded Pipe Fittings and Flanges	PVC Schedule 80	Variable
Transition Fittings	Transition from HDPE to Stainless Steel Piping	High Density Polyethylene (HDPE) and/or Stainless Steel	Variable
Water Line Fittings	Flanges and fittings for temporary water line	Brass	Variable

3.2 OPERATION

A. The Contractor shall be responsible for the satisfactory operation, maintenance and troubleshooting of the TCTS piping needed for the duration of the TCTS Work.

B. Following completion of the installation, the TCTS piping shall be performance tested. All piping shall be adjusted and analyzed for misalignment, leaks, excessive vibration, safety protocol and overall performance.

C. The Contractor shall provide replacement parts as needed.

D. The Contractor shall provide the services of a qualified Operator for the equipment in accordance with NJDEP requirements.

E. The Contractor shall monitor the performance of the piping and replace the repair leaks and replace piping as needed. The piping and associated appurtenances shall be routinely inspected for wear, tear and ultraviolet damage.

F. The Manufacturer recommended pressure ratings for piping shall not be exceeded.

G. The system shall be protected from vehicular traffic and worker slip, trips and fall hazards.

END OF SECTION

SECTION 44 42 23

Specification for Temporary Construction Treatment System (TCTS)

WATER TREATMENT CLARIFIERS

PART 1 GENERAL

1.1 SECTION INCLUDES

A. Tube Settler/Clarifier (Clarifier).

1.2 RELATED SECTIONS

A. Division 40 05 23 – Valves
B. Section 44 42 56 – Water Treatment Pumps

1.3 DESCRIPTION

A. General
   1. The temporary construction treatment system (TCTS) shall be operated to treat impacted water that is managed during construction activities. The treated effluent shall be discharged to the Hackensack River.

B. Design Criteria
   1. As shown in the Contract Documents.
   2. Refer to Rain for Rent Tube Settler/Clarifier product literature.

C. Performance Requirements
   1. Clarifiers – to reduce the solids loading from the flocculation unit.
   2. The treatment system shall be operated by the Contractor in order to achieve New Jersey Pollution Discharge Elimination System (NJPDES) discharge limits.
   3. The Contractor shall install and operate the system in accordance with all applicable New Jersey Department of Environmental Protection (NJDEP), Treatment Works Approval (TWA) and the project-specific Air Permit requirements.

1.4 SUBMITTALS

A. Manufacturer's installation information.
B. Shop Drawings: Show product and connection details.
C. O&M Manuals.

D. Quality Control information.
   1. Unit operation analytical data – for performance testing.
   2. Operation Logs.

E. Proposed changes or modifications.

1.5 QUALITY ASSURANCE

A. Quality assurance activities are described in the document titled "Construction Quality Assurance Plan, SCCC and Diamond Site, Kearny New Jersey."

B. The Engineer will collect the discharge sample to evaluate compliance with the NJPDES permit conditions.

1.6 QUALITY CONTROL

A. The Contractor shall be responsible for quality control activities during installation, start up and operation of the TCTS.

B. The Contractor shall determine the number of Clarifiers required for operation of the TCTS.

C. The Contractor shall perform routine performance monitoring by collecting samples from the in-system sample ports. The Contractor shall change out components and service the Clarifiers as needed based on the analytical results.

D. The Contractor shall comply with all applicable Federal, State and local laws or ordinances as well as applicable codes, standards and regulations.

E. The Contractor shall provide QC documentation to the Engineer.

1.7 DELIVERY, STORAGE, AND HANDLING

A. Store products in Manufacturer's unopened packaging until ready for installation.

B. Use proper equipment and methods during unloading and transporting material to ensure safety and to prevent damage.

C. Handle and store materials in accordance with Manufacturer's recommendations.

PART 2 PRODUCTS

2.1 CLARIFIER

A. The Clarifiers shall be a Tube Settler unit as furnished by Rain for Rent or Engineer-approved equal. Parallel plate or lamella clarifiers may be considered.

PART 3 EXECUTION

3.1 INSTALLATION

A. The Contractor shall furnish and install the Clarifiers, piping, electrical, controls, incidentals and associated appurtenances in accordance with Manufacturer's instructions.

3.2 OPERATION

A. The Contractor shall be responsible for the satisfactory operation, maintenance and troubleshooting of the Clarifiers as needed for the duration of the TCTS Work.

B. Following completion of the installation, the Clarifiers shall be performance-tested. All equipment shall be adjusted and analyzed for misalignment, leaks, excessive vibration, safety protocol and overall performance, and the installation shall be subject to approval by the Engineer.

C. The Contractor shall provide replacement parts as needed.

D. The Contractor shall provide the services of a qualified Operator for the equipment in accordance with NJDEP requirements.

E. The Contractor shall set the clarifier weir height, flow rate and underflow sludge pump rate to optimize treatment efficiency.

F. Covers shall be maintained on the clarifier at all times.

G. The Contractor shall evaluate the clarifier effluent and modify the system as needed.

H. The clarifier shall be fitted with a overflow shut off switch in the tank.

END OF SECTION

SECTION 44 42 56

Specification for Temporary Construction Treatment System (TCTS)

WATER TREATMENT PUMPS

PART 1 GENERAL

1.1 SECTION INCLUDES

A. Process Pumps
   1. Temporary Construction Treatment System (TCTS) Transfer Pumps
   2. TCTS Chemical Metering Pumps

1.2 RELATED SECTIONS

A. Division 40 05 23 – Valves

1.3 DESCRIPTION

A. General
   1. The temporary construction treatment system (TCTS) shall be operated to treat impacted water that is managed during construction activities. The treated effluent shall be discharged to the Hackensack River.

B. Design Criteria
   1. As shown in the Contract Documents
   2. As shown on Pump product literature and Pump Schedules

C. Performance Requirements
   1. Pump impacted groundwater and surface water to the TCTS as needed for the following:
      a. Slurry wall construction;
      b. Personnel and equipment decontamination;
      c. Lagoon dewatering;
      d. Sediment dewatering;
      e. Trench dewatering;
      f. Ditch dewatering; and
      g. Other construction related activities as needed and as directed by the Engineer.
   2. Pumping process water between unit operations.
   3. Pump from the final Frac Tank to the force main and Outfall 002 or Outfall 003.
   4. The treatment system shall be operated by the Contractor in order to achieve NJPDES discharge limits.

5. The Contractor shall install and operate the pumps in accordance with all applicable New Jersey Department of Environmental Protection (NJDEP), Treatment Works Approval (TWA) and the project-specific Air Permit requirements.

1.4 SUBMITTALS

A. Manufacturer's installation information
B. Shop Drawings: Show pumps and connection details
C. O&M Manuals
D. Quality Control information
   1. Pump performance testing
   2. Operation Logs
E. Proposed changes or modifications

1.5 QUALITY ASSURANCE

A. Quality assurance activities are described in the document titled "Construction Quality Assurance Plan, SCCC and Diamond Site, Kearny New Jersey.

B. The Engineer will collect the discharge sample to evaluate compliance with the NJPDES permit conditions.

1.6 QUALITY CONTROL

A. The Contractor shall be responsible for quality control activities during installation, start up and operation of the TCTS
B. The Contractor shall perform routine performance monitoring by collecting samples from the in-system sample ports. And, the Contractor shall change out Pumps and fittings as needed based on performance
C. The Contractor shall comply with all applicable Federal, State and local laws or ordinances as well as applicable codes, standards and regulations
D. The Contractor shall provide QC documentation to the Engineer

1.7 DELIVERY, STORAGE, AND HANDLING

A. Store products in Manufacturer's unopened packaging until ready for installation
B. Use proper equipment and methods during unloading and transporting material to ensure safety and to prevent damage
C. Handle and store materials in accordance with Manufacturer's recommendations.

PART 2 PRODUCTS

2.1 PUMPS

A. The Pump Schedules are provided below
B. The Contractor shall select the number of TCTS pumps required based on field conditions encountered during construction
C. The Contractor shall provide the pumps as shown on the Pump Schedule or Engineer-approved equal
(See tables, following pages)

Table 444256 – A

Schedule of TCTS Transfer Pumps

Pump No.	Item	Type Option	Supplier / Manufacturer Option	Model Option	HP	Discharge Dia. in	Material	Operating Pt.	Solids Dia. In	Max flow, gpm	Max head, ft	Max Pressure, psi
P-01	Influent Pump	Portable Gas-Powered Wet Prime Trash Pump	Godwin	GTP-50HX	5.5	2	Ductile Iron	65 gpm @ 75 ft	1	185	98	42
OR												
P-01	Influent Pump	Portable Gas-Powered Wet Prime Semi-trash Pump	Godwin	GWP-50HX	4	2	Die-cast Aluminum	65 gpm @ 75 ft	0.74	158	95	41
P-02	Cr Reduction Influent Pump	Portable Gas-Powered Wet Prime Semi-trash	Godwin	GWP-50HX	4	2	Die-cast Aluminum	65 gpm @ 75 ft	0.74	158	95	41
OR												
P-02	Cr Reduction Influent Pump	Portable Gas-Powered Wet Prime Trash Pump	Godwin	GTP-50HX	5.5	2	Ductile Iron	65 gpm @ 75 ft	1	185	98	42
P-03	Bag Filter and GAC Pump	Portable Gas-Powered Dri-Prime Semi-trash	Godwin	CD-80D	14.0	3	Die-cast Aluminum	65 gpm @ 115 ft	0.74	158	95	41
OR												
P-03	Bag Filter and GAC Pump	Portable Gas-Powered Wet Prime Semi-trash	Godwin	GWP-100HX	8	4	Chromium Steel Impeller	65 gpm @ 115 ft	0.75	383	92	40
P-04	Final Effluent	Portable Gas-Powered Wet Prime Semi-trash	Godwin	GWP-50HX	4	2	Die-cast Aluminum	100 gpm @ 50 ft	0.74	158	95	41
OR												
P-04	Final Effluent	Portable Gas-Powered Wet Prime Trash Pump	Godwin	GTP-50HX	5.5	2	Ductile Iron	167 gpm @ 30 ft	1	185	98	42
P-05	Sludge Pump	1.5" Double Diaphragm	Ingersoll Rand	PE15P-FPS-PVV		1.5" ANSI Flange inlet and outlet 1/2" NPT air	Polypropylene with Viton diaphragms and balls	20 gpm @ 65 ft	0.25	123	277	120
P-06	Filtrate Return	1.5" Double Diaphragm	Ingersoll Rand	PE15P-FPS-PVV		1.5" ANSI Flange inlet and outlet 1/2" NPT air	Polypropylene with Viton diaphragms and balls	20 gpm @ 65 ft	0.25	123	277	120

Table 444256 – B

Schedule of Chemical Metering Pumps

Number	Item	Description	Model # Option	Vendor Option	GPH	l/h	psi	Control	Voltage
PM-01	Metering Pump	Ferrous Sulfide	B941-313SI	Milton Roy	7	26.5	30	External 4-20 mA or pulse	120 VAC
PM-02	Metering Pump	Sodium Sulfide	B941-313SI	Milton Roy	7	26.5	30	External 4-20 mA or pulse	120 VAC
PM-03	Metering Pump	Acid Feed to Chrome Reduction	B921-393SP	Milton Roy	2.5	9.5	100	External 4-20 mA or pulse	120 VAC
PM-04	Metering Pump	Acid Feed to pH Control Tank	B941-313SP	Milton Roy	7	26.5	30	External 4-20 mA or pulse	120 VAC
PM-04	Metering Pump	Sodium Hydroxide Feed to Cr-Tank	B921-398SI	Milton Roy	2.5	9.5	100	External 4-20 mA or pulse	120 VAC
PM-05	Metering Pump	Sodium Hydroxide Feed to pH Tank	B941-398SI	Milton Roy	7	26.5	30	External 4-20 mA or pulse	120 VAC
PM-06	Metering Pump	Cationic Polymer	B921-85HV	Milton Roy	2.5	9.5	100	External 4-20 mA or pulse	120 VAC
PM-07	Metering Pump	Anionic Polymer	B921-85HV	Milton Roy	2.5	9.5	100	External 4-20 mA or pulse	120 VAC
PM-08	Metering Pump	Flocculant/Ferric Chloride	B941-313SI	Milton Roy	7	26.5	30	External 4-20 mA or pulse	120 VAC
For 1/4" NPT male (for sulfuric acid), change "I" to "P"									

PART 3 EXECUTION

3.1 INSTALLATION

A. The Contractor shall furnish and install the TCTS pumps, piping, controls, electrical, incidentals and associated appurtenances in accordance with Manufacturers' instructions.
B. Diaphragm pumps (i.e. pump no. P-01) shall be installed as needed to reduce potential emulsification in certain areas and as needed to optimize flow rates.
C. The Contractor shall select TCTS pump sizes to meet planned operations (e.g. hours per day).

3.2 OPERATION

A. The Contractor shall be responsible for the satisfactory operation, maintenance and troubleshooting of the Pumps as needed for the duration of the TCTS Work.

B. Following completion of the installation, the Pumps shall be performance tested. All equipment shall be adjusted and analyzed for misalignment, leaks, excessive vibration, safety protocol and overall performance, and the installation shall be subject to approval by the Engineer.

C. The Contractor shall provide replacement parts as needed.

D. The Contractor shall provide the services of a qualified Operator for the TCTS pumps in accordance with NJDEP requirements.

END OF SECTION

CHECKLIST ITEM 9

CONSTRUCTION SPECIFICATIONS CUT SHEETS

GENERAL INDUSTRIAL TWA

P-01 Influent Pump
P-02 Chrome Reduction Influent Pump
P-03 Bag Filter and GAC Pump
P-04 Final Effluent Pump

Godwin Wet-Prime

GDP-80HX

GPL-50HX

GWP-25HX

GPP-50HX

GTP-100HX

GWP80-HX

Portable, gasoline-powered Wet-Prime pumps from the people who understand your pumping needs.

godwin pumps®

Think Orange. Think Godwin.

Great Pumps. Great People.

www.godwinpumps.com

Dewatering Pumps

Semi-Trash — *GWP-25HX* *GWP-50HX* *GWP-80HX* *GWP-100HX*

The right pumps for:

- Pumping water with light abrasives & small solids, **semi-trash**
- Construction & industrial dewatering
- Landscaping & irrigation
- Utilities, manholes & vault draining

Discharge Dia. - " (mm)	1 (25)	2 (50)	3 (80)	4 (100)
Solids Handling Dia. - " (mm)	0.2 (5)	0.75 (19)	0.75 (19)	0.75 (19)
Max. Head - ' (m)	106 (32)	95 (29)	85 (26)	92 (28)
Max. Flow - GPM (m^3/h)	30 (6.9)	158 (36)	238 (54)	383 (87)
Power - HP (kW)	1.1 (0.8)	4.0 (3)	5.5 (4.1)	8.0 (5.9)
Fuel Tank Cap. - gal. (l)	0.15 (0.55)	0.66 (2.5)	0.95 (3.6)	1.58 (6)
Weight - lbs. (kg)	12.1 (5.5)	51 (23)	64 (29)	123 (56)

Features & Benefits

GWP-25HX

- Carbon ceramic mechanical seal for increased protection
- Die-cast aluminum volute & impeller
- Lightweight die-cast aluminum pump casing
- High efficiency, four-stroke engine

GWP-50HX, GWP-80HX & GWP-100HX

- **Semi-trash** handling capability
- Abrasion resistant solid silicon carbide mechanical seal for superior durability
- High-grade ductile iron volute & impeller for reduced wear & maintenance
- Removable, lightweight die-cast aluminum pump casing
- Durable, lightweight steel roll cage for added protection & easy maneuvering
- High performance engine with Oil Alert® system & electronic ignition to increase fuel efficiency
- Rubber mounts for reduced vibration

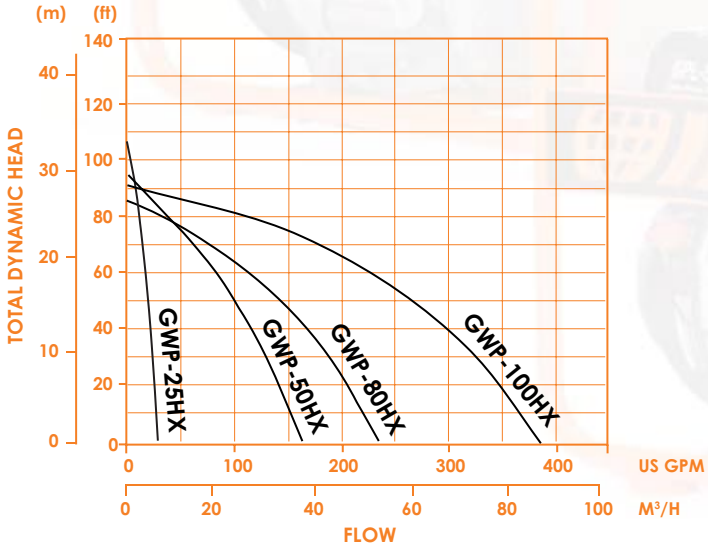

Trash Pumps

GTP-50HX GTP-80HX GTP-100HX

The right pumps for:

- Construction & industrial, trash-laden water
- Stream/pond dewatering
- Septic tanks & manholes
- Pumping water with light abrasives & solids

Discharge Dia. - " (mm)	2 (50)	3 (80)	4 (100)
Solids Handling Dia. - " (mm)	1 (25)	1.5 (38)	2 (50)
Max. Head - ' (m)	98 (30)	89 (27)	82 (25)
Max. Flow - GPM (m^3/h)	185 (42)	354 (80)	425 (96)
Power - HP (kW)	5.5 (4.1)	8.0 (6)	11.0 (8.2)
Fuel Tank Cap. - gal. (l)	0.95 (3.6)	1.58 (6)	1.72 (6.5)
Weight - lbs. (kg)	104 (47)	128 (58)	172 (78)

Features & Benefits

- Solids handling capability
- Abrasion resistant solid silicon carbide mechanical seal for superior durability & protection
- High-grade ductile iron volute & wearplate for reduced wear & maintenance
- Hi-chrome cast iron impeller for reduced wear & maintenance
- Removable, lightweight die-cast aluminum cover & volute for fast debris removal
- Durable, lightweight steel roll cage for added protection & easy maneuvering
- High performance engine with Oil Alert system & electronic ignition to increase fuel efficiency
- Rubber engine mounts for reduced vibration

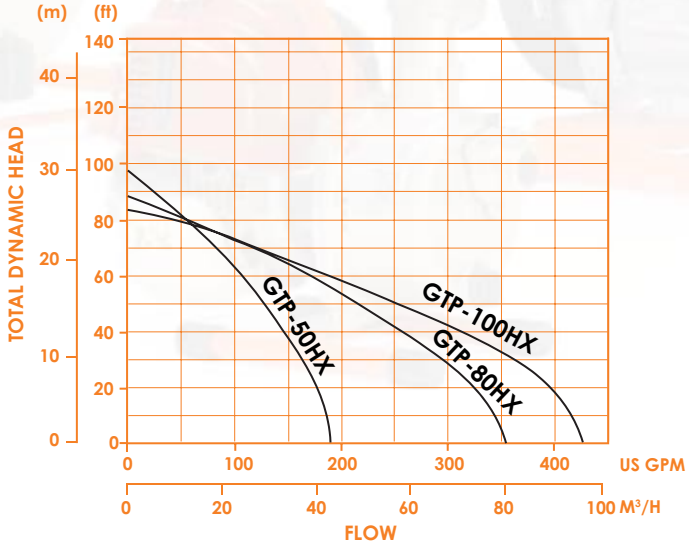

s, manufactures, specifies, services, sells and rents the v

Wet-Prime Pumps

Godwin Pumps is pleased to introduce its new line of portable, gasoline-powered Wet-Prime pumps. Available in dewatering, trash, plastic and pressure models with both Honda® and Subaru Robin® engines, Godwin Wet-Prime pumps are capable of maximum heads to 285' and maximum flows to 425 GPM. Ideal for applications including construction dewatering, landscaping and irrigation, farming, remote firefighting and marine construction, the Wet-Prime series is backed by the same dependable parts and service availability as Godwin's Dri-Prime®, Heidra® and Sub-Prime® pumps.

Reliable. Reputable. Responsive.
Think Orange. Think Godwin. Great Pumps. Great People.

godwin pumps

Think Orange. Think Godwin.
Great Pumps. Great People.

Local Distributor:

Home Offices
Bridgeport, NJ • Telephone +1(856) 467-3636
Gloucestershire, England • Telephone +44 (0)1285 750271
www.godwinpumps.com

Dri-Prime, Heidra, Sub-Prime, the color orange for pumps and Godwin Pumps are registered trademarks of Godwin Pumps of America, Inc.
Oil Alert is a registered trademark of American Honda Motor Co.
All other marks belong to their respective owners.
Specifications and photos are subject to change without notice.
© 2006 Godwin Pumps of America, Inc. All rights reserved. GPASL.1006

CHECKLIST ITEM 9

CONSTRUCTION SPECIFICATIONS CUT SHEETS

GENERAL INDUSTRIAL TWA

P-05 Sludge Pump
P-06 Filtrate Return Pump
Ingersol Rand PE15P-FPS-PVV
1.5” Double Diaphragm Pump

Data Sheet

Series B
Electronic Metering Pumps

Configuration

Model B92 1 - 392SI

Control & Output Code

Manual Control
Speed (stroking frequency) and stroke length manually adjustable

B11 ---	1.6 GPH	(6.1 l/h) ---	150 psi	(10.30 Bar)
B12 ---	2.5 GPH	(9.5 l/h) ---	100 psi	(6.90 Bar)
B13 ---	4.5 GPH	(17.0 l/h) ---	50 psi	(3.50 Bar)
B14 ---	7.0 GPH	(26.5 l/h) ---	30 psi	(2.07 Bar)

Instrument Responsive / Manual Control
Manual adjustment features of Series B1 plus switch conversion to external control for automatic systems.

B71 ---	1.6 GPH	(6.1 l/h) ---	150 psi	(10.30 Bar)
B72 ---	2.5 GPH	(9.5 l/h) ---	100 psi	(6.90 Bar)
B73 ---	4.5 GPH	(17.0 l/h) ---	50 psi	(3.50 Bar)
B74 ---	7.0 GPH	(26.5 l/h) ---	30 psi	(2.07 Bar)
B91 ---	1.6 GPH	(6.1 l/h) ---	150 psi	(10.30 Bar)
B92 ---	2.5 GPH	(9.5 l/h) ---	100 psi	(6.90 Bar)
B93 ---	4.5 GPH	(17.0 l/h) ---	50 psi	(3.50 Bar)
B94 ---	7.0 GPH	(26.5 l/h) ---	30 psi	(2.07 Bar)

Voltage Code

1 --------- 120 VAC, US Plug
2 --------- 240 VAC, US Plug
3 --------- 220-240 VAC, DIN Plug
5 -------- 240-250 VAC, UK Plug
6 -------- 240-250 VAC, AUST/NZ Plug
7 -------- 220-240 VAC, SWISS Plug

Liquid End

See next page for complete Liquid End specifications and selection.

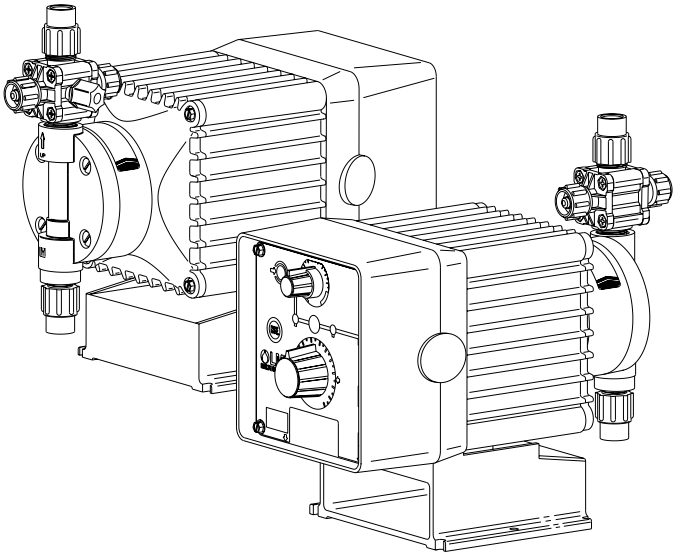

Dimensions

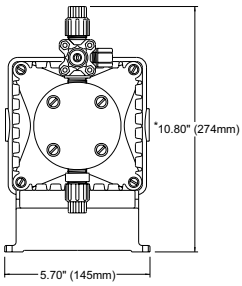

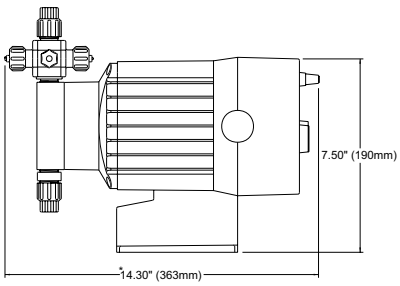

*DIMENSIONS SHOWN ARE MAXIMUM FOR LARGEST LIQUID END AVAILABLE. THESE DIMENSIONS VARY DEPENDING ON THE LIQUID END SELECTED.

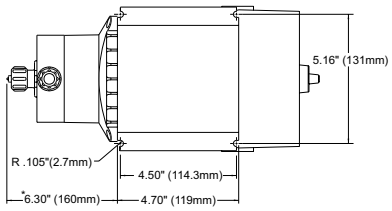

Specifications

Series	Strokes Per Minute (Adjustable) Min	Max	Stroke Length (Adjustable) Recommended Minimum	Average Input Power @ Max Speed	Shipping Weight
B11, B71, B91† B12, B72, B92† B13, B73, B93† B14, B74, B94†	1	100	10%	29 watts	15 lbs (6.9 kg)

† Series B9 pumps may be programmed for strokes per hour for lower outputs.

LMI MILTON ROY

8 Post Office Square
Acton, MA 01720 USA
TOLL FREE: (800) 564-1097
TEL: (978) 263-9800
FAX: (978) 264-9172
http://www.lmipumps.com

Replaces same of Rev. G 2/98
1417. H 4/02

Configuration Data & Materials of Construction

Drive Assembly	Liquid End No.	Size Code	Materials of Construction: Head & Fittings	Balls	Liquifram™	Check Valve	Accessory	Tubing & Connections: Discharge	Suction
	498SI†	0.9	PVC / PVC	Ceramic	Fluorofilm™	PVDF / Polyprel®	4FV	PE .375" O.D.	
B92 ■ -	490SI†	0.9	Acrylic / PVC	Ceramic	Fluorofilm™	PVDF / Polyprel®	4FV	PE .375" O.D.	
B91 ■ -	490FI	0.9	Acrylic / PVDF	Ceramic	Fluorofilm™	PVDF / Polyprel®	4FV	PE .375" O.D.	
B72 ■ -	398SI†	0.9	PVC / PVC	Ceramic	Fluorofilm™	PVDF / Polyprel®	4FV	PE .375" O.D.	
B71 ■ -	393SI†	0.9	PVDF / PVDF	Ceramic	Fluorofilm™	PVDF / PTFE	4FV	PE .375" O.D.	
B12 ■ -	392SI†	0.9	PVDF / PVDF	Ceramic	Fluorofilm™	PVDF / Polyprel®	4FV	PE .375" O.D.	
B11 ■ -	85HV	0.9	Polypropylene	316 S.S.	Fluorofilm™	PTFE		PE .5" O.D.	Vinyl .938" O.D.
	86HV	0.9	Acrylic / PP	316 S.S.	Fluorofilm™	Hypalon®		PE .5" O.D.	Vinyl .938" O.D
	89	0.9	UHMW PE	Ceramic	Hypalon®	Hypalon®		PE .5" O.D.	Vinyl .500" O.D.
	95S**	0.9	Polypropylene	Ceramic	Fluorofilm™	PTFE	4FV	PE .375" O.D.	
	297	0.9	316 S.S.	316 S.S.	Fluorofilm™	316 S.S.		Pipe 1/4" NPT M	
	468SI†	1.8	PVC / PVC	Ceramic	Fluorofilm™	PVDF / Polyprel®	4FV	PE .375" O.D.	
	460SI†	1.8	Acrylic / PVC	Ceramic	Fluorofilm™	PVC / Polyprel®	4FV	PE .375" O.D.	
	460FI	1.8	Acrylic / PVDF	Ceramic	Fluorofilm™	PVDF / Polyprel®	4FV	PE .375" O.D.	
	368SI†	1.8	PVC / PVC	Ceramic	Fluorofilm™	PVC / Polyprel®	4FV	PE .375" O.D.	
	363SI†	1.8	PVDF / PVDF	Ceramic	Fluorofilm™	PVDF / PTFE	4FV	PE .375" O.D.	
B93 ■ -	362SI†	1.8	PVDF / PVDF	Ceramic	Fluorofilm™	PVDF / Polyprel®	4FV	PE .375" O.D.	
B73 ■ -	75HV	1.8	Polypropylene	316 S.S.	Fluorofilm™	PTFE		PE .5" O.D.	Vinyl .938" O.D.
B13 ■ -	75S**	1.8	Polypropylene	Ceramic	Fluorofilm™	PTFE	4FV	PE .5" O.D.	
	76HV	1.8	Acrylic / PP	316 S.S.	Fluorofilm™	Hypalon®		PE .5" O.D.	Vinyl .938" O.D.
	79	1.8	UHMW PE	Ceramic	Hypalon®	Hypalon®		PE .5" O.D.	Vinyl .500" O.D.
	277	1.8	316 S.S.	316 S.S.	Fluorofilm™	316 S.S.		Pipe 1/4" NPT M	
	418SI†	3.0	PVC / PVC	Ceramic	Fluorofilm™	PVC / Polyprel®	4FV	PE .5" O.D.	
	410SI†	3.0	Acrylic / PVC	Ceramic	Fluorofilm™	PVC / Polyprel®	4FV	PE .5" O.D.	
	410FI	3.0	Acrylic / PVDF	.375 PTFE	Fluorofilm™	PVDF / Polyprel®	4FV	PE .5" O.D.	
	318SI†	3.0	PVC / PVC	Ceramic	Fluorofilm™	PVC / Polyprel®	4FV	PE .5" O.D.	
B94 ■ -	312SI†	3.0	PVDF / PVDF	Ceramic	Fluorofilm™	PVDF / Polyprel®	4FV	PE .5" O.D.	
B74 ■ -	313SI†	3.0	PVDF / PVDF	Ceramic	Fluorofilm™	PVDF / PTFE	4FV	PE .5" O.D.	
B14 ■ -	15S**	3.0	Polypropylene	Ceramic	Fluorofilm™	PTFE	4FV	PE .5" O.D.	
	217	3.0	316 S.S.	316 S.S.	Fluorofilm™	316 S.S.		Pipe 1/4" NPT M	

■ See front page for voltage code specifications.

** These Liquid Ends are available without a 4FV.

† To specify ¼" NPT male, change 'I' to 'P'. To specify black, UV resistant tubing, change 'I' to 'U'. To specify Bleed 4FV, change 'S' to 'B'. To specify 3FV, change 'S' to'T'.

3FV Indicates that the pump is equipped with an LMI Three Function Valve (pressure relief, priming aid, line drain).

4FV Indicates that the pump is equipped with an LMI Four Function Valve. This diaphragm type anti-syphon/pressure relief valve is installed on the pump head. It provides anti-syphon protection and aids in priming, even under pressure.

Fluorofilm™ is a copolymer of PTFE and PFA.
Polyprel® is an elastomeric PTFE copolymer.

Polyprel is a registered trademark of Liquid Metronics Incorporated. Fluorofilm is a trademark of Liquid Metronics Incorporated. Hypalon is a registered trademark of E. I. du Pont de Nemours & Co., Inc.

Output Information

Series	Gallons per Hour* Min	Max	Liters per Hour* Min	Max	mL/cc per Minute* Min	Max	mL/cc per Stroke Min	Max	Maximum Injection Pressure
B11, B71, B91†	0.002	1.6	0.006	6.1	0.10	101	0.10	1.01	150 psi (10.30 Bar)
B12, B72, B92†	0.003	2.5	0.009	9.5	0.16	158	0.16	1.58	100 psi (6.90 Bar)
B13, B73, B93†	0.005	4.5	0.017	17.0	0.28	284	0.28	2.84	50 psi (3.50 Bar)
B14, B74, B94†	0.007	7.0	0.027	26.5	0.44	442	0.44	4.42	30 psi (2.07 Bar)

*Minimum output is based on one (1) stroke per minute and 10% stroke setting, minimum output can be reduced further in external mode.

†Series B9 pumps may be programmed for strokes per hour for lower outputs.

© 2002 LMI Milton Roy - All Rights Reserved
Printed in USA
Specifications subject to change without notice.

SECTION 44 42 73

Specification for Temporary Construction Treatment System (TCTS)

WATER TREATMENT TANKS

PART 1 GENERAL

1.1 SECTION INCLUDES

A. Water Treatment Tanks (Tanks)

1.2 RELATED SECTIONS

A. Division 40 05 23 – Valves
B. Section 44 42 56 – Water Treatment Pumps

1.3 DESCRIPTION

A. General
1. The temporary construction treatment system (TCTS) shall be operated to treat impacted water that is managed during construction activities. The treated effluent shall be discharged to the Hackensack River.

B. Design Criteria
1. As shown in the Contract Documents
2. Refer to Tank product literature

C. Performance Requirements
1. The Tanks and associated appurtenances shall be installed in order to perform the following functions:
   a. Equalization
   b. CrVI reduction
   c. pH control
   d. Flocculation
   e. Settling
   f. Pump tank

2. The treatment system shall be operated by the Contractor in order to achieve NJDPES discharge limits.

1.4 SUBMITTALS

A. Manufacturer's installation information

B. Shop Drawings: Show Tank and connection details
C. Tank specification information
D. O&M Manuals
E. Quality Control information.
   1. Unit operation analytical data – for performance testing
   2. Tank installation Logs
F. Proposed changes or modifications

1.5 QUALITY ASSURANCE

A. Quality assurance activities are described in the document titled "Construction Quality Assurance Plan, SCCC and Diamond Site, Kearny New Jersey."

B. The Engineer will collect the discharge sample to evaluate compliance with the NJPDES permit conditions.

1.6 QUALITY CONTROL

A. The Contractor shall be responsible for quality control activities during installation, start up and operation of the TCTS.

B. The Contractor shall perform routine performance monitoring by collecting samples from the in-system sample ports. The sampling ports are shown on the Drawings.

C. The Contractor shall comply with all applicable Federal, State and local laws or ordinances as well as applicable codes, standards and regulations.

D. The Contractor shall provide QC documentation to the Engineer.

1.7 DELIVERY, STORAGE, AND HANDLING

A. Store products in Manufacturer's unopened packaging until ready for installation.
B. Use proper equipment and methods during unloading and transporting material to ensure safety and to prevent damage.
C. Handle and store materials in accordance with Manufacturer's recommendations.

PART 2 PRODUCTS

2.1 TANKS

A. The Water Treatment Tank Schedule is provided in Table 444273 – A below.
B. The Contractor shall select the number of Tanks required based on field conditions encountered during construction and based on economic considerations and Engineer approval. Equalization and/or Effluent Tanks shall be added or reduced as needed.
C. The Tanks shall be as shown on the Water Treatment Tank Schedule or Engineer- approved equal.

Table 444273 – A

Schedule of Water Treatment Tanks

Tank Designation	Tank Description		Supplier/ Manufacturer	Model	Approx. Dimensions	Approx. Volume (gal)	Cover	Material
TC-EQ-A	Frac Tank	18,100 Gallon Worksafe Flip top Tank	Rain For Rent		8' x 45' 7" x 8'	18,100	Yes	Steel construction with cross style internal bracing
TC-CR-01	CrVI Reduction Tank	3,000 Gallon Flat Bottom Tank	SNYDER	5130	90" (dia.) x 127" (H)	3,000	Yes	HDLPE
TC-PH-01	pH Control Tank	3,000 Gallon Flat Bottom Tank	SNYDER	5130	90" (dia.) x 127" (H)	3,000	Yes	HDLPE
TC-FL-01	Flocculation Tank	5,600 Gallon Flat Bottom Tank	SNYDER	5250	142" (dia.) x 101" (H)	5,600	Yes	HDLPE
TC-CL-01-A	Tube Settler / Clarifier	Tube Settler	Rain For Rent		23' x 8'3" x 6' 9"	5,000	Yes	Carbon Steel
TC-CL-02	Pump Tank	1,100 Gallon Dome Bottom Tank	SNYDER	171	86" (dia.) x 55" (H)	1,100	Yes	HDLPE
TC-BF-A, B, C, D	Bag Filtration Units	Four Chambers	Rain For Rent	BF 400	Footprint: 62" x 36" x 61"; 7" (dia.) x 30" (H) for each bag filter	5 gal for each bag filter	Yes	Chamber constructed of 304 Stainless Steel
TC-GAC-A, B, C	GAC Units	GAC Adsorption Vessel	Calgon	CR50 00	72" x 64" x 98 5/8"	1,967	Yes	Carbon steel pressure vessel; internal epoxy lining
TC-ET-A	Frac Tank	18,100 Gallon Worksafe Flip top Tank	Rain For Rent		8' x 45' 7" x 8'	18,100	Yes	Steel construction with cross style internal bracing
TC-PF-A;	Pressure Filter Roll-off	25 Yard Filter Box	Rain For Rent		8'4" x 23' 1/2" x 5' 1-1/2"	5,049	Yes	Carbon steel

PART 3 EXECUTION

3.1 INSTALLATION

A. The Contractor shall furnish and install the Tanks, piping, controls, level switches, electrical, incidentals and associated appurtenances in accordance with Manufacturers instructions.

B. Confined Space Entry placards shall be placed on the tanks.

3.2 OPERATION

A. The Contractor shall be responsible for the satisfactory operation, maintenance (e.g. remove solids that have accumulated) and troubleshooting of the Tanks as needed for the duration of the TCTS Work.

B. Following completion of the installation, the Tanks will be performance tested. All equipment shall be adjusted and analyzed for misalignment, leaks, excessive vibration, safety protocol and overall performance, and the installation shall be subject to approval by the Engineer.

C. The Contractor shall provide replacement parts as needed.

D. The Contractor shall provide the services of a qualified Operator for the Tanks in accordance with NJDEP requirements.

E. Covers shall be maintained on the tanks at all times.

F. Level control switches shall be maintained in order to regulate the water levels and prevent overflow.

G. Ladders shall be maintained to facilitate inspection.

END OF SECTION

CHECKLIST ITEM 9

CONSTRUCTION SPECIFICATIONS CUT SHEETS

GENERAL INDUSTRIAL TWA

TC-EQ-A, B, C
Equalization Tank (s)
Rain for Rent 18,100 Gallon
Worksafe Flip Top Tank (s)

Rain for Rent

18,100 GALLON WORKSAFE ™
FLIP TOP TANK

Features

•Safety Stairway
•Complete Grip Strut Walkway with Safety Guardrails
•"V" shaped floor with 4" valves at each end for quick cleaning
•Flip top lids for ease of access and cleaning
•Easy to move and transport

Technical

•"V" shaped floor allowing residual fluid to easily flush out through the floor level 4" valves
•Staircase, guard rails, and three 22" man-way hatches standard
•Convenient monitoring of fluids and cleaning when project is complete

Material Specifications

•Steel construction with cross style internal bracing
•Two 4" Butterfly valves located at either end of the "V" shaped floor
•Permanently attached axles for maximum maneuverability
•Staircase attached to front end and a guard rail system on tank walkway
•Three 22" man-way hatches and 14 flush mount lids that can be latched in the open position

Rain for Rent
P.O. Box 2248
Bakersfield CA 93303
800-742-7246
661-393-1542
FAX 661-393-1542
www.rainforrent.com
info@rainforrent.com

Rain for Rent is a registered trademark of Western Oilfields Supply Company. Features and Specifications are subject to change without notice.

REV.NO.	DESCRIPTION	PREVIOUS DWG	BY	DATE

ITEM	QTY.	REF.	DESCRIPTION

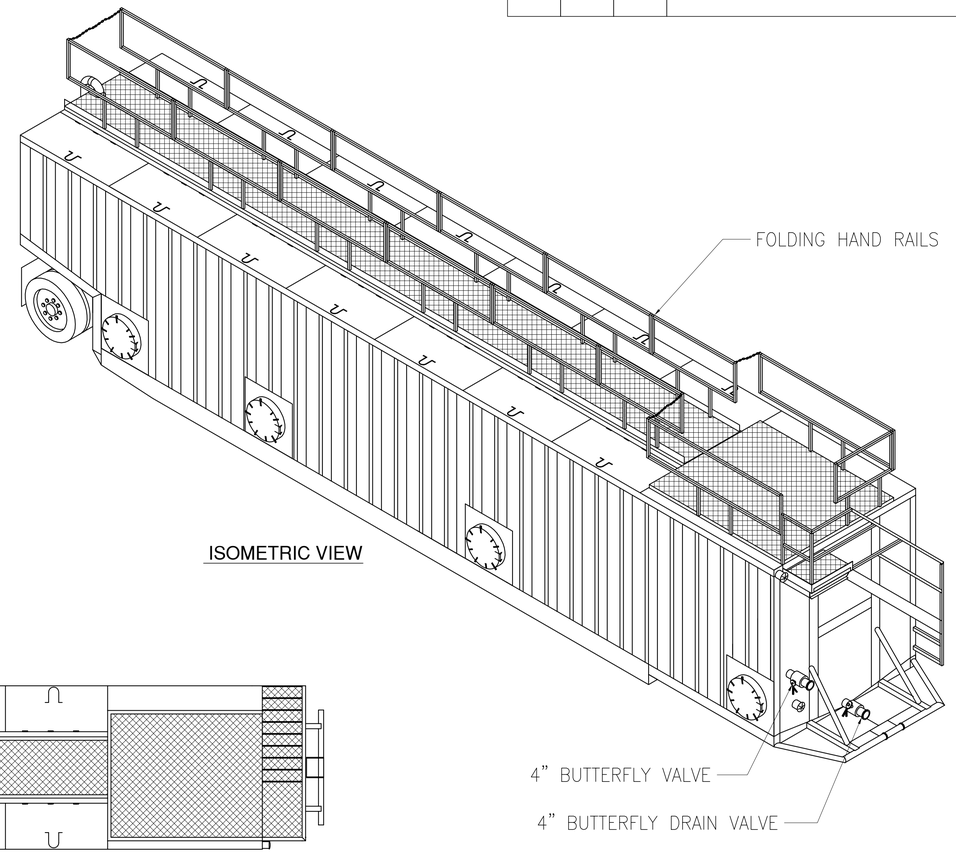

ISOMETRIC VIEW

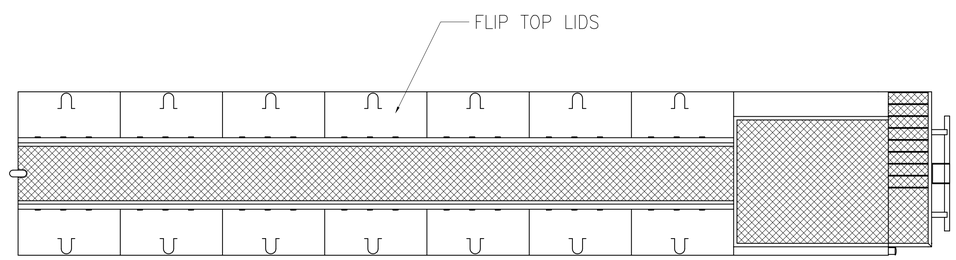

PLAN VIEW

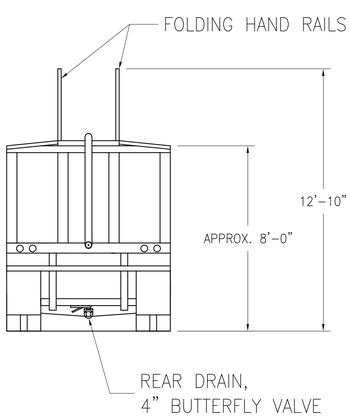

REAR VIEW

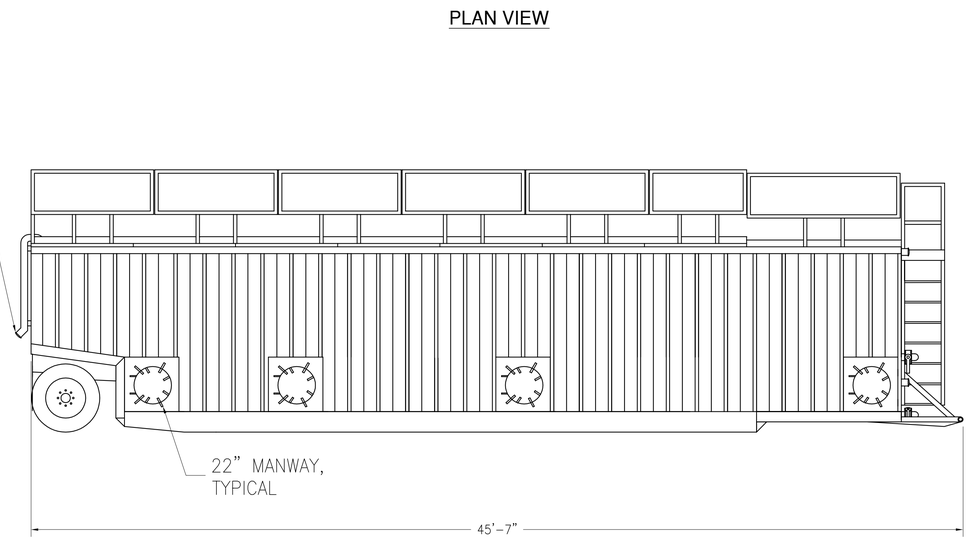

CURBSIDE VIEW

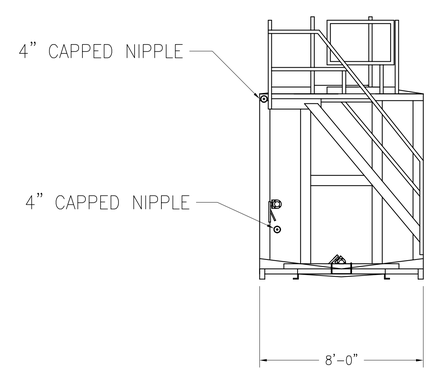

FRONT VIEW

Date 05-07-02
Scale NTS
Designed
Checked K.MUSICK
Drawn M.STEVENSON
Sheet Size

FLIP TOP TANK

18,100 GALLON

FRONTIER STYLE TANK

Rain For Rent
Engineering
3404 State Road PO Box 2248 Bakersfield Ca 93303

All information contained in or disclosed by this document is considered confidential and proprietary by Lake Company. All disclosures of design information and reproduction of this document and all sales rights are exclusively reserved by and to Lake Company and communication of this information to others is prohibited without the prior written consent of Lake Company.

1 Sheet of 1

Drawing Number
102301

Job Number
1010710

CHECKLIST ITEM 9

CONSTRUCTION SPECIFICATIONS CUT SHEETS

GENERAL INDUSTRIAL TWA

TC-CR-01
Chrome Reduction Tank
Snyder Industries, Inc. - 5130
3,000 Gallon Flat Bottom Tank

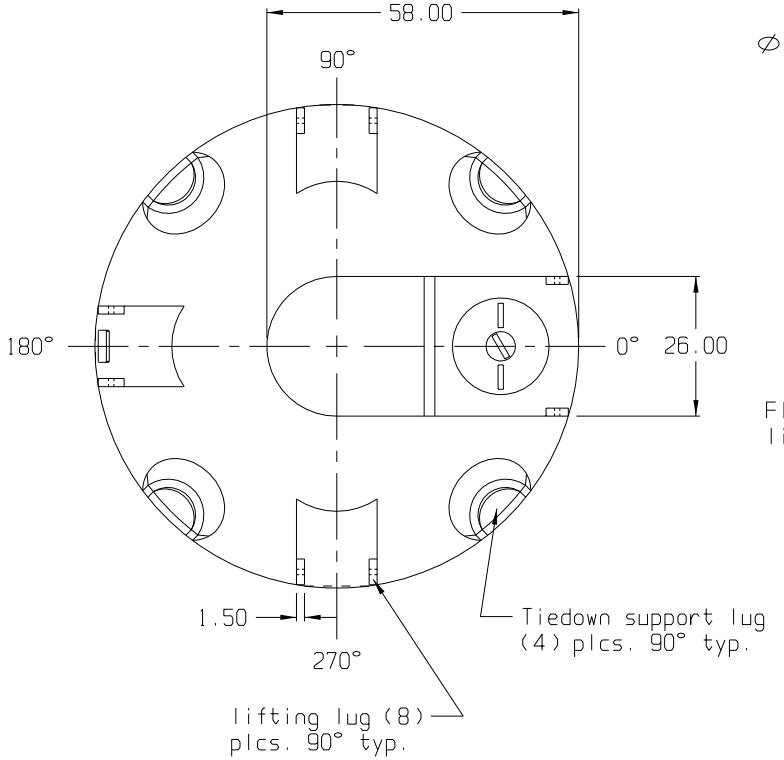

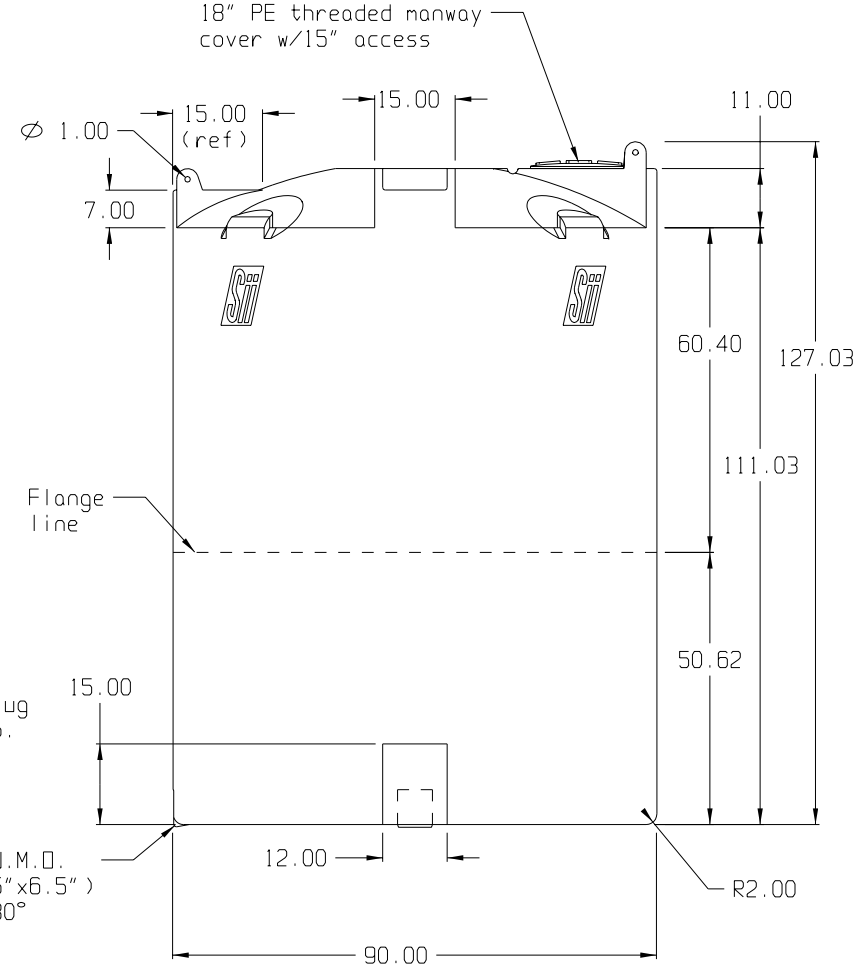

SNYDER INDUSTRIES INC.

(all dimensions in inches)

BASE FITTINGS TO BE LEFT INSTALLED AT TIME OF SHIPMENT PER Sii PROCEDURE

PART # TANK: 5130--L

REF#: 0000 06/24/02

3,000 GALLON FLAT BOTTOM TANK

CHECKLIST ITEM 9

CONSTRUCTION SPECIFICATIONS CUT SHEETS

GENERAL INDUSTRIAL TWA

TC-PH-01
pH Control Tank
Snyder Industries, Inc. - 5130
3,000 Gallon Flat Bottom Tank

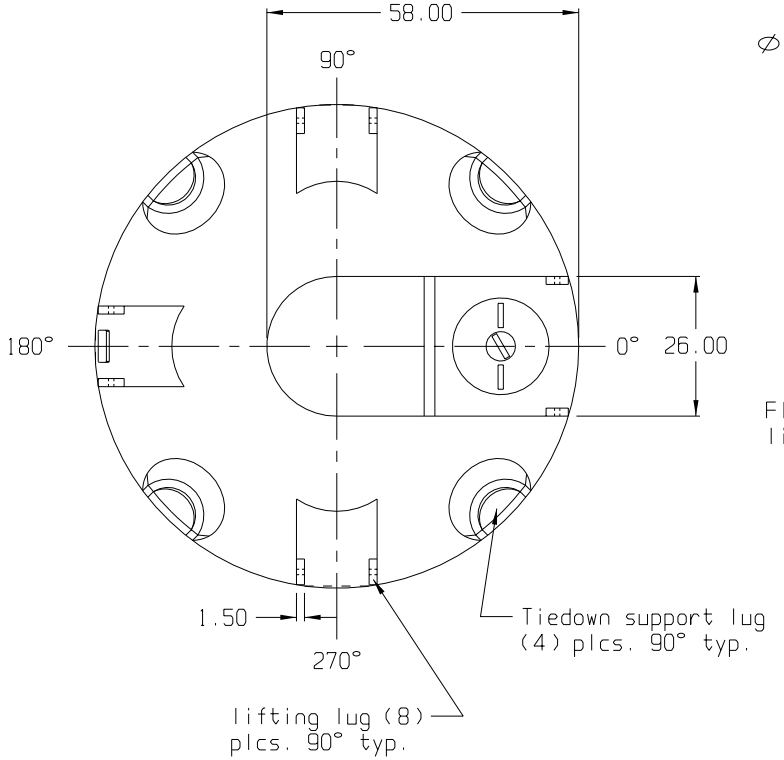

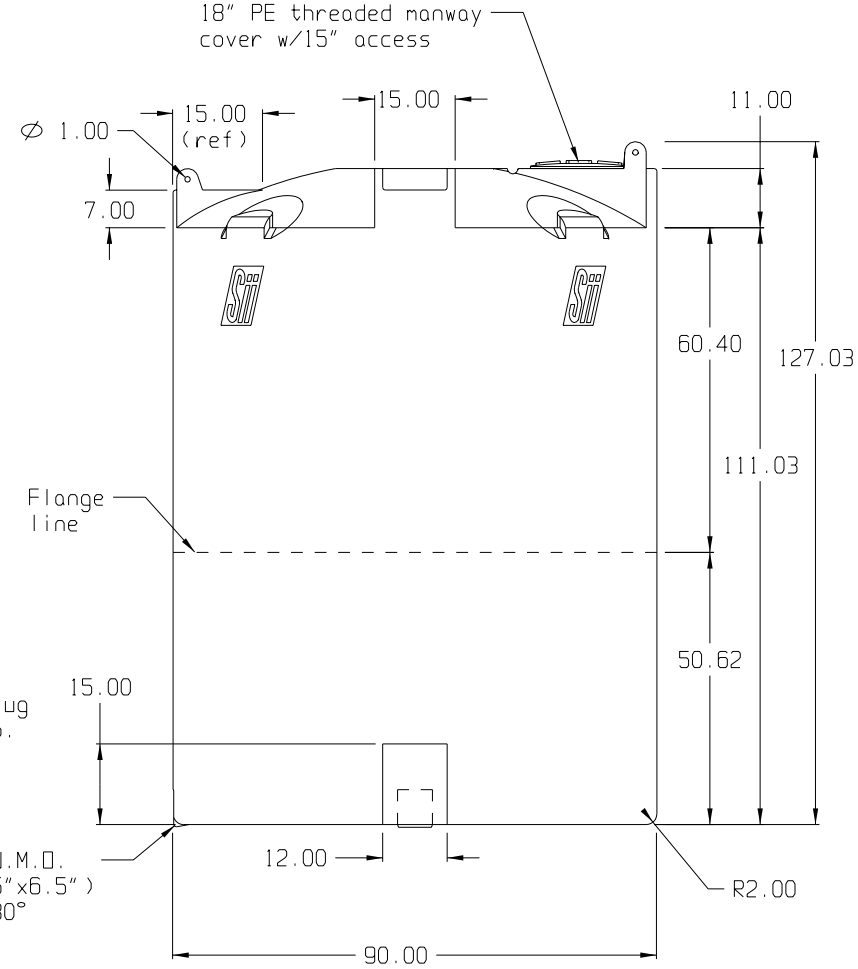

SNYDER INDUSTRIES INC.

(all dimensions in inches)

BASE FITTINGS TO BE LEFT INSTALLED AT TIME OF SHIPMENT PER Sii PROCEDURE

PART # TANK: 5130--L

REF#: 0000 06/24/02

3,000 GALLON FLAT BOTTOM TANK

CHECKLIST ITEM 9

CONSTRUCTION SPECIFICATIONS CUT SHEETS

GENERAL INDUSTRIAL TWA

TC-FL-01
Flocculation Tank
Snyder Industries, Inc. - 5250
5,600 Gallon Flat Bottom Tank

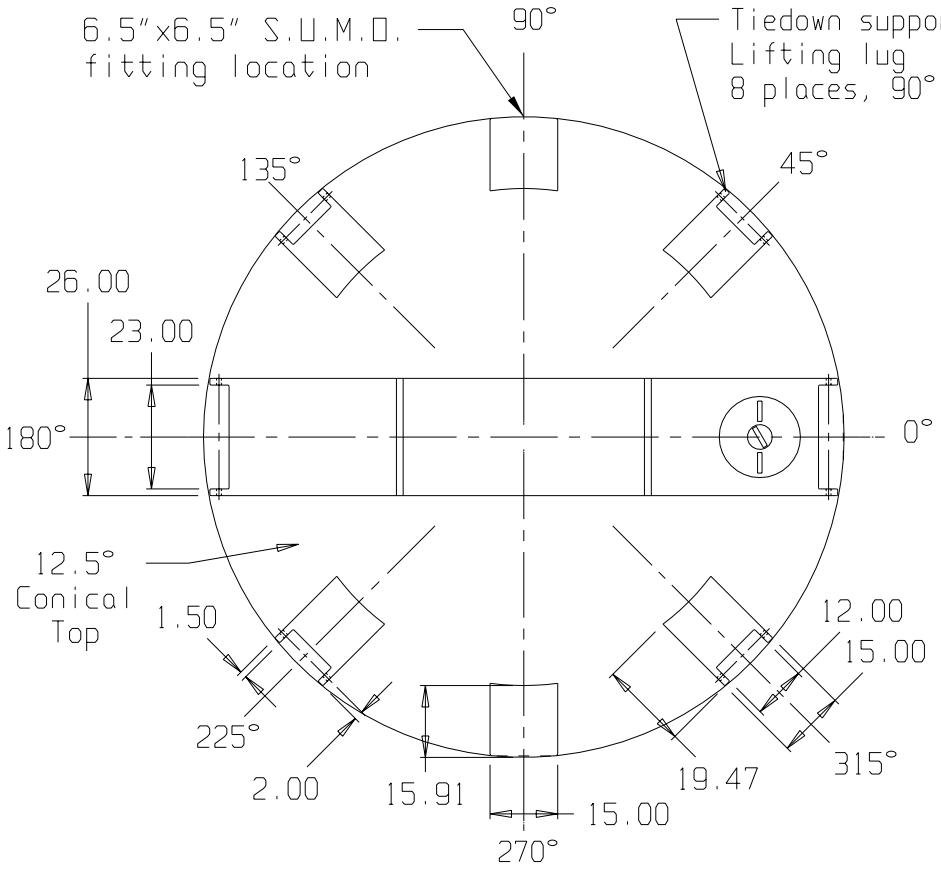

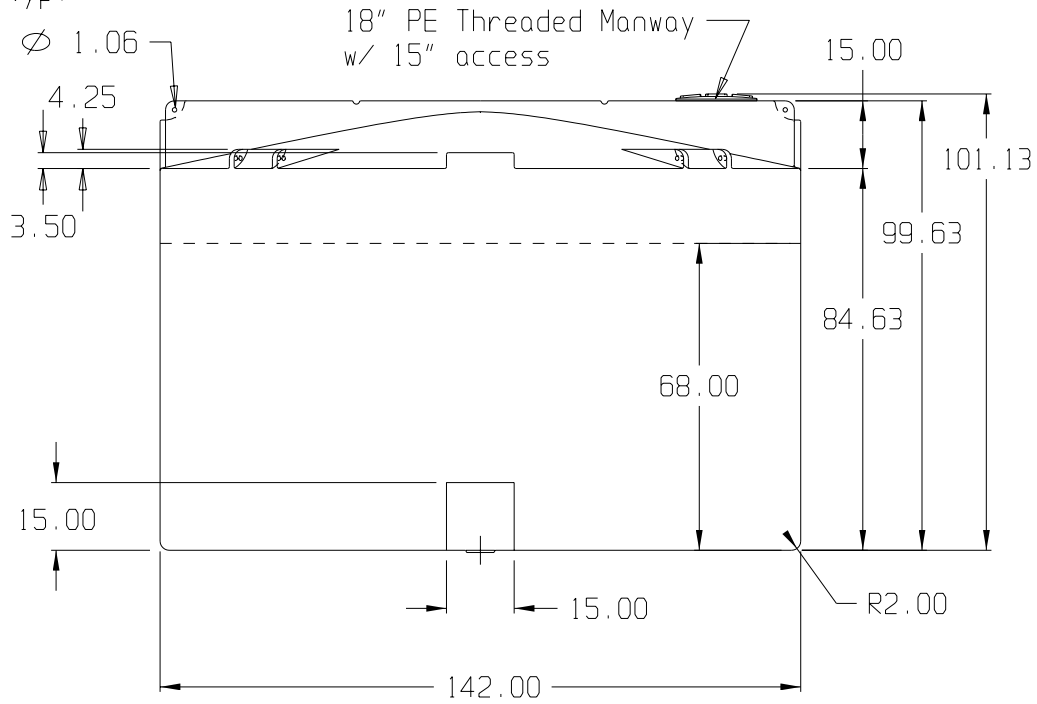

SNYDER INDUSTRIES INC.

(all dimensions in inches)

BASE FITTINGS TO BE LEFT INSTALLED AT TIME OF SHIPMENT PER Sii PROCEDURE

PART # TANK: 5250--P

5,600 GALLON FLAT BOTTOM TANK

REF#: 0000 06/26/02

CHECKLIST ITEM 9

CONSTRUCTION SPECIFICATIONS CUT SHEETS

GENERAL INDUSTRIAL TWA

TC-CL-01-A
Tube Settler / Clarifier
Rain for Rent
Tube Settler

RAIN FOR RENT

Tube Settler

Rain for Rent's **Tube Settlers** utilize individual, isolated tubular channels, each sloped at 60°, to expand the settling capacity of water and wastewater clarifiers. Engineered with the individual tubes rising in the same direction to eliminate mixing currents and unstable flow patterns. Constructed of flame-resistant, self-extinguishing PVC that is also inert to naturally occurring constituents in water and wastewater.

Improve Efficiency

The shape and configuration of the modules inside the Tube Settler are engineered to minimize the Reynolds Number and to create laminar flow for rapid settling of solids. This enhanced settling reduces chemical coagulant use and downstream filter backwash requirements. For plant design and upgrading, less settling area is needed.

Structural Integrity

The Tube Settler has a 5,000 gallon maximum capacity with a swing-out door for easy cleaning. The modules inside the Tube Settler are self-supporting and constructed of prime, rigid, UV-protected PVC. Integrated structural ribs provide substantial loading strength (maximum 250 lbs/ft^2). The unique design assures a solid interface during installation.

Rain for Rent

P.O. Box 2248 • Bakersfield, CA 93303

800-742-7246 • 661-399-9124

Fax • 661-393-1542

rainforrent.com

RAIN FOR RENT

CHECKLIST ITEM 9

CONSTRUCTION SPECIFICATIONS CUT SHEETS

GENERAL INDUSTRIAL TWA

TC-CL-02
Pump Tank
Snyder Industries, Inc. - 171
1,100 Gallon Dome Bottom Tank

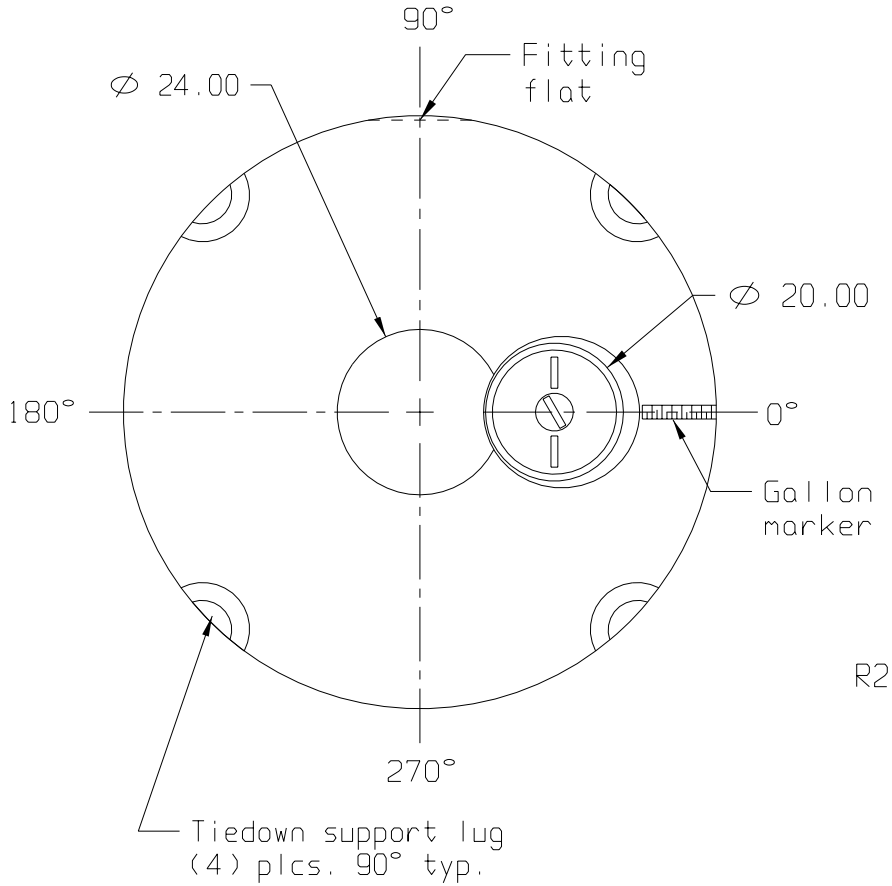

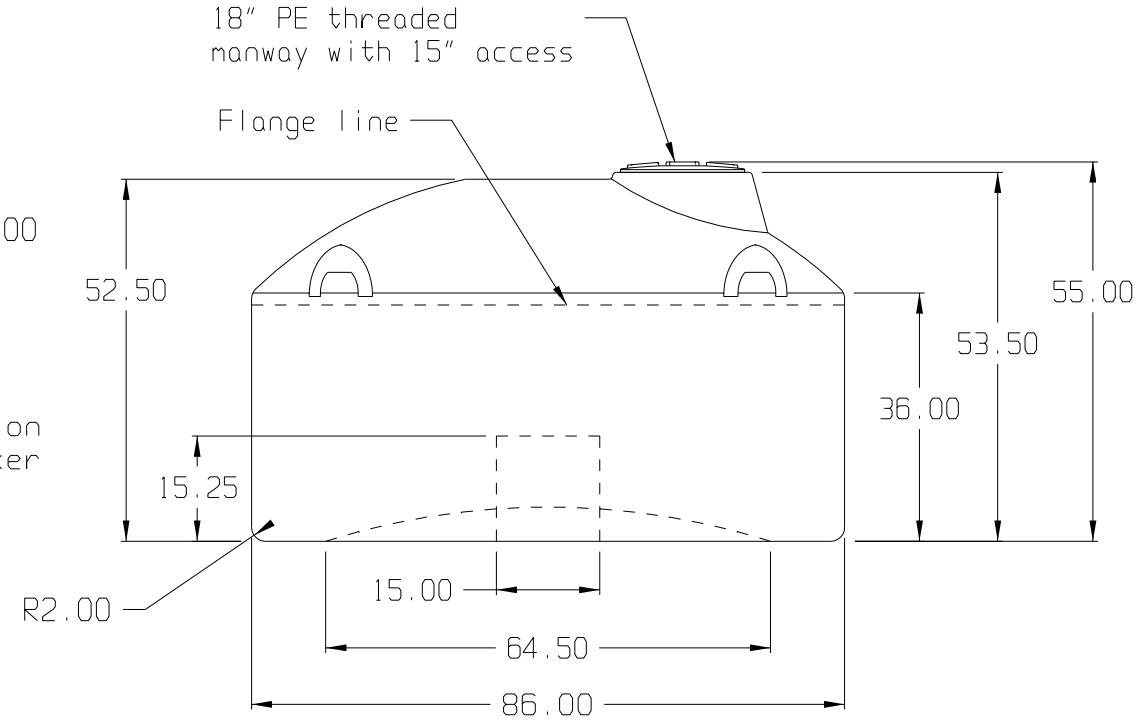

(all dimensions in inches)

BASE FITTINGS TO BE LEFT INSTALLED AT TIME OF SHIPMENT PER SII PROCEDURE

1,100 GALLON DOME BOTTOM TANK

PART # TANK: 171--L

REF#: 0000 02/12/03

SNYDER INDUSTRIES INC.

CHECKLIST ITEM 9

CONSTRUCTION SPECIFICATIONS CUT SHEETS

GENERAL INDUSTRIAL TWA

TC - BF - A, B, C, D

Rain for Rent – BF 400

4-Chambered

Bag Filtration Unit

Rain for Rent

BF 400
Up to 400 GPM

Features

- Manifold connections are 6" 150 lb flanges
- Quadruple bag filter
- Bag filter for high solids holding capacity
- Replaceable bag filters from 100 to 1 micron nominal rating
- No moving parts
- Skid mounted

Technical

- Bag filter chambers connect in parallel
- Units are fitted with bleed valves and pressure gauges
- System can stand alone for sediment removal or be used in combination with filter equipment
- Footprint: 62" long x 36" wide x 61" high
- Dry weight: 1,150 lbs.

Material Specifications

- Chambers constructed of 304 Stainless Steel
- Piping constructed of 304 stainless steel
- Each bag filter chamber holds one (1) 7" x 30" double- stitched filter bag
- Maximum operating pressure: 125psi
- Stainless Steel inlet and outlet manifolds

Available Accessories

- Power Prime Pumps
- Spill Guard Containment berms
- Stainless Steel 304 and Carbon Steel storage tanks in
- Bi-Level, Mixer, Weir and Manifold configurations
- Polyethylene storage tanks
- Cartridge and bag filters
- HDPE pipe and fittings
- Roll off boxes, dewatering bins and vacuum boxes
- Flow meters and pressure reducing/ sustaining valves
- Aluminum Victaulic pipe and fittings
- Suction and discharge hose

Rain for Rent
P.O. Box 2248
Bakersfield CA 93303
800-742-7246
661-393-1542
FAX 661-393-1542
www.rainforrent.com
info@rainforrent.com

Rain for Rent is a registered trademark of Western Oilfields Supply Company. Features and Specifications are subject to change without notice.

CHECKLIST ITEM 9

CONSTRUCTION SPECIFICATIONS CUT SHEETS

GENERAL INDUSTRIAL TWA

TC-GAC-A, B, C
Calgon CR5000
Granular Activated Carbon
(GAC) Adsorption Vessels

CALGON

CALGON CARBON CORPORATION

Making Water and Air Safer and Cleaner

CR2000 AND CR5000 ADSORBERS

Granular Activated Carbon Adsorption Vessel

Adsorber Vessel Specifications

- Carbon steel pressure vessel
- Pressure rating 50 psig at 100°F (based on ASME design)
- Manway on top head for internal access and carbon fill
- Skid support / fork truck channels
- Lifting lugs
- Internal epoxy lining
- Splash plate inlet distributor
- PVC pipe underdrain with PPL water collection nozzles, nozzle count is one per square foot of cross sectional area
- Exterior epoxy paint finish
- Stainless steel carbon discharge piping fitted with a bronze ball valve

Dimensions:	CR2000	CR5000
Height	92″	98 5/8″
Plot Area	51″x45″	72″x64″
Weights:		
Typical weight of GAC	2,000 lbs.*	5,000 lbs.*
Empty	1,500 lbs.	2,200 lbs.
Shipping with Dry GAC	3,500 lbs.*	7,200 lbs.*
Operating	8,300 lbs.	17,200 lbs.
Connections:	3″, 150 lbs. FLG.	4″, 150 lbs. FLG.

*Approximate weights. May be less depending on type and density of carbon.

General Description

Calgon Carbon's CR2000 and CR5000 are pressure vessels designed to treat water using granular activated carbon (GAC). The vessels arrive filled with granular activated carbon for the removal of organic compounds from a variety of applications including: waste water streams, ground water remediation, pump tests, air stripper polishing, and pump and treat systems. The CR2000 is filled with 2,000 lbs.* of GAC and can treat up to 100 gpm. The CR5000 is filled with 5,000 lbs.* of GAC and can treat up to 250 gpm.

Features and Benefits

Flexibility. The CR vessels treat water downflow through a fixed bed of granular activated carbon, and therefore, can handle varying flows and on-off operating conditions. When multiple vessels and the optional pipe rack are purchased, the vessels can be arranged in parallel to treat higher flows or can be connected in series to optimize carbon usage.

High Operating Pressures. The CR vessels are designed to operate at pressures up to 50 psig at 100°F (baed on ASME design).

High Flow Rates. The CR vessels are designed with large process connections to allow for higher flow rates while maintaining reasonable pressure drops.

High Performance Underdrain. The CR vessels have a corrosion resistant underdrain with a nozzle count of one per square foot of bed area for even collection of treated water.

Granular Activated Carbon. The CR vessels can be provided with any of Calgon Carbon Corporation's extensive product line of granular activated carbon. A Technical Sales Representative can assist in selecting the most cost effective carbon for your application.

Easy to Install. The CR vessels are fitted with supports for ease of off-loading and positioning at the treatment location using either a fork truck or crane. The vessels can also be secured to a foundation for a permanent installation.

Ready to use. The CR vessels are delivered pre-loaded with GAC to minimize start-up time and installation costs.

CHECKLIST ITEM 9

CONSTRUCTION SPECIFICATIONS CUT SHEETS

GENERAL INDUSTRIAL TWA

TC-ET-A
Final Effluent Tank
Rain for Rent
18,100 Gallon Worksafe Flip Top

Rain for Rent

18,100 GALLON WORKSAFE ™
FLIP TOP TANK

Features

•Safety Stairway
•Complete Grip Strut Walkway with Safety Guardrails
•"V" shaped floor with 4" valves at each end for quick cleaning
•Flip top lids for ease of access and cleaning
•Easy to move and transport

Technical

•"V" shaped floor allowing residual fluid to easily flush out through the floor level 4" valves
•Staircase, guard rails, and three 22" man-way hatches standard
•Convenient monitoring of fluids and cleaning when project is complete

Material Specifications

•Steel construction with cross style internal bracing
•Two 4" Butterfly valves located at either end of the "V" shaped floor
•Permanently attached axles for maximum maneuverability
•Staircase attached to front end and a guard rail system on tank walkway
•Three 22" man-way hatches and 14 flush mount lids that can be latched in the open position

Rain for Rent
P.O. Box 2248
Bakersfield CA 93303
800-742-7246
661-393-1542
FAX 661-393-1542
www.rainforrent.com
info@rainforrent.com

Rain for Rent is a registered trademark of Western Oilfields Supply Company. Features and Specifications are subject to change without notice.

REV.NO.	DESCRIPTION	PREVIOUS DWG	BY	DATE

ITEM	QTY.	REF.	DESCRIPTION

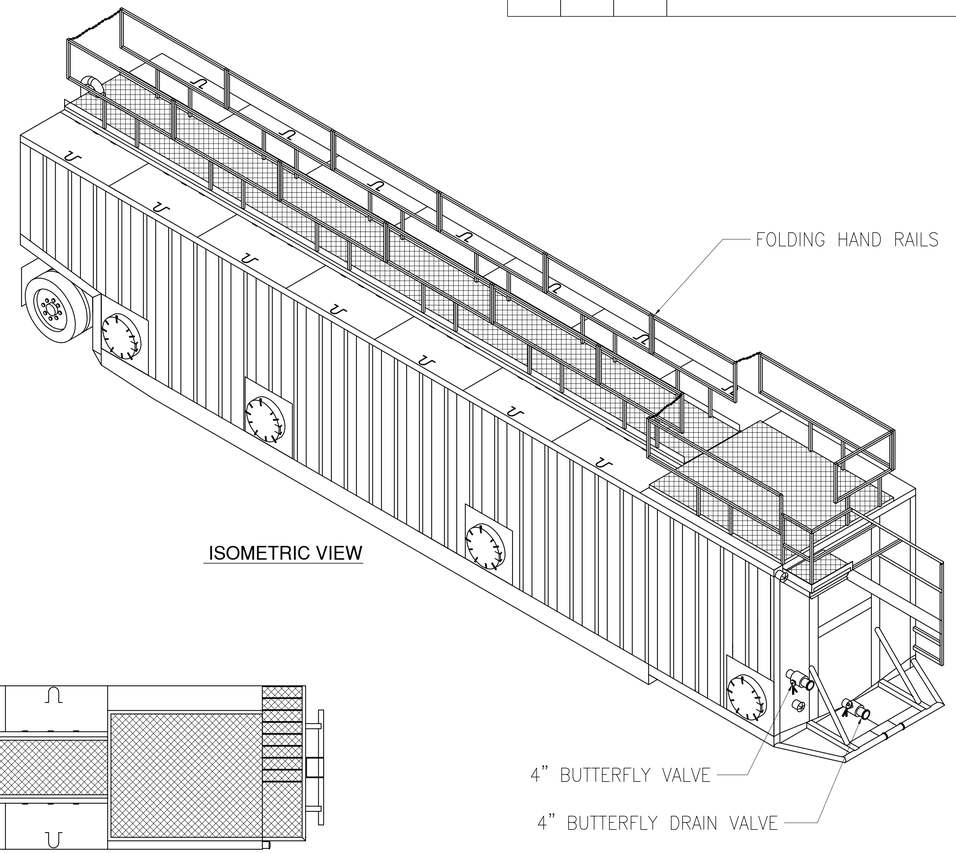

ISOMETRIC VIEW

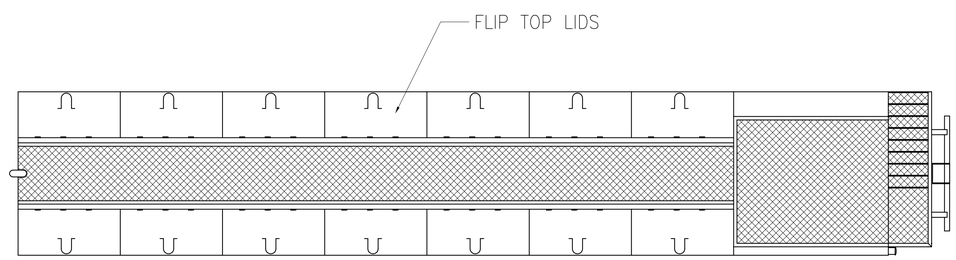

PLAN VIEW

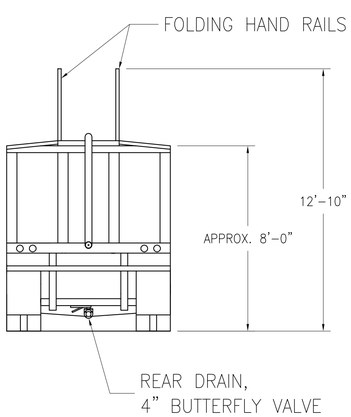

REAR VIEW

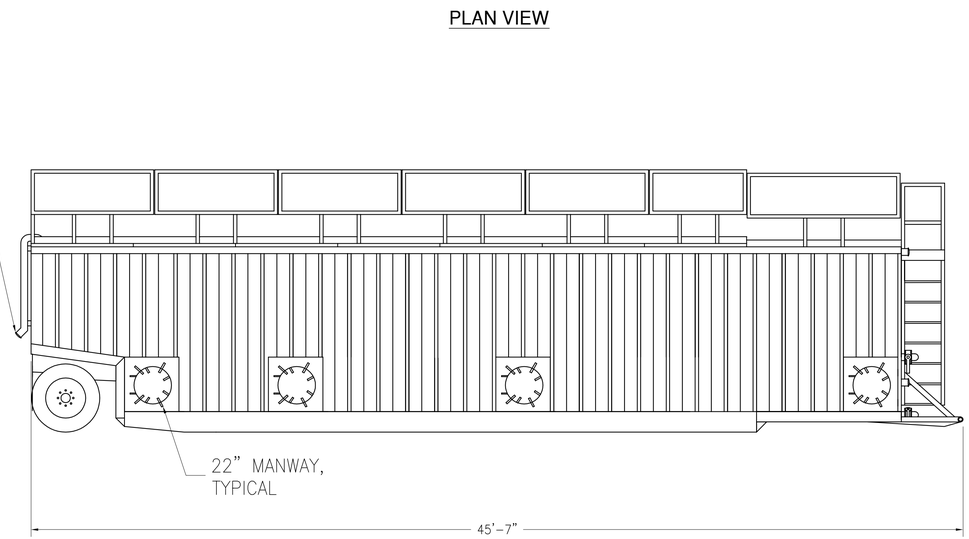

CURBSIDE VIEW

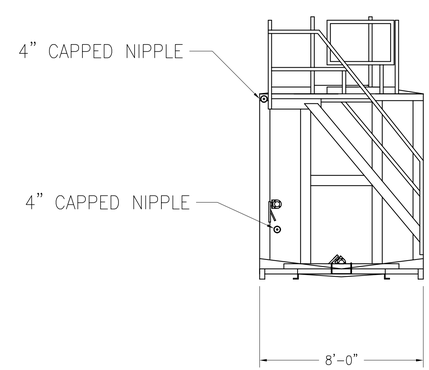

FRONT VIEW

Date 05-07-02
Scale NTS
Designed
Checked K.MUSICK
Drawn M.STEVENSON
Sheet Size

FLIP TOP TANK

18,100 GALLON

FRONTIER STYLE TANK

Rain For Rent
Engineering
3404 State Road PO Box 2248 Bakersfield Ca 93303

All information contained in or disclosed by this document is considered confidential and proprietary by Lake Company. All disclosures of design information and reproduction of this document and all sales rights are exclusively reserved by and to Lake Company and communication of this information to others is prohibited without the prior written consent of Lake Company.

1 Sheet of 1

Drawing Number
102301

Job Number
1010710

CHECKLIST ITEM 9

CONSTRUCTION SPECIFICATIONS CUT SHEETS

GENERAL INDUSTRIAL TWA

TC-PF-01
Pressure Filtration Roll-off
Rain for Rent
25 Yard Filter Box

Rain for Rent

Model 25 Yard Filter Box

Features

- Front floor sections fold up for easy cleaning
- Rugged floor and side screens
- Completely removable screen basket
- Various mesh filter cloths available
- Roll over tarp
- Standard roll off configuration

Technical

- 25 yard capacity
- Four - 4" drains for fast dewatering
- Fully gasketed rear door - watertight
- Weight 3,300 lbs.
- 8'4" Wide, 23' 1/2" Long, 5' 1-1/2" High

Available Accessories

- Power Prime Pumps
- Spill Guard Containment berms
- Stainless Steel 304 and Carbon Steel storage tanks in
- Bi-Level, Mixer, Weir and Manifold configurations
- Polyethylene storage tanks
- Cartridge and bag filters
- HDPE pipe and fittings
- Roll off boxes, dewatering bins and vacuum boxes
- Flow meters and pressure reducing/ sustaining valves
- Aluminum Victaulic pipe and fittings
- Suction and discharge hose

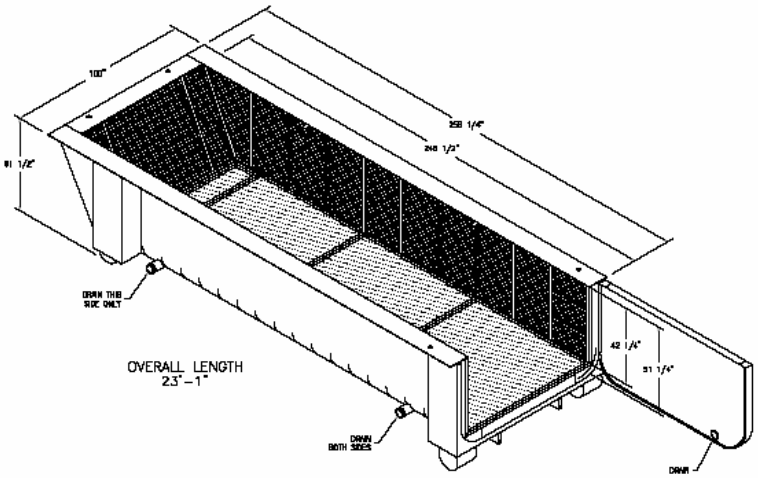

Rain for Rent
P.O. Box 2248
Bakersfield CA 93303
800-742-7246
661-393-1542
FAX 661-393-1542
www.rainforrent.com
info@rainforrent.com

Rain for Rent is a registered trademark of Western Oilfields Supply Company. Features and Specifications are subject to change without notice.

SECTION 44 43 13

Specification for Temporary Construction Treatment System (TCTS)

FILTERS

PART 1 GENERAL

1.1 SECTION INCLUDES

A. Granular Activated Carbon (GAC) Filters
B. Bag Filtration Units
C. Filter Boxes
D. Geotextile Tubes

1.2 RELATED SECTIONS

A. Division 40 05 23 – Valves
B. Section 44 42 56 – Water Treatment Pumps

1.3 DESCRIPTION

A. General

1. The temporary construction treatment system (TCTS) shall be operated to treat impacted water that is managed during construction activities. The treated effluent shall be discharged to the Hackensack River.

B. Design Criteria

1. As shown in the Contract Documents.
2. Refer to Calgon Carbon Corporation (Calgon) GAC carbon adsorption vessel product literature.
3. Refer to Rain for Rent BF 400 skid mounted bag filter product literature.
4. Refer to Rain for Rent Filter Box and SiltTex Geotextile Tube product literature.

C. Performance Requirements

1. GAC filters - to remove organic constituents of concern (COC) from the wastewater.
2. Bag Filters – to remove suspended and dissolved solids from the wastewater.
3. Filter Box/Geotextile Tube – to dewater the solids separated from the tube settler (clarifier).

4. The treatment system shall be operated by the Contractor in order to achieve New Jersey Pollution Discharge Elimination System (NJPDES) discharge limits.
5. The Contractor shall install and operate the system in accordance with all applicable New Jersey Department of Environmental Protection (NJDEP), Treatment Works Approval (TWA) and the project-specific Air Permit requirements.

1.4 SUBMITTALS

A. Manufacturer's installation information

B. Shop Drawings: Show product and connection details

C. GAC specification information

D. Bag Filter specification information

E. Filter Box specification information

F. Geotextile Tube specification information

G. O&M Manuals

H. Quality Control information
   1. Unit operation analytical data – for performance testing
   2. Operation Logs

I. Proposed changes or modifications

1.5 QUALITY ASSURANCE

A. Quality assurance activities are described in the document titled "Construction Quality Assurance Plan, SCCC and Diamond Site, Kearny, New Jersey."

B. The Engineer will collect the discharge sample to evaluate compliance with the NJPDES permit conditions.

1.6 QUALITY CONTROL

A. The Contractor shall be responsible for quality control activities during installation, start up and operation of the TCTS filters.

B. The Contractor shall perform routine performance monitoring by collecting samples from the in-system sample ports. And, the Contractor shall change out GAC media and filters as needed based on the analytical results.

C. The Contractor shall comply with all applicable Federal, State and local laws or ordinances as well as applicable codes, standards and regulations.

D. The Contractor shall provide QC documentation to the Engineer.

1.7 DELIVERY, STORAGE, AND HANDLING

A. Store products in Manufacturer's unopened packaging until ready for installation.

B. Use proper equipment and methods during unloading and transporting material to ensure safety and to prevent damage.

C. Handle and store materials in accordance with Manufacturer's recommendations.

PART 2 PRODUCTS

2.1 GAC FILTER

A. The GAC filters shall be Calgon Model CR5000 Adsorbers or Engineer-approved equal.
B. GAC filters shall be provided filled to design capacity with Calgon Filtrasorb 300 or Filtrasorb 400 or Engineer-approved equal.

2.2 BAG FILTER

A. The bag filter housing assembly shall be a BF 400 skid-mounted unit as furnished by Rain for Rent or Engineer-approved equal.
B. The filters shall be high capacity process filters and compatible with the housing units as recommended by the Manufacturer. Filter housings shall be provided complete with filter bags in place, with additional filter bags as needed for each housing.

2.3 FILTER BOX

A. The filter box shall be a Model 25 Yard Filter Box as furnished by Rain for Rent or Engineer-approved equal.

2.4 GEOTEXTILE TUBES

A. The geotextile tubes (to be placed inside the filter box) shall be SiltTex Geotextile Tubes as manufactured by Geosynthetics Inc., or Engineer-approved equal.

PART 3 EXECUTION

3.1 INSTALLATION

A. The Contractor shall furnish and install the filters, piping, electrical, controls, incidentals and associated appurtenances in accordance with Manufacturer's instructions.

B. Pressure relief valves and rupture disks shall be placed on filter influent pipes.

C. Automatic vent valves shall be installed on top of the GAC filters to remove captured air.

3.2 OPERATION

A. The Contractor shall be responsible for the satisfactory operation, maintenance and troubleshooting of the filters as needed for the duration of the TCTS Work.

B. Following completion of the installation, the filters shall be performance tested. All equipment shall be adjusted and analyzed for misalignment, leaks, excessive vibration, safety protocol and overall performance, and the installation shall be subject to approval by the Engineer.

C. The Contractor shall provide replacement parts as needed.

D. The Contractor shall provide the services of a qualified Operator for the equipment in accordance with NJDEP requirements.

E. The Contractor shall monitor the performance of the filter media and replace the spent media as needed.

F. The spent GAC shall be characterized for offsite disposal or regeneration in accordance with NJDEP and United States Environmental Protection Agency (USEPA) requirements.

G. Spent filter bags shall be disposed offsite in accordance with NJDEP and USEPA requirements.

H. The Manufacturer recommended pressure drops for filters shall not be exceeded.

I. Covers shall be maintained on filters during operation.

END OF SECTION

CHECKLIST ITEM 9

CONSTRUCTION SPECIFICATIONS CUT SHEETS

GENERAL INDUSTRIAL TWA

SiltTex® Geotextile Tube/ Dewatering Bag Geosynthetics, Inc.

SiltTex GEOTEXTILE TUBES™

COASTAL PROTECTION AND DEWATERING

SiltTex Geotextile Tubes™ are manufactured from a variety of permeable, high-strength woven polypropylene or polyester fabrics, which are sewn to exacting standards by our in-house fabrication crews.

Once onsite, geotextile tubes are hydraulically filled with heavily saturated waste materials or sand. When fully dewatered, the material has reduced weight and volume, allowing for more cost effective material handling. In coastal applications the structure is strategically placed before filling to offer effective erosion alternatives.

SiltTex GEOTEXTILE TUBES™

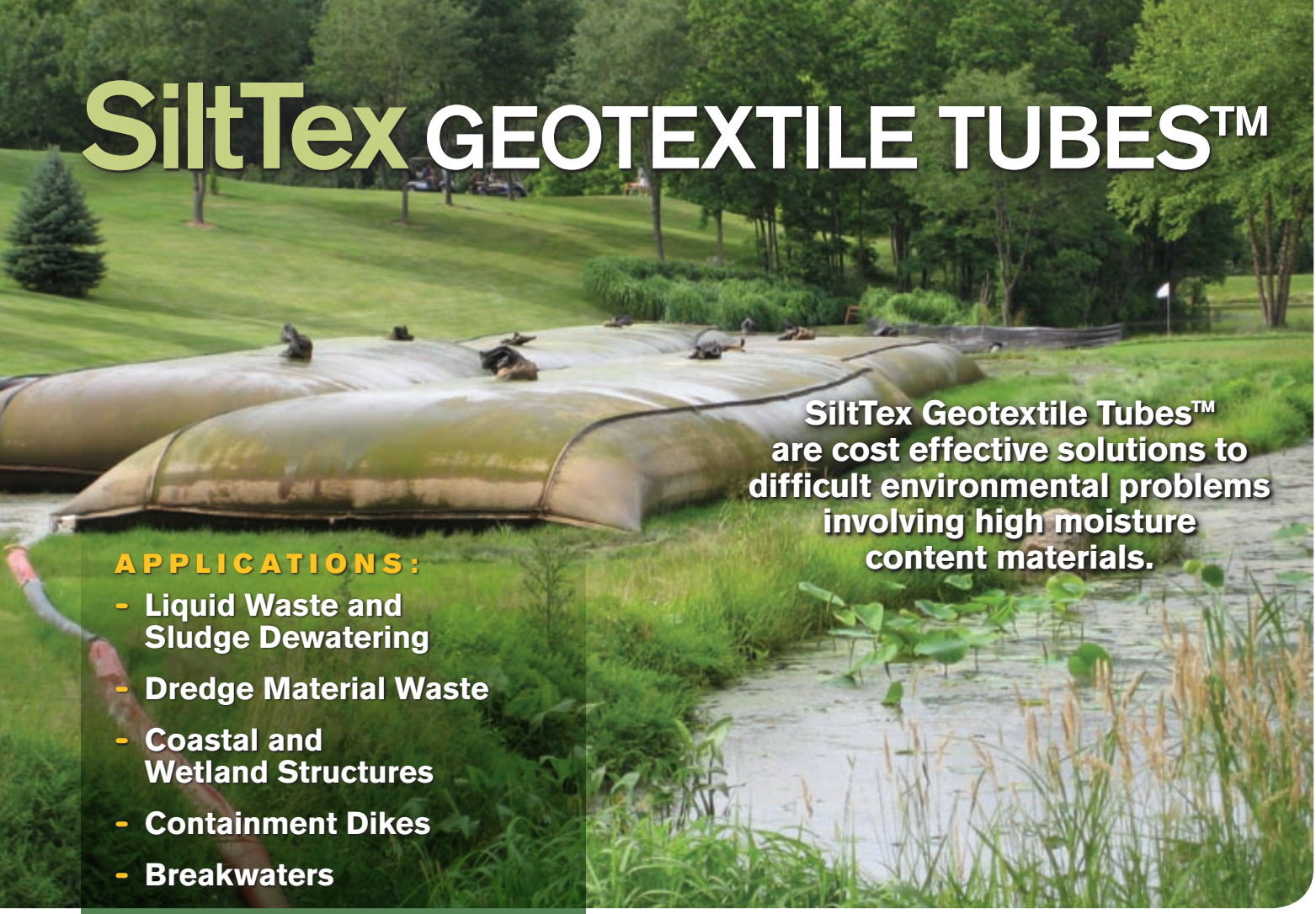

SiltTex Geotextile Tubes™ are cost effective solutions to difficult environmental problems involving high moisture content materials.

APPLICATIONS:

- Liquid Waste and Sludge Dewatering
- Dredge Material Waste
- Coastal and Wetland Structures
- Containment Dikes
- Breakwaters

ADVANTAGES:

- Improved Effluent Clarity
- Little or No Odor
- Less Time for Drying
- No Surface Area Disruption
- Cost Effective
- Passive Dewatering

Standard SiltTex Geotextile Tube™ Sizes

30' CIRCUMFERENCE

30' x 50'	1 Fill Port
30' x 75'	2 Fill Ports
30' x 100'	2 Fill Ports

Capacity – 2.1 cubic yards / linear foot

45' CIRCUMFERENCE

45' x 50'	1 Fill Port
45' x 75'	2 Fill Ports
45' x 100'	2 Fill Ports

Capacity – 3.9 cubic yards / linear foot

60' CIRCUMFERENCE

60' x 100'	2 Fill Ports

Capacity – 6.1 cubic yards / linear foot

Custom dimensions available based on project requirements.

Dimensions and capacities are represented as typical values and are not to be used for design purposes. GSI makes no warranties and assumes no liability in connection with the use of this information.

GEO-SYNTHETICS, INC.

2401 Pewaukee Road
Waukesha, Wisconsin 53188-6904
800-444-5523 • 262-524-7979
FAX 262-524-7961

www.geo-synthetics.com

SECTION 44 44 13

Specification for Temporary Construction Treatment System (TCTS)

WATER TREATMENT CHEMICAL FEED EQUIPMENT

PART 1 GENERAL

1.1 SECTION INCLUDES

A. Cr(VI) reduction - chemical feed equipment.
B. pH control - chemical feed equipment.

1.2 RELATED SECTIONS

A. Division 40 05 23 – Valves
B. Section 44 42 56 – Water Treatment Pumps
C. Section 44 42 73 – Water Treatment Tanks
D. Section 44 44 43 – Water Heavy Metal Treatment Equipment

1.3 DESCRIPTION

A. General
   1. The temporary construction treatment system (TCTS) shall be operated to treat impacted water that is managed during construction activities. The treated effluent shall be discharged to the Hackensack River.

B. Design Criteria
   1. As shown on the Drawings.

C. Performance Requirements
   1. To deliver the reducing chemicals and pH control chemicals to the Cr(VI) reduction system.
   2. The treatment system shall be operated by the Contractor in order to achieve New Jersey Pollution Discharge Elimination System (NJPDES) discharge limits.
   3. The Contractor shall install and operate the system in accordance with all applicable New Jersey Department of Environmental Protection (NJDEP), Treatment Works Approval (TWA) and the project-specific Air Permit requirements.
   4. The tubing used for the chemical feed system shall be chemically compatible.

1.4 SUBMITTALS

A. Manufacturer's installation information.
B. Shop Drawings: Show product and connection details.
C. O&M Manuals.
D. Quality Control information.
   1. Unit operation analytical data – for performance testing.

2. Operation Logs.

E. Proposed changes or modifications.

1.5 QUALITY ASSURANCE

A. Quality assurance activities are described in the document titled "Construction Quality Assurance Plan, SCCC and Diamond Site, Kearny, New Jersey."

B. The Engineer will collect the discharge sample to evaluate compliance with the NJPDES permit conditions.

1.6 QUALITY CONTROL

A. The Contractor shall be responsible for quality control activities during installation, start up and operation of the TCTS.

B. The Contractor shall perform routine performance monitoring by collecting samples from the in-system sample ports. And, the Contractor shall maintain the chemical feed equipment as needed based on the analytical results.

C. The Contractor shall comply with all applicable Federal, State and local laws or ordinances as well as applicable codes, standards and regulations.

D. The Contractor shall provide QC documentation to the Engineer.

1.7 DELIVERY, STORAGE, AND HANDLING

A. Store products in Manufacturer's unopened packaging until ready for installation.

B. Use proper equipment and methods during unloading and transporting material to ensure safety and to prevent damage.

C. Handle and store materials in accordance with Manufacturer's recommendations.

PART 2 PRODUCTS

2.1 CHEMICAL FEED

1. Na_2S and $FeSO_4$ feed system – The Contractor shall furnish the feed system chemicals and pump.
2. H_2SO4 and NaOH feed systems – The Contractor shall furnish the feed system chemicals and pump.
3. Anionic polymer and cationic polymer coagulant feed systems – The Contractor shall furnish the feed system chemicals and pump.

PART 3 EXECUTION

3.1 INSTALLATION

A. The Contractor shall furnish and install the chemical feed equipment, controls, piping, electrical, incidentals and associated appurtenances in accordance with Manufacturer's instructions.

B. The Contractor shall provide temporary secondary containment for the treatment chemicals, in accordance with applicable rules and regulations.

3.2 OPERATION

A. The Contractor shall be responsible for the satisfactory operation, maintenance and troubleshooting of the chemical feed equipment as needed for the duration of the TCTS Work.

B. Following completion of the installation, the chemical feed equipment shall be performance tested. All equipment shall be adjusted and analyzed for misalignment, leaks, excessive vibration, safety protocol and overall performance, and the installation shall be subject to approval by the Engineer.

C. The Contractor shall provide replacement parts as needed.

D. The Contractor shall provide the services of a qualified Operator for the equipment in accordance with NJDEP requirements.

E. The Contractor shall monitor the performance of the chemical feed equipment and maintain the equipment as needed.

F. The Contractor shall furnish an adequate chemical supply and mix tanks/feed tanks.

G. The chemicals shall to be segregated to prevent comingling of incompatible chemicals.

H. The pH and/or ORP probes shall be calibrated, maintained, and cleaned during operation in accordance with Manufacturer's recommendations.

I. The Contractor shall regulate the flow and dosages of feed chemicals to facilitate treatment.

END OF SECTION

SECTION 44 44 43

Specification for Temporary Construction Treatment System (TCTS)

WATER HEAVY METALS TREATMENT EQUIPMENT

PART 1 GENERAL

1.1 SECTION INCLUDES

A. Cr(VI) reduction system.
B. pH control system.
C. Coagulant/flocculation system.

1.2 RELATED SECTIONS

A. Division 40 05 23 – Valves
B. Section 44 42 56 – Water Treatment Pumps
C. Section 44 44 13 – Water Treatment Chemical Feed Equipment
D. Section 44 42 73 – Water Treatment Tanks

1.3 DESCRIPTION

A. General
1. The temporary construction treatment system (TCTS) shall be operated to treat impacted water that is managed during construction activities. The treated effluent shall be discharged to the Hackensack River.

B. Design Criteria
1. As shown in the Contract Documents.

C. Performance Requirements
1. Cr(VI) reduction system – to reduce Cr(VI) to Cr(III) via the addition of reducing agents, pH control and flocculation.
2. The treatment system shall be operated by the Contractor in order to achieve New Jersey Pollution Discharge Elimination System (NJPDES) discharge limits.
3. The Contractor shall install and operate the system in accordance with all applicable New Jersey Department of Environmental Protection (NJDEP), Treatment Works Approval (TWA) and the project-specific Air Permit requirements.

1.4 SUBMITTALS

A. Manufacturer's installation information.
B. Shop Drawings and Cut Sheets: Show product and connection details.
C. O&M Manuals.
D. Quality Control information.
   1. Unit operation analytical data – for performance testing.
   2. Operation Logs.
E. Proposed changes or modifications.

1.5 QUALITY ASSURANCE

A. Quality assurance activities are described in the document titled "Construction Quality Assurance Plan, SCCC and Diamond Site, Kearny, New Jersey".

B. The Engineer will collect the discharge sample to evaluate compliance with the NJPDES permit conditions.

1.6 QUALITY CONTROL

A. The Contractor shall be responsible for quality control activities during installation, equipment calibration, start up and operation of the TCTS Cr reduction system.

B. The Contractor shall perform routine performance monitoring by collecting samples from the in-system sample ports. And, the Contractor shall add treatment chemicals to the Cr reduction system as needed based on the analytical results.

C. The Contractor shall comply with all applicable Federal, State and local laws or ordinances as well as applicable codes, standards and regulations.

D. The Contractor shall provide QC documentation to the Engineer.

1.7 DELIVERY, STORAGE, AND HANDLING

A. Store products in Manufacturer's unopened packaging until ready for installation.

B. Use proper equipment and methods during unloading and transporting material to ensure safety and to prevent damage.

C. Handle and store materials in accordance with Manufacturer's recommendations.

PART 2 PRODUCTS

2.1 TANKS

A. Tank Nos. TC-CR-01, TC-PH-01 and TC-FL-01.

2.2 MIXERS

1. The mixers shall be Grovhac, Inc. Model No. 770-500GE3D (for the 3,000 gallon tanks) and Grovhac, Inc. Model No. 770-1500GX3S (for the 5,600 gallon tank), or Engineer-approved equal.

PART 3 EXECUTION

3.1 INSTALLATION

A. The Contractor shall furnish and install the reactors, mixers, piping, controls, electrical, incidentals and associated appurtenances in accordance with Manufacturer's instructions.

3.2 OPERATION

A. The Contractor shall be responsible for the satisfactory operation, maintenance and troubleshooting of the reactors as needed for the duration of the TCTS Work.
B. Following completion of the installation, the reactors shall be performance tested. All equipment shall be adjusted and analyzed for misalignment, seals, leaks, excessive vibration, safety protocol and overall performance, and the installation shall be subject to approval by the Engineer.
C. The Contractor shall provide replacement parts as needed.
D. The Contractor shall conduct jar testing to determine the treatment chemical doses for the various impacted water sources to be treated.
E. The Contractor shall provide the services of a qualified Operator for the equipment in accordance with NJDEP requirements.
F. The Contractor shall monitor the performance of the reactors and chemical feed systems and maintain the systems as needed.
G. Covers shall be maintained on the tanks at all times.
H. The Contractor shall provide acceptable chemical mix tanks and connect the mix tanks to the treatment tanks.
I. The system shall be operated in order to obtain large settleable floc.
J. The target pH for Cr(VI) reduction is 10 to 12. The target pH for Cr(III) and other metals removal is 8.7 to 8.9 at the discharge of the flocculation tank.
K. A pH of 7 to 8 shall be achieved in the Pump Tank to ensure that the discharge pH is in the permit limit range of 6-9.

END OF SECTION

CHECKLIST ITEM 9

CONSTRUCTION SPECIFICATIONS CUT SHEETS

GENERAL INDUSTRIAL TWA

Chemical Mixers, MX-01 to MX-03
Grovhac, Inc. 770-500GE3D,770-1500GX3S

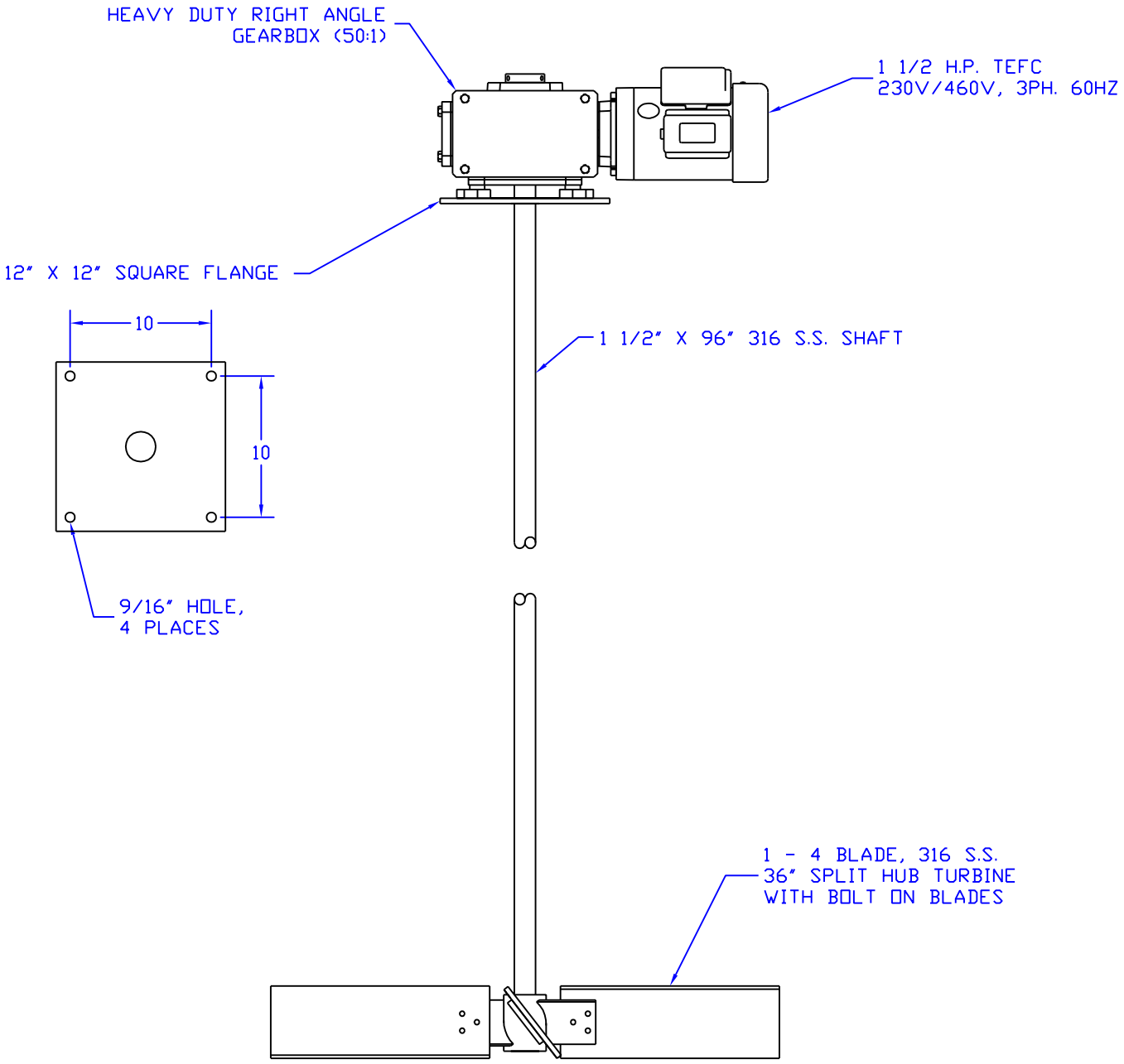

STANDARD TOLERANCES			
.00	±.010	ANGULAR	±.5°
.000	±.005	FRACTION	±1/64
.0000	±.0005		

GROVHAC INC.

770-1500GE3S

DRAWN	11/20/09	SIZE	DRAWN BY:		REV.
		A	SR	#TJ6549	01
SCALE	NONE				

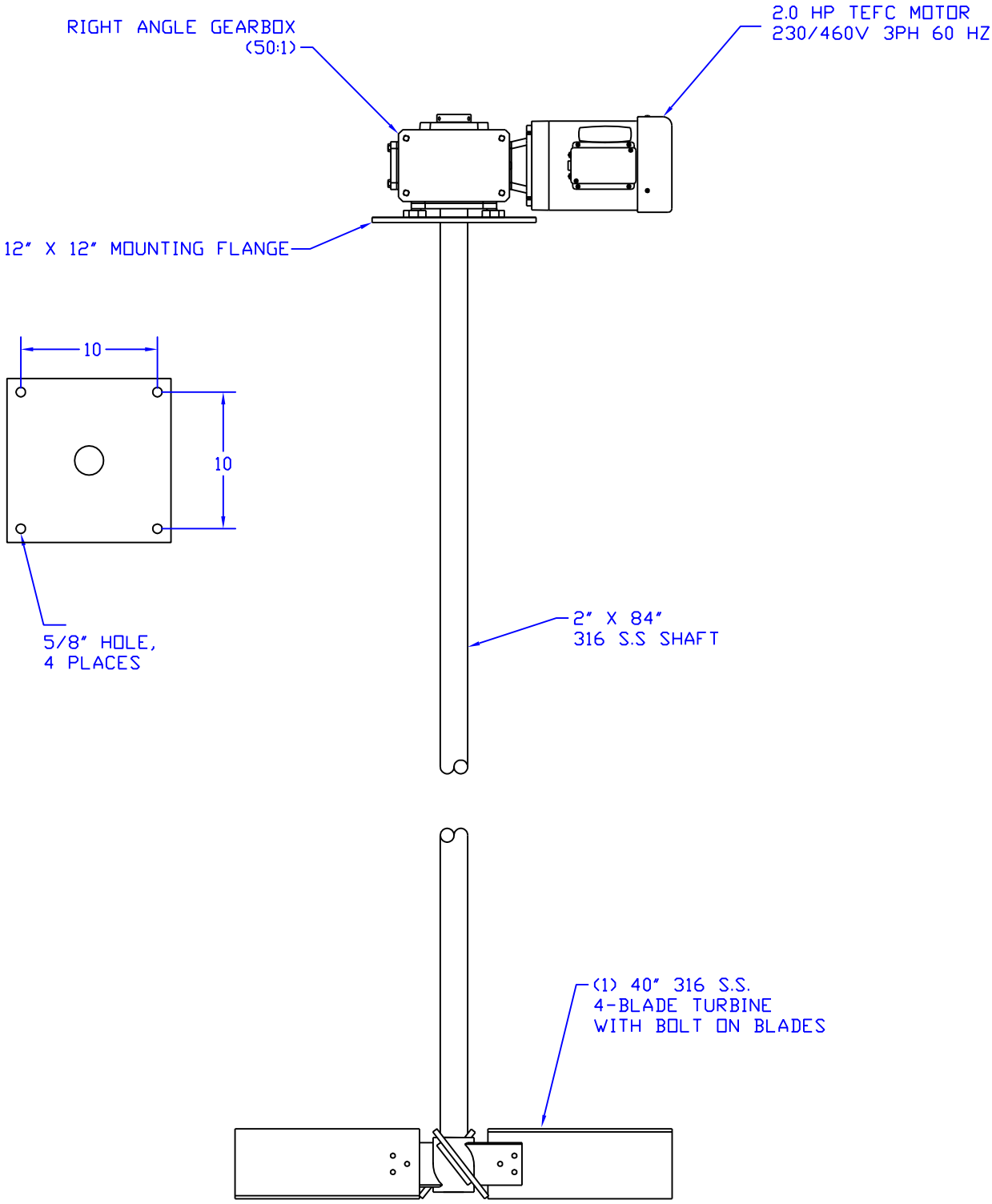

	GROVHAC INC.			
	770-2000GE3S			
DRAWN 11/20/09	SIZE A	DRAWN BY SR	DWG. NO. #TJ6550	REV. 01

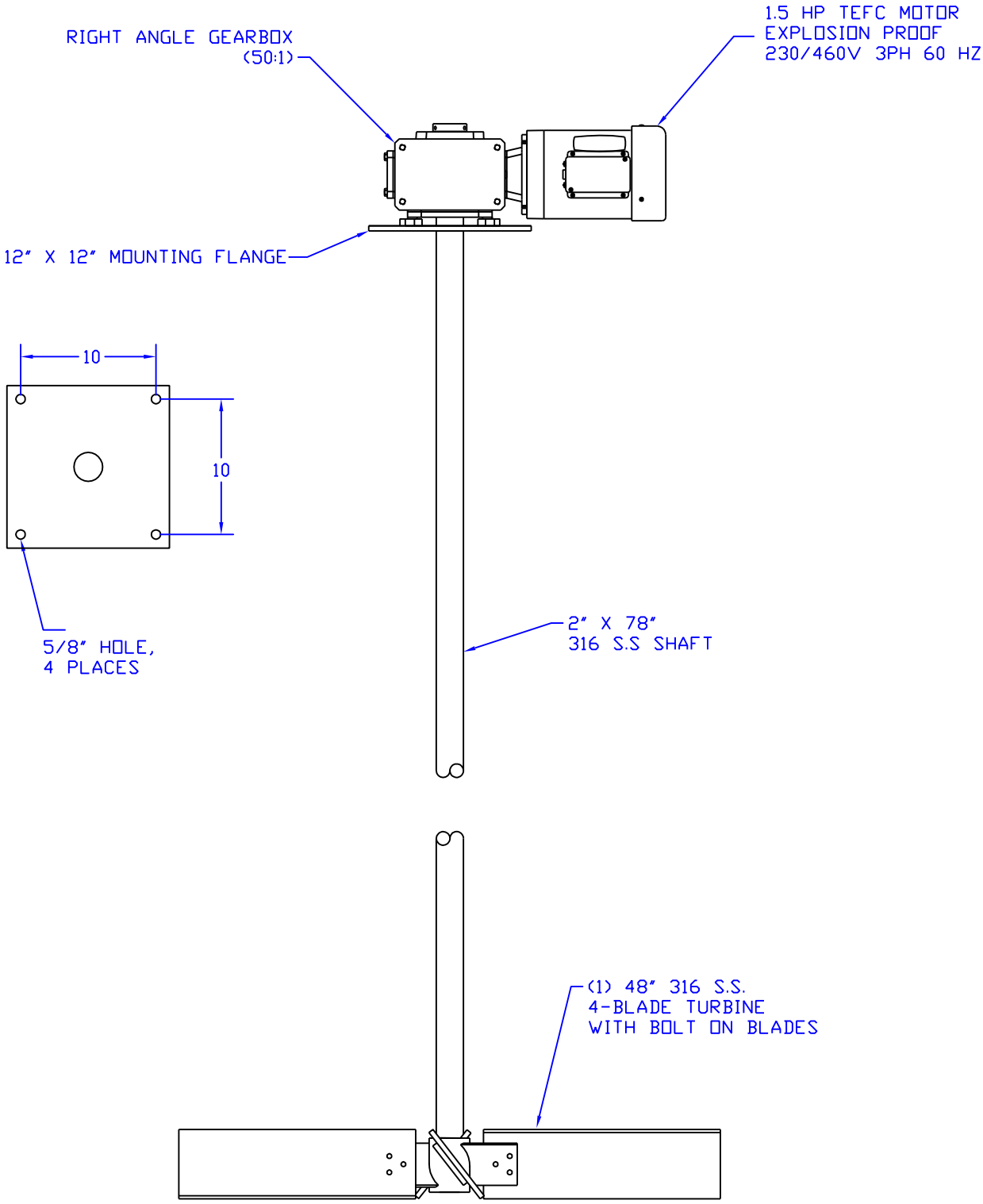

	GROVHAC INC.			
	770-1500GX3S			
DRAWN 12/3/09	SIZE A	DRAWN BY SR	DWG. NO. #TJ6548 REV.1	REV. 01