1290080

Rico Surface and Groundwater Sampling
Supplemental Surface and Groundwater Quality Monitoring

Rico, Colorado
Data Summary Report

Prepared for:
Atlantic Richfield Company
4 Centerpointe Drive
La Palma, CA 90623

Prepared by:

ANDERSON
ENGINEERING COMPANY INC.

977 West 2100 South
Salt Lake City, UT 84119
(801) 972-6222

July 2013

Table of Contents

1.0 Introduction 3
2.0 Field Sampling 3
2.1 Sampling Frequency 3
2.2 Water Quality and Flow Measurement Sampling Locations 3
2.3 Sampling Station Conditions and Desctiptions 5
2.4 Simultaneous Operations 6
3.0 Sampling and Analysis Parameters and Methods 6
4.0 Flow Measurement Methods 9
5.0 Analytical Results 10
6.0 Quality Control 10
6.1 Field QC 10
6.2 Laboratory QC 10

List of Figures

Figure 1 Northern St. Louis Ponds Sampling Locations
Figure 2 Southern St. Louis Ponds Sampling Locations
Figure 3 Sampling Locations South of Rico
Figure 4 Dolores River Cross Section at Sampling Station DR-1
Figure 5 Dolores River Cross Section at Sampling Station DR-2
Figure 6 Pond 8 Embankment Cross Section at Sampling Station DR-5
Figure 7 Dolores River Cross Section at Sampling Station DR-7
Figure 8 Dolores River Cross Section at Sampling Station DR-4-SW
Figure 9 Dolores River Cross Section at Sampling Station DR-G

List of Tables

Table 1 Sampling Location Descriptions
Table 2 Analytical Procedures Summary
Table 3A Surface Water Location Sampling Field Data and Station Information Summary, July 2013
Table 3B Groundwater Well Sampling Field Data and Station Information Summary, July 2013
Table 3C Quality Control Samples Field Data and Station Information Summary, July 2013
Table 3D DR-1 Cross Section Composite Sampling Field Data and Flow Information Summary, July 2013
Table 3E DR-2 Cross Section Composite Sampling Field Data and Flow Information Summary, July 2013
Table 3F DR-7 Cross Section Composite Sampling Field Data and Flow Information Summary, July 2013
Table 3G DR-4-SW Cross Section Composite Sampling Field Data and Flow Information Summary, July 2013
Table 4A Surface Water Sampling Analytical Sampling Results Summary, July 2013
Table 4B Groundwater Analytical Sampling Results Summary, July 2013
Table 4C Quality Control Samples Analytical Sampling Results Summary, July 2013
Table 4D Dolores River Composite Sampling Analytical Sampling Results Summary, July 2013
Table 5A Relative Percent Difference (RPD) of Lab Analysis between DR-1 and Duplicate Sample DR-8
Table 5B Relative Percent Difference (RPD) of Lab Analysis between DR-G and Duplicate Sample DR-9

Table 5C Relative Percent Difference (RPD) of Lab Analysis between MW-104 and Duplicate Sample DR-10
Table 5D Relative Percent Difference (RPD) of Lab Analysis between MW-1 SHALLOW and Duplicate Sample DR-11
Table 5E Relative Percent Difference (RPD) of Lab Analysis between P13-103 and Duplicate Sample DR-12

List of Appendices

Appendix A Sampling Location Maps
Appendix B Data Tables
Appendix C Project Narrative and Laboratory Analytical Reports
Appendix D Laboratory QC Results
Appendix E Flow Cross Sections
Appendix F Chain of Custody Records
Appendix G Field Photos
Appendix H Field Log Book Records
Appendix I North Flume OTT PLS Transducer Data with Flowrates
Appendix J North Flume Ultrasonic Sensor Data with Flowrates
Appendix K South Flume OTT Orpheus Mini Data with Flowrates
Appendix L Technical Standard Operating Procedure – Collection of Cross Channel Surface Water Samples

1.0 Introduction

In accordance with the Rico Sampling and Analysis Plan for Supplemental Surface and Groundwater Quality Monitoring at Rico, CO prepared by AECOM, dated November 2010, the surface and groundwater sampling event was completed on July 9th – 19th 2013. Sampling was completed by Anderson Engineering Co. Inc., by technicians who are familiar with the Rico sites and the BP Control of Work Management System. Surface and groundwater samples were collected from prescribed locations within the St. Louis settling pond system and at the system discharge (DR-6) to the Dolores River (collectively referred to as the St. Louis pond system), and previously sampled locations along the Dolores River above, at and below the St. Louis pond system. Figures 1, 2, and 3 in Appendix A illustrate the locations of the various points sampled this month. Sample results have been summarized and laboratory analytical results are attached with quality control documentation.

2.0 Field Sampling

2.1 Sampling Frequency

The sampling period represented by this sampling event is for the month of July of 2013. Sampling will be performed on a monthly basis through at least the end of 2013.

2.2 Water Quality and Flow Measurement Sampling Locations

Surface water and groundwater samples were collected from the locations described on Table 1 and shown on Figures 1, 2, and 3 in Appendix A. In the fall of 2011, twelve (12) new monitoring wells were drilled in the vicinity of the recently constructed interim drying facility. Beginning November 2011, those wells were sampled and will continue to be sampled monthly along with the other sampling locations mentioned. In the fall of 2012, eight (8) new monitoring wells were drilled throughout the St. Louis Ponds site. Beginning November 2012, those wells were sampled and will continue to be sampled monthly along with the other sampling locations mentioned. Additionally, eight (8) historic groundwater wells are sampled on a monthly basis. Two angle boreholes (AT-2 and BAH-01) are sampled monthly as well.

The Dolores River was sampled above the St. Louis pond system, and below the adit outfalls downstream of the reclaimed Silver Swan Mine area. The river was also sampled at the USGS gaging station downstream of the Silver Swan site.

TABLE 1 - Sample Location Descriptions

SITE ID	SITE LOCATION / DESCRIPTION
Surface Water Locations	
DR-1	Cross-section on the Dolores River approximately 1000 feet North of Pond 18.
DR-2	Cross-section on the Dolores River approximately 150 feet North of the system outfall.
DR-3	St. Louis Tunnel discharge at adit entrance. Sampling location is at the parshll flume located approximately 50 ft west of the cinder block

	structure at the former adit entrance.
DR-4	Discharge of Pond 15. The sampling location is at the outlet of the upper discharge pipe located on the midpoint of the Pond 15 south embankment.
DR-5	Discharge of Pond 8. The sampling location is at the inlet of the discharge spillway located at the southwest corner of Pond 8.
DR-6	St. Louis settling ponds system outfall to the Dolores River (previous permit Outfall 002). Sample location is at installed 9" parshall flume.
DR-7	Dolores River below St. Louis settling ponds system outfall. Sampling/flow measurement location is located just off the entrance road to the St. Louis ponds site where the Dolores River is adjacent to the entrance road. The site is located approximately 75 feet downstream of a large bend in the river that first brings the Dolores adjacent to the entrance road.
DR-4-SW	Dolores River below Silver Swan. Sampling/flow measurement location is on the Dolores River below the Silver Swan site just downstream of a bend in the river and below a cemetery on the east bank.
DR-G	Located approximately 3.5 miles downstream of the Silver Swan site, at the USGS gauging station #09165000 immediately downstream of the bridge at this location.
Groundwater Locations	
GW-1	Well is located on the north end of the site, approximately 1000 feet north of the northern edge of Pond 18 and about 75 feet northeast of DR-1
GW-3	Located approximately 200 feet north of the northern edge of pond 18, and approximately 60 feet west of the main access road.
GW-4	Located on the western flood dike of Pond 18, approximately midway along the dike.
GW-5	Located on the northern edge of the former Pond 17 area, or on the northern dike of the newly constructed drying cell 1.
GW-6	Located on the middle of the former Pond 17 area, or on the western edge of the south dike of the newly constructed drying cell 1.
GW-7	Located on the eastern edge of the access road directly across from the former Pond 17, or directly across from the newly constructed drying cell 2.
EB-1	Located on the northern edge of the former Pond 17 area, or on the northern dike of the newly constructed drying cell 1. It is within ten feet of GW-5.
EB-2	Located on the southern portion of the former Pond 16 area, or on the western edge of the south dike of the newly constructed drying cell 3.
MW-1 Shallow MW-1 Deep	Both wells are located about 4 feet apart on the western embankment of Pond 13 at the division between Pond 11 and Pond 12.
MW-2 Shallow MW-2 Deep	Both wells are located about 4 feet apart on the western flood embankment of Pond 12, about mid-way along the pond.
MW-3 Shallow MW-3 Deep	Both wells are located about 4 feet apart on the western flood embankment of Pond 15, on the southern half of the embankment.
MW-4 Shallow MW-4 Deep	Both wells are located about 4 feet apart on the southern embankment of Pond 13, approximately 60 west of the main east access road.

MW-5 Shallow MW-5 Deep	Both wells are located about 4 feet apart on the western dike of drying cell 3 (refer to Figure 2).
MW-6 Shallow MW-6 Deep	Both wells are located about 4 feet apart on northern embankment of Pond 13, approximately 75 feet west of the main east access road
MW-101	Well is located approximately 200 feet south of the lime plant building in the large open clearing within the St. Louis Road loop.
MW-102	Well is located approximately 150 feet southeast of well GW-7 at the point that the access road splits in two directions.
MW-103	Well is located at the southwest corner of Pond 7 on the flood control dike adjacent to the Dolores River.
MW-104	Well is located approximately midway along the west flood control dike of Pond 9.
MW-202	Well is located approximately 25 feet southeast of the cinder block structure at the former adit entrance.
MW-204	Well is located approximately 200 feet east of the cinder block structure at the former adit entrance, adjacent to the collapsed tunnel.
P13-102	Well is located at approximately the southeast end of the newly constructed dike at the southwest corner of Pond 13.
P13-103	Well is located approximately midway along the newly constructed dike at the south corner of Pond 13.
CHV-101S	Well is located approximately 125 feet east of the cinder block structure at the former adit entrance, adjacent to the collapsed tunnel. Sampling by bailer.
AT-2	Angle borehole casing is located approximately 220 feet east of the cinder block structure at the former adit entrance, adjacent to the collapsed tunnel.
BAH-01	Angle borehole casing which accesses the mine tunnel from the south.

2.3 Sampling Station Conditions and Descriptions

The sampling requirements and stations are described in detail below, as well as the conditions at each station for this sampling period. Samples collected were collected per protocols identified in the Sampling and Analysis Plan (SAP). Flow measurements were collected per protocols identified in the SAP.

DR-1. Sampling location fully accessible. Grab sample collected from east bank of river and composite sample collected from stream cross section. Flow measurements were collected by flowmeter.

DR-2. Sampling location fully accessible. Grab sample collected from east bank of river and composite sample collected from stream cross section. Flow measurements were collected by flowmeter.

DR-3. Flow measurement collected monthly by an installed 9” flume and water level measurement devices at the sampling location. Manual measurement collected on 7/23/13 at 4:00 AM.

DR-4. Sample location fully accessible. Sample collected from upper drain pipe inlet in Pond 15. Flow in both pipes estimated by measuring depth and pipe velocity.

DR-5. Sampling location fully accessible. Sample collected at spillway. Flow measurements collected by flowmeter at spillway. Due to the shallow water and multiple paths, accurate flow measurements could not be determined for this sampling location and period. Flows estimated at spillway to be 50% of total flow.

DR-6. Flow measurement by an installed 9" flume and water level measurement devices at the sampling location. Manual measurement collected on 7-10-13 at 2:23 PM.

DR-7. Sampling location fully accessible. Grab sample collected from east bank of river and composite sample collected from stream cross section. Flow measurements were collected by flowmeter.

DR-4-SW. Sampling location fully accessible. Grab sample collected from east bank of river and composite sample collected from stream cross section. Flow measurements were collected by flowmeter.

DR-G. Sampling location fully accessible. Grab sample collected from east bank of river and composite sample collected from stream cross section. Flow measurements were collected by flowmeter.

Monitoring Wells. All monitoring wells were sampled by use of a bailer, and field measurements were taken at the time of sampling, per protocols identified in the SAP. Depth measurements were also taken at this time. For the July 2013 sampling period, MW-2 Shallow, MW-3 Shallow, and MW-202 were dry. MW-204 could not be sampled due to shifting in subgrade soils causing the pipe to bend, not allowing a bailer to be lowered down the well. Plans will be made to deal with the change to allow sampling in the future.

2.4 Simultaneous Operations

During the month of July 2013, other projects were occurring simultaneously at the St. Louis Ponds site.

- Operation of the pilot scale wetland test was occurring during the sampling period. Effects on the water from this operation are little to none.
- During this sampling period, the 517 injection test was running. The test began on June 21, 2013, and involved the injection of a 25% NaOH solution into the bottom of the 517. As the objective of the test was to treat water coming out of the St. Louis at DR-3, this may have an effect on samples collected within the St Louis Ponds area.

3.0 Sampling and Analysis Parameters and Methods

All samples were collected as grab or composite samples. Samples were collected from well-mixed locations, which are representative of conditions within the flow stream. Groundwater samples are purged according to protocols identified in the SAP. Lab-certified plastic bottles were used to collect sample water for analyses. Clean hands, dirty hands procedures were followed throughout the sampling. For quality control purposes, one duplicate sample was collected for every 10 samples collected and two field blanks were included with the water samples being submitted to the laboratory for analysis. Composite river samples are collected in accordance with the technical standard operating procedure found in Appendix L.

Lab-certified plastic bottles were used to collect all water samples. Sample water was first collected in clean plastic jugs and field parameters were measured at the time of sample collection. Sample water was then placed in the sampling bottles soon thereafter per protocols identified in the SAP. The following sample bottles were used for collection and analysis (all samples collected without filtration unless otherwise indicated):

- One (1) 500mL HDPE bottle, unpreserved, for alkalinity, Total Dissolved Solids (TDS), Total Suspended Solids (TSS), chloride and sulfate analysis
- One (1) 250mL HDPE bottle, unpreserved, for salinity analysis
- One (1) 250mL HDPE bottle, preserved with HNO_3, for total metals, silica, and water hardness analysis
- One (1) 250mL HDPE bottle, preserved with HNO_3, for dissolved metals analysis. This sample is filtered in the field through a 0.45µm filter.
- One (1) 250mL HDPE bottle, preserved with HNO_3, for potentially dissolved metals analysis
- One (1) 250 mL HDPE bottle, preserved with NaOH and Zn Acetate, for sulfide analysis.
- One (1) 250 mL HDPE bottle, preserved with NaOH, for cyanide analysis
- One (1) 250 mL amber glass bottle, preserved with H_2SO_4, for Total Organic Carbon (TOC) and nitrate analysis

Field parameters were measured at the time of sample collection. Field measurement data for pH, temperature, electrical conductivity, dissolved oxygen, and Oxydation-Reduction Potential were recorded using a Hanna Instruments HI 9828 Multiparameter Meter and ExTech ExStik EC500 meter (for recording pH, electrical conductivity, and temperature of groundwater well purge water), and results were logged in the field log book. Results of field measurements for all samples collected on site can be found in Tables 3A – 3G in Appendix B. Weather parameters including temperature and precipitation were obtained and documented in the Daily Toolbox Meeting Record.

All sample bottles were labeled to identify sample number, date and time of collection, type of analysis, and appropriate preservative. In addition, sample analysis/chain of custody forms were completed and processed at the time of sample collection. Original chain of custody forms are signed, dated, and placed in the sample container prior to sealing the container for shipment.

Water samples were kept in cooled containers and sent to the analytical laboratory. Samples were submitted to Pace Analytical Laboratories in Lenexa, Kansas for analysis by analytical procedures listed on Table 2. Analysis was performed according to methods specified in 40 CFR, Part 136 or other methods approved by the EPA. Laboratory methods and reporting limits for all parameters are presented in Table 2. Laboratory results and supporting documentation including quality assurance results are contained in the Appendix C and Appendix D of this report. Results are summarized in Tables 4A – 4D in Appendix B of this report.

TABLE 2 - Analytical Procedures Summary

PARAMETER	DETECTION LIMIT (MDL)	REPORTING LIMIT (RL)	METHOD
FIELD PARAMETERS			
Dissolved Oxygen (ppm)	+/- 1.5% of reading	+/- 1.5% of reading	SM 4500-OG
Electrical Conductivity (mS/cm)	+/- 1% of reading	+/- 1% of reading	EPA 120.1
Temperature (°C)	+/- 0.15° C	+/- 0.15° C	Standard Method 2550
ORP (Oxidation Reduction Potential, mV)	+/- 1.0 mV	+/- 1.0 mV	Ag/AgCl Probe
pH (Standard pH Units)	+/- 0.02 pH	+/- 0.02 pH	EPA 150.2
NON-METALS			
Alkalinity (mg/L as $CaCO_3$)	20 mg/L	20 mg/L	SM 2320B
Chloride (mg/L)	1.0 mg/L	1.0 mg/L	EPA 300.0
Cyanide (μg/L as CN)	0.0021 mg/L	0.005 mg/L	SM 4500-CN-E
Hardness (mg/L as $CaCO_3$)	0.036 mg/L	0.071 mg/L	SM 2340B
Nitrogen, NO2 plus NO3 (mg/L)	0.022 mg/L	0.1 mg/L	EPA 353.2
Salinity (mg/L as dissolved solids)	6 mg/L	6 mg/L	SM 2510B (calculated)
Silica	0.027 mg/L	0.054 mg/L	EPA 200.8
Sulfate (mg/L as SO4)	0.15 mg/L	1.0 mg/L	EPA 300.0
Sulfides (mg/L)	0.018 mg/L	0.05 mg/L	4500-S-2 D
Total Dissolved Solids (mg/L as TDS)	5.0 mg/L	5.0 mg/L	SM 2540C
Total Organic Carbon (mg/L)	0.072 mg/L	0.5 mg/L	SM 5310C
Total Suspended Solids (mg/L as TSS)	5.0 mg/L	5.0 mg/L	SM 2540D
TOTAL, DISSOLVED, AND POTENTIALLY DISSOLVED METALS*			
Aluminum (μg/L as Al)	2.00 μg/L, 6.35 μg/L	4 μg/L, 50 μg/L	EPA 200.8, EPA 200.8
Antimony (μg/L as Sb)	0.100 μg/L, 0.03 μg/L	0.5 μg/L, 1 μg/L	EPA 200.8, EPA 200.8
Arsenic (μg/L as As)	0.138 μg/L, 0.05 μg/L	0.5 μg/L, 1 μg/L	EPA 200.8, EPA 200.8
Barium (μg/L as Ba)	0.150 μg/L, 0.08 μg/L	0.3 μg/L, 1 μg/L	EPA 200.8, EPA 200.8
Beryllium (μg/L as Be)	0.092 μg/L, 0.05 μg/L	0.2 μg/L, 0.5 μg/L	EPA 200.8, EPA 200.8
Cadmium (μg/L as Cd)	0.028 μg/L, 0.05 μg/L	0.08 μg/L, 0.5 μg/L	EPA 200.8, EPA 200.8
Calcium (μg/L as Ca)	10.000 μg/L, 10.35 μg/L	20 μg/L, 100 μg/L	EPA 200.8, EPA 200.7
Chromium (ug/l as Cr)	0.094 μg/L, 0.07 μg/L	0.5 μg/L, 1 μg/L	EPA 200.8, EPA 200.8
Cobalt (ug/l as Co)	0.250 μg/L, 0.08 μg/L	0.5 μg/L, 1 μg/L	EPA 200.8, EPA 200.8
Copper (μg/L as Cu)	0.184 μg/L, 0.12 μg/L	0.5 μg/L, 1 μg/L	EPA 200.8, EPA 200.8
Iron (μg/L as Fe)	10.00 μg/L, 2.95 μg/L	50 μg/L, 50 μg/L	EPA 200.8, EPA 200.8
Lead (μg/L as Pb)	0.018 μg/L, 0.03 μg/L	0.1 μg/L, 1 μg/L	EPA 200.8, EPA 200.8
Magnesium (μg/L as Mg)	2.31 μg/L, 6.48 μg/L	5 μg/L, 50 μg/L	EPA 200.8, EPA 200.7
Manganese (μg/L as Mn)	0.250 μg/L, 0.14 μg/L	0.5 μg/L, 1 μg/L	EPA 200.8, EPA 200.8
Mercury (μg/L as Hg)	0.1 μg/L, 0.053 μg/L	0.2 μg/L, 1 μg/L	EPA 245.1, EPA 245.1
Molybdenum (μg/L as Mo)	0.069 μg/L, 0.12 μg/L	0.5 μg/L, 1 μg/L	EPA 200.8, EPA 200.8
Nickel (μg/L as Ni)	0.151 μg/L, 0.07 μg/L	0.5 μg/L, 1 μg/L	EPA 200.8, EPA 200.8
Potassium (μg/L as K)	5.24 μg/L, 44.38 μg/L	20 μg/L, 500 μg/L	EPA 200.8, EPA 200.7
Selenium (ug/l as Se)	0.094 μg/L, 0.14 μg/L	0.5 μg/L, 1 μg/L	EPA 200.8, EPA 200.8
Silver (ug/L as Ag)	0.040 μg/L, 0.01 μg/L	0.5 μg/L, 0.5 μg/L	EPA 200.8, EPA 200.8
Sodium (μg/L as Na)	10.40 μg/L, 21.68 μg/L	50 μg/L, 500 μg/L	EPA 200.8, EPA 200.7
Thallium (μg/L as Tl)	0.019 μg/L, 0.02 μg/L	0.1 μg/L, 1 μg/L	EPA 200.8, EPA 200.8
Vanadium (μg/L as V)	0.037 μg/L, 0.11 μg/L	0.1 μg/L, 1 μg/L	EPA 200.8, EPA 200.8
Zinc (μg/L as Zn)	1.00 μg/L, 1.04 μg/L	5 μg/L, 10 μg/L	EPA 200.8, EPA 200.8

*Limits and methods for metals displayed in following format: Total and Dissolved Metals, Potentially Dissolved Metals

4.0 Flow Measurement Methods

Flow velocity measurements were taken at the river sampling locations where accessible. Flow measurements were not collected at areas where ice and snow buildup or high, fast flows prohibited safe access. The flow measurements obtained this sampling period are described in Section 2.3. Flow measurements were collected at DR-1, DR-2, DR-3, DR-4, DR-5, DR-6, DR-7, DR-4-SW, and DR-G. Refer to Figures 4 through 9 in Appendix E for Dolores River cross sections. The flowrates are presented on Tables 3A, 3D, 3E, 3F, and 3G in Appendix B.

Flow velocity readings and flowrate calculations were performed in accordance with AECI Standard Operating Procedures 3-4: Stream Flow Measurements and 3-6: Stream Flow Measurements with Portable Flowmeter. Flow velocity measurements collected during this sampling event were taken by use of a Hach FH950 Portable Velocity Meter at stations DR-1, DR-2, DR-5, DR-7, DR-4-SW, and DR-G using the six-tenths-depth method. This method uses the velocity at six-tenths of the depth as the mean velocity. This method is generally reliable between depths from 0.3 feet to 2.5 feet. Stream sections were selected with the desired characteristics of parallel flows, smooth streambed with minimal obstructions, a straight channel, and a flat streambed. The stream section, perpendicular to the flow was measured in feet. The width of the section was determined and divided into several sub-sections. Flow measurements of velocity (by the six-tenths-depth method) and water depth were measured at each sub-section. The flow meter was set to the 5 second fixed period average mode. Flows were calculated for each stream section using the water depth, horizontal distance, and averaged velocity data.

The St. Louis tunnel flow (DR-3) and St. Louis pond discharge (DR-6) currently have Parshall flumes installed. Flow measurements can be determined at these flumes when the depth of flow is known at a particular point. In order to continuously monitor and measure the depth of flow, depth measurement devices were installed on May 11th, 2011 and May 12th, 2011 at both the north and south flumes. An STI Ultrasonic IRU-5180 automated water level detector was installed at the north Parshall flume. In order to obtain further flow data, an OTT PLS submersible pressure transducer was installed at the north flume in December 2011. In January 2012, it was decided that the OTT PLS would be used exclusively at the north flume to report flow data, and that the ultrasonic meter would remain only as a backup flow measurement system. This was due in large part to the stability and uniformity observed in the data from the OTT PLS, as opposed to the ultrasonic meter, which exhibited greater instability and variability in the readings that the OTT PLS. The south flume has a submersible pressure transducer called the OTT Orpheus Mini. It records deviations from a pre-programmed depth of air space from the top edge of the flume down to the water level. Knowing then the total depth of the flume, the depth of flow can be determined. The post processed data for the OTT PLS, the STI Ultrasonic IRU-5180, and the OTT Orpheus Mini are given in Appendix I, J, and K, respectively.

During the month of July 2013, technical issues caused power loses periodically throughout the month at the DR-3 equipment. Usable data was not recorded for certain hours during the day. Solutions for correcting these issues are being investigated and will be implemented.

5.0 Analytical Results

The results of the laboratory analysis are summarized on Tables 4A – 4D in Appendix B. The data is organized by sample location. The Pace Lab reports for all results are contained in Appendix C.

6.0 Quality Control

In addition to the standard laboratory Quality Control (QC), field QC samples for this sampling event included one field duplicate for every 10 samples collected and two Field Blanks (FB).

6.1 Field QC

A field duplicate water sample was obtained for every 10 samples collected. Field duplicate samples are assigned the Sample IDs DR-8, DR-9, DR-10, DR-11, and so forth for as many samples as are collected. During the July 2013 sampling period these duplicate samples were collected at stations DR-1 (DR-8), DR-G (DR-9), MW-104 (DR-10), MW-1 SHALLOW (DR-11), and P13-103 (DR-12). During sample collection, the duplicate sample bottles were filled simultaneously from the discharge stream or source of water. The duplicate sample was submitted to the analytical laboratory as “blind duplicate” samples.

Tables 5A – 5E in Appendix B compare the analytical results for all parameters from all duplicate sample collected and present the Relative Percent Difference (RPD). The RPD for aqueous samples should be +/- 20%.

Two Field Blanks (FB) were collected by processing and analyzing a bottle of distilled water in the field and in the lab in the same manner as any other sample. The FB-LAB and FB-FIELD were analyzed for the same constituents as the other samples. Both had concentrations below the reporting limit for all metals except for a small number of total, dissolved, and potentially dissolved metals.

6.2 Laboratory QC

The laboratory control sample (LCS), method blank, matrix spike, and matrix spike duplicate sample results were all within the established limits of concentration, percent recovery, and relative percent difference, with several minor exceptions. Please refer to the Laboratory QC Results in Appendix D for exceptions and for a full QC report.

Appendix A

Sampling Location Maps

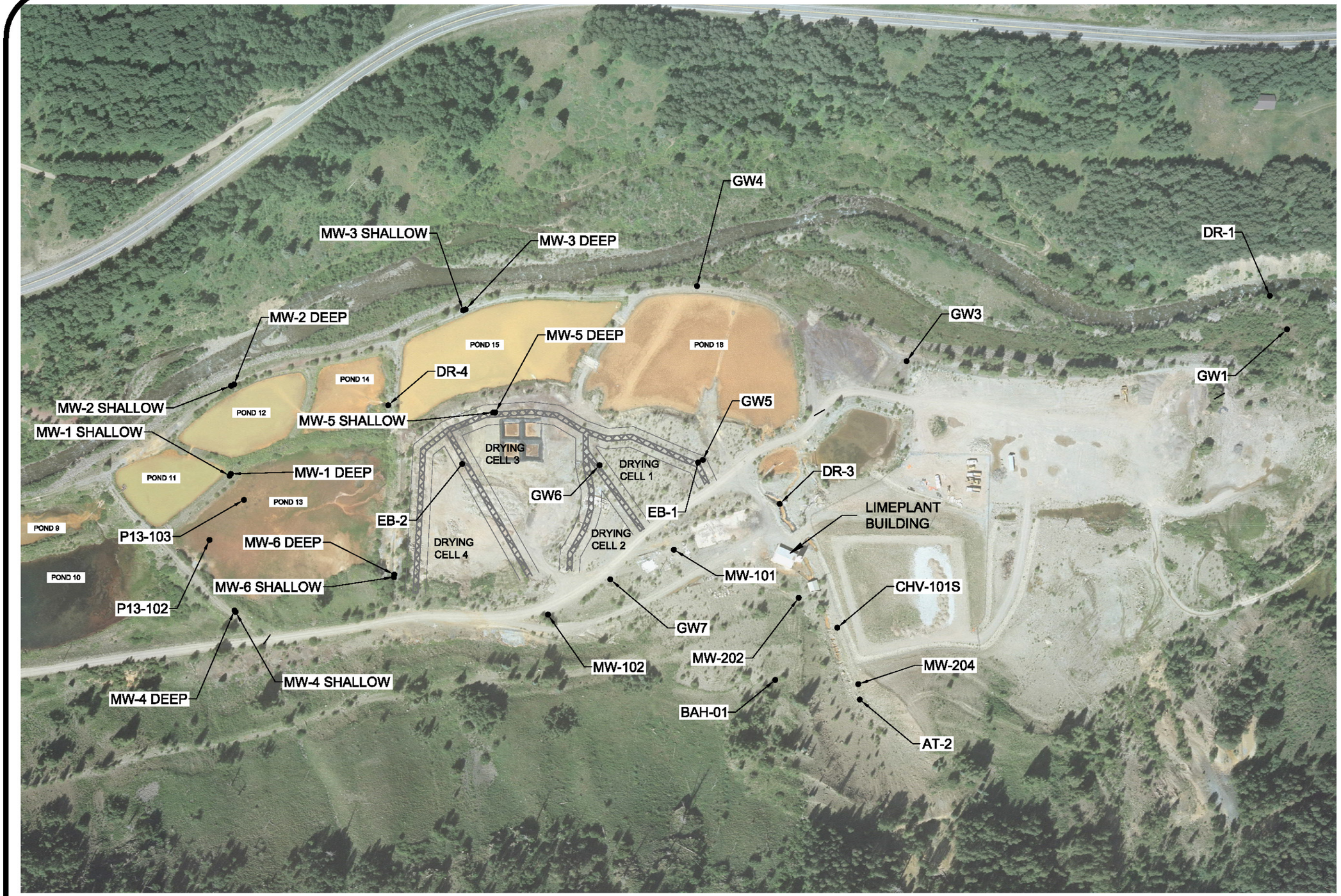

1 NORTHERN ST. LOUIS PONDS SAMPLING LOCATIONS

SCALE - 1" = 200'

THESE PLANS AND SPECIFICATIONS ARE THE PROPERTY OF ANDERSON ENGINEERING COMPANY, INC., 977 WEST 2100 SOUTH, SALT LAKE CITY, UTAH, 84119 AND SHALL NOT BE COPIED, REDUCED, OR REPRODUCED WITHOUT THEIR WRITTEN PERMISSION.

General Notes

N

SCALE IN FEET
0 100 200

No.	Revision/Issue	Date

BP

ANDERSON
ENGINEERING COMPANY, INC.
977 WEST 2100 SOUTH
SALT LAKE CITY, UTAH 84119
(801) 972-6222

RICO WATER SAMPLING

NORTHERN ST. LOUIS PONDS SAMPLING LOCATIONS

RICO, COLORADO

DRAWN BY:	MAD
ENGINEER:	MAD
APPROVED:	MAD

Project	Sheet
Date 30-Jul-13	1
Scale 1" = 200'	

G:\Users\LEXS-BEV\Documents\RICO\Rico Water Sampling\Monthly Sampling Data\May 2013\Appendices\Appendix A - Sampling Location Maps\Rev 2013 sampling locations map.dwg

2 **SOUTHERN ST. LOUIS PONDS SAMPLING LOCATIONS**

SCALE - 1" = 200'

THESE PLANS AND SPECIFICATIONS ARE THE PROPERTY OF ANDERSON ENGINEERING COMPANY, INC., 977 WEST 2100 SOUTH, SALT LAKE CITY, UTAH, 84119 AND SHALL NOT BE COPIED, REDUCED, OR REPRODUCED WITHOUT THEIR WRITTEN PERMISSION.

General Notes

SCALE IN FEET
0 100 200

No.	Revision/Issue	Date

BP

ANDERSON
ENGINEERING COMPANY, INC.
977 WEST 2100 SOUTH
SALT LAKE CITY, UTAH 84119
(801) 972-6222

RICO WATER SAMPLING

SOUTHERN ST. LOUIS PONDS
SAMPLING LOCATIONS

RICO,
COLORADO

DRAWN BY:	MAD
ENGINEER:	MAD
APPROVED:	MAD

Project	Sheet 2
Date 30-Jul-13	
Scale 1" = 200'	

C:\Users\AEC2-MD\Documents\AECO\Rico Water Sampling\Monthly Sampling Data\May 2013\Appendices\Appendix A - Sampling Location Maps\Rico 2013 sampling locations maps.dwg

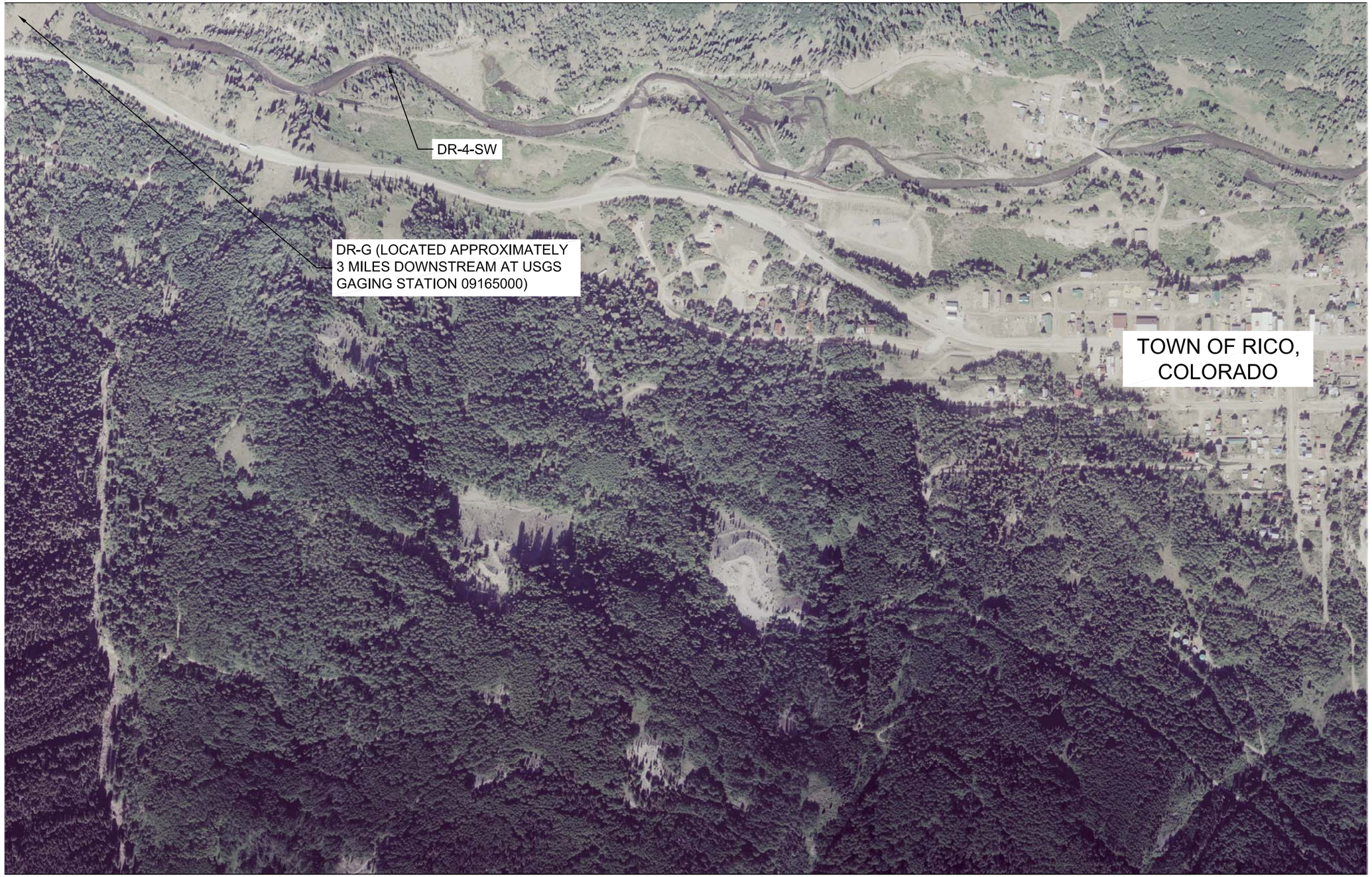

3 **SAMPLING LOCATIONS SOUTH OF RICO, CO**

SCALE - 1" = 500'

THESE PLANS AND SPECIFICATIONS ARE THE PROPERTY OF ANDERSON ENGINEERING COMPANY, INC., 977 WEST 2100 SOUTH, SALT LAKE CITY, UTAH, 84119 AND SHALL NOT BE COPIED, REDUCED, OR REPRODUCED WITHOUT THEIR WRITTEN PERMISSION.

General Notes

SCALE IN FEET
0 250 500

No.	Revision/Issue	Date

BP / ARCO

ANDERSON
ENGINEERING COMPANY, INC.
977 WEST 2100 SOUTH
SALT LAKE CITY, UTAH 84119
(801) 972-6222

RICO SURFACE WATER SAMOPLING

SAMPLING LOCATIONS SOUTH OF RICO, CO

RICO, COLORADO

DRAWN BY:	MAD
ENGINEER:	MAD
APPROVED:	CES

Project	Sheet 3
Date 5-Apr-12	
Scale 1" = 500'	

C:\Users\AECI-MD\Documents\RICO\Rico Water Sampling\Monthly Sampling Data\November 2012\Appendices\Appendix A - Sampling Location Maps\Locations south of Rico.dwg

Appendix B

Data Tables

TABLE 3A - Surface Water Location Sampling Field Data and Station Information Summary, July 2013

			Field Measurements					GPS Benchmark Location (Colorado State Plane NAD83)		Flow Data				Comments
Sample Location	Date of Sample Collection	Field Technicians	EC (mS/cm)	Oxydation Reduction Potential (ORP, mV)	Dissolved Oxygen (ppm)	pH	Temp (°C)	Northing	Easting	Stream Cross section area (ft^2)	Flowrate cfs / gpm			
DR-1	7/10/2013	T. Barbee, M. Capener	0.285	-21.6	7.05	8.04	12.62	1389970.4600	2267573.6490	20.2	23.6		10597.2	Cross section on the Dolores River above St. Louis settling pond system (approximately 800 ft north of the northern edge of Pond 18). Flow measurements were collected by flowmeter.
DR-2	7/10/2013	T. Barbee, M. Capener	3.489	-34.5	6.33	7.77	17.54	1386660.9610	2267971.4630	27.4	24.1		10817.0	Cross section on the Dolores River, approximately 150 ft north of system outfall. Flow measurements were collected by flowmeter.
DR-3	7/10/2013	T. Barbee, M. Capener	1.466	-37.9	2.97	7.15	20.02	1388963.0808	2268004.6974	NA	Ultrasonic	1.24	556.5	St Louis adit discharge. Flow measurement by installed Parshall Flume. Equipment at north flume suffered several power failures and data could not be obtained during some portions of the month. Manual measurement collected on 7/23/13 at 4:00pm.
											Transducer	1.21	543.0	
											Manual	0.95	426.4	
DR-4	7/17/2013	T. Barbee, M. Capener	1.392	4.4	6.66	7.68	20.09	1388153.6284	2267799.1579	NA	0.95		426.4	Pond 15 discharge. Flow measurements in both discharge pipes collected by flowmeter.
DR-5	7/17/2013	T. Barbee, M. Capener	1.462	-61.3	6.25	8.00	18.58	1387273.4503	2268024.8524	1.75	0.91		408.4	Pond 8 discharge. Flow measurements by flowmeter at spillway. Due to the shallow water and multiple paths, accurate flow measurements could not be determined for this sampling location and period. Flows estimated at spillway to be 50% of total flow.
DR-6	7/10/2013	T. Barbee, M. Capener	1.624	4.9	6.90	6.88	20.09	1386431.4984	2267964.5711	NA	Transducer	0.66	296.2	Outfall to Dolores River. Flow measurement by installed Parshall Flume. Water level by OTT Orpheus Mini submersible pressure transducer. Manual flow measurement collected on 7/10/13 at 2:23 pm.
											Manual	1.04	466.8	
DR-7	7/10/2013	T. Barbee, M. Capener	0.563	-23.6	6.36	6.98	18.23	1385880.1050	2267983.4510	15.3	9.7		4352.0	Cross section on the Dolores River, approximately 500 ft below St. Louis settling pond system outfall. Flow measurements were collected by flowmeter.
DR-4-SW	7/17/2013	T. Barbee, M. Capener	0.405	-6.2	7.60	7.50	13.86	1379176.1190	2266285.0850	25.6	47.8		21453.1	Cross section on the Dolores River approximately 100 below the Silver Swan site. Flow measurements were collected by flowmeter.
DR-G	7/10/2013	T. Barbee, M. Capener	0.445	-38.8	6.59	8.37	19.21	1364029.7850	2258752.9060	19.6	29.4		13190.7	Cross section on the Dolores River at USGS gauging station #09165000, approximately 3.5 miles downstream of the Silver Swan site. Flow measurements were collected by flowmeter.

ANDERSON
ENGINEERING COMPANY INC.

TABLE 3B - Groundwater Well Sampling Field Data and Station Information Summary, July 2013

			Field Measurements								GPS Casing Location (Colorado State Plane NAD83)		Comments
Sample Location	Date of Sample Collection	Field Technicians	EC (mS/cm)	Oxydation Reduction Potential (ORP, mV)	Dissolved Oxygen (ppm)	pH	Temp (°C)	Well Casing Elevation (ft)	Measured Depth to Water (ft)	Well Water Elevation (ft)	Northing	Easting	
GW-1	7/9/2013	T. Barbee, M. Capener	0.307	-34.3	0.83	6.92	10.54	8840.130	1.95	8838.180	1390006.0210	2267642.6870	Located on the north end of the site, approximately a quarter mile north of the northern edge of Pond 18.
GW-3	7/9/2013	T. Barbee, M. Capener	0.932	-53.9	1.21	7.13	10.26	8836.680	12.96	8823.720	1389221.9930	2267708.3940	Located approximately 200 feet north of the northern edge of pond 18, and approximately 60 feet west of the main access road.
GW-4	7/18/2013	T. Barbee, M. Capener	0.852	-45.7	0.03	6.52	11.32	8826.790	10.59	8816.200	1388790.0720	2267553.5420	Located on the western flood dike of Pond 18, approximately midway along the dike.
GW-5	7/9/2013	T. Barbee, M. Capener	2.925	-81.1	0.52	6.79	9.99	8839.520	22.41	8817.110	1388802.0650	2267911.8020	Located on the northern edge of the former Pond 17 area, or on the northern dike of the newly constructed drying cell 1.
GW-6	7/9/2013	T. Barbee, M. Capener	2.151	-67.2	0.62	6.88	10.18	8837.450	21.86	8815.590	1388589.3950	2267922.5090	Located on the middle of the former Pond 17 area, or on the western edge of the south dike of the newly constructed drying cell 1.
GW-7	7/17/2013	T. Barbee, M. Capener	1.665	-19.8	0	6.54	13.51	8840.000	23.27	8816.730	1388611.4370	2268158.0170	GW-7 Located on the eastern edge of the access road directly across from the former Pond 17, or directly across from the newly constructed drying cell 2.
EB-1	7/17/2013	T. Barbee, M. Capener	2.102	-81.1	0.29	7.68	10.54	8839.860	22.81	8817.050	1388792.4420	2267916.9080	Located on the northern edge of the former Pond 17 area, or on the northern dike of the newly constructed drying cell 1. It is within ten feet of GW-5.
EB-2	7/10/2013	T. Barbee, M. Capener	3.508	-98.1	0.00	6.32	12.58	8829.840	17.11	8812.730	1388306.1480	2267920.2500	Located on the southern portion of the former Pond 16 area, or on the western edge of the south dike of the newly constructed drying cell 3.
MW-1 SHALLOW	7/18/2013	T. Barbee, M. Capener	1.549	-11.9	0.90	6.74	16.97	8810.870	6.13	8804.740	1387826.7470	2267944.5160	Both wells are located about 4 feet apart on the western embankment of Pond 13 at the division between Pond 11 and Pond 12.
MW-1 DEEP	7/18/2013	T. Barbee, M. Capener	1.523	-7.8	1.11	6.77	16.10	8810.850	9.25	8801.600	1387829.4070	2267940.5680	
MW-2 SHALLOW	7/18/2013	CNM- Not enough water to sample						8810.230	10.02	8800.210	1387829.7580	2267759.0810	Both wells are located about 4 feet apart on the western flood embankment of Pond 12, about mid-way along the pond.
MW-2 DEEP	7/18/2013	T. Barbee, M. Capener	1.533	-21.8	2.14	6.67	11.91	8810.210	9.99	8800.220	1387836.0950	2267756.0910	
MW-3 SHALLOW	7/18/2013	CNM- Not enough water to sample						8819.570	-	-	1388308.0910	2267603.5420	Both wells are located about 4 feet apart on the western flood embankment of Pond 15, on the southern half of the embankment.
MW-3 DEEP	7/18/2013	T. Barbee, M. Capener	1.539	-62.9	0.44	6.68	15.28	8819.720	9.84	8809.880	1388313.2060	2267601.6050	
MW-4 SHALLOW	7/17/2013	T. Barbee, M. Capener	1.155	-15.6	2.33	6.62	12.61	8816.830	17.27	8799.560	1387836.9670	2268221.9370	Both wells are located about 4 feet apart on the southern embankment of Pond 13, approximately 60 west of the main east access road.
MW-4 DEEP	7/9/2013	T. Barbee, M. Capener	1.705	27.1	0.52	6.32	13.37	8816.770	17.21	8799.560	1387839.1320	2268224.8950	
MW-5 SHALLOW	7/9/2013	T. Barbee, M. Capener	3.697	71.0	0.11	4.45	11.18	8830.950	16.5	8814.450	1388369.7050	2267814.3980	Both wells are located about 4 feet apart on the western dike of drying cell 3 (refer to Figure 2).
MW-5 DEEP	7/9/2013	T. Barbee, M. Capener	2.246	-86.5	0.91	6.40	11.41	8830.730	17.66	8813.070	1388374.5740	2267813.8150	
MW-6 SHALLOW	7/18/2013	T. Barbee, M. Capener	2.414	-65.9	0.00	6.07	11.19	8830.580	23.58	8807.000	1388166.1000	2268148.1000	Both wells are located about 4 feet apart on northern embankment of Pond 13, approximately 75 feet west of the main east access road.
MW-6 DEEP	7/18/2013	T. Barbee, M. Capener	1.885	-63.8	0.23	6.27	11.62	8830.110	23.39	8806.720	1388165.5290	2268153.3270	
MW-101	7/9/2013	T. Barbee, M. Capener	1.801	-12.8	0.76	6.23	13.08	8845.417	27.91	8817.507	1388742.4460	2268096.7400	Located east of Drying Cells 1 / 2 boundary dike, inside the St Louis Access road loop, south of the St. Louis lab building.
MW-102	7/9/2013	T. Barbee, M. Capener	1.315	27.6	1.04	6.45	12.23	8841.304	24.48	8816.824	1388482.8360	2268230.4920	Located east of Drying Cell 4, in the St Louis Access road at the south end of the road loop.
MW-103	7/18/2013	T. Barbee, M. Capener	1.912	-44.3	0.52	6.40	13.54	8797.799	6.76	8791.039	1387371.9920	2268003.3380	Located on the western flood embankment of Pond 9, approximately 175 feet south of the north west corner of Pond 9.
MW-104	7/18/2013	T. Barbee, M. Capener	1.570	-20.4	1.41	6.76	17.64	8785.598	3.94	8781.658	1390006.0210	2267642.6870	Located on the western flood embankment between Ponds 6 and 7.
MW-202	7/19/2013	CNM- Not enough water to sample						8859.206	32.38	8826.826	1388999.6490	2268195.9780	Located approximately 30 feet south of the remnant portal structure of the St. Louis Adit discharge. Well could not be sampled due to very low amount of water.
MW-204	7/19/2013	CNM- Broke pipe						8865.954	15.32	8850.634	1389122.4820	2268373.7870	Located west of collapsed St. Louis adit base, approximately 30 feet west of AT-2. Could not sample due to settling of subgrade causing pipe to bend.
P13-102	7/19/2013	T. Barbee, M. Capener	1.993	-26.3	0.54	6.29	9.01	8810.643	10.51	8800.133	1387785.4540	2268076.6470	Located on Pond 13 dike near southeast corner of pond.
P13-103	7/19/2013	T. Barbee, M. Capener	1.650	-87.2	0.42	6.32	8.58	8811.464	10.68	8800.784	1387856.4350	2267994.0830	Located on Pond 13 causeway just north of the dike.
CHV-101 S	7/19/2013	T. Barbee, M. Capener	1.492	-3.9	2.2	6.27	15.49	8858.931	37.21	8821.721	1389079.2880	2268257.5150	Well is located approximately 125 feet east of the cinder block structure at the former adit entrance, adjacent to the collapsed tunnel. Sampling by bailer.

Angle Boreholes

AT-2	7/19/2013	T. Barbee, M. Capener	1.067	-121.40	0	8.39	18.32	8866.206	11.83	8859.782	1389125.5680	2268405.5140	Angle borehole casing is located approximately 220 feet east of the cinder block structure at the former adit entrance, adjacent to the collapsed tunnel.
BAH-01	7/19/2013	T. Barbee, M. Capener	1.299	135.40	0.00	6.42	17.21	8912.639	CNM	-	1388951.4380	2268365.0940	Angle borehole casing which accesses the mine tunnel. Could not measure depth.

ANDERSON
ENGINEERING COMPANY INC.

TABLE 3C - Quality Control Samples Field Data and Station Information Summary, July 2013

			Field Measurements					Comments
Sample Location	Date of Sample Collection	Field Technicians	EC (mS/cm)	Oxydation Reduction Potential (ORP, mV)	Dissolved Oxygen (ppm)	pH	Temp (°C)	
Duplicate Samples								
DR-8	7/10/2013	T. Barbee, M. Capener	0.285	-21.1	7.11	8.15	12.69	Duplicate of DR-1
DR-9	7/10/2013	T. Barbee, M. Capener	0.444	-37.2	6.54	8.35	19.23	Duplicate of DR-G
DR-10	7/18/2013	T. Barbee, M. Capener	1.573	-22.2	0.81	6.73	17.73	Duplicate of MW-104
DR-11	7/18/2013	T. Barbee, M. Capener	1.549	11.9	0.90	6.74	16.96	Duplicate of MW-1 SHALLOW
DR-12	7/19/2013	T. Barbee, M. Capener	1.650	-86.1	0.00	6.32	8.86	Duplicate of P13-103
Field Blanks								
FB-FIELD	7/18/2013	T. Barbee, M. Capener	0.012	-77.6	3.78	7.08	17.53	Field blank collected in the field.
FB-LAB	7/10/2013	T. Barbee, M. Capener	0.012	-76.9	4.48	8.05	19.87	Field blank collected in the lab work area.

ANDERSON
ENGINEERING COMPANY INC.

Table 3D - DR-1 Cross Section Composite Sampling Field Data and Flow Information Summary, July 2013

			Field Measurements					GPS Location (Colorado State Plane NAD83)		Flow Data				Comments
Sample Location	Date of Sample Collection	Field Technicians	EC (mS/cm)	Oxydation Reduction Potential (ORP, mV)	Dissolved Oxygen (ppm)	pH	Temp (°C)	Northing*	Easting*	Compartment Geometry		Average Flowrate		
										Width (ft)	Area (ft^2)	cfs	gpm	
COMPARTMENT 1	7/10/2013	T. Barbee, M. Capener	0.284	-21.2	7.66	7.88	12.44	1389969.1940	2267566.8266	5	1.40	1.50	673	
COMPARTMENT 2	7/10/2013	T. Barbee, M. Capener	0.284	-22.4	7.56	7.99	12.50	1389968.1814	2267561.9302	5	5.00	9.46	4247	
COMPARTMENT 3	7/10/2013	T. Barbee, M. Capener	0.285	-21.9	7.37	8.00	12.57	1389967.1688	2267557.0338	5	4.74	6.64	2982	
COMPARTMENT 4	7/10/2013	T. Barbee, M. Capener	0.285	-22.1	7.56	8.03	12.64	1389966.1563	2267552.1374	5	5.90	5.69	2555	
COMPARTMENT 5	7/10/2013	T. Barbee, M. Capener	0.285	-22.2	7.31	8.04	12.71	1389965.1437	2267547.2410	5	3.20	0.31	141	
TOTAL COMPOSITE	7/10/2013	T. Barbee, M. Capener	0.283	-18.7	5.07	8.01	14.97	-	-	25	20.2	23.6	10597.2	

*Northing and easting values are estimates based on surveyed benchark on east bank of river at this location

ANDERSON
ENGINEERING COMPANY INC.

Table 3E - DR-2 Cross Section Composite Sampling Field Data and Flow Information Summary, July 2013

			Field Measurements					GPS Location (Colorado State Plane NAD83)		Flow Data				Comments
Sample Location	Date of Sample Collection	Field Technicians	EC (mS/cm)	Oxydation Reduction Potential (ORP, mV)	Dissolved Oxygen (ppm)	pH	Temp (°C)	Northing*	Easting*	Compartment Geometry		Average Flowrate		
										Width (ft)	Area (ft^2)	cfs	gpm	
COMPARTMENT 1	7/10/2013	T. Barbee, M. Capener	0.347	-33.0	6.75	7.81	17.54	1386656.1154	2267952.2500	6	2.90	1.43	641	
COMPARTMENT 2	7/10/2013	T. Barbee, M. Capener	0.334	-32.7	6.83	7.88	17.53	1386654.6527	2267946.4310	6	7.30	6.51	2922	
COMPARTMENT 3	7/10/2013	T. Barbee, M. Capener	0.333	-30.2	6.72	7.85	17.53	1386653.1900	2267940.6120	6	8.00	8.73	3916	
COMPARTMENT 4	7/10/2013	T. Barbee, M. Capener	0.350	-27.1	6.73	7.76	17.55	1386651.7273	2267934.7930	6	7.20	6.56	2943	
COMPARTMENT 5	7/10/2013	T. Barbee, M. Capener	0.386	-23.3	6.57	7.63	17.62	1386650.2646	2267928.9740	6	2.00	0.88	394	
COMPOSITE	7/10/2013	T. Barbee, M. Capener	0.341	-44.0	4.29	7.27	19.57	-	-	30	27.4	24.1	10817.0	

*Northing and easting values are estimates based on surveyed benchark on east bank of river at this location

ANDERSON
ENGINEERING COMPANY INC.

Table 3F - DR-7 Cross Section Composite Sampling Field Data and Flow Information Summary, July 2013

			Field Measurements					GPS Location (Colorado State Plane NAD83)		Flow Data				Comments
Sample Location	Date of Sample Collection	Field Technicians	EC (mS/cm)	Oxydation Reduction Potential (ORP, mV)	Dissolved Oxygen (ppm)	pH	Temp (°C)	Northing*	Easting*	Compartment Geometry		Average Flowrate		
										Width (ft)	Area (ft^2)	cfs	gpm	
COMPARTMENT 1	7/10/2013	T. Barbee, M. Capener	0.563	-25.9	6.47	6.90	18.24	1385879.1689	2267954.8978	6	1.60	0.25	110	
COMPARTMENT 2	7/10/2013	T. Barbee, M. Capener	0.523	-28.5	6.80	6.89	18.11	1385877.3859	2267949.1688	6	1.60	0.25	110	
COMPARTMENT 3	7/10/2013	T. Barbee, M. Capener	0.476	-29.4	6.66	6.95	17.98	1385875.6030	2267943.4399	6	4.50	6.36	2853	
COMPARTMENT 4	7/10/2013	T. Barbee, M. Capener	0.442	-29.5	6.75	7.02	17.89	1385873.8200	2267937.7109	6	1.60	0.25	110	
COMPARTMENT 5	7/10/2013	T. Barbee, M. Capener	0.419	-30.0	6.89	7.04	17.85	1385872.0371	2267931.9819	6	2.20	1.74	780	
COMPARTMENT 6	7/10/2013	T. Barbee, M. Capener	0.414	-29.8	6.85	7.03	17.87	1385870.2541	2267926.2530	6	1.60	0.25	110	
COMPARTMENT 7	7/10/2013	T. Barbee, M. Capener	0.414	-28.4	6.59	6.95	17.97	1385868.4712	2267920.5240	6	2.20	0.62	279	
TOTAL COMPOSITE	7/10/2013	T. Barbee, M. Capener	0.439	-28.0	4.69	8.40	20.13	-	-	42	15.3	9.7	4352	

*Northing and easting values are estimates based on surveyed benchark on east bank of river at this location

ANDERSON
ENGINEERING COMPANY INC.

Table 3G - DR-4-SW Cross Section Composite Sampling Field Data and Flow Information Summary, July 2013

			Field Measurements					GPS Location (Colorado State Plane NAD83)		Flow Data				Comments
Sample Location	Date of Sample Collection	Field Technicians	EC (mS/cm)	Oxydation Reduction Potential (ORP, mV)	Dissolved Oxygen (ppm)	pH	Temp (°C)	Northing*	Easting*	Compartment Geometry		Average Flowrate		
										Width (ft)	Area (ft^2)	cfs	gpm	
COMPARTMENT 1	7/17/2013	T. Barbee, M. Capener	0.405	1.8	7.82	7.17	13.78	1379181.4814	2266273.2472	6	1.00	0.86	384	
COMPARTMENT 2	7/17/2013	T. Barbee, M. Capener	0.404	-0.3	7.78	7.29	13.72	1379183.9299	2266267.7695	6	3.60	7.61	3414	
COMPARTMENT 3	7/17/2013	T. Barbee, M. Capener	0.404	-1.0	7.76	7.33	13.65	1379186.3784	2266262.2919	6	2.50	4.80	2156	
COMPARTMENT 4	7/17/2013	T. Barbee, M. Capener	0.404	-1.6	8.02	7.38	13.65	1379188.8270	2266256.8142	6	3.60	7.61	3414	
COMPARTMENT 5	7/17/2013	T. Barbee, M. Capener	0.404	-2.1	7.62	7.42	13.67	1379191.2755	2266251.3366	6	3.60	7.61	3414	
COMPARTMENT 6	7/17/2013	T. Barbee, M. Capener	0.400	-7.0	7.49	7.52	15.78	1379193.7240	2266245.8589	6	3.60	7.61	3414	
COMPARTMENT 7	7/17/2013	T. Barbee, M. Capener	0.405	-6.4	7.43	7.51	13.82	1379196.1726	2266240.3813	6	7.70	11.71	5255	
TOTAL COMPOSITE	7/17/2013	T. Barbee, M. Capener	0.404	-7.1	5.75	7.55	15.57	-	-	42	25.6	47.8	21453	

*Northing and easting values are estimates based on surveyed benchark on east bank of river at this location

ANDERSON
ENGINEERING COMPANY INC.

TABLE 4A - Surface Water Analytical Sampling Results Summary, July 2013

			Metals (µg/L)																								Non-Metals (mg/L, unless otherwise indicated)													
Field Sample ID	Date Collected	Fraction	Aluminum	Antimony	Arsenic	Barium	Beryllium	Cadmium	Calcium	Chromium	Cobalt	Copper	Iron	Lead	Magnesium	Manganese	Mercury	Molybdenum	Nickel	Potassium	Selenium	Silver	Sodium	Thallium	Vanadium	Zinc	Alkalinity, Bicarbonate (CaCO3)	Alkalinity, Carbonate (CaCO3)	Alkalinity, Total as CaCO3	Chloride	Cyanide	Hardness (µg/L as CaCO3)	Nitrogen, NO2 plus NO3	Salinity, as dissolved solids	Salinity, as sea water (PSU)	Silica (µg/L)	Sulfate	Sulfide	TDS	TOC	TSS
DR-1	7/10/13	Total	35.4	<0.50	<0.50	67.3	<0.20	<0.080	42900	<0.50	<0.50	<0.50	<50.0	<0.10	5350	8.3	<0.20	0.93	<0.50	698	<0.50	<0.50	2270	<0.10	0.15	<5.0	92.1	<20.0	92.1	1.2	<0.0050	129000	<0.10	158	0.12	5950	43.7	<0.050	153	1.1	<5.0
		Dissolved	9.5	<0.50	<0.50	69.3	<0.20	<0.080	37600	<0.50	<0.50	1.3	<50.0	<0.10	5380	8.2	<0.20	1.0	3.0	654	<0.50	<0.50	2320	<0.10	0.14	5.0															
		Potentially Dissolved	6.5J	0.18J	0.21J	68.7	<0.50	<0.50	40400	0.41J	<1.0	0.84J	25.6J	0.26J	5760	8.9	<0.20	1.4	<1.0	697	0.39J	<0.50	2600	0.32J	0.36J	1.8J															
DR-2	7/10/13	Total	13.6	<0.50	<0.50	66.1	<0.20	<0.080	50500	0.72	<0.50	<0.50	<50.0	<0.10	6020	106	<0.20	1.2	<0.50	933	<0.50	<0.50	2660	<0.10	0.18	5.6	103	<20.0	103	1.1	<0.0050	151000	<0.10	180	0.14	6060	63.0	<0.050	177	1.2	<5.0
		Dissolved	11.9	<0.50	<0.50	70.1	<0.20	<0.080	47300	0.55	<0.50	1.2	<50.0	<0.10	6240	105	<0.20	1.3	0.65	880	<0.50	<0.50	2780	<0.10	0.17	6.3															
		Potentially Dissolved	7.0J	0.16J	0.32J	65.1	<0.50	<0.50	50500	0.40J	<1.0	0.85J	26.2J	0.30J	6500	103	<0.20	1.3	<1.0	950	0.36J	<0.50	3120	0.30J	0.41J	6.8J															
DR-3	7/10/13	Total	372	<0.5	0.7	18.9	0.56	18.1	311000	<0.5	2.5	80.2	4600	5.7	17600	2170	<0.2	17.8	3.9	3660	<0.5	<0.5	26800	<0.1	<0.1	4220	95.9	<20	95.9	<1	<0.005	849000	<0.1	881	0.69	20100	660	<0.05	988	<0.5	15
		Dissolved	23	<0.5	<0.5	20.3	0.34	19.2	229000	<0.5	2.7	8.6	428	<0.1	18700	1820	<0.2	18.6	4.7	3480	<0.5	<0.5	22600	<0.1	<0.1	3620															
		Potentially Dissolved	380	0.58J	0.59J	19.3	0.58	20.2	234000	0.56J	2.5	91.5	5030	6.5	18900	1850	<0.2	19.7	2.3	3850	<1	<0.5	24600	0.40J	<1	3700															
DR-4	7/17/13	Total	212	<0.50	<0.50	21.8	0.29	16.6	219000	<0.50	2.5	50.5	2090	4.2	18400	1810	<0.20	18.3	4.1	3440	<0.50	<0.50	20200	<0.10	<0.10	3120	96.9	<20.0	96.9	<1.0	<0.0050	623000	<0.10	852	0.66	15000	571	<0.050	1000	<0.50	13.0
		Dissolved	19.7	<0.50	<0.50	22.1	<0.20	15.4	237000	<0.50	2.7	3.9	<50.0	0.10	19300	1750	<0.20	18.9	7.0	3680	<0.50	<0.50	21600	<0.10	<0.10	2640															
		Potentially Dissolved	190	0.26J	0.35J	20.0	0.21J	16.3	231000	0.69J	2.3	48.2	1930	4.4	18900	1720	<0.20	18.9	3.9	3630	<1.0	0.014J	21900	0.32J	<1.0	2760															
DR-5	7/17/13	Total	57.4	<0.50	<0.50	20.0	<0.20	11.3	215000	<0.50	1.9	13.3	617	1.1	19400	1530	<0.20	16.4	3.6	3710	<0.50	<0.50	20800	<0.10	<0.10	2230	102	<20.0	102	<1.0	<0.0050	617000	<0.10	763	0.59	14400	565	<0.050	979	<0.50	<5.0
		Dissolved	11.8	<0.50	<0.50	21.1	<0.20	4.4	237000	<0.50	2.1	1.4	<50.0	<0.10	20500	1500	<0.20	17.7	3.6	4020	<0.50	<0.50	21300	<0.10	<0.10	1990															
		Potentially Dissolved	43.9J	0.19J	0.16J	17.8	<0.50	11.2	245000	0.38J	1.7	12.3	559	1.3	22400	1420	<0.20	16.4	3.2	4010	<1.0	<0.50	23100	0.28J	<1.0	1900															
DR-6	7/10/13	Total	13.6	<0.50	<0.50	19.8	<0.20	7.5	266000	<0.50	1.3	3.8	398	0.48	22100	1190	<0.20	17.6	2.5	5730	<0.50	<0.50	30500	<0.10	<0.10	1230	154	<20.0	154	<1.0	<0.0050	755000	0.19	946	0.74	17700	725	<0.050	1130	<0.50	<5.0
		Dissolved	<4.0	<0.50	<0.50	20.6	<0.20	7.8	253000	<0.50	1.3	1.3	<50.0	<0.10	23700	1280	<0.20	18.4	3.1	5270	<0.50	<0.50	31200	<0.10	<0.10	1420															
		Potentially Dissolved	11.5J	0.34J	0.28J	19.4	<0.50	8.3	262000	0.97J	1.2	4.9	413	0.70J	23800	1280	<0.20	19.6	0.79J	6010	<1.0	<0.50	34000	0.36J	0.34J	1360															
DR-7	7/10/13	Total	9.9	<0.50	0.99	63.5	<0.20	0.50	78000	<0.50	<0.50	0.52	132	<0.10	9540	205	<0.20	2.3	<0.50	2110	<0.50	<0.50	6380	<0.10	0.14	87.9	121	<20.0	121	1.2	<0.0050	234000	<0.10	299	0.22	9580	130	<0.050	327	0.96	<5.0
		Dissolved	<4.0	<0.50	0.80	66.2	<0.20	0.57	73500	0.63	<0.50	0.95	63.3	<0.10	9570	202	<0.20	2.5	0.86	1920	<0.50	<0.50	6630	<0.10	0.12	92.5															
		Potentially Dissolved	8.5J	0.20J	0.89J	62.8	<0.50	0.62	73600	0.70J	0.11J	1.0	156	0.29J	9690	207	<0.20	2.5	<1.0	2060	<1.0	<0.50	7000	0.32J	0.40J	92.8															
DR-4-SW	7/17/13	Total	121	<0.50	<0.50	66.8	<0.20	0.40	49600	0.69	<0.50	0.98	231	0.68	7140	112	<0.20	1.4	0.82	1080	<0.50	<0.50	3380	<0.10	0.39	75.0	105	<20.0	105	1.1	<0.0050	153000	<0.10	212	0.16	7280	73.8	<0.050	203	1.3	9.0
		Dissolved	9.8	<0.50	<0.50	68.2	<0.20	0.35	55700	<0.50	<0.50	2.0	<50.0	<0.10	7560	107	<0.20	1.5	4.2	1150	<0.50	<0.50	3650	<0.10	<0.10	70.6															
		Potentially Dissolved	29.9J	0.057J	0.39J	64.0	<0.50	0.37J	53300	0.68J	0.22J	0.75J	138	0.82J	7090	111	<0.20	1.5	0.96J	1120	<1.0	<0.50	3660	0.23J	0.14J	72.4															
DR-G	7/10/13	Total	6.7	<0.50	<0.50	78.0	<0.20	0.20	65300	<0.50	<0.50	0.50	<50.0	<0.10	7680	19.7	<0.20	1.5	<0.50	1320	<0.50	<0.50	3990	<0.10	0.18	30.3	122	<20.0	122	1.4	<0.0050	195000	<0.10	223	0.17	7720	84.2	<0.050	255	1.0	<5.0
		Dissolved	6.0	<0.50	<0.50	80.6	<0.20	0.22	61300	<0.50	<0.50	1.5	<50.0	<0.10	7820	18.9	<0.20	1.5	3.8	1220	<0.50	<0.50	4160	<0.10	0.19	31.4															
		Potentially Dissolved	6.2J	0.14J	0.29J	79.5	<0.50	0.28J	62200	0.75J	<1.0	1.7	63.0	0.30J	7980	20.4	<0.20	1.8	<1.0	1310	<1.0	<0.50	4430	0.30J	0.67J	32.6															

ANDERSON
ENGINEERING COMPANY INC.

TABLE 4B - Groundwater Analytical Sampling Results Summary, July 2013

Field Sample ID	Date Collected	Fraction	Metals (µg/L)																									Non-Metals (mg/L, unless otherwise indicated)															
			Aluminum	Antimony	Arsenic	Barium	Beryllium	Cadmium	Calcium	Chromium	Cobalt	Copper	Iron	Lead	Magnesium	Manganese	Mercury	Molybdenum	Nickel	Potassium	Selenium	Silver	Sodium	Thallium	Vanadium	Zinc	Alkalinity, Bicarbonate (CaCO3)	Alkalinity, Carbonate (CaCO3)	Alkalinity, Total as CaCO3	Chloride	Cyanide	Hardness (µg/L as CaCO3)	Nitrogen, NO2 plus NO3	Salinity, as dissolved solids	Salinity, as seawater (PSU)	Silica (µg/L)	Sulfate	Sulfide	TDS	TOC	TSS
GW-1	7/9/13	Total	8320	0.53	13.0	208	0.54	1.2	50700	9.4	8.2	46.1	14200	40.6	8550	1510	<0.20	4.1	14.4	2820	1.5	<0.50	2500	0.26	17.1	140	92.9	<20.0	92.9	1.3	<0.0050	162000	<0.10	171	0.13	31800	42.3	<0.050	174	1.1	564
		Dissolved	5.9	<0.50	<0.50	57.5	<0.20	<0.080	44600	<0.50	<0.50	1.8	<50.0	<0.10	5240	5.8	<0.20	1.4	3.0	656	<0.50	<0.50	2260	<0.10	<0.10	6.1																
		Potentially Dissolved	1600	0.25J	2.1	180	0.34J	1.2	48600	2.7	3.7	29.0	3050	21.9	6280	860	<0.20	0.47J	8.1	864	0.87J	0.51	2460	0.33J	4.3	82.5																
GW-3	7/19/13	Total	8060	0.54	14.2	178	0.47	2.3	144000	11.4	7.0	76.6	15300	138	20400	1540	<0.20	2.3	9.2	3970	5.6	0.79	3160	0.18	16.5	433	196	<20.0	196	1.6	<0.0050	443000	<0.10	<6.4	<0.014	37900	226	<0.050	519	0.88	358
		Dissolved	5.1	<0.50	<0.50	30.4	<0.20	0.29	143000	<0.50	<0.50	2.4	<50.0	0.13	16200	41.9	<0.20	0.54	3.9	2660	3.2	<0.50	2930	<0.10	<0.10	33.6																
		Potentially Dissolved	2210	0.22J	5.6	74.4	0.30J	1.9	136000	3.9	3.9	56.3	5380	74.4	16300	964	<0.20	0.30J	5.9	2730	3.8	0.71	2860	0.25J	3.6	342																
GW-4	7/18/13	Total	19600	0.68	16.1	395	1.3	6.1	137000	31.5	13.7	84.5	43800	87.9	27200	2020	<0.20	18.8	22.9	5910	2.3	0.90	7070	0.42	45.2	640	168	<20.0	168	1.9	<0.0050	455000	<0.10	962	0.75	70200	219	<0.050	481	1.4	592
		Dissolved	90.0	<0.50	0.73	40.9	<0.20	0.17	135000	<0.50	0.76	1.9	176	0.46	14800	328	<0.20	9.7	5.2	2730	<0.50	<0.50	6940	<0.10	0.29	25.7																
		Potentially Dissolved	3680	0.19J	5.7	98.9	0.84	5.9	136000	8.7	7.8	69.9	16400	87.0	15400	1840	<0.20	6.8	9.7	2960	1.7	0.075J	6620	0.42J	10.2	452																
GW-5	7/9/13	Total	16400	2.6	352	110	1.5	116	619000	18.6	47.5	1600	76500	16700	52700	8470	<0.20	31.8	65.3	8720	5.6	69.1	8940	2.2	27.6	40900	234	<20.0	234	1.6	<0.0050	1760000	<0.10	1570	1.3	81800	1790	1.2	2240	0.61	331
		Dissolved	177	<0.50	43.5	17.4	<0.20	1.5	585000	0.52	7.8	19.2	4050	211	49400	5480	<0.20	11.0	10.1	5520	<0.50	<0.50	8990	<0.10	0.39	5390																
		Potentially Dissolved	9570	1.2	271	13.5	1.3	88.6	595000	10.3	23.0	587	48300	4720	48300	7460	<0.20	5.1	38.0	6390	2.1	<0.50	9520	0.94J	17.8	36900																
GW-6	7/9/13	Total	36100	5.2	354	165	4.3	131	418000	47.5	45.9	1500	198000	18600	62300	16400	<0.20	13.7	63.7	17100	10.1	39.7	6920	2.9	69.9	35100	191	<20.0	191	1.4	<0.0050	1300000	<0.10	1110	0.87	149000	1050	0.17	1590	1.3	719
		Dissolved	40.0	<0.50	53.0	14.8	0.47	<0.080	354000	<0.50	2.6	0.64	29300	1.8	45900	6950	<0.20	6.6	3.4	8740	<0.50	<0.50	6790	<0.10	0.10	9310																
		Potentially Dissolved	13500	1.8	261	17.2	2.7	68.2	340000	17.5	16.1	513	84200	5970	49400	12400	<0.20	3.2	22.6	10600	2.6	<0.50	7230	1.3	31.1	18800																
GW-7	7/17/13	Total	9900	0.72	14.8	47.1	1.1	5.7	282000	16.3	4.5	154	24900	531	36400	203	<0.20	4.4	12.5	4180	7.6	1.2	8210	0.40	13.4	925	276	<20.0	276	<1.0	<0.0050	853000	0.56	854	0.67	35800	552	<0.050	1090	0.69	137
		Dissolved	82.0	<0.50	<0.50	14.4	<0.20	3.0	294000	<0.50	0.70	6.3	<50.0	5.5	29800	17.4	<0.20	1.1	6.7	2800	1.6	<0.50	8530	<0.10	<0.10	189																
		Potentially Dissolved	3410	0.13J	2.9	17.7	0.64	3.6	290000	4.4	1.9	94.8	6010	283	29200	44.1	<0.20	0.75J	5.6	3050	3.1	0.37J	8920	0.40J	1.5	415																
EB-1	7/17/13	Total	1280	<0.50	10.7	24.5	0.27	3.8	362000	2.2	4.6	67.7	9950	546	29600	2610	<0.20	12.1	5.4	4090	0.52	0.97	7570	<0.10	2.2	2070	174	<20.0	174	1.0	<0.0050	1030000	<0.10	1060	0.84	22100	880	<0.050	1500	1.2	55.0
		Dissolved	11.6	<0.50	1.1	12.5	<0.20	0.23	406000	<0.50	3.8	0.72	<50.0	15.9	31000	2430	<0.20	12.4	4.1	4220	<0.50	<0.50	8310	<0.10	<0.10	1080																
		Potentially Dissolved	454	0.17J	7.1	13.8	0.10J	1.6	370000	1.3	3.4	28.4	2540	341	27800	2330	<0.20	10.9	3.7	4040	<1.0	0.015J	8500	0.24J	0.67J	1340																
EB-2	7/17/13	Total	13900	<0.50	118	18.2	5.9	4.3	338000	<0.50	40.1	55.4	568000	595	137000	30100	<0.20	4.5	53.9	16800	1.1	0.77	6760	0.11	1.2	47300	62.4	<20.0	62.4	1.1	<0.0050	1410000	<0.10	1990	1.6	36600	2340	<0.050	3660	<0.50	89.0
		Dissolved	13700	<0.50	72.8	11.9	6.1	0.99	359000	<0.50	44.4	3.0	537000	18.6	142000	29000	<0.20	3.8	60.6	17800	0.87	<0.50	7330	<0.10	<0.10	45600																
		Potentially Dissolved	14000	0.64J	135	11.4	6.2	3.6	341000	0.57J	44.6	49.8	563000	532	129000	28400	<0.20	5.4J	66.3	16600	1.8J	0.22J	7400	0.12J	<10.0	40900																
MW-1 SHALLOW	7/18/13	Total	7930	0.57	10.4	142	0.68	0.98	232000	8.8	4.8	34.7	12000	88.6	23800	577	<0.20	12.6	7.1	9750	7.9	<0.50	22500	0.28	12.7	171	86.2	<20.0	86.2	<1.0	<0.0050	678000	<0.10	774	0.60	43000	637	<0.050	1030	<0.50	191
		Dissolved	6.4	<0.50	<0.50	28.8	<0.20	0.33	251000	<0.50	<0.50	1.3	<50.0	0.11	20200	18.4	<0.20	11.7	3.6	9030	5.5	<0.50	23300	<0.10	<0.10	30.1																
		Potentially Dissolved	1650	0.20J	2.3	44.5	0.35J	0.70	230000	2.3	2.5	18.5	2510	55.3	18800	360	<0.20	4.8	2.5	8520	5.9	0.47J	22900	0.28J	2.6	118																
MW-1 DEEP	7/18/13	Total	1850	<0.50	3.5	42.6	0.58	7.0	234000	3.7	1.5	83.2	7130	162	19900	563	<0.20	15.7	2.8	8310	12.1	<0.50	21300	0.19	2.8	1410	110	<20.0	110	<1.0	<0.0050	666000	<0.10	758	0.59	20500	623	<0.050	1010	<0.50	77.0
		Dissolved	12.9	<0.50	<0.50	23.7	<0.20	2.0	244000	<0.50	<0.50	2.9	<50.0	0.82	19600	12.7	<0.20	13.4	4.4	8260	11.7	<0.50	22800	0.14	<0.10	329																
		Potentially Dissolved	840	0.38J	2.2	28.6	0.53	6.7	237000	2.6	0.92J	83.3	5270	161	19000	357	<0.20	7.9	1.8	8120	11.3	0.24J	22900	0.31J	0.79J	1300																
MW-2 SHALLOW	7/18/13	Total	CNM: Not enough water to sample.																																							
		Dissolved																																								
		Potentially Dissolved																																								
MW-2 DEEP	7/18/13	Total	227	<0.50	0.68	19.6	<0.20	1.3	243000	0.55	<0.50	32.6	524	9.2	21900	40.3	<0.20	7.8	<0.50	1860	1.6	<0.50	12000	<0.10	0.53	50.0	96.0	<20.0	96.0	<1.0	<0.0050	696000	0.40	784	0.61	9920	655	<0.050	1010	<0.50	20.0
		Dissolved	6.5	<0.50	<0.50	14.3	<0.20	0.93	259000	<0.50	<0.50	1.4	<50.0	0.14	23700	2.6	<0.20	8.7	4.1	1920	1.6	<0.50	12900	<0.10	<0.10	22.0																
		Potentially Dissolved	76.9	0.10J	0.26J	16.1	<0.50	1.1	247000	0.77J	0.095J	1.2	282	7.1	21800	23.6	<0.20	7.2	0.34J	1810	1.5	0.064J	12900	0.31J	0.31J	24.5																
MW-3 SHALLOW	7/18/13	Total	CNM; Not enough water to sample.																																							
		Dissolved																																								
		Potentially Dissolved																																								
MW-3 DEEP	7/18/13	Total	442	<0.50	1.5	34.4	<0.20	0.62	234000	0.56	1.1	5.5	2530	9.5	23300	1420	<0.20	8.9	0.56	7120	<0.50	<0.50	12100	<0.10	1.1	59.9	99.7	<20.0	99.7	<1.0	<0.0050	679000	<0.10	794	0.62	13700	634	<0.050	1040	0.75	25.0
		Dissolved	6.3	<0.50	1.1	23.9	<0.20	0.081	260000	<0.50	1.1	1.1	1530	<0.10	25200	1440	<0.20	10.1	3.7	7620	<0.50	<0.50	13300	<0.10	<0.10	42.5																
		Potentially Dissolved	129	0.12J	1.1	24.9	0.073J	0.37J	235000	0.97J	0.96J	4.3	2170	8.6	21900	1290	<0.20	8.6	0.47J	7050	0.16J	0.048J	12800	0.40J	0.60J	49.2																
MW-4 SHALLOW	7/17/13	Total	9130	<0.50	8.1	154	0.95	2.0	234000	11.8	4.9	57.7	12400	82.8	29800	394	<0.20	2.9	9.0	5000	27.0	<0.50	7130	0.21	12.7	413	309	<20.0	309	1.9	<0.0050	706000	1.9	744	0.58	43400	388	<0.050	914	1.3	166
		Dissolved	30.3	<0.50	<0.50	64.1	<0.20	1.4	247000	<0.50	<0.50	3.2	<50.0	0.36	27000	62.6	<0.20	1.8	1.4	3690	26.4	<0.50	7750	<0.10	0.10	150																
		Potentially Dissolved	2520	0.11J	2.8	74.7	0.46J	1.9	218000	5.0	2.5	38.7	3720	79.6	23400	290	<0.20	1.2	3.6	3470	24.3	0.23J	7280	0.28J	3.4	323																
MW-4 DEEP	7/12/13	Total	1160	<0.50	2.9	52.0	0.21	2.6	310000	1.3	2.2	15.9	2330	14.1	31800	414	<0.20	3.1	1.8	3500	34.8	<0.50	6430	<0.10	2.2	361	404	<20.0	404	1.1	<0.0050	904000	<0.10	942	0.74	18600	508	<0.050	1110	<0.50	39.0
		Dissolved	48.4	<0.50	<0.50	18.2	<0.20	2.3	294000	0.56	<0.50	4.0	<50.0	<0.10	33600	6.3	<0.20	2.0	1.4	3040	35.7	<0.50	6770	<0.10	<0.10	348																
		Potentially Dissolved	480	0.13J	1.7	27.6	0.11J	2.7	288000	1.7	0.72J	12.3	1040	10.4	32800	126	<0.20	1.1	<1.0	3330	33.4	0.067J	7300	0.30J	1.4	361																
MW-5 SHALLOW	7/9/13	Total	36800	3.6	384	90.0	7.0	185	476000	16.5	89.2	1090	596000	7010	133000	28000	<0.20	8.0	157	5160	10.5	22.5	22200	0.86	13.5	129000	<20.0	<20.0	<20.0	3.6	<0.0050	1740000	<0.10	1790	1.4	77800	3480	<0.050	4190	<0.50	228
		Dissolved	25900	<2.5	259	8.1	7.1	157	424000	<2.5	76.0	4.2	448000	1070	134000	26000	<0.20	<2.5	142	2360	4.8	<2.5	19400	<0.50	1.4	119000																
		Potentially Dissolved	29800	1.2J	373	6.5	6.7	197	351000	8.7	87.2	656	453000	3270	113000	25900	<0.20	2.9J	161	2540	7.4	<2.5	19200	2.0J	3.5J	120000																
MW-5 DEEP	7/9/13	Total	4140	0.63	219	75.1	1.9	4.1	456000	3.5	11.4	70.5	90700	553	53400	11800	<0.20	17.0	11.4	9340	1.2	1.7	7220	0.25	6.2	11000	99.7	<20.0	99.7	1.5	<0.0050	1110000	<0.10	1100	0.87	33700	1170	<0.050	1650	0.55	344
		Dissolved	510	<0.50	113	11.3	1.7	<0.080	332000	<0.50	9.4	0.69	68400	2.6	58300	11400	<0.20	12.6	8.1	8130	<0.50	<0.50	7550	<0.10	<0.10	9480																
		Potentially Dissolved	1340	0.19J	168	14.7	1.6	1.1	325000	1.3	9.2	18.9	69800	299	53400	10900	<0.20	6.2	6.2	8910	0.45J	<0.50	8260	0.41J	0.87J	9390																
MW-6 SHALLOW	7/18/13	Total	13600	0.59	88.8	106	1.5	9.9	378000	11.9	10.9	59.4	67900	117	61200	9220	<0.20	8.2	16.1	13500	1.8	<0.50	3960	0.41	17.6	2200	147	<20.0	147	1.1	<0.0050	1190000	<0.10	1170	0.92	65600	1090	<0.050	1710	0.82	306
		Dissolved	643	<0.50	28.3	17.1	0.88	0.12	414000	<0.50	4.2	0.70	47000	<0.10	59800	9180	<0.20	4.8	2.3	12500	<0.50	<0.50	4310	<0.10	<0.10	620																
		Potentially Dissolved	5070	0.18J	70.4	24.1	1.1	7.8	376000	3.8	7.5	32.8	58300	110	52800	8850	<0.20	3.5	8.9	12200	1.1	0.011J	4500	0.43J	4.2	1980																
MW-6 DEEP	7/18/13	Total	2810	<0.50	48.1	46.1	0.70	1.5	285000	2.3	3.9	15.1	24900	31.2	43500	7830	<0.20	7.0	4.4	6700	1.4	<0.50	4780	<0.10	5.2	759	179	<20.0	179	1.0	<0.0050	890000	<0.10	908	0.71	26200	732	<0.050	1250	<0.50	99.0
		Dissolved	329	<0.50	18.1	18.2	0.59	<0.080	302000	<0.50	3.0	1.3	19700	0.26	43400	7620	<0.20	6.3	2.3	6620	0.79J	<0.50	5170	<0.10	<0.10	331																
		Potentially Dissolved	1110	0.20J	43.1	24.9	0.62	0.88	279000	1.7	3.0	9.6	22200	23.5	39400	7240	<0.20	4.7	3.2	6260	0.83J	<0.50	5160	0.25J	1.9	656																
MW-101	7/9/13	Total	12200	0.50	15.5	168	1.1	6.8	340000	20.2	10	106	33900	1150	39100	1440	<0.20	8.0	16.7	6200	6.3	5.3	9310	0.62	19.2	979	320	<20.0	320	1.3	<0.0050	1010000	0.38	902	0.70	53100	684	<0.050	1200	0.73	335
		Dissolved	1340	<0.50	2.0	31.6	0.24	0.93	319000	2.0	4.0	11.2	5360	119	36800	967	<0.20	2.2	8.3	4080	3.3	<0.50	9610	<0.10	2.0	331																
		Potentially Dissolved	1390	0.17J	2.0	26.6	0.33J	2.6	309000	3.7	4.2	24.3	7060	438	35100	988	<0.20	0.58J	4.2	4220	3.2	<0.50	9880	0.44J	2.6	471																
MW-102	7/9/13	Total	41700	0.96	59.6	322	3.9	8.3	242000	55.3	83.6	186	68900	297	47900	10900	<0.20	19.9	64.1	6800	9.8	0.81	7050	0.77	69.4	1640	201	<20.0	201	1.1	<0.0050	803000	0.83	703	0.54	137000	466	<0.050	844	0.52	892
		Dissolved	26.8	<0.50	<0.50	12.4	<0.20	0.29	221000	<0.50	<0.50	1.7	<50.0	0.25	20300	10.1	<0.20	0.55	4.2	1850	2.3	<0.50	6990	<0.10	<0.10	55.3																
		Potentially Dissolved	6060	0.18J	4.1	61.4	2.2	5.0	203000	7.2	11.8	67.2	5870	116	19800	1360	<0.20	0.24J	10.6	2210	5.6	0.50J	6780	0.29J	5.0	793																
MW-103	7/18/13	Total	1960	<0.50	10.3	59.5	0.74	1.4	306000	2.2	4.3	6.9	11600	7.6	34200	8490	<0.20	11.1	3.2	5720	<0.50	<0.50	14700	0.18	3.8	151	339	<20.0	339	<1.0	<0.0050	904000	<0.10	950	0.74	36200	613	<0.050	1260	0.70	120
		Dissolved	20.9	<0.50	3.6	39.8	0.41	0.18	324000	<0.50	3.7	1.3	6840	<0.10	34600	8300	<0.20	10.9	5.4	5070	<0.50	<0.50	15900	<0.10	<0.10	98.9																
		Potentially Dissolved	419	0.065J	5.3	40.0	0.66	1.1	318000	1.5	3.6	4.8	8740	5.5	32600	8230	<0.20	8.2	2.9	5550	0.23J	0.013J	15900	0.38J	0.90J	133																
MW-104	7/18/13	Total	1230	<0.50	1.5	52.6	<0.20	3.2	231000	2.3	1.0	7.5	2100	12.3	21300	546	<0.20	13.7	2.1	6630	1.3	<0.50	23300	<0.10	2.7	778	114	<20.0	114	<1.0	<0.0050	664000	<0.10	796	0.62	22100	644	<0.050	1030	<0.50	62.0
		Dissolved	4.5	<0.50	<0.50	20.3	<0.20	2.6	259000	<0.50	<0.50	2.0	<50.0	0.14	23400	28.7	<0.20	13.0	4.8	7030	1.3	<0.50	26000	<0.10	<0.10	654																
		Potentially Dissolved	359	0.12J	0.56J	29.5	<0.50	2.9	235000	2.3	0.46J	5.7	898	8.8	20200	244	<0.20	6.5	2.1	6420	1.2	0.12J	24900	0.24J	0.66J	717																
MW-202	7/19/13	Total	CNM: Not enough water to sample.																																							
		Dissolved																																								
		Potentially Dissolved																																								
MW-204	7/19/13	Total	CNM: Broke pipe.																																							
		Dissolved																																								
		Potentially Dissolved																																								
P13-102	7/19/13	Total	1410	<0.50	2.5	41.0	0.27	0.46	331000	1.7	13.1	6.7	3980	9.1	46700	18400	<0.20	4.4	2.6	5230	<0.50	<0.50	12600	<0.10	3.0	122	166	<20.0	166	1.4	<0.0050	1020000	<0.10	1080	0.85	25400	900	<0.050	1440	<0.50	57.0
		Dissolved	37.7	<0.50	1.1	21.0	<0.20	0.13	336000	<0.50	12.8	1.5	1870	0.30	47900	18100	<0.20	4.2	5.3	5040	<0.50	<0.50	12800	<0.10	<0.10	73.5																
		Potentially Dissolved	276	0.037J	1.2	23.7	0.21J	0.23J	317000	0.91J	11.0	4.6	2620	8.5	44900	17200	<0.20	3.7	3.3	4970	<1.0	0.011J	12500	0.29J	0.60J	120																
P13-103	7/19/13	Total	5830	1.2	69.4	132	0.56	6.2	275000	6.1	7.2	255	65400	1010	30900	2700	<0.20	10.6	8.8	5570	3.4	8.4	11300	0.40	8.8	1170	133	<20.0	133	1.0	<0.0050	815000	<0.10	870	0.68	46000	676	<0.050	1150	0.62	579
		Dissolved	4.4	<0.50	32.7	26.6	<0.20	0.24	284000	<0.50	1.8	1.1	11200	0.20	30500	2590	<0.20	7.9	4.6	4280	<0.50	<0.50	12000	<0.10	<0.10	162																
		Potentially Dissolved	1280	0.28J	62.0	36.2	0.38J	4.7	266000	2.9	2.7	134	22900	860	27500	2510	<0.20	6.4	4.4	4150	0.76J	0.16J	11400	0.37J	2.1	827																
CHV-101S	7/19/13	Total	26100	<0.50	22.6	707	2.2	3.1	280000	50.7	27.4	61.1	44000	55.8	39100	6660	<0.20	8.7	37.2	7770	2.3	<0.50	13400	0.51	48.7	557	151	<20.0	151	<1.0	<0.0050	859000	<0.10	837	0.65	94300	611	<0.050	983	<0.50	1630
		Dissolved	5.0	<0.50	<0.50	23.5	<0.20	0.19	257000	<0.50	<0.50	1.0	<50.0	0.10	20800	64.4	<0.20	0.65	3.3	2700	<0.50	<0.50	12600	<0.10	<0.10	19.7																
		Potentially Dissolved	4350	0.094J	3.5	69.4	1.4	2.0	245000	17.9	9.2	26.8	8380	15.0	21700	2530	<0.20	0.58J	12.7	3210	1.5	0.17J	12000	0.24J	6.7	279																

Angle Boreholes

AT-2	7/19/13	Total	12400	1.6	12.9	120	2.5	17.5	168000	14.2	8.5	770	209000	177	22100	3460	<0.20	33.6	16.0	6340	1.1	<0.50	10700	0.23	16.8	2810	36.8	<20.0	36.8	1.5	<0.0050	510000	<0.10	580	0.44	42300	469	<0.050	681	1.1	702
		Dissolved	5.1	<0.50	<0.50	53.0	<0.20	<0.080	169000	<0.50	<0.50	1.2	<50.0	0.12	14300	523	<0.20	4.4	3.9	5300	<0.50	<0.50	11100	<0.10	<0.10	7.2																		
		Potentially Dissolved	2290	0.20J	1.2	77.7	1.8	15.0	161000	6.4	5.3	431	53400	156	14900	1890	<0.20	0.99J	8.7	5200	1.1	0.013J	10800	0.28J	2.2	1990																		
BAH-01	7/19/13	Total	388000	<50.0	104	576	270	2520	432000	12900	297	116000	5

TABLE 4C - Quality Control Samples Analytical Sampling Results Summary, July 2013

Field Sample ID	Date Collected	Fraction	Metals (µg/L)																								Non-Metals (mg/L, unless otherwise indicated)													
			Aluminum	Antimony	Arsenic	Barium	Beryllium	Cadmium	Calcium	Chromium	Cobalt	Copper	Iron	Lead	Magnesium	Manganese	Mercury	Molybdenum	Nickel	Potassium	Selenium	Silver	Sodium	Thallium	Vanadium	Zinc	Alkalinity, Bicarbonate (CaCO3)	Alkalinity, Carbonate (CaCO3)	Alkalinity, Total as CaCO3	Chloride	Cyanide	Hardness (µg/L as CaCO3)	Nitrogen, NO2 plus NO3	Salinity, as dissolved solids	Salinity, as sea water (PSU)	Silica (µg/L)	Sulfate	Sulfide	TDS	TOC	TSS
DR-8	7/10/13	Total	15.4	<0.50	<0.50	65.5	<0.20	<0.080	39500	<0.50	<0.50	<0.50	<50.0	<0.10	5180	8.8	<0.20	0.92	<0.50	671	<0.50	<0.50	2190	<0.10	0.16	<5.0	116	<20.0	116	1.1	<0.0050	120000	<0.10	153	0.12	5170	42.6	<0.050	157	1.0	<5.0
DUPLICATE OF DR-1		Dissolved	4.8	<0.50	<0.50	70.2	<0.20	<0.080	37500	<0.50	<0.50	1.2	<50.0	<0.10	5400	8.5	<0.20	0.96	4.0	648	<0.50	<0.50	2340	<0.10	0.14	<5.0															
		Potentially Dissolved	5.6J	0.14J	0.17J	68.8	<0.50	<0.50	41000	4.2	<1.0	1.4	41.4J	0.24J	5900	8.6	<0.20	1.3	<1.0	652	<1.0	<0.50	2620	0.28J	0.80J	<10.0															
DR-9	7/10/13	Total	9.5	<0.50	<0.50	77.0	<0.20	0.22	64100	<0.50	<0.50	0.56	<50.0	0.20	7680	21.1	<0.20	1.5	<0.50	1310	<0.50	<0.50	3980	<0.10	0.20	34.8	143	<20.0	143	1.3	<0.0050	192000	<0.10	251	0.19	7580	81.2	<0.050	259	0.99	<5.0
DUPLICATE OF DR-G		Dissolved	6.8	<0.50	<0.50	80.1	<0.20	0.21	60600	0.98	<0.50	1.1	<50.0	<0.10	7690	17.0	<0.20	1.6	0.71	1200	<0.50	<0.50	4050	<0.10	0.18	28.1															
		Potentially Dissolved	6.5J	0.14J	0.32J	78.7	<0.50	0.28J	64400	1.5	<1.0	0.96J	44.6J	0.29J	8210	21.6	<0.20	1.7	<1.0	1310	<1.0	<0.50	4460	0.30J	0.57J	32.8															
DR-10	7/18/13	Total	1010	<0.50	1.2	49.2	<0.20	2.9	243000	1.9	0.84	6.2	1690	9.6	21900	476	<0.20	14.1	1.9	6920	1.4	<0.50	24200	<0.10	2.1	786	117	<20.0	117	<1.0	<0.0050	696000	<0.10	783	0.61	22600	620	<0.050	1030	<0.50	43.0
DUPLICATE OF MW-104		Dissolved	17.3	<0.50	<0.50	19.8	<0.20	2.3	251000	<0.50	<0.50	1.7	<50.0	0.22	21500	35.2	<0.20	12.2	4.2	6730	1.1	<0.50	24800	<0.10	<0.10	644															
		Potentially Dissolved	222	0.11J	0.32J	25.7	<0.50	2.5	241000	1.0	0.32J	3.7	617	6.1	20800	190	<0.20	8.7	1.2	6630	1.2	0.085J	25900	0.24J	0.42J	666															
DR-11	7/18/13	Total	7820	0.56	10.3	146	0.66	1.1	244000	8.9	4.8	36.6	12000	93.6	24300	596	<0.20	13.1	7.1	9870	7.8	<0.50	22300	0.28	12.7	181	101	<20.0	101	<1.0	<0.0050	709000	<0.10	831	0.65	43700	616	<0.050	1030	0.57	244
DUPLICATE OF MW-1 SHALLOW		Dissolved	8.4	<0.50	<0.50	28.8	<0.20	0.32	254000	<0.50	<0.50	1.3	<50.0	0.16	20000	17.3	<0.20	11.6	4.0	8790	5.3	<0.50	23000	<0.10	<0.10	30.4															
		Potentially Dissolved	1530	0.21J	2.1	41.6	0.37J	0.78	235000	2.3	2.2	19.1	2310	55.0	19400	343	<0.20	5.0	2.4	8430	5.5	0.44J	23200	0.28J	2.4	116															
DR-12	7/19/13	Total	6120	1.4	67.1	145	0.57	6.7	276000	8.8	8.1	308	74200	1120	31000	2680	<0.20	11.3	10.2	5720	3.6	10.4	11300	0.46	9.2	1190	140	<20.0	140	<1.0	<0.0050	816000	<0.10	866	0.68	46400	671	<0.050	1100	<0.50	557
DUPLICATE OF P13-103		Dissolved	8.9	<0.50	35.0	24.1	<0.20	0.18	280000	<0.50	1.7	2.2	11500	0.42	30200	2480	<0.20	7.6	4.4	4190	<0.50	<0.50	12000	<0.10	<0.10	152															
		Potentially Dissolved	991	0.27J	56.4	34.3	0.32J	3.3	264000	2.6	2.3	103	20800	641	28400	2480	<0.20	5.9	3.1	4100	0.57J	0.15J	11500	0.35J	1.4	596															
FB- LAB	7/10/13	Total	<4.0	<0.50	<0.50	<0.30	<0.20	<0.080	<20.0	<0.50	<0.50	<0.50	<50.0	<0.10	<5.0	<0.50	<0.20	<0.50	<0.50	<20.0	<0.50	<0.50	301	<0.10	<0.10	<5.0	<20.0	<20.0	<20.0	<1.0	<0.0050	<71.0	<0.10	<8.4	<0.014	<53.5	<1.0	<0.050	<5.0	<0.50	<5.0
		Dissolved	<4.0	<0.50	<0.50	<0.30	<0.20	<0.080	<20.0	<0.50	<0.50	0.58	<50.0	<0.10	<5.0	<0.50	<0.20	<0.50	0.70	23.9	<0.50	<0.50	326	<0.10	<0.10	<5.0															
		Potentially Dissolved	<50.0	0.075J	<1.0	0.26J	<0.50	<0.50	29.0J	1.1	<1.0	<1.0	6.0J	0.20J	<50.0	<1.0	<0.20	<1.0	1.0	<500	<1.0	<0.50	358J	0.28J	0.63J	<10.0															
FB- FIELD	7/18/13	Total	4.2	<0.50	<0.50	<0.30	<0.20	<0.080	<20.0	<0.50	<0.50	0.85	<50.0	0.11	<5.0	<0.50	<0.20	<0.50	<0.50	<20.0	<0.50	<0.50	303	<0.10	<0.10	<5.0	<20.0	<20.0	<20.0	<1.0	<0.0050	<71.0	<0.10	<8.4	<0.014	<53.5	<1.0	<0.050	<5.0	<0.50	<5.0
		Dissolved	<4.0	<0.50	<0.50	<0.30	<0.20	<0.080	23.0	<0.50	<0.50	0.91	<50.0	<0.10	5.4	0.61	<0.20	<0.50	1.1	51.4	<0.50	<0.50	404	<0.10	<0.10	<5.0															
		Potentially Dissolved	<50.0	<1.0	<1.0	<1.0	<0.50	<0.50	36.0J	0.32J	<1.0	<1.0	10.8J	0.043J	<50.0	0.35J	<0.20	<1.0	<1.0	<500	<1.0	0.010J	344J	0.23J	<1.0	<10.0															

ANDERSON
ENGINEERING COMPANY INC.

TABLE 4D - Dolores River Composite Sampling Analytical Sampling Results Summary, July 2013

			Metals (µg/L)																							Non-Metals (mg/L, unless otherwise indicated)													
Field Sample ID	Date Collected	Fraction	Aluminum	Antimony	Arsenic	Barium	Beryllium	Cadmium	Calcium	Chromium	Cobalt	Copper	Iron	Lead	Magnesium	Manganese	Mercury	Molybdenum	Nickel	Potassium	Selenium	Silver	Sodium	Thallium	Vanadium	Zinc	Alkalinity, Bicarbonate (CaCO3)	Alkalinity, Carbonate (CaCO3)	Alkalinity, Total as CaCO3	Chloride	Cyanide	Hardness (µg/L as CaCO3)	Nitrogen, NO2 plus NO3	Salinity, as dissolved solids	Salinity, as sea water (PSU)	Silica (µg/L)	Sulfate	Sulfide	TDS	TOC	TSS
DR-1 COMPOSITE	7/10/13	Total	12.6	<0.50	<0.50	68.5	<0.20	<0.080	41300	<0.50	<0.50	<0.50	<50.0	<0.10	5390	8.7	<0.20	0.95	<0.50	702	<0.50	<0.50	2280	<0.10	0.15	<5.0	90.5	<20.0	90.5	1.1	<0.0050	125000	<0.10	156	0.12	5600	43.0	<0.050	155	1.1	<5.0
		Dissolved	4.1	<0.50	<0.50	69.3	<0.20	<0.080	37700	<0.50	<0.50	0.98	57.7	<0.10	5420	7.2	<0.20	1.0	0.54	645	<0.50	<0.50	2310	<0.10	0.14	<5.0														
		Potentially Dissolved	<50.0	0.15J	0.21J	66.6	<0.50	<0.50	38800	0.90J	<1.0	1.6	19.8J	0.25J	5530	8.0	<0.20	1.2	<1.0	638	0.36J	<0.50	2510	0.29J	0.65J	2.3J														
DR-2 COMPOSITE	7/10/13	Total	9.0	<0.50	<0.50	66.6	<0.20	<0.080	50100	<0.50	<0.50	<0.50	<50.0	<0.10	6220	89.5	<0.20	1.1	<0.50	961	<0.50	<0.50	2780	<0.10	0.16	<5.0	120	<20.0	120	1.1	<0.0050	151000	<0.10	187	0.14	6240	63.0	<0.050	189	1.2	<5.0
		Dissolved	5.7	<0.50	<0.50	68.0	<0.20	<0.080	46000	<0.50	<0.50	1.1	<50.0	<0.10	6190	85.7	<0.20	1.2	0.59	864	<0.50	<0.50	2800	<0.10	0.16	5.2														
		Potentially Dissolved	10.1J	0.14J	0.24J	65.2	<0.50	<0.50	46900	0.78J	<1.0	0.75J	33.1J	0.24J	6380	90.3	<0.20	1.3	<1.0	934	<1.0	<0.50	3000	0.30J	0.53J	4.6J														
DR-7 COMPOSITE	7/10/13	Total	25.8	<0.50	0.67	64.3	<0.20	0.33	63700	<0.50	<0.50	0.73	144	0.13	7660	174	<0.20	1.8	<0.50	1440	<0.50	<0.50	4450	<0.10	0.20	54.3	129	<20.0	129	1.2	<0.0050	191000	<0.10	259	0.20	7810	95.5	<0.050	253	1.1	<5.0
		Dissolved	4.9	<0.50	<0.50	67.1	<0.20	0.32	60300	<0.50	<0.50	0.94	<50.0	<0.10	7700	151	<0.20	1.9	0.60	1320	<0.50	<0.50	4640	<0.10	0.13	55.4														
		Potentially Dissolved	7.1J	0.15J	0.51J	64.4	<0.50	0.41J	62200	0.44J	0.063J	0.87J	92.0	0.26J	7910	152	<0.20	2.1	<1.0	1370	<1.0	<0.50	4960	0.30J	0.70J	54.2														
DR-4-SW COMPOSITE	7/17/13	Total	198	<0.50	0.62	71.4	<0.20	0.42	52700	<0.50	<0.50	1.2	363	1.2	7430	125	<0.20	1.4	0.87	1140	<0.50	<0.50	3460	<0.10	0.60	82.6	105	<20.0	105	1.0	<0.0050	162000	<0.10	211	0.16	7750	72.7	<0.050	203	1.3	10
		Dissolved	8.4	<0.50	<0.50	68.6	<0.20	0.36	56600	<0.50	<0.50	1.6	<50.0	<0.10	7610	108	<0.20	1.5	0.96	1150	<0.50	<0.50	3740	<0.10	<0.10	67.6														
		Potentially Dissolved	42.4J	0.11J	0.38J	68.2	<0.50	0.38J	56400	0.32J	0.27J	0.88J	180	1.2	7450	121	<0.20	1.6	0.77J	1150	<1.0	0.011J	3850	0.26J	0.20J	75.3														

ANDERSON
ENGINEERING COMPANY INC.

Table 5A - Relative Percent Difference (RPD) of Lab Analysis Between DR-1 and DR-8

Analyte	Total Metals / Non Metals			Dissolved Metals			Potentially Dissolved Metals		
	DR-1 (µg/L)	DR-8 (µg/L)	RPD (%)	DR-1 (µg/L)	DR-8 (µg/L)	RPD (%)	DR-1 (µg/L)	DR-8 (µg/L)	RPD (%)
Aluminum	35.4	15.4	-78.74	9.5	4.8	-65.73	6.5J	5.6J	-
Antimony	<0.50	<0.50	-	<0.50	<0.50	-	0.18J	0.14J	-
Arsenic	<0.50	<0.50	-	<0.50	<0.50	-	0.21J	0.17J	-
Barium	67.3	65.5	-2.71	69.3	70.2	1.29	68.7	68.8	0.15
Beryllium	<0.20	<0.20	-	<0.20	<0.20	-	<0.50	<0.50	-
Cadmium	<0.080	<0.080	-	<0.080	<0.080	-	<0.50	<0.50	-
Calcium	42900	39500	-8.25	37600	37500	-0.27	40400	41000	1.47
Chromium	<0.50	<0.50	-	<0.50	<0.50	-	0.41J	4.2	-
Cobalt	<0.50	<0.50	-	<0.50	<0.50	-	<1.0	<1.0	-
Copper	<0.50	<0.50	-	1.3	1.2	-8.00	0.84J	1.4	-
Iron	<50.0	<50.0	-	<50.0	<50.0	-	25.6J	41.4J	-
Lead	<0.10	<0.10	-	<0.10	<0.10	-	0.26J	0.24J	-
Magnesium	5350	5180	-3.23	5380	5400	0.37	5760	5900	2.40
Manganese	8.3	8.8	5.85	8.2	8.5	3.59	8.9	8.6	-3.43
Mercury	<0.20	<0.20	-	<0.20	<0.20	-	<0.20	<0.20	-
Molybdenum	0.93	0.92	-1.08	1.0	0.96	-4.08	1.4	1.3	-7.41
Nickel	<0.50	<0.50	-	3.0	4.0	28.57	<1.0	<1.0	-
Potassium	698	671	-3.94	654	648	-0.92	697	652	-6.67
Selenium	<0.50	<0.50	-	<0.50	<0.50	-	0.39J	<1.0	-
Silver	<0.50	<0.50	-	<0.50	<0.50	-	<0.50	<0.50	-
Sodium	2270	2190	-3.59	2320	2340	0.86	2600	2620	0.77
Thallium	<0.10	<0.10	-	<0.10	<0.10	-	0.32J	0.29J	-
Vanadium	0.15	0.16	6.45	0.14	0.14	0.00	0.36J	0.80J	-
Zinc	<5.0	<5.0	-	5.0	<5.0	-	1.8J	<10.0	-
Alkalinity, Bicarbonate (CaCO3, mg/L)	92.1	116	22.97	-	-	-	-	-	-
Alkalinity, Carbonate (CaCO3, mg/L)	<20.0	<20.0	-	-	-	-	-	-	-
Alkalinity, Total as CaCO3 (mg/L)	92.1	116	22.97	-	-	-	-	-	-
Chloride (mg/L)	1.2	1.1	-8.70	-	-	-	-	-	-
Cyanide	<0.0050	<0.0050	-	-	-	-	-	-	-
Hardness	129000	120000	-7.23	-	-	-	-	-	-
Nitrogen, NO2 plus NO3 (mg/L)	<0.10	<0.10	-	-	-	-	-	-	-
Salinity, as dissolved solids (mg/L)	158	153	-3.22	-	-	-	-	-	-
Salinity, as sea water (PSU)	0.12	0.12	0.00	-	-	-	-	-	-
Silica	5950	5170	-14.03	-	-	-	-	-	-
Sulfate (mg/L)	43.7	42.6	-2.55	-	-	-	-	-	-
Sulfide (mg/L)	<0.050	<0.050	-	-	-	-	-	-	-
TDS (mg/L)	153	157	2.58	-	-	-	-	-	-
TOC (mg/L)	1.1	1.0	-9.52	-	-	-	-	-	-
TSS (mg/L)	<5.0	<5.0	-	-	-	-	-	-	-

Table 5B - Relative Percent Difference (RPD) of Lab Analysis Between DR-G and DR-9

Analyte	Total Metals / Non Metals			Dissolved Metals			Potentially Dissolved Metals		
	DR-G (µg/L)	DR-9 (µg/L)	RPD (%)	DR-G (µg/L)	DR-9 (µg/L)	RPD (%)	DR-G (µg/L)	DR-9 (µg/L)	RPD (%)
Aluminum	6.7	9.5	34.57	6.0	6.8	12.50	6.2J	6.5J	-
Antimony	<0.50	<0.50	-	<0.50	<0.50	-	0.14J	0.14J	-
Arsenic	<0.50	<0.50	-	<0.50	<0.50	-	0.29J	0.32J	-
Barium	78.0	77.0	-1.29	80.6	80.1	-0.62	79.5	78.7	-1.01
Beryllium	<0.20	<0.20	-	<0.20	<0.20	-	<0.50	<0.50	-
Cadmium	0.20	0.22	9.52	0.22	0.21	-4.65	0.28J	0.28J	-
Calcium	65300	64100	-1.85	61300	60600	-1.15	62200	64400	3.48
Chromium	<0.50	<0.50	-	<0.50	0.98	-	0.79J	1.5	-
Cobalt	<0.50	<0.50	-	<0.50	<0.50	-	<1.0	<1.0	-
Copper	0.50	0.56	11.32	1.5	1.1	-30.77	1.7	0.96J	-
Iron	<50.0	<50.0	-	<50.0	<50.0	-	63.0	44.6J	-
Lead	<0.10	0.20	-	<0.10	<0.10	-	0.30J	0.29J	-
Magnesium	7680	7680	0.00	7820	7690	-1.68	7980	8210	2.84
Manganese	19.7	21.1	6.86	18.9	17.0	-10.58	20.4	21.6	5.71
Mercury	<0.20	<0.20	-	<0.20	<0.20	-	<0.20	<0.20	-
Molybdenum	1.5	1.5	0.00	1.5	1.6	6.45	1.8	1.7	-5.71
Nickel	<0.50	<0.50	-	3.8	0.71	-137.03	<1.0	<1.0	-
Potassium	1320	1310	-0.76	1220	1200	-1.65	1310	1310	0.00
Selenium	<0.50	<0.50	-	<0.50	<0.50	-	<1.0	<1.0	-
Silver	<0.50	<0.50	-	<0.50	<0.50	-	<0.50	<0.50	-
Sodium	3990	3980	-0.25	4160	4050	-2.68	4430	4460	0.67
Thallium	<0.10	<0.10	-	<0.10	<0.10	-	0.30J	0.30J	-
Vanadium	0.18	0.20	10.53	0.19	0.18	-5.41	0.67J	0.57J	-
Zinc	30.3	34.8	13.82	31.4	28.1	-11.09	32.6	32.8	0.61
Alkalinity, Bicarbonate (CaCO3, mg/L)	122	143	15.85	-	-	-	-	-	-
Alkalinity, Carbonate (CaCO3, mg/L)	<20.0	<20.0	-	-	-	-	-	-	-
Alkalinity, Total as CaCO3 (mg/L)	122	143	15.85	-	-	-	-	-	-
Chloride (mg/L)	1.4	1.3	-7.41	-	-	-	-	-	-
Cyanide	<0.0050	<0.0050	-	-	-	-	-	-	-
Hardness	195000	192000	-1.55	-	-	-	-	-	-
Nitrogen, NO2 plus NO3 (mg/L)	<0.10	<0.10	-	-	-	-	-	-	-
Salinity, as dissolved solids (mg/L)	223	251	11.81	-	-	-	-	-	-
Salinity, as sea water (PSU)	0.17	0.19	11.11	-	-	-	-	-	-
Silica	7720	7580	-1.83	-	-	-	-	-	-
Sulfate (mg/L)	84.2	81.2	-3.63	-	-	-	-	-	-
Sulfide (mg/L)	<0.050	<0.050	-	-	-	-	-	-	-
TDS (mg/L)	255	259	1.56	-	-	-	-	-	-
TOC (mg/L)	1.0	0.99	-1.01	-	-	-	-	-	-
TSS (mg/L)	<5.0	<5.0	-	-	-	-	-	-	-

Table 5C - Relative Percent Difference (RPD) of Lab Analysis Between MW-104 and DR-10

Analyte	Total Metals / Non Metals			Dissolved Metals			Potentially Dissolved Metals		
	MW-104 (µg/L)	DR-10 (µg/L)	RPD (%)	MW-104 (µg/L)	DR-10 (µg/L)	RPD (%)	MW-104 (µg/L)	DR-10 (µg/L)	RPD (%)
Aluminum	1230	1010	-19.64	4.5	17.3	117.43	359	222	-47.16
Antimony	<0.50	<0.50	-	<0.50	<0.50	-	0.12J	0.11J	-
Arsenic	1.5	1.2	-22.22	<0.50	<0.50	-	0.56J	0.32J	-
Barium	52.6	49.2	-6.68	20.3	19.8	-2.49	29.5	25.7	-13.77
Beryllium	<0.20	<0.20	-	<0.20	<0.20	-	<0.50	<0.50	-
Cadmium	3.2	2.9	-9.84	2.6	2.3	-12.24	2.9	2.5	-14.81
Calcium	231000	243000	5.06	259000	251000	-3.14	235000	241000	2.52
Chromium	2.3	1.9	-19.05	<0.50	<0.50	-	2.3	1.0	-78.79
Cobalt	1.0	0.84	-17.39	<0.50	<0.50	-	0.46J	0.32J	-
Copper	7.5	6.2	-18.98	2.0	1.7	-16.22	5.7	3.7	-42.55
Iron	2100	1690	-21.64	<50.0	<50.0	-	898	617	-37.10
Lead	12.3	9.6	-24.66	0.14	0.22	44.44	8.8	6.1	-36.24
Magnesium	21300	21900	2.78	23400	21500	-8.46	20200	20800	2.93
Manganese	546	476	-13.70	28.7	35.2	20.34	244	190	-24.88
Mercury	<0.20	<0.20	-	<0.20	<0.20	-	<0.20	<0.20	-
Molybdenum	13.7	14.1	2.88	13.0	12.2	-6.35	6.5	8.7	28.95
Nickel	2.1	1.9	-10.00	4.8	4.2	-13.33	2.1	1.2	-54.55
Potassium	6630	6920	4.28	7030	6730	-4.36	6420	6630	3.22
Selenium	1.3	1.4	7.41	1.3	1.1	-16.67	1.2	1.2	0.00
Silver	<0.50	<0.50	-	<0.50	<0.50	-	0.12J	0.085J	-
Sodium	23300	24200	3.79	26000	24800	-4.72	24900	25900	3.94
Thallium	<0.10	<0.10	-	<0.10	<0.10	-	0.24J	0.24J	-
Vanadium	2.7	2.1	-25.00	<0.10	<0.10	-	0.66J	0.42J	-
Zinc	778	786	1.02	654	644	-1.54	717	666	-7.38
Alkalinity, Bicarbonate (CaCO3, mg/L)	114	117	2.60	-	-	-	-	-	-
Alkalinity, Carbonate (CaCO3, mg/L)	<20.0	<20.0	-	-	-	-	-	-	-
Alkalinity, Total as CaCO3 (mg/L)	114	117	2.60	-	-	-	-	-	-
Chloride (mg/L)	<1.0	<1.0	-	-	-	-	-	-	-
Cyanide	<0.0050	<0.0050	-	-	-	-	-	-	-
Hardness	664000	696000	4.71	-	-	-	-	-	-
Nitrogen, NO2 plus NO3 (mg/L)	<0.10	<0.10	-	-	-	-	-	-	-
Salinity, as dissolved solids (mg/L)	796	783	-1.65	-	-	-	-	-	-
Salinity, as sea water (PSU)	0.62	0.61	-1.63	-	-	-	-	-	-
Silica	22100	22600	2.24	-	-	-	-	-	-
Sulfate (mg/L)	644	620	-3.80	-	-	-	-	-	-
Sulfide (mg/L)	<0.050	<0.050	-	-	-	-	-	-	-
TDS (mg/L)	1030	1030	0.00	-	-	-	-	-	-
TOC (mg/L)	<0.50	<0.50	-	-	-	-	-	-	-
TSS (mg/L)	62.0	43.0	-36.19	-	-	-	-	-	-

Table 5D - Relative Percent Difference (RPD) of Lab Analysis Between MW-1 SHALLOW and DR-11

Analyte	Total Metals / Non Metals			Dissolved Metals			Potentially Dissolved Metals		
	MW-1 SHALLOW (µg/L)	DR-11 (µg/L)	RPD (%)	MW-1 SHALLOW (µg/L)	DR-11 (µg/L)	RPD (%)	MW-1 SHALLOW (µg/L)	DR-11 (µg/L)	RPD (%)
Aluminum	7930	7820	-1.40	6.4	8.4	27.03	1650	1530	-7.55
Antimony	0.57	0.56	-1.77	<0.50	<0.50	-	0.20J	0.21J	-
Arsenic	10.4	10.3	-0.97	<0.50	<0.50	-	2.3	2.1	-9.09
Barium	142	146	2.78	28.8	28.8	0.00	44.5	41.6	-6.74
Beryllium	0.68	0.66	-2.99	<0.20	<0.20	-	0.35J	0.37J	-
Cadmium	0.98	1.1	11.54	0.33	0.32	-3.08	0.70	0.78	10.81
Calcium	232000	244000	5.04	251000	254000	1.19	230000	235000	2.15
Chromium	8.8	8.9	1.13	<0.50	<0.50	-	2.3	2.3	0.00
Cobalt	4.8	4.8	0.00	<0.50	<0.50	-	2.5	2.2	-12.77
Copper	34.7	36.6	5.33	1.3	1.3	0.00	18.5	19.1	3.19
Iron	12000	12000	0.00	<50.0	<50.0	-	2510	2310	-8.30
Lead	88.6	93.6	5.49	0.11	0.16	37.04	55.3	55.0	-0.54
Magnesium	23800	24300	2.08	20200	20000	-1.00	18800	19400	3.14
Manganese	577	596	3.24	18.4	17.3	-6.16	360	343	-4.84
Mercury	<0.20	<0.20	-	<0.20	<0.20	-	<0.20	<0.20	-
Molybdenum	12.6	13.1	3.89	11.7	11.6	-0.86	4.8	5.0	4.08
Nickel	7.1	7.1	0.00	3.6	4.0	10.53	2.5	2.4	-4.08
Potassium	9750	9870	1.22	9030	8790	-2.69	8520	8430	-1.06
Selenium	7.9	7.8	-1.27	5.5	5.3	-3.70	5.9	5.5	-7.02
Silver	<0.50	<0.50	-	<0.50	<0.50	-	0.47J	0.44J	-
Sodium	22500	22300	-0.89	23300	23000	-1.30	22900	23200	1.30
Thallium	0.28	0.28	0.00	<0.10	<0.10	-	0.28J	0.28J	-
Vanadium	12.7	12.7	0.00	<0.10	<0.10	-	2.6	2.4	-8.00
Zinc	171	181	5.68	30.1	30.4	0.99	118	116	-1.71
Alkalinity, Bicarbonate (CaCO3, mg/L)	86.2	101	15.81	-	-	-	-	-	-
Alkalinity, Carbonate (CaCO3, mg/L)	<20.0	<20.0	-	-	-	-	-	-	-
Alkalinity, Total as CaCO3 (mg/L)	86.2	101	15.81	-	-	-	-	-	-
Chloride (mg/L)	<1.0	<1.0	-	-	-	-	-	-	-
Cyanide	<0.0050	<0.0050	-	-	-	-	-	-	-
Hardness	678000	709000	4.47	-	-	-	-	-	-
Nitrogen, NO2 plus NO3 (mg/L)	<0.10	<0.10	-	-	-	-	-	-	-
Salinity, as dissolved solids (mg/L)	774	831	7.10	-	-	-	-	-	-
Salinity, as sea water (PSU)	0.60	0.65	8.00	-	-	-	-	-	-
Silica	43000	43700	1.61	-	-	-	-	-	-
Sulfate (mg/L)	637	616	-3.35	-	-	-	-	-	-
Sulfide (mg/L)	<0.050	<0.050	-	-	-	-	-	-	-
TDS (mg/L)	1030	1030	0.00	-	-	-	-	-	-
TOC (mg/L)	<0.50	0.57	-	-	-	-	-	-	-
TSS (mg/L)	191	244	24.37	-	-	-	-	-	-

Table 5E - Relative Percent Difference (RPD) of Lab Analysis Between P13-103 and DR-12

Analyte	Total Metals / Non Metals			Dissolved Metals			Potentially Dissolved Metals		
	P13-103 (µg/L)	DR-12 (µg/L)	RPD (%)	P13-103 (µg/L)	DR-12 (µg/L)	RPD (%)	P13-103 (µg/L)	DR-12 (µg/L)	RPD (%)
Aluminum	5830	6120	4.85	4.4	8.9	67.67	1280	991	-25.45
Antimony	1.2	1.4	15.38	<0.50	<0.50	-	0.29J	0.27J	-
Arsenic	69.4	67.1	-3.37	32.7	35.0	6.79	62.0	56.4	-9.46
Barium	132	145	9.39	26.6	24.1	-9.86	36.2	34.3	-5.39
Beryllium	0.56	0.57	1.77	<0.20	<0.20	-	0.38J	0.32J	-
Cadmium	6.2	6.7	7.75	0.24	0.18	-28.57	4.7	3.3	-35.00
Calcium	275000	276000	0.36	284000	280000	-1.42	266000	264000	-0.75
Chromium	6.1	8.8	36.24	<0.50	<0.50	-	2.9	2.6	-10.91
Cobalt	7.2	8.1	11.76	1.8	1.7	-5.71	2.7	2.3	-16.00
Copper	255	308	18.83	1.1	2.2	66.67	134	103	-26.16
Iron	65400	74200	12.61	11200	11500	2.64	22900	20800	-9.61
Lead	1010	1120	10.33	0.20	0.42	70.97	860	641	-29.18
Magnesium	30900	31000	0.32	30500	30200	-0.99	27500	28400	3.22
Manganese	2700	2680	-0.74	2590	2480	-4.34	2510	2480	-1.20
Mercury	<0.20	<0.20	-	<0.20	<0.20	-	<0.20	<0.20	-
Molybdenum	10.6	11.3	6.39	7.9	7.6	-3.87	6.4	5.9	-8.13
Nickel	8.8	10.2	14.74	4.6	4.4	-4.44	4.4	3.1	-34.67
Potassium	5570	5720	2.66	4280	4190	-2.13	4150	4100	-1.21
Selenium	3.4	3.6	5.71	<0.50	<0.50	-	0.76J	0.57J	-
Silver	8.4	10.4	21.28	<0.50	<0.50	-	0.16J	0.15J	-
Sodium	11300	11300	0.00	12000	12000	0.00	11400	11500	0.87
Thallium	0.40	0.46	13.95	<0.10	<0.10	-	0.37J	0.35J	-
Vanadium	8.8	9.2	4.44	<0.10	<0.10	-	2.1	1.4	-40.00
Zinc	1170	1190	1.69	162	152	-6.37	827	596	-32.47
Alkalinity, Bicarbonate (CaCO3, mg/L)	133	140	5.13	-	-	-	-	-	-
Alkalinity, Carbonate (CaCO3, mg/L)	<20.0	<20.0	-	-	-	-	-	-	-
Alkalinity, Total as CaCO3 (mg/L)	133	140	5.13	-	-	-	-	-	-
Chloride (mg/L)	1.0	<1.0	-	-	-	-	-	-	-
Cyanide	<0.0050	<0.0050	-	-	-	-	-	-	-
Hardness	815000	816000	0.12	-	-	-	-	-	-
Nitrogen, NO2 plus NO3 (mg/L)	<0.10	<0.10	-	-	-	-	-	-	-
Salinity, as dissolved solids (mg/L)	870	866	-0.46	-	-	-	-	-	-
Salinity, as sea water (PSU)	0.68	0.68	0.00	-	-	-	-	-	-
Silica	46000	46400	0.87	-	-	-	-	-	-
Sulfate (mg/L)	676	671	-0.74	-	-	-	-	-	-
Sulfide (mg/L)	<0.050	<0.050	-	-	-	-	-	-	-
TDS (mg/L)	1150	1100	-4.44	-	-	-	-	-	-
TOC (mg/L)	0.62	<0.50	-	-	-	-	-	-	-
TSS (mg/L)	579	557	-3.87	-	-	-	-	-	-

Appendix C

Project Narrative and Laboratory Analytical Reports

Pace Analytical Services, Inc.
9608 Loiret Blvd.
Lenexa, KS 66219
(913)599-5665

July 31, 2013

Mark DeFriez
Anderson Engineering Company I
977 W 2100 S.
Salt Lake City, UT 84119

RE: Project: JULY 2013 RICO WATER SAMPLING
Pace Project No.: 60148708

Dear Mark DeFriez:
Enclosed are the analytical results for sample(s) received by the laboratory on July 12, 2013. The results relate only to the within this report conform to the most current version of the TNI standards, BP LaMP Technical Requirements Revision 10.1, and any applicable Quality Assurance Project Plan (QAPP), or Work Plan unless otherwise narrated in the body of this report.

If you have any questions concerning this report, please feel free to contact me.

Sincerely,

Heather M. Wilson

Heather Wilson

heather.wilson@pacelabs.com
Project Manager

Enclosures

This report shall not be reproduced, except in full,
without the written consent of Pace Analytical Services, Inc..

Pace Analytical Services, Inc.
9608 Loiret Blvd.
Lenexa, KS 66219
(913)599-5665

CERTIFICATIONS

Project: JULY 2013 RICO WATER SAMPLING
Pace Project No.: 60148708

Minnesota Certification IDs
1700 Elm Street SE Suite 200, Minneapolis, MN 55414
A2LA Certification #: 2926.01
Alaska Certification #: UST-078
Alaska Certification #MN00064
Arizona Certification #: AZ-0014
Arkansas Certification #: 88-0680
California Certification #: 01155CA
Colorado Certification #Pace
Connecticut Certification #: PH-0256
EPA Region 8 Certification #: Pace
Florida/NELAP Certification #: E87605
Georgia Certification #: 959
Hawaii Certification #Pace
Idaho Certification #: MN00064
Illinois Certification #: 200011
Kansas Certification #: E-10167
Louisiana Certification #: 03086
Louisiana Certification #: LA080009
Maine Certification #: 2007029
Maryland Certification #: 322
Michigan DEQ Certification #: 9909
Minnesota Certification #: 027-053-137
Mississippi Certification #: Pace
Montana Certification #: MT CERT0092
Nevada Certification #: MN_00064
Nebraska Certification #: Pace
New Jersey Certification #: MN-002
New York Certification #: 11647
North Carolina Certification #: 530
North Dakota Certification #: R-036
Ohio VAP Certification #: CL101
Oklahoma Certification #: 9507
Oregon Certification #: MN200001
Oregon Certification #: MN300001
Pennsylvania Certification #: 68-00563
Puerto Rico Certification
Tennessee Certification #: 02818
Texas Certification #: T104704192
Utah Certification #: MN00064
Virginia/DCLS Certification #: 002521
Virginia/VELAP Certification #: 460163
Washington Certification #: C754
West Virginia Certification #: 382
Wisconsin Certification #: 999407970

Montana Certification IDs
602 South 25th Street, Billings, MT 59101
EPA Region 8 Certification #: 8TMS-Q
Idaho Certification #: MT00012
Montana Certification #: MT CERT0040
NVLAP Certification #: 101292-0
Minnesota Dept of Health Certification #: 030-999-442
Washington Department of Ecology #: C993

Green Bay Certification IDs
1241 Bellevue Street, Green Bay, WI 54302
Florida/NELAP Certification #: E87948
Illinois Certification #: 200050
Kentucky Certification #: 82
Louisiana Certification #: 04168
Minnesota Certification #: 055-999-334
New York Certification #: 11888
North Dakota Certification #: R-150
South Carolina Certification #: 83006001
US Dept of Agriculture #: S-76505
Wisconsin Certification #: 405132750

Kansas Certification IDs
9608 Loiret Boulevard, Lenexa, KS 66219
WY STR Certification #: 2456.01
Arkansas Certification #: 13-012-0
Illinois Certification #: 003097
Iowa Certification #: 118
Kansas/NELAP Certification #: E-10116
Louisiana Certification #: 03055
Nevada Certification #: KS000212008A
Oklahoma Certification #: 9205/9935
Texas Certification #: T104704407-13-4
Utah Certification #: KS000212013-3
Illinois Certification #: 003097

This report shall not be reproduced, except in full,
without the written consent of Pace Analytical Services, Inc..

Pace Analytical Services, Inc.
9608 Loiret Blvd.
Lenexa, KS 66219
(913)599-5665

SAMPLE SUMMARY

Project: JULY 2013 RICO WATER SAMPLING
Pace Project No.: 60148708

Lab ID	Sample ID	Matrix	Date Collected	Date Received
60148708001	**DR-1_20130710**	Water	07/10/13 10:47	07/12/13 10:30
60148708002	**DR-2_20130710**	Water	07/10/13 14:10	07/12/13 10:30
60148708003	**DR-3_20130710**	Water	07/10/13 12:05	07/12/13 10:30
60148708004	**DR-6_20130710**	Water	07/10/13 14:23	07/12/13 10:30
60148708005	**DR-7_20130710**	Water	07/10/13 14:53	07/12/13 10:30
60148708006	**DR-G_20130710**	Water	07/10/13 15:55	07/12/13 10:30
60148708007	**DR-1 COMPOSITE_20130710**	Water	07/10/13 10:45	07/12/13 10:30
60148708008	**DR-2 COMPOSITE_20130710**	Water	07/10/13 14:07	07/12/13 10:30
60148708009	**DR-7 COMPOSITE_20130710**	Water	07/10/13 15:06	07/12/13 10:30
60148708010	**DR-8_20130710**	Water	07/10/13 10:48	07/12/13 10:30
60148708011	**DR-9_20130710**	Water	07/10/13 15:57	07/12/13 10:30
60148708012	**FB-LAB_20130710**	Water	07/10/13 12:08	07/12/13 10:30
60148708013	**GW-1_20130709**	Water	07/09/13 10:32	07/12/13 10:30
60148708014	**GW-5_20130709**	Water	07/09/13 11:25	07/12/13 10:30
60148708015	**GW-6_20130709**	Water	07/09/13 11:52	07/12/13 10:30
60148708016	**MW-101_20130709**	Water	07/09/13 13:20	07/12/13 10:30
60148708017	**MW-102_20130709**	Water	07/09/13 13:55	07/12/13 10:30
60148708018	**MW-4 DEEP_20130709**	Water	07/09/13 15:07	07/12/13 10:30
60148708019	**MW-5 DEEP_20130709**	Water	07/09/13 12:45	07/12/13 10:30
60148708020	**MW-5 SHALLOW_20130709**	Water	07/09/13 12:30	07/12/13 10:30

This report shall not be reproduced, except in full,
without the written consent of Pace Analytical Services, Inc..

Pace Analytical Services, Inc.
9608 Loiret Blvd.
Lenexa, KS 66219
(913)599-5665

SAMPLE ANALYTE COUNT

Project: JULY 2013 RICO WATER SAMPLING
Pace Project No.: 60148708

Lab ID	Sample ID	Method	Analysts	Analytes Reported	Laboratory
60148708001	**DR-1_20130710**	EPA 200.7	JGP	4	PASI-K
		EPA 200.8	TT3	25	PASI-M
		EPA 200.8	TT3	23	PASI-M
		EPA 200.8	SMW	19	PASI-K
		EPA 245.1	WBS	1	PASI-M
		EPA 245.1	WBS	1	PASI-M
		EPA 245.1	NDJ	1	PASI-K
		SM 2510B	CS1	1	
		Calculated	CS1	2	
		SM 2320B	JMC	3	PASI-K
		SM 2540C	LEM	1	PASI-K
		SM 2540D	LEM	1	PASI-K
		SM 4500-S-2 D	OL	1	PASI-K
		EPA 300.0	OL	2	PASI-K
		EPA 353.2	DJR	1	PASI-K
		SM 4500-CN-E	AJM	1	PASI-K
		SM 5310C	TJJ	1	PASI-G
60148708002	**DR-2_20130710**	EPA 200.7	JGP	4	PASI-K
		EPA 200.8	TT3	25	PASI-M
		EPA 200.8	TT3	23	PASI-M
		EPA 200.8	SMW	19	PASI-K
		EPA 245.1	WBS	1	PASI-M
		EPA 245.1	WBS	1	PASI-M
		EPA 245.1	NDJ	1	PASI-K
		SM 2510B	CS1	1	
		Calculated	CS1	2	
		SM 2320B	JMC	3	PASI-K
		SM 2540C	LEM	1	PASI-K
		SM 2540D	LEM	1	PASI-K
		SM 4500-S-2 D	OL	1	PASI-K
		EPA 300.0	OL	2	PASI-K
		EPA 353.2	DJR	1	PASI-K
		SM 4500-CN-E	AJM	1	PASI-K
		SM 5310C	TJJ	1	PASI-G
60148708003	**DR-3_20130710**	EPA 200.7	JGP	4	PASI-K
		EPA 200.8	TT3	25	PASI-M
		EPA 200.8	TT3	23	PASI-M

This report shall not be reproduced, except in full,
without the written consent of Pace Analytical Services, Inc..

Pace Analytical Services, Inc.
9608 Loiret Blvd.
Lenexa, KS 66219
(913)599-5665

SAMPLE ANALYTE COUNT

Project: JULY 2013 RICO WATER SAMPLING
Pace Project No.: 60148708

Lab ID	Sample ID	Method	Analysts	Analytes Reported	Laboratory
		EPA 200.8	SMW	19	PASI-K
		EPA 245.1	WBS	1	PASI-M
		EPA 245.1	WBS	1	PASI-M
		EPA 245.1	NDJ	1	PASI-K
		SM 2510B	CS1	1	
		Calculated	CS1	2	
		SM 2320B	JMC	3	PASI-K
		SM 2540C	LEM	1	PASI-K
		SM 2540D	LEM	1	PASI-K
		SM 4500-S-2 D	OL	1	PASI-K
		EPA 300.0	OL	2	PASI-K
		EPA 353.2	DJR	1	PASI-K
		SM 4500-CN-E	AJM	1	PASI-K
		SM 5310C	TJJ	1	PASI-G
60148708004	**DR-6_20130710**	EPA 200.7	JGP	4	PASI-K
		EPA 200.8	TT3	25	PASI-M
		EPA 200.8	TT3	23	PASI-M
		EPA 200.8	SMW	19	PASI-K
		EPA 245.1	WBS	1	PASI-M
		EPA 245.1	WBS	1	PASI-M
		EPA 245.1	NDJ	1	PASI-K
		SM 2510B	CS1	1	
		Calculated	CS1	2	
		SM 2320B	JMC	3	PASI-K
		SM 2540C	LEM	1	PASI-K
		SM 2540D	LEM	1	PASI-K
		SM 4500-S-2 D	OL	1	PASI-K
		EPA 300.0	OL	2	PASI-K
		EPA 353.2	DJR	1	PASI-K
		SM 4500-CN-E	AJM	1	PASI-K
		SM 5310C	TJJ	1	PASI-G
60148708005	**DR-7_20130710**	EPA 200.7	JGP	4	PASI-K
		EPA 200.8	TT3	25	PASI-M
		EPA 200.8	TT3	23	PASI-M
		EPA 200.8	SMW	19	PASI-K
		EPA 245.1	WBS	1	PASI-M
		EPA 245.1	WBS	1	PASI-M

This report shall not be reproduced, except in full,
without the written consent of Pace Analytical Services, Inc..

Pace Analytical Services, Inc.
9608 Loiret Blvd.
Lenexa, KS 66219
(913)599-5665

SAMPLE ANALYTE COUNT

Project: JULY 2013 RICO WATER SAMPLING
Pace Project No.: 60148708

Lab ID	Sample ID	Method	Analysts	Analytes Reported	Laboratory
		EPA 245.1	NDJ	1	PASI-K
		SM 2510B	CS1	1	
		Calculated	CS1	2	
		SM 2320B	JMC	3	PASI-K
		SM 2540C	LEM	1	PASI-K
		SM 2540D	LEM	1	PASI-K
		SM 4500-S-2 D	OL	1	PASI-K
		EPA 300.0	OL	2	PASI-K
		EPA 353.2	DJR	1	PASI-K
		SM 4500-CN-E	AJM	1	PASI-K
		SM 5310C	TJJ	1	PASI-G
60148708006	**DR-G_20130710**	EPA 200.7	JGP	4	PASI-K
		EPA 200.8	TT3	25	PASI-M
		EPA 200.8	TT3	23	PASI-M
		EPA 200.8	SMW	19	PASI-K
		EPA 245.1	WBS	1	PASI-M
		EPA 245.1	WBS	1	PASI-M
		EPA 245.1	NDJ	1	PASI-K
		SM 2510B	CS1	1	
		Calculated	CS1	2	
		SM 2320B	JMC	3	PASI-K
		SM 2540C	LEM	1	PASI-K
		SM 2540D	LEM	1	PASI-K
		SM 4500-S-2 D	OL	1	PASI-K
		EPA 300.0	OL	2	PASI-K
		EPA 353.2	DJR	1	PASI-K
		SM 4500-CN-E	AJM	1	PASI-K
		SM 5310C	TJJ	1	PASI-G
60148708007	**DR-1 COMPOSITE_20130710**	EPA 200.7	JGP	4	PASI-K
		EPA 200.8	TT3	25	PASI-M
		EPA 200.8	TT3	23	PASI-M
		EPA 200.8	SMW	19	PASI-K
		EPA 245.1	WBS	1	PASI-M
		EPA 245.1	WBS	1	PASI-M
		EPA 245.1	NDJ	1	PASI-K
		SM 2510B	CS1	1	
		Calculated	CS1	2	

This report shall not be reproduced, except in full,
without the written consent of Pace Analytical Services, Inc..

Pace Analytical Services, Inc.
9608 Loiret Blvd.
Lenexa, KS 66219
(913)599-5665

SAMPLE ANALYTE COUNT

Project: JULY 2013 RICO WATER SAMPLING
Pace Project No.: 60148708

Lab ID	Sample ID	Method	Analysts	Analytes Reported	Laboratory
		SM 2320B	JMC	3	PASI-K
		SM 2540C	LEM	1	PASI-K
		SM 2540D	LEM	1	PASI-K
		SM 4500-S-2 D	OL	1	PASI-K
		EPA 300.0	OL	2	PASI-K
		EPA 353.2	DJR	1	PASI-K
		SM 4500-CN-E	AJM	1	PASI-K
		SM 5310C	TJJ	1	PASI-G
60148708008	**DR-2 COMPOSITE_20130710**	EPA 200.7	JGP	4	PASI-K
		EPA 200.8	TT3	25	PASI-M
		EPA 200.8	TT3	23	PASI-M
		EPA 200.8	SMW	19	PASI-K
		EPA 245.1	WBS	1	PASI-M
		EPA 245.1	WBS	1	PASI-M
		EPA 245.1	NDJ	1	PASI-K
		SM 2510B	CS1	1	
		Calculated	CS1	2	
		SM 2320B	JMC1	3	PASI-K
		SM 2540C	LEM	1	PASI-K
		SM 2540D	LEM	1	PASI-K
		SM 4500-S-2 D	OL	1	PASI-K
		EPA 300.0	OL	2	PASI-K
		EPA 353.2	DJR	1	PASI-K
		SM 4500-CN-E	AJM	1	PASI-K
		SM 5310C	TJJ	1	PASI-G
60148708009	**DR-7 COMPOSITE_20130710**	EPA 200.7	JGP	4	PASI-K
		EPA 200.8	TT3	25	PASI-M
		EPA 200.8	TT3	23	PASI-M
		EPA 200.8	SMW	19	PASI-K
		EPA 245.1	WBS	1	PASI-M
		EPA 245.1	WBS	1	PASI-M
		EPA 245.1	NDJ	1	PASI-K
		SM 2510B	CS1	1	
		Calculated	CS1	2	
		SM 2320B	JMC1	3	PASI-K
		SM 2540C	LEM	1	PASI-K
		SM 2540D	LEM	1	PASI-K

This report shall not be reproduced, except in full,
without the written consent of Pace Analytical Services, Inc..

Pace Analytical Services, Inc.
9608 Loiret Blvd.
Lenexa, KS 66219
(913)599-5665

SAMPLE ANALYTE COUNT

Project: JULY 2013 RICO WATER SAMPLING
Pace Project No.: 60148708

Lab ID	Sample ID	Method	Analysts	Analytes Reported	Laboratory
		SM 4500-S-2 D	OL	1	PASI-K
		EPA 300.0	OL	2	PASI-K
		EPA 353.2	DJR	1	PASI-K
		SM 4500-CN-E	AJM	1	PASI-K
		SM 5310C	TJJ	1	PASI-G
60148708010	**DR-8_20130710**	EPA 200.7	JGP	4	PASI-K
		EPA 200.8	TT3	25	PASI-M
		EPA 200.8	TT3	23	PASI-M
		EPA 200.8	SMW	19	PASI-K
		EPA 245.1	WBS	1	PASI-M
		EPA 245.1	WBS	1	PASI-M
		EPA 245.1	NDJ	1	PASI-K
		SM 2510B	CS1	1	
		Calculated	CS1	2	
		SM 2320B	JMC1	3	PASI-K
		SM 2540C	LEM	1	PASI-K
		SM 2540D	LEM	1	PASI-K
		SM 4500-S-2 D	OL	1	PASI-K
		EPA 300.0	OL	2	PASI-K
		EPA 353.2	DJR	1	PASI-K
		SM 4500-CN-E	AJM	1	PASI-K
		SM 5310C	TJJ	1	PASI-G
60148708011	**DR-9_20130710**	EPA 200.7	JGP	4	PASI-K
		EPA 200.8	TT3	25	PASI-M
		EPA 200.8	TT3	23	PASI-M
		EPA 200.8	SMW	19	PASI-K
		EPA 245.1	WBS	1	PASI-M
		EPA 245.1	WBS	1	PASI-M
		EPA 245.1	NDJ	1	PASI-K
		SM 2510B	CS1	1	
		Calculated	CS1	2	
		SM 2320B	JMC1	3	PASI-K
		SM 2540C	LEM	1	PASI-K
		SM 2540D	LEM	1	PASI-K
		SM 4500-S-2 D	OL	1	PASI-K
		EPA 300.0	OL	2	PASI-K
		EPA 353.2	DJR	1	PASI-K

This report shall not be reproduced, except in full,
without the written consent of Pace Analytical Services, Inc..

Pace Analytical Services, Inc.
9608 Loiret Blvd.
Lenexa, KS 66219
(913)599-5665

SAMPLE ANALYTE COUNT

Project: JULY 2013 RICO WATER SAMPLING
Pace Project No.: 60148708

Lab ID	Sample ID	Method	Analysts	Analytes Reported	Laboratory
		SM 4500-CN-E	AJM	1	PASI-K
		SM 5310C	TJJ	1	PASI-G
60148708012	**FB-LAB_20130710**	EPA 200.7	JGP	4	PASI-K
		EPA 200.8	TT3	25	PASI-M
		EPA 200.8	TT3	23	PASI-M
		EPA 200.8	SMW	19	PASI-K
		EPA 245.1	WBS	1	PASI-M
		EPA 245.1	WBS	1	PASI-M
		EPA 245.1	NDJ	1	PASI-K
		SM 2510B	CS1	1	
		Calculated	CS1	2	
		SM 2320B	JMC1	3	PASI-K
		SM 2540C	LEM	1	PASI-K
		SM 2540D	LEM	1	PASI-K
		SM 4500-S-2 D	OL	1	PASI-K
		EPA 300.0	OL	2	PASI-K
		EPA 353.2	DJR	1	PASI-K
		SM 4500-CN-E	AJM	1	PASI-K
		SM 5310C	TJJ	1	PASI-G
60148708013	**GW-1_20130709**	EPA 200.7	JGP	4	PASI-K
		EPA 200.8	TT3	25	PASI-M
		EPA 200.8	TT3	23	PASI-M
		EPA 200.8	SMW	19	PASI-K
		EPA 245.1	WBS	1	PASI-M
		EPA 245.1	WBS	1	PASI-M
		EPA 245.1	NDJ	1	PASI-K
		SM 2510B	CS1	1	
		Calculated	CS1	2	
		SM 2320B	JMC	3	PASI-K
		SM 2540C	LEM	1	PASI-K
		SM 2540D	LEM	1	PASI-K
		SM 4500-S-2 D	OL	1	PASI-K
		EPA 300.0	OL	2	PASI-K
		EPA 353.2	DJR	1	PASI-K
		SM 4500-CN-E	AJM	1	PASI-K
		SM 5310C	TJJ	1	PASI-G
60148708014	**GW-5_20130709**	EPA 200.7	JGP	4	PASI-K

This report shall not be reproduced, except in full,
without the written consent of Pace Analytical Services, Inc..

Pace Analytical Services, Inc.
9608 Loiret Blvd.
Lenexa, KS 66219
(913)599-5665

SAMPLE ANALYTE COUNT

Project: JULY 2013 RICO WATER SAMPLING
Pace Project No.: 60148708

Lab ID	Sample ID	Method	Analysts	Analytes Reported	Laboratory
		EPA 200.8	TT3	25	PASI-M
		EPA 200.8	TT3	23	PASI-M
		EPA 200.8	SMW	19	PASI-K
		EPA 245.1	WBS	1	PASI-M
		EPA 245.1	WBS	1	PASI-M
		EPA 245.1	NDJ	1	PASI-K
		SM 2510B	CS1	1	
		Calculated	CS1	2	
		SM 2320B	JMC	3	PASI-K
		SM 2540C	LEM	1	PASI-K
		SM 2540D	LEM	1	PASI-K
		SM 4500-S-2 D	OL	1	PASI-K
		EPA 300.0	OL	2	PASI-K
		EPA 353.2	DJR	1	PASI-K
		SM 4500-CN-E	AJM	1	PASI-K
		SM 5310C	TJJ	1	PASI-G
60148708015	**GW-6_20130709**	EPA 200.7	JGP	4	PASI-K
		EPA 200.8	TT3	25	PASI-M
		EPA 200.8	TT3	23	PASI-M
		EPA 200.8	SMW	19	PASI-K
		EPA 245.1	WBS	1	PASI-M
		EPA 245.1	WBS	1	PASI-M
		EPA 245.1	NDJ	1	PASI-K
		SM 2510B	CS1	1	
		Calculated	CS1	2	
		SM 2320B	JMC	3	PASI-K
		SM 2540C	LEM	1	PASI-K
		SM 2540D	LEM	1	PASI-K
		SM 4500-S-2 D	OL	1	PASI-K
		EPA 300.0	OL	2	PASI-K
		EPA 353.2	DJR	1	PASI-K
		SM 4500-CN-E	AJM	1	PASI-K
		SM 5310C	TJJ	1	PASI-G
60148708016	**MW-101_20130709**	EPA 200.7	JGP	4	PASI-K
		EPA 200.8	TT3	25	PASI-M
		EPA 200.8	TT3	23	PASI-M
		EPA 200.8	SMW	19	PASI-K

This report shall not be reproduced, except in full,
without the written consent of Pace Analytical Services, Inc..

Pace Analytical Services, Inc.
9608 Loiret Blvd.
Lenexa, KS 66219
(913)599-5665

SAMPLE ANALYTE COUNT

Project: JULY 2013 RICO WATER SAMPLING
Pace Project No.: 60148708

Lab ID	Sample ID	Method	Analysts	Analytes Reported	Laboratory
		EPA 245.1	WBS	1	PASI-M
		EPA 245.1	WBS	1	PASI-M
		EPA 245.1	NDJ	1	PASI-K
		SM 2510B	CS1	1	
		Calculated	CS1	2	
		SM 2320B	JMC	3	PASI-K
		SM 2540C	LEM	1	PASI-K
		SM 2540D	LEM	1	PASI-K
		SM 4500-S-2 D	OL	1	PASI-K
		EPA 300.0	OL	2	PASI-K
		EPA 353.2	DJR	1	PASI-K
		SM 4500-CN-E	AJM	1	PASI-K
		SM 5310C	TJJ	1	PASI-G
60148708017	**MW-102_20130709**	EPA 200.7	JGP	4	PASI-K
		EPA 200.8	TT3	25	PASI-M
		EPA 200.8	TT3	23	PASI-M
		EPA 200.8	SMW	19	PASI-K
		EPA 245.1	WBS	1	PASI-M
		EPA 245.1	WBS	1	PASI-M
		EPA 245.1	NDJ	1	PASI-K
		SM 2510B	CS1	1	
		Calculated	CS1	2	
		SM 2320B	JMC	3	PASI-K
		SM 2540C	LEM	1	PASI-K
		SM 2540D	LEM	1	PASI-K
		SM 4500-S-2 D	OL	1	PASI-K
		EPA 300.0	OL	2	PASI-K
		EPA 353.2	DJR	1	PASI-K
		SM 4500-CN-E	AJM	1	PASI-K
		SM 5310C	TJJ	1	PASI-G
60148708018	**MW-4 DEEP_20130709**	EPA 200.7	JGP	4	PASI-K
		EPA 200.8	TT3	25	PASI-M
		EPA 200.8	TT3	23	PASI-M
		EPA 200.8	SMW	19	PASI-K
		EPA 245.1	WBS	1	PASI-M
		EPA 245.1	WBS	1	PASI-M
		EPA 245.1	NDJ	1	PASI-K

This report shall not be reproduced, except in full,
without the written consent of Pace Analytical Services, Inc..

Pace Analytical Services, Inc.
9608 Loiret Blvd.
Lenexa, KS 66219
(913)599-5665

SAMPLE ANALYTE COUNT

Project: JULY 2013 RICO WATER SAMPLING
Pace Project No.: 60148708

Lab ID	Sample ID	Method	Analysts	Analytes Reported	Laboratory
		SM 2510B	CS1	1	
		Calculated	CS1	2	
		SM 2320B	JMC	3	PASI-K
		SM 2540C	LEM	1	PASI-K
		SM 2540D	LEM	1	PASI-K
		SM 4500-S-2 D	OL	1	PASI-K
		EPA 300.0	OL	2	PASI-K
		EPA 353.2	DJR	1	PASI-K
		SM 4500-CN-E	AJM	1	PASI-K
		SM 5310C	TJJ	1	PASI-G
60148708019	**MW-5 DEEP_20130709**	EPA 200.7	JGP	4	PASI-K
		EPA 200.8	TT3	25	PASI-M
		EPA 200.8	TT3	23	PASI-M
		EPA 200.8	SMW	19	PASI-K
		EPA 245.1	WBS	1	PASI-M
		EPA 245.1	WBS	1	PASI-M
		EPA 245.1	NDJ	1	PASI-K
		SM 2510B	CS1	1	
		Calculated	CS1	2	
		SM 2320B	JMC	3	PASI-K
		SM 2540C	LEM	1	PASI-K
		SM 2540D	LEM	1	PASI-K
		SM 4500-S-2 D	OL	1	PASI-K
		EPA 300.0	OL	2	PASI-K
		EPA 353.2	DJR	1	PASI-K
		SM 4500-CN-E	AJM	1	PASI-K
		SM 5310C	TJJ	1	PASI-G
60148708020	**MW-5 SHALLOW_20130709**	EPA 200.7	JGP	4	PASI-K
		EPA 200.8	TT3	25	PASI-M
		EPA 200.8	TT3	23	PASI-M
		EPA 200.8	SMW	19	PASI-K
		EPA 245.1	WBS	1	PASI-M
		EPA 245.1	WBS	1	PASI-M
		EPA 245.1	NDJ	1	PASI-K
		SM 2510B	CS1	1	
		Calculated	CS1	2	
		SM 2320B	JMC	3	PASI-K

This report shall not be reproduced, except in full,
without the written consent of Pace Analytical Services, Inc..

Pace Analytical Services, Inc.
9608 Loiret Blvd.
Lenexa, KS 66219
(913)599-5665

SAMPLE ANALYTE COUNT

Project: JULY 2013 RICO WATER SAMPLING
Pace Project No.: 60148708

Lab ID	Sample ID	Method	Analysts	Analytes Reported	Laboratory
		SM 2540C	LEM	1	PASI-K
		SM 2540D	LEM	1	PASI-K
		SM 4500-S-2 D	OL	1	PASI-K
		EPA 300.0	OL	2	PASI-K
		EPA 353.2	DJR	1	PASI-K
		SM 4500-CN-E	AJM	1	PASI-K
		SM 5310C	TJJ	1	PASI-G

This report shall not be reproduced, except in full,
without the written consent of Pace Analytical Services, Inc..

Pace Analytical Services, Inc.
9608 Loiret Blvd.
Lenexa, KS 66219
(913)599-5665

PROJECT NARRATIVE

Project: JULY 2013 RICO WATER SAMPLING
Pace Project No.: 60148708

Method: **EPA 200.7**
Description: 200.7 Potentially Diss. Metals
Client: BP Anderson Engineering Company Inc.
Date: July 31, 2013

General Information:
20 samples were analyzed for EPA 200.7. All samples were received in acceptable condition with any exceptions noted below.

Hold Time:
The samples were analyzed within the method required hold times with any exceptions noted below.

Sample Preparation:
The samples were prepared in accordance with EPA 200.7 with any exceptions noted below.

Initial Calibrations (including MS Tune as applicable):
All criteria were within method requirements with any exceptions noted below.

Continuing Calibration:
All criteria were within method requirements with any exceptions noted below.

Method Blank:
All analytes were below the report limit in the method blank with any exceptions noted below.

Laboratory Control Spike:
All laboratory control spike compounds were within QC limits with any exceptions noted below.

Matrix Spikes:
All percent recoveries and relative percent differences (RPDs) were within acceptance criteria with any exceptions noted below.

QC Batch: MPRP/23521

A matrix spike and matrix spike duplicate (MS/MSD) were performed on the following sample(s): 60148708003,60148708013

M1: Matrix spike recovery exceeded QC limits. Batch accepted based on laboratory control sample (LCS) recovery.

- MS (Lab ID: 1221795)
  - Calcium, Dissolved
- MSD (Lab ID: 1221796)
  - Calcium, Dissolved

Additional Comments:

This report shall not be reproduced, except in full,
without the written consent of Pace Analytical Services, Inc..

Pace Analytical Services, Inc.
9608 Loiret Blvd.
Lenexa, KS 66219
(913)599-5665

PROJECT NARRATIVE

Project: JULY 2013 RICO WATER SAMPLING
Pace Project No.: 60148708

Method: **EPA 200.8**
Description: 200.8 MET ICPMS
Client: BP Anderson Engineering Company Inc.
Date: July 31, 2013

General Information:
20 samples were analyzed for EPA 200.8. All samples were received in acceptable condition with any exceptions noted below.

Hold Time:
The samples were analyzed within the method required hold times with any exceptions noted below.

Sample Preparation:
The samples were prepared in accordance with EPA 200.8 with any exceptions noted below.

Initial Calibrations (including MS Tune as applicable):
All criteria were within method requirements with any exceptions noted below.

Continuing Calibration:
All criteria were within method requirements with any exceptions noted below.

Internal Standards:
All internal standards were within QC limits with any exceptions noted below.

Method Blank:
All analytes were below the report limit in the method blank with any exceptions noted below.

Laboratory Control Spike:
All laboratory control spike compounds were within QC limits with any exceptions noted below.

Matrix Spikes:
All percent recoveries and relative percent differences (RPDs) were within acceptance criteria with any exceptions noted below.

QC Batch: MPRP/40615

A matrix spike and matrix spike duplicate (MS/MSD) were performed on the following sample(s): 60148708001,60148708011

M1: Matrix spike recovery exceeded QC limits. Batch accepted based on laboratory control sample (LCS) recovery.

- MS (Lab ID: 1480186)
  - Calcium
- MS (Lab ID: 1480188)
  - Calcium
- MSD (Lab ID: 1480187)
  - Calcium

Additional Comments:

This report shall not be reproduced, except in full,
without the written consent of Pace Analytical Services, Inc..

Pace Analytical Services, Inc.
9608 Loiret Blvd.
Lenexa, KS 66219
(913)599-5665

PROJECT NARRATIVE

Project: JULY 2013 RICO WATER SAMPLING
Pace Project No.: 60148708

Method: **EPA 200.8**
Description: 200.8 MET ICPMS
Client: BP Anderson Engineering Company Inc.
Date: July 31, 2013

Analyte Comments:

QC Batch: MPRP/40615

E: Analyte concentration exceeded the calibration range. The reported result is estimated.

- MS (Lab ID: 1480188)
  - Calcium

This report shall not be reproduced, except in full,
without the written consent of Pace Analytical Services, Inc..

Pace Analytical Services, Inc.
9608 Loiret Blvd.
Lenexa, KS 66219
(913)599-5665

PROJECT NARRATIVE

Project: JULY 2013 RICO WATER SAMPLING
Pace Project No.: 60148708

Method: **EPA 200.8**
Description: 200.8 MET ICPMS, Dissolved
Client: BP Anderson Engineering Company Inc.
Date: July 31, 2013

General Information:
20 samples were analyzed for EPA 200.8. All samples were received in acceptable condition with any exceptions noted below.

Hold Time:
The samples were analyzed within the method required hold times with any exceptions noted below.

Sample Preparation:
The samples were prepared in accordance with EPA 200.8 with any exceptions noted below.

Initial Calibrations (including MS Tune as applicable):
All criteria were within method requirements with any exceptions noted below.

Continuing Calibration:
All criteria were within method requirements with any exceptions noted below.

Internal Standards:
All internal standards were within QC limits with any exceptions noted below.

Method Blank:
All analytes were below the report limit in the method blank with any exceptions noted below.

Laboratory Control Spike:
All laboratory control spike compounds were within QC limits with any exceptions noted below.

Matrix Spikes:
All percent recoveries and relative percent differences (RPDs) were within acceptance criteria with any exceptions noted below.

QC Batch: MPRP/40612

A matrix spike and matrix spike duplicate (MS/MSD) were performed on the following sample(s): 60148708001,60148708011

M1: Matrix spike recovery exceeded QC limits. Batch accepted based on laboratory control sample (LCS) recovery.

- MS (Lab ID: 1480157)
  - Calcium, Dissolved
- MS (Lab ID: 1480159)
  - Calcium, Dissolved

Additional Comments:

Analyte Comments:

QC Batch: MPRP/40612

D3: Sample was diluted due to the presence of high levels of non-target analytes or other matrix interference.

- MW-5 SHALLOW_20130709 (Lab ID: 60148708020)
  - Silver, Dissolved
  - Chromium, Dissolved

This report shall not be reproduced, except in full,
without the written consent of Pace Analytical Services, Inc..

Pace Analytical Services, Inc.
9608 Loiret Blvd.
Lenexa, KS 66219
(913)599-5665

PROJECT NARRATIVE

Project: JULY 2013 RICO WATER SAMPLING
Pace Project No.: 60148708

Method: **EPA 200.8**
Description: 200.8 MET ICPMS, Dissolved
Client: BP Anderson Engineering Company Inc.
Date: July 31, 2013

Analyte Comments:

QC Batch: MPRP/40612

D3: Sample was diluted due to the presence of high levels of non-target analytes or other matrix interference.

- MW-5 SHALLOW_20130709 (Lab ID: 60148708020)
  - Molybdenum, Dissolved
  - Antimony, Dissolved
  - Thallium, Dissolved

E: Analyte concentration exceeded the calibration range. The reported result is estimated.

- MS (Lab ID: 1480159)
  - Calcium, Dissolved

This report shall not be reproduced, except in full,
without the written consent of Pace Analytical Services, Inc..

Pace Analytical Services, Inc.
9608 Loiret Blvd.
Lenexa, KS 66219
(913)599-5665

PROJECT NARRATIVE

Project: JULY 2013 RICO WATER SAMPLING
Pace Project No.: 60148708

Method: **EPA 200.8**
Description: 200.8 Potentially Diss. Metals
Client: BP Anderson Engineering Company Inc.
Date: July 31, 2013

General Information:
20 samples were analyzed for EPA 200.8. All samples were received in acceptable condition with any exceptions noted below.

Hold Time:
The samples were analyzed within the method required hold times with any exceptions noted below.

Sample Preparation:
The samples were prepared in accordance with EPA 200.8 with any exceptions noted below.

Initial Calibrations (including MS Tune as applicable):
All criteria were within method requirements with any exceptions noted below.

Continuing Calibration:
All criteria were within method requirements with any exceptions noted below.

Internal Standards:
All internal standards were within QC limits with any exceptions noted below.

Method Blank:
All analytes were below the report limit in the method blank with any exceptions noted below.

QC Batch: MPRP/23522

B: Analyte was detected in the associated method blank.

- BLANK for HBN 299239 [MPRP/235 (Lab ID: 1221803)
  - Antimony, Dissolved
  - Lead, Dissolved
  - Molybdenum, Dissolved
  - Thallium, Dissolved

Laboratory Control Spike:
All laboratory control spike compounds were within QC limits with any exceptions noted below.

Matrix Spikes:
All percent recoveries and relative percent differences (RPDs) were within acceptance criteria with any exceptions noted below.

Additional Comments:

Analyte Comments:

QC Batch: MPRP/23522

D3: Sample was diluted due to the presence of high levels of non-target analytes or other matrix interference.

- MW-5 SHALLOW_20130709 (Lab ID: 60148708020)
  - Silver, Dissolved

This report shall not be reproduced, except in full,
without the written consent of Pace Analytical Services, Inc..

Pace Analytical Services, Inc.
9608 Loiret Blvd.
Lenexa, KS 66219
(913)599-5665

PROJECT NARRATIVE

Project: JULY 2013 RICO WATER SAMPLING
Pace Project No.: 60148708

Method: **EPA 245.1**
Description: 245.1 Mercury
Client: BP Anderson Engineering Company Inc.
Date: July 31, 2013

General Information:
20 samples were analyzed for EPA 245.1. All samples were received in acceptable condition with any exceptions noted below.

Hold Time:
The samples were analyzed within the method required hold times with any exceptions noted below.

Sample Preparation:
The samples were prepared in accordance with EPA 245.1 with any exceptions noted below.

Initial Calibrations (including MS Tune as applicable):
All criteria were within method requirements with any exceptions noted below.

Continuing Calibration:
All criteria were within method requirements with any exceptions noted below.

Method Blank:
All analytes were below the report limit in the method blank with any exceptions noted below.

Laboratory Control Spike:
All laboratory control spike compounds were within QC limits with any exceptions noted below.

Matrix Spikes:
All percent recoveries and relative percent differences (RPDs) were within acceptance criteria with any exceptions noted below.

Additional Comments:

This report shall not be reproduced, except in full,
without the written consent of Pace Analytical Services, Inc..

Pace Analytical Services, Inc.
9608 Loiret Blvd.
Lenexa, KS 66219
(913)599-5665

PROJECT NARRATIVE

Project: JULY 2013 RICO WATER SAMPLING
Pace Project No.: 60148708

Method: **EPA 245.1**
Description: 245.1 Mercury, Dissolved
Client: BP Anderson Engineering Company Inc.
Date: July 31, 2013

General Information:
20 samples were analyzed for EPA 245.1. All samples were received in acceptable condition with any exceptions noted below.

Hold Time:
The samples were analyzed within the method required hold times with any exceptions noted below.

Sample Preparation:
The samples were prepared in accordance with EPA 245.1 with any exceptions noted below.

Initial Calibrations (including MS Tune as applicable):
All criteria were within method requirements with any exceptions noted below.

Continuing Calibration:
All criteria were within method requirements with any exceptions noted below.

Method Blank:
All analytes were below the report limit in the method blank with any exceptions noted below.

Laboratory Control Spike:
All laboratory control spike compounds were within QC limits with any exceptions noted below.

Matrix Spikes:
All percent recoveries and relative percent differences (RPDs) were within acceptance criteria with any exceptions noted below.

Additional Comments:

This report shall not be reproduced, except in full,
without the written consent of Pace Analytical Services, Inc..

Pace Analytical Services, Inc.
9608 Loiret Blvd.
Lenexa, KS 66219
(913)599-5665

PROJECT NARRATIVE

Project: JULY 2013 RICO WATER SAMPLING
Pace Project No.: 60148708

Method: **EPA 245.1**
Description: 245.1 Potentially Diss Mercury
Client: BP Anderson Engineering Company Inc.
Date: July 31, 2013

General Information:
20 samples were analyzed for EPA 245.1. All samples were received in acceptable condition with any exceptions noted below.

Hold Time:
The samples were analyzed within the method required hold times with any exceptions noted below.

Sample Preparation:
The samples were prepared in accordance with EPA 245.1 with any exceptions noted below.

Initial Calibrations (including MS Tune as applicable):
All criteria were within method requirements with any exceptions noted below.

Continuing Calibration:
All criteria were within method requirements with any exceptions noted below.

Method Blank:
All analytes were below the report limit in the method blank with any exceptions noted below.

Laboratory Control Spike:
All laboratory control spike compounds were within QC limits with any exceptions noted below.

Matrix Spikes:
All percent recoveries and relative percent differences (RPDs) were within acceptance criteria with any exceptions noted below.

Additional Comments:

This report shall not be reproduced, except in full,
without the written consent of Pace Analytical Services, Inc..

Pace Analytical Services, Inc.
9608 Loiret Blvd.
Lenexa, KS 66219
(913)599-5665

PROJECT NARRATIVE

Project: JULY 2013 RICO WATER SAMPLING
Pace Project No.: 60148708

Method: **SM 2510B**
Description: 2510B Specific Conductance
Client: BP Anderson Engineering Company Inc.
Date: July 31, 2013

General Information:
20 samples were analyzed for SM 2510B. All samples were received in acceptable condition with any exceptions noted below.

Hold Time:
The samples were analyzed within the method required hold times with any exceptions noted below.

Initial Calibrations (including MS Tune as applicable):
All criteria were within method requirements with any exceptions noted below.

Continuing Calibration:
All criteria were within method requirements with any exceptions noted below.

Internal Standards:
All internal standards were within QC limits with any exceptions noted below.

Surrogates:
All surrogates were within QC limits with any exceptions noted below.

Method Blank:
All analytes were below the report limit in the method blank with any exceptions noted below.

Laboratory Control Spike:
All laboratory control spike compounds were within QC limits with any exceptions noted below.

Matrix Spikes:
All percent recoveries and relative percent differences (RPDs) were within acceptance criteria with any exceptions noted below.

Duplicate Sample:
All duplicate sample results were within method acceptance criteria with any exceptions noted below.

Additional Comments:

This report shall not be reproduced, except in full,
without the written consent of Pace Analytical Services, Inc..

Pace Analytical Services, Inc.
9608 Loiret Blvd.
Lenexa, KS 66219
(913)599-5665

PROJECT NARRATIVE

Project: JULY 2013 RICO WATER SAMPLING
Pace Project No.: 60148708

Method: **Calculated**
Description: Salinity
Client: BP Anderson Engineering Company Inc.
Date: July 31, 2013

General Information:
20 samples were analyzed for Calculated. All samples were received in acceptable condition with any exceptions noted below.

Hold Time:
The samples were analyzed within the method required hold times with any exceptions noted below.

Initial Calibrations (including MS Tune as applicable):
All criteria were within method requirements with any exceptions noted below.

Continuing Calibration:
All criteria were within method requirements with any exceptions noted below.

Internal Standards:
All internal standards were within QC limits with any exceptions noted below.

Surrogates:
All surrogates were within QC limits with any exceptions noted below.

Method Blank:
All analytes were below the report limit in the method blank with any exceptions noted below.

Laboratory Control Spike:
All laboratory control spike compounds were within QC limits with any exceptions noted below.

Matrix Spikes:
All percent recoveries and relative percent differences (RPDs) were within acceptance criteria with any exceptions noted below.

Additional Comments:

This report shall not be reproduced, except in full,
without the written consent of Pace Analytical Services, Inc..

Pace Analytical Services, Inc.
9608 Loiret Blvd.
Lenexa, KS 66219
(913)599-5665

PROJECT NARRATIVE

Project: JULY 2013 RICO WATER SAMPLING
Pace Project No.: 60148708

Method: **SM 2320B**
Description: 2320B Alkalinity
Client: BP Anderson Engineering Company Inc.
Date: July 31, 2013

General Information:
20 samples were analyzed for SM 2320B. All samples were received in acceptable condition with any exceptions noted below.

Hold Time:
The samples were analyzed within the method required hold times with any exceptions noted below.

Method Blank:
All analytes were below the report limit in the method blank with any exceptions noted below.

Laboratory Control Spike:
All laboratory control spike compounds were within QC limits with any exceptions noted below.

Matrix Spikes:
All percent recoveries and relative percent differences (RPDs) were within acceptance criteria with any exceptions noted below.

Duplicate Sample:
All duplicate sample results were within method acceptance criteria with any exceptions noted below.

Additional Comments:

This report shall not be reproduced, except in full,
without the written consent of Pace Analytical Services, Inc..

Pace Analytical Services, Inc.
9608 Loiret Blvd.
Lenexa, KS 66219
(913)599-5665

PROJECT NARRATIVE

Project: JULY 2013 RICO WATER SAMPLING
Pace Project No.: 60148708

Method: **SM 2540C**
Description: 2540C Total Dissolved Solids
Client: BP Anderson Engineering Company Inc.
Date: July 31, 2013

General Information:
20 samples were analyzed for SM 2540C. All samples were received in acceptable condition with any exceptions noted below.

Hold Time:
The samples were analyzed within the method required hold times with any exceptions noted below.

Method Blank:
All analytes were below the report limit in the method blank with any exceptions noted below.

Laboratory Control Spike:
All laboratory control spike compounds were within QC limits with any exceptions noted below.

Matrix Spikes:
All percent recoveries and relative percent differences (RPDs) were within acceptance criteria with any exceptions noted below.

Duplicate Sample:
All duplicate sample results were within method acceptance criteria with any exceptions noted below.

Additional Comments:

This report shall not be reproduced, except in full,
without the written consent of Pace Analytical Services, Inc..

Pace Analytical Services, Inc.
9608 Loiret Blvd.
Lenexa, KS 66219
(913)599-5665

PROJECT NARRATIVE

Project: JULY 2013 RICO WATER SAMPLING
Pace Project No.: 60148708

Method: **SM 2540D**
Description: 2540D Total Suspended Solids
Client: BP Anderson Engineering Company Inc.
Date: July 31, 2013

General Information:
20 samples were analyzed for SM 2540D. All samples were received in acceptable condition with any exceptions noted below.

Hold Time:
The samples were analyzed within the method required hold times with any exceptions noted below.

Method Blank:
All analytes were below the report limit in the method blank with any exceptions noted below.

Laboratory Control Spike:
All laboratory control spike compounds were within QC limits with any exceptions noted below.

Matrix Spikes:
All percent recoveries and relative percent differences (RPDs) were within acceptance criteria with any exceptions noted below.

Duplicate Sample:
All duplicate sample results were within method acceptance criteria with any exceptions noted below.

QC Batch: WET/42370

D6: The relative percent difference (RPD) between the sample and sample duplicate exceeded laboratory control limits.

- DUP (Lab ID: 1220526)
  - Total Suspended Solids

Additional Comments:

This report shall not be reproduced, except in full,
without the written consent of Pace Analytical Services, Inc..

Pace Analytical Services, Inc.
9608 Loiret Blvd.
Lenexa, KS 66219
(913)599-5665

PROJECT NARRATIVE

Project: JULY 2013 RICO WATER SAMPLING
Pace Project No.: 60148708

Method: **SM 4500-S-2 D**
Description: 4500S2D Sulfide, Total
Client: BP Anderson Engineering Company Inc.
Date: July 31, 2013

General Information:
20 samples were analyzed for SM 4500-S-2 D. All samples were received in acceptable condition with any exceptions noted below.

Hold Time:
The samples were analyzed within the method required hold times with any exceptions noted below.

Method Blank:
All analytes were below the report limit in the method blank with any exceptions noted below.

Laboratory Control Spike:
All laboratory control spike compounds were within QC limits with any exceptions noted below.

Matrix Spikes:
All percent recoveries and relative percent differences (RPDs) were within acceptance criteria with any exceptions noted below.

Duplicate Sample:
All duplicate sample results were within method acceptance criteria with any exceptions noted below.

Additional Comments:

This report shall not be reproduced, except in full,
without the written consent of Pace Analytical Services, Inc..

Pace Analytical Services, Inc.
9608 Loiret Blvd.
Lenexa, KS 66219
(913)599-5665

PROJECT NARRATIVE

Project: JULY 2013 RICO WATER SAMPLING
Pace Project No.: 60148708

Method: **EPA 300.0**
Description: 300.0 IC Anions 28 Days
Client: BP Anderson Engineering Company Inc.
Date: July 31, 2013

General Information:
20 samples were analyzed for EPA 300.0. All samples were received in acceptable condition with any exceptions noted below.

Hold Time:
The samples were analyzed within the method required hold times with any exceptions noted below.

Initial Calibrations (including MS Tune as applicable):
All criteria were within method requirements with any exceptions noted below.

Continuing Calibration:
All criteria were within method requirements with any exceptions noted below.

Method Blank:
All analytes were below the report limit in the method blank with any exceptions noted below.

Laboratory Control Spike:
All laboratory control spike compounds were within QC limits with any exceptions noted below.

Matrix Spikes:
All percent recoveries and relative percent differences (RPDs) were within acceptance criteria with any exceptions noted below.

Additional Comments:

This report shall not be reproduced, except in full,
without the written consent of Pace Analytical Services, Inc..

Pace Analytical Services, Inc.
9608 Loiret Blvd.
Lenexa, KS 66219
(913)599-5665

PROJECT NARRATIVE

Project: JULY 2013 RICO WATER SAMPLING
Pace Project No.: 60148708

Method: **EPA 353.2**
Description: 353.2 Nitrogen, NO2/NO3 pres.
Client: BP Anderson Engineering Company Inc.
Date: July 31, 2013

General Information:
20 samples were analyzed for EPA 353.2. All samples were received in acceptable condition with any exceptions noted below.

Hold Time:
The samples were analyzed within the method required hold times with any exceptions noted below.

Initial Calibrations (including MS Tune as applicable):
All criteria were within method requirements with any exceptions noted below.

Continuing Calibration:
All criteria were within method requirements with any exceptions noted below.

Method Blank:
All analytes were below the report limit in the method blank with any exceptions noted below.

Laboratory Control Spike:
All laboratory control spike compounds were within QC limits with any exceptions noted below.

Matrix Spikes:
All percent recoveries and relative percent differences (RPDs) were within acceptance criteria with any exceptions noted below.

QC Batch: WETA/25539

A matrix spike and matrix spike duplicate (MS/MSD) were performed on the following sample(s): 60148708001,60149184001

M1: Matrix spike recovery exceeded QC limits. Batch accepted based on laboratory control sample (LCS) recovery.

- MS (Lab ID: 1224084)
  - Nitrogen, NO2 plus NO3

QC Batch: WETA/25541

A matrix spike and matrix spike duplicate (MS/MSD) were performed on the following sample(s): 60148708017,60148708018

M1: Matrix spike recovery exceeded QC limits. Batch accepted based on laboratory control sample (LCS) recovery.

- MS (Lab ID: 1224093)
  - Nitrogen, NO2 plus NO3

Additional Comments:

This report shall not be reproduced, except in full,
without the written consent of Pace Analytical Services, Inc..

Pace Analytical Services, Inc.
9608 Loiret Blvd.
Lenexa, KS 66219
(913)599-5665

PROJECT NARRATIVE

Project: JULY 2013 RICO WATER SAMPLING
Pace Project No.: 60148708

Method: **SM 4500-CN-E**
Description: 4500CNE Cyanide, Total
Client: BP Anderson Engineering Company Inc.
Date: July 31, 2013

General Information:
20 samples were analyzed for SM 4500-CN-E. All samples were received in acceptable condition with any exceptions noted below.

Hold Time:
The samples were analyzed within the method required hold times with any exceptions noted below.

Initial Calibrations (including MS Tune as applicable):
All criteria were within method requirements with any exceptions noted below.

Continuing Calibration:
All criteria were within method requirements with any exceptions noted below.

Method Blank:
All analytes were below the report limit in the method blank with any exceptions noted below.

Laboratory Control Spike:
All laboratory control spike compounds were within QC limits with any exceptions noted below.

Matrix Spikes:
All percent recoveries and relative percent differences (RPDs) were within acceptance criteria with any exceptions noted below.

Duplicate Sample:
All duplicate sample results were within method acceptance criteria with any exceptions noted below.

Additional Comments:

This report shall not be reproduced, except in full,
without the written consent of Pace Analytical Services, Inc..

Pace Analytical Services, Inc.
9608 Loiret Blvd.
Lenexa, KS 66219
(913)599-5665

PROJECT NARRATIVE

Project: JULY 2013 RICO WATER SAMPLING
Pace Project No.: 60148708

Method: **SM 5310C**
Description: 5310C TOC
Client: BP Anderson Engineering Company Inc.
Date: July 31, 2013

General Information:
20 samples were analyzed for SM 5310C. All samples were received in acceptable condition with any exceptions noted below.

Hold Time:
The samples were analyzed within the method required hold times with any exceptions noted below.

Initial Calibrations (including MS Tune as applicable):
All criteria were within method requirements with any exceptions noted below.

Continuing Calibration:
All criteria were within method requirements with any exceptions noted below.

Method Blank:
All analytes were below the report limit in the method blank with any exceptions noted below.

Laboratory Control Spike:
All laboratory control spike compounds were within QC limits with any exceptions noted below.

Matrix Spikes:
All percent recoveries and relative percent differences (RPDs) were within acceptance criteria with any exceptions noted below.

Additional Comments:

This data package has been reviewed for quality and completeness and is approved for release.

This report shall not be reproduced, except in full,
without the written consent of Pace Analytical Services, Inc..

Pace Analytical Services, Inc.
9608 Loiret Blvd.
Lenexa, KS 66219
(913)599-5665

ANALYTICAL RESULTS

Project: JULY 2013 RICO WATER SAMPLING
Pace Project No.: 60148708

Sample: DR-1_20130710 **Lab ID: 60148708001** Collected: 07/10/13 10:47 Received: 07/12/13 10:30 Matrix: Water

Parameters	Results	Units	Report Limit	DF	Prepared	Analyzed	CAS No.	Qual
200.7 Potentially Diss. Metals	Analytical Method: EPA 200.7 Preparation Method: EPA 200.7							
Calcium, Dissolved	**40400**	ug/L	100	1	07/18/13 10:25	07/24/13 13:04	7440-70-2	
Magnesium, Dissolved	**5760**	ug/L	50.0	1	07/18/13 10:25	07/24/13 13:04	7439-95-4	
Potassium, Dissolved	**697**	ug/L	500	1	07/18/13 10:25	07/24/13 13:04	7440-09-7	
Sodium, Dissolved	**2600**	ug/L	500	1	07/18/13 10:25	07/24/13 13:04	7440-23-5	
200.8 MET ICPMS	Analytical Method: EPA 200.8 Preparation Method: EPA 200.8							
Aluminum	**35.4**	ug/L	4.0	1	07/21/13 05:44	07/25/13 17:45	7429-90-5	
Antimony	ND	ug/L	0.50	1	07/21/13 05:44	07/25/13 17:45	7440-36-0	
Arsenic	ND	ug/L	0.50	1	07/21/13 05:44	07/25/13 17:45	7440-38-2	
Barium	**67.3**	ug/L	0.30	1	07/21/13 05:44	07/25/13 17:45	7440-39-3	
Beryllium	ND	ug/L	0.20	1	07/21/13 05:44	07/25/13 17:45	7440-41-7	
Cadmium	ND	ug/L	0.080	1	07/21/13 05:44	07/25/13 17:45	7440-43-9	
Calcium	**42900**	ug/L	100	5	07/21/13 05:44	07/25/13 18:06	7440-70-2	M1
Chromium	ND	ug/L	0.50	1	07/21/13 05:44	07/25/13 17:45	7440-47-3	
Cobalt	ND	ug/L	0.50	1	07/21/13 05:44	07/25/13 17:45	7440-48-4	
Copper	ND	ug/L	0.50	1	07/21/13 05:44	07/25/13 17:45	7440-50-8	
Iron	ND	ug/L	50.0	1	07/21/13 05:44	07/25/13 17:45	7439-89-6	
Lead	ND	ug/L	0.10	1	07/21/13 05:44	07/25/13 17:45	7439-92-1	
Magnesium	**5350**	ug/L	5.0	1	07/21/13 05:44	07/25/13 17:45	7439-95-4	
Manganese	**8.3**	ug/L	0.50	1	07/21/13 05:44	07/25/13 17:45	7439-96-5	
Molybdenum	**0.93**	ug/L	0.50	1	07/21/13 05:44	07/25/13 17:45	7439-98-7	
Nickel	ND	ug/L	0.50	1	07/21/13 05:44	07/25/13 17:45	7440-02-0	
Potassium	**698**	ug/L	20.0	1	07/21/13 05:44	07/25/13 17:45	7440-09-7	
Selenium	ND	ug/L	0.50	1	07/21/13 05:44	07/25/13 17:45	7782-49-2	
Silica	**5950**	ug/L	268	5	07/21/13 05:44	07/25/13 18:06	7631-86-9	
Silver	ND	ug/L	0.50	1	07/21/13 05:44	07/26/13 14:43	7440-22-4	
Sodium	**2270**	ug/L	50.0	1	07/21/13 05:44	07/25/13 17:45	7440-23-5	
Thallium	ND	ug/L	0.10	1	07/21/13 05:44	07/25/13 17:45	7440-28-0	
Total Hardness by 2340B	**129000**	ug/L	355	5	07/21/13 05:44	07/25/13 18:06		
Vanadium	**0.15**	ug/L	0.10	1	07/21/13 05:44	07/25/13 17:45	7440-62-2	
Zinc	ND	ug/L	5.0	1	07/21/13 05:44	07/25/13 17:45	7440-66-6	
200.8 MET ICPMS, Dissolved	Analytical Method: EPA 200.8 Preparation Method: EPA 200.8							
Aluminum, Dissolved	**9.5**	ug/L	4.0	1	07/21/13 05:45	07/24/13 01:10	7429-90-5	
Antimony, Dissolved	ND	ug/L	0.50	1	07/21/13 05:45	07/24/13 01:10	7440-36-0	
Arsenic, Dissolved	ND	ug/L	0.50	1	07/21/13 05:45	07/24/13 01:10	7440-38-2	
Barium, Dissolved	**69.3**	ug/L	0.30	1	07/21/13 05:45	07/24/13 01:10	7440-39-3	
Beryllium, Dissolved	ND	ug/L	0.20	1	07/21/13 05:45	07/24/13 01:10	7440-41-7	
Cadmium, Dissolved	ND	ug/L	0.080	1	07/21/13 05:45	07/24/13 01:10	7440-43-9	
Calcium, Dissolved	**37600**	ug/L	100	5	07/21/13 05:45	07/24/13 01:16	7440-70-2	M1
Chromium, Dissolved	ND	ug/L	0.50	1	07/21/13 05:45	07/24/13 01:10	7440-47-3	
Cobalt, Dissolved	ND	ug/L	0.50	1	07/21/13 05:45	07/24/13 01:10	7440-48-4	
Copper, Dissolved	**1.3**	ug/L	0.50	1	07/21/13 05:45	07/24/13 01:10	7440-50-8	
Iron, Dissolved	ND	ug/L	50.0	1	07/21/13 05:45	07/24/13 01:10	7439-89-6	
Lead, Dissolved	ND	ug/L	0.10	1	07/21/13 05:45	07/24/13 01:10	7439-92-1	
Magnesium, Dissolved	**5380**	ug/L	5.0	1	07/21/13 05:45	07/24/13 01:10	7439-95-4	

This report shall not be reproduced, except in full,
without the written consent of Pace Analytical Services, Inc..

Pace Analytical Services, Inc.
9608 Loiret Blvd.
Lenexa, KS 66219
(913)599-5665

ANALYTICAL RESULTS

Project: JULY 2013 RICO WATER SAMPLING
Pace Project No.: 60148708

Sample: DR-1_20130710 **Lab ID: 60148708001** Collected: 07/10/13 10:47 Received: 07/12/13 10:30 Matrix: Water

Parameters	Results	Units	Report Limit	DF	Prepared	Analyzed	CAS No.	Qual
200.8 MET ICPMS, Dissolved	Analytical Method: EPA 200.8 Preparation Method: EPA 200.8							
Manganese, Dissolved	**8.2**	ug/L	0.50	1	07/21/13 05:45	07/24/13 01:10	7439-96-5	
Molybdenum, Dissolved	**1.0**	ug/L	0.50	1	07/21/13 05:45	07/24/13 01:10	7439-98-7	
Nickel, Dissolved	**3.0**	ug/L	0.50	1	07/21/13 05:45	07/24/13 01:10	7440-02-0	
Potassium, Dissolved	**654**	ug/L	20.0	1	07/21/13 05:45	07/24/13 01:10	7440-09-7	
Selenium, Dissolved	ND	ug/L	0.50	1	07/21/13 05:45	07/24/13 01:10	7782-49-2	
Silver, Dissolved	ND	ug/L	0.50	1	07/21/13 05:45	07/24/13 01:10	7440-22-4	
Sodium, Dissolved	**2320**	ug/L	50.0	1	07/21/13 05:45	07/24/13 01:10	7440-23-5	
Thallium, Dissolved	ND	ug/L	0.10	1	07/21/13 05:45	07/24/13 01:10	7440-28-0	
Vanadium, Dissolved	**0.14**	ug/L	0.10	1	07/21/13 05:45	07/24/13 01:10	7440-62-2	
Zinc, Dissolved	**5.0**	ug/L	5.0	1	07/21/13 05:45	07/24/13 01:10	7440-66-6	
200.8 Potentially Diss. Metals	Analytical Method: EPA 200.8 Preparation Method: EPA 200.8							
Aluminum, Dissolved	**6.5J**	ug/L	50.0	1	07/18/13 10:25	07/22/13 15:06	7429-90-5	
Antimony, Dissolved	**0.18J**	ug/L	1.0	1	07/18/13 10:25	07/22/13 15:06	7440-36-0	B
Arsenic, Dissolved	**0.21J**	ug/L	1.0	1	07/18/13 10:25	07/22/13 15:06	7440-38-2	
Barium, Dissolved	**68.7**	ug/L	1.0	1	07/18/13 10:25	07/22/13 15:06	7440-39-3	
Beryllium, Dissolved	ND	ug/L	0.50	1	07/18/13 10:25	07/22/13 15:06	7440-41-7	
Cadmium, Dissolved	ND	ug/L	0.50	1	07/18/13 10:25	07/22/13 15:06	7440-43-9	
Chromium, Dissolved	**0.41J**	ug/L	1.0	1	07/18/13 10:25	07/22/13 15:06	7440-47-3	
Cobalt, Dissolved	ND	ug/L	1.0	1	07/18/13 10:25	07/22/13 15:06	7440-48-4	
Copper, Dissolved	**0.84J**	ug/L	1.0	1	07/18/13 10:25	07/22/13 15:06	7440-50-8	
Iron, Dissolved	**25.6J**	ug/L	50.0	1	07/18/13 10:25	07/22/13 15:06	7439-89-6	
Lead, Dissolved	**0.26J**	ug/L	1.0	1	07/18/13 10:25	07/22/13 15:06	7439-92-1	B
Manganese, Dissolved	**8.9**	ug/L	1.0	1	07/18/13 10:25	07/22/13 15:06	7439-96-5	
Molybdenum, Dissolved	**1.4**	ug/L	1.0	1	07/18/13 10:25	07/22/13 15:06	7439-98-7	B
Nickel, Dissolved	ND	ug/L	1.0	1	07/18/13 10:25	07/22/13 15:06	7440-02-0	
Selenium, Dissolved	**0.39J**	ug/L	1.0	1	07/18/13 10:25	07/22/13 15:06	7782-49-2	
Silver, Dissolved	ND	ug/L	0.50	1	07/18/13 10:25	07/22/13 15:06	7440-22-4	
Thallium, Dissolved	**0.32J**	ug/L	1.0	1	07/18/13 10:25	07/22/13 15:06	7440-28-0	B
Vanadium, Dissolved	**0.36J**	ug/L	1.0	1	07/18/13 10:25	07/23/13 11:27	7440-62-2	
Zinc, Dissolved	**1.8J**	ug/L	10.0	1	07/18/13 10:25	07/22/13 15:06	7440-66-6	
245.1 Mercury	Analytical Method: EPA 245.1 Preparation Method: EPA 245.1							
Mercury	ND	ug/L	0.20	1	07/18/13 14:57	07/23/13 10:15	7439-97-6	
245.1 Mercury, Dissolved	Analytical Method: EPA 245.1 Preparation Method: EPA 245.1							
Mercury, Dissolved	ND	ug/L	0.20	1	07/18/13 14:53	07/23/13 11:38	7439-97-6	
245.1 Potentially Diss Mercury	Analytical Method: EPA 245.1 Preparation Method: EPA 245.1							
Mercury, Dissolved	ND	ug/L	0.20	1	07/16/13 08:30	07/16/13 11:07	7439-97-6	
2510B Specific Conductance	Analytical Method: SM 2510B							
Specific Conductance	**248**	umhos/cm	10.0	1		07/18/13 11:21		
Salinity	Analytical Method: Calculated							
Salinity (as dissolved solids)	**158**	mg/L	6.4	1		07/23/13 10:09		

REPORT OF LABORATORY ANALYSIS

This report shall not be reproduced, except in full,
without the written consent of Pace Analytical Services, Inc..

Pace Analytical Services, Inc.
9608 Loiret Blvd.
Lenexa, KS 66219
(913)599-5665

ANALYTICAL RESULTS

Project: JULY 2013 RICO WATER SAMPLING
Pace Project No.: 60148708

Sample: DR-1_20130710 **Lab ID: 60148708001** Collected: 07/10/13 10:47 Received: 07/12/13 10:30 Matrix: Water

Parameters	Results	Units	Report Limit	DF	Prepared	Analyzed	CAS No.	Qual
Salinity	Analytical Method: Calculated							
Salinity (as seawater)	**0.12**	PSU	0.014	1		07/23/13 10:09		
2320B Alkalinity	Analytical Method: SM 2320B							
Alkalinity,Bicarbonate (CaCO3)	**92.1**	mg/L	20.0	1		07/17/13 11:10		
Alkalinity, Carbonate (CaCO3)	ND	mg/L	20.0	1		07/17/13 11:10		
Alkalinity, Total as CaCO3	**92.1**	mg/L	20.0	1		07/17/13 11:10		
2540C Total Dissolved Solids	Analytical Method: SM 2540C							
Total Dissolved Solids	**153**	mg/L	5.0	1		07/12/13 14:19		
2540D Total Suspended Solids	Analytical Method: SM 2540D							
Total Suspended Solids	ND	mg/L	5.0	1		07/12/13 16:15		
4500S2D Sulfide, Total	Analytical Method: SM 4500-S-2 D							
Sulfide, Total	ND	mg/L	0.050	1		07/16/13 13:52	18496-25-8	
300.0 IC Anions 28 Days	Analytical Method: EPA 300.0							
Chloride	**1.2**	mg/L	1.0	1		07/26/13 16:16	16887-00-6	
Sulfate	**43.7**	mg/L	10.0	10		07/25/13 17:31	14808-79-8	
353.2 Nitrogen, NO2/NO3 pres.	Analytical Method: EPA 353.2							
Nitrogen, NO2 plus NO3	ND	mg/L	0.10	1		07/23/13 13:12		M1
4500CNE Cyanide, Total	Analytical Method: SM 4500-CN-E							
Cyanide	ND	mg/L	0.0050	1		07/15/13 14:08	57-12-5	
5310C TOC	Analytical Method: SM 5310C							
Total Organic Carbon	**1.1**	mg/L	0.50	1		07/17/13 12:36	7440-44-0	

This report shall not be reproduced, except in full,
without the written consent of Pace Analytical Services, Inc..

Pace Analytical Services, Inc.
9608 Loiret Blvd.
Lenexa, KS 66219
(913)599-5665

ANALYTICAL RESULTS

Project: JULY 2013 RICO WATER SAMPLING
Pace Project No.: 60148708

Sample: DR-2_20130710 **Lab ID: 60148708002** Collected: 07/10/13 14:10 Received: 07/12/13 10:30 Matrix: Water

Parameters	Results	Units	Report Limit	DF	Prepared	Analyzed	CAS No.	Qual
200.7 Potentially Diss. Metals	Analytical Method: EPA 200.7 Preparation Method: EPA 200.7							
Calcium, Dissolved	**50500**	ug/L	100	1	07/18/13 10:25	07/24/13 13:08	7440-70-2	
Magnesium, Dissolved	**6500**	ug/L	50.0	1	07/18/13 10:25	07/24/13 13:08	7439-95-4	
Potassium, Dissolved	**950**	ug/L	500	1	07/18/13 10:25	07/24/13 13:08	7440-09-7	
Sodium, Dissolved	**3120**	ug/L	500	1	07/18/13 10:25	07/24/13 13:08	7440-23-5	
200.8 MET ICPMS	Analytical Method: EPA 200.8 Preparation Method: EPA 200.8							
Aluminum	**13.6**	ug/L	4.0	1	07/21/13 05:44	07/25/13 18:15	7429-90-5	
Antimony	ND	ug/L	0.50	1	07/21/13 05:44	07/25/13 18:15	7440-36-0	
Arsenic	ND	ug/L	0.50	1	07/21/13 05:44	07/25/13 18:15	7440-38-2	
Barium	**66.1**	ug/L	0.30	1	07/21/13 05:44	07/25/13 18:15	7440-39-3	
Beryllium	ND	ug/L	0.20	1	07/21/13 05:44	07/25/13 18:15	7440-41-7	
Cadmium	ND	ug/L	0.080	1	07/21/13 05:44	07/25/13 18:15	7440-43-9	
Calcium	**50500**	ug/L	400	20	07/21/13 05:44	07/25/13 18:19	7440-70-2	
Chromium	**0.72**	ug/L	0.50	1	07/21/13 05:44	07/25/13 18:15	7440-47-3	
Cobalt	ND	ug/L	0.50	1	07/21/13 05:44	07/25/13 18:15	7440-48-4	
Copper	ND	ug/L	0.50	1	07/21/13 05:44	07/25/13 18:15	7440-50-8	
Iron	ND	ug/L	50.0	1	07/21/13 05:44	07/25/13 18:15	7439-89-6	
Lead	ND	ug/L	0.10	1	07/21/13 05:44	07/25/13 18:15	7439-92-1	
Magnesium	**6020**	ug/L	5.0	1	07/21/13 05:44	07/25/13 18:15	7439-95-4	
Manganese	**106**	ug/L	0.50	1	07/21/13 05:44	07/25/13 18:15	7439-96-5	
Molybdenum	**1.2**	ug/L	0.50	1	07/21/13 05:44	07/25/13 18:15	7439-98-7	
Nickel	ND	ug/L	0.50	1	07/21/13 05:44	07/25/13 18:15	7440-02-0	
Potassium	**933**	ug/L	20.0	1	07/21/13 05:44	07/25/13 18:15	7440-09-7	
Selenium	ND	ug/L	0.50	1	07/21/13 05:44	07/25/13 18:15	7782-49-2	
Silica	**6060**	ug/L	1070	20	07/21/13 05:44	07/25/13 18:19	7631-86-9	
Silver	ND	ug/L	0.50	1	07/21/13 05:44	07/26/13 14:48	7440-22-4	
Sodium	**2660**	ug/L	50.0	1	07/21/13 05:44	07/25/13 18:15	7440-23-5	
Thallium	ND	ug/L	0.10	1	07/21/13 05:44	07/25/13 18:15	7440-28-0	
Total Hardness by 2340B	**151000**	ug/L	1420	20	07/21/13 05:44	07/25/13 18:19		
Vanadium	**0.18**	ug/L	0.10	1	07/21/13 05:44	07/25/13 18:15	7440-62-2	
Zinc	**5.6**	ug/L	5.0	1	07/21/13 05:44	07/25/13 18:15	7440-66-6	
200.8 MET ICPMS, Dissolved	Analytical Method: EPA 200.8 Preparation Method: EPA 200.8							
Aluminum, Dissolved	**11.9**	ug/L	4.0	1	07/21/13 05:45	07/24/13 01:26	7429-90-5	
Antimony, Dissolved	ND	ug/L	0.50	1	07/21/13 05:45	07/24/13 01:26	7440-36-0	
Arsenic, Dissolved	ND	ug/L	0.50	1	07/21/13 05:45	07/24/13 01:26	7440-38-2	
Barium, Dissolved	**70.1**	ug/L	0.30	1	07/21/13 05:45	07/24/13 01:26	7440-39-3	
Beryllium, Dissolved	ND	ug/L	0.20	1	07/21/13 05:45	07/24/13 01:26	7440-41-7	
Cadmium, Dissolved	ND	ug/L	0.080	1	07/21/13 05:45	07/24/13 01:26	7440-43-9	
Calcium, Dissolved	**47300**	ug/L	400	20	07/21/13 05:45	07/24/13 01:31	7440-70-2	
Chromium, Dissolved	**0.55**	ug/L	0.50	1	07/21/13 05:45	07/24/13 01:26	7440-47-3	
Cobalt, Dissolved	ND	ug/L	0.50	1	07/21/13 05:45	07/24/13 01:26	7440-48-4	
Copper, Dissolved	**1.2**	ug/L	0.50	1	07/21/13 05:45	07/24/13 01:26	7440-50-8	
Iron, Dissolved	ND	ug/L	50.0	1	07/21/13 05:45	07/24/13 01:26	7439-89-6	
Lead, Dissolved	ND	ug/L	0.10	1	07/21/13 05:45	07/24/13 01:26	7439-92-1	
Magnesium, Dissolved	**6240**	ug/L	5.0	1	07/21/13 05:45	07/24/13 01:26	7439-95-4	

This report shall not be reproduced, except in full,
without the written consent of Pace Analytical Services, Inc..

Pace Analytical Services, Inc.
9608 Loiret Blvd.
Lenexa, KS 66219
(913)599-5665

ANALYTICAL RESULTS

Project: JULY 2013 RICO WATER SAMPLING
Pace Project No.: 60148708

Sample: DR-2_20130710 **Lab ID: 60148708002** Collected: 07/10/13 14:10 Received: 07/12/13 10:30 Matrix: Water

Parameters	Results	Units	Report Limit	DF	Prepared	Analyzed	CAS No.	Qual
200.8 MET ICPMS, Dissolved	Analytical Method: EPA 200.8 Preparation Method: EPA 200.8							
Manganese, Dissolved	**105**	ug/L	0.50	1	07/21/13 05:45	07/24/13 01:26	7439-96-5	
Molybdenum, Dissolved	**1.3**	ug/L	0.50	1	07/21/13 05:45	07/24/13 01:26	7439-98-7	
Nickel, Dissolved	**0.65**	ug/L	0.50	1	07/21/13 05:45	07/24/13 01:26	7440-02-0	
Potassium, Dissolved	**880**	ug/L	20.0	1	07/21/13 05:45	07/24/13 01:26	7440-09-7	
Selenium, Dissolved	ND	ug/L	0.50	1	07/21/13 05:45	07/24/13 01:26	7782-49-2	
Silver, Dissolved	ND	ug/L	0.50	1	07/21/13 05:45	07/24/13 01:26	7440-22-4	
Sodium, Dissolved	**2780**	ug/L	50.0	1	07/21/13 05:45	07/24/13 01:26	7440-23-5	
Thallium, Dissolved	ND	ug/L	0.10	1	07/21/13 05:45	07/24/13 01:26	7440-28-0	
Vanadium, Dissolved	**0.17**	ug/L	0.10	1	07/21/13 05:45	07/24/13 01:26	7440-62-2	
Zinc, Dissolved	**6.3**	ug/L	5.0	1	07/21/13 05:45	07/24/13 01:26	7440-66-6	
200.8 Potentially Diss. Metals	Analytical Method: EPA 200.8 Preparation Method: EPA 200.8							
Aluminum, Dissolved	**7.0J**	ug/L	50.0	1	07/18/13 10:25	07/22/13 15:10	7429-90-5	
Antimony, Dissolved	**0.16J**	ug/L	1.0	1	07/18/13 10:25	07/22/13 15:10	7440-36-0	B
Arsenic, Dissolved	**0.32J**	ug/L	1.0	1	07/18/13 10:25	07/22/13 15:10	7440-38-2	
Barium, Dissolved	**65.1**	ug/L	1.0	1	07/18/13 10:25	07/22/13 15:10	7440-39-3	
Beryllium, Dissolved	ND	ug/L	0.50	1	07/18/13 10:25	07/22/13 15:10	7440-41-7	
Cadmium, Dissolved	ND	ug/L	0.50	1	07/18/13 10:25	07/22/13 15:10	7440-43-9	
Chromium, Dissolved	**0.40J**	ug/L	1.0	1	07/18/13 10:25	07/22/13 15:10	7440-47-3	
Cobalt, Dissolved	ND	ug/L	1.0	1	07/18/13 10:25	07/22/13 15:10	7440-48-4	
Copper, Dissolved	**0.85J**	ug/L	1.0	1	07/18/13 10:25	07/22/13 15:10	7440-50-8	
Iron, Dissolved	**26.2J**	ug/L	50.0	1	07/18/13 10:25	07/22/13 15:10	7439-89-6	
Lead, Dissolved	**0.30J**	ug/L	1.0	1	07/18/13 10:25	07/22/13 15:10	7439-92-1	B
Manganese, Dissolved	**103**	ug/L	1.0	1	07/18/13 10:25	07/22/13 15:10	7439-96-5	
Molybdenum, Dissolved	**1.3**	ug/L	1.0	1	07/18/13 10:25	07/22/13 15:10	7439-98-7	B
Nickel, Dissolved	ND	ug/L	1.0	1	07/18/13 10:25	07/22/13 15:10	7440-02-0	
Selenium, Dissolved	**0.36J**	ug/L	1.0	1	07/18/13 10:25	07/22/13 15:10	7782-49-2	
Silver, Dissolved	ND	ug/L	0.50	1	07/18/13 10:25	07/22/13 15:10	7440-22-4	
Thallium, Dissolved	**0.30J**	ug/L	1.0	1	07/18/13 10:25	07/22/13 15:10	7440-28-0	B
Vanadium, Dissolved	**0.41J**	ug/L	1.0	1	07/18/13 10:25	07/23/13 11:31	7440-62-2	
Zinc, Dissolved	**6.8J**	ug/L	10.0	1	07/18/13 10:25	07/22/13 15:10	7440-66-6	
245.1 Mercury	Analytical Method: EPA 245.1 Preparation Method: EPA 245.1							
Mercury	ND	ug/L	0.20	1	07/18/13 14:57	07/23/13 10:17	7439-97-6	
245.1 Mercury, Dissolved	Analytical Method: EPA 245.1 Preparation Method: EPA 245.1							
Mercury, Dissolved	ND	ug/L	0.20	1	07/18/13 14:53	07/23/13 11:41	7439-97-6	
245.1 Potentially Diss Mercury	Analytical Method: EPA 245.1 Preparation Method: EPA 245.1							
Mercury, Dissolved	ND	ug/L	0.20	1	07/16/13 08:30	07/16/13 11:09	7439-97-6	
2510B Specific Conductance	Analytical Method: SM 2510B							
Specific Conductance	**300**	umhos/cm	10.0	1		07/18/13 11:24		
Salinity	Analytical Method: Calculated							
Salinity (as dissolved solids)	**180**	mg/L	6.4	1		07/23/13 10:09		

REPORT OF LABORATORY ANALYSIS

This report shall not be reproduced, except in full,
without the written consent of Pace Analytical Services, Inc..

Pace Analytical Services, Inc.
9608 Loiret Blvd.
Lenexa, KS 66219
(913)599-5665

ANALYTICAL RESULTS

Project: JULY 2013 RICO WATER SAMPLING
Pace Project No.: 60148708

Sample: DR-2_20130710 **Lab ID: 60148708002** Collected: 07/10/13 14:10 Received: 07/12/13 10:30 Matrix: Water

Parameters	Results	Units	Report Limit	DF	Prepared	Analyzed	CAS No.	Qual
Salinity	Analytical Method: Calculated							
Salinity (as seawater)	**0.14**	PSU	0.014	1		07/23/13 10:09		
2320B Alkalinity	Analytical Method: SM 2320B							
Alkalinity,Bicarbonate (CaCO3)	**103**	mg/L	20.0	1		07/17/13 11:14		
Alkalinity, Carbonate (CaCO3)	ND	mg/L	20.0	1		07/17/13 11:14		
Alkalinity, Total as CaCO3	**103**	mg/L	20.0	1		07/17/13 11:14		
2540C Total Dissolved Solids	Analytical Method: SM 2540C							
Total Dissolved Solids	**177**	mg/L	5.0	1		07/12/13 14:19		
2540D Total Suspended Solids	Analytical Method: SM 2540D							
Total Suspended Solids	ND	mg/L	5.0	1		07/12/13 16:15		
4500S2D Sulfide, Total	Analytical Method: SM 4500-S-2 D							
Sulfide, Total	ND	mg/L	0.050	1		07/16/13 13:53	18496-25-8	
300.0 IC Anions 28 Days	Analytical Method: EPA 300.0							
Chloride	**1.1**	mg/L	1.0	1		07/26/13 17:07	16887-00-6	
Sulfate	**63.0**	mg/L	10.0	10		07/25/13 18:53	14808-79-8	
353.2 Nitrogen, NO2/NO3 pres.	Analytical Method: EPA 353.2							
Nitrogen, NO2 plus NO3	ND	mg/L	0.10	1		07/23/13 13:14		
4500CNE Cyanide, Total	Analytical Method: SM 4500-CN-E							
Cyanide	ND	mg/L	0.0050	1		07/15/13 14:11	57-12-5	
5310C TOC	Analytical Method: SM 5310C							
Total Organic Carbon	**1.2**	mg/L	0.50	1		07/17/13 13:31	7440-44-0	

This report shall not be reproduced, except in full,
without the written consent of Pace Analytical Services, Inc..

Pace Analytical Services, Inc.
9608 Loiret Blvd.
Lenexa, KS 66219
(913)599-5665

ANALYTICAL RESULTS

Project: JULY 2013 RICO WATER SAMPLING
Pace Project No.: 60148708

Sample: DR-3_20130710 **Lab ID: 60148708003** Collected: 07/10/13 12:05 Received: 07/12/13 10:30 Matrix: Water

Parameters	Results	Units	Report Limit	DF	Prepared	Analyzed	CAS No.	Qual
200.7 Potentially Diss. Metals	Analytical Method: EPA 200.7 Preparation Method: EPA 200.7							
Calcium, Dissolved	**234000**	ug/L	100	1	07/18/13 10:25	07/24/13 13:11	7440-70-2	M1
Magnesium, Dissolved	**18900**	ug/L	50.0	1	07/18/13 10:25	07/24/13 13:11	7439-95-4	
Potassium, Dissolved	**3850**	ug/L	500	1	07/18/13 10:25	07/24/13 13:11	7440-09-7	
Sodium, Dissolved	**24600**	ug/L	500	1	07/18/13 10:25	07/24/13 13:11	7440-23-5	
200.8 MET ICPMS	Analytical Method: EPA 200.8 Preparation Method: EPA 200.8							
Aluminum	**372**	ug/L	4.0	1	07/21/13 05:44	07/25/13 18:40	7429-90-5	
Antimony	ND	ug/L	0.50	1	07/21/13 05:44	07/25/13 18:40	7440-36-0	
Arsenic	**0.70**	ug/L	0.50	1	07/21/13 05:44	07/25/13 18:40	7440-38-2	
Barium	**18.9**	ug/L	0.30	1	07/21/13 05:44	07/25/13 18:40	7440-39-3	
Beryllium	**0.56**	ug/L	0.20	1	07/21/13 05:44	07/25/13 18:40	7440-41-7	
Cadmium	**18.1**	ug/L	0.080	1	07/21/13 05:44	07/25/13 18:40	7440-43-9	
Calcium	**311000**	ug/L	400	20	07/21/13 05:44	07/25/13 18:44	7440-70-2	
Chromium	ND	ug/L	0.50	1	07/21/13 05:44	07/25/13 18:40	7440-47-3	
Cobalt	**2.5**	ug/L	0.50	1	07/21/13 05:44	07/25/13 18:40	7440-48-4	
Copper	**80.2**	ug/L	0.50	1	07/21/13 05:44	07/25/13 18:40	7440-50-8	
Iron	**4600**	ug/L	50.0	1	07/21/13 05:44	07/25/13 18:40	7439-89-6	
Lead	**5.7**	ug/L	0.10	1	07/21/13 05:44	07/25/13 18:40	7439-92-1	
Magnesium	**17600**	ug/L	5.0	1	07/21/13 05:44	07/25/13 18:40	7439-95-4	
Manganese	**2170**	ug/L	10.0	20	07/21/13 05:44	07/25/13 18:44	7439-96-5	
Molybdenum	**17.8**	ug/L	0.50	1	07/21/13 05:44	07/25/13 18:40	7439-98-7	
Nickel	**3.9**	ug/L	0.50	1	07/21/13 05:44	07/25/13 18:40	7440-02-0	
Potassium	**3660**	ug/L	20.0	1	07/21/13 05:44	07/25/13 18:40	7440-09-7	
Selenium	ND	ug/L	0.50	1	07/21/13 05:44	07/25/13 18:40	7782-49-2	
Silica	**20100**	ug/L	1070	20	07/21/13 05:44	07/25/13 18:44	7631-86-9	
Silver	ND	ug/L	0.50	1	07/21/13 05:44	07/26/13 14:53	7440-22-4	
Sodium	**26800**	ug/L	1000	20	07/21/13 05:44	07/25/13 18:44	7440-23-5	
Thallium	ND	ug/L	0.10	1	07/21/13 05:44	07/25/13 18:40	7440-28-0	
Total Hardness by 2340B	**849000**	ug/L	1420	20	07/21/13 05:44	07/25/13 18:44		
Vanadium	ND	ug/L	0.10	1	07/21/13 05:44	07/25/13 18:40	7440-62-2	
Zinc	**4220**	ug/L	100	20	07/21/13 05:44	07/25/13 18:44	7440-66-6	
200.8 MET ICPMS, Dissolved	Analytical Method: EPA 200.8 Preparation Method: EPA 200.8							
Aluminum, Dissolved	**23.0**	ug/L	4.0	1	07/21/13 05:45	07/24/13 01:36	7429-90-5	
Antimony, Dissolved	ND	ug/L	0.50	1	07/21/13 05:45	07/24/13 01:36	7440-36-0	
Arsenic, Dissolved	ND	ug/L	0.50	1	07/21/13 05:45	07/24/13 01:36	7440-38-2	
Barium, Dissolved	**20.3**	ug/L	0.30	1	07/21/13 05:45	07/24/13 01:36	7440-39-3	
Beryllium, Dissolved	**0.34**	ug/L	0.20	1	07/21/13 05:45	07/24/13 01:36	7440-41-7	
Cadmium, Dissolved	**19.2**	ug/L	0.080	1	07/21/13 05:45	07/24/13 01:36	7440-43-9	
Calcium, Dissolved	**229000**	ug/L	400	20	07/21/13 05:45	07/24/13 01:42	7440-70-2	
Chromium, Dissolved	ND	ug/L	0.50	1	07/21/13 05:45	07/24/13 01:36	7440-47-3	
Cobalt, Dissolved	**2.7**	ug/L	0.50	1	07/21/13 05:45	07/24/13 01:36	7440-48-4	
Copper, Dissolved	**8.6**	ug/L	0.50	1	07/21/13 05:45	07/24/13 01:36	7440-50-8	
Iron, Dissolved	**428**	ug/L	50.0	1	07/21/13 05:45	07/24/13 01:36	7439-89-6	
Lead, Dissolved	ND	ug/L	0.10	1	07/21/13 05:45	07/24/13 01:36	7439-92-1	
Magnesium, Dissolved	**18700**	ug/L	5.0	1	07/21/13 05:45	07/24/13 01:36	7439-95-4	

This report shall not be reproduced, except in full,
without the written consent of Pace Analytical Services, Inc..

Pace Analytical Services, Inc.
9608 Loiret Blvd.
Lenexa, KS 66219
(913)599-5665

ANALYTICAL RESULTS

Project: JULY 2013 RICO WATER SAMPLING
Pace Project No.: 60148708

Sample: DR-3_20130710 **Lab ID: 60148708003** Collected: 07/10/13 12:05 Received: 07/12/13 10:30 Matrix: Water

Parameters	Results	Units	Report Limit	DF	Prepared	Analyzed	CAS No.	Qual
200.8 MET ICPMS, Dissolved	Analytical Method: EPA 200.8 Preparation Method: EPA 200.8							
Manganese, Dissolved	**1820**	ug/L	10.0	20	07/21/13 05:45	07/24/13 01:42	7439-96-5	
Molybdenum, Dissolved	**18.6**	ug/L	0.50	1	07/21/13 05:45	07/24/13 01:36	7439-98-7	
Nickel, Dissolved	**4.7**	ug/L	0.50	1	07/21/13 05:45	07/24/13 01:36	7440-02-0	
Potassium, Dissolved	**3480**	ug/L	20.0	1	07/21/13 05:45	07/24/13 01:36	7440-09-7	
Selenium, Dissolved	ND	ug/L	0.50	1	07/21/13 05:45	07/24/13 01:36	7782-49-2	
Silver, Dissolved	ND	ug/L	0.50	1	07/21/13 05:45	07/24/13 01:36	7440-22-4	
Sodium, Dissolved	**22600**	ug/L	1000	20	07/21/13 05:45	07/24/13 01:42	7440-23-5	
Thallium, Dissolved	ND	ug/L	0.10	1	07/21/13 05:45	07/24/13 01:36	7440-28-0	
Vanadium, Dissolved	ND	ug/L	0.10	1	07/21/13 05:45	07/24/13 01:36	7440-62-2	
Zinc, Dissolved	**3620**	ug/L	100	20	07/21/13 05:45	07/24/13 01:42	7440-66-6	
200.8 Potentially Diss. Metals	Analytical Method: EPA 200.8 Preparation Method: EPA 200.8							
Aluminum, Dissolved	**380**	ug/L	50.0	1	07/18/13 10:25	07/22/13 15:27	7429-90-5	
Antimony, Dissolved	**0.58J**	ug/L	1.0	1	07/18/13 10:25	07/22/13 15:27	7440-36-0	B
Arsenic, Dissolved	**0.59J**	ug/L	1.0	1	07/18/13 10:25	07/22/13 15:27	7440-38-2	
Barium, Dissolved	**19.3**	ug/L	1.0	1	07/18/13 10:25	07/22/13 15:27	7440-39-3	
Beryllium, Dissolved	**0.58**	ug/L	0.50	1	07/18/13 10:25	07/22/13 15:27	7440-41-7	
Cadmium, Dissolved	**20.2**	ug/L	0.50	1	07/18/13 10:25	07/22/13 15:27	7440-43-9	
Chromium, Dissolved	**0.56J**	ug/L	1.0	1	07/18/13 10:25	07/22/13 15:27	7440-47-3	
Cobalt, Dissolved	**2.5**	ug/L	1.0	1	07/18/13 10:25	07/22/13 15:27	7440-48-4	
Copper, Dissolved	**91.5**	ug/L	1.0	1	07/18/13 10:25	07/22/13 15:27	7440-50-8	
Iron, Dissolved	**5030**	ug/L	50.0	1	07/18/13 10:25	07/22/13 15:27	7439-89-6	
Lead, Dissolved	**6.5**	ug/L	1.0	1	07/18/13 10:25	07/22/13 15:27	7439-92-1	
Manganese, Dissolved	**1850**	ug/L	1.0	1	07/18/13 10:25	07/22/13 15:27	7439-96-5	
Molybdenum, Dissolved	**19.7**	ug/L	1.0	1	07/18/13 10:25	07/22/13 15:27	7439-98-7	
Nickel, Dissolved	**2.3**	ug/L	1.0	1	07/18/13 10:25	07/22/13 15:27	7440-02-0	
Selenium, Dissolved	ND	ug/L	1.0	1	07/18/13 10:25	07/22/13 15:27	7782-49-2	
Silver, Dissolved	ND	ug/L	0.50	1	07/18/13 10:25	07/22/13 15:27	7440-22-4	
Thallium, Dissolved	**0.40J**	ug/L	1.0	1	07/18/13 10:25	07/22/13 15:27	7440-28-0	B
Vanadium, Dissolved	ND	ug/L	1.0	1	07/18/13 10:25	07/23/13 11:39	7440-62-2	
Zinc, Dissolved	**3700**	ug/L	10.0	1	07/18/13 10:25	07/22/13 15:27	7440-66-6	
245.1 Mercury	Analytical Method: EPA 245.1 Preparation Method: EPA 245.1							
Mercury	ND	ug/L	0.20	1	07/18/13 14:57	07/23/13 10:30	7439-97-6	
245.1 Mercury, Dissolved	Analytical Method: EPA 245.1 Preparation Method: EPA 245.1							
Mercury, Dissolved	ND	ug/L	0.20	1	07/18/13 14:53	07/23/13 11:53	7439-97-6	
245.1 Potentially Diss Mercury	Analytical Method: EPA 245.1 Preparation Method: EPA 245.1							
Mercury, Dissolved	ND	ug/L	0.20	1	07/16/13 08:30	07/16/13 11:16	7439-97-6	
2510B Specific Conductance	Analytical Method: SM 2510B							
Specific Conductance	**1300**	umhos/cm	10.0	1		07/18/13 11:25		
Salinity	Analytical Method: Calculated							
Salinity (as dissolved solids)	**881**	mg/L	6.4	1		07/23/13 10:09		

REPORT OF LABORATORY ANALYSIS

This report shall not be reproduced, except in full,
without the written consent of Pace Analytical Services, Inc..

Pace Analytical Services, Inc.
9608 Loiret Blvd.
Lenexa, KS 66219
(913)599-5665

ANALYTICAL RESULTS

Project: JULY 2013 RICO WATER SAMPLING
Pace Project No.: 60148708

Sample: DR-3_20130710 **Lab ID: 60148708003** Collected: 07/10/13 12:05 Received: 07/12/13 10:30 Matrix: Water

Parameters	Results	Units	Report Limit	DF	Prepared	Analyzed	CAS No.	Qual
Salinity	Analytical Method: Calculated							
Salinity (as seawater)	**0.69**	PSU	0.014	1		07/23/13 10:09		
2320B Alkalinity	Analytical Method: SM 2320B							
Alkalinity,Bicarbonate (CaCO3)	**95.9**	mg/L	20.0	1		07/17/13 11:18		
Alkalinity, Carbonate (CaCO3)	ND	mg/L	20.0	1		07/17/13 11:18		
Alkalinity, Total as CaCO3	**95.9**	mg/L	20.0	1		07/17/13 11:18		
2540C Total Dissolved Solids	Analytical Method: SM 2540C							
Total Dissolved Solids	**988**	mg/L	5.0	1		07/12/13 14:20		
2540D Total Suspended Solids	Analytical Method: SM 2540D							
Total Suspended Solids	**15.0**	mg/L	5.0	1		07/15/13 09:32		
4500S2D Sulfide, Total	Analytical Method: SM 4500-S-2 D							
Sulfide, Total	ND	mg/L	0.050	1		07/16/13 13:55	18496-25-8	
300.0 IC Anions 28 Days	Analytical Method: EPA 300.0							
Chloride	ND	mg/L	1.0	1		07/26/13 17:25	16887-00-6	
Sulfate	**660**	mg/L	100	100		07/26/13 17:42	14808-79-8	
353.2 Nitrogen, NO2/NO3 pres.	Analytical Method: EPA 353.2							
Nitrogen, NO2 plus NO3	ND	mg/L	0.10	1		07/23/13 13:15		
4500CNE Cyanide, Total	Analytical Method: SM 4500-CN-E							
Cyanide	ND	mg/L	0.0050	1		07/15/13 14:13	57-12-5	
5310C TOC	Analytical Method: SM 5310C							
Total Organic Carbon	ND	mg/L	0.50	1		07/17/13 14:43	7440-44-0	

This report shall not be reproduced, except in full,
without the written consent of Pace Analytical Services, Inc..

Pace Analytical Services, Inc.
9608 Loiret Blvd.
Lenexa, KS 66219
(913)599-5665

ANALYTICAL RESULTS

Project: JULY 2013 RICO WATER SAMPLING
Pace Project No.: 60148708

Sample: DR-6_20130710 **Lab ID: 60148708004** Collected: 07/10/13 14:23 Received: 07/12/13 10:30 Matrix: Water

Parameters	Results	Units	Report Limit	DF	Prepared	Analyzed	CAS No.	Qual
200.7 Potentially Diss. Metals	Analytical Method: EPA 200.7 Preparation Method: EPA 200.7							
Calcium, Dissolved	**262000**	ug/L	100	1	07/18/13 10:25	07/24/13 13:23	7440-70-2	
Magnesium, Dissolved	**23800**	ug/L	50.0	1	07/18/13 10:25	07/24/13 13:23	7439-95-4	
Potassium, Dissolved	**6010**	ug/L	500	1	07/18/13 10:25	07/24/13 13:23	7440-09-7	
Sodium, Dissolved	**34000**	ug/L	500	1	07/18/13 10:25	07/24/13 13:23	7440-23-5	
200.8 MET ICPMS	Analytical Method: EPA 200.8 Preparation Method: EPA 200.8							
Aluminum	**13.6**	ug/L	4.0	1	07/21/13 05:44	07/25/13 18:49	7429-90-5	
Antimony	ND	ug/L	0.50	1	07/21/13 05:44	07/25/13 18:49	7440-36-0	
Arsenic	ND	ug/L	0.50	1	07/21/13 05:44	07/25/13 18:49	7440-38-2	
Barium	**19.8**	ug/L	0.30	1	07/21/13 05:44	07/25/13 18:49	7440-39-3	
Beryllium	ND	ug/L	0.20	1	07/21/13 05:44	07/25/13 18:49	7440-41-7	
Cadmium	**7.5**	ug/L	0.080	1	07/21/13 05:44	07/25/13 18:49	7440-43-9	
Calcium	**266000**	ug/L	400	20	07/21/13 05:44	07/25/13 18:53	7440-70-2	
Chromium	ND	ug/L	0.50	1	07/21/13 05:44	07/25/13 18:49	7440-47-3	
Cobalt	**1.3**	ug/L	0.50	1	07/21/13 05:44	07/25/13 18:49	7440-48-4	
Copper	**3.8**	ug/L	0.50	1	07/21/13 05:44	07/25/13 18:49	7440-50-8	
Iron	**398**	ug/L	50.0	1	07/21/13 05:44	07/25/13 18:49	7439-89-6	
Lead	**0.48**	ug/L	0.10	1	07/21/13 05:44	07/25/13 18:49	7439-92-1	
Magnesium	**22100**	ug/L	5.0	1	07/21/13 05:44	07/25/13 18:49	7439-95-4	
Manganese	**1190**	ug/L	10.0	20	07/21/13 05:44	07/25/13 18:53	7439-96-5	
Molybdenum	**17.6**	ug/L	0.50	1	07/21/13 05:44	07/25/13 18:49	7439-98-7	
Nickel	**2.5**	ug/L	0.50	1	07/21/13 05:44	07/25/13 18:49	7440-02-0	
Potassium	**5730**	ug/L	20.0	1	07/21/13 05:44	07/25/13 18:49	7440-09-7	
Selenium	ND	ug/L	0.50	1	07/21/13 05:44	07/25/13 18:49	7782-49-2	
Silica	**17700**	ug/L	1070	20	07/21/13 05:44	07/25/13 18:53	7631-86-9	
Silver	ND	ug/L	0.50	1	07/21/13 05:44	07/26/13 14:58	7440-22-4	
Sodium	**30500**	ug/L	1000	20	07/21/13 05:44	07/25/13 18:53	7440-23-5	
Thallium	ND	ug/L	0.10	1	07/21/13 05:44	07/25/13 18:49	7440-28-0	
Total Hardness by 2340B	**755000**	ug/L	1420	20	07/21/13 05:44	07/25/13 18:53		
Vanadium	ND	ug/L	0.10	1	07/21/13 05:44	07/25/13 18:49	7440-62-2	
Zinc	**1230**	ug/L	100	20	07/21/13 05:44	07/25/13 18:53	7440-66-6	
200.8 MET ICPMS, Dissolved	Analytical Method: EPA 200.8 Preparation Method: EPA 200.8							
Aluminum, Dissolved	ND	ug/L	4.0	1	07/21/13 05:45	07/24/13 02:18	7429-90-5	
Antimony, Dissolved	ND	ug/L	0.50	1	07/21/13 05:45	07/24/13 02:18	7440-36-0	
Arsenic, Dissolved	ND	ug/L	0.50	1	07/21/13 05:45	07/24/13 02:18	7440-38-2	
Barium, Dissolved	**20.6**	ug/L	0.30	1	07/21/13 05:45	07/24/13 02:18	7440-39-3	
Beryllium, Dissolved	ND	ug/L	0.20	1	07/21/13 05:45	07/24/13 02:18	7440-41-7	
Cadmium, Dissolved	**7.8**	ug/L	0.080	1	07/21/13 05:45	07/24/13 02:18	7440-43-9	
Calcium, Dissolved	**253000**	ug/L	400	20	07/21/13 05:45	07/24/13 02:23	7440-70-2	
Chromium, Dissolved	ND	ug/L	0.50	1	07/21/13 05:45	07/24/13 02:18	7440-47-3	
Cobalt, Dissolved	**1.3**	ug/L	0.50	1	07/21/13 05:45	07/24/13 02:18	7440-48-4	
Copper, Dissolved	**1.3**	ug/L	0.50	1	07/21/13 05:45	07/24/13 02:18	7440-50-8	
Iron, Dissolved	ND	ug/L	50.0	1	07/21/13 05:45	07/24/13 02:18	7439-89-6	
Lead, Dissolved	ND	ug/L	0.10	1	07/21/13 05:45	07/24/13 02:18	7439-92-1	
Magnesium, Dissolved	**23700**	ug/L	100	20	07/21/13 05:45	07/24/13 02:23	7439-95-4	

This report shall not be reproduced, except in full,
without the written consent of Pace Analytical Services, Inc..

Pace Analytical Services, Inc.
9608 Loiret Blvd.
Lenexa, KS 66219
(913)599-5665

ANALYTICAL RESULTS

Project: JULY 2013 RICO WATER SAMPLING
Pace Project No.: 60148708

Sample: DR-6_20130710 **Lab ID: 60148708004** Collected: 07/10/13 14:23 Received: 07/12/13 10:30 Matrix: Water

Parameters	Results	Units	Report Limit	DF	Prepared	Analyzed	CAS No.	Qual
200.8 MET ICPMS, Dissolved	Analytical Method: EPA 200.8 Preparation Method: EPA 200.8							
Manganese, Dissolved	**1280**	ug/L	10.0	20	07/21/13 05:45	07/24/13 02:23	7439-96-5	
Molybdenum, Dissolved	**18.4**	ug/L	0.50	1	07/21/13 05:45	07/24/13 02:18	7439-98-7	
Nickel, Dissolved	**3.1**	ug/L	0.50	1	07/21/13 05:45	07/24/13 02:18	7440-02-0	
Potassium, Dissolved	**5270**	ug/L	20.0	1	07/21/13 05:45	07/24/13 02:18	7440-09-7	
Selenium, Dissolved	ND	ug/L	0.50	1	07/21/13 05:45	07/24/13 02:18	7782-49-2	
Silver, Dissolved	ND	ug/L	0.50	1	07/21/13 05:45	07/24/13 02:18	7440-22-4	
Sodium, Dissolved	**31200**	ug/L	1000	20	07/21/13 05:45	07/24/13 02:23	7440-23-5	
Thallium, Dissolved	ND	ug/L	0.10	1	07/21/13 05:45	07/24/13 02:18	7440-28-0	
Vanadium, Dissolved	ND	ug/L	0.10	1	07/21/13 05:45	07/24/13 02:18	7440-62-2	
Zinc, Dissolved	**1420**	ug/L	100	20	07/21/13 05:45	07/24/13 02:23	7440-66-6	
200.8 Potentially Diss. Metals	Analytical Method: EPA 200.8 Preparation Method: EPA 200.8							
Aluminum, Dissolved	**11.9J**	ug/L	50.0	1	07/18/13 10:25	07/22/13 15:31	7429-90-5	
Antimony, Dissolved	**0.34J**	ug/L	1.0	1	07/18/13 10:25	07/22/13 15:31	7440-36-0	B
Arsenic, Dissolved	**0.28J**	ug/L	1.0	1	07/18/13 10:25	07/22/13 15:31	7440-38-2	
Barium, Dissolved	**19.4**	ug/L	1.0	1	07/18/13 10:25	07/22/13 15:31	7440-39-3	
Beryllium, Dissolved	ND	ug/L	0.50	1	07/18/13 10:25	07/22/13 15:31	7440-41-7	
Cadmium, Dissolved	**8.3**	ug/L	0.50	1	07/18/13 10:25	07/22/13 15:31	7440-43-9	
Chromium, Dissolved	**0.97J**	ug/L	1.0	1	07/18/13 10:25	07/22/13 15:31	7440-47-3	
Cobalt, Dissolved	**1.2**	ug/L	1.0	1	07/18/13 10:25	07/22/13 15:31	7440-48-4	
Copper, Dissolved	**4.9**	ug/L	1.0	1	07/18/13 10:25	07/22/13 15:31	7440-50-8	
Iron, Dissolved	**413**	ug/L	50.0	1	07/18/13 10:25	07/22/13 15:31	7439-89-6	
Lead, Dissolved	**0.70J**	ug/L	1.0	1	07/18/13 10:25	07/22/13 15:31	7439-92-1	B
Manganese, Dissolved	**1280**	ug/L	1.0	1	07/18/13 10:25	07/22/13 15:31	7439-96-5	
Molybdenum, Dissolved	**19.6**	ug/L	1.0	1	07/18/13 10:25	07/22/13 15:31	7439-98-7	
Nickel, Dissolved	**0.79J**	ug/L	1.0	1	07/18/13 10:25	07/22/13 15:31	7440-02-0	
Selenium, Dissolved	ND	ug/L	1.0	1	07/18/13 10:25	07/22/13 15:31	7782-49-2	
Silver, Dissolved	ND	ug/L	0.50	1	07/18/13 10:25	07/22/13 15:31	7440-22-4	
Thallium, Dissolved	**0.36J**	ug/L	1.0	1	07/18/13 10:25	07/22/13 15:31	7440-28-0	B
Vanadium, Dissolved	**0.34J**	ug/L	1.0	1	07/18/13 10:25	07/23/13 11:44	7440-62-2	
Zinc, Dissolved	**1360**	ug/L	10.0	1	07/18/13 10:25	07/22/13 15:31	7440-66-6	
245.1 Mercury	Analytical Method: EPA 245.1 Preparation Method: EPA 245.1							
Mercury	ND	ug/L	0.20	1	07/18/13 14:57	07/23/13 10:32	7439-97-6	
245.1 Mercury, Dissolved	Analytical Method: EPA 245.1 Preparation Method: EPA 245.1							
Mercury, Dissolved	ND	ug/L	0.20	1	07/18/13 14:53	07/23/13 11:56	7439-97-6	
245.1 Potentially Diss Mercury	Analytical Method: EPA 245.1 Preparation Method: EPA 245.1							
Mercury, Dissolved	ND	ug/L	0.20	1	07/16/13 08:30	07/16/13 11:18	7439-97-6	
2510B Specific Conductance	Analytical Method: SM 2510B							
Specific Conductance	**1420**	umhos/cm	10.0	1		07/18/13 11:26		
Salinity	Analytical Method: Calculated							
Salinity (as dissolved solids)	**946**	mg/L	6.4	1		07/23/13 10:09		

REPORT OF LABORATORY ANALYSIS

This report shall not be reproduced, except in full,
without the written consent of Pace Analytical Services, Inc..

Pace Analytical Services, Inc.
9608 Loiret Blvd.
Lenexa, KS 66219
(913)599-5665

ANALYTICAL RESULTS

Project: JULY 2013 RICO WATER SAMPLING
Pace Project No.: 60148708

Sample: DR-6_20130710 **Lab ID: 60148708004** Collected: 07/10/13 14:23 Received: 07/12/13 10:30 Matrix: Water

Parameters	Results	Units	Report Limit	DF	Prepared	Analyzed	CAS No.	Qual
Salinity	Analytical Method: Calculated							
Salinity (as seawater)	**0.74**	PSU	0.014	1		07/23/13 10:09		
2320B Alkalinity	Analytical Method: SM 2320B							
Alkalinity,Bicarbonate (CaCO3)	**154**	mg/L	20.0	1		07/17/13 11:31		
Alkalinity, Carbonate (CaCO3)	ND	mg/L	20.0	1		07/17/13 11:31		
Alkalinity, Total as CaCO3	**154**	mg/L	20.0	1		07/17/13 11:31		
2540C Total Dissolved Solids	Analytical Method: SM 2540C							
Total Dissolved Solids	**1130**	mg/L	5.0	1		07/12/13 14:20		
2540D Total Suspended Solids	Analytical Method: SM 2540D							
Total Suspended Solids	ND	mg/L	5.0	1		07/15/13 09:32		
4500S2D Sulfide, Total	Analytical Method: SM 4500-S-2 D							
Sulfide, Total	ND	mg/L	0.050	1		07/16/13 13:55	18496-25-8	
300.0 IC Anions 28 Days	Analytical Method: EPA 300.0							
Chloride	ND	mg/L	1.0	1		07/26/13 17:59	16887-00-6	
Sulfate	**725**	mg/L	100	100		07/26/13 18:16	14808-79-8	
353.2 Nitrogen, NO2/NO3 pres.	Analytical Method: EPA 353.2							
Nitrogen, NO2 plus NO3	**0.19**	mg/L	0.10	1		07/23/13 13:16		
4500CNE Cyanide, Total	Analytical Method: SM 4500-CN-E							
Cyanide	ND	mg/L	0.0050	1		07/15/13 14:15	57-12-5	
5310C TOC	Analytical Method: SM 5310C							
Total Organic Carbon	ND	mg/L	0.50	1		07/17/13 15:01	7440-44-0	

This report shall not be reproduced, except in full,
without the written consent of Pace Analytical Services, Inc..

Pace Analytical Services, Inc.
9608 Loiret Blvd.
Lenexa, KS 66219
(913)599-5665

ANALYTICAL RESULTS

Project: JULY 2013 RICO WATER SAMPLING
Pace Project No.: 60148708

Sample: DR-7_20130710 **Lab ID: 60148708005** Collected: 07/10/13 14:53 Received: 07/12/13 10:30 Matrix: Water

Parameters	Results	Units	Report Limit	DF	Prepared	Analyzed	CAS No.	Qual
200.7 Potentially Diss. Metals	Analytical Method: EPA 200.7 Preparation Method: EPA 200.7							
Calcium, Dissolved	**73600**	ug/L	100	1	07/18/13 10:25	07/24/13 13:26	7440-70-2	
Magnesium, Dissolved	**9690**	ug/L	50.0	1	07/18/13 10:25	07/24/13 13:26	7439-95-4	
Potassium, Dissolved	**2060**	ug/L	500	1	07/18/13 10:25	07/24/13 13:26	7440-09-7	
Sodium, Dissolved	**7000**	ug/L	500	1	07/18/13 10:25	07/24/13 13:26	7440-23-5	
200.8 MET ICPMS	Analytical Method: EPA 200.8 Preparation Method: EPA 200.8							
Aluminum	**9.9**	ug/L	4.0	1	07/21/13 05:44	07/25/13 18:57	7429-90-5	
Antimony	ND	ug/L	0.50	1	07/21/13 05:44	07/25/13 18:57	7440-36-0	
Arsenic	**0.99**	ug/L	0.50	1	07/21/13 05:44	07/25/13 18:57	7440-38-2	
Barium	**63.5**	ug/L	0.30	1	07/21/13 05:44	07/25/13 18:57	7440-39-3	
Beryllium	ND	ug/L	0.20	1	07/21/13 05:44	07/25/13 18:57	7440-41-7	
Cadmium	**0.50**	ug/L	0.080	1	07/21/13 05:44	07/25/13 18:57	7440-43-9	
Calcium	**78000**	ug/L	400	20	07/21/13 05:44	07/25/13 19:02	7440-70-2	
Chromium	ND	ug/L	0.50	1	07/21/13 05:44	07/25/13 18:57	7440-47-3	
Cobalt	ND	ug/L	0.50	1	07/21/13 05:44	07/25/13 18:57	7440-48-4	
Copper	**0.52**	ug/L	0.50	1	07/21/13 05:44	07/25/13 18:57	7440-50-8	
Iron	**132**	ug/L	50.0	1	07/21/13 05:44	07/25/13 18:57	7439-89-6	
Lead	ND	ug/L	0.10	1	07/21/13 05:44	07/25/13 18:57	7439-92-1	
Magnesium	**9540**	ug/L	5.0	1	07/21/13 05:44	07/25/13 18:57	7439-95-4	
Manganese	**205**	ug/L	0.50	1	07/21/13 05:44	07/25/13 18:57	7439-96-5	
Molybdenum	**2.3**	ug/L	0.50	1	07/21/13 05:44	07/25/13 18:57	7439-98-7	
Nickel	ND	ug/L	0.50	1	07/21/13 05:44	07/25/13 18:57	7440-02-0	
Potassium	**2110**	ug/L	20.0	1	07/21/13 05:44	07/25/13 18:57	7440-09-7	
Selenium	ND	ug/L	0.50	1	07/21/13 05:44	07/25/13 18:57	7782-49-2	
Silica	**9580**	ug/L	1070	20	07/21/13 05:44	07/25/13 19:02	7631-86-9	
Silver	ND	ug/L	0.50	1	07/21/13 05:44	07/26/13 15:03	7440-22-4	
Sodium	**6380**	ug/L	50.0	1	07/21/13 05:44	07/25/13 18:57	7440-23-5	
Thallium	ND	ug/L	0.10	1	07/21/13 05:44	07/25/13 18:57	7440-28-0	
Total Hardness by 2340B	**234000**	ug/L	1420	20	07/21/13 05:44	07/25/13 19:02		
Vanadium	**0.14**	ug/L	0.10	1	07/21/13 05:44	07/25/13 18:57	7440-62-2	
Zinc	**87.9**	ug/L	5.0	1	07/21/13 05:44	07/25/13 18:57	7440-66-6	
200.8 MET ICPMS, Dissolved	Analytical Method: EPA 200.8 Preparation Method: EPA 200.8							
Aluminum, Dissolved	ND	ug/L	4.0	1	07/21/13 05:45	07/24/13 02:28	7429-90-5	
Antimony, Dissolved	ND	ug/L	0.50	1	07/21/13 05:45	07/24/13 02:28	7440-36-0	
Arsenic, Dissolved	**0.80**	ug/L	0.50	1	07/21/13 05:45	07/24/13 02:28	7440-38-2	
Barium, Dissolved	**66.2**	ug/L	0.30	1	07/21/13 05:45	07/24/13 02:28	7440-39-3	
Beryllium, Dissolved	ND	ug/L	0.20	1	07/21/13 05:45	07/24/13 02:28	7440-41-7	
Cadmium, Dissolved	**0.57**	ug/L	0.080	1	07/21/13 05:45	07/24/13 02:28	7440-43-9	
Calcium, Dissolved	**73500**	ug/L	400	20	07/21/13 05:45	07/24/13 02:34	7440-70-2	
Chromium, Dissolved	**0.63**	ug/L	0.50	1	07/21/13 05:45	07/24/13 02:28	7440-47-3	
Cobalt, Dissolved	ND	ug/L	0.50	1	07/21/13 05:45	07/24/13 02:28	7440-48-4	
Copper, Dissolved	**0.95**	ug/L	0.50	1	07/21/13 05:45	07/24/13 02:28	7440-50-8	
Iron, Dissolved	**63.3**	ug/L	50.0	1	07/21/13 05:45	07/24/13 02:28	7439-89-6	
Lead, Dissolved	ND	ug/L	0.10	1	07/21/13 05:45	07/24/13 02:28	7439-92-1	
Magnesium, Dissolved	**9570**	ug/L	5.0	1	07/21/13 05:45	07/24/13 02:28	7439-95-4	

This report shall not be reproduced, except in full,
without the written consent of Pace Analytical Services, Inc..

Pace Analytical Services, Inc.
9608 Loiret Blvd.
Lenexa, KS 66219
(913)599-5665

ANALYTICAL RESULTS

Project: JULY 2013 RICO WATER SAMPLING
Pace Project No.: 60148708

Sample: DR-7_20130710 **Lab ID: 60148708005** Collected: 07/10/13 14:53 Received: 07/12/13 10:30 Matrix: Water

Parameters	Results	Units	Report Limit	DF	Prepared	Analyzed	CAS No.	Qual
200.8 MET ICPMS, Dissolved	Analytical Method: EPA 200.8 Preparation Method: EPA 200.8							
Manganese, Dissolved	**202**	ug/L	0.50	1	07/21/13 05:45	07/24/13 02:28	7439-96-5	
Molybdenum, Dissolved	**2.5**	ug/L	0.50	1	07/21/13 05:45	07/24/13 02:28	7439-98-7	
Nickel, Dissolved	**0.86**	ug/L	0.50	1	07/21/13 05:45	07/24/13 02:28	7440-02-0	
Potassium, Dissolved	**1920**	ug/L	20.0	1	07/21/13 05:45	07/24/13 02:28	7440-09-7	
Selenium, Dissolved	ND	ug/L	0.50	1	07/21/13 05:45	07/24/13 02:28	7782-49-2	
Silver, Dissolved	ND	ug/L	0.50	1	07/21/13 05:45	07/24/13 02:28	7440-22-4	
Sodium, Dissolved	**6630**	ug/L	50.0	1	07/21/13 05:45	07/24/13 02:28	7440-23-5	
Thallium, Dissolved	ND	ug/L	0.10	1	07/21/13 05:45	07/24/13 02:28	7440-28-0	
Vanadium, Dissolved	**0.12**	ug/L	0.10	1	07/21/13 05:45	07/24/13 02:28	7440-62-2	
Zinc, Dissolved	**92.5**	ug/L	5.0	1	07/21/13 05:45	07/24/13 02:28	7440-66-6	
200.8 Potentially Diss. Metals	Analytical Method: EPA 200.8 Preparation Method: EPA 200.8							
Aluminum, Dissolved	**8.5J**	ug/L	50.0	1	07/18/13 10:25	07/22/13 15:35	7429-90-5	
Antimony, Dissolved	**0.20J**	ug/L	1.0	1	07/18/13 10:25	07/22/13 15:35	7440-36-0	B
Arsenic, Dissolved	**0.89J**	ug/L	1.0	1	07/18/13 10:25	07/22/13 15:35	7440-38-2	
Barium, Dissolved	**62.8**	ug/L	1.0	1	07/18/13 10:25	07/22/13 15:35	7440-39-3	
Beryllium, Dissolved	ND	ug/L	0.50	1	07/18/13 10:25	07/22/13 15:35	7440-41-7	
Cadmium, Dissolved	**0.62**	ug/L	0.50	1	07/18/13 10:25	07/22/13 15:35	7440-43-9	
Chromium, Dissolved	**0.70J**	ug/L	1.0	1	07/18/13 10:25	07/22/13 15:35	7440-47-3	
Cobalt, Dissolved	**0.11J**	ug/L	1.0	1	07/18/13 10:25	07/22/13 15:35	7440-48-4	
Copper, Dissolved	**1.0**	ug/L	1.0	1	07/18/13 10:25	07/22/13 15:35	7440-50-8	
Iron, Dissolved	**156**	ug/L	50.0	1	07/18/13 10:25	07/22/13 15:35	7439-89-6	
Lead, Dissolved	**0.29J**	ug/L	1.0	1	07/18/13 10:25	07/22/13 15:35	7439-92-1	B
Manganese, Dissolved	**207**	ug/L	1.0	1	07/18/13 10:25	07/22/13 15:35	7439-96-5	
Molybdenum, Dissolved	**2.5**	ug/L	1.0	1	07/18/13 10:25	07/22/13 15:35	7439-98-7	
Nickel, Dissolved	ND	ug/L	1.0	1	07/18/13 10:25	07/22/13 15:35	7440-02-0	
Selenium, Dissolved	ND	ug/L	1.0	1	07/18/13 10:25	07/22/13 15:35	7782-49-2	
Silver, Dissolved	ND	ug/L	0.50	1	07/18/13 10:25	07/22/13 15:35	7440-22-4	
Thallium, Dissolved	**0.32J**	ug/L	1.0	1	07/18/13 10:25	07/22/13 15:35	7440-28-0	B
Vanadium, Dissolved	**0.40J**	ug/L	1.0	1	07/18/13 10:25	07/23/13 11:56	7440-62-2	
Zinc, Dissolved	**92.8**	ug/L	10.0	1	07/18/13 10:25	07/22/13 15:35	7440-66-6	
245.1 Mercury	Analytical Method: EPA 245.1 Preparation Method: EPA 245.1							
Mercury	ND	ug/L	0.20	1	07/18/13 14:57	07/23/13 10:35	7439-97-6	
245.1 Mercury, Dissolved	Analytical Method: EPA 245.1 Preparation Method: EPA 245.1							
Mercury, Dissolved	ND	ug/L	0.20	1	07/18/13 14:53	07/23/13 11:58	7439-97-6	
245.1 Potentially Diss Mercury	Analytical Method: EPA 245.1 Preparation Method: EPA 245.1							
Mercury, Dissolved	ND	ug/L	0.20	1	07/16/13 08:30	07/16/13 11:20	7439-97-6	
2510B Specific Conductance	Analytical Method: SM 2510B							
Specific Conductance	**462**	umhos/cm	10.0	1		07/18/13 11:27		
Salinity	Analytical Method: Calculated							
Salinity (as dissolved solids)	**299**	mg/L	6.4	1		07/23/13 10:09		

REPORT OF LABORATORY ANALYSIS

This report shall not be reproduced, except in full,
without the written consent of Pace Analytical Services, Inc..

Pace Analytical Services, Inc.
9608 Loiret Blvd.
Lenexa, KS 66219
(913)599-5665

ANALYTICAL RESULTS

Project: JULY 2013 RICO WATER SAMPLING
Pace Project No.: 60148708

Sample: DR-7_20130710 **Lab ID: 60148708005** Collected: 07/10/13 14:53 Received: 07/12/13 10:30 Matrix: Water

Parameters	Results	Units	Report Limit	DF	Prepared	Analyzed	CAS No.	Qual
Salinity	Analytical Method: Calculated							
Salinity (as seawater)	**0.22**	PSU	0.014	1		07/23/13 10:09		
2320B Alkalinity	Analytical Method: SM 2320B							
Alkalinity,Bicarbonate (CaCO3)	**121**	mg/L	20.0	1		07/17/13 11:39		
Alkalinity, Carbonate (CaCO3)	ND	mg/L	20.0	1		07/17/13 11:39		
Alkalinity, Total as CaCO3	**121**	mg/L	20.0	1		07/17/13 11:39		
2540C Total Dissolved Solids	Analytical Method: SM 2540C							
Total Dissolved Solids	**327**	mg/L	5.0	1		07/16/13 09:36		
2540D Total Suspended Solids	Analytical Method: SM 2540D							
Total Suspended Solids	ND	mg/L	5.0	1		07/15/13 09:32		
4500S2D Sulfide, Total	Analytical Method: SM 4500-S-2 D							
Sulfide, Total	ND	mg/L	0.050	1		07/16/13 13:55	18496-25-8	
300.0 IC Anions 28 Days	Analytical Method: EPA 300.0							
Chloride	**1.2**	mg/L	1.0	1		07/26/13 19:08	16887-00-6	
Sulfate	**130**	mg/L	10.0	10		07/25/13 19:42	14808-79-8	
353.2 Nitrogen, NO2/NO3 pres.	Analytical Method: EPA 353.2							
Nitrogen, NO2 plus NO3	ND	mg/L	0.10	1		07/23/13 13:17		
4500CNE Cyanide, Total	Analytical Method: SM 4500-CN-E							
Cyanide	ND	mg/L	0.0050	1		07/15/13 14:16	57-12-5	
5310C TOC	Analytical Method: SM 5310C							
Total Organic Carbon	**0.96**	mg/L	0.50	1		07/17/13 15:19	7440-44-0	

This report shall not be reproduced, except in full,
without the written consent of Pace Analytical Services, Inc..

Pace Analytical Services, Inc.
9608 Loiret Blvd.
Lenexa, KS 66219
(913)599-5665

ANALYTICAL RESULTS

Project: JULY 2013 RICO WATER SAMPLING
Pace Project No.: 60148708

Sample: DR-G_20130710 **Lab ID: 60148708006** Collected: 07/10/13 15:55 Received: 07/12/13 10:30 Matrix: Water

Parameters	Results	Units	Report Limit	DF	Prepared	Analyzed	CAS No.	Qual
200.7 Potentially Diss. Metals	Analytical Method: EPA 200.7 Preparation Method: EPA 200.7							
Calcium, Dissolved	**62200**	ug/L	100	1	07/18/13 10:25	07/24/13 13:36	7440-70-2	
Magnesium, Dissolved	**7980**	ug/L	50.0	1	07/18/13 10:25	07/24/13 13:36	7439-95-4	
Potassium, Dissolved	**1310**	ug/L	500	1	07/18/13 10:25	07/24/13 13:36	7440-09-7	
Sodium, Dissolved	**4430**	ug/L	500	1	07/18/13 10:25	07/24/13 13:36	7440-23-5	
200.8 MET ICPMS	Analytical Method: EPA 200.8 Preparation Method: EPA 200.8							
Aluminum	**6.7**	ug/L	4.0	1	07/21/13 05:44	07/25/13 19:06	7429-90-5	
Antimony	ND	ug/L	0.50	1	07/21/13 05:44	07/25/13 19:06	7440-36-0	
Arsenic	ND	ug/L	0.50	1	07/21/13 05:44	07/25/13 19:06	7440-38-2	
Barium	**78.0**	ug/L	0.30	1	07/21/13 05:44	07/25/13 19:06	7440-39-3	
Beryllium	ND	ug/L	0.20	1	07/21/13 05:44	07/25/13 19:06	7440-41-7	
Cadmium	**0.20**	ug/L	0.080	1	07/21/13 05:44	07/25/13 19:06	7440-43-9	
Calcium	**65300**	ug/L	400	20	07/21/13 05:44	07/25/13 19:10	7440-70-2	
Chromium	ND	ug/L	0.50	1	07/21/13 05:44	07/25/13 19:06	7440-47-3	
Cobalt	ND	ug/L	0.50	1	07/21/13 05:44	07/25/13 19:06	7440-48-4	
Copper	**0.50**	ug/L	0.50	1	07/21/13 05:44	07/25/13 19:06	7440-50-8	
Iron	ND	ug/L	50.0	1	07/21/13 05:44	07/25/13 19:06	7439-89-6	
Lead	ND	ug/L	0.10	1	07/21/13 05:44	07/25/13 19:06	7439-92-1	
Magnesium	**7680**	ug/L	5.0	1	07/21/13 05:44	07/25/13 19:06	7439-95-4	
Manganese	**19.7**	ug/L	0.50	1	07/21/13 05:44	07/25/13 19:06	7439-96-5	
Molybdenum	**1.5**	ug/L	0.50	1	07/21/13 05:44	07/25/13 19:06	7439-98-7	
Nickel	ND	ug/L	0.50	1	07/21/13 05:44	07/25/13 19:06	7440-02-0	
Potassium	**1320**	ug/L	20.0	1	07/21/13 05:44	07/25/13 19:06	7440-09-7	
Selenium	ND	ug/L	0.50	1	07/21/13 05:44	07/25/13 19:06	7782-49-2	
Silica	**7720**	ug/L	1070	20	07/21/13 05:44	07/25/13 19:10	7631-86-9	
Silver	ND	ug/L	0.50	1	07/21/13 05:44	07/26/13 15:09	7440-22-4	
Sodium	**3990**	ug/L	50.0	1	07/21/13 05:44	07/25/13 19:06	7440-23-5	
Thallium	ND	ug/L	0.10	1	07/21/13 05:44	07/25/13 19:06	7440-28-0	
Total Hardness by 2340B	**195000**	ug/L	1420	20	07/21/13 05:44	07/25/13 19:10		
Vanadium	**0.18**	ug/L	0.10	1	07/21/13 05:44	07/25/13 19:06	7440-62-2	
Zinc	**30.3**	ug/L	5.0	1	07/21/13 05:44	07/25/13 19:06	7440-66-6	
200.8 MET ICPMS, Dissolved	Analytical Method: EPA 200.8 Preparation Method: EPA 200.8							
Aluminum, Dissolved	**6.0**	ug/L	4.0	1	07/21/13 05:45	07/24/13 02:39	7429-90-5	
Antimony, Dissolved	ND	ug/L	0.50	1	07/21/13 05:45	07/24/13 02:39	7440-36-0	
Arsenic, Dissolved	ND	ug/L	0.50	1	07/21/13 05:45	07/24/13 02:39	7440-38-2	
Barium, Dissolved	**80.6**	ug/L	0.30	1	07/21/13 05:45	07/24/13 02:39	7440-39-3	
Beryllium, Dissolved	ND	ug/L	0.20	1	07/21/13 05:45	07/24/13 02:39	7440-41-7	
Cadmium, Dissolved	**0.22**	ug/L	0.080	1	07/21/13 05:45	07/24/13 02:39	7440-43-9	
Calcium, Dissolved	**61300**	ug/L	400	20	07/21/13 05:45	07/24/13 02:44	7440-70-2	
Chromium, Dissolved	ND	ug/L	0.50	1	07/21/13 05:45	07/24/13 02:39	7440-47-3	
Cobalt, Dissolved	ND	ug/L	0.50	1	07/21/13 05:45	07/24/13 02:39	7440-48-4	
Copper, Dissolved	**1.5**	ug/L	0.50	1	07/21/13 05:45	07/24/13 02:39	7440-50-8	
Iron, Dissolved	ND	ug/L	50.0	1	07/21/13 05:45	07/24/13 02:39	7439-89-6	
Lead, Dissolved	ND	ug/L	0.10	1	07/21/13 05:45	07/24/13 02:39	7439-92-1	
Magnesium, Dissolved	**7820**	ug/L	5.0	1	07/21/13 05:45	07/24/13 02:39	7439-95-4	

This report shall not be reproduced, except in full,
without the written consent of Pace Analytical Services, Inc..

Pace Analytical Services, Inc.
9608 Loiret Blvd.
Lenexa, KS 66219
(913)599-5665

ANALYTICAL RESULTS

Project: JULY 2013 RICO WATER SAMPLING
Pace Project No.: 60148708

Sample: DR-G_20130710 **Lab ID: 60148708006** Collected: 07/10/13 15:55 Received: 07/12/13 10:30 Matrix: Water

Parameters	Results	Units	Report Limit	DF	Prepared	Analyzed	CAS No.	Qual
200.8 MET ICPMS, Dissolved	Analytical Method: EPA 200.8 Preparation Method: EPA 200.8							
Manganese, Dissolved	**18.9**	ug/L	0.50	1	07/21/13 05:45	07/24/13 02:39	7439-96-5	
Molybdenum, Dissolved	**1.5**	ug/L	0.50	1	07/21/13 05:45	07/24/13 02:39	7439-98-7	
Nickel, Dissolved	**3.8**	ug/L	0.50	1	07/21/13 05:45	07/24/13 02:39	7440-02-0	
Potassium, Dissolved	**1220**	ug/L	20.0	1	07/21/13 05:45	07/24/13 02:39	7440-09-7	
Selenium, Dissolved	ND	ug/L	0.50	1	07/21/13 05:45	07/24/13 02:39	7782-49-2	
Silver, Dissolved	ND	ug/L	0.50	1	07/21/13 05:45	07/24/13 02:39	7440-22-4	
Sodium, Dissolved	**4160**	ug/L	50.0	1	07/21/13 05:45	07/24/13 02:39	7440-23-5	
Thallium, Dissolved	ND	ug/L	0.10	1	07/21/13 05:45	07/24/13 02:39	7440-28-0	
Vanadium, Dissolved	**0.19**	ug/L	0.10	1	07/21/13 05:45	07/24/13 02:39	7440-62-2	
Zinc, Dissolved	**31.4**	ug/L	5.0	1	07/21/13 05:45	07/24/13 02:39	7440-66-6	
200.8 Potentially Diss. Metals	Analytical Method: EPA 200.8 Preparation Method: EPA 200.8							
Aluminum, Dissolved	**6.2J**	ug/L	50.0	1	07/18/13 10:25	07/22/13 15:48	7429-90-5	
Antimony, Dissolved	**0.14J**	ug/L	1.0	1	07/18/13 10:25	07/22/13 15:48	7440-36-0	B
Arsenic, Dissolved	**0.29J**	ug/L	1.0	1	07/18/13 10:25	07/22/13 15:48	7440-38-2	
Barium, Dissolved	**79.5**	ug/L	1.0	1	07/18/13 10:25	07/22/13 15:48	7440-39-3	
Beryllium, Dissolved	ND	ug/L	0.50	1	07/18/13 10:25	07/22/13 15:48	7440-41-7	
Cadmium, Dissolved	**0.28J**	ug/L	0.50	1	07/18/13 10:25	07/22/13 15:48	7440-43-9	
Chromium, Dissolved	**0.79J**	ug/L	1.0	1	07/18/13 10:25	07/22/13 15:48	7440-47-3	
Cobalt, Dissolved	ND	ug/L	1.0	1	07/18/13 10:25	07/22/13 15:48	7440-48-4	
Copper, Dissolved	**1.7**	ug/L	1.0	1	07/18/13 10:25	07/22/13 15:48	7440-50-8	
Iron, Dissolved	**63.0**	ug/L	50.0	1	07/18/13 10:25	07/22/13 15:48	7439-89-6	
Lead, Dissolved	**0.30J**	ug/L	1.0	1	07/18/13 10:25	07/22/13 15:48	7439-92-1	B
Manganese, Dissolved	**20.4**	ug/L	1.0	1	07/18/13 10:25	07/22/13 15:48	7439-96-5	
Molybdenum, Dissolved	**1.8**	ug/L	1.0	1	07/18/13 10:25	07/22/13 15:48	7439-98-7	B
Nickel, Dissolved	ND	ug/L	1.0	1	07/18/13 10:25	07/22/13 15:48	7440-02-0	
Selenium, Dissolved	ND	ug/L	1.0	1	07/18/13 10:25	07/22/13 15:48	7782-49-2	
Silver, Dissolved	ND	ug/L	0.50	1	07/18/13 10:25	07/22/13 15:48	7440-22-4	
Thallium, Dissolved	**0.30J**	ug/L	1.0	1	07/18/13 10:25	07/22/13 15:48	7440-28-0	B
Vanadium, Dissolved	**0.67J**	ug/L	1.0	1	07/18/13 10:25	07/23/13 12:00	7440-62-2	
Zinc, Dissolved	**32.6**	ug/L	10.0	1	07/18/13 10:25	07/22/13 15:48	7440-66-6	
245.1 Mercury	Analytical Method: EPA 245.1 Preparation Method: EPA 245.1							
Mercury	ND	ug/L	0.20	1	07/18/13 14:57	07/23/13 10:37	7439-97-6	
245.1 Mercury, Dissolved	Analytical Method: EPA 245.1 Preparation Method: EPA 245.1							
Mercury, Dissolved	ND	ug/L	0.20	1	07/18/13 14:53	07/23/13 12:01	7439-97-6	
245.1 Potentially Diss Mercury	Analytical Method: EPA 245.1 Preparation Method: EPA 245.1							
Mercury, Dissolved	ND	ug/L	0.20	1	07/16/13 08:30	07/16/13 11:27	7439-97-6	
2510B Specific Conductance	Analytical Method: SM 2510B							
Specific Conductance	**392**	umhos/cm	10.0	1		07/18/13 11:30		
Salinity	Analytical Method: Calculated							
Salinity (as dissolved solids)	**223**	mg/L	6.4	1		07/23/13 10:09		

REPORT OF LABORATORY ANALYSIS

This report shall not be reproduced, except in full,
without the written consent of Pace Analytical Services, Inc..

Pace Analytical Services, Inc.
9608 Loiret Blvd.
Lenexa, KS 66219
(913)599-5665

ANALYTICAL RESULTS

Project: JULY 2013 RICO WATER SAMPLING
Pace Project No.: 60148708

Sample: DR-G_20130710 **Lab ID: 60148708006** Collected: 07/10/13 15:55 Received: 07/12/13 10:30 Matrix: Water

Parameters	Results	Units	Report Limit	DF	Prepared	Analyzed	CAS No.	Qual
Salinity	Analytical Method: Calculated							
Salinity (as seawater)	**0.17**	PSU	0.014	1		07/23/13 10:09		
2320B Alkalinity	Analytical Method: SM 2320B							
Alkalinity,Bicarbonate (CaCO3)	**122**	mg/L	20.0	1		07/17/13 11:43		
Alkalinity, Carbonate (CaCO3)	ND	mg/L	20.0	1		07/17/13 11:43		
Alkalinity, Total as CaCO3	**122**	mg/L	20.0	1		07/17/13 11:43		
2540C Total Dissolved Solids	Analytical Method: SM 2540C							
Total Dissolved Solids	**255**	mg/L	5.0	1		07/16/13 09:37		
2540D Total Suspended Solids	Analytical Method: SM 2540D							
Total Suspended Solids	ND	mg/L	5.0	1		07/15/13 09:32		
4500S2D Sulfide, Total	Analytical Method: SM 4500-S-2 D							
Sulfide, Total	ND	mg/L	0.050	1		07/16/13 13:55	18496-25-8	
300.0 IC Anions 28 Days	Analytical Method: EPA 300.0							
Chloride	**1.4**	mg/L	1.0	1		07/26/13 19:25	16887-00-6	
Sulfate	**84.2**	mg/L	10.0	10		07/25/13 19:59	14808-79-8	
353.2 Nitrogen, NO2/NO3 pres.	Analytical Method: EPA 353.2							
Nitrogen, NO2 plus NO3	ND	mg/L	0.10	1		07/23/13 13:18		
4500CNE Cyanide, Total	Analytical Method: SM 4500-CN-E							
Cyanide	ND	mg/L	0.0050	1		07/15/13 14:16	57-12-5	
5310C TOC	Analytical Method: SM 5310C							
Total Organic Carbon	**1.0**	mg/L	0.50	1		07/17/13 15:38	7440-44-0	

This report shall not be reproduced, except in full,
without the written consent of Pace Analytical Services, Inc..

Pace Analytical Services, Inc.
9608 Loiret Blvd.
Lenexa, KS 66219
(913)599-5665

ANALYTICAL RESULTS

Project: JULY 2013 RICO WATER SAMPLING
Pace Project No.: 60148708

Sample: DR-1 COMPOSITE_20130710 **Lab ID: 60148708007** Collected: 07/10/13 10:45 Received: 07/12/13 10:30 Matrix: Water

Parameters	Results	Units	Report Limit	DF	Prepared	Analyzed	CAS No.	Qual
200.7 Potentially Diss. Metals	Analytical Method: EPA 200.7 Preparation Method: EPA 200.7							
Calcium, Dissolved	**38800**	ug/L	100	1	07/18/13 10:25	07/24/13 13:39	7440-70-2	
Magnesium, Dissolved	**5530**	ug/L	50.0	1	07/18/13 10:25	07/24/13 13:39	7439-95-4	
Potassium, Dissolved	**638**	ug/L	500	1	07/18/13 10:25	07/24/13 13:39	7440-09-7	
Sodium, Dissolved	**2510**	ug/L	500	1	07/18/13 10:25	07/24/13 13:39	7440-23-5	
200.8 MET ICPMS	Analytical Method: EPA 200.8 Preparation Method: EPA 200.8							
Aluminum	**12.6**	ug/L	4.0	1	07/21/13 05:44	07/25/13 19:15	7429-90-5	
Antimony	ND	ug/L	0.50	1	07/21/13 05:44	07/25/13 19:15	7440-36-0	
Arsenic	ND	ug/L	0.50	1	07/21/13 05:44	07/25/13 19:15	7440-38-2	
Barium	**68.5**	ug/L	0.30	1	07/21/13 05:44	07/25/13 19:15	7440-39-3	
Beryllium	ND	ug/L	0.20	1	07/21/13 05:44	07/25/13 19:15	7440-41-7	
Cadmium	ND	ug/L	0.080	1	07/21/13 05:44	07/25/13 19:15	7440-43-9	
Calcium	**41300**	ug/L	400	20	07/21/13 05:44	07/25/13 19:19	7440-70-2	
Chromium	ND	ug/L	0.50	1	07/21/13 05:44	07/25/13 19:15	7440-47-3	
Cobalt	ND	ug/L	0.50	1	07/21/13 05:44	07/25/13 19:15	7440-48-4	
Copper	ND	ug/L	0.50	1	07/21/13 05:44	07/25/13 19:15	7440-50-8	
Iron	ND	ug/L	50.0	1	07/21/13 05:44	07/25/13 19:15	7439-89-6	
Lead	ND	ug/L	0.10	1	07/21/13 05:44	07/25/13 19:15	7439-92-1	
Magnesium	**5390**	ug/L	5.0	1	07/21/13 05:44	07/25/13 19:15	7439-95-4	
Manganese	**8.7**	ug/L	0.50	1	07/21/13 05:44	07/25/13 19:15	7439-96-5	
Molybdenum	**0.95**	ug/L	0.50	1	07/21/13 05:44	07/25/13 19:15	7439-98-7	
Nickel	ND	ug/L	0.50	1	07/21/13 05:44	07/25/13 19:15	7440-02-0	
Potassium	**702**	ug/L	20.0	1	07/21/13 05:44	07/25/13 19:15	7440-09-7	
Selenium	ND	ug/L	0.50	1	07/21/13 05:44	07/25/13 19:15	7782-49-2	
Silica	**5600**	ug/L	1070	20	07/21/13 05:44	07/25/13 19:19	7631-86-9	
Silver	ND	ug/L	0.50	1	07/21/13 05:44	07/26/13 15:14	7440-22-4	
Sodium	**2280**	ug/L	50.0	1	07/21/13 05:44	07/25/13 19:15	7440-23-5	
Thallium	ND	ug/L	0.10	1	07/21/13 05:44	07/25/13 19:15	7440-28-0	
Total Hardness by 2340B	**125000**	ug/L	1420	20	07/21/13 05:44	07/25/13 19:19		
Vanadium	**0.15**	ug/L	0.10	1	07/21/13 05:44	07/25/13 19:15	7440-62-2	
Zinc	ND	ug/L	5.0	1	07/21/13 05:44	07/25/13 19:15	7440-66-6	
200.8 MET ICPMS, Dissolved	Analytical Method: EPA 200.8 Preparation Method: EPA 200.8							
Aluminum, Dissolved	**4.1**	ug/L	4.0	1	07/21/13 05:45	07/24/13 02:49	7429-90-5	
Antimony, Dissolved	ND	ug/L	0.50	1	07/21/13 05:45	07/24/13 02:49	7440-36-0	
Arsenic, Dissolved	ND	ug/L	0.50	1	07/21/13 05:45	07/24/13 02:49	7440-38-2	
Barium, Dissolved	**69.3**	ug/L	0.30	1	07/21/13 05:45	07/24/13 02:49	7440-39-3	
Beryllium, Dissolved	ND	ug/L	0.20	1	07/21/13 05:45	07/24/13 02:49	7440-41-7	
Cadmium, Dissolved	ND	ug/L	0.080	1	07/21/13 05:45	07/24/13 02:49	7440-43-9	
Calcium, Dissolved	**37700**	ug/L	400	20	07/21/13 05:45	07/24/13 02:54	7440-70-2	
Chromium, Dissolved	ND	ug/L	0.50	1	07/21/13 05:45	07/24/13 02:49	7440-47-3	
Cobalt, Dissolved	ND	ug/L	0.50	1	07/21/13 05:45	07/24/13 02:49	7440-48-4	
Copper, Dissolved	**0.98**	ug/L	0.50	1	07/21/13 05:45	07/24/13 02:49	7440-50-8	
Iron, Dissolved	**57.7**	ug/L	50.0	1	07/21/13 05:45	07/24/13 02:49	7439-89-6	
Lead, Dissolved	ND	ug/L	0.10	1	07/21/13 05:45	07/24/13 02:49	7439-92-1	
Magnesium, Dissolved	**5420**	ug/L	5.0	1	07/21/13 05:45	07/24/13 02:49	7439-95-4	

This report shall not be reproduced, except in full,
without the written consent of Pace Analytical Services, Inc..

Pace Analytical Services, Inc.
9608 Loiret Blvd.
Lenexa, KS 66219
(913)599-5665

ANALYTICAL RESULTS

Project: JULY 2013 RICO WATER SAMPLING
Pace Project No.: 60148708

Sample: DR-1 COMPOSITE_20130710 **Lab ID: 60148708007** Collected: 07/10/13 10:45 Received: 07/12/13 10:30 Matrix: Water

Parameters	Results	Units	Report Limit	DF	Prepared	Analyzed	CAS No.	Qual
200.8 MET ICPMS, Dissolved	Analytical Method: EPA 200.8 Preparation Method: EPA 200.8							
Manganese, Dissolved	**7.2**	ug/L	0.50	1	07/21/13 05:45	07/24/13 02:49	7439-96-5	
Molybdenum, Dissolved	**1.0**	ug/L	0.50	1	07/21/13 05:45	07/24/13 02:49	7439-98-7	
Nickel, Dissolved	**0.54**	ug/L	0.50	1	07/21/13 05:45	07/24/13 02:49	7440-02-0	
Potassium, Dissolved	**645**	ug/L	20.0	1	07/21/13 05:45	07/24/13 02:49	7440-09-7	
Selenium, Dissolved	ND	ug/L	0.50	1	07/21/13 05:45	07/24/13 02:49	7782-49-2	
Silver, Dissolved	ND	ug/L	0.50	1	07/21/13 05:45	07/24/13 02:49	7440-22-4	
Sodium, Dissolved	**2310**	ug/L	50.0	1	07/21/13 05:45	07/24/13 02:49	7440-23-5	
Thallium, Dissolved	ND	ug/L	0.10	1	07/21/13 05:45	07/24/13 02:49	7440-28-0	
Vanadium, Dissolved	**0.14**	ug/L	0.10	1	07/21/13 05:45	07/24/13 02:49	7440-62-2	
Zinc, Dissolved	ND	ug/L	5.0	1	07/21/13 05:45	07/24/13 02:49	7440-66-6	
200.8 Potentially Diss. Metals	Analytical Method: EPA 200.8 Preparation Method: EPA 200.8							
Aluminum, Dissolved	ND	ug/L	50.0	1	07/18/13 10:25	07/22/13 15:52	7429-90-5	
Antimony, Dissolved	**0.15J**	ug/L	1.0	1	07/18/13 10:25	07/22/13 15:52	7440-36-0	B
Arsenic, Dissolved	**0.21J**	ug/L	1.0	1	07/18/13 10:25	07/22/13 15:52	7440-38-2	
Barium, Dissolved	**66.6**	ug/L	1.0	1	07/18/13 10:25	07/22/13 15:52	7440-39-3	
Beryllium, Dissolved	ND	ug/L	0.50	1	07/18/13 10:25	07/22/13 15:52	7440-41-7	
Cadmium, Dissolved	ND	ug/L	0.50	1	07/18/13 10:25	07/22/13 15:52	7440-43-9	
Chromium, Dissolved	**0.90J**	ug/L	1.0	1	07/18/13 10:25	07/22/13 15:52	7440-47-3	
Cobalt, Dissolved	ND	ug/L	1.0	1	07/18/13 10:25	07/22/13 15:52	7440-48-4	
Copper, Dissolved	**1.6**	ug/L	1.0	1	07/18/13 10:25	07/22/13 15:52	7440-50-8	
Iron, Dissolved	**19.8J**	ug/L	50.0	1	07/18/13 10:25	07/22/13 15:52	7439-89-6	
Lead, Dissolved	**0.25J**	ug/L	1.0	1	07/18/13 10:25	07/22/13 15:52	7439-92-1	B
Manganese, Dissolved	**8.0**	ug/L	1.0	1	07/18/13 10:25	07/22/13 15:52	7439-96-5	
Molybdenum, Dissolved	**1.2**	ug/L	1.0	1	07/18/13 10:25	07/22/13 15:52	7439-98-7	B
Nickel, Dissolved	ND	ug/L	1.0	1	07/18/13 10:25	07/22/13 15:52	7440-02-0	
Selenium, Dissolved	**0.36J**	ug/L	1.0	1	07/18/13 10:25	07/22/13 15:52	7782-49-2	
Silver, Dissolved	ND	ug/L	0.50	1	07/18/13 10:25	07/22/13 15:52	7440-22-4	
Thallium, Dissolved	**0.29J**	ug/L	1.0	1	07/18/13 10:25	07/22/13 15:52	7440-28-0	B
Vanadium, Dissolved	**0.65J**	ug/L	1.0	1	07/18/13 10:25	07/23/13 12:04	7440-62-2	
Zinc, Dissolved	**2.3J**	ug/L	10.0	1	07/18/13 10:25	07/22/13 15:52	7440-66-6	
245.1 Mercury	Analytical Method: EPA 245.1 Preparation Method: EPA 245.1							
Mercury	ND	ug/L	0.20	1	07/18/13 14:57	07/23/13 10:39	7439-97-6	
245.1 Mercury, Dissolved	Analytical Method: EPA 245.1 Preparation Method: EPA 245.1							
Mercury, Dissolved	ND	ug/L	0.20	1	07/18/13 14:53	07/23/13 12:03	7439-97-6	
245.1 Potentially Diss Mercury	Analytical Method: EPA 245.1 Preparation Method: EPA 245.1							
Mercury, Dissolved	ND	ug/L	0.20	1	07/16/13 08:30	07/16/13 11:29	7439-97-6	
2510B Specific Conductance	Analytical Method: SM 2510B							
Specific Conductance	**248**	umhos/cm	10.0	1		07/18/13 11:31		

This report shall not be reproduced, except in full,
without the written consent of Pace Analytical Services, Inc..

Pace Analytical Services, Inc.
9608 Loiret Blvd.
Lenexa, KS 66219
(913)599-5665

ANALYTICAL RESULTS

Project: JULY 2013 RICO WATER SAMPLING
Pace Project No.: 60148708

Sample: DR-1 COMPOSITE_20130710 **Lab ID: 60148708007** Collected: 07/10/13 10:45 Received: 07/12/13 10:30 Matrix: Water

Parameters	Results	Units	Report Limit	DF	Prepared	Analyzed	CAS No.	Qual
Salinity	Analytical Method: Calculated							
Salinity (as dissolved solids)	**156**	mg/L	6.4	1		07/23/13 10:09		
Salinity (as seawater)	**0.12**	PSU	0.014	1		07/23/13 10:09		
2320B Alkalinity	Analytical Method: SM 2320B							
Alkalinity,Bicarbonate (CaCO3)	**90.5**	mg/L	20.0	1		07/17/13 11:47		
Alkalinity, Carbonate (CaCO3)	ND	mg/L	20.0	1		07/17/13 11:47		
Alkalinity, Total as CaCO3	**90.5**	mg/L	20.0	1		07/17/13 11:47		
2540C Total Dissolved Solids	Analytical Method: SM 2540C							
Total Dissolved Solids	**155**	mg/L	5.0	1		07/16/13 09:37		
2540D Total Suspended Solids	Analytical Method: SM 2540D							
Total Suspended Solids	ND	mg/L	5.0	1		07/15/13 09:33		
4500S2D Sulfide, Total	Analytical Method: SM 4500-S-2 D							
Sulfide, Total	ND	mg/L	0.050	1		07/16/13 13:56	18496-25-8	
300.0 IC Anions 28 Days	Analytical Method: EPA 300.0							
Chloride	**1.1**	mg/L	1.0	1		07/26/13 19:42	16887-00-6	
Sulfate	**43.0**	mg/L	10.0	10		07/25/13 20:15	14808-79-8	
353.2 Nitrogen, NO2/NO3 pres.	Analytical Method: EPA 353.2							
Nitrogen, NO2 plus NO3	ND	mg/L	0.10	1		07/23/13 13:19		
4500CNE Cyanide, Total	Analytical Method: SM 4500-CN-E							
Cyanide	ND	mg/L	0.0050	1		07/15/13 14:20	57-12-5	
5310C TOC	Analytical Method: SM 5310C							
Total Organic Carbon	**1.1**	mg/L	0.50	1		07/17/13 15:56	7440-44-0	

This report shall not be reproduced, except in full,
without the written consent of Pace Analytical Services, Inc..

Pace Analytical Services, Inc.
9608 Loiret Blvd.
Lenexa, KS 66219
(913)599-5665

ANALYTICAL RESULTS

Project: JULY 2013 RICO WATER SAMPLING
Pace Project No.: 60148708

Sample: DR-2 COMPOSITE_20130710 **Lab ID: 60148708008** Collected: 07/10/13 14:07 Received: 07/12/13 10:30 Matrix: Water

Parameters	Results	Units	Report Limit	DF	Prepared	Analyzed	CAS No.	Qual
200.7 Potentially Diss. Metals	Analytical Method: EPA 200.7 Preparation Method: EPA 200.7							
Calcium, Dissolved	**46900**	ug/L	100	1	07/18/13 10:25	07/24/13 13:42	7440-70-2	
Magnesium, Dissolved	**6380**	ug/L	50.0	1	07/18/13 10:25	07/24/13 13:42	7439-95-4	
Potassium, Dissolved	**934**	ug/L	500	1	07/18/13 10:25	07/24/13 13:42	7440-09-7	
Sodium, Dissolved	**3000**	ug/L	500	1	07/18/13 10:25	07/24/13 13:42	7440-23-5	
200.8 MET ICPMS	Analytical Method: EPA 200.8 Preparation Method: EPA 200.8							
Aluminum	**9.0**	ug/L	4.0	1	07/21/13 05:44	07/25/13 19:33	7429-90-5	
Antimony	ND	ug/L	0.50	1	07/21/13 05:44	07/25/13 19:33	7440-36-0	
Arsenic	ND	ug/L	0.50	1	07/21/13 05:44	07/25/13 19:33	7440-38-2	
Barium	**66.6**	ug/L	0.30	1	07/21/13 05:44	07/25/13 19:33	7440-39-3	
Beryllium	ND	ug/L	0.20	1	07/21/13 05:44	07/25/13 19:33	7440-41-7	
Cadmium	ND	ug/L	0.080	1	07/21/13 05:44	07/25/13 19:33	7440-43-9	
Calcium	**50100**	ug/L	400	20	07/21/13 05:44	07/25/13 19:37	7440-70-2	
Chromium	ND	ug/L	0.50	1	07/21/13 05:44	07/25/13 19:33	7440-47-3	
Cobalt	ND	ug/L	0.50	1	07/21/13 05:44	07/25/13 19:33	7440-48-4	
Copper	ND	ug/L	0.50	1	07/21/13 05:44	07/25/13 19:33	7440-50-8	
Iron	ND	ug/L	50.0	1	07/21/13 05:44	07/25/13 19:33	7439-89-6	
Lead	ND	ug/L	0.10	1	07/21/13 05:44	07/25/13 19:33	7439-92-1	
Magnesium	**6220**	ug/L	5.0	1	07/21/13 05:44	07/25/13 19:33	7439-95-4	
Manganese	**89.5**	ug/L	0.50	1	07/21/13 05:44	07/25/13 19:33	7439-96-5	
Molybdenum	**1.1**	ug/L	0.50	1	07/21/13 05:44	07/25/13 19:33	7439-98-7	
Nickel	ND	ug/L	0.50	1	07/21/13 05:44	07/25/13 19:33	7440-02-0	
Potassium	**961**	ug/L	20.0	1	07/21/13 05:44	07/25/13 19:33	7440-09-7	
Selenium	ND	ug/L	0.50	1	07/21/13 05:44	07/25/13 19:33	7782-49-2	
Silica	**6240**	ug/L	1070	20	07/21/13 05:44	07/25/13 19:37	7631-86-9	
Silver	ND	ug/L	0.50	1	07/21/13 05:44	07/26/13 15:55	7440-22-4	
Sodium	**2780**	ug/L	50.0	1	07/21/13 05:44	07/25/13 19:33	7440-23-5	
Thallium	ND	ug/L	0.10	1	07/21/13 05:44	07/25/13 19:33	7440-28-0	
Total Hardness by 2340B	**151000**	ug/L	1420	20	07/21/13 05:44	07/25/13 19:37		
Vanadium	**0.16**	ug/L	0.10	1	07/21/13 05:44	07/25/13 19:33	7440-62-2	
Zinc	ND	ug/L	5.0	1	07/21/13 05:44	07/25/13 19:33	7440-66-6	
200.8 MET ICPMS, Dissolved	Analytical Method: EPA 200.8 Preparation Method: EPA 200.8							
Aluminum, Dissolved	**5.7**	ug/L	4.0	1	07/21/13 05:45	07/24/13 02:59	7429-90-5	
Antimony, Dissolved	ND	ug/L	0.50	1	07/21/13 05:45	07/24/13 02:59	7440-36-0	
Arsenic, Dissolved	ND	ug/L	0.50	1	07/21/13 05:45	07/24/13 02:59	7440-38-2	
Barium, Dissolved	**68.0**	ug/L	0.30	1	07/21/13 05:45	07/24/13 02:59	7440-39-3	
Beryllium, Dissolved	ND	ug/L	0.20	1	07/21/13 05:45	07/24/13 02:59	7440-41-7	
Cadmium, Dissolved	ND	ug/L	0.080	1	07/21/13 05:45	07/24/13 02:59	7440-43-9	
Calcium, Dissolved	**46000**	ug/L	400	20	07/21/13 05:45	07/24/13 03:05	7440-70-2	
Chromium, Dissolved	ND	ug/L	0.50	1	07/21/13 05:45	07/24/13 02:59	7440-47-3	
Cobalt, Dissolved	ND	ug/L	0.50	1	07/21/13 05:45	07/24/13 02:59	7440-48-4	
Copper, Dissolved	**1.1**	ug/L	0.50	1	07/21/13 05:45	07/24/13 02:59	7440-50-8	
Iron, Dissolved	ND	ug/L	50.0	1	07/21/13 05:45	07/24/13 02:59	7439-89-6	
Lead, Dissolved	ND	ug/L	0.10	1	07/21/13 05:45	07/24/13 02:59	7439-92-1	
Magnesium, Dissolved	**6190**	ug/L	5.0	1	07/21/13 05:45	07/24/13 02:59	7439-95-4	

This report shall not be reproduced, except in full,
without the written consent of Pace Analytical Services, Inc..

Pace Analytical Services, Inc.
9608 Loiret Blvd.
Lenexa, KS 66219
(913)599-5665

ANALYTICAL RESULTS

Project: JULY 2013 RICO WATER SAMPLING
Pace Project No.: 60148708

Sample: DR-2 COMPOSITE_20130710 **Lab ID: 60148708008** Collected: 07/10/13 14:07 Received: 07/12/13 10:30 Matrix: Water

Parameters	Results	Units	Report Limit	DF	Prepared	Analyzed	CAS No.	Qual
200.8 MET ICPMS, Dissolved	Analytical Method: EPA 200.8 Preparation Method: EPA 200.8							
Manganese, Dissolved	**85.7**	ug/L	0.50	1	07/21/13 05:45	07/24/13 02:59	7439-96-5	
Molybdenum, Dissolved	**1.2**	ug/L	0.50	1	07/21/13 05:45	07/24/13 02:59	7439-98-7	
Nickel, Dissolved	**0.59**	ug/L	0.50	1	07/21/13 05:45	07/24/13 02:59	7440-02-0	
Potassium, Dissolved	**864**	ug/L	20.0	1	07/21/13 05:45	07/24/13 02:59	7440-09-7	
Selenium, Dissolved	ND	ug/L	0.50	1	07/21/13 05:45	07/24/13 02:59	7782-49-2	
Silver, Dissolved	ND	ug/L	0.50	1	07/21/13 05:45	07/24/13 02:59	7440-22-4	
Sodium, Dissolved	**2800**	ug/L	50.0	1	07/21/13 05:45	07/24/13 02:59	7440-23-5	
Thallium, Dissolved	ND	ug/L	0.10	1	07/21/13 05:45	07/24/13 02:59	7440-28-0	
Vanadium, Dissolved	**0.16**	ug/L	0.10	1	07/21/13 05:45	07/24/13 02:59	7440-62-2	
Zinc, Dissolved	**5.2**	ug/L	5.0	1	07/21/13 05:45	07/24/13 02:59	7440-66-6	
200.8 Potentially Diss. Metals	Analytical Method: EPA 200.8 Preparation Method: EPA 200.8							
Aluminum, Dissolved	**10.1J**	ug/L	50.0	1	07/18/13 10:25	07/22/13 15:57	7429-90-5	
Antimony, Dissolved	**0.14J**	ug/L	1.0	1	07/18/13 10:25	07/22/13 15:57	7440-36-0	B
Arsenic, Dissolved	**0.24J**	ug/L	1.0	1	07/18/13 10:25	07/22/13 15:57	7440-38-2	
Barium, Dissolved	**65.2**	ug/L	1.0	1	07/18/13 10:25	07/22/13 15:57	7440-39-3	
Beryllium, Dissolved	ND	ug/L	0.50	1	07/18/13 10:25	07/22/13 15:57	7440-41-7	
Cadmium, Dissolved	ND	ug/L	0.50	1	07/18/13 10:25	07/22/13 15:57	7440-43-9	
Chromium, Dissolved	**0.78J**	ug/L	1.0	1	07/18/13 10:25	07/22/13 15:57	7440-47-3	
Cobalt, Dissolved	ND	ug/L	1.0	1	07/18/13 10:25	07/22/13 15:57	7440-48-4	
Copper, Dissolved	**0.75J**	ug/L	1.0	1	07/18/13 10:25	07/22/13 15:57	7440-50-8	
Iron, Dissolved	**33.1J**	ug/L	50.0	1	07/18/13 10:25	07/22/13 15:57	7439-89-6	
Lead, Dissolved	**0.24J**	ug/L	1.0	1	07/18/13 10:25	07/22/13 15:57	7439-92-1	B
Manganese, Dissolved	**90.3**	ug/L	1.0	1	07/18/13 10:25	07/22/13 15:57	7439-96-5	
Molybdenum, Dissolved	**1.3**	ug/L	1.0	1	07/18/13 10:25	07/22/13 15:57	7439-98-7	B
Nickel, Dissolved	ND	ug/L	1.0	1	07/18/13 10:25	07/22/13 15:57	7440-02-0	
Selenium, Dissolved	ND	ug/L	1.0	1	07/18/13 10:25	07/22/13 15:57	7782-49-2	
Silver, Dissolved	ND	ug/L	0.50	1	07/18/13 10:25	07/22/13 15:57	7440-22-4	
Thallium, Dissolved	**0.30J**	ug/L	1.0	1	07/18/13 10:25	07/22/13 15:57	7440-28-0	B
Vanadium, Dissolved	**0.53J**	ug/L	1.0	1	07/18/13 10:25	07/23/13 12:08	7440-62-2	
Zinc, Dissolved	**4.6J**	ug/L	10.0	1	07/18/13 10:25	07/22/13 15:57	7440-66-6	
245.1 Mercury	Analytical Method: EPA 245.1 Preparation Method: EPA 245.1							
Mercury	ND	ug/L	0.20	1	07/18/13 14:57	07/23/13 10:42	7439-97-6	
245.1 Mercury, Dissolved	Analytical Method: EPA 245.1 Preparation Method: EPA 245.1							
Mercury, Dissolved	ND	ug/L	0.20	1	07/18/13 14:53	07/23/13 12:05	7439-97-6	
245.1 Potentially Diss Mercury	Analytical Method: EPA 245.1 Preparation Method: EPA 245.1							
Mercury, Dissolved	ND	ug/L	0.20	1	07/16/13 08:30	07/16/13 11:31	7439-97-6	
2510B Specific Conductance	Analytical Method: SM 2510B							
Specific Conductance	**315**	umhos/cm	10.0	1		07/18/13 11:33		

This report shall not be reproduced, except in full,
without the written consent of Pace Analytical Services, Inc..

Pace Analytical Services, Inc.
9608 Loiret Blvd.
Lenexa, KS 66219
(913)599-5665

ANALYTICAL RESULTS

Project: JULY 2013 RICO WATER SAMPLING
Pace Project No.: 60148708

Sample: DR-2 COMPOSITE_20130710 **Lab ID: 60148708008** Collected: 07/10/13 14:07 Received: 07/12/13 10:30 Matrix: Water

Parameters	Results	Units	Report Limit	DF	Prepared	Analyzed	CAS No.	Qual
Salinity	Analytical Method: Calculated							
Salinity (as dissolved solids)	**187**	mg/L	6.4	1		07/23/13 10:09		
Salinity (as seawater)	**0.14**	PSU	0.014	1		07/23/13 10:09		
2320B Alkalinity	Analytical Method: SM 2320B							
Alkalinity,Bicarbonate (CaCO3)	**120**	mg/L	20.0	1		07/19/13 11:34		
Alkalinity, Carbonate (CaCO3)	ND	mg/L	20.0	1		07/19/13 11:34		
Alkalinity, Total as CaCO3	**120**	mg/L	20.0	1		07/19/13 11:34		
2540C Total Dissolved Solids	Analytical Method: SM 2540C							
Total Dissolved Solids	**189**	mg/L	5.0	1		07/16/13 09:37		
2540D Total Suspended Solids	Analytical Method: SM 2540D							
Total Suspended Solids	ND	mg/L	5.0	1		07/15/13 09:33		
4500S2D Sulfide, Total	Analytical Method: SM 4500-S-2 D							
Sulfide, Total	ND	mg/L	0.050	1		07/16/13 13:56	18496-25-8	
300.0 IC Anions 28 Days	Analytical Method: EPA 300.0							
Chloride	**1.1**	mg/L	1.0	1		07/26/13 19:59	16887-00-6	
Sulfate	**63.0**	mg/L	10.0	10		07/25/13 20:31	14808-79-8	
353.2 Nitrogen, NO2/NO3 pres.	Analytical Method: EPA 353.2							
Nitrogen, NO2 plus NO3	ND	mg/L	0.10	1		07/23/13 13:20		
4500CNE Cyanide, Total	Analytical Method: SM 4500-CN-E							
Cyanide	ND	mg/L	0.0050	1		07/15/13 14:24	57-12-5	
5310C TOC	Analytical Method: SM 5310C							
Total Organic Carbon	**1.2**	mg/L	0.50	1		07/17/13 16:14	7440-44-0	

This report shall not be reproduced, except in full,
without the written consent of Pace Analytical Services, Inc..

Pace Analytical Services, Inc.
9608 Loiret Blvd.
Lenexa, KS 66219
(913)599-5665

ANALYTICAL RESULTS

Project: JULY 2013 RICO WATER SAMPLING
Pace Project No.: 60148708

Sample: DR-7 COMPOSITE_20130710 **Lab ID: 60148708009** Collected: 07/10/13 15:06 Received: 07/12/13 10:30 Matrix: Water

Parameters	Results	Units	Report Limit	DF	Prepared	Analyzed	CAS No.	Qual
200.7 Potentially Diss. Metals	Analytical Method: EPA 200.7 Preparation Method: EPA 200.7							
Calcium, Dissolved	**62200**	ug/L	100	1	07/18/13 10:25	07/24/13 13:45	7440-70-2	
Magnesium, Dissolved	**7910**	ug/L	50.0	1	07/18/13 10:25	07/24/13 13:45	7439-95-4	
Potassium, Dissolved	**1370**	ug/L	500	1	07/18/13 10:25	07/24/13 13:45	7440-09-7	
Sodium, Dissolved	**4960**	ug/L	500	1	07/18/13 10:25	07/24/13 13:45	7440-23-5	
200.8 MET ICPMS	Analytical Method: EPA 200.8 Preparation Method: EPA 200.8							
Aluminum	**25.8**	ug/L	4.0	1	07/21/13 05:44	07/25/13 19:42	7429-90-5	
Antimony	ND	ug/L	0.50	1	07/21/13 05:44	07/25/13 19:42	7440-36-0	
Arsenic	**0.67**	ug/L	0.50	1	07/21/13 05:44	07/25/13 19:42	7440-38-2	
Barium	**64.3**	ug/L	0.30	1	07/21/13 05:44	07/25/13 19:42	7440-39-3	
Beryllium	ND	ug/L	0.20	1	07/21/13 05:44	07/25/13 19:42	7440-41-7	
Cadmium	**0.33**	ug/L	0.080	1	07/21/13 05:44	07/25/13 19:42	7440-43-9	
Calcium	**63700**	ug/L	400	20	07/21/13 05:44	07/25/13 19:46	7440-70-2	
Chromium	ND	ug/L	0.50	1	07/21/13 05:44	07/25/13 19:42	7440-47-3	
Cobalt	ND	ug/L	0.50	1	07/21/13 05:44	07/25/13 19:42	7440-48-4	
Copper	**0.73**	ug/L	0.50	1	07/21/13 05:44	07/25/13 19:42	7440-50-8	
Iron	**144**	ug/L	50.0	1	07/21/13 05:44	07/25/13 19:42	7439-89-6	
Lead	**0.13**	ug/L	0.10	1	07/21/13 05:44	07/25/13 19:42	7439-92-1	
Magnesium	**7660**	ug/L	5.0	1	07/21/13 05:44	07/25/13 19:42	7439-95-4	
Manganese	**174**	ug/L	0.50	1	07/21/13 05:44	07/25/13 19:42	7439-96-5	
Molybdenum	**1.8**	ug/L	0.50	1	07/21/13 05:44	07/25/13 19:42	7439-98-7	
Nickel	ND	ug/L	0.50	1	07/21/13 05:44	07/25/13 19:42	7440-02-0	
Potassium	**1440**	ug/L	20.0	1	07/21/13 05:44	07/25/13 19:42	7440-09-7	
Selenium	ND	ug/L	0.50	1	07/21/13 05:44	07/25/13 19:42	7782-49-2	
Silica	**7810**	ug/L	1070	20	07/21/13 05:44	07/25/13 19:46	7631-86-9	
Silver	ND	ug/L	0.50	1	07/21/13 05:44	07/26/13 16:00	7440-22-4	
Sodium	**4450**	ug/L	50.0	1	07/21/13 05:44	07/25/13 19:42	7440-23-5	
Thallium	ND	ug/L	0.10	1	07/21/13 05:44	07/25/13 19:42	7440-28-0	
Total Hardness by 2340B	**191000**	ug/L	1420	20	07/21/13 05:44	07/25/13 19:46		
Vanadium	**0.20**	ug/L	0.10	1	07/21/13 05:44	07/25/13 19:42	7440-62-2	
Zinc	**54.3**	ug/L	5.0	1	07/21/13 05:44	07/25/13 19:42	7440-66-6	
200.8 MET ICPMS, Dissolved	Analytical Method: EPA 200.8 Preparation Method: EPA 200.8							
Aluminum, Dissolved	**4.9**	ug/L	4.0	1	07/21/13 05:45	07/24/13 03:28	7429-90-5	
Antimony, Dissolved	ND	ug/L	0.50	1	07/21/13 05:45	07/24/13 03:28	7440-36-0	
Arsenic, Dissolved	ND	ug/L	0.50	1	07/21/13 05:45	07/24/13 03:28	7440-38-2	
Barium, Dissolved	**67.1**	ug/L	0.30	1	07/21/13 05:45	07/24/13 03:28	7440-39-3	
Beryllium, Dissolved	ND	ug/L	0.20	1	07/21/13 05:45	07/24/13 03:28	7440-41-7	
Cadmium, Dissolved	**0.32**	ug/L	0.080	1	07/21/13 05:45	07/24/13 03:28	7440-43-9	
Calcium, Dissolved	**60300**	ug/L	400	20	07/21/13 05:45	07/24/13 03:34	7440-70-2	
Chromium, Dissolved	ND	ug/L	0.50	1	07/21/13 05:45	07/24/13 03:28	7440-47-3	
Cobalt, Dissolved	ND	ug/L	0.50	1	07/21/13 05:45	07/24/13 03:28	7440-48-4	
Copper, Dissolved	**0.94**	ug/L	0.50	1	07/21/13 05:45	07/24/13 03:28	7440-50-8	
Iron, Dissolved	ND	ug/L	50.0	1	07/21/13 05:45	07/24/13 03:28	7439-89-6	
Lead, Dissolved	ND	ug/L	0.10	1	07/21/13 05:45	07/24/13 03:28	7439-92-1	
Magnesium, Dissolved	**7700**	ug/L	5.0	1	07/21/13 05:45	07/24/13 03:28	7439-95-4	

This report shall not be reproduced, except in full,
without the written consent of Pace Analytical Services, Inc..

Pace Analytical Services, Inc.
9608 Loiret Blvd.
Lenexa, KS 66219
(913)599-5665

ANALYTICAL RESULTS

Project: JULY 2013 RICO WATER SAMPLING
Pace Project No.: 60148708

Sample: DR-7 COMPOSITE_20130710 **Lab ID: 60148708009** Collected: 07/10/13 15:06 Received: 07/12/13 10:30 Matrix: Water

Parameters	Results	Units	Report Limit	DF	Prepared	Analyzed	CAS No.	Qual
200.8 MET ICPMS, Dissolved	Analytical Method: EPA 200.8 Preparation Method: EPA 200.8							
Manganese, Dissolved	**151**	ug/L	0.50	1	07/21/13 05:45	07/24/13 03:28	7439-96-5	
Molybdenum, Dissolved	**1.9**	ug/L	0.50	1	07/21/13 05:45	07/24/13 03:28	7439-98-7	
Nickel, Dissolved	**0.60**	ug/L	0.50	1	07/21/13 05:45	07/24/13 03:28	7440-02-0	
Potassium, Dissolved	**1320**	ug/L	20.0	1	07/21/13 05:45	07/24/13 03:28	7440-09-7	
Selenium, Dissolved	ND	ug/L	0.50	1	07/21/13 05:45	07/24/13 03:28	7782-49-2	
Silver, Dissolved	ND	ug/L	0.50	1	07/21/13 05:45	07/24/13 03:28	7440-22-4	
Sodium, Dissolved	**4640**	ug/L	50.0	1	07/21/13 05:45	07/24/13 03:28	7440-23-5	
Thallium, Dissolved	ND	ug/L	0.10	1	07/21/13 05:45	07/24/13 03:28	7440-28-0	
Vanadium, Dissolved	**0.13**	ug/L	0.10	1	07/21/13 05:45	07/24/13 03:28	7440-62-2	
Zinc, Dissolved	**55.4**	ug/L	5.0	1	07/21/13 05:45	07/24/13 03:28	7440-66-6	
200.8 Potentially Diss. Metals	Analytical Method: EPA 200.8 Preparation Method: EPA 200.8							
Aluminum, Dissolved	**7.1J**	ug/L	50.0	1	07/18/13 10:25	07/22/13 16:01	7429-90-5	
Antimony, Dissolved	**0.15J**	ug/L	1.0	1	07/18/13 10:25	07/22/13 16:01	7440-36-0	B
Arsenic, Dissolved	**0.51J**	ug/L	1.0	1	07/18/13 10:25	07/22/13 16:01	7440-38-2	
Barium, Dissolved	**64.4**	ug/L	1.0	1	07/18/13 10:25	07/22/13 16:01	7440-39-3	
Beryllium, Dissolved	ND	ug/L	0.50	1	07/18/13 10:25	07/22/13 16:01	7440-41-7	
Cadmium, Dissolved	**0.41J**	ug/L	0.50	1	07/18/13 10:25	07/22/13 16:01	7440-43-9	
Chromium, Dissolved	**0.44J**	ug/L	1.0	1	07/18/13 10:25	07/22/13 16:01	7440-47-3	
Cobalt, Dissolved	**0.063J**	ug/L	1.0	1	07/18/13 10:25	07/22/13 16:01	7440-48-4	
Copper, Dissolved	**0.87J**	ug/L	1.0	1	07/18/13 10:25	07/22/13 16:01	7440-50-8	
Iron, Dissolved	**92.0**	ug/L	50.0	1	07/18/13 10:25	07/22/13 16:01	7439-89-6	
Lead, Dissolved	**0.26J**	ug/L	1.0	1	07/18/13 10:25	07/22/13 16:01	7439-92-1	B
Manganese, Dissolved	**152**	ug/L	1.0	1	07/18/13 10:25	07/22/13 16:01	7439-96-5	
Molybdenum, Dissolved	**2.1**	ug/L	1.0	1	07/18/13 10:25	07/22/13 16:01	7439-98-7	B
Nickel, Dissolved	ND	ug/L	1.0	1	07/18/13 10:25	07/22/13 16:01	7440-02-0	
Selenium, Dissolved	ND	ug/L	1.0	1	07/18/13 10:25	07/22/13 16:01	7782-49-2	
Silver, Dissolved	ND	ug/L	0.50	1	07/18/13 10:25	07/22/13 16:01	7440-22-4	
Thallium, Dissolved	**0.30J**	ug/L	1.0	1	07/18/13 10:25	07/22/13 16:01	7440-28-0	B
Vanadium, Dissolved	**0.70J**	ug/L	1.0	1	07/18/13 10:25	07/23/13 12:13	7440-62-2	
Zinc, Dissolved	**54.2**	ug/L	10.0	1	07/18/13 10:25	07/22/13 16:01	7440-66-6	
245.1 Mercury	Analytical Method: EPA 245.1 Preparation Method: EPA 245.1							
Mercury	ND	ug/L	0.20	1	07/18/13 14:57	07/23/13 10:44	7439-97-6	
245.1 Mercury, Dissolved	Analytical Method: EPA 245.1 Preparation Method: EPA 245.1							
Mercury, Dissolved	ND	ug/L	0.20	1	07/18/13 14:53	07/23/13 12:08	7439-97-6	
245.1 Potentially Diss Mercury	Analytical Method: EPA 245.1 Preparation Method: EPA 245.1							
Mercury, Dissolved	ND	ug/L	0.20	1	07/16/13 08:30	07/16/13 11:34	7439-97-6	
2510B Specific Conductance	Analytical Method: SM 2510B							
Specific Conductance	**428**	umhos/cm	10.0	1		07/18/13 11:34		

This report shall not be reproduced, except in full,
without the written consent of Pace Analytical Services, Inc..

Pace Analytical Services, Inc.
9608 Loiret Blvd.
Lenexa, KS 66219
(913)599-5665

ANALYTICAL RESULTS

Project: JULY 2013 RICO WATER SAMPLING
Pace Project No.: 60148708

Sample: DR-7 COMPOSITE_20130710 **Lab ID: 60148708009** Collected: 07/10/13 15:06 Received: 07/12/13 10:30 Matrix: Water

Parameters	Results	Units	Report Limit	DF	Prepared	Analyzed	CAS No.	Qual
Salinity	Analytical Method: Calculated							
Salinity (as dissolved solids)	**259**	mg/L	6.4	1		07/23/13 10:09		
Salinity (as seawater)	**0.20**	PSU	0.014	1		07/23/13 10:09		
2320B Alkalinity	Analytical Method: SM 2320B							
Alkalinity,Bicarbonate (CaCO3)	**129**	mg/L	20.0	1		07/19/13 11:38		
Alkalinity, Carbonate (CaCO3)	ND	mg/L	20.0	1		07/19/13 11:38		
Alkalinity, Total as CaCO3	**129**	mg/L	20.0	1		07/19/13 11:38		
2540C Total Dissolved Solids	Analytical Method: SM 2540C							
Total Dissolved Solids	**253**	mg/L	5.0	1		07/16/13 09:37		
2540D Total Suspended Solids	Analytical Method: SM 2540D							
Total Suspended Solids	ND	mg/L	5.0	1		07/15/13 09:33		
4500S2D Sulfide, Total	Analytical Method: SM 4500-S-2 D							
Sulfide, Total	ND	mg/L	0.050	1		07/16/13 13:56	18496-25-8	
300.0 IC Anions 28 Days	Analytical Method: EPA 300.0							
Chloride	**1.2**	mg/L	1.0	1		07/26/13 20:16	16887-00-6	
Sulfate	**95.5**	mg/L	10.0	10		07/25/13 20:48	14808-79-8	
353.2 Nitrogen, NO2/NO3 pres.	Analytical Method: EPA 353.2							
Nitrogen, NO2 plus NO3	ND	mg/L	0.10	1		07/23/13 13:20		
4500CNE Cyanide, Total	Analytical Method: SM 4500-CN-E							
Cyanide	ND	mg/L	0.0050	1		07/15/13 14:25	57-12-5	
5310C TOC	Analytical Method: SM 5310C							
Total Organic Carbon	**1.1**	mg/L	0.50	1		07/17/13 16:32	7440-44-0	

This report shall not be reproduced, except in full,
without the written consent of Pace Analytical Services, Inc..

Pace Analytical Services, Inc.
9608 Loiret Blvd.
Lenexa, KS 66219
(913)599-5665

ANALYTICAL RESULTS

Project: JULY 2013 RICO WATER SAMPLING
Pace Project No.: 60148708

Sample: DR-8_20130710 **Lab ID: 60148708010** Collected: 07/10/13 10:48 Received: 07/12/13 10:30 Matrix: Water

Parameters	Results	Units	Report Limit	DF	Prepared	Analyzed	CAS No.	Qual
200.7 Potentially Diss. Metals	Analytical Method: EPA 200.7 Preparation Method: EPA 200.7							
Calcium, Dissolved	**41000**	ug/L	100	1	07/18/13 10:25	07/24/13 13:48	7440-70-2	
Magnesium, Dissolved	**5900**	ug/L	50.0	1	07/18/13 10:25	07/24/13 13:48	7439-95-4	
Potassium, Dissolved	**652**	ug/L	500	1	07/18/13 10:25	07/24/13 13:48	7440-09-7	
Sodium, Dissolved	**2620**	ug/L	500	1	07/18/13 10:25	07/24/13 13:48	7440-23-5	
200.8 MET ICPMS	Analytical Method: EPA 200.8 Preparation Method: EPA 200.8							
Aluminum	**15.4**	ug/L	4.0	1	07/21/13 05:44	07/25/13 19:50	7429-90-5	
Antimony	ND	ug/L	0.50	1	07/21/13 05:44	07/25/13 19:50	7440-36-0	
Arsenic	ND	ug/L	0.50	1	07/21/13 05:44	07/25/13 19:50	7440-38-2	
Barium	**65.5**	ug/L	0.30	1	07/21/13 05:44	07/25/13 19:50	7440-39-3	
Beryllium	ND	ug/L	0.20	1	07/21/13 05:44	07/25/13 19:50	7440-41-7	
Cadmium	ND	ug/L	0.080	1	07/21/13 05:44	07/25/13 19:50	7440-43-9	
Calcium	**39500**	ug/L	400	20	07/21/13 05:44	07/25/13 19:55	7440-70-2	
Chromium	ND	ug/L	0.50	1	07/21/13 05:44	07/25/13 19:50	7440-47-3	
Cobalt	ND	ug/L	0.50	1	07/21/13 05:44	07/25/13 19:50	7440-48-4	
Copper	ND	ug/L	0.50	1	07/21/13 05:44	07/25/13 19:50	7440-50-8	
Iron	ND	ug/L	50.0	1	07/21/13 05:44	07/25/13 19:50	7439-89-6	
Lead	ND	ug/L	0.10	1	07/21/13 05:44	07/25/13 19:50	7439-92-1	
Magnesium	**5180**	ug/L	5.0	1	07/21/13 05:44	07/25/13 19:50	7439-95-4	
Manganese	**8.8**	ug/L	0.50	1	07/21/13 05:44	07/25/13 19:50	7439-96-5	
Molybdenum	**0.92**	ug/L	0.50	1	07/21/13 05:44	07/25/13 19:50	7439-98-7	
Nickel	ND	ug/L	0.50	1	07/21/13 05:44	07/25/13 19:50	7440-02-0	
Potassium	**671**	ug/L	20.0	1	07/21/13 05:44	07/25/13 19:50	7440-09-7	
Selenium	ND	ug/L	0.50	1	07/21/13 05:44	07/25/13 19:50	7782-49-2	
Silica	**5170**	ug/L	1070	20	07/21/13 05:44	07/25/13 19:55	7631-86-9	
Silver	ND	ug/L	0.50	1	07/21/13 05:44	07/26/13 16:05	7440-22-4	
Sodium	**2190**	ug/L	50.0	1	07/21/13 05:44	07/25/13 19:50	7440-23-5	
Thallium	ND	ug/L	0.10	1	07/21/13 05:44	07/25/13 19:50	7440-28-0	
Total Hardness by 2340B	**120000**	ug/L	1420	20	07/21/13 05:44	07/25/13 19:55		
Vanadium	**0.16**	ug/L	0.10	1	07/21/13 05:44	07/25/13 19:50	7440-62-2	
Zinc	ND	ug/L	5.0	1	07/21/13 05:44	07/25/13 19:50	7440-66-6	
200.8 MET ICPMS, Dissolved	Analytical Method: EPA 200.8 Preparation Method: EPA 200.8							
Aluminum, Dissolved	**4.8**	ug/L	4.0	1	07/21/13 05:45	07/24/13 03:39	7429-90-5	
Antimony, Dissolved	ND	ug/L	0.50	1	07/21/13 05:45	07/24/13 03:39	7440-36-0	
Arsenic, Dissolved	ND	ug/L	0.50	1	07/21/13 05:45	07/24/13 03:39	7440-38-2	
Barium, Dissolved	**70.2**	ug/L	0.30	1	07/21/13 05:45	07/24/13 03:39	7440-39-3	
Beryllium, Dissolved	ND	ug/L	0.20	1	07/21/13 05:45	07/24/13 03:39	7440-41-7	
Cadmium, Dissolved	ND	ug/L	0.080	1	07/21/13 05:45	07/24/13 03:39	7440-43-9	
Calcium, Dissolved	**37500**	ug/L	400	20	07/21/13 05:45	07/24/13 03:44	7440-70-2	
Chromium, Dissolved	ND	ug/L	0.50	1	07/21/13 05:45	07/24/13 03:39	7440-47-3	
Cobalt, Dissolved	ND	ug/L	0.50	1	07/21/13 05:45	07/24/13 03:39	7440-48-4	
Copper, Dissolved	**1.2**	ug/L	0.50	1	07/21/13 05:45	07/24/13 03:39	7440-50-8	
Iron, Dissolved	ND	ug/L	50.0	1	07/21/13 05:45	07/24/13 03:39	7439-89-6	
Lead, Dissolved	ND	ug/L	0.10	1	07/21/13 05:45	07/24/13 03:39	7439-92-1	
Magnesium, Dissolved	**5400**	ug/L	5.0	1	07/21/13 05:45	07/24/13 03:39	7439-95-4	

This report shall not be reproduced, except in full,
without the written consent of Pace Analytical Services, Inc..

Pace Analytical Services, Inc.
9608 Loiret Blvd.
Lenexa, KS 66219
(913)599-5665

ANALYTICAL RESULTS

Project: JULY 2013 RICO WATER SAMPLING
Pace Project No.: 60148708

Sample: DR-8_20130710 **Lab ID: 60148708010** Collected: 07/10/13 10:48 Received: 07/12/13 10:30 Matrix: Water

Parameters	Results	Units	Report Limit	DF	Prepared	Analyzed	CAS No.	Qual
200.8 MET ICPMS, Dissolved	Analytical Method: EPA 200.8 Preparation Method: EPA 200.8							
Manganese, Dissolved	**8.5**	ug/L	0.50	1	07/21/13 05:45	07/24/13 03:39	7439-96-5	
Molybdenum, Dissolved	**0.96**	ug/L	0.50	1	07/21/13 05:45	07/24/13 03:39	7439-98-7	
Nickel, Dissolved	**4.0**	ug/L	0.50	1	07/21/13 05:45	07/24/13 03:39	7440-02-0	
Potassium, Dissolved	**648**	ug/L	20.0	1	07/21/13 05:45	07/24/13 03:39	7440-09-7	
Selenium, Dissolved	ND	ug/L	0.50	1	07/21/13 05:45	07/24/13 03:39	7782-49-2	
Silver, Dissolved	ND	ug/L	0.50	1	07/21/13 05:45	07/24/13 03:39	7440-22-4	
Sodium, Dissolved	**2340**	ug/L	50.0	1	07/21/13 05:45	07/24/13 03:39	7440-23-5	
Thallium, Dissolved	ND	ug/L	0.10	1	07/21/13 05:45	07/24/13 03:39	7440-28-0	
Vanadium, Dissolved	**0.14**	ug/L	0.10	1	07/21/13 05:45	07/24/13 03:39	7440-62-2	
Zinc, Dissolved	ND	ug/L	5.0	1	07/21/13 05:45	07/24/13 03:39	7440-66-6	
200.8 Potentially Diss. Metals	Analytical Method: EPA 200.8 Preparation Method: EPA 200.8							
Aluminum, Dissolved	**5.6J**	ug/L	50.0	1	07/18/13 10:25	07/22/13 16:05	7429-90-5	
Antimony, Dissolved	**0.14J**	ug/L	1.0	1	07/18/13 10:25	07/22/13 16:05	7440-36-0	B
Arsenic, Dissolved	**0.17J**	ug/L	1.0	1	07/18/13 10:25	07/22/13 16:05	7440-38-2	
Barium, Dissolved	**68.8**	ug/L	1.0	1	07/18/13 10:25	07/22/13 16:05	7440-39-3	
Beryllium, Dissolved	ND	ug/L	0.50	1	07/18/13 10:25	07/22/13 16:05	7440-41-7	
Cadmium, Dissolved	ND	ug/L	0.50	1	07/18/13 10:25	07/22/13 16:05	7440-43-9	
Chromium, Dissolved	**4.2**	ug/L	1.0	1	07/18/13 10:25	07/22/13 16:05	7440-47-3	
Cobalt, Dissolved	ND	ug/L	1.0	1	07/18/13 10:25	07/22/13 16:05	7440-48-4	
Copper, Dissolved	**1.4**	ug/L	1.0	1	07/18/13 10:25	07/22/13 16:05	7440-50-8	
Iron, Dissolved	**41.4J**	ug/L	50.0	1	07/18/13 10:25	07/22/13 16:05	7439-89-6	
Lead, Dissolved	**0.24J**	ug/L	1.0	1	07/18/13 10:25	07/22/13 16:05	7439-92-1	B
Manganese, Dissolved	**8.6**	ug/L	1.0	1	07/18/13 10:25	07/22/13 16:05	7439-96-5	
Molybdenum, Dissolved	**1.3**	ug/L	1.0	1	07/18/13 10:25	07/22/13 16:05	7439-98-7	B
Nickel, Dissolved	ND	ug/L	1.0	1	07/18/13 10:25	07/22/13 16:05	7440-02-0	
Selenium, Dissolved	ND	ug/L	1.0	1	07/18/13 10:25	07/22/13 16:05	7782-49-2	
Silver, Dissolved	ND	ug/L	0.50	1	07/18/13 10:25	07/22/13 16:05	7440-22-4	
Thallium, Dissolved	**0.29J**	ug/L	1.0	1	07/18/13 10:25	07/22/13 16:05	7440-28-0	B
Vanadium, Dissolved	**0.80J**	ug/L	1.0	1	07/18/13 10:25	07/23/13 12:17	7440-62-2	
Zinc, Dissolved	ND	ug/L	10.0	1	07/18/13 10:25	07/22/13 16:05	7440-66-6	
245.1 Mercury	Analytical Method: EPA 245.1 Preparation Method: EPA 245.1							
Mercury	ND	ug/L	0.20	1	07/18/13 14:57	07/23/13 10:47	7439-97-6	
245.1 Mercury, Dissolved	Analytical Method: EPA 245.1 Preparation Method: EPA 245.1							
Mercury, Dissolved	ND	ug/L	0.20	1	07/18/13 14:53	07/23/13 12:10	7439-97-6	
245.1 Potentially Diss Mercury	Analytical Method: EPA 245.1 Preparation Method: EPA 245.1							
Mercury, Dissolved	ND	ug/L	0.20	1	07/16/13 08:30	07/16/13 11:36	7439-97-6	
2510B Specific Conductance	Analytical Method: SM 2510B							
Specific Conductance	**244**	umhos/cm	10.0	1		07/18/13 11:36		
Salinity	Analytical Method: Calculated							
Salinity (as dissolved solids)	**153**	mg/L	6.4	1		07/23/13 10:09		

REPORT OF LABORATORY ANALYSIS

This report shall not be reproduced, except in full,
without the written consent of Pace Analytical Services, Inc..

Pace Analytical Services, Inc.
9608 Loiret Blvd.
Lenexa, KS 66219
(913)599-5665

ANALYTICAL RESULTS

Project: JULY 2013 RICO WATER SAMPLING
Pace Project No.: 60148708

Sample: DR-8_20130710 **Lab ID: 60148708010** Collected: 07/10/13 10:48 Received: 07/12/13 10:30 Matrix: Water

Parameters	Results	Units	Report Limit	DF	Prepared	Analyzed	CAS No.	Qual
Salinity	Analytical Method: Calculated							
Salinity (as seawater)	**0.12**	PSU	0.014	1		07/23/13 10:09		
2320B Alkalinity	Analytical Method: SM 2320B							
Alkalinity,Bicarbonate (CaCO3)	**116**	mg/L	20.0	1		07/19/13 11:42		
Alkalinity, Carbonate (CaCO3)	ND	mg/L	20.0	1		07/19/13 11:42		
Alkalinity, Total as CaCO3	**116**	mg/L	20.0	1		07/19/13 11:42		
2540C Total Dissolved Solids	Analytical Method: SM 2540C							
Total Dissolved Solids	**157**	mg/L	5.0	1		07/16/13 09:38		
2540D Total Suspended Solids	Analytical Method: SM 2540D							
Total Suspended Solids	ND	mg/L	5.0	1		07/15/13 09:33		
4500S2D Sulfide, Total	Analytical Method: SM 4500-S-2 D							
Sulfide, Total	ND	mg/L	0.050	1		07/16/13 13:56	18496-25-8	
300.0 IC Anions 28 Days	Analytical Method: EPA 300.0							
Chloride	**1.1**	mg/L	1.0	1		07/26/13 20:34	16887-00-6	
Sulfate	**42.6**	mg/L	10.0	10		07/25/13 21:04	14808-79-8	
353.2 Nitrogen, NO2/NO3 pres.	Analytical Method: EPA 353.2							
Nitrogen, NO2 plus NO3	ND	mg/L	0.10	1		07/23/13 13:21		
4500CNE Cyanide, Total	Analytical Method: SM 4500-CN-E							
Cyanide	ND	mg/L	0.0050	1		07/15/13 14:25	57-12-5	
5310C TOC	Analytical Method: SM 5310C							
Total Organic Carbon	**1.0**	mg/L	0.50	1		07/17/13 16:50	7440-44-0	

This report shall not be reproduced, except in full,
without the written consent of Pace Analytical Services, Inc..

Pace Analytical Services, Inc.
9608 Loiret Blvd.
Lenexa, KS 66219
(913)599-5665

ANALYTICAL RESULTS

Project: JULY 2013 RICO WATER SAMPLING
Pace Project No.: 60148708

Sample: DR-9_20130710 **Lab ID: 60148708011** Collected: 07/10/13 15:57 Received: 07/12/13 10:30 Matrix: Water

Parameters	Results	Units	Report Limit	DF	Prepared	Analyzed	CAS No.	Qual
200.7 Potentially Diss. Metals	Analytical Method: EPA 200.7 Preparation Method: EPA 200.7							
Calcium, Dissolved	**64400**	ug/L	100	1	07/18/13 10:25	07/24/13 13:52	7440-70-2	
Magnesium, Dissolved	**8210**	ug/L	50.0	1	07/18/13 10:25	07/24/13 13:52	7439-95-4	
Potassium, Dissolved	**1310**	ug/L	500	1	07/18/13 10:25	07/24/13 13:52	7440-09-7	
Sodium, Dissolved	**4460**	ug/L	500	1	07/18/13 10:25	07/24/13 13:52	7440-23-5	
200.8 MET ICPMS	Analytical Method: EPA 200.8 Preparation Method: EPA 200.8							
Aluminum	**9.5**	ug/L	4.0	1	07/21/13 05:44	07/25/13 21:52	7429-90-5	
Antimony	ND	ug/L	0.50	1	07/21/13 05:44	07/25/13 21:52	7440-36-0	
Arsenic	ND	ug/L	0.50	1	07/21/13 05:44	07/25/13 21:52	7440-38-2	
Barium	**77.0**	ug/L	0.30	1	07/21/13 05:44	07/25/13 21:52	7440-39-3	
Beryllium	ND	ug/L	0.20	1	07/21/13 05:44	07/25/13 21:52	7440-41-7	
Cadmium	**0.22**	ug/L	0.080	1	07/21/13 05:44	07/25/13 21:52	7440-43-9	
Calcium	**64100**	ug/L	400	20	07/21/13 05:44	07/25/13 22:02	7440-70-2	M1
Chromium	ND	ug/L	0.50	1	07/21/13 05:44	07/25/13 21:52	7440-47-3	
Cobalt	ND	ug/L	0.50	1	07/21/13 05:44	07/25/13 21:52	7440-48-4	
Copper	**0.56**	ug/L	0.50	1	07/21/13 05:44	07/25/13 21:52	7440-50-8	
Iron	ND	ug/L	50.0	1	07/21/13 05:44	07/25/13 21:52	7439-89-6	
Lead	**0.20**	ug/L	0.10	1	07/21/13 05:44	07/25/13 21:52	7439-92-1	
Magnesium	**7680**	ug/L	5.0	1	07/21/13 05:44	07/25/13 21:52	7439-95-4	
Manganese	**21.1**	ug/L	0.50	1	07/21/13 05:44	07/25/13 21:52	7439-96-5	
Molybdenum	**1.5**	ug/L	0.50	1	07/21/13 05:44	07/25/13 21:52	7439-98-7	
Nickel	ND	ug/L	0.50	1	07/21/13 05:44	07/25/13 21:52	7440-02-0	
Potassium	**1310**	ug/L	20.0	1	07/21/13 05:44	07/25/13 21:52	7440-09-7	
Selenium	ND	ug/L	0.50	1	07/21/13 05:44	07/25/13 21:52	7782-49-2	
Silica	**7580**	ug/L	1070	20	07/21/13 05:44	07/25/13 22:02	7631-86-9	
Silver	ND	ug/L	0.50	1	07/21/13 05:44	07/26/13 16:11	7440-22-4	
Sodium	**3980**	ug/L	50.0	1	07/21/13 05:44	07/25/13 21:52	7440-23-5	
Thallium	ND	ug/L	0.10	1	07/21/13 05:44	07/25/13 21:52	7440-28-0	
Total Hardness by 2340B	**192000**	ug/L	1420	20	07/21/13 05:44	07/25/13 22:02		
Vanadium	**0.20**	ug/L	0.10	1	07/21/13 05:44	07/25/13 21:52	7440-62-2	
Zinc	**34.8**	ug/L	5.0	1	07/21/13 05:44	07/25/13 21:52	7440-66-6	
200.8 MET ICPMS, Dissolved	Analytical Method: EPA 200.8 Preparation Method: EPA 200.8							
Aluminum, Dissolved	**6.8**	ug/L	4.0	1	07/21/13 05:45	07/24/13 03:49	7429-90-5	
Antimony, Dissolved	ND	ug/L	0.50	1	07/21/13 05:45	07/24/13 03:49	7440-36-0	
Arsenic, Dissolved	ND	ug/L	0.50	1	07/21/13 05:45	07/24/13 03:49	7440-38-2	
Barium, Dissolved	**80.1**	ug/L	0.30	1	07/21/13 05:45	07/24/13 03:49	7440-39-3	
Beryllium, Dissolved	ND	ug/L	0.20	1	07/21/13 05:45	07/24/13 03:49	7440-41-7	
Cadmium, Dissolved	**0.21**	ug/L	0.080	1	07/21/13 05:45	07/24/13 03:49	7440-43-9	
Calcium, Dissolved	**60600**	ug/L	400	20	07/21/13 05:45	07/24/13 03:54	7440-70-2	M1
Chromium, Dissolved	**0.98**	ug/L	0.50	1	07/21/13 05:45	07/24/13 03:49	7440-47-3	
Cobalt, Dissolved	ND	ug/L	0.50	1	07/21/13 05:45	07/24/13 03:49	7440-48-4	
Copper, Dissolved	**1.1**	ug/L	0.50	1	07/21/13 05:45	07/24/13 03:49	7440-50-8	
Iron, Dissolved	ND	ug/L	50.0	1	07/21/13 05:45	07/24/13 03:49	7439-89-6	
Lead, Dissolved	ND	ug/L	0.10	1	07/21/13 05:45	07/24/13 03:49	7439-92-1	
Magnesium, Dissolved	**7690**	ug/L	5.0	1	07/21/13 05:45	07/24/13 03:49	7439-95-4	

This report shall not be reproduced, except in full,
without the written consent of Pace Analytical Services, Inc..

Pace Analytical Services, Inc.
9608 Loiret Blvd.
Lenexa, KS 66219
(913)599-5665

ANALYTICAL RESULTS

Project: JULY 2013 RICO WATER SAMPLING
Pace Project No.: 60148708

Sample: DR-9_20130710 **Lab ID: 60148708011** Collected: 07/10/13 15:57 Received: 07/12/13 10:30 Matrix: Water

Parameters	Results	Units	Report Limit	DF	Prepared	Analyzed	CAS No.	Qual
200.8 MET ICPMS, Dissolved	Analytical Method: EPA 200.8 Preparation Method: EPA 200.8							
Manganese, Dissolved	**17.0**	ug/L	0.50	1	07/21/13 05:45	07/24/13 03:49	7439-96-5	
Molybdenum, Dissolved	**1.6**	ug/L	0.50	1	07/21/13 05:45	07/24/13 03:49	7439-98-7	
Nickel, Dissolved	**0.71**	ug/L	0.50	1	07/21/13 05:45	07/24/13 03:49	7440-02-0	
Potassium, Dissolved	**1200**	ug/L	20.0	1	07/21/13 05:45	07/24/13 03:49	7440-09-7	
Selenium, Dissolved	ND	ug/L	0.50	1	07/21/13 05:45	07/24/13 03:49	7782-49-2	
Silver, Dissolved	ND	ug/L	0.50	1	07/21/13 05:45	07/24/13 03:49	7440-22-4	
Sodium, Dissolved	**4050**	ug/L	50.0	1	07/21/13 05:45	07/24/13 03:49	7440-23-5	
Thallium, Dissolved	ND	ug/L	0.10	1	07/21/13 05:45	07/24/13 03:49	7440-28-0	
Vanadium, Dissolved	**0.18**	ug/L	0.10	1	07/21/13 05:45	07/24/13 03:49	7440-62-2	
Zinc, Dissolved	**28.1**	ug/L	5.0	1	07/21/13 05:45	07/24/13 03:49	7440-66-6	
200.8 Potentially Diss. Metals	Analytical Method: EPA 200.8 Preparation Method: EPA 200.8							
Aluminum, Dissolved	**6.5J**	ug/L	50.0	1	07/18/13 10:25	07/22/13 16:09	7429-90-5	
Antimony, Dissolved	**0.14J**	ug/L	1.0	1	07/18/13 10:25	07/22/13 16:09	7440-36-0	B
Arsenic, Dissolved	**0.32J**	ug/L	1.0	1	07/18/13 10:25	07/22/13 16:09	7440-38-2	
Barium, Dissolved	**78.7**	ug/L	1.0	1	07/18/13 10:25	07/22/13 16:09	7440-39-3	
Beryllium, Dissolved	ND	ug/L	0.50	1	07/18/13 10:25	07/22/13 16:09	7440-41-7	
Cadmium, Dissolved	**0.28J**	ug/L	0.50	1	07/18/13 10:25	07/22/13 16:09	7440-43-9	
Chromium, Dissolved	**1.5**	ug/L	1.0	1	07/18/13 10:25	07/22/13 16:09	7440-47-3	
Cobalt, Dissolved	ND	ug/L	1.0	1	07/18/13 10:25	07/22/13 16:09	7440-48-4	
Copper, Dissolved	**0.96J**	ug/L	1.0	1	07/18/13 10:25	07/22/13 16:09	7440-50-8	
Iron, Dissolved	**44.6J**	ug/L	50.0	1	07/18/13 10:25	07/22/13 16:09	7439-89-6	
Lead, Dissolved	**0.29J**	ug/L	1.0	1	07/18/13 10:25	07/22/13 16:09	7439-92-1	B
Manganese, Dissolved	**21.6**	ug/L	1.0	1	07/18/13 10:25	07/22/13 16:09	7439-96-5	
Molybdenum, Dissolved	**1.7**	ug/L	1.0	1	07/18/13 10:25	07/22/13 16:09	7439-98-7	B
Nickel, Dissolved	ND	ug/L	1.0	1	07/18/13 10:25	07/22/13 16:09	7440-02-0	
Selenium, Dissolved	ND	ug/L	1.0	1	07/18/13 10:25	07/22/13 16:09	7782-49-2	
Silver, Dissolved	ND	ug/L	0.50	1	07/18/13 10:25	07/22/13 16:09	7440-22-4	
Thallium, Dissolved	**0.30J**	ug/L	1.0	1	07/18/13 10:25	07/22/13 16:09	7440-28-0	B
Vanadium, Dissolved	**0.57J**	ug/L	1.0	1	07/18/13 10:25	07/23/13 12:21	7440-62-2	
Zinc, Dissolved	**32.8**	ug/L	10.0	1	07/18/13 10:25	07/22/13 16:09	7440-66-6	
245.1 Mercury	Analytical Method: EPA 245.1 Preparation Method: EPA 245.1							
Mercury	ND	ug/L	0.20	1	07/18/13 14:57	07/23/13 10:54	7439-97-6	
245.1 Mercury, Dissolved	Analytical Method: EPA 245.1 Preparation Method: EPA 245.1							
Mercury, Dissolved	ND	ug/L	0.20	1	07/18/13 14:53	07/23/13 12:18	7439-97-6	
245.1 Potentially Diss Mercury	Analytical Method: EPA 245.1 Preparation Method: EPA 245.1							
Mercury, Dissolved	ND	ug/L	0.20	1	07/16/13 08:30	07/16/13 11:38	7439-97-6	
2510B Specific Conductance	Analytical Method: SM 2510B							
Specific Conductance	**403**	umhos/cm	10.0	1		07/18/13 11:42		
Salinity	Analytical Method: Calculated							
Salinity (as dissolved solids)	**251**	mg/L	6.4	1		07/23/13 10:09		

REPORT OF LABORATORY ANALYSIS

This report shall not be reproduced, except in full,
without the written consent of Pace Analytical Services, Inc..

Pace Analytical Services, Inc.
9608 Loiret Blvd.
Lenexa, KS 66219
(913)599-5665

ANALYTICAL RESULTS

Project: JULY 2013 RICO WATER SAMPLING
Pace Project No.: 60148708

Sample: DR-9_20130710 **Lab ID: 60148708011** Collected: 07/10/13 15:57 Received: 07/12/13 10:30 Matrix: Water

Parameters	Results	Units	Report Limit	DF	Prepared	Analyzed	CAS No.	Qual
Salinity	Analytical Method: Calculated							
Salinity (as seawater)	**0.19**	PSU	0.014	1		07/23/13 10:09		
2320B Alkalinity	Analytical Method: SM 2320B							
Alkalinity,Bicarbonate (CaCO3)	**143**	mg/L	20.0	1		07/19/13 11:46		
Alkalinity, Carbonate (CaCO3)	ND	mg/L	20.0	1		07/19/13 11:46		
Alkalinity, Total as CaCO3	**143**	mg/L	20.0	1		07/19/13 11:46		
2540C Total Dissolved Solids	Analytical Method: SM 2540C							
Total Dissolved Solids	**259**	mg/L	5.0	1		07/16/13 09:38		
2540D Total Suspended Solids	Analytical Method: SM 2540D							
Total Suspended Solids	ND	mg/L	5.0	1		07/15/13 09:34		
4500S2D Sulfide, Total	Analytical Method: SM 4500-S-2 D							
Sulfide, Total	ND	mg/L	0.050	1		07/16/13 13:56	18496-25-8	
300.0 IC Anions 28 Days	Analytical Method: EPA 300.0							
Chloride	**1.3**	mg/L	1.0	1		07/26/13 21:08	16887-00-6	
Sulfate	**81.2**	mg/L	10.0	10		07/26/13 21:25	14808-79-8	
353.2 Nitrogen, NO2/NO3 pres.	Analytical Method: EPA 353.2							
Nitrogen, NO2 plus NO3	ND	mg/L	0.10	1		07/23/13 13:22		
4500CNE Cyanide, Total	Analytical Method: SM 4500-CN-E							
Cyanide	ND	mg/L	0.0050	1		07/15/13 14:28	57-12-5	
5310C TOC	Analytical Method: SM 5310C							
Total Organic Carbon	**0.99**	mg/L	0.50	1		07/17/13 17:27	7440-44-0	

This report shall not be reproduced, except in full,
without the written consent of Pace Analytical Services, Inc..

Pace Analytical Services, Inc.
9608 Loiret Blvd.
Lenexa, KS 66219
(913)599-5665

ANALYTICAL RESULTS

Project: JULY 2013 RICO WATER SAMPLING
Pace Project No.: 60148708

Sample: FB-LAB_20130710 **Lab ID: 60148708012** Collected: 07/10/13 12:08 Received: 07/12/13 10:30 Matrix: Water

Parameters	Results	Units	Report Limit	DF	Prepared	Analyzed	CAS No.	Qual
200.7 Potentially Diss. Metals	Analytical Method: EPA 200.7 Preparation Method: EPA 200.7							
Calcium, Dissolved	**29.0J**	ug/L	100	1	07/18/13 10:25	07/24/13 13:55	7440-70-2	
Magnesium, Dissolved	ND	ug/L	50.0	1	07/18/13 10:25	07/24/13 13:55	7439-95-4	
Potassium, Dissolved	ND	ug/L	500	1	07/18/13 10:25	07/24/13 13:55	7440-09-7	
Sodium, Dissolved	**358J**	ug/L	500	1	07/18/13 10:25	07/24/13 13:55	7440-23-5	
200.8 MET ICPMS	Analytical Method: EPA 200.8 Preparation Method: EPA 200.8							
Aluminum	ND	ug/L	4.0	1	07/21/13 05:44	07/25/13 19:59	7429-90-5	
Antimony	ND	ug/L	0.50	1	07/21/13 05:44	07/25/13 19:59	7440-36-0	
Arsenic	ND	ug/L	0.50	1	07/21/13 05:44	07/25/13 19:59	7440-38-2	
Barium	ND	ug/L	0.30	1	07/21/13 05:44	07/25/13 19:59	7440-39-3	
Beryllium	ND	ug/L	0.20	1	07/21/13 05:44	07/25/13 19:59	7440-41-7	
Cadmium	ND	ug/L	0.080	1	07/21/13 05:44	07/25/13 19:59	7440-43-9	
Calcium	ND	ug/L	20.0	1	07/21/13 05:44	07/25/13 19:59	7440-70-2	
Chromium	ND	ug/L	0.50	1	07/21/13 05:44	07/25/13 19:59	7440-47-3	
Cobalt	ND	ug/L	0.50	1	07/21/13 05:44	07/25/13 19:59	7440-48-4	
Copper	ND	ug/L	0.50	1	07/21/13 05:44	07/25/13 19:59	7440-50-8	
Iron	ND	ug/L	50.0	1	07/21/13 05:44	07/25/13 19:59	7439-89-6	
Lead	ND	ug/L	0.10	1	07/21/13 05:44	07/25/13 19:59	7439-92-1	
Magnesium	ND	ug/L	5.0	1	07/21/13 05:44	07/25/13 19:59	7439-95-4	
Manganese	ND	ug/L	0.50	1	07/21/13 05:44	07/25/13 19:59	7439-96-5	
Molybdenum	ND	ug/L	0.50	1	07/21/13 05:44	07/25/13 19:59	7439-98-7	
Nickel	ND	ug/L	0.50	1	07/21/13 05:44	07/25/13 19:59	7440-02-0	
Potassium	ND	ug/L	20.0	1	07/21/13 05:44	07/25/13 19:59	7440-09-7	
Selenium	ND	ug/L	0.50	1	07/21/13 05:44	07/25/13 19:59	7782-49-2	
Silica	ND	ug/L	53.5	1	07/21/13 05:44	07/25/13 19:59	7631-86-9	
Silver	ND	ug/L	0.50	1	07/21/13 05:44	07/26/13 16:16	7440-22-4	
Sodium	**301**	ug/L	50.0	1	07/21/13 05:44	07/26/13 16:16	7440-23-5	
Thallium	ND	ug/L	0.10	1	07/21/13 05:44	07/25/13 19:59	7440-28-0	
Total Hardness by 2340B	ND	ug/L	71.0	1	07/21/13 05:44	07/25/13 19:59		
Vanadium	ND	ug/L	0.10	1	07/21/13 05:44	07/25/13 19:59	7440-62-2	
Zinc	ND	ug/L	5.0	1	07/21/13 05:44	07/25/13 19:59	7440-66-6	
200.8 MET ICPMS, Dissolved	Analytical Method: EPA 200.8 Preparation Method: EPA 200.8							
Aluminum, Dissolved	ND	ug/L	4.0	1	07/21/13 05:45	07/24/13 03:59	7429-90-5	
Antimony, Dissolved	ND	ug/L	0.50	1	07/21/13 05:45	07/24/13 03:59	7440-36-0	
Arsenic, Dissolved	ND	ug/L	0.50	1	07/21/13 05:45	07/24/13 03:59	7440-38-2	
Barium, Dissolved	ND	ug/L	0.30	1	07/21/13 05:45	07/24/13 03:59	7440-39-3	
Beryllium, Dissolved	ND	ug/L	0.20	1	07/21/13 05:45	07/24/13 03:59	7440-41-7	
Cadmium, Dissolved	ND	ug/L	0.080	1	07/21/13 05:45	07/24/13 03:59	7440-43-9	
Calcium, Dissolved	ND	ug/L	20.0	1	07/21/13 05:45	07/24/13 03:59	7440-70-2	
Chromium, Dissolved	ND	ug/L	0.50	1	07/21/13 05:45	07/24/13 03:59	7440-47-3	
Cobalt, Dissolved	ND	ug/L	0.50	1	07/21/13 05:45	07/24/13 03:59	7440-48-4	
Copper, Dissolved	**0.58**	ug/L	0.50	1	07/21/13 05:45	07/24/13 03:59	7440-50-8	
Iron, Dissolved	ND	ug/L	50.0	1	07/21/13 05:45	07/24/13 03:59	7439-89-6	
Lead, Dissolved	ND	ug/L	0.10	1	07/21/13 05:45	07/24/13 03:59	7439-92-1	
Magnesium, Dissolved	ND	ug/L	5.0	1	07/21/13 05:45	07/24/13 03:59	7439-95-4	

This report shall not be reproduced, except in full,
without the written consent of Pace Analytical Services, Inc..

Pace Analytical Services, Inc.
9608 Loiret Blvd.
Lenexa, KS 66219
(913)599-5665

ANALYTICAL RESULTS

Project: JULY 2013 RICO WATER SAMPLING
Pace Project No.: 60148708

Sample: FB-LAB_20130710 **Lab ID: 60148708012** Collected: 07/10/13 12:08 Received: 07/12/13 10:30 Matrix: Water

Parameters	Results	Units	Report Limit	DF	Prepared	Analyzed	CAS No.	Qual
200.8 MET ICPMS, Dissolved	Analytical Method: EPA 200.8 Preparation Method: EPA 200.8							
Manganese, Dissolved	ND	ug/L	0.50	1	07/21/13 05:45	07/24/13 03:59	7439-96-5	
Molybdenum, Dissolved	ND	ug/L	0.50	1	07/21/13 05:45	07/24/13 03:59	7439-98-7	
Nickel, Dissolved	**0.70**	ug/L	0.50	1	07/21/13 05:45	07/24/13 03:59	7440-02-0	
Potassium, Dissolved	**23.9**	ug/L	20.0	1	07/21/13 05:45	07/24/13 03:59	7440-09-7	
Selenium, Dissolved	ND	ug/L	0.50	1	07/21/13 05:45	07/24/13 03:59	7782-49-2	
Silver, Dissolved	ND	ug/L	0.50	1	07/21/13 05:45	07/24/13 03:59	7440-22-4	
Sodium, Dissolved	**326**	ug/L	50.0	1	07/21/13 05:45	07/24/13 03:59	7440-23-5	
Thallium, Dissolved	ND	ug/L	0.10	1	07/21/13 05:45	07/24/13 03:59	7440-28-0	
Vanadium, Dissolved	ND	ug/L	0.10	1	07/21/13 05:45	07/24/13 03:59	7440-62-2	
Zinc, Dissolved	ND	ug/L	5.0	1	07/21/13 05:45	07/24/13 03:59	7440-66-6	
200.8 Potentially Diss. Metals	Analytical Method: EPA 200.8 Preparation Method: EPA 200.8							
Aluminum, Dissolved	ND	ug/L	50.0	1	07/18/13 10:25	07/22/13 16:13	7429-90-5	
Antimony, Dissolved	**0.075J**	ug/L	1.0	1	07/18/13 10:25	07/22/13 16:13	7440-36-0	B
Arsenic, Dissolved	ND	ug/L	1.0	1	07/18/13 10:25	07/22/13 16:13	7440-38-2	
Barium, Dissolved	**0.26J**	ug/L	1.0	1	07/18/13 10:25	07/22/13 16:13	7440-39-3	
Beryllium, Dissolved	ND	ug/L	0.50	1	07/18/13 10:25	07/22/13 16:13	7440-41-7	
Cadmium, Dissolved	ND	ug/L	0.50	1	07/18/13 10:25	07/22/13 16:13	7440-43-9	
Chromium, Dissolved	**1.1**	ug/L	1.0	1	07/18/13 10:25	07/22/13 16:13	7440-47-3	
Cobalt, Dissolved	ND	ug/L	1.0	1	07/18/13 10:25	07/22/13 16:13	7440-48-4	
Copper, Dissolved	ND	ug/L	1.0	1	07/18/13 10:25	07/22/13 16:13	7440-50-8	
Iron, Dissolved	**6.0J**	ug/L	50.0	1	07/18/13 10:25	07/22/13 16:13	7439-89-6	
Lead, Dissolved	**0.20J**	ug/L	1.0	1	07/18/13 10:25	07/22/13 16:13	7439-92-1	B
Manganese, Dissolved	ND	ug/L	1.0	1	07/18/13 10:25	07/22/13 16:13	7439-96-5	
Molybdenum, Dissolved	ND	ug/L	1.0	1	07/18/13 10:25	07/22/13 16:13	7439-98-7	
Nickel, Dissolved	**1.0**	ug/L	1.0	1	07/18/13 10:25	07/22/13 16:13	7440-02-0	
Selenium, Dissolved	ND	ug/L	1.0	1	07/18/13 10:25	07/22/13 16:13	7782-49-2	
Silver, Dissolved	ND	ug/L	0.50	1	07/18/13 10:25	07/22/13 16:13	7440-22-4	
Thallium, Dissolved	**0.28J**	ug/L	1.0	1	07/18/13 10:25	07/22/13 16:13	7440-28-0	B
Vanadium, Dissolved	**0.63J**	ug/L	1.0	1	07/18/13 10:25	07/23/13 12:25	7440-62-2	
Zinc, Dissolved	ND	ug/L	10.0	1	07/18/13 10:25	07/22/13 16:13	7440-66-6	
245.1 Mercury	Analytical Method: EPA 245.1 Preparation Method: EPA 245.1							
Mercury	ND	ug/L	0.20	1	07/18/13 14:57	07/23/13 10:57	7439-97-6	
245.1 Mercury, Dissolved	Analytical Method: EPA 245.1 Preparation Method: EPA 245.1							
Mercury, Dissolved	ND	ug/L	0.20	1	07/18/13 14:53	07/23/13 12:20	7439-97-6	
245.1 Potentially Diss Mercury	Analytical Method: EPA 245.1 Preparation Method: EPA 245.1							
Mercury, Dissolved	ND	ug/L	0.20	1	07/16/13 08:30	07/16/13 11:40	7439-97-6	
2510B Specific Conductance	Analytical Method: SM 2510B							
Specific Conductance	ND	umhos/cm	10.0	1		07/18/13 11:43		
Salinity	Analytical Method: Calculated							
Salinity (as dissolved solids)	ND	mg/L	6.4	1		07/23/13 10:09		

REPORT OF LABORATORY ANALYSIS

This report shall not be reproduced, except in full,
without the written consent of Pace Analytical Services, Inc..

Pace Analytical Services, Inc.
9608 Loiret Blvd.
Lenexa, KS 66219
(913)599-5665

ANALYTICAL RESULTS

Project: JULY 2013 RICO WATER SAMPLING
Pace Project No.: 60148708

Sample: FB-LAB_20130710 **Lab ID: 60148708012** Collected: 07/10/13 12:08 Received: 07/12/13 10:30 Matrix: Water

Parameters	Results	Units	Report Limit	DF	Prepared	Analyzed	CAS No.	Qual
Salinity	Analytical Method: Calculated							
Salinity (as seawater)	ND	PSU	0.014	1		07/23/13 10:09		
2320B Alkalinity	Analytical Method: SM 2320B							
Alkalinity,Bicarbonate (CaCO3)	ND	mg/L	20.0	1		07/19/13 11:50		
Alkalinity, Carbonate (CaCO3)	ND	mg/L	20.0	1		07/19/13 11:50		
Alkalinity, Total as CaCO3	ND	mg/L	20.0	1		07/19/13 11:50		
2540C Total Dissolved Solids	Analytical Method: SM 2540C							
Total Dissolved Solids	ND	mg/L	5.0	1		07/16/13 09:38		
2540D Total Suspended Solids	Analytical Method: SM 2540D							
Total Suspended Solids	ND	mg/L	5.0	1		07/15/13 09:34		
4500S2D Sulfide, Total	Analytical Method: SM 4500-S-2 D							
Sulfide, Total	ND	mg/L	0.050	1		07/16/13 13:57	18496-25-8	
300.0 IC Anions 28 Days	Analytical Method: EPA 300.0							
Chloride	ND	mg/L	1.0	1		07/26/13 21:42	16887-00-6	
Sulfate	ND	mg/L	1.0	1		07/26/13 21:42	14808-79-8	
353.2 Nitrogen, NO2/NO3 pres.	Analytical Method: EPA 353.2							
Nitrogen, NO2 plus NO3	ND	mg/L	0.10	1		07/23/13 13:25		
4500CNE Cyanide, Total	Analytical Method: SM 4500-CN-E							
Cyanide	ND	mg/L	0.0050	1		07/15/13 14:28	57-12-5	
5310C TOC	Analytical Method: SM 5310C							
Total Organic Carbon	ND	mg/L	0.50	1		07/17/13 17:44	7440-44-0	

This report shall not be reproduced, except in full,
without the written consent of Pace Analytical Services, Inc..

Pace Analytical Services, Inc.
9608 Loiret Blvd.
Lenexa, KS 66219
(913)599-5665

ANALYTICAL RESULTS

Project: JULY 2013 RICO WATER SAMPLING
Pace Project No.: 60148708

Sample: GW-1_20130709 **Lab ID: 60148708013** Collected: 07/09/13 10:32 Received: 07/12/13 10:30 Matrix: Water

Parameters	Results	Units	Report Limit	DF	Prepared	Analyzed	CAS No.	Qual
200.7 Potentially Diss. Metals	Analytical Method: EPA 200.7 Preparation Method: EPA 200.7							
Calcium, Dissolved	**48600**	ug/L	100	1	07/18/13 10:25	07/24/13 13:58	7440-70-2	
Magnesium, Dissolved	**6280**	ug/L	50.0	1	07/18/13 10:25	07/24/13 13:58	7439-95-4	
Potassium, Dissolved	**864**	ug/L	500	1	07/18/13 10:25	07/24/13 13:58	7440-09-7	
Sodium, Dissolved	**2460**	ug/L	500	1	07/18/13 10:25	07/24/13 13:58	7440-23-5	
200.8 MET ICPMS	Analytical Method: EPA 200.8 Preparation Method: EPA 200.8							
Aluminum	**8320**	ug/L	4.0	1	07/21/13 05:44	07/25/13 20:08	7429-90-5	
Antimony	**0.53**	ug/L	0.50	1	07/21/13 05:44	07/25/13 20:08	7440-36-0	
Arsenic	**13.0**	ug/L	0.50	1	07/21/13 05:44	07/25/13 20:08	7440-38-2	
Barium	**208**	ug/L	0.30	1	07/21/13 05:44	07/25/13 20:08	7440-39-3	
Beryllium	**0.54**	ug/L	0.20	1	07/21/13 05:44	07/25/13 20:08	7440-41-7	
Cadmium	**1.2**	ug/L	0.080	1	07/21/13 05:44	07/25/13 20:08	7440-43-9	
Calcium	**50700**	ug/L	400	20	07/21/13 05:44	07/25/13 20:13	7440-70-2	
Chromium	**9.4**	ug/L	0.50	1	07/21/13 05:44	07/25/13 20:08	7440-47-3	
Cobalt	**8.2**	ug/L	0.50	1	07/21/13 05:44	07/25/13 20:08	7440-48-4	
Copper	**46.1**	ug/L	0.50	1	07/21/13 05:44	07/25/13 20:08	7440-50-8	
Iron	**14200**	ug/L	50.0	1	07/21/13 05:44	07/25/13 20:08	7439-89-6	
Lead	**40.6**	ug/L	0.10	1	07/21/13 05:44	07/25/13 20:08	7439-92-1	
Magnesium	**8550**	ug/L	5.0	1	07/21/13 05:44	07/25/13 20:08	7439-95-4	
Manganese	**1510**	ug/L	10.0	20	07/21/13 05:44	07/25/13 20:13	7439-96-5	
Molybdenum	**4.1**	ug/L	0.50	1	07/21/13 05:44	07/25/13 20:08	7439-98-7	
Nickel	**14.4**	ug/L	0.50	1	07/21/13 05:44	07/25/13 20:08	7440-02-0	
Potassium	**2820**	ug/L	20.0	1	07/21/13 05:44	07/25/13 20:08	7440-09-7	
Selenium	**1.5**	ug/L	0.50	1	07/21/13 05:44	07/25/13 20:08	7782-49-2	
Silica	**31800**	ug/L	1070	20	07/21/13 05:44	07/25/13 20:13	7631-86-9	
Silver	ND	ug/L	0.50	1	07/21/13 05:44	07/26/13 16:21	7440-22-4	
Sodium	**2500**	ug/L	50.0	1	07/21/13 05:44	07/25/13 20:08	7440-23-5	
Thallium	**0.26**	ug/L	0.10	1	07/21/13 05:44	07/25/13 20:08	7440-28-0	
Total Hardness by 2340B	**162000**	ug/L	1420	20	07/21/13 05:44	07/25/13 20:13		
Vanadium	**17.1**	ug/L	0.10	1	07/21/13 05:44	07/25/13 20:08	7440-62-2	
Zinc	**140**	ug/L	5.0	1	07/21/13 05:44	07/25/13 20:08	7440-66-6	
200.8 MET ICPMS, Dissolved	Analytical Method: EPA 200.8 Preparation Method: EPA 200.8							
Aluminum, Dissolved	**5.9**	ug/L	4.0	1	07/21/13 05:45	07/24/13 04:10	7429-90-5	
Antimony, Dissolved	ND	ug/L	0.50	1	07/21/13 05:45	07/24/13 04:10	7440-36-0	
Arsenic, Dissolved	ND	ug/L	0.50	1	07/21/13 05:45	07/24/13 04:10	7440-38-2	
Barium, Dissolved	**57.5**	ug/L	0.30	1	07/21/13 05:45	07/24/13 04:10	7440-39-3	
Beryllium, Dissolved	ND	ug/L	0.20	1	07/21/13 05:45	07/24/13 04:10	7440-41-7	
Cadmium, Dissolved	ND	ug/L	0.080	1	07/21/13 05:45	07/24/13 04:10	7440-43-9	
Calcium, Dissolved	**44600**	ug/L	400	20	07/21/13 05:45	07/24/13 04:15	7440-70-2	
Chromium, Dissolved	ND	ug/L	0.50	1	07/21/13 05:45	07/24/13 04:10	7440-47-3	
Cobalt, Dissolved	ND	ug/L	0.50	1	07/21/13 05:45	07/24/13 04:10	7440-48-4	
Copper, Dissolved	**1.8**	ug/L	0.50	1	07/21/13 05:45	07/24/13 04:10	7440-50-8	
Iron, Dissolved	ND	ug/L	50.0	1	07/21/13 05:45	07/24/13 04:10	7439-89-6	
Lead, Dissolved	ND	ug/L	0.10	1	07/21/13 05:45	07/24/13 04:10	7439-92-1	
Magnesium, Dissolved	**5240**	ug/L	5.0	1	07/21/13 05:45	07/24/13 04:10	7439-95-4	

This report shall not be reproduced, except in full,
without the written consent of Pace Analytical Services, Inc..

Pace Analytical Services, Inc.
9608 Loiret Blvd.
Lenexa, KS 66219
(913)599-5665

ANALYTICAL RESULTS

Project: JULY 2013 RICO WATER SAMPLING
Pace Project No.: 60148708

Sample: GW-1_20130709 **Lab ID: 60148708013** Collected: 07/09/13 10:32 Received: 07/12/13 10:30 Matrix: Water

Parameters	Results	Units	Report Limit	DF	Prepared	Analyzed	CAS No.	Qual
200.8 MET ICPMS, Dissolved	Analytical Method: EPA 200.8 Preparation Method: EPA 200.8							
Manganese, Dissolved	**5.8**	ug/L	0.50	1	07/21/13 05:45	07/24/13 04:10	7439-96-5	
Molybdenum, Dissolved	**1.4**	ug/L	0.50	1	07/21/13 05:45	07/24/13 04:10	7439-98-7	
Nickel, Dissolved	**3.0**	ug/L	0.50	1	07/21/13 05:45	07/24/13 04:10	7440-02-0	
Potassium, Dissolved	**656**	ug/L	20.0	1	07/21/13 05:45	07/24/13 04:10	7440-09-7	
Selenium, Dissolved	ND	ug/L	0.50	1	07/21/13 05:45	07/24/13 04:10	7782-49-2	
Silver, Dissolved	ND	ug/L	0.50	1	07/21/13 05:45	07/24/13 04:10	7440-22-4	
Sodium, Dissolved	**2260**	ug/L	50.0	1	07/21/13 05:45	07/24/13 04:10	7440-23-5	
Thallium, Dissolved	ND	ug/L	0.10	1	07/21/13 05:45	07/24/13 04:10	7440-28-0	
Vanadium, Dissolved	ND	ug/L	0.10	1	07/21/13 05:45	07/24/13 04:10	7440-62-2	
Zinc, Dissolved	**6.1**	ug/L	5.0	1	07/21/13 05:45	07/24/13 04:10	7440-66-6	
200.8 Potentially Diss. Metals	Analytical Method: EPA 200.8 Preparation Method: EPA 200.8							
Aluminum, Dissolved	**1600**	ug/L	50.0	1	07/18/13 10:25	07/22/13 16:21	7429-90-5	
Antimony, Dissolved	**0.25J**	ug/L	1.0	1	07/18/13 10:25	07/22/13 16:21	7440-36-0	B
Arsenic, Dissolved	**2.1**	ug/L	1.0	1	07/18/13 10:25	07/22/13 16:21	7440-38-2	
Barium, Dissolved	**180**	ug/L	1.0	1	07/18/13 10:25	07/22/13 16:21	7440-39-3	
Beryllium, Dissolved	**0.34J**	ug/L	0.50	1	07/18/13 10:25	07/22/13 16:21	7440-41-7	
Cadmium, Dissolved	**1.2**	ug/L	0.50	1	07/18/13 10:25	07/22/13 16:21	7440-43-9	
Chromium, Dissolved	**2.7**	ug/L	1.0	1	07/18/13 10:25	07/22/13 16:21	7440-47-3	
Cobalt, Dissolved	**3.7**	ug/L	1.0	1	07/18/13 10:25	07/22/13 16:21	7440-48-4	
Copper, Dissolved	**29.0**	ug/L	1.0	1	07/18/13 10:25	07/22/13 16:21	7440-50-8	
Iron, Dissolved	**3050**	ug/L	50.0	1	07/18/13 10:25	07/22/13 16:21	7439-89-6	
Lead, Dissolved	**21.9**	ug/L	1.0	1	07/18/13 10:25	07/22/13 16:21	7439-92-1	
Manganese, Dissolved	**860**	ug/L	1.0	1	07/18/13 10:25	07/22/13 16:21	7439-96-5	
Molybdenum, Dissolved	**0.47J**	ug/L	1.0	1	07/18/13 10:25	07/22/13 16:21	7439-98-7	B
Nickel, Dissolved	**8.1**	ug/L	1.0	1	07/18/13 10:25	07/22/13 16:21	7440-02-0	
Selenium, Dissolved	**0.87J**	ug/L	1.0	1	07/18/13 10:25	07/22/13 16:21	7782-49-2	
Silver, Dissolved	**0.51**	ug/L	0.50	1	07/18/13 10:25	07/22/13 16:21	7440-22-4	
Thallium, Dissolved	**0.33J**	ug/L	1.0	1	07/18/13 10:25	07/22/13 16:21	7440-28-0	B
Vanadium, Dissolved	**4.3**	ug/L	1.0	1	07/18/13 10:25	07/23/13 12:29	7440-62-2	
Zinc, Dissolved	**82.5**	ug/L	10.0	1	07/18/13 10:25	07/22/13 16:21	7440-66-6	
245.1 Mercury	Analytical Method: EPA 245.1 Preparation Method: EPA 245.1							
Mercury	ND	ug/L	0.20	1	07/18/13 14:57	07/23/13 10:59	7439-97-6	
245.1 Mercury, Dissolved	Analytical Method: EPA 245.1 Preparation Method: EPA 245.1							
Mercury, Dissolved	ND	ug/L	0.20	1	07/18/13 14:53	07/23/13 12:23	7439-97-6	
245.1 Potentially Diss Mercury	Analytical Method: EPA 245.1 Preparation Method: EPA 245.1							
Mercury, Dissolved	ND	ug/L	0.20	1	07/16/13 08:30	07/16/13 11:43	7439-97-6	
2510B Specific Conductance	Analytical Method: SM 2510B							
Specific Conductance	**277**	umhos/cm	10.0	1		07/18/13 11:45		
Salinity	Analytical Method: Calculated							
Salinity (as dissolved solids)	**171**	mg/L	6.4	1		07/23/13 10:09		

REPORT OF LABORATORY ANALYSIS

This report shall not be reproduced, except in full,
without the written consent of Pace Analytical Services, Inc..

Pace Analytical Services, Inc.
9608 Loiret Blvd.
Lenexa, KS 66219
(913)599-5665

ANALYTICAL RESULTS

Project: JULY 2013 RICO WATER SAMPLING
Pace Project No.: 60148708

Sample: GW-1_20130709 **Lab ID: 60148708013** Collected: 07/09/13 10:32 Received: 07/12/13 10:30 Matrix: Water

Parameters	Results	Units	Report Limit	DF	Prepared	Analyzed	CAS No.	Qual
Salinity	Analytical Method: Calculated							
Salinity (as seawater)	**0.13**	PSU	0.014	1		07/23/13 10:09		
2320B Alkalinity	Analytical Method: SM 2320B							
Alkalinity,Bicarbonate (CaCO3)	**92.9**	mg/L	20.0	1		07/16/13 10:32		
Alkalinity, Carbonate (CaCO3)	ND	mg/L	20.0	1		07/16/13 10:32		
Alkalinity, Total as CaCO3	**92.9**	mg/L	20.0	1		07/16/13 10:32		
2540C Total Dissolved Solids	Analytical Method: SM 2540C							
Total Dissolved Solids	**174**	mg/L	5.0	1		07/12/13 14:15		
2540D Total Suspended Solids	Analytical Method: SM 2540D							
Total Suspended Solids	**564**	mg/L	5.0	1		07/16/13 08:30		
4500S2D Sulfide, Total	Analytical Method: SM 4500-S-2 D							
Sulfide, Total	ND	mg/L	0.050	1		07/15/13 13:25	18496-25-8	
300.0 IC Anions 28 Days	Analytical Method: EPA 300.0							
Chloride	**1.3**	mg/L	1.0	1		07/26/13 22:34	16887-00-6	
Sulfate	**42.3**	mg/L	5.0	5		07/26/13 22:51	14808-79-8	
353.2 Nitrogen, NO2/NO3 pres.	Analytical Method: EPA 353.2							
Nitrogen, NO2 plus NO3	ND	mg/L	0.10	1		07/23/13 13:26		
4500CNE Cyanide, Total	Analytical Method: SM 4500-CN-E							
Cyanide	ND	mg/L	0.0050	1		07/15/13 14:29	57-12-5	
5310C TOC	Analytical Method: SM 5310C							
Total Organic Carbon	**1.1**	mg/L	0.50	1		07/17/13 18:02	7440-44-0	

This report shall not be reproduced, except in full,
without the written consent of Pace Analytical Services, Inc..

Pace Analytical Services, Inc.
9608 Loiret Blvd.
Lenexa, KS 66219
(913)599-5665

ANALYTICAL RESULTS

Project: JULY 2013 RICO WATER SAMPLING
Pace Project No.: 60148708

Sample: GW-5_20130709 **Lab ID: 60148708014** Collected: 07/09/13 11:25 Received: 07/12/13 10:30 Matrix: Water

Parameters	Results	Units	Report Limit	DF	Prepared	Analyzed	CAS No.	Qual
200.7 Potentially Diss. Metals	Analytical Method: EPA 200.7 Preparation Method: EPA 200.7							
Calcium, Dissolved	**595000**	ug/L	1000	10	07/18/13 10:25	07/25/13 10:13	7440-70-2	
Magnesium, Dissolved	**48300**	ug/L	50.0	1	07/18/13 10:25	07/24/13 14:04	7439-95-4	
Potassium, Dissolved	**6390**	ug/L	500	1	07/18/13 10:25	07/24/13 14:04	7440-09-7	
Sodium, Dissolved	**9520**	ug/L	500	1	07/18/13 10:25	07/24/13 14:04	7440-23-5	
200.8 MET ICPMS	Analytical Method: EPA 200.8 Preparation Method: EPA 200.8							
Aluminum	**16400**	ug/L	4.0	1	07/21/13 05:44	07/25/13 20:28	7429-90-5	
Antimony	**2.6**	ug/L	0.50	1	07/21/13 05:44	07/25/13 20:28	7440-36-0	
Arsenic	**352**	ug/L	0.50	1	07/21/13 05:44	07/25/13 20:28	7440-38-2	
Barium	**110**	ug/L	0.30	1	07/21/13 05:44	07/25/13 20:28	7440-39-3	
Beryllium	**1.5**	ug/L	0.20	1	07/21/13 05:44	07/25/13 20:28	7440-41-7	
Cadmium	**116**	ug/L	0.080	1	07/21/13 05:44	07/25/13 20:28	7440-43-9	
Calcium	**619000**	ug/L	4000	200	07/21/13 05:44	07/26/13 16:40	7440-70-2	
Chromium	**18.6**	ug/L	0.50	1	07/21/13 05:44	07/25/13 20:28	7440-47-3	
Cobalt	**47.5**	ug/L	0.50	1	07/21/13 05:44	07/25/13 20:28	7440-48-4	
Copper	**1600**	ug/L	10.0	20	07/21/13 05:44	07/25/13 20:34	7440-50-8	
Iron	**76500**	ug/L	1000	20	07/21/13 05:44	07/25/13 20:34	7439-89-6	
Lead	**16700**	ug/L	20.0	200	07/21/13 05:44	07/26/13 16:40	7439-92-1	
Magnesium	**52700**	ug/L	100	20	07/21/13 05:44	07/25/13 20:34	7439-95-4	
Manganese	**8470**	ug/L	10.0	20	07/21/13 05:44	07/25/13 20:34	7439-96-5	
Molybdenum	**31.8**	ug/L	0.50	1	07/21/13 05:44	07/25/13 20:28	7439-98-7	
Nickel	**65.3**	ug/L	0.50	1	07/21/13 05:44	07/25/13 20:28	7440-02-0	
Potassium	**8720**	ug/L	20.0	1	07/21/13 05:44	07/25/13 20:28	7440-09-7	
Selenium	**5.6**	ug/L	0.50	1	07/21/13 05:44	07/25/13 20:28	7782-49-2	
Silica	**81800**	ug/L	1070	20	07/21/13 05:44	07/25/13 20:34	7631-86-9	
Silver	**69.1**	ug/L	10.0	20	07/21/13 05:44	07/26/13 16:33	7440-22-4	
Sodium	**8940**	ug/L	50.0	1	07/21/13 05:44	07/25/13 20:28	7440-23-5	
Thallium	**2.2**	ug/L	0.10	1	07/21/13 05:44	07/25/13 20:28	7440-28-0	
Total Hardness by 2340B	**1760000**	ug/L	14200	200	07/21/13 05:44	07/26/13 16:40		
Vanadium	**27.6**	ug/L	0.10	1	07/21/13 05:44	07/25/13 20:28	7440-62-2	
Zinc	**40900**	ug/L	1000	200	07/21/13 05:44	07/26/13 16:40	7440-66-6	
200.8 MET ICPMS, Dissolved	Analytical Method: EPA 200.8 Preparation Method: EPA 200.8							
Aluminum, Dissolved	**177**	ug/L	4.0	1	07/21/13 05:45	07/24/13 04:38	7429-90-5	
Antimony, Dissolved	ND	ug/L	0.50	1	07/21/13 05:45	07/24/13 04:38	7440-36-0	
Arsenic, Dissolved	**43.5**	ug/L	0.50	1	07/21/13 05:45	07/24/13 04:38	7440-38-2	
Barium, Dissolved	**17.4**	ug/L	0.30	1	07/21/13 05:45	07/24/13 04:38	7440-39-3	
Beryllium, Dissolved	ND	ug/L	0.20	1	07/21/13 05:45	07/24/13 04:38	7440-41-7	
Cadmium, Dissolved	**1.5**	ug/L	0.080	1	07/21/13 05:45	07/24/13 04:38	7440-43-9	
Calcium, Dissolved	**585000**	ug/L	1000	50	07/21/13 05:45	07/24/13 17:33	7440-70-2	
Chromium, Dissolved	**0.52**	ug/L	0.50	1	07/21/13 05:45	07/24/13 04:38	7440-47-3	
Cobalt, Dissolved	**7.8**	ug/L	0.50	1	07/21/13 05:45	07/24/13 04:38	7440-48-4	
Copper, Dissolved	**19.2**	ug/L	0.50	1	07/21/13 05:45	07/24/13 04:38	7440-50-8	
Iron, Dissolved	**4050**	ug/L	50.0	1	07/21/13 05:45	07/24/13 04:38	7439-89-6	
Lead, Dissolved	**211**	ug/L	0.10	1	07/21/13 05:45	07/24/13 04:38	7439-92-1	
Magnesium, Dissolved	**49400**	ug/L	100	20	07/21/13 05:45	07/24/13 04:45	7439-95-4	

This report shall not be reproduced, except in full,
without the written consent of Pace Analytical Services, Inc..

Pace Analytical Services, Inc.
9608 Loiret Blvd.
Lenexa, KS 66219
(913)599-5665

ANALYTICAL RESULTS

Project: JULY 2013 RICO WATER SAMPLING
Pace Project No.: 60148708

Sample: GW-5_20130709 **Lab ID: 60148708014** Collected: 07/09/13 11:25 Received: 07/12/13 10:30 Matrix: Water

Parameters	Results	Units	Report Limit	DF	Prepared	Analyzed	CAS No.	Qual
200.8 MET ICPMS, Dissolved	Analytical Method: EPA 200.8 Preparation Method: EPA 200.8							
Manganese, Dissolved	**5480**	ug/L	10.0	20	07/21/13 05:45	07/24/13 04:45	7439-96-5	
Molybdenum, Dissolved	**11.0**	ug/L	0.50	1	07/21/13 05:45	07/24/13 04:38	7439-98-7	
Nickel, Dissolved	**10.1**	ug/L	0.50	1	07/21/13 05:45	07/24/13 04:38	7440-02-0	
Potassium, Dissolved	**5520**	ug/L	20.0	1	07/21/13 05:45	07/24/13 04:38	7440-09-7	
Selenium, Dissolved	ND	ug/L	0.50	1	07/21/13 05:45	07/24/13 04:38	7782-49-2	
Silver, Dissolved	ND	ug/L	0.50	1	07/21/13 05:45	07/24/13 04:38	7440-22-4	
Sodium, Dissolved	**8990**	ug/L	50.0	1	07/21/13 05:45	07/24/13 04:38	7440-23-5	
Thallium, Dissolved	ND	ug/L	0.10	1	07/21/13 05:45	07/24/13 04:38	7440-28-0	
Vanadium, Dissolved	**0.39**	ug/L	0.10	1	07/21/13 05:45	07/24/13 04:38	7440-62-2	
Zinc, Dissolved	**5390**	ug/L	100	20	07/21/13 05:45	07/24/13 04:45	7440-66-6	
200.8 Potentially Diss. Metals	Analytical Method: EPA 200.8 Preparation Method: EPA 200.8							
Aluminum, Dissolved	**9570**	ug/L	50.0	1	07/18/13 10:25	07/22/13 16:26	7429-90-5	
Antimony, Dissolved	**1.2**	ug/L	1.0	1	07/18/13 10:25	07/22/13 16:26	7440-36-0	
Arsenic, Dissolved	**271**	ug/L	1.0	1	07/18/13 10:25	07/22/13 16:26	7440-38-2	
Barium, Dissolved	**13.5**	ug/L	1.0	1	07/18/13 10:25	07/22/13 16:26	7440-39-3	
Beryllium, Dissolved	**1.3**	ug/L	0.50	1	07/18/13 10:25	07/22/13 16:26	7440-41-7	
Cadmium, Dissolved	**88.6**	ug/L	0.50	1	07/18/13 10:25	07/22/13 16:26	7440-43-9	
Chromium, Dissolved	**10.3**	ug/L	1.0	1	07/18/13 10:25	07/22/13 16:26	7440-47-3	
Cobalt, Dissolved	**23.0**	ug/L	1.0	1	07/18/13 10:25	07/22/13 16:26	7440-48-4	
Copper, Dissolved	**587**	ug/L	1.0	1	07/18/13 10:25	07/22/13 16:26	7440-50-8	
Iron, Dissolved	**48300**	ug/L	50.0	1	07/18/13 10:25	07/22/13 16:26	7439-89-6	
Lead, Dissolved	**4720**	ug/L	1.0	1	07/18/13 10:25	07/22/13 16:26	7439-92-1	
Manganese, Dissolved	**7460**	ug/L	20.0	20	07/18/13 10:25	07/23/13 13:35	7439-96-5	
Molybdenum, Dissolved	**5.1**	ug/L	1.0	1	07/18/13 10:25	07/22/13 16:26	7439-98-7	
Nickel, Dissolved	**38.0**	ug/L	1.0	1	07/18/13 10:25	07/22/13 16:26	7440-02-0	
Selenium, Dissolved	**2.1**	ug/L	1.0	1	07/18/13 10:25	07/22/13 16:26	7782-49-2	
Silver, Dissolved	ND	ug/L	0.50	1	07/18/13 10:25	07/22/13 16:26	7440-22-4	
Thallium, Dissolved	**0.94J**	ug/L	1.0	1	07/18/13 10:25	07/22/13 16:26	7440-28-0	B
Vanadium, Dissolved	**17.8**	ug/L	1.0	1	07/18/13 10:25	07/23/13 12:33	7440-62-2	
Zinc, Dissolved	**36900**	ug/L	200	20	07/18/13 10:25	07/23/13 13:35	7440-66-6	
245.1 Mercury	Analytical Method: EPA 245.1 Preparation Method: EPA 245.1							
Mercury	ND	ug/L	0.20	1	07/18/13 14:57	07/23/13 11:02	7439-97-6	
245.1 Mercury, Dissolved	Analytical Method: EPA 245.1 Preparation Method: EPA 245.1							
Mercury, Dissolved	ND	ug/L	0.20	1	07/18/13 14:53	07/23/13 12:25	7439-97-6	
245.1 Potentially Diss Mercury	Analytical Method: EPA 245.1 Preparation Method: EPA 245.1							
Mercury, Dissolved	ND	ug/L	0.20	1	07/16/13 08:30	07/16/13 11:45	7439-97-6	
2510B Specific Conductance	Analytical Method: SM 2510B							
Specific Conductance	**2730**	umhos/cm	10.0	1		07/18/13 11:46		
Salinity	Analytical Method: Calculated							
Salinity (as dissolved solids)	**1570**	mg/L	6.4	1		07/23/13 10:09		

REPORT OF LABORATORY ANALYSIS

This report shall not be reproduced, except in full,
without the written consent of Pace Analytical Services, Inc..

Pace Analytical Services, Inc.
9608 Loiret Blvd.
Lenexa, KS 66219
(913)599-5665

ANALYTICAL RESULTS

Project: JULY 2013 RICO WATER SAMPLING
Pace Project No.: 60148708

Sample: GW-5_20130709 **Lab ID: 60148708014** Collected: 07/09/13 11:25 Received: 07/12/13 10:30 Matrix: Water

Parameters	Results	Units	Report Limit	DF	Prepared	Analyzed	CAS No.	Qual
Salinity	Analytical Method: Calculated							
Salinity (as seawater)	**1.3**	PSU	0.014	1		07/23/13 10:09		
2320B Alkalinity	Analytical Method: SM 2320B							
Alkalinity,Bicarbonate (CaCO3)	**234**	mg/L	20.0	1		07/16/13 10:36		
Alkalinity, Carbonate (CaCO3)	ND	mg/L	20.0	1		07/16/13 10:36		
Alkalinity, Total as CaCO3	**234**	mg/L	20.0	1		07/16/13 10:36		
2540C Total Dissolved Solids	Analytical Method: SM 2540C							
Total Dissolved Solids	**2240**	mg/L	5.0	1		07/12/13 14:16		
2540D Total Suspended Solids	Analytical Method: SM 2540D							
Total Suspended Solids	**331**	mg/L	5.0	1		07/12/13 16:12		
4500S2D Sulfide, Total	Analytical Method: SM 4500-S-2 D							
Sulfide, Total	**1.2**	mg/L	0.050	1		07/15/13 13:26	18496-25-8	
300.0 IC Anions 28 Days	Analytical Method: EPA 300.0							
Chloride	**1.6**	mg/L	1.0	1		07/26/13 23:08	16887-00-6	
Sulfate	**1790**	mg/L	200	200		07/26/13 23:26	14808-79-8	
353.2 Nitrogen, NO2/NO3 pres.	Analytical Method: EPA 353.2							
Nitrogen, NO2 plus NO3	ND	mg/L	0.10	1		07/23/13 13:27		
4500CNE Cyanide, Total	Analytical Method: SM 4500-CN-E							
Cyanide	ND	mg/L	0.0050	1		07/15/13 14:29	57-12-5	
5310C TOC	Analytical Method: SM 5310C							
Total Organic Carbon	**0.61**	mg/L	0.50	1		07/17/13 18:21	7440-44-0	

This report shall not be reproduced, except in full,
without the written consent of Pace Analytical Services, Inc..

Pace Analytical Services, Inc.
9608 Loiret Blvd.
Lenexa, KS 66219
(913)599-5665

ANALYTICAL RESULTS

Project: JULY 2013 RICO WATER SAMPLING
Pace Project No.: 60148708

Sample: GW-6_20130709 **Lab ID: 60148708015** Collected: 07/09/13 11:52 Received: 07/12/13 10:30 Matrix: Water

Parameters	Results	Units	Report Limit	DF	Prepared	Analyzed	CAS No.	Qual
200.7 Potentially Diss. Metals	Analytical Method: EPA 200.7 Preparation Method: EPA 200.7							
Calcium, Dissolved	**340000**	ug/L	100	1	07/18/13 10:25	07/24/13 14:14	7440-70-2	
Magnesium, Dissolved	**49400**	ug/L	50.0	1	07/18/13 10:25	07/24/13 14:14	7439-95-4	
Potassium, Dissolved	**10600**	ug/L	500	1	07/18/13 10:25	07/24/13 14:14	7440-09-7	
Sodium, Dissolved	**7230**	ug/L	500	1	07/18/13 10:25	07/24/13 14:14	7440-23-5	
200.8 MET ICPMS	Analytical Method: EPA 200.8 Preparation Method: EPA 200.8							
Aluminum	**36100**	ug/L	80.0	20	07/21/13 05:44	07/25/13 20:45	7429-90-5	
Antimony	**5.2**	ug/L	0.50	1	07/21/13 05:44	07/25/13 20:39	7440-36-0	
Arsenic	**354**	ug/L	0.50	1	07/21/13 05:44	07/25/13 20:39	7440-38-2	
Barium	**165**	ug/L	0.30	1	07/21/13 05:44	07/25/13 20:39	7440-39-3	
Beryllium	**4.3**	ug/L	0.20	1	07/21/13 05:44	07/25/13 20:39	7440-41-7	
Cadmium	**131**	ug/L	0.080	1	07/21/13 05:44	07/25/13 20:39	7440-43-9	
Calcium	**418000**	ug/L	400	20	07/21/13 05:44	07/25/13 20:45	7440-70-2	
Chromium	**47.5**	ug/L	0.50	1	07/21/13 05:44	07/25/13 20:39	7440-47-3	
Cobalt	**45.9**	ug/L	0.50	1	07/21/13 05:44	07/25/13 20:39	7440-48-4	
Copper	**1500**	ug/L	10.0	20	07/21/13 05:44	07/25/13 20:45	7440-50-8	
Iron	**198000**	ug/L	1000	20	07/21/13 05:44	07/25/13 20:45	7439-89-6	
Lead	**18600**	ug/L	20.0	200	07/21/13 05:44	07/26/13 17:09	7439-92-1	
Magnesium	**62300**	ug/L	100	20	07/21/13 05:44	07/25/13 20:45	7439-95-4	
Manganese	**16400**	ug/L	100	200	07/21/13 05:44	07/26/13 17:09	7439-96-5	
Molybdenum	**13.7**	ug/L	0.50	1	07/21/13 05:44	07/25/13 20:39	7439-98-7	
Nickel	**63.7**	ug/L	0.50	1	07/21/13 05:44	07/25/13 20:39	7440-02-0	
Potassium	**17100**	ug/L	20.0	1	07/21/13 05:44	07/25/13 20:39	7440-09-7	
Selenium	**10.1**	ug/L	0.50	1	07/21/13 05:44	07/25/13 20:39	7782-49-2	
Silica	**149000**	ug/L	10700	200	07/21/13 05:44	07/26/13 17:09	7631-86-9	
Silver	**39.7**	ug/L	10.0	20	07/21/13 05:44	07/26/13 17:03	7440-22-4	
Sodium	**6920**	ug/L	50.0	1	07/21/13 05:44	07/25/13 20:39	7440-23-5	
Thallium	**2.9**	ug/L	0.10	1	07/21/13 05:44	07/25/13 20:39	7440-28-0	
Total Hardness by 2340B	**1300000**	ug/L	1420	20	07/21/13 05:44	07/25/13 20:45		
Vanadium	**69.9**	ug/L	0.10	1	07/21/13 05:44	07/25/13 20:39	7440-62-2	
Zinc	**35100**	ug/L	1000	200	07/21/13 05:44	07/26/13 17:09	7440-66-6	
200.8 MET ICPMS, Dissolved	Analytical Method: EPA 200.8 Preparation Method: EPA 200.8							
Aluminum, Dissolved	**40.0**	ug/L	4.0	1	07/21/13 05:45	07/24/13 04:50	7429-90-5	
Antimony, Dissolved	ND	ug/L	0.50	1	07/21/13 05:45	07/24/13 04:50	7440-36-0	
Arsenic, Dissolved	**53.0**	ug/L	0.50	1	07/21/13 05:45	07/24/13 04:50	7440-38-2	
Barium, Dissolved	**14.8**	ug/L	0.30	1	07/21/13 05:45	07/24/13 04:50	7440-39-3	
Beryllium, Dissolved	**0.47**	ug/L	0.20	1	07/21/13 05:45	07/24/13 04:50	7440-41-7	
Cadmium, Dissolved	ND	ug/L	0.080	1	07/21/13 05:45	07/24/13 04:50	7440-43-9	
Calcium, Dissolved	**354000**	ug/L	400	20	07/21/13 05:45	07/24/13 04:56	7440-70-2	
Chromium, Dissolved	ND	ug/L	0.50	1	07/21/13 05:45	07/24/13 04:50	7440-47-3	
Cobalt, Dissolved	**2.6**	ug/L	0.50	1	07/21/13 05:45	07/24/13 04:50	7440-48-4	
Copper, Dissolved	**0.64**	ug/L	0.50	1	07/21/13 05:45	07/24/13 04:50	7440-50-8	
Iron, Dissolved	**29300**	ug/L	1000	20	07/21/13 05:45	07/24/13 04:56	7439-89-6	
Lead, Dissolved	**1.8**	ug/L	0.10	1	07/21/13 05:45	07/24/13 04:50	7439-92-1	
Magnesium, Dissolved	**45900**	ug/L	100	20	07/21/13 05:45	07/24/13 04:56	7439-95-4	

This report shall not be reproduced, except in full,
without the written consent of Pace Analytical Services, Inc..

Pace Analytical Services, Inc.
9608 Loiret Blvd.
Lenexa, KS 66219
(913)599-5665

ANALYTICAL RESULTS

Project: JULY 2013 RICO WATER SAMPLING
Pace Project No.: 60148708

Sample: GW-6_20130709 **Lab ID: 60148708015** Collected: 07/09/13 11:52 Received: 07/12/13 10:30 Matrix: Water

Parameters	Results	Units	Report Limit	DF	Prepared	Analyzed	CAS No.	Qual
200.8 MET ICPMS, Dissolved	Analytical Method: EPA 200.8 Preparation Method: EPA 200.8							
Manganese, Dissolved	**6950**	ug/L	10.0	20	07/21/13 05:45	07/24/13 04:56	7439-96-5	
Molybdenum, Dissolved	**6.6**	ug/L	0.50	1	07/21/13 05:45	07/24/13 04:50	7439-98-7	
Nickel, Dissolved	**3.4**	ug/L	0.50	1	07/21/13 05:45	07/24/13 04:50	7440-02-0	
Potassium, Dissolved	**8740**	ug/L	20.0	1	07/21/13 05:45	07/24/13 04:50	7440-09-7	
Selenium, Dissolved	ND	ug/L	0.50	1	07/21/13 05:45	07/24/13 04:50	7782-49-2	
Silver, Dissolved	ND	ug/L	0.50	1	07/21/13 05:45	07/24/13 04:50	7440-22-4	
Sodium, Dissolved	**6790**	ug/L	50.0	1	07/21/13 05:45	07/24/13 04:50	7440-23-5	
Thallium, Dissolved	ND	ug/L	0.10	1	07/21/13 05:45	07/24/13 04:50	7440-28-0	
Vanadium, Dissolved	**0.10**	ug/L	0.10	1	07/21/13 05:45	07/24/13 04:50	7440-62-2	
Zinc, Dissolved	**9310**	ug/L	250	50	07/21/13 05:45	07/24/13 17:38	7440-66-6	
200.8 Potentially Diss. Metals	Analytical Method: EPA 200.8 Preparation Method: EPA 200.8							
Aluminum, Dissolved	**13500**	ug/L	50.0	1	07/18/13 10:25	07/22/13 16:39	7429-90-5	
Antimony, Dissolved	**1.8**	ug/L	1.0	1	07/18/13 10:25	07/22/13 16:39	7440-36-0	
Arsenic, Dissolved	**261**	ug/L	1.0	1	07/18/13 10:25	07/22/13 16:39	7440-38-2	
Barium, Dissolved	**17.2**	ug/L	1.0	1	07/18/13 10:25	07/22/13 16:39	7440-39-3	
Beryllium, Dissolved	**2.7**	ug/L	0.50	1	07/18/13 10:25	07/22/13 16:39	7440-41-7	
Cadmium, Dissolved	**68.2**	ug/L	0.50	1	07/18/13 10:25	07/22/13 16:39	7440-43-9	
Chromium, Dissolved	**17.5**	ug/L	1.0	1	07/18/13 10:25	07/22/13 16:39	7440-47-3	
Cobalt, Dissolved	**16.1**	ug/L	1.0	1	07/18/13 10:25	07/22/13 16:39	7440-48-4	
Copper, Dissolved	**513**	ug/L	1.0	1	07/18/13 10:25	07/22/13 16:39	7440-50-8	
Iron, Dissolved	**84200**	ug/L	50.0	1	07/18/13 10:25	07/22/13 16:39	7439-89-6	
Lead, Dissolved	**5970**	ug/L	20.0	20	07/18/13 10:25	07/23/13 13:39	7439-92-1	
Manganese, Dissolved	**12400**	ug/L	20.0	20	07/18/13 10:25	07/23/13 13:39	7439-96-5	
Molybdenum, Dissolved	**3.2**	ug/L	1.0	1	07/18/13 10:25	07/22/13 16:39	7439-98-7	
Nickel, Dissolved	**22.6**	ug/L	1.0	1	07/18/13 10:25	07/22/13 16:39	7440-02-0	
Selenium, Dissolved	**2.6**	ug/L	1.0	1	07/18/13 10:25	07/22/13 16:39	7782-49-2	
Silver, Dissolved	ND	ug/L	0.50	1	07/18/13 10:25	07/22/13 16:39	7440-22-4	
Thallium, Dissolved	**1.3**	ug/L	1.0	1	07/18/13 10:25	07/22/13 16:39	7440-28-0	B
Vanadium, Dissolved	**31.1**	ug/L	1.0	1	07/18/13 10:25	07/23/13 13:01	7440-62-2	
Zinc, Dissolved	**18800**	ug/L	10.0	1	07/18/13 10:25	07/22/13 16:39	7440-66-6	
245.1 Mercury	Analytical Method: EPA 245.1 Preparation Method: EPA 245.1							
Mercury	ND	ug/L	0.20	1	07/18/13 14:57	07/23/13 11:04	7439-97-6	
245.1 Mercury, Dissolved	Analytical Method: EPA 245.1 Preparation Method: EPA 245.1							
Mercury, Dissolved	ND	ug/L	0.20	1	07/18/13 14:53	07/23/13 12:28	7439-97-6	
245.1 Potentially Diss Mercury	Analytical Method: EPA 245.1 Preparation Method: EPA 245.1							
Mercury, Dissolved	ND	ug/L	0.20	1	07/16/13 08:30	07/17/13 11:03	7439-97-6	
2510B Specific Conductance	Analytical Method: SM 2510B							
Specific Conductance	**1910**	umhos/cm	10.0	1		07/18/13 11:52		
Salinity	Analytical Method: Calculated							
Salinity (as dissolved solids)	**1110**	mg/L	6.4	1		07/23/13 10:09		

REPORT OF LABORATORY ANALYSIS

This report shall not be reproduced, except in full,
without the written consent of Pace Analytical Services, Inc..

Pace Analytical Services, Inc.
9608 Loiret Blvd.
Lenexa, KS 66219
(913)599-5665

ANALYTICAL RESULTS

Project: JULY 2013 RICO WATER SAMPLING
Pace Project No.: 60148708

Sample: GW-6_20130709 **Lab ID: 60148708015** Collected: 07/09/13 11:52 Received: 07/12/13 10:30 Matrix: Water

Parameters	Results	Units	Report Limit	DF	Prepared	Analyzed	CAS No.	Qual
Salinity	Analytical Method: Calculated							
Salinity (as seawater)	**0.87**	PSU	0.014	1		07/23/13 10:09		
2320B Alkalinity	Analytical Method: SM 2320B							
Alkalinity,Bicarbonate (CaCO3)	**191**	mg/L	20.0	1		07/16/13 10:40		
Alkalinity, Carbonate (CaCO3)	ND	mg/L	20.0	1		07/16/13 10:40		
Alkalinity, Total as CaCO3	**191**	mg/L	20.0	1		07/16/13 10:40		
2540C Total Dissolved Solids	Analytical Method: SM 2540C							
Total Dissolved Solids	**1590**	mg/L	5.0	1		07/12/13 14:16		
2540D Total Suspended Solids	Analytical Method: SM 2540D							
Total Suspended Solids	**719**	mg/L	5.0	1		07/12/13 16:12		
4500S2D Sulfide, Total	Analytical Method: SM 4500-S-2 D							
Sulfide, Total	**0.17**	mg/L	0.050	1		07/15/13 13:26	18496-25-8	
300.0 IC Anions 28 Days	Analytical Method: EPA 300.0							
Chloride	**1.4**	mg/L	1.0	1		07/26/13 23:43	16887-00-6	
Sulfate	**1050**	mg/L	100	100		07/27/13 00:00	14808-79-8	
353.2 Nitrogen, NO2/NO3 pres.	Analytical Method: EPA 353.2							
Nitrogen, NO2 plus NO3	ND	mg/L	0.10	1		07/23/13 13:27		
4500CNE Cyanide, Total	Analytical Method: SM 4500-CN-E							
Cyanide	ND	mg/L	0.0050	1		07/15/13 14:32	57-12-5	
5310C TOC	Analytical Method: SM 5310C							
Total Organic Carbon	**1.3**	mg/L	0.50	1		07/17/13 18:39	7440-44-0	

This report shall not be reproduced, except in full,
without the written consent of Pace Analytical Services, Inc..

Pace Analytical Services, Inc.
9608 Loiret Blvd.
Lenexa, KS 66219
(913)599-5665

ANALYTICAL RESULTS

Project: JULY 2013 RICO WATER SAMPLING
Pace Project No.: 60148708

Sample: MW-101_20130709 **Lab ID: 60148708016** Collected: 07/09/13 13:20 Received: 07/12/13 10:30 Matrix: Water

Parameters	Results	Units	Report Limit	DF	Prepared	Analyzed	CAS No.	Qual
200.7 Potentially Diss. Metals	Analytical Method: EPA 200.7 Preparation Method: EPA 200.7							
Calcium, Dissolved	**309000**	ug/L	100	1	07/18/13 10:25	07/24/13 14:17	7440-70-2	
Magnesium, Dissolved	**35100**	ug/L	50.0	1	07/18/13 10:25	07/24/13 14:17	7439-95-4	
Potassium, Dissolved	**4220**	ug/L	500	1	07/18/13 10:25	07/24/13 14:17	7440-09-7	
Sodium, Dissolved	**9880**	ug/L	500	1	07/18/13 10:25	07/24/13 14:17	7440-23-5	
200.8 MET ICPMS	Analytical Method: EPA 200.8 Preparation Method: EPA 200.8							
Aluminum	**12200**	ug/L	4.0	1	07/21/13 05:44	07/25/13 20:50	7429-90-5	
Antimony	**0.50**	ug/L	0.50	1	07/21/13 05:44	07/25/13 20:50	7440-36-0	
Arsenic	**15.5**	ug/L	0.50	1	07/21/13 05:44	07/25/13 20:50	7440-38-2	
Barium	**168**	ug/L	0.30	1	07/21/13 05:44	07/25/13 20:50	7440-39-3	
Beryllium	**1.1**	ug/L	0.20	1	07/21/13 05:44	07/25/13 20:50	7440-41-7	
Cadmium	**6.8**	ug/L	0.080	1	07/21/13 05:44	07/25/13 20:50	7440-43-9	
Calcium	**340000**	ug/L	400	20	07/21/13 05:44	07/25/13 20:56	7440-70-2	
Chromium	**20.2**	ug/L	0.50	1	07/21/13 05:44	07/25/13 20:50	7440-47-3	
Cobalt	**10**	ug/L	0.50	1	07/21/13 05:44	07/25/13 20:50	7440-48-4	
Copper	**106**	ug/L	0.50	1	07/21/13 05:44	07/25/13 20:50	7440-50-8	
Iron	**33900**	ug/L	1000	20	07/21/13 05:44	07/25/13 20:56	7439-89-6	
Lead	**1150**	ug/L	2.0	20	07/21/13 05:44	07/25/13 20:56	7439-92-1	
Magnesium	**39100**	ug/L	100	20	07/21/13 05:44	07/25/13 20:56	7439-95-4	
Manganese	**1440**	ug/L	10.0	20	07/21/13 05:44	07/25/13 20:56	7439-96-5	
Molybdenum	**8.0**	ug/L	0.50	1	07/21/13 05:44	07/25/13 20:50	7439-98-7	
Nickel	**16.7**	ug/L	0.50	1	07/21/13 05:44	07/25/13 20:50	7440-02-0	
Potassium	**6200**	ug/L	20.0	1	07/21/13 05:44	07/25/13 20:50	7440-09-7	
Selenium	**6.3**	ug/L	0.50	1	07/21/13 05:44	07/25/13 20:50	7782-49-2	
Silica	**53100**	ug/L	1070	20	07/21/13 05:44	07/25/13 20:56	7631-86-9	
Silver	**5.3**	ug/L	0.50	1	07/21/13 05:44	07/26/13 16:27	7440-22-4	
Sodium	**9310**	ug/L	50.0	1	07/21/13 05:44	07/25/13 20:50	7440-23-5	
Thallium	**0.62**	ug/L	0.10	1	07/21/13 05:44	07/25/13 20:50	7440-28-0	
Total Hardness by 2340B	**1010000**	ug/L	1420	20	07/21/13 05:44	07/25/13 20:56		
Vanadium	**19.2**	ug/L	0.10	1	07/21/13 05:44	07/25/13 20:50	7440-62-2	
Zinc	**979**	ug/L	100	20	07/21/13 05:44	07/25/13 20:56	7440-66-6	
200.8 MET ICPMS, Dissolved	Analytical Method: EPA 200.8 Preparation Method: EPA 200.8							
Aluminum, Dissolved	**1340**	ug/L	4.0	1	07/21/13 05:45	07/24/13 05:01	7429-90-5	
Antimony, Dissolved	ND	ug/L	0.50	1	07/21/13 05:45	07/24/13 05:01	7440-36-0	
Arsenic, Dissolved	**2.0**	ug/L	0.50	1	07/21/13 05:45	07/24/13 05:01	7440-38-2	
Barium, Dissolved	**31.6**	ug/L	0.30	1	07/21/13 05:45	07/24/13 05:01	7440-39-3	
Beryllium, Dissolved	**0.24**	ug/L	0.20	1	07/21/13 05:45	07/24/13 05:01	7440-41-7	
Cadmium, Dissolved	**0.93**	ug/L	0.080	1	07/21/13 05:45	07/24/13 05:01	7440-43-9	
Calcium, Dissolved	**319000**	ug/L	400	20	07/21/13 05:45	07/24/13 05:07	7440-70-2	
Chromium, Dissolved	**2.0**	ug/L	0.50	1	07/21/13 05:45	07/24/13 05:01	7440-47-3	
Cobalt, Dissolved	**4.0**	ug/L	0.50	1	07/21/13 05:45	07/24/13 05:01	7440-48-4	
Copper, Dissolved	**11.2**	ug/L	0.50	1	07/21/13 05:45	07/24/13 05:01	7440-50-8	
Iron, Dissolved	**5360**	ug/L	50.0	1	07/21/13 05:45	07/24/13 05:01	7439-89-6	
Lead, Dissolved	**119**	ug/L	0.10	1	07/21/13 05:45	07/24/13 05:01	7439-92-1	
Magnesium, Dissolved	**36800**	ug/L	100	20	07/21/13 05:45	07/24/13 05:07	7439-95-4	

This report shall not be reproduced, except in full,
without the written consent of Pace Analytical Services, Inc..

Pace Analytical Services, Inc.
9608 Loiret Blvd.
Lenexa, KS 66219
(913)599-5665

ANALYTICAL RESULTS

Project: JULY 2013 RICO WATER SAMPLING
Pace Project No.: 60148708

Sample: MW-101_20130709 **Lab ID: 60148708016** Collected: 07/09/13 13:20 Received: 07/12/13 10:30 Matrix: Water

Parameters	Results	Units	Report Limit	DF	Prepared	Analyzed	CAS No.	Qual
200.8 MET ICPMS, Dissolved	Analytical Method: EPA 200.8 Preparation Method: EPA 200.8							
Manganese, Dissolved	**967**	ug/L	10.0	20	07/21/13 05:45	07/24/13 05:07	7439-96-5	
Molybdenum, Dissolved	**2.2**	ug/L	0.50	1	07/21/13 05:45	07/24/13 05:01	7439-98-7	
Nickel, Dissolved	**8.3**	ug/L	0.50	1	07/21/13 05:45	07/24/13 05:01	7440-02-0	
Potassium, Dissolved	**4080**	ug/L	20.0	1	07/21/13 05:45	07/24/13 05:01	7440-09-7	
Selenium, Dissolved	**3.3**	ug/L	0.50	1	07/21/13 05:45	07/24/13 05:01	7782-49-2	
Silver, Dissolved	ND	ug/L	0.50	1	07/21/13 05:45	07/24/13 05:01	7440-22-4	
Sodium, Dissolved	**9610**	ug/L	50.0	1	07/21/13 05:45	07/24/13 05:01	7440-23-5	
Thallium, Dissolved	ND	ug/L	0.10	1	07/21/13 05:45	07/24/13 05:01	7440-28-0	
Vanadium, Dissolved	**2.0**	ug/L	0.10	1	07/21/13 05:45	07/24/13 05:01	7440-62-2	
Zinc, Dissolved	**331**	ug/L	5.0	1	07/21/13 05:45	07/24/13 05:01	7440-66-6	
200.8 Potentially Diss. Metals	Analytical Method: EPA 200.8 Preparation Method: EPA 200.8							
Aluminum, Dissolved	**1390**	ug/L	50.0	1	07/18/13 10:25	07/22/13 16:43	7429-90-5	
Antimony, Dissolved	**0.17J**	ug/L	1.0	1	07/18/13 10:25	07/22/13 16:43	7440-36-0	B
Arsenic, Dissolved	**2.0**	ug/L	1.0	1	07/18/13 10:25	07/22/13 16:43	7440-38-2	
Barium, Dissolved	**26.6**	ug/L	1.0	1	07/18/13 10:25	07/22/13 16:43	7440-39-3	
Beryllium, Dissolved	**0.33J**	ug/L	0.50	1	07/18/13 10:25	07/22/13 16:43	7440-41-7	
Cadmium, Dissolved	**2.6**	ug/L	0.50	1	07/18/13 10:25	07/22/13 16:43	7440-43-9	
Chromium, Dissolved	**3.7**	ug/L	1.0	1	07/18/13 10:25	07/22/13 16:43	7440-47-3	
Cobalt, Dissolved	**4.2**	ug/L	1.0	1	07/18/13 10:25	07/22/13 16:43	7440-48-4	
Copper, Dissolved	**24.3**	ug/L	1.0	1	07/18/13 10:25	07/22/13 16:43	7440-50-8	
Iron, Dissolved	**7060**	ug/L	50.0	1	07/18/13 10:25	07/22/13 16:43	7439-89-6	
Lead, Dissolved	**438**	ug/L	1.0	1	07/18/13 10:25	07/22/13 16:43	7439-92-1	
Manganese, Dissolved	**988**	ug/L	1.0	1	07/18/13 10:25	07/22/13 16:43	7439-96-5	
Molybdenum, Dissolved	**0.58J**	ug/L	1.0	1	07/18/13 10:25	07/22/13 16:43	7439-98-7	B
Nickel, Dissolved	**4.2**	ug/L	1.0	1	07/18/13 10:25	07/22/13 16:43	7440-02-0	
Selenium, Dissolved	**3.2**	ug/L	1.0	1	07/18/13 10:25	07/22/13 16:43	7782-49-2	
Silver, Dissolved	ND	ug/L	0.50	1	07/18/13 10:25	07/22/13 16:43	7440-22-4	
Thallium, Dissolved	**0.44J**	ug/L	1.0	1	07/18/13 10:25	07/22/13 16:43	7440-28-0	B
Vanadium, Dissolved	**2.6**	ug/L	1.0	1	07/18/13 10:25	07/23/13 13:06	7440-62-2	
Zinc, Dissolved	**471**	ug/L	10.0	1	07/18/13 10:25	07/22/13 16:43	7440-66-6	
245.1 Mercury	Analytical Method: EPA 245.1 Preparation Method: EPA 245.1							
Mercury	ND	ug/L	0.20	1	07/18/13 14:57	07/23/13 11:06	7439-97-6	
245.1 Mercury, Dissolved	Analytical Method: EPA 245.1 Preparation Method: EPA 245.1							
Mercury, Dissolved	ND	ug/L	0.20	1	07/18/13 14:53	07/23/13 12:30	7439-97-6	
245.1 Potentially Diss Mercury	Analytical Method: EPA 245.1 Preparation Method: EPA 245.1							
Mercury, Dissolved	ND	ug/L	0.20	1	07/16/13 08:30	07/17/13 11:05	7439-97-6	
2510B Specific Conductance	Analytical Method: SM 2510B							
Specific Conductance	**1890**	umhos/cm	10.0	1		07/18/13 11:53		
Salinity	Analytical Method: Calculated							
Salinity (as dissolved solids)	**902**	mg/L	6.4	1		07/23/13 10:09		

REPORT OF LABORATORY ANALYSIS

This report shall not be reproduced, except in full,
without the written consent of Pace Analytical Services, Inc..

Pace Analytical Services, Inc.
9608 Loiret Blvd.
Lenexa, KS 66219
(913)599-5665

ANALYTICAL RESULTS

Project: JULY 2013 RICO WATER SAMPLING
Pace Project No.: 60148708

Sample: MW-101_20130709 **Lab ID: 60148708016** Collected: 07/09/13 13:20 Received: 07/12/13 10:30 Matrix: Water

Parameters	Results	Units	Report Limit	DF	Prepared	Analyzed	CAS No.	Qual
Salinity	Analytical Method: Calculated							
Salinity (as seawater)	**0.70**	PSU	0.014	1		07/23/13 10:09		
2320B Alkalinity	Analytical Method: SM 2320B							
Alkalinity,Bicarbonate (CaCO3)	**320**	mg/L	20.0	1		07/16/13 11:04		
Alkalinity, Carbonate (CaCO3)	ND	mg/L	20.0	1		07/16/13 11:04		
Alkalinity, Total as CaCO3	**320**	mg/L	20.0	1		07/16/13 11:04		
2540C Total Dissolved Solids	Analytical Method: SM 2540C							
Total Dissolved Solids	**1200**	mg/L	5.0	1		07/12/13 14:16		
2540D Total Suspended Solids	Analytical Method: SM 2540D							
Total Suspended Solids	**335**	mg/L	5.0	1		07/12/13 16:12		
4500S2D Sulfide, Total	Analytical Method: SM 4500-S-2 D							
Sulfide, Total	ND	mg/L	0.050	1		07/15/13 13:28	18496-25-8	
300.0 IC Anions 28 Days	Analytical Method: EPA 300.0							
Chloride	**1.3**	mg/L	1.0	1		07/27/13 00:17	16887-00-6	
Sulfate	**684**	mg/L	100	100		07/27/13 00:34	14808-79-8	
353.2 Nitrogen, NO2/NO3 pres.	Analytical Method: EPA 353.2							
Nitrogen, NO2 plus NO3	**0.38**	mg/L	0.10	1		07/23/13 13:28		
4500CNE Cyanide, Total	Analytical Method: SM 4500-CN-E							
Cyanide	ND	mg/L	0.0050	1		07/15/13 14:32	57-12-5	
5310C TOC	Analytical Method: SM 5310C							
Total Organic Carbon	**0.73**	mg/L	0.50	1		07/17/13 18:57	7440-44-0	

This report shall not be reproduced, except in full,
without the written consent of Pace Analytical Services, Inc..

Pace Analytical Services, Inc.
9608 Loiret Blvd.
Lenexa, KS 66219
(913)599-5665

ANALYTICAL RESULTS

Project: JULY 2013 RICO WATER SAMPLING
Pace Project No.: 60148708

Sample: MW-102_20130709 **Lab ID: 60148708017** Collected: 07/09/13 13:55 Received: 07/12/13 10:30 Matrix: Water

Parameters	Results	Units	Report Limit	DF	Prepared	Analyzed	CAS No.	Qual
200.7 Potentially Diss. Metals	Analytical Method: EPA 200.7 Preparation Method: EPA 200.7							
Calcium, Dissolved	**203000**	ug/L	100	1	07/18/13 10:25	07/24/13 14:20	7440-70-2	
Magnesium, Dissolved	**19800**	ug/L	50.0	1	07/18/13 10:25	07/24/13 14:20	7439-95-4	
Potassium, Dissolved	**2210**	ug/L	500	1	07/18/13 10:25	07/24/13 14:20	7440-09-7	
Sodium, Dissolved	**6780**	ug/L	500	1	07/18/13 10:25	07/24/13 14:20	7440-23-5	
200.8 MET ICPMS	Analytical Method: EPA 200.8 Preparation Method: EPA 200.8							
Aluminum	**41700**	ug/L	80.0	20	07/21/13 05:44	07/25/13 21:07	7429-90-5	
Antimony	**0.96**	ug/L	0.50	1	07/21/13 05:44	07/25/13 21:01	7440-36-0	
Arsenic	**59.6**	ug/L	0.50	1	07/21/13 05:44	07/25/13 21:01	7440-38-2	
Barium	**322**	ug/L	0.30	1	07/21/13 05:44	07/25/13 21:01	7440-39-3	
Beryllium	**3.9**	ug/L	0.20	1	07/21/13 05:44	07/25/13 21:01	7440-41-7	
Cadmium	**8.3**	ug/L	0.080	1	07/21/13 05:44	07/25/13 21:01	7440-43-9	
Calcium	**242000**	ug/L	400	20	07/21/13 05:44	07/25/13 21:07	7440-70-2	
Chromium	**55.3**	ug/L	0.50	1	07/21/13 05:44	07/25/13 21:01	7440-47-3	
Cobalt	**83.6**	ug/L	0.50	1	07/21/13 05:44	07/25/13 21:01	7440-48-4	
Copper	**186**	ug/L	0.50	1	07/21/13 05:44	07/25/13 21:01	7440-50-8	
Iron	**68900**	ug/L	1000	20	07/21/13 05:44	07/25/13 21:07	7439-89-6	
Lead	**297**	ug/L	0.10	1	07/21/13 05:44	07/25/13 21:01	7439-92-1	
Magnesium	**47900**	ug/L	100	20	07/21/13 05:44	07/25/13 21:07	7439-95-4	
Manganese	**10900**	ug/L	25.0	50	07/21/13 05:44	07/26/13 17:21	7439-96-5	
Molybdenum	**19.9**	ug/L	0.50	1	07/21/13 05:44	07/25/13 21:01	7439-98-7	
Nickel	**64.1**	ug/L	0.50	1	07/21/13 05:44	07/25/13 21:01	7440-02-0	
Potassium	**6800**	ug/L	20.0	1	07/21/13 05:44	07/25/13 21:01	7440-09-7	
Selenium	**9.8**	ug/L	0.50	1	07/21/13 05:44	07/25/13 21:01	7782-49-2	
Silica	**137000**	ug/L	2680	50	07/21/13 05:44	07/26/13 17:21	7631-86-9	
Silver	**0.81**	ug/L	0.50	1	07/21/13 05:44	07/26/13 17:15	7440-22-4	
Sodium	**7050**	ug/L	50.0	1	07/21/13 05:44	07/25/13 21:01	7440-23-5	
Thallium	**0.77**	ug/L	0.10	1	07/21/13 05:44	07/25/13 21:01	7440-28-0	
Total Hardness by 2340B	**803000**	ug/L	1420	20	07/21/13 05:44	07/25/13 21:07		
Vanadium	**69.4**	ug/L	0.10	1	07/21/13 05:44	07/25/13 21:01	7440-62-2	
Zinc	**1640**	ug/L	100	20	07/21/13 05:44	07/25/13 21:07	7440-66-6	
200.8 MET ICPMS, Dissolved	Analytical Method: EPA 200.8 Preparation Method: EPA 200.8							
Aluminum, Dissolved	**26.8**	ug/L	4.0	1	07/21/13 05:45	07/24/13 05:12	7429-90-5	
Antimony, Dissolved	ND	ug/L	0.50	1	07/21/13 05:45	07/24/13 05:12	7440-36-0	
Arsenic, Dissolved	ND	ug/L	0.50	1	07/21/13 05:45	07/24/13 05:12	7440-38-2	
Barium, Dissolved	**12.4**	ug/L	0.30	1	07/21/13 05:45	07/24/13 05:12	7440-39-3	
Beryllium, Dissolved	ND	ug/L	0.20	1	07/21/13 05:45	07/24/13 05:12	7440-41-7	
Cadmium, Dissolved	**0.29**	ug/L	0.080	1	07/21/13 05:45	07/24/13 05:12	7440-43-9	
Calcium, Dissolved	**221000**	ug/L	400	20	07/21/13 05:45	07/24/13 05:18	7440-70-2	
Chromium, Dissolved	ND	ug/L	0.50	1	07/21/13 05:45	07/24/13 05:12	7440-47-3	
Cobalt, Dissolved	ND	ug/L	0.50	1	07/21/13 05:45	07/24/13 05:12	7440-48-4	
Copper, Dissolved	**1.7**	ug/L	0.50	1	07/21/13 05:45	07/24/13 05:12	7440-50-8	
Iron, Dissolved	ND	ug/L	50.0	1	07/21/13 05:45	07/24/13 05:12	7439-89-6	
Lead, Dissolved	**0.25**	ug/L	0.10	1	07/21/13 05:45	07/24/13 05:12	7439-92-1	
Magnesium, Dissolved	**20300**	ug/L	5.0	1	07/21/13 05:45	07/24/13 05:12	7439-95-4	

This report shall not be reproduced, except in full,
without the written consent of Pace Analytical Services, Inc..

Pace Analytical Services, Inc.
9608 Loiret Blvd.
Lenexa, KS 66219
(913)599-5665

ANALYTICAL RESULTS

Project: JULY 2013 RICO WATER SAMPLING
Pace Project No.: 60148708

Sample: MW-102_20130709 **Lab ID: 60148708017** Collected: 07/09/13 13:55 Received: 07/12/13 10:30 Matrix: Water

Parameters	Results	Units	Report Limit	DF	Prepared	Analyzed	CAS No.	Qual
200.8 MET ICPMS, Dissolved	Analytical Method: EPA 200.8 Preparation Method: EPA 200.8							
Manganese, Dissolved	**10.1**	ug/L	0.50	1	07/21/13 05:45	07/24/13 05:12	7439-96-5	
Molybdenum, Dissolved	**0.55**	ug/L	0.50	1	07/21/13 05:45	07/24/13 05:12	7439-98-7	
Nickel, Dissolved	**4.2**	ug/L	0.50	1	07/21/13 05:45	07/24/13 05:12	7440-02-0	
Potassium, Dissolved	**1850**	ug/L	20.0	1	07/21/13 05:45	07/24/13 05:12	7440-09-7	
Selenium, Dissolved	**2.3**	ug/L	0.50	1	07/21/13 05:45	07/24/13 05:12	7782-49-2	
Silver, Dissolved	ND	ug/L	0.50	1	07/21/13 05:45	07/24/13 05:12	7440-22-4	
Sodium, Dissolved	**6990**	ug/L	50.0	1	07/21/13 05:45	07/24/13 05:12	7440-23-5	
Thallium, Dissolved	ND	ug/L	0.10	1	07/21/13 05:45	07/24/13 05:12	7440-28-0	
Vanadium, Dissolved	ND	ug/L	0.10	1	07/21/13 05:45	07/24/13 05:12	7440-62-2	
Zinc, Dissolved	**55.3**	ug/L	5.0	1	07/21/13 05:45	07/24/13 05:12	7440-66-6	
200.8 Potentially Diss. Metals	Analytical Method: EPA 200.8 Preparation Method: EPA 200.8							
Aluminum, Dissolved	**6060**	ug/L	50.0	1	07/18/13 10:25	07/22/13 16:47	7429-90-5	
Antimony, Dissolved	**0.18J**	ug/L	1.0	1	07/18/13 10:25	07/22/13 16:47	7440-36-0	B
Arsenic, Dissolved	**4.1**	ug/L	1.0	1	07/18/13 10:25	07/22/13 16:47	7440-38-2	
Barium, Dissolved	**61.4**	ug/L	1.0	1	07/18/13 10:25	07/22/13 16:47	7440-39-3	
Beryllium, Dissolved	**2.2**	ug/L	0.50	1	07/18/13 10:25	07/22/13 16:47	7440-41-7	
Cadmium, Dissolved	**5.0**	ug/L	0.50	1	07/18/13 10:25	07/22/13 16:47	7440-43-9	
Chromium, Dissolved	**7.2**	ug/L	1.0	1	07/18/13 10:25	07/22/13 16:47	7440-47-3	
Cobalt, Dissolved	**11.8**	ug/L	1.0	1	07/18/13 10:25	07/22/13 16:47	7440-48-4	
Copper, Dissolved	**67.2**	ug/L	1.0	1	07/18/13 10:25	07/22/13 16:47	7440-50-8	
Iron, Dissolved	**5870**	ug/L	50.0	1	07/18/13 10:25	07/22/13 16:47	7439-89-6	
Lead, Dissolved	**116**	ug/L	1.0	1	07/18/13 10:25	07/22/13 16:47	7439-92-1	
Manganese, Dissolved	**1360**	ug/L	1.0	1	07/18/13 10:25	07/22/13 16:47	7439-96-5	
Molybdenum, Dissolved	**0.24J**	ug/L	1.0	1	07/18/13 10:25	07/22/13 16:47	7439-98-7	B
Nickel, Dissolved	**10.6**	ug/L	1.0	1	07/18/13 10:25	07/22/13 16:47	7440-02-0	
Selenium, Dissolved	**5.6**	ug/L	1.0	1	07/18/13 10:25	07/22/13 16:47	7782-49-2	
Silver, Dissolved	**0.50J**	ug/L	0.50	1	07/18/13 10:25	07/22/13 16:47	7440-22-4	
Thallium, Dissolved	**0.29J**	ug/L	1.0	1	07/18/13 10:25	07/22/13 16:47	7440-28-0	B
Vanadium, Dissolved	**5.0**	ug/L	1.0	1	07/18/13 10:25	07/23/13 13:10	7440-62-2	
Zinc, Dissolved	**793**	ug/L	10.0	1	07/18/13 10:25	07/22/13 16:47	7440-66-6	
245.1 Mercury	Analytical Method: EPA 245.1 Preparation Method: EPA 245.1							
Mercury	ND	ug/L	0.20	1	07/18/13 14:57	07/23/13 11:14	7439-97-6	
245.1 Mercury, Dissolved	Analytical Method: EPA 245.1 Preparation Method: EPA 245.1							
Mercury, Dissolved	ND	ug/L	0.20	1	07/18/13 14:53	07/23/13 12:37	7439-97-6	
245.1 Potentially Diss Mercury	Analytical Method: EPA 245.1 Preparation Method: EPA 245.1							
Mercury, Dissolved	ND	ug/L	0.20	1	07/16/13 08:30	07/17/13 11:07	7439-97-6	
2510B Specific Conductance	Analytical Method: SM 2510B							
Specific Conductance	**1160**	umhos/cm	10.0	1		07/18/13 11:55		
Salinity	Analytical Method: Calculated							
Salinity (as dissolved solids)	**703**	mg/L	6.4	1		07/23/13 10:09		

REPORT OF LABORATORY ANALYSIS

This report shall not be reproduced, except in full,
without the written consent of Pace Analytical Services, Inc..

Pace Analytical Services, Inc.
9608 Loiret Blvd.
Lenexa, KS 66219
(913)599-5665

ANALYTICAL RESULTS

Project: JULY 2013 RICO WATER SAMPLING
Pace Project No.: 60148708

Sample: MW-102_20130709 **Lab ID: 60148708017** Collected: 07/09/13 13:55 Received: 07/12/13 10:30 Matrix: Water

Parameters	Results	Units	Report Limit	DF	Prepared	Analyzed	CAS No.	Qual
Salinity	Analytical Method: Calculated							
Salinity (as seawater)	**0.54**	PSU	0.014	1		07/23/13 10:09		
2320B Alkalinity	Analytical Method: SM 2320B							
Alkalinity,Bicarbonate (CaCO3)	**201**	mg/L	20.0	1		07/16/13 11:09		
Alkalinity, Carbonate (CaCO3)	ND	mg/L	20.0	1		07/16/13 11:09		
Alkalinity, Total as CaCO3	**201**	mg/L	20.0	1		07/16/13 11:09		
2540C Total Dissolved Solids	Analytical Method: SM 2540C							
Total Dissolved Solids	**844**	mg/L	5.0	1		07/12/13 14:17		
2540D Total Suspended Solids	Analytical Method: SM 2540D							
Total Suspended Solids	**892**	mg/L	5.0	1		07/12/13 16:13		
4500S2D Sulfide, Total	Analytical Method: SM 4500-S-2 D							
Sulfide, Total	ND	mg/L	0.050	1		07/15/13 13:28	18496-25-8	
300.0 IC Anions 28 Days	Analytical Method: EPA 300.0							
Chloride	**1.1**	mg/L	1.0	1		07/27/13 00:52	16887-00-6	
Sulfate	**466**	mg/L	50.0	50		07/27/13 01:09	14808-79-8	
353.2 Nitrogen, NO2/NO3 pres.	Analytical Method: EPA 353.2							
Nitrogen, NO2 plus NO3	**0.83**	mg/L	0.10	1		07/24/13 08:31		
4500CNE Cyanide, Total	Analytical Method: SM 4500-CN-E							
Cyanide	ND	mg/L	0.0050	1		07/15/13 14:33	57-12-5	
5310C TOC	Analytical Method: SM 5310C							
Total Organic Carbon	**0.52**	mg/L	0.50	1		07/17/13 19:14	7440-44-0	

This report shall not be reproduced, except in full,
without the written consent of Pace Analytical Services, Inc..

Pace Analytical Services, Inc.
9608 Loiret Blvd.
Lenexa, KS 66219
(913)599-5665

ANALYTICAL RESULTS

Project: JULY 2013 RICO WATER SAMPLING
Pace Project No.: 60148708

Sample: MW-4 DEEP_20130709 **Lab ID: 60148708018** Collected: 07/09/13 15:07 Received: 07/12/13 10:30 Matrix: Water

Parameters	Results	Units	Report Limit	DF	Prepared	Analyzed	CAS No.	Qual
200.7 Potentially Diss. Metals	Analytical Method: EPA 200.7 Preparation Method: EPA 200.7							
Calcium, Dissolved	**288000**	ug/L	100	1	07/18/13 10:25	07/24/13 14:23	7440-70-2	
Magnesium, Dissolved	**32800**	ug/L	50.0	1	07/18/13 10:25	07/24/13 14:23	7439-95-4	
Potassium, Dissolved	**3330**	ug/L	500	1	07/18/13 10:25	07/24/13 14:23	7440-09-7	
Sodium, Dissolved	**7300**	ug/L	500	1	07/18/13 10:25	07/24/13 14:23	7440-23-5	
200.8 MET ICPMS	Analytical Method: EPA 200.8 Preparation Method: EPA 200.8							
Aluminum	**1160**	ug/L	4.0	1	07/21/13 05:44	07/25/13 21:11	7429-90-5	
Antimony	ND	ug/L	0.50	1	07/21/13 05:44	07/25/13 21:11	7440-36-0	
Arsenic	**2.9**	ug/L	0.50	1	07/21/13 05:44	07/25/13 21:11	7440-38-2	
Barium	**52.0**	ug/L	0.30	1	07/21/13 05:44	07/25/13 21:11	7440-39-3	
Beryllium	**0.21**	ug/L	0.20	1	07/21/13 05:44	07/25/13 21:11	7440-41-7	
Cadmium	**2.6**	ug/L	0.080	1	07/21/13 05:44	07/25/13 21:11	7440-43-9	
Calcium	**310000**	ug/L	400	20	07/21/13 05:44	07/25/13 21:16	7440-70-2	
Chromium	**1.3**	ug/L	0.50	1	07/21/13 05:44	07/25/13 21:11	7440-47-3	
Cobalt	**2.2**	ug/L	0.50	1	07/21/13 05:44	07/25/13 21:11	7440-48-4	
Copper	**15.9**	ug/L	0.50	1	07/21/13 05:44	07/25/13 21:11	7440-50-8	
Iron	**2330**	ug/L	50.0	1	07/21/13 05:44	07/25/13 21:11	7439-89-6	
Lead	**14.1**	ug/L	0.10	1	07/21/13 05:44	07/25/13 21:11	7439-92-1	
Magnesium	**31800**	ug/L	100	20	07/21/13 05:44	07/25/13 21:16	7439-95-4	
Manganese	**414**	ug/L	0.50	1	07/21/13 05:44	07/25/13 21:11	7439-96-5	
Molybdenum	**3.1**	ug/L	0.50	1	07/21/13 05:44	07/25/13 21:11	7439-98-7	
Nickel	**1.8**	ug/L	0.50	1	07/21/13 05:44	07/25/13 21:11	7440-02-0	
Potassium	**3500**	ug/L	20.0	1	07/21/13 05:44	07/25/13 21:11	7440-09-7	
Selenium	**34.8**	ug/L	0.50	1	07/21/13 05:44	07/25/13 21:11	7782-49-2	
Silica	**18600**	ug/L	1070	20	07/21/13 05:44	07/25/13 21:16	7631-86-9	
Silver	ND	ug/L	0.50	1	07/21/13 05:44	07/26/13 15:49	7440-22-4	
Sodium	**6430**	ug/L	50.0	1	07/21/13 05:44	07/25/13 21:11	7440-23-5	
Thallium	ND	ug/L	0.10	1	07/21/13 05:44	07/25/13 21:11	7440-28-0	
Total Hardness by 2340B	**904000**	ug/L	1420	20	07/21/13 05:44	07/25/13 21:16		
Vanadium	**2.2**	ug/L	0.10	1	07/21/13 05:44	07/25/13 21:11	7440-62-2	
Zinc	**361**	ug/L	5.0	1	07/21/13 05:44	07/25/13 21:11	7440-66-6	
200.8 MET ICPMS, Dissolved	Analytical Method: EPA 200.8 Preparation Method: EPA 200.8							
Aluminum, Dissolved	**46.4**	ug/L	4.0	1	07/21/13 05:45	07/24/13 05:23	7429-90-5	
Antimony, Dissolved	ND	ug/L	0.50	1	07/21/13 05:45	07/24/13 05:23	7440-36-0	
Arsenic, Dissolved	ND	ug/L	0.50	1	07/21/13 05:45	07/24/13 05:23	7440-38-2	
Barium, Dissolved	**18.2**	ug/L	0.30	1	07/21/13 05:45	07/24/13 05:23	7440-39-3	
Beryllium, Dissolved	ND	ug/L	0.20	1	07/21/13 05:45	07/24/13 05:23	7440-41-7	
Cadmium, Dissolved	**2.3**	ug/L	0.080	1	07/21/13 05:45	07/24/13 05:23	7440-43-9	
Calcium, Dissolved	**294000**	ug/L	400	20	07/21/13 05:45	07/24/13 05:28	7440-70-2	
Chromium, Dissolved	**0.56**	ug/L	0.50	1	07/21/13 05:45	07/24/13 05:23	7440-47-3	
Cobalt, Dissolved	ND	ug/L	0.50	1	07/21/13 05:45	07/24/13 05:23	7440-48-4	
Copper, Dissolved	**4.0**	ug/L	0.50	1	07/21/13 05:45	07/24/13 05:23	7440-50-8	
Iron, Dissolved	ND	ug/L	50.0	1	07/21/13 05:45	07/24/13 05:23	7439-89-6	
Lead, Dissolved	ND	ug/L	0.10	1	07/21/13 05:45	07/24/13 05:23	7439-92-1	
Magnesium, Dissolved	**33600**	ug/L	100	20	07/21/13 05:45	07/24/13 05:28	7439-95-4	

This report shall not be reproduced, except in full,
without the written consent of Pace Analytical Services, Inc..

Pace Analytical Services, Inc.
9608 Loiret Blvd.
Lenexa, KS 66219
(913)599-5665

ANALYTICAL RESULTS

Project: JULY 2013 RICO WATER SAMPLING
Pace Project No.: 60148708

Sample: MW-4 DEEP_20130709 **Lab ID: 60148708018** Collected: 07/09/13 15:07 Received: 07/12/13 10:30 Matrix: Water

Parameters	Results	Units	Report Limit	DF	Prepared	Analyzed	CAS No.	Qual
200.8 MET ICPMS, Dissolved	Analytical Method: EPA 200.8 Preparation Method: EPA 200.8							
Manganese, Dissolved	**6.3**	ug/L	0.50	1	07/21/13 05:45	07/24/13 05:23	7439-96-5	
Molybdenum, Dissolved	**2.0**	ug/L	0.50	1	07/21/13 05:45	07/24/13 05:23	7439-98-7	
Nickel, Dissolved	**1.4**	ug/L	0.50	1	07/21/13 05:45	07/24/13 05:23	7440-02-0	
Potassium, Dissolved	**3040**	ug/L	20.0	1	07/21/13 05:45	07/24/13 05:23	7440-09-7	
Selenium, Dissolved	**35.7**	ug/L	0.50	1	07/21/13 05:45	07/24/13 05:23	7782-49-2	
Silver, Dissolved	ND	ug/L	0.50	1	07/21/13 05:45	07/24/13 05:23	7440-22-4	
Sodium, Dissolved	**6770**	ug/L	50.0	1	07/21/13 05:45	07/24/13 05:23	7440-23-5	
Thallium, Dissolved	ND	ug/L	0.10	1	07/21/13 05:45	07/24/13 05:23	7440-28-0	
Vanadium, Dissolved	ND	ug/L	0.10	1	07/21/13 05:45	07/24/13 05:23	7440-62-2	
Zinc, Dissolved	**348**	ug/L	5.0	1	07/21/13 05:45	07/24/13 05:23	7440-66-6	
200.8 Potentially Diss. Metals	Analytical Method: EPA 200.8 Preparation Method: EPA 200.8							
Aluminum, Dissolved	**480**	ug/L	50.0	1	07/18/13 10:25	07/22/13 16:51	7429-90-5	
Antimony, Dissolved	**0.13J**	ug/L	1.0	1	07/18/13 10:25	07/22/13 16:51	7440-36-0	B
Arsenic, Dissolved	**1.7**	ug/L	1.0	1	07/18/13 10:25	07/22/13 16:51	7440-38-2	
Barium, Dissolved	**27.6**	ug/L	1.0	1	07/18/13 10:25	07/22/13 16:51	7440-39-3	
Beryllium, Dissolved	**0.11J**	ug/L	0.50	1	07/18/13 10:25	07/22/13 16:51	7440-41-7	
Cadmium, Dissolved	**2.7**	ug/L	0.50	1	07/18/13 10:25	07/22/13 16:51	7440-43-9	
Chromium, Dissolved	**1.7**	ug/L	1.0	1	07/18/13 10:25	07/22/13 16:51	7440-47-3	
Cobalt, Dissolved	**0.72J**	ug/L	1.0	1	07/18/13 10:25	07/22/13 16:51	7440-48-4	
Copper, Dissolved	**12.3**	ug/L	1.0	1	07/18/13 10:25	07/22/13 16:51	7440-50-8	
Iron, Dissolved	**1040**	ug/L	50.0	1	07/18/13 10:25	07/22/13 16:51	7439-89-6	
Lead, Dissolved	**10.4**	ug/L	1.0	1	07/18/13 10:25	07/22/13 16:51	7439-92-1	
Manganese, Dissolved	**126**	ug/L	1.0	1	07/18/13 10:25	07/22/13 16:51	7439-96-5	
Molybdenum, Dissolved	**1.1**	ug/L	1.0	1	07/18/13 10:25	07/22/13 16:51	7439-98-7	B
Nickel, Dissolved	ND	ug/L	1.0	1	07/18/13 10:25	07/22/13 16:51	7440-02-0	
Selenium, Dissolved	**33.4**	ug/L	1.0	1	07/18/13 10:25	07/22/13 16:51	7782-49-2	
Silver, Dissolved	**0.067J**	ug/L	0.50	1	07/18/13 10:25	07/22/13 16:51	7440-22-4	
Thallium, Dissolved	**0.30J**	ug/L	1.0	1	07/18/13 10:25	07/22/13 16:51	7440-28-0	B
Vanadium, Dissolved	**1.4**	ug/L	1.0	1	07/18/13 10:25	07/23/13 13:14	7440-62-2	
Zinc, Dissolved	**361**	ug/L	10.0	1	07/18/13 10:25	07/22/13 16:51	7440-66-6	
245.1 Mercury	Analytical Method: EPA 245.1 Preparation Method: EPA 245.1							
Mercury	ND	ug/L	0.20	1	07/18/13 14:57	07/23/13 11:16	7439-97-6	
245.1 Mercury, Dissolved	Analytical Method: EPA 245.1 Preparation Method: EPA 245.1							
Mercury, Dissolved	ND	ug/L	0.20	1	07/18/13 14:53	07/23/13 12:40	7439-97-6	
245.1 Potentially Diss Mercury	Analytical Method: EPA 245.1 Preparation Method: EPA 245.1							
Mercury, Dissolved	ND	ug/L	0.20	1	07/16/13 08:30	07/17/13 11:09	7439-97-6	
2510B Specific Conductance	Analytical Method: SM 2510B							
Specific Conductance	**1560**	umhos/cm	10.0	1		07/18/13 11:57		
Salinity	Analytical Method: Calculated							
Salinity (as dissolved solids)	**942**	mg/L	6.4	1		07/23/13 10:09		

REPORT OF LABORATORY ANALYSIS

This report shall not be reproduced, except in full,
without the written consent of Pace Analytical Services, Inc..

Pace Analytical Services, Inc.
9608 Loiret Blvd.
Lenexa, KS 66219
(913)599-5665

ANALYTICAL RESULTS

Project: JULY 2013 RICO WATER SAMPLING
Pace Project No.: 60148708

Sample: MW-4 DEEP_20130709 **Lab ID: 60148708018** Collected: 07/09/13 15:07 Received: 07/12/13 10:30 Matrix: Water

Parameters	Results	Units	Report Limit	DF	Prepared	Analyzed	CAS No.	Qual
Salinity	Analytical Method: Calculated							
Salinity (as seawater)	**0.74**	PSU	0.014	1		07/23/13 10:09		
2320B Alkalinity	Analytical Method: SM 2320B							
Alkalinity,Bicarbonate (CaCO3)	**404**	mg/L	20.0	1		07/16/13 11:14		
Alkalinity, Carbonate (CaCO3)	ND	mg/L	20.0	1		07/16/13 11:14		
Alkalinity, Total as CaCO3	**404**	mg/L	20.0	1		07/16/13 11:14		
2540C Total Dissolved Solids	Analytical Method: SM 2540C							
Total Dissolved Solids	**1110**	mg/L	5.0	1		07/12/13 14:18		
2540D Total Suspended Solids	Analytical Method: SM 2540D							
Total Suspended Solids	**39.0**	mg/L	5.0	1		07/12/13 16:13		
4500S2D Sulfide, Total	Analytical Method: SM 4500-S-2 D							
Sulfide, Total	ND	mg/L	0.050	1		07/15/13 13:29	18496-25-8	
300.0 IC Anions 28 Days	Analytical Method: EPA 300.0							
Chloride	**1.1**	mg/L	1.0	1		07/27/13 02:00	16887-00-6	
Sulfate	**508**	mg/L	50.0	50		07/27/13 02:18	14808-79-8	
353.2 Nitrogen, NO2/NO3 pres.	Analytical Method: EPA 353.2							
Nitrogen, NO2 plus NO3	ND	mg/L	0.10	1		07/24/13 08:33		M1
4500CNE Cyanide, Total	Analytical Method: SM 4500-CN-E							
Cyanide	ND	mg/L	0.0050	1		07/15/13 14:37	57-12-5	
5310C TOC	Analytical Method: SM 5310C							
Total Organic Carbon	ND	mg/L	0.50	1		07/17/13 19:33	7440-44-0	

This report shall not be reproduced, except in full,
without the written consent of Pace Analytical Services, Inc..

Pace Analytical Services, Inc.
9608 Loiret Blvd.
Lenexa, KS 66219
(913)599-5665

ANALYTICAL RESULTS

Project: JULY 2013 RICO WATER SAMPLING
Pace Project No.: 60148708

Sample: MW-5 DEEP_20130709 **Lab ID: 60148708019** Collected: 07/09/13 12:45 Received: 07/12/13 10:30 Matrix: Water

Parameters	Results	Units	Report Limit	DF	Prepared	Analyzed	CAS No.	Qual
200.7 Potentially Diss. Metals	Analytical Method: EPA 200.7 Preparation Method: EPA 200.7							
Calcium, Dissolved	**325000**	ug/L	100	1	07/18/13 10:25	07/24/13 14:26	7440-70-2	
Magnesium, Dissolved	**53400**	ug/L	50.0	1	07/18/13 10:25	07/24/13 14:26	7439-95-4	
Potassium, Dissolved	**8910**	ug/L	500	1	07/18/13 10:25	07/24/13 14:26	7440-09-7	
Sodium, Dissolved	**8260**	ug/L	500	1	07/18/13 10:25	07/24/13 14:26	7440-23-5	
200.8 MET ICPMS	Analytical Method: EPA 200.8 Preparation Method: EPA 200.8							
Aluminum	**4140**	ug/L	4.0	1	07/21/13 05:44	07/25/13 21:30	7429-90-5	
Antimony	**0.63**	ug/L	0.50	1	07/21/13 05:44	07/25/13 21:30	7440-36-0	
Arsenic	**219**	ug/L	0.50	1	07/21/13 05:44	07/25/13 21:30	7440-38-2	
Barium	**75.1**	ug/L	0.30	1	07/21/13 05:44	07/25/13 21:30	7440-39-3	
Beryllium	**1.9**	ug/L	0.20	1	07/21/13 05:44	07/25/13 21:30	7440-41-7	
Cadmium	**4.1**	ug/L	0.080	1	07/21/13 05:44	07/25/13 21:30	7440-43-9	
Calcium	**356000**	ug/L	400	20	07/21/13 05:44	07/25/13 21:36	7440-70-2	
Chromium	**3.5**	ug/L	0.50	1	07/21/13 05:44	07/25/13 21:30	7440-47-3	
Cobalt	**11.4**	ug/L	0.50	1	07/21/13 05:44	07/25/13 21:30	7440-48-4	
Copper	**70.5**	ug/L	0.50	1	07/21/13 05:44	07/25/13 21:30	7440-50-8	
Iron	**90700**	ug/L	1000	20	07/21/13 05:44	07/25/13 21:36	7439-89-6	
Lead	**553**	ug/L	2.0	20	07/21/13 05:44	07/25/13 21:36	7439-92-1	
Magnesium	**53400**	ug/L	100	20	07/21/13 05:44	07/25/13 21:36	7439-95-4	
Manganese	**11800**	ug/L	25.0	50	07/21/13 05:44	07/26/13 17:32	7439-96-5	
Molybdenum	**17.0**	ug/L	0.50	1	07/21/13 05:44	07/25/13 21:30	7439-98-7	
Nickel	**11.4**	ug/L	0.50	1	07/21/13 05:44	07/25/13 21:30	7440-02-0	
Potassium	**9340**	ug/L	20.0	1	07/21/13 05:44	07/25/13 21:30	7440-09-7	
Selenium	**1.2**	ug/L	0.50	1	07/21/13 05:44	07/25/13 21:30	7782-49-2	
Silica	**33700**	ug/L	1070	20	07/21/13 05:44	07/25/13 21:36	7631-86-9	
Silver	**1.7**	ug/L	0.50	1	07/21/13 05:44	07/26/13 17:26	7440-22-4	
Sodium	**7220**	ug/L	50.0	1	07/21/13 05:44	07/25/13 21:30	7440-23-5	
Thallium	**0.25**	ug/L	0.10	1	07/21/13 05:44	07/25/13 21:30	7440-28-0	
Total Hardness by 2340B	**1110000**	ug/L	1420	20	07/21/13 05:44	07/25/13 21:36		
Vanadium	**6.2**	ug/L	0.10	1	07/21/13 05:44	07/25/13 21:30	7440-62-2	
Zinc	**11000**	ug/L	250	50	07/21/13 05:44	07/26/13 17:32	7440-66-6	
200.8 MET ICPMS, Dissolved	Analytical Method: EPA 200.8 Preparation Method: EPA 200.8							
Aluminum, Dissolved	**510**	ug/L	4.0	1	07/21/13 05:45	07/24/13 06:08	7429-90-5	
Antimony, Dissolved	ND	ug/L	0.50	1	07/21/13 05:45	07/24/13 06:08	7440-36-0	
Arsenic, Dissolved	**113**	ug/L	0.50	1	07/21/13 05:45	07/24/13 06:08	7440-38-2	
Barium, Dissolved	**11.3**	ug/L	0.30	1	07/21/13 05:45	07/24/13 06:08	7440-39-3	
Beryllium, Dissolved	**1.7**	ug/L	0.20	1	07/21/13 05:45	07/24/13 06:08	7440-41-7	
Cadmium, Dissolved	ND	ug/L	0.080	1	07/21/13 05:45	07/24/13 06:08	7440-43-9	
Calcium, Dissolved	**332000**	ug/L	400	20	07/21/13 05:45	07/24/13 06:13	7440-70-2	
Chromium, Dissolved	ND	ug/L	0.50	1	07/21/13 05:45	07/24/13 06:08	7440-47-3	
Cobalt, Dissolved	**9.4**	ug/L	0.50	1	07/21/13 05:45	07/24/13 06:08	7440-48-4	
Copper, Dissolved	**0.69**	ug/L	0.50	1	07/21/13 05:45	07/24/13 06:08	7440-50-8	
Iron, Dissolved	**68400**	ug/L	1000	20	07/21/13 05:45	07/24/13 06:13	7439-89-6	
Lead, Dissolved	**2.6**	ug/L	0.10	1	07/21/13 05:45	07/24/13 06:08	7439-92-1	
Magnesium, Dissolved	**58300**	ug/L	100	20	07/21/13 05:45	07/24/13 06:13	7439-95-4	

This report shall not be reproduced, except in full,
without the written consent of Pace Analytical Services, Inc..

Pace Analytical Services, Inc.
9608 Loiret Blvd.
Lenexa, KS 66219
(913)599-5665

ANALYTICAL RESULTS

Project: JULY 2013 RICO WATER SAMPLING
Pace Project No.: 60148708

Sample: MW-5 DEEP_20130709 **Lab ID: 60148708019** Collected: 07/09/13 12:45 Received: 07/12/13 10:30 Matrix: Water

Parameters	Results	Units	Report Limit	DF	Prepared	Analyzed	CAS No.	Qual
200.8 MET ICPMS, Dissolved	Analytical Method: EPA 200.8 Preparation Method: EPA 200.8							
Manganese, Dissolved	**11400**	ug/L	25.0	50	07/21/13 05:45	07/24/13 17:44	7439-96-5	
Molybdenum, Dissolved	**12.6**	ug/L	0.50	1	07/21/13 05:45	07/24/13 06:08	7439-98-7	
Nickel, Dissolved	**8.1**	ug/L	0.50	1	07/21/13 05:45	07/24/13 06:08	7440-02-0	
Potassium, Dissolved	**8130**	ug/L	20.0	1	07/21/13 05:45	07/24/13 06:08	7440-09-7	
Selenium, Dissolved	ND	ug/L	0.50	1	07/21/13 05:45	07/24/13 06:08	7782-49-2	
Silver, Dissolved	ND	ug/L	0.50	1	07/21/13 05:45	07/24/13 06:08	7440-22-4	
Sodium, Dissolved	**7550**	ug/L	50.0	1	07/21/13 05:45	07/24/13 06:08	7440-23-5	
Thallium, Dissolved	ND	ug/L	0.10	1	07/21/13 05:45	07/24/13 06:08	7440-28-0	
Vanadium, Dissolved	ND	ug/L	0.10	1	07/21/13 05:45	07/24/13 06:08	7440-62-2	
Zinc, Dissolved	**9480**	ug/L	250	50	07/21/13 05:45	07/24/13 17:44	7440-66-6	
200.8 Potentially Diss. Metals	Analytical Method: EPA 200.8 Preparation Method: EPA 200.8							
Aluminum, Dissolved	**1340**	ug/L	50.0	1	07/18/13 10:25	07/22/13 16:55	7429-90-5	
Antimony, Dissolved	**0.19J**	ug/L	1.0	1	07/18/13 10:25	07/22/13 16:55	7440-36-0	B
Arsenic, Dissolved	**168**	ug/L	1.0	1	07/18/13 10:25	07/22/13 16:55	7440-38-2	
Barium, Dissolved	**14.7**	ug/L	1.0	1	07/18/13 10:25	07/22/13 16:55	7440-39-3	
Beryllium, Dissolved	**1.6**	ug/L	0.50	1	07/18/13 10:25	07/22/13 16:55	7440-41-7	
Cadmium, Dissolved	**1.1**	ug/L	0.50	1	07/18/13 10:25	07/22/13 16:55	7440-43-9	
Chromium, Dissolved	**1.3**	ug/L	1.0	1	07/18/13 10:25	07/22/13 16:55	7440-47-3	
Cobalt, Dissolved	**9.2**	ug/L	1.0	1	07/18/13 10:25	07/22/13 16:55	7440-48-4	
Copper, Dissolved	**18.9**	ug/L	1.0	1	07/18/13 10:25	07/22/13 16:55	7440-50-8	
Iron, Dissolved	**69800**	ug/L	50.0	1	07/18/13 10:25	07/22/13 16:55	7439-89-6	
Lead, Dissolved	**299**	ug/L	1.0	1	07/18/13 10:25	07/22/13 16:55	7439-92-1	
Manganese, Dissolved	**10900**	ug/L	20.0	20	07/18/13 10:25	07/23/13 13:43	7439-96-5	
Molybdenum, Dissolved	**6.2**	ug/L	1.0	1	07/18/13 10:25	07/22/13 16:55	7439-98-7	
Nickel, Dissolved	**6.2**	ug/L	1.0	1	07/18/13 10:25	07/22/13 16:55	7440-02-0	
Selenium, Dissolved	**0.45J**	ug/L	1.0	1	07/18/13 10:25	07/22/13 16:55	7782-49-2	
Silver, Dissolved	ND	ug/L	0.50	1	07/18/13 10:25	07/22/13 16:55	7440-22-4	
Thallium, Dissolved	**0.41J**	ug/L	1.0	1	07/18/13 10:25	07/22/13 16:55	7440-28-0	B
Vanadium, Dissolved	**0.87J**	ug/L	1.0	1	07/18/13 10:25	07/23/13 13:18	7440-62-2	
Zinc, Dissolved	**9390**	ug/L	10.0	1	07/18/13 10:25	07/22/13 16:55	7440-66-6	
245.1 Mercury	Analytical Method: EPA 245.1 Preparation Method: EPA 245.1							
Mercury	ND	ug/L	0.20	1	07/18/13 14:57	07/23/13 11:19	7439-97-6	
245.1 Mercury, Dissolved	Analytical Method: EPA 245.1 Preparation Method: EPA 245.1							
Mercury, Dissolved	ND	ug/L	0.20	1	07/18/13 14:53	07/23/13 12:42	7439-97-6	
245.1 Potentially Diss Mercury	Analytical Method: EPA 245.1 Preparation Method: EPA 245.1							
Mercury, Dissolved	ND	ug/L	0.20	1	07/16/13 08:30	07/17/13 11:12	7439-97-6	
2510B Specific Conductance	Analytical Method: SM 2510B							
Specific Conductance	**1850**	umhos/cm	10.0	1		07/18/13 11:59		
Salinity	Analytical Method: Calculated							
Salinity (as dissolved solids)	**1100**	mg/L	6.4	1		07/24/13 11:32		

REPORT OF LABORATORY ANALYSIS

This report shall not be reproduced, except in full,
without the written consent of Pace Analytical Services, Inc..

Pace Analytical Services, Inc.
9608 Loiret Blvd.
Lenexa, KS 66219
(913)599-5665

ANALYTICAL RESULTS

Project: JULY 2013 RICO WATER SAMPLING
Pace Project No.: 60148708

Sample: MW-5 DEEP_20130709 **Lab ID: 60148708019** Collected: 07/09/13 12:45 Received: 07/12/13 10:30 Matrix: Water

Parameters	Results	Units	Report Limit	DF	Prepared	Analyzed	CAS No.	Qual
Salinity	Analytical Method: Calculated							
Salinity (as seawater)	**0.87**	PSU	0.014	1		07/24/13 11:32		
2320B Alkalinity	Analytical Method: SM 2320B							
Alkalinity,Bicarbonate (CaCO3)	**99.7**	mg/L	20.0	1		07/16/13 11:18		
Alkalinity, Carbonate (CaCO3)	ND	mg/L	20.0	1		07/16/13 11:18		
Alkalinity, Total as CaCO3	**99.7**	mg/L	20.0	1		07/16/13 11:18		
2540C Total Dissolved Solids	Analytical Method: SM 2540C							
Total Dissolved Solids	**1650**	mg/L	5.0	1		07/12/13 14:18		
2540D Total Suspended Solids	Analytical Method: SM 2540D							
Total Suspended Solids	**344**	mg/L	5.0	1		07/12/13 16:13		
4500S2D Sulfide, Total	Analytical Method: SM 4500-S-2 D							
Sulfide, Total	ND	mg/L	0.050	1		07/15/13 13:29	18496-25-8	
300.0 IC Anions 28 Days	Analytical Method: EPA 300.0							
Chloride	**1.5**	mg/L	1.0	1		07/27/13 02:35	16887-00-6	
Sulfate	**1170**	mg/L	100	100		07/27/13 02:52	14808-79-8	
353.2 Nitrogen, NO2/NO3 pres.	Analytical Method: EPA 353.2							
Nitrogen, NO2 plus NO3	ND	mg/L	0.10	1		07/24/13 08:35		
4500CNE Cyanide, Total	Analytical Method: SM 4500-CN-E							
Cyanide	ND	mg/L	0.0050	1		07/15/13 14:37	57-12-5	
5310C TOC	Analytical Method: SM 5310C							
Total Organic Carbon	**0.55**	mg/L	0.50	1		07/17/13 19:50	7440-44-0	

This report shall not be reproduced, except in full,
without the written consent of Pace Analytical Services, Inc..

Pace Analytical Services, Inc.
9608 Loiret Blvd.
Lenexa, KS 66219
(913)599-5665

ANALYTICAL RESULTS

Project: JULY 2013 RICO WATER SAMPLING
Pace Project No.: 60148708

Sample: MW-5 SHALLOW_20130709 **Lab ID: 60148708020** Collected: 07/09/13 12:30 Received: 07/12/13 10:30 Matrix: Water

Parameters	Results	Units	Report Limit	DF	Prepared	Analyzed	CAS No.	Qual
200.7 Potentially Diss. Metals	Analytical Method: EPA 200.7 Preparation Method: EPA 200.7							
Calcium, Dissolved	**351000**	ug/L	100	1	07/18/13 10:25	07/24/13 14:30	7440-70-2	
Magnesium, Dissolved	**113000**	ug/L	50.0	1	07/18/13 10:25	07/24/13 14:30	7439-95-4	
Potassium, Dissolved	**2540**	ug/L	500	1	07/18/13 10:25	07/24/13 14:30	7440-09-7	
Sodium, Dissolved	**19200**	ug/L	500	1	07/18/13 10:25	07/24/13 14:30	7440-23-5	
200.8 MET ICPMS	Analytical Method: EPA 200.8 Preparation Method: EPA 200.8							
Aluminum	**36800**	ug/L	80.0	20	07/21/13 05:44	07/25/13 21:47	7429-90-5	
Antimony	**3.6**	ug/L	0.50	1	07/21/13 05:44	07/25/13 21:41	7440-36-0	
Arsenic	**384**	ug/L	0.50	1	07/21/13 05:44	07/25/13 21:41	7440-38-2	
Barium	**90.0**	ug/L	0.30	1	07/21/13 05:44	07/25/13 21:41	7440-39-3	
Beryllium	**7.0**	ug/L	0.20	1	07/21/13 05:44	07/25/13 21:41	7440-41-7	
Cadmium	**185**	ug/L	0.080	1	07/21/13 05:44	07/25/13 21:41	7440-43-9	
Calcium	**476000**	ug/L	10000	500	07/21/13 05:44	07/26/13 17:43	7440-70-2	
Chromium	**16.5**	ug/L	0.50	1	07/21/13 05:44	07/25/13 21:41	7440-47-3	
Cobalt	**89.2**	ug/L	0.50	1	07/21/13 05:44	07/25/13 21:41	7440-48-4	
Copper	**1090**	ug/L	10.0	20	07/21/13 05:44	07/25/13 21:47	7440-50-8	
Iron	**596000**	ug/L	25000	500	07/21/13 05:44	07/26/13 17:43	7439-89-6	
Lead	**7010**	ug/L	2.0	20	07/21/13 05:44	07/25/13 21:47	7439-92-1	
Magnesium	**133000**	ug/L	100	20	07/21/13 05:44	07/25/13 21:47	7439-95-4	
Manganese	**28000**	ug/L	250	500	07/21/13 05:44	07/26/13 17:43	7439-96-5	
Molybdenum	**8.0**	ug/L	0.50	1	07/21/13 05:44	07/25/13 21:41	7439-98-7	
Nickel	**157**	ug/L	0.50	1	07/21/13 05:44	07/25/13 21:41	7440-02-0	
Potassium	**5160**	ug/L	20.0	1	07/21/13 05:44	07/25/13 21:41	7440-09-7	
Selenium	**10.5**	ug/L	0.50	1	07/21/13 05:44	07/25/13 21:41	7782-49-2	
Silica	**77800**	ug/L	1070	20	07/21/13 05:44	07/25/13 21:47	7631-86-9	
Silver	**22.5**	ug/L	10.0	20	07/21/13 05:44	07/26/13 17:37	7440-22-4	
Sodium	**22200**	ug/L	50.0	1	07/21/13 05:44	07/25/13 21:41	7440-23-5	
Thallium	**0.86**	ug/L	0.10	1	07/21/13 05:44	07/25/13 21:41	7440-28-0	
Total Hardness by 2340B	**1740000**	ug/L	35500	500	07/21/13 05:44	07/26/13 17:43		
Vanadium	**13.5**	ug/L	0.10	1	07/21/13 05:44	07/25/13 21:41	7440-62-2	
Zinc	**129000**	ug/L	2500	500	07/21/13 05:44	07/26/13 17:43	7440-66-6	
200.8 MET ICPMS, Dissolved	Analytical Method: EPA 200.8 Preparation Method: EPA 200.8							
Aluminum, Dissolved	**25900**	ug/L	20.0	5	07/21/13 05:45	07/24/13 05:52	7429-90-5	
Antimony, Dissolved	ND	ug/L	2.5	5	07/21/13 05:45	07/24/13 05:52	7440-36-0	D3
Arsenic, Dissolved	**259**	ug/L	2.5	5	07/21/13 05:45	07/24/13 05:52	7440-38-2	
Barium, Dissolved	**8.1**	ug/L	1.5	5	07/21/13 05:45	07/24/13 05:52	7440-39-3	
Beryllium, Dissolved	**7.1**	ug/L	1.0	5	07/21/13 05:45	07/24/13 05:52	7440-41-7	
Cadmium, Dissolved	**157**	ug/L	0.40	5	07/21/13 05:45	07/24/13 05:52	7440-43-9	
Calcium, Dissolved	**424000**	ug/L	1000	50	07/21/13 05:45	07/24/13 05:57	7440-70-2	
Chromium, Dissolved	ND	ug/L	2.5	5	07/21/13 05:45	07/24/13 05:52	7440-47-3	D3
Cobalt, Dissolved	**76.0**	ug/L	2.5	5	07/21/13 05:45	07/24/13 05:52	7440-48-4	
Copper, Dissolved	**4.2**	ug/L	2.5	5	07/21/13 05:45	07/24/13 05:52	7440-50-8	
Iron, Dissolved	**448000**	ug/L	2500	50	07/21/13 05:45	07/24/13 05:57	7439-89-6	
Lead, Dissolved	**1070**	ug/L	0.50	5	07/21/13 05:45	07/24/13 05:52	7439-92-1	
Magnesium, Dissolved	**134000**	ug/L	250	50	07/21/13 05:45	07/24/13 05:57	7439-95-4	

This report shall not be reproduced, except in full,
without the written consent of Pace Analytical Services, Inc..

Pace Analytical Services, Inc.
9608 Loiret Blvd.
Lenexa, KS 66219
(913)599-5665

ANALYTICAL RESULTS

Project: JULY 2013 RICO WATER SAMPLING
Pace Project No.: 60148708

Sample: MW-5 SHALLOW_20130709 **Lab ID: 60148708020** Collected: 07/09/13 12:30 Received: 07/12/13 10:30 Matrix: Water

Parameters	Results	Units	Report Limit	DF	Prepared	Analyzed	CAS No.	Qual
200.8 MET ICPMS, Dissolved	Analytical Method: EPA 200.8 Preparation Method: EPA 200.8							
Manganese, Dissolved	**26000**	ug/L	250	500	07/21/13 05:45	07/24/13 06:02	7439-96-5	
Molybdenum, Dissolved	ND	ug/L	2.5	5	07/21/13 05:45	07/24/13 05:52	7439-98-7	D3
Nickel, Dissolved	**142**	ug/L	2.5	5	07/21/13 05:45	07/24/13 05:52	7440-02-0	
Potassium, Dissolved	**2360**	ug/L	100	5	07/21/13 05:45	07/24/13 05:52	7440-09-7	
Selenium, Dissolved	**4.8**	ug/L	2.5	5	07/21/13 05:45	07/24/13 05:52	7782-49-2	
Silver, Dissolved	ND	ug/L	2.5	5	07/21/13 05:45	07/24/13 05:52	7440-22-4	D3
Sodium, Dissolved	**19400**	ug/L	250	5	07/21/13 05:45	07/24/13 05:52	7440-23-5	
Thallium, Dissolved	ND	ug/L	0.50	5	07/21/13 05:45	07/24/13 05:52	7440-28-0	D3
Vanadium, Dissolved	**1.4**	ug/L	0.50	5	07/21/13 05:45	07/24/13 05:52	7440-62-2	
Zinc, Dissolved	**119000**	ug/L	2500	500	07/21/13 05:45	07/24/13 06:02	7440-66-6	
200.8 Potentially Diss. Metals	Analytical Method: EPA 200.8 Preparation Method: EPA 200.8							
Aluminum, Dissolved	**29800**	ug/L	250	5	07/18/13 10:25	07/22/13 16:59	7429-90-5	
Antimony, Dissolved	**1.2J**	ug/L	5.0	5	07/18/13 10:25	07/22/13 16:59	7440-36-0	B
Arsenic, Dissolved	**373**	ug/L	5.0	5	07/18/13 10:25	07/22/13 16:59	7440-38-2	
Barium, Dissolved	**6.5**	ug/L	5.0	5	07/18/13 10:25	07/22/13 16:59	7440-39-3	
Beryllium, Dissolved	**6.7**	ug/L	2.5	5	07/18/13 10:25	07/22/13 16:59	7440-41-7	
Cadmium, Dissolved	**197**	ug/L	2.5	5	07/18/13 10:25	07/22/13 16:59	7440-43-9	
Chromium, Dissolved	**8.7**	ug/L	5.0	5	07/18/13 10:25	07/22/13 16:59	7440-47-3	
Cobalt, Dissolved	**87.2**	ug/L	5.0	5	07/18/13 10:25	07/22/13 16:59	7440-48-4	
Copper, Dissolved	**656**	ug/L	5.0	5	07/18/13 10:25	07/22/13 16:59	7440-50-8	
Iron, Dissolved	**453000**	ug/L	250	5	07/18/13 10:25	07/22/13 16:59	7439-89-6	
Lead, Dissolved	**3270**	ug/L	5.0	5	07/18/13 10:25	07/22/13 16:59	7439-92-1	
Manganese, Dissolved	**25900**	ug/L	50.0	50	07/18/13 10:25	07/23/13 13:47	7439-96-5	
Molybdenum, Dissolved	**2.9J**	ug/L	5.0	5	07/18/13 10:25	07/22/13 16:59	7439-98-7	B
Nickel, Dissolved	**161**	ug/L	5.0	5	07/18/13 10:25	07/22/13 16:59	7440-02-0	
Selenium, Dissolved	**7.4**	ug/L	5.0	5	07/18/13 10:25	07/22/13 16:59	7782-49-2	
Silver, Dissolved	ND	ug/L	2.5	5	07/18/13 10:25	07/22/13 16:59	7440-22-4	D3
Thallium, Dissolved	**2.0J**	ug/L	5.0	5	07/18/13 10:25	07/22/13 16:59	7440-28-0	B
Vanadium, Dissolved	**3.5J**	ug/L	5.0	5	07/18/13 10:25	07/23/13 13:30	7440-62-2	
Zinc, Dissolved	**120000**	ug/L	500	50	07/18/13 10:25	07/23/13 13:47	7440-66-6	
245.1 Mercury	Analytical Method: EPA 245.1 Preparation Method: EPA 245.1							
Mercury	ND	ug/L	0.20	1	07/18/13 14:57	07/23/13 11:21	7439-97-6	
245.1 Mercury, Dissolved	Analytical Method: EPA 245.1 Preparation Method: EPA 245.1							
Mercury, Dissolved	ND	ug/L	0.20	1	07/18/13 14:53	07/23/13 12:45	7439-97-6	
245.1 Potentially Diss Mercury	Analytical Method: EPA 245.1 Preparation Method: EPA 245.1							
Mercury, Dissolved	ND	ug/L	0.20	1	07/16/13 08:30	07/17/13 11:14	7439-97-6	
2510B Specific Conductance	Analytical Method: SM 2510B							
Specific Conductance	**3960**	umhos/cm	10.0	1		07/18/13 12:00		

REPORT OF LABORATORY ANALYSIS

This report shall not be reproduced, except in full,
without the written consent of Pace Analytical Services, Inc..

Pace Analytical Services, Inc.
9608 Loiret Blvd.
Lenexa, KS 66219
(913)599-5665

ANALYTICAL RESULTS

Project: JULY 2013 RICO WATER SAMPLING
Pace Project No.: 60148708

Sample: MW-5 SHALLOW_20130709 **Lab ID: 60148708020** Collected: 07/09/13 12:30 Received: 07/12/13 10:30 Matrix: Water

Parameters	Results	Units	Report Limit	DF	Prepared	Analyzed	CAS No.	Qual
Salinity	Analytical Method: Calculated							
Salinity (as dissolved solids)	**1790**	mg/L	6.4	1		07/24/13 11:32		
Salinity (as seawater)	**1.4**	PSU	0.014	1		07/24/13 11:32		
2320B Alkalinity	Analytical Method: SM 2320B							
Alkalinity,Bicarbonate (CaCO3)	ND	mg/L	20.0	1		07/17/13 10:41		
Alkalinity, Carbonate (CaCO3)	ND	mg/L	20.0	1		07/17/13 10:41		
Alkalinity, Total as CaCO3	ND	mg/L	20.0	1		07/17/13 10:41		
2540C Total Dissolved Solids	Analytical Method: SM 2540C							
Total Dissolved Solids	**4190**	mg/L	5.0	1		07/12/13 14:18		
2540D Total Suspended Solids	Analytical Method: SM 2540D							
Total Suspended Solids	**228**	mg/L	5.0	1		07/12/13 16:13		
4500S2D Sulfide, Total	Analytical Method: SM 4500-S-2 D							
Sulfide, Total	ND	mg/L	0.050	1		07/15/13 13:30	18496-25-8	
300.0 IC Anions 28 Days	Analytical Method: EPA 300.0							
Chloride	**3.6**	mg/L	1.0	1		07/27/13 03:09	16887-00-6	
Sulfate	**3480**	mg/L	500	500		07/29/13 02:08	14808-79-8	
353.2 Nitrogen, NO2/NO3 pres.	Analytical Method: EPA 353.2							
Nitrogen, NO2 plus NO3	ND	mg/L	0.10	1		07/24/13 08:35		
4500CNE Cyanide, Total	Analytical Method: SM 4500-CN-E							
Cyanide	ND	mg/L	0.0050	1		07/15/13 14:40	57-12-5	
5310C TOC	Analytical Method: SM 5310C							
Total Organic Carbon	ND	mg/L	0.50	1		07/17/13 20:08	7440-44-0	

This report shall not be reproduced, except in full,
without the written consent of Pace Analytical Services, Inc..

Pace Analytical Services, Inc.
9608 Loiret Blvd.
Lenexa, KS 66219
(913)599-5665

August 21, 2013

Mark DeFriez
Anderson Engineering Company I
977 W 2100 S.
Salt Lake City, UT 84119

RE: Project: JULY 2013 RICO WATER SAMPLING
Pace Project No.: 60149200

Dear Mark DeFriez:
Enclosed are the analytical results for sample(s) received by the laboratory on July 19, 2013. The results relate only to the within this report conform to the most current version of the TNI standards, BP LaMP Technical Requirements Revision 10.1, and any applicable Quality Assurance Project Plan (QAPP), or Work Plan unless otherwise narrated in the body of this report.

If you have any questions concerning this report, please feel free to contact me.

Sincerely,

Heather M. Wilson

Heather Wilson

heather.wilson@pacelabs.com
Project Manager

Enclosures

This report shall not be reproduced, except in full,
without the written consent of Pace Analytical Services, Inc..

Pace Analytical Services, Inc.
9608 Loiret Blvd.
Lenexa, KS 66219
(913)599-5665

CERTIFICATIONS

Project: JULY 2013 RICO WATER SAMPLING
Pace Project No.: 60149200

Minnesota Certification IDs
1700 Elm Street SE Suite 200, Minneapolis, MN 55414
A2LA Certification #: 2926.01
Alaska Certification #: UST-078
Alaska Certification #MN00064
Arizona Certification #: AZ-0014
Arkansas Certification #: 88-0680
California Certification #: 01155CA
Colorado Certification #Pace
Connecticut Certification #: PH-0256
EPA Region 8 Certification #: Pace
Florida/NELAP Certification #: E87605
Georgia Certification #: 959
Hawaii Certification #Pace
Idaho Certification #: MN00064
Illinois Certification #: 200011
Kansas Certification #: E-10167
Louisiana Certification #: 03086
Louisiana Certification #: LA080009
Maine Certification #: 2007029
Maryland Certification #: 322
Michigan DEQ Certification #: 9909
Minnesota Certification #: 027-053-137
Mississippi Certification #: Pace
Montana Certification #: MT CERT0092
Nevada Certification #: MN_00064
Nebraska Certification #: Pace
New Jersey Certification #: MN-002
New York Certification #: 11647
North Carolina Certification #: 530
North Dakota Certification #: R-036
Ohio VAP Certification #: CL101
Oklahoma Certification #: 9507
Oregon Certification #: MN200001
Oregon Certification #: MN300001
Pennsylvania Certification #: 68-00563
Puerto Rico Certification
Tennessee Certification #: 02818
Texas Certification #: T104704192
Utah Certification #: MN00064
Virginia/DCLS Certification #: 002521
Virginia/VELAP Certification #: 460163
Washington Certification #: C754
West Virginia Certification #: 382
Wisconsin Certification #: 999407970

Montana Certification IDs
602 South 25th Street, Billings, MT 59101
EPA Region 8 Certification #: 8TMS-Q
Idaho Certification #: MT00012
Montana Certification #: MT CERT0040
NVLAP Certification #: 101292-0
Minnesota Dept of Health Certification #: 030-999-442
Washington Department of Ecology #: C993

Green Bay Certification IDs
1241 Bellevue Street, Green Bay, WI 54302
Florida/NELAP Certification #: E87948
Illinois Certification #: 200050
Kentucky Certification #: 82
Louisiana Certification #: 04168
Minnesota Certification #: 055-999-334
New York Certification #: 11888
North Dakota Certification #: R-150
South Carolina Certification #: 83006001
US Dept of Agriculture #: S-76505
Wisconsin Certification #: 405132750

Kansas Certification IDs
9608 Loiret Boulevard, Lenexa, KS 66219
WY STR Certification #: 2456.01
Arkansas Certification #: 13-012-0
Illinois Certification #: 003097
Iowa Certification #: 118
Kansas/NELAP Certification #: E-10116
Louisiana Certification #: 03055
Nevada Certification #: KS000212008A
Oklahoma Certification #: 9205/9935
Texas Certification #: T104704407-13-4
Utah Certification #: KS000212013-3
Illinois Certification #: 003097

This report shall not be reproduced, except in full,
without the written consent of Pace Analytical Services, Inc..

Pace Analytical Services, Inc.
9608 Loiret Blvd.
Lenexa, KS 66219
(913)599-5665

SAMPLE SUMMARY

Project: JULY 2013 RICO WATER SAMPLING
Pace Project No.: 60149200

Lab ID	Sample ID	Matrix	Date Collected	Date Received
60149200001	**DR-4_20130717**	Water	07/17/13 13:30	07/19/13 10:00
60149200002	**DR-5_20130717**	Water	07/17/13 13:05	07/19/13 10:00
60149200003	**DR-4-SW_20130717**	Water	07/17/13 10:50	07/19/13 10:00
60149200004	**DR-4-SW COMPOSITE_20130717**	Water	07/17/13 10:48	07/19/13 10:00
60149200005	**GW-7_20130717**	Water	07/17/13 14:30	07/19/13 10:00
60149200006	**EB-1_20130717**	Water	07/17/13 14:07	07/19/13 10:00
60149200007	**EB-2_20130717**	Water	07/17/13 13:55	07/19/13 10:00
60149200008	**MW-4 SHALLOW_20130717**	Water	07/17/13 15:35	07/19/13 10:00

This report shall not be reproduced, except in full,
without the written consent of Pace Analytical Services, Inc..

Pace Analytical Services, Inc.
9608 Loiret Blvd.
Lenexa, KS 66219
(913)599-5665

SAMPLE ANALYTE COUNT

Project: JULY 2013 RICO WATER SAMPLING
Pace Project No.: 60149200

Lab ID	Sample ID	Method	Analysts	Analytes Reported	Laboratory
60149200001	**DR-4_20130717**	EPA 200.7	JGP	4	PASI-K
		EPA 200.8	TT3	25	PASI-M
		EPA 200.8	TT3	23	PASI-M
		EPA 200.8	SMW	19	PASI-K
		EPA 245.1	WBS	1	PASI-M
		EPA 245.1	WBS	1	PASI-M
		EPA 245.1	NDJ	1	PASI-K
		SM 2510B	CS1	1	
		Calculated	CS1	2	
		SM 2320B	JMC	3	PASI-K
		SM 2540C	LEM	1	PASI-K
		SM 2540D	LEM	1	PASI-K
		SM 4500-S-2 D	OL	1	PASI-K
		EPA 300.0	OL	2	PASI-K
		EPA 353.2	DJR	1	PASI-K
		SM 4500-CN-E	AJM	1	PASI-K
		SM 5310C	TJJ	1	PASI-G
60149200002	**DR-5_20130717**	EPA 200.7	JGP	4	PASI-K
		EPA 200.8	TT3	25	PASI-M
		EPA 200.8	TT3	23	PASI-M
		EPA 200.8	SMW	19	PASI-K
		EPA 245.1	WBS	1	PASI-M
		EPA 245.1	WBS	1	PASI-M
		EPA 245.1	NDJ	1	PASI-K
		SM 2510B	CS1	1	
		Calculated	CS1	2	
		SM 2320B	JMC	3	PASI-K
		SM 2540C	LEM	1	PASI-K
		SM 2540D	LEM	1	PASI-K
		SM 4500-S-2 D	OL	1	PASI-K
		EPA 300.0	OL	2	PASI-K
		EPA 353.2	DJR	1	PASI-K
		SM 4500-CN-E	AJM	1	PASI-K
		SM 5310C	TJJ	1	PASI-G
60149200003	**DR-4-SW_20130717**	EPA 200.7	JGP	4	PASI-K
		EPA 200.8	TT3	25	PASI-M
		EPA 200.8	TT3	23	PASI-M

This report shall not be reproduced, except in full,
without the written consent of Pace Analytical Services, Inc..

Pace Analytical Services, Inc.
9608 Loiret Blvd.
Lenexa, KS 66219
(913)599-5665

SAMPLE ANALYTE COUNT

Project: JULY 2013 RICO WATER SAMPLING
Pace Project No.: 60149200

Lab ID	Sample ID	Method	Analysts	Analytes Reported	Laboratory
		EPA 200.8	SMW	19	PASI-K
		EPA 245.1	WBS	1	PASI-M
		EPA 245.1	WBS	1	PASI-M
		EPA 245.1	NDJ	1	PASI-K
		SM 2510B	CS1	1	
		Calculated	CS1	2	
		SM 2320B	JMC	3	PASI-K
		SM 2540C	LEM	1	PASI-K
		SM 2540D	LEM	1	PASI-K
		SM 4500-S-2 D	OL	1	PASI-K
		EPA 300.0	OL	2	PASI-K
		EPA 353.2	DJR	1	PASI-K
		SM 4500-CN-E	AJM	1	PASI-K
		SM 5310C	TJJ	1	PASI-G
60149200004	**DR-4-SW COMPOSITE_20130717**	EPA 200.7	JGP	4	PASI-K
		EPA 200.8	TT3	25	PASI-M
		EPA 200.8	TT3	23	PASI-M
		EPA 200.8	SMW	19	PASI-K
		EPA 245.1	WBS	1	PASI-M
		EPA 245.1	WBS	1	PASI-M
		EPA 245.1	NDJ	1	PASI-K
		SM 2510B	CS1	1	
		Calculated	CS1	2	
		SM 2320B	JMC	3	PASI-K
		SM 2540C	LEM	1	PASI-K
		SM 2540D	LEM	1	PASI-K
		SM 4500-S-2 D	OL	1	PASI-K
		EPA 300.0	OL	2	PASI-K
		EPA 353.2	DJR	1	PASI-K
		SM 4500-CN-E	AJM	1	PASI-K
		SM 5310C	TJJ	1	PASI-G
60149200005	**GW-7_20130717**	EPA 200.7	JGP	4	PASI-K
		EPA 200.8	TT3	25	PASI-M
		EPA 200.8	TT3	23	PASI-M
		EPA 200.8	SMW	19	PASI-K
		EPA 245.1	WBS	1	PASI-M
		EPA 245.1	WBS	1	PASI-M

This report shall not be reproduced, except in full,
without the written consent of Pace Analytical Services, Inc..

Pace Analytical Services, Inc.
9608 Loiret Blvd.
Lenexa, KS 66219
(913)599-5665

SAMPLE ANALYTE COUNT

Project: JULY 2013 RICO WATER SAMPLING
Pace Project No.: 60149200

Lab ID	Sample ID	Method	Analysts	Analytes Reported	Laboratory
		EPA 245.1	NDJ	1	PASI-K
		SM 2510B	CS1	1	
		Calculated	CS1	2	
		SM 2320B	JMC	3	PASI-K
		SM 2540C	LEM	1	PASI-K
		SM 2540D	LEM	1	PASI-K
		SM 4500-S-2 D	OL	1	PASI-K
		EPA 300.0	OL	2	PASI-K
		EPA 353.2	DJR	1	PASI-K
		SM 4500-CN-E	AJM	1	PASI-K
		SM 5310C	TJJ	1	PASI-G
60149200006	**EB-1_20130717**	EPA 200.7	JGP	4	PASI-K
		EPA 200.8	TT3	25	PASI-M
		EPA 200.8	TT3	23	PASI-M
		EPA 200.8	SMW	19	PASI-K
		EPA 245.1	WBS	1	PASI-M
		EPA 245.1	WBS	1	PASI-M
		EPA 245.1	NDJ	1	PASI-K
		SM 2510B	CS1	1	
		Calculated	CS1	2	
		SM 2320B	JMC	3	PASI-K
		SM 2540C	LEM	1	PASI-K
		SM 2540D	LEM	1	PASI-K
		SM 4500-S-2 D	OL	1	PASI-K
		EPA 300.0	OL	2	PASI-K
		EPA 353.2	DJR	1	PASI-K
		SM 4500-CN-E	AJM	1	PASI-K
		SM 5310C	TJJ	1	PASI-G
60149200007	**EB-2_20130717**	EPA 200.7	JGP	4	PASI-K
		EPA 200.8	TT3	25	PASI-M
		EPA 200.8	TT3	23	PASI-M
		EPA 200.8	SMW	19	PASI-K
		EPA 245.1	WBS	1	PASI-M
		EPA 245.1	WBS	1	PASI-M
		EPA 245.1	NDJ	1	PASI-K
		SM 2510B	CS1	1	
		Calculated	CS1	2	

This report shall not be reproduced, except in full,
without the written consent of Pace Analytical Services, Inc..

Pace Analytical Services, Inc.
9608 Loiret Blvd.
Lenexa, KS 66219
(913)599-5665

SAMPLE ANALYTE COUNT

Project: JULY 2013 RICO WATER SAMPLING
Pace Project No.: 60149200

Lab ID	Sample ID	Method	Analysts	Analytes Reported	Laboratory
		SM 2320B	JMC	3	PASI-K
		SM 2540C	LEM	1	PASI-K
		SM 2540D	LEM	1	PASI-K
		SM 4500-S-2 D	OL	1	PASI-K
		EPA 300.0	OL	2	PASI-K
		EPA 353.2	DJR	1	PASI-K
		SM 4500-CN-E	AJM	1	PASI-K
		SM 5310C	TJJ	1	PASI-G
60149200008	**MW-4 SHALLOW_20130717**	EPA 200.7	JGP	4	PASI-K
		EPA 200.8	TT3	25	PASI-M
		EPA 200.8	TT3	23	PASI-M
		EPA 200.8	SMW	19	PASI-K
		EPA 245.1	WBS	1	PASI-M
		EPA 245.1	WBS	1	PASI-M
		EPA 245.1	NDJ	1	PASI-K
		SM 2510B	CS1	1	
		Calculated	CS1	2	
		SM 2320B	JMC	3	PASI-K
		SM 2540C	LEM	1	PASI-K
		SM 2540D	LEM	1	PASI-K
		SM 4500-S-2 D	OL	1	PASI-K
		EPA 300.0	OL	2	PASI-K
		EPA 353.2	DJR	1	PASI-K
		SM 4500-CN-E	AJM	1	PASI-K
		SM 5310C	TJJ	1	PASI-G

This report shall not be reproduced, except in full,
without the written consent of Pace Analytical Services, Inc..

Pace Analytical Services, Inc.
9608 Loiret Blvd.
Lenexa, KS 66219
(913)599-5665

PROJECT NARRATIVE

Project: JULY 2013 RICO WATER SAMPLING
Pace Project No.: 60149200

Method: **EPA 200.7**
Description: 200.7 Potentially Diss. Metals
Client: BP Anderson Engineering Company Inc.
Date: August 21, 2013

General Information:
8 samples were analyzed for EPA 200.7. All samples were received in acceptable condition with any exceptions noted below.

Hold Time:
The samples were analyzed within the method required hold times with any exceptions noted below.

Sample Preparation:
The samples were prepared in accordance with EPA 200.7 with any exceptions noted below.

Initial Calibrations (including MS Tune as applicable):
All criteria were within method requirements with any exceptions noted below.

Continuing Calibration:
All criteria were within method requirements with any exceptions noted below.

Method Blank:
All analytes were below the report limit in the method blank with any exceptions noted below.

Laboratory Control Spike:
All laboratory control spike compounds were within QC limits with any exceptions noted below.

Matrix Spikes:
All percent recoveries and relative percent differences (RPDs) were within acceptance criteria with any exceptions noted below.

QC Batch: MPRP/23583

A matrix spike and matrix spike duplicate (MS/MSD) were performed on the following sample(s): 60149200002

M1: Matrix spike recovery exceeded QC limits. Batch accepted based on laboratory control sample (LCS) recovery.

- MS (Lab ID: 1224373)
  - Calcium, Dissolved

Additional Comments:

Sample Comments:

All reported results confirmed for total vs. dissolved metals (Ni)

- DR-4_20130717 (Lab ID: 60149200001)
- DR-4-SW_20130717 (Lab ID: 60149200003)

This report shall not be reproduced, except in full,
without the written consent of Pace Analytical Services, Inc..

Pace Analytical Services, Inc.
9608 Loiret Blvd.
Lenexa, KS 66219
(913)599-5665

PROJECT NARRATIVE

Project: JULY 2013 RICO WATER SAMPLING
Pace Project No.: 60149200

Method: **EPA 200.8**
Description: 200.8 MET ICPMS
Client: BP Anderson Engineering Company Inc.
Date: August 21, 2013

General Information:
8 samples were analyzed for EPA 200.8. All samples were received in acceptable condition with any exceptions noted below.

Hold Time:
The samples were analyzed within the method required hold times with any exceptions noted below.

Sample Preparation:
The samples were prepared in accordance with EPA 200.8 with any exceptions noted below.

Initial Calibrations (including MS Tune as applicable):
All criteria were within method requirements with any exceptions noted below.

Continuing Calibration:
All criteria were within method requirements with any exceptions noted below.

Internal Standards:
All internal standards were within QC limits with any exceptions noted below.

Method Blank:
All analytes were below the report limit in the method blank with any exceptions noted below.

Laboratory Control Spike:
All laboratory control spike compounds were within QC limits with any exceptions noted below.

Matrix Spikes:
All percent recoveries and relative percent differences (RPDs) were within acceptance criteria with any exceptions noted below.

QC Batch: MPRP/40787

A matrix spike and matrix spike duplicate (MS/MSD) were performed on the following sample(s): 60149200001,60149302011

M1: Matrix spike recovery exceeded QC limits. Batch accepted based on laboratory control sample (LCS) recovery.

- MS (Lab ID: 1485512)
  - Aluminum
  - Calcium
  - Magnesium
  - Potassium
  - Sodium
- MS (Lab ID: 1486799)
  - Calcium
  - Magnesium
- MSD (Lab ID: 1486800)
  - Magnesium

Additional Comments:

This report shall not be reproduced, except in full,
without the written consent of Pace Analytical Services, Inc..

Pace Analytical Services, Inc.
9608 Loiret Blvd.
Lenexa, KS 66219
(913)599-5665

PROJECT NARRATIVE

Project: JULY 2013 RICO WATER SAMPLING
Pace Project No.: 60149200

Method: **EPA 200.8**
Description: 200.8 MET ICPMS
Client: BP Anderson Engineering Company Inc.
Date: August 21, 2013

Sample Comments:

All reported results confirmed for total vs. dissolved metals (Ni)
- DR-4_20130717 (Lab ID: 60149200001)
- DR-4-SW_20130717 (Lab ID: 60149200003)

Analyte Comments:

QC Batch: MPRP/40787

E: Analyte concentration exceeded the calibration range. The reported result is estimated.
- MS (Lab ID: 1485512)
  - Calcium
- MS (Lab ID: 1486799)
  - Calcium
  - Manganese
  - Zinc
- MSD (Lab ID: 1486800)
  - Calcium
  - Manganese
  - Zinc

This report shall not be reproduced, except in full,
without the written consent of Pace Analytical Services, Inc..

Pace Analytical Services, Inc.
9608 Loiret Blvd.
Lenexa, KS 66219
(913)599-5665

PROJECT NARRATIVE

Project: JULY 2013 RICO WATER SAMPLING
Pace Project No.: 60149200

Method: **EPA 200.8**
Description: 200.8 MET ICPMS, Dissolved
Client: BP Anderson Engineering Company Inc.
Date: August 21, 2013

General Information:
8 samples were analyzed for EPA 200.8. All samples were received in acceptable condition with any exceptions noted below.

Hold Time:
The samples were analyzed within the method required hold times with any exceptions noted below.

Sample Preparation:
The samples were prepared in accordance with EPA 200.8 with any exceptions noted below.

Initial Calibrations (including MS Tune as applicable):
All criteria were within method requirements with any exceptions noted below.

Continuing Calibration:
All criteria were within method requirements with any exceptions noted below.

Internal Standards:
All internal standards were within QC limits with any exceptions noted below.

Method Blank:
All analytes were below the report limit in the method blank with any exceptions noted below.

Laboratory Control Spike:
All laboratory control spike compounds were within QC limits with any exceptions noted below.

Matrix Spikes:
All percent recoveries and relative percent differences (RPDs) were within acceptance criteria with any exceptions noted below.

QC Batch: MPRP/40786

A matrix spike and matrix spike duplicate (MS/MSD) were performed on the following sample(s): 60149200005,60149302004

M1: Matrix spike recovery exceeded QC limits. Batch accepted based on laboratory control sample (LCS) recovery.

- MS (Lab ID: 1496972)
  - Calcium, Dissolved
  - Magnesium, Dissolved
  - Sodium, Dissolved
- MS (Lab ID: 1496974)
  - Calcium, Dissolved
  - Magnesium, Dissolved
- MSD (Lab ID: 1496973)
  - Calcium, Dissolved
  - Magnesium, Dissolved

Additional Comments:

This report shall not be reproduced, except in full,
without the written consent of Pace Analytical Services, Inc..

Pace Analytical Services, Inc.
9608 Loiret Blvd.
Lenexa, KS 66219
(913)599-5665

PROJECT NARRATIVE

Project: JULY 2013 RICO WATER SAMPLING
Pace Project No.: 60149200

Method: **EPA 200.8**
Description: 200.8 MET ICPMS, Dissolved
Client: BP Anderson Engineering Company Inc.
Date: August 21, 2013

Sample Comments:

All reported results confirmed for total vs. dissolved metals (Ni)
- DR-4_20130717 (Lab ID: 60149200001)
- DR-4-SW_20130717 (Lab ID: 60149200003)

Analyte Comments:

QC Batch: MPRP/40786

E: Analyte concentration exceeded the calibration range. The reported result is estimated.
- MS (Lab ID: 1496972)
  - Calcium, Dissolved
- MS (Lab ID: 1496974)
  - Calcium, Dissolved
- MSD (Lab ID: 1496973)
  - Calcium, Dissolved

This report shall not be reproduced, except in full,
without the written consent of Pace Analytical Services, Inc..

Pace Analytical Services, Inc.
9608 Loiret Blvd.
Lenexa, KS 66219
(913)599-5665

PROJECT NARRATIVE

Project: JULY 2013 RICO WATER SAMPLING
Pace Project No.: 60149200

Method: **EPA 200.8**
Description: 200.8 Potentially Diss. Metals
Client: BP Anderson Engineering Company Inc.
Date: August 21, 2013

General Information:
8 samples were analyzed for EPA 200.8. All samples were received in acceptable condition with any exceptions noted below.

Hold Time:
The samples were analyzed within the method required hold times with any exceptions noted below.

Sample Preparation:
The samples were prepared in accordance with EPA 200.8 with any exceptions noted below.

Initial Calibrations (including MS Tune as applicable):
All criteria were within method requirements with any exceptions noted below.

Continuing Calibration:
All criteria were within method requirements with any exceptions noted below.

Internal Standards:
All internal standards were within QC limits with any exceptions noted below.

Method Blank:
All analytes were below the report limit in the method blank with any exceptions noted below.

QC Batch: MPRP/23584

B: Analyte was detected in the associated method blank.

- BLANK for HBN 299830 [MPRP/235 (Lab ID: 1224375)
  - Chromium, Dissolved
  - Copper, Dissolved
  - Lead, Dissolved
  - Molybdenum, Dissolved
  - Nickel, Dissolved
  - Thallium, Dissolved
  - Vanadium, Dissolved

Laboratory Control Spike:
All laboratory control spike compounds were within QC limits with any exceptions noted below.

Matrix Spikes:
All percent recoveries and relative percent differences (RPDs) were within acceptance criteria with any exceptions noted below.

Additional Comments:

Sample Comments:

All reported results confirmed for total vs. dissolved metals (Ni)

- DR-4_20130717 (Lab ID: 60149200001)
- DR-4-SW_20130717 (Lab ID: 60149200003)

This report shall not be reproduced, except in full,
without the written consent of Pace Analytical Services, Inc..

Pace Analytical Services, Inc.
9608 Loiret Blvd.
Lenexa, KS 66219
(913)599-5665

PROJECT NARRATIVE

Project: JULY 2013 RICO WATER SAMPLING
Pace Project No.: 60149200

Method: **EPA 200.8**
Description: 200.8 Potentially Diss. Metals
Client: BP Anderson Engineering Company Inc.
Date: August 21, 2013

Analyte Comments:

QC Batch: MPRP/23584

D3: Sample was diluted due to the presence of high levels of non-target analytes or other matrix interference.

- EB-2_20130717 (Lab ID: 60149200007)
  - Vanadium, Dissolved

This report shall not be reproduced, except in full,
without the written consent of Pace Analytical Services, Inc..

Pace Analytical Services, Inc.
9608 Loiret Blvd.
Lenexa, KS 66219
(913)599-5665

PROJECT NARRATIVE

Project: JULY 2013 RICO WATER SAMPLING
Pace Project No.: 60149200

Method: **EPA 245.1**
Description: 245.1 Mercury
Client: BP Anderson Engineering Company Inc.
Date: August 21, 2013

General Information:
8 samples were analyzed for EPA 245.1. All samples were received in acceptable condition with any exceptions noted below.

Hold Time:
The samples were analyzed within the method required hold times with any exceptions noted below.

Sample Preparation:
The samples were prepared in accordance with EPA 245.1 with any exceptions noted below.

Initial Calibrations (including MS Tune as applicable):
All criteria were within method requirements with any exceptions noted below.

Continuing Calibration:
All criteria were within method requirements with any exceptions noted below.

Method Blank:
All analytes were below the report limit in the method blank with any exceptions noted below.

Laboratory Control Spike:
All laboratory control spike compounds were within QC limits with any exceptions noted below.

Matrix Spikes:
All percent recoveries and relative percent differences (RPDs) were within acceptance criteria with any exceptions noted below.

Additional Comments:

Sample Comments:

All reported results confirmed for total vs. dissolved metals (Ni)
- DR-4_20130717 (Lab ID: 60149200001)
- DR-4-SW_20130717 (Lab ID: 60149200003)

This report shall not be reproduced, except in full,
without the written consent of Pace Analytical Services, Inc..

Pace Analytical Services, Inc.
9608 Loiret Blvd.
Lenexa, KS 66219
(913)599-5665

PROJECT NARRATIVE

Project: JULY 2013 RICO WATER SAMPLING
Pace Project No.: 60149200

Method: **EPA 245.1**
Description: 245.1 Mercury, Dissolved
Client: BP Anderson Engineering Company Inc.
Date: August 21, 2013

General Information:
8 samples were analyzed for EPA 245.1. All samples were received in acceptable condition with any exceptions noted below.

Hold Time:
The samples were analyzed within the method required hold times with any exceptions noted below.

Sample Preparation:
The samples were prepared in accordance with EPA 245.1 with any exceptions noted below.

Initial Calibrations (including MS Tune as applicable):
All criteria were within method requirements with any exceptions noted below.

Continuing Calibration:
All criteria were within method requirements with any exceptions noted below.

Method Blank:
All analytes were below the report limit in the method blank with any exceptions noted below.

Laboratory Control Spike:
All laboratory control spike compounds were within QC limits with any exceptions noted below.

Matrix Spikes:
All percent recoveries and relative percent differences (RPDs) were within acceptance criteria with any exceptions noted below.

Additional Comments:

Sample Comments:

All reported results confirmed for total vs. dissolved metals (Ni)
- DR-4_20130717 (Lab ID: 60149200001)
- DR-4-SW_20130717 (Lab ID: 60149200003)

This report shall not be reproduced, except in full,
without the written consent of Pace Analytical Services, Inc..

Pace Analytical Services, Inc.
9608 Loiret Blvd.
Lenexa, KS 66219
(913)599-5665

PROJECT NARRATIVE

Project: JULY 2013 RICO WATER SAMPLING
Pace Project No.: 60149200

Method: **EPA 245.1**
Description: 245.1 Potentially Diss Mercury
Client: BP Anderson Engineering Company Inc.
Date: August 21, 2013

General Information:
8 samples were analyzed for EPA 245.1. All samples were received in acceptable condition with any exceptions noted below.

Hold Time:
The samples were analyzed within the method required hold times with any exceptions noted below.

Sample Preparation:
The samples were prepared in accordance with EPA 245.1 with any exceptions noted below.

Initial Calibrations (including MS Tune as applicable):
All criteria were within method requirements with any exceptions noted below.

Continuing Calibration:
All criteria were within method requirements with any exceptions noted below.

Method Blank:
All analytes were below the report limit in the method blank with any exceptions noted below.

Laboratory Control Spike:
All laboratory control spike compounds were within QC limits with any exceptions noted below.

Matrix Spikes:
All percent recoveries and relative percent differences (RPDs) were within acceptance criteria with any exceptions noted below.

Additional Comments:

Sample Comments:

All reported results confirmed for total vs. dissolved metals (Ni)
- DR-4_20130717 (Lab ID: 60149200001)
- DR-4-SW_20130717 (Lab ID: 60149200003)

This report shall not be reproduced, except in full,
without the written consent of Pace Analytical Services, Inc..

Pace Analytical Services, Inc.
9608 Loiret Blvd.
Lenexa, KS 66219
(913)599-5665

PROJECT NARRATIVE

Project: JULY 2013 RICO WATER SAMPLING
Pace Project No.: 60149200

Method: **SM 2510B**
Description: 2510B Specific Conductance
Client: BP Anderson Engineering Company Inc.
Date: August 21, 2013

General Information:
8 samples were analyzed for SM 2510B. All samples were received in acceptable condition with any exceptions noted below.

Hold Time:
The samples were analyzed within the method required hold times with any exceptions noted below.

Initial Calibrations (including MS Tune as applicable):
All criteria were within method requirements with any exceptions noted below.

Continuing Calibration:
All criteria were within method requirements with any exceptions noted below.

Internal Standards:
All internal standards were within QC limits with any exceptions noted below.

Surrogates:
All surrogates were within QC limits with any exceptions noted below.

Method Blank:
All analytes were below the report limit in the method blank with any exceptions noted below.

Laboratory Control Spike:
All laboratory control spike compounds were within QC limits with any exceptions noted below.

Matrix Spikes:
All percent recoveries and relative percent differences (RPDs) were within acceptance criteria with any exceptions noted below.

Duplicate Sample:
All duplicate sample results were within method acceptance criteria with any exceptions noted below.

Additional Comments:

Sample Comments:

All reported results confirmed for total vs. dissolved metals (Ni)
- DR-4_20130717 (Lab ID: 60149200001)
- DR-4-SW_20130717 (Lab ID: 60149200003)

This report shall not be reproduced, except in full,
without the written consent of Pace Analytical Services, Inc..

Pace Analytical Services, Inc.
9608 Loiret Blvd.
Lenexa, KS 66219
(913)599-5665

PROJECT NARRATIVE

Project: JULY 2013 RICO WATER SAMPLING
Pace Project No.: 60149200

Method: **Calculated**
Description: Salinity
Client: BP Anderson Engineering Company Inc.
Date: August 21, 2013

General Information:
8 samples were analyzed for Calculated. All samples were received in acceptable condition with any exceptions noted below.

Hold Time:
The samples were analyzed within the method required hold times with any exceptions noted below.

Initial Calibrations (including MS Tune as applicable):
All criteria were within method requirements with any exceptions noted below.

Continuing Calibration:
All criteria were within method requirements with any exceptions noted below.

Internal Standards:
All internal standards were within QC limits with any exceptions noted below.

Surrogates:
All surrogates were within QC limits with any exceptions noted below.

Method Blank:
All analytes were below the report limit in the method blank with any exceptions noted below.

Laboratory Control Spike:
All laboratory control spike compounds were within QC limits with any exceptions noted below.

Matrix Spikes:
All percent recoveries and relative percent differences (RPDs) were within acceptance criteria with any exceptions noted below.

Additional Comments:

Sample Comments:

All reported results confirmed for total vs. dissolved metals (Ni)
- DR-4_20130717 (Lab ID: 60149200001)
- DR-4-SW_20130717 (Lab ID: 60149200003)

This report shall not be reproduced, except in full,
without the written consent of Pace Analytical Services, Inc..

Pace Analytical Services, Inc.
9608 Loiret Blvd.
Lenexa, KS 66219
(913)599-5665

PROJECT NARRATIVE

Project: JULY 2013 RICO WATER SAMPLING
Pace Project No.: 60149200

Method: **SM 2320B**
Description: 2320B Alkalinity
Client: BP Anderson Engineering Company Inc.
Date: August 21, 2013

General Information:
8 samples were analyzed for SM 2320B. All samples were received in acceptable condition with any exceptions noted below.

Hold Time:
The samples were analyzed within the method required hold times with any exceptions noted below.

Method Blank:
All analytes were below the report limit in the method blank with any exceptions noted below.

Laboratory Control Spike:
All laboratory control spike compounds were within QC limits with any exceptions noted below.

Matrix Spikes:
All percent recoveries and relative percent differences (RPDs) were within acceptance criteria with any exceptions noted below.

Duplicate Sample:
All duplicate sample results were within method acceptance criteria with any exceptions noted below.

QC Batch: WET/42488

D6: The relative percent difference (RPD) between the sample and sample duplicate exceeded laboratory control limits.

- DUP (Lab ID: 1223998)
  - Alkalinity, Total as CaCO3
  - Alkalinity,Bicarbonate (CaCO3)

Additional Comments:

Sample Comments:

All reported results confirmed for total vs. dissolved metals (Ni)

- DR-4_20130717 (Lab ID: 60149200001)
- DR-4-SW_20130717 (Lab ID: 60149200003)

This report shall not be reproduced, except in full,
without the written consent of Pace Analytical Services, Inc..

Pace Analytical Services, Inc.
9608 Loiret Blvd.
Lenexa, KS 66219
(913)599-5665

PROJECT NARRATIVE

Project: JULY 2013 RICO WATER SAMPLING
Pace Project No.: 60149200

Method: **SM 2540C**
Description: 2540C Total Dissolved Solids
Client: BP Anderson Engineering Company Inc.
Date: August 21, 2013

General Information:
8 samples were analyzed for SM 2540C. All samples were received in acceptable condition with any exceptions noted below.

Hold Time:
The samples were analyzed within the method required hold times with any exceptions noted below.

Method Blank:
All analytes were below the report limit in the method blank with any exceptions noted below.

Laboratory Control Spike:
All laboratory control spike compounds were within QC limits with any exceptions noted below.

Matrix Spikes:
All percent recoveries and relative percent differences (RPDs) were within acceptance criteria with any exceptions noted below.

Duplicate Sample:
All duplicate sample results were within method acceptance criteria with any exceptions noted below.

Additional Comments:

Sample Comments:

All reported results confirmed for total vs. dissolved metals (Ni)

- DR-4_20130717 (Lab ID: 60149200001)
- DR-4-SW_20130717 (Lab ID: 60149200003)

This report shall not be reproduced, except in full,
without the written consent of Pace Analytical Services, Inc..

Pace Analytical Services, Inc.
9608 Loiret Blvd.
Lenexa, KS 66219
(913)599-5665

PROJECT NARRATIVE

Project: JULY 2013 RICO WATER SAMPLING
Pace Project No.: 60149200

Method: **SM 2540D**
Description: 2540D Total Suspended Solids
Client: BP Anderson Engineering Company Inc.
Date: August 21, 2013

General Information:
8 samples were analyzed for SM 2540D. All samples were received in acceptable condition with any exceptions noted below.

Hold Time:
The samples were analyzed within the method required hold times with any exceptions noted below.

Method Blank:
All analytes were below the report limit in the method blank with any exceptions noted below.

Laboratory Control Spike:
All laboratory control spike compounds were within QC limits with any exceptions noted below.

Matrix Spikes:
All percent recoveries and relative percent differences (RPDs) were within acceptance criteria with any exceptions noted below.

Duplicate Sample:
All duplicate sample results were within method acceptance criteria with any exceptions noted below.

Additional Comments:

Sample Comments:

All reported results confirmed for total vs. dissolved metals (Ni)
- DR-4_20130717 (Lab ID: 60149200001)
- DR-4-SW_20130717 (Lab ID: 60149200003)

This report shall not be reproduced, except in full,
without the written consent of Pace Analytical Services, Inc..

Pace Analytical Services, Inc.
9608 Loiret Blvd.
Lenexa, KS 66219
(913)599-5665

PROJECT NARRATIVE

Project: JULY 2013 RICO WATER SAMPLING
Pace Project No.: 60149200

Method: **SM 4500-S-2 D**
Description: 4500S2D Sulfide, Total
Client: BP Anderson Engineering Company Inc.
Date: August 21, 2013

General Information:
8 samples were analyzed for SM 4500-S-2 D. All samples were received in acceptable condition with any exceptions noted below.

Hold Time:
The samples were analyzed within the method required hold times with any exceptions noted below.

Method Blank:
All analytes were below the report limit in the method blank with any exceptions noted below.

Laboratory Control Spike:
All laboratory control spike compounds were within QC limits with any exceptions noted below.

Matrix Spikes:
All percent recoveries and relative percent differences (RPDs) were within acceptance criteria with any exceptions noted below.

Duplicate Sample:
All duplicate sample results were within method acceptance criteria with any exceptions noted below.

Additional Comments:

Sample Comments:

All reported results confirmed for total vs. dissolved metals (Ni)
- DR-4_20130717 (Lab ID: 60149200001)
- DR-4-SW_20130717 (Lab ID: 60149200003)

This report shall not be reproduced, except in full,
without the written consent of Pace Analytical Services, Inc..

Pace Analytical Services, Inc.
9608 Loiret Blvd.
Lenexa, KS 66219
(913)599-5665

PROJECT NARRATIVE

Project: JULY 2013 RICO WATER SAMPLING
Pace Project No.: 60149200

Method: **EPA 300.0**
Description: 300.0 IC Anions 28 Days
Client: BP Anderson Engineering Company Inc.
Date: August 21, 2013

General Information:
8 samples were analyzed for EPA 300.0. All samples were received in acceptable condition with any exceptions noted below.

Hold Time:
The samples were analyzed within the method required hold times with any exceptions noted below.

Initial Calibrations (including MS Tune as applicable):
All criteria were within method requirements with any exceptions noted below.

Continuing Calibration:
All criteria were within method requirements with any exceptions noted below.

Method Blank:
All analytes were below the report limit in the method blank with any exceptions noted below.

Laboratory Control Spike:
All laboratory control spike compounds were within QC limits with any exceptions noted below.

Matrix Spikes:
All percent recoveries and relative percent differences (RPDs) were within acceptance criteria with any exceptions noted below.

Additional Comments:

Sample Comments:

All reported results confirmed for total vs. dissolved metals (Ni)
- DR-4_20130717 (Lab ID: 60149200001)
- DR-4-SW_20130717 (Lab ID: 60149200003)

This report shall not be reproduced, except in full,
without the written consent of Pace Analytical Services, Inc..

Pace Analytical Services, Inc.
9608 Loiret Blvd.
Lenexa, KS 66219
(913)599-5665

PROJECT NARRATIVE

Project: JULY 2013 RICO WATER SAMPLING
Pace Project No.: 60149200

Method: **EPA 353.2**
Description: 353.2 Nitrogen, NO2/NO3 pres.
Client: BP Anderson Engineering Company Inc.
Date: August 21, 2013

General Information:
8 samples were analyzed for EPA 353.2. All samples were received in acceptable condition with any exceptions noted below.

Hold Time:
The samples were analyzed within the method required hold times with any exceptions noted below.

Initial Calibrations (including MS Tune as applicable):
All criteria were within method requirements with any exceptions noted below.

Continuing Calibration:
All criteria were within method requirements with any exceptions noted below.

Method Blank:
All analytes were below the report limit in the method blank with any exceptions noted below.

Laboratory Control Spike:
All laboratory control spike compounds were within QC limits with any exceptions noted below.

Matrix Spikes:
All percent recoveries and relative percent differences (RPDs) were within acceptance criteria with any exceptions noted below.

Additional Comments:

Sample Comments:

All reported results confirmed for total vs. dissolved metals (Ni)
- DR-4_20130717 (Lab ID: 60149200001)
- DR-4-SW_20130717 (Lab ID: 60149200003)

This report shall not be reproduced, except in full,
without the written consent of Pace Analytical Services, Inc..

Pace Analytical Services, Inc.
9608 Loiret Blvd.
Lenexa, KS 66219
(913)599-5665

PROJECT NARRATIVE

Project: JULY 2013 RICO WATER SAMPLING
Pace Project No.: 60149200

Method: **SM 4500-CN-E**
Description: 4500CNE Cyanide, Total
Client: BP Anderson Engineering Company Inc.
Date: August 21, 2013

General Information:
8 samples were analyzed for SM 4500-CN-E. All samples were received in acceptable condition with any exceptions noted below.

Hold Time:
The samples were analyzed within the method required hold times with any exceptions noted below.

Initial Calibrations (including MS Tune as applicable):
All criteria were within method requirements with any exceptions noted below.

Continuing Calibration:
All criteria were within method requirements with any exceptions noted below.

Method Blank:
All analytes were below the report limit in the method blank with any exceptions noted below.

Laboratory Control Spike:
All laboratory control spike compounds were within QC limits with any exceptions noted below.

Matrix Spikes:
All percent recoveries and relative percent differences (RPDs) were within acceptance criteria with any exceptions noted below.

Duplicate Sample:
All duplicate sample results were within method acceptance criteria with any exceptions noted below.

Additional Comments:

Sample Comments:

All reported results confirmed for total vs. dissolved metals (Ni)
- DR-4_20130717 (Lab ID: 60149200001)
- DR-4-SW_20130717 (Lab ID: 60149200003)

This report shall not be reproduced, except in full,
without the written consent of Pace Analytical Services, Inc..

Pace Analytical Services, Inc.
9608 Loiret Blvd.
Lenexa, KS 66219
(913)599-5665

PROJECT NARRATIVE

Project: JULY 2013 RICO WATER SAMPLING
Pace Project No.: 60149200

Method: **SM 5310C**
Description: 5310C TOC
Client: BP Anderson Engineering Company Inc.
Date: August 21, 2013

General Information:
8 samples were analyzed for SM 5310C. All samples were received in acceptable condition with any exceptions noted below.

Hold Time:
The samples were analyzed within the method required hold times with any exceptions noted below.

Initial Calibrations (including MS Tune as applicable):
All criteria were within method requirements with any exceptions noted below.

Continuing Calibration:
All criteria were within method requirements with any exceptions noted below.

Method Blank:
All analytes were below the report limit in the method blank with any exceptions noted below.

Laboratory Control Spike:
All laboratory control spike compounds were within QC limits with any exceptions noted below.

Matrix Spikes:
All percent recoveries and relative percent differences (RPDs) were within acceptance criteria with any exceptions noted below.

Additional Comments:

Sample Comments:

All reported results confirmed for total vs. dissolved metals (Ni)
- DR-4_20130717 (Lab ID: 60149200001)
- DR-4-SW_20130717 (Lab ID: 60149200003)

This data package has been reviewed for quality and completeness and is approved for release.

This report shall not be reproduced, except in full,
without the written consent of Pace Analytical Services, Inc..

Pace Analytical Services, Inc.
9608 Loiret Blvd.
Lenexa, KS 66219
(913)599-5665

ANALYTICAL RESULTS

Project: JULY 2013 RICO WATER SAMPLING
Pace Project No.: 60149200

Sample: DR-4_20130717 **Lab ID: 60149200001** Collected: 07/17/13 13:30 Received: 07/19/13 10:00 Matrix: Water

Comments: • All reported results confirmed for total vs. dissolved metals (Ni)

Parameters	Results	Units	Report Limit	DF	Prepared	Analyzed	CAS No.	Qual
200.7 Potentially Diss. Metals	Analytical Method: EPA 200.7	Preparation Method: EPA 200.7						
Calcium, Dissolved	**231000**	ug/L	100	1	07/23/13 15:00	07/30/13 14:10	7440-70-2	
Magnesium, Dissolved	**18900**	ug/L	50.0	1	07/23/13 15:00	07/30/13 14:10	7439-95-4	
Potassium, Dissolved	**3630**	ug/L	500	1	07/23/13 15:00	07/30/13 14:10	7440-09-7	
Sodium, Dissolved	**21900**	ug/L	500	1	07/23/13 15:00	07/30/13 14:10	7440-23-5	
200.8 MET ICPMS	Analytical Method: EPA 200.8	Preparation Method: EPA 200.8						
Aluminum	**212**	ug/L	4.0	1	07/25/13 07:54	07/30/13 15:48	7429-90-5	
Antimony	ND	ug/L	0.50	1	07/25/13 07:54	07/30/13 15:48	7440-36-0	
Arsenic	ND	ug/L	0.50	1	07/25/13 07:54	07/30/13 15:48	7440-38-2	
Barium	**21.8**	ug/L	0.30	1	07/25/13 07:54	07/30/13 15:48	7440-39-3	
Beryllium	**0.29**	ug/L	0.20	1	07/25/13 07:54	07/30/13 15:48	7440-41-7	
Cadmium	**16.6**	ug/L	0.080	1	07/25/13 07:54	07/30/13 15:48	7440-43-9	
Calcium	**219000**	ug/L	400	20	07/25/13 07:54	07/30/13 15:58	7440-70-2	M1
Chromium	ND	ug/L	0.50	1	07/25/13 07:54	07/30/13 15:48	7440-47-3	
Cobalt	**2.5**	ug/L	0.50	1	07/25/13 07:54	07/30/13 15:48	7440-48-4	
Copper	**50.5**	ug/L	0.50	1	07/25/13 07:54	07/30/13 15:48	7440-50-8	
Iron	**2090**	ug/L	50.0	1	07/25/13 07:54	07/30/13 15:48	7439-89-6	
Lead	**4.2**	ug/L	0.10	1	07/25/13 07:54	07/30/13 15:48	7439-92-1	
Magnesium	**18400**	ug/L	5.0	1	07/25/13 07:54	07/30/13 15:48	7439-95-4	M1
Manganese	**1810**	ug/L	2.5	5	07/25/13 07:54	07/30/13 15:53	7439-96-5	
Molybdenum	**18.3**	ug/L	0.50	1	07/25/13 07:54	07/30/13 15:48	7439-98-7	
Nickel	**4.1**	ug/L	0.50	1	07/25/13 07:54	07/30/13 15:48	7440-02-0	
Potassium	**3440**	ug/L	20.0	1	07/25/13 07:54	07/30/13 15:48	7440-09-7	
Selenium	ND	ug/L	0.50	1	07/25/13 07:54	07/30/13 15:48	7782-49-2	
Silica	**15000**	ug/L	268	5	07/25/13 07:54	07/30/13 15:53	7631-86-9	
Silver	ND	ug/L	0.50	1	07/25/13 07:54	07/30/13 15:48	7440-22-4	
Sodium	**20200**	ug/L	50.0	1	07/25/13 07:54	07/30/13 15:48	7440-23-5	
Thallium	ND	ug/L	0.10	1	07/25/13 07:54	07/30/13 15:48	7440-28-0	
Total Hardness by 2340B	**623000**	ug/L	1420	20	07/25/13 07:54	07/30/13 15:58		
Vanadium	ND	ug/L	0.10	1	07/25/13 07:54	07/30/13 15:48	7440-62-2	
Zinc	**3120**	ug/L	100	20	07/25/13 07:54	07/30/13 15:58	7440-66-6	
200.8 MET ICPMS, Dissolved	Analytical Method: EPA 200.8	Preparation Method: EPA 200.8						
Aluminum, Dissolved	**19.7**	ug/L	4.0	1	08/07/13 15:42	08/08/13 11:07	7429-90-5	
Antimony, Dissolved	ND	ug/L	0.50	1	08/07/13 15:42	08/08/13 11:07	7440-36-0	
Arsenic, Dissolved	ND	ug/L	0.50	1	08/07/13 15:42	08/08/13 11:07	7440-38-2	
Barium, Dissolved	**22.1**	ug/L	0.30	1	08/07/13 15:42	08/08/13 11:07	7440-39-3	
Beryllium, Dissolved	ND	ug/L	0.20	1	08/07/13 15:42	08/08/13 11:07	7440-41-7	
Cadmium, Dissolved	**15.4**	ug/L	0.080	1	08/07/13 15:42	08/08/13 11:07	7440-43-9	
Calcium, Dissolved	**237000**	ug/L	400	20	08/07/13 15:42	08/08/13 11:12	7440-70-2	
Chromium, Dissolved	ND	ug/L	0.50	1	08/07/13 15:42	08/08/13 11:07	7440-47-3	
Cobalt, Dissolved	**2.7**	ug/L	0.50	1	08/07/13 15:42	08/08/13 11:07	7440-48-4	
Copper, Dissolved	**3.9**	ug/L	0.50	1	08/07/13 15:42	08/08/13 11:07	7440-50-8	
Iron, Dissolved	ND	ug/L	50.0	1	08/07/13 15:42	08/08/13 11:07	7439-89-6	
Lead, Dissolved	**0.10**	ug/L	0.10	1	08/07/13 15:42	08/08/13 11:07	7439-92-1	

This report shall not be reproduced, except in full,
without the written consent of Pace Analytical Services, Inc..

Pace Analytical Services, Inc.
9608 Loiret Blvd.
Lenexa, KS 66219
(913)599-5665

ANALYTICAL RESULTS

Project: JULY 2013 RICO WATER SAMPLING
Pace Project No.: 60149200

Sample: DR-4_20130717 **Lab ID: 60149200001** Collected: 07/17/13 13:30 Received: 07/19/13 10:00 Matrix: Water

Comments: • All reported results confirmed for total vs. dissolved metals (Ni)

Parameters	Results	Units	Report Limit	DF	Prepared	Analyzed	CAS No.	Qual
200.8 MET ICPMS, Dissolved	Analytical Method: EPA 200.8		Preparation Method: EPA 200.8					
Magnesium, Dissolved	**19300**	ug/L	5.0	1	08/07/13 15:42	08/08/13 11:07	7439-95-4	
Manganese, Dissolved	**1750**	ug/L	10.0	20	08/07/13 15:42	08/08/13 11:12	7439-96-5	
Molybdenum, Dissolved	**18.9**	ug/L	0.50	1	08/07/13 15:42	08/08/13 11:07	7439-98-7	
Nickel, Dissolved	**7.0**	ug/L	0.50	1	08/07/13 15:42	08/08/13 11:07	7440-02-0	
Potassium, Dissolved	**3680**	ug/L	20.0	1	08/07/13 15:42	08/08/13 11:07	7440-09-7	
Selenium, Dissolved	ND	ug/L	0.50	1	08/07/13 15:42	08/08/13 11:07	7782-49-2	
Silver, Dissolved	ND	ug/L	0.50	1	08/07/13 15:42	08/08/13 11:07	7440-22-4	
Sodium, Dissolved	**21600**	ug/L	50.0	1	08/07/13 15:42	08/08/13 11:07	7440-23-5	
Thallium, Dissolved	ND	ug/L	0.10	1	08/07/13 15:42	08/08/13 11:07	7440-28-0	
Vanadium, Dissolved	ND	ug/L	0.10	1	08/07/13 15:42	08/08/13 11:07	7440-62-2	
Zinc, Dissolved	**2640**	ug/L	100	20	08/07/13 15:42	08/08/13 11:12	7440-66-6	
200.8 Potentially Diss. Metals	Analytical Method: EPA 200.8		Preparation Method: EPA 200.8					
Aluminum, Dissolved	**190**	ug/L	50.0	1	07/23/13 15:00	08/14/13 16:28	7429-90-5	
Antimony, Dissolved	**0.26J**	ug/L	1.0	1	07/23/13 15:00	08/14/13 16:28	7440-36-0	
Arsenic, Dissolved	**0.35J**	ug/L	1.0	1	07/23/13 15:00	08/14/13 16:28	7440-38-2	
Barium, Dissolved	**20.0**	ug/L	1.0	1	07/23/13 15:00	08/14/13 16:28	7440-39-3	
Beryllium, Dissolved	**0.21J**	ug/L	0.50	1	07/23/13 15:00	08/15/13 14:16	7440-41-7	
Cadmium, Dissolved	**16.3**	ug/L	0.50	1	07/23/13 15:00	08/14/13 16:28	7440-43-9	
Chromium, Dissolved	**0.69J**	ug/L	1.0	1	07/23/13 15:00	08/14/13 16:28	7440-47-3	B
Cobalt, Dissolved	**2.3**	ug/L	1.0	1	07/23/13 15:00	08/14/13 16:28	7440-48-4	
Copper, Dissolved	**48.2**	ug/L	1.0	1	07/23/13 15:00	08/14/13 16:28	7440-50-8	
Iron, Dissolved	**1930**	ug/L	50.0	1	07/23/13 15:00	08/15/13 14:16	7439-89-6	
Lead, Dissolved	**4.4**	ug/L	1.0	1	07/23/13 15:00	08/14/13 16:28	7439-92-1	
Manganese, Dissolved	**1720**	ug/L	1.0	1	07/23/13 15:00	08/14/13 16:28	7439-96-5	
Molybdenum, Dissolved	**18.9**	ug/L	1.0	1	07/23/13 15:00	08/14/13 16:28	7439-98-7	
Nickel, Dissolved	**3.9**	ug/L	1.0	1	07/23/13 15:00	08/14/13 16:28	7440-02-0	
Selenium, Dissolved	ND	ug/L	1.0	1	07/23/13 15:00	08/14/13 16:28	7782-49-2	
Silver, Dissolved	**0.014J**	ug/L	0.50	1	07/23/13 15:00	08/14/13 16:28	7440-22-4	
Thallium, Dissolved	**0.32J**	ug/L	1.0	1	07/23/13 15:00	08/14/13 16:28	7440-28-0	B
Vanadium, Dissolved	ND	ug/L	1.0	1	07/23/13 15:00	08/14/13 16:28	7440-62-2	
Zinc, Dissolved	**2760**	ug/L	10.0	1	07/23/13 15:00	08/14/13 16:28	7440-66-6	
245.1 Mercury	Analytical Method: EPA 245.1		Preparation Method: EPA 245.1					
Mercury	ND	ug/L	0.20	1	07/29/13 12:46	08/01/13 10:20	7439-97-6	
245.1 Mercury, Dissolved	Analytical Method: EPA 245.1		Preparation Method: EPA 245.1					
Mercury, Dissolved	ND	ug/L	0.20	1	07/29/13 13:42	08/01/13 11:02	7439-97-6	
245.1 Potentially Diss Mercury	Analytical Method: EPA 245.1		Preparation Method: EPA 245.1					
Mercury, Dissolved	ND	ug/L	0.20	1	07/22/13 14:30	07/23/13 10:21	7439-97-6	
2510B Specific Conductance	Analytical Method: SM 2510B							
Specific Conductance	**1330**	umhos/cm	10.0	1		08/01/13 17:20		

This report shall not be reproduced, except in full,
without the written consent of Pace Analytical Services, Inc..

Pace Analytical Services, Inc.
9608 Loiret Blvd.
Lenexa, KS 66219
(913)599-5665

ANALYTICAL RESULTS

Project: JULY 2013 RICO WATER SAMPLING
Pace Project No.: 60149200

Sample: DR-4_20130717 **Lab ID: 60149200001** Collected: 07/17/13 13:30 Received: 07/19/13 10:00 Matrix: Water

Comments: • All reported results confirmed for total vs. dissolved metals (Ni)

Parameters	Results	Units	Report Limit	DF	Prepared	Analyzed	CAS No.	Qual
Salinity	Analytical Method: Calculated							
Salinity (as dissolved solids)	**852**	mg/L	6.4	1		08/01/13 17:20		
Salinity (as seawater)	**0.66**	PSU	0.014	1		08/01/13 17:20		
2320B Alkalinity	Analytical Method: SM 2320B							
Alkalinity,Bicarbonate (CaCO3)	**96.9**	mg/L	20.0	1		07/23/13 08:18		
Alkalinity, Carbonate (CaCO3)	ND	mg/L	20.0	1		07/23/13 08:18		
Alkalinity, Total as CaCO3	**96.9**	mg/L	20.0	1		07/23/13 08:18		
2540C Total Dissolved Solids	Analytical Method: SM 2540C							
Total Dissolved Solids	**1000**	mg/L	5.0	1		07/22/13 10:03		
2540D Total Suspended Solids	Analytical Method: SM 2540D							
Total Suspended Solids	**13.0**	mg/L	5.0	1		07/22/13 08:45		
4500S2D Sulfide, Total	Analytical Method: SM 4500-S-2 D							
Sulfide, Total	ND	mg/L	0.050	1		07/23/13 13:36	18496-25-8	
300.0 IC Anions 28 Days	Analytical Method: EPA 300.0							
Chloride	ND	mg/L	1.0	1		07/31/13 13:10	16887-00-6	
Sulfate	**571**	mg/L	100	100		08/01/13 09:47	14808-79-8	
353.2 Nitrogen, NO2/NO3 pres.	Analytical Method: EPA 353.2							
Nitrogen, NO2 plus NO3	ND	mg/L	0.10	1		07/24/13 09:12		
4500CNE Cyanide, Total	Analytical Method: SM 4500-CN-E							
Cyanide	ND	mg/L	0.0050	1		07/24/13 15:39	57-12-5	
5310C TOC	Analytical Method: SM 5310C							
Total Organic Carbon	ND	mg/L	0.50	1		07/29/13 17:22	7440-44-0	

This report shall not be reproduced, except in full,
without the written consent of Pace Analytical Services, Inc..

Pace Analytical Services, Inc.
9608 Loiret Blvd.
Lenexa, KS 66219
(913)599-5665

ANALYTICAL RESULTS

Project: JULY 2013 RICO WATER SAMPLING
Pace Project No.: 60149200

Sample: DR-5_20130717 **Lab ID: 60149200002** Collected: 07/17/13 13:05 Received: 07/19/13 10:00 Matrix: Water

Parameters	Results	Units	Report Limit	DF	Prepared	Analyzed	CAS No.	Qual
200.7 Potentially Diss. Metals	Analytical Method: EPA 200.7 Preparation Method: EPA 200.7							
Calcium, Dissolved	**245000**	ug/L	100	1	07/23/13 15:00	07/30/13 14:13	7440-70-2	M1
Magnesium, Dissolved	**22400**	ug/L	50.0	1	07/23/13 15:00	07/30/13 14:13	7439-95-4	
Potassium, Dissolved	**4010**	ug/L	500	1	07/23/13 15:00	07/30/13 14:13	7440-09-7	
Sodium, Dissolved	**23100**	ug/L	500	1	07/23/13 15:00	07/30/13 14:13	7440-23-5	
200.8 MET ICPMS	Analytical Method: EPA 200.8 Preparation Method: EPA 200.8							
Aluminum	**57.4**	ug/L	4.0	1	07/25/13 07:54	07/30/13 16:52	7429-90-5	
Antimony	ND	ug/L	0.50	1	07/25/13 07:54	07/30/13 16:52	7440-36-0	
Arsenic	ND	ug/L	0.50	1	07/25/13 07:54	07/30/13 16:52	7440-38-2	
Barium	**20.0**	ug/L	0.30	1	07/25/13 07:54	07/30/13 16:52	7440-39-3	
Beryllium	ND	ug/L	0.20	1	07/25/13 07:54	07/30/13 16:52	7440-41-7	
Cadmium	**11.3**	ug/L	0.080	1	07/25/13 07:54	07/30/13 16:52	7440-43-9	
Calcium	**215000**	ug/L	400	20	07/25/13 07:54	07/30/13 16:58	7440-70-2	
Chromium	ND	ug/L	0.50	1	07/25/13 07:54	07/30/13 16:52	7440-47-3	
Cobalt	**1.9**	ug/L	0.50	1	07/25/13 07:54	07/30/13 16:52	7440-48-4	
Copper	**13.3**	ug/L	0.50	1	07/25/13 07:54	07/30/13 16:52	7440-50-8	
Iron	**617**	ug/L	50.0	1	07/25/13 07:54	07/30/13 16:52	7439-89-6	
Lead	**1.1**	ug/L	0.10	1	07/25/13 07:54	07/30/13 16:52	7439-92-1	
Magnesium	**19400**	ug/L	5.0	1	07/25/13 07:54	07/30/13 16:52	7439-95-4	
Manganese	**1530**	ug/L	10.0	20	07/25/13 07:54	07/30/13 16:58	7439-96-5	
Molybdenum	**16.4**	ug/L	0.50	1	07/25/13 07:54	07/30/13 16:52	7439-98-7	
Nickel	**3.6**	ug/L	0.50	1	07/25/13 07:54	07/30/13 16:52	7440-02-0	
Potassium	**3710**	ug/L	20.0	1	07/25/13 07:54	07/30/13 16:52	7440-09-7	
Selenium	ND	ug/L	0.50	1	07/25/13 07:54	07/30/13 16:52	7782-49-2	
Silica	**14400**	ug/L	1070	20	07/25/13 07:54	07/30/13 16:58	7631-86-9	
Silver	ND	ug/L	0.50	1	07/25/13 07:54	07/30/13 16:52	7440-22-4	
Sodium	**20800**	ug/L	50.0	1	07/25/13 07:54	07/30/13 16:52	7440-23-5	
Thallium	ND	ug/L	0.10	1	07/25/13 07:54	07/30/13 16:52	7440-28-0	
Total Hardness by 2340B	**617000**	ug/L	1420	20	07/25/13 07:54	07/30/13 16:58		
Vanadium	ND	ug/L	0.10	1	07/25/13 07:54	07/30/13 16:52	7440-62-2	
Zinc	**2230**	ug/L	100	20	07/25/13 07:54	07/30/13 16:58	7440-66-6	
200.8 MET ICPMS, Dissolved	Analytical Method: EPA 200.8 Preparation Method: EPA 200.8							
Aluminum, Dissolved	**11.8**	ug/L	4.0	1	08/07/13 15:42	08/08/13 11:17	7429-90-5	
Antimony, Dissolved	ND	ug/L	0.50	1	08/07/13 15:42	08/08/13 11:17	7440-36-0	
Arsenic, Dissolved	ND	ug/L	0.50	1	08/07/13 15:42	08/08/13 11:17	7440-38-2	
Barium, Dissolved	**21.1**	ug/L	0.30	1	08/07/13 15:42	08/08/13 11:17	7440-39-3	
Beryllium, Dissolved	ND	ug/L	0.20	1	08/07/13 15:42	08/08/13 11:17	7440-41-7	
Cadmium, Dissolved	**4.4**	ug/L	0.080	1	08/07/13 15:42	08/08/13 11:17	7440-43-9	
Calcium, Dissolved	**237000**	ug/L	400	20	08/07/13 15:42	08/08/13 11:22	7440-70-2	
Chromium, Dissolved	ND	ug/L	0.50	1	08/07/13 15:42	08/08/13 11:17	7440-47-3	
Cobalt, Dissolved	**2.1**	ug/L	0.50	1	08/07/13 15:42	08/08/13 11:17	7440-48-4	
Copper, Dissolved	**1.4**	ug/L	0.50	1	08/07/13 15:42	08/08/13 11:17	7440-50-8	
Iron, Dissolved	ND	ug/L	50.0	1	08/07/13 15:42	08/08/13 11:17	7439-89-6	
Lead, Dissolved	ND	ug/L	0.10	1	08/07/13 15:42	08/08/13 11:17	7439-92-1	
Magnesium, Dissolved	**20500**	ug/L	5.0	1	08/07/13 15:42	08/08/13 11:17	7439-95-4	

This report shall not be reproduced, except in full,
without the written consent of Pace Analytical Services, Inc..

Pace Analytical Services, Inc.
9608 Loiret Blvd.
Lenexa, KS 66219
(913)599-5665

ANALYTICAL RESULTS

Project: JULY 2013 RICO WATER SAMPLING
Pace Project No.: 60149200

Sample: DR-5_20130717 **Lab ID: 60149200002** Collected: 07/17/13 13:05 Received: 07/19/13 10:00 Matrix: Water

Parameters	Results	Units	Report Limit	DF	Prepared	Analyzed	CAS No.	Qual
200.8 MET ICPMS, Dissolved	Analytical Method: EPA 200.8 Preparation Method: EPA 200.8							
Manganese, Dissolved	**1500**	ug/L	10.0	20	08/07/13 15:42	08/08/13 11:22	7439-96-5	
Molybdenum, Dissolved	**17.7**	ug/L	0.50	1	08/07/13 15:42	08/08/13 11:17	7439-98-7	
Nickel, Dissolved	**3.6**	ug/L	0.50	1	08/07/13 15:42	08/08/13 11:17	7440-02-0	
Potassium, Dissolved	**4020**	ug/L	20.0	1	08/07/13 15:42	08/08/13 11:17	7440-09-7	
Selenium, Dissolved	ND	ug/L	0.50	1	08/07/13 15:42	08/08/13 11:17	7782-49-2	
Silver, Dissolved	ND	ug/L	0.50	1	08/07/13 15:42	08/08/13 11:17	7440-22-4	
Sodium, Dissolved	**21300**	ug/L	1000	20	08/07/13 15:42	08/08/13 11:22	7440-23-5	
Thallium, Dissolved	ND	ug/L	0.10	1	08/07/13 15:42	08/08/13 11:17	7440-28-0	
Vanadium, Dissolved	ND	ug/L	0.10	1	08/07/13 15:42	08/08/13 11:17	7440-62-2	
Zinc, Dissolved	**1990**	ug/L	100	20	08/07/13 15:42	08/08/13 11:22	7440-66-6	
200.8 Potentially Diss. Metals	Analytical Method: EPA 200.8 Preparation Method: EPA 200.8							
Aluminum, Dissolved	**43.9J**	ug/L	50.0	1	07/23/13 15:00	08/14/13 16:32	7429-90-5	
Antimony, Dissolved	**0.19J**	ug/L	1.0	1	07/23/13 15:00	08/14/13 16:32	7440-36-0	
Arsenic, Dissolved	**0.16J**	ug/L	1.0	1	07/23/13 15:00	08/14/13 16:32	7440-38-2	
Barium, Dissolved	**17.8**	ug/L	1.0	1	07/23/13 15:00	08/14/13 16:32	7440-39-3	
Beryllium, Dissolved	ND	ug/L	0.50	1	07/23/13 15:00	08/15/13 14:20	7440-41-7	
Cadmium, Dissolved	**11.2**	ug/L	0.50	1	07/23/13 15:00	08/14/13 16:32	7440-43-9	
Chromium, Dissolved	**0.38J**	ug/L	1.0	1	07/23/13 15:00	08/14/13 16:32	7440-47-3	B
Cobalt, Dissolved	**1.7**	ug/L	1.0	1	07/23/13 15:00	08/14/13 16:32	7440-48-4	
Copper, Dissolved	**12.3**	ug/L	1.0	1	07/23/13 15:00	08/14/13 16:32	7440-50-8	
Iron, Dissolved	**559**	ug/L	50.0	1	07/23/13 15:00	08/15/13 14:20	7439-89-6	
Lead, Dissolved	**1.3**	ug/L	1.0	1	07/23/13 15:00	08/14/13 16:32	7439-92-1	B
Manganese, Dissolved	**1420**	ug/L	1.0	1	07/23/13 15:00	08/14/13 16:32	7439-96-5	
Molybdenum, Dissolved	**16.4**	ug/L	1.0	1	07/23/13 15:00	08/14/13 16:32	7439-98-7	
Nickel, Dissolved	**3.2**	ug/L	1.0	1	07/23/13 15:00	08/14/13 16:32	7440-02-0	
Selenium, Dissolved	ND	ug/L	1.0	1	07/23/13 15:00	08/14/13 16:32	7782-49-2	
Silver, Dissolved	ND	ug/L	0.50	1	07/23/13 15:00	08/14/13 16:32	7440-22-4	
Thallium, Dissolved	**0.28J**	ug/L	1.0	1	07/23/13 15:00	08/14/13 16:32	7440-28-0	B
Vanadium, Dissolved	ND	ug/L	1.0	1	07/23/13 15:00	08/14/13 16:32	7440-62-2	
Zinc, Dissolved	**1900**	ug/L	10.0	1	07/23/13 15:00	08/14/13 16:32	7440-66-6	
245.1 Mercury	Analytical Method: EPA 245.1 Preparation Method: EPA 245.1							
Mercury	ND	ug/L	0.20	1	07/29/13 12:46	08/01/13 10:22	7439-97-6	
245.1 Mercury, Dissolved	Analytical Method: EPA 245.1 Preparation Method: EPA 245.1							
Mercury, Dissolved	ND	ug/L	0.20	1	07/29/13 13:42	08/01/13 11:04	7439-97-6	
245.1 Potentially Diss Mercury	Analytical Method: EPA 245.1 Preparation Method: EPA 245.1							
Mercury, Dissolved	ND	ug/L	0.20	1	07/22/13 14:30	07/23/13 10:28	7439-97-6	
2510B Specific Conductance	Analytical Method: SM 2510B							
Specific Conductance	**1190**	umhos/cm	10.0	1		08/01/13 17:22		
Salinity	Analytical Method: Calculated							
Salinity (as dissolved solids)	**763**	mg/L	6.4	1		08/01/13 17:22		

REPORT OF LABORATORY ANALYSIS

This report shall not be reproduced, except in full,
without the written consent of Pace Analytical Services, Inc..

Pace Analytical Services, Inc.
9608 Loiret Blvd.
Lenexa, KS 66219
(913)599-5665

ANALYTICAL RESULTS

Project: JULY 2013 RICO WATER SAMPLING
Pace Project No.: 60149200

Sample: DR-5_20130717 **Lab ID: 60149200002** Collected: 07/17/13 13:05 Received: 07/19/13 10:00 Matrix: Water

Parameters	Results	Units	Report Limit	DF	Prepared	Analyzed	CAS No.	Qual
Salinity	Analytical Method: Calculated							
Salinity (as seawater)	**0.59**	PSU	0.014	1		08/01/13 17:22		
2320B Alkalinity	Analytical Method: SM 2320B							
Alkalinity,Bicarbonate (CaCO3)	**102**	mg/L	20.0	1		07/23/13 08:22		D6
Alkalinity, Carbonate (CaCO3)	ND	mg/L	20.0	1		07/23/13 08:22		
Alkalinity, Total as CaCO3	**102**	mg/L	20.0	1		07/23/13 08:22		D6
2540C Total Dissolved Solids	Analytical Method: SM 2540C							
Total Dissolved Solids	**979**	mg/L	5.0	1		07/22/13 10:04		
2540D Total Suspended Solids	Analytical Method: SM 2540D							
Total Suspended Solids	ND	mg/L	5.0	1		07/22/13 08:45		
4500S2D Sulfide, Total	Analytical Method: SM 4500-S-2 D							
Sulfide, Total	ND	mg/L	0.050	1		07/23/13 13:38	18496-25-8	
300.0 IC Anions 28 Days	Analytical Method: EPA 300.0							
Chloride	ND	mg/L	1.0	1		07/31/13 14:04	16887-00-6	
Sulfate	**565**	mg/L	100	100		08/01/13 10:41	14808-79-8	
353.2 Nitrogen, NO2/NO3 pres.	Analytical Method: EPA 353.2							
Nitrogen, NO2 plus NO3	ND	mg/L	0.10	1		07/24/13 09:13		
4500CNE Cyanide, Total	Analytical Method: SM 4500-CN-E							
Cyanide	ND	mg/L	0.0050	1		07/24/13 15:42	57-12-5	
5310C TOC	Analytical Method: SM 5310C							
Total Organic Carbon	ND	mg/L	0.50	1		07/29/13 17:40	7440-44-0	

This report shall not be reproduced, except in full,
without the written consent of Pace Analytical Services, Inc..

Pace Analytical Services, Inc.
9608 Loiret Blvd.
Lenexa, KS 66219
(913)599-5665

ANALYTICAL RESULTS

Project: JULY 2013 RICO WATER SAMPLING
Pace Project No.: 60149200

Sample: DR-4-SW_20130717 **Lab ID: 60149200003** Collected: 07/17/13 10:50 Received: 07/19/13 10:00 Matrix: Water

Comments: • All reported results confirmed for total vs. dissolved metals (Ni)

Parameters	Results	Units	Report Limit	DF	Prepared	Analyzed	CAS No.	Qual
200.7 Potentially Diss. Metals	Analytical Method: EPA 200.7	Preparation Method: EPA 200.7						
Calcium, Dissolved	**53300**	ug/L	100	1	07/23/13 15:00	07/30/13 14:25	7440-70-2	
Magnesium, Dissolved	**7090**	ug/L	50.0	1	07/23/13 15:00	07/30/13 14:25	7439-95-4	
Potassium, Dissolved	**1120**	ug/L	500	1	07/23/13 15:00	07/30/13 14:25	7440-09-7	
Sodium, Dissolved	**3660**	ug/L	500	1	07/23/13 15:00	07/30/13 14:25	7440-23-5	
200.8 MET ICPMS	Analytical Method: EPA 200.8	Preparation Method: EPA 200.8						
Aluminum	**121**	ug/L	4.0	1	07/25/13 07:54	07/30/13 17:03	7429-90-5	
Antimony	ND	ug/L	0.50	1	07/25/13 07:54	07/30/13 17:03	7440-36-0	
Arsenic	ND	ug/L	0.50	1	07/25/13 07:54	07/30/13 17:03	7440-38-2	
Barium	**66.8**	ug/L	0.30	1	07/25/13 07:54	07/30/13 17:03	7440-39-3	
Beryllium	ND	ug/L	0.20	1	07/25/13 07:54	07/30/13 17:03	7440-41-7	
Cadmium	**0.40**	ug/L	0.080	1	07/25/13 07:54	07/30/13 17:03	7440-43-9	
Calcium	**49600**	ug/L	400	20	07/25/13 07:54	07/30/13 17:08	7440-70-2	
Chromium	**0.69**	ug/L	0.50	1	07/25/13 07:54	07/30/13 17:03	7440-47-3	
Cobalt	ND	ug/L	0.50	1	07/25/13 07:54	07/30/13 17:03	7440-48-4	
Copper	**0.98**	ug/L	0.50	1	07/25/13 07:54	07/30/13 17:03	7440-50-8	
Iron	**231**	ug/L	50.0	1	07/25/13 07:54	07/30/13 17:03	7439-89-6	
Lead	**0.68**	ug/L	0.10	1	07/25/13 07:54	07/30/13 17:03	7439-92-1	
Magnesium	**7140**	ug/L	5.0	1	07/25/13 07:54	07/30/13 17:03	7439-95-4	
Manganese	**112**	ug/L	0.50	1	07/25/13 07:54	07/30/13 17:03	7439-96-5	
Molybdenum	**1.4**	ug/L	0.50	1	07/25/13 07:54	07/30/13 17:03	7439-98-7	
Nickel	**0.82**	ug/L	0.50	1	07/25/13 07:54	07/30/13 17:03	7440-02-0	
Potassium	**1080**	ug/L	20.0	1	07/25/13 07:54	07/30/13 17:03	7440-09-7	
Selenium	ND	ug/L	0.50	1	07/25/13 07:54	07/30/13 17:03	7782-49-2	
Silica	**7280**	ug/L	1070	20	07/25/13 07:54	07/30/13 17:08	7631-86-9	
Silver	ND	ug/L	0.50	1	07/25/13 07:54	07/30/13 17:03	7440-22-4	
Sodium	**3380**	ug/L	50.0	1	07/25/13 07:54	07/30/13 17:03	7440-23-5	
Thallium	ND	ug/L	0.10	1	07/25/13 07:54	07/30/13 17:03	7440-28-0	
Total Hardness by 2340B	**153000**	ug/L	1420	20	07/25/13 07:54	07/30/13 17:08		
Vanadium	**0.39**	ug/L	0.10	1	07/25/13 07:54	07/30/13 17:03	7440-62-2	
Zinc	**75.0**	ug/L	5.0	1	07/25/13 07:54	07/30/13 17:03	7440-66-6	
200.8 MET ICPMS, Dissolved	Analytical Method: EPA 200.8	Preparation Method: EPA 200.8						
Aluminum, Dissolved	**9.8**	ug/L	4.0	1	08/07/13 15:42	08/08/13 11:27	7429-90-5	
Antimony, Dissolved	ND	ug/L	0.50	1	08/07/13 15:42	08/08/13 11:27	7440-36-0	
Arsenic, Dissolved	ND	ug/L	0.50	1	08/07/13 15:42	08/08/13 11:27	7440-38-2	
Barium, Dissolved	**68.2**	ug/L	0.30	1	08/07/13 15:42	08/08/13 11:27	7440-39-3	
Beryllium, Dissolved	ND	ug/L	0.20	1	08/07/13 15:42	08/08/13 11:27	7440-41-7	
Cadmium, Dissolved	**0.35**	ug/L	0.080	1	08/07/13 15:42	08/08/13 11:27	7440-43-9	
Calcium, Dissolved	**55700**	ug/L	400	20	08/07/13 15:42	08/08/13 11:32	7440-70-2	
Chromium, Dissolved	ND	ug/L	0.50	1	08/07/13 15:42	08/08/13 11:27	7440-47-3	
Cobalt, Dissolved	ND	ug/L	0.50	1	08/07/13 15:42	08/08/13 11:27	7440-48-4	
Copper, Dissolved	**2.0**	ug/L	0.50	1	08/07/13 15:42	08/08/13 11:27	7440-50-8	
Iron, Dissolved	ND	ug/L	50.0	1	08/07/13 15:42	08/08/13 11:27	7439-89-6	
Lead, Dissolved	ND	ug/L	0.10	1	08/07/13 15:42	08/08/13 11:27	7439-92-1	

This report shall not be reproduced, except in full,
without the written consent of Pace Analytical Services, Inc..

Pace Analytical Services, Inc.
9608 Loiret Blvd.
Lenexa, KS 66219
(913)599-5665

ANALYTICAL RESULTS

Project: JULY 2013 RICO WATER SAMPLING
Pace Project No.: 60149200

Sample: DR-4-SW_20130717 **Lab ID: 60149200003** Collected: 07/17/13 10:50 Received: 07/19/13 10:00 Matrix: Water

Comments: • All reported results confirmed for total vs. dissolved metals (Ni)

Parameters	Results	Units	Report Limit	DF	Prepared	Analyzed	CAS No.	Qual
200.8 MET ICPMS, Dissolved	Analytical Method: EPA 200.8		Preparation Method: EPA 200.8					
Magnesium, Dissolved	**7560**	ug/L	5.0	1	08/07/13 15:42	08/08/13 11:27	7439-95-4	
Manganese, Dissolved	**107**	ug/L	0.50	1	08/07/13 15:42	08/08/13 11:27	7439-96-5	
Molybdenum, Dissolved	**1.5**	ug/L	0.50	1	08/07/13 15:42	08/08/13 11:27	7439-98-7	
Nickel, Dissolved	**4.2**	ug/L	0.50	1	08/07/13 15:42	08/08/13 11:27	7440-02-0	
Potassium, Dissolved	**1150**	ug/L	20.0	1	08/07/13 15:42	08/08/13 11:27	7440-09-7	
Selenium, Dissolved	ND	ug/L	0.50	1	08/07/13 15:42	08/08/13 11:27	7782-49-2	
Silver, Dissolved	ND	ug/L	0.50	1	08/07/13 15:42	08/08/13 11:27	7440-22-4	
Sodium, Dissolved	**3650**	ug/L	50.0	1	08/07/13 15:42	08/08/13 11:27	7440-23-5	
Thallium, Dissolved	ND	ug/L	0.10	1	08/07/13 15:42	08/08/13 11:27	7440-28-0	
Vanadium, Dissolved	ND	ug/L	0.10	1	08/07/13 15:42	08/08/13 11:27	7440-62-2	
Zinc, Dissolved	**70.6**	ug/L	5.0	1	08/07/13 15:42	08/08/13 11:27	7440-66-6	
200.8 Potentially Diss. Metals	Analytical Method: EPA 200.8		Preparation Method: EPA 200.8					
Aluminum, Dissolved	**29.9J**	ug/L	50.0	1	07/23/13 15:00	08/14/13 16:36	7429-90-5	
Antimony, Dissolved	**0.057J**	ug/L	1.0	1	07/23/13 15:00	08/14/13 16:36	7440-36-0	
Arsenic, Dissolved	**0.39J**	ug/L	1.0	1	07/23/13 15:00	08/14/13 16:36	7440-38-2	
Barium, Dissolved	**64.0**	ug/L	1.0	1	07/23/13 15:00	08/14/13 16:36	7440-39-3	
Beryllium, Dissolved	ND	ug/L	0.50	1	07/23/13 15:00	08/15/13 14:24	7440-41-7	
Cadmium, Dissolved	**0.37J**	ug/L	0.50	1	07/23/13 15:00	08/14/13 16:36	7440-43-9	
Chromium, Dissolved	**0.68J**	ug/L	1.0	1	07/23/13 15:00	08/14/13 16:36	7440-47-3	B
Cobalt, Dissolved	**0.22J**	ug/L	1.0	1	07/23/13 15:00	08/14/13 16:36	7440-48-4	
Copper, Dissolved	**0.75J**	ug/L	1.0	1	07/23/13 15:00	08/14/13 16:36	7440-50-8	B
Iron, Dissolved	**138**	ug/L	50.0	1	07/23/13 15:00	08/15/13 14:24	7439-89-6	
Lead, Dissolved	**0.82J**	ug/L	1.0	1	07/23/13 15:00	08/14/13 16:36	7439-92-1	B
Manganese, Dissolved	**111**	ug/L	1.0	1	07/23/13 15:00	08/14/13 16:36	7439-96-5	
Molybdenum, Dissolved	**1.5**	ug/L	1.0	1	07/23/13 15:00	08/14/13 16:36	7439-98-7	B
Nickel, Dissolved	**0.96J**	ug/L	1.0	1	07/23/13 15:00	08/14/13 16:36	7440-02-0	B
Selenium, Dissolved	ND	ug/L	1.0	1	07/23/13 15:00	08/14/13 16:36	7782-49-2	
Silver, Dissolved	ND	ug/L	0.50	1	07/23/13 15:00	08/14/13 16:36	7440-22-4	
Thallium, Dissolved	**0.23J**	ug/L	1.0	1	07/23/13 15:00	08/14/13 16:36	7440-28-0	B
Vanadium, Dissolved	**0.14J**	ug/L	1.0	1	07/23/13 15:00	08/14/13 16:36	7440-62-2	B
Zinc, Dissolved	**72.4**	ug/L	10.0	1	07/23/13 15:00	08/14/13 16:36	7440-66-6	
245.1 Mercury	Analytical Method: EPA 245.1		Preparation Method: EPA 245.1					
Mercury	ND	ug/L	0.20	1	07/29/13 12:46	08/01/13 10:35	7439-97-6	
245.1 Mercury, Dissolved	Analytical Method: EPA 245.1		Preparation Method: EPA 245.1					
Mercury, Dissolved	ND	ug/L	0.20	1	07/29/13 13:42	08/01/13 11:17	7439-97-6	
245.1 Potentially Diss Mercury	Analytical Method: EPA 245.1		Preparation Method: EPA 245.1					
Mercury, Dissolved	ND	ug/L	0.20	1	07/22/13 14:30	07/23/13 10:30	7439-97-6	
2510B Specific Conductance	Analytical Method: SM 2510B							
Specific Conductance	**331**	umhos/cm	10.0	1		08/01/13 17:23		

REPORT OF LABORATORY ANALYSIS

This report shall not be reproduced, except in full,
without the written consent of Pace Analytical Services, Inc..

Pace Analytical Services, Inc.
9608 Loiret Blvd.
Lenexa, KS 66219
(913)599-5665

ANALYTICAL RESULTS

Project: JULY 2013 RICO WATER SAMPLING
Pace Project No.: 60149200

Sample: DR-4-SW_20130717 **Lab ID: 60149200003** Collected: 07/17/13 10:50 Received: 07/19/13 10:00 Matrix: Water

Comments: • All reported results confirmed for total vs. dissolved metals (Ni)

Parameters	Results	Units	Report Limit	DF	Prepared	Analyzed	CAS No.	Qual
Salinity	Analytical Method: Calculated							
Salinity (as dissolved solids)	**212**	mg/L	6.4	1		08/01/13 17:23		
Salinity (as seawater)	**0.16**	PSU	0.014	1		08/01/13 17:23		
2320B Alkalinity	Analytical Method: SM 2320B							
Alkalinity,Bicarbonate (CaCO3)	**105**	mg/L	20.0	1		07/23/13 08:30		
Alkalinity, Carbonate (CaCO3)	ND	mg/L	20.0	1		07/23/13 08:30		
Alkalinity, Total as CaCO3	**105**	mg/L	20.0	1		07/23/13 08:30		
2540C Total Dissolved Solids	Analytical Method: SM 2540C							
Total Dissolved Solids	**203**	mg/L	5.0	1		07/22/13 10:04		
2540D Total Suspended Solids	Analytical Method: SM 2540D							
Total Suspended Solids	**9.0**	mg/L	5.0	1		07/22/13 08:45		
4500S2D Sulfide, Total	Analytical Method: SM 4500-S-2 D							
Sulfide, Total	ND	mg/L	0.050	1		07/23/13 13:41	18496-25-8	
300.0 IC Anions 28 Days	Analytical Method: EPA 300.0							
Chloride	**1.1**	mg/L	1.0	1		07/31/13 14:22	16887-00-6	
Sulfate	**73.8**	mg/L	10.0	10		08/01/13 11:34	14808-79-8	
353.2 Nitrogen, NO2/NO3 pres.	Analytical Method: EPA 353.2							
Nitrogen, NO2 plus NO3	ND	mg/L	0.10	1		07/24/13 09:14		
4500CNE Cyanide, Total	Analytical Method: SM 4500-CN-E							
Cyanide	ND	mg/L	0.0050	1		07/24/13 15:42	57-12-5	
5310C TOC	Analytical Method: SM 5310C							
Total Organic Carbon	**1.3**	mg/L	1.0	2		07/29/13 18:17	7440-44-0	

This report shall not be reproduced, except in full,
without the written consent of Pace Analytical Services, Inc..

Pace Analytical Services, Inc.
9608 Loiret Blvd.
Lenexa, KS 66219
(913)599-5665

ANALYTICAL RESULTS

Project: JULY 2013 RICO WATER SAMPLING
Pace Project No.: 60149200

Sample: DR-4-SW COMPOSITE_20130717 **Lab ID: 60149200004** Collected: 07/17/13 10:48 Received: 07/19/13 10:00 Matrix: Water

Parameters	Results	Units	Report Limit	DF	Prepared	Analyzed	CAS No.	Qual
200.7 Potentially Diss. Metals	Analytical Method: EPA 200.7 Preparation Method: EPA 200.7							
Calcium, Dissolved	**56400**	ug/L	100	1	07/23/13 15:00	07/30/13 14:28	7440-70-2	
Magnesium, Dissolved	**7450**	ug/L	50.0	1	07/23/13 15:00	07/30/13 14:28	7439-95-4	
Potassium, Dissolved	**1150**	ug/L	500	1	07/23/13 15:00	07/30/13 14:28	7440-09-7	
Sodium, Dissolved	**3850**	ug/L	500	1	07/23/13 15:00	07/30/13 14:28	7440-23-5	
200.8 MET ICPMS	Analytical Method: EPA 200.8 Preparation Method: EPA 200.8							
Aluminum	**198**	ug/L	4.0	1	07/25/13 07:54	07/30/13 17:14	7429-90-5	
Antimony	ND	ug/L	0.50	1	07/25/13 07:54	07/30/13 17:14	7440-36-0	
Arsenic	**0.62**	ug/L	0.50	1	07/25/13 07:54	07/30/13 17:14	7440-38-2	
Barium	**71.4**	ug/L	0.30	1	07/25/13 07:54	07/30/13 17:14	7440-39-3	
Beryllium	ND	ug/L	0.20	1	07/25/13 07:54	07/30/13 17:14	7440-41-7	
Cadmium	**0.42**	ug/L	0.080	1	07/25/13 07:54	07/30/13 17:14	7440-43-9	
Calcium	**52700**	ug/L	400	20	07/25/13 07:54	07/30/13 17:19	7440-70-2	
Chromium	ND	ug/L	0.50	1	07/25/13 07:54	07/30/13 17:14	7440-47-3	
Cobalt	ND	ug/L	0.50	1	07/25/13 07:54	07/30/13 17:14	7440-48-4	
Copper	**1.2**	ug/L	0.50	1	07/25/13 07:54	07/30/13 17:14	7440-50-8	
Iron	**363**	ug/L	50.0	1	07/25/13 07:54	07/30/13 17:14	7439-89-6	
Lead	**1.2**	ug/L	0.10	1	07/25/13 07:54	07/30/13 17:14	7439-92-1	
Magnesium	**7430**	ug/L	5.0	1	07/25/13 07:54	07/30/13 17:14	7439-95-4	
Manganese	**125**	ug/L	0.50	1	07/25/13 07:54	07/30/13 17:14	7439-96-5	
Molybdenum	**1.4**	ug/L	0.50	1	07/25/13 07:54	07/30/13 17:14	7439-98-7	
Nickel	**0.87**	ug/L	0.50	1	07/25/13 07:54	07/30/13 17:14	7440-02-0	
Potassium	**1140**	ug/L	20.0	1	07/25/13 07:54	07/30/13 17:14	7440-09-7	
Selenium	ND	ug/L	0.50	1	07/25/13 07:54	07/30/13 17:14	7782-49-2	
Silica	**7750**	ug/L	1070	20	07/25/13 07:54	07/30/13 17:19	7631-86-9	
Silver	ND	ug/L	0.50	1	07/25/13 07:54	07/30/13 17:14	7440-22-4	
Sodium	**3460**	ug/L	50.0	1	07/25/13 07:54	07/30/13 17:14	7440-23-5	
Thallium	ND	ug/L	0.10	1	07/25/13 07:54	07/30/13 17:14	7440-28-0	
Total Hardness by 2340B	**162000**	ug/L	1420	20	07/25/13 07:54	07/30/13 17:19		
Vanadium	**0.60**	ug/L	0.10	1	07/25/13 07:54	07/30/13 17:14	7440-62-2	
Zinc	**82.6**	ug/L	5.0	1	07/25/13 07:54	07/30/13 17:14	7440-66-6	
200.8 MET ICPMS, Dissolved	Analytical Method: EPA 200.8 Preparation Method: EPA 200.8							
Aluminum, Dissolved	**8.4**	ug/L	4.0	1	08/07/13 15:42	08/08/13 11:37	7429-90-5	
Antimony, Dissolved	ND	ug/L	0.50	1	08/07/13 15:42	08/08/13 11:37	7440-36-0	
Arsenic, Dissolved	ND	ug/L	0.50	1	08/07/13 15:42	08/08/13 11:37	7440-38-2	
Barium, Dissolved	**68.6**	ug/L	0.30	1	08/07/13 15:42	08/08/13 11:37	7440-39-3	
Beryllium, Dissolved	ND	ug/L	0.20	1	08/07/13 15:42	08/08/13 11:37	7440-41-7	
Cadmium, Dissolved	**0.36**	ug/L	0.080	1	08/07/13 15:42	08/08/13 11:37	7440-43-9	
Calcium, Dissolved	**56500**	ug/L	400	20	08/07/13 15:42	08/08/13 11:42	7440-70-2	
Chromium, Dissolved	ND	ug/L	0.50	1	08/07/13 15:42	08/08/13 11:37	7440-47-3	
Cobalt, Dissolved	ND	ug/L	0.50	1	08/07/13 15:42	08/08/13 11:37	7440-48-4	
Copper, Dissolved	**1.6**	ug/L	0.50	1	08/07/13 15:42	08/08/13 11:37	7440-50-8	
Iron, Dissolved	ND	ug/L	50.0	1	08/07/13 15:42	08/08/13 11:37	7439-89-6	
Lead, Dissolved	ND	ug/L	0.10	1	08/07/13 15:42	08/08/13 11:37	7439-92-1	
Magnesium, Dissolved	**7610**	ug/L	5.0	1	08/07/13 15:42	08/08/13 11:37	7439-95-4	

This report shall not be reproduced, except in full,
without the written consent of Pace Analytical Services, Inc..

Pace Analytical Services, Inc.
9608 Loiret Blvd.
Lenexa, KS 66219
(913)599-5665

ANALYTICAL RESULTS

Project: JULY 2013 RICO WATER SAMPLING
Pace Project No.: 60149200

Sample: DR-4-SW COMPOSITE_20130717 **Lab ID: 60149200004** Collected: 07/17/13 10:48 Received: 07/19/13 10:00 Matrix: Water

Parameters	Results	Units	Report Limit	DF	Prepared	Analyzed	CAS No.	Qual
200.8 MET ICPMS, Dissolved	Analytical Method: EPA 200.8 Preparation Method: EPA 200.8							
Manganese, Dissolved	**108**	ug/L	0.50	1	08/07/13 15:42	08/08/13 11:37	7439-96-5	
Molybdenum, Dissolved	**1.5**	ug/L	0.50	1	08/07/13 15:42	08/08/13 11:37	7439-98-7	
Nickel, Dissolved	**0.96**	ug/L	0.50	1	08/07/13 15:42	08/08/13 11:37	7440-02-0	
Potassium, Dissolved	**1150**	ug/L	20.0	1	08/07/13 15:42	08/08/13 11:37	7440-09-7	
Selenium, Dissolved	ND	ug/L	0.50	1	08/07/13 15:42	08/08/13 11:37	7782-49-2	
Silver, Dissolved	ND	ug/L	0.50	1	08/07/13 15:42	08/08/13 11:37	7440-22-4	
Sodium, Dissolved	**3740**	ug/L	50.0	1	08/07/13 15:42	08/08/13 11:37	7440-23-5	
Thallium, Dissolved	ND	ug/L	0.10	1	08/07/13 15:42	08/08/13 11:37	7440-28-0	
Vanadium, Dissolved	ND	ug/L	0.10	1	08/07/13 15:42	08/08/13 11:37	7440-62-2	
Zinc, Dissolved	**67.6**	ug/L	5.0	1	08/07/13 15:42	08/08/13 11:37	7440-66-6	
200.8 Potentially Diss. Metals	Analytical Method: EPA 200.8 Preparation Method: EPA 200.8							
Aluminum, Dissolved	**42.4J**	ug/L	50.0	1	07/23/13 15:00	08/14/13 17:01	7429-90-5	
Antimony, Dissolved	**0.11J**	ug/L	1.0	1	07/23/13 15:00	08/14/13 17:01	7440-36-0	
Arsenic, Dissolved	**0.38J**	ug/L	1.0	1	07/23/13 15:00	08/14/13 17:01	7440-38-2	
Barium, Dissolved	**68.2**	ug/L	1.0	1	07/23/13 15:00	08/14/13 17:01	7440-39-3	
Beryllium, Dissolved	ND	ug/L	0.50	1	07/23/13 15:00	08/15/13 14:32	7440-41-7	
Cadmium, Dissolved	**0.38J**	ug/L	0.50	1	07/23/13 15:00	08/14/13 17:01	7440-43-9	
Chromium, Dissolved	**0.32J**	ug/L	1.0	1	07/23/13 15:00	08/14/13 17:01	7440-47-3	B
Cobalt, Dissolved	**0.27J**	ug/L	1.0	1	07/23/13 15:00	08/14/13 17:01	7440-48-4	
Copper, Dissolved	**0.88J**	ug/L	1.0	1	07/23/13 15:00	08/14/13 17:01	7440-50-8	B
Iron, Dissolved	**180**	ug/L	50.0	1	07/23/13 15:00	08/15/13 14:32	7439-89-6	
Lead, Dissolved	**1.2**	ug/L	1.0	1	07/23/13 15:00	08/14/13 17:01	7439-92-1	B
Manganese, Dissolved	**121**	ug/L	1.0	1	07/23/13 15:00	08/14/13 17:01	7439-96-5	
Molybdenum, Dissolved	**1.6**	ug/L	1.0	1	07/23/13 15:00	08/14/13 17:01	7439-98-7	B
Nickel, Dissolved	**0.77J**	ug/L	1.0	1	07/23/13 15:00	08/14/13 17:01	7440-02-0	B
Selenium, Dissolved	ND	ug/L	1.0	1	07/23/13 15:00	08/14/13 17:01	7782-49-2	
Silver, Dissolved	**0.011J**	ug/L	0.50	1	07/23/13 15:00	08/14/13 17:01	7440-22-4	
Thallium, Dissolved	**0.26J**	ug/L	1.0	1	07/23/13 15:00	08/14/13 17:01	7440-28-0	B
Vanadium, Dissolved	**0.20J**	ug/L	1.0	1	07/23/13 15:00	08/14/13 17:01	7440-62-2	B
Zinc, Dissolved	**75.3**	ug/L	10.0	1	07/23/13 15:00	08/14/13 17:01	7440-66-6	
245.1 Mercury	Analytical Method: EPA 245.1 Preparation Method: EPA 245.1							
Mercury	ND	ug/L	0.20	1	07/29/13 12:46	08/01/13 10:37	7439-97-6	
245.1 Mercury, Dissolved	Analytical Method: EPA 245.1 Preparation Method: EPA 245.1							
Mercury, Dissolved	ND	ug/L	0.20	1	07/29/13 13:42	08/01/13 11:19	7439-97-6	
245.1 Potentially Diss Mercury	Analytical Method: EPA 245.1 Preparation Method: EPA 245.1							
Mercury, Dissolved	ND	ug/L	0.20	1	07/22/13 14:30	07/23/13 10:32	7439-97-6	
2510B Specific Conductance	Analytical Method: SM 2510B							
Specific Conductance	**329**	umhos/cm	10.0	1		08/01/13 17:24		

This report shall not be reproduced, except in full,
without the written consent of Pace Analytical Services, Inc..

Pace Analytical Services, Inc.
9608 Loiret Blvd.
Lenexa, KS 66219
(913)599-5665

ANALYTICAL RESULTS

Project: JULY 2013 RICO WATER SAMPLING
Pace Project No.: 60149200

Sample: DR-4-SW COMPOSITE_20130717 **Lab ID: 60149200004** Collected: 07/17/13 10:48 Received: 07/19/13 10:00 Matrix: Water

Parameters	Results	Units	Report Limit	DF	Prepared	Analyzed	CAS No.	Qual
Salinity	Analytical Method: Calculated							
Salinity (as dissolved solids)	**211**	mg/L	6.4	1		08/01/13 17:24		
Salinity (as seawater)	**0.16**	PSU	0.014	1		08/01/13 17:24		
2320B Alkalinity	Analytical Method: SM 2320B							
Alkalinity,Bicarbonate (CaCO3)	**105**	mg/L	20.0	1		07/23/13 08:34		
Alkalinity, Carbonate (CaCO3)	ND	mg/L	20.0	1		07/23/13 08:34		
Alkalinity, Total as CaCO3	**105**	mg/L	20.0	1		07/23/13 08:34		
2540C Total Dissolved Solids	Analytical Method: SM 2540C							
Total Dissolved Solids	**203**	mg/L	5.0	1		07/22/13 10:05		
2540D Total Suspended Solids	Analytical Method: SM 2540D							
Total Suspended Solids	**10**	mg/L	5.0	1		07/22/13 08:45		
4500S2D Sulfide, Total	Analytical Method: SM 4500-S-2 D							
Sulfide, Total	ND	mg/L	0.050	1		07/23/13 13:42	18496-25-8	
300.0 IC Anions 28 Days	Analytical Method: EPA 300.0							
Chloride	**1.0**	mg/L	1.0	1		07/31/13 14:39	16887-00-6	
Sulfate	**72.7**	mg/L	10.0	10		08/01/13 11:52	14808-79-8	
353.2 Nitrogen, NO2/NO3 pres.	Analytical Method: EPA 353.2							
Nitrogen, NO2 plus NO3	ND	mg/L	0.10	1		07/24/13 09:14		
4500CNE Cyanide, Total	Analytical Method: SM 4500-CN-E							
Cyanide	ND	mg/L	0.0050	1		07/24/13 17:34	57-12-5	
5310C TOC	Analytical Method: SM 5310C							
Total Organic Carbon	**1.3**	mg/L	0.50	1		07/29/13 19:11	7440-44-0	

This report shall not be reproduced, except in full,
without the written consent of Pace Analytical Services, Inc..

Pace Analytical Services, Inc.
9608 Loiret Blvd.
Lenexa, KS 66219
(913)599-5665

ANALYTICAL RESULTS

Project: JULY 2013 RICO WATER SAMPLING
Pace Project No.: 60149200

Sample: GW-7_20130717 **Lab ID: 60149200005** Collected: 07/17/13 14:30 Received: 07/19/13 10:00 Matrix: Water

Parameters	Results	Units	Report Limit	DF	Prepared	Analyzed	CAS No.	Qual
200.7 Potentially Diss. Metals	Analytical Method: EPA 200.7 Preparation Method: EPA 200.7							
Calcium, Dissolved	**290000**	ug/L	100	1	07/23/13 15:00	07/30/13 14:38	7440-70-2	
Magnesium, Dissolved	**29200**	ug/L	50.0	1	07/23/13 15:00	07/30/13 14:38	7439-95-4	
Potassium, Dissolved	**3050**	ug/L	500	1	07/23/13 15:00	07/30/13 14:38	7440-09-7	
Sodium, Dissolved	**8920**	ug/L	500	1	07/23/13 15:00	07/30/13 14:38	7440-23-5	
200.8 MET ICPMS	Analytical Method: EPA 200.8 Preparation Method: EPA 200.8							
Aluminum	**9900**	ug/L	4.0	1	07/25/13 07:54	07/30/13 17:24	7429-90-5	
Antimony	**0.72**	ug/L	0.50	1	07/25/13 07:54	07/30/13 17:24	7440-36-0	
Arsenic	**14.8**	ug/L	0.50	1	07/25/13 07:54	07/30/13 17:24	7440-38-2	
Barium	**47.1**	ug/L	0.30	1	07/25/13 07:54	07/30/13 17:24	7440-39-3	
Beryllium	**1.1**	ug/L	0.20	1	07/25/13 07:54	07/30/13 17:24	7440-41-7	
Cadmium	**5.7**	ug/L	0.080	1	07/25/13 07:54	07/30/13 17:24	7440-43-9	
Calcium	**282000**	ug/L	400	20	07/25/13 07:54	07/30/13 17:30	7440-70-2	
Chromium	**16.3**	ug/L	0.50	1	07/25/13 07:54	07/30/13 17:24	7440-47-3	
Cobalt	**4.5**	ug/L	0.50	1	07/25/13 07:54	07/30/13 17:24	7440-48-4	
Copper	**154**	ug/L	0.50	1	07/25/13 07:54	07/30/13 17:24	7440-50-8	
Iron	**24900**	ug/L	1000	20	07/25/13 07:54	07/30/13 17:30	7439-89-6	
Lead	**531**	ug/L	2.0	20	07/25/13 07:54	07/30/13 17:30	7439-92-1	
Magnesium	**36400**	ug/L	100	20	07/25/13 07:54	07/30/13 17:30	7439-95-4	
Manganese	**203**	ug/L	0.50	1	07/25/13 07:54	07/30/13 17:24	7439-96-5	
Molybdenum	**4.4**	ug/L	0.50	1	07/25/13 07:54	07/30/13 17:24	7439-98-7	
Nickel	**12.5**	ug/L	0.50	1	07/25/13 07:54	07/30/13 17:24	7440-02-0	
Potassium	**4180**	ug/L	20.0	1	07/25/13 07:54	07/30/13 17:24	7440-09-7	
Selenium	**7.6**	ug/L	0.50	1	07/25/13 07:54	07/30/13 17:24	7782-49-2	
Silica	**35800**	ug/L	1070	20	07/25/13 07:54	07/30/13 17:30	7631-86-9	
Silver	**1.2**	ug/L	0.50	1	07/25/13 07:54	07/30/13 17:24	7440-22-4	
Sodium	**8210**	ug/L	50.0	1	07/25/13 07:54	07/30/13 17:24	7440-23-5	
Thallium	**0.40**	ug/L	0.10	1	07/25/13 07:54	07/30/13 17:24	7440-28-0	
Total Hardness by 2340B	**853000**	ug/L	1420	20	07/25/13 07:54	07/30/13 17:30		
Vanadium	**13.4**	ug/L	0.10	1	07/25/13 07:54	07/30/13 17:24	7440-62-2	
Zinc	**925**	ug/L	100	20	07/25/13 07:54	07/30/13 17:30	7440-66-6	
200.8 MET ICPMS, Dissolved	Analytical Method: EPA 200.8 Preparation Method: EPA 200.8							
Aluminum, Dissolved	**82.0**	ug/L	4.0	1	08/07/13 15:42	08/08/13 12:05	7429-90-5	
Antimony, Dissolved	ND	ug/L	0.50	1	08/07/13 15:42	08/08/13 12:05	7440-36-0	
Arsenic, Dissolved	ND	ug/L	0.50	1	08/07/13 15:42	08/08/13 12:05	7440-38-2	
Barium, Dissolved	**14.4**	ug/L	0.30	1	08/07/13 15:42	08/08/13 12:05	7440-39-3	
Beryllium, Dissolved	ND	ug/L	0.20	1	08/07/13 15:42	08/08/13 12:05	7440-41-7	
Cadmium, Dissolved	**3.0**	ug/L	0.080	1	08/07/13 15:42	08/08/13 12:05	7440-43-9	
Calcium, Dissolved	**294000**	ug/L	400	20	08/07/13 15:42	08/08/13 12:15	7440-70-2	M1
Chromium, Dissolved	ND	ug/L	0.50	1	08/07/13 15:42	08/08/13 12:05	7440-47-3	
Cobalt, Dissolved	**0.70**	ug/L	0.50	1	08/07/13 15:42	08/08/13 12:05	7440-48-4	
Copper, Dissolved	**6.3**	ug/L	0.50	1	08/07/13 15:42	08/08/13 12:05	7440-50-8	
Iron, Dissolved	ND	ug/L	50.0	1	08/07/13 15:42	08/08/13 12:05	7439-89-6	
Lead, Dissolved	**5.5**	ug/L	0.10	1	08/07/13 15:42	08/08/13 12:05	7439-92-1	
Magnesium, Dissolved	**29800**	ug/L	25.0	5	08/07/13 15:42	08/08/13 12:10	7439-95-4	M1

This report shall not be reproduced, except in full,
without the written consent of Pace Analytical Services, Inc..

Pace Analytical Services, Inc.
9608 Loiret Blvd.
Lenexa, KS 66219
(913)599-5665

ANALYTICAL RESULTS

Project: JULY 2013 RICO WATER SAMPLING
Pace Project No.: 60149200

Sample: GW-7_20130717 **Lab ID: 60149200005** Collected: 07/17/13 14:30 Received: 07/19/13 10:00 Matrix: Water

Parameters	Results	Units	Report Limit	DF	Prepared	Analyzed	CAS No.	Qual
200.8 MET ICPMS, Dissolved	Analytical Method: EPA 200.8 Preparation Method: EPA 200.8							
Manganese, Dissolved	**17.4**	ug/L	0.50	1	08/07/13 15:42	08/08/13 12:05	7439-96-5	
Molybdenum, Dissolved	**1.1**	ug/L	0.50	1	08/07/13 15:42	08/08/13 12:05	7439-98-7	
Nickel, Dissolved	**6.7**	ug/L	0.50	1	08/07/13 15:42	08/08/13 12:05	7440-02-0	
Potassium, Dissolved	**2800**	ug/L	20.0	1	08/07/13 15:42	08/08/13 12:05	7440-09-7	
Selenium, Dissolved	**1.6**	ug/L	0.50	1	08/07/13 15:42	08/08/13 12:05	7782-49-2	
Silver, Dissolved	ND	ug/L	0.50	1	08/07/13 15:42	08/08/13 12:05	7440-22-4	
Sodium, Dissolved	**8530**	ug/L	50.0	1	08/07/13 15:42	08/08/13 12:05	7440-23-5	M1
Thallium, Dissolved	ND	ug/L	0.10	1	08/07/13 15:42	08/08/13 12:05	7440-28-0	
Vanadium, Dissolved	ND	ug/L	0.10	1	08/07/13 15:42	08/08/13 12:05	7440-62-2	
Zinc, Dissolved	**189**	ug/L	5.0	1	08/07/13 15:42	08/08/13 12:05	7440-66-6	
200.8 Potentially Diss. Metals	Analytical Method: EPA 200.8 Preparation Method: EPA 200.8							
Aluminum, Dissolved	**3410**	ug/L	50.0	1	07/23/13 15:00	08/14/13 17:05	7429-90-5	
Antimony, Dissolved	**0.13J**	ug/L	1.0	1	07/23/13 15:00	08/14/13 17:05	7440-36-0	
Arsenic, Dissolved	**2.9**	ug/L	1.0	1	07/23/13 15:00	08/14/13 17:05	7440-38-2	
Barium, Dissolved	**17.7**	ug/L	1.0	1	07/23/13 15:00	08/14/13 17:05	7440-39-3	
Beryllium, Dissolved	**0.64**	ug/L	0.50	1	07/23/13 15:00	08/15/13 14:48	7440-41-7	
Cadmium, Dissolved	**3.6**	ug/L	0.50	1	07/23/13 15:00	08/14/13 17:05	7440-43-9	
Chromium, Dissolved	**4.4**	ug/L	1.0	1	07/23/13 15:00	08/14/13 17:05	7440-47-3	B
Cobalt, Dissolved	**1.9**	ug/L	1.0	1	07/23/13 15:00	08/14/13 17:05	7440-48-4	
Copper, Dissolved	**94.8**	ug/L	1.0	1	07/23/13 15:00	08/14/13 17:05	7440-50-8	
Iron, Dissolved	**6010**	ug/L	50.0	1	07/23/13 15:00	08/15/13 14:48	7439-89-6	
Lead, Dissolved	**283**	ug/L	1.0	1	07/23/13 15:00	08/14/13 17:05	7439-92-1	
Manganese, Dissolved	**44.1**	ug/L	1.0	1	07/23/13 15:00	08/14/13 17:05	7439-96-5	
Molybdenum, Dissolved	**0.75J**	ug/L	1.0	1	07/23/13 15:00	08/14/13 17:05	7439-98-7	B
Nickel, Dissolved	**5.6**	ug/L	1.0	1	07/23/13 15:00	08/14/13 17:05	7440-02-0	
Selenium, Dissolved	**3.1**	ug/L	1.0	1	07/23/13 15:00	08/14/13 17:05	7782-49-2	
Silver, Dissolved	**0.37J**	ug/L	0.50	1	07/23/13 15:00	08/14/13 17:05	7440-22-4	
Thallium, Dissolved	**0.40J**	ug/L	1.0	1	07/23/13 15:00	08/14/13 17:05	7440-28-0	B
Vanadium, Dissolved	**1.5**	ug/L	1.0	1	07/23/13 15:00	08/14/13 17:05	7440-62-2	
Zinc, Dissolved	**415**	ug/L	10.0	1	07/23/13 15:00	08/14/13 17:05	7440-66-6	
245.1 Mercury	Analytical Method: EPA 245.1 Preparation Method: EPA 245.1							
Mercury	ND	ug/L	0.20	1	07/29/13 12:46	08/01/13 10:40	7439-97-6	
245.1 Mercury, Dissolved	Analytical Method: EPA 245.1 Preparation Method: EPA 245.1							
Mercury, Dissolved	ND	ug/L	0.20	1	07/29/13 13:42	08/01/13 11:21	7439-97-6	
245.1 Potentially Diss Mercury	Analytical Method: EPA 245.1 Preparation Method: EPA 245.1							
Mercury, Dissolved	ND	ug/L	0.20	1	07/22/13 14:30	07/23/13 10:34	7439-97-6	
2510B Specific Conductance	Analytical Method: SM 2510B							
Specific Conductance	**1340**	umhos/cm	10.0	1		08/01/13 17:29		
Salinity	Analytical Method: Calculated							
Salinity (as dissolved solids)	**854**	mg/L	6.4	1		08/01/13 17:29		

REPORT OF LABORATORY ANALYSIS

This report shall not be reproduced, except in full,
without the written consent of Pace Analytical Services, Inc..

Pace Analytical Services, Inc.
9608 Loiret Blvd.
Lenexa, KS 66219
(913)599-5665

ANALYTICAL RESULTS

Project: JULY 2013 RICO WATER SAMPLING
Pace Project No.: 60149200

Sample: GW-7_20130717 **Lab ID: 60149200005** Collected: 07/17/13 14:30 Received: 07/19/13 10:00 Matrix: Water

Parameters	Results	Units	Report Limit	DF	Prepared	Analyzed	CAS No.	Qual
Salinity	Analytical Method: Calculated							
Salinity (as seawater)	**0.67**	PSU	0.014	1		08/01/13 17:29		
2320B Alkalinity	Analytical Method: SM 2320B							
Alkalinity,Bicarbonate (CaCO3)	**276**	mg/L	20.0	1		07/23/13 08:39		
Alkalinity, Carbonate (CaCO3)	ND	mg/L	20.0	1		07/23/13 08:39		
Alkalinity, Total as CaCO3	**276**	mg/L	20.0	1		07/23/13 08:39		
2540C Total Dissolved Solids	Analytical Method: SM 2540C							
Total Dissolved Solids	**1090**	mg/L	5.0	1		07/22/13 10:05		
2540D Total Suspended Solids	Analytical Method: SM 2540D							
Total Suspended Solids	**137**	mg/L	5.0	1		07/22/13 08:45		
4500S2D Sulfide, Total	Analytical Method: SM 4500-S-2 D							
Sulfide, Total	ND	mg/L	0.050	1		07/23/13 13:42	18496-25-8	
300.0 IC Anions 28 Days	Analytical Method: EPA 300.0							
Chloride	ND	mg/L	1.0	1		07/31/13 14:57	16887-00-6	
Sulfate	**552**	mg/L	100	100		08/01/13 12:10	14808-79-8	
353.2 Nitrogen, NO2/NO3 pres.	Analytical Method: EPA 353.2							
Nitrogen, NO2 plus NO3	**0.56**	mg/L	0.10	1		07/24/13 09:15		
4500CNE Cyanide, Total	Analytical Method: SM 4500-CN-E							
Cyanide	ND	mg/L	0.0050	1		07/24/13 17:35	57-12-5	
5310C TOC	Analytical Method: SM 5310C							
Total Organic Carbon	**0.69**	mg/L	0.50	1		07/29/13 19:29	7440-44-0	

This report shall not be reproduced, except in full,
without the written consent of Pace Analytical Services, Inc..

Pace Analytical Services, Inc.
9608 Loiret Blvd.
Lenexa, KS 66219
(913)599-5665

ANALYTICAL RESULTS

Project: JULY 2013 RICO WATER SAMPLING
Pace Project No.: 60149200

Sample: EB-1_20130717 **Lab ID: 60149200006** Collected: 07/17/13 14:07 Received: 07/19/13 10:00 Matrix: Water

Parameters	Results	Units	Report Limit	DF	Prepared	Analyzed	CAS No.	Qual
200.7 Potentially Diss. Metals	Analytical Method: EPA 200.7 Preparation Method: EPA 200.7							
Calcium, Dissolved	**370000**	ug/L	100	1	07/23/13 15:00	07/30/13 14:41	7440-70-2	
Magnesium, Dissolved	**27800**	ug/L	50.0	1	07/23/13 15:00	07/30/13 14:41	7439-95-4	
Potassium, Dissolved	**4040**	ug/L	500	1	07/23/13 15:00	07/30/13 14:41	7440-09-7	
Sodium, Dissolved	**8500**	ug/L	500	1	07/23/13 15:00	07/30/13 14:41	7440-23-5	
200.8 MET ICPMS	Analytical Method: EPA 200.8 Preparation Method: EPA 200.8							
Aluminum	**1280**	ug/L	4.0	1	07/25/13 07:54	07/30/13 17:37	7429-90-5	
Antimony	ND	ug/L	0.50	1	07/25/13 07:54	07/30/13 17:37	7440-36-0	
Arsenic	**10.7**	ug/L	0.50	1	07/25/13 07:54	07/30/13 17:37	7440-38-2	
Barium	**24.5**	ug/L	0.30	1	07/25/13 07:54	07/30/13 17:37	7440-39-3	
Beryllium	**0.27**	ug/L	0.20	1	07/25/13 07:54	07/30/13 17:37	7440-41-7	
Cadmium	**3.8**	ug/L	0.080	1	07/25/13 07:54	07/30/13 17:37	7440-43-9	
Calcium	**362000**	ug/L	400	20	07/25/13 07:54	07/30/13 17:43	7440-70-2	
Chromium	**2.2**	ug/L	0.50	1	07/25/13 07:54	07/30/13 17:37	7440-47-3	
Cobalt	**4.6**	ug/L	0.50	1	07/25/13 07:54	07/30/13 17:37	7440-48-4	
Copper	**67.7**	ug/L	0.50	1	07/25/13 07:54	07/30/13 17:37	7440-50-8	
Iron	**9950**	ug/L	50.0	1	07/25/13 07:54	07/30/13 17:37	7439-89-6	
Lead	**546**	ug/L	2.0	20	07/25/13 07:54	07/30/13 17:43	7439-92-1	
Magnesium	**29600**	ug/L	100	20	07/25/13 07:54	07/30/13 17:43	7439-95-4	
Manganese	**2610**	ug/L	10.0	20	07/25/13 07:54	07/30/13 17:43	7439-96-5	
Molybdenum	**12.1**	ug/L	0.50	1	07/25/13 07:54	07/30/13 17:37	7439-98-7	
Nickel	**5.4**	ug/L	0.50	1	07/25/13 07:54	07/30/13 17:37	7440-02-0	
Potassium	**4090**	ug/L	20.0	1	07/25/13 07:54	07/30/13 17:37	7440-09-7	
Selenium	**0.52**	ug/L	0.50	1	07/25/13 07:54	07/30/13 17:37	7782-49-2	
Silica	**22100**	ug/L	1070	20	07/25/13 07:54	07/30/13 17:43	7631-86-9	
Silver	**0.97**	ug/L	0.50	1	07/25/13 07:54	07/30/13 17:37	7440-22-4	
Sodium	**7570**	ug/L	50.0	1	07/25/13 07:54	07/30/13 17:37	7440-23-5	
Thallium	ND	ug/L	0.10	1	07/25/13 07:54	07/30/13 17:37	7440-28-0	
Total Hardness by 2340B	**1030000**	ug/L	1420	20	07/25/13 07:54	07/30/13 17:43		
Vanadium	**2.2**	ug/L	0.10	1	07/25/13 07:54	07/30/13 17:37	7440-62-2	
Zinc	**2070**	ug/L	100	20	07/25/13 07:54	07/30/13 17:43	7440-66-6	
200.8 MET ICPMS, Dissolved	Analytical Method: EPA 200.8 Preparation Method: EPA 200.8							
Aluminum, Dissolved	**11.6**	ug/L	4.0	1	08/07/13 15:42	08/08/13 12:20	7429-90-5	
Antimony, Dissolved	ND	ug/L	0.50	1	08/07/13 15:42	08/08/13 12:20	7440-36-0	
Arsenic, Dissolved	**1.1**	ug/L	0.50	1	08/07/13 15:42	08/08/13 12:20	7440-38-2	
Barium, Dissolved	**12.5**	ug/L	0.30	1	08/07/13 15:42	08/08/13 12:20	7440-39-3	
Beryllium, Dissolved	ND	ug/L	0.20	1	08/07/13 15:42	08/08/13 12:20	7440-41-7	
Cadmium, Dissolved	**0.23**	ug/L	0.080	1	08/07/13 15:42	08/08/13 12:20	7440-43-9	
Calcium, Dissolved	**406000**	ug/L	400	20	08/07/13 15:42	08/08/13 12:25	7440-70-2	
Chromium, Dissolved	ND	ug/L	0.50	1	08/07/13 15:42	08/08/13 12:20	7440-47-3	
Cobalt, Dissolved	**3.8**	ug/L	0.50	1	08/07/13 15:42	08/08/13 12:20	7440-48-4	
Copper, Dissolved	**0.72**	ug/L	0.50	1	08/07/13 15:42	08/08/13 12:20	7440-50-8	
Iron, Dissolved	ND	ug/L	50.0	1	08/07/13 15:42	08/08/13 12:20	7439-89-6	
Lead, Dissolved	**15.9**	ug/L	0.10	1	08/07/13 15:42	08/08/13 12:20	7439-92-1	
Magnesium, Dissolved	**31000**	ug/L	100	20	08/07/13 15:42	08/08/13 12:25	7439-95-4	

This report shall not be reproduced, except in full,
without the written consent of Pace Analytical Services, Inc..

Pace Analytical Services, Inc.
9608 Loiret Blvd.
Lenexa, KS 66219
(913)599-5665

ANALYTICAL RESULTS

Project: JULY 2013 RICO WATER SAMPLING
Pace Project No.: 60149200

Sample: EB-1_20130717 **Lab ID: 60149200006** Collected: 07/17/13 14:07 Received: 07/19/13 10:00 Matrix: Water

Parameters	Results	Units	Report Limit	DF	Prepared	Analyzed	CAS No.	Qual
200.8 MET ICPMS, Dissolved	Analytical Method: EPA 200.8 Preparation Method: EPA 200.8							
Manganese, Dissolved	**2430**	ug/L	10.0	20	08/07/13 15:42	08/08/13 12:25	7439-96-5	
Molybdenum, Dissolved	**12.4**	ug/L	0.50	1	08/07/13 15:42	08/08/13 12:20	7439-98-7	
Nickel, Dissolved	**4.1**	ug/L	0.50	1	08/07/13 15:42	08/08/13 12:20	7440-02-0	
Potassium, Dissolved	**4220**	ug/L	20.0	1	08/07/13 15:42	08/08/13 12:20	7440-09-7	
Selenium, Dissolved	ND	ug/L	0.50	1	08/07/13 15:42	08/08/13 12:20	7782-49-2	
Silver, Dissolved	ND	ug/L	0.50	1	08/07/13 15:42	08/08/13 12:20	7440-22-4	
Sodium, Dissolved	**8310**	ug/L	50.0	1	08/07/13 15:42	08/08/13 12:20	7440-23-5	
Thallium, Dissolved	ND	ug/L	0.10	1	08/07/13 15:42	08/08/13 12:20	7440-28-0	
Vanadium, Dissolved	ND	ug/L	0.10	1	08/07/13 15:42	08/08/13 12:20	7440-62-2	
Zinc, Dissolved	**1080**	ug/L	100	20	08/07/13 15:42	08/08/13 12:25	7440-66-6	
200.8 Potentially Diss. Metals	Analytical Method: EPA 200.8 Preparation Method: EPA 200.8							
Aluminum, Dissolved	**454**	ug/L	50.0	1	07/23/13 15:00	08/14/13 17:10	7429-90-5	
Antimony, Dissolved	**0.17J**	ug/L	1.0	1	07/23/13 15:00	08/14/13 17:10	7440-36-0	
Arsenic, Dissolved	**7.1**	ug/L	1.0	1	07/23/13 15:00	08/14/13 17:10	7440-38-2	
Barium, Dissolved	**13.8**	ug/L	1.0	1	07/23/13 15:00	08/14/13 17:10	7440-39-3	
Beryllium, Dissolved	**0.10J**	ug/L	0.50	1	07/23/13 15:00	08/15/13 14:03	7440-41-7	
Cadmium, Dissolved	**1.6**	ug/L	0.50	1	07/23/13 15:00	08/14/13 17:10	7440-43-9	
Chromium, Dissolved	**1.3**	ug/L	1.0	1	07/23/13 15:00	08/14/13 17:10	7440-47-3	B
Cobalt, Dissolved	**3.4**	ug/L	1.0	1	07/23/13 15:00	08/14/13 17:10	7440-48-4	
Copper, Dissolved	**28.4**	ug/L	1.0	1	07/23/13 15:00	08/14/13 17:10	7440-50-8	
Iron, Dissolved	**2540**	ug/L	50.0	1	07/23/13 15:00	08/15/13 14:03	7439-89-6	
Lead, Dissolved	**341**	ug/L	1.0	1	07/23/13 15:00	08/14/13 17:10	7439-92-1	
Manganese, Dissolved	**2330**	ug/L	1.0	1	07/23/13 15:00	08/14/13 17:10	7439-96-5	
Molybdenum, Dissolved	**10.9**	ug/L	1.0	1	07/23/13 15:00	08/14/13 17:10	7439-98-7	
Nickel, Dissolved	**3.7**	ug/L	1.0	1	07/23/13 15:00	08/14/13 17:10	7440-02-0	
Selenium, Dissolved	ND	ug/L	1.0	1	07/23/13 15:00	08/14/13 17:10	7782-49-2	
Silver, Dissolved	**0.015J**	ug/L	0.50	1	07/23/13 15:00	08/14/13 17:10	7440-22-4	
Thallium, Dissolved	**0.24J**	ug/L	1.0	1	07/23/13 15:00	08/14/13 17:10	7440-28-0	B
Vanadium, Dissolved	**0.67J**	ug/L	1.0	1	07/23/13 15:00	08/14/13 17:10	7440-62-2	B
Zinc, Dissolved	**1340**	ug/L	10.0	1	07/23/13 15:00	08/14/13 17:10	7440-66-6	
245.1 Mercury	Analytical Method: EPA 245.1 Preparation Method: EPA 245.1							
Mercury	ND	ug/L	0.20	1	07/29/13 12:46	08/01/13 10:42	7439-97-6	
245.1 Mercury, Dissolved	Analytical Method: EPA 245.1 Preparation Method: EPA 245.1							
Mercury, Dissolved	ND	ug/L	0.20	1	07/29/13 13:42	08/01/13 11:24	7439-97-6	
245.1 Potentially Diss Mercury	Analytical Method: EPA 245.1 Preparation Method: EPA 245.1							
Mercury, Dissolved	ND	ug/L	0.20	1	07/22/13 14:30	07/23/13 10:43	7439-97-6	
2510B Specific Conductance	Analytical Method: SM 2510B							
Specific Conductance	**1660**	umhos/cm	10.0	1		08/01/13 17:30		
Salinity	Analytical Method: Calculated							
Salinity (as dissolved solids)	**1060**	mg/L	6.4	1		08/01/13 17:30		

REPORT OF LABORATORY ANALYSIS

This report shall not be reproduced, except in full,
without the written consent of Pace Analytical Services, Inc..

Pace Analytical Services, Inc.
9608 Loiret Blvd.
Lenexa, KS 66219
(913)599-5665

ANALYTICAL RESULTS

Project: JULY 2013 RICO WATER SAMPLING
Pace Project No.: 60149200

Sample: EB-1_20130717 **Lab ID: 60149200006** Collected: 07/17/13 14:07 Received: 07/19/13 10:00 Matrix: Water

Parameters	Results	Units	Report Limit	DF	Prepared	Analyzed	CAS No.	Qual
Salinity	Analytical Method: Calculated							
Salinity (as seawater)	**0.84**	PSU	0.014	1		08/01/13 17:30		
2320B Alkalinity	Analytical Method: SM 2320B							
Alkalinity,Bicarbonate (CaCO3)	**174**	mg/L	20.0	1		07/23/13 08:43		
Alkalinity, Carbonate (CaCO3)	ND	mg/L	20.0	1		07/23/13 08:43		
Alkalinity, Total as CaCO3	**174**	mg/L	20.0	1		07/23/13 08:43		
2540C Total Dissolved Solids	Analytical Method: SM 2540C							
Total Dissolved Solids	**1500**	mg/L	5.0	1		07/22/13 10:05		
2540D Total Suspended Solids	Analytical Method: SM 2540D							
Total Suspended Solids	**55.0**	mg/L	5.0	1		07/22/13 08:46		
4500S2D Sulfide, Total	Analytical Method: SM 4500-S-2 D							
Sulfide, Total	ND	mg/L	0.050	1		07/23/13 13:43	18496-25-8	
300.0 IC Anions 28 Days	Analytical Method: EPA 300.0							
Chloride	**1.0**	mg/L	1.0	1		07/31/13 15:15	16887-00-6	
Sulfate	**880**	mg/L	100	100		08/01/13 12:28	14808-79-8	
353.2 Nitrogen, NO2/NO3 pres.	Analytical Method: EPA 353.2							
Nitrogen, NO2 plus NO3	ND	mg/L	0.10	1		07/24/13 09:16		
4500CNE Cyanide, Total	Analytical Method: SM 4500-CN-E							
Cyanide	ND	mg/L	0.0050	1		07/24/13 17:35	57-12-5	
5310C TOC	Analytical Method: SM 5310C							
Total Organic Carbon	**1.2**	mg/L	0.50	1		07/29/13 19:47	7440-44-0	

This report shall not be reproduced, except in full,
without the written consent of Pace Analytical Services, Inc..

Pace Analytical Services, Inc.
9608 Loiret Blvd.
Lenexa, KS 66219
(913)599-5665

ANALYTICAL RESULTS

Project: JULY 2013 RICO WATER SAMPLING
Pace Project No.: 60149200

Sample: EB-2_20130717 **Lab ID: 60149200007** Collected: 07/17/13 13:55 Received: 07/19/13 10:00 Matrix: Water

Parameters	Results	Units	Report Limit	DF	Prepared	Analyzed	CAS No.	Qual
200.7 Potentially Diss. Metals	Analytical Method: EPA 200.7 Preparation Method: EPA 200.7							
Calcium, Dissolved	**341000**	ug/L	500	5	07/23/13 15:00	07/30/13 14:44	7440-70-2	
Magnesium, Dissolved	**129000**	ug/L	250	5	07/23/13 15:00	07/30/13 14:44	7439-95-4	
Potassium, Dissolved	**16600**	ug/L	2500	5	07/23/13 15:00	07/30/13 14:44	7440-09-7	
Sodium, Dissolved	**7400**	ug/L	2500	5	07/23/13 15:00	07/30/13 14:44	7440-23-5	
200.8 MET ICPMS	Analytical Method: EPA 200.8 Preparation Method: EPA 200.8							
Aluminum	**13900**	ug/L	4.0	1	07/25/13 07:54	07/30/13 16:04	7429-90-5	
Antimony	ND	ug/L	0.50	1	07/25/13 07:54	07/30/13 16:04	7440-36-0	
Arsenic	**118**	ug/L	0.50	1	07/25/13 07:54	07/30/13 16:04	7440-38-2	
Barium	**18.2**	ug/L	0.30	1	07/25/13 07:54	07/30/13 16:04	7440-39-3	
Beryllium	**5.9**	ug/L	0.20	1	07/25/13 07:54	07/30/13 16:04	7440-41-7	
Cadmium	**4.3**	ug/L	0.080	1	07/25/13 07:54	07/30/13 16:04	7440-43-9	
Calcium	**338000**	ug/L	400	20	07/25/13 07:54	07/30/13 16:10	7440-70-2	
Chromium	ND	ug/L	0.50	1	07/25/13 07:54	07/30/13 16:04	7440-47-3	
Cobalt	**40.1**	ug/L	0.50	1	07/25/13 07:54	07/30/13 16:04	7440-48-4	
Copper	**55.4**	ug/L	0.50	1	07/25/13 07:54	07/30/13 16:04	7440-50-8	
Iron	**568000**	ug/L	10000	200	07/25/13 07:54	07/30/13 16:16	7439-89-6	
Lead	**595**	ug/L	2.0	20	07/25/13 07:54	07/31/13 09:48	7439-92-1	
Magnesium	**137000**	ug/L	100	20	07/25/13 07:54	07/30/13 16:10	7439-95-4	
Manganese	**30100**	ug/L	100	200	07/25/13 07:54	07/30/13 16:16	7439-96-5	
Molybdenum	**4.5**	ug/L	0.50	1	07/25/13 07:54	07/30/13 16:04	7439-98-7	
Nickel	**53.9**	ug/L	0.50	1	07/25/13 07:54	07/30/13 16:04	7440-02-0	
Potassium	**16600**	ug/L	20.0	1	07/25/13 07:54	07/30/13 16:04	7440-09-7	
Selenium	**1.1**	ug/L	0.50	1	07/25/13 07:54	07/30/13 16:04	7782-49-2	
Silica	**36600**	ug/L	1070	20	07/25/13 07:54	07/30/13 16:10	7631-86-9	
Silver	**0.77**	ug/L	0.50	1	07/25/13 07:54	07/30/13 16:04	7440-22-4	
Sodium	**6760**	ug/L	50.0	1	07/25/13 07:54	07/30/13 16:04	7440-23-5	
Thallium	**0.11**	ug/L	0.10	1	07/25/13 07:54	07/30/13 16:04	7440-28-0	
Total Hardness by 2340B	**1410000**	ug/L	1420	20	07/25/13 07:54	07/30/13 16:10		
Vanadium	**1.2**	ug/L	0.10	1	07/25/13 07:54	07/30/13 16:04	7440-62-2	
Zinc	**47300**	ug/L	1000	200	07/25/13 07:54	07/30/13 16:16	7440-66-6	
200.8 MET ICPMS, Dissolved	Analytical Method: EPA 200.8 Preparation Method: EPA 200.8							
Aluminum, Dissolved	**13700**	ug/L	4.0	1	08/07/13 15:42	08/08/13 12:30	7429-90-5	
Antimony, Dissolved	ND	ug/L	0.50	1	08/07/13 15:42	08/08/13 12:30	7440-36-0	
Arsenic, Dissolved	**72.8**	ug/L	0.50	1	08/07/13 15:42	08/08/13 12:30	7440-38-2	
Barium, Dissolved	**11.9**	ug/L	0.30	1	08/07/13 15:42	08/08/13 12:30	7440-39-3	
Beryllium, Dissolved	**6.1**	ug/L	0.20	1	08/07/13 15:42	08/08/13 12:30	7440-41-7	
Cadmium, Dissolved	**0.99**	ug/L	0.080	1	08/07/13 15:42	08/08/13 12:30	7440-43-9	
Calcium, Dissolved	**359000**	ug/L	400	20	08/07/13 15:42	08/08/13 12:35	7440-70-2	
Chromium, Dissolved	ND	ug/L	0.50	1	08/07/13 15:42	08/08/13 12:30	7440-47-3	
Cobalt, Dissolved	**44.4**	ug/L	0.50	1	08/07/13 15:42	08/08/13 12:30	7440-48-4	
Copper, Dissolved	**3.0**	ug/L	0.50	1	08/07/13 15:42	08/08/13 12:30	7440-50-8	
Iron, Dissolved	**537000**	ug/L	10000	200	08/07/13 15:42	08/08/13 12:40	7439-89-6	
Lead, Dissolved	**18.6**	ug/L	0.10	1	08/07/13 15:42	08/08/13 12:30	7439-92-1	
Magnesium, Dissolved	**142000**	ug/L	100	20	08/07/13 15:42	08/08/13 12:35	7439-95-4	

This report shall not be reproduced, except in full,
without the written consent of Pace Analytical Services, Inc..

Pace Analytical Services, Inc.
9608 Loiret Blvd.
Lenexa, KS 66219
(913)599-5665

ANALYTICAL RESULTS

Project: JULY 2013 RICO WATER SAMPLING
Pace Project No.: 60149200

Sample: EB-2_20130717 **Lab ID: 60149200007** Collected: 07/17/13 13:55 Received: 07/19/13 10:00 Matrix: Water

Parameters	Results	Units	Report Limit	DF	Prepared	Analyzed	CAS No.	Qual
200.8 MET ICPMS, Dissolved	Analytical Method: EPA 200.8 Preparation Method: EPA 200.8							
Manganese, Dissolved	**29000**	ug/L	100	200	08/07/13 15:42	08/08/13 12:40	7439-96-5	
Molybdenum, Dissolved	**3.8**	ug/L	0.50	1	08/07/13 15:42	08/08/13 12:30	7439-98-7	
Nickel, Dissolved	**60.6**	ug/L	0.50	1	08/07/13 15:42	08/08/13 12:30	7440-02-0	
Potassium, Dissolved	**17800**	ug/L	20.0	1	08/07/13 15:42	08/08/13 12:30	7440-09-7	
Selenium, Dissolved	**0.87**	ug/L	0.50	1	08/07/13 15:42	08/08/13 12:30	7782-49-2	
Silver, Dissolved	ND	ug/L	0.50	1	08/07/13 15:42	08/08/13 12:30	7440-22-4	
Sodium, Dissolved	**7330**	ug/L	50.0	1	08/07/13 15:42	08/08/13 12:30	7440-23-5	
Thallium, Dissolved	ND	ug/L	0.10	1	08/07/13 15:42	08/08/13 12:30	7440-28-0	
Vanadium, Dissolved	ND	ug/L	0.10	1	08/07/13 15:42	08/08/13 12:30	7440-62-2	
Zinc, Dissolved	**45600**	ug/L	1000	200	08/07/13 15:42	08/08/13 12:40	7440-66-6	
200.8 Potentially Diss. Metals	Analytical Method: EPA 200.8 Preparation Method: EPA 200.8							
Aluminum, Dissolved	**14000**	ug/L	250	5	07/23/13 15:00	08/15/13 14:52	7429-90-5	
Antimony, Dissolved	**0.64J**	ug/L	5.0	5	07/23/13 15:00	08/15/13 14:52	7440-36-0	
Arsenic, Dissolved	**135**	ug/L	5.0	5	07/23/13 15:00	08/15/13 14:52	7440-38-2	
Barium, Dissolved	**11.4**	ug/L	5.0	5	07/23/13 15:00	08/15/13 14:52	7440-39-3	
Beryllium, Dissolved	**6.2**	ug/L	2.5	5	07/23/13 15:00	08/15/13 14:52	7440-41-7	
Cadmium, Dissolved	**3.6**	ug/L	2.5	5	07/23/13 15:00	08/15/13 14:52	7440-43-9	
Chromium, Dissolved	**0.57J**	ug/L	5.0	5	07/23/13 15:00	08/15/13 14:52	7440-47-3	B
Cobalt, Dissolved	**44.6**	ug/L	5.0	5	07/23/13 15:00	08/15/13 14:52	7440-48-4	
Copper, Dissolved	**49.8**	ug/L	5.0	5	07/23/13 15:00	08/15/13 14:52	7440-50-8	
Iron, Dissolved	**563000**	ug/L	5000	100	07/23/13 15:00	08/16/13 01:33	7439-89-6	
Lead, Dissolved	**532**	ug/L	5.0	5	07/23/13 15:00	08/15/13 14:52	7439-92-1	
Manganese, Dissolved	**28400**	ug/L	10.0	10	07/23/13 15:00	08/14/13 17:14	7439-96-5	
Molybdenum, Dissolved	**5.4J**	ug/L	10.0	10	07/23/13 15:00	08/14/13 17:14	7439-98-7	B
Nickel, Dissolved	**66.3**	ug/L	5.0	5	07/23/13 15:00	08/15/13 14:52	7440-02-0	
Selenium, Dissolved	**1.8J**	ug/L	5.0	5	07/23/13 15:00	08/15/13 14:52	7782-49-2	
Silver, Dissolved	**0.22J**	ug/L	2.5	5	07/23/13 15:00	08/15/13 14:52	7440-22-4	
Thallium, Dissolved	**0.12J**	ug/L	5.0	5	07/23/13 15:00	08/15/13 14:52	7440-28-0	B
Vanadium, Dissolved	ND	ug/L	10.0	10	07/23/13 15:00	08/14/13 17:14	7440-62-2	D3
Zinc, Dissolved	**40900**	ug/L	50.0	5	07/23/13 15:00	08/15/13 14:52	7440-66-6	
245.1 Mercury	Analytical Method: EPA 245.1 Preparation Method: EPA 245.1							
Mercury	ND	ug/L	0.20	1	07/29/13 12:46	08/01/13 10:45	7439-97-6	
245.1 Mercury, Dissolved	Analytical Method: EPA 245.1 Preparation Method: EPA 245.1							
Mercury, Dissolved	ND	ug/L	0.20	1	07/29/13 13:42	08/01/13 11:26	7439-97-6	
245.1 Potentially Diss Mercury	Analytical Method: EPA 245.1 Preparation Method: EPA 245.1							
Mercury, Dissolved	ND	ug/L	0.20	1	07/22/13 14:30	07/23/13 10:45	7439-97-6	
2510B Specific Conductance	Analytical Method: SM 2510B							
Specific Conductance	**3110**	umhos/cm	10.0	1		08/01/13 17:33		
Salinity	Analytical Method: Calculated							
Salinity (as dissolved solids)	**1990**	mg/L	6.4	1		08/01/13 17:33		

REPORT OF LABORATORY ANALYSIS

This report shall not be reproduced, except in full,
without the written consent of Pace Analytical Services, Inc..

Pace Analytical Services, Inc.
9608 Loiret Blvd.
Lenexa, KS 66219
(913)599-5665

ANALYTICAL RESULTS

Project: JULY 2013 RICO WATER SAMPLING
Pace Project No.: 60149200

Sample: EB-2_20130717 **Lab ID: 60149200007** Collected: 07/17/13 13:55 Received: 07/19/13 10:00 Matrix: Water

Parameters	Results	Units	Report Limit	DF	Prepared	Analyzed	CAS No.	Qual
Salinity	Analytical Method: Calculated							
Salinity (as seawater)	**1.6**	PSU	0.014	1		08/01/13 17:33		
2320B Alkalinity	Analytical Method: SM 2320B							
Alkalinity,Bicarbonate (CaCO3)	**62.4**	mg/L	20.0	1		07/23/13 08:47		
Alkalinity, Carbonate (CaCO3)	ND	mg/L	20.0	1		07/23/13 08:47		
Alkalinity, Total as CaCO3	**62.4**	mg/L	20.0	1		07/23/13 08:47		
2540C Total Dissolved Solids	Analytical Method: SM 2540C							
Total Dissolved Solids	**3660**	mg/L	5.0	1		07/22/13 10:05		
2540D Total Suspended Solids	Analytical Method: SM 2540D							
Total Suspended Solids	**89.0**	mg/L	5.0	1		07/22/13 08:46		
4500S2D Sulfide, Total	Analytical Method: SM 4500-S-2 D							
Sulfide, Total	ND	mg/L	0.050	1		07/23/13 13:43	18496-25-8	
300.0 IC Anions 28 Days	Analytical Method: EPA 300.0							
Chloride	**1.1**	mg/L	1.0	1		07/31/13 15:33	16887-00-6	
Sulfate	**2340**	mg/L	500	500		08/01/13 12:46	14808-79-8	
353.2 Nitrogen, NO2/NO3 pres.	Analytical Method: EPA 353.2							
Nitrogen, NO2 plus NO3	ND	mg/L	0.10	1		07/24/13 09:17		
4500CNE Cyanide, Total	Analytical Method: SM 4500-CN-E							
Cyanide	ND	mg/L	0.0050	1		07/24/13 17:38	57-12-5	
5310C TOC	Analytical Method: SM 5310C							
Total Organic Carbon	ND	mg/L	0.50	1		07/29/13 20:05	7440-44-0	

This report shall not be reproduced, except in full,
without the written consent of Pace Analytical Services, Inc..

Pace Analytical Services, Inc.
9608 Loiret Blvd.
Lenexa, KS 66219
(913)599-5665

ANALYTICAL RESULTS

Project: JULY 2013 RICO WATER SAMPLING
Pace Project No.: 60149200

Sample: MW-4 SHALLOW_20130717 **Lab ID: 60149200008** Collected: 07/17/13 15:35 Received: 07/19/13 10:00 Matrix: Water

Parameters	Results	Units	Report Limit	DF	Prepared	Analyzed	CAS No.	Qual
200.7 Potentially Diss. Metals	Analytical Method: EPA 200.7 Preparation Method: EPA 200.7							
Calcium, Dissolved	**218000**	ug/L	100	1	07/23/13 15:00	07/30/13 14:47	7440-70-2	
Magnesium, Dissolved	**23400**	ug/L	50.0	1	07/23/13 15:00	07/30/13 14:47	7439-95-4	
Potassium, Dissolved	**3470**	ug/L	500	1	07/23/13 15:00	07/30/13 14:47	7440-09-7	
Sodium, Dissolved	**7280**	ug/L	500	1	07/23/13 15:00	07/30/13 14:47	7440-23-5	
200.8 MET ICPMS	Analytical Method: EPA 200.8 Preparation Method: EPA 200.8							
Aluminum	**9130**	ug/L	4.0	1	07/25/13 07:54	07/30/13 18:07	7429-90-5	
Antimony	ND	ug/L	0.50	1	07/25/13 07:54	07/30/13 18:07	7440-36-0	
Arsenic	**8.1**	ug/L	0.50	1	07/25/13 07:54	07/30/13 18:07	7440-38-2	
Barium	**154**	ug/L	0.30	1	07/25/13 07:54	07/30/13 18:07	7440-39-3	
Beryllium	**0.95**	ug/L	0.20	1	07/25/13 07:54	07/30/13 18:07	7440-41-7	
Cadmium	**2.0**	ug/L	0.080	1	07/25/13 07:54	07/30/13 18:07	7440-43-9	
Calcium	**234000**	ug/L	400	20	07/25/13 07:54	07/30/13 18:13	7440-70-2	
Chromium	**11.8**	ug/L	0.50	1	07/25/13 07:54	07/30/13 18:07	7440-47-3	
Cobalt	**4.9**	ug/L	0.50	1	07/25/13 07:54	07/30/13 18:07	7440-48-4	
Copper	**57.7**	ug/L	0.50	1	07/25/13 07:54	07/30/13 18:07	7440-50-8	
Iron	**12400**	ug/L	50.0	1	07/25/13 07:54	07/30/13 18:07	7439-89-6	
Lead	**82.8**	ug/L	0.10	1	07/25/13 07:54	07/30/13 18:07	7439-92-1	
Magnesium	**29800**	ug/L	100	20	07/25/13 07:54	07/30/13 18:13	7439-95-4	
Manganese	**394**	ug/L	0.50	1	07/25/13 07:54	07/30/13 18:07	7439-96-5	
Molybdenum	**2.9**	ug/L	0.50	1	07/25/13 07:54	07/30/13 18:07	7439-98-7	
Nickel	**9.0**	ug/L	0.50	1	07/25/13 07:54	07/30/13 18:07	7440-02-0	
Potassium	**5000**	ug/L	20.0	1	07/25/13 07:54	07/30/13 18:07	7440-09-7	
Selenium	**27.0**	ug/L	0.50	1	07/25/13 07:54	07/30/13 18:07	7782-49-2	
Silica	**43400**	ug/L	1070	20	07/25/13 07:54	07/30/13 18:13	7631-86-9	
Silver	ND	ug/L	0.50	1	07/25/13 07:54	07/30/13 18:07	7440-22-4	
Sodium	**7130**	ug/L	50.0	1	07/25/13 07:54	07/30/13 18:07	7440-23-5	
Thallium	**0.21**	ug/L	0.10	1	07/25/13 07:54	07/30/13 18:07	7440-28-0	
Total Hardness by 2340B	**706000**	ug/L	1420	20	07/25/13 07:54	07/30/13 18:13		
Vanadium	**12.7**	ug/L	0.10	1	07/25/13 07:54	07/30/13 18:07	7440-62-2	
Zinc	**413**	ug/L	5.0	1	07/25/13 07:54	07/30/13 18:07	7440-66-6	
200.8 MET ICPMS, Dissolved	Analytical Method: EPA 200.8 Preparation Method: EPA 200.8							
Aluminum, Dissolved	**30.3**	ug/L	4.0	1	08/07/13 15:42	08/08/13 13:15	7429-90-5	
Antimony, Dissolved	ND	ug/L	0.50	1	08/07/13 15:42	08/08/13 13:15	7440-36-0	
Arsenic, Dissolved	ND	ug/L	0.50	1	08/07/13 15:42	08/08/13 13:15	7440-38-2	
Barium, Dissolved	**64.1**	ug/L	0.30	1	08/07/13 15:42	08/08/13 13:15	7440-39-3	
Beryllium, Dissolved	ND	ug/L	0.20	1	08/07/13 15:42	08/08/13 13:15	7440-41-7	
Cadmium, Dissolved	**1.4**	ug/L	0.080	1	08/07/13 15:42	08/08/13 13:15	7440-43-9	
Calcium, Dissolved	**247000**	ug/L	400	20	08/07/13 15:42	08/08/13 13:20	7440-70-2	
Chromium, Dissolved	ND	ug/L	0.50	1	08/07/13 15:42	08/08/13 13:15	7440-47-3	
Cobalt, Dissolved	ND	ug/L	0.50	1	08/07/13 15:42	08/08/13 13:15	7440-48-4	
Copper, Dissolved	**3.2**	ug/L	0.50	1	08/07/13 15:42	08/08/13 13:15	7440-50-8	
Iron, Dissolved	ND	ug/L	50.0	1	08/07/13 15:42	08/08/13 13:15	7439-89-6	
Lead, Dissolved	**0.36**	ug/L	0.10	1	08/07/13 15:42	08/08/13 13:15	7439-92-1	
Magnesium, Dissolved	**27000**	ug/L	100	20	08/07/13 15:42	08/08/13 13:20	7439-95-4	

This report shall not be reproduced, except in full,
without the written consent of Pace Analytical Services, Inc..

Pace Analytical Services, Inc.
9608 Loiret Blvd.
Lenexa, KS 66219
(913)599-5665

ANALYTICAL RESULTS

Project: JULY 2013 RICO WATER SAMPLING
Pace Project No.: 60149200

Sample: MW-4 SHALLOW_20130717 **Lab ID: 60149200008** Collected: 07/17/13 15:35 Received: 07/19/13 10:00 Matrix: Water

Parameters	Results	Units	Report Limit	DF	Prepared	Analyzed	CAS No.	Qual
200.8 MET ICPMS, Dissolved	Analytical Method: EPA 200.8 Preparation Method: EPA 200.8							
Manganese, Dissolved	**62.6**	ug/L	0.50	1	08/07/13 15:42	08/08/13 13:15	7439-96-5	
Molybdenum, Dissolved	**1.8**	ug/L	0.50	1	08/07/13 15:42	08/08/13 13:15	7439-98-7	
Nickel, Dissolved	**1.4**	ug/L	0.50	1	08/07/13 15:42	08/08/13 13:15	7440-02-0	
Potassium, Dissolved	**3690**	ug/L	20.0	1	08/07/13 15:42	08/08/13 13:15	7440-09-7	
Selenium, Dissolved	**26.4**	ug/L	0.50	1	08/07/13 15:42	08/08/13 13:15	7782-49-2	
Silver, Dissolved	ND	ug/L	0.50	1	08/07/13 15:42	08/08/13 13:15	7440-22-4	
Sodium, Dissolved	**7750**	ug/L	50.0	1	08/07/13 15:42	08/08/13 13:15	7440-23-5	
Thallium, Dissolved	ND	ug/L	0.10	1	08/07/13 15:42	08/08/13 13:15	7440-28-0	
Vanadium, Dissolved	**0.10**	ug/L	0.10	1	08/07/13 15:42	08/08/13 13:15	7440-62-2	
Zinc, Dissolved	**150**	ug/L	5.0	1	08/07/13 15:42	08/08/13 13:15	7440-66-6	
200.8 Potentially Diss. Metals	Analytical Method: EPA 200.8 Preparation Method: EPA 200.8							
Aluminum, Dissolved	**2520**	ug/L	50.0	1	07/23/13 15:00	08/14/13 17:18	7429-90-5	
Antimony, Dissolved	**0.11J**	ug/L	1.0	1	07/23/13 15:00	08/14/13 17:18	7440-36-0	
Arsenic, Dissolved	**2.8**	ug/L	1.0	1	07/23/13 15:00	08/14/13 17:18	7440-38-2	
Barium, Dissolved	**74.7**	ug/L	1.0	1	07/23/13 15:00	08/14/13 17:18	7440-39-3	
Beryllium, Dissolved	**0.46J**	ug/L	0.50	1	07/23/13 15:00	08/15/13 14:56	7440-41-7	
Cadmium, Dissolved	**1.9**	ug/L	0.50	1	07/23/13 15:00	08/14/13 17:18	7440-43-9	
Chromium, Dissolved	**5.0**	ug/L	1.0	1	07/23/13 15:00	08/14/13 17:18	7440-47-3	
Cobalt, Dissolved	**2.5**	ug/L	1.0	1	07/23/13 15:00	08/14/13 17:18	7440-48-4	
Copper, Dissolved	**38.7**	ug/L	1.0	1	07/23/13 15:00	08/14/13 17:18	7440-50-8	
Iron, Dissolved	**3720**	ug/L	50.0	1	07/23/13 15:00	08/15/13 14:56	7439-89-6	
Lead, Dissolved	**79.6**	ug/L	1.0	1	07/23/13 15:00	08/14/13 17:18	7439-92-1	
Manganese, Dissolved	**290**	ug/L	1.0	1	07/23/13 15:00	08/14/13 17:18	7439-96-5	
Molybdenum, Dissolved	**1.2**	ug/L	1.0	1	07/23/13 15:00	08/14/13 17:18	7439-98-7	B
Nickel, Dissolved	**3.6**	ug/L	1.0	1	07/23/13 15:00	08/14/13 17:18	7440-02-0	
Selenium, Dissolved	**24.3**	ug/L	1.0	1	07/23/13 15:00	08/14/13 17:18	7782-49-2	
Silver, Dissolved	**0.23J**	ug/L	0.50	1	07/23/13 15:00	08/14/13 17:18	7440-22-4	
Thallium, Dissolved	**0.28J**	ug/L	1.0	1	07/23/13 15:00	08/14/13 17:18	7440-28-0	B
Vanadium, Dissolved	**3.4**	ug/L	1.0	1	07/23/13 15:00	08/14/13 17:18	7440-62-2	
Zinc, Dissolved	**323**	ug/L	10.0	1	07/23/13 15:00	08/14/13 17:18	7440-66-6	
245.1 Mercury	Analytical Method: EPA 245.1 Preparation Method: EPA 245.1							
Mercury	ND	ug/L	0.20	1	07/29/13 12:46	08/01/13 10:47	7439-97-6	
245.1 Mercury, Dissolved	Analytical Method: EPA 245.1 Preparation Method: EPA 245.1							
Mercury, Dissolved	ND	ug/L	0.20	1	07/29/13 13:42	08/01/13 11:29	7439-97-6	
245.1 Potentially Diss Mercury	Analytical Method: EPA 245.1 Preparation Method: EPA 245.1							
Mercury, Dissolved	ND	ug/L	0.20	1	07/22/13 14:30	07/23/13 10:48	7439-97-6	
2510B Specific Conductance	Analytical Method: SM 2510B							
Specific Conductance	**1160**	umhos/cm	10.0	1		08/01/13 17:34		

This report shall not be reproduced, except in full,
without the written consent of Pace Analytical Services, Inc..

Pace Analytical Services, Inc.
9608 Loiret Blvd.
Lenexa, KS 66219
(913)599-5665

ANALYTICAL RESULTS

Project: JULY 2013 RICO WATER SAMPLING
Pace Project No.: 60149200

Sample: MW-4 SHALLOW_20130717 **Lab ID: 60149200008** Collected: 07/17/13 15:35 Received: 07/19/13 10:00 Matrix: Water

Parameters	Results	Units	Report Limit	DF	Prepared	Analyzed	CAS No.	Qual
Salinity	Analytical Method: Calculated							
Salinity (as dissolved solids)	**744**	mg/L	6.4	1		08/01/13 17:34		
Salinity (as seawater)	**0.58**	PSU	0.014	1		08/01/13 17:34		
2320B Alkalinity	Analytical Method: SM 2320B							
Alkalinity,Bicarbonate (CaCO3)	**309**	mg/L	20.0	1		07/23/13 09:02		
Alkalinity, Carbonate (CaCO3)	ND	mg/L	20.0	1		07/23/13 09:02		
Alkalinity, Total as CaCO3	**309**	mg/L	20.0	1		07/23/13 09:02		
2540C Total Dissolved Solids	Analytical Method: SM 2540C							
Total Dissolved Solids	**914**	mg/L	5.0	1		07/22/13 10:06		
2540D Total Suspended Solids	Analytical Method: SM 2540D							
Total Suspended Solids	**166**	mg/L	5.0	1		07/22/13 08:46		
4500S2D Sulfide, Total	Analytical Method: SM 4500-S-2 D							
Sulfide, Total	ND	mg/L	0.050	1		07/23/13 13:44	18496-25-8	
300.0 IC Anions 28 Days	Analytical Method: EPA 300.0							
Chloride	**1.9**	mg/L	1.0	1		07/31/13 15:51	16887-00-6	
Sulfate	**388**	mg/L	50.0	50		08/01/13 13:04	14808-79-8	
353.2 Nitrogen, NO2/NO3 pres.	Analytical Method: EPA 353.2							
Nitrogen, NO2 plus NO3	**1.9**	mg/L	0.10	1		07/24/13 09:18		
4500CNE Cyanide, Total	Analytical Method: SM 4500-CN-E							
Cyanide	ND	mg/L	0.0050	1		07/24/13 17:38	57-12-5	
5310C TOC	Analytical Method: SM 5310C							
Total Organic Carbon	**1.3**	mg/L	0.50	1		07/29/13 20:23	7440-44-0	

This report shall not be reproduced, except in full,
without the written consent of Pace Analytical Services, Inc..

Pace Analytical Services, Inc.
9608 Loiret Blvd.
Lenexa, KS 66219
(913)599-5665

August 26, 2013

Mark DeFriez
Anderson Engineering Company I
977 W 2100 S.
Salt Lake City, UT 84119

RE: Project: July 2013 Rico Water Sampling
Pace Project No.: 60149302

Dear Mark DeFriez:
Enclosed are the analytical results for sample(s) received by the laboratory on July 20, 2013. The results relate only to the within this report conform to the most current version of the TNI standards, BP LaMP Technical Requirements Revision 10.1, and any applicable Quality Assurance Project Plan (QAPP), or Work Plan unless otherwise narrated in the body of this report.

If you have any questions concerning this report, please feel free to contact me.

Sincerely,

Heather Wilson

heather.wilson@pacelabs.com
Project Manager

Enclosures

This report shall not be reproduced, except in full,
without the written consent of Pace Analytical Services, Inc..

Pace Analytical Services, Inc.
9608 Loiret Blvd.
Lenexa, KS 66219
(913)599-5665

CERTIFICATIONS

Project: July 2013 Rico Water Sampling
Pace Project No.: 60149302

Minnesota Certification IDs
1700 Elm Street SE Suite 200, Minneapolis, MN 55414
A2LA Certification #: 2926.01
Alaska Certification #: UST-078
Alaska Certification #MN00064
Arizona Certification #: AZ-0014
Arkansas Certification #: 88-0680
California Certification #: 01155CA
Colorado Certification #Pace
Connecticut Certification #: PH-0256
EPA Region 8 Certification #: Pace
Florida/NELAP Certification #: E87605
Georgia Certification #: 959
Hawaii Certification #Pace
Idaho Certification #: MN00064
Illinois Certification #: 200011
Kansas Certification #: E-10167
Louisiana Certification #: 03086
Louisiana Certification #: LA080009
Maine Certification #: 2007029
Maryland Certification #: 322
Michigan DEQ Certification #: 9909
Minnesota Certification #: 027-053-137
Mississippi Certification #: Pace
Montana Certification #: MT CERT0092
Nevada Certification #: MN_00064
Nebraska Certification #: Pace
New Jersey Certification #: MN-002
New York Certification #: 11647
North Carolina Certification #: 530
North Dakota Certification #: R-036
Ohio VAP Certification #: CL101
Oklahoma Certification #: 9507
Oregon Certification #: MN200001
Oregon Certification #: MN300001
Pennsylvania Certification #: 68-00563
Puerto Rico Certification
Tennessee Certification #: 02818
Texas Certification #: T104704192
Utah Certification #: MN00064
Virginia/DCLS Certification #: 002521
Virginia/VELAP Certification #: 460163
Washington Certification #: C754
West Virginia Certification #: 382
Wisconsin Certification #: 999407970

Montana Certification IDs
602 South 25th Street, Billings, MT 59101
EPA Region 8 Certification #: 8TMS-Q
Idaho Certification #: MT00012
Montana Certification #: MT CERT0040
NVLAP Certification #: 101292-0
Minnesota Dept of Health Certification #: 030-999-442
Washington Department of Ecology #: C993

Green Bay Certification IDs
1241 Bellevue Street, Green Bay, WI 54302
Florida/NELAP Certification #: E87948
Illinois Certification #: 200050
Kentucky Certification #: 82
Louisiana Certification #: 04168
Minnesota Certification #: 055-999-334
New York Certification #: 11888
North Dakota Certification #: R-150
South Carolina Certification #: 83006001
US Dept of Agriculture #: S-76505
Wisconsin Certification #: 405132750

Kansas Certification IDs
9608 Loiret Boulevard, Lenexa, KS 66219
WY STR Certification #: 2456.01
Arkansas Certification #: 13-012-0
Illinois Certification #: 003097
Iowa Certification #: 118
Kansas/NELAP Certification #: E-10116
Louisiana Certification #: 03055
Nevada Certification #: KS000212008A
Oklahoma Certification #: 9205/9935
Texas Certification #: T104704407-13-4
Utah Certification #: KS000212013-3
Illinois Certification #: 003097

This report shall not be reproduced, except in full,
without the written consent of Pace Analytical Services, Inc..

Pace Analytical Services, Inc.
9608 Loiret Blvd.
Lenexa, KS 66219
(913)599-5665

SAMPLE SUMMARY

Project: July 2013 Rico Water Sampling
Pace Project No.: 60149302

Lab ID	Sample ID	Matrix	Date Collected	Date Received
60149302001	**GW-4_20130718**	Water	07/18/13 11:05	07/20/13 09:20
60149302002	**MW-103_20130718**	Water	07/18/13 13:52	07/20/13 09:20
60149302003	**MW-104_20130718**	Water	07/18/13 13:16	07/20/13 09:20
60149302004	**MW-1 DEEP_20130718**	Water	07/18/13 15:40	07/20/13 09:20
60149302005	**MW-1 SHALLOW_20130718**	Water	07/18/13 15:33	07/20/13 09:20
60149302006	**MW-2 DEEP_20130718**	Water	07/18/13 11:50	07/20/13 09:20
60149302007	**MW-3 DEEP_20130718**	Water	07/18/13 11:27	07/20/13 09:20
60149302008	**MW-6 DEEP_20130718**	Water	07/18/13 10:39	07/20/13 09:20
60149302009	**MW-6 SHALLOW_20130718**	Water	07/18/13 10:34	07/20/13 09:20
60149302010	**DR-10_20130718**	Water	07/18/13 13:17	07/20/13 09:20
60149302011	**DR-11_20130718**	Water	07/18/13 15:35	07/20/13 09:20
60149302012	**FB-FIELD_20130718**	Water	07/18/13 10:50	07/20/13 09:20
60149302013	**GW-3_20130719**	Water	07/19/13 14:15	07/20/13 09:20
60149302014	**P13-102_20130719**	Water	07/19/13 09:35	07/20/13 09:20
60149302015	**P13-103_20130719**	Water	07/19/13 09:05	07/20/13 09:20
60149302016	**CHV-101S_20130719**	Water	07/19/13 10:27	07/20/13 09:20
60149302017	**AT-2_20130719**	Water	07/19/13 09:57	07/20/13 09:20
60149302018	**BAH-01_20130719**	Water	07/19/13 10:36	07/20/13 09:20
60149302019	**DR-12_20130719**	Water	07/19/13 09:06	07/20/13 09:20

This report shall not be reproduced, except in full,
without the written consent of Pace Analytical Services, Inc..

Pace Analytical Services, Inc.
9608 Loiret Blvd.
Lenexa, KS 66219
(913)599-5665

SAMPLE ANALYTE COUNT

Project: July 2013 Rico Water Sampling
Pace Project No.: 60149302

Lab ID	Sample ID	Method	Analysts	Analytes Reported	Laboratory
60149302001	**GW-4_20130718**	EPA 200.7	JGP	4	PASI-K
		EPA 200.8	TT3	25	PASI-M
		EPA 200.8	TT3	23	PASI-M
		EPA 200.8	SMW	19	PASI-K
		EPA 245.1	WBS	1	PASI-M
		EPA 245.1	WBS	1	PASI-M
		EPA 245.1	NDJ	1	PASI-K
		SM 2510B	CS1	1	
		Calculated	CS1	2	
		SM 2320B	JMC	3	PASI-K
		SM 2540C	LEM	1	PASI-K
		SM 2540D	LEM	1	PASI-K
		SM 4500-S-2 D	OL	1	PASI-K
		EPA 300.0	OL	2	PASI-K
		EPA 353.2	DJR	1	PASI-K
		SM 4500-CN-E	AJM	1	PASI-K
		SM 5310C	TJJ	1	PASI-G
60149302002	**MW-103_20130718**	EPA 200.7	JGP	4	PASI-K
		EPA 200.8	TT3	25	PASI-M
		EPA 200.8	TT3	23	PASI-M
		EPA 200.8	SMW	19	PASI-K
		EPA 245.1	WBS	1	PASI-M
		EPA 245.1	WBS	1	PASI-M
		EPA 245.1	NDJ	1	PASI-K
		SM 2510B	CS1	1	
		Calculated	CS1	2	
		SM 2320B	JMC	3	PASI-K
		SM 2540C	LEM	1	PASI-K
		SM 2540D	LEM	1	PASI-K
		SM 4500-S-2 D	OL	1	PASI-K
		EPA 300.0	OL	2	PASI-K
		EPA 353.2	DJR	1	PASI-K
		SM 4500-CN-E	AJM	1	PASI-K
		SM 5310C	TJJ	1	PASI-G
60149302003	**MW-104_20130718**	EPA 200.7	JGP	4	PASI-K
		EPA 200.8	TT3	25	PASI-M
		EPA 200.8	TT3	23	PASI-M

This report shall not be reproduced, except in full,
without the written consent of Pace Analytical Services, Inc..

Pace Analytical Services, Inc.
9608 Loiret Blvd.
Lenexa, KS 66219
(913)599-5665

SAMPLE ANALYTE COUNT

Project: July 2013 Rico Water Sampling
Pace Project No.: 60149302

Lab ID	Sample ID	Method	Analysts	Analytes Reported	Laboratory
		EPA 200.8	SMW	19	PASI-K
		EPA 245.1	WBS	1	PASI-M
		EPA 245.1	WBS	1	PASI-M
		EPA 245.1	NDJ	1	PASI-K
		SM 2510B	CS1	1	
		Calculated	CS1	2	
		SM 2320B	JMC	3	PASI-K
		SM 2540C	LEM	1	PASI-K
		SM 2540D	LEM	1	PASI-K
		SM 4500-S-2 D	OL	1	PASI-K
		EPA 300.0	OL	2	PASI-K
		EPA 353.2	DJR	1	PASI-K
		SM 4500-CN-E	AJM	1	PASI-K
		SM 5310C	TJJ	1	PASI-G
60149302004	**MW-1 DEEP_20130718**	EPA 200.7	JGP	4	PASI-K
		EPA 200.8	TT3	25	PASI-M
		EPA 200.8	TT3	23	PASI-M
		EPA 200.8	SMW	19	PASI-K
		EPA 245.1	WBS	1	PASI-M
		EPA 245.1	WBS	1	PASI-M
		EPA 245.1	NDJ	1	PASI-K
		SM 2510B	CS1	1	
		Calculated	CS1	2	
		SM 2320B	JMC	3	PASI-K
		SM 2540C	LEM	1	PASI-K
		SM 2540D	LEM	1	PASI-K
		SM 4500-S-2 D	OL	1	PASI-K
		EPA 300.0	OL	2	PASI-K
		EPA 353.2	DJR	1	PASI-K
		SM 4500-CN-E	AJM	1	PASI-K
		SM 5310C	TJJ	1	PASI-G
60149302005	**MW-1 SHALLOW_20130718**	EPA 200.7	JGP	4	PASI-K
		EPA 200.8	TT3	25	PASI-M
		EPA 200.8	TT3	23	PASI-M
		EPA 200.8	SMW	19	PASI-K
		EPA 245.1	WBS	1	PASI-M
		EPA 245.1	WBS	1	PASI-M

This report shall not be reproduced, except in full,
without the written consent of Pace Analytical Services, Inc..

Pace Analytical Services, Inc.
9608 Loiret Blvd.
Lenexa, KS 66219
(913)599-5665

SAMPLE ANALYTE COUNT

Project: July 2013 Rico Water Sampling
Pace Project No.: 60149302

Lab ID	Sample ID	Method	Analysts	Analytes Reported	Laboratory
		EPA 245.1	NDJ	1	PASI-K
		SM 2510B	CS1	1	
		Calculated	CS1	2	
		SM 2320B	JMC	3	PASI-K
		SM 2540C	LEM	1	PASI-K
		SM 2540D	LEM	1	PASI-K
		SM 4500-S-2 D	OL	1	PASI-K
		EPA 300.0	OL	2	PASI-K
		EPA 353.2	DJR	1	PASI-K
		SM 4500-CN-E	AJM	1	PASI-K
		SM 5310C	TJJ	1	PASI-G
60149302006	**MW-2 DEEP_20130718**	EPA 200.7	JGP	4	PASI-K
		EPA 200.8	TT3	25	PASI-M
		EPA 200.8	TT3	23	PASI-M
		EPA 200.8	SMW	19	PASI-K
		EPA 245.1	WBS	1	PASI-M
		EPA 245.1	WBS	1	PASI-M
		EPA 245.1	NDJ	1	PASI-K
		SM 2510B	CS1	1	
		Calculated	CS1	2	
		SM 2320B	JMC	3	PASI-K
		SM 2540C	LEM	1	PASI-K
		SM 2540D	LEM	1	PASI-K
		SM 4500-S-2 D	OL	1	PASI-K
		EPA 300.0	OL	2	PASI-K
		EPA 353.2	DJR	1	PASI-K
		SM 4500-CN-E	AJM	1	PASI-K
		SM 5310C	TJJ	1	PASI-G
60149302007	**MW-3 DEEP_20130718**	EPA 200.7	JGP	4	PASI-K
		EPA 200.8	TT3	25	PASI-M
		EPA 200.8	TT3	23	PASI-M
		EPA 200.8	SMW	19	PASI-K
		EPA 245.1	WBS	1	PASI-M
		EPA 245.1	WBS	1	PASI-M
		EPA 245.1	NDJ	1	PASI-K
		SM 2510B	CS1	1	
		Calculated	CS1	2	

This report shall not be reproduced, except in full,
without the written consent of Pace Analytical Services, Inc..

Pace Analytical Services, Inc.
9608 Loiret Blvd.
Lenexa, KS 66219
(913)599-5665

SAMPLE ANALYTE COUNT

Project: July 2013 Rico Water Sampling
Pace Project No.: 60149302

Lab ID	Sample ID	Method	Analysts	Analytes Reported	Laboratory
		SM 2320B	JMC	3	PASI-K
		SM 2540C	LEM	1	PASI-K
		SM 2540D	LEM	1	PASI-K
		SM 4500-S-2 D	OL	1	PASI-K
		EPA 300.0	OL	2	PASI-K
		EPA 353.2	DJR	1	PASI-K
		SM 4500-CN-E	AJM	1	PASI-K
		SM 5310C	TJJ	1	PASI-G
60149302008	**MW-6 DEEP_20130718**	EPA 200.7	JGP	4	PASI-K
		EPA 200.8	TT3	25	PASI-M
		EPA 200.8	TT3	23	PASI-M
		EPA 200.8	SMW	19	PASI-K
		EPA 245.1	WBS	1	PASI-M
		EPA 245.1	WBS	1	PASI-M
		EPA 245.1	NDJ	1	PASI-K
		SM 2510B	CS1	1	
		Calculated	CS1	2	
		SM 2320B	JMC	3	PASI-K
		SM 2540C	LEM	1	PASI-K
		SM 2540D	LEM	1	PASI-K
		SM 4500-S-2 D	OL	1	PASI-K
		EPA 300.0	OL	2	PASI-K
		EPA 353.2	DJR	1	PASI-K
		SM 4500-CN-E	AJM	1	PASI-K
		SM 5310C	TJJ	1	PASI-G
60149302009	**MW-6 SHALLOW_20130718**	EPA 200.7	JGP	4	PASI-K
		EPA 200.8	TT3	25	PASI-M
		EPA 200.8	TT3	23	PASI-M
		EPA 200.8	SMW	19	PASI-K
		EPA 245.1	WBS	1	PASI-M
		EPA 245.1	WBS	1	PASI-M
		EPA 245.1	NDJ	1	PASI-K
		SM 2510B	CS1	1	
		Calculated	CS1	2	
		SM 2320B	JMC	3	PASI-K
		SM 2540C	LEM	1	PASI-K
		SM 2540D	LEM	1	PASI-K

This report shall not be reproduced, except in full,
without the written consent of Pace Analytical Services, Inc..

Pace Analytical Services, Inc.
9608 Loiret Blvd.
Lenexa, KS 66219
(913)599-5665

SAMPLE ANALYTE COUNT

Project: July 2013 Rico Water Sampling
Pace Project No.: 60149302

Lab ID	Sample ID	Method	Analysts	Analytes Reported	Laboratory
		SM 4500-S-2 D	OL	1	PASI-K
		EPA 300.0	OL	2	PASI-K
		EPA 353.2	DJR	1	PASI-K
		SM 4500-CN-E	AJM	1	PASI-K
		SM 5310C	TJJ	1	PASI-G
60149302010	**DR-10_20130718**	EPA 200.7	JGP	4	PASI-K
		EPA 200.8	TT3	25	PASI-M
		EPA 200.8	TT3	23	PASI-M
		EPA 200.8	SMW	19	PASI-K
		EPA 245.1	WBS	1	PASI-M
		EPA 245.1	WBS	1	PASI-M
		EPA 245.1	NDJ	1	PASI-K
		SM 2510B	CS1	1	
		Calculated	CS1	2	
		SM 2320B	JMC	3	PASI-K
		SM 2540C	LEM	1	PASI-K
		SM 2540D	LEM	1	PASI-K
		SM 4500-S-2 D	OL	1	PASI-K
		EPA 300.0	OL	2	PASI-K
		EPA 353.2	DJR	1	PASI-K
		SM 4500-CN-E	AJM	1	PASI-K
		SM 5310C	TJJ	1	PASI-G
60149302011	**DR-11_20130718**	EPA 200.7	JGP	4	PASI-K
		EPA 200.8	TT3	25	PASI-M
		EPA 200.8	TT3	23	PASI-M
		EPA 200.8	SMW	19	PASI-K
		EPA 245.1	WBS	1	PASI-M
		EPA 245.1	WBS	1	PASI-M
		EPA 245.1	NDJ	1	PASI-K
		SM 2510B	CS1	1	
		Calculated	CS1	2	
		SM 2320B	JMC	3	PASI-K
		SM 2540C	LEM	1	PASI-K
		SM 2540D	LEM	1	PASI-K
		SM 4500-S-2 D	OL	1	PASI-K
		EPA 300.0	OL	2	PASI-K
		EPA 353.2	DJR	1	PASI-K

This report shall not be reproduced, except in full,
without the written consent of Pace Analytical Services, Inc..

Pace Analytical Services, Inc.
9608 Loiret Blvd.
Lenexa, KS 66219
(913)599-5665

SAMPLE ANALYTE COUNT

Project: July 2013 Rico Water Sampling
Pace Project No.: 60149302

Lab ID	Sample ID	Method	Analysts	Analytes Reported	Laboratory
		SM 4500-CN-E	AJM	1	PASI-K
		SM 5310C	TJJ	1	PASI-G
60149302012	**FB-FIELD_20130718**	EPA 200.7	JGP	4	PASI-K
		EPA 200.8	TT3	25	PASI-M
		EPA 200.8	TT3	23	PASI-M
		EPA 200.8	SMW	19	PASI-K
		EPA 245.1	WBS	1	PASI-M
		EPA 245.1	WBS	1	PASI-M
		EPA 245.1	NDJ	1	PASI-K
		SM 2510B	CS1	1	
		Calculated	CS1	2	
		SM 2320B	JMC	3	PASI-K
		SM 2540C	LEM	1	PASI-K
		SM 2540D	LEM	1	PASI-K
		SM 4500-S-2 D	OL	1	PASI-K
		EPA 300.0	OL	2	PASI-K
		EPA 353.2	DJR	1	PASI-K
		SM 4500-CN-E	AJM	1	PASI-K
		SM 5310C	TJJ	1	PASI-G
60149302013	**GW-3_20130719**	EPA 200.7	JGP	4	PASI-K
		EPA 200.8	TT3	25	PASI-M
		EPA 200.8	TT3	23	PASI-M
		EPA 200.8	SMW	19	PASI-K
		EPA 245.1	WBS	1	PASI-M
		EPA 245.1	WBS	1	PASI-M
		EPA 245.1	NDJ	1	PASI-K
		SM 2510B	CS1	1	
		Calculated	CS1	2	
		SM 2320B	JMC	3	PASI-K
		SM 2540C	LEM	1	PASI-K
		SM 2540D	LEM	1	PASI-K
		SM 4500-S-2 D	OL	1	PASI-K
		EPA 300.0	OL	2	PASI-K
		EPA 353.2	DJR	1	PASI-K
		SM 4500-CN-E	AJM	1	PASI-K
		SM 5310C	TJJ	1	PASI-G
60149302014	**P13-102_20130719**	EPA 200.7	JGP	4	PASI-K

This report shall not be reproduced, except in full,
without the written consent of Pace Analytical Services, Inc..

Pace Analytical Services, Inc.
9608 Loiret Blvd.
Lenexa, KS 66219
(913)599-5665

SAMPLE ANALYTE COUNT

Project: July 2013 Rico Water Sampling
Pace Project No.: 60149302

Lab ID	Sample ID	Method	Analysts	Analytes Reported	Laboratory
		EPA 200.8	TT3	25	PASI-M
		EPA 200.8	TT3	23	PASI-M
		EPA 200.8	SMW	19	PASI-K
		EPA 245.1	WBS	1	PASI-M
		EPA 245.1	WBS	1	PASI-M
		EPA 245.1	NDJ	1	PASI-K
		SM 2510B	CS1	1	
		Calculated	CS1	2	
		SM 2320B	JMC	3	PASI-K
		SM 2540C	LEM	1	PASI-K
		SM 2540D	LEM	1	PASI-K
		SM 4500-S-2 D	OL	1	PASI-K
		EPA 300.0	OL	2	PASI-K
		EPA 353.2	DJR	1	PASI-K
		SM 4500-CN-E	AJM	1	PASI-K
		SM 5310C	TJJ	1	PASI-G
60149302015	**P13-103_20130719**	EPA 200.7	JGP	4	PASI-K
		EPA 200.8	TT3	25	PASI-M
		EPA 200.8	TT3	23	PASI-M
		EPA 200.8	SMW	19	PASI-K
		EPA 245.1	WBS	1	PASI-M
		EPA 245.1	WBS	1	PASI-M
		EPA 245.1	NDJ	1	PASI-K
		SM 2510B	CS1	1	
		Calculated	CS1	2	
		SM 2320B	JMC	3	PASI-K
		SM 2540C	LEM	1	PASI-K
		SM 2540D	LEM	1	PASI-K
		SM 4500-S-2 D	OL	1	PASI-K
		EPA 300.0	OL	2	PASI-K
		EPA 353.2	DJR	1	PASI-K
		SM 4500-CN-E	AJM	1	PASI-K
		SM 5310C	TJJ	1	PASI-G
60149302016	**CHV-101S_20130719**	EPA 200.7	JGP	4	PASI-K
		EPA 200.8	TT3	25	PASI-M
		EPA 200.8	TT3	23	PASI-M
		EPA 200.8	SMW	19	PASI-K

This report shall not be reproduced, except in full,
without the written consent of Pace Analytical Services, Inc..

Pace Analytical Services, Inc.
9608 Loiret Blvd.
Lenexa, KS 66219
(913)599-5665

SAMPLE ANALYTE COUNT

Project: July 2013 Rico Water Sampling
Pace Project No.: 60149302

Lab ID	Sample ID	Method	Analysts	Analytes Reported	Laboratory
		EPA 245.1	WBS	1	PASI-M
		EPA 245.1	WBS	1	PASI-M
		EPA 245.1	NDJ	1	PASI-K
		SM 2510B	CS1	1	
		Calculated	CS1	2	
		SM 2320B	JMC	3	PASI-K
		SM 2540C	LEM	1	PASI-K
		SM 2540D	LEM	1	PASI-K
		SM 4500-S-2 D	OL	1	PASI-K
		EPA 300.0	OL	2	PASI-K
		EPA 353.2	DJR	1	PASI-K
		SM 4500-CN-E	AJM	1	PASI-K
		SM 5310C	TJJ	1	PASI-G
60149302017	**AT-2_20130719**	EPA 200.7	JGP	4	PASI-K
		EPA 200.8	TT3	25	PASI-M
		EPA 200.8	TT3	23	PASI-M
		EPA 200.8	SMW	19	PASI-K
		EPA 245.1	WBS	1	PASI-M
		EPA 245.1	WBS	1	PASI-M
		EPA 245.1	NDJ	1	PASI-K
		SM 2510B	CS1	1	
		Calculated	CS1	2	
		SM 2320B	JMC	3	PASI-K
		SM 2540C	LEM	1	PASI-K
		SM 2540D	LEM	1	PASI-K
		SM 4500-S-2 D	OL	1	PASI-K
		EPA 300.0	OL	2	PASI-K
		EPA 353.2	DJR	1	PASI-K
		SM 4500-CN-E	AJM	1	PASI-K
		SM 5310C	TJJ	1	PASI-G
60149302018	**BAH-01_20130719**	EPA 200.7	JGP	4	PASI-K
		EPA 200.8	TT3	25	PASI-M
		EPA 200.8	TT3	23	PASI-M
		EPA 200.8	SMW	19	PASI-K
		EPA 245.1	WBS	1	PASI-M
		EPA 245.1	WBS	1	PASI-M
		EPA 245.1	NDJ	1	PASI-K

This report shall not be reproduced, except in full,
without the written consent of Pace Analytical Services, Inc..

Pace Analytical Services, Inc.
9608 Loiret Blvd.
Lenexa, KS 66219
(913)599-5665

SAMPLE ANALYTE COUNT

Project: July 2013 Rico Water Sampling
Pace Project No.: 60149302

Lab ID	Sample ID	Method	Analysts	Analytes Reported	Laboratory
		SM 2510B	CS1	1	
		Calculated	CS1	2	
		SM 2320B	JMC	3	PASI-K
		SM 2540C	LEM	1	PASI-K
		SM 2540D	LEM	1	PASI-K
		SM 4500-S-2 D	OL	1	PASI-K
		EPA 300.0	OL	2	PASI-K
		EPA 353.2	DJR	1	PASI-K
		SM 4500-CN-E	AJM	1	PASI-K
		SM 5310C	TJJ	1	PASI-G
60149302019	**DR-12_20130719**	EPA 200.7	JGP	4	PASI-K
		EPA 200.8	TT3	25	PASI-M
		EPA 200.8	TT3	23	PASI-M
		EPA 200.8	SMW	19	PASI-K
		EPA 245.1	WBS	1	PASI-M
		EPA 245.1	WBS	1	PASI-M
		EPA 245.1	NDJ	1	PASI-K
		SM 2510B	CS1	1	
		Calculated	CS1	2	
		SM 2320B	JMC	3	PASI-K
		SM 2540C	LEM	1	PASI-K
		SM 2540D	LEM	1	PASI-K
		SM 4500-S-2 D	OL	1	PASI-K
		EPA 300.0	OL	2	PASI-K
		EPA 353.2	DJR	1	PASI-K
		SM 4500-CN-E	AJM	1	PASI-K
		SM 5310C	TJJ	1	PASI-G

This report shall not be reproduced, except in full,
without the written consent of Pace Analytical Services, Inc..

Pace Analytical Services, Inc.
9608 Loiret Blvd.
Lenexa, KS 66219
(913)599-5665

PROJECT NARRATIVE

Project: July 2013 Rico Water Sampling
Pace Project No.: 60149302

Method: **EPA 200.7**
Description: 200.7 Potentially Diss. Metals
Client: BP Anderson Engineering Company Inc.
Date: August 26, 2013

General Information:
19 samples were analyzed for EPA 200.7. All samples were received in acceptable condition with any exceptions noted below.

Hold Time:
The samples were analyzed within the method required hold times with any exceptions noted below.

Sample Preparation:
The samples were prepared in accordance with EPA 200.7 with any exceptions noted below.

Initial Calibrations (including MS Tune as applicable):
All criteria were within method requirements with any exceptions noted below.

Continuing Calibration:
All criteria were within method requirements with any exceptions noted below.

Method Blank:
All analytes were below the report limit in the method blank with any exceptions noted below.

QC Batch: MPRP/23585

B: Analyte was detected in the associated method blank.

- BLANK for HBN 299831 [MPRP/235 (Lab ID: 1224379)
  - Calcium, Dissolved

Laboratory Control Spike:
All laboratory control spike compounds were within QC limits with any exceptions noted below.

Matrix Spikes:
All percent recoveries and relative percent differences (RPDs) were within acceptance criteria with any exceptions noted below.

QC Batch: MPRP/23585

A matrix spike and matrix spike duplicate (MS/MSD) were performed on the following sample(s): 60149302003,60149302004

M1: Matrix spike recovery exceeded QC limits. Batch accepted based on laboratory control sample (LCS) recovery.

- MS (Lab ID: 1224381)
  - Calcium, Dissolved
- MS (Lab ID: 1224383)
  - Calcium, Dissolved
- MSD (Lab ID: 1224382)
  - Calcium, Dissolved

Additional Comments:

Sample Comments:

All reported results confirmed for total vs. dissolved metals (Ni)

- MW-103_20130718 (Lab ID: 60149302002)

This report shall not be reproduced, except in full,
without the written consent of Pace Analytical Services, Inc..

Pace Analytical Services, Inc.
9608 Loiret Blvd.
Lenexa, KS 66219
(913)599-5665

PROJECT NARRATIVE

Project: July 2013 Rico Water Sampling
Pace Project No.: 60149302

Method: **EPA 200.7**
Description: 200.7 Potentially Diss. Metals
Client: BP Anderson Engineering Company Inc.
Date: August 26, 2013

Sample Comments:

All reported results confirmed for total vs. dissolved metals (Ni)
- MW-104_20130718 (Lab ID: 60149302003)
- MW-1 DEEP_20130718 (Lab ID: 60149302004)
- MW-3 DEEP_20130718 (Lab ID: 60149302007)
- DR-10_20130718 (Lab ID: 60149302010)

All reported results confirmed for total vs. dissolved metals (Na)
- FB-FIELD_20130718 (Lab ID: 60149302012)

All reported results confirmed for total vs. dissolved metals (Ni)
- P13-102_20130719 (Lab ID: 60149302014)

This report shall not be reproduced, except in full,
without the written consent of Pace Analytical Services, Inc..

Pace Analytical Services, Inc.
9608 Loiret Blvd.
Lenexa, KS 66219
(913)599-5665

PROJECT NARRATIVE

Project: July 2013 Rico Water Sampling
Pace Project No.: 60149302

Method: **EPA 200.8**
Description: 200.8 MET ICPMS
Client: BP Anderson Engineering Company Inc.
Date: August 26, 2013

General Information:
19 samples were analyzed for EPA 200.8. All samples were received in acceptable condition with any exceptions noted below.

Hold Time:
The samples were analyzed within the method required hold times with any exceptions noted below.

Sample Preparation:
The samples were prepared in accordance with EPA 200.8 with any exceptions noted below.

Initial Calibrations (including MS Tune as applicable):
All criteria were within method requirements with any exceptions noted below.

Continuing Calibration:
All criteria were within method requirements with any exceptions noted below.

Internal Standards:
All internal standards were within QC limits with any exceptions noted below.

Method Blank:
All analytes were below the report limit in the method blank with any exceptions noted below.

Laboratory Control Spike:
All laboratory control spike compounds were within QC limits with any exceptions noted below.

Matrix Spikes:
All percent recoveries and relative percent differences (RPDs) were within acceptance criteria with any exceptions noted below.

QC Batch: MPRP/40787

A matrix spike and matrix spike duplicate (MS/MSD) were performed on the following sample(s): 60149200001,60149302011

M1: Matrix spike recovery exceeded QC limits. Batch accepted based on laboratory control sample (LCS) recovery.

- MS (Lab ID: 1485512)
  - Aluminum
  - Calcium
  - Magnesium
  - Potassium
  - Sodium
- MS (Lab ID: 1486799)
  - Calcium
  - Magnesium
- MSD (Lab ID: 1486800)
  - Magnesium

This report shall not be reproduced, except in full,
without the written consent of Pace Analytical Services, Inc..

Pace Analytical Services, Inc.
9608 Loiret Blvd.
Lenexa, KS 66219
(913)599-5665

PROJECT NARRATIVE

Project: July 2013 Rico Water Sampling
Pace Project No.: 60149302

Method: **EPA 200.8**
Description: 200.8 MET ICPMS
Client: BP Anderson Engineering Company Inc.
Date: August 26, 2013

QC Batch: MPRP/40831

A matrix spike and matrix spike duplicate (MS/MSD) were performed on the following sample(s): 60149302012

M1: Matrix spike recovery exceeded QC limits. Batch accepted based on laboratory control sample (LCS) recovery.

- MSD (Lab ID: 1486577)
  - Aluminum
  - Iron

R1: RPD value was outside control limits.

- MSD (Lab ID: 1486577)
  - Iron

Additional Comments:

Sample Comments:

All reported results confirmed for total vs. dissolved metals (Ni)

- MW-103_20130718 (Lab ID: 60149302002)
- MW-104_20130718 (Lab ID: 60149302003)
- MW-1 DEEP_20130718 (Lab ID: 60149302004)
- MW-3 DEEP_20130718 (Lab ID: 60149302007)
- DR-10_20130718 (Lab ID: 60149302010)

All reported results confirmed for total vs. dissolved metals (Na)

- FB-FIELD_20130718 (Lab ID: 60149302012)

All reported results confirmed for total vs. dissolved metals (Ni)

- P13-102_20130719 (Lab ID: 60149302014)

Analyte Comments:

QC Batch: MPRP/40787

E: Analyte concentration exceeded the calibration range. The reported result is estimated.

- MS (Lab ID: 1485512)
  - Calcium
- MS (Lab ID: 1486799)
  - Calcium
  - Manganese
  - Zinc
- MSD (Lab ID: 1486800)
  - Calcium
  - Manganese
  - Zinc

QC Batch: MPRP/40831

D3: Sample was diluted due to the presence of high levels of non-target analytes or other matrix interference.

- BAH-01_20130719 (Lab ID: 60149302018)
  - Antimony
  - Thallium

This report shall not be reproduced, except in full,
without the written consent of Pace Analytical Services, Inc..

Pace Analytical Services, Inc.
9608 Loiret Blvd.
Lenexa, KS 66219
(913)599-5665

PROJECT NARRATIVE

Project: July 2013 Rico Water Sampling
Pace Project No.: 60149302

Method: **EPA 200.8**
Description: 200.8 MET ICPMS, Dissolved
Client: BP Anderson Engineering Company Inc.
Date: August 26, 2013

General Information:
19 samples were analyzed for EPA 200.8. All samples were received in acceptable condition with any exceptions noted below.

Hold Time:
The samples were analyzed within the method required hold times with any exceptions noted below.

Sample Preparation:
The samples were prepared in accordance with EPA 200.8 with any exceptions noted below.

Initial Calibrations (including MS Tune as applicable):
All criteria were within method requirements with any exceptions noted below.

Continuing Calibration:
All criteria were within method requirements with any exceptions noted below.

Internal Standards:
All internal standards were within QC limits with any exceptions noted below.

Method Blank:
All analytes were below the report limit in the method blank with any exceptions noted below.

Laboratory Control Spike:
All laboratory control spike compounds were within QC limits with any exceptions noted below.

Matrix Spikes:
All percent recoveries and relative percent differences (RPDs) were within acceptance criteria with any exceptions noted below.

QC Batch: MPRP/40786

A matrix spike and matrix spike duplicate (MS/MSD) were performed on the following sample(s): 60149200005,60149302004

M1: Matrix spike recovery exceeded QC limits. Batch accepted based on laboratory control sample (LCS) recovery.

- MS (Lab ID: 1496972)
  - Calcium, Dissolved
  - Magnesium, Dissolved
  - Sodium, Dissolved
- MS (Lab ID: 1496974)
  - Calcium, Dissolved
  - Magnesium, Dissolved
- MSD (Lab ID: 1496973)
  - Calcium, Dissolved
  - Magnesium, Dissolved

This report shall not be reproduced, except in full,
without the written consent of Pace Analytical Services, Inc..

Pace Analytical Services, Inc.
9608 Loiret Blvd.
Lenexa, KS 66219
(913)599-5665

PROJECT NARRATIVE

Project: July 2013 Rico Water Sampling
Pace Project No.: 60149302

Method: **EPA 200.8**
Description: 200.8 MET ICPMS, Dissolved
Client: BP Anderson Engineering Company Inc.
Date: August 26, 2013

QC Batch: MPRP/40829

A matrix spike and matrix spike duplicate (MS/MSD) were performed on the following sample(s): 60149302013

M1: Matrix spike recovery exceeded QC limits. Batch accepted based on laboratory control sample (LCS) recovery.

- MS (Lab ID: 1486568)
  - Calcium, Dissolved
  - Magnesium, Dissolved
- MSD (Lab ID: 1486569)
  - Calcium, Dissolved

Additional Comments:

Sample Comments:

All reported results confirmed for total vs. dissolved metals (Ni)
- MW-103_20130718 (Lab ID: 60149302002)
- MW-104_20130718 (Lab ID: 60149302003)
- MW-1 DEEP_20130718 (Lab ID: 60149302004)
- MW-3 DEEP_20130718 (Lab ID: 60149302007)
- DR-10_20130718 (Lab ID: 60149302010)

All reported results confirmed for total vs. dissolved metals (Na)
- FB-FIELD_20130718 (Lab ID: 60149302012)

All reported results confirmed for total vs. dissolved metals (Ni)
- P13-102_20130719 (Lab ID: 60149302014)

Analyte Comments:

QC Batch: MPRP/40786

E: Analyte concentration exceeded the calibration range. The reported result is estimated.
- MS (Lab ID: 1496972)
  - Calcium, Dissolved
- MS (Lab ID: 1496974)
  - Calcium, Dissolved
- MSD (Lab ID: 1496973)
  - Calcium, Dissolved

QC Batch: MPRP/40829

E: Analyte concentration exceeded the calibration range. The reported result is estimated.
- MS (Lab ID: 1486568)
  - Calcium, Dissolved
- MSD (Lab ID: 1486569)
  - Calcium, Dissolved

This report shall not be reproduced, except in full,
without the written consent of Pace Analytical Services, Inc..

Pace Analytical Services, Inc.
9608 Loiret Blvd.
Lenexa, KS 66219
(913)599-5665

PROJECT NARRATIVE

Project: July 2013 Rico Water Sampling
Pace Project No.: 60149302

Method: **EPA 200.8**
Description: 200.8 Potentially Diss. Metals
Client: BP Anderson Engineering Company Inc.
Date: August 26, 2013

General Information:
19 samples were analyzed for EPA 200.8. All samples were received in acceptable condition with any exceptions noted below.

Hold Time:
The samples were analyzed within the method required hold times with any exceptions noted below.

Sample Preparation:
The samples were prepared in accordance with EPA 200.8 with any exceptions noted below.

Initial Calibrations (including MS Tune as applicable):
All criteria were within method requirements with any exceptions noted below.

Continuing Calibration:
All criteria were within method requirements with any exceptions noted below.

Internal Standards:
All internal standards were within QC limits with any exceptions noted below.

Method Blank:
All analytes were below the report limit in the method blank with any exceptions noted below.

QC Batch: MPRP/23586

B: Analyte was detected in the associated method blank.

- BLANK for HBN 299832 [MPRP/235 (Lab ID: 1224384)
  - Chromium, Dissolved
  - Iron, Dissolved
  - Lead, Dissolved
  - Manganese, Dissolved
  - Nickel, Dissolved
  - Thallium, Dissolved

Laboratory Control Spike:
All laboratory control spike compounds were within QC limits with any exceptions noted below.

Matrix Spikes:
All percent recoveries and relative percent differences (RPDs) were within acceptance criteria with any exceptions noted below.

QC Batch: MPRP/23586

A matrix spike and matrix spike duplicate (MS/MSD) were performed on the following sample(s): 60149302005,60149302006

M1: Matrix spike recovery exceeded QC limits. Batch accepted based on laboratory control sample (LCS) recovery.

- MS (Lab ID: 1224386)
  - Manganese, Dissolved

Additional Comments:

This report shall not be reproduced, except in full,
without the written consent of Pace Analytical Services, Inc..

Pace Analytical Services, Inc.
9608 Loiret Blvd.
Lenexa, KS 66219
(913)599-5665

PROJECT NARRATIVE

Project: July 2013 Rico Water Sampling
Pace Project No.: 60149302

Method: **EPA 200.8**
Description: 200.8 Potentially Diss. Metals
Client: BP Anderson Engineering Company Inc.
Date: August 26, 2013

Sample Comments:

All reported results confirmed for total vs. dissolved metals (Ni)
- MW-103_20130718 (Lab ID: 60149302002)
- MW-104_20130718 (Lab ID: 60149302003)
- MW-1 DEEP_20130718 (Lab ID: 60149302004)
- MW-3 DEEP_20130718 (Lab ID: 60149302007)
- DR-10_20130718 (Lab ID: 60149302010)

All reported results confirmed for total vs. dissolved metals (Na)
- FB-FIELD_20130718 (Lab ID: 60149302012)

All reported results confirmed for total vs. dissolved metals (Ni)
- P13-102_20130719 (Lab ID: 60149302014)

Analyte Comments:

QC Batch: MPRP/23586

D3: Sample was diluted due to the presence of high levels of non-target analytes or other matrix interference.
- BAH-01_20130719 (Lab ID: 60149302018)
  - Arsenic, Dissolved
  - Chromium, Dissolved
  - Molybdenum, Dissolved
  - Antimony, Dissolved
  - Selenium, Dissolved
  - Vanadium, Dissolved

This report shall not be reproduced, except in full,
without the written consent of Pace Analytical Services, Inc..

Pace Analytical Services, Inc.
9608 Loiret Blvd.
Lenexa, KS 66219
(913)599-5665

PROJECT NARRATIVE

Project: July 2013 Rico Water Sampling
Pace Project No.: 60149302

Method: **EPA 245.1**
Description: 245.1 Mercury
Client: BP Anderson Engineering Company Inc.
Date: August 26, 2013

General Information:
19 samples were analyzed for EPA 245.1. All samples were received in acceptable condition with any exceptions noted below.

Hold Time:
The samples were analyzed within the method required hold times with any exceptions noted below.

Sample Preparation:
The samples were prepared in accordance with EPA 245.1 with any exceptions noted below.

Initial Calibrations (including MS Tune as applicable):
All criteria were within method requirements with any exceptions noted below.

Continuing Calibration:
All criteria were within method requirements with any exceptions noted below.

Method Blank:
All analytes were below the report limit in the method blank with any exceptions noted below.

Laboratory Control Spike:
All laboratory control spike compounds were within QC limits with any exceptions noted below.

Matrix Spikes:
All percent recoveries and relative percent differences (RPDs) were within acceptance criteria with any exceptions noted below.

Additional Comments:

Sample Comments:

All reported results confirmed for total vs. dissolved metals (Ni)
- MW-103_20130718 (Lab ID: 60149302002)
- MW-104_20130718 (Lab ID: 60149302003)
- MW-1 DEEP_20130718 (Lab ID: 60149302004)
- MW-3 DEEP_20130718 (Lab ID: 60149302007)
- DR-10_20130718 (Lab ID: 60149302010)

All reported results confirmed for total vs. dissolved metals (Na)
- FB-FIELD_20130718 (Lab ID: 60149302012)

All reported results confirmed for total vs. dissolved metals (Ni)
- P13-102_20130719 (Lab ID: 60149302014)

This report shall not be reproduced, except in full,
without the written consent of Pace Analytical Services, Inc..

Pace Analytical Services, Inc.
9608 Loiret Blvd.
Lenexa, KS 66219
(913)599-5665

PROJECT NARRATIVE

Project: July 2013 Rico Water Sampling
Pace Project No.: 60149302

Method: **EPA 245.1**
Description: 245.1 Mercury, Dissolved
Client: BP Anderson Engineering Company Inc.
Date: August 26, 2013

General Information:
19 samples were analyzed for EPA 245.1. All samples were received in acceptable condition with any exceptions noted below.

Hold Time:
The samples were analyzed within the method required hold times with any exceptions noted below.

Sample Preparation:
The samples were prepared in accordance with EPA 245.1 with any exceptions noted below.

Initial Calibrations (including MS Tune as applicable):
All criteria were within method requirements with any exceptions noted below.

Continuing Calibration:
All criteria were within method requirements with any exceptions noted below.

Method Blank:
All analytes were below the report limit in the method blank with any exceptions noted below.

Laboratory Control Spike:
All laboratory control spike compounds were within QC limits with any exceptions noted below.

Matrix Spikes:
All percent recoveries and relative percent differences (RPDs) were within acceptance criteria with any exceptions noted below.

Additional Comments:

Sample Comments:

All reported results confirmed for total vs. dissolved metals (Ni)
- MW-103_20130718 (Lab ID: 60149302002)
- MW-104_20130718 (Lab ID: 60149302003)
- MW-1 DEEP_20130718 (Lab ID: 60149302004)
- MW-3 DEEP_20130718 (Lab ID: 60149302007)
- DR-10_20130718 (Lab ID: 60149302010)

All reported results confirmed for total vs. dissolved metals (Na)
- FB-FIELD_20130718 (Lab ID: 60149302012)

All reported results confirmed for total vs. dissolved metals (Ni)
- P13-102_20130719 (Lab ID: 60149302014)

This report shall not be reproduced, except in full,
without the written consent of Pace Analytical Services, Inc..

Pace Analytical Services, Inc.
9608 Loiret Blvd.
Lenexa, KS 66219
(913)599-5665

PROJECT NARRATIVE

Project: July 2013 Rico Water Sampling
Pace Project No.: 60149302

Method: **EPA 245.1**
Description: 245.1 Potentially Diss Mercury
Client: BP Anderson Engineering Company Inc.
Date: August 26, 2013

General Information:
19 samples were analyzed for EPA 245.1. All samples were received in acceptable condition with any exceptions noted below.

Hold Time:
The samples were analyzed within the method required hold times with any exceptions noted below.

Sample Preparation:
The samples were prepared in accordance with EPA 245.1 with any exceptions noted below.

Initial Calibrations (including MS Tune as applicable):
All criteria were within method requirements with any exceptions noted below.

Continuing Calibration:
All criteria were within method requirements with any exceptions noted below.

Method Blank:
All analytes were below the report limit in the method blank with any exceptions noted below.

Laboratory Control Spike:
All laboratory control spike compounds were within QC limits with any exceptions noted below.

Matrix Spikes:
All percent recoveries and relative percent differences (RPDs) were within acceptance criteria with any exceptions noted below.

Additional Comments:

Sample Comments:

All reported results confirmed for total vs. dissolved metals (Ni)
- MW-103_20130718 (Lab ID: 60149302002)
- MW-104_20130718 (Lab ID: 60149302003)
- MW-1 DEEP_20130718 (Lab ID: 60149302004)
- MW-3 DEEP_20130718 (Lab ID: 60149302007)
- DR-10_20130718 (Lab ID: 60149302010)

All reported results confirmed for total vs. dissolved metals (Na)
- FB-FIELD_20130718 (Lab ID: 60149302012)

All reported results confirmed for total vs. dissolved metals (Ni)
- P13-102_20130719 (Lab ID: 60149302014)

This report shall not be reproduced, except in full,
without the written consent of Pace Analytical Services, Inc..

Pace Analytical Services, Inc.
9608 Loiret Blvd.
Lenexa, KS 66219
(913)599-5665

PROJECT NARRATIVE

Project: July 2013 Rico Water Sampling
Pace Project No.: 60149302

Method: **SM 2510B**
Description: 2510B Specific Conductance
Client: BP Anderson Engineering Company Inc.
Date: August 26, 2013

General Information:
19 samples were analyzed for SM 2510B. All samples were received in acceptable condition with any exceptions noted below.

Hold Time:
The samples were analyzed within the method required hold times with any exceptions noted below.

Initial Calibrations (including MS Tune as applicable):
All criteria were within method requirements with any exceptions noted below.

Continuing Calibration:
All criteria were within method requirements with any exceptions noted below.

Internal Standards:
All internal standards were within QC limits with any exceptions noted below.

Surrogates:
All surrogates were within QC limits with any exceptions noted below.

Method Blank:
All analytes were below the report limit in the method blank with any exceptions noted below.

Laboratory Control Spike:
All laboratory control spike compounds were within QC limits with any exceptions noted below.

Matrix Spikes:
All percent recoveries and relative percent differences (RPDs) were within acceptance criteria with any exceptions noted below.

Duplicate Sample:
All duplicate sample results were within method acceptance criteria with any exceptions noted below.

Additional Comments:

Sample Comments:

All reported results confirmed for total vs. dissolved metals (Ni)
- MW-103_20130718 (Lab ID: 60149302002)
- MW-104_20130718 (Lab ID: 60149302003)
- MW-1 DEEP_20130718 (Lab ID: 60149302004)
- MW-3 DEEP_20130718 (Lab ID: 60149302007)
- DR-10_20130718 (Lab ID: 60149302010)

All reported results confirmed for total vs. dissolved metals (Na)
- FB-FIELD_20130718 (Lab ID: 60149302012)

All reported results confirmed for total vs. dissolved metals (Ni)
- P13-102_20130719 (Lab ID: 60149302014)

This report shall not be reproduced, except in full,
without the written consent of Pace Analytical Services, Inc..

Pace Analytical Services, Inc.
9608 Loiret Blvd.
Lenexa, KS 66219
(913)599-5665

PROJECT NARRATIVE

Project: July 2013 Rico Water Sampling
Pace Project No.: 60149302

Method: **Calculated**
Description: Salinity
Client: BP Anderson Engineering Company Inc.
Date: August 26, 2013

General Information:
19 samples were analyzed for Calculated. All samples were received in acceptable condition with any exceptions noted below.

Hold Time:
The samples were analyzed within the method required hold times with any exceptions noted below.

Initial Calibrations (including MS Tune as applicable):
All criteria were within method requirements with any exceptions noted below.

Continuing Calibration:
All criteria were within method requirements with any exceptions noted below.

Internal Standards:
All internal standards were within QC limits with any exceptions noted below.

Surrogates:
All surrogates were within QC limits with any exceptions noted below.

Method Blank:
All analytes were below the report limit in the method blank with any exceptions noted below.

Laboratory Control Spike:
All laboratory control spike compounds were within QC limits with any exceptions noted below.

Matrix Spikes:
All percent recoveries and relative percent differences (RPDs) were within acceptance criteria with any exceptions noted below.

Additional Comments:

Sample Comments:

All reported results confirmed for total vs. dissolved metals (Ni)
- MW-103_20130718 (Lab ID: 60149302002)
- MW-104_20130718 (Lab ID: 60149302003)
- MW-1 DEEP_20130718 (Lab ID: 60149302004)
- MW-3 DEEP_20130718 (Lab ID: 60149302007)
- DR-10_20130718 (Lab ID: 60149302010)

All reported results confirmed for total vs. dissolved metals (Na)
- FB-FIELD_20130718 (Lab ID: 60149302012)

All reported results confirmed for total vs. dissolved metals (Ni)
- P13-102_20130719 (Lab ID: 60149302014)

This report shall not be reproduced, except in full,
without the written consent of Pace Analytical Services, Inc..

Pace Analytical Services, Inc.
9608 Loiret Blvd.
Lenexa, KS 66219
(913)599-5665

PROJECT NARRATIVE

Project: July 2013 Rico Water Sampling
Pace Project No.: 60149302

Method: **SM 2320B**
Description: 2320B Alkalinity
Client: BP Anderson Engineering Company Inc.
Date: August 26, 2013

General Information:
19 samples were analyzed for SM 2320B. All samples were received in acceptable condition with any exceptions noted below.

Hold Time:
The samples were analyzed within the method required hold times with any exceptions noted below.

Method Blank:
All analytes were below the report limit in the method blank with any exceptions noted below.

Laboratory Control Spike:
All laboratory control spike compounds were within QC limits with any exceptions noted below.

Matrix Spikes:
All percent recoveries and relative percent differences (RPDs) were within acceptance criteria with any exceptions noted below.

Duplicate Sample:
All duplicate sample results were within method acceptance criteria with any exceptions noted below.

QC Batch: WET/42488

D6: The relative percent difference (RPD) between the sample and sample duplicate exceeded laboratory control limits.

- DUP (Lab ID: 1223998)
  - Alkalinity, Total as CaCO3
  - Alkalinity,Bicarbonate (CaCO3)

Additional Comments:

Sample Comments:

All reported results confirmed for total vs. dissolved metals (Ni)
- MW-103_20130718 (Lab ID: 60149302002)
- MW-104_20130718 (Lab ID: 60149302003)
- MW-1 DEEP_20130718 (Lab ID: 60149302004)
- MW-3 DEEP_20130718 (Lab ID: 60149302007)
- DR-10_20130718 (Lab ID: 60149302010)

All reported results confirmed for total vs. dissolved metals (Na)
- FB-FIELD_20130718 (Lab ID: 60149302012)

All reported results confirmed for total vs. dissolved metals (Ni)
- P13-102_20130719 (Lab ID: 60149302014)

This report shall not be reproduced, except in full,
without the written consent of Pace Analytical Services, Inc..

Pace Analytical Services, Inc.
9608 Loiret Blvd.
Lenexa, KS 66219
(913)599-5665

PROJECT NARRATIVE

Project: July 2013 Rico Water Sampling
Pace Project No.: 60149302

Method: **SM 2540C**
Description: 2540C Total Dissolved Solids
Client: BP Anderson Engineering Company Inc.
Date: August 26, 2013

General Information:
19 samples were analyzed for SM 2540C. All samples were received in acceptable condition with any exceptions noted below.

Hold Time:
The samples were analyzed within the method required hold times with any exceptions noted below.

Method Blank:
All analytes were below the report limit in the method blank with any exceptions noted below.

Laboratory Control Spike:
All laboratory control spike compounds were within QC limits with any exceptions noted below.

Matrix Spikes:
All percent recoveries and relative percent differences (RPDs) were within acceptance criteria with any exceptions noted below.

Duplicate Sample:
All duplicate sample results were within method acceptance criteria with any exceptions noted below.

Additional Comments:

Sample Comments:

All reported results confirmed for total vs. dissolved metals (Ni)
- MW-103_20130718 (Lab ID: 60149302002)
- MW-104_20130718 (Lab ID: 60149302003)
- MW-1 DEEP_20130718 (Lab ID: 60149302004)
- MW-3 DEEP_20130718 (Lab ID: 60149302007)
- DR-10_20130718 (Lab ID: 60149302010)

All reported results confirmed for total vs. dissolved metals (Na)
- FB-FIELD_20130718 (Lab ID: 60149302012)

All reported results confirmed for total vs. dissolved metals (Ni)
- P13-102_20130719 (Lab ID: 60149302014)

This report shall not be reproduced, except in full,
without the written consent of Pace Analytical Services, Inc..

Pace Analytical Services, Inc.
9608 Loiret Blvd.
Lenexa, KS 66219
(913)599-5665

PROJECT NARRATIVE

Project: July 2013 Rico Water Sampling
Pace Project No.: 60149302

Method: **SM 2540D**
Description: 2540D Total Suspended Solids
Client: BP Anderson Engineering Company Inc.
Date: August 26, 2013

General Information:
19 samples were analyzed for SM 2540D. All samples were received in acceptable condition with any exceptions noted below.

Hold Time:
The samples were analyzed within the method required hold times with any exceptions noted below.

Method Blank:
All analytes were below the report limit in the method blank with any exceptions noted below.

Laboratory Control Spike:
All laboratory control spike compounds were within QC limits with any exceptions noted below.

Matrix Spikes:
All percent recoveries and relative percent differences (RPDs) were within acceptance criteria with any exceptions noted below.

Duplicate Sample:
All duplicate sample results were within method acceptance criteria with any exceptions noted below.

Additional Comments:

Sample Comments:

All reported results confirmed for total vs. dissolved metals (Ni)
- MW-103_20130718 (Lab ID: 60149302002)
- MW-104_20130718 (Lab ID: 60149302003)
- MW-1 DEEP_20130718 (Lab ID: 60149302004)
- MW-3 DEEP_20130718 (Lab ID: 60149302007)
- DR-10_20130718 (Lab ID: 60149302010)

All reported results confirmed for total vs. dissolved metals (Na)
- FB-FIELD_20130718 (Lab ID: 60149302012)

All reported results confirmed for total vs. dissolved metals (Ni)
- P13-102_20130719 (Lab ID: 60149302014)

This report shall not be reproduced, except in full,
without the written consent of Pace Analytical Services, Inc..

Pace Analytical Services, Inc.
9608 Loiret Blvd.
Lenexa, KS 66219
(913)599-5665

PROJECT NARRATIVE

Project: July 2013 Rico Water Sampling
Pace Project No.: 60149302

Method: **SM 4500-S-2 D**
Description: 4500S2D Sulfide, Total
Client: BP Anderson Engineering Company Inc.
Date: August 26, 2013

General Information:
19 samples were analyzed for SM 4500-S-2 D. All samples were received in acceptable condition with any exceptions noted below.

Hold Time:
The samples were analyzed within the method required hold times with any exceptions noted below.

Method Blank:
All analytes were below the report limit in the method blank with any exceptions noted below.

Laboratory Control Spike:
All laboratory control spike compounds were within QC limits with any exceptions noted below.

Matrix Spikes:
All percent recoveries and relative percent differences (RPDs) were within acceptance criteria with any exceptions noted below.

QC Batch: WET/42548

A matrix spike and matrix spike duplicate (MS/MSD) were performed on the following sample(s): 60149302001

M1: Matrix spike recovery exceeded QC limits. Batch accepted based on laboratory control sample (LCS) recovery.

- MS (Lab ID: 1225754)
  - Sulfide, Total

Duplicate Sample:
All duplicate sample results were within method acceptance criteria with any exceptions noted below.

Additional Comments:

Sample Comments:

All reported results confirmed for total vs. dissolved metals (Ni)
- MW-103_20130718 (Lab ID: 60149302002)
- MW-104_20130718 (Lab ID: 60149302003)
- MW-1 DEEP_20130718 (Lab ID: 60149302004)
- MW-3 DEEP_20130718 (Lab ID: 60149302007)
- DR-10_20130718 (Lab ID: 60149302010)

All reported results confirmed for total vs. dissolved metals (Na)
- FB-FIELD_20130718 (Lab ID: 60149302012)

All reported results confirmed for total vs. dissolved metals (Ni)
- P13-102_20130719 (Lab ID: 60149302014)

This report shall not be reproduced, except in full,
without the written consent of Pace Analytical Services, Inc..

Pace Analytical Services, Inc.
9608 Loiret Blvd.
Lenexa, KS 66219
(913)599-5665

PROJECT NARRATIVE

Project: July 2013 Rico Water Sampling
Pace Project No.: 60149302

Method: **EPA 300.0**
Description: 300.0 IC Anions 28 Days
Client: BP Anderson Engineering Company Inc.
Date: August 26, 2013

General Information:
19 samples were analyzed for EPA 300.0. All samples were received in acceptable condition with any exceptions noted below.

Hold Time:
The samples were analyzed within the method required hold times with any exceptions noted below.

Initial Calibrations (including MS Tune as applicable):
All criteria were within method requirements with any exceptions noted below.

Continuing Calibration:
All criteria were within method requirements with any exceptions noted below.

Method Blank:
All analytes were below the report limit in the method blank with any exceptions noted below.

Laboratory Control Spike:
All laboratory control spike compounds were within QC limits with any exceptions noted below.

Matrix Spikes:
All percent recoveries and relative percent differences (RPDs) were within acceptance criteria with any exceptions noted below.

Additional Comments:

Sample Comments:

All reported results confirmed for total vs. dissolved metals (Ni)
- MW-103_20130718 (Lab ID: 60149302002)
- MW-104_20130718 (Lab ID: 60149302003)
- MW-1 DEEP_20130718 (Lab ID: 60149302004)
- MW-3 DEEP_20130718 (Lab ID: 60149302007)
- DR-10_20130718 (Lab ID: 60149302010)

All reported results confirmed for total vs. dissolved metals (Na)
- FB-FIELD_20130718 (Lab ID: 60149302012)

All reported results confirmed for total vs. dissolved metals (Ni)
- P13-102_20130719 (Lab ID: 60149302014)

This report shall not be reproduced, except in full,
without the written consent of Pace Analytical Services, Inc..

Pace Analytical Services, Inc.
9608 Loiret Blvd.
Lenexa, KS 66219
(913)599-5665

PROJECT NARRATIVE

Project: July 2013 Rico Water Sampling
Pace Project No.: 60149302

Method: **EPA 353.2**
Description: 353.2 Nitrogen, NO2/NO3 pres.
Client: BP Anderson Engineering Company Inc.
Date: August 26, 2013

General Information:
19 samples were analyzed for EPA 353.2. All samples were received in acceptable condition with any exceptions noted below.

Hold Time:
The samples were analyzed within the method required hold times with any exceptions noted below.

Initial Calibrations (including MS Tune as applicable):
All criteria were within method requirements with any exceptions noted below.

Continuing Calibration:
All criteria were within method requirements with any exceptions noted below.

Method Blank:
All analytes were below the report limit in the method blank with any exceptions noted below.

Laboratory Control Spike:
All laboratory control spike compounds were within QC limits with any exceptions noted below.

Matrix Spikes:
All percent recoveries and relative percent differences (RPDs) were within acceptance criteria with any exceptions noted below.

QC Batch: WETA/25544

A matrix spike and matrix spike duplicate (MS/MSD) were performed on the following sample(s): 60149302002,60149302003

M1: Matrix spike recovery exceeded QC limits. Batch accepted based on laboratory control sample (LCS) recovery.

- MS (Lab ID: 1224104)
  - Nitrogen, NO2 plus NO3
- MS (Lab ID: 1224105)
  - Nitrogen, NO2 plus NO3

Additional Comments:

Sample Comments:

All reported results confirmed for total vs. dissolved metals (Ni)
- MW-103_20130718 (Lab ID: 60149302002)
- MW-104_20130718 (Lab ID: 60149302003)
- MW-1 DEEP_20130718 (Lab ID: 60149302004)
- MW-3 DEEP_20130718 (Lab ID: 60149302007)
- DR-10_20130718 (Lab ID: 60149302010)

All reported results confirmed for total vs. dissolved metals (Na)
- FB-FIELD_20130718 (Lab ID: 60149302012)

All reported results confirmed for total vs. dissolved metals (Ni)
- P13-102_20130719 (Lab ID: 60149302014)

This report shall not be reproduced, except in full,
without the written consent of Pace Analytical Services, Inc..

Pace Analytical Services, Inc.
9608 Loiret Blvd.
Lenexa, KS 66219
(913)599-5665

PROJECT NARRATIVE

Project: July 2013 Rico Water Sampling
Pace Project No.: 60149302

Method: **SM 4500-CN-E**
Description: 4500CNE Cyanide, Total
Client: BP Anderson Engineering Company Inc.
Date: August 26, 2013

General Information:
19 samples were analyzed for SM 4500-CN-E. All samples were received in acceptable condition with any exceptions noted below.

Hold Time:
The samples were analyzed within the method required hold times with any exceptions noted below.

Initial Calibrations (including MS Tune as applicable):
All criteria were within method requirements with any exceptions noted below.

Continuing Calibration:
All criteria were within method requirements with any exceptions noted below.

Method Blank:
All analytes were below the report limit in the method blank with any exceptions noted below.

Laboratory Control Spike:
All laboratory control spike compounds were within QC limits with any exceptions noted below.

Matrix Spikes:
All percent recoveries and relative percent differences (RPDs) were within acceptance criteria with any exceptions noted below.

Duplicate Sample:
All duplicate sample results were within method acceptance criteria with any exceptions noted below.

Additional Comments:

Sample Comments:

All reported results confirmed for total vs. dissolved metals (Ni)
- MW-103_20130718 (Lab ID: 60149302002)
- MW-104_20130718 (Lab ID: 60149302003)
- MW-1 DEEP_20130718 (Lab ID: 60149302004)
- MW-3 DEEP_20130718 (Lab ID: 60149302007)
- DR-10_20130718 (Lab ID: 60149302010)

All reported results confirmed for total vs. dissolved metals (Na)
- FB-FIELD_20130718 (Lab ID: 60149302012)

All reported results confirmed for total vs. dissolved metals (Ni)
- P13-102_20130719 (Lab ID: 60149302014)

This report shall not be reproduced, except in full,
without the written consent of Pace Analytical Services, Inc..

Pace Analytical Services, Inc.
9608 Loiret Blvd.
Lenexa, KS 66219
(913)599-5665

PROJECT NARRATIVE

Project: July 2013 Rico Water Sampling
Pace Project No.: 60149302

Method: **SM 5310C**
Description: 5310C TOC
Client: BP Anderson Engineering Company Inc.
Date: August 26, 2013

General Information:
19 samples were analyzed for SM 5310C. All samples were received in acceptable condition with any exceptions noted below.

Hold Time:
The samples were analyzed within the method required hold times with any exceptions noted below.

Initial Calibrations (including MS Tune as applicable):
All criteria were within method requirements with any exceptions noted below.

Continuing Calibration:
All criteria were within method requirements with any exceptions noted below.

Method Blank:
All analytes were below the report limit in the method blank with any exceptions noted below.

Laboratory Control Spike:
All laboratory control spike compounds were within QC limits with any exceptions noted below.

Matrix Spikes:
All percent recoveries and relative percent differences (RPDs) were within acceptance criteria with any exceptions noted below.

Additional Comments:

Sample Comments:

All reported results confirmed for total vs. dissolved metals (Ni)
- MW-103_20130718 (Lab ID: 60149302002)
- MW-104_20130718 (Lab ID: 60149302003)
- MW-1 DEEP_20130718 (Lab ID: 60149302004)
- MW-3 DEEP_20130718 (Lab ID: 60149302007)
- DR-10_20130718 (Lab ID: 60149302010)

All reported results confirmed for total vs. dissolved metals (Na)
- FB-FIELD_20130718 (Lab ID: 60149302012)

All reported results confirmed for total vs. dissolved metals (Ni)
- P13-102_20130719 (Lab ID: 60149302014)

This data package has been reviewed for quality and completeness and is approved for release.

This report shall not be reproduced, except in full,
without the written consent of Pace Analytical Services, Inc..

Pace Analytical Services, Inc.
9608 Loiret Blvd.
Lenexa, KS 66219
(913)599-5665

ANALYTICAL RESULTS

Project: July 2013 Rico Water Sampling
Pace Project No.: 60149302

Sample: GW-4_20130718 **Lab ID: 60149302001** Collected: 07/18/13 11:05 Received: 07/20/13 09:20 Matrix: Water

Parameters	Results	Units	Report Limit	DF	Prepared	Analyzed	CAS No.	Qual
200.7 Potentially Diss. Metals	Analytical Method: EPA 200.7 Preparation Method: EPA 200.7							
Calcium, Dissolved	**136000**	ug/L	100	1	07/23/13 15:00	07/31/13 09:12	7440-70-2	
Magnesium, Dissolved	**15400**	ug/L	50.0	1	07/23/13 15:00	07/31/13 09:12	7439-95-4	
Potassium, Dissolved	**2960**	ug/L	500	1	07/23/13 15:00	07/31/13 09:12	7440-09-7	
Sodium, Dissolved	**6620**	ug/L	500	1	07/23/13 15:00	07/31/13 09:12	7440-23-5	
200.8 MET ICPMS	Analytical Method: EPA 200.8 Preparation Method: EPA 200.8							
Aluminum	**19600**	ug/L	4.0	1	07/25/13 07:54	07/30/13 18:20	7429-90-5	
Antimony	**0.68**	ug/L	0.50	1	07/25/13 07:54	07/30/13 18:20	7440-36-0	
Arsenic	**16.1**	ug/L	0.50	1	07/25/13 07:54	07/30/13 18:20	7440-38-2	
Barium	**395**	ug/L	0.30	1	07/25/13 07:54	07/30/13 18:20	7440-39-3	
Beryllium	**1.3**	ug/L	0.20	1	07/25/13 07:54	07/30/13 18:20	7440-41-7	
Cadmium	**6.1**	ug/L	0.080	1	07/25/13 07:54	07/30/13 18:20	7440-43-9	
Calcium	**137000**	ug/L	400	20	07/25/13 07:54	07/30/13 18:26	7440-70-2	
Chromium	**31.5**	ug/L	0.50	1	07/25/13 07:54	07/30/13 18:20	7440-47-3	
Cobalt	**13.7**	ug/L	0.50	1	07/25/13 07:54	07/30/13 18:20	7440-48-4	
Copper	**84.5**	ug/L	0.50	1	07/25/13 07:54	07/30/13 18:20	7440-50-8	
Iron	**43900**	ug/L	1000	20	07/25/13 07:54	07/30/13 18:26	7439-89-6	
Lead	**87.9**	ug/L	0.10	1	07/25/13 07:54	07/31/13 09:53	7439-92-1	
Magnesium	**27200**	ug/L	100	20	07/25/13 07:54	07/30/13 18:26	7439-95-4	
Manganese	**2020**	ug/L	10.0	20	07/25/13 07:54	07/30/13 18:26	7439-96-5	
Molybdenum	**18.8**	ug/L	0.50	1	07/25/13 07:54	07/30/13 18:20	7439-98-7	
Nickel	**22.9**	ug/L	0.50	1	07/25/13 07:54	07/30/13 18:20	7440-02-0	
Potassium	**5910**	ug/L	20.0	1	07/25/13 07:54	07/30/13 18:20	7440-09-7	
Selenium	**2.3**	ug/L	0.50	1	07/25/13 07:54	07/30/13 18:20	7782-49-2	
Silica	**70200**	ug/L	1070	20	07/25/13 07:54	07/30/13 18:26	7631-86-9	
Silver	**0.90**	ug/L	0.50	1	07/25/13 07:54	07/30/13 18:20	7440-22-4	
Sodium	**7070**	ug/L	50.0	1	07/25/13 07:54	07/30/13 18:20	7440-23-5	
Thallium	**0.42**	ug/L	0.10	1	07/25/13 07:54	07/31/13 09:53	7440-28-0	
Total Hardness by 2340B	**455000**	ug/L	1420	20	07/25/13 07:54	07/30/13 18:26		
Vanadium	**45.2**	ug/L	0.10	1	07/25/13 07:54	07/30/13 18:20	7440-62-2	
Zinc	**640**	ug/L	100	20	07/25/13 07:54	07/30/13 18:26	7440-66-6	
200.8 MET ICPMS, Dissolved	Analytical Method: EPA 200.8 Preparation Method: EPA 200.8							
Aluminum, Dissolved	**90.0**	ug/L	4.0	1	08/07/13 15:42	08/08/13 13:25	7429-90-5	
Antimony, Dissolved	ND	ug/L	0.50	1	08/07/13 15:42	08/08/13 13:25	7440-36-0	
Arsenic, Dissolved	**0.73**	ug/L	0.50	1	08/07/13 15:42	08/08/13 13:25	7440-38-2	
Barium, Dissolved	**40.9**	ug/L	0.30	1	08/07/13 15:42	08/08/13 13:25	7440-39-3	
Beryllium, Dissolved	ND	ug/L	0.20	1	08/07/13 15:42	08/08/13 13:25	7440-41-7	
Cadmium, Dissolved	**0.17**	ug/L	0.080	1	08/07/13 15:42	08/08/13 13:25	7440-43-9	
Calcium, Dissolved	**135000**	ug/L	400	20	08/07/13 15:42	08/08/13 13:30	7440-70-2	
Chromium, Dissolved	ND	ug/L	0.50	1	08/07/13 15:42	08/08/13 13:25	7440-47-3	
Cobalt, Dissolved	**0.76**	ug/L	0.50	1	08/07/13 15:42	08/08/13 13:25	7440-48-4	
Copper, Dissolved	**1.9**	ug/L	0.50	1	08/07/13 15:42	08/08/13 13:25	7440-50-8	
Iron, Dissolved	**176**	ug/L	50.0	1	08/07/13 15:42	08/08/13 13:25	7439-89-6	
Lead, Dissolved	**0.46**	ug/L	0.10	1	08/07/13 15:42	08/08/13 13:25	7439-92-1	
Magnesium, Dissolved	**14800**	ug/L	5.0	1	08/07/13 15:42	08/08/13 13:25	7439-95-4	

This report shall not be reproduced, except in full,
without the written consent of Pace Analytical Services, Inc..

Pace Analytical Services, Inc.
9608 Loiret Blvd.
Lenexa, KS 66219
(913)599-5665

ANALYTICAL RESULTS

Project: July 2013 Rico Water Sampling
Pace Project No.: 60149302

Sample: GW-4_20130718 **Lab ID: 60149302001** Collected: 07/18/13 11:05 Received: 07/20/13 09:20 Matrix: Water

Parameters	Results	Units	Report Limit	DF	Prepared	Analyzed	CAS No.	Qual
200.8 MET ICPMS, Dissolved	Analytical Method: EPA 200.8 Preparation Method: EPA 200.8							
Manganese, Dissolved	**328**	ug/L	0.50	1	08/07/13 15:42	08/08/13 13:25	7439-96-5	
Molybdenum, Dissolved	**9.7**	ug/L	0.50	1	08/07/13 15:42	08/08/13 13:25	7439-98-7	
Nickel, Dissolved	**5.2**	ug/L	0.50	1	08/07/13 15:42	08/08/13 13:25	7440-02-0	
Potassium, Dissolved	**2730**	ug/L	20.0	1	08/07/13 15:42	08/08/13 13:25	7440-09-7	
Selenium, Dissolved	ND	ug/L	0.50	1	08/07/13 15:42	08/08/13 13:25	7782-49-2	
Silver, Dissolved	ND	ug/L	0.50	1	08/07/13 15:42	08/08/13 13:25	7440-22-4	
Sodium, Dissolved	**6940**	ug/L	50.0	1	08/07/13 15:42	08/08/13 13:25	7440-23-5	
Thallium, Dissolved	ND	ug/L	0.10	1	08/07/13 15:42	08/08/13 13:25	7440-28-0	
Vanadium, Dissolved	**0.29**	ug/L	0.10	1	08/07/13 15:42	08/08/13 13:25	7440-62-2	
Zinc, Dissolved	**25.7**	ug/L	5.0	1	08/07/13 15:42	08/08/13 13:25	7440-66-6	
200.8 Potentially Diss. Metals	Analytical Method: EPA 200.8 Preparation Method: EPA 200.8							
Aluminum, Dissolved	**3680**	ug/L	50.0	1	07/23/13 15:00	08/15/13 23:21	7429-90-5	
Antimony, Dissolved	**0.19J**	ug/L	1.0	1	07/23/13 15:00	08/15/13 23:21	7440-36-0	
Arsenic, Dissolved	**5.7**	ug/L	1.0	1	07/23/13 15:00	08/15/13 23:21	7440-38-2	
Barium, Dissolved	**98.9**	ug/L	1.0	1	07/23/13 15:00	08/15/13 23:21	7440-39-3	
Beryllium, Dissolved	**0.84**	ug/L	0.50	1	07/23/13 15:00	08/15/13 23:21	7440-41-7	
Cadmium, Dissolved	**5.9**	ug/L	0.50	1	07/23/13 15:00	08/15/13 23:21	7440-43-9	
Chromium, Dissolved	**8.7**	ug/L	1.0	1	07/23/13 15:00	08/15/13 23:21	7440-47-3	
Cobalt, Dissolved	**7.8**	ug/L	1.0	1	07/23/13 15:00	08/15/13 23:21	7440-48-4	
Copper, Dissolved	**69.9**	ug/L	1.0	1	07/23/13 15:00	08/15/13 23:21	7440-50-8	
Iron, Dissolved	**16400**	ug/L	50.0	1	07/23/13 15:00	08/15/13 23:21	7439-89-6	
Lead, Dissolved	**87.0**	ug/L	1.0	1	07/23/13 15:00	08/15/13 23:21	7439-92-1	
Manganese, Dissolved	**1840**	ug/L	1.0	1	07/23/13 15:00	08/15/13 23:21	7439-96-5	
Molybdenum, Dissolved	**6.8**	ug/L	1.0	1	07/23/13 15:00	08/15/13 23:21	7439-98-7	
Nickel, Dissolved	**9.7**	ug/L	1.0	1	07/23/13 15:00	08/15/13 23:21	7440-02-0	
Selenium, Dissolved	**1.7**	ug/L	1.0	1	07/23/13 15:00	08/15/13 23:21	7782-49-2	
Silver, Dissolved	**0.075J**	ug/L	0.50	1	07/23/13 15:00	08/15/13 23:21	7440-22-4	
Thallium, Dissolved	**0.42J**	ug/L	1.0	1	07/23/13 15:00	08/15/13 23:21	7440-28-0	B
Vanadium, Dissolved	**10.2**	ug/L	1.0	1	07/23/13 15:00	08/15/13 23:21	7440-62-2	
Zinc, Dissolved	**452**	ug/L	10.0	1	07/23/13 15:00	08/15/13 23:21	7440-66-6	
245.1 Mercury	Analytical Method: EPA 245.1 Preparation Method: EPA 245.1							
Mercury	ND	ug/L	0.20	1	07/30/13 09:46	08/01/13 11:44	7439-97-6	
245.1 Mercury, Dissolved	Analytical Method: EPA 245.1 Preparation Method: EPA 245.1							
Mercury, Dissolved	ND	ug/L	0.20	1	07/29/13 09:32	08/01/13 13:05	7439-97-6	
245.1 Potentially Diss Mercury	Analytical Method: EPA 245.1 Preparation Method: EPA 245.1							
Mercury, Dissolved	ND	ug/L	0.20	1	07/22/13 14:30	07/23/13 10:54	7439-97-6	
2510B Specific Conductance	Analytical Method: SM 2510B							
Specific Conductance	**1500**	umhos/cm	10.0	1		08/01/13 17:37		
Salinity	Analytical Method: Calculated							
Salinity (as dissolved solids)	**962**	mg/L	6.4	1		08/01/13 17:37		

REPORT OF LABORATORY ANALYSIS

This report shall not be reproduced, except in full,
without the written consent of Pace Analytical Services, Inc..

Pace Analytical Services, Inc.
9608 Loiret Blvd.
Lenexa, KS 66219
(913)599-5665

ANALYTICAL RESULTS

Project: July 2013 Rico Water Sampling
Pace Project No.: 60149302

Sample: GW-4_20130718 **Lab ID: 60149302001** Collected: 07/18/13 11:05 Received: 07/20/13 09:20 Matrix: Water

Parameters	Results	Units	Report Limit	DF	Prepared	Analyzed	CAS No.	Qual
Salinity	Analytical Method: Calculated							
Salinity (as seawater)	**0.75**	PSU	0.014	1		08/01/13 17:37		
2320B Alkalinity	Analytical Method: SM 2320B							
Alkalinity,Bicarbonate (CaCO3)	**168**	mg/L	20.0	1		07/23/13 09:15		
Alkalinity, Carbonate (CaCO3)	ND	mg/L	20.0	1		07/23/13 09:15		
Alkalinity, Total as CaCO3	**168**	mg/L	20.0	1		07/23/13 09:15		
2540C Total Dissolved Solids	Analytical Method: SM 2540C							
Total Dissolved Solids	**481**	mg/L	5.0	1		07/23/13 15:41		
2540D Total Suspended Solids	Analytical Method: SM 2540D							
Total Suspended Solids	**592**	mg/L	5.0	1		07/22/13 12:50		
4500S2D Sulfide, Total	Analytical Method: SM 4500-S-2 D							
Sulfide, Total	ND	mg/L	0.050	1		07/25/13 14:08	18496-25-8	M1
300.0 IC Anions 28 Days	Analytical Method: EPA 300.0							
Chloride	**1.9**	mg/L	1.0	1		07/31/13 17:21	16887-00-6	
Sulfate	**219**	mg/L	20.0	20		08/01/13 17:15	14808-79-8	
353.2 Nitrogen, NO2/NO3 pres.	Analytical Method: EPA 353.2							
Nitrogen, NO2 plus NO3	ND	mg/L	0.10	1		07/24/13 09:21		
4500CNE Cyanide, Total	Analytical Method: SM 4500-CN-E							
Cyanide	ND	mg/L	0.0050	1		07/24/13 17:44	57-12-5	
5310C TOC	Analytical Method: SM 5310C							
Total Organic Carbon	**1.4**	mg/L	0.50	1		07/29/13 20:42	7440-44-0	

This report shall not be reproduced, except in full,
without the written consent of Pace Analytical Services, Inc..

Pace Analytical Services, Inc.
9608 Loiret Blvd.
Lenexa, KS 66219
(913)599-5665

ANALYTICAL RESULTS

Project: July 2013 Rico Water Sampling
Pace Project No.: 60149302

Sample: MW-103_20130718 **Lab ID: 60149302002** Collected: 07/18/13 13:52 Received: 07/20/13 09:20 Matrix: Water

Comments: • All reported results confirmed for total vs. dissolved metals (Ni)

Parameters	Results	Units	Report Limit	DF	Prepared	Analyzed	CAS No.	Qual
200.7 Potentially Diss. Metals	Analytical Method: EPA 200.7 Preparation Method: EPA 200.7							
Calcium, Dissolved	**318000**	ug/L	100	1	07/23/13 15:00	07/31/13 09:15	7440-70-2	
Magnesium, Dissolved	**32600**	ug/L	50.0	1	07/23/13 15:00	07/31/13 09:15	7439-95-4	
Potassium, Dissolved	**5550**	ug/L	500	1	07/23/13 15:00	07/31/13 09:15	7440-09-7	
Sodium, Dissolved	**15900**	ug/L	500	1	07/23/13 15:00	07/31/13 09:15	7440-23-5	
200.8 MET ICPMS	Analytical Method: EPA 200.8 Preparation Method: EPA 200.8							
Aluminum	**1960**	ug/L	4.0	1	07/25/13 07:54	07/30/13 18:32	7429-90-5	
Antimony	ND	ug/L	0.50	1	07/25/13 07:54	07/30/13 18:32	7440-36-0	
Arsenic	**10.3**	ug/L	0.50	1	07/25/13 07:54	07/30/13 18:32	7440-38-2	
Barium	**59.5**	ug/L	0.30	1	07/25/13 07:54	07/30/13 18:32	7440-39-3	
Beryllium	**0.74**	ug/L	0.20	1	07/25/13 07:54	07/30/13 18:32	7440-41-7	
Cadmium	**1.4**	ug/L	0.080	1	07/25/13 07:54	07/30/13 18:32	7440-43-9	
Calcium	**306000**	ug/L	400	20	07/25/13 07:54	07/30/13 18:37	7440-70-2	
Chromium	**2.2**	ug/L	0.50	1	07/25/13 07:54	07/30/13 18:32	7440-47-3	
Cobalt	**4.3**	ug/L	0.50	1	07/25/13 07:54	07/30/13 18:32	7440-48-4	
Copper	**6.9**	ug/L	0.50	1	07/25/13 07:54	07/30/13 18:32	7440-50-8	
Iron	**11600**	ug/L	50.0	1	07/25/13 07:54	07/30/13 18:32	7439-89-6	
Lead	**7.6**	ug/L	0.10	1	07/25/13 07:54	07/30/13 18:32	7439-92-1	
Magnesium	**34200**	ug/L	100	20	07/25/13 07:54	07/30/13 18:37	7439-95-4	
Manganese	**8490**	ug/L	10.0	20	07/25/13 07:54	07/30/13 18:37	7439-96-5	
Molybdenum	**11.1**	ug/L	0.50	1	07/25/13 07:54	07/30/13 18:32	7439-98-7	
Nickel	**3.2**	ug/L	0.50	1	07/25/13 07:54	07/30/13 18:32	7440-02-0	
Potassium	**5720**	ug/L	20.0	1	07/25/13 07:54	07/30/13 18:32	7440-09-7	
Selenium	ND	ug/L	0.50	1	07/25/13 07:54	07/30/13 18:32	7782-49-2	
Silica	**36200**	ug/L	1070	20	07/25/13 07:54	07/30/13 18:37	7631-86-9	
Silver	ND	ug/L	0.50	1	07/25/13 07:54	07/30/13 18:32	7440-22-4	
Sodium	**14700**	ug/L	50.0	1	07/25/13 07:54	07/30/13 18:32	7440-23-5	
Thallium	**0.18**	ug/L	0.10	1	07/25/13 07:54	07/30/13 18:32	7440-28-0	
Total Hardness by 2340B	**904000**	ug/L	1420	20	07/25/13 07:54	07/30/13 18:37		
Vanadium	**3.8**	ug/L	0.10	1	07/25/13 07:54	07/30/13 18:32	7440-62-2	
Zinc	**151**	ug/L	5.0	1	07/25/13 07:54	07/30/13 18:32	7440-66-6	
200.8 MET ICPMS, Dissolved	Analytical Method: EPA 200.8 Preparation Method: EPA 200.8							
Aluminum, Dissolved	**20.9**	ug/L	4.0	1	08/07/13 15:42	08/08/13 13:35	7429-90-5	
Antimony, Dissolved	ND	ug/L	0.50	1	08/07/13 15:42	08/08/13 13:35	7440-36-0	
Arsenic, Dissolved	**3.6**	ug/L	0.50	1	08/07/13 15:42	08/08/13 13:35	7440-38-2	
Barium, Dissolved	**39.8**	ug/L	0.30	1	08/07/13 15:42	08/08/13 13:35	7440-39-3	
Beryllium, Dissolved	**0.41**	ug/L	0.20	1	08/07/13 15:42	08/08/13 13:35	7440-41-7	
Cadmium, Dissolved	**0.18**	ug/L	0.080	1	08/07/13 15:42	08/08/13 13:35	7440-43-9	
Calcium, Dissolved	**324000**	ug/L	400	20	08/07/13 15:42	08/08/13 13:40	7440-70-2	
Chromium, Dissolved	ND	ug/L	0.50	1	08/07/13 15:42	08/08/13 13:35	7440-47-3	
Cobalt, Dissolved	**3.7**	ug/L	0.50	1	08/07/13 15:42	08/08/13 13:35	7440-48-4	
Copper, Dissolved	**1.3**	ug/L	0.50	1	08/07/13 15:42	08/08/13 13:35	7440-50-8	
Iron, Dissolved	**6840**	ug/L	50.0	1	08/07/13 15:42	08/08/13 13:35	7439-89-6	
Lead, Dissolved	ND	ug/L	0.10	1	08/07/13 15:42	08/08/13 13:35	7439-92-1	

This report shall not be reproduced, except in full,
without the written consent of Pace Analytical Services, Inc..

Pace Analytical Services, Inc.
9608 Loiret Blvd.
Lenexa, KS 66219
(913)599-5665

ANALYTICAL RESULTS

Project: July 2013 Rico Water Sampling
Pace Project No.: 60149302

Sample: MW-103_20130718 **Lab ID: 60149302002** Collected: 07/18/13 13:52 Received: 07/20/13 09:20 Matrix: Water

Comments: • All reported results confirmed for total vs. dissolved metals (Ni)

Parameters	Results	Units	Report Limit	DF	Prepared	Analyzed	CAS No.	Qual
200.8 MET ICPMS, Dissolved	Analytical Method: EPA 200.8		Preparation Method: EPA 200.8					
Magnesium, Dissolved	**34600**	ug/L	100	20	08/07/13 15:42	08/08/13 13:40	7439-95-4	
Manganese, Dissolved	**8300**	ug/L	10.0	20	08/07/13 15:42	08/08/13 13:40	7439-96-5	
Molybdenum, Dissolved	**10.9**	ug/L	0.50	1	08/07/13 15:42	08/08/13 13:35	7439-98-7	
Nickel, Dissolved	**5.4**	ug/L	0.50	1	08/07/13 15:42	08/08/13 13:35	7440-02-0	
Potassium, Dissolved	**5670**	ug/L	20.0	1	08/07/13 15:42	08/08/13 13:35	7440-09-7	
Selenium, Dissolved	ND	ug/L	0.50	1	08/07/13 15:42	08/08/13 13:35	7782-49-2	
Silver, Dissolved	ND	ug/L	0.50	1	08/07/13 15:42	08/08/13 13:35	7440-22-4	
Sodium, Dissolved	**15900**	ug/L	50.0	1	08/07/13 15:42	08/08/13 13:35	7440-23-5	
Thallium, Dissolved	ND	ug/L	0.10	1	08/07/13 15:42	08/08/13 13:35	7440-28-0	
Vanadium, Dissolved	ND	ug/L	0.10	1	08/07/13 15:42	08/08/13 13:35	7440-62-2	
Zinc, Dissolved	**98.9**	ug/L	5.0	1	08/07/13 15:42	08/08/13 13:35	7440-66-6	
200.8 Potentially Diss. Metals	Analytical Method: EPA 200.8		Preparation Method: EPA 200.8					
Aluminum, Dissolved	**419**	ug/L	50.0	1	07/23/13 15:00	08/15/13 23:25	7429-90-5	
Antimony, Dissolved	**0.065J**	ug/L	1.0	1	07/23/13 15:00	08/15/13 23:25	7440-36-0	
Arsenic, Dissolved	**5.3**	ug/L	1.0	1	07/23/13 15:00	08/15/13 23:25	7440-38-2	
Barium, Dissolved	**40.0**	ug/L	1.0	1	07/23/13 15:00	08/15/13 23:25	7440-39-3	
Beryllium, Dissolved	**0.66**	ug/L	0.50	1	07/23/13 15:00	08/15/13 23:25	7440-41-7	
Cadmium, Dissolved	**1.1**	ug/L	0.50	1	07/23/13 15:00	08/15/13 23:25	7440-43-9	
Chromium, Dissolved	**1.5**	ug/L	1.0	1	07/23/13 15:00	08/15/13 23:25	7440-47-3	B
Cobalt, Dissolved	**3.6**	ug/L	1.0	1	07/23/13 15:00	08/15/13 23:25	7440-48-4	
Copper, Dissolved	**4.8**	ug/L	1.0	1	07/23/13 15:00	08/15/13 23:25	7440-50-8	
Iron, Dissolved	**8740**	ug/L	50.0	1	07/23/13 15:00	08/15/13 23:25	7439-89-6	
Lead, Dissolved	**5.5**	ug/L	1.0	1	07/23/13 15:00	08/15/13 23:25	7439-92-1	
Manganese, Dissolved	**8230**	ug/L	5.0	5	07/23/13 15:00	08/16/13 01:12	7439-96-5	
Molybdenum, Dissolved	**8.2**	ug/L	1.0	1	07/23/13 15:00	08/15/13 23:25	7439-98-7	
Nickel, Dissolved	**2.9**	ug/L	1.0	1	07/23/13 15:00	08/15/13 23:25	7440-02-0	
Selenium, Dissolved	**0.23J**	ug/L	1.0	1	07/23/13 15:00	08/15/13 23:25	7782-49-2	
Silver, Dissolved	**0.013J**	ug/L	0.50	1	07/23/13 15:00	08/15/13 23:25	7440-22-4	
Thallium, Dissolved	**0.38J**	ug/L	1.0	1	07/23/13 15:00	08/15/13 23:25	7440-28-0	B
Vanadium, Dissolved	**0.90J**	ug/L	1.0	1	07/23/13 15:00	08/15/13 23:25	7440-62-2	
Zinc, Dissolved	**133**	ug/L	10.0	1	07/23/13 15:00	08/15/13 23:25	7440-66-6	
245.1 Mercury	Analytical Method: EPA 245.1		Preparation Method: EPA 245.1					
Mercury	ND	ug/L	0.20	1	07/30/13 09:46	08/01/13 11:51	7439-97-6	
245.1 Mercury, Dissolved	Analytical Method: EPA 245.1		Preparation Method: EPA 245.1					
Mercury, Dissolved	ND	ug/L	0.20	1	07/29/13 09:32	08/01/13 13:12	7439-97-6	
245.1 Potentially Diss Mercury	Analytical Method: EPA 245.1		Preparation Method: EPA 245.1					
Mercury, Dissolved	ND	ug/L	0.20	1	07/22/13 14:30	07/23/13 11:01	7439-97-6	
2510B Specific Conductance	Analytical Method: SM 2510B							
Specific Conductance	**1480**	umhos/cm	10.0	1		08/01/13 17:38		

This report shall not be reproduced, except in full,
without the written consent of Pace Analytical Services, Inc..

Pace Analytical Services, Inc.
9608 Loiret Blvd.
Lenexa, KS 66219
(913)599-5665

ANALYTICAL RESULTS

Project: July 2013 Rico Water Sampling
Pace Project No.: 60149302

Sample: MW-103_20130718 **Lab ID: 60149302002** Collected: 07/18/13 13:52 Received: 07/20/13 09:20 Matrix: Water

Comments: • All reported results confirmed for total vs. dissolved metals (Ni)

Parameters	Results	Units	Report Limit	DF	Prepared	Analyzed	CAS No.	Qual
Salinity	Analytical Method: Calculated							
Salinity (as dissolved solids)	**950**	mg/L	6.4	1		08/01/13 17:38		
Salinity (as seawater)	**0.74**	PSU	0.014	1		08/01/13 17:38		
2320B Alkalinity	Analytical Method: SM 2320B							
Alkalinity,Bicarbonate (CaCO3)	**339**	mg/L	20.0	1		07/23/13 09:20		
Alkalinity, Carbonate (CaCO3)	ND	mg/L	20.0	1		07/23/13 09:20		
Alkalinity, Total as CaCO3	**339**	mg/L	20.0	1		07/23/13 09:20		
2540C Total Dissolved Solids	Analytical Method: SM 2540C							
Total Dissolved Solids	**1260**	mg/L	5.0	1		07/23/13 15:42		
2540D Total Suspended Solids	Analytical Method: SM 2540D							
Total Suspended Solids	**120**	mg/L	5.0	1		07/23/13 08:18		
4500S2D Sulfide, Total	Analytical Method: SM 4500-S-2 D							
Sulfide, Total	ND	mg/L	0.050	1		07/25/13 14:11	18496-25-8	
300.0 IC Anions 28 Days	Analytical Method: EPA 300.0							
Chloride	ND	mg/L	1.0	1		07/31/13 18:14	16887-00-6	
Sulfate	**613**	mg/L	100	100		08/01/13 18:44	14808-79-8	
353.2 Nitrogen, NO2/NO3 pres.	Analytical Method: EPA 353.2							
Nitrogen, NO2 plus NO3	ND	mg/L	0.10	1		07/24/13 09:24		M1
4500CNE Cyanide, Total	Analytical Method: SM 4500-CN-E							
Cyanide	ND	mg/L	0.0050	1		07/24/13 17:47	57-12-5	
5310C TOC	Analytical Method: SM 5310C							
Total Organic Carbon	**0.70**	mg/L	0.50	1		07/29/13 21:55	7440-44-0	

This report shall not be reproduced, except in full,
without the written consent of Pace Analytical Services, Inc..

Pace Analytical Services, Inc.
9608 Loiret Blvd.
Lenexa, KS 66219
(913)599-5665

ANALYTICAL RESULTS

Project: July 2013 Rico Water Sampling
Pace Project No.: 60149302

Sample: MW-104_20130718 **Lab ID: 60149302003** Collected: 07/18/13 13:16 Received: 07/20/13 09:20 Matrix: Water

Comments: • All reported results confirmed for total vs. dissolved metals (Ni)

Parameters	Results	Units	Report Limit	DF	Prepared	Analyzed	CAS No.	Qual
200.7 Potentially Diss. Metals	Analytical Method: EPA 200.7	Preparation Method: EPA 200.7						
Calcium, Dissolved	**235000**	ug/L	100	1	07/23/13 15:00	07/31/13 09:18	7440-70-2	M1
Magnesium, Dissolved	**20200**	ug/L	50.0	1	07/23/13 15:00	07/31/13 09:18	7439-95-4	
Potassium, Dissolved	**6420**	ug/L	500	1	07/23/13 15:00	07/31/13 09:18	7440-09-7	
Sodium, Dissolved	**24900**	ug/L	500	1	07/23/13 15:00	07/31/13 09:18	7440-23-5	
200.8 MET ICPMS	Analytical Method: EPA 200.8	Preparation Method: EPA 200.8						
Aluminum	**1230**	ug/L	4.0	1	07/25/13 07:54	07/30/13 18:42	7429-90-5	
Antimony	ND	ug/L	0.50	1	07/25/13 07:54	07/30/13 18:42	7440-36-0	
Arsenic	**1.5**	ug/L	0.50	1	07/25/13 07:54	07/30/13 18:42	7440-38-2	
Barium	**52.6**	ug/L	0.30	1	07/25/13 07:54	07/30/13 18:42	7440-39-3	
Beryllium	ND	ug/L	0.20	1	07/25/13 07:54	07/30/13 18:42	7440-41-7	
Cadmium	**3.2**	ug/L	0.080	1	07/25/13 07:54	07/30/13 18:42	7440-43-9	
Calcium	**231000**	ug/L	400	20	07/25/13 07:54	07/30/13 18:48	7440-70-2	
Chromium	**2.3**	ug/L	0.50	1	07/25/13 07:54	07/30/13 18:42	7440-47-3	
Cobalt	**1.0**	ug/L	0.50	1	07/25/13 07:54	07/30/13 18:42	7440-48-4	
Copper	**7.5**	ug/L	0.50	1	07/25/13 07:54	07/30/13 18:42	7440-50-8	
Iron	**2100**	ug/L	50.0	1	07/25/13 07:54	07/30/13 18:42	7439-89-6	
Lead	**12.3**	ug/L	0.10	1	07/25/13 07:54	07/30/13 18:42	7439-92-1	
Magnesium	**21300**	ug/L	5.0	1	07/25/13 07:54	07/30/13 18:42	7439-95-4	
Manganese	**546**	ug/L	10.0	20	07/25/13 07:54	07/30/13 18:48	7439-96-5	
Molybdenum	**13.7**	ug/L	0.50	1	07/25/13 07:54	07/30/13 18:42	7439-98-7	
Nickel	**2.1**	ug/L	0.50	1	07/25/13 07:54	07/30/13 18:42	7440-02-0	
Potassium	**6630**	ug/L	20.0	1	07/25/13 07:54	07/30/13 18:42	7440-09-7	
Selenium	**1.3**	ug/L	0.50	1	07/25/13 07:54	07/30/13 18:42	7782-49-2	
Silica	**22100**	ug/L	1070	20	07/25/13 07:54	07/30/13 18:48	7631-86-9	
Silver	ND	ug/L	0.50	1	07/25/13 07:54	07/30/13 18:42	7440-22-4	
Sodium	**23300**	ug/L	1000	20	07/25/13 07:54	07/30/13 18:48	7440-23-5	
Thallium	ND	ug/L	0.10	1	07/25/13 07:54	07/30/13 18:42	7440-28-0	
Total Hardness by 2340B	**664000**	ug/L	1420	20	07/25/13 07:54	07/30/13 18:48		
Vanadium	**2.7**	ug/L	0.10	1	07/25/13 07:54	07/30/13 18:42	7440-62-2	
Zinc	**778**	ug/L	100	20	07/25/13 07:54	07/30/13 18:48	7440-66-6	
200.8 MET ICPMS, Dissolved	Analytical Method: EPA 200.8	Preparation Method: EPA 200.8						
Aluminum, Dissolved	**4.5**	ug/L	4.0	1	08/07/13 15:42	08/08/13 13:45	7429-90-5	
Antimony, Dissolved	ND	ug/L	0.50	1	08/07/13 15:42	08/08/13 13:45	7440-36-0	
Arsenic, Dissolved	ND	ug/L	0.50	1	08/07/13 15:42	08/08/13 13:45	7440-38-2	
Barium, Dissolved	**20.3**	ug/L	0.30	1	08/07/13 15:42	08/08/13 13:45	7440-39-3	
Beryllium, Dissolved	ND	ug/L	0.20	1	08/07/13 15:42	08/08/13 13:45	7440-41-7	
Cadmium, Dissolved	**2.6**	ug/L	0.080	1	08/07/13 15:42	08/08/13 13:45	7440-43-9	
Calcium, Dissolved	**259000**	ug/L	400	20	08/07/13 15:42	08/08/13 13:50	7440-70-2	
Chromium, Dissolved	ND	ug/L	0.50	1	08/07/13 15:42	08/08/13 13:45	7440-47-3	
Cobalt, Dissolved	ND	ug/L	0.50	1	08/07/13 15:42	08/08/13 13:45	7440-48-4	
Copper, Dissolved	**2.0**	ug/L	0.50	1	08/07/13 15:42	08/08/13 13:45	7440-50-8	
Iron, Dissolved	ND	ug/L	50.0	1	08/07/13 15:42	08/08/13 13:45	7439-89-6	
Lead, Dissolved	**0.14**	ug/L	0.10	1	08/07/13 15:42	08/08/13 13:45	7439-92-1	

This report shall not be reproduced, except in full,
without the written consent of Pace Analytical Services, Inc..

Pace Analytical Services, Inc.
9608 Loiret Blvd.
Lenexa, KS 66219
(913)599-5665

ANALYTICAL RESULTS

Project: July 2013 Rico Water Sampling
Pace Project No.: 60149302

Sample: MW-104_20130718 **Lab ID: 60149302003** Collected: 07/18/13 13:16 Received: 07/20/13 09:20 Matrix: Water

Comments: • All reported results confirmed for total vs. dissolved metals (Ni)

Parameters	Results	Units	Report Limit	DF	Prepared	Analyzed	CAS No.	Qual
200.8 MET ICPMS, Dissolved	Analytical Method: EPA 200.8		Preparation Method: EPA 200.8					
Magnesium, Dissolved	**23400**	ug/L	100	20	08/07/13 15:42	08/08/13 13:50	7439-95-4	
Manganese, Dissolved	**28.7**	ug/L	0.50	1	08/07/13 15:42	08/08/13 13:45	7439-96-5	
Molybdenum, Dissolved	**13.0**	ug/L	0.50	1	08/07/13 15:42	08/08/13 13:45	7439-98-7	
Nickel, Dissolved	**4.8**	ug/L	0.50	1	08/07/13 15:42	08/08/13 13:45	7440-02-0	
Potassium, Dissolved	**7030**	ug/L	20.0	1	08/07/13 15:42	08/08/13 13:45	7440-09-7	
Selenium, Dissolved	**1.3**	ug/L	0.50	1	08/07/13 15:42	08/08/13 13:45	7782-49-2	
Silver, Dissolved	ND	ug/L	0.50	1	08/07/13 15:42	08/08/13 13:45	7440-22-4	
Sodium, Dissolved	**26000**	ug/L	1000	20	08/07/13 15:42	08/08/13 13:50	7440-23-5	
Thallium, Dissolved	ND	ug/L	0.10	1	08/07/13 15:42	08/08/13 13:45	7440-28-0	
Vanadium, Dissolved	ND	ug/L	0.10	1	08/07/13 15:42	08/08/13 13:45	7440-62-2	
Zinc, Dissolved	**654**	ug/L	100	20	08/07/13 15:42	08/08/13 13:50	7440-66-6	
200.8 Potentially Diss. Metals	Analytical Method: EPA 200.8		Preparation Method: EPA 200.8					
Aluminum, Dissolved	**359**	ug/L	50.0	1	07/23/13 15:00	08/15/13 23:29	7429-90-5	
Antimony, Dissolved	**0.12J**	ug/L	1.0	1	07/23/13 15:00	08/15/13 23:29	7440-36-0	
Arsenic, Dissolved	**0.56J**	ug/L	1.0	1	07/23/13 15:00	08/15/13 23:29	7440-38-2	
Barium, Dissolved	**29.5**	ug/L	1.0	1	07/23/13 15:00	08/15/13 23:29	7440-39-3	
Beryllium, Dissolved	ND	ug/L	0.50	1	07/23/13 15:00	08/15/13 23:29	7440-41-7	
Cadmium, Dissolved	**2.9**	ug/L	0.50	1	07/23/13 15:00	08/15/13 23:29	7440-43-9	
Chromium, Dissolved	**2.3**	ug/L	1.0	1	07/23/13 15:00	08/15/13 23:29	7440-47-3	B
Cobalt, Dissolved	**0.46J**	ug/L	1.0	1	07/23/13 15:00	08/15/13 23:29	7440-48-4	
Copper, Dissolved	**5.7**	ug/L	1.0	1	07/23/13 15:00	08/15/13 23:29	7440-50-8	
Iron, Dissolved	**898**	ug/L	50.0	1	07/23/13 15:00	08/15/13 23:29	7439-89-6	
Lead, Dissolved	**8.8**	ug/L	1.0	1	07/23/13 15:00	08/15/13 23:29	7439-92-1	
Manganese, Dissolved	**244**	ug/L	1.0	1	07/23/13 15:00	08/15/13 23:29	7439-96-5	
Molybdenum, Dissolved	**6.5**	ug/L	1.0	1	07/23/13 15:00	08/15/13 23:29	7439-98-7	
Nickel, Dissolved	**2.1**	ug/L	1.0	1	07/23/13 15:00	08/15/13 23:29	7440-02-0	
Selenium, Dissolved	**1.2**	ug/L	1.0	1	07/23/13 15:00	08/15/13 23:29	7782-49-2	
Silver, Dissolved	**0.12J**	ug/L	0.50	1	07/23/13 15:00	08/15/13 23:29	7440-22-4	
Thallium, Dissolved	**0.24J**	ug/L	1.0	1	07/23/13 15:00	08/15/13 23:29	7440-28-0	B
Vanadium, Dissolved	**0.66J**	ug/L	1.0	1	07/23/13 15:00	08/15/13 23:29	7440-62-2	
Zinc, Dissolved	**717**	ug/L	10.0	1	07/23/13 15:00	08/15/13 23:29	7440-66-6	
245.1 Mercury	Analytical Method: EPA 245.1		Preparation Method: EPA 245.1					
Mercury	ND	ug/L	0.20	1	07/30/13 09:46	08/01/13 11:58	7439-97-6	
245.1 Mercury, Dissolved	Analytical Method: EPA 245.1		Preparation Method: EPA 245.1					
Mercury, Dissolved	ND	ug/L	0.20	1	07/29/13 09:32	08/01/13 13:19	7439-97-6	
245.1 Potentially Diss Mercury	Analytical Method: EPA 245.1		Preparation Method: EPA 245.1					
Mercury, Dissolved	ND	ug/L	0.20	1	07/22/13 14:30	07/23/13 11:12	7439-97-6	
2510B Specific Conductance	Analytical Method: SM 2510B							
Specific Conductance	**1240**	umhos/cm	10.0	1		08/01/13 17:42		

REPORT OF LABORATORY ANALYSIS

This report shall not be reproduced, except in full,
without the written consent of Pace Analytical Services, Inc..

Pace Analytical Services, Inc.
9608 Loiret Blvd.
Lenexa, KS 66219
(913)599-5665

ANALYTICAL RESULTS

Project: July 2013 Rico Water Sampling
Pace Project No.: 60149302

Sample: MW-104_20130718 **Lab ID: 60149302003** Collected: 07/18/13 13:16 Received: 07/20/13 09:20 Matrix: Water

Comments: • All reported results confirmed for total vs. dissolved metals (Ni)

Parameters	Results	Units	Report Limit	DF	Prepared	Analyzed	CAS No.	Qual
Salinity	Analytical Method: Calculated							
Salinity (as dissolved solids)	**796**	mg/L	6.4	1		08/01/13 17:42		
Salinity (as seawater)	**0.62**	PSU	0.014	1		08/01/13 17:42		
2320B Alkalinity	Analytical Method: SM 2320B							
Alkalinity,Bicarbonate (CaCO3)	**114**	mg/L	20.0	1		07/23/13 09:25		
Alkalinity, Carbonate (CaCO3)	ND	mg/L	20.0	1		07/23/13 09:25		
Alkalinity, Total as CaCO3	**114**	mg/L	20.0	1		07/23/13 09:25		
2540C Total Dissolved Solids	Analytical Method: SM 2540C							
Total Dissolved Solids	**1030**	mg/L	5.0	1		07/23/13 15:42		
2540D Total Suspended Solids	Analytical Method: SM 2540D							
Total Suspended Solids	**62.0**	mg/L	5.0	1		07/23/13 08:18		
4500S2D Sulfide, Total	Analytical Method: SM 4500-S-2 D							
Sulfide, Total	ND	mg/L	0.050	1		07/25/13 14:14	18496-25-8	
300.0 IC Anions 28 Days	Analytical Method: EPA 300.0							
Chloride	ND	mg/L	1.0	1		07/31/13 18:32	16887-00-6	
Sulfate	**644**	mg/L	100	100		08/01/13 19:02	14808-79-8	
353.2 Nitrogen, NO2/NO3 pres.	Analytical Method: EPA 353.2							
Nitrogen, NO2 plus NO3	ND	mg/L	0.10	1		07/24/13 09:26		M1
4500CNE Cyanide, Total	Analytical Method: SM 4500-CN-E							
Cyanide	ND	mg/L	0.0050	1		07/24/13 17:47	57-12-5	
5310C TOC	Analytical Method: SM 5310C							
Total Organic Carbon	ND	mg/L	0.50	1		07/29/13 22:13	7440-44-0	

This report shall not be reproduced, except in full,
without the written consent of Pace Analytical Services, Inc..

Pace Analytical Services, Inc.
9608 Loiret Blvd.
Lenexa, KS 66219
(913)599-5665

ANALYTICAL RESULTS

Project: July 2013 Rico Water Sampling
Pace Project No.: 60149302

Sample: MW-1 DEEP_20130718 **Lab ID: 60149302004** Collected: 07/18/13 15:40 Received: 07/20/13 09:20 Matrix: Water

Comments: • All reported results confirmed for total vs. dissolved metals (Ni)

Parameters	Results	Units	Report Limit	DF	Prepared	Analyzed	CAS No.	Qual
200.7 Potentially Diss. Metals	Analytical Method: EPA 200.7	Preparation Method: EPA 200.7						
Calcium, Dissolved	**237000**	ug/L	100	1	07/23/13 15:00	07/31/13 09:31	7440-70-2	M1
Magnesium, Dissolved	**19000**	ug/L	50.0	1	07/23/13 15:00	07/31/13 09:31	7439-95-4	
Potassium, Dissolved	**8120**	ug/L	500	1	07/23/13 15:00	07/31/13 09:31	7440-09-7	
Sodium, Dissolved	**22900**	ug/L	500	1	07/23/13 15:00	07/31/13 09:31	7440-23-5	
200.8 MET ICPMS	Analytical Method: EPA 200.8	Preparation Method: EPA 200.8						
Aluminum	**1850**	ug/L	4.0	1	07/25/13 07:54	07/30/13 18:53	7429-90-5	
Antimony	ND	ug/L	0.50	1	07/25/13 07:54	07/30/13 18:53	7440-36-0	
Arsenic	**3.5**	ug/L	0.50	1	07/25/13 07:54	07/30/13 18:53	7440-38-2	
Barium	**42.6**	ug/L	0.30	1	07/25/13 07:54	07/30/13 18:53	7440-39-3	
Beryllium	**0.58**	ug/L	0.20	1	07/25/13 07:54	07/30/13 18:53	7440-41-7	
Cadmium	**7.0**	ug/L	0.080	1	07/25/13 07:54	07/30/13 18:53	7440-43-9	
Calcium	**234000**	ug/L	400	20	07/25/13 07:54	07/30/13 18:59	7440-70-2	
Chromium	**3.7**	ug/L	0.50	1	07/25/13 07:54	07/30/13 18:53	7440-47-3	
Cobalt	**1.5**	ug/L	0.50	1	07/25/13 07:54	07/30/13 18:53	7440-48-4	
Copper	**83.2**	ug/L	0.50	1	07/25/13 07:54	07/30/13 18:53	7440-50-8	
Iron	**7130**	ug/L	50.0	1	07/25/13 07:54	07/30/13 18:53	7439-89-6	
Lead	**162**	ug/L	0.10	1	07/25/13 07:54	07/30/13 18:53	7439-92-1	
Magnesium	**19900**	ug/L	5.0	1	07/25/13 07:54	07/30/13 18:53	7439-95-4	
Manganese	**563**	ug/L	10.0	20	07/25/13 07:54	07/30/13 18:59	7439-96-5	
Molybdenum	**15.7**	ug/L	0.50	1	07/25/13 07:54	07/30/13 18:53	7439-98-7	
Nickel	**2.8**	ug/L	0.50	1	07/25/13 07:54	07/30/13 18:53	7440-02-0	
Potassium	**8310**	ug/L	20.0	1	07/25/13 07:54	07/30/13 18:53	7440-09-7	
Selenium	**12.1**	ug/L	0.50	1	07/25/13 07:54	07/30/13 18:53	7782-49-2	
Silica	**20500**	ug/L	1070	20	07/25/13 07:54	07/30/13 18:59	7631-86-9	
Silver	ND	ug/L	0.50	1	07/25/13 07:54	07/30/13 18:53	7440-22-4	
Sodium	**21300**	ug/L	1000	20	07/25/13 07:54	07/30/13 18:59	7440-23-5	
Thallium	**0.19**	ug/L	0.10	1	07/25/13 07:54	07/30/13 18:53	7440-28-0	
Total Hardness by 2340B	**666000**	ug/L	1420	20	07/25/13 07:54	07/30/13 18:59		
Vanadium	**2.8**	ug/L	0.10	1	07/25/13 07:54	07/30/13 18:53	7440-62-2	
Zinc	**1410**	ug/L	100	20	07/25/13 07:54	07/30/13 18:59	7440-66-6	
200.8 MET ICPMS, Dissolved	Analytical Method: EPA 200.8	Preparation Method: EPA 200.8						
Aluminum, Dissolved	**12.9**	ug/L	4.0	1	08/07/13 15:42	08/08/13 13:56	7429-90-5	
Antimony, Dissolved	ND	ug/L	0.50	1	08/07/13 15:42	08/08/13 13:56	7440-36-0	
Arsenic, Dissolved	ND	ug/L	0.50	1	08/07/13 15:42	08/08/13 13:56	7440-38-2	
Barium, Dissolved	**23.7**	ug/L	0.30	1	08/07/13 15:42	08/08/13 13:56	7440-39-3	
Beryllium, Dissolved	ND	ug/L	0.20	1	08/07/13 15:42	08/08/13 13:56	7440-41-7	
Cadmium, Dissolved	**2.0**	ug/L	0.080	1	08/07/13 15:42	08/08/13 13:56	7440-43-9	
Calcium, Dissolved	**244000**	ug/L	400	20	08/07/13 15:42	08/08/13 14:01	7440-70-2	M1
Chromium, Dissolved	ND	ug/L	0.50	1	08/07/13 15:42	08/08/13 13:56	7440-47-3	
Cobalt, Dissolved	ND	ug/L	0.50	1	08/07/13 15:42	08/08/13 13:56	7440-48-4	
Copper, Dissolved	**2.9**	ug/L	0.50	1	08/07/13 15:42	08/08/13 13:56	7440-50-8	
Iron, Dissolved	ND	ug/L	50.0	1	08/07/13 15:42	08/08/13 13:56	7439-89-6	
Lead, Dissolved	**0.82**	ug/L	0.10	1	08/07/13 15:42	08/08/13 13:56	7439-92-1	

This report shall not be reproduced, except in full,
without the written consent of Pace Analytical Services, Inc..

Pace Analytical Services, Inc.
9608 Loiret Blvd.
Lenexa, KS 66219
(913)599-5665

ANALYTICAL RESULTS

Project: July 2013 Rico Water Sampling
Pace Project No.: 60149302

Sample: MW-1 DEEP_20130718 **Lab ID: 60149302004** Collected: 07/18/13 15:40 Received: 07/20/13 09:20 Matrix: Water

Comments: • All reported results confirmed for total vs. dissolved metals (Ni)

Parameters	Results	Units	Report Limit	DF	Prepared	Analyzed	CAS No.	Qual
200.8 MET ICPMS, Dissolved	Analytical Method: EPA 200.8		Preparation Method: EPA 200.8					
Magnesium, Dissolved	**19600**	ug/L	5.0	1	08/07/13 15:42	08/08/13 13:56	7439-95-4	M1
Manganese, Dissolved	**12.7**	ug/L	0.50	1	08/07/13 15:42	08/08/13 13:56	7439-96-5	
Molybdenum, Dissolved	**13.4**	ug/L	0.50	1	08/07/13 15:42	08/08/13 13:56	7439-98-7	
Nickel, Dissolved	**4.4**	ug/L	0.50	1	08/07/13 15:42	08/08/13 13:56	7440-02-0	
Potassium, Dissolved	**8260**	ug/L	20.0	1	08/07/13 15:42	08/08/13 13:56	7440-09-7	
Selenium, Dissolved	**11.7**	ug/L	0.50	1	08/07/13 15:42	08/08/13 13:56	7782-49-2	
Silver, Dissolved	ND	ug/L	0.50	1	08/07/13 15:42	08/08/13 13:56	7440-22-4	
Sodium, Dissolved	**22800**	ug/L	1000	20	08/07/13 15:42	08/08/13 14:01	7440-23-5	
Thallium, Dissolved	**0.14**	ug/L	0.10	1	08/07/13 15:42	08/08/13 13:56	7440-28-0	
Vanadium, Dissolved	ND	ug/L	0.10	1	08/07/13 15:42	08/08/13 13:56	7440-62-2	
Zinc, Dissolved	**329**	ug/L	5.0	1	08/07/13 15:42	08/08/13 13:56	7440-66-6	
200.8 Potentially Diss. Metals	Analytical Method: EPA 200.8		Preparation Method: EPA 200.8					
Aluminum, Dissolved	**840**	ug/L	50.0	1	07/23/13 15:00	08/15/13 23:33	7429-90-5	
Antimony, Dissolved	**0.38J**	ug/L	1.0	1	07/23/13 15:00	08/15/13 23:33	7440-36-0	
Arsenic, Dissolved	**2.2**	ug/L	1.0	1	07/23/13 15:00	08/15/13 23:33	7440-38-2	
Barium, Dissolved	**28.6**	ug/L	1.0	1	07/23/13 15:00	08/15/13 23:33	7440-39-3	
Beryllium, Dissolved	**0.53**	ug/L	0.50	1	07/23/13 15:00	08/15/13 23:33	7440-41-7	
Cadmium, Dissolved	**6.7**	ug/L	0.50	1	07/23/13 15:00	08/15/13 23:33	7440-43-9	
Chromium, Dissolved	**2.6**	ug/L	1.0	1	07/23/13 15:00	08/15/13 23:33	7440-47-3	B
Cobalt, Dissolved	**0.92J**	ug/L	1.0	1	07/23/13 15:00	08/15/13 23:33	7440-48-4	
Copper, Dissolved	**83.3**	ug/L	1.0	1	07/23/13 15:00	08/15/13 23:33	7440-50-8	
Iron, Dissolved	**5270**	ug/L	50.0	1	07/23/13 15:00	08/15/13 23:33	7439-89-6	
Lead, Dissolved	**161**	ug/L	1.0	1	07/23/13 15:00	08/15/13 23:33	7439-92-1	
Manganese, Dissolved	**357**	ug/L	1.0	1	07/23/13 15:00	08/15/13 23:33	7439-96-5	
Molybdenum, Dissolved	**7.9**	ug/L	1.0	1	07/23/13 15:00	08/15/13 23:33	7439-98-7	
Nickel, Dissolved	**1.8**	ug/L	1.0	1	07/23/13 15:00	08/15/13 23:33	7440-02-0	
Selenium, Dissolved	**11.3**	ug/L	1.0	1	07/23/13 15:00	08/15/13 23:33	7782-49-2	
Silver, Dissolved	**0.24J**	ug/L	0.50	1	07/23/13 15:00	08/15/13 23:33	7440-22-4	
Thallium, Dissolved	**0.31J**	ug/L	1.0	1	07/23/13 15:00	08/15/13 23:33	7440-28-0	B
Vanadium, Dissolved	**0.79J**	ug/L	1.0	1	07/23/13 15:00	08/15/13 23:33	7440-62-2	
Zinc, Dissolved	**1300**	ug/L	10.0	1	07/23/13 15:00	08/15/13 23:33	7440-66-6	
245.1 Mercury	Analytical Method: EPA 245.1		Preparation Method: EPA 245.1					
Mercury	ND	ug/L	0.20	1	07/30/13 09:46	08/01/13 12:01	7439-97-6	
245.1 Mercury, Dissolved	Analytical Method: EPA 245.1		Preparation Method: EPA 245.1					
Mercury, Dissolved	ND	ug/L	0.20	1	07/29/13 09:32	08/01/13 13:22	7439-97-6	
245.1 Potentially Diss Mercury	Analytical Method: EPA 245.1		Preparation Method: EPA 245.1					
Mercury, Dissolved	ND	ug/L	0.20	1	07/22/13 14:30	07/23/13 11:14	7439-97-6	
2510B Specific Conductance	Analytical Method: SM 2510B							
Specific Conductance	**1180**	umhos/cm	10.0	1		08/01/13 17:43		

This report shall not be reproduced, except in full,
without the written consent of Pace Analytical Services, Inc..

Pace Analytical Services, Inc.
9608 Loiret Blvd.
Lenexa, KS 66219
(913)599-5665

ANALYTICAL RESULTS

Project: July 2013 Rico Water Sampling
Pace Project No.: 60149302

Sample: MW-1 DEEP_20130718 **Lab ID: 60149302004** Collected: 07/18/13 15:40 Received: 07/20/13 09:20 Matrix: Water

Comments: • All reported results confirmed for total vs. dissolved metals (Ni)

Parameters	Results	Units	Report Limit	DF	Prepared	Analyzed	CAS No.	Qual
Salinity	Analytical Method: Calculated							
Salinity (as dissolved solids)	**758**	mg/L	6.4	1		08/01/13 17:43		
Salinity (as seawater)	**0.59**	PSU	0.014	1		08/01/13 17:43		
2320B Alkalinity	Analytical Method: SM 2320B							
Alkalinity,Bicarbonate (CaCO3)	**110**	mg/L	20.0	1		07/23/13 09:28		
Alkalinity, Carbonate (CaCO3)	ND	mg/L	20.0	1		07/23/13 09:28		
Alkalinity, Total as CaCO3	**110**	mg/L	20.0	1		07/23/13 09:28		
2540C Total Dissolved Solids	Analytical Method: SM 2540C							
Total Dissolved Solids	**1010**	mg/L	5.0	1		07/23/13 15:43		
2540D Total Suspended Solids	Analytical Method: SM 2540D							
Total Suspended Solids	**77.0**	mg/L	5.0	1		07/23/13 08:18		
4500S2D Sulfide, Total	Analytical Method: SM 4500-S-2 D							
Sulfide, Total	ND	mg/L	0.050	1		07/25/13 14:15	18496-25-8	
300.0 IC Anions 28 Days	Analytical Method: EPA 300.0							
Chloride	ND	mg/L	1.0	1		07/31/13 18:50	16887-00-6	
Sulfate	**623**	mg/L	100	100		08/01/13 19:20	14808-79-8	
353.2 Nitrogen, NO2/NO3 pres.	Analytical Method: EPA 353.2							
Nitrogen, NO2 plus NO3	ND	mg/L	0.10	1		07/24/13 09:28		
4500CNE Cyanide, Total	Analytical Method: SM 4500-CN-E							
Cyanide	ND	mg/L	0.0050	1		07/24/13 17:48	57-12-5	
5310C TOC	Analytical Method: SM 5310C							
Total Organic Carbon	ND	mg/L	0.50	1		07/29/13 22:31	7440-44-0	

This report shall not be reproduced, except in full,
without the written consent of Pace Analytical Services, Inc..

Pace Analytical Services, Inc.
9608 Loiret Blvd.
Lenexa, KS 66219
(913)599-5665

ANALYTICAL RESULTS

Project: July 2013 Rico Water Sampling
Pace Project No.: 60149302

Sample: MW-1 SHALLOW_20130718 **Lab ID: 60149302005** Collected: 07/18/13 15:33 Received: 07/20/13 09:20 Matrix: Water

Parameters	Results	Units	Report Limit	DF	Prepared	Analyzed	CAS No.	Qual
200.7 Potentially Diss. Metals	Analytical Method: EPA 200.7 Preparation Method: EPA 200.7							
Calcium, Dissolved	**230000**	ug/L	100	1	07/23/13 15:00	07/31/13 09:43	7440-70-2	
Magnesium, Dissolved	**18800**	ug/L	50.0	1	07/23/13 15:00	07/31/13 09:43	7439-95-4	
Potassium, Dissolved	**8520**	ug/L	500	1	07/23/13 15:00	07/31/13 09:43	7440-09-7	
Sodium, Dissolved	**22900**	ug/L	500	1	07/23/13 15:00	07/31/13 09:43	7440-23-5	
200.8 MET ICPMS	Analytical Method: EPA 200.8 Preparation Method: EPA 200.8							
Aluminum	**7930**	ug/L	4.0	1	07/25/13 07:54	07/30/13 19:23	7429-90-5	
Antimony	**0.57**	ug/L	0.50	1	07/25/13 07:54	07/30/13 19:23	7440-36-0	
Arsenic	**10.4**	ug/L	0.50	1	07/25/13 07:54	07/30/13 19:23	7440-38-2	
Barium	**142**	ug/L	0.30	1	07/25/13 07:54	07/30/13 19:23	7440-39-3	
Beryllium	**0.68**	ug/L	0.20	1	07/25/13 07:54	07/30/13 19:23	7440-41-7	
Cadmium	**0.98**	ug/L	0.080	1	07/25/13 07:54	07/30/13 19:23	7440-43-9	
Calcium	**232000**	ug/L	400	20	07/25/13 07:54	07/30/13 19:29	7440-70-2	
Chromium	**8.8**	ug/L	0.50	1	07/25/13 07:54	07/30/13 19:23	7440-47-3	
Cobalt	**4.8**	ug/L	0.50	1	07/25/13 07:54	07/30/13 19:23	7440-48-4	
Copper	**34.7**	ug/L	0.50	1	07/25/13 07:54	07/30/13 19:23	7440-50-8	
Iron	**12000**	ug/L	50.0	1	07/25/13 07:54	07/30/13 19:23	7439-89-6	
Lead	**88.6**	ug/L	0.10	1	07/25/13 07:54	07/30/13 19:23	7439-92-1	
Magnesium	**23800**	ug/L	100	20	07/25/13 07:54	07/30/13 19:29	7439-95-4	
Manganese	**577**	ug/L	10.0	20	07/25/13 07:54	07/30/13 19:29	7439-96-5	
Molybdenum	**12.6**	ug/L	0.50	1	07/25/13 07:54	07/30/13 19:23	7439-98-7	
Nickel	**7.1**	ug/L	0.50	1	07/25/13 07:54	07/30/13 19:23	7440-02-0	
Potassium	**9750**	ug/L	20.0	1	07/25/13 07:54	07/30/13 19:23	7440-09-7	
Selenium	**7.9**	ug/L	0.50	1	07/25/13 07:54	07/30/13 19:23	7782-49-2	
Silica	**43000**	ug/L	1070	20	07/25/13 07:54	07/30/13 19:29	7631-86-9	
Silver	ND	ug/L	0.50	1	07/25/13 07:54	07/30/13 19:23	7440-22-4	
Sodium	**22500**	ug/L	50.0	1	07/25/13 07:54	07/30/13 19:23	7440-23-5	
Thallium	**0.28**	ug/L	0.10	1	07/25/13 07:54	07/30/13 19:23	7440-28-0	
Total Hardness by 2340B	**678000**	ug/L	1420	20	07/25/13 07:54	07/30/13 19:29		
Vanadium	**12.7**	ug/L	0.10	1	07/25/13 07:54	07/30/13 19:23	7440-62-2	
Zinc	**171**	ug/L	5.0	1	07/25/13 07:54	07/30/13 19:23	7440-66-6	
200.8 MET ICPMS, Dissolved	Analytical Method: EPA 200.8 Preparation Method: EPA 200.8							
Aluminum, Dissolved	**6.4**	ug/L	4.0	1	08/07/13 15:42	08/08/13 14:23	7429-90-5	
Antimony, Dissolved	ND	ug/L	0.50	1	08/07/13 15:42	08/08/13 14:23	7440-36-0	
Arsenic, Dissolved	ND	ug/L	0.50	1	08/07/13 15:42	08/08/13 14:23	7440-38-2	
Barium, Dissolved	**28.8**	ug/L	0.30	1	08/07/13 15:42	08/08/13 14:23	7440-39-3	
Beryllium, Dissolved	ND	ug/L	0.20	1	08/07/13 15:42	08/08/13 14:23	7440-41-7	
Cadmium, Dissolved	**0.33**	ug/L	0.080	1	08/07/13 15:42	08/08/13 14:23	7440-43-9	
Calcium, Dissolved	**251000**	ug/L	400	20	08/07/13 15:42	08/08/13 14:28	7440-70-2	
Chromium, Dissolved	ND	ug/L	0.50	1	08/07/13 15:42	08/08/13 14:23	7440-47-3	
Cobalt, Dissolved	ND	ug/L	0.50	1	08/07/13 15:42	08/08/13 14:23	7440-48-4	
Copper, Dissolved	**1.3**	ug/L	0.50	1	08/07/13 15:42	08/08/13 14:23	7440-50-8	
Iron, Dissolved	ND	ug/L	50.0	1	08/07/13 15:42	08/08/13 14:23	7439-89-6	
Lead, Dissolved	**0.11**	ug/L	0.10	1	08/07/13 15:42	08/08/13 14:23	7439-92-1	
Magnesium, Dissolved	**20200**	ug/L	5.0	1	08/07/13 15:42	08/08/13 14:23	7439-95-4	

This report shall not be reproduced, except in full,
without the written consent of Pace Analytical Services, Inc..

Pace Analytical Services, Inc.
9608 Loiret Blvd.
Lenexa, KS 66219
(913)599-5665

ANALYTICAL RESULTS

Project: July 2013 Rico Water Sampling
Pace Project No.: 60149302

Sample: MW-1 SHALLOW_20130718 **Lab ID: 60149302005** Collected: 07/18/13 15:33 Received: 07/20/13 09:20 Matrix: Water

Parameters	Results	Units	Report Limit	DF	Prepared	Analyzed	CAS No.	Qual
200.8 MET ICPMS, Dissolved	Analytical Method: EPA 200.8 Preparation Method: EPA 200.8							
Manganese, Dissolved	**18.4**	ug/L	0.50	1	08/07/13 15:42	08/08/13 14:23	7439-96-5	
Molybdenum, Dissolved	**11.7**	ug/L	0.50	1	08/07/13 15:42	08/08/13 14:23	7439-98-7	
Nickel, Dissolved	**3.6**	ug/L	0.50	1	08/07/13 15:42	08/08/13 14:23	7440-02-0	
Potassium, Dissolved	**9030**	ug/L	20.0	1	08/07/13 15:42	08/08/13 14:23	7440-09-7	
Selenium, Dissolved	**5.5**	ug/L	0.50	1	08/07/13 15:42	08/08/13 14:23	7782-49-2	
Silver, Dissolved	ND	ug/L	0.50	1	08/07/13 15:42	08/08/13 14:23	7440-22-4	
Sodium, Dissolved	**23300**	ug/L	1000	20	08/07/13 15:42	08/08/13 14:28	7440-23-5	
Thallium, Dissolved	ND	ug/L	0.10	1	08/07/13 15:42	08/08/13 14:23	7440-28-0	
Vanadium, Dissolved	ND	ug/L	0.10	1	08/07/13 15:42	08/08/13 14:23	7440-62-2	
Zinc, Dissolved	**30.1**	ug/L	5.0	1	08/07/13 15:42	08/08/13 14:23	7440-66-6	
200.8 Potentially Diss. Metals	Analytical Method: EPA 200.8 Preparation Method: EPA 200.8							
Aluminum, Dissolved	**1650**	ug/L	50.0	1	07/23/13 15:00	08/15/13 23:37	7429-90-5	
Antimony, Dissolved	**0.20J**	ug/L	1.0	1	07/23/13 15:00	08/15/13 23:37	7440-36-0	
Arsenic, Dissolved	**2.3**	ug/L	1.0	1	07/23/13 15:00	08/15/13 23:37	7440-38-2	
Barium, Dissolved	**44.5**	ug/L	1.0	1	07/23/13 15:00	08/15/13 23:37	7440-39-3	
Beryllium, Dissolved	**0.35J**	ug/L	0.50	1	07/23/13 15:00	08/15/13 23:37	7440-41-7	
Cadmium, Dissolved	**0.70**	ug/L	0.50	1	07/23/13 15:00	08/15/13 23:37	7440-43-9	
Chromium, Dissolved	**2.3**	ug/L	1.0	1	07/23/13 15:00	08/15/13 23:37	7440-47-3	B
Cobalt, Dissolved	**2.5**	ug/L	1.0	1	07/23/13 15:00	08/15/13 23:37	7440-48-4	
Copper, Dissolved	**18.5**	ug/L	1.0	1	07/23/13 15:00	08/15/13 23:37	7440-50-8	
Iron, Dissolved	**2510**	ug/L	50.0	1	07/23/13 15:00	08/15/13 23:37	7439-89-6	
Lead, Dissolved	**55.3**	ug/L	1.0	1	07/23/13 15:00	08/15/13 23:37	7439-92-1	
Manganese, Dissolved	**360**	ug/L	1.0	1	07/23/13 15:00	08/15/13 23:37	7439-96-5	M1
Molybdenum, Dissolved	**4.8**	ug/L	1.0	1	07/23/13 15:00	08/15/13 23:37	7439-98-7	
Nickel, Dissolved	**2.5**	ug/L	1.0	1	07/23/13 15:00	08/15/13 23:37	7440-02-0	
Selenium, Dissolved	**5.9**	ug/L	1.0	1	07/23/13 15:00	08/15/13 23:37	7782-49-2	
Silver, Dissolved	**0.47J**	ug/L	0.50	1	07/23/13 15:00	08/15/13 23:37	7440-22-4	
Thallium, Dissolved	**0.28J**	ug/L	1.0	1	07/23/13 15:00	08/15/13 23:37	7440-28-0	B
Vanadium, Dissolved	**2.6**	ug/L	1.0	1	07/23/13 15:00	08/15/13 23:37	7440-62-2	
Zinc, Dissolved	**118**	ug/L	10.0	1	07/23/13 15:00	08/15/13 23:37	7440-66-6	
245.1 Mercury	Analytical Method: EPA 245.1 Preparation Method: EPA 245.1							
Mercury	ND	ug/L	0.20	1	07/30/13 09:46	08/01/13 12:03	7439-97-6	
245.1 Mercury, Dissolved	Analytical Method: EPA 245.1 Preparation Method: EPA 245.1							
Mercury, Dissolved	ND	ug/L	0.20	1	07/29/13 09:32	08/01/13 13:24	7439-97-6	
245.1 Potentially Diss Mercury	Analytical Method: EPA 245.1 Preparation Method: EPA 245.1							
Mercury, Dissolved	ND	ug/L	0.20	1	07/22/13 14:30	07/23/13 11:17	7439-97-6	
2510B Specific Conductance	Analytical Method: SM 2510B							
Specific Conductance	**1210**	umhos/cm	10.0	1		08/01/13 19:50		

This report shall not be reproduced, except in full,
without the written consent of Pace Analytical Services, Inc..

Pace Analytical Services, Inc.
9608 Loiret Blvd.
Lenexa, KS 66219
(913)599-5665

ANALYTICAL RESULTS

Project: July 2013 Rico Water Sampling
Pace Project No.: 60149302

Sample: MW-1 SHALLOW_20130718 **Lab ID: 60149302005** Collected: 07/18/13 15:33 Received: 07/20/13 09:20 Matrix: Water

Parameters	Results	Units	Report Limit	DF	Prepared	Analyzed	CAS No.	Qual
Salinity	Analytical Method: Calculated							
Salinity (as dissolved solids)	**774**	mg/L	6.4	1		08/01/13 17:50		
Salinity (as seawater)	**0.60**	PSU	0.014	1		08/01/13 17:50		
2320B Alkalinity	Analytical Method: SM 2320B							
Alkalinity,Bicarbonate (CaCO3)	**86.2**	mg/L	20.0	1		07/23/13 09:32		
Alkalinity, Carbonate (CaCO3)	ND	mg/L	20.0	1		07/23/13 09:32		
Alkalinity, Total as CaCO3	**86.2**	mg/L	20.0	1		07/23/13 09:32		
2540C Total Dissolved Solids	Analytical Method: SM 2540C							
Total Dissolved Solids	**1030**	mg/L	5.0	1		07/23/13 15:43		
2540D Total Suspended Solids	Analytical Method: SM 2540D							
Total Suspended Solids	**191**	mg/L	5.0	1		07/23/13 08:19		
4500S2D Sulfide, Total	Analytical Method: SM 4500-S-2 D							
Sulfide, Total	ND	mg/L	0.050	1		07/25/13 14:15	18496-25-8	
300.0 IC Anions 28 Days	Analytical Method: EPA 300.0							
Chloride	ND	mg/L	1.0	1		07/31/13 19:08	16887-00-6	
Sulfate	**637**	mg/L	100	100		08/01/13 19:38	14808-79-8	
353.2 Nitrogen, NO2/NO3 pres.	Analytical Method: EPA 353.2							
Nitrogen, NO2 plus NO3	ND	mg/L	0.10	1		07/24/13 09:28		
4500CNE Cyanide, Total	Analytical Method: SM 4500-CN-E							
Cyanide	ND	mg/L	0.0050	1		07/24/13 17:50	57-12-5	
5310C TOC	Analytical Method: SM 5310C							
Total Organic Carbon	ND	mg/L	0.50	1		07/29/13 22:50	7440-44-0	

This report shall not be reproduced, except in full,
without the written consent of Pace Analytical Services, Inc..

Pace Analytical Services, Inc.
9608 Loiret Blvd.
Lenexa, KS 66219
(913)599-5665

ANALYTICAL RESULTS

Project: July 2013 Rico Water Sampling
Pace Project No.: 60149302

Sample: MW-2 DEEP_20130718 **Lab ID: 60149302006** Collected: 07/18/13 11:50 Received: 07/20/13 09:20 Matrix: Water

Parameters	Results	Units	Report Limit	DF	Prepared	Analyzed	CAS No.	Qual
200.7 Potentially Diss. Metals	Analytical Method: EPA 200.7 Preparation Method: EPA 200.7							
Calcium, Dissolved	**247000**	ug/L	100	1	07/23/13 15:00	07/31/13 09:46	7440-70-2	
Magnesium, Dissolved	**21800**	ug/L	50.0	1	07/23/13 15:00	07/31/13 09:46	7439-95-4	
Potassium, Dissolved	**1810**	ug/L	500	1	07/23/13 15:00	07/31/13 09:46	7440-09-7	
Sodium, Dissolved	**12900**	ug/L	500	1	07/23/13 15:00	07/31/13 09:46	7440-23-5	
200.8 MET ICPMS	Analytical Method: EPA 200.8 Preparation Method: EPA 200.8							
Aluminum	**227**	ug/L	4.0	1	07/25/13 07:54	07/30/13 19:35	7429-90-5	
Antimony	ND	ug/L	0.50	1	07/25/13 07:54	07/30/13 19:35	7440-36-0	
Arsenic	**0.68**	ug/L	0.50	1	07/25/13 07:54	07/30/13 19:35	7440-38-2	
Barium	**19.6**	ug/L	0.30	1	07/25/13 07:54	07/30/13 19:35	7440-39-3	
Beryllium	ND	ug/L	0.20	1	07/25/13 07:54	07/30/13 19:35	7440-41-7	
Cadmium	**1.3**	ug/L	0.080	1	07/25/13 07:54	07/30/13 19:35	7440-43-9	
Calcium	**243000**	ug/L	400	20	07/25/13 07:54	07/30/13 19:41	7440-70-2	
Chromium	**0.55**	ug/L	0.50	1	07/25/13 07:54	07/30/13 19:35	7440-47-3	
Cobalt	ND	ug/L	0.50	1	07/25/13 07:54	07/30/13 19:35	7440-48-4	
Copper	**32.6**	ug/L	0.50	1	07/25/13 07:54	07/30/13 19:35	7440-50-8	
Iron	**524**	ug/L	50.0	1	07/25/13 07:54	07/30/13 19:35	7439-89-6	
Lead	**9.2**	ug/L	0.10	1	07/25/13 07:54	07/30/13 19:35	7439-92-1	
Magnesium	**21900**	ug/L	5.0	1	07/25/13 07:54	07/30/13 19:35	7439-95-4	
Manganese	**40.3**	ug/L	0.50	1	07/25/13 07:54	07/30/13 19:35	7439-96-5	
Molybdenum	**7.8**	ug/L	0.50	1	07/25/13 07:54	07/30/13 19:35	7439-98-7	
Nickel	ND	ug/L	0.50	1	07/25/13 07:54	07/30/13 19:35	7440-02-0	
Potassium	**1860**	ug/L	20.0	1	07/25/13 07:54	07/30/13 19:35	7440-09-7	
Selenium	**1.6**	ug/L	0.50	1	07/25/13 07:54	07/30/13 19:35	7782-49-2	
Silica	**9920**	ug/L	1070	20	07/25/13 07:54	07/30/13 19:41	7631-86-9	
Silver	ND	ug/L	0.50	1	07/25/13 07:54	07/30/13 19:35	7440-22-4	
Sodium	**12000**	ug/L	50.0	1	07/25/13 07:54	07/30/13 19:35	7440-23-5	
Thallium	ND	ug/L	0.10	1	07/25/13 07:54	07/30/13 19:35	7440-28-0	
Total Hardness by 2340B	**696000**	ug/L	1420	20	07/25/13 07:54	07/30/13 19:41		
Vanadium	**0.53**	ug/L	0.10	1	07/25/13 07:54	07/30/13 19:35	7440-62-2	
Zinc	**50.0**	ug/L	5.0	1	07/25/13 07:54	07/30/13 19:35	7440-66-6	
200.8 MET ICPMS, Dissolved	Analytical Method: EPA 200.8 Preparation Method: EPA 200.8							
Aluminum, Dissolved	**6.5**	ug/L	4.0	1	08/07/13 15:42	08/08/13 14:33	7429-90-5	
Antimony, Dissolved	ND	ug/L	0.50	1	08/07/13 15:42	08/08/13 14:33	7440-36-0	
Arsenic, Dissolved	ND	ug/L	0.50	1	08/07/13 15:42	08/08/13 14:33	7440-38-2	
Barium, Dissolved	**14.3**	ug/L	0.30	1	08/07/13 15:42	08/08/13 14:33	7440-39-3	
Beryllium, Dissolved	ND	ug/L	0.20	1	08/07/13 15:42	08/08/13 14:33	7440-41-7	
Cadmium, Dissolved	**0.93**	ug/L	0.080	1	08/07/13 15:42	08/08/13 14:33	7440-43-9	
Calcium, Dissolved	**259000**	ug/L	400	20	08/07/13 15:42	08/08/13 14:38	7440-70-2	
Chromium, Dissolved	ND	ug/L	0.50	1	08/07/13 15:42	08/08/13 14:33	7440-47-3	
Cobalt, Dissolved	ND	ug/L	0.50	1	08/07/13 15:42	08/08/13 14:33	7440-48-4	
Copper, Dissolved	**1.4**	ug/L	0.50	1	08/07/13 15:42	08/08/13 14:33	7440-50-8	
Iron, Dissolved	ND	ug/L	50.0	1	08/07/13 15:42	08/08/13 14:33	7439-89-6	
Lead, Dissolved	**0.14**	ug/L	0.10	1	08/07/13 15:42	08/08/13 14:33	7439-92-1	
Magnesium, Dissolved	**23700**	ug/L	100	20	08/07/13 15:42	08/08/13 14:38	7439-95-4	

This report shall not be reproduced, except in full,
without the written consent of Pace Analytical Services, Inc..

Pace Analytical Services, Inc.
9608 Loiret Blvd.
Lenexa, KS 66219
(913)599-5665

ANALYTICAL RESULTS

Project: July 2013 Rico Water Sampling
Pace Project No.: 60149302

Sample: MW-2 DEEP_20130718 **Lab ID: 60149302006** Collected: 07/18/13 11:50 Received: 07/20/13 09:20 Matrix: Water

Parameters	Results	Units	Report Limit	DF	Prepared	Analyzed	CAS No.	Qual
200.8 MET ICPMS, Dissolved	Analytical Method: EPA 200.8 Preparation Method: EPA 200.8							
Manganese, Dissolved	**2.6**	ug/L	0.50	1	08/07/13 15:42	08/08/13 14:33	7439-96-5	
Molybdenum, Dissolved	**8.7**	ug/L	0.50	1	08/07/13 15:42	08/08/13 14:33	7439-98-7	
Nickel, Dissolved	**4.1**	ug/L	0.50	1	08/07/13 15:42	08/08/13 14:33	7440-02-0	
Potassium, Dissolved	**1920**	ug/L	20.0	1	08/07/13 15:42	08/08/13 14:33	7440-09-7	
Selenium, Dissolved	**1.6**	ug/L	0.50	1	08/07/13 15:42	08/08/13 14:33	7782-49-2	
Silver, Dissolved	ND	ug/L	0.50	1	08/07/13 15:42	08/08/13 14:33	7440-22-4	
Sodium, Dissolved	**12900**	ug/L	50.0	1	08/07/13 15:42	08/08/13 14:33	7440-23-5	
Thallium, Dissolved	ND	ug/L	0.10	1	08/07/13 15:42	08/08/13 14:33	7440-28-0	
Vanadium, Dissolved	ND	ug/L	0.10	1	08/07/13 15:42	08/08/13 14:33	7440-62-2	
Zinc, Dissolved	**22.0**	ug/L	5.0	1	08/07/13 15:42	08/08/13 14:33	7440-66-6	
200.8 Potentially Diss. Metals	Analytical Method: EPA 200.8 Preparation Method: EPA 200.8							
Aluminum, Dissolved	**76.9**	ug/L	50.0	1	07/23/13 15:00	08/15/13 23:50	7429-90-5	
Antimony, Dissolved	**0.10J**	ug/L	1.0	1	07/23/13 15:00	08/15/13 23:50	7440-36-0	
Arsenic, Dissolved	**0.26J**	ug/L	1.0	1	07/23/13 15:00	08/15/13 23:50	7440-38-2	
Barium, Dissolved	**16.1**	ug/L	1.0	1	07/23/13 15:00	08/15/13 23:50	7440-39-3	
Beryllium, Dissolved	ND	ug/L	0.50	1	07/23/13 15:00	08/15/13 23:50	7440-41-7	
Cadmium, Dissolved	**1.1**	ug/L	0.50	1	07/23/13 15:00	08/15/13 23:50	7440-43-9	
Chromium, Dissolved	**0.77J**	ug/L	1.0	1	07/23/13 15:00	08/15/13 23:50	7440-47-3	B
Cobalt, Dissolved	**0.095J**	ug/L	1.0	1	07/23/13 15:00	08/15/13 23:50	7440-48-4	
Copper, Dissolved	**1.2**	ug/L	1.0	1	07/23/13 15:00	08/15/13 23:50	7440-50-8	
Iron, Dissolved	**282**	ug/L	50.0	1	07/23/13 15:00	08/15/13 23:50	7439-89-6	
Lead, Dissolved	**7.1**	ug/L	1.0	1	07/23/13 15:00	08/15/13 23:50	7439-92-1	
Manganese, Dissolved	**23.6**	ug/L	1.0	1	07/23/13 15:00	08/15/13 23:50	7439-96-5	
Molybdenum, Dissolved	**7.2**	ug/L	1.0	1	07/23/13 15:00	08/15/13 23:50	7439-98-7	
Nickel, Dissolved	**0.34J**	ug/L	1.0	1	07/23/13 15:00	08/15/13 23:50	7440-02-0	B
Selenium, Dissolved	**1.5**	ug/L	1.0	1	07/23/13 15:00	08/15/13 23:50	7782-49-2	
Silver, Dissolved	**0.064J**	ug/L	0.50	1	07/23/13 15:00	08/15/13 23:50	7440-22-4	
Thallium, Dissolved	**0.31J**	ug/L	1.0	1	07/23/13 15:00	08/15/13 23:50	7440-28-0	B
Vanadium, Dissolved	**0.31J**	ug/L	1.0	1	07/23/13 15:00	08/15/13 23:50	7440-62-2	
Zinc, Dissolved	**24.5**	ug/L	10.0	1	07/23/13 15:00	08/15/13 23:50	7440-66-6	
245.1 Mercury	Analytical Method: EPA 245.1 Preparation Method: EPA 245.1							
Mercury	ND	ug/L	0.20	1	07/30/13 09:46	08/01/13 12:06	7439-97-6	
245.1 Mercury, Dissolved	Analytical Method: EPA 245.1 Preparation Method: EPA 245.1							
Mercury, Dissolved	ND	ug/L	0.20	1	07/29/13 09:32	08/01/13 13:27	7439-97-6	
245.1 Potentially Diss Mercury	Analytical Method: EPA 245.1 Preparation Method: EPA 245.1							
Mercury, Dissolved	ND	ug/L	0.20	1	07/22/13 14:30	07/23/13 11:19	7439-97-6	
2510B Specific Conductance	Analytical Method: SM 2510B							
Specific Conductance	**1220**	umhos/cm	10.0	1		08/01/13 19:54		
Salinity	Analytical Method: Calculated							
Salinity (as dissolved solids)	**784**	mg/L	6.4	1		08/01/13 17:54		

REPORT OF LABORATORY ANALYSIS

This report shall not be reproduced, except in full,
without the written consent of Pace Analytical Services, Inc..

Pace Analytical Services, Inc.
9608 Loiret Blvd.
Lenexa, KS 66219
(913)599-5665

ANALYTICAL RESULTS

Project: July 2013 Rico Water Sampling
Pace Project No.: 60149302

Sample: MW-2 DEEP_20130718 **Lab ID: 60149302006** Collected: 07/18/13 11:50 Received: 07/20/13 09:20 Matrix: Water

Parameters	Results	Units	Report Limit	DF	Prepared	Analyzed	CAS No.	Qual
Salinity	Analytical Method: Calculated							
Salinity (as seawater)	**0.61**	PSU	0.014	1		08/01/13 17:54		
2320B Alkalinity	Analytical Method: SM 2320B							
Alkalinity,Bicarbonate (CaCO3)	**96.0**	mg/L	20.0	1		07/23/13 09:36		
Alkalinity, Carbonate (CaCO3)	ND	mg/L	20.0	1		07/23/13 09:36		
Alkalinity, Total as CaCO3	**96.0**	mg/L	20.0	1		07/23/13 09:36		
2540C Total Dissolved Solids	Analytical Method: SM 2540C							
Total Dissolved Solids	**1010**	mg/L	5.0	1		07/23/13 15:43		
2540D Total Suspended Solids	Analytical Method: SM 2540D							
Total Suspended Solids	**20.0**	mg/L	5.0	1		07/23/13 08:19		
4500S2D Sulfide, Total	Analytical Method: SM 4500-S-2 D							
Sulfide, Total	ND	mg/L	0.050	1		07/25/13 14:15	18496-25-8	
300.0 IC Anions 28 Days	Analytical Method: EPA 300.0							
Chloride	ND	mg/L	1.0	1		07/31/13 19:26	16887-00-6	
Sulfate	**655**	mg/L	100	100		08/01/13 19:56	14808-79-8	
353.2 Nitrogen, NO2/NO3 pres.	Analytical Method: EPA 353.2							
Nitrogen, NO2 plus NO3	**0.40**	mg/L	0.10	1		07/24/13 09:31		
4500CNE Cyanide, Total	Analytical Method: SM 4500-CN-E							
Cyanide	ND	mg/L	0.0050	1		07/24/13 17:51	57-12-5	
5310C TOC	Analytical Method: SM 5310C							
Total Organic Carbon	ND	mg/L	0.50	1		07/29/13 23:08	7440-44-0	

This report shall not be reproduced, except in full,
without the written consent of Pace Analytical Services, Inc..

Pace Analytical Services, Inc.
9608 Loiret Blvd.
Lenexa, KS 66219
(913)599-5665

ANALYTICAL RESULTS

Project: July 2013 Rico Water Sampling
Pace Project No.: 60149302

Sample: MW-3 DEEP_20130718 **Lab ID: 60149302007** Collected: 07/18/13 11:27 Received: 07/20/13 09:20 Matrix: Water

Comments: • All reported results confirmed for total vs. dissolved metals (Ni)

Parameters	Results	Units	Report Limit	DF	Prepared	Analyzed	CAS No.	Qual
200.7 Potentially Diss. Metals	Analytical Method: EPA 200.7	Preparation Method: EPA 200.7						
Calcium, Dissolved	**235000**	ug/L	100	1	07/23/13 15:00	07/31/13 09:49	7440-70-2	
Magnesium, Dissolved	**21900**	ug/L	50.0	1	07/23/13 15:00	07/31/13 09:49	7439-95-4	
Potassium, Dissolved	**7050**	ug/L	500	1	07/23/13 15:00	07/31/13 09:49	7440-09-7	
Sodium, Dissolved	**12800**	ug/L	500	1	07/23/13 15:00	07/31/13 09:49	7440-23-5	
200.8 MET ICPMS	Analytical Method: EPA 200.8	Preparation Method: EPA 200.8						
Aluminum	**442**	ug/L	4.0	1	07/25/13 07:54	07/30/13 19:46	7429-90-5	
Antimony	ND	ug/L	0.50	1	07/25/13 07:54	07/30/13 19:46	7440-36-0	
Arsenic	**1.5**	ug/L	0.50	1	07/25/13 07:54	07/30/13 19:46	7440-38-2	
Barium	**34.4**	ug/L	0.30	1	07/25/13 07:54	07/30/13 19:46	7440-39-3	
Beryllium	ND	ug/L	0.20	1	07/25/13 07:54	07/30/13 19:46	7440-41-7	
Cadmium	**0.62**	ug/L	0.080	1	07/25/13 07:54	07/30/13 19:46	7440-43-9	
Calcium	**234000**	ug/L	400	20	07/25/13 07:54	07/30/13 19:51	7440-70-2	
Chromium	**0.56**	ug/L	0.50	1	07/25/13 07:54	07/30/13 19:46	7440-47-3	
Cobalt	**1.1**	ug/L	0.50	1	07/25/13 07:54	07/30/13 19:46	7440-48-4	
Copper	**5.5**	ug/L	0.50	1	07/25/13 07:54	07/30/13 19:46	7440-50-8	
Iron	**2530**	ug/L	50.0	1	07/25/13 07:54	07/30/13 19:46	7439-89-6	
Lead	**9.5**	ug/L	0.10	1	07/25/13 07:54	07/30/13 19:46	7439-92-1	
Magnesium	**23300**	ug/L	100	20	07/25/13 07:54	07/30/13 19:51	7439-95-4	
Manganese	**1420**	ug/L	10.0	20	07/25/13 07:54	07/30/13 19:51	7439-96-5	
Molybdenum	**8.9**	ug/L	0.50	1	07/25/13 07:54	07/30/13 19:46	7439-98-7	
Nickel	**0.56**	ug/L	0.50	1	07/25/13 07:54	07/30/13 19:46	7440-02-0	
Potassium	**7120**	ug/L	20.0	1	07/25/13 07:54	07/30/13 19:46	7440-09-7	
Selenium	ND	ug/L	0.50	1	07/25/13 07:54	07/30/13 19:46	7782-49-2	
Silica	**13700**	ug/L	1070	20	07/25/13 07:54	07/30/13 19:51	7631-86-9	
Silver	ND	ug/L	0.50	1	07/25/13 07:54	07/30/13 19:46	7440-22-4	
Sodium	**12100**	ug/L	50.0	1	07/25/13 07:54	07/30/13 19:46	7440-23-5	
Thallium	ND	ug/L	0.10	1	07/25/13 07:54	07/30/13 19:46	7440-28-0	
Total Hardness by 2340B	**679000**	ug/L	1420	20	07/25/13 07:54	07/30/13 19:51		
Vanadium	**1.1**	ug/L	0.10	1	07/25/13 07:54	07/30/13 19:46	7440-62-2	
Zinc	**59.9**	ug/L	5.0	1	07/25/13 07:54	07/30/13 19:46	7440-66-6	
200.8 MET ICPMS, Dissolved	Analytical Method: EPA 200.8	Preparation Method: EPA 200.8						
Aluminum, Dissolved	**6.3**	ug/L	4.0	1	08/07/13 15:42	08/08/13 14:44	7429-90-5	
Antimony, Dissolved	ND	ug/L	0.50	1	08/07/13 15:42	08/08/13 14:44	7440-36-0	
Arsenic, Dissolved	**1.1**	ug/L	0.50	1	08/07/13 15:42	08/08/13 14:44	7440-38-2	
Barium, Dissolved	**23.9**	ug/L	0.30	1	08/07/13 15:42	08/08/13 14:44	7440-39-3	
Beryllium, Dissolved	ND	ug/L	0.20	1	08/07/13 15:42	08/08/13 14:44	7440-41-7	
Cadmium, Dissolved	**0.081**	ug/L	0.080	1	08/07/13 15:42	08/08/13 14:44	7440-43-9	
Calcium, Dissolved	**260000**	ug/L	400	20	08/07/13 15:42	08/08/13 14:49	7440-70-2	
Chromium, Dissolved	ND	ug/L	0.50	1	08/07/13 15:42	08/08/13 14:44	7440-47-3	
Cobalt, Dissolved	**1.1**	ug/L	0.50	1	08/07/13 15:42	08/08/13 14:44	7440-48-4	
Copper, Dissolved	**1.1**	ug/L	0.50	1	08/07/13 15:42	08/08/13 14:44	7440-50-8	
Iron, Dissolved	**1530**	ug/L	50.0	1	08/07/13 15:42	08/08/13 14:44	7439-89-6	
Lead, Dissolved	ND	ug/L	0.10	1	08/07/13 15:42	08/08/13 14:44	7439-92-1	

This report shall not be reproduced, except in full,
without the written consent of Pace Analytical Services, Inc..

Pace Analytical Services, Inc.
9608 Loiret Blvd.
Lenexa, KS 66219
(913)599-5665

ANALYTICAL RESULTS

Project: July 2013 Rico Water Sampling
Pace Project No.: 60149302

Sample: MW-3 DEEP_20130718 **Lab ID: 60149302007** Collected: 07/18/13 11:27 Received: 07/20/13 09:20 Matrix: Water

Comments: • All reported results confirmed for total vs. dissolved metals (Ni)

Parameters	Results	Units	Report Limit	DF	Prepared	Analyzed	CAS No.	Qual
200.8 MET ICPMS, Dissolved	Analytical Method: EPA 200.8		Preparation Method: EPA 200.8					
Magnesium, Dissolved	**25200**	ug/L	100	20	08/07/13 15:42	08/08/13 14:49	7439-95-4	
Manganese, Dissolved	**1440**	ug/L	10.0	20	08/07/13 15:42	08/08/13 14:49	7439-96-5	
Molybdenum, Dissolved	**10.1**	ug/L	0.50	1	08/07/13 15:42	08/08/13 14:44	7439-98-7	
Nickel, Dissolved	**3.7**	ug/L	0.50	1	08/07/13 15:42	08/08/13 14:44	7440-02-0	
Potassium, Dissolved	**7620**	ug/L	20.0	1	08/07/13 15:42	08/08/13 14:44	7440-09-7	
Selenium, Dissolved	ND	ug/L	0.50	1	08/07/13 15:42	08/08/13 14:44	7782-49-2	
Silver, Dissolved	ND	ug/L	0.50	1	08/07/13 15:42	08/08/13 14:44	7440-22-4	
Sodium, Dissolved	**13300**	ug/L	50.0	1	08/07/13 15:42	08/08/13 14:44	7440-23-5	
Thallium, Dissolved	ND	ug/L	0.10	1	08/07/13 15:42	08/08/13 14:44	7440-28-0	
Vanadium, Dissolved	ND	ug/L	0.10	1	08/07/13 15:42	08/08/13 14:44	7440-62-2	
Zinc, Dissolved	**42.5**	ug/L	5.0	1	08/07/13 15:42	08/08/13 14:44	7440-66-6	
200.8 Potentially Diss. Metals	Analytical Method: EPA 200.8		Preparation Method: EPA 200.8					
Aluminum, Dissolved	**129**	ug/L	50.0	1	07/23/13 15:00	08/16/13 00:10	7429-90-5	
Antimony, Dissolved	**0.12J**	ug/L	1.0	1	07/23/13 15:00	08/16/13 00:10	7440-36-0	
Arsenic, Dissolved	**1.1**	ug/L	1.0	1	07/23/13 15:00	08/16/13 00:10	7440-38-2	
Barium, Dissolved	**24.9**	ug/L	1.0	1	07/23/13 15:00	08/16/13 00:10	7440-39-3	
Beryllium, Dissolved	**0.073J**	ug/L	0.50	1	07/23/13 15:00	08/16/13 00:10	7440-41-7	
Cadmium, Dissolved	**0.37J**	ug/L	0.50	1	07/23/13 15:00	08/16/13 00:10	7440-43-9	
Chromium, Dissolved	**0.97J**	ug/L	1.0	1	07/23/13 15:00	08/16/13 00:10	7440-47-3	B
Cobalt, Dissolved	**0.96J**	ug/L	1.0	1	07/23/13 15:00	08/16/13 00:10	7440-48-4	
Copper, Dissolved	**4.3**	ug/L	1.0	1	07/23/13 15:00	08/16/13 00:10	7440-50-8	
Iron, Dissolved	**2170**	ug/L	50.0	1	07/23/13 15:00	08/16/13 00:10	7439-89-6	
Lead, Dissolved	**8.6**	ug/L	1.0	1	07/23/13 15:00	08/16/13 00:10	7439-92-1	
Manganese, Dissolved	**1290**	ug/L	1.0	1	07/23/13 15:00	08/16/13 00:10	7439-96-5	
Molybdenum, Dissolved	**8.6**	ug/L	1.0	1	07/23/13 15:00	08/16/13 00:10	7439-98-7	
Nickel, Dissolved	**0.47J**	ug/L	1.0	1	07/23/13 15:00	08/16/13 00:10	7440-02-0	B
Selenium, Dissolved	**0.16J**	ug/L	1.0	1	07/23/13 15:00	08/16/13 00:10	7782-49-2	
Silver, Dissolved	**0.048J**	ug/L	0.50	1	07/23/13 15:00	08/16/13 00:10	7440-22-4	
Thallium, Dissolved	**0.40J**	ug/L	1.0	1	07/23/13 15:00	08/16/13 00:10	7440-28-0	B
Vanadium, Dissolved	**0.60J**	ug/L	1.0	1	07/23/13 15:00	08/16/13 00:10	7440-62-2	
Zinc, Dissolved	**49.2**	ug/L	10.0	1	07/23/13 15:00	08/16/13 00:10	7440-66-6	
245.1 Mercury	Analytical Method: EPA 245.1		Preparation Method: EPA 245.1					
Mercury	ND	ug/L	0.20	1	07/30/13 09:46	08/01/13 12:08	7439-97-6	
245.1 Mercury, Dissolved	Analytical Method: EPA 245.1		Preparation Method: EPA 245.1					
Mercury, Dissolved	ND	ug/L	0.20	1	07/29/13 09:32	08/01/13 13:29	7439-97-6	
245.1 Potentially Diss Mercury	Analytical Method: EPA 245.1		Preparation Method: EPA 245.1					
Mercury, Dissolved	ND	ug/L	0.20	1	07/22/13 14:30	07/23/13 11:21	7439-97-6	
2510B Specific Conductance	Analytical Method: SM 2510B							
Specific Conductance	**1240**	umhos/cm	10.0	1		08/01/13 19:55		

REPORT OF LABORATORY ANALYSIS

This report shall not be reproduced, except in full,
without the written consent of Pace Analytical Services, Inc..

Pace Analytical Services, Inc.
9608 Loiret Blvd.
Lenexa, KS 66219
(913)599-5665

ANALYTICAL RESULTS

Project: July 2013 Rico Water Sampling
Pace Project No.: 60149302

Sample: MW-3 DEEP_20130718 **Lab ID: 60149302007** Collected: 07/18/13 11:27 Received: 07/20/13 09:20 Matrix: Water

Comments: • All reported results confirmed for total vs. dissolved metals (Ni)

Parameters	Results	Units	Report Limit	DF	Prepared	Analyzed	CAS No.	Qual
Salinity	Analytical Method: Calculated							
Salinity (as dissolved solids)	**794**	mg/L	6.4	1		08/01/13 17:55		
Salinity (as seawater)	**0.62**	PSU	0.014	1		08/01/13 17:55		
2320B Alkalinity	Analytical Method: SM 2320B							
Alkalinity,Bicarbonate (CaCO3)	**99.7**	mg/L	20.0	1		07/23/13 09:40		
Alkalinity, Carbonate (CaCO3)	ND	mg/L	20.0	1		07/23/13 09:40		
Alkalinity, Total as CaCO3	**99.7**	mg/L	20.0	1		07/23/13 09:40		
2540C Total Dissolved Solids	Analytical Method: SM 2540C							
Total Dissolved Solids	**1040**	mg/L	5.0	1		07/23/13 15:43		
2540D Total Suspended Solids	Analytical Method: SM 2540D							
Total Suspended Solids	**25.0**	mg/L	5.0	1		07/23/13 08:19		
4500S2D Sulfide, Total	Analytical Method: SM 4500-S-2 D							
Sulfide, Total	ND	mg/L	0.050	1		07/25/13 14:16	18496-25-8	
300.0 IC Anions 28 Days	Analytical Method: EPA 300.0							
Chloride	ND	mg/L	1.0	1		07/31/13 20:20	16887-00-6	
Sulfate	**634**	mg/L	100	100		08/01/13 20:14	14808-79-8	
353.2 Nitrogen, NO2/NO3 pres.	Analytical Method: EPA 353.2							
Nitrogen, NO2 plus NO3	ND	mg/L	0.10	1		07/24/13 09:32		
4500CNE Cyanide, Total	Analytical Method: SM 4500-CN-E							
Cyanide	ND	mg/L	0.0050	1		07/24/13 17:52	57-12-5	
5310C TOC	Analytical Method: SM 5310C							
Total Organic Carbon	**0.75**	mg/L	0.50	1		07/29/13 23:26	7440-44-0	

This report shall not be reproduced, except in full,
without the written consent of Pace Analytical Services, Inc..

Pace Analytical Services, Inc.
9608 Loiret Blvd.
Lenexa, KS 66219
(913)599-5665

ANALYTICAL RESULTS

Project: July 2013 Rico Water Sampling
Pace Project No.: 60149302

Sample: MW-6 DEEP_20130718 **Lab ID: 60149302008** Collected: 07/18/13 10:39 Received: 07/20/13 09:20 Matrix: Water

Parameters	Results	Units	Report Limit	DF	Prepared	Analyzed	CAS No.	Qual
200.7 Potentially Diss. Metals	Analytical Method: EPA 200.7 Preparation Method: EPA 200.7							
Calcium, Dissolved	**279000**	ug/L	100	1	07/23/13 15:00	07/31/13 09:52	7440-70-2	
Magnesium, Dissolved	**39400**	ug/L	50.0	1	07/23/13 15:00	07/31/13 09:52	7439-95-4	
Potassium, Dissolved	**6260**	ug/L	500	1	07/23/13 15:00	07/31/13 09:52	7440-09-7	
Sodium, Dissolved	**5160**	ug/L	500	1	07/23/13 15:00	07/31/13 09:52	7440-23-5	
200.8 MET ICPMS	Analytical Method: EPA 200.8 Preparation Method: EPA 200.8							
Aluminum	**2810**	ug/L	4.0	1	07/25/13 07:54	07/30/13 19:56	7429-90-5	
Antimony	ND	ug/L	0.50	1	07/25/13 07:54	07/30/13 19:56	7440-36-0	
Arsenic	**48.1**	ug/L	0.50	1	07/25/13 07:54	07/30/13 19:56	7440-38-2	
Barium	**46.1**	ug/L	0.30	1	07/25/13 07:54	07/30/13 19:56	7440-39-3	
Beryllium	**0.70**	ug/L	0.20	1	07/25/13 07:54	07/30/13 19:56	7440-41-7	
Cadmium	**1.5**	ug/L	0.080	1	07/25/13 07:54	07/30/13 19:56	7440-43-9	
Calcium	**285000**	ug/L	400	20	07/25/13 07:54	07/30/13 20:02	7440-70-2	
Chromium	**2.3**	ug/L	0.50	1	07/25/13 07:54	07/30/13 19:56	7440-47-3	
Cobalt	**3.9**	ug/L	0.50	1	07/25/13 07:54	07/30/13 19:56	7440-48-4	
Copper	**15.1**	ug/L	0.50	1	07/25/13 07:54	07/30/13 19:56	7440-50-8	
Iron	**24900**	ug/L	1000	20	07/25/13 07:54	07/30/13 20:02	7439-89-6	
Lead	**31.2**	ug/L	0.10	1	07/25/13 07:54	07/30/13 19:56	7439-92-1	
Magnesium	**43500**	ug/L	100	20	07/25/13 07:54	07/30/13 20:02	7439-95-4	
Manganese	**7830**	ug/L	10.0	20	07/25/13 07:54	07/30/13 20:02	7439-96-5	
Molybdenum	**7.0**	ug/L	0.50	1	07/25/13 07:54	07/30/13 19:56	7439-98-7	
Nickel	**4.4**	ug/L	0.50	1	07/25/13 07:54	07/30/13 19:56	7440-02-0	
Potassium	**6700**	ug/L	20.0	1	07/25/13 07:54	07/30/13 19:56	7440-09-7	
Selenium	**1.4**	ug/L	0.50	1	07/25/13 07:54	07/30/13 19:56	7782-49-2	
Silica	**26200**	ug/L	1070	20	07/25/13 07:54	07/30/13 20:02	7631-86-9	
Silver	ND	ug/L	0.50	1	07/25/13 07:54	07/30/13 19:56	7440-22-4	
Sodium	**4780**	ug/L	50.0	1	07/25/13 07:54	07/30/13 19:56	7440-23-5	
Thallium	ND	ug/L	0.10	1	07/25/13 07:54	07/30/13 19:56	7440-28-0	
Total Hardness by 2340B	**890000**	ug/L	1420	20	07/25/13 07:54	07/30/13 20:02		
Vanadium	**5.2**	ug/L	0.10	1	07/25/13 07:54	07/30/13 19:56	7440-62-2	
Zinc	**759**	ug/L	100	20	07/25/13 07:54	07/30/13 20:02	7440-66-6	
200.8 MET ICPMS, Dissolved	Analytical Method: EPA 200.8 Preparation Method: EPA 200.8							
Aluminum, Dissolved	**329**	ug/L	4.0	1	08/07/13 15:42	08/08/13 14:54	7429-90-5	
Antimony, Dissolved	ND	ug/L	0.50	1	08/07/13 15:42	08/08/13 14:54	7440-36-0	
Arsenic, Dissolved	**18.1**	ug/L	0.50	1	08/07/13 15:42	08/08/13 14:54	7440-38-2	
Barium, Dissolved	**18.2**	ug/L	0.30	1	08/07/13 15:42	08/08/13 14:54	7440-39-3	
Beryllium, Dissolved	**0.59**	ug/L	0.20	1	08/07/13 15:42	08/08/13 14:54	7440-41-7	
Cadmium, Dissolved	ND	ug/L	0.080	1	08/07/13 15:42	08/08/13 14:54	7440-43-9	
Calcium, Dissolved	**302000**	ug/L	400	20	08/07/13 15:42	08/08/13 14:59	7440-70-2	
Chromium, Dissolved	ND	ug/L	0.50	1	08/07/13 15:42	08/08/13 14:54	7440-47-3	
Cobalt, Dissolved	**3.0**	ug/L	0.50	1	08/07/13 15:42	08/08/13 14:54	7440-48-4	
Copper, Dissolved	**1.3**	ug/L	0.50	1	08/07/13 15:42	08/08/13 14:54	7440-50-8	
Iron, Dissolved	**19700**	ug/L	50.0	1	08/07/13 15:42	08/08/13 14:54	7439-89-6	
Lead, Dissolved	**0.26**	ug/L	0.10	1	08/07/13 15:42	08/08/13 14:54	7439-92-1	
Magnesium, Dissolved	**43400**	ug/L	100	20	08/07/13 15:42	08/08/13 14:59	7439-95-4	

This report shall not be reproduced, except in full,
without the written consent of Pace Analytical Services, Inc..

Pace Analytical Services, Inc.
9608 Loiret Blvd.
Lenexa, KS 66219
(913)599-5665

ANALYTICAL RESULTS

Project: July 2013 Rico Water Sampling
Pace Project No.: 60149302

Sample: MW-6 DEEP_20130718 **Lab ID: 60149302008** Collected: 07/18/13 10:39 Received: 07/20/13 09:20 Matrix: Water

Parameters	Results	Units	Report Limit	DF	Prepared	Analyzed	CAS No.	Qual
200.8 MET ICPMS, Dissolved	Analytical Method: EPA 200.8 Preparation Method: EPA 200.8							
Manganese, Dissolved	**7620**	ug/L	10.0	20	08/07/13 15:42	08/08/13 14:59	7439-96-5	
Molybdenum, Dissolved	**6.3**	ug/L	0.50	1	08/07/13 15:42	08/08/13 14:54	7439-98-7	
Nickel, Dissolved	**2.3**	ug/L	0.50	1	08/07/13 15:42	08/08/13 14:54	7440-02-0	
Potassium, Dissolved	**6620**	ug/L	20.0	1	08/07/13 15:42	08/08/13 14:54	7440-09-7	
Selenium, Dissolved	**0.79**	ug/L	0.50	1	08/07/13 15:42	08/08/13 14:54	7782-49-2	
Silver, Dissolved	ND	ug/L	0.50	1	08/07/13 15:42	08/08/13 14:54	7440-22-4	
Sodium, Dissolved	**5170**	ug/L	50.0	1	08/07/13 15:42	08/08/13 14:54	7440-23-5	
Thallium, Dissolved	ND	ug/L	0.10	1	08/07/13 15:42	08/08/13 14:54	7440-28-0	
Vanadium, Dissolved	ND	ug/L	0.10	1	08/07/13 15:42	08/08/13 14:54	7440-62-2	
Zinc, Dissolved	**331**	ug/L	5.0	1	08/07/13 15:42	08/08/13 14:54	7440-66-6	
200.8 Potentially Diss. Metals	Analytical Method: EPA 200.8 Preparation Method: EPA 200.8							
Aluminum, Dissolved	**1110**	ug/L	50.0	1	07/23/13 15:00	08/16/13 00:15	7429-90-5	
Antimony, Dissolved	**0.20J**	ug/L	1.0	1	07/23/13 15:00	08/16/13 00:15	7440-36-0	
Arsenic, Dissolved	**43.1**	ug/L	1.0	1	07/23/13 15:00	08/16/13 00:15	7440-38-2	
Barium, Dissolved	**24.9**	ug/L	1.0	1	07/23/13 15:00	08/16/13 00:15	7440-39-3	
Beryllium, Dissolved	**0.62**	ug/L	0.50	1	07/23/13 15:00	08/16/13 00:15	7440-41-7	
Cadmium, Dissolved	**0.88**	ug/L	0.50	1	07/23/13 15:00	08/16/13 00:15	7440-43-9	
Chromium, Dissolved	**1.7**	ug/L	1.0	1	07/23/13 15:00	08/16/13 00:15	7440-47-3	B
Cobalt, Dissolved	**3.0**	ug/L	1.0	1	07/23/13 15:00	08/16/13 00:15	7440-48-4	
Copper, Dissolved	**9.6**	ug/L	1.0	1	07/23/13 15:00	08/16/13 00:15	7440-50-8	
Iron, Dissolved	**22200**	ug/L	50.0	1	07/23/13 15:00	08/16/13 00:15	7439-89-6	
Lead, Dissolved	**23.5**	ug/L	1.0	1	07/23/13 15:00	08/16/13 00:15	7439-92-1	
Manganese, Dissolved	**7240**	ug/L	5.0	5	07/23/13 15:00	08/16/13 01:17	7439-96-5	
Molybdenum, Dissolved	**4.7**	ug/L	1.0	1	07/23/13 15:00	08/16/13 00:15	7439-98-7	
Nickel, Dissolved	**3.2**	ug/L	1.0	1	07/23/13 15:00	08/16/13 00:15	7440-02-0	
Selenium, Dissolved	**0.83J**	ug/L	1.0	1	07/23/13 15:00	08/16/13 00:15	7782-49-2	
Silver, Dissolved	ND	ug/L	0.50	1	07/23/13 15:00	08/16/13 00:15	7440-22-4	
Thallium, Dissolved	**0.25J**	ug/L	1.0	1	07/23/13 15:00	08/16/13 00:15	7440-28-0	B
Vanadium, Dissolved	**1.9**	ug/L	1.0	1	07/23/13 15:00	08/16/13 00:15	7440-62-2	
Zinc, Dissolved	**656**	ug/L	10.0	1	07/23/13 15:00	08/16/13 00:15	7440-66-6	
245.1 Mercury	Analytical Method: EPA 245.1 Preparation Method: EPA 245.1							
Mercury	ND	ug/L	0.20	1	07/30/13 09:46	08/01/13 12:11	7439-97-6	
245.1 Mercury, Dissolved	Analytical Method: EPA 245.1 Preparation Method: EPA 245.1							
Mercury, Dissolved	ND	ug/L	0.20	1	07/29/13 09:32	08/01/13 13:32	7439-97-6	
245.1 Potentially Diss Mercury	Analytical Method: EPA 245.1 Preparation Method: EPA 245.1							
Mercury, Dissolved	ND	ug/L	0.20	1	07/22/13 14:30	07/23/13 11:23	7439-97-6	
2510B Specific Conductance	Analytical Method: SM 2510B							
Specific Conductance	**1420**	umhos/cm	10.0	1		08/01/13 17:56		
Salinity	Analytical Method: Calculated							
Salinity (as dissolved solids)	**908**	mg/L	6.4	1		08/01/13 17:56		

REPORT OF LABORATORY ANALYSIS

This report shall not be reproduced, except in full,
without the written consent of Pace Analytical Services, Inc..

Pace Analytical Services, Inc.
9608 Loiret Blvd.
Lenexa, KS 66219
(913)599-5665

ANALYTICAL RESULTS

Project: July 2013 Rico Water Sampling
Pace Project No.: 60149302

Sample: MW-6 DEEP_20130718 **Lab ID: 60149302008** Collected: 07/18/13 10:39 Received: 07/20/13 09:20 Matrix: Water

Parameters	Results	Units	Report Limit	DF	Prepared	Analyzed	CAS No.	Qual
Salinity	Analytical Method: Calculated							
Salinity (as seawater)	**0.71**	PSU	0.014	1		08/01/13 17:56		
2320B Alkalinity	Analytical Method: SM 2320B							
Alkalinity,Bicarbonate (CaCO3)	**179**	mg/L	20.0	1		07/23/13 09:53		
Alkalinity, Carbonate (CaCO3)	ND	mg/L	20.0	1		07/23/13 09:53		
Alkalinity, Total as CaCO3	**179**	mg/L	20.0	1		07/23/13 09:53		
2540C Total Dissolved Solids	Analytical Method: SM 2540C							
Total Dissolved Solids	**1250**	mg/L	5.0	1		07/23/13 15:44		
2540D Total Suspended Solids	Analytical Method: SM 2540D							
Total Suspended Solids	**99.0**	mg/L	5.0	1		07/23/13 08:19		
4500S2D Sulfide, Total	Analytical Method: SM 4500-S-2 D							
Sulfide, Total	ND	mg/L	0.050	1		07/25/13 14:16	18496-25-8	
300.0 IC Anions 28 Days	Analytical Method: EPA 300.0							
Chloride	**1.0**	mg/L	1.0	1		07/31/13 20:38	16887-00-6	
Sulfate	**732**	mg/L	100	100		08/01/13 20:32	14808-79-8	
353.2 Nitrogen, NO2/NO3 pres.	Analytical Method: EPA 353.2							
Nitrogen, NO2 plus NO3	ND	mg/L	0.10	1		07/24/13 09:33		
4500CNE Cyanide, Total	Analytical Method: SM 4500-CN-E							
Cyanide	ND	mg/L	0.0050	1		07/24/13 17:55	57-12-5	
5310C TOC	Analytical Method: SM 5310C							
Total Organic Carbon	ND	mg/L	0.50	1		07/29/13 23:44	7440-44-0	

This report shall not be reproduced, except in full,
without the written consent of Pace Analytical Services, Inc..

Pace Analytical Services, Inc.
9608 Loiret Blvd.
Lenexa, KS 66219
(913)599-5665

ANALYTICAL RESULTS

Project: July 2013 Rico Water Sampling
Pace Project No.: 60149302

Sample: MW-6 SHALLOW_20130718 **Lab ID: 60149302009** Collected: 07/18/13 10:34 Received: 07/20/13 09:20 Matrix: Water

Parameters	Results	Units	Report Limit	DF	Prepared	Analyzed	CAS No.	Qual
200.7 Potentially Diss. Metals	Analytical Method: EPA 200.7 Preparation Method: EPA 200.7							
Calcium, Dissolved	**376000**	ug/L	100	1	07/23/13 15:00	07/31/13 09:56	7440-70-2	
Magnesium, Dissolved	**52800**	ug/L	50.0	1	07/23/13 15:00	07/31/13 09:56	7439-95-4	
Potassium, Dissolved	**12200**	ug/L	500	1	07/23/13 15:00	07/31/13 09:56	7440-09-7	
Sodium, Dissolved	**4500**	ug/L	500	1	07/23/13 15:00	07/31/13 09:56	7440-23-5	
200.8 MET ICPMS	Analytical Method: EPA 200.8 Preparation Method: EPA 200.8							
Aluminum	**13600**	ug/L	4.0	1	07/25/13 07:54	07/30/13 20:07	7429-90-5	
Antimony	**0.59**	ug/L	0.50	1	07/25/13 07:54	07/30/13 20:07	7440-36-0	
Arsenic	**88.8**	ug/L	0.50	1	07/25/13 07:54	07/30/13 20:07	7440-38-2	
Barium	**106**	ug/L	0.30	1	07/25/13 07:54	07/30/13 20:07	7440-39-3	
Beryllium	**1.5**	ug/L	0.20	1	07/25/13 07:54	07/30/13 20:07	7440-41-7	
Cadmium	**9.9**	ug/L	0.080	1	07/25/13 07:54	07/30/13 20:07	7440-43-9	
Calcium	**378000**	ug/L	400	20	07/25/13 07:54	07/30/13 20:13	7440-70-2	
Chromium	**11.9**	ug/L	0.50	1	07/25/13 07:54	07/30/13 20:07	7440-47-3	
Cobalt	**10.9**	ug/L	0.50	1	07/25/13 07:54	07/30/13 20:07	7440-48-4	
Copper	**59.4**	ug/L	0.50	1	07/25/13 07:54	07/30/13 20:07	7440-50-8	
Iron	**67900**	ug/L	1000	20	07/25/13 07:54	07/30/13 20:13	7439-89-6	
Lead	**117**	ug/L	0.10	1	07/25/13 07:54	07/30/13 20:07	7439-92-1	
Magnesium	**61200**	ug/L	100	20	07/25/13 07:54	07/30/13 20:13	7439-95-4	
Manganese	**9220**	ug/L	25.0	50	07/25/13 07:54	07/31/13 10:21	7439-96-5	
Molybdenum	**8.2**	ug/L	0.50	1	07/25/13 07:54	07/30/13 20:07	7439-98-7	
Nickel	**16.1**	ug/L	0.50	1	07/25/13 07:54	07/30/13 20:07	7440-02-0	
Potassium	**13500**	ug/L	20.0	1	07/25/13 07:54	07/30/13 20:07	7440-09-7	
Selenium	**1.8**	ug/L	0.50	1	07/25/13 07:54	07/30/13 20:07	7782-49-2	
Silica	**65600**	ug/L	1070	20	07/25/13 07:54	07/30/13 20:13	7631-86-9	
Silver	ND	ug/L	0.50	1	07/25/13 07:54	07/30/13 20:07	7440-22-4	
Sodium	**3960**	ug/L	50.0	1	07/25/13 07:54	07/30/13 20:07	7440-23-5	
Thallium	**0.41**	ug/L	0.10	1	07/25/13 07:54	07/30/13 20:07	7440-28-0	
Total Hardness by 2340B	**1190000**	ug/L	1420	20	07/25/13 07:54	07/30/13 20:13		
Vanadium	**17.6**	ug/L	0.10	1	07/25/13 07:54	07/30/13 20:07	7440-62-2	
Zinc	**2290**	ug/L	100	20	07/25/13 07:54	07/30/13 20:13	7440-66-6	
200.8 MET ICPMS, Dissolved	Analytical Method: EPA 200.8 Preparation Method: EPA 200.8							
Aluminum, Dissolved	**643**	ug/L	4.0	1	08/07/13 15:42	08/08/13 15:04	7429-90-5	
Antimony, Dissolved	ND	ug/L	0.50	1	08/07/13 15:42	08/08/13 15:04	7440-36-0	
Arsenic, Dissolved	**28.3**	ug/L	0.50	1	08/07/13 15:42	08/08/13 15:04	7440-38-2	
Barium, Dissolved	**17.1**	ug/L	0.30	1	08/07/13 15:42	08/08/13 15:04	7440-39-3	
Beryllium, Dissolved	**0.88**	ug/L	0.20	1	08/07/13 15:42	08/08/13 15:04	7440-41-7	
Cadmium, Dissolved	**0.12**	ug/L	0.080	1	08/07/13 15:42	08/08/13 15:04	7440-43-9	
Calcium, Dissolved	**414000**	ug/L	1000	50	08/07/13 15:42	08/08/13 15:09	7440-70-2	
Chromium, Dissolved	ND	ug/L	0.50	1	08/07/13 15:42	08/08/13 15:04	7440-47-3	
Cobalt, Dissolved	**4.2**	ug/L	0.50	1	08/07/13 15:42	08/08/13 15:04	7440-48-4	
Copper, Dissolved	**0.70**	ug/L	0.50	1	08/07/13 15:42	08/08/13 15:04	7440-50-8	
Iron, Dissolved	**47000**	ug/L	2500	50	08/07/13 15:42	08/08/13 15:09	7439-89-6	
Lead, Dissolved	ND	ug/L	0.10	1	08/07/13 15:42	08/08/13 15:04	7439-92-1	
Magnesium, Dissolved	**59800**	ug/L	250	50	08/07/13 15:42	08/08/13 15:09	7439-95-4	

This report shall not be reproduced, except in full,
without the written consent of Pace Analytical Services, Inc..

Pace Analytical Services, Inc.
9608 Loiret Blvd.
Lenexa, KS 66219
(913)599-5665

ANALYTICAL RESULTS

Project: July 2013 Rico Water Sampling
Pace Project No.: 60149302

Sample: MW-6 SHALLOW_20130718 **Lab ID: 60149302009** Collected: 07/18/13 10:34 Received: 07/20/13 09:20 Matrix: Water

Parameters	Results	Units	Report Limit	DF	Prepared	Analyzed	CAS No.	Qual
200.8 MET ICPMS, Dissolved	Analytical Method: EPA 200.8 Preparation Method: EPA 200.8							
Manganese, Dissolved	**9180**	ug/L	25.0	50	08/07/13 15:42	08/08/13 15:09	7439-96-5	
Molybdenum, Dissolved	**4.8**	ug/L	0.50	1	08/07/13 15:42	08/08/13 15:04	7439-98-7	
Nickel, Dissolved	**2.3**	ug/L	0.50	1	08/07/13 15:42	08/08/13 15:04	7440-02-0	
Potassium, Dissolved	**12500**	ug/L	20.0	1	08/07/13 15:42	08/08/13 15:04	7440-09-7	
Selenium, Dissolved	ND	ug/L	0.50	1	08/07/13 15:42	08/08/13 15:04	7782-49-2	
Silver, Dissolved	ND	ug/L	0.50	1	08/07/13 15:42	08/08/13 15:04	7440-22-4	
Sodium, Dissolved	**4310**	ug/L	50.0	1	08/07/13 15:42	08/08/13 15:04	7440-23-5	
Thallium, Dissolved	ND	ug/L	0.10	1	08/07/13 15:42	08/08/13 15:04	7440-28-0	
Vanadium, Dissolved	ND	ug/L	0.10	1	08/07/13 15:42	08/08/13 15:04	7440-62-2	
Zinc, Dissolved	**620**	ug/L	250	50	08/07/13 15:42	08/08/13 15:09	7440-66-6	
200.8 Potentially Diss. Metals	Analytical Method: EPA 200.8 Preparation Method: EPA 200.8							
Aluminum, Dissolved	**5070**	ug/L	50.0	1	07/23/13 15:00	08/16/13 00:19	7429-90-5	
Antimony, Dissolved	**0.18J**	ug/L	1.0	1	07/23/13 15:00	08/16/13 00:19	7440-36-0	
Arsenic, Dissolved	**70.4**	ug/L	1.0	1	07/23/13 15:00	08/16/13 00:19	7440-38-2	
Barium, Dissolved	**24.1**	ug/L	1.0	1	07/23/13 15:00	08/16/13 00:19	7440-39-3	
Beryllium, Dissolved	**1.1**	ug/L	0.50	1	07/23/13 15:00	08/16/13 00:19	7440-41-7	
Cadmium, Dissolved	**7.8**	ug/L	0.50	1	07/23/13 15:00	08/16/13 00:19	7440-43-9	
Chromium, Dissolved	**3.8**	ug/L	1.0	1	07/23/13 15:00	08/16/13 00:19	7440-47-3	
Cobalt, Dissolved	**7.5**	ug/L	1.0	1	07/23/13 15:00	08/16/13 00:19	7440-48-4	
Copper, Dissolved	**32.8**	ug/L	1.0	1	07/23/13 15:00	08/16/13 00:19	7440-50-8	
Iron, Dissolved	**58300**	ug/L	50.0	1	07/23/13 15:00	08/16/13 00:19	7439-89-6	
Lead, Dissolved	**110**	ug/L	1.0	1	07/23/13 15:00	08/16/13 00:19	7439-92-1	
Manganese, Dissolved	**8850**	ug/L	5.0	5	07/23/13 15:00	08/16/13 01:21	7439-96-5	
Molybdenum, Dissolved	**3.5**	ug/L	1.0	1	07/23/13 15:00	08/16/13 00:19	7439-98-7	
Nickel, Dissolved	**8.9**	ug/L	1.0	1	07/23/13 15:00	08/16/13 00:19	7440-02-0	
Selenium, Dissolved	**1.1**	ug/L	1.0	1	07/23/13 15:00	08/16/13 00:19	7782-49-2	
Silver, Dissolved	**0.011J**	ug/L	0.50	1	07/23/13 15:00	08/16/13 00:19	7440-22-4	
Thallium, Dissolved	**0.43J**	ug/L	1.0	1	07/23/13 15:00	08/16/13 00:19	7440-28-0	B
Vanadium, Dissolved	**4.2**	ug/L	1.0	1	07/23/13 15:00	08/16/13 00:19	7440-62-2	
Zinc, Dissolved	**1980**	ug/L	10.0	1	07/23/13 15:00	08/16/13 00:19	7440-66-6	
245.1 Mercury	Analytical Method: EPA 245.1 Preparation Method: EPA 245.1							
Mercury	ND	ug/L	0.20	1	07/30/13 09:46	08/01/13 12:13	7439-97-6	
245.1 Mercury, Dissolved	Analytical Method: EPA 245.1 Preparation Method: EPA 245.1							
Mercury, Dissolved	ND	ug/L	0.20	1	07/29/13 09:32	08/01/13 13:34	7439-97-6	
245.1 Potentially Diss Mercury	Analytical Method: EPA 245.1 Preparation Method: EPA 245.1							
Mercury, Dissolved	ND	ug/L	0.20	1	07/22/13 14:30	07/23/13 11:25	7439-97-6	
2510B Specific Conductance	Analytical Method: SM 2510B							
Specific Conductance	**1830**	umhos/cm	10.0	1		08/01/13 17:57		

REPORT OF LABORATORY ANALYSIS

This report shall not be reproduced, except in full,
without the written consent of Pace Analytical Services, Inc..

Pace Analytical Services, Inc.
9608 Loiret Blvd.
Lenexa, KS 66219
(913)599-5665

ANALYTICAL RESULTS

Project: July 2013 Rico Water Sampling
Pace Project No.: 60149302

Sample: MW-6 SHALLOW_20130718 **Lab ID: 60149302009** Collected: 07/18/13 10:34 Received: 07/20/13 09:20 Matrix: Water

Parameters	Results	Units	Report Limit	DF	Prepared	Analyzed	CAS No.	Qual
Salinity	Analytical Method: Calculated							
Salinity (as dissolved solids)	**1170**	mg/L	6.4	1		08/01/13 17:57		
Salinity (as seawater)	**0.92**	PSU	0.014	1		08/01/13 17:57		
2320B Alkalinity	Analytical Method: SM 2320B							
Alkalinity,Bicarbonate (CaCO3)	**147**	mg/L	20.0	1		07/23/13 09:58		
Alkalinity, Carbonate (CaCO3)	ND	mg/L	20.0	1		07/23/13 09:58		
Alkalinity, Total as CaCO3	**147**	mg/L	20.0	1		07/23/13 09:58		
2540C Total Dissolved Solids	Analytical Method: SM 2540C							
Total Dissolved Solids	**1710**	mg/L	5.0	1		07/23/13 15:44		
2540D Total Suspended Solids	Analytical Method: SM 2540D							
Total Suspended Solids	**306**	mg/L	5.0	1		07/23/13 08:19		
4500S2D Sulfide, Total	Analytical Method: SM 4500-S-2 D							
Sulfide, Total	ND	mg/L	0.050	1		07/25/13 14:17	18496-25-8	
300.0 IC Anions 28 Days	Analytical Method: EPA 300.0							
Chloride	**1.1**	mg/L	1.0	1		07/31/13 20:55	16887-00-6	
Sulfate	**1090**	mg/L	200	200		08/01/13 20:49	14808-79-8	
353.2 Nitrogen, NO2/NO3 pres.	Analytical Method: EPA 353.2							
Nitrogen, NO2 plus NO3	ND	mg/L	0.10	1		07/24/13 09:34		
4500CNE Cyanide, Total	Analytical Method: SM 4500-CN-E							
Cyanide	ND	mg/L	0.0050	1		07/24/13 17:56	57-12-5	
5310C TOC	Analytical Method: SM 5310C							
Total Organic Carbon	**0.82**	mg/L	0.50	1		07/30/13 00:02	7440-44-0	

This report shall not be reproduced, except in full,
without the written consent of Pace Analytical Services, Inc..

Pace Analytical Services, Inc.
9608 Loiret Blvd.
Lenexa, KS 66219
(913)599-5665

ANALYTICAL RESULTS

Project: July 2013 Rico Water Sampling
Pace Project No.: 60149302

Sample: DR-10_20130718 **Lab ID: 60149302010** Collected: 07/18/13 13:17 Received: 07/20/13 09:20 Matrix: Water

Comments: • All reported results confirmed for total vs. dissolved metals (Ni)

Parameters	Results	Units	Report Limit	DF	Prepared	Analyzed	CAS No.	Qual
200.7 Potentially Diss. Metals	Analytical Method: EPA 200.7	Preparation Method: EPA 200.7						
Calcium, Dissolved	**241000**	ug/L	100	1	07/23/13 15:00	07/31/13 09:59	7440-70-2	
Magnesium, Dissolved	**20800**	ug/L	50.0	1	07/23/13 15:00	07/31/13 09:59	7439-95-4	
Potassium, Dissolved	**6630**	ug/L	500	1	07/23/13 15:00	07/31/13 09:59	7440-09-7	
Sodium, Dissolved	**25900**	ug/L	500	1	07/23/13 15:00	07/31/13 09:59	7440-23-5	
200.8 MET ICPMS	Analytical Method: EPA 200.8	Preparation Method: EPA 200.8						
Aluminum	**1010**	ug/L	4.0	1	07/25/13 07:54	07/30/13 20:38	7429-90-5	
Antimony	ND	ug/L	0.50	1	07/25/13 07:54	07/30/13 20:38	7440-36-0	
Arsenic	**1.2**	ug/L	0.50	1	07/25/13 07:54	07/30/13 20:38	7440-38-2	
Barium	**49.2**	ug/L	0.30	1	07/25/13 07:54	07/30/13 20:38	7440-39-3	
Beryllium	ND	ug/L	0.20	1	07/25/13 07:54	07/30/13 20:38	7440-41-7	
Cadmium	**2.9**	ug/L	0.080	1	07/25/13 07:54	07/30/13 20:38	7440-43-9	
Calcium	**243000**	ug/L	400	20	07/25/13 07:54	07/30/13 20:44	7440-70-2	
Chromium	**1.9**	ug/L	0.50	1	07/25/13 07:54	07/30/13 20:38	7440-47-3	
Cobalt	**0.84**	ug/L	0.50	1	07/25/13 07:54	07/30/13 20:38	7440-48-4	
Copper	**6.2**	ug/L	0.50	1	07/25/13 07:54	07/30/13 20:38	7440-50-8	
Iron	**1690**	ug/L	50.0	1	07/25/13 07:54	07/30/13 20:38	7439-89-6	
Lead	**9.6**	ug/L	0.10	1	07/25/13 07:54	07/30/13 20:38	7439-92-1	
Magnesium	**21900**	ug/L	5.0	1	07/25/13 07:54	07/30/13 20:38	7439-95-4	
Manganese	**476**	ug/L	10.0	20	07/25/13 07:54	07/30/13 20:44	7439-96-5	
Molybdenum	**14.1**	ug/L	0.50	1	07/25/13 07:54	07/30/13 20:38	7439-98-7	
Nickel	**1.9**	ug/L	0.50	1	07/25/13 07:54	07/30/13 20:38	7440-02-0	
Potassium	**6920**	ug/L	20.0	1	07/25/13 07:54	07/30/13 20:38	7440-09-7	
Selenium	**1.4**	ug/L	0.50	1	07/25/13 07:54	07/30/13 20:38	7782-49-2	
Silica	**22600**	ug/L	1070	20	07/25/13 07:54	07/30/13 20:44	7631-86-9	
Silver	ND	ug/L	0.50	1	07/25/13 07:54	07/30/13 20:38	7440-22-4	
Sodium	**24200**	ug/L	1000	20	07/25/13 07:54	07/30/13 20:44	7440-23-5	
Thallium	ND	ug/L	0.10	1	07/25/13 07:54	07/30/13 20:38	7440-28-0	
Total Hardness by 2340B	**696000**	ug/L	1420	20	07/25/13 07:54	07/30/13 20:44		
Vanadium	**2.1**	ug/L	0.10	1	07/25/13 07:54	07/30/13 20:38	7440-62-2	
Zinc	**786**	ug/L	100	20	07/25/13 07:54	07/30/13 20:44	7440-66-6	
200.8 MET ICPMS, Dissolved	Analytical Method: EPA 200.8	Preparation Method: EPA 200.8						
Aluminum, Dissolved	**17.3**	ug/L	4.0	1	08/07/13 15:42	08/08/13 15:36	7429-90-5	
Antimony, Dissolved	ND	ug/L	0.50	1	08/07/13 15:42	08/08/13 15:36	7440-36-0	
Arsenic, Dissolved	ND	ug/L	0.50	1	08/07/13 15:42	08/08/13 15:36	7440-38-2	
Barium, Dissolved	**19.8**	ug/L	0.30	1	08/07/13 15:42	08/08/13 15:36	7440-39-3	
Beryllium, Dissolved	ND	ug/L	0.20	1	08/07/13 15:42	08/08/13 15:36	7440-41-7	
Cadmium, Dissolved	**2.3**	ug/L	0.080	1	08/07/13 15:42	08/08/13 15:36	7440-43-9	
Calcium, Dissolved	**251000**	ug/L	400	20	08/07/13 15:42	08/08/13 15:45	7440-70-2	
Chromium, Dissolved	ND	ug/L	0.50	1	08/07/13 15:42	08/08/13 15:36	7440-47-3	
Cobalt, Dissolved	ND	ug/L	0.50	1	08/07/13 15:42	08/08/13 15:36	7440-48-4	
Copper, Dissolved	**1.7**	ug/L	0.50	1	08/07/13 15:42	08/08/13 15:36	7440-50-8	
Iron, Dissolved	ND	ug/L	50.0	1	08/07/13 15:42	08/08/13 15:36	7439-89-6	
Lead, Dissolved	**0.22**	ug/L	0.10	1	08/07/13 15:42	08/08/13 15:36	7439-92-1	

This report shall not be reproduced, except in full,
without the written consent of Pace Analytical Services, Inc..

Pace Analytical Services, Inc.
9608 Loiret Blvd.
Lenexa, KS 66219
(913)599-5665

ANALYTICAL RESULTS

Project: July 2013 Rico Water Sampling
Pace Project No.: 60149302

Sample: DR-10_20130718 **Lab ID: 60149302010** Collected: 07/18/13 13:17 Received: 07/20/13 09:20 Matrix: Water

Comments: • All reported results confirmed for total vs. dissolved metals (Ni)

Parameters	Results	Units	Report Limit	DF	Prepared	Analyzed	CAS No.	Qual
200.8 MET ICPMS, Dissolved	Analytical Method: EPA 200.8	Preparation Method: EPA 200.8						
Magnesium, Dissolved	**21500**	ug/L	5.0	1	08/07/13 15:42	08/08/13 15:36	7439-95-4	
Manganese, Dissolved	**35.2**	ug/L	0.50	1	08/07/13 15:42	08/08/13 15:36	7439-96-5	
Molybdenum, Dissolved	**12.2**	ug/L	0.50	1	08/07/13 15:42	08/08/13 15:36	7439-98-7	
Nickel, Dissolved	**4.2**	ug/L	0.50	1	08/07/13 15:42	08/08/13 15:36	7440-02-0	
Potassium, Dissolved	**6730**	ug/L	20.0	1	08/07/13 15:42	08/08/13 15:36	7440-09-7	
Selenium, Dissolved	**1.1**	ug/L	0.50	1	08/07/13 15:42	08/08/13 15:36	7782-49-2	
Silver, Dissolved	ND	ug/L	0.50	1	08/07/13 15:42	08/08/13 15:36	7440-22-4	
Sodium, Dissolved	**24800**	ug/L	1000	20	08/07/13 15:42	08/08/13 15:45	7440-23-5	
Thallium, Dissolved	ND	ug/L	0.10	1	08/07/13 15:42	08/08/13 15:36	7440-28-0	
Vanadium, Dissolved	ND	ug/L	0.10	1	08/07/13 15:42	08/08/13 15:36	7440-62-2	
Zinc, Dissolved	**644**	ug/L	100	20	08/07/13 15:42	08/08/13 15:45	7440-66-6	
200.8 Potentially Diss. Metals	Analytical Method: EPA 200.8	Preparation Method: EPA 200.8						
Aluminum, Dissolved	**222**	ug/L	50.0	1	07/23/13 15:00	08/16/13 00:23	7429-90-5	
Antimony, Dissolved	**0.11J**	ug/L	1.0	1	07/23/13 15:00	08/16/13 00:23	7440-36-0	
Arsenic, Dissolved	**0.32J**	ug/L	1.0	1	07/23/13 15:00	08/16/13 00:23	7440-38-2	
Barium, Dissolved	**25.7**	ug/L	1.0	1	07/23/13 15:00	08/16/13 00:23	7440-39-3	
Beryllium, Dissolved	ND	ug/L	0.50	1	07/23/13 15:00	08/16/13 00:23	7440-41-7	
Cadmium, Dissolved	**2.5**	ug/L	0.50	1	07/23/13 15:00	08/16/13 00:23	7440-43-9	
Chromium, Dissolved	**1.0**	ug/L	1.0	1	07/23/13 15:00	08/16/13 00:23	7440-47-3	B
Cobalt, Dissolved	**0.32J**	ug/L	1.0	1	07/23/13 15:00	08/16/13 00:23	7440-48-4	
Copper, Dissolved	**3.7**	ug/L	1.0	1	07/23/13 15:00	08/16/13 00:23	7440-50-8	
Iron, Dissolved	**617**	ug/L	50.0	1	07/23/13 15:00	08/16/13 00:23	7439-89-6	
Lead, Dissolved	**6.1**	ug/L	1.0	1	07/23/13 15:00	08/16/13 00:23	7439-92-1	
Manganese, Dissolved	**190**	ug/L	1.0	1	07/23/13 15:00	08/16/13 00:23	7439-96-5	
Molybdenum, Dissolved	**8.7**	ug/L	1.0	1	07/23/13 15:00	08/16/13 00:23	7439-98-7	
Nickel, Dissolved	**1.2**	ug/L	1.0	1	07/23/13 15:00	08/16/13 00:23	7440-02-0	B
Selenium, Dissolved	**1.2**	ug/L	1.0	1	07/23/13 15:00	08/16/13 00:23	7782-49-2	
Silver, Dissolved	**0.085J**	ug/L	0.50	1	07/23/13 15:00	08/16/13 00:23	7440-22-4	
Thallium, Dissolved	**0.24J**	ug/L	1.0	1	07/23/13 15:00	08/16/13 00:23	7440-28-0	B
Vanadium, Dissolved	**0.42J**	ug/L	1.0	1	07/23/13 15:00	08/16/13 00:23	7440-62-2	
Zinc, Dissolved	**666**	ug/L	10.0	1	07/23/13 15:00	08/16/13 00:23	7440-66-6	
245.1 Mercury	Analytical Method: EPA 245.1	Preparation Method: EPA 245.1						
Mercury	ND	ug/L	0.20	1	07/30/13 09:46	08/01/13 12:15	7439-97-6	
245.1 Mercury, Dissolved	Analytical Method: EPA 245.1	Preparation Method: EPA 245.1						
Mercury, Dissolved	ND	ug/L	0.20	1	07/29/13 09:32	08/01/13 13:42	7439-97-6	
245.1 Potentially Diss Mercury	Analytical Method: EPA 245.1	Preparation Method: EPA 245.1						
Mercury, Dissolved	ND	ug/L	0.20	1	07/22/13 14:30	07/23/13 11:28	7439-97-6	
2510B Specific Conductance	Analytical Method: SM 2510B							
Specific Conductance	**1220**	umhos/cm	10.0	1		08/01/13 17:58		

REPORT OF LABORATORY ANALYSIS

This report shall not be reproduced, except in full,
without the written consent of Pace Analytical Services, Inc..

Pace Analytical Services, Inc.
9608 Loiret Blvd.
Lenexa, KS 66219
(913)599-5665

ANALYTICAL RESULTS

Project: July 2013 Rico Water Sampling
Pace Project No.: 60149302

Sample: DR-10_20130718 **Lab ID: 60149302010** Collected: 07/18/13 13:17 Received: 07/20/13 09:20 Matrix: Water

Comments: • All reported results confirmed for total vs. dissolved metals (Ni)

Parameters	Results	Units	Report Limit	DF	Prepared	Analyzed	CAS No.	Qual
Salinity	Analytical Method: Calculated							
Salinity (as dissolved solids)	**783**	mg/L	6.4	1		08/01/13 17:58		
Salinity (as seawater)	**0.61**	PSU	0.014	1		08/01/13 17:58		
2320B Alkalinity	Analytical Method: SM 2320B							
Alkalinity,Bicarbonate (CaCO3)	**117**	mg/L	20.0	1		07/23/13 10:02		
Alkalinity, Carbonate (CaCO3)	ND	mg/L	20.0	1		07/23/13 10:02		
Alkalinity, Total as CaCO3	**117**	mg/L	20.0	1		07/23/13 10:02		
2540C Total Dissolved Solids	Analytical Method: SM 2540C							
Total Dissolved Solids	**1030**	mg/L	5.0	1		07/23/13 15:46		
2540D Total Suspended Solids	Analytical Method: SM 2540D							
Total Suspended Solids	**43.0**	mg/L	5.0	1		07/23/13 08:20		
4500S2D Sulfide, Total	Analytical Method: SM 4500-S-2 D							
Sulfide, Total	ND	mg/L	0.050	1		07/25/13 14:17	18496-25-8	
300.0 IC Anions 28 Days	Analytical Method: EPA 300.0							
Chloride	ND	mg/L	1.0	1		07/31/13 21:13	16887-00-6	
Sulfate	**620**	mg/L	100	100		08/01/13 21:07	14808-79-8	
353.2 Nitrogen, NO2/NO3 pres.	Analytical Method: EPA 353.2							
Nitrogen, NO2 plus NO3	ND	mg/L	0.10	1		07/24/13 09:34		
4500CNE Cyanide, Total	Analytical Method: SM 4500-CN-E							
Cyanide	ND	mg/L	0.0050	1		07/24/13 17:56	57-12-5	
5310C TOC	Analytical Method: SM 5310C							
Total Organic Carbon	ND	mg/L	0.50	1		07/30/13 18:46	7440-44-0	

This report shall not be reproduced, except in full,
without the written consent of Pace Analytical Services, Inc..

Pace Analytical Services, Inc.
9608 Loiret Blvd.
Lenexa, KS 66219
(913)599-5665

ANALYTICAL RESULTS

Project: July 2013 Rico Water Sampling
Pace Project No.: 60149302

Sample: DR-11_20130718 **Lab ID: 60149302011** Collected: 07/18/13 15:35 Received: 07/20/13 09:20 Matrix: Water

Parameters	Results	Units	Report Limit	DF	Prepared	Analyzed	CAS No.	Qual
200.7 Potentially Diss. Metals	Analytical Method: EPA 200.7 Preparation Method: EPA 200.7							
Calcium, Dissolved	**235000**	ug/L	100	1	07/23/13 15:00	07/31/13 10:02	7440-70-2	
Magnesium, Dissolved	**19400**	ug/L	50.0	1	07/23/13 15:00	07/31/13 10:02	7439-95-4	
Potassium, Dissolved	**8430**	ug/L	500	1	07/23/13 15:00	07/31/13 10:02	7440-09-7	
Sodium, Dissolved	**23200**	ug/L	500	1	07/23/13 15:00	07/31/13 10:02	7440-23-5	
200.8 MET ICPMS	Analytical Method: EPA 200.8 Preparation Method: EPA 200.8							
Aluminum	**7820**	ug/L	4.0	1	07/25/13 07:54	07/30/13 20:49	7429-90-5	M1
Antimony	**0.56**	ug/L	0.50	1	07/25/13 07:54	07/30/13 20:49	7440-36-0	
Arsenic	**10.3**	ug/L	0.50	1	07/25/13 07:54	07/30/13 20:49	7440-38-2	
Barium	**146**	ug/L	0.30	1	07/25/13 07:54	07/30/13 20:49	7440-39-3	
Beryllium	**0.66**	ug/L	0.20	1	07/25/13 07:54	07/30/13 20:49	7440-41-7	
Cadmium	**1.1**	ug/L	0.080	1	07/25/13 07:54	07/30/13 20:49	7440-43-9	
Calcium	**244000**	ug/L	400	20	07/25/13 07:54	07/30/13 20:55	7440-70-2	M1
Chromium	**8.9**	ug/L	0.50	1	07/25/13 07:54	07/30/13 20:49	7440-47-3	
Cobalt	**4.8**	ug/L	0.50	1	07/25/13 07:54	07/30/13 20:49	7440-48-4	
Copper	**36.6**	ug/L	0.50	1	07/25/13 07:54	07/30/13 20:49	7440-50-8	
Iron	**12000**	ug/L	50.0	1	07/25/13 07:54	07/30/13 20:49	7439-89-6	
Lead	**93.6**	ug/L	0.10	1	07/25/13 07:54	07/30/13 20:49	7439-92-1	
Magnesium	**24300**	ug/L	100	20	07/25/13 07:54	07/30/13 20:55	7439-95-4	M1
Manganese	**596**	ug/L	10.0	20	07/25/13 07:54	07/30/13 20:55	7439-96-5	
Molybdenum	**13.1**	ug/L	0.50	1	07/25/13 07:54	07/30/13 20:49	7439-98-7	
Nickel	**7.1**	ug/L	0.50	1	07/25/13 07:54	07/30/13 20:49	7440-02-0	
Potassium	**9870**	ug/L	20.0	1	07/25/13 07:54	07/30/13 20:49	7440-09-7	M1
Selenium	**7.8**	ug/L	0.50	1	07/25/13 07:54	07/30/13 20:49	7782-49-2	
Silica	**43700**	ug/L	1070	20	07/25/13 07:54	07/30/13 20:55	7631-86-9	
Silver	ND	ug/L	0.50	1	07/25/13 07:54	07/30/13 20:49	7440-22-4	
Sodium	**22300**	ug/L	1000	20	07/25/13 07:54	07/30/13 20:55	7440-23-5	M1
Thallium	**0.28**	ug/L	0.10	1	07/25/13 07:54	07/30/13 20:49	7440-28-0	
Total Hardness by 2340B	**709000**	ug/L	1420	20	07/25/13 07:54	07/30/13 20:55		
Vanadium	**12.7**	ug/L	0.10	1	07/25/13 07:54	07/30/13 20:49	7440-62-2	
Zinc	**181**	ug/L	5.0	1	07/25/13 07:54	07/30/13 20:49	7440-66-6	
200.8 MET ICPMS, Dissolved	Analytical Method: EPA 200.8 Preparation Method: EPA 200.8							
Aluminum, Dissolved	**8.4**	ug/L	4.0	1	08/07/13 15:42	08/08/13 15:50	7429-90-5	
Antimony, Dissolved	ND	ug/L	0.50	1	08/07/13 15:42	08/08/13 15:50	7440-36-0	
Arsenic, Dissolved	ND	ug/L	0.50	1	08/07/13 15:42	08/08/13 15:50	7440-38-2	
Barium, Dissolved	**28.8**	ug/L	0.30	1	08/07/13 15:42	08/08/13 15:50	7440-39-3	
Beryllium, Dissolved	ND	ug/L	0.20	1	08/07/13 15:42	08/08/13 15:50	7440-41-7	
Cadmium, Dissolved	**0.32**	ug/L	0.080	1	08/07/13 15:42	08/08/13 15:50	7440-43-9	
Calcium, Dissolved	**254000**	ug/L	400	20	08/07/13 15:42	08/08/13 15:55	7440-70-2	
Chromium, Dissolved	ND	ug/L	0.50	1	08/07/13 15:42	08/08/13 15:50	7440-47-3	
Cobalt, Dissolved	ND	ug/L	0.50	1	08/07/13 15:42	08/08/13 15:50	7440-48-4	
Copper, Dissolved	**1.3**	ug/L	0.50	1	08/07/13 15:42	08/08/13 15:50	7440-50-8	
Iron, Dissolved	ND	ug/L	50.0	1	08/07/13 15:42	08/08/13 15:50	7439-89-6	
Lead, Dissolved	**0.16**	ug/L	0.10	1	08/07/13 15:42	08/08/13 15:50	7439-92-1	
Magnesium, Dissolved	**20000**	ug/L	5.0	1	08/07/13 15:42	08/08/13 15:50	7439-95-4	

This report shall not be reproduced, except in full,
without the written consent of Pace Analytical Services, Inc..

Pace Analytical Services, Inc.
9608 Loiret Blvd.
Lenexa, KS 66219
(913)599-5665

ANALYTICAL RESULTS

Project: July 2013 Rico Water Sampling
Pace Project No.: 60149302

Sample: DR-11_20130718 **Lab ID: 60149302011** Collected: 07/18/13 15:35 Received: 07/20/13 09:20 Matrix: Water

Parameters	Results	Units	Report Limit	DF	Prepared	Analyzed	CAS No.	Qual
200.8 MET ICPMS, Dissolved	Analytical Method: EPA 200.8 Preparation Method: EPA 200.8							
Manganese, Dissolved	**17.3**	ug/L	0.50	1	08/07/13 15:42	08/08/13 15:50	7439-96-5	
Molybdenum, Dissolved	**11.6**	ug/L	0.50	1	08/07/13 15:42	08/08/13 15:50	7439-98-7	
Nickel, Dissolved	**4.0**	ug/L	0.50	1	08/07/13 15:42	08/08/13 15:50	7440-02-0	
Potassium, Dissolved	**8790**	ug/L	20.0	1	08/07/13 15:42	08/08/13 15:50	7440-09-7	
Selenium, Dissolved	**5.3**	ug/L	0.50	1	08/07/13 15:42	08/08/13 15:50	7782-49-2	
Silver, Dissolved	ND	ug/L	0.50	1	08/07/13 15:42	08/08/13 15:50	7440-22-4	
Sodium, Dissolved	**23000**	ug/L	1000	20	08/07/13 15:42	08/08/13 15:55	7440-23-5	
Thallium, Dissolved	ND	ug/L	0.10	1	08/07/13 15:42	08/08/13 15:50	7440-28-0	
Vanadium, Dissolved	ND	ug/L	0.10	1	08/07/13 15:42	08/08/13 15:50	7440-62-2	
Zinc, Dissolved	**30.4**	ug/L	5.0	1	08/07/13 15:42	08/08/13 15:50	7440-66-6	
200.8 Potentially Diss. Metals	Analytical Method: EPA 200.8 Preparation Method: EPA 200.8							
Aluminum, Dissolved	**1530**	ug/L	50.0	1	07/23/13 15:00	08/16/13 00:27	7429-90-5	
Antimony, Dissolved	**0.21J**	ug/L	1.0	1	07/23/13 15:00	08/16/13 00:27	7440-36-0	
Arsenic, Dissolved	**2.1**	ug/L	1.0	1	07/23/13 15:00	08/16/13 00:27	7440-38-2	
Barium, Dissolved	**41.6**	ug/L	1.0	1	07/23/13 15:00	08/16/13 00:27	7440-39-3	
Beryllium, Dissolved	**0.37J**	ug/L	0.50	1	07/23/13 15:00	08/16/13 00:27	7440-41-7	
Cadmium, Dissolved	**0.78**	ug/L	0.50	1	07/23/13 15:00	08/16/13 00:27	7440-43-9	
Chromium, Dissolved	**2.3**	ug/L	1.0	1	07/23/13 15:00	08/16/13 00:27	7440-47-3	B
Cobalt, Dissolved	**2.2**	ug/L	1.0	1	07/23/13 15:00	08/16/13 00:27	7440-48-4	
Copper, Dissolved	**19.1**	ug/L	1.0	1	07/23/13 15:00	08/16/13 00:27	7440-50-8	
Iron, Dissolved	**2310**	ug/L	50.0	1	07/23/13 15:00	08/16/13 00:27	7439-89-6	
Lead, Dissolved	**55.0**	ug/L	1.0	1	07/23/13 15:00	08/16/13 00:27	7439-92-1	
Manganese, Dissolved	**343**	ug/L	1.0	1	07/23/13 15:00	08/16/13 00:27	7439-96-5	
Molybdenum, Dissolved	**5.0**	ug/L	1.0	1	07/23/13 15:00	08/16/13 00:27	7439-98-7	
Nickel, Dissolved	**2.4**	ug/L	1.0	1	07/23/13 15:00	08/16/13 00:27	7440-02-0	
Selenium, Dissolved	**5.5**	ug/L	1.0	1	07/23/13 15:00	08/16/13 00:27	7782-49-2	
Silver, Dissolved	**0.44J**	ug/L	0.50	1	07/23/13 15:00	08/16/13 00:27	7440-22-4	
Thallium, Dissolved	**0.28J**	ug/L	1.0	1	07/23/13 15:00	08/16/13 00:27	7440-28-0	B
Vanadium, Dissolved	**2.4**	ug/L	1.0	1	07/23/13 15:00	08/16/13 00:27	7440-62-2	
Zinc, Dissolved	**116**	ug/L	10.0	1	07/23/13 15:00	08/16/13 00:27	7440-66-6	
245.1 Mercury	Analytical Method: EPA 245.1 Preparation Method: EPA 245.1							
Mercury	ND	ug/L	0.20	1	07/30/13 09:46	08/01/13 12:23	7439-97-6	
245.1 Mercury, Dissolved	Analytical Method: EPA 245.1 Preparation Method: EPA 245.1							
Mercury, Dissolved	ND	ug/L	0.20	1	07/29/13 09:32	08/01/13 13:44	7439-97-6	
245.1 Potentially Diss Mercury	Analytical Method: EPA 245.1 Preparation Method: EPA 245.1							
Mercury, Dissolved	ND	ug/L	0.20	1	07/22/13 14:30	07/23/13 11:37	7439-97-6	
2510B Specific Conductance	Analytical Method: SM 2510B							
Specific Conductance	**1300**	umhos/cm	10.0	1		08/02/13 11:03		
Salinity	Analytical Method: Calculated							
Salinity (as dissolved solids)	**831**	mg/L	6.4	1		08/02/13 11:03		

REPORT OF LABORATORY ANALYSIS

This report shall not be reproduced, except in full,
without the written consent of Pace Analytical Services, Inc..

Pace Analytical Services, Inc.
9608 Loiret Blvd.
Lenexa, KS 66219
(913)599-5665

ANALYTICAL RESULTS

Project: July 2013 Rico Water Sampling
Pace Project No.: 60149302

Sample: DR-11_20130718 **Lab ID: 60149302011** Collected: 07/18/13 15:35 Received: 07/20/13 09:20 Matrix: Water

Parameters	Results	Units	Report Limit	DF	Prepared	Analyzed	CAS No.	Qual
Salinity	Analytical Method: Calculated							
Salinity (as seawater)	**0.65**	PSU	0.014	1		08/02/13 11:03		
2320B Alkalinity	Analytical Method: SM 2320B							
Alkalinity,Bicarbonate (CaCO3)	**101**	mg/L	20.0	1		07/23/13 10:06		
Alkalinity, Carbonate (CaCO3)	ND	mg/L	20.0	1		07/23/13 10:06		
Alkalinity, Total as CaCO3	**101**	mg/L	20.0	1		07/23/13 10:06		
2540C Total Dissolved Solids	Analytical Method: SM 2540C							
Total Dissolved Solids	**1030**	mg/L	5.0	1		07/23/13 15:46		
2540D Total Suspended Solids	Analytical Method: SM 2540D							
Total Suspended Solids	**244**	mg/L	5.0	1		07/23/13 08:20		
4500S2D Sulfide, Total	Analytical Method: SM 4500-S-2 D							
Sulfide, Total	ND	mg/L	0.050	1		07/25/13 14:17	18496-25-8	
300.0 IC Anions 28 Days	Analytical Method: EPA 300.0							
Chloride	ND	mg/L	1.0	1		07/31/13 21:49	16887-00-6	
Sulfate	**616**	mg/L	100	100		08/01/13 22:19	14808-79-8	
353.2 Nitrogen, NO2/NO3 pres.	Analytical Method: EPA 353.2							
Nitrogen, NO2 plus NO3	ND	mg/L	0.10	1		07/24/13 09:35		
4500CNE Cyanide, Total	Analytical Method: SM 4500-CN-E							
Cyanide	ND	mg/L	0.0050	1		07/24/13 17:59	57-12-5	
5310C TOC	Analytical Method: SM 5310C							
Total Organic Carbon	**0.57**	mg/L	0.50	1		07/30/13 19:41	7440-44-0	

This report shall not be reproduced, except in full,
without the written consent of Pace Analytical Services, Inc..

Pace Analytical Services, Inc.
9608 Loiret Blvd.
Lenexa, KS 66219
(913)599-5665

ANALYTICAL RESULTS

Project: July 2013 Rico Water Sampling
Pace Project No.: 60149302

Sample: FB-FIELD_20130718 **Lab ID: 60149302012** Collected: 07/18/13 10:50 Received: 07/20/13 09:20 Matrix: Water

Comments: • All reported results confirmed for total vs. dissolved metals (Na)

Parameters	Results	Units	Report Limit	DF	Prepared	Analyzed	CAS No.	Qual
200.7 Potentially Diss. Metals	Analytical Method: EPA 200.7 Preparation Method: EPA 200.7							
Calcium, Dissolved	**36.0J**	ug/L	100	1	07/23/13 15:00	07/31/13 10:05	7440-70-2	B
Magnesium, Dissolved	ND	ug/L	50.0	1	07/23/13 15:00	07/31/13 10:05	7439-95-4	
Potassium, Dissolved	ND	ug/L	500	1	07/23/13 15:00	07/31/13 10:05	7440-09-7	
Sodium, Dissolved	**344J**	ug/L	500	1	07/23/13 15:00	07/31/13 10:05	7440-23-5	
200.8 MET ICPMS	Analytical Method: EPA 200.8 Preparation Method: EPA 200.8							
Aluminum	**4.2**	ug/L	4.0	1	07/25/13 13:35	08/05/13 14:15	7429-90-5	M1
Antimony	ND	ug/L	0.50	1	07/25/13 13:35	08/05/13 14:15	7440-36-0	
Arsenic	ND	ug/L	0.50	1	07/25/13 13:35	08/05/13 14:15	7440-38-2	
Barium	ND	ug/L	0.30	1	07/25/13 13:35	08/05/13 14:15	7440-39-3	
Beryllium	ND	ug/L	0.20	1	07/25/13 13:35	08/05/13 14:15	7440-41-7	
Cadmium	ND	ug/L	0.080	1	07/25/13 13:35	08/05/13 14:15	7440-43-9	
Calcium	ND	ug/L	20.0	1	07/25/13 13:35	08/05/13 14:15	7440-70-2	
Chromium	ND	ug/L	0.50	1	07/25/13 13:35	08/05/13 14:15	7440-47-3	
Cobalt	ND	ug/L	0.50	1	07/25/13 13:35	08/05/13 14:15	7440-48-4	
Copper	**0.85**	ug/L	0.50	1	07/25/13 13:35	08/05/13 14:15	7440-50-8	
Iron	ND	ug/L	50.0	1	07/25/13 13:35	08/05/13 14:15	7439-89-6	M1,R1
Lead	**0.11**	ug/L	0.10	1	07/25/13 13:35	08/05/13 14:15	7439-92-1	
Magnesium	ND	ug/L	5.0	1	07/25/13 13:35	08/05/13 14:15	7439-95-4	
Manganese	ND	ug/L	0.50	1	07/25/13 13:35	08/05/13 14:15	7439-96-5	
Molybdenum	ND	ug/L	0.50	1	07/25/13 13:35	08/05/13 14:15	7439-98-7	
Nickel	ND	ug/L	0.50	1	07/25/13 13:35	08/05/13 14:15	7440-02-0	
Potassium	ND	ug/L	20.0	1	07/25/13 13:35	08/05/13 14:15	7440-09-7	
Selenium	ND	ug/L	0.50	1	07/25/13 13:35	08/05/13 14:15	7782-49-2	
Silica	ND	ug/L	53.5	1	07/25/13 13:35	08/05/13 14:15	7631-86-9	
Silver	ND	ug/L	0.50	1	07/25/13 13:35	08/05/13 14:15	7440-22-4	
Sodium	**303**	ug/L	50.0	1	07/25/13 13:35	08/05/13 14:15	7440-23-5	
Thallium	ND	ug/L	0.10	1	07/25/13 13:35	08/05/13 14:15	7440-28-0	
Total Hardness by 2340B	ND	ug/L	71.0	1	07/25/13 13:35	08/05/13 14:15		
Vanadium	ND	ug/L	0.10	1	07/25/13 13:35	08/05/13 14:15	7440-62-2	
Zinc	ND	ug/L	5.0	1	07/25/13 13:35	08/05/13 14:15	7440-66-6	
200.8 MET ICPMS, Dissolved	Analytical Method: EPA 200.8 Preparation Method: EPA 200.8							
Aluminum, Dissolved	ND	ug/L	4.0	1	08/07/13 15:42	08/08/13 11:02	7429-90-5	
Antimony, Dissolved	ND	ug/L	0.50	1	08/07/13 15:42	08/08/13 11:02	7440-36-0	
Arsenic, Dissolved	ND	ug/L	0.50	1	08/07/13 15:42	08/08/13 11:02	7440-38-2	
Barium, Dissolved	ND	ug/L	0.30	1	08/07/13 15:42	08/08/13 11:02	7440-39-3	
Beryllium, Dissolved	ND	ug/L	0.20	1	08/07/13 15:42	08/08/13 11:02	7440-41-7	
Cadmium, Dissolved	ND	ug/L	0.080	1	08/07/13 15:42	08/08/13 11:02	7440-43-9	
Calcium, Dissolved	**23.0**	ug/L	20.0	1	08/07/13 15:42	08/08/13 11:02	7440-70-2	
Chromium, Dissolved	ND	ug/L	0.50	1	08/07/13 15:42	08/08/13 11:02	7440-47-3	
Cobalt, Dissolved	ND	ug/L	0.50	1	08/07/13 15:42	08/08/13 11:02	7440-48-4	
Copper, Dissolved	**0.91**	ug/L	0.50	1	08/07/13 15:42	08/08/13 11:02	7440-50-8	
Iron, Dissolved	ND	ug/L	50.0	1	08/07/13 15:42	08/08/13 11:02	7439-89-6	
Lead, Dissolved	ND	ug/L	0.10	1	08/07/13 15:42	08/08/13 11:02	7439-92-1	

This report shall not be reproduced, except in full,
without the written consent of Pace Analytical Services, Inc..

Pace Analytical Services, Inc.
9608 Loiret Blvd.
Lenexa, KS 66219
(913)599-5665

ANALYTICAL RESULTS

Project: July 2013 Rico Water Sampling
Pace Project No.: 60149302

Sample: FB-FIELD_20130718 **Lab ID: 60149302012** Collected: 07/18/13 10:50 Received: 07/20/13 09:20 Matrix: Water

Comments: • All reported results confirmed for total vs. dissolved metals (Na)

Parameters	Results	Units	Report Limit	DF	Prepared	Analyzed	CAS No.	Qual
200.8 MET ICPMS, Dissolved	Analytical Method: EPA 200.8		Preparation Method: EPA 200.8					
Magnesium, Dissolved	**5.4**	ug/L	5.0	1	08/07/13 15:42	08/08/13 11:02	7439-95-4	
Manganese, Dissolved	**0.61**	ug/L	0.50	1	08/07/13 15:42	08/08/13 11:02	7439-96-5	
Molybdenum, Dissolved	ND	ug/L	0.50	1	08/07/13 15:42	08/08/13 11:02	7439-98-7	
Nickel, Dissolved	**1.1**	ug/L	0.50	1	08/07/13 15:42	08/08/13 11:02	7440-02-0	
Potassium, Dissolved	**51.4**	ug/L	20.0	1	08/07/13 15:42	08/08/13 11:02	7440-09-7	
Selenium, Dissolved	ND	ug/L	0.50	1	08/07/13 15:42	08/08/13 11:02	7782-49-2	
Silver, Dissolved	ND	ug/L	0.50	1	08/07/13 15:42	08/08/13 11:02	7440-22-4	
Sodium, Dissolved	**404**	ug/L	50.0	1	08/07/13 15:42	08/08/13 11:02	7440-23-5	
Thallium, Dissolved	ND	ug/L	0.10	1	08/07/13 15:42	08/08/13 11:02	7440-28-0	
Vanadium, Dissolved	ND	ug/L	0.10	1	08/07/13 15:42	08/08/13 11:02	7440-62-2	
Zinc, Dissolved	ND	ug/L	5.0	1	08/07/13 15:42	08/08/13 11:02	7440-66-6	
200.8 Potentially Diss. Metals	Analytical Method: EPA 200.8		Preparation Method: EPA 200.8					
Aluminum, Dissolved	ND	ug/L	50.0	1	07/23/13 15:00	08/16/13 00:31	7429-90-5	
Antimony, Dissolved	ND	ug/L	1.0	1	07/23/13 15:00	08/16/13 00:31	7440-36-0	
Arsenic, Dissolved	ND	ug/L	1.0	1	07/23/13 15:00	08/16/13 00:31	7440-38-2	
Barium, Dissolved	ND	ug/L	1.0	1	07/23/13 15:00	08/16/13 00:31	7440-39-3	
Beryllium, Dissolved	ND	ug/L	0.50	1	07/23/13 15:00	08/16/13 00:31	7440-41-7	
Cadmium, Dissolved	ND	ug/L	0.50	1	07/23/13 15:00	08/16/13 00:31	7440-43-9	
Chromium, Dissolved	**0.32J**	ug/L	1.0	1	07/23/13 15:00	08/16/13 00:31	7440-47-3	B
Cobalt, Dissolved	ND	ug/L	1.0	1	07/23/13 15:00	08/16/13 00:31	7440-48-4	
Copper, Dissolved	ND	ug/L	1.0	1	07/23/13 15:00	08/16/13 00:31	7440-50-8	
Iron, Dissolved	**10.8J**	ug/L	50.0	1	07/23/13 15:00	08/16/13 00:31	7439-89-6	B
Lead, Dissolved	**0.043J**	ug/L	1.0	1	07/23/13 15:00	08/16/13 00:31	7439-92-1	B
Manganese, Dissolved	**0.35J**	ug/L	1.0	1	07/23/13 15:00	08/16/13 00:31	7439-96-5	B
Molybdenum, Dissolved	ND	ug/L	1.0	1	07/23/13 15:00	08/16/13 00:31	7439-98-7	
Nickel, Dissolved	ND	ug/L	1.0	1	07/23/13 15:00	08/16/13 00:31	7440-02-0	
Selenium, Dissolved	ND	ug/L	1.0	1	07/23/13 15:00	08/16/13 00:31	7782-49-2	
Silver, Dissolved	**0.010J**	ug/L	0.50	1	07/23/13 15:00	08/16/13 00:31	7440-22-4	
Thallium, Dissolved	**0.23J**	ug/L	1.0	1	07/23/13 15:00	08/16/13 00:31	7440-28-0	B
Vanadium, Dissolved	ND	ug/L	1.0	1	07/23/13 15:00	08/16/13 00:31	7440-62-2	
Zinc, Dissolved	ND	ug/L	10.0	1	07/23/13 15:00	08/16/13 00:31	7440-66-6	
245.1 Mercury	Analytical Method: EPA 245.1		Preparation Method: EPA 245.1					
Mercury	ND	ug/L	0.20	1	07/30/13 09:46	08/01/13 12:25	7439-97-6	
245.1 Mercury, Dissolved	Analytical Method: EPA 245.1		Preparation Method: EPA 245.1					
Mercury, Dissolved	ND	ug/L	0.20	1	07/29/13 09:32	08/01/13 13:47	7439-97-6	
245.1 Potentially Diss Mercury	Analytical Method: EPA 245.1		Preparation Method: EPA 245.1					
Mercury, Dissolved	ND	ug/L	0.20	1	07/22/13 14:30	07/23/13 11:39	7439-97-6	
2510B Specific Conductance	Analytical Method: SM 2510B							
Specific Conductance	ND	umhos/cm	10.0	1		08/02/13 11:06		

REPORT OF LABORATORY ANALYSIS

This report shall not be reproduced, except in full,
without the written consent of Pace Analytical Services, Inc..

Pace Analytical Services, Inc.
9608 Loiret Blvd.
Lenexa, KS 66219
(913)599-5665

ANALYTICAL RESULTS

Project: July 2013 Rico Water Sampling
Pace Project No.: 60149302

Sample: FB-FIELD_20130718 **Lab ID: 60149302012** Collected: 07/18/13 10:50 Received: 07/20/13 09:20 Matrix: Water

Comments: • All reported results confirmed for total vs. dissolved metals (Na)

Parameters	Results	Units	Report Limit	DF	Prepared	Analyzed	CAS No.	Qual
Salinity	Analytical Method: Calculated							
Salinity (as dissolved solids)	ND	mg/L	6.4	1		08/02/13 11:06		
Salinity (as seawater)	ND	PSU	0.014	1		08/02/13 11:06		
2320B Alkalinity	Analytical Method: SM 2320B							
Alkalinity,Bicarbonate (CaCO3)	ND	mg/L	20.0	1		07/25/13 09:58		
Alkalinity, Carbonate (CaCO3)	ND	mg/L	20.0	1		07/25/13 09:58		
Alkalinity, Total as CaCO3	ND	mg/L	20.0	1		07/25/13 09:58		
2540C Total Dissolved Solids	Analytical Method: SM 2540C							
Total Dissolved Solids	ND	mg/L	5.0	1		07/23/13 15:46		
2540D Total Suspended Solids	Analytical Method: SM 2540D							
Total Suspended Solids	ND	mg/L	5.0	1		07/23/13 08:20		
4500S2D Sulfide, Total	Analytical Method: SM 4500-S-2 D							
Sulfide, Total	ND	mg/L	0.050	1		07/25/13 14:18	18496-25-8	
300.0 IC Anions 28 Days	Analytical Method: EPA 300.0							
Chloride	ND	mg/L	1.0	1		08/01/13 22:37	16887-00-6	
Sulfate	ND	mg/L	1.0	1		08/01/13 22:37	14808-79-8	
353.2 Nitrogen, NO2/NO3 pres.	Analytical Method: EPA 353.2							
Nitrogen, NO2 plus NO3	ND	mg/L	0.10	1		07/24/13 09:36		
4500CNE Cyanide, Total	Analytical Method: SM 4500-CN-E							
Cyanide	ND	mg/L	0.0050	1		07/24/13 17:59	57-12-5	
5310C TOC	Analytical Method: SM 5310C							
Total Organic Carbon	ND	mg/L	0.50	1		07/30/13 21:04	7440-44-0	

This report shall not be reproduced, except in full,
without the written consent of Pace Analytical Services, Inc..

Pace Analytical Services, Inc.
9608 Loiret Blvd.
Lenexa, KS 66219
(913)599-5665

ANALYTICAL RESULTS

Project: July 2013 Rico Water Sampling
Pace Project No.: 60149302

Sample: GW-3_20130719 **Lab ID: 60149302013** Collected: 07/19/13 14:15 Received: 07/20/13 09:20 Matrix: Water

Parameters	Results	Units	Report Limit	DF	Prepared	Analyzed	CAS No.	Qual
200.7 Potentially Diss. Metals	Analytical Method: EPA 200.7 Preparation Method: EPA 200.7							
Calcium, Dissolved	**136000**	ug/L	100	1	07/23/13 15:00	07/31/13 10:08	7440-70-2	
Magnesium, Dissolved	**16300**	ug/L	50.0	1	07/23/13 15:00	07/31/13 10:08	7439-95-4	
Potassium, Dissolved	**2730**	ug/L	500	1	07/23/13 15:00	07/31/13 10:08	7440-09-7	
Sodium, Dissolved	**2860**	ug/L	500	1	07/23/13 15:00	07/31/13 10:08	7440-23-5	
200.8 MET ICPMS	Analytical Method: EPA 200.8 Preparation Method: EPA 200.8							
Aluminum	**8060**	ug/L	4.0	1	07/25/13 13:35	08/05/13 14:30	7429-90-5	
Antimony	**0.54**	ug/L	0.50	1	07/25/13 13:35	08/05/13 14:30	7440-36-0	
Arsenic	**14.2**	ug/L	0.50	1	07/25/13 13:35	08/05/13 14:30	7440-38-2	
Barium	**178**	ug/L	0.30	1	07/25/13 13:35	08/05/13 14:30	7440-39-3	
Beryllium	**0.47**	ug/L	0.20	1	07/25/13 13:35	08/05/13 14:30	7440-41-7	
Cadmium	**2.3**	ug/L	0.080	1	07/25/13 13:35	08/05/13 14:30	7440-43-9	
Calcium	**144000**	ug/L	400	20	07/25/13 13:35	08/05/13 14:36	7440-70-2	
Chromium	**11.4**	ug/L	0.50	1	07/25/13 13:35	08/05/13 14:30	7440-47-3	
Cobalt	**7.0**	ug/L	0.50	1	07/25/13 13:35	08/05/13 14:30	7440-48-4	
Copper	**76.6**	ug/L	0.50	1	07/25/13 13:35	08/05/13 14:30	7440-50-8	
Iron	**15300**	ug/L	50.0	1	07/25/13 13:35	08/05/13 14:30	7439-89-6	
Lead	**138**	ug/L	0.10	1	07/25/13 13:35	08/05/13 14:30	7439-92-1	
Magnesium	**20400**	ug/L	5.0	1	07/25/13 13:35	08/05/13 14:30	7439-95-4	
Manganese	**1540**	ug/L	10.0	20	07/25/13 13:35	08/05/13 14:36	7439-96-5	
Molybdenum	**2.3**	ug/L	0.50	1	07/25/13 13:35	08/05/13 14:30	7439-98-7	
Nickel	**9.2**	ug/L	0.50	1	07/25/13 13:35	08/05/13 14:30	7440-02-0	
Potassium	**3970**	ug/L	20.0	1	07/25/13 13:35	08/05/13 14:30	7440-09-7	
Selenium	**5.6**	ug/L	0.50	1	07/25/13 13:35	08/05/13 14:30	7782-49-2	
Silica	**37900**	ug/L	1070	20	07/25/13 13:35	08/05/13 14:36	7631-86-9	
Silver	**0.79**	ug/L	0.50	1	07/25/13 13:35	08/05/13 14:30	7440-22-4	
Sodium	**3160**	ug/L	50.0	1	07/25/13 13:35	08/05/13 14:30	7440-23-5	
Thallium	**0.18**	ug/L	0.10	1	07/25/13 13:35	08/05/13 14:30	7440-28-0	
Total Hardness by 2340B	**443000**	ug/L	1420	20	07/25/13 13:35	08/05/13 14:36		
Vanadium	**16.5**	ug/L	0.10	1	07/25/13 13:35	08/05/13 14:30	7440-62-2	
Zinc	**433**	ug/L	5.0	1	07/25/13 13:35	08/05/13 14:30	7440-66-6	
200.8 MET ICPMS, Dissolved	Analytical Method: EPA 200.8 Preparation Method: EPA 200.8							
Aluminum, Dissolved	**5.1**	ug/L	4.0	1	07/25/13 13:32	08/05/13 17:10	7429-90-5	
Antimony, Dissolved	ND	ug/L	0.50	1	07/25/13 13:32	08/05/13 17:10	7440-36-0	
Arsenic, Dissolved	ND	ug/L	0.50	1	07/25/13 13:32	08/05/13 17:10	7440-38-2	
Barium, Dissolved	**30.4**	ug/L	0.30	1	07/25/13 13:32	08/05/13 17:10	7440-39-3	
Beryllium, Dissolved	ND	ug/L	0.20	1	07/25/13 13:32	08/05/13 17:10	7440-41-7	
Cadmium, Dissolved	**0.29**	ug/L	0.080	1	07/25/13 13:32	08/05/13 17:10	7440-43-9	
Calcium, Dissolved	**143000**	ug/L	400	20	07/25/13 13:32	08/05/13 17:20	7440-70-2	M1
Chromium, Dissolved	ND	ug/L	0.50	1	07/25/13 13:32	08/05/13 17:10	7440-47-3	
Cobalt, Dissolved	ND	ug/L	0.50	1	07/25/13 13:32	08/05/13 17:10	7440-48-4	
Copper, Dissolved	**2.4**	ug/L	0.50	1	07/25/13 13:32	08/05/13 17:10	7440-50-8	
Iron, Dissolved	ND	ug/L	50.0	1	07/25/13 13:32	08/05/13 17:10	7439-89-6	
Lead, Dissolved	**0.13**	ug/L	0.10	1	07/25/13 13:32	08/05/13 17:10	7439-92-1	
Magnesium, Dissolved	**16200**	ug/L	5.0	1	07/25/13 13:32	08/05/13 17:10	7439-95-4	M1

This report shall not be reproduced, except in full,
without the written consent of Pace Analytical Services, Inc..

Pace Analytical Services, Inc.
9608 Loiret Blvd.
Lenexa, KS 66219
(913)599-5665

ANALYTICAL RESULTS

Project: July 2013 Rico Water Sampling
Pace Project No.: 60149302

Sample: GW-3_20130719 **Lab ID: 60149302013** Collected: 07/19/13 14:15 Received: 07/20/13 09:20 Matrix: Water

Parameters	Results	Units	Report Limit	DF	Prepared	Analyzed	CAS No.	Qual
200.8 MET ICPMS, Dissolved	Analytical Method: EPA 200.8 Preparation Method: EPA 200.8							
Manganese, Dissolved	**41.9**	ug/L	0.50	1	07/25/13 13:32	08/05/13 17:10	7439-96-5	
Molybdenum, Dissolved	**0.54**	ug/L	0.50	1	07/25/13 13:32	08/05/13 17:10	7439-98-7	
Nickel, Dissolved	**3.9**	ug/L	0.50	1	07/25/13 13:32	08/05/13 17:10	7440-02-0	
Potassium, Dissolved	**2660**	ug/L	20.0	1	07/25/13 13:32	08/05/13 17:10	7440-09-7	
Selenium, Dissolved	**3.2**	ug/L	0.50	1	07/25/13 13:32	08/05/13 17:10	7782-49-2	
Silver, Dissolved	ND	ug/L	0.50	1	07/25/13 13:32	08/05/13 17:10	7440-22-4	
Sodium, Dissolved	**2930**	ug/L	50.0	1	07/25/13 13:32	08/05/13 17:10	7440-23-5	
Thallium, Dissolved	ND	ug/L	0.10	1	07/25/13 13:32	08/05/13 17:10	7440-28-0	
Vanadium, Dissolved	ND	ug/L	0.10	1	07/25/13 13:32	08/05/13 17:10	7440-62-2	
Zinc, Dissolved	**33.6**	ug/L	5.0	1	07/25/13 13:32	08/05/13 17:10	7440-66-6	
200.8 Potentially Diss. Metals	Analytical Method: EPA 200.8 Preparation Method: EPA 200.8							
Aluminum, Dissolved	**2210**	ug/L	50.0	1	07/23/13 15:00	08/16/13 00:35	7429-90-5	
Antimony, Dissolved	**0.22J**	ug/L	1.0	1	07/23/13 15:00	08/16/13 00:35	7440-36-0	
Arsenic, Dissolved	**5.6**	ug/L	1.0	1	07/23/13 15:00	08/16/13 00:35	7440-38-2	
Barium, Dissolved	**74.4**	ug/L	1.0	1	07/23/13 15:00	08/16/13 00:35	7440-39-3	
Beryllium, Dissolved	**0.30J**	ug/L	0.50	1	07/23/13 15:00	08/16/13 00:35	7440-41-7	
Cadmium, Dissolved	**1.9**	ug/L	0.50	1	07/23/13 15:00	08/16/13 00:35	7440-43-9	
Chromium, Dissolved	**3.9**	ug/L	1.0	1	07/23/13 15:00	08/16/13 00:35	7440-47-3	
Cobalt, Dissolved	**3.9**	ug/L	1.0	1	07/23/13 15:00	08/16/13 00:35	7440-48-4	
Copper, Dissolved	**56.3**	ug/L	1.0	1	07/23/13 15:00	08/16/13 00:35	7440-50-8	
Iron, Dissolved	**5380**	ug/L	50.0	1	07/23/13 15:00	08/16/13 00:35	7439-89-6	
Lead, Dissolved	**74.4**	ug/L	1.0	1	07/23/13 15:00	08/16/13 00:35	7439-92-1	
Manganese, Dissolved	**964**	ug/L	1.0	1	07/23/13 15:00	08/16/13 00:35	7439-96-5	
Molybdenum, Dissolved	**0.30J**	ug/L	1.0	1	07/23/13 15:00	08/16/13 00:35	7439-98-7	
Nickel, Dissolved	**5.9**	ug/L	1.0	1	07/23/13 15:00	08/16/13 00:35	7440-02-0	
Selenium, Dissolved	**3.8**	ug/L	1.0	1	07/23/13 15:00	08/16/13 00:35	7782-49-2	
Silver, Dissolved	**0.71**	ug/L	0.50	1	07/23/13 15:00	08/16/13 00:35	7440-22-4	
Thallium, Dissolved	**0.25J**	ug/L	1.0	1	07/23/13 15:00	08/16/13 00:35	7440-28-0	B
Vanadium, Dissolved	**3.6**	ug/L	1.0	1	07/23/13 15:00	08/16/13 00:35	7440-62-2	
Zinc, Dissolved	**342**	ug/L	10.0	1	07/23/13 15:00	08/16/13 00:35	7440-66-6	
245.1 Mercury	Analytical Method: EPA 245.1 Preparation Method: EPA 245.1							
Mercury	ND	ug/L	0.20	1	07/30/13 09:46	08/01/13 12:28	7439-97-6	
245.1 Mercury, Dissolved	Analytical Method: EPA 245.1 Preparation Method: EPA 245.1							
Mercury, Dissolved	ND	ug/L	0.20	1	07/29/13 09:32	08/01/13 13:49	7439-97-6	
245.1 Potentially Diss Mercury	Analytical Method: EPA 245.1 Preparation Method: EPA 245.1							
Mercury, Dissolved	ND	ug/L	0.20	1	07/22/13 14:30	07/23/13 11:41	7439-97-6	
2510B Specific Conductance	Analytical Method: SM 2510B							
Specific Conductance	ND	umhos/cm	10.0	1		08/02/13 11:08		
Salinity	Analytical Method: Calculated							
Salinity (as dissolved solids)	ND	mg/L	6.4	1		08/02/13 11:08		

REPORT OF LABORATORY ANALYSIS

This report shall not be reproduced, except in full,
without the written consent of Pace Analytical Services, Inc..

Pace Analytical Services, Inc.
9608 Loiret Blvd.
Lenexa, KS 66219
(913)599-5665

ANALYTICAL RESULTS

Project: July 2013 Rico Water Sampling
Pace Project No.: 60149302

Sample: GW-3_20130719 **Lab ID: 60149302013** Collected: 07/19/13 14:15 Received: 07/20/13 09:20 Matrix: Water

Parameters	Results	Units	Report Limit	DF	Prepared	Analyzed	CAS No.	Qual
Salinity	Analytical Method: Calculated							
Salinity (as seawater)	ND	PSU	0.014	1		08/02/13 11:08		
2320B Alkalinity	Analytical Method: SM 2320B							
Alkalinity,Bicarbonate (CaCO3)	**196**	mg/L	20.0	1		07/25/13 10:03		
Alkalinity, Carbonate (CaCO3)	ND	mg/L	20.0	1		07/25/13 10:03		
Alkalinity, Total as CaCO3	**196**	mg/L	20.0	1		07/25/13 10:03		
2540C Total Dissolved Solids	Analytical Method: SM 2540C							
Total Dissolved Solids	**519**	mg/L	5.0	1		07/23/13 15:46		
2540D Total Suspended Solids	Analytical Method: SM 2540D							
Total Suspended Solids	**358**	mg/L	5.0	1		07/24/13 08:19		
4500S2D Sulfide, Total	Analytical Method: SM 4500-S-2 D							
Sulfide, Total	ND	mg/L	0.050	1		07/26/13 12:42	18496-25-8	
300.0 IC Anions 28 Days	Analytical Method: EPA 300.0							
Chloride	**1.6**	mg/L	1.0	1		07/31/13 22:25	16887-00-6	
Sulfate	**226**	mg/L	20.0	20		08/01/13 22:55	14808-79-8	
353.2 Nitrogen, NO2/NO3 pres.	Analytical Method: EPA 353.2							
Nitrogen, NO2 plus NO3	ND	mg/L	0.10	1		07/24/13 09:37		
4500CNE Cyanide, Total	Analytical Method: SM 4500-CN-E							
Cyanide	ND	mg/L	0.0050	1		07/24/13 18:00	57-12-5	
5310C TOC	Analytical Method: SM 5310C							
Total Organic Carbon	**0.88**	mg/L	0.50	1		07/30/13 21:22	7440-44-0	

This report shall not be reproduced, except in full,
without the written consent of Pace Analytical Services, Inc..

Pace Analytical Services, Inc.
9608 Loiret Blvd.
Lenexa, KS 66219
(913)599-5665

ANALYTICAL RESULTS

Project: July 2013 Rico Water Sampling
Pace Project No.: 60149302

Sample: P13-102_20130719 **Lab ID: 60149302014** Collected: 07/19/13 09:35 Received: 07/20/13 09:20 Matrix: Water

Comments: • All reported results confirmed for total vs. dissolved metals (Ni)

Parameters	Results	Units	Report Limit	DF	Prepared	Analyzed	CAS No.	Qual
200.7 Potentially Diss. Metals	Analytical Method: EPA 200.7	Preparation Method: EPA 200.7						
Calcium, Dissolved	**317000**	ug/L	100	1	07/23/13 15:00	07/31/13 10:11	7440-70-2	
Magnesium, Dissolved	**44900**	ug/L	50.0	1	07/23/13 15:00	07/31/13 10:11	7439-95-4	
Potassium, Dissolved	**4970**	ug/L	500	1	07/23/13 15:00	07/31/13 10:11	7440-09-7	
Sodium, Dissolved	**12500**	ug/L	500	1	07/23/13 15:00	07/31/13 10:11	7440-23-5	
200.8 MET ICPMS	Analytical Method: EPA 200.8	Preparation Method: EPA 200.8						
Aluminum	**1410**	ug/L	4.0	1	07/25/13 13:35	08/05/13 14:42	7429-90-5	
Antimony	ND	ug/L	0.50	1	07/25/13 13:35	08/05/13 14:42	7440-36-0	
Arsenic	**2.5**	ug/L	0.50	1	07/25/13 13:35	08/05/13 14:42	7440-38-2	
Barium	**41.0**	ug/L	0.30	1	07/25/13 13:35	08/05/13 14:42	7440-39-3	
Beryllium	**0.27**	ug/L	0.20	1	07/25/13 13:35	08/05/13 14:42	7440-41-7	
Cadmium	**0.46**	ug/L	0.080	1	07/25/13 13:35	08/05/13 14:42	7440-43-9	
Calcium	**331000**	ug/L	400	20	07/25/13 13:35	08/05/13 14:47	7440-70-2	
Chromium	**1.7**	ug/L	0.50	1	07/25/13 13:35	08/05/13 14:42	7440-47-3	
Cobalt	**13.1**	ug/L	0.50	1	07/25/13 13:35	08/05/13 14:42	7440-48-4	
Copper	**6.7**	ug/L	0.50	1	07/25/13 13:35	08/05/13 14:42	7440-50-8	
Iron	**3980**	ug/L	50.0	1	07/25/13 13:35	08/05/13 14:42	7439-89-6	
Lead	**9.1**	ug/L	0.10	1	07/25/13 13:35	08/05/13 14:42	7439-92-1	
Magnesium	**46700**	ug/L	100	20	07/25/13 13:35	08/05/13 14:47	7439-95-4	
Manganese	**18400**	ug/L	25.0	50	07/25/13 13:35	08/06/13 12:16	7439-96-5	
Molybdenum	**4.4**	ug/L	0.50	1	07/25/13 13:35	08/05/13 14:42	7439-98-7	
Nickel	**2.6**	ug/L	0.50	1	07/25/13 13:35	08/05/13 14:42	7440-02-0	
Potassium	**5230**	ug/L	20.0	1	07/25/13 13:35	08/05/13 14:42	7440-09-7	
Selenium	ND	ug/L	0.50	1	07/25/13 13:35	08/05/13 14:42	7782-49-2	
Silica	**25400**	ug/L	1070	20	07/25/13 13:35	08/05/13 14:47	7631-86-9	
Silver	ND	ug/L	0.50	1	07/25/13 13:35	08/05/13 14:42	7440-22-4	
Sodium	**12600**	ug/L	50.0	1	07/25/13 13:35	08/05/13 14:42	7440-23-5	
Thallium	ND	ug/L	0.10	1	07/25/13 13:35	08/05/13 14:42	7440-28-0	
Total Hardness by 2340B	**1020000**	ug/L	1420	20	07/25/13 13:35	08/05/13 14:47		
Vanadium	**3.0**	ug/L	0.10	1	07/25/13 13:35	08/05/13 14:42	7440-62-2	
Zinc	**122**	ug/L	5.0	1	07/25/13 13:35	08/05/13 14:42	7440-66-6	
200.8 MET ICPMS, Dissolved	Analytical Method: EPA 200.8	Preparation Method: EPA 200.8						
Aluminum, Dissolved	**37.7**	ug/L	4.0	1	07/25/13 13:32	08/05/13 17:54	7429-90-5	
Antimony, Dissolved	ND	ug/L	0.50	1	07/25/13 13:32	08/05/13 17:54	7440-36-0	
Arsenic, Dissolved	**1.1**	ug/L	0.50	1	07/25/13 13:32	08/05/13 17:54	7440-38-2	
Barium, Dissolved	**21.0**	ug/L	0.30	1	07/25/13 13:32	08/05/13 17:54	7440-39-3	
Beryllium, Dissolved	ND	ug/L	0.20	1	07/25/13 13:32	08/05/13 17:54	7440-41-7	
Cadmium, Dissolved	**0.13**	ug/L	0.080	1	07/25/13 13:32	08/05/13 17:54	7440-43-9	
Calcium, Dissolved	**336000**	ug/L	400	20	07/25/13 13:32	08/05/13 17:59	7440-70-2	
Chromium, Dissolved	ND	ug/L	0.50	1	07/25/13 13:32	08/05/13 17:54	7440-47-3	
Cobalt, Dissolved	**12.8**	ug/L	0.50	1	07/25/13 13:32	08/05/13 17:54	7440-48-4	
Copper, Dissolved	**1.5**	ug/L	0.50	1	07/25/13 13:32	08/05/13 17:54	7440-50-8	
Iron, Dissolved	**1870**	ug/L	50.0	1	07/25/13 13:32	08/05/13 17:54	7439-89-6	
Lead, Dissolved	**0.30**	ug/L	0.10	1	07/25/13 13:32	08/05/13 17:54	7439-92-1	

This report shall not be reproduced, except in full,
without the written consent of Pace Analytical Services, Inc..

Pace Analytical Services, Inc.
9608 Loiret Blvd.
Lenexa, KS 66219
(913)599-5665

ANALYTICAL RESULTS

Project: July 2013 Rico Water Sampling
Pace Project No.: 60149302

Sample: P13-102_20130719 **Lab ID: 60149302014** Collected: 07/19/13 09:35 Received: 07/20/13 09:20 Matrix: Water

Comments: • All reported results confirmed for total vs. dissolved metals (Ni)

Parameters	Results	Units	Report Limit	DF	Prepared	Analyzed	CAS No.	Qual
200.8 MET ICPMS, Dissolved	Analytical Method: EPA 200.8		Preparation Method: EPA 200.8					
Magnesium, Dissolved	**47900**	ug/L	100	20	07/25/13 13:32	08/05/13 17:59	7439-95-4	
Manganese, Dissolved	**18100**	ug/L	25.0	50	07/25/13 13:32	08/06/13 12:45	7439-96-5	
Molybdenum, Dissolved	**4.2**	ug/L	0.50	1	07/25/13 13:32	08/05/13 17:54	7439-98-7	
Nickel, Dissolved	**5.3**	ug/L	0.50	1	07/25/13 13:32	08/05/13 17:54	7440-02-0	
Potassium, Dissolved	**5040**	ug/L	20.0	1	07/25/13 13:32	08/05/13 17:54	7440-09-7	
Selenium, Dissolved	ND	ug/L	0.50	1	07/25/13 13:32	08/05/13 17:54	7782-49-2	
Silver, Dissolved	ND	ug/L	0.50	1	07/25/13 13:32	08/05/13 17:54	7440-22-4	
Sodium, Dissolved	**12800**	ug/L	50.0	1	07/25/13 13:32	08/05/13 17:54	7440-23-5	
Thallium, Dissolved	ND	ug/L	0.10	1	07/25/13 13:32	08/05/13 17:54	7440-28-0	
Vanadium, Dissolved	ND	ug/L	0.10	1	07/25/13 13:32	08/05/13 17:54	7440-62-2	
Zinc, Dissolved	**73.5**	ug/L	5.0	1	07/25/13 13:32	08/05/13 17:54	7440-66-6	
200.8 Potentially Diss. Metals	Analytical Method: EPA 200.8		Preparation Method: EPA 200.8					
Aluminum, Dissolved	**276**	ug/L	50.0	1	07/23/13 15:00	08/16/13 00:39	7429-90-5	
Antimony, Dissolved	**0.037J**	ug/L	1.0	1	07/23/13 15:00	08/16/13 00:39	7440-36-0	
Arsenic, Dissolved	**1.2**	ug/L	1.0	1	07/23/13 15:00	08/16/13 00:39	7440-38-2	
Barium, Dissolved	**23.7**	ug/L	1.0	1	07/23/13 15:00	08/16/13 00:39	7440-39-3	
Beryllium, Dissolved	**0.21J**	ug/L	0.50	1	07/23/13 15:00	08/16/13 00:39	7440-41-7	
Cadmium, Dissolved	**0.23J**	ug/L	0.50	1	07/23/13 15:00	08/16/13 00:39	7440-43-9	
Chromium, Dissolved	**0.91J**	ug/L	1.0	1	07/23/13 15:00	08/16/13 00:39	7440-47-3	B
Cobalt, Dissolved	**11.0**	ug/L	1.0	1	07/23/13 15:00	08/16/13 00:39	7440-48-4	
Copper, Dissolved	**4.6**	ug/L	1.0	1	07/23/13 15:00	08/16/13 00:39	7440-50-8	
Iron, Dissolved	**2620**	ug/L	50.0	1	07/23/13 15:00	08/16/13 00:39	7439-89-6	
Lead, Dissolved	**8.5**	ug/L	1.0	1	07/23/13 15:00	08/16/13 00:39	7439-92-1	
Manganese, Dissolved	**17200**	ug/L	10.0	10	07/23/13 15:00	08/16/13 01:25	7439-96-5	
Molybdenum, Dissolved	**3.7**	ug/L	1.0	1	07/23/13 15:00	08/16/13 00:39	7439-98-7	
Nickel, Dissolved	**3.3**	ug/L	1.0	1	07/23/13 15:00	08/16/13 00:39	7440-02-0	
Selenium, Dissolved	ND	ug/L	1.0	1	07/23/13 15:00	08/16/13 00:39	7782-49-2	
Silver, Dissolved	**0.011J**	ug/L	0.50	1	07/23/13 15:00	08/16/13 00:39	7440-22-4	
Thallium, Dissolved	**0.29J**	ug/L	1.0	1	07/23/13 15:00	08/16/13 00:39	7440-28-0	B
Vanadium, Dissolved	**0.60J**	ug/L	1.0	1	07/23/13 15:00	08/16/13 00:39	7440-62-2	
Zinc, Dissolved	**120**	ug/L	10.0	1	07/23/13 15:00	08/16/13 00:39	7440-66-6	
245.1 Mercury	Analytical Method: EPA 245.1		Preparation Method: EPA 245.1					
Mercury	ND	ug/L	0.20	1	07/30/13 09:46	08/01/13 12:30	7439-97-6	
245.1 Mercury, Dissolved	Analytical Method: EPA 245.1		Preparation Method: EPA 245.1					
Mercury, Dissolved	ND	ug/L	0.20	1	07/29/13 09:32	08/01/13 13:51	7439-97-6	
245.1 Potentially Diss Mercury	Analytical Method: EPA 245.1		Preparation Method: EPA 245.1					
Mercury, Dissolved	ND	ug/L	0.20	1	07/22/13 14:30	07/23/13 11:43	7439-97-6	
2510B Specific Conductance	Analytical Method: SM 2510B							
Specific Conductance	**1680**	umhos/cm	10.0	1		08/02/13 11:11		

REPORT OF LABORATORY ANALYSIS

This report shall not be reproduced, except in full,
without the written consent of Pace Analytical Services, Inc..

Pace Analytical Services, Inc.
9608 Loiret Blvd.
Lenexa, KS 66219
(913)599-5665

ANALYTICAL RESULTS

Project: July 2013 Rico Water Sampling
Pace Project No.: 60149302

Sample: P13-102_20130719 **Lab ID: 60149302014** Collected: 07/19/13 09:35 Received: 07/20/13 09:20 Matrix: Water

Comments: • All reported results confirmed for total vs. dissolved metals (Ni)

Parameters	Results	Units	Report Limit	DF	Prepared	Analyzed	CAS No.	Qual
Salinity	Analytical Method: Calculated							
Salinity (as dissolved solids)	**1080**	mg/L	6.4	1		08/02/13 11:11		
Salinity (as seawater)	**0.85**	PSU	0.014	1		08/02/13 11:11		
2320B Alkalinity	Analytical Method: SM 2320B							
Alkalinity,Bicarbonate (CaCO3)	**166**	mg/L	20.0	1		07/25/13 10:07		
Alkalinity, Carbonate (CaCO3)	ND	mg/L	20.0	1		07/25/13 10:07		
Alkalinity, Total as CaCO3	**166**	mg/L	20.0	1		07/25/13 10:07		
2540C Total Dissolved Solids	Analytical Method: SM 2540C							
Total Dissolved Solids	**1440**	mg/L	5.0	1		07/23/13 15:47		
2540D Total Suspended Solids	Analytical Method: SM 2540D							
Total Suspended Solids	**57.0**	mg/L	5.0	1		07/24/13 08:19		
4500S2D Sulfide, Total	Analytical Method: SM 4500-S-2 D							
Sulfide, Total	ND	mg/L	0.050	1		07/26/13 12:42	18496-25-8	
300.0 IC Anions 28 Days	Analytical Method: EPA 300.0							
Chloride	**1.4**	mg/L	1.0	1		07/31/13 22:43	16887-00-6	
Sulfate	**900**	mg/L	100	100		08/01/13 23:13	14808-79-8	
353.2 Nitrogen, NO2/NO3 pres.	Analytical Method: EPA 353.2							
Nitrogen, NO2 plus NO3	ND	mg/L	0.10	1		07/24/13 09:38		
4500CNE Cyanide, Total	Analytical Method: SM 4500-CN-E							
Cyanide	ND	mg/L	0.0050	1		07/24/13 18:00	57-12-5	
5310C TOC	Analytical Method: SM 5310C							
Total Organic Carbon	ND	mg/L	0.50	1		07/30/13 21:40	7440-44-0	

This report shall not be reproduced, except in full,
without the written consent of Pace Analytical Services, Inc..

Pace Analytical Services, Inc.
9608 Loiret Blvd.
Lenexa, KS 66219
(913)599-5665

ANALYTICAL RESULTS

Project: July 2013 Rico Water Sampling
Pace Project No.: 60149302

Sample: P13-103_20130719 **Lab ID: 60149302015** Collected: 07/19/13 09:05 Received: 07/20/13 09:20 Matrix: Water

Parameters	Results	Units	Report Limit	DF	Prepared	Analyzed	CAS No.	Qual
200.7 Potentially Diss. Metals	Analytical Method: EPA 200.7 Preparation Method: EPA 200.7							
Calcium, Dissolved	**266000**	ug/L	100	1	07/23/13 15:00	07/31/13 10:21	7440-70-2	
Magnesium, Dissolved	**27500**	ug/L	50.0	1	07/23/13 15:00	07/31/13 10:21	7439-95-4	
Potassium, Dissolved	**4150**	ug/L	500	1	07/23/13 15:00	07/31/13 10:21	7440-09-7	
Sodium, Dissolved	**11400**	ug/L	500	1	07/23/13 15:00	07/31/13 10:21	7440-23-5	
200.8 MET ICPMS	Analytical Method: EPA 200.8 Preparation Method: EPA 200.8							
Aluminum	**5830**	ug/L	4.0	1	07/25/13 13:35	08/05/13 15:21	7429-90-5	
Antimony	**1.2**	ug/L	0.50	1	07/25/13 13:35	08/05/13 15:21	7440-36-0	
Arsenic	**69.4**	ug/L	0.50	1	07/25/13 13:35	08/05/13 15:21	7440-38-2	
Barium	**132**	ug/L	0.30	1	07/25/13 13:35	08/05/13 15:21	7440-39-3	
Beryllium	**0.56**	ug/L	0.20	1	07/25/13 13:35	08/05/13 15:21	7440-41-7	
Cadmium	**6.2**	ug/L	0.080	1	07/25/13 13:35	08/05/13 15:21	7440-43-9	
Calcium	**275000**	ug/L	400	20	07/25/13 13:35	08/05/13 15:27	7440-70-2	
Chromium	**6.1**	ug/L	0.50	1	07/25/13 13:35	08/05/13 15:21	7440-47-3	
Cobalt	**7.2**	ug/L	0.50	1	07/25/13 13:35	08/05/13 15:21	7440-48-4	
Copper	**255**	ug/L	0.50	1	07/25/13 13:35	08/05/13 15:21	7440-50-8	
Iron	**65400**	ug/L	1000	20	07/25/13 13:35	08/05/13 15:27	7439-89-6	
Lead	**1010**	ug/L	2.0	20	07/25/13 13:35	08/05/13 15:27	7439-92-1	
Magnesium	**30900**	ug/L	100	20	07/25/13 13:35	08/05/13 15:27	7439-95-4	
Manganese	**2700**	ug/L	10.0	20	07/25/13 13:35	08/05/13 15:27	7439-96-5	
Molybdenum	**10.6**	ug/L	0.50	1	07/25/13 13:35	08/05/13 15:21	7439-98-7	
Nickel	**8.8**	ug/L	0.50	1	07/25/13 13:35	08/05/13 15:21	7440-02-0	
Potassium	**5570**	ug/L	20.0	1	07/25/13 13:35	08/05/13 15:21	7440-09-7	
Selenium	**3.4**	ug/L	0.50	1	07/25/13 13:35	08/05/13 15:21	7782-49-2	
Silica	**46000**	ug/L	1070	20	07/25/13 13:35	08/05/13 15:27	7631-86-9	
Silver	**8.4**	ug/L	0.50	1	07/25/13 13:35	08/05/13 15:21	7440-22-4	
Sodium	**11300**	ug/L	50.0	1	07/25/13 13:35	08/05/13 15:21	7440-23-5	
Thallium	**0.40**	ug/L	0.10	1	07/25/13 13:35	08/05/13 15:21	7440-28-0	
Total Hardness by 2340B	**815000**	ug/L	1420	20	07/25/13 13:35	08/05/13 15:27		
Vanadium	**8.8**	ug/L	0.10	1	07/25/13 13:35	08/05/13 15:21	7440-62-2	
Zinc	**1170**	ug/L	100	20	07/25/13 13:35	08/05/13 15:27	7440-66-6	
200.8 MET ICPMS, Dissolved	Analytical Method: EPA 200.8 Preparation Method: EPA 200.8							
Aluminum, Dissolved	**4.4**	ug/L	4.0	1	07/25/13 13:32	08/05/13 18:04	7429-90-5	
Antimony, Dissolved	ND	ug/L	0.50	1	07/25/13 13:32	08/05/13 18:04	7440-36-0	
Arsenic, Dissolved	**32.7**	ug/L	0.50	1	07/25/13 13:32	08/05/13 18:04	7440-38-2	
Barium, Dissolved	**26.6**	ug/L	0.30	1	07/25/13 13:32	08/05/13 18:04	7440-39-3	
Beryllium, Dissolved	ND	ug/L	0.20	1	07/25/13 13:32	08/05/13 18:04	7440-41-7	
Cadmium, Dissolved	**0.24**	ug/L	0.080	1	07/25/13 13:32	08/05/13 18:04	7440-43-9	
Calcium, Dissolved	**284000**	ug/L	400	20	07/25/13 13:32	08/05/13 18:09	7440-70-2	
Chromium, Dissolved	ND	ug/L	0.50	1	07/25/13 13:32	08/05/13 18:04	7440-47-3	
Cobalt, Dissolved	**1.8**	ug/L	0.50	1	07/25/13 13:32	08/05/13 18:04	7440-48-4	
Copper, Dissolved	**1.1**	ug/L	0.50	1	07/25/13 13:32	08/05/13 18:04	7440-50-8	
Iron, Dissolved	**11200**	ug/L	50.0	1	07/25/13 13:32	08/05/13 18:04	7439-89-6	
Lead, Dissolved	**0.20**	ug/L	0.10	1	07/25/13 13:32	08/05/13 18:04	7439-92-1	
Magnesium, Dissolved	**30500**	ug/L	100	20	07/25/13 13:32	08/05/13 18:09	7439-95-4	

This report shall not be reproduced, except in full,
without the written consent of Pace Analytical Services, Inc..

Pace Analytical Services, Inc.
9608 Loiret Blvd.
Lenexa, KS 66219
(913)599-5665

ANALYTICAL RESULTS

Project: July 2013 Rico Water Sampling
Pace Project No.: 60149302

Sample: P13-103_20130719 **Lab ID: 60149302015** Collected: 07/19/13 09:05 Received: 07/20/13 09:20 Matrix: Water

Parameters	Results	Units	Report Limit	DF	Prepared	Analyzed	CAS No.	Qual
200.8 MET ICPMS, Dissolved	Analytical Method: EPA 200.8 Preparation Method: EPA 200.8							
Manganese, Dissolved	**2590**	ug/L	10.0	20	07/25/13 13:32	08/05/13 18:09	7439-96-5	
Molybdenum, Dissolved	**7.9**	ug/L	0.50	1	07/25/13 13:32	08/05/13 18:04	7439-98-7	
Nickel, Dissolved	**4.6**	ug/L	0.50	1	07/25/13 13:32	08/05/13 18:04	7440-02-0	
Potassium, Dissolved	**4280**	ug/L	20.0	1	07/25/13 13:32	08/05/13 18:04	7440-09-7	
Selenium, Dissolved	ND	ug/L	0.50	1	07/25/13 13:32	08/05/13 18:04	7782-49-2	
Silver, Dissolved	ND	ug/L	0.50	1	07/25/13 13:32	08/05/13 18:04	7440-22-4	
Sodium, Dissolved	**12000**	ug/L	50.0	1	07/25/13 13:32	08/05/13 18:04	7440-23-5	
Thallium, Dissolved	ND	ug/L	0.10	1	07/25/13 13:32	08/05/13 18:04	7440-28-0	
Vanadium, Dissolved	ND	ug/L	0.10	1	07/25/13 13:32	08/05/13 18:04	7440-62-2	
Zinc, Dissolved	**162**	ug/L	5.0	1	07/25/13 13:32	08/05/13 18:04	7440-66-6	
200.8 Potentially Diss. Metals	Analytical Method: EPA 200.8 Preparation Method: EPA 200.8							
Aluminum, Dissolved	**1280**	ug/L	50.0	1	07/23/13 15:00	08/16/13 00:43	7429-90-5	
Antimony, Dissolved	**0.29J**	ug/L	1.0	1	07/23/13 15:00	08/16/13 00:43	7440-36-0	
Arsenic, Dissolved	**62.0**	ug/L	1.0	1	07/23/13 15:00	08/16/13 00:43	7440-38-2	
Barium, Dissolved	**36.2**	ug/L	1.0	1	07/23/13 15:00	08/16/13 00:43	7440-39-3	
Beryllium, Dissolved	**0.38J**	ug/L	0.50	1	07/23/13 15:00	08/16/13 00:43	7440-41-7	
Cadmium, Dissolved	**4.7**	ug/L	0.50	1	07/23/13 15:00	08/16/13 00:43	7440-43-9	
Chromium, Dissolved	**2.9**	ug/L	1.0	1	07/23/13 15:00	08/16/13 00:43	7440-47-3	B
Cobalt, Dissolved	**2.7**	ug/L	1.0	1	07/23/13 15:00	08/16/13 00:43	7440-48-4	
Copper, Dissolved	**134**	ug/L	1.0	1	07/23/13 15:00	08/16/13 00:43	7440-50-8	
Iron, Dissolved	**22900**	ug/L	50.0	1	07/23/13 15:00	08/16/13 00:43	7439-89-6	
Lead, Dissolved	**860**	ug/L	1.0	1	07/23/13 15:00	08/16/13 00:43	7439-92-1	
Manganese, Dissolved	**2510**	ug/L	1.0	1	07/23/13 15:00	08/16/13 00:43	7439-96-5	
Molybdenum, Dissolved	**6.4**	ug/L	1.0	1	07/23/13 15:00	08/16/13 00:43	7439-98-7	
Nickel, Dissolved	**4.4**	ug/L	1.0	1	07/23/13 15:00	08/16/13 00:43	7440-02-0	
Selenium, Dissolved	**0.76J**	ug/L	1.0	1	07/23/13 15:00	08/16/13 00:43	7782-49-2	
Silver, Dissolved	**0.16J**	ug/L	0.50	1	07/23/13 15:00	08/16/13 00:43	7440-22-4	
Thallium, Dissolved	**0.37J**	ug/L	1.0	1	07/23/13 15:00	08/16/13 00:43	7440-28-0	B
Vanadium, Dissolved	**2.1**	ug/L	1.0	1	07/23/13 15:00	08/16/13 00:43	7440-62-2	
Zinc, Dissolved	**827**	ug/L	10.0	1	07/23/13 15:00	08/16/13 00:43	7440-66-6	
245.1 Mercury	Analytical Method: EPA 245.1 Preparation Method: EPA 245.1							
Mercury	ND	ug/L	0.20	1	07/30/13 09:46	08/01/13 12:33	7439-97-6	
245.1 Mercury, Dissolved	Analytical Method: EPA 245.1 Preparation Method: EPA 245.1							
Mercury, Dissolved	ND	ug/L	0.20	1	07/29/13 09:32	08/01/13 13:54	7439-97-6	
245.1 Potentially Diss Mercury	Analytical Method: EPA 245.1 Preparation Method: EPA 245.1							
Mercury, Dissolved	ND	ug/L	0.20	1	07/22/13 14:30	07/23/13 11:46	7439-97-6	
2510B Specific Conductance	Analytical Method: SM 2510B							
Specific Conductance	**1360**	umhos/cm	10.0	1		08/02/13 11:14		
Salinity	Analytical Method: Calculated							
Salinity (as dissolved solids)	**870**	mg/L	6.4	1		08/02/13 11:14		

REPORT OF LABORATORY ANALYSIS

This report shall not be reproduced, except in full,
without the written consent of Pace Analytical Services, Inc..

Pace Analytical Services, Inc.
9608 Loiret Blvd.
Lenexa, KS 66219
(913)599-5665

ANALYTICAL RESULTS

Project: July 2013 Rico Water Sampling
Pace Project No.: 60149302

Sample: P13-103_20130719 **Lab ID: 60149302015** Collected: 07/19/13 09:05 Received: 07/20/13 09:20 Matrix: Water

Parameters	Results	Units	Report Limit	DF	Prepared	Analyzed	CAS No.	Qual
Salinity	Analytical Method: Calculated							
Salinity (as seawater)	**0.68**	PSU	0.014	1		08/02/13 11:14		
2320B Alkalinity	Analytical Method: SM 2320B							
Alkalinity,Bicarbonate (CaCO3)	**133**	mg/L	20.0	1		07/25/13 10:21		
Alkalinity, Carbonate (CaCO3)	ND	mg/L	20.0	1		07/25/13 10:21		
Alkalinity, Total as CaCO3	**133**	mg/L	20.0	1		07/25/13 10:21		
2540C Total Dissolved Solids	Analytical Method: SM 2540C							
Total Dissolved Solids	**1150**	mg/L	5.0	1		07/23/13 15:47		
2540D Total Suspended Solids	Analytical Method: SM 2540D							
Total Suspended Solids	**579**	mg/L	5.0	1		07/24/13 08:19		
4500S2D Sulfide, Total	Analytical Method: SM 4500-S-2 D							
Sulfide, Total	ND	mg/L	0.050	1		07/26/13 12:44	18496-25-8	
300.0 IC Anions 28 Days	Analytical Method: EPA 300.0							
Chloride	**1.0**	mg/L	1.0	1		07/31/13 23:01	16887-00-6	
Sulfate	**676**	mg/L	100	100		08/01/13 23:31	14808-79-8	
353.2 Nitrogen, NO2/NO3 pres.	Analytical Method: EPA 353.2							
Nitrogen, NO2 plus NO3	ND	mg/L	0.10	1		07/24/13 09:39		
4500CNE Cyanide, Total	Analytical Method: SM 4500-CN-E							
Cyanide	ND	mg/L	0.0050	1		07/24/13 18:03	57-12-5	
5310C TOC	Analytical Method: SM 5310C							
Total Organic Carbon	**0.62**	mg/L	0.50	1		07/30/13 21:58	7440-44-0	

This report shall not be reproduced, except in full,
without the written consent of Pace Analytical Services, Inc..

Pace Analytical Services, Inc.
9608 Loiret Blvd.
Lenexa, KS 66219
(913)599-5665

ANALYTICAL RESULTS

Project: July 2013 Rico Water Sampling
Pace Project No.: 60149302

Sample: CHV-101S_20130719 **Lab ID: 60149302016** Collected: 07/19/13 10:27 Received: 07/20/13 09:20 Matrix: Water

Parameters	Results	Units	Report Limit	DF	Prepared	Analyzed	CAS No.	Qual
200.7 Potentially Diss. Metals	Analytical Method: EPA 200.7 Preparation Method: EPA 200.7							
Calcium, Dissolved	**245000**	ug/L	100	1	07/23/13 15:00	07/31/13 10:24	7440-70-2	
Magnesium, Dissolved	**21700**	ug/L	50.0	1	07/23/13 15:00	07/31/13 10:24	7439-95-4	
Potassium, Dissolved	**3210**	ug/L	500	1	07/23/13 15:00	07/31/13 10:24	7440-09-7	
Sodium, Dissolved	**12000**	ug/L	500	1	07/23/13 15:00	07/31/13 10:24	7440-23-5	
200.8 MET ICPMS	Analytical Method: EPA 200.8 Preparation Method: EPA 200.8							
Aluminum	**26100**	ug/L	80.0	20	07/25/13 13:35	08/05/13 15:39	7429-90-5	
Antimony	ND	ug/L	0.50	1	07/25/13 13:35	08/05/13 15:33	7440-36-0	
Arsenic	**22.6**	ug/L	0.50	1	07/25/13 13:35	08/05/13 15:33	7440-38-2	
Barium	**707**	ug/L	6.0	20	07/25/13 13:35	08/05/13 15:39	7440-39-3	
Beryllium	**2.2**	ug/L	0.20	1	07/25/13 13:35	08/05/13 15:33	7440-41-7	
Cadmium	**3.1**	ug/L	0.080	1	07/25/13 13:35	08/05/13 15:33	7440-43-9	
Calcium	**280000**	ug/L	400	20	07/25/13 13:35	08/05/13 15:39	7440-70-2	
Chromium	**50.7**	ug/L	0.50	1	07/25/13 13:35	08/05/13 15:33	7440-47-3	
Cobalt	**27.4**	ug/L	0.50	1	07/25/13 13:35	08/05/13 15:33	7440-48-4	
Copper	**61.1**	ug/L	0.50	1	07/25/13 13:35	08/05/13 15:33	7440-50-8	
Iron	**44000**	ug/L	1000	20	07/25/13 13:35	08/05/13 15:39	7439-89-6	
Lead	**55.8**	ug/L	0.10	1	07/25/13 13:35	08/06/13 12:21	7439-92-1	
Magnesium	**39100**	ug/L	100	20	07/25/13 13:35	08/05/13 15:39	7439-95-4	
Manganese	**6660**	ug/L	10.0	20	07/25/13 13:35	08/05/13 15:39	7439-96-5	
Molybdenum	**8.7**	ug/L	0.50	1	07/25/13 13:35	08/05/13 15:33	7439-98-7	
Nickel	**37.2**	ug/L	0.50	1	07/25/13 13:35	08/05/13 15:33	7440-02-0	
Potassium	**7770**	ug/L	20.0	1	07/25/13 13:35	08/05/13 15:33	7440-09-7	
Selenium	**2.3**	ug/L	0.50	1	07/25/13 13:35	08/05/13 15:33	7782-49-2	
Silica	**94300**	ug/L	1070	20	07/25/13 13:35	08/05/13 15:39	7631-86-9	
Silver	ND	ug/L	0.50	1	07/25/13 13:35	08/05/13 15:33	7440-22-4	
Sodium	**13400**	ug/L	50.0	1	07/25/13 13:35	08/05/13 15:33	7440-23-5	
Thallium	**0.51**	ug/L	0.10	1	07/25/13 13:35	08/06/13 12:21	7440-28-0	
Total Hardness by 2340B	**859000**	ug/L	1420	20	07/25/13 13:35	08/05/13 15:39		
Vanadium	**48.7**	ug/L	0.10	1	07/25/13 13:35	08/05/13 15:33	7440-62-2	
Zinc	**557**	ug/L	100	20	07/25/13 13:35	08/05/13 15:39	7440-66-6	
200.8 MET ICPMS, Dissolved	Analytical Method: EPA 200.8 Preparation Method: EPA 200.8							
Aluminum, Dissolved	**5.0**	ug/L	4.0	1	07/25/13 13:32	08/05/13 18:14	7429-90-5	
Antimony, Dissolved	ND	ug/L	0.50	1	07/25/13 13:32	08/05/13 18:14	7440-36-0	
Arsenic, Dissolved	ND	ug/L	0.50	1	07/25/13 13:32	08/05/13 18:14	7440-38-2	
Barium, Dissolved	**23.5**	ug/L	0.30	1	07/25/13 13:32	08/05/13 18:14	7440-39-3	
Beryllium, Dissolved	ND	ug/L	0.20	1	07/25/13 13:32	08/05/13 18:14	7440-41-7	
Cadmium, Dissolved	**0.19**	ug/L	0.080	1	07/25/13 13:32	08/05/13 18:14	7440-43-9	
Calcium, Dissolved	**257000**	ug/L	400	20	07/25/13 13:32	08/05/13 18:19	7440-70-2	
Chromium, Dissolved	ND	ug/L	0.50	1	07/25/13 13:32	08/05/13 18:14	7440-47-3	
Cobalt, Dissolved	ND	ug/L	0.50	1	07/25/13 13:32	08/05/13 18:14	7440-48-4	
Copper, Dissolved	**1.0**	ug/L	0.50	1	07/25/13 13:32	08/05/13 18:14	7440-50-8	
Iron, Dissolved	ND	ug/L	50.0	1	07/25/13 13:32	08/05/13 18:14	7439-89-6	
Lead, Dissolved	**0.10**	ug/L	0.10	1	07/25/13 13:32	08/05/13 18:14	7439-92-1	
Magnesium, Dissolved	**20800**	ug/L	5.0	1	07/25/13 13:32	08/05/13 18:14	7439-95-4	

This report shall not be reproduced, except in full,
without the written consent of Pace Analytical Services, Inc..

Pace Analytical Services, Inc.
9608 Loiret Blvd.
Lenexa, KS 66219
(913)599-5665

ANALYTICAL RESULTS

Project: July 2013 Rico Water Sampling
Pace Project No.: 60149302

Sample: CHV-101S_20130719 **Lab ID: 60149302016** Collected: 07/19/13 10:27 Received: 07/20/13 09:20 Matrix: Water

Parameters	Results	Units	Report Limit	DF	Prepared	Analyzed	CAS No.	Qual
200.8 MET ICPMS, Dissolved	Analytical Method: EPA 200.8 Preparation Method: EPA 200.8							
Manganese, Dissolved	**64.4**	ug/L	0.50	1	07/25/13 13:32	08/05/13 18:14	7439-96-5	
Molybdenum, Dissolved	**0.65**	ug/L	0.50	1	07/25/13 13:32	08/05/13 18:14	7439-98-7	
Nickel, Dissolved	**3.3**	ug/L	0.50	1	07/25/13 13:32	08/05/13 18:14	7440-02-0	
Potassium, Dissolved	**2700**	ug/L	20.0	1	07/25/13 13:32	08/05/13 18:14	7440-09-7	
Selenium, Dissolved	ND	ug/L	0.50	1	07/25/13 13:32	08/05/13 18:14	7782-49-2	
Silver, Dissolved	ND	ug/L	0.50	1	07/25/13 13:32	08/05/13 18:14	7440-22-4	
Sodium, Dissolved	**12600**	ug/L	50.0	1	07/25/13 13:32	08/05/13 18:14	7440-23-5	
Thallium, Dissolved	ND	ug/L	0.10	1	07/25/13 13:32	08/05/13 18:14	7440-28-0	
Vanadium, Dissolved	ND	ug/L	0.10	1	07/25/13 13:32	08/05/13 18:14	7440-62-2	
Zinc, Dissolved	**19.7**	ug/L	5.0	1	07/25/13 13:32	08/05/13 18:14	7440-66-6	
200.8 Potentially Diss. Metals	Analytical Method: EPA 200.8 Preparation Method: EPA 200.8							
Aluminum, Dissolved	**4350**	ug/L	50.0	1	07/23/13 15:00	08/16/13 00:56	7429-90-5	
Antimony, Dissolved	**0.094J**	ug/L	1.0	1	07/23/13 15:00	08/16/13 00:56	7440-36-0	
Arsenic, Dissolved	**3.5**	ug/L	1.0	1	07/23/13 15:00	08/16/13 00:56	7440-38-2	
Barium, Dissolved	**69.4**	ug/L	1.0	1	07/23/13 15:00	08/16/13 00:56	7440-39-3	
Beryllium, Dissolved	**1.4**	ug/L	0.50	1	07/23/13 15:00	08/16/13 00:56	7440-41-7	
Cadmium, Dissolved	**2.0**	ug/L	0.50	1	07/23/13 15:00	08/16/13 00:56	7440-43-9	
Chromium, Dissolved	**17.9**	ug/L	1.0	1	07/23/13 15:00	08/16/13 00:56	7440-47-3	
Cobalt, Dissolved	**9.2**	ug/L	1.0	1	07/23/13 15:00	08/16/13 00:56	7440-48-4	
Copper, Dissolved	**26.8**	ug/L	1.0	1	07/23/13 15:00	08/16/13 00:56	7440-50-8	
Iron, Dissolved	**8380**	ug/L	50.0	1	07/23/13 15:00	08/16/13 00:56	7439-89-6	
Lead, Dissolved	**15.0**	ug/L	1.0	1	07/23/13 15:00	08/16/13 00:56	7439-92-1	
Manganese, Dissolved	**2530**	ug/L	1.0	1	07/23/13 15:00	08/16/13 00:56	7439-96-5	
Molybdenum, Dissolved	**0.59J**	ug/L	1.0	1	07/23/13 15:00	08/16/13 00:56	7439-98-7	
Nickel, Dissolved	**12.7**	ug/L	1.0	1	07/23/13 15:00	08/16/13 00:56	7440-02-0	
Selenium, Dissolved	**1.5**	ug/L	1.0	1	07/23/13 15:00	08/16/13 00:56	7782-49-2	
Silver, Dissolved	**0.17J**	ug/L	0.50	1	07/23/13 15:00	08/16/13 00:56	7440-22-4	
Thallium, Dissolved	**0.24J**	ug/L	1.0	1	07/23/13 15:00	08/16/13 00:56	7440-28-0	B
Vanadium, Dissolved	**6.7**	ug/L	1.0	1	07/23/13 15:00	08/16/13 00:56	7440-62-2	
Zinc, Dissolved	**279**	ug/L	10.0	1	07/23/13 15:00	08/16/13 00:56	7440-66-6	
245.1 Mercury	Analytical Method: EPA 245.1 Preparation Method: EPA 245.1							
Mercury	ND	ug/L	0.20	1	07/30/13 09:46	08/01/13 12:35	7439-97-6	
245.1 Mercury, Dissolved	Analytical Method: EPA 245.1 Preparation Method: EPA 245.1							
Mercury, Dissolved	ND	ug/L	0.20	1	07/29/13 09:32	08/01/13 14:01	7439-97-6	
245.1 Potentially Diss Mercury	Analytical Method: EPA 245.1 Preparation Method: EPA 245.1							
Mercury, Dissolved	ND	ug/L	0.20	1	07/22/13 14:30	07/23/13 11:48	7439-97-6	
2510B Specific Conductance	Analytical Method: SM 2510B							
Specific Conductance	**1310**	umhos/cm	10.0	1		08/02/13 11:16		
Salinity	Analytical Method: Calculated							
Salinity (as dissolved solids)	**837**	mg/L	6.4	1		08/02/13 11:16		

REPORT OF LABORATORY ANALYSIS

This report shall not be reproduced, except in full,
without the written consent of Pace Analytical Services, Inc..

Pace Analytical Services, Inc.
9608 Loiret Blvd.
Lenexa, KS 66219
(913)599-5665

ANALYTICAL RESULTS

Project: July 2013 Rico Water Sampling
Pace Project No.: 60149302

Sample: CHV-101S_20130719 **Lab ID: 60149302016** Collected: 07/19/13 10:27 Received: 07/20/13 09:20 Matrix: Water

Parameters	Results	Units	Report Limit	DF	Prepared	Analyzed	CAS No.	Qual
Salinity	Analytical Method: Calculated							
Salinity (as seawater)	**0.65**	PSU	0.014	1		08/02/13 11:16		
2320B Alkalinity	Analytical Method: SM 2320B							
Alkalinity,Bicarbonate (CaCO3)	**151**	mg/L	20.0	1		07/25/13 10:26		
Alkalinity, Carbonate (CaCO3)	ND	mg/L	20.0	1		07/25/13 10:26		
Alkalinity, Total as CaCO3	**151**	mg/L	20.0	1		07/25/13 10:26		
2540C Total Dissolved Solids	Analytical Method: SM 2540C							
Total Dissolved Solids	**983**	mg/L	5.0	1		07/23/13 15:47		
2540D Total Suspended Solids	Analytical Method: SM 2540D							
Total Suspended Solids	**1630**	mg/L	5.0	1		07/24/13 08:20		
4500S2D Sulfide, Total	Analytical Method: SM 4500-S-2 D							
Sulfide, Total	ND	mg/L	0.050	1		07/26/13 12:46	18496-25-8	
300.0 IC Anions 28 Days	Analytical Method: EPA 300.0							
Chloride	ND	mg/L	1.0	1		07/31/13 23:54	16887-00-6	
Sulfate	**611**	mg/L	100	100		08/01/13 23:49	14808-79-8	
353.2 Nitrogen, NO2/NO3 pres.	Analytical Method: EPA 353.2							
Nitrogen, NO2 plus NO3	ND	mg/L	0.10	1		07/24/13 09:41		
4500CNE Cyanide, Total	Analytical Method: SM 4500-CN-E							
Cyanide	ND	mg/L	0.0050	1		07/24/13 18:03	57-12-5	
5310C TOC	Analytical Method: SM 5310C							
Total Organic Carbon	ND	mg/L	0.50	1		07/30/13 22:16	7440-44-0	

This report shall not be reproduced, except in full,
without the written consent of Pace Analytical Services, Inc..

Pace Analytical Services, Inc.
9608 Loiret Blvd.
Lenexa, KS 66219
(913)599-5665

ANALYTICAL RESULTS

Project: July 2013 Rico Water Sampling
Pace Project No.: 60149302

Sample: AT-2_20130719 **Lab ID: 60149302017** Collected: 07/19/13 09:57 Received: 07/20/13 09:20 Matrix: Water

Parameters	Results	Units	Report Limit	DF	Prepared	Analyzed	CAS No.	Qual
200.7 Potentially Diss. Metals	Analytical Method: EPA 200.7 Preparation Method: EPA 200.7							
Calcium, Dissolved	**161000**	ug/L	100	1	07/23/13 15:00	07/31/13 10:27	7440-70-2	
Magnesium, Dissolved	**14900**	ug/L	50.0	1	07/23/13 15:00	07/31/13 10:27	7439-95-4	
Potassium, Dissolved	**5200**	ug/L	500	1	07/23/13 15:00	07/31/13 10:27	7440-09-7	
Sodium, Dissolved	**10800**	ug/L	500	1	07/23/13 15:00	07/31/13 10:27	7440-23-5	
200.8 MET ICPMS	Analytical Method: EPA 200.8 Preparation Method: EPA 200.8							
Aluminum	**12400**	ug/L	4.0	1	07/25/13 13:35	08/05/13 15:44	7429-90-5	
Antimony	**1.6**	ug/L	0.50	1	07/25/13 13:35	08/05/13 15:44	7440-36-0	
Arsenic	**12.9**	ug/L	0.50	1	07/25/13 13:35	08/05/13 15:44	7440-38-2	
Barium	**120**	ug/L	0.30	1	07/25/13 13:35	08/05/13 15:44	7440-39-3	
Beryllium	**2.5**	ug/L	0.20	1	07/25/13 13:35	08/05/13 15:44	7440-41-7	
Cadmium	**17.5**	ug/L	0.080	1	07/25/13 13:35	08/05/13 15:44	7440-43-9	
Calcium	**168000**	ug/L	400	20	07/25/13 13:35	08/05/13 15:50	7440-70-2	
Chromium	**14.2**	ug/L	0.50	1	07/25/13 13:35	08/05/13 15:44	7440-47-3	
Cobalt	**8.5**	ug/L	0.50	1	07/25/13 13:35	08/05/13 15:44	7440-48-4	
Copper	**770**	ug/L	10.0	20	07/25/13 13:35	08/05/13 15:50	7440-50-8	
Iron	**209000**	ug/L	1000	20	07/25/13 13:35	08/05/13 15:50	7439-89-6	
Lead	**177**	ug/L	0.10	1	07/25/13 13:35	08/06/13 12:27	7439-92-1	
Magnesium	**22100**	ug/L	5.0	1	07/25/13 13:35	08/05/13 15:44	7439-95-4	
Manganese	**3460**	ug/L	10.0	20	07/25/13 13:35	08/05/13 15:50	7439-96-5	
Molybdenum	**33.6**	ug/L	0.50	1	07/25/13 13:35	08/05/13 15:44	7439-98-7	
Nickel	**16.0**	ug/L	0.50	1	07/25/13 13:35	08/05/13 15:44	7440-02-0	
Potassium	**6340**	ug/L	20.0	1	07/25/13 13:35	08/05/13 15:44	7440-09-7	
Selenium	**1.1**	ug/L	0.50	1	07/25/13 13:35	08/05/13 15:44	7782-49-2	
Silica	**42300**	ug/L	1070	20	07/25/13 13:35	08/05/13 15:50	7631-86-9	
Silver	ND	ug/L	0.50	1	07/25/13 13:35	08/05/13 15:44	7440-22-4	
Sodium	**10700**	ug/L	50.0	1	07/25/13 13:35	08/05/13 15:44	7440-23-5	
Thallium	**0.23**	ug/L	0.10	1	07/25/13 13:35	08/06/13 12:27	7440-28-0	
Total Hardness by 2340B	**510000**	ug/L	1420	20	07/25/13 13:35	08/05/13 15:50		
Vanadium	**16.8**	ug/L	0.10	1	07/25/13 13:35	08/05/13 15:44	7440-62-2	
Zinc	**2810**	ug/L	100	20	07/25/13 13:35	08/05/13 15:50	7440-66-6	
200.8 MET ICPMS, Dissolved	Analytical Method: EPA 200.8 Preparation Method: EPA 200.8							
Aluminum, Dissolved	**5.1**	ug/L	4.0	1	07/25/13 13:32	08/05/13 18:24	7429-90-5	
Antimony, Dissolved	ND	ug/L	0.50	1	07/25/13 13:32	08/05/13 18:24	7440-36-0	
Arsenic, Dissolved	ND	ug/L	0.50	1	07/25/13 13:32	08/05/13 18:24	7440-38-2	
Barium, Dissolved	**53.0**	ug/L	0.30	1	07/25/13 13:32	08/05/13 18:24	7440-39-3	
Beryllium, Dissolved	ND	ug/L	0.20	1	07/25/13 13:32	08/05/13 18:24	7440-41-7	
Cadmium, Dissolved	ND	ug/L	0.080	1	07/25/13 13:32	08/05/13 18:24	7440-43-9	
Calcium, Dissolved	**169000**	ug/L	400	20	07/25/13 13:32	08/05/13 18:29	7440-70-2	
Chromium, Dissolved	ND	ug/L	0.50	1	07/25/13 13:32	08/05/13 18:24	7440-47-3	
Cobalt, Dissolved	ND	ug/L	0.50	1	07/25/13 13:32	08/05/13 18:24	7440-48-4	
Copper, Dissolved	**1.2**	ug/L	0.50	1	07/25/13 13:32	08/05/13 18:24	7440-50-8	
Iron, Dissolved	ND	ug/L	50.0	1	07/25/13 13:32	08/05/13 18:24	7439-89-6	
Lead, Dissolved	**0.12**	ug/L	0.10	1	07/25/13 13:32	08/05/13 18:24	7439-92-1	
Magnesium, Dissolved	**14300**	ug/L	5.0	1	07/25/13 13:32	08/05/13 18:24	7439-95-4	

This report shall not be reproduced, except in full,
without the written consent of Pace Analytical Services, Inc..

Pace Analytical Services, Inc.
9608 Loiret Blvd.
Lenexa, KS 66219
(913)599-5665

ANALYTICAL RESULTS

Project: July 2013 Rico Water Sampling
Pace Project No.: 60149302

Sample: AT-2_20130719 **Lab ID: 60149302017** Collected: 07/19/13 09:57 Received: 07/20/13 09:20 Matrix: Water

Parameters	Results	Units	Report Limit	DF	Prepared	Analyzed	CAS No.	Qual
200.8 MET ICPMS, Dissolved	Analytical Method: EPA 200.8 Preparation Method: EPA 200.8							
Manganese, Dissolved	**523**	ug/L	10.0	20	07/25/13 13:32	08/05/13 18:29	7439-96-5	
Molybdenum, Dissolved	**4.4**	ug/L	0.50	1	07/25/13 13:32	08/05/13 18:24	7439-98-7	
Nickel, Dissolved	**3.9**	ug/L	0.50	1	07/25/13 13:32	08/05/13 18:24	7440-02-0	
Potassium, Dissolved	**5300**	ug/L	20.0	1	07/25/13 13:32	08/05/13 18:24	7440-09-7	
Selenium, Dissolved	ND	ug/L	0.50	1	07/25/13 13:32	08/05/13 18:24	7782-49-2	
Silver, Dissolved	ND	ug/L	0.50	1	07/25/13 13:32	08/05/13 18:24	7440-22-4	
Sodium, Dissolved	**11100**	ug/L	50.0	1	07/25/13 13:32	08/05/13 18:24	7440-23-5	
Thallium, Dissolved	ND	ug/L	0.10	1	07/25/13 13:32	08/05/13 18:24	7440-28-0	
Vanadium, Dissolved	ND	ug/L	0.10	1	07/25/13 13:32	08/05/13 18:24	7440-62-2	
Zinc, Dissolved	**7.2**	ug/L	5.0	1	07/25/13 13:32	08/05/13 18:24	7440-66-6	
200.8 Potentially Diss. Metals	Analytical Method: EPA 200.8 Preparation Method: EPA 200.8							
Aluminum, Dissolved	**2290**	ug/L	50.0	1	07/23/13 15:00	08/16/13 01:00	7429-90-5	
Antimony, Dissolved	**0.20J**	ug/L	1.0	1	07/23/13 15:00	08/16/13 01:00	7440-36-0	
Arsenic, Dissolved	**1.2**	ug/L	1.0	1	07/23/13 15:00	08/16/13 01:00	7440-38-2	
Barium, Dissolved	**77.7**	ug/L	1.0	1	07/23/13 15:00	08/16/13 01:00	7440-39-3	
Beryllium, Dissolved	**1.8**	ug/L	0.50	1	07/23/13 15:00	08/16/13 01:00	7440-41-7	
Cadmium, Dissolved	**15.0**	ug/L	0.50	1	07/23/13 15:00	08/16/13 01:00	7440-43-9	
Chromium, Dissolved	**6.4**	ug/L	1.0	1	07/23/13 15:00	08/16/13 01:00	7440-47-3	
Cobalt, Dissolved	**5.3**	ug/L	1.0	1	07/23/13 15:00	08/16/13 01:00	7440-48-4	
Copper, Dissolved	**431**	ug/L	1.0	1	07/23/13 15:00	08/16/13 01:00	7440-50-8	
Iron, Dissolved	**53400**	ug/L	50.0	1	07/23/13 15:00	08/16/13 01:00	7439-89-6	
Lead, Dissolved	**156**	ug/L	1.0	1	07/23/13 15:00	08/16/13 01:00	7439-92-1	
Manganese, Dissolved	**1890**	ug/L	1.0	1	07/23/13 15:00	08/16/13 01:00	7439-96-5	
Molybdenum, Dissolved	**0.99J**	ug/L	1.0	1	07/23/13 15:00	08/16/13 01:00	7439-98-7	
Nickel, Dissolved	**8.7**	ug/L	1.0	1	07/23/13 15:00	08/16/13 01:00	7440-02-0	
Selenium, Dissolved	**1.1**	ug/L	1.0	1	07/23/13 15:00	08/16/13 01:00	7782-49-2	
Silver, Dissolved	**0.013J**	ug/L	0.50	1	07/23/13 15:00	08/16/13 01:00	7440-22-4	
Thallium, Dissolved	**0.28J**	ug/L	1.0	1	07/23/13 15:00	08/16/13 01:00	7440-28-0	B
Vanadium, Dissolved	**2.2**	ug/L	1.0	1	07/23/13 15:00	08/16/13 01:00	7440-62-2	
Zinc, Dissolved	**1990**	ug/L	10.0	1	07/23/13 15:00	08/16/13 01:00	7440-66-6	
245.1 Mercury	Analytical Method: EPA 245.1 Preparation Method: EPA 245.1							
Mercury	ND	ug/L	0.20	1	07/30/13 09:46	08/01/13 12:43	7439-97-6	
245.1 Mercury, Dissolved	Analytical Method: EPA 245.1 Preparation Method: EPA 245.1							
Mercury, Dissolved	ND	ug/L	0.20	1	07/29/13 09:32	08/01/13 14:04	7439-97-6	
245.1 Potentially Diss Mercury	Analytical Method: EPA 245.1 Preparation Method: EPA 245.1							
Mercury, Dissolved	ND	ug/L	0.20	1	07/22/13 14:30	07/23/13 11:50	7439-97-6	
2510B Specific Conductance	Analytical Method: SM 2510B							
Specific Conductance	**907**	umhos/cm	10.0	1		08/02/13 11:21		
Salinity	Analytical Method: Calculated							
Salinity (as dissolved solids)	**580**	mg/L	6.4	1		08/02/13 11:21		

REPORT OF LABORATORY ANALYSIS

This report shall not be reproduced, except in full,
without the written consent of Pace Analytical Services, Inc..

Pace Analytical Services, Inc.
9608 Loiret Blvd.
Lenexa, KS 66219
(913)599-5665

ANALYTICAL RESULTS

Project: July 2013 Rico Water Sampling
Pace Project No.: 60149302

Sample: AT-2_20130719 **Lab ID: 60149302017** Collected: 07/19/13 09:57 Received: 07/20/13 09:20 Matrix: Water

Parameters	Results	Units	Report Limit	DF	Prepared	Analyzed	CAS No.	Qual
Salinity	Analytical Method: Calculated							
Salinity (as seawater)	**0.44**	PSU	0.014	1		08/02/13 11:21		
2320B Alkalinity	Analytical Method: SM 2320B							
Alkalinity,Bicarbonate (CaCO3)	**36.8**	mg/L	20.0	1		07/25/13 10:29		
Alkalinity, Carbonate (CaCO3)	ND	mg/L	20.0	1		07/25/13 10:29		
Alkalinity, Total as CaCO3	**36.8**	mg/L	20.0	1		07/25/13 10:29		
2540C Total Dissolved Solids	Analytical Method: SM 2540C							
Total Dissolved Solids	**681**	mg/L	5.0	1		07/23/13 15:47		
2540D Total Suspended Solids	Analytical Method: SM 2540D							
Total Suspended Solids	**702**	mg/L	5.0	1		07/24/13 08:20		
4500S2D Sulfide, Total	Analytical Method: SM 4500-S-2 D							
Sulfide, Total	ND	mg/L	0.050	1		07/26/13 12:47	18496-25-8	
300.0 IC Anions 28 Days	Analytical Method: EPA 300.0							
Chloride	**1.5**	mg/L	1.0	1		08/01/13 00:12	16887-00-6	
Sulfate	**469**	mg/L	100	100		08/02/13 00:06	14808-79-8	
353.2 Nitrogen, NO2/NO3 pres.	Analytical Method: EPA 353.2							
Nitrogen, NO2 plus NO3	ND	mg/L	0.10	1		07/24/13 09:42		
4500CNE Cyanide, Total	Analytical Method: SM 4500-CN-E							
Cyanide	ND	mg/L	0.0050	1		07/24/13 18:04	57-12-5	
5310C TOC	Analytical Method: SM 5310C							
Total Organic Carbon	**1.1**	mg/L	0.50	1		07/30/13 22:34	7440-44-0	

This report shall not be reproduced, except in full,
without the written consent of Pace Analytical Services, Inc..

Pace Analytical Services, Inc.
9608 Loiret Blvd.
Lenexa, KS 66219
(913)599-5665

ANALYTICAL RESULTS

Project: July 2013 Rico Water Sampling
Pace Project No.: 60149302

Sample: BAH-01_20130719 **Lab ID: 60149302018** Collected: 07/19/13 10:36 Received: 07/20/13 09:20 Matrix: Water

Parameters	Results	Units	Report Limit	DF	Prepared	Analyzed	CAS No.	Qual
200.7 Potentially Diss. Metals	Analytical Method: EPA 200.7 Preparation Method: EPA 200.7							
Calcium, Dissolved	**333000**	ug/L	500	5	07/23/13 15:00	07/31/13 10:30	7440-70-2	
Magnesium, Dissolved	**25600**	ug/L	250	5	07/23/13 15:00	07/31/13 10:30	7439-95-4	
Potassium, Dissolved	**15200**	ug/L	2500	5	07/23/13 15:00	07/31/13 10:30	7440-09-7	
Sodium, Dissolved	**14300**	ug/L	2500	5	07/23/13 15:00	07/31/13 10:30	7440-23-5	
200.8 MET ICPMS	Analytical Method: EPA 200.8 Preparation Method: EPA 200.8							
Aluminum	**388000**	ug/L	80.0	20	07/25/13 13:35	08/05/13 16:01	7429-90-5	
Antimony	ND	ug/L	50.0	100	07/25/13 13:35	08/06/13 12:33	7440-36-0	D3
Arsenic	**104**	ug/L	50.0	100	07/25/13 13:35	08/06/13 12:33	7440-38-2	
Barium	**576**	ug/L	30.0	100	07/25/13 13:35	08/06/13 12:33	7440-39-3	
Beryllium	**270**	ug/L	1.0	5	07/25/13 13:35	08/05/13 15:55	7440-41-7	
Cadmium	**2520**	ug/L	8.0	100	07/25/13 13:35	08/06/13 12:33	7440-43-9	
Calcium	**432000**	ug/L	400	20	07/25/13 13:35	08/05/13 16:01	7440-70-2	
Chromium	**12900**	ug/L	50.0	100	07/25/13 13:35	08/06/13 12:33	7440-47-3	
Cobalt	**297**	ug/L	50.0	100	07/25/13 13:35	08/06/13 12:33	7440-48-4	
Copper	**116000**	ug/L	500	1000	07/25/13 13:35	08/05/13 16:13	7440-50-8	
Iron	**5470000**	ug/L	50000	1000	07/25/13 13:35	08/05/13 16:13	7439-89-6	
Lead	**28400**	ug/L	10.0	100	07/25/13 13:35	08/06/13 12:33	7439-92-1	
Magnesium	**42900**	ug/L	25.0	5	07/25/13 13:35	08/05/13 15:55	7439-95-4	
Manganese	**69900**	ug/L	100	200	07/25/13 13:35	08/06/13 12:39	7439-96-5	
Molybdenum	**86.1**	ug/L	50.0	100	07/25/13 13:35	08/06/13 12:33	7439-98-7	
Nickel	**755**	ug/L	50.0	100	07/25/13 13:35	08/06/13 12:33	7440-02-0	
Potassium	**14300**	ug/L	100	5	07/25/13 13:35	08/05/13 15:55	7440-09-7	
Selenium	**73.3**	ug/L	50.0	100	07/25/13 13:35	08/06/13 12:33	7782-49-2	
Silica	**697000**	ug/L	10700	200	07/25/13 13:35	08/06/13 12:39	7631-86-9	
Silver	**186**	ug/L	20.0	40	07/25/13 13:35	08/07/13 13:34	7440-22-4	
Sodium	**13200**	ug/L	250	5	07/25/13 13:35	08/05/13 15:55	7440-23-5	
Thallium	ND	ug/L	10.0	100	07/25/13 13:35	08/06/13 12:33	7440-28-0	D3
Total Hardness by 2340B	**1250000**	ug/L	1420	20	07/25/13 13:35	08/05/13 16:01		
Vanadium	**8.8**	ug/L	0.50	5	07/25/13 13:35	08/05/13 15:55	7440-62-2	
Zinc	**248000**	ug/L	5000	1000	07/25/13 13:35	08/05/13 16:13	7440-66-6	
200.8 MET ICPMS, Dissolved	Analytical Method: EPA 200.8 Preparation Method: EPA 200.8							
Aluminum, Dissolved	**71.1**	ug/L	4.0	1	07/25/13 13:32	08/05/13 18:35	7429-90-5	
Antimony, Dissolved	ND	ug/L	0.50	1	07/25/13 13:32	08/05/13 18:35	7440-36-0	
Arsenic, Dissolved	ND	ug/L	0.50	1	07/25/13 13:32	08/05/13 18:35	7440-38-2	
Barium, Dissolved	**51.3**	ug/L	0.30	1	07/25/13 13:32	08/05/13 18:35	7440-39-3	
Beryllium, Dissolved	ND	ug/L	0.20	1	07/25/13 13:32	08/05/13 18:35	7440-41-7	
Cadmium, Dissolved	**0.33**	ug/L	0.080	1	07/25/13 13:32	08/05/13 18:35	7440-43-9	
Calcium, Dissolved	**200000**	ug/L	400	20	07/25/13 13:32	08/05/13 18:40	7440-70-2	
Chromium, Dissolved	**1.4**	ug/L	0.50	1	07/25/13 13:32	08/05/13 18:35	7440-47-3	
Cobalt, Dissolved	**4.2**	ug/L	0.50	1	07/25/13 13:32	08/05/13 18:35	7440-48-4	
Copper, Dissolved	**12.2**	ug/L	0.50	1	07/25/13 13:32	08/05/13 18:35	7440-50-8	
Iron, Dissolved	**10600**	ug/L	50.0	1	07/25/13 13:32	08/05/13 18:35	7439-89-6	
Lead, Dissolved	**3.3**	ug/L	0.10	1	07/25/13 13:32	08/05/13 18:35	7439-92-1	
Magnesium, Dissolved	**19100**	ug/L	5.0	1	07/25/13 13:32	08/05/13 18:35	7439-95-4	

This report shall not be reproduced, except in full,
without the written consent of Pace Analytical Services, Inc..

Pace Analytical Services, Inc.
9608 Loiret Blvd.
Lenexa, KS 66219
(913)599-5665

ANALYTICAL RESULTS

Project: July 2013 Rico Water Sampling
Pace Project No.: 60149302

Sample: BAH-01_20130719 **Lab ID: 60149302018** Collected: 07/19/13 10:36 Received: 07/20/13 09:20 Matrix: Water

Parameters	Results	Units	Report Limit	DF	Prepared	Analyzed	CAS No.	Qual
200.8 MET ICPMS, Dissolved	Analytical Method: EPA 200.8 Preparation Method: EPA 200.8							
Manganese, Dissolved	**1180**	ug/L	10.0	20	07/25/13 13:32	08/05/13 18:40	7439-96-5	
Molybdenum, Dissolved	**35.8**	ug/L	0.50	1	07/25/13 13:32	08/05/13 18:35	7439-98-7	
Nickel, Dissolved	**1.6**	ug/L	0.50	1	07/25/13 13:32	08/05/13 18:35	7440-02-0	
Potassium, Dissolved	**16300**	ug/L	20.0	1	07/25/13 13:32	08/05/13 18:35	7440-09-7	
Selenium, Dissolved	ND	ug/L	0.50	1	07/25/13 13:32	08/05/13 18:35	7782-49-2	
Silver, Dissolved	ND	ug/L	0.50	1	07/25/13 13:32	08/05/13 18:35	7440-22-4	
Sodium, Dissolved	**15000**	ug/L	50.0	1	07/25/13 13:32	08/05/13 18:35	7440-23-5	
Thallium, Dissolved	ND	ug/L	0.10	1	07/25/13 13:32	08/05/13 18:35	7440-28-0	
Vanadium, Dissolved	ND	ug/L	0.10	1	07/25/13 13:32	08/05/13 18:35	7440-62-2	
Zinc, Dissolved	**140**	ug/L	5.0	1	07/25/13 13:32	08/05/13 18:35	7440-66-6	
200.8 Potentially Diss. Metals	Analytical Method: EPA 200.8 Preparation Method: EPA 200.8							
Aluminum, Dissolved	**2490**	ug/L	500	10	07/23/13 15:00	08/16/13 01:04	7429-90-5	
Antimony, Dissolved	ND	ug/L	10.0	10	07/23/13 15:00	08/16/13 01:04	7440-36-0	D3
Arsenic, Dissolved	ND	ug/L	10.0	10	07/23/13 15:00	08/16/13 01:04	7440-38-2	D3
Barium, Dissolved	**269**	ug/L	10.0	10	07/23/13 15:00	08/16/13 01:04	7440-39-3	
Beryllium, Dissolved	**4.4J**	ug/L	5.0	10	07/23/13 15:00	08/16/13 01:04	7440-41-7	
Cadmium, Dissolved	**12.4**	ug/L	5.0	10	07/23/13 15:00	08/16/13 01:04	7440-43-9	
Chromium, Dissolved	ND	ug/L	10.0	10	07/23/13 15:00	08/16/13 01:04	7440-47-3	D3
Cobalt, Dissolved	**21.1**	ug/L	10.0	10	07/23/13 15:00	08/16/13 01:04	7440-48-4	
Copper, Dissolved	**4.5J**	ug/L	10.0	10	07/23/13 15:00	08/16/13 01:04	7440-50-8	
Iron, Dissolved	**934000**	ug/L	500	10	07/23/13 15:00	08/16/13 01:04	7439-89-6	
Lead, Dissolved	**15.0**	ug/L	10.0	10	07/23/13 15:00	08/16/13 01:04	7439-92-1	
Manganese, Dissolved	**15300**	ug/L	10.0	10	07/23/13 15:00	08/16/13 01:04	7439-96-5	
Molybdenum, Dissolved	ND	ug/L	10.0	10	07/23/13 15:00	08/16/13 01:04	7439-98-7	D3
Nickel, Dissolved	**139**	ug/L	10.0	10	07/23/13 15:00	08/16/13 01:04	7440-02-0	
Selenium, Dissolved	ND	ug/L	10.0	10	07/23/13 15:00	08/16/13 01:04	7782-49-2	D3
Silver, Dissolved	ND	ug/L	5.0	10	07/23/13 15:00	08/16/13 01:04	7440-22-4	
Thallium, Dissolved	**2.4J**	ug/L	10.0	10	07/23/13 15:00	08/16/13 01:04	7440-28-0	B
Vanadium, Dissolved	ND	ug/L	10.0	10	07/23/13 15:00	08/16/13 01:04	7440-62-2	D3
Zinc, Dissolved	**30700**	ug/L	100	10	07/23/13 15:00	08/16/13 01:04	7440-66-6	
245.1 Mercury	Analytical Method: EPA 245.1 Preparation Method: EPA 245.1							
Mercury	ND	ug/L	0.60	1	07/30/13 09:46	08/01/13 12:45	7439-97-6	
245.1 Mercury, Dissolved	Analytical Method: EPA 245.1 Preparation Method: EPA 245.1							
Mercury, Dissolved	ND	ug/L	0.20	1	07/29/13 09:32	08/01/13 14:06	7439-97-6	
245.1 Potentially Diss Mercury	Analytical Method: EPA 245.1 Preparation Method: EPA 245.1							
Mercury, Dissolved	ND	ug/L	0.20	1	07/22/13 14:30	07/23/13 11:52	7439-97-6	
2510B Specific Conductance	Analytical Method: SM 2510B							
Specific Conductance	**1130**	umhos/cm	10.0	1		08/02/13 11:23		
Salinity	Analytical Method: Calculated							
Salinity (as dissolved solids)	**725**	mg/L	6.4	1		08/02/13 11:23		

REPORT OF LABORATORY ANALYSIS

This report shall not be reproduced, except in full,
without the written consent of Pace Analytical Services, Inc..

Pace Analytical Services, Inc.
9608 Loiret Blvd.
Lenexa, KS 66219
(913)599-5665

ANALYTICAL RESULTS

Project: July 2013 Rico Water Sampling
Pace Project No.: 60149302

Sample: BAH-01_20130719 **Lab ID: 60149302018** Collected: 07/19/13 10:36 Received: 07/20/13 09:20 Matrix: Water

Parameters	Results	Units	Report Limit	DF	Prepared	Analyzed	CAS No.	Qual
Salinity	Analytical Method: Calculated							
Salinity (as seawater)	**0.56**	PSU	0.014	1		08/02/13 11:23		
2320B Alkalinity	Analytical Method: SM 2320B							
Alkalinity,Bicarbonate (CaCO3)	**79.2**	mg/L	20.0	1		07/25/13 10:33		
Alkalinity, Carbonate (CaCO3)	ND	mg/L	20.0	1		07/25/13 10:33		
Alkalinity, Total as CaCO3	**79.2**	mg/L	20.0	1		07/25/13 10:33		
2540C Total Dissolved Solids	Analytical Method: SM 2540C							
Total Dissolved Solids	**775**	mg/L	5.0	1		07/23/13 15:48		
2540D Total Suspended Solids	Analytical Method: SM 2540D							
Total Suspended Solids	**26700**	mg/L	5.0	1		07/24/13 08:20		
4500S2D Sulfide, Total	Analytical Method: SM 4500-S-2 D							
Sulfide, Total	ND	mg/L	0.050	1		07/26/13 12:48	18496-25-8	
300.0 IC Anions 28 Days	Analytical Method: EPA 300.0							
Chloride	**2.6**	mg/L	1.0	1		08/01/13 00:30	16887-00-6	
Sulfate	**569**	mg/L	100	100		08/02/13 00:24	14808-79-8	
353.2 Nitrogen, NO2/NO3 pres.	Analytical Method: EPA 353.2							
Nitrogen, NO2 plus NO3	ND	mg/L	0.10	1		07/24/13 09:43		
4500CNE Cyanide, Total	Analytical Method: SM 4500-CN-E							
Cyanide	ND	mg/L	0.0050	1		07/24/13 18:08	57-12-5	
5310C TOC	Analytical Method: SM 5310C							
Total Organic Carbon	**3.5**	mg/L	3.0	6		07/31/13 09:45	7440-44-0	

This report shall not be reproduced, except in full,
without the written consent of Pace Analytical Services, Inc..

Pace Analytical Services, Inc.
9608 Loiret Blvd.
Lenexa, KS 66219
(913)599-5665

ANALYTICAL RESULTS

Project: July 2013 Rico Water Sampling
Pace Project No.: 60149302

Sample: DR-12_20130719 **Lab ID: 60149302019** Collected: 07/19/13 09:06 Received: 07/20/13 09:20 Matrix: Water

Parameters	Results	Units	Report Limit	DF	Prepared	Analyzed	CAS No.	Qual
200.7 Potentially Diss. Metals	Analytical Method: EPA 200.7 Preparation Method: EPA 200.7							
Calcium, Dissolved	**264000**	ug/L	100	1	07/23/13 15:00	07/31/13 10:34	7440-70-2	
Magnesium, Dissolved	**28400**	ug/L	50.0	1	07/23/13 15:00	07/31/13 10:34	7439-95-4	
Potassium, Dissolved	**4100**	ug/L	500	1	07/23/13 15:00	07/31/13 10:34	7440-09-7	
Sodium, Dissolved	**11500**	ug/L	500	1	07/23/13 15:00	07/31/13 10:34	7440-23-5	
200.8 MET ICPMS	Analytical Method: EPA 200.8 Preparation Method: EPA 200.8							
Aluminum	**6120**	ug/L	4.0	1	07/25/13 13:35	08/05/13 16:35	7429-90-5	
Antimony	**1.4**	ug/L	0.50	1	07/25/13 13:35	08/05/13 16:35	7440-36-0	
Arsenic	**67.1**	ug/L	0.50	1	07/25/13 13:35	08/05/13 16:35	7440-38-2	
Barium	**145**	ug/L	0.30	1	07/25/13 13:35	08/05/13 16:35	7440-39-3	
Beryllium	**0.57**	ug/L	0.20	1	07/25/13 13:35	08/05/13 16:35	7440-41-7	
Cadmium	**6.7**	ug/L	0.080	1	07/25/13 13:35	08/05/13 16:35	7440-43-9	
Calcium	**276000**	ug/L	400	20	07/25/13 13:35	08/05/13 16:41	7440-70-2	
Chromium	**8.8**	ug/L	0.50	1	07/25/13 13:35	08/05/13 16:35	7440-47-3	
Cobalt	**8.1**	ug/L	0.50	1	07/25/13 13:35	08/05/13 16:35	7440-48-4	
Copper	**308**	ug/L	0.50	1	07/25/13 13:35	08/05/13 16:35	7440-50-8	
Iron	**74200**	ug/L	1000	20	07/25/13 13:35	08/05/13 16:41	7439-89-6	
Lead	**1120**	ug/L	2.0	20	07/25/13 13:35	08/05/13 16:41	7439-92-1	
Magnesium	**31000**	ug/L	100	20	07/25/13 13:35	08/05/13 16:41	7439-95-4	
Manganese	**2680**	ug/L	10.0	20	07/25/13 13:35	08/05/13 16:41	7439-96-5	
Molybdenum	**11.3**	ug/L	0.50	1	07/25/13 13:35	08/05/13 16:35	7439-98-7	
Nickel	**10.2**	ug/L	0.50	1	07/25/13 13:35	08/05/13 16:35	7440-02-0	
Potassium	**5720**	ug/L	20.0	1	07/25/13 13:35	08/05/13 16:35	7440-09-7	
Selenium	**3.6**	ug/L	0.50	1	07/25/13 13:35	08/05/13 16:35	7782-49-2	
Silica	**46400**	ug/L	1070	20	07/25/13 13:35	08/05/13 16:41	7631-86-9	
Silver	**10.4**	ug/L	0.50	1	07/25/13 13:35	08/05/13 16:35	7440-22-4	
Sodium	**11300**	ug/L	50.0	1	07/25/13 13:35	08/05/13 16:35	7440-23-5	
Thallium	**0.46**	ug/L	0.10	1	07/25/13 13:35	08/05/13 16:35	7440-28-0	
Total Hardness by 2340B	**816000**	ug/L	1420	20	07/25/13 13:35	08/05/13 16:41		
Vanadium	**9.2**	ug/L	0.10	1	07/25/13 13:35	08/05/13 16:35	7440-62-2	
Zinc	**1190**	ug/L	100	20	07/25/13 13:35	08/05/13 16:41	7440-66-6	
200.8 MET ICPMS, Dissolved	Analytical Method: EPA 200.8 Preparation Method: EPA 200.8							
Aluminum, Dissolved	**8.9**	ug/L	4.0	1	07/25/13 13:32	08/05/13 19:01	7429-90-5	
Antimony, Dissolved	ND	ug/L	0.50	1	07/25/13 13:32	08/05/13 19:01	7440-36-0	
Arsenic, Dissolved	**35.0**	ug/L	0.50	1	07/25/13 13:32	08/05/13 19:01	7440-38-2	
Barium, Dissolved	**24.1**	ug/L	0.30	1	07/25/13 13:32	08/05/13 19:01	7440-39-3	
Beryllium, Dissolved	ND	ug/L	0.20	1	07/25/13 13:32	08/05/13 19:01	7440-41-7	
Cadmium, Dissolved	**0.18**	ug/L	0.080	1	07/25/13 13:32	08/05/13 19:01	7440-43-9	
Calcium, Dissolved	**280000**	ug/L	400	20	07/25/13 13:32	08/05/13 19:06	7440-70-2	
Chromium, Dissolved	ND	ug/L	0.50	1	07/25/13 13:32	08/05/13 19:01	7440-47-3	
Cobalt, Dissolved	**1.7**	ug/L	0.50	1	07/25/13 13:32	08/05/13 19:01	7440-48-4	
Copper, Dissolved	**2.2**	ug/L	0.50	1	07/25/13 13:32	08/05/13 19:01	7440-50-8	
Iron, Dissolved	**11500**	ug/L	50.0	1	07/25/13 13:32	08/05/13 19:01	7439-89-6	
Lead, Dissolved	**0.42**	ug/L	0.10	1	07/25/13 13:32	08/05/13 19:01	7439-92-1	
Magnesium, Dissolved	**30200**	ug/L	100	20	07/25/13 13:32	08/05/13 19:06	7439-95-4	

This report shall not be reproduced, except in full,
without the written consent of Pace Analytical Services, Inc..

Pace Analytical Services, Inc.
9608 Loiret Blvd.
Lenexa, KS 66219
(913)599-5665

ANALYTICAL RESULTS

Project: July 2013 Rico Water Sampling
Pace Project No.: 60149302

Sample: DR-12_20130719 **Lab ID: 60149302019** Collected: 07/19/13 09:06 Received: 07/20/13 09:20 Matrix: Water

Parameters	Results	Units	Report Limit	DF	Prepared	Analyzed	CAS No.	Qual
200.8 MET ICPMS, Dissolved	Analytical Method: EPA 200.8 Preparation Method: EPA 200.8							
Manganese, Dissolved	**2480**	ug/L	10.0	20	07/25/13 13:32	08/05/13 19:06	7439-96-5	
Molybdenum, Dissolved	**7.6**	ug/L	0.50	1	07/25/13 13:32	08/05/13 19:01	7439-98-7	
Nickel, Dissolved	**4.4**	ug/L	0.50	1	07/25/13 13:32	08/05/13 19:01	7440-02-0	
Potassium, Dissolved	**4190**	ug/L	20.0	1	07/25/13 13:32	08/05/13 19:01	7440-09-7	
Selenium, Dissolved	ND	ug/L	0.50	1	07/25/13 13:32	08/05/13 19:01	7782-49-2	
Silver, Dissolved	ND	ug/L	0.50	1	07/25/13 13:32	08/05/13 19:01	7440-22-4	
Sodium, Dissolved	**12000**	ug/L	50.0	1	07/25/13 13:32	08/05/13 19:01	7440-23-5	
Thallium, Dissolved	ND	ug/L	0.10	1	07/25/13 13:32	08/05/13 19:01	7440-28-0	
Vanadium, Dissolved	ND	ug/L	0.10	1	07/25/13 13:32	08/05/13 19:01	7440-62-2	
Zinc, Dissolved	**152**	ug/L	5.0	1	07/25/13 13:32	08/05/13 19:01	7440-66-6	
200.8 Potentially Diss. Metals	Analytical Method: EPA 200.8 Preparation Method: EPA 200.8							
Aluminum, Dissolved	**991**	ug/L	50.0	1	07/23/13 15:00	08/16/13 01:08	7429-90-5	
Antimony, Dissolved	**0.27J**	ug/L	1.0	1	07/23/13 15:00	08/16/13 01:08	7440-36-0	
Arsenic, Dissolved	**56.4**	ug/L	1.0	1	07/23/13 15:00	08/16/13 01:08	7440-38-2	
Barium, Dissolved	**34.3**	ug/L	1.0	1	07/23/13 15:00	08/16/13 01:08	7440-39-3	
Beryllium, Dissolved	**0.32J**	ug/L	0.50	1	07/23/13 15:00	08/16/13 01:08	7440-41-7	
Cadmium, Dissolved	**3.3**	ug/L	0.50	1	07/23/13 15:00	08/16/13 01:08	7440-43-9	
Chromium, Dissolved	**2.6**	ug/L	1.0	1	07/23/13 15:00	08/16/13 01:08	7440-47-3	B
Cobalt, Dissolved	**2.3**	ug/L	1.0	1	07/23/13 15:00	08/16/13 01:08	7440-48-4	
Copper, Dissolved	**103**	ug/L	1.0	1	07/23/13 15:00	08/16/13 01:08	7440-50-8	
Iron, Dissolved	**20800**	ug/L	50.0	1	07/23/13 15:00	08/16/13 01:08	7439-89-6	
Lead, Dissolved	**641**	ug/L	1.0	1	07/23/13 15:00	08/16/13 01:08	7439-92-1	
Manganese, Dissolved	**2480**	ug/L	1.0	1	07/23/13 15:00	08/16/13 01:08	7439-96-5	
Molybdenum, Dissolved	**5.9**	ug/L	1.0	1	07/23/13 15:00	08/16/13 01:08	7439-98-7	
Nickel, Dissolved	**3.1**	ug/L	1.0	1	07/23/13 15:00	08/16/13 01:08	7440-02-0	
Selenium, Dissolved	**0.57J**	ug/L	1.0	1	07/23/13 15:00	08/16/13 01:08	7782-49-2	
Silver, Dissolved	**0.15J**	ug/L	0.50	1	07/23/13 15:00	08/16/13 01:08	7440-22-4	
Thallium, Dissolved	**0.35J**	ug/L	1.0	1	07/23/13 15:00	08/16/13 01:08	7440-28-0	B
Vanadium, Dissolved	**1.4**	ug/L	1.0	1	07/23/13 15:00	08/16/13 01:08	7440-62-2	
Zinc, Dissolved	**596**	ug/L	10.0	1	07/23/13 15:00	08/16/13 01:08	7440-66-6	
245.1 Mercury	Analytical Method: EPA 245.1 Preparation Method: EPA 245.1							
Mercury	ND	ug/L	0.20	1	07/30/13 09:46	08/01/13 12:47	7439-97-6	
245.1 Mercury, Dissolved	Analytical Method: EPA 245.1 Preparation Method: EPA 245.1							
Mercury, Dissolved	ND	ug/L	0.20	1	07/29/13 09:32	08/01/13 14:09	7439-97-6	
245.1 Potentially Diss Mercury	Analytical Method: EPA 245.1 Preparation Method: EPA 245.1							
Mercury, Dissolved	ND	ug/L	0.20	1	07/22/13 14:30	07/23/13 11:54	7439-97-6	
2510B Specific Conductance	Analytical Method: SM 2510B							
Specific Conductance	**1350**	umhos/cm	10.0	1		08/02/13 11:25		
Salinity	Analytical Method: Calculated							
Salinity (as dissolved solids)	**866**	mg/L	6.4	1		08/02/13 11:25		

REPORT OF LABORATORY ANALYSIS

This report shall not be reproduced, except in full,
without the written consent of Pace Analytical Services, Inc..

Pace Analytical Services, Inc.
9608 Loiret Blvd.
Lenexa, KS 66219
(913)599-5665

ANALYTICAL RESULTS

Project: July 2013 Rico Water Sampling
Pace Project No.: 60149302

Sample: DR-12_20130719 **Lab ID: 60149302019** Collected: 07/19/13 09:06 Received: 07/20/13 09:20 Matrix: Water

Parameters	Results	Units	Report Limit	DF	Prepared	Analyzed	CAS No.	Qual
Salinity	Analytical Method: Calculated							
Salinity (as seawater)	**0.68**	PSU	0.014	1		08/02/13 11:25		
2320B Alkalinity	Analytical Method: SM 2320B							
Alkalinity,Bicarbonate (CaCO3)	**140**	mg/L	20.0	1		07/29/13 10:08		
Alkalinity, Carbonate (CaCO3)	ND	mg/L	20.0	1		07/29/13 10:08		
Alkalinity, Total as CaCO3	**140**	mg/L	20.0	1		07/29/13 10:08		
2540C Total Dissolved Solids	Analytical Method: SM 2540C							
Total Dissolved Solids	**1100**	mg/L	5.0	1		07/23/13 15:48		
2540D Total Suspended Solids	Analytical Method: SM 2540D							
Total Suspended Solids	**557**	mg/L	5.0	1		07/24/13 08:21		
4500S2D Sulfide, Total	Analytical Method: SM 4500-S-2 D							
Sulfide, Total	ND	mg/L	0.050	1		07/26/13 12:49	18496-25-8	
300.0 IC Anions 28 Days	Analytical Method: EPA 300.0							
Chloride	ND	mg/L	1.0	1		08/01/13 00:48	16887-00-6	
Sulfate	**671**	mg/L	100	100		08/02/13 00:42	14808-79-8	
353.2 Nitrogen, NO2/NO3 pres.	Analytical Method: EPA 353.2							
Nitrogen, NO2 plus NO3	ND	mg/L	0.10	1		07/24/13 09:44		
4500CNE Cyanide, Total	Analytical Method: SM 4500-CN-E							
Cyanide	ND	mg/L	0.0050	1		07/24/13 18:08	57-12-5	
5310C TOC	Analytical Method: SM 5310C							
Total Organic Carbon	ND	mg/L	0.50	1		07/30/13 23:11	7440-44-0	

This report shall not be reproduced, except in full,
without the written consent of Pace Analytical Services, Inc..

Appendix D

Laboratory QC Results

Pace Analytical Services, Inc.
9608 Loiret Blvd.
Lenexa, KS 66219
(913)599-5665

QUALITY CONTROL DATA

Project: JULY 2013 RICO WATER SAMPLING
Pace Project No.: 60148708

QC Batch: MERP/8834 Analysis Method: EPA 245.1
QC Batch Method: EPA 245.1 Analysis Description: 245.1 Mercury
Associated Lab Samples: 60148708001, 60148708002, 60148708003, 60148708004, 60148708005, 60148708006, 60148708007, 60148708008, 60148708009, 60148708010, 60148708011, 60148708012, 60148708013, 60148708014, 60148708015, 60148708016, 60148708017, 60148708018, 60148708019, 60148708020

METHOD BLANK: 1480225 Matrix: Water
Associated Lab Samples: 60148708001, 60148708002, 60148708003, 60148708004, 60148708005, 60148708006, 60148708007, 60148708008, 60148708009, 60148708010, 60148708011, 60148708012, 60148708013, 60148708014, 60148708015, 60148708016, 60148708017, 60148708018, 60148708019, 60148708020

Parameter	Units	Blank Result	Reporting Limit	Analyzed	Qualifiers
Mercury	ug/L	ND	0.20	07/23/13 10:10	

LABORATORY CONTROL SAMPLE: 1480226

Parameter	Units	Spike Conc.	LCS Result	LCS % Rec	% Rec Limits	Qualifiers
Mercury	ug/L	5	4.3	87	85-115	

MATRIX SPIKE & MATRIX SPIKE DUPLICATE: 1480227 1480228

Parameter	Units	60148708002 Result	MS Spike Conc.	MSD Spike Conc.	MS Result	MSD Result	MS % Rec	MSD % Rec	% Rec Limits	RPD	Max RPD	Qual
Mercury	ug/L	ND	5	5	4.4	4.9	87	98	85-115	12	20	

MATRIX SPIKE SAMPLE: 1480229

Parameter	Units	60148708020 Result	Spike Conc.	MS Result	MS % Rec	% Rec Limits	Qualifiers
Mercury	ug/L	ND	5	5.3	106	85-115	

REPORT OF LABORATORY ANALYSIS

This report shall not be reproduced, except in full,
without the written consent of Pace Analytical Services, Inc..

Pace Analytical Services, Inc.
9608 Loiret Blvd.
Lenexa, KS 66219
(913)599-5665

QUALITY CONTROL DATA

Project: JULY 2013 RICO WATER SAMPLING
Pace Project No.: 60148708

QC Batch: MERP/8833 Analysis Method: EPA 245.1
QC Batch Method: EPA 245.1 Analysis Description: 245.1 Mercury - Dissolved
Associated Lab Samples: 60148708001, 60148708002, 60148708003, 60148708004, 60148708005, 60148708006, 60148708007, 60148708008, 60148708009, 60148708010, 60148708011, 60148708012, 60148708013, 60148708014, 60148708015, 60148708016, 60148708017, 60148708018, 60148708019, 60148708020

METHOD BLANK: 1480219 Matrix: Water
Associated Lab Samples: 60148708001, 60148708002, 60148708003, 60148708004, 60148708005, 60148708006, 60148708007, 60148708008, 60148708009, 60148708010, 60148708011, 60148708012, 60148708013, 60148708014, 60148708015, 60148708016, 60148708017, 60148708018, 60148708019, 60148708020

Parameter	Units	Blank Result	Reporting Limit	Analyzed	Qualifiers
Mercury, Dissolved	ug/L	ND	0.20	07/23/13 11:34	

LABORATORY CONTROL SAMPLE: 1480220

Parameter	Units	Spike Conc.	LCS Result	LCS % Rec	% Rec Limits	Qualifiers
Mercury, Dissolved	ug/L	5	4.8	97	85-115	

MATRIX SPIKE & MATRIX SPIKE DUPLICATE: 1480221 1480222

Parameter	Units	60148708002 Result	MS Spike Conc.	MSD Spike Conc.	MS Result	MSD Result	MS % Rec	MSD % Rec	% Rec Limits	RPD	Max RPD	Qual
Mercury, Dissolved	ug/L	ND	5	5	4.8	5.2	95	104	85-115	9	20	

MATRIX SPIKE SAMPLE: 1480223

Parameter	Units	60148708020 Result	Spike Conc.	MS Result	MS % Rec	% Rec Limits	Qualifiers
Mercury, Dissolved	ug/L	ND	5	4.9	98	85-115	

This report shall not be reproduced, except in full,
without the written consent of Pace Analytical Services, Inc..

Pace Analytical Services, Inc.
9608 Loiret Blvd.
Lenexa, KS 66219
(913)599-5665

QUALITY CONTROL DATA

Project: JULY 2013 RICO WATER SAMPLING
Pace Project No.: 60148708

QC Batch: MERP/7510 — Analysis Method: EPA 245.1
QC Batch Method: EPA 245.1 — Analysis Description: 245.1 Mercury, Potentially Dissolved
Associated Lab Samples: 60148708001, 60148708002, 60148708003, 60148708004, 60148708005, 60148708006, 60148708007, 60148708008, 60148708009, 60148708010, 60148708011, 60148708012, 60148708013, 60148708014, 60148708015, 60148708016, 60148708017, 60148708018, 60148708019, 60148708020

METHOD BLANK: 1220499 — Matrix: Water
Associated Lab Samples: 60148708001, 60148708002, 60148708003, 60148708004, 60148708005, 60148708006, 60148708007, 60148708008, 60148708009, 60148708010, 60148708011, 60148708012, 60148708013, 60148708014, 60148708015, 60148708016, 60148708017, 60148708018, 60148708019, 60148708020

Parameter	Units	Blank Result	Reporting Limit	Analyzed	Qualifiers
Mercury, Dissolved	ug/L	ND	0.20	07/16/13 10:58	

LABORATORY CONTROL SAMPLE: 1220500

Parameter	Units	Spike Conc.	LCS Result	LCS % Rec	% Rec Limits	Qualifiers
Mercury, Dissolved	ug/L	5	5.7	114	85-115	

MATRIX SPIKE & MATRIX SPIKE DUPLICATE: 1220501 — 1220502

Parameter	Units	60148708002 Result	MS Spike Conc.	MSD Spike Conc.	MS Result	MSD Result	MS % Rec	MSD % Rec	% Rec Limits	RPD	Max RPD	Qual
Mercury, Dissolved	ug/L	ND	5	5	4.6	5.4	92	108	70-130	16	20	

MATRIX SPIKE SAMPLE: 1220543

Parameter	Units	60148708020 Result	Spike Conc.	MS Result	MS % Rec	% Rec Limits	Qualifiers
Mercury, Dissolved	ug/L	ND	5	5.3	105	70-130	

This report shall not be reproduced, except in full,
without the written consent of Pace Analytical Services, Inc..

Pace Analytical Services, Inc.
9608 Loiret Blvd.
Lenexa, KS 66219
(913)599-5665

QUALITY CONTROL DATA

Project: JULY 2013 RICO WATER SAMPLING
Pace Project No.: 60148708

QC Batch: MPRP/23521 Analysis Method: EPA 200.7
QC Batch Method: EPA 200.7 Analysis Description: 200.7 Potentially Dissolved Metals
Associated Lab Samples: 60148708001, 60148708002, 60148708003, 60148708004, 60148708005, 60148708006, 60148708007, 60148708008, 60148708009, 60148708010, 60148708011, 60148708012, 60148708013, 60148708014, 60148708015, 60148708016, 60148708017, 60148708018, 60148708019, 60148708020

METHOD BLANK: 1221793 Matrix: Water
Associated Lab Samples: 60148708001, 60148708002, 60148708003, 60148708004, 60148708005, 60148708006, 60148708007, 60148708008, 60148708009, 60148708010, 60148708011, 60148708012, 60148708013, 60148708014, 60148708015, 60148708016, 60148708017, 60148708018, 60148708019, 60148708020

Parameter	Units	Blank Result	Reporting Limit	Analyzed	Qualifiers
Calcium, Dissolved	ug/L	ND	100	07/24/13 12:58	
Magnesium, Dissolved	ug/L	ND	50.0	07/24/13 12:58	
Potassium, Dissolved	ug/L	ND	500	07/24/13 12:58	
Sodium, Dissolved	ug/L	ND	500	07/24/13 12:58	

LABORATORY CONTROL SAMPLE: 1221794

Parameter	Units	Spike Conc.	LCS Result	LCS % Rec	% Rec Limits	Qualifiers
Calcium, Dissolved	ug/L	10000	10500	105	85-115	
Magnesium, Dissolved	ug/L	10000	10300	103	85-115	
Potassium, Dissolved	ug/L	10000	10700	107	85-115	
Sodium, Dissolved	ug/L	10000	10800	108	85-115	

MATRIX SPIKE & MATRIX SPIKE DUPLICATE: 1221795 1221796

Parameter	Units	60148708003 Result	MS Spike Conc.	MSD Spike Conc.	MS Result	MSD Result	MS % Rec	MSD % Rec	% Rec Limits	RPD	Max RPD	Qual
Calcium, Dissolved	ug/L	234000	10000	10000	261000	258000	273	244	70-130	1	20	M1
Magnesium, Dissolved	ug/L	18900	10000	10000	30900	30600	120	117	70-130	1	20	
Potassium, Dissolved	ug/L	3850	10000	10000	15100	15000	112	111	70-130	1	20	
Sodium, Dissolved	ug/L	24600	10000	10000	36700	36700	121	120	70-130	0	20	

MATRIX SPIKE SAMPLE: 1221797

Parameter	Units	60148708013 Result	Spike Conc.	MS Result	MS % Rec	% Rec Limits	Qualifiers
Calcium, Dissolved	ug/L	48600	10000	58100	95	70-130	
Magnesium, Dissolved	ug/L	6280	10000	15800	95	70-130	
Potassium, Dissolved	ug/L	864	10000	11000	102	70-130	
Sodium, Dissolved	ug/L	2460	10000	12700	103	70-130	

This report shall not be reproduced, except in full,
without the written consent of Pace Analytical Services, Inc..

Pace Analytical Services, Inc.
9608 Loiret Blvd.
Lenexa, KS 66219
(913)599-5665

QUALITY CONTROL DATA

Project: JULY 2013 RICO WATER SAMPLING
Pace Project No.: 60148708

QC Batch: MPRP/40615 Analysis Method: EPA 200.8
QC Batch Method: EPA 200.8 Analysis Description: 200.8 MET
Associated Lab Samples: 60148708001, 60148708002, 60148708003, 60148708004, 60148708005, 60148708006, 60148708007, 60148708008, 60148708009, 60148708010, 60148708011, 60148708012, 60148708013, 60148708014, 60148708015, 60148708016, 60148708017, 60148708018, 60148708019, 60148708020

METHOD BLANK: 1480184 Matrix: Water
Associated Lab Samples: 60148708001, 60148708002, 60148708003, 60148708004, 60148708005, 60148708006, 60148708007, 60148708008, 60148708009, 60148708010, 60148708011, 60148708012, 60148708013, 60148708014, 60148708015, 60148708016, 60148708017, 60148708018, 60148708019, 60148708020

Parameter	Units	Blank Result	Reporting Limit	Analyzed	Qualifiers
Aluminum	ug/L	ND	4.0	07/25/13 17:41	
Antimony	ug/L	ND	0.50	07/25/13 17:41	
Arsenic	ug/L	ND	0.50	07/25/13 17:41	
Barium	ug/L	ND	0.30	07/25/13 17:41	
Beryllium	ug/L	ND	0.20	07/25/13 17:41	
Cadmium	ug/L	ND	0.080	07/25/13 17:41	
Calcium	ug/L	ND	20.0	07/25/13 17:41	
Chromium	ug/L	ND	0.50	07/25/13 17:41	
Cobalt	ug/L	ND	0.50	07/25/13 17:41	
Copper	ug/L	ND	0.50	07/25/13 17:41	
Iron	ug/L	ND	50.0	07/25/13 17:41	
Lead	ug/L	ND	0.10	07/25/13 17:41	
Magnesium	ug/L	ND	5.0	07/25/13 17:41	
Manganese	ug/L	ND	0.50	07/25/13 17:41	
Molybdenum	ug/L	ND	0.50	07/25/13 17:41	
Nickel	ug/L	ND	0.50	07/25/13 17:41	
Potassium	ug/L	ND	20.0	07/25/13 17:41	
Selenium	ug/L	ND	0.50	07/25/13 17:41	
Silver	ug/L	ND	0.50	07/26/13 14:37	
Sodium	ug/L	ND	50.0	07/26/13 14:37	
Thallium	ug/L	ND	0.10	07/25/13 17:41	
Vanadium	ug/L	ND	0.10	07/25/13 17:41	
Zinc	ug/L	ND	5.0	07/25/13 17:41	

LABORATORY CONTROL SAMPLE: 1480185

Parameter	Units	Spike Conc.	LCS Result	LCS % Rec	% Rec Limits	Qualifiers
Aluminum	ug/L	80	79.1	99	85-115	
Antimony	ug/L	80	73.9	92	85-115	
Arsenic	ug/L	80	76.7	96	85-115	
Barium	ug/L	80	74.6	93	85-115	
Beryllium	ug/L	80	71.1	89	85-115	
Cadmium	ug/L	80	73.0	91	85-115	
Calcium	ug/L	1000	895	90	85-115	
Chromium	ug/L	80	73.1	91	85-115	
Cobalt	ug/L	80	73.9	92	85-115	
Copper	ug/L	80	72.3	90	85-115	
Iron	ug/L	1000	954	95	85-115	

This report shall not be reproduced, except in full,
without the written consent of Pace Analytical Services, Inc..

Pace Analytical Services, Inc.
9608 Loiret Blvd.
Lenexa, KS 66219
(913)599-5665

QUALITY CONTROL DATA

Project: JULY 2013 RICO WATER SAMPLING
Pace Project No.: 60148708

LABORATORY CONTROL SAMPLE: 1480185

Parameter	Units	Spike Conc.	LCS Result	LCS % Rec	% Rec Limits	Qualifiers
Lead	ug/L	80	77.8	97	85-115	
Magnesium	ug/L	1000	934	93	85-115	
Manganese	ug/L	80	77.4	97	85-115	
Molybdenum	ug/L	80	71.2	89	85-115	
Nickel	ug/L	80	73.2	92	85-115	
Potassium	ug/L	1000	1000	100	85-115	
Selenium	ug/L	80	80.9	101	85-115	
Silver	ug/L	80	85.1	106	85-115	
Sodium	ug/L	1000	977	98	85-115	
Thallium	ug/L	80	79.9	100	85-115	
Vanadium	ug/L	80	74.0	92	85-115	
Zinc	ug/L	80	72.5	91	85-115	

MATRIX SPIKE & MATRIX SPIKE DUPLICATE: 1480186 1480187

Parameter	Units	60148708001 Result	MS Spike Conc.	MSD Spike Conc.	MS Result	MSD Result	MS % Rec	MSD % Rec	% Rec Limits	RPD	Max RPD	Qual
Aluminum	ug/L	35.4	80	80	109	93.2	92	72	70-130	15	20	
Antimony	ug/L	ND	80	80	76.3	76.3	95	95	70-130	.03	20	
Arsenic	ug/L	ND	80	80	79.0	79.3	98	99	70-130	.5	20	
Barium	ug/L	67.3	80	80	141	141	92	92	70-130	.04	20	
Beryllium	ug/L	ND	80	80	71.0	72.3	89	90	70-130	2	20	
Cadmium	ug/L	ND	80	80	74.7	75.1	93	94	70-130	.5	20	
Calcium	ug/L	42900	1000	1000	42300	43100	-56	26	70-130	2	20	M1
Chromium	ug/L	ND	80	80	76.2	75.0	95	94	70-130	2	20	
Cobalt	ug/L	ND	80	80	75.0	75.9	94	95	70-130	1	20	
Copper	ug/L	ND	80	80	73.5	74.1	91	92	70-130	.8	20	
Iron	ug/L	ND	1000	1000	995	996	97	97	70-130	.08	20	
Lead	ug/L	ND	80	80	79.1	79.4	99	99	70-130	.4	20	
Magnesium	ug/L	5350	1000	1000	6180	6200	83	85	70-130	.3	20	
Manganese	ug/L	8.3	80	80	86.3	86.2	97	97	70-130	.2	20	
Molybdenum	ug/L	0.93	80	80	74.7	74.7	92	92	70-130	.05	20	
Nickel	ug/L	ND	80	80	75.0	75.1	94	94	70-130	.08	20	
Potassium	ug/L	698	1000	1000	1690	1690	99	100	70-130	.5	20	
Selenium	ug/L	ND	80	80	80.6	82.7	100	103	70-130	2	20	
Silver	ug/L	ND	80	80	74.6	80.5	93	101	70-130	8	20	
Sodium	ug/L	2270	1000	1000	3200	3210	93	94	70-130	.3	20	
Thallium	ug/L	ND	80	80	79.4	79.8	99	100	70-130	.5	20	
Vanadium	ug/L	0.15	80	80	76.3	75.8	95	95	70-130	.6	20	
Zinc	ug/L	ND	80	80	73.2	74.7	89	90	70-130	2	20	

MATRIX SPIKE SAMPLE: 1480188

Parameter	Units	60148708011 Result	Spike Conc.	MS Result	MS % Rec	% Rec Limits	Qualifiers
Aluminum	ug/L	9.5	80	90.7	102	70-130	

REPORT OF LABORATORY ANALYSIS

This report shall not be reproduced, except in full,
without the written consent of Pace Analytical Services, Inc..

Pace Analytical Services, Inc.
9608 Loiret Blvd.
Lenexa, KS 66219
(913)599-5665

QUALITY CONTROL DATA

Project: JULY 2013 RICO WATER SAMPLING
Pace Project No.: 60148708

MATRIX SPIKE SAMPLE: 1480188

Parameter	Units	60148708011 Result	Spike Conc.	MS Result	MS % Rec	% Rec Limits	Qualifiers
Antimony	ug/L	ND	80	76.9	96	70-130	
Arsenic	ug/L	ND	80	80.7	100	70-130	
Barium	ug/L	77.0	80	153	95	70-130	
Beryllium	ug/L	ND	80	75.9	95	70-130	
Cadmium	ug/L	0.22	80	77.0	96	70-130	
Calcium	ug/L	64100	1000	68300	418	70-130	E,M1
Chromium	ug/L	ND	80	78.0	97	70-130	
Cobalt	ug/L	ND	80	78.6	98	70-130	
Copper	ug/L	0.56	80	77.2	96	70-130	
Iron	ug/L	ND	1000	1040	100	70-130	
Lead	ug/L	0.20	80	79.4	99	70-130	
Magnesium	ug/L	7680	1000	8600	92	70-130	
Manganese	ug/L	21.1	80	99.9	99	70-130	
Molybdenum	ug/L	1.5	80	78.3	96	70-130	
Nickel	ug/L	ND	80	77.7	97	70-130	
Potassium	ug/L	1310	1000	2320	101	70-130	
Selenium	ug/L	ND	80	80.4	100	70-130	
Silver	ug/L	ND	80	82.6	103	70-130	
Sodium	ug/L	3980	1000	4920	94	70-130	
Thallium	ug/L	ND	80	80.4	101	70-130	
Vanadium	ug/L	0.20	80	77.9	97	70-130	
Zinc	ug/L	34.8	80	105	87	70-130	

This report shall not be reproduced, except in full,
without the written consent of Pace Analytical Services, Inc..

Pace Analytical Services, Inc.
9608 Loiret Blvd.
Lenexa, KS 66219
(913)599-5665

QUALITY CONTROL DATA

Project: JULY 2013 RICO WATER SAMPLING
Pace Project No.: 60148708

QC Batch: MPRP/40612 Analysis Method: EPA 200.8
QC Batch Method: EPA 200.8 Analysis Description: 200.8 MET Dissolved
Associated Lab Samples: 60148708001, 60148708002, 60148708003, 60148708004, 60148708005, 60148708006, 60148708007, 60148708008, 60148708009, 60148708010, 60148708011, 60148708012, 60148708013, 60148708014, 60148708015, 60148708016, 60148708017, 60148708018, 60148708019, 60148708020

METHOD BLANK: 1480155 Matrix: Water
Associated Lab Samples: 60148708001, 60148708002, 60148708003, 60148708004, 60148708005, 60148708006, 60148708007, 60148708008, 60148708009, 60148708010, 60148708011, 60148708012, 60148708013, 60148708014, 60148708015, 60148708016, 60148708017, 60148708018, 60148708019, 60148708020

Parameter	Units	Blank Result	Reporting Limit	Analyzed	Qualifiers
Aluminum, Dissolved	ug/L	ND	4.0	07/24/13 01:05	
Antimony, Dissolved	ug/L	ND	0.50	07/24/13 01:05	
Arsenic, Dissolved	ug/L	ND	0.50	07/24/13 01:05	
Barium, Dissolved	ug/L	ND	0.30	07/24/13 01:05	
Beryllium, Dissolved	ug/L	ND	0.20	07/24/13 01:05	
Cadmium, Dissolved	ug/L	ND	0.080	07/24/13 01:05	
Calcium, Dissolved	ug/L	ND	20.0	07/24/13 01:05	
Chromium, Dissolved	ug/L	ND	0.50	07/24/13 01:05	
Cobalt, Dissolved	ug/L	ND	0.50	07/24/13 01:05	
Copper, Dissolved	ug/L	ND	0.50	07/24/13 01:05	
Iron, Dissolved	ug/L	ND	50.0	07/24/13 01:05	
Lead, Dissolved	ug/L	ND	0.10	07/24/13 01:05	
Magnesium, Dissolved	ug/L	ND	5.0	07/24/13 01:05	
Manganese, Dissolved	ug/L	ND	0.50	07/24/13 01:05	
Molybdenum, Dissolved	ug/L	ND	0.50	07/24/13 01:05	
Nickel, Dissolved	ug/L	ND	0.50	07/24/13 01:05	
Potassium, Dissolved	ug/L	ND	20.0	07/24/13 01:05	
Selenium, Dissolved	ug/L	ND	0.50	07/24/13 01:05	
Silver, Dissolved	ug/L	ND	0.50	07/24/13 01:05	
Sodium, Dissolved	ug/L	ND	50.0	07/24/13 01:05	
Thallium, Dissolved	ug/L	ND	0.10	07/24/13 01:05	
Vanadium, Dissolved	ug/L	ND	0.10	07/24/13 01:05	
Zinc, Dissolved	ug/L	ND	5.0	07/24/13 01:05	

LABORATORY CONTROL SAMPLE: 1480156

Parameter	Units	Spike Conc.	LCS Result	LCS % Rec	% Rec Limits	Qualifiers
Aluminum, Dissolved	ug/L	80	80.4	101	85-115	
Antimony, Dissolved	ug/L	80	81.2	101	85-115	
Arsenic, Dissolved	ug/L	80	80.0	100	85-115	
Barium, Dissolved	ug/L	80	81.0	101	85-115	
Beryllium, Dissolved	ug/L	80	84.3	105	85-115	
Cadmium, Dissolved	ug/L	80	82.3	103	85-115	
Calcium, Dissolved	ug/L	1000	1010	101	85-115	
Chromium, Dissolved	ug/L	80	80.8	101	85-115	
Cobalt, Dissolved	ug/L	80	80.4	100	85-115	
Copper, Dissolved	ug/L	80	83.5	104	85-115	
Iron, Dissolved	ug/L	1000	938	94	85-115	

This report shall not be reproduced, except in full,
without the written consent of Pace Analytical Services, Inc..

Pace Analytical Services, Inc.
9608 Loiret Blvd.
Lenexa, KS 66219
(913)599-5665

QUALITY CONTROL DATA

Project: JULY 2013 RICO WATER SAMPLING
Pace Project No.: 60148708

LABORATORY CONTROL SAMPLE: 1480156

Parameter	Units	Spike Conc.	LCS Result	LCS % Rec	% Rec Limits	Qualifiers
Lead, Dissolved	ug/L	80	80.6	101	85-115	
Magnesium, Dissolved	ug/L	1000	1010	101	85-115	
Manganese, Dissolved	ug/L	80	81.3	102	85-115	
Molybdenum, Dissolved	ug/L	80	80.0	100	85-115	
Nickel, Dissolved	ug/L	80	81.7	102	85-115	
Potassium, Dissolved	ug/L	1000	947	95	85-115	
Selenium, Dissolved	ug/L	80	80.4	100	85-115	
Silver, Dissolved	ug/L	80	81.9	102	85-115	
Sodium, Dissolved	ug/L	1000	1000	100	85-115	
Thallium, Dissolved	ug/L	80	78.8	98	85-115	
Vanadium, Dissolved	ug/L	80	79.9	100	85-115	
Zinc, Dissolved	ug/L	80	83.2	104	85-115	

MATRIX SPIKE & MATRIX SPIKE DUPLICATE: 1480157 1480158

Parameter	Units	60148708001 Result	MS Spike Conc.	MSD Spike Conc.	MS Result	MSD Result	MS % Rec	MSD % Rec	% Rec Limits	RPD	Max RPD	Qual
Aluminum, Dissolved	ug/L	9.5	80	80	91.3	98.9	102	112	70-130	8	20	
Antimony, Dissolved	ug/L	ND	80	80	82.2	81.0	103	101	70-130	1	20	
Arsenic, Dissolved	ug/L	ND	80	80	82.1	80.7	102	101	70-130	2	20	
Barium, Dissolved	ug/L	69.3	80	80	151	152	102	104	70-130	.9	20	
Beryllium, Dissolved	ug/L	ND	80	80	87.2	85.2	109	107	70-130	2	20	
Cadmium, Dissolved	ug/L	ND	80	80	84.1	83.5	105	104	70-130	.7	20	
Calcium, Dissolved	ug/L	37600	1000	1000	38300	38700	61	105	70-130	1	20	M1
Chromium, Dissolved	ug/L	ND	80	80	81.2	80.3	101	100	70-130	1	20	
Cobalt, Dissolved	ug/L	ND	80	80	80.9	79.8	101	100	70-130	1	20	
Copper, Dissolved	ug/L	1.3	80	80	84.4	83.1	104	102	70-130	2	20	
Iron, Dissolved	ug/L	ND	1000	1000	948	941	94	93	70-130	.7	20	
Lead, Dissolved	ug/L	ND	80	80	80.3	79.6	100	99	70-130	.8	20	
Magnesium, Dissolved	ug/L	5380	1000	1000	6400	6440	102	106	70-130	.6	20	
Manganese, Dissolved	ug/L	8.2	80	80	89.6	89.1	102	101	70-130	.5	20	
Molybdenum, Dissolved	ug/L	1.0	80	80	82.1	81.9	101	101	70-130	.2	20	
Nickel, Dissolved	ug/L	3.0	80	80	84.1	82.7	101	100	70-130	2	20	
Potassium, Dissolved	ug/L	654	1000	1000	1590	1610	94	95	70-130	.7	20	
Selenium, Dissolved	ug/L	ND	80	80	82.3	81.5	103	101	70-130	1	20	
Silver, Dissolved	ug/L	ND	80	80	80.1	78.4	100	98	70-130	2	20	
Sodium, Dissolved	ug/L	2320	1000	1000	3330	3350	101	103	70-130	.8	20	
Thallium, Dissolved	ug/L	ND	80	80	79.4	79.0	99	99	70-130	.6	20	
Vanadium, Dissolved	ug/L	0.14	80	80	81.0	79.4	101	99	70-130	2	20	
Zinc, Dissolved	ug/L	5.0	80	80	88.7	87.7	105	103	70-130	1	20	

MATRIX SPIKE SAMPLE: 1480159

Parameter	Units	60148708011 Result	Spike Conc.	MS Result	MS % Rec	% Rec Limits	Qualifiers
Aluminum, Dissolved	ug/L	6.8	80	83.7	96	70-130	

REPORT OF LABORATORY ANALYSIS

This report shall not be reproduced, except in full,
without the written consent of Pace Analytical Services, Inc..

Pace Analytical Services, Inc.
9608 Loiret Blvd.
Lenexa, KS 66219
(913)599-5665

QUALITY CONTROL DATA

Project: JULY 2013 RICO WATER SAMPLING
Pace Project No.: 60148708

MATRIX SPIKE SAMPLE: 1480159

Parameter	Units	60148708011 Result	Spike Conc.	MS Result	MS % Rec	% Rec Limits	Qualifiers
Antimony, Dissolved	ug/L	ND	80	82.0	102	70-130	
Arsenic, Dissolved	ug/L	ND	80	82.1	102	70-130	
Barium, Dissolved	ug/L	80.1	80	163	103	70-130	
Beryllium, Dissolved	ug/L	ND	80	84.0	105	70-130	
Cadmium, Dissolved	ug/L	0.21	80	83.2	104	70-130	
Calcium, Dissolved	ug/L	60600	1000	61000	34	70-130	E,M1
Chromium, Dissolved	ug/L	0.98	80	80.3	99	70-130	
Cobalt, Dissolved	ug/L	ND	80	80.2	100	70-130	
Copper, Dissolved	ug/L	1.1	80	82.5	102	70-130	
Iron, Dissolved	ug/L	ND	1000	950	92	70-130	
Lead, Dissolved	ug/L	ND	80	79.0	99	70-130	
Magnesium, Dissolved	ug/L	7690	1000	8830	114	70-130	
Manganese, Dissolved	ug/L	17.0	80	96.8	100	70-130	
Molybdenum, Dissolved	ug/L	1.6	80	82.4	101	70-130	
Nickel, Dissolved	ug/L	0.71	80	80.7	100	70-130	
Potassium, Dissolved	ug/L	1200	1000	2160	96	70-130	
Selenium, Dissolved	ug/L	ND	80	82.1	102	70-130	
Silver, Dissolved	ug/L	ND	80	78.3	98	70-130	
Sodium, Dissolved	ug/L	4050	1000	5030	99	70-130	
Thallium, Dissolved	ug/L	ND	80	78.2	98	70-130	
Vanadium, Dissolved	ug/L	0.18	80	80.0	100	70-130	
Zinc, Dissolved	ug/L	28.1	80	110	103	70-130	

This report shall not be reproduced, except in full,
without the written consent of Pace Analytical Services, Inc..

Pace Analytical Services, Inc.
9608 Loiret Blvd.
Lenexa, KS 66219
(913)599-5665

QUALITY CONTROL DATA

Project: JULY 2013 RICO WATER SAMPLING
Pace Project No.: 60148708

QC Batch: MPRP/23522 Analysis Method: EPA 200.8
QC Batch Method: EPA 200.8 Analysis Description: 200.8 Potentially Dissolved Metals
Associated Lab Samples: 60148708001, 60148708002, 60148708003, 60148708004, 60148708005, 60148708006, 60148708007, 60148708008, 60148708009, 60148708010, 60148708011, 60148708012, 60148708013, 60148708014, 60148708015, 60148708016, 60148708017, 60148708018, 60148708019, 60148708020

METHOD BLANK: 1221803 Matrix: Water
Associated Lab Samples: 60148708001, 60148708002, 60148708003, 60148708004, 60148708005, 60148708006, 60148708007, 60148708008, 60148708009, 60148708010, 60148708011, 60148708012, 60148708013, 60148708014, 60148708015, 60148708016, 60148708017, 60148708018, 60148708019, 60148708020

Parameter	Units	Blank Result	Reporting Limit	Analyzed	Qualifiers
Aluminum, Dissolved	ug/L	ND	50.0	07/22/13 14:58	
Antimony, Dissolved	ug/L	0.086J	1.0	07/22/13 14:58	
Arsenic, Dissolved	ug/L	ND	1.0	07/22/13 14:58	
Barium, Dissolved	ug/L	ND	1.0	07/22/13 14:58	
Beryllium, Dissolved	ug/L	ND	0.50	07/22/13 14:58	
Cadmium, Dissolved	ug/L	ND	0.50	07/22/13 14:58	
Chromium, Dissolved	ug/L	ND	1.0	07/22/13 14:58	
Cobalt, Dissolved	ug/L	ND	1.0	07/22/13 14:58	
Copper, Dissolved	ug/L	ND	1.0	07/22/13 14:58	
Iron, Dissolved	ug/L	ND	50.0	07/22/13 14:58	
Lead, Dissolved	ug/L	0.20J	1.0	07/22/13 14:58	
Manganese, Dissolved	ug/L	ND	1.0	07/22/13 14:58	
Molybdenum, Dissolved	ug/L	0.23J	1.0	07/22/13 14:58	
Nickel, Dissolved	ug/L	ND	1.0	07/22/13 14:58	
Selenium, Dissolved	ug/L	ND	1.0	07/22/13 14:58	
Silver, Dissolved	ug/L	ND	0.50	07/22/13 14:58	
Thallium, Dissolved	ug/L	0.29J	1.0	07/22/13 14:58	
Vanadium, Dissolved	ug/L	ND	1.0	07/23/13 11:06	
Zinc, Dissolved	ug/L	ND	10.0	07/22/13 14:58	

LABORATORY CONTROL SAMPLE: 1221804

Parameter	Units	Spike Conc.	LCS Result	LCS % Rec	% Rec Limits	Qualifiers
Aluminum, Dissolved	ug/L	1000	954	95	85-115	
Antimony, Dissolved	ug/L	40	40.3	101	85-115	
Arsenic, Dissolved	ug/L	40	39.8	100	85-115	
Barium, Dissolved	ug/L	40	39.9	100	85-115	
Beryllium, Dissolved	ug/L	40	38.6	96	85-115	
Cadmium, Dissolved	ug/L	40	40.1	100	85-115	
Chromium, Dissolved	ug/L	40	41.2	103	85-115	
Cobalt, Dissolved	ug/L	40	40.6	101	85-115	
Copper, Dissolved	ug/L	40	40.3	101	85-115	
Iron, Dissolved	ug/L	1000	998	100	85-115	
Lead, Dissolved	ug/L	40	39.8	100	85-115	
Manganese, Dissolved	ug/L	40	41.0	103	85-115	
Molybdenum, Dissolved	ug/L	40	40.6	101	85-115	
Nickel, Dissolved	ug/L	40	40.7	102	85-115	
Selenium, Dissolved	ug/L	40	40.0	100	85-115	

This report shall not be reproduced, except in full,
without the written consent of Pace Analytical Services, Inc..

Pace Analytical Services, Inc.
9608 Loiret Blvd.
Lenexa, KS 66219
(913)599-5665

QUALITY CONTROL DATA

Project: JULY 2013 RICO WATER SAMPLING
Pace Project No.: 60148708

LABORATORY CONTROL SAMPLE: 1221804

Parameter	Units	Spike Conc.	LCS Result	LCS % Rec	% Rec Limits	Qualifiers
Silver, Dissolved	ug/L	20	19.7	99	85-115	
Thallium, Dissolved	ug/L	40	38.1	95	85-115	
Vanadium, Dissolved	ug/L	40	39.7	99	85-115	
Zinc, Dissolved	ug/L	100	105	105	85-115	

MATRIX SPIKE & MATRIX SPIKE DUPLICATE: 1221805 1221806

Parameter	Units	60148708001 Result	MS Spike Conc.	MSD Spike Conc.	MS Result	MSD Result	MS % Rec	MSD % Rec	% Rec Limits	RPD	Max RPD	Qual
Aluminum, Dissolved	ug/L	6.5J	1000	1000	974	925	97	92	70-130	5	20	
Antimony, Dissolved	ug/L	0.18J	40	40	41.4	38.6	103	96	70-130	7	20	
Arsenic, Dissolved	ug/L	0.21J	40	40	41.3	39.2	103	98	70-130	5	20	
Barium, Dissolved	ug/L	68.7	40	40	110	106	104	93	70-130	4	20	
Beryllium, Dissolved	ug/L	ND	40	40	40.0	37.7	100	94	70-130	6	20	
Cadmium, Dissolved	ug/L	ND	40	40	41.4	39.8	103	99	70-130	4	20	
Chromium, Dissolved	ug/L	0.41J	40	40	41.4	40.1	102	99	70-130	3	20	
Cobalt, Dissolved	ug/L	ND	40	40	39.2	38.2	98	95	70-130	3	20	
Copper, Dissolved	ug/L	0.84J	40	40	40.5	37.9	99	93	70-130	7	20	
Iron, Dissolved	ug/L	25.6J	1000	1000	1010	980	99	95	70-130	3	20	
Lead, Dissolved	ug/L	0.26J	40	40	40.3	39.5	100	98	70-130	2	20	
Manganese, Dissolved	ug/L	8.9	40	40	49.8	48.7	102	99	70-130	2	20	
Molybdenum, Dissolved	ug/L	1.4	40	40	41.8	41.9	101	101	70-130	0	20	
Nickel, Dissolved	ug/L	ND	40	40	39.3	37.6	98	94	70-130	4	20	
Selenium, Dissolved	ug/L	0.39J	40	40	42.2	39.1	105	97	70-130	8	20	
Silver, Dissolved	ug/L	ND	20	20	19.8	17.2	99	86	70-130	14	20	
Thallium, Dissolved	ug/L	0.32J	40	40	38.6	38.0	96	94	70-130	2	20	
Vanadium, Dissolved	ug/L	0.36J	40	40	40.3	38.8	100	96	70-130	4	20	
Zinc, Dissolved	ug/L	1.8J	100	100	110	100	109	98	70-130	10	20	

MATRIX SPIKE SAMPLE: 1221807

Parameter	Units	60148708012 Result	Spike Conc.	MS Result	MS % Rec	% Rec Limits	Qualifiers
Aluminum, Dissolved	ug/L	ND	1000	969	97	70-130	
Antimony, Dissolved	ug/L	0.075J	40	40.4	101	70-130	
Arsenic, Dissolved	ug/L	ND	40	38.5	96	70-130	
Barium, Dissolved	ug/L	0.26J	40	40.0	99	70-130	
Beryllium, Dissolved	ug/L	ND	40	40.6	102	70-130	
Cadmium, Dissolved	ug/L	ND	40	39.6	99	70-130	
Chromium, Dissolved	ug/L	1.1	40	41.0	100	70-130	
Cobalt, Dissolved	ug/L	ND	40	39.0	98	70-130	
Copper, Dissolved	ug/L	ND	40	39.3	97	70-130	
Iron, Dissolved	ug/L	6.0J	1000	984	98	70-130	
Lead, Dissolved	ug/L	0.20J	40	40.1	100	70-130	
Manganese, Dissolved	ug/L	ND	40	40.1	100	70-130	
Molybdenum, Dissolved	ug/L	ND	40	39.9	99	70-130	

This report shall not be reproduced, except in full,
without the written consent of Pace Analytical Services, Inc..

Pace Analytical Services, Inc.
9608 Loiret Blvd.
Lenexa, KS 66219
(913)599-5665

QUALITY CONTROL DATA

Project: JULY 2013 RICO WATER SAMPLING
Pace Project No.: 60148708

MATRIX SPIKE SAMPLE: 1221807

Parameter	Units	60148708012 Result	Spike Conc.	MS Result	MS % Rec	% Rec Limits	Qualifiers
Nickel, Dissolved	ug/L	1.0	40	39.5	96	70-130	
Selenium, Dissolved	ug/L	ND	40	39.4	99	70-130	
Silver, Dissolved	ug/L	ND	20	19.6	98	70-130	
Thallium, Dissolved	ug/L	0.28J	40	38.0	94	70-130	
Vanadium, Dissolved	ug/L	0.63J	40	39.7	98	70-130	
Zinc, Dissolved	ug/L	ND	100	103	102	70-130	

This report shall not be reproduced, except in full,
without the written consent of Pace Analytical Services, Inc..

Pace Analytical Services, Inc.
9608 Loiret Blvd.
Lenexa, KS 66219
(913)599-5665

QUALITY CONTROL DATA

Project: JULY 2013 RICO WATER SAMPLING
Pace Project No.: 60148708

QC Batch: MT/12784 | Analysis Method: SM 2510B
QC Batch Method: SM 2510B | Analysis Description: 2510B Specific Conductance

Associated Lab Samples: 60148708001, 60148708002, 60148708003, 60148708004, 60148708005, 60148708006, 60148708007, 60148708008, 60148708009, 60148708010, 60148708011, 60148708012, 60148708013, 60148708014, 60148708015, 60148708016, 60148708017, 60148708018, 60148708019, 60148708020

METHOD BLANK: 1480271 | Matrix: Water

Associated Lab Samples: 60148708001, 60148708002, 60148708003, 60148708004, 60148708005, 60148708006, 60148708007, 60148708008, 60148708009, 60148708010, 60148708011, 60148708012, 60148708013, 60148708014, 60148708015, 60148708016, 60148708017, 60148708018, 60148708019, 60148708020

Parameter	Units	Blank Result	Reporting Limit	Analyzed	Qualifiers
Specific Conductance	umhos/cm	ND	10.0	07/18/13 11:17	

LABORATORY CONTROL SAMPLE: 1480272

Parameter	Units	Spike Conc.	LCS Result	LCS % Rec	% Rec Limits	Qualifiers
Specific Conductance	umhos/cm	1000	980	98	90-110	

SAMPLE DUPLICATE: 1480273

Parameter	Units	60148708001 Result	Dup Result	RPD	Max RPD	Qualifiers
Specific Conductance	umhos/cm	248	260	5	20	

SAMPLE DUPLICATE: 1480274

Parameter	Units	60148708010 Result	Dup Result	RPD	Max RPD	Qualifiers
Specific Conductance	umhos/cm	244	257	5	20	

This report shall not be reproduced, except in full,
without the written consent of Pace Analytical Services, Inc..

Pace Analytical Services, Inc.
9608 Loiret Blvd.
Lenexa, KS 66219
(913)599-5665

QUALITY CONTROL DATA

Project: JULY 2013 RICO WATER SAMPLING
Pace Project No.: 60148708

QC Batch: WET/42363 Analysis Method: SM 2320B
QC Batch Method: SM 2320B Analysis Description: 2320B Alkalinity
Associated Lab Samples: 60148708013, 60148708014, 60148708015, 60148708016, 60148708017, 60148708018, 60148708019

METHOD BLANK: 1220398 Matrix: Water
Associated Lab Samples: 60148708013, 60148708014, 60148708015, 60148708016, 60148708017, 60148708018, 60148708019

Parameter	Units	Blank Result	Reporting Limit	Analyzed	Qualifiers
Alkalinity, Carbonate (CaCO3)	mg/L	ND	20.0	07/16/13 08:56	
Alkalinity, Total as CaCO3	mg/L	ND	20.0	07/16/13 08:56	
Alkalinity,Bicarbonate (CaCO3)	mg/L	ND	20.0	07/16/13 08:56	

LABORATORY CONTROL SAMPLE: 1220399

Parameter	Units	Spike Conc.	LCS Result	LCS % Rec	% Rec Limits	Qualifiers
Alkalinity, Total as CaCO3	mg/L	500	493	99	90-110	

SAMPLE DUPLICATE: 1220402

Parameter	Units	60148807002 Result	Dup Result	RPD	Max RPD	Qualifiers
Alkalinity, Carbonate (CaCO3)	mg/L	ND	ND		10	
Alkalinity, Total as CaCO3	mg/L	89.0	87.0	2	10	
Alkalinity,Bicarbonate (CaCO3)	mg/L	89.0	87.0	2	10	

SAMPLE DUPLICATE: 1220403

Parameter	Units	60148547001 Result	Dup Result	RPD	Max RPD	Qualifiers
Alkalinity, Carbonate (CaCO3)	mg/L	ND	ND		10	
Alkalinity, Total as CaCO3	mg/L	129	136	6	10	
Alkalinity,Bicarbonate (CaCO3)	mg/L	129	136	6	10	

This report shall not be reproduced, except in full,
without the written consent of Pace Analytical Services, Inc..

Pace Analytical Services, Inc.
9608 Loiret Blvd.
Lenexa, KS 66219
(913)599-5665

QUALITY CONTROL DATA

Project: JULY 2013 RICO WATER SAMPLING
Pace Project No.: 60148708

QC Batch: WET/42387 Analysis Method: SM 2320B
QC Batch Method: SM 2320B Analysis Description: 2320B Alkalinity
Associated Lab Samples: 60148708001, 60148708002, 60148708003, 60148708004, 60148708005, 60148708006, 60148708007, 60148708020

METHOD BLANK: 1220969 Matrix: Water
Associated Lab Samples: 60148708001, 60148708002, 60148708003, 60148708004, 60148708005, 60148708006, 60148708007, 60148708020

Parameter	Units	Blank Result	Reporting Limit	Analyzed	Qualifiers
Alkalinity, Carbonate (CaCO3)	mg/L	ND	20.0	07/17/13 09:33	
Alkalinity, Total as CaCO3	mg/L	ND	20.0	07/17/13 09:33	
Alkalinity,Bicarbonate (CaCO3)	mg/L	ND	20.0	07/17/13 09:33	

LABORATORY CONTROL SAMPLE: 1220970

Parameter	Units	Spike Conc.	LCS Result	LCS % Rec	% Rec Limits	Qualifiers
Alkalinity, Total as CaCO3	mg/L	500	496	99	90-110	

SAMPLE DUPLICATE: 1220973

Parameter	Units	60148857002 Result	Dup Result	RPD	Max RPD	Qualifiers
Alkalinity, Carbonate (CaCO3)	mg/L	ND	ND		10	
Alkalinity, Total as CaCO3	mg/L	230	248	7	10	
Alkalinity,Bicarbonate (CaCO3)	mg/L	230	248	7	10	

SAMPLE DUPLICATE: 1220974

Parameter	Units	60148886003 Result	Dup Result	RPD	Max RPD	Qualifiers
Alkalinity, Carbonate (CaCO3)	mg/L	ND	ND		10	
Alkalinity, Total as CaCO3	mg/L	92.6	92.2	0	10	
Alkalinity,Bicarbonate (CaCO3)	mg/L	92.6	92.2	0	10	

This report shall not be reproduced, except in full,
without the written consent of Pace Analytical Services, Inc..

Pace Analytical Services, Inc.
9608 Loiret Blvd.
Lenexa, KS 66219
(913)599-5665

QUALITY CONTROL DATA

Project: JULY 2013 RICO WATER SAMPLING
Pace Project No.: 60148708

QC Batch: WET/42441 | Analysis Method: SM 2320B
QC Batch Method: SM 2320B | Analysis Description: 2320B Alkalinity
Associated Lab Samples: 60148708008, 60148708009, 60148708010, 60148708011, 60148708012

METHOD BLANK: 1222645 | Matrix: Water
Associated Lab Samples: 60148708008, 60148708009, 60148708010, 60148708011, 60148708012

Parameter	Units	Blank Result	Reporting Limit	Analyzed	Qualifiers
Alkalinity, Carbonate (CaCO3)	mg/L	ND	20.0	07/19/13 09:50	
Alkalinity, Total as CaCO3	mg/L	ND	20.0	07/19/13 09:50	
Alkalinity,Bicarbonate (CaCO3)	mg/L	ND	20.0	07/19/13 09:50	

LABORATORY CONTROL SAMPLE: 1222646

Parameter	Units	Spike Conc.	LCS Result	LCS % Rec	% Rec Limits	Qualifiers
Alkalinity, Total as CaCO3	mg/L	500	497	99	90-110	

SAMPLE DUPLICATE: 1222649

Parameter	Units	60148929002 Result	Dup Result	RPD	Max RPD	Qualifiers
Alkalinity, Carbonate (CaCO3)	mg/L	ND	ND		10	
Alkalinity, Total as CaCO3	mg/L	688	702	2	10	
Alkalinity,Bicarbonate (CaCO3)	mg/L	688	702	2	10	

SAMPLE DUPLICATE: 1222651

Parameter	Units	60149015001 Result	Dup Result	RPD	Max RPD	Qualifiers
Alkalinity, Carbonate (CaCO3)	mg/L	ND	ND		10	
Alkalinity, Total as CaCO3	mg/L	712	731	3	10	
Alkalinity,Bicarbonate (CaCO3)	mg/L	712	731	3	10	

This report shall not be reproduced, except in full,
without the written consent of Pace Analytical Services, Inc..

Pace Analytical Services, Inc.
9608 Loiret Blvd.
Lenexa, KS 66219
(913)599-5665

QUALITY CONTROL DATA

Project: JULY 2013 RICO WATER SAMPLING
Pace Project No.: 60148708

QC Batch: WET/42330 | Analysis Method: SM 2540C
QC Batch Method: SM 2540C | Analysis Description: 2540C Total Dissolved Solids
Associated Lab Samples: 60148708001, 60148708002, 60148708003, 60148708004, 60148708013, 60148708014, 60148708015, 60148708016, 60148708017, 60148708018, 60148708019, 60148708020

METHOD BLANK: 1219192 | Matrix: Water
Associated Lab Samples: 60148708001, 60148708002, 60148708003, 60148708004, 60148708013, 60148708014, 60148708015, 60148708016, 60148708017, 60148708018, 60148708019, 60148708020

Parameter	Units	Blank Result	Reporting Limit	Analyzed	Qualifiers
Total Dissolved Solids	mg/L	ND	5.0	07/12/13 14:14	

LABORATORY CONTROL SAMPLE: 1219193

Parameter	Units	Spike Conc.	LCS Result	LCS % Rec	% Rec Limits	Qualifiers
Total Dissolved Solids	mg/L	1000	973	97	80-120	

SAMPLE DUPLICATE: 1219194

Parameter	Units	60148474002 Result	Dup Result	RPD	Max RPD	Qualifiers
Total Dissolved Solids	mg/L	2440	2630	8	17	

SAMPLE DUPLICATE: 1219195

Parameter	Units	60148708017 Result	Dup Result	RPD	Max RPD	Qualifiers
Total Dissolved Solids	mg/L	844	869	3	17	

This report shall not be reproduced, except in full,
without the written consent of Pace Analytical Services, Inc..

Pace Analytical Services, Inc.
9608 Loiret Blvd.
Lenexa, KS 66219
(913)599-5665

QUALITY CONTROL DATA

Project: JULY 2013 RICO WATER SAMPLING
Pace Project No.: 60148708

QC Batch: WET/42372 | Analysis Method: SM 2540C
QC Batch Method: SM 2540C | Analysis Description: 2540C Total Dissolved Solids
Associated Lab Samples: 60148708005, 60148708006, 60148708007, 60148708008, 60148708009, 60148708010, 60148708011, 60148708012

METHOD BLANK: 1220612 | Matrix: Water
Associated Lab Samples: 60148708005, 60148708006, 60148708007, 60148708008, 60148708009, 60148708010, 60148708011, 60148708012

Parameter	Units	Blank Result	Reporting Limit	Analyzed	Qualifiers
Total Dissolved Solids	mg/L	ND	5.0	07/16/13 09:36	

LABORATORY CONTROL SAMPLE: 1220613

Parameter	Units	Spike Conc.	LCS Result	LCS % Rec	% Rec Limits	Qualifiers
Total Dissolved Solids	mg/L	1000	971	97	80-120	

SAMPLE DUPLICATE: 1220614

Parameter	Units	60148708005 Result	Dup Result	RPD	Max RPD	Qualifiers
Total Dissolved Solids	mg/L	327	334	2	17	

SAMPLE DUPLICATE: 1220615

Parameter	Units	60148689002 Result	Dup Result	RPD	Max RPD	Qualifiers
Total Dissolved Solids	mg/L	1170	1210	3	17	

This report shall not be reproduced, except in full,
without the written consent of Pace Analytical Services, Inc..

Pace Analytical Services, Inc.
9608 Loiret Blvd.
Lenexa, KS 66219
(913)599-5665

QUALITY CONTROL DATA

Project: JULY 2013 RICO WATER SAMPLING
Pace Project No.: 60148708

QC Batch: WET/42331 Analysis Method: SM 2540D
QC Batch Method: SM 2540D Analysis Description: 2540D Total Suspended Solids
Associated Lab Samples: 60148708001, 60148708002, 60148708014, 60148708015, 60148708016, 60148708017, 60148708018, 60148708019, 60148708020

METHOD BLANK: 1219429 Matrix: Water
Associated Lab Samples: 60148708001, 60148708002, 60148708014, 60148708015, 60148708016, 60148708017, 60148708018, 60148708019, 60148708020

Parameter	Units	Blank Result	Reporting Limit	Analyzed	Qualifiers
Total Suspended Solids	mg/L	ND	5.0	07/12/13 16:11	

SAMPLE DUPLICATE: 1219431

Parameter	Units	60148572002 Result	Dup Result	RPD	Max RPD	Qualifiers
Total Suspended Solids	mg/L	38.0	36.0	5	25	

This report shall not be reproduced, except in full,
without the written consent of Pace Analytical Services, Inc..

Pace Analytical Services, Inc.
9608 Loiret Blvd.
Lenexa, KS 66219
(913)599-5665

QUALITY CONTROL DATA

Project: JULY 2013 RICO WATER SAMPLING
Pace Project No.: 60148708

QC Batch: WET/42350 Analysis Method: SM 2540D
QC Batch Method: SM 2540D Analysis Description: 2540D Total Suspended Solids
Associated Lab Samples: 60148708003, 60148708004, 60148708005, 60148708006, 60148708007, 60148708008, 60148708009, 60148708010, 60148708011, 60148708012

METHOD BLANK: 1219994 Matrix: Water
Associated Lab Samples: 60148708003, 60148708004, 60148708005, 60148708006, 60148708007, 60148708008, 60148708009, 60148708010, 60148708011, 60148708012

Parameter	Units	Blank Result	Reporting Limit	Analyzed	Qualifiers
Total Suspended Solids	mg/L	ND	5.0	07/15/13 09:31	

SAMPLE DUPLICATE: 1219995

Parameter	Units	60148708003 Result	Dup Result	RPD	Max RPD	Qualifiers
Total Suspended Solids	mg/L	15.0	16.0	6	25	

SAMPLE DUPLICATE: 1219996

Parameter	Units	60148688001 Result	Dup Result	RPD	Max RPD	Qualifiers
Total Suspended Solids	mg/L	730	850	15	25	

This report shall not be reproduced, except in full,
without the written consent of Pace Analytical Services, Inc..

Pace Analytical Services, Inc.
9608 Loiret Blvd.
Lenexa, KS 66219
(913)599-5665

QUALITY CONTROL DATA

Project: JULY 2013 RICO WATER SAMPLING
Pace Project No.: 60148708

QC Batch: WET/42370 | Analysis Method: SM 2540D
QC Batch Method: SM 2540D | Analysis Description: 2540D Total Suspended Solids
Associated Lab Samples: 60148708013

METHOD BLANK: 1220524 | Matrix: Water
Associated Lab Samples: 60148708013

Parameter	Units	Blank Result	Reporting Limit	Analyzed	Qualifiers
Total Suspended Solids	mg/L	ND	5.0	07/16/13 08:30	

SAMPLE DUPLICATE: 1220525

Parameter	Units	60148846002 Result	Dup Result	RPD	Max RPD	Qualifiers
Total Suspended Solids	mg/L	30.0	31.0	3	25	

SAMPLE DUPLICATE: 1220526

Parameter	Units	60148677001 Result	Dup Result	RPD	Max RPD	Qualifiers
Total Suspended Solids	mg/L	7.0	5.0	33	25	D6

This report shall not be reproduced, except in full,
without the written consent of Pace Analytical Services, Inc..

Pace Analytical Services, Inc.
9608 Loiret Blvd.
Lenexa, KS 66219
(913)599-5665

QUALITY CONTROL DATA

Project: JULY 2013 RICO WATER SAMPLING
Pace Project No.: 60148708

QC Batch: WET/42349 | Analysis Method: SM 4500-S-2 D
QC Batch Method: SM 4500-S-2 D | Analysis Description: 4500S2D Sulfide, Total
Associated Lab Samples: 60148708013, 60148708014, 60148708015, 60148708016, 60148708017, 60148708018, 60148708019, 60148708020

METHOD BLANK: 1219961 | Matrix: Water
Associated Lab Samples: 60148708013, 60148708014, 60148708015, 60148708016, 60148708017, 60148708018, 60148708019, 60148708020

Parameter	Units	Blank Result	Reporting Limit	Analyzed	Qualifiers
Sulfide, Total	mg/L	ND	0.050	07/15/13 13:11	

LABORATORY CONTROL SAMPLE: 1219962

Parameter	Units	Spike Conc.	LCS Result	LCS % Rec	% Rec Limits	Qualifiers
Sulfide, Total	mg/L	.5	0.50	99	80-120	

MATRIX SPIKE SAMPLE: 1220187

Parameter	Units	60148416003 Result	Spike Conc.	MS Result	MS % Rec	% Rec Limits	Qualifiers
Sulfide, Total	mg/L	ND	.5	0.39	77	75-125	

SAMPLE DUPLICATE: 1219964

Parameter	Units	60148708013 Result	Dup Result	RPD	Max RPD	Qualifiers
Sulfide, Total	mg/L	ND	ND		20	

This report shall not be reproduced, except in full,
without the written consent of Pace Analytical Services, Inc..

Pace Analytical Services, Inc.
9608 Loiret Blvd.
Lenexa, KS 66219
(913)599-5665

QUALITY CONTROL DATA

Project: JULY 2013 RICO WATER SAMPLING
Pace Project No.: 60148708

QC Batch: WET/42381 | Analysis Method: SM 4500-S-2 D
QC Batch Method: SM 4500-S-2 D | Analysis Description: 4500S2D Sulfide, Total
Associated Lab Samples: 60148708001, 60148708002, 60148708003, 60148708004, 60148708005, 60148708006, 60148708007, 60148708008, 60148708009, 60148708010, 60148708011, 60148708012

METHOD BLANK: 1220829 | Matrix: Water
Associated Lab Samples: 60148708001, 60148708002, 60148708003, 60148708004, 60148708005, 60148708006, 60148708007, 60148708008, 60148708009, 60148708010, 60148708011, 60148708012

Parameter	Units	Blank Result	Reporting Limit	Analyzed	Qualifiers
Sulfide, Total	mg/L	ND	0.050	07/16/13 13:51	

LABORATORY CONTROL SAMPLE: 1220830

Parameter	Units	Spike Conc.	LCS Result	LCS % Rec	% Rec Limits	Qualifiers
Sulfide, Total	mg/L	.5	0.48	95	80-120	

MATRIX SPIKE SAMPLE: 1220831

Parameter	Units	60148708001 Result	Spike Conc.	MS Result	MS % Rec	% Rec Limits	Qualifiers
Sulfide, Total	mg/L	ND	.5	0.56	112	75-125	

SAMPLE DUPLICATE: 1220832

Parameter	Units	60148708002 Result	Dup Result	RPD	Max RPD	Qualifiers
Sulfide, Total	mg/L	ND	ND		20	

This report shall not be reproduced, except in full,
without the written consent of Pace Analytical Services, Inc..

Pace Analytical Services, Inc.
9608 Loiret Blvd.
Lenexa, KS 66219
(913)599-5665

QUALITY CONTROL DATA

Project: JULY 2013 RICO WATER SAMPLING
Pace Project No.: 60148708

QC Batch: WETA/25584 Analysis Method: EPA 300.0
QC Batch Method: EPA 300.0 Analysis Description: 300.0 IC Anions
Associated Lab Samples: 60148708001, 60148708002, 60148708003, 60148708004, 60148708005, 60148708006, 60148708007, 60148708008, 60148708009, 60148708010, 60148708011, 60148708012, 60148708013, 60148708014, 60148708015, 60148708016, 60148708017, 60148708018, 60148708019, 60148708020

METHOD BLANK: 1225713 Matrix: Water
Associated Lab Samples: 60148708001, 60148708002, 60148708005, 60148708006, 60148708007, 60148708008, 60148708009, 60148708010

Parameter	Units	Blank Result	Reporting Limit	Analyzed	Qualifiers
Sulfate	mg/L	ND	1.0	07/25/13 16:58	

METHOD BLANK: 1226239 Matrix: Water
Associated Lab Samples: 60148708001, 60148708002, 60148708003, 60148708004, 60148708005, 60148708006, 60148708007, 60148708008, 60148708009, 60148708010, 60148708011, 60148708012, 60148708013, 60148708014, 60148708015, 60148708016, 60148708017, 60148708018, 60148708019, 60148708020

Parameter	Units	Blank Result	Reporting Limit	Analyzed	Qualifiers
Chloride	mg/L	ND	1.0	07/26/13 15:41	
Sulfate	mg/L	ND	1.0	07/26/13 15:41	

METHOD BLANK: 1227168 Matrix: Water
Associated Lab Samples: 60148708020

Parameter	Units	Blank Result	Reporting Limit	Analyzed	Qualifiers
Sulfate	mg/L	ND	1.0	07/29/13 01:35	

LABORATORY CONTROL SAMPLE: 1225714

Parameter	Units	Spike Conc.	LCS Result	LCS % Rec	% Rec Limits	Qualifiers
Sulfate	mg/L	5	5.3	105	90-110	

LABORATORY CONTROL SAMPLE: 1226240

Parameter	Units	Spike Conc.	LCS Result	LCS % Rec	% Rec Limits	Qualifiers
Chloride	mg/L	5	5.0	99	90-110	
Sulfate	mg/L	5	4.9	98	90-110	

LABORATORY CONTROL SAMPLE: 1227169

Parameter	Units	Spike Conc.	LCS Result	LCS % Rec	% Rec Limits	Qualifiers
Sulfate	mg/L	5	5.1	101	90-110	

This report shall not be reproduced, except in full,
without the written consent of Pace Analytical Services, Inc..

Pace Analytical Services, Inc.
9608 Loiret Blvd.
Lenexa, KS 66219
(913)599-5665

QUALITY CONTROL DATA

Project: JULY 2013 RICO WATER SAMPLING
Pace Project No.: 60148708

MATRIX SPIKE & MATRIX SPIKE DUPLICATE: 1225715 1225716

Parameter	Units	60148708001 Result	MS Spike Conc.	MSD Spike Conc.	MS Result	MSD Result	MS % Rec	MSD % Rec	% Rec Limits	RPD	Max RPD	Qual
Chloride	mg/L	1.2	5	5	5.4	5.5	85	86	64-118	1	12	
Sulfate	mg/L	43.7	50	50	91.9	91.3	96	95	61-119	1	10	

MATRIX SPIKE SAMPLE: 1225717

Parameter	Units	60148708010 Result	Spike Conc.	MS Result	MS % Rec	% Rec Limits	Qualifiers
Chloride	mg/L	1.1	5	5.3	84	64-118	
Sulfate	mg/L	42.6	50	88.6	92	61-119	

This report shall not be reproduced, except in full,
without the written consent of Pace Analytical Services, Inc..

Pace Analytical Services, Inc.
9608 Loiret Blvd.
Lenexa, KS 66219
(913)599-5665

QUALITY CONTROL DATA

Project: JULY 2013 RICO WATER SAMPLING
Pace Project No.: 60148708

QC Batch: WETA/25539 | Analysis Method: EPA 353.2
QC Batch Method: EPA 353.2 | Analysis Description: 353.2 Nitrate + Nitrite, preserved
Associated Lab Samples: 60148708001, 60148708002, 60148708003, 60148708004, 60148708005, 60148708006, 60148708007, 60148708008, 60148708009, 60148708010, 60148708011, 60148708012, 60148708013, 60148708014, 60148708015, 60148708016

METHOD BLANK: 1224081 | Matrix: Water
Associated Lab Samples: 60148708001, 60148708002, 60148708003, 60148708004, 60148708005, 60148708006, 60148708007, 60148708008, 60148708009, 60148708010, 60148708011, 60148708012, 60148708013, 60148708014, 60148708015, 60148708016

Parameter	Units	Blank Result	Reporting Limit	Analyzed	Qualifiers
Nitrogen, NO2 plus NO3	mg/L	ND	0.10	07/23/13 13:04	

LABORATORY CONTROL SAMPLE: 1224082

Parameter	Units	Spike Conc.	LCS Result	LCS % Rec	% Rec Limits	Qualifiers
Nitrogen, NO2 plus NO3	mg/L	2	2.1	104	90-110	

MATRIX SPIKE SAMPLE: 1224083

Parameter	Units	60149184001 Result	Spike Conc.	MS Result	MS % Rec	% Rec Limits	Qualifiers
Nitrogen, NO2 plus NO3	mg/L	1.8	2	3.8	102	90-110	

MATRIX SPIKE SAMPLE: 1224084

Parameter	Units	60148708001 Result	Spike Conc.	MS Result	MS % Rec	% Rec Limits	Qualifiers
Nitrogen, NO2 plus NO3	mg/L	ND	2	2.5	123	90-110	M1

This report shall not be reproduced, except in full,
without the written consent of Pace Analytical Services, Inc..

Pace Analytical Services, Inc.
9608 Loiret Blvd.
Lenexa, KS 66219
(913)599-5665

QUALITY CONTROL DATA

Project: JULY 2013 RICO WATER SAMPLING
Pace Project No.: 60148708

QC Batch: WETA/25541 | Analysis Method: EPA 353.2
QC Batch Method: EPA 353.2 | Analysis Description: 353.2 Nitrate + Nitrite, preserved
Associated Lab Samples: 60148708017, 60148708018, 60148708019, 60148708020

METHOD BLANK: 1224090 | Matrix: Water
Associated Lab Samples: 60148708017, 60148708018, 60148708019, 60148708020

Parameter	Units	Blank Result	Reporting Limit	Analyzed	Qualifiers
Nitrogen, NO2 plus NO3	mg/L	ND	0.10	07/24/13 08:29	

LABORATORY CONTROL SAMPLE: 1224091

Parameter	Units	Spike Conc.	LCS Result	LCS % Rec	% Rec Limits	Qualifiers
Nitrogen, NO2 plus NO3	mg/L	2	2.1	106	90-110	

MATRIX SPIKE SAMPLE: 1224092

Parameter	Units	60148708017 Result	Spike Conc.	MS Result	MS % Rec	% Rec Limits	Qualifiers
Nitrogen, NO2 plus NO3	mg/L	0.83	2	3.0	109	90-110	

MATRIX SPIKE SAMPLE: 1224093

Parameter	Units	60148708018 Result	Spike Conc.	MS Result	MS % Rec	% Rec Limits	Qualifiers
Nitrogen, NO2 plus NO3	mg/L	ND	2	2.4	119	90-110	M1

This report shall not be reproduced, except in full,
without the written consent of Pace Analytical Services, Inc..

Pace Analytical Services, Inc.
9608 Loiret Blvd.
Lenexa, KS 66219
(913)599-5665

QUALITY CONTROL DATA

Project: JULY 2013 RICO WATER SAMPLING
Pace Project No.: 60148708

QC Batch: WETA/25440 | Analysis Method: SM 4500-CN-E
QC Batch Method: SM 4500-CN-E | Analysis Description: 4500CNE Cyanide, Total
Associated Lab Samples: 60148708001, 60148708002, 60148708003, 60148708004, 60148708005, 60148708006

METHOD BLANK: 1219877 | Matrix: Water
Associated Lab Samples: 60148708001, 60148708002, 60148708003, 60148708004, 60148708005, 60148708006

Parameter	Units	Blank Result	Reporting Limit	Analyzed	Qualifiers
Cyanide	mg/L	ND	0.0050	07/15/13 13:47	

LABORATORY CONTROL SAMPLE: 1219878

Parameter	Units	Spike Conc.	LCS Result	LCS % Rec	% Rec Limits	Qualifiers
Cyanide	mg/L	.1	0.10	105	69-126	

MATRIX SPIKE SAMPLE: 1219879

Parameter	Units	60148502002 Result	Spike Conc.	MS Result	MS % Rec	% Rec Limits	Qualifiers
Cyanide	mg/L	0.012	.1	0.12	105	41-136	

SAMPLE DUPLICATE: 1219880

Parameter	Units	60148708002 Result	Dup Result	RPD	Max RPD	Qualifiers
Cyanide	mg/L	ND	ND		26	

This report shall not be reproduced, except in full,
without the written consent of Pace Analytical Services, Inc..

Pace Analytical Services, Inc.
9608 Loiret Blvd.
Lenexa, KS 66219
(913)599-5665

QUALITY CONTROL DATA

Project: JULY 2013 RICO WATER SAMPLING
Pace Project No.: 60148708

QC Batch: WETA/25441 — Analysis Method: SM 4500-CN-E
QC Batch Method: SM 4500-CN-E — Analysis Description: 4500CNE Cyanide, Total
Associated Lab Samples: 60148708007, 60148708008, 60148708009, 60148708010, 60148708011, 60148708012, 60148708013, 60148708014, 60148708015, 60148708016, 60148708017, 60148708018, 60148708019, 60148708020

METHOD BLANK: 1219881 — Matrix: Water
Associated Lab Samples: 60148708007, 60148708008, 60148708009, 60148708010, 60148708011, 60148708012, 60148708013, 60148708014, 60148708015, 60148708016, 60148708017, 60148708018, 60148708019, 60148708020

Parameter	Units	Blank Result	Reporting Limit	Analyzed	Qualifiers
Cyanide	mg/L	ND	0.0050	07/15/13 14:17	

LABORATORY CONTROL SAMPLE: 1219882

Parameter	Units	Spike Conc.	LCS Result	LCS % Rec	% Rec Limits	Qualifiers
Cyanide	mg/L	.1	0.11	106	69-126	

MATRIX SPIKE SAMPLE: 1219883

Parameter	Units	60148708007 Result	Spike Conc.	MS Result	MS % Rec	% Rec Limits	Qualifiers
Cyanide	mg/L	ND	.1	0.10	101	41-136	

SAMPLE DUPLICATE: 1219884

Parameter	Units	60148708019 Result	Dup Result	RPD	Max RPD	Qualifiers
Cyanide	mg/L	ND	ND		26	

This report shall not be reproduced, except in full,
without the written consent of Pace Analytical Services, Inc..

Pace Analytical Services, Inc.
9608 Loiret Blvd.
Lenexa, KS 66219
(913)599-5665

QUALITY CONTROL DATA

Project: JULY 2013 RICO WATER SAMPLING
Pace Project No.: 60148708

QC Batch: WETA/18561 — Analysis Method: SM 5310C
QC Batch Method: SM 5310C — Analysis Description: 5310C Total Organic Carbon
Associated Lab Samples: 60148708001, 60148708002, 60148708003, 60148708004, 60148708005, 60148708006, 60148708007, 60148708008, 60148708009, 60148708010, 60148708011, 60148708012, 60148708013, 60148708014, 60148708015, 60148708016, 60148708017, 60148708018, 60148708019, 60148708020

METHOD BLANK: 824266 — Matrix: Water
Associated Lab Samples: 60148708001, 60148708002, 60148708003, 60148708004, 60148708005, 60148708006, 60148708007, 60148708008, 60148708009, 60148708010, 60148708011, 60148708012, 60148708013, 60148708014, 60148708015, 60148708016, 60148708017, 60148708018, 60148708019, 60148708020

Parameter	Units	Blank Result	Reporting Limit	Analyzed	Qualifiers
Total Organic Carbon	mg/L	ND	0.50	07/17/13 20:45	

LABORATORY CONTROL SAMPLE: 824267

Parameter	Units	Spike Conc.	LCS Result	LCS % Rec	% Rec Limits	Qualifiers
Total Organic Carbon	mg/L	2.5	2.5	102	80-120	

MATRIX SPIKE & MATRIX SPIKE DUPLICATE: 824268 824269

Parameter	Units	60148708001 Result	MS Spike Conc.	MSD Spike Conc.	MS Result	MSD Result	MS % Rec	MSD % Rec	% Rec Limits	RPD	Max RPD	Qual
Total Organic Carbon	mg/L	1.1	2.5	2.5	3.8	3.8	108	108	80-120	0	20	

MATRIX SPIKE & MATRIX SPIKE DUPLICATE: 824270 824271

Parameter	Units	60148708002 Result	MS Spike Conc.	MSD Spike Conc.	MS Result	MSD Result	MS % Rec	MSD % Rec	% Rec Limits	RPD	Max RPD	Qual
Total Organic Carbon	mg/L	1.2	2.5	2.5	3.9	3.9	110	108	80-120	1	20	

This report shall not be reproduced, except in full,
without the written consent of Pace Analytical Services, Inc..

Pace Analytical Services, Inc.
9608 Loiret Blvd.
Lenexa, KS 66219
(913)599-5665

QUALIFIERS

Project: JULY 2013 RICO WATER SAMPLING
Pace Project No.: 60148708

DEFINITIONS

DF - Dilution Factor, if reported, represents the factor applied to the reported data due to changes in sample preparation, dilution of the sample aliquot, or moisture content.

ND - Not Detected at or above adjusted reporting limit.

J - Estimated concentration above the adjusted method detection limit and below the adjusted reporting limit.

MDL - Adjusted Method Detection Limit.

PRL - Pace Reporting Limit.

RL - Reporting Limit.

S - Surrogate

1,2-Diphenylhydrazine (8270 listed analyte) decomposes to Azobenzene.

Consistent with EPA guidelines, unrounded data are displayed and have been used to calculate % recovery and RPD values.

LCS(D) - Laboratory Control Sample (Duplicate)

MS(D) - Matrix Spike (Duplicate)

DUP - Sample Duplicate

RPD - Relative Percent Difference

NC - Not Calculable.

SG - Silica Gel - Clean-Up

U - Indicates the compound was analyzed for, but not detected.

N-Nitrosodiphenylamine decomposes and cannot be separated from Diphenylamine using Method 8270. The result reported for each analyte is a combined concentration.

Pace Analytical is TNI accredited. Contact your Pace PM for the current list of accredited analytes.

TNI - The NELAC Institute.

LABORATORIES

PASI-G	Pace Analytical Services - Green Bay
PASI-K	Pace Analytical Services - Kansas City
PASI-M	Pace Analytical Services - Minneapolis

ANALYTE QUALIFIERS

B	Analyte was detected in the associated method blank.
D3	Sample was diluted due to the presence of high levels of non-target analytes or other matrix interference.
D6	The relative percent difference (RPD) between the sample and sample duplicate exceeded laboratory control limits.
E	Analyte concentration exceeded the calibration range. The reported result is estimated.
M1	Matrix spike recovery exceeded QC limits. Batch accepted based on laboratory control sample (LCS) recovery.

This report shall not be reproduced, except in full,
without the written consent of Pace Analytical Services, Inc..

Pace Analytical Services, Inc.
9608 Loiret Blvd.
Lenexa, KS 66219
(913)599-5665

QUALITY CONTROL DATA CROSS REFERENCE TABLE

Project: JULY 2013 RICO WATER SAMPLING
Pace Project No.: 60148708

Lab ID	Sample ID	QC Batch Method	QC Batch	Analytical Method	Analytical Batch
60148708001	**DR-1_20130710**	EPA 200.7	MPRP/23521	EPA 200.7	ICP/18479
60148708002	**DR-2_20130710**	EPA 200.7	MPRP/23521	EPA 200.7	ICP/18479
60148708003	**DR-3_20130710**	EPA 200.7	MPRP/23521	EPA 200.7	ICP/18479
60148708004	**DR-6_20130710**	EPA 200.7	MPRP/23521	EPA 200.7	ICP/18479
60148708005	**DR-7_20130710**	EPA 200.7	MPRP/23521	EPA 200.7	ICP/18479
60148708006	**DR-G_20130710**	EPA 200.7	MPRP/23521	EPA 200.7	ICP/18479
60148708007	**DR-1 COMPOSITE_20130710**	EPA 200.7	MPRP/23521	EPA 200.7	ICP/18479
60148708008	**DR-2 COMPOSITE_20130710**	EPA 200.7	MPRP/23521	EPA 200.7	ICP/18479
60148708009	**DR-7 COMPOSITE_20130710**	EPA 200.7	MPRP/23521	EPA 200.7	ICP/18479
60148708010	**DR-8_20130710**	EPA 200.7	MPRP/23521	EPA 200.7	ICP/18479
60148708011	**DR-9_20130710**	EPA 200.7	MPRP/23521	EPA 200.7	ICP/18479
60148708012	**FB-LAB_20130710**	EPA 200.7	MPRP/23521	EPA 200.7	ICP/18479
60148708013	**GW-1_20130709**	EPA 200.7	MPRP/23521	EPA 200.7	ICP/18479
60148708014	**GW-5_20130709**	EPA 200.7	MPRP/23521	EPA 200.7	ICP/18479
60148708015	**GW-6_20130709**	EPA 200.7	MPRP/23521	EPA 200.7	ICP/18479
60148708016	**MW-101_20130709**	EPA 200.7	MPRP/23521	EPA 200.7	ICP/18479
60148708017	**MW-102_20130709**	EPA 200.7	MPRP/23521	EPA 200.7	ICP/18479
60148708018	**MW-4 DEEP_20130709**	EPA 200.7	MPRP/23521	EPA 200.7	ICP/18479
60148708019	**MW-5 DEEP_20130709**	EPA 200.7	MPRP/23521	EPA 200.7	ICP/18479
60148708020	**MW-5 SHALLOW_20130709**	EPA 200.7	MPRP/23521	EPA 200.7	ICP/18479
60148708001	**DR-1_20130710**	EPA 200.8	MPRP/40615	EPA 200.8	ICPM/16967
60148708002	**DR-2_20130710**	EPA 200.8	MPRP/40615	EPA 200.8	ICPM/16967
60148708003	**DR-3_20130710**	EPA 200.8	MPRP/40615	EPA 200.8	ICPM/16967
60148708004	**DR-6_20130710**	EPA 200.8	MPRP/40615	EPA 200.8	ICPM/16967
60148708005	**DR-7_20130710**	EPA 200.8	MPRP/40615	EPA 200.8	ICPM/16967
60148708006	**DR-G_20130710**	EPA 200.8	MPRP/40615	EPA 200.8	ICPM/16967
60148708007	**DR-1 COMPOSITE_20130710**	EPA 200.8	MPRP/40615	EPA 200.8	ICPM/16967
60148708008	**DR-2 COMPOSITE_20130710**	EPA 200.8	MPRP/40615	EPA 200.8	ICPM/16967
60148708009	**DR-7 COMPOSITE_20130710**	EPA 200.8	MPRP/40615	EPA 200.8	ICPM/16967
60148708010	**DR-8_20130710**	EPA 200.8	MPRP/40615	EPA 200.8	ICPM/16967
60148708011	**DR-9_20130710**	EPA 200.8	MPRP/40615	EPA 200.8	ICPM/16967
60148708012	**FB-LAB_20130710**	EPA 200.8	MPRP/40615	EPA 200.8	ICPM/16967
60148708013	**GW-1_20130709**	EPA 200.8	MPRP/40615	EPA 200.8	ICPM/16967
60148708014	**GW-5_20130709**	EPA 200.8	MPRP/40615	EPA 200.8	ICPM/16967
60148708015	**GW-6_20130709**	EPA 200.8	MPRP/40615	EPA 200.8	ICPM/16967
60148708016	**MW-101_20130709**	EPA 200.8	MPRP/40615	EPA 200.8	ICPM/16967
60148708017	**MW-102_20130709**	EPA 200.8	MPRP/40615	EPA 200.8	ICPM/16967
60148708018	**MW-4 DEEP_20130709**	EPA 200.8	MPRP/40615	EPA 200.8	ICPM/16967
60148708019	**MW-5 DEEP_20130709**	EPA 200.8	MPRP/40615	EPA 200.8	ICPM/16967
60148708020	**MW-5 SHALLOW_20130709**	EPA 200.8	MPRP/40615	EPA 200.8	ICPM/16967
60148708001	**DR-1_20130710**	EPA 200.8	MPRP/40612	EPA 200.8	ICPM/16945
60148708002	**DR-2_20130710**	EPA 200.8	MPRP/40612	EPA 200.8	ICPM/16945
60148708003	**DR-3_20130710**	EPA 200.8	MPRP/40612	EPA 200.8	ICPM/16945
60148708004	**DR-6_20130710**	EPA 200.8	MPRP/40612	EPA 200.8	ICPM/16945
60148708005	**DR-7_20130710**	EPA 200.8	MPRP/40612	EPA 200.8	ICPM/16945
60148708006	**DR-G_20130710**	EPA 200.8	MPRP/40612	EPA 200.8	ICPM/16945
60148708007	**DR-1 COMPOSITE_20130710**	EPA 200.8	MPRP/40612	EPA 200.8	ICPM/16945
60148708008	**DR-2 COMPOSITE_20130710**	EPA 200.8	MPRP/40612	EPA 200.8	ICPM/16945

This report shall not be reproduced, except in full,
without the written consent of Pace Analytical Services, Inc..

Pace Analytical Services, Inc.
9608 Loiret Blvd.
Lenexa, KS 66219
(913)599-5665

QUALITY CONTROL DATA CROSS REFERENCE TABLE

Project: JULY 2013 RICO WATER SAMPLING
Pace Project No.: 60148708

Lab ID	Sample ID	QC Batch Method	QC Batch	Analytical Method	Analytical Batch
60148708009	**DR-7 COMPOSITE_20130710**	EPA 200.8	MPRP/40612	EPA 200.8	ICPM/16945
60148708010	**DR-8_20130710**	EPA 200.8	MPRP/40612	EPA 200.8	ICPM/16945
60148708011	**DR-9_20130710**	EPA 200.8	MPRP/40612	EPA 200.8	ICPM/16945
60148708012	**FB-LAB_20130710**	EPA 200.8	MPRP/40612	EPA 200.8	ICPM/16945
60148708013	**GW-1_20130709**	EPA 200.8	MPRP/40612	EPA 200.8	ICPM/16945
60148708014	**GW-5_20130709**	EPA 200.8	MPRP/40612	EPA 200.8	ICPM/16945
60148708015	**GW-6_20130709**	EPA 200.8	MPRP/40612	EPA 200.8	ICPM/16945
60148708016	**MW-101_20130709**	EPA 200.8	MPRP/40612	EPA 200.8	ICPM/16945
60148708017	**MW-102_20130709**	EPA 200.8	MPRP/40612	EPA 200.8	ICPM/16945
60148708018	**MW-4 DEEP_20130709**	EPA 200.8	MPRP/40612	EPA 200.8	ICPM/16945
60148708019	**MW-5 DEEP_20130709**	EPA 200.8	MPRP/40612	EPA 200.8	ICPM/16945
60148708020	**MW-5 SHALLOW_20130709**	EPA 200.8	MPRP/40612	EPA 200.8	ICPM/16945
60148708001	**DR-1_20130710**	EPA 200.8	MPRP/23522	EPA 200.8	ICPM/2398
60148708002	**DR-2_20130710**	EPA 200.8	MPRP/23522	EPA 200.8	ICPM/2398
60148708003	**DR-3_20130710**	EPA 200.8	MPRP/23522	EPA 200.8	ICPM/2398
60148708004	**DR-6_20130710**	EPA 200.8	MPRP/23522	EPA 200.8	ICPM/2398
60148708005	**DR-7_20130710**	EPA 200.8	MPRP/23522	EPA 200.8	ICPM/2398
60148708006	**DR-G_20130710**	EPA 200.8	MPRP/23522	EPA 200.8	ICPM/2398
60148708007	**DR-1 COMPOSITE_20130710**	EPA 200.8	MPRP/23522	EPA 200.8	ICPM/2398
60148708008	**DR-2 COMPOSITE_20130710**	EPA 200.8	MPRP/23522	EPA 200.8	ICPM/2398
60148708009	**DR-7 COMPOSITE_20130710**	EPA 200.8	MPRP/23522	EPA 200.8	ICPM/2398
60148708010	**DR-8_20130710**	EPA 200.8	MPRP/23522	EPA 200.8	ICPM/2398
60148708011	**DR-9_20130710**	EPA 200.8	MPRP/23522	EPA 200.8	ICPM/2398
60148708012	**FB-LAB_20130710**	EPA 200.8	MPRP/23522	EPA 200.8	ICPM/2398
60148708013	**GW-1_20130709**	EPA 200.8	MPRP/23522	EPA 200.8	ICPM/2398
60148708014	**GW-5_20130709**	EPA 200.8	MPRP/23522	EPA 200.8	ICPM/2398
60148708015	**GW-6_20130709**	EPA 200.8	MPRP/23522	EPA 200.8	ICPM/2398
60148708016	**MW-101_20130709**	EPA 200.8	MPRP/23522	EPA 200.8	ICPM/2398
60148708017	**MW-102_20130709**	EPA 200.8	MPRP/23522	EPA 200.8	ICPM/2398
60148708018	**MW-4 DEEP_20130709**	EPA 200.8	MPRP/23522	EPA 200.8	ICPM/2398
60148708019	**MW-5 DEEP_20130709**	EPA 200.8	MPRP/23522	EPA 200.8	ICPM/2398
60148708020	**MW-5 SHALLOW_20130709**	EPA 200.8	MPRP/23522	EPA 200.8	ICPM/2398
60148708001	**DR-1_20130710**	EPA 245.1	MERP/8834	EPA 245.1	MERC/10074
60148708002	**DR-2_20130710**	EPA 245.1	MERP/8834	EPA 245.1	MERC/10074
60148708003	**DR-3_20130710**	EPA 245.1	MERP/8834	EPA 245.1	MERC/10074
60148708004	**DR-6_20130710**	EPA 245.1	MERP/8834	EPA 245.1	MERC/10074
60148708005	**DR-7_20130710**	EPA 245.1	MERP/8834	EPA 245.1	MERC/10074
60148708006	**DR-G_20130710**	EPA 245.1	MERP/8834	EPA 245.1	MERC/10074
60148708007	**DR-1 COMPOSITE_20130710**	EPA 245.1	MERP/8834	EPA 245.1	MERC/10074
60148708008	**DR-2 COMPOSITE_20130710**	EPA 245.1	MERP/8834	EPA 245.1	MERC/10074
60148708009	**DR-7 COMPOSITE_20130710**	EPA 245.1	MERP/8834	EPA 245.1	MERC/10074
60148708010	**DR-8_20130710**	EPA 245.1	MERP/8834	EPA 245.1	MERC/10074
60148708011	**DR-9_20130710**	EPA 245.1	MERP/8834	EPA 245.1	MERC/10074
60148708012	**FB-LAB_20130710**	EPA 245.1	MERP/8834	EPA 245.1	MERC/10074
60148708013	**GW-1_20130709**	EPA 245.1	MERP/8834	EPA 245.1	MERC/10074
60148708014	**GW-5_20130709**	EPA 245.1	MERP/8834	EPA 245.1	MERC/10074
60148708015	**GW-6_20130709**	EPA 245.1	MERP/8834	EPA 245.1	MERC/10074
60148708016	**MW-101_20130709**	EPA 245.1	MERP/8834	EPA 245.1	MERC/10074

This report shall not be reproduced, except in full,
without the written consent of Pace Analytical Services, Inc..

Pace Analytical Services, Inc.
9608 Loiret Blvd.
Lenexa, KS 66219
(913)599-5665

QUALITY CONTROL DATA CROSS REFERENCE TABLE

Project: JULY 2013 RICO WATER SAMPLING
Pace Project No.: 60148708

Lab ID	Sample ID	QC Batch Method	QC Batch	Analytical Method	Analytical Batch
60148708017	**MW-102_20130709**	EPA 245.1	MERP/8834	EPA 245.1	MERC/10074
60148708018	**MW-4 DEEP_20130709**	EPA 245.1	MERP/8834	EPA 245.1	MERC/10074
60148708019	**MW-5 DEEP_20130709**	EPA 245.1	MERP/8834	EPA 245.1	MERC/10074
60148708020	**MW-5 SHALLOW_20130709**	EPA 245.1	MERP/8834	EPA 245.1	MERC/10074
60148708001	**DR-1_20130710**	EPA 245.1	MERP/8833	EPA 245.1	MERC/10075
60148708002	**DR-2_20130710**	EPA 245.1	MERP/8833	EPA 245.1	MERC/10075
60148708003	**DR-3_20130710**	EPA 245.1	MERP/8833	EPA 245.1	MERC/10075
60148708004	**DR-6_20130710**	EPA 245.1	MERP/8833	EPA 245.1	MERC/10075
60148708005	**DR-7_20130710**	EPA 245.1	MERP/8833	EPA 245.1	MERC/10075
60148708006	**DR-G_20130710**	EPA 245.1	MERP/8833	EPA 245.1	MERC/10075
60148708007	**DR-1 COMPOSITE_20130710**	EPA 245.1	MERP/8833	EPA 245.1	MERC/10075
60148708008	**DR-2 COMPOSITE_20130710**	EPA 245.1	MERP/8833	EPA 245.1	MERC/10075
60148708009	**DR-7 COMPOSITE_20130710**	EPA 245.1	MERP/8833	EPA 245.1	MERC/10075
60148708010	**DR-8_20130710**	EPA 245.1	MERP/8833	EPA 245.1	MERC/10075
60148708011	**DR-9_20130710**	EPA 245.1	MERP/8833	EPA 245.1	MERC/10075
60148708012	**FB-LAB_20130710**	EPA 245.1	MERP/8833	EPA 245.1	MERC/10075
60148708013	**GW-1_20130709**	EPA 245.1	MERP/8833	EPA 245.1	MERC/10075
60148708014	**GW-5_20130709**	EPA 245.1	MERP/8833	EPA 245.1	MERC/10075
60148708015	**GW-6_20130709**	EPA 245.1	MERP/8833	EPA 245.1	MERC/10075
60148708016	**MW-101_20130709**	EPA 245.1	MERP/8833	EPA 245.1	MERC/10075
60148708017	**MW-102_20130709**	EPA 245.1	MERP/8833	EPA 245.1	MERC/10075
60148708018	**MW-4 DEEP_20130709**	EPA 245.1	MERP/8833	EPA 245.1	MERC/10075
60148708019	**MW-5 DEEP_20130709**	EPA 245.1	MERP/8833	EPA 245.1	MERC/10075
60148708020	**MW-5 SHALLOW_20130709**	EPA 245.1	MERP/8833	EPA 245.1	MERC/10075
60148708001	**DR-1_20130710**	EPA 245.1	MERP/7510	EPA 245.1	MERC/7467
60148708002	**DR-2_20130710**	EPA 245.1	MERP/7510	EPA 245.1	MERC/7467
60148708003	**DR-3_20130710**	EPA 245.1	MERP/7510	EPA 245.1	MERC/7467
60148708004	**DR-6_20130710**	EPA 245.1	MERP/7510	EPA 245.1	MERC/7467
60148708005	**DR-7_20130710**	EPA 245.1	MERP/7510	EPA 245.1	MERC/7467
60148708006	**DR-G_20130710**	EPA 245.1	MERP/7510	EPA 245.1	MERC/7467
60148708007	**DR-1 COMPOSITE_20130710**	EPA 245.1	MERP/7510	EPA 245.1	MERC/7467
60148708008	**DR-2 COMPOSITE_20130710**	EPA 245.1	MERP/7510	EPA 245.1	MERC/7467
60148708009	**DR-7 COMPOSITE_20130710**	EPA 245.1	MERP/7510	EPA 245.1	MERC/7467
60148708010	**DR-8_20130710**	EPA 245.1	MERP/7510	EPA 245.1	MERC/7467
60148708011	**DR-9_20130710**	EPA 245.1	MERP/7510	EPA 245.1	MERC/7467
60148708012	**FB-LAB_20130710**	EPA 245.1	MERP/7510	EPA 245.1	MERC/7467
60148708013	**GW-1_20130709**	EPA 245.1	MERP/7510	EPA 245.1	MERC/7467
60148708014	**GW-5_20130709**	EPA 245.1	MERP/7510	EPA 245.1	MERC/7467
60148708015	**GW-6_20130709**	EPA 245.1	MERP/7510	EPA 245.1	MERC/7467
60148708016	**MW-101_20130709**	EPA 245.1	MERP/7510	EPA 245.1	MERC/7467
60148708017	**MW-102_20130709**	EPA 245.1	MERP/7510	EPA 245.1	MERC/7467
60148708018	**MW-4 DEEP_20130709**	EPA 245.1	MERP/7510	EPA 245.1	MERC/7467
60148708019	**MW-5 DEEP_20130709**	EPA 245.1	MERP/7510	EPA 245.1	MERC/7467
60148708020	**MW-5 SHALLOW_20130709**	EPA 245.1	MERP/7510	EPA 245.1	MERC/7467
60148708001	**DR-1_20130710**	SM 2510B	MT/12784		
60148708002	**DR-2_20130710**	SM 2510B	MT/12784		
60148708003	**DR-3_20130710**	SM 2510B	MT/12784		

This report shall not be reproduced, except in full,
without the written consent of Pace Analytical Services, Inc..

Pace Analytical Services, Inc.
9608 Loiret Blvd.
Lenexa, KS 66219
(913)599-5665

QUALITY CONTROL DATA CROSS REFERENCE TABLE

Project: JULY 2013 RICO WATER SAMPLING
Pace Project No.: 60148708

Lab ID	Sample ID	QC Batch Method	QC Batch	Analytical Method	Analytical Batch
60148708004	**DR-6_20130710**	SM 2510B	MT/12784		
60148708005	**DR-7_20130710**	SM 2510B	MT/12784		
60148708006	**DR-G_20130710**	SM 2510B	MT/12784		
60148708007	**DR-1 COMPOSITE_20130710**	SM 2510B	MT/12784		
60148708008	**DR-2 COMPOSITE_20130710**	SM 2510B	MT/12784		
60148708009	**DR-7 COMPOSITE_20130710**	SM 2510B	MT/12784		
60148708010	**DR-8_20130710**	SM 2510B	MT/12784		
60148708011	**DR-9_20130710**	SM 2510B	MT/12784		
60148708012	**FB-LAB_20130710**	SM 2510B	MT/12784		
60148708013	**GW-1_20130709**	SM 2510B	MT/12784		
60148708014	**GW-5_20130709**	SM 2510B	MT/12784		
60148708015	**GW-6_20130709**	SM 2510B	MT/12784		
60148708016	**MW-101_20130709**	SM 2510B	MT/12784		
60148708017	**MW-102_20130709**	SM 2510B	MT/12784		
60148708018	**MW-4 DEEP_20130709**	SM 2510B	MT/12784		
60148708019	**MW-5 DEEP_20130709**	SM 2510B	MT/12784		
60148708020	**MW-5 SHALLOW_20130709**	SM 2510B	MT/12784		
60148708001	**DR-1_20130710**	Calculated	MT/12862		
60148708002	**DR-2_20130710**	Calculated	MT/12862		
60148708003	**DR-3_20130710**	Calculated	MT/12862		
60148708004	**DR-6_20130710**	Calculated	MT/12862		
60148708005	**DR-7_20130710**	Calculated	MT/12862		
60148708006	**DR-G_20130710**	Calculated	MT/12862		
60148708007	**DR-1 COMPOSITE_20130710**	Calculated	MT/12862		
60148708008	**DR-2 COMPOSITE_20130710**	Calculated	MT/12862		
60148708009	**DR-7 COMPOSITE_20130710**	Calculated	MT/12862		
60148708010	**DR-8_20130710**	Calculated	MT/12862		
60148708011	**DR-9_20130710**	Calculated	MT/12862		
60148708012	**FB-LAB_20130710**	Calculated	MT/12862		
60148708013	**GW-1_20130709**	Calculated	MT/12862		
60148708014	**GW-5_20130709**	Calculated	MT/12862		
60148708015	**GW-6_20130709**	Calculated	MT/12862		
60148708016	**MW-101_20130709**	Calculated	MT/12862		
60148708017	**MW-102_20130709**	Calculated	MT/12862		
60148708018	**MW-4 DEEP_20130709**	Calculated	MT/12862		
60148708019	**MW-5 DEEP_20130709**	Calculated	MT/12863		
60148708020	**MW-5 SHALLOW_20130709**	Calculated	MT/12863		
60148708001	**DR-1_20130710**	SM 2320B	WET/42387		
60148708002	**DR-2_20130710**	SM 2320B	WET/42387		
60148708003	**DR-3_20130710**	SM 2320B	WET/42387		
60148708004	**DR-6_20130710**	SM 2320B	WET/42387		
60148708005	**DR-7_20130710**	SM 2320B	WET/42387		
60148708006	**DR-G_20130710**	SM 2320B	WET/42387		
60148708007	**DR-1 COMPOSITE_20130710**	SM 2320B	WET/42387		
60148708008	**DR-2 COMPOSITE_20130710**	SM 2320B	WET/42441		
60148708009	**DR-7 COMPOSITE_20130710**	SM 2320B	WET/42441		
60148708010	**DR-8_20130710**	SM 2320B	WET/42441		

This report shall not be reproduced, except in full,
without the written consent of Pace Analytical Services, Inc..

Pace Analytical Services, Inc.
9608 Loiret Blvd.
Lenexa, KS 66219
(913)599-5665

QUALITY CONTROL DATA CROSS REFERENCE TABLE

Project: JULY 2013 RICO WATER SAMPLING
Pace Project No.: 60148708

Lab ID	Sample ID	QC Batch Method	QC Batch	Analytical Method	Analytical Batch
60148708011	**DR-9_20130710**	SM 2320B	WET/42441		
60148708012	**FB-LAB_20130710**	SM 2320B	WET/42441		
60148708013	**GW-1_20130709**	SM 2320B	WET/42363		
60148708014	**GW-5_20130709**	SM 2320B	WET/42363		
60148708015	**GW-6_20130709**	SM 2320B	WET/42363		
60148708016	**MW-101_20130709**	SM 2320B	WET/42363		
60148708017	**MW-102_20130709**	SM 2320B	WET/42363		
60148708018	**MW-4 DEEP_20130709**	SM 2320B	WET/42363		
60148708019	**MW-5 DEEP_20130709**	SM 2320B	WET/42363		
60148708020	**MW-5 SHALLOW_20130709**	SM 2320B	WET/42387		
60148708001	**DR-1_20130710**	SM 2540C	WET/42330		
60148708002	**DR-2_20130710**	SM 2540C	WET/42330		
60148708003	**DR-3_20130710**	SM 2540C	WET/42330		
60148708004	**DR-6_20130710**	SM 2540C	WET/42330		
60148708005	**DR-7_20130710**	SM 2540C	WET/42372		
60148708006	**DR-G_20130710**	SM 2540C	WET/42372		
60148708007	**DR-1 COMPOSITE_20130710**	SM 2540C	WET/42372		
60148708008	**DR-2 COMPOSITE_20130710**	SM 2540C	WET/42372		
60148708009	**DR-7 COMPOSITE_20130710**	SM 2540C	WET/42372		
60148708010	**DR-8_20130710**	SM 2540C	WET/42372		
60148708011	**DR-9_20130710**	SM 2540C	WET/42372		
60148708012	**FB-LAB_20130710**	SM 2540C	WET/42372		
60148708013	**GW-1_20130709**	SM 2540C	WET/42330		
60148708014	**GW-5_20130709**	SM 2540C	WET/42330		
60148708015	**GW-6_20130709**	SM 2540C	WET/42330		
60148708016	**MW-101_20130709**	SM 2540C	WET/42330		
60148708017	**MW-102_20130709**	SM 2540C	WET/42330		
60148708018	**MW-4 DEEP_20130709**	SM 2540C	WET/42330		
60148708019	**MW-5 DEEP_20130709**	SM 2540C	WET/42330		
60148708020	**MW-5 SHALLOW_20130709**	SM 2540C	WET/42330		
60148708001	**DR-1_20130710**	SM 2540D	WET/42331		
60148708002	**DR-2_20130710**	SM 2540D	WET/42331		
60148708003	**DR-3_20130710**	SM 2540D	WET/42350		
60148708004	**DR-6_20130710**	SM 2540D	WET/42350		
60148708005	**DR-7_20130710**	SM 2540D	WET/42350		
60148708006	**DR-G_20130710**	SM 2540D	WET/42350		
60148708007	**DR-1 COMPOSITE_20130710**	SM 2540D	WET/42350		
60148708008	**DR-2 COMPOSITE_20130710**	SM 2540D	WET/42350		
60148708009	**DR-7 COMPOSITE_20130710**	SM 2540D	WET/42350		
60148708010	**DR-8_20130710**	SM 2540D	WET/42350		
60148708011	**DR-9_20130710**	SM 2540D	WET/42350		
60148708012	**FB-LAB_20130710**	SM 2540D	WET/42350		
60148708013	**GW-1_20130709**	SM 2540D	WET/42370		
60148708014	**GW-5_20130709**	SM 2540D	WET/42331		

This report shall not be reproduced, except in full,
without the written consent of Pace Analytical Services, Inc..

Pace Analytical Services, Inc.
9608 Loiret Blvd.
Lenexa, KS 66219
(913)599-5665

QUALITY CONTROL DATA CROSS REFERENCE TABLE

Project: JULY 2013 RICO WATER SAMPLING
Pace Project No.: 60148708

Lab ID	Sample ID	QC Batch Method	QC Batch	Analytical Method	Analytical Batch
60148708015	**GW-6_20130709**	SM 2540D	WET/42331		
60148708016	**MW-101_20130709**	SM 2540D	WET/42331		
60148708017	**MW-102_20130709**	SM 2540D	WET/42331		
60148708018	**MW-4 DEEP_20130709**	SM 2540D	WET/42331		
60148708019	**MW-5 DEEP_20130709**	SM 2540D	WET/42331		
60148708020	**MW-5 SHALLOW_20130709**	SM 2540D	WET/42331		
60148708001	**DR-1_20130710**	SM 4500-S-2 D	WET/42381		
60148708002	**DR-2_20130710**	SM 4500-S-2 D	WET/42381		
60148708003	**DR-3_20130710**	SM 4500-S-2 D	WET/42381		
60148708004	**DR-6_20130710**	SM 4500-S-2 D	WET/42381		
60148708005	**DR-7_20130710**	SM 4500-S-2 D	WET/42381		
60148708006	**DR-G_20130710**	SM 4500-S-2 D	WET/42381		
60148708007	**DR-1 COMPOSITE_20130710**	SM 4500-S-2 D	WET/42381		
60148708008	**DR-2 COMPOSITE_20130710**	SM 4500-S-2 D	WET/42381		
60148708009	**DR-7 COMPOSITE_20130710**	SM 4500-S-2 D	WET/42381		
60148708010	**DR-8_20130710**	SM 4500-S-2 D	WET/42381		
60148708011	**DR-9_20130710**	SM 4500-S-2 D	WET/42381		
60148708012	**FB-LAB_20130710**	SM 4500-S-2 D	WET/42381		
60148708013	**GW-1_20130709**	SM 4500-S-2 D	WET/42349		
60148708014	**GW-5_20130709**	SM 4500-S-2 D	WET/42349		
60148708015	**GW-6_20130709**	SM 4500-S-2 D	WET/42349		
60148708016	**MW-101_20130709**	SM 4500-S-2 D	WET/42349		
60148708017	**MW-102_20130709**	SM 4500-S-2 D	WET/42349		
60148708018	**MW-4 DEEP_20130709**	SM 4500-S-2 D	WET/42349		
60148708019	**MW-5 DEEP_20130709**	SM 4500-S-2 D	WET/42349		
60148708020	**MW-5 SHALLOW_20130709**	SM 4500-S-2 D	WET/42349		
60148708001	**DR-1_20130710**	EPA 300.0	WETA/25584		
60148708002	**DR-2_20130710**	EPA 300.0	WETA/25584		
60148708003	**DR-3_20130710**	EPA 300.0	WETA/25584		
60148708004	**DR-6_20130710**	EPA 300.0	WETA/25584		
60148708005	**DR-7_20130710**	EPA 300.0	WETA/25584		
60148708006	**DR-G_20130710**	EPA 300.0	WETA/25584		
60148708007	**DR-1 COMPOSITE_20130710**	EPA 300.0	WETA/25584		
60148708008	**DR-2 COMPOSITE_20130710**	EPA 300.0	WETA/25584		
60148708009	**DR-7 COMPOSITE_20130710**	EPA 300.0	WETA/25584		
60148708010	**DR-8_20130710**	EPA 300.0	WETA/25584		
60148708011	**DR-9_20130710**	EPA 300.0	WETA/25584		
60148708012	**FB-LAB_20130710**	EPA 300.0	WETA/25584		
60148708013	**GW-1_20130709**	EPA 300.0	WETA/25584		
60148708014	**GW-5_20130709**	EPA 300.0	WETA/25584		
60148708015	**GW-6_20130709**	EPA 300.0	WETA/25584		
60148708016	**MW-101_20130709**	EPA 300.0	WETA/25584		
60148708017	**MW-102_20130709**	EPA 300.0	WETA/25584		
60148708018	**MW-4 DEEP_20130709**	EPA 300.0	WETA/25584		
60148708019	**MW-5 DEEP_20130709**	EPA 300.0	WETA/25584		
60148708020	**MW-5 SHALLOW_20130709**	EPA 300.0	WETA/25584		
60148708001	**DR-1_20130710**	EPA 353.2	WETA/25539		

This report shall not be reproduced, except in full,
without the written consent of Pace Analytical Services, Inc..

Pace Analytical Services, Inc.
9608 Loiret Blvd.
Lenexa, KS 66219
(913)599-5665

QUALITY CONTROL DATA CROSS REFERENCE TABLE

Project: JULY 2013 RICO WATER SAMPLING
Pace Project No.: 60148708

Lab ID	Sample ID	QC Batch Method	QC Batch	Analytical Method	Analytical Batch
60148708002	**DR-2_20130710**	EPA 353.2	WETA/25539		
60148708003	**DR-3_20130710**	EPA 353.2	WETA/25539		
60148708004	**DR-6_20130710**	EPA 353.2	WETA/25539		
60148708005	**DR-7_20130710**	EPA 353.2	WETA/25539		
60148708006	**DR-G_20130710**	EPA 353.2	WETA/25539		
60148708007	**DR-1 COMPOSITE_20130710**	EPA 353.2	WETA/25539		
60148708008	**DR-2 COMPOSITE_20130710**	EPA 353.2	WETA/25539		
60148708009	**DR-7 COMPOSITE_20130710**	EPA 353.2	WETA/25539		
60148708010	**DR-8_20130710**	EPA 353.2	WETA/25539		
60148708011	**DR-9_20130710**	EPA 353.2	WETA/25539		
60148708012	**FB-LAB_20130710**	EPA 353.2	WETA/25539		
60148708013	**GW-1_20130709**	EPA 353.2	WETA/25539		
60148708014	**GW-5_20130709**	EPA 353.2	WETA/25539		
60148708015	**GW-6_20130709**	EPA 353.2	WETA/25539		
60148708016	**MW-101_20130709**	EPA 353.2	WETA/25539		
60148708017	**MW-102_20130709**	EPA 353.2	WETA/25541		
60148708018	**MW-4 DEEP_20130709**	EPA 353.2	WETA/25541		
60148708019	**MW-5 DEEP_20130709**	EPA 353.2	WETA/25541		
60148708020	**MW-5 SHALLOW_20130709**	EPA 353.2	WETA/25541		
60148708001	**DR-1_20130710**	SM 4500-CN-E	WETA/25440		
60148708002	**DR-2_20130710**	SM 4500-CN-E	WETA/25440		
60148708003	**DR-3_20130710**	SM 4500-CN-E	WETA/25440		
60148708004	**DR-6_20130710**	SM 4500-CN-E	WETA/25440		
60148708005	**DR-7_20130710**	SM 4500-CN-E	WETA/25440		
60148708006	**DR-G_20130710**	SM 4500-CN-E	WETA/25440		
60148708007	**DR-1 COMPOSITE_20130710**	SM 4500-CN-E	WETA/25441		
60148708008	**DR-2 COMPOSITE_20130710**	SM 4500-CN-E	WETA/25441		
60148708009	**DR-7 COMPOSITE_20130710**	SM 4500-CN-E	WETA/25441		
60148708010	**DR-8_20130710**	SM 4500-CN-E	WETA/25441		
60148708011	**DR-9_20130710**	SM 4500-CN-E	WETA/25441		
60148708012	**FB-LAB_20130710**	SM 4500-CN-E	WETA/25441		
60148708013	**GW-1_20130709**	SM 4500-CN-E	WETA/25441		
60148708014	**GW-5_20130709**	SM 4500-CN-E	WETA/25441		
60148708015	**GW-6_20130709**	SM 4500-CN-E	WETA/25441		
60148708016	**MW-101_20130709**	SM 4500-CN-E	WETA/25441		
60148708017	**MW-102_20130709**	SM 4500-CN-E	WETA/25441		
60148708018	**MW-4 DEEP_20130709**	SM 4500-CN-E	WETA/25441		
60148708019	**MW-5 DEEP_20130709**	SM 4500-CN-E	WETA/25441		
60148708020	**MW-5 SHALLOW_20130709**	SM 4500-CN-E	WETA/25441		
60148708001	**DR-1_20130710**	SM 5310C	WETA/18561		
60148708002	**DR-2_20130710**	SM 5310C	WETA/18561		
60148708003	**DR-3_20130710**	SM 5310C	WETA/18561		
60148708004	**DR-6_20130710**	SM 5310C	WETA/18561		
60148708005	**DR-7_20130710**	SM 5310C	WETA/18561		
60148708006	**DR-G_20130710**	SM 5310C	WETA/18561		
60148708007	**DR-1 COMPOSITE_20130710**	SM 5310C	WETA/18561		
60148708008	**DR-2 COMPOSITE_20130710**	SM 5310C	WETA/18561		

This report shall not be reproduced, except in full,
without the written consent of Pace Analytical Services, Inc..

Pace Analytical Services, Inc.
9608 Loiret Blvd.
Lenexa, KS 66219
(913)599-5665

QUALITY CONTROL DATA CROSS REFERENCE TABLE

Project: JULY 2013 RICO WATER SAMPLING
Pace Project No.: 60148708

Lab ID	Sample ID	QC Batch Method	QC Batch	Analytical Method	Analytical Batch
60148708009	**DR-7 COMPOSITE_20130710**	SM 5310C	WETA/18561		
60148708010	**DR-8_20130710**	SM 5310C	WETA/18561		
60148708011	**DR-9_20130710**	SM 5310C	WETA/18561		
60148708012	**FB-LAB_20130710**	SM 5310C	WETA/18561		
60148708013	**GW-1_20130709**	SM 5310C	WETA/18561		
60148708014	**GW-5_20130709**	SM 5310C	WETA/18561		
60148708015	**GW-6_20130709**	SM 5310C	WETA/18561		
60148708016	**MW-101_20130709**	SM 5310C	WETA/18561		
60148708017	**MW-102_20130709**	SM 5310C	WETA/18561		
60148708018	**MW-4 DEEP_20130709**	SM 5310C	WETA/18561		
60148708019	**MW-5 DEEP_20130709**	SM 5310C	WETA/18561		
60148708020	**MW-5 SHALLOW_20130709**	SM 5310C	WETA/18561		

This report shall not be reproduced, except in full,
without the written consent of Pace Analytical Services, Inc..

Pace Analytical Services, Inc.
9608 Loiret Blvd.
Lenexa, KS 66219
(913)599-5665

QUALITY CONTROL DATA

Project: JULY 2013 RICO WATER SAMPLING
Pace Project No.: 60149200

QC Batch: MERP/8932 | Analysis Method: EPA 245.1
QC Batch Method: EPA 245.1 | Analysis Description: 245.1 Mercury
Associated Lab Samples: 60149200001, 60149200002, 60149200003, 60149200004, 60149200005, 60149200006, 60149200007, 60149200008

METHOD BLANK: 1488890 | Matrix: Water
Associated Lab Samples: 60149200001, 60149200002, 60149200003, 60149200004, 60149200005, 60149200006, 60149200007, 60149200008

Parameter	Units	Blank Result	Reporting Limit	Analyzed	Qualifiers
Mercury	ug/L	ND	0.20	08/01/13 10:15	

LABORATORY CONTROL SAMPLE: 1488891

Parameter	Units	Spike Conc.	LCS Result	LCS % Rec	% Rec Limits	Qualifiers
Mercury	ug/L	5	4.6	92	85-115	

MATRIX SPIKE & MATRIX SPIKE DUPLICATE: 1488892 1488893

Parameter	Units	60149200002 Result	MS Spike Conc.	MSD Spike Conc.	MS Result	MSD Result	MS % Rec	MSD % Rec	% Rec Limits	RPD	Max RPD	Qual
Mercury	ug/L	ND	5	5	4.8	4.8	96	96	85-115	.4	20	

This report shall not be reproduced, except in full,
without the written consent of Pace Analytical Services, Inc..

Pace Analytical Services, Inc.
9608 Loiret Blvd.
Lenexa, KS 66219
(913)599-5665

QUALITY CONTROL DATA

Project: JULY 2013 RICO WATER SAMPLING
Pace Project No.: 60149200

QC Batch: MERP/8931 | Analysis Method: EPA 245.1
QC Batch Method: EPA 245.1 | Analysis Description: 245.1 Mercury - Dissolved
Associated Lab Samples: 60149200001, 60149200002, 60149200003, 60149200004, 60149200005, 60149200006, 60149200007, 60149200008

METHOD BLANK: 1488886 | Matrix: Water
Associated Lab Samples: 60149200001, 60149200002, 60149200003, 60149200004, 60149200005, 60149200006, 60149200007, 60149200008

Parameter	Units	Blank Result	Reporting Limit	Analyzed	Qualifiers
Mercury, Dissolved	ug/L	ND	0.20	08/01/13 10:57	

LABORATORY CONTROL SAMPLE: 1488887

Parameter	Units	Spike Conc.	LCS Result	LCS % Rec	% Rec Limits	Qualifiers
Mercury, Dissolved	ug/L	5	4.5	91	85-115	

MATRIX SPIKE & MATRIX SPIKE DUPLICATE: 1488888 1488889

Parameter	Units	60149200002 Result	MS Spike Conc.	MSD Spike Conc.	MS Result	MSD Result	MS % Rec	MSD % Rec	% Rec Limits	RPD	Max RPD	Qual
Mercury, Dissolved	ug/L	ND	5	5	4.6	4.9	92	97	85-115	5	20	

This report shall not be reproduced, except in full,
without the written consent of Pace Analytical Services, Inc..

Pace Analytical Services, Inc.
9608 Loiret Blvd.
Lenexa, KS 66219
(913)599-5665

QUALITY CONTROL DATA

Project: JULY 2013 RICO WATER SAMPLING
Pace Project No.: 60149200

QC Batch: MERP/7534 — Analysis Method: EPA 245.1
QC Batch Method: EPA 245.1 — Analysis Description: 245.1 Mercury, Potentially Dissolved
Associated Lab Samples: 60149200001, 60149200002, 60149200003, 60149200004, 60149200005, 60149200006, 60149200007, 60149200008

METHOD BLANK: 1223933 — Matrix: Water
Associated Lab Samples: 60149200001, 60149200002, 60149200003, 60149200004, 60149200005, 60149200006, 60149200007, 60149200008

Parameter	Units	Blank Result	Reporting Limit	Analyzed	Qualifiers
Mercury, Dissolved	ug/L	ND	0.20	07/23/13 10:16	

LABORATORY CONTROL SAMPLE: 1223934

Parameter	Units	Spike Conc.	LCS Result	LCS % Rec	% Rec Limits	Qualifiers
Mercury, Dissolved	ug/L	5	4.8	96	85-115	

MATRIX SPIKE & MATRIX SPIKE DUPLICATE: 1223935 1223936

Parameter	Units	60149200001 Result	MS Spike Conc.	MSD Spike Conc.	MS Result	MSD Result	MS % Rec	MSD % Rec	% Rec Limits	RPD	Max RPD	Qual
Mercury, Dissolved	ug/L	ND	5	5	4.7	4.4	93	87	70-130	6	20	

This report shall not be reproduced, except in full,
without the written consent of Pace Analytical Services, Inc..

Pace Analytical Services, Inc.
9608 Loiret Blvd.
Lenexa, KS 66219
(913)599-5665

QUALITY CONTROL DATA

Project: JULY 2013 RICO WATER SAMPLING
Pace Project No.: 60149200

QC Batch: MPRP/23583 | Analysis Method: EPA 200.7
QC Batch Method: EPA 200.7 | Analysis Description: 200.7 Potentially Dissolved Metals
Associated Lab Samples: 60149200001, 60149200002, 60149200003, 60149200004, 60149200005, 60149200006, 60149200007, 60149200008

METHOD BLANK: 1224371 | Matrix: Water
Associated Lab Samples: 60149200001, 60149200002, 60149200003, 60149200004, 60149200005, 60149200006, 60149200007, 60149200008

Parameter	Units	Blank Result	Reporting Limit	Analyzed	Qualifiers
Calcium, Dissolved	ug/L	16.1J	100	07/30/13 14:03	
Magnesium, Dissolved	ug/L	ND	50.0	07/30/13 14:03	
Potassium, Dissolved	ug/L	ND	500	07/30/13 14:03	
Sodium, Dissolved	ug/L	71.3J	500	07/30/13 14:03	

LABORATORY CONTROL SAMPLE: 1224372

Parameter	Units	Spike Conc.	LCS Result	LCS % Rec	% Rec Limits	Qualifiers
Calcium, Dissolved	ug/L	10000	10300	103	85-115	
Magnesium, Dissolved	ug/L	10000	10300	103	85-115	
Potassium, Dissolved	ug/L	10000	10000	100	85-115	
Sodium, Dissolved	ug/L	10000	10200	102	85-115	

MATRIX SPIKE & MATRIX SPIKE DUPLICATE: 1224373 1224374

Parameter	Units	60149200002 Result	MS Spike Conc.	MSD Spike Conc.	MS Result	MSD Result	MS % Rec	MSD % Rec	% Rec Limits	RPD	Max RPD	Qual
Calcium, Dissolved	ug/L	245000	10000	10000	249000	254000	36	84	70-130	2	20	M1
Magnesium, Dissolved	ug/L	22400	10000	10000	31300	31900	88	95	70-130	2	20	
Potassium, Dissolved	ug/L	4010	10000	10000	14800	15000	108	109	70-130	1	20	
Sodium, Dissolved	ug/L	23100	10000	10000	33700	34300	106	112	70-130	2	20	

This report shall not be reproduced, except in full,
without the written consent of Pace Analytical Services, Inc..

Pace Analytical Services, Inc.
9608 Loiret Blvd.
Lenexa, KS 66219
(913)599-5665

QUALITY CONTROL DATA

Project: JULY 2013 RICO WATER SAMPLING
Pace Project No.: 60149200

QC Batch: MPRP/40787 Analysis Method: EPA 200.8
QC Batch Method: EPA 200.8 Analysis Description: 200.8 MET
Associated Lab Samples: 60149200001, 60149200002, 60149200003, 60149200004, 60149200005, 60149200006, 60149200007, 60149200008

METHOD BLANK: 1485508 Matrix: Water
Associated Lab Samples: 60149200001, 60149200002, 60149200003, 60149200004, 60149200005, 60149200006, 60149200007, 60149200008

Parameter	Units	Blank Result	Reporting Limit	Analyzed	Qualifiers
Aluminum	ug/L	ND	4.0	07/30/13 15:38	
Antimony	ug/L	ND	0.50	07/30/13 15:38	
Arsenic	ug/L	ND	0.50	07/30/13 15:38	
Barium	ug/L	ND	0.30	07/30/13 15:38	
Beryllium	ug/L	ND	0.20	07/30/13 15:38	
Cadmium	ug/L	ND	0.080	07/30/13 15:38	
Calcium	ug/L	ND	20.0	07/30/13 15:38	
Chromium	ug/L	ND	0.50	07/30/13 15:38	
Cobalt	ug/L	ND	0.50	07/30/13 15:38	
Copper	ug/L	ND	0.50	07/30/13 15:38	
Iron	ug/L	ND	50.0	07/30/13 15:38	
Lead	ug/L	ND	0.10	07/30/13 15:38	
Magnesium	ug/L	ND	5.0	07/30/13 15:38	
Manganese	ug/L	ND	0.50	07/30/13 15:38	
Molybdenum	ug/L	ND	0.50	07/30/13 15:38	
Nickel	ug/L	ND	0.50	07/30/13 15:38	
Potassium	ug/L	ND	20.0	07/30/13 15:38	
Selenium	ug/L	ND	0.50	07/30/13 15:38	
Silver	ug/L	ND	0.50	07/30/13 15:38	
Sodium	ug/L	ND	50.0	07/30/13 15:38	
Thallium	ug/L	ND	0.10	07/30/13 15:38	
Vanadium	ug/L	ND	0.10	07/30/13 15:38	
Zinc	ug/L	ND	5.0	07/30/13 15:38	

LABORATORY CONTROL SAMPLE: 1485509

Parameter	Units	Spike Conc.	LCS Result	LCS % Rec	% Rec Limits	Qualifiers
Aluminum	ug/L	80	81.8	102	85-115	
Antimony	ug/L	80	75.3	94	85-115	
Arsenic	ug/L	80	73.2	92	85-115	
Barium	ug/L	80	83.9	105	85-115	
Beryllium	ug/L	80	84.2	105	85-115	
Cadmium	ug/L	80	84.6	106	85-115	
Calcium	ug/L	1000	1030	103	85-115	
Chromium	ug/L	80	83.1	104	85-115	
Cobalt	ug/L	80	80.8	101	85-115	
Copper	ug/L	80	81.7	102	85-115	
Iron	ug/L	1000	1040	104	85-115	
Lead	ug/L	80	83.6	105	85-115	
Magnesium	ug/L	1000	1050	105	85-115	

This report shall not be reproduced, except in full,
without the written consent of Pace Analytical Services, Inc..

Pace Analytical Services, Inc.
9608 Loiret Blvd.
Lenexa, KS 66219
(913)599-5665

QUALITY CONTROL DATA

Project: JULY 2013 RICO WATER SAMPLING
Pace Project No.: 60149200

LABORATORY CONTROL SAMPLE: 1485509

Parameter	Units	Spike Conc.	LCS Result	LCS % Rec	% Rec Limits	Qualifiers
Manganese	ug/L	80	85.0	106	85-115	
Molybdenum	ug/L	80	81.1	101	85-115	
Nickel	ug/L	80	80.6	101	85-115	
Potassium	ug/L	1000	1020	102	85-115	
Selenium	ug/L	80	83.3	104	85-115	
Silver	ug/L	80	82.9	104	85-115	
Sodium	ug/L	1000	994	99	85-115	
Thallium	ug/L	80	83.3	104	85-115	
Vanadium	ug/L	80	81.0	101	85-115	
Zinc	ug/L	80	88.1	110	85-115	

MATRIX SPIKE SAMPLE: 1485512

Parameter	Units	60149302011 Result	Spike Conc.	MS Result	MS % Rec	% Rec Limits	Qualifiers
Aluminum	ug/L	7820	80	10400	3260	70-130	M1
Antimony	ug/L	0.56	80	70.8	88	70-130	
Arsenic	ug/L	10.3	80	86.8	96	70-130	
Barium	ug/L	146	80	233	108	70-130	
Beryllium	ug/L	0.66	80	81.5	101	70-130	
Cadmium	ug/L	1.1	80	83.8	103	70-130	
Calcium	ug/L	244000	1000	240000	-400	70-130	E,M1
Chromium	ug/L	8.9	80	91.8	104	70-130	
Cobalt	ug/L	4.8	80	86.6	102	70-130	
Copper	ug/L	36.6	80	113	95	70-130	
Iron	ug/L	12000	1000	12900	94	70-130	
Lead	ug/L	93.6	80	174	100	70-130	
Magnesium	ug/L	24300	1000	24700	34	70-130	M1
Manganese	ug/L	596	80	658	78	70-130	
Molybdenum	ug/L	13.1	80	94.0	101	70-130	
Nickel	ug/L	7.1	80	86.7	99	70-130	
Potassium	ug/L	9870	1000	11600	172	70-130	M1
Selenium	ug/L	7.8	80	93.7	107	70-130	
Silver	ug/L	ND	80	74.0	92	70-130	
Sodium	ug/L	22300	1000	23900	160	70-130	M1
Thallium	ug/L	0.28	80	79.0	98	70-130	
Vanadium	ug/L	12.7	80	95.9	104	70-130	
Zinc	ug/L	181	80	270	112	70-130	

MATRIX SPIKE & MATRIX SPIKE DUPLICATE: 1486799 1486800

Parameter	Units	60149200001 Result	MS Spike Conc.	MSD Spike Conc.	MS Result	MSD Result	MS % Rec	MSD % Rec	% Rec Limits	RPD	Max RPD	Qual
Aluminum	ug/L	212	80	80	295	293	104	102	70-130	.6	20	
Antimony	ug/L	ND	80	80	77.5	77.2	97	96	70-130	.4	20	
Arsenic	ug/L	ND	80	80	76.9	77.3	96	96	70-130	.5	20	

REPORT OF LABORATORY ANALYSIS

This report shall not be reproduced, except in full,
without the written consent of Pace Analytical Services, Inc..

Pace Analytical Services, Inc.
9608 Loiret Blvd.
Lenexa, KS 66219
(913)599-5665

QUALITY CONTROL DATA

Project: JULY 2013 RICO WATER SAMPLING
Pace Project No.: 60149200

MATRIX SPIKE & MATRIX SPIKE DUPLICATE: 1486799 1486800

Parameter	Units	60149200001 Result	MS Spike Conc.	MSD Spike Conc.	MS Result	MSD Result	MS % Rec	MSD % Rec	% Rec Limits	RPD	Max RPD	Qual
Barium	ug/L	21.8	80	80	108	106	107	106	70-130	1	20	
Beryllium	ug/L	0.29	80	80	83.2	83.0	104	103	70-130	.2	20	
Cadmium	ug/L	16.6	80	80	101	98.8	105	103	70-130	2	20	
Calcium	ug/L	219000	1000	1000	221000	220000	140	80	70-130	.3	20	E,M1
Chromium	ug/L	ND	80	80	83.6	82.8	104	103	70-130	1	20	
Cobalt	ug/L	2.5	80	80	84.8	84.6	103	103	70-130	.3	20	
Copper	ug/L	50.5	80	80	129	128	98	97	70-130	.8	20	
Iron	ug/L	2090	1000	1000	3190	3180	110	108	70-130	.4	20	
Lead	ug/L	4.2	80	80	84.2	84.1	100	100	70-130	.1	20	
Magnesium	ug/L	18400	1000	1000	20200	20200	172	174	70-130	.1	20	M1
Manganese	ug/L	1810	80	80	1910	1900	120	113	70-130	.3	20	E
Molybdenum	ug/L	18.3	80	80	103	101	106	104	70-130	2	20	
Nickel	ug/L	4.1	80	80	84.5	82.8	101	98	70-130	2	20	
Potassium	ug/L	3440	1000	1000	4470	4480	103	104	70-130	.3	20	
Selenium	ug/L	ND	80	80	84.7	84.8	106	106	70-130	.2	20	
Silver	ug/L	ND	80	80	75.3	73.1	94	91	70-130	3	20	
Sodium	ug/L	20200	1000	1000	21300	21300	107	105	70-130	.09	20	
Thallium	ug/L	ND	80	80	81.7	81.2	102	101	70-130	.7	20	
Vanadium	ug/L	ND	80	80	83.5	82.0	104	102	70-130	2	20	
Zinc	ug/L	3120	80	80	3180	3190	70	80	70-130	.3	20	E

This report shall not be reproduced, except in full,
without the written consent of Pace Analytical Services, Inc..

Pace Analytical Services, Inc.
9608 Loiret Blvd.
Lenexa, KS 66219
(913)599-5665

QUALITY CONTROL DATA

Project: JULY 2013 RICO WATER SAMPLING
Pace Project No.: 60149200

QC Batch: MPRP/40786 | Analysis Method: EPA 200.8
QC Batch Method: EPA 200.8 | Analysis Description: 200.8 MET Dissolved
Associated Lab Samples: 60149200001, 60149200002, 60149200003, 60149200004, 60149200005, 60149200006, 60149200007, 60149200008

METHOD BLANK: 1485489 | Matrix: Water
Associated Lab Samples: 60149200001, 60149200002, 60149200003, 60149200004, 60149200005, 60149200006, 60149200007, 60149200008

Parameter	Units	Blank Result	Reporting Limit	Analyzed	Qualifiers
Aluminum, Dissolved	ug/L	ND	4.0	08/08/13 15:31	
Antimony, Dissolved	ug/L	ND	0.50	08/08/13 15:31	
Arsenic, Dissolved	ug/L	ND	0.50	08/08/13 15:31	
Barium, Dissolved	ug/L	ND	0.30	08/08/13 15:31	
Beryllium, Dissolved	ug/L	ND	0.20	08/08/13 15:31	
Cadmium, Dissolved	ug/L	ND	0.080	08/08/13 15:31	
Calcium, Dissolved	ug/L	ND	20.0	08/08/13 15:31	
Chromium, Dissolved	ug/L	ND	0.50	08/08/13 15:31	
Cobalt, Dissolved	ug/L	ND	0.50	08/08/13 15:31	
Copper, Dissolved	ug/L	ND	0.50	08/08/13 15:31	
Iron, Dissolved	ug/L	ND	50.0	08/08/13 15:31	
Lead, Dissolved	ug/L	ND	0.10	08/08/13 15:31	
Magnesium, Dissolved	ug/L	ND	5.0	08/08/13 15:31	
Manganese, Dissolved	ug/L	ND	0.50	08/08/13 15:31	
Molybdenum, Dissolved	ug/L	ND	0.50	08/08/13 15:31	
Nickel, Dissolved	ug/L	ND	0.50	08/08/13 15:31	
Potassium, Dissolved	ug/L	ND	20.0	08/08/13 15:31	
Selenium, Dissolved	ug/L	ND	0.50	08/08/13 15:31	
Silver, Dissolved	ug/L	ND	0.50	08/08/13 15:31	
Sodium, Dissolved	ug/L	ND	50.0	08/08/13 15:31	
Thallium, Dissolved	ug/L	ND	0.10	08/08/13 15:31	
Vanadium, Dissolved	ug/L	ND	0.10	08/08/13 15:31	
Zinc, Dissolved	ug/L	ND	5.0	08/08/13 15:31	

LABORATORY CONTROL SAMPLE: 1485490

Parameter	Units	Spike Conc.	LCS Result	LCS % Rec	% Rec Limits	Qualifiers
Aluminum, Dissolved	ug/L	80	84.7	106	85-115	
Antimony, Dissolved	ug/L	80	83.4	104	85-115	
Arsenic, Dissolved	ug/L	80	82.2	103	85-115	
Barium, Dissolved	ug/L	80	83.8	105	85-115	
Beryllium, Dissolved	ug/L	80	84.1	105	85-115	
Cadmium, Dissolved	ug/L	80	82.6	103	85-115	
Calcium, Dissolved	ug/L	1000	1050	105	85-115	
Chromium, Dissolved	ug/L	80	81.8	102	85-115	
Cobalt, Dissolved	ug/L	80	80.4	100	85-115	
Copper, Dissolved	ug/L	80	79.5	99	85-115	
Iron, Dissolved	ug/L	1000	1020	102	85-115	
Lead, Dissolved	ug/L	80	84.1	105	85-115	
Magnesium, Dissolved	ug/L	1000	1080	108	85-115	

This report shall not be reproduced, except in full,
without the written consent of Pace Analytical Services, Inc..

Pace Analytical Services, Inc.
9608 Loiret Blvd.
Lenexa, KS 66219
(913)599-5665

QUALITY CONTROL DATA

Project: JULY 2013 RICO WATER SAMPLING
Pace Project No.: 60149200

LABORATORY CONTROL SAMPLE: 1485490

Parameter	Units	Spike Conc.	LCS Result	LCS % Rec	% Rec Limits	Qualifiers
Manganese, Dissolved	ug/L	80	82.6	103	85-115	
Molybdenum, Dissolved	ug/L	80	79.4	99	85-115	
Nickel, Dissolved	ug/L	80	79.3	99	85-115	
Potassium, Dissolved	ug/L	1000	1050	105	85-115	
Selenium, Dissolved	ug/L	80	84.1	105	85-115	
Silver, Dissolved	ug/L	80	78.8	98	85-115	
Sodium, Dissolved	ug/L	1000	1020	102	85-115	
Thallium, Dissolved	ug/L	80	82.1	103	85-115	
Vanadium, Dissolved	ug/L	80	81.0	101	85-115	
Zinc, Dissolved	ug/L	80	83.4	104	85-115	

MATRIX SPIKE & MATRIX SPIKE DUPLICATE: 1496972 1496973

Parameter	Units	60149200005 Result	MS Spike Conc.	MSD Spike Conc.	MS Result	MSD Result	MS % Rec	MSD % Rec	% Rec Limits	RPD	Max RPD	Qual
Aluminum, Dissolved	ug/L	82.0	80	80	166	165	106	104	70-130	.8	20	
Antimony, Dissolved	ug/L	ND	80	80	88.2	84.8	110	106	70-130	4	20	
Arsenic, Dissolved	ug/L	ND	80	80	91.5	89.1	114	111	70-130	3	20	
Barium, Dissolved	ug/L	14.4	80	80	102	97.7	110	104	70-130	4	20	
Beryllium, Dissolved	ug/L	ND	80	80	88.1	85.4	110	107	70-130	3	20	
Cadmium, Dissolved	ug/L	3.0	80	80	89.0	85.7	108	103	70-130	4	20	
Calcium, Dissolved	ug/L	294000	1000	1000	301000	300000	780	620	70-130	.5	20	E,M1
Chromium, Dissolved	ug/L	ND	80	80	84.7	81.7	105	102	70-130	4	20	
Cobalt, Dissolved	ug/L	0.70	80	80	88.2	84.4	109	105	70-130	4	20	
Copper, Dissolved	ug/L	6.3	80	80	88.2	84.6	102	98	70-130	4	20	
Iron, Dissolved	ug/L	ND	1000	1000	1030	1000	103	100	70-130	3	20	
Lead, Dissolved	ug/L	5.5	80	80	86.0	83.8	101	98	70-130	3	20	
Magnesium, Dissolved	ug/L	29800	1000	1000	31500	31300	173	151	70-130	.7	20	M1
Manganese, Dissolved	ug/L	17.4	80	80	100	98.1	104	101	70-130	2	20	
Molybdenum, Dissolved	ug/L	1.1	80	80	91.2	86.8	113	107	70-130	5	20	
Nickel, Dissolved	ug/L	6.7	80	80	91.6	88.2	106	102	70-130	4	20	
Potassium, Dissolved	ug/L	2800	1000	1000	3880	3840	109	104	70-130	1	20	
Selenium, Dissolved	ug/L	1.6	80	80	90.0	89.2	110	109	70-130	.8	20	
Silver, Dissolved	ug/L	ND	80	80	78.7	76.2	98	95	70-130	3	20	
Sodium, Dissolved	ug/L	8530	1000	1000	9890	9830	136	130	70-130	.5	20	M1
Thallium, Dissolved	ug/L	ND	80	80	80.6	78.7	101	98	70-130	2	20	
Vanadium, Dissolved	ug/L	ND	80	80	84.8	82.0	106	102	70-130	3	20	
Zinc, Dissolved	ug/L	189	80	80	284	280	119	114	70-130	1	20	

MATRIX SPIKE SAMPLE: 1496974

Parameter	Units	60149302004 Result	Spike Conc.	MS Result	MS % Rec	% Rec Limits	Qualifiers
Aluminum, Dissolved	ug/L	12.9	80	101	110	70-130	
Antimony, Dissolved	ug/L	ND	80	88.7	111	70-130	
Arsenic, Dissolved	ug/L	ND	80	91.5	114	70-130	

This report shall not be reproduced, except in full,
without the written consent of Pace Analytical Services, Inc..

Pace Analytical Services, Inc.
9608 Loiret Blvd.
Lenexa, KS 66219
(913)599-5665

QUALITY CONTROL DATA

Project: JULY 2013 RICO WATER SAMPLING
Pace Project No.: 60149200

MATRIX SPIKE SAMPLE: 1496974

Parameter	Units	60149302004 Result	Spike Conc.	MS Result	MS % Rec	% Rec Limits	Qualifiers
Barium, Dissolved	ug/L	23.7	80	111	109	70-130	
Beryllium, Dissolved	ug/L	ND	80	85.4	107	70-130	
Cadmium, Dissolved	ug/L	2.0	80	86.2	105	70-130	
Calcium, Dissolved	ug/L	244000	1000	248000	400	70-130	E,M1
Chromium, Dissolved	ug/L	ND	80	83.6	104	70-130	
Cobalt, Dissolved	ug/L	ND	80	85.1	106	70-130	
Copper, Dissolved	ug/L	2.9	80	81.6	98	70-130	
Iron, Dissolved	ug/L	ND	1000	1060	103	70-130	
Lead, Dissolved	ug/L	0.82	80	82.8	103	70-130	
Magnesium, Dissolved	ug/L	19600	1000	21100	152	70-130	M1
Manganese, Dissolved	ug/L	12.7	80	96.0	104	70-130	
Molybdenum, Dissolved	ug/L	13.4	80	99.4	108	70-130	
Nickel, Dissolved	ug/L	4.4	80	85.0	101	70-130	
Potassium, Dissolved	ug/L	8260	1000	9370	111	70-130	
Selenium, Dissolved	ug/L	11.7	80	102	113	70-130	
Silver, Dissolved	ug/L	ND	80	74.9	94	70-130	
Sodium, Dissolved	ug/L	22800	1000	24000	122	70-130	
Thallium, Dissolved	ug/L	0.14	80	82.1	102	70-130	
Vanadium, Dissolved	ug/L	ND	80	85.4	107	70-130	
Zinc, Dissolved	ug/L	329	80	410	102	70-130	

This report shall not be reproduced, except in full,
without the written consent of Pace Analytical Services, Inc..

Pace Analytical Services, Inc.
9608 Loiret Blvd.
Lenexa, KS 66219
(913)599-5665

QUALITY CONTROL DATA

Project: JULY 2013 RICO WATER SAMPLING
Pace Project No.: 60149200

QC Batch: MPRP/23584 | Analysis Method: EPA 200.8
QC Batch Method: EPA 200.8 | Analysis Description: 200.8 Potentially Dissolved Metals
Associated Lab Samples: 60149200001, 60149200002, 60149200003, 60149200004, 60149200005, 60149200006, 60149200007, 60149200008

METHOD BLANK: 1224375 | Matrix: Water
Associated Lab Samples: 60149200001, 60149200002, 60149200003, 60149200004, 60149200005, 60149200006, 60149200007, 60149200008

Parameter	Units	Blank Result	Reporting Limit	Analyzed	Qualifiers
Aluminum, Dissolved	ug/L	ND	50.0	08/14/13 16:20	
Antimony, Dissolved	ug/L	ND	1.0	08/14/13 16:20	
Arsenic, Dissolved	ug/L	ND	1.0	08/14/13 16:20	
Barium, Dissolved	ug/L	0.12J	1.0	08/14/13 16:20	
Beryllium, Dissolved	ug/L	ND	0.50	08/15/13 13:55	
Cadmium, Dissolved	ug/L	ND	0.50	08/14/13 16:20	
Chromium, Dissolved	ug/L	0.48J	1.0	08/14/13 16:20	
Cobalt, Dissolved	ug/L	ND	1.0	08/14/13 16:20	
Copper, Dissolved	ug/L	0.87J	1.0	08/14/13 16:20	
Iron, Dissolved	ug/L	ND	50.0	08/15/13 13:55	
Lead, Dissolved	ug/L	0.21J	1.0	08/14/13 16:20	
Manganese, Dissolved	ug/L	0.40J	1.0	08/14/13 16:20	
Molybdenum, Dissolved	ug/L	0.68J	1.0	08/14/13 16:20	
Nickel, Dissolved	ug/L	0.13J	1.0	08/14/13 16:20	
Selenium, Dissolved	ug/L	ND	1.0	08/14/13 16:20	
Silver, Dissolved	ug/L	ND	0.50	08/14/13 16:20	
Thallium, Dissolved	ug/L	0.21J	1.0	08/14/13 16:20	
Vanadium, Dissolved	ug/L	0.14J	1.0	08/14/13 16:20	
Zinc, Dissolved	ug/L	1.6J	10.0	08/14/13 16:20	

LABORATORY CONTROL SAMPLE: 1224376

Parameter	Units	Spike Conc.	LCS Result	LCS % Rec	% Rec Limits	Qualifiers
Aluminum, Dissolved	ug/L	1000	966	97	85-115	
Antimony, Dissolved	ug/L	40	41.3	103	85-115	
Arsenic, Dissolved	ug/L	40	40.2	101	85-115	
Barium, Dissolved	ug/L	40	39.6	99	85-115	
Beryllium, Dissolved	ug/L	40	42.0	105	85-115	
Cadmium, Dissolved	ug/L	40	40.9	102	85-115	
Chromium, Dissolved	ug/L	40	40.4	101	85-115	
Cobalt, Dissolved	ug/L	40	39.8	100	85-115	
Copper, Dissolved	ug/L	40	40.3	101	85-115	
Iron, Dissolved	ug/L	1000	961	96	85-115	
Lead, Dissolved	ug/L	40	40.1	100	85-115	
Manganese, Dissolved	ug/L	40	41.0	103	85-115	
Molybdenum, Dissolved	ug/L	40	41.2	103	85-115	
Nickel, Dissolved	ug/L	40	39.5	99	85-115	
Selenium, Dissolved	ug/L	40	41.4	104	85-115	
Silver, Dissolved	ug/L	20	20.0	100	85-115	
Thallium, Dissolved	ug/L	40	38.6	96	85-115	

This report shall not be reproduced, except in full,
without the written consent of Pace Analytical Services, Inc..

Pace Analytical Services, Inc.
9608 Loiret Blvd.
Lenexa, KS 66219
(913)599-5665

QUALITY CONTROL DATA

Project: JULY 2013 RICO WATER SAMPLING
Pace Project No.: 60149200

LABORATORY CONTROL SAMPLE: 1224376

Parameter	Units	Spike Conc.	LCS Result	LCS % Rec	% Rec Limits	Qualifiers
Vanadium, Dissolved	ug/L	40	40.4	101	85-115	
Zinc, Dissolved	ug/L	100	107	107	85-115	

MATRIX SPIKE & MATRIX SPIKE DUPLICATE: 1224377 1224378

Parameter	Units	60149200003 Result	MS Spike Conc.	MSD Spike Conc.	MS Result	MSD Result	MS % Rec	MSD % Rec	% Rec Limits	RPD	Max RPD	Qual
Aluminum, Dissolved	ug/L	29.9J	1000	1000	981	961	95	93	70-130	2	20	
Antimony, Dissolved	ug/L	0.057J	40	40	41.0	40.3	102	101	70-130	2	20	
Arsenic, Dissolved	ug/L	0.39J	40	40	40.6	40.2	100	100	70-130	1	20	
Barium, Dissolved	ug/L	64.0	40	40	106	106	105	104	70-130	0	20	
Beryllium, Dissolved	ug/L	ND	40	40	40.8	40.0	102	100	70-130	2	20	
Cadmium, Dissolved	ug/L	0.37J	40	40	40.6	40.1	101	99	70-130	1	20	
Chromium, Dissolved	ug/L	0.68J	40	40	40.4	40.6	99	100	70-130	1	20	
Cobalt, Dissolved	ug/L	0.22J	40	40	38.7	38.3	96	95	70-130	1	20	
Copper, Dissolved	ug/L	0.75J	40	40	38.6	38.4	95	94	70-130	1	20	
Iron, Dissolved	ug/L	138	1000	1000	1090	1060	95	93	70-130	2	20	
Lead, Dissolved	ug/L	0.82J	40	40	41.1	39.8	101	97	70-130	3	20	
Manganese, Dissolved	ug/L	111	40	40	152	152	101	102	70-130	0	20	
Molybdenum, Dissolved	ug/L	1.5	40	40	43.7	43.1	106	104	70-130	1	20	
Nickel, Dissolved	ug/L	0.96J	40	40	38.7	37.9	94	92	70-130	2	20	
Selenium, Dissolved	ug/L	ND	40	40	41.0	40.4	102	101	70-130	1	20	
Silver, Dissolved	ug/L	ND	20	20	19.3	18.9	96	94	70-130	2	20	
Thallium, Dissolved	ug/L	0.23J	40	40	38.9	38.0	97	94	70-130	2	20	
Vanadium, Dissolved	ug/L	0.14J	40	40	40.5	40.3	101	100	70-130	0	20	
Zinc, Dissolved	ug/L	72.4	100	100	171	171	99	99	70-130	0	20	

This report shall not be reproduced, except in full,
without the written consent of Pace Analytical Services, Inc..

Pace Analytical Services, Inc.
9608 Loiret Blvd.
Lenexa, KS 66219
(913)599-5665

QUALITY CONTROL DATA

Project: JULY 2013 RICO WATER SAMPLING
Pace Project No.: 60149200

QC Batch: MT/13020 | Analysis Method: SM 2510B
QC Batch Method: SM 2510B | Analysis Description: 2510B Specific Conductance
Associated Lab Samples: 60149200001, 60149200002, 60149200003, 60149200004, 60149200005, 60149200006, 60149200007, 60149200008

METHOD BLANK: 1492410 | Matrix: Water
Associated Lab Samples: 60149200001, 60149200002, 60149200003, 60149200004, 60149200005, 60149200006, 60149200007, 60149200008

Parameter	Units	Blank Result	Reporting Limit	Analyzed	Qualifiers
Specific Conductance	umhos/cm	ND	10.0	08/01/13 17:11	

LABORATORY CONTROL SAMPLE: 1492411

Parameter	Units	Spike Conc.	LCS Result	LCS % Rec	% Rec Limits	Qualifiers
Specific Conductance	umhos/cm	1000	958	96	90-110	

SAMPLE DUPLICATE: 1492412

Parameter	Units	10236163001 Result	Dup Result	RPD	Max RPD	Qualifiers
Specific Conductance	umhos/cm	145	149	3	20	

SAMPLE DUPLICATE: 1492413

Parameter	Units	10236454001 Result	Dup Result	RPD	Max RPD	Qualifiers
Specific Conductance	umhos/cm	1660	1680	.8	20	

This report shall not be reproduced, except in full,
without the written consent of Pace Analytical Services, Inc..

Pace Analytical Services, Inc.
9608 Loiret Blvd.
Lenexa, KS 66219
(913)599-5665

QUALITY CONTROL DATA

Project: JULY 2013 RICO WATER SAMPLING
Pace Project No.: 60149200

QC Batch: WET/42488 Analysis Method: SM 2320B
QC Batch Method: SM 2320B Analysis Description: 2320B Alkalinity
Associated Lab Samples: 60149200001, 60149200002, 60149200003, 60149200004, 60149200005, 60149200006, 60149200007, 60149200008

METHOD BLANK: 1223994 Matrix: Water
Associated Lab Samples: 60149200001, 60149200002, 60149200003, 60149200004, 60149200005, 60149200006, 60149200007, 60149200008

Parameter	Units	Blank Result	Reporting Limit	Analyzed	Qualifiers
Alkalinity, Carbonate (CaCO3)	mg/L	ND	20.0	07/23/13 08:14	
Alkalinity, Total as CaCO3	mg/L	ND	20.0	07/23/13 08:14	
Alkalinity,Bicarbonate (CaCO3)	mg/L	ND	20.0	07/23/13 08:14	

LABORATORY CONTROL SAMPLE: 1223995

Parameter	Units	Spike Conc.	LCS Result	LCS % Rec	% Rec Limits	Qualifiers
Alkalinity, Total as CaCO3	mg/L	500	470	94	90-110	

SAMPLE DUPLICATE: 1223998

Parameter	Units	60149200002 Result	Dup Result	RPD	Max RPD	Qualifiers
Alkalinity, Carbonate (CaCO3)	mg/L	ND	ND		10	
Alkalinity, Total as CaCO3	mg/L	102	115	12	10	D6
Alkalinity,Bicarbonate (CaCO3)	mg/L	102	115	12	10	D6

SAMPLE DUPLICATE: 1223999

Parameter	Units	60149183001 Result	Dup Result	RPD	Max RPD	Qualifiers
Alkalinity, Carbonate (CaCO3)	mg/L	ND	ND		10	
Alkalinity, Total as CaCO3	mg/L	146	152	4	10	
Alkalinity,Bicarbonate (CaCO3)	mg/L	146	152	4	10	

This report shall not be reproduced, except in full,
without the written consent of Pace Analytical Services, Inc..

Pace Analytical Services, Inc.
9608 Loiret Blvd.
Lenexa, KS 66219
(913)599-5665

QUALITY CONTROL DATA

Project: JULY 2013 RICO WATER SAMPLING
Pace Project No.: 60149200

QC Batch: WET/42481 | Analysis Method: SM 2540C
QC Batch Method: SM 2540C | Analysis Description: 2540C Total Dissolved Solids
Associated Lab Samples: 60149200001, 60149200002, 60149200003, 60149200004, 60149200005, 60149200006, 60149200007, 60149200008

METHOD BLANK: 1223751 | Matrix: Water
Associated Lab Samples: 60149200001, 60149200002, 60149200003, 60149200004, 60149200005, 60149200006, 60149200007, 60149200008

Parameter	Units	Blank Result	Reporting Limit	Analyzed	Qualifiers
Total Dissolved Solids	mg/L	ND	5.0	07/22/13 10:00	

LABORATORY CONTROL SAMPLE: 1223752

Parameter	Units	Spike Conc.	LCS Result	LCS % Rec	% Rec Limits	Qualifiers
Total Dissolved Solids	mg/L	1000	951	95	80-120	

SAMPLE DUPLICATE: 1223753

Parameter	Units	60149037001 Result	Dup Result	RPD	Max RPD	Qualifiers
Total Dissolved Solids	mg/L	543	548	1	17	

SAMPLE DUPLICATE: 1223754

Parameter	Units	60149200002 Result	Dup Result	RPD	Max RPD	Qualifiers
Total Dissolved Solids	mg/L	979	983	0	17	

This report shall not be reproduced, except in full,
without the written consent of Pace Analytical Services, Inc..

Pace Analytical Services, Inc.
9608 Loiret Blvd.
Lenexa, KS 66219
(913)599-5665

QUALITY CONTROL DATA

Project: JULY 2013 RICO WATER SAMPLING
Pace Project No.: 60149200

QC Batch: WET/42475 Analysis Method: SM 2540D
QC Batch Method: SM 2540D Analysis Description: 2540D Total Suspended Solids
Associated Lab Samples: 60149200001, 60149200002, 60149200003, 60149200004, 60149200005, 60149200006, 60149200007, 60149200008

METHOD BLANK: 1223645 Matrix: Water
Associated Lab Samples: 60149200001, 60149200002, 60149200003, 60149200004, 60149200005, 60149200006, 60149200007, 60149200008

Parameter	Units	Blank Result	Reporting Limit	Analyzed	Qualifiers
Total Suspended Solids	mg/L	ND	5.0	07/22/13 08:44	

SAMPLE DUPLICATE: 1223646

Parameter	Units	60149137001 Result	Dup Result	RPD	Max RPD	Qualifiers
Total Suspended Solids	mg/L	ND	ND		25	

SAMPLE DUPLICATE: 1223647

Parameter	Units	60149149001 Result	Dup Result	RPD	Max RPD	Qualifiers
Total Suspended Solids	mg/L	70.0	55.7	23	25	

This report shall not be reproduced, except in full,
without the written consent of Pace Analytical Services, Inc..

Pace Analytical Services, Inc.
9608 Loiret Blvd.
Lenexa, KS 66219
(913)599-5665

QUALITY CONTROL DATA

Project: JULY 2013 RICO WATER SAMPLING
Pace Project No.: 60149200

QC Batch: WET/42501 | Analysis Method: SM 4500-S-2 D
QC Batch Method: SM 4500-S-2 D | Analysis Description: 4500S2D Sulfide, Total
Associated Lab Samples: 60149200001, 60149200002, 60149200003, 60149200004, 60149200005, 60149200006, 60149200007, 60149200008

METHOD BLANK: 1224214 | Matrix: Water
Associated Lab Samples: 60149200001, 60149200002, 60149200003, 60149200004, 60149200005, 60149200006, 60149200007, 60149200008

Parameter	Units	Blank Result	Reporting Limit	Analyzed	Qualifiers
Sulfide, Total	mg/L	ND	0.050	07/23/13 13:35	

LABORATORY CONTROL SAMPLE: 1224215

Parameter	Units	Spike Conc.	LCS Result	LCS % Rec	% Rec Limits	Qualifiers
Sulfide, Total	mg/L	.5	0.50	100	80-120	

MATRIX SPIKE SAMPLE: 1224216

Parameter	Units	60149200001 Result	Spike Conc.	MS Result	MS % Rec	% Rec Limits	Qualifiers
Sulfide, Total	mg/L	ND	.5	0.44	88	75-125	

SAMPLE DUPLICATE: 1224217

Parameter	Units	60149200002 Result	Dup Result	RPD	Max RPD	Qualifiers
Sulfide, Total	mg/L	ND	ND		20	

This report shall not be reproduced, except in full,
without the written consent of Pace Analytical Services, Inc..

Pace Analytical Services, Inc.
9608 Loiret Blvd.
Lenexa, KS 66219
(913)599-5665

QUALITY CONTROL DATA

Project: JULY 2013 RICO WATER SAMPLING
Pace Project No.: 60149200

QC Batch: WETA/25636 — Analysis Method: EPA 300.0
QC Batch Method: EPA 300.0 — Analysis Description: 300.0 IC Anions
Associated Lab Samples: 60149200001, 60149200002, 60149200003, 60149200004, 60149200005, 60149200006, 60149200007, 60149200008

METHOD BLANK: 1228548 — Matrix: Water
Associated Lab Samples: 60149200001, 60149200002, 60149200003, 60149200004, 60149200005, 60149200006, 60149200007, 60149200008

Parameter	Units	Blank Result	Reporting Limit	Analyzed	Qualifiers
Chloride	mg/L	ND	1.0	07/31/13 11:45	

METHOD BLANK: 1229219 — Matrix: Water
Associated Lab Samples: 60149200001, 60149200002, 60149200003, 60149200004, 60149200005, 60149200006, 60149200007, 60149200008

Parameter	Units	Blank Result	Reporting Limit	Analyzed	Qualifiers
Sulfate	mg/L	ND	1.0	08/01/13 09:11	

LABORATORY CONTROL SAMPLE: 1228549

Parameter	Units	Spike Conc.	LCS Result	LCS % Rec	% Rec Limits	Qualifiers
Chloride	mg/L	5	4.8	97	90-110	

LABORATORY CONTROL SAMPLE: 1229220

Parameter	Units	Spike Conc.	LCS Result	LCS % Rec	% Rec Limits	Qualifiers
Sulfate	mg/L	5	4.6	93	90-110	

MATRIX SPIKE & MATRIX SPIKE DUPLICATE: 1228550 1228551

Parameter	Units	60149200001 Result	MS Spike Conc.	MSD Spike Conc.	MS Result	MSD Result	MS % Rec	MSD % Rec	% Rec Limits	RPD	Max RPD	Qual
Chloride	mg/L	ND	5	5	5.2	5.4	90	93	64-118	3	12	
Sulfate	mg/L	571	500	500	1100	1030	106	93	61-119	6	10	

This report shall not be reproduced, except in full,
without the written consent of Pace Analytical Services, Inc..

Pace Analytical Services, Inc.
9608 Loiret Blvd.
Lenexa, KS 66219
(913)599-5665

QUALITY CONTROL DATA

Project: JULY 2013 RICO WATER SAMPLING
Pace Project No.: 60149200

QC Batch: WETA/25543 | Analysis Method: EPA 353.2
QC Batch Method: EPA 353.2 | Analysis Description: 353.2 Nitrate + Nitrite, preserved
Associated Lab Samples: 60149200001, 60149200002, 60149200003, 60149200004, 60149200005, 60149200006, 60149200007, 60149200008

METHOD BLANK: 1224098 | Matrix: Water
Associated Lab Samples: 60149200001, 60149200002, 60149200003, 60149200004, 60149200005, 60149200006, 60149200007, 60149200008

Parameter	Units	Blank Result	Reporting Limit	Analyzed	Qualifiers
Nitrogen, NO2 plus NO3	mg/L	ND	0.10	07/24/13 08:56	

LABORATORY CONTROL SAMPLE: 1224099

Parameter	Units	Spike Conc.	LCS Result	LCS % Rec	% Rec Limits	Qualifiers
Nitrogen, NO2 plus NO3	mg/L	2	2.1	106	90-110	

MATRIX SPIKE SAMPLE: 1224100

Parameter	Units	60149202009 Result	Spike Conc.	MS Result	MS % Rec	% Rec Limits	Qualifiers
Nitrogen, NO2 plus NO3	mg/L	102	80	182	100	90-110	

MATRIX SPIKE SAMPLE: 1224101

Parameter	Units	60149247001 Result	Spike Conc.	MS Result	MS % Rec	% Rec Limits	Qualifiers
Nitrogen, NO2 plus NO3	mg/L	37.8	40	79.8	105	90-110	

This report shall not be reproduced, except in full,
without the written consent of Pace Analytical Services, Inc..

Pace Analytical Services, Inc.
9608 Loiret Blvd.
Lenexa, KS 66219
(913)599-5665

QUALITY CONTROL DATA

Project: JULY 2013 RICO WATER SAMPLING
Pace Project No.: 60149200

QC Batch: WETA/25558 — Analysis Method: SM 4500-CN-E
QC Batch Method: SM 4500-CN-E — Analysis Description: 4500CNE Cyanide, Total
Associated Lab Samples: 60149200001, 60149200002, 60149200003, 60149200004, 60149200005, 60149200006, 60149200007, 60149200008

METHOD BLANK: 1224566 — Matrix: Water
Associated Lab Samples: 60149200001, 60149200002, 60149200003, 60149200004, 60149200005, 60149200006, 60149200007, 60149200008

Parameter	Units	Blank Result	Reporting Limit	Analyzed	Qualifiers
Cyanide	mg/L	ND	0.0050	07/24/13 15:21	

LABORATORY CONTROL SAMPLE: 1224567

Parameter	Units	Spike Conc.	LCS Result	LCS % Rec	% Rec Limits	Qualifiers
Cyanide	mg/L	.1	0.097	97	69-126	

MATRIX SPIKE SAMPLE: 1224569

Parameter	Units	60149200001 Result	Spike Conc.	MS Result	MS % Rec	% Rec Limits	Qualifiers
Cyanide	mg/L	ND	.1	0.080	78	41-136	

SAMPLE DUPLICATE: 1224568

Parameter	Units	60149148010 Result	Dup Result	RPD	Max RPD	Qualifiers
Cyanide	mg/L	0.44	0.46	3	26	

This report shall not be reproduced, except in full,
without the written consent of Pace Analytical Services, Inc..

Pace Analytical Services, Inc.
9608 Loiret Blvd.
Lenexa, KS 66219
(913)599-5665

QUALITY CONTROL DATA

Project: JULY 2013 RICO WATER SAMPLING
Pace Project No.: 60149200

QC Batch: WETA/18729 | Analysis Method: SM 5310C
QC Batch Method: SM 5310C | Analysis Description: 5310C Total Organic Carbon
Associated Lab Samples: 60149200001, 60149200002, 60149200003, 60149200004, 60149200005, 60149200006, 60149200007, 60149200008

METHOD BLANK: 829902 | Matrix: Water
Associated Lab Samples: 60149200001, 60149200002, 60149200003, 60149200004, 60149200005, 60149200006, 60149200007, 60149200008

Parameter	Units	Blank Result	Reporting Limit	Analyzed	Qualifiers
Total Organic Carbon	mg/L	ND	0.50	07/30/13 00:21	

LABORATORY CONTROL SAMPLE: 829903

Parameter	Units	Spike Conc.	LCS Result	LCS % Rec	% Rec Limits	Qualifiers
Total Organic Carbon	mg/L	2.5	2.5	98	80-120	

MATRIX SPIKE & MATRIX SPIKE DUPLICATE: 829904 829905

Parameter	Units	60149200003 Result	MS Spike Conc.	MSD Spike Conc.	MS Result	MSD Result	MS % Rec	MSD % Rec	% Rec Limits	RPD	Max RPD	Qual
Total Organic Carbon	mg/L	1.3	5	5	6.5	6.6	103	106	80-120	2	20	

MATRIX SPIKE & MATRIX SPIKE DUPLICATE: 829906 829907

Parameter	Units	60149302001 Result	MS Spike Conc.	MSD Spike Conc.	MS Result	MSD Result	MS % Rec	MSD % Rec	% Rec Limits	RPD	Max RPD	Qual
Total Organic Carbon	mg/L	1.4	2.5	2.5	3.8	3.9	94	98	80-120	3	20	

This report shall not be reproduced, except in full,
without the written consent of Pace Analytical Services, Inc..

Pace Analytical Services, Inc.
9608 Loiret Blvd.
Lenexa, KS 66219
(913)599-5665

QUALIFIERS

Project: JULY 2013 RICO WATER SAMPLING
Pace Project No.: 60149200

DEFINITIONS

DF - Dilution Factor, if reported, represents the factor applied to the reported data due to changes in sample preparation, dilution of the sample aliquot, or moisture content.

ND - Not Detected at or above adjusted reporting limit.

J - Estimated concentration above the adjusted method detection limit and below the adjusted reporting limit.

MDL - Adjusted Method Detection Limit.

PRL - Pace Reporting Limit.

RL - Reporting Limit.

S - Surrogate

1,2-Diphenylhydrazine (8270 listed analyte) decomposes to Azobenzene.

Consistent with EPA guidelines, unrounded data are displayed and have been used to calculate % recovery and RPD values.

LCS(D) - Laboratory Control Sample (Duplicate)

MS(D) - Matrix Spike (Duplicate)

DUP - Sample Duplicate

RPD - Relative Percent Difference

NC - Not Calculable.

SG - Silica Gel - Clean-Up

U - Indicates the compound was analyzed for, but not detected.

N-Nitrosodiphenylamine decomposes and cannot be separated from Diphenylamine using Method 8270. The result reported for each analyte is a combined concentration.

Pace Analytical is TNI accredited. Contact your Pace PM for the current list of accredited analytes.

TNI - The NELAC Institute.

LABORATORIES

PASI-G	Pace Analytical Services - Green Bay
PASI-K	Pace Analytical Services - Kansas City
PASI-M	Pace Analytical Services - Minneapolis

ANALYTE QUALIFIERS

B	Analyte was detected in the associated method blank.
D3	Sample was diluted due to the presence of high levels of non-target analytes or other matrix interference.
D6	The relative percent difference (RPD) between the sample and sample duplicate exceeded laboratory control limits.
E	Analyte concentration exceeded the calibration range. The reported result is estimated.
M1	Matrix spike recovery exceeded QC limits. Batch accepted based on laboratory control sample (LCS) recovery.

This report shall not be reproduced, except in full,
without the written consent of Pace Analytical Services, Inc..

Pace Analytical Services, Inc.
9608 Loiret Blvd.
Lenexa, KS 66219
(913)599-5665

QUALITY CONTROL DATA CROSS REFERENCE TABLE

Project: JULY 2013 RICO WATER SAMPLING
Pace Project No.: 60149200

Lab ID	Sample ID	QC Batch Method	QC Batch	Analytical Method	Analytical Batch
60149200001	**DR-4_20130717**	EPA 200.7	MPRP/23583	EPA 200.7	ICP/18519
60149200002	**DR-5_20130717**	EPA 200.7	MPRP/23583	EPA 200.7	ICP/18519
60149200003	**DR-4-SW_20130717**	EPA 200.7	MPRP/23583	EPA 200.7	ICP/18519
60149200004	**DR-4-SW COMPOSITE_20130717**	EPA 200.7	MPRP/23583	EPA 200.7	ICP/18519
60149200005	**GW-7_20130717**	EPA 200.7	MPRP/23583	EPA 200.7	ICP/18519
60149200006	**EB-1_20130717**	EPA 200.7	MPRP/23583	EPA 200.7	ICP/18519
60149200007	**EB-2_20130717**	EPA 200.7	MPRP/23583	EPA 200.7	ICP/18519
60149200008	**MW-4 SHALLOW_20130717**	EPA 200.7	MPRP/23583	EPA 200.7	ICP/18519
60149200001	**DR-4_20130717**	EPA 200.8	MPRP/40787	EPA 200.8	ICPM/17026
60149200002	**DR-5_20130717**	EPA 200.8	MPRP/40787	EPA 200.8	ICPM/17026
60149200003	**DR-4-SW_20130717**	EPA 200.8	MPRP/40787	EPA 200.8	ICPM/17026
60149200004	**DR-4-SW COMPOSITE_20130717**	EPA 200.8	MPRP/40787	EPA 200.8	ICPM/17026
60149200005	**GW-7_20130717**	EPA 200.8	MPRP/40787	EPA 200.8	ICPM/17026
60149200006	**EB-1_20130717**	EPA 200.8	MPRP/40787	EPA 200.8	ICPM/17026
60149200007	**EB-2_20130717**	EPA 200.8	MPRP/40787	EPA 200.8	ICPM/17026
60149200008	**MW-4 SHALLOW_20130717**	EPA 200.8	MPRP/40787	EPA 200.8	ICPM/17026
60149200001	**DR-4_20130717**	EPA 200.8	MPRP/40786	EPA 200.8	ICPM/17027
60149200002	**DR-5_20130717**	EPA 200.8	MPRP/40786	EPA 200.8	ICPM/17027
60149200003	**DR-4-SW_20130717**	EPA 200.8	MPRP/40786	EPA 200.8	ICPM/17027
60149200004	**DR-4-SW COMPOSITE_20130717**	EPA 200.8	MPRP/40786	EPA 200.8	ICPM/17027
60149200005	**GW-7_20130717**	EPA 200.8	MPRP/40786	EPA 200.8	ICPM/17027
60149200006	**EB-1_20130717**	EPA 200.8	MPRP/40786	EPA 200.8	ICPM/17027
60149200007	**EB-2_20130717**	EPA 200.8	MPRP/40786	EPA 200.8	ICPM/17027
60149200008	**MW-4 SHALLOW_20130717**	EPA 200.8	MPRP/40786	EPA 200.8	ICPM/17027
60149200001	**DR-4_20130717**	EPA 200.8	MPRP/23584	EPA 200.8	ICPM/2404
60149200002	**DR-5_20130717**	EPA 200.8	MPRP/23584	EPA 200.8	ICPM/2404
60149200003	**DR-4-SW_20130717**	EPA 200.8	MPRP/23584	EPA 200.8	ICPM/2404
60149200004	**DR-4-SW COMPOSITE_20130717**	EPA 200.8	MPRP/23584	EPA 200.8	ICPM/2404
60149200005	**GW-7_20130717**	EPA 200.8	MPRP/23584	EPA 200.8	ICPM/2404
60149200006	**EB-1_20130717**	EPA 200.8	MPRP/23584	EPA 200.8	ICPM/2404
60149200007	**EB-2_20130717**	EPA 200.8	MPRP/23584	EPA 200.8	ICPM/2404
60149200008	**MW-4 SHALLOW_20130717**	EPA 200.8	MPRP/23584	EPA 200.8	ICPM/2404
60149200001	**DR-4_20130717**	EPA 245.1	MERP/8932	EPA 245.1	MERC/10170
60149200002	**DR-5_20130717**	EPA 245.1	MERP/8932	EPA 245.1	MERC/10170
60149200003	**DR-4-SW_20130717**	EPA 245.1	MERP/8932	EPA 245.1	MERC/10170
60149200004	**DR-4-SW COMPOSITE_20130717**	EPA 245.1	MERP/8932	EPA 245.1	MERC/10170
60149200005	**GW-7_20130717**	EPA 245.1	MERP/8932	EPA 245.1	MERC/10170
60149200006	**EB-1_20130717**	EPA 245.1	MERP/8932	EPA 245.1	MERC/10170
60149200007	**EB-2_20130717**	EPA 245.1	MERP/8932	EPA 245.1	MERC/10170
60149200008	**MW-4 SHALLOW_20130717**	EPA 245.1	MERP/8932	EPA 245.1	MERC/10170
60149200001	**DR-4_20130717**	EPA 245.1	MERP/8931	EPA 245.1	MERC/10174
60149200002	**DR-5_20130717**	EPA 245.1	MERP/8931	EPA 245.1	MERC/10174
60149200003	**DR-4-SW_20130717**	EPA 245.1	MERP/8931	EPA 245.1	MERC/10174
60149200004	**DR-4-SW COMPOSITE_20130717**	EPA 245.1	MERP/8931	EPA 245.1	MERC/10174
60149200005	**GW-7_20130717**	EPA 245.1	MERP/8931	EPA 245.1	MERC/10174
60149200006	**EB-1_20130717**	EPA 245.1	MERP/8931	EPA 245.1	MERC/10174

This report shall not be reproduced, except in full,
without the written consent of Pace Analytical Services, Inc..

Pace Analytical Services, Inc.
9608 Loiret Blvd.
Lenexa, KS 66219
(913)599-5665

QUALITY CONTROL DATA CROSS REFERENCE TABLE

Project: JULY 2013 RICO WATER SAMPLING
Pace Project No.: 60149200

Lab ID	Sample ID	QC Batch Method	QC Batch	Analytical Method	Analytical Batch
60149200007	**EB-2_20130717**	EPA 245.1	MERP/8931	EPA 245.1	MERC/10174
60149200008	**MW-4 SHALLOW_20130717**	EPA 245.1	MERP/8931	EPA 245.1	MERC/10174
60149200001	**DR-4_20130717**	EPA 245.1	MERP/7534	EPA 245.1	MERC/7491
60149200002	**DR-5_20130717**	EPA 245.1	MERP/7534	EPA 245.1	MERC/7491
60149200003	**DR-4-SW_20130717**	EPA 245.1	MERP/7534	EPA 245.1	MERC/7491
60149200004	**DR-4-SW COMPOSITE_20130717**	EPA 245.1	MERP/7534	EPA 245.1	MERC/7491
60149200005	**GW-7_20130717**	EPA 245.1	MERP/7534	EPA 245.1	MERC/7491
60149200006	**EB-1_20130717**	EPA 245.1	MERP/7534	EPA 245.1	MERC/7491
60149200007	**EB-2_20130717**	EPA 245.1	MERP/7534	EPA 245.1	MERC/7491
60149200008	**MW-4 SHALLOW_20130717**	EPA 245.1	MERP/7534	EPA 245.1	MERC/7491
60149200001	**DR-4_20130717**	SM 2510B	MT/13020		
60149200002	**DR-5_20130717**	SM 2510B	MT/13020		
60149200003	**DR-4-SW_20130717**	SM 2510B	MT/13020		
60149200004	**DR-4-SW COMPOSITE_20130717**	SM 2510B	MT/13020		
60149200005	**GW-7_20130717**	SM 2510B	MT/13020		
60149200006	**EB-1_20130717**	SM 2510B	MT/13020		
60149200007	**EB-2_20130717**	SM 2510B	MT/13020		
60149200008	**MW-4 SHALLOW_20130717**	SM 2510B	MT/13020		
60149200001	**DR-4_20130717**	Calculated	MT/13060		
60149200002	**DR-5_20130717**	Calculated	MT/13060		
60149200003	**DR-4-SW_20130717**	Calculated	MT/13060		
60149200004	**DR-4-SW COMPOSITE_20130717**	Calculated	MT/13060		
60149200005	**GW-7_20130717**	Calculated	MT/13060		
60149200006	**EB-1_20130717**	Calculated	MT/13060		
60149200007	**EB-2_20130717**	Calculated	MT/13060		
60149200008	**MW-4 SHALLOW_20130717**	Calculated	MT/13060		
60149200001	**DR-4_20130717**	SM 2320B	WET/42488		
60149200002	**DR-5_20130717**	SM 2320B	WET/42488		
60149200003	**DR-4-SW_20130717**	SM 2320B	WET/42488		
60149200004	**DR-4-SW COMPOSITE_20130717**	SM 2320B	WET/42488		
60149200005	**GW-7_20130717**	SM 2320B	WET/42488		
60149200006	**EB-1_20130717**	SM 2320B	WET/42488		
60149200007	**EB-2_20130717**	SM 2320B	WET/42488		
60149200008	**MW-4 SHALLOW_20130717**	SM 2320B	WET/42488		
60149200001	**DR-4_20130717**	SM 2540C	WET/42481		
60149200002	**DR-5_20130717**	SM 2540C	WET/42481		
60149200003	**DR-4-SW_20130717**	SM 2540C	WET/42481		
60149200004	**DR-4-SW COMPOSITE_20130717**	SM 2540C	WET/42481		
60149200005	**GW-7_20130717**	SM 2540C	WET/42481		
60149200006	**EB-1_20130717**	SM 2540C	WET/42481		
60149200007	**EB-2_20130717**	SM 2540C	WET/42481		
60149200008	**MW-4 SHALLOW_20130717**	SM 2540C	WET/42481		
60149200001	**DR-4_20130717**	SM 2540D	WET/42475		
60149200002	**DR-5_20130717**	SM 2540D	WET/42475		
60149200003	**DR-4-SW_20130717**	SM 2540D	WET/42475		
60149200004	**DR-4-SW COMPOSITE_20130717**	SM 2540D	WET/42475		

This report shall not be reproduced, except in full,
without the written consent of Pace Analytical Services, Inc..

Pace Analytical Services, Inc.
9608 Loiret Blvd.
Lenexa, KS 66219
(913)599-5665

QUALITY CONTROL DATA CROSS REFERENCE TABLE

Project: JULY 2013 RICO WATER SAMPLING
Pace Project No.: 60149200

Lab ID	Sample ID	QC Batch Method	QC Batch	Analytical Method	Analytical Batch
60149200005	**GW-7_20130717**	SM 2540D	WET/42475		
60149200006	**EB-1_20130717**	SM 2540D	WET/42475		
60149200007	**EB-2_20130717**	SM 2540D	WET/42475		
60149200008	**MW-4 SHALLOW_20130717**	SM 2540D	WET/42475		
60149200001	**DR-4_20130717**	SM 4500-S-2 D	WET/42501		
60149200002	**DR-5_20130717**	SM 4500-S-2 D	WET/42501		
60149200003	**DR-4-SW_20130717**	SM 4500-S-2 D	WET/42501		
60149200004	**DR-4-SW COMPOSITE_20130717**	SM 4500-S-2 D	WET/42501		
60149200005	**GW-7_20130717**	SM 4500-S-2 D	WET/42501		
60149200006	**EB-1_20130717**	SM 4500-S-2 D	WET/42501		
60149200007	**EB-2_20130717**	SM 4500-S-2 D	WET/42501		
60149200008	**MW-4 SHALLOW_20130717**	SM 4500-S-2 D	WET/42501		
60149200001	**DR-4_20130717**	EPA 300.0	WETA/25636		
60149200002	**DR-5_20130717**	EPA 300.0	WETA/25636		
60149200003	**DR-4-SW_20130717**	EPA 300.0	WETA/25636		
60149200004	**DR-4-SW COMPOSITE_20130717**	EPA 300.0	WETA/25636		
60149200005	**GW-7_20130717**	EPA 300.0	WETA/25636		
60149200006	**EB-1_20130717**	EPA 300.0	WETA/25636		
60149200007	**EB-2_20130717**	EPA 300.0	WETA/25636		
60149200008	**MW-4 SHALLOW_20130717**	EPA 300.0	WETA/25636		
60149200001	**DR-4_20130717**	EPA 353.2	WETA/25543		
60149200002	**DR-5_20130717**	EPA 353.2	WETA/25543		
60149200003	**DR-4-SW_20130717**	EPA 353.2	WETA/25543		
60149200004	**DR-4-SW COMPOSITE_20130717**	EPA 353.2	WETA/25543		
60149200005	**GW-7_20130717**	EPA 353.2	WETA/25543		
60149200006	**EB-1_20130717**	EPA 353.2	WETA/25543		
60149200007	**EB-2_20130717**	EPA 353.2	WETA/25543		
60149200008	**MW-4 SHALLOW_20130717**	EPA 353.2	WETA/25543		
60149200001	**DR-4_20130717**	SM 4500-CN-E	WETA/25558		
60149200002	**DR-5_20130717**	SM 4500-CN-E	WETA/25558		
60149200003	**DR-4-SW_20130717**	SM 4500-CN-E	WETA/25558		
60149200004	**DR-4-SW COMPOSITE_20130717**	SM 4500-CN-E	WETA/25558		
60149200005	**GW-7_20130717**	SM 4500-CN-E	WETA/25558		
60149200006	**EB-1_20130717**	SM 4500-CN-E	WETA/25558		
60149200007	**EB-2_20130717**	SM 4500-CN-E	WETA/25558		
60149200008	**MW-4 SHALLOW_20130717**	SM 4500-CN-E	WETA/25558		
60149200001	**DR-4_20130717**	SM 5310C	WETA/18729		
60149200002	**DR-5_20130717**	SM 5310C	WETA/18729		
60149200003	**DR-4-SW_20130717**	SM 5310C	WETA/18729		
60149200004	**DR-4-SW COMPOSITE_20130717**	SM 5310C	WETA/18729		
60149200005	**GW-7_20130717**	SM 5310C	WETA/18729		
60149200006	**EB-1_20130717**	SM 5310C	WETA/18729		
60149200007	**EB-2_20130717**	SM 5310C	WETA/18729		
60149200008	**MW-4 SHALLOW_20130717**	SM 5310C	WETA/18729		

This report shall not be reproduced, except in full,
without the written consent of Pace Analytical Services, Inc..

Pace Analytical Services, Inc.
9608 Loiret Blvd.
Lenexa, KS 66219
(913)599-5665

QUALITY CONTROL DATA

Project: July 2013 Rico Water Sampling
Pace Project No.: 60149302

QC Batch: MERP/8896 Analysis Method: EPA 245.1
QC Batch Method: EPA 245.1 Analysis Description: 245.1 Mercury
Associated Lab Samples: 60149302001, 60149302002, 60149302003, 60149302004, 60149302005, 60149302006, 60149302007, 60149302008, 60149302009, 60149302010, 60149302011, 60149302012, 60149302013, 60149302014, 60149302015, 60149302016, 60149302017, 60149302018, 60149302019

METHOD BLANK: 1485565 Matrix: Water
Associated Lab Samples: 60149302001, 60149302002, 60149302003, 60149302004, 60149302005, 60149302006, 60149302007, 60149302008, 60149302009, 60149302010, 60149302011, 60149302012, 60149302013, 60149302014, 60149302015, 60149302016, 60149302017, 60149302018, 60149302019

Parameter	Units	Blank Result	Reporting Limit	Analyzed	Qualifiers
Mercury	ug/L	ND	0.20	08/01/13 11:39	

LABORATORY CONTROL SAMPLE: 1485566

Parameter	Units	Spike Conc.	LCS Result	LCS % Rec	% Rec Limits	Qualifiers
Mercury	ug/L	5	5.0	101	85-115	

MATRIX SPIKE & MATRIX SPIKE DUPLICATE: 1485567 1485568

Parameter	Units	60149302001 Result	MS Spike Conc.	MSD Spike Conc.	MS Result	MSD Result	MS % Rec	MSD % Rec	% Rec Limits	RPD	Max RPD	Qual
Mercury	ug/L	ND	5	5	5.3	5.4	104	105	85-115	1	20	

MATRIX SPIKE SAMPLE: 1485569

Parameter	Units	60149302019 Result	Spike Conc.	MS Result	MS % Rec	% Rec Limits	Qualifiers
Mercury	ug/L	ND	5	5.0	99	85-115	

This report shall not be reproduced, except in full,
without the written consent of Pace Analytical Services, Inc..

Pace Analytical Services, Inc.
9608 Loiret Blvd.
Lenexa, KS 66219
(913)599-5665

QUALITY CONTROL DATA

Project: July 2013 Rico Water Sampling
Pace Project No.: 60149302

QC Batch: MERP/8895 — Analysis Method: EPA 245.1
QC Batch Method: EPA 245.1 — Analysis Description: 245.1 Mercury - Dissolved
Associated Lab Samples: 60149302001, 60149302002, 60149302003, 60149302004, 60149302005, 60149302006, 60149302007, 60149302008, 60149302009, 60149302010, 60149302011, 60149302012, 60149302013, 60149302014, 60149302015, 60149302016, 60149302017, 60149302018, 60149302019

METHOD BLANK: 1485560 — Matrix: Water
Associated Lab Samples: 60149302001, 60149302002, 60149302003, 60149302004, 60149302005, 60149302006, 60149302007, 60149302008, 60149302009, 60149302010, 60149302011, 60149302012, 60149302013, 60149302014, 60149302015, 60149302016, 60149302017, 60149302018, 60149302019

Parameter	Units	Blank Result	Reporting Limit	Analyzed	Qualifiers
Mercury, Dissolved	ug/L	ND	0.20	08/01/13 13:00	

LABORATORY CONTROL SAMPLE: 1485561

Parameter	Units	Spike Conc.	LCS Result	LCS % Rec	% Rec Limits	Qualifiers
Mercury, Dissolved	ug/L	5	5.0	100	85-115	

MATRIX SPIKE & MATRIX SPIKE DUPLICATE: 1485562 1485563

Parameter	Units	60149302001 Result	MS Spike Conc.	MSD Spike Conc.	MS Result	MSD Result	MS % Rec	MSD % Rec	% Rec Limits	RPD	Max RPD	Qual
Mercury, Dissolved	ug/L	ND	5	5	4.9	4.7	98	94	85-115	5	20	

MATRIX SPIKE SAMPLE: 1485564

Parameter	Units	60149302019 Result	Spike Conc.	MS Result	MS % Rec	% Rec Limits	Qualifiers
Mercury, Dissolved	ug/L	ND	5	5.0	101	85-115	

This report shall not be reproduced, except in full,
without the written consent of Pace Analytical Services, Inc..

Pace Analytical Services, Inc.
9608 Loiret Blvd.
Lenexa, KS 66219
(913)599-5665

QUALITY CONTROL DATA

Project: July 2013 Rico Water Sampling
Pace Project No.: 60149302

QC Batch: MERP/7535 | Analysis Method: EPA 245.1
QC Batch Method: EPA 245.1 | Analysis Description: 245.1 Mercury, Potentially Dissolved

Associated Lab Samples: 60149302001, 60149302002, 60149302003, 60149302004, 60149302005, 60149302006, 60149302007, 60149302008, 60149302009, 60149302010, 60149302011, 60149302012, 60149302013, 60149302014, 60149302015, 60149302016, 60149302017, 60149302018, 60149302019

METHOD BLANK: 1223937 | Matrix: Water

Associated Lab Samples: 60149302001, 60149302002, 60149302003, 60149302004, 60149302005, 60149302006, 60149302007, 60149302008, 60149302009, 60149302010, 60149302011, 60149302012, 60149302013, 60149302014, 60149302015, 60149302016, 60149302017, 60149302018, 60149302019

Parameter	Units	Blank Result	Reporting Limit	Analyzed	Qualifiers
Mercury, Dissolved	ug/L	ND	0.20	07/23/13 10:50	

LABORATORY CONTROL SAMPLE: 1223938

Parameter	Units	Spike Conc.	LCS Result	LCS % Rec	% Rec Limits	Qualifiers
Mercury, Dissolved	ug/L	5	4.8	96	85-115	

MATRIX SPIKE & MATRIX SPIKE DUPLICATE: 1223939 1223940

Parameter	Units	60149302001 Result	MS Spike Conc.	MSD Spike Conc.	MS Result	MSD Result	MS % Rec	MSD % Rec	% Rec Limits	RPD	Max RPD	Qual
Mercury, Dissolved	ug/L	ND	5	5	4.8	4.9	95	97	70-130	2	20	

MATRIX SPIKE SAMPLE: 1223941

Parameter	Units	60149302002 Result	Spike Conc.	MS Result	MS % Rec	% Rec Limits	Qualifiers
Mercury, Dissolved	ug/L	ND	5	4.8	96	70-130	

This report shall not be reproduced, except in full,
without the written consent of Pace Analytical Services, Inc..

Pace Analytical Services, Inc.
9608 Loiret Blvd.
Lenexa, KS 66219
(913)599-5665

QUALITY CONTROL DATA

Project: July 2013 Rico Water Sampling
Pace Project No.: 60149302

QC Batch: MPRP/23585 | Analysis Method: EPA 200.7
QC Batch Method: EPA 200.7 | Analysis Description: 200.7 Potentially Dissolved Metals

Associated Lab Samples: 60149302001, 60149302002, 60149302003, 60149302004, 60149302005, 60149302006, 60149302007, 60149302008, 60149302009, 60149302010, 60149302011, 60149302012, 60149302013, 60149302014, 60149302015, 60149302016, 60149302017, 60149302018, 60149302019

METHOD BLANK: 1224379 | Matrix: Water

Associated Lab Samples: 60149302001, 60149302002, 60149302003, 60149302004, 60149302005, 60149302006, 60149302007, 60149302008, 60149302009, 60149302010, 60149302011, 60149302012, 60149302013, 60149302014, 60149302015, 60149302016, 60149302017, 60149302018, 60149302019

Parameter	Units	Blank Result	Reporting Limit	Analyzed	Qualifiers
Calcium, Dissolved	ug/L	16.2J	100	07/31/13 09:06	
Magnesium, Dissolved	ug/L	ND	50.0	07/31/13 09:06	
Potassium, Dissolved	ug/L	ND	500	07/31/13 09:06	
Sodium, Dissolved	ug/L	22.9J	500	07/31/13 09:06	

LABORATORY CONTROL SAMPLE: 1224380

Parameter	Units	Spike Conc.	LCS Result	LCS % Rec	% Rec Limits	Qualifiers
Calcium, Dissolved	ug/L	10000	10500	105	85-115	
Magnesium, Dissolved	ug/L	10000	10500	105	85-115	
Potassium, Dissolved	ug/L	10000	10500	105	85-115	
Sodium, Dissolved	ug/L	10000	10600	106	85-115	

MATRIX SPIKE & MATRIX SPIKE DUPLICATE: 1224381 1224382

Parameter	Units	60149302003 Result	MS Spike Conc.	MSD Spike Conc.	MS Result	MSD Result	MS % Rec	MSD % Rec	% Rec Limits	RPD	Max RPD	Qual
Calcium, Dissolved	ug/L	235000	10000	10000	262000	259000	271	237	70-130	1	20	M1
Magnesium, Dissolved	ug/L	20200	10000	10000	31000	31500	108	113	70-130	2	20	
Potassium, Dissolved	ug/L	6420	10000	10000	17300	17100	109	107	70-130	1	20	
Sodium, Dissolved	ug/L	24900	10000	10000	37000	36700	121	118	70-130	1	20	

MATRIX SPIKE SAMPLE: 1224383

Parameter	Units	60149302004 Result	Spike Conc.	MS Result	MS % Rec	% Rec Limits	Qualifiers
Calcium, Dissolved	ug/L	237000	10000	240000	26	70-130	M1
Magnesium, Dissolved	ug/L	19000	10000	27200	82	70-130	
Potassium, Dissolved	ug/L	8120	10000	18200	101	70-130	
Sodium, Dissolved	ug/L	22900	10000	32600	97	70-130	

This report shall not be reproduced, except in full,
without the written consent of Pace Analytical Services, Inc..

Pace Analytical Services, Inc.
9608 Loiret Blvd.
Lenexa, KS 66219
(913)599-5665

QUALITY CONTROL DATA

Project: July 2013 Rico Water Sampling
Pace Project No.: 60149302

QC Batch: MPRP/40787 | Analysis Method: EPA 200.8
QC Batch Method: EPA 200.8 | Analysis Description: 200.8 MET
Associated Lab Samples: 60149302001, 60149302002, 60149302003, 60149302004, 60149302005, 60149302006, 60149302007, 60149302008, 60149302009, 60149302010, 60149302011

METHOD BLANK: 1485508 | Matrix: Water
Associated Lab Samples: 60149302001, 60149302002, 60149302003, 60149302004, 60149302005, 60149302006, 60149302007, 60149302008, 60149302009, 60149302010, 60149302011

Parameter	Units	Blank Result	Reporting Limit	Analyzed	Qualifiers
Aluminum	ug/L	ND	4.0	07/30/13 15:38	
Antimony	ug/L	ND	0.50	07/30/13 15:38	
Arsenic	ug/L	ND	0.50	07/30/13 15:38	
Barium	ug/L	ND	0.30	07/30/13 15:38	
Beryllium	ug/L	ND	0.20	07/30/13 15:38	
Cadmium	ug/L	ND	0.080	07/30/13 15:38	
Calcium	ug/L	ND	20.0	07/30/13 15:38	
Chromium	ug/L	ND	0.50	07/30/13 15:38	
Cobalt	ug/L	ND	0.50	07/30/13 15:38	
Copper	ug/L	ND	0.50	07/30/13 15:38	
Iron	ug/L	ND	50.0	07/30/13 15:38	
Lead	ug/L	ND	0.10	07/30/13 15:38	
Magnesium	ug/L	ND	5.0	07/30/13 15:38	
Manganese	ug/L	ND	0.50	07/30/13 15:38	
Molybdenum	ug/L	ND	0.50	07/30/13 15:38	
Nickel	ug/L	ND	0.50	07/30/13 15:38	
Potassium	ug/L	ND	20.0	07/30/13 15:38	
Selenium	ug/L	ND	0.50	07/30/13 15:38	
Silver	ug/L	ND	0.50	07/30/13 15:38	
Sodium	ug/L	ND	50.0	07/30/13 15:38	
Thallium	ug/L	ND	0.10	07/30/13 15:38	
Vanadium	ug/L	ND	0.10	07/30/13 15:38	
Zinc	ug/L	ND	5.0	07/30/13 15:38	

LABORATORY CONTROL SAMPLE: 1485509

Parameter	Units	Spike Conc.	LCS Result	LCS % Rec	% Rec Limits	Qualifiers
Aluminum	ug/L	80	81.8	102	85-115	
Antimony	ug/L	80	75.3	94	85-115	
Arsenic	ug/L	80	73.2	92	85-115	
Barium	ug/L	80	83.9	105	85-115	
Beryllium	ug/L	80	84.2	105	85-115	
Cadmium	ug/L	80	84.6	106	85-115	
Calcium	ug/L	1000	1030	103	85-115	
Chromium	ug/L	80	83.1	104	85-115	
Cobalt	ug/L	80	80.8	101	85-115	
Copper	ug/L	80	81.7	102	85-115	
Iron	ug/L	1000	1040	104	85-115	
Lead	ug/L	80	83.6	105	85-115	
Magnesium	ug/L	1000	1050	105	85-115	

This report shall not be reproduced, except in full,
without the written consent of Pace Analytical Services, Inc..

Pace Analytical Services, Inc.
9608 Loiret Blvd.
Lenexa, KS 66219
(913)599-5665

QUALITY CONTROL DATA

Project: July 2013 Rico Water Sampling
Pace Project No.: 60149302

LABORATORY CONTROL SAMPLE: 1485509

Parameter	Units	Spike Conc.	LCS Result	LCS % Rec	% Rec Limits	Qualifiers
Manganese	ug/L	80	85.0	106	85-115	
Molybdenum	ug/L	80	81.1	101	85-115	
Nickel	ug/L	80	80.6	101	85-115	
Potassium	ug/L	1000	1020	102	85-115	
Selenium	ug/L	80	83.3	104	85-115	
Silver	ug/L	80	82.9	104	85-115	
Sodium	ug/L	1000	994	99	85-115	
Thallium	ug/L	80	83.3	104	85-115	
Vanadium	ug/L	80	81.0	101	85-115	
Zinc	ug/L	80	88.1	110	85-115	

MATRIX SPIKE SAMPLE: 1485512

Parameter	Units	60149302011 Result	Spike Conc.	MS Result	MS % Rec	% Rec Limits	Qualifiers
Aluminum	ug/L	7820	80	10400	3260	70-130	M1
Antimony	ug/L	0.56	80	70.8	88	70-130	
Arsenic	ug/L	10.3	80	86.8	96	70-130	
Barium	ug/L	146	80	233	108	70-130	
Beryllium	ug/L	0.66	80	81.5	101	70-130	
Cadmium	ug/L	1.1	80	83.8	103	70-130	
Calcium	ug/L	244000	1000	240000	-400	70-130	E,M1
Chromium	ug/L	8.9	80	91.8	104	70-130	
Cobalt	ug/L	4.8	80	86.6	102	70-130	
Copper	ug/L	36.6	80	113	95	70-130	
Iron	ug/L	12000	1000	12900	94	70-130	
Lead	ug/L	93.6	80	174	100	70-130	
Magnesium	ug/L	24300	1000	24700	34	70-130	M1
Manganese	ug/L	596	80	658	78	70-130	
Molybdenum	ug/L	13.1	80	94.0	101	70-130	
Nickel	ug/L	7.1	80	86.7	99	70-130	
Potassium	ug/L	9870	1000	11600	172	70-130	M1
Selenium	ug/L	7.8	80	93.7	107	70-130	
Silver	ug/L	ND	80	74.0	92	70-130	
Sodium	ug/L	22300	1000	23900	160	70-130	M1
Thallium	ug/L	0.28	80	79.0	98	70-130	
Vanadium	ug/L	12.7	80	95.9	104	70-130	
Zinc	ug/L	181	80	270	112	70-130	

MATRIX SPIKE & MATRIX SPIKE DUPLICATE: 1486799 1486800

Parameter	Units	60149200001 Result	MS Spike Conc.	MSD Spike Conc.	MS Result	MSD Result	MS % Rec	MSD % Rec	% Rec Limits	RPD	Max RPD	Qual
Aluminum	ug/L	212	80	80	295	293	104	102	70-130	.6	20	
Antimony	ug/L	ND	80	80	77.5	77.2	97	96	70-130	.4	20	
Arsenic	ug/L	ND	80	80	76.9	77.3	96	96	70-130	.5	20	

REPORT OF LABORATORY ANALYSIS

This report shall not be reproduced, except in full,
without the written consent of Pace Analytical Services, Inc..

Pace Analytical Services, Inc.
9608 Loiret Blvd.
Lenexa, KS 66219
(913)599-5665

QUALITY CONTROL DATA

Project: July 2013 Rico Water Sampling
Pace Project No.: 60149302

MATRIX SPIKE & MATRIX SPIKE DUPLICATE: 1486799 1486800

Parameter	Units	60149200001 Result	MS Spike Conc.	MSD Spike Conc.	MS Result	MSD Result	MS % Rec	MSD % Rec	% Rec Limits	RPD	Max RPD	Qual
Barium	ug/L	21.8	80	80	108	106	107	106	70-130	1	20	
Beryllium	ug/L	0.29	80	80	83.2	83.0	104	103	70-130	.2	20	
Cadmium	ug/L	16.6	80	80	101	98.8	105	103	70-130	2	20	
Calcium	ug/L	219000	1000	1000	221000	220000	140	80	70-130	.3	20	E,M1
Chromium	ug/L	ND	80	80	83.6	82.8	104	103	70-130	1	20	
Cobalt	ug/L	2.5	80	80	84.8	84.6	103	103	70-130	.3	20	
Copper	ug/L	50.5	80	80	129	128	98	97	70-130	.8	20	
Iron	ug/L	2090	1000	1000	3190	3180	110	108	70-130	.4	20	
Lead	ug/L	4.2	80	80	84.2	84.1	100	100	70-130	.1	20	
Magnesium	ug/L	18400	1000	1000	20200	20200	172	174	70-130	.1	20	M1
Manganese	ug/L	1810	80	80	1910	1900	120	113	70-130	.3	20	E
Molybdenum	ug/L	18.3	80	80	103	101	106	104	70-130	2	20	
Nickel	ug/L	4.1	80	80	84.5	82.8	101	98	70-130	2	20	
Potassium	ug/L	3440	1000	1000	4470	4480	103	104	70-130	.3	20	
Selenium	ug/L	ND	80	80	84.7	84.8	106	106	70-130	.2	20	
Silver	ug/L	ND	80	80	75.3	73.1	94	91	70-130	3	20	
Sodium	ug/L	20200	1000	1000	21300	21300	107	105	70-130	.09	20	
Thallium	ug/L	ND	80	80	81.7	81.2	102	101	70-130	.7	20	
Vanadium	ug/L	ND	80	80	83.5	82.0	104	102	70-130	2	20	
Zinc	ug/L	3120	80	80	3180	3190	70	80	70-130	.3	20	E

This report shall not be reproduced, except in full,
without the written consent of Pace Analytical Services, Inc..

Pace Analytical Services, Inc.
9608 Loiret Blvd.
Lenexa, KS 66219
(913)599-5665

QUALITY CONTROL DATA

Project: July 2013 Rico Water Sampling
Pace Project No.: 60149302

QC Batch: MPRP/40831 Analysis Method: EPA 200.8
QC Batch Method: EPA 200.8 Analysis Description: 200.8 MET
Associated Lab Samples: 60149302012, 60149302013, 60149302014, 60149302015, 60149302016, 60149302017, 60149302018, 60149302019

METHOD BLANK: 1486574 Matrix: Water
Associated Lab Samples: 60149302012, 60149302013, 60149302014, 60149302015, 60149302016, 60149302017, 60149302018, 60149302019

Parameter	Units	Blank Result	Reporting Limit	Analyzed	Qualifiers
Aluminum	ug/L	ND	4.0	08/05/13 14:10	
Antimony	ug/L	ND	0.50	08/05/13 14:10	
Arsenic	ug/L	ND	0.50	08/05/13 14:10	
Barium	ug/L	ND	0.30	08/05/13 14:10	
Beryllium	ug/L	ND	0.20	08/05/13 14:10	
Cadmium	ug/L	ND	0.080	08/05/13 14:10	
Calcium	ug/L	ND	20.0	08/05/13 14:10	
Chromium	ug/L	ND	0.50	08/05/13 14:10	
Cobalt	ug/L	ND	0.50	08/05/13 14:10	
Copper	ug/L	ND	0.50	08/05/13 14:10	
Iron	ug/L	ND	50.0	08/05/13 14:10	
Lead	ug/L	ND	0.10	08/05/13 14:10	
Magnesium	ug/L	ND	5.0	08/05/13 14:10	
Manganese	ug/L	ND	0.50	08/05/13 14:10	
Molybdenum	ug/L	ND	0.50	08/05/13 14:10	
Nickel	ug/L	ND	0.50	08/05/13 14:10	
Potassium	ug/L	ND	20.0	08/05/13 14:10	
Selenium	ug/L	ND	0.50	08/05/13 14:10	
Silver	ug/L	ND	0.50	08/05/13 14:10	
Sodium	ug/L	ND	50.0	08/05/13 14:10	
Thallium	ug/L	ND	0.10	08/05/13 14:10	
Vanadium	ug/L	ND	0.10	08/05/13 14:10	
Zinc	ug/L	ND	5.0	08/05/13 14:10	

LABORATORY CONTROL SAMPLE: 1486575

Parameter	Units	Spike Conc.	LCS Result	LCS % Rec	% Rec Limits	Qualifiers
Aluminum	ug/L	80	86.1	108	85-115	
Antimony	ug/L	80	82.6	103	85-115	
Arsenic	ug/L	80	82.5	103	85-115	
Barium	ug/L	80	83.1	104	85-115	
Beryllium	ug/L	80	84.2	105	85-115	
Cadmium	ug/L	80	83.3	104	85-115	
Calcium	ug/L	1000	1120	112	85-115	
Chromium	ug/L	80	84.7	106	85-115	
Cobalt	ug/L	80	84.4	106	85-115	
Copper	ug/L	80	84.6	106	85-115	
Iron	ug/L	1000	1050	105	85-115	
Lead	ug/L	80	84.5	106	85-115	
Magnesium	ug/L	1000	1030	103	85-115	

This report shall not be reproduced, except in full,
without the written consent of Pace Analytical Services, Inc..

Pace Analytical Services, Inc.
9608 Loiret Blvd.
Lenexa, KS 66219
(913)599-5665

QUALITY CONTROL DATA

Project: July 2013 Rico Water Sampling
Pace Project No.: 60149302

LABORATORY CONTROL SAMPLE: 1486575

Parameter	Units	Spike Conc.	LCS Result	LCS % Rec	% Rec Limits	Qualifiers
Manganese	ug/L	80	84.6	106	85-115	
Molybdenum	ug/L	80	80.1	100	85-115	
Nickel	ug/L	80	83.6	104	85-115	
Potassium	ug/L	1000	1040	104	85-115	
Selenium	ug/L	80	83.5	104	85-115	
Silver	ug/L	80	85.8	107	85-115	
Sodium	ug/L	1000	1050	105	85-115	
Thallium	ug/L	80	86.5	108	85-115	
Vanadium	ug/L	80	83.5	104	85-115	
Zinc	ug/L	80	86.8	108	85-115	

MATRIX SPIKE & MATRIX SPIKE DUPLICATE: 1486576 1486577

Parameter	Units	60149302012 Result	MS Spike Conc.	MSD Spike Conc.	MS Result	MSD Result	MS % Rec	MSD % Rec	% Rec Limits	RPD	Max RPD	Qual
Aluminum	ug/L	4.2	80	80	94.4	114	113	138	70-130	19	20	M1
Antimony	ug/L	ND	80	80	82.0	79.0	103	99	70-130	4	20	
Arsenic	ug/L	ND	80	80	80.8	78.1	101	98	70-130	3	20	
Barium	ug/L	ND	80	80	82.6	78.2	103	97	70-130	6	20	
Beryllium	ug/L	ND	80	80	82.0	79.9	103	100	70-130	3	20	
Cadmium	ug/L	ND	80	80	81.9	78.8	102	98	70-130	4	20	
Calcium	ug/L	ND	1000	1000	1120	1100	110	108	70-130	2	20	
Chromium	ug/L	ND	80	80	83.1	81.6	104	102	70-130	2	20	
Cobalt	ug/L	ND	80	80	82.7	80.3	103	100	70-130	3	20	
Copper	ug/L	0.85	80	80	83.6	85.5	103	106	70-130	2	20	
Iron	ug/L	ND	1000	1000	1130	1420	112	140	70-130	23	20	M1,R1
Lead	ug/L	0.11	80	80	85.4	83.1	107	104	70-130	3	20	
Magnesium	ug/L	ND	1000	1000	1050	1030	105	103	70-130	2	20	
Manganese	ug/L	ND	80	80	86.3	86.1	107	107	70-130	.1	20	
Molybdenum	ug/L	ND	80	80	78.1	75.0	98	94	70-130	4	20	
Nickel	ug/L	ND	80	80	81.9	79.1	102	99	70-130	4	20	
Potassium	ug/L	ND	1000	1000	1030	999	103	99	70-130	3	20	
Selenium	ug/L	ND	80	80	82.3	80.4	103	100	70-130	2	20	
Silver	ug/L	ND	80	80	81.4	79.1	102	99	70-130	3	20	
Sodium	ug/L	303	1000	1000	1340	1300	103	100	70-130	2	20	
Thallium	ug/L	ND	80	80	86.8	82.2	108	103	70-130	5	20	
Vanadium	ug/L	ND	80	80	82.0	79.5	103	99	70-130	3	20	
Zinc	ug/L	ND	80	80	89.4	101	108	122	70-130	12	20	

This report shall not be reproduced, except in full,
without the written consent of Pace Analytical Services, Inc..

Pace Analytical Services, Inc.
9608 Loiret Blvd.
Lenexa, KS 66219
(913)599-5665

QUALITY CONTROL DATA

Project: July 2013 Rico Water Sampling
Pace Project No.: 60149302

QC Batch: MPRP/40786 | Analysis Method: EPA 200.8
QC Batch Method: EPA 200.8 | Analysis Description: 200.8 MET Dissolved
Associated Lab Samples: 60149302001, 60149302002, 60149302003, 60149302004, 60149302005, 60149302006, 60149302007, 60149302008, 60149302009, 60149302010, 60149302011, 60149302012

METHOD BLANK: 1485489 | Matrix: Water
Associated Lab Samples: 60149302001, 60149302002, 60149302003, 60149302004, 60149302005, 60149302006, 60149302007, 60149302008, 60149302009, 60149302010, 60149302011, 60149302012

Parameter	Units	Blank Result	Reporting Limit	Analyzed	Qualifiers
Aluminum, Dissolved	ug/L	ND	4.0	08/08/13 15:31	
Antimony, Dissolved	ug/L	ND	0.50	08/08/13 15:31	
Arsenic, Dissolved	ug/L	ND	0.50	08/08/13 15:31	
Barium, Dissolved	ug/L	ND	0.30	08/08/13 15:31	
Beryllium, Dissolved	ug/L	ND	0.20	08/08/13 15:31	
Cadmium, Dissolved	ug/L	ND	0.080	08/08/13 15:31	
Calcium, Dissolved	ug/L	ND	20.0	08/08/13 15:31	
Chromium, Dissolved	ug/L	ND	0.50	08/08/13 15:31	
Cobalt, Dissolved	ug/L	ND	0.50	08/08/13 15:31	
Copper, Dissolved	ug/L	ND	0.50	08/08/13 15:31	
Iron, Dissolved	ug/L	ND	50.0	08/08/13 15:31	
Lead, Dissolved	ug/L	ND	0.10	08/08/13 15:31	
Magnesium, Dissolved	ug/L	ND	5.0	08/08/13 15:31	
Manganese, Dissolved	ug/L	ND	0.50	08/08/13 15:31	
Molybdenum, Dissolved	ug/L	ND	0.50	08/08/13 15:31	
Nickel, Dissolved	ug/L	ND	0.50	08/08/13 15:31	
Potassium, Dissolved	ug/L	ND	20.0	08/08/13 15:31	
Selenium, Dissolved	ug/L	ND	0.50	08/08/13 15:31	
Silver, Dissolved	ug/L	ND	0.50	08/08/13 15:31	
Sodium, Dissolved	ug/L	ND	50.0	08/08/13 15:31	
Thallium, Dissolved	ug/L	ND	0.10	08/08/13 15:31	
Vanadium, Dissolved	ug/L	ND	0.10	08/08/13 15:31	
Zinc, Dissolved	ug/L	ND	5.0	08/08/13 15:31	

LABORATORY CONTROL SAMPLE: 1485490

Parameter	Units	Spike Conc.	LCS Result	LCS % Rec	% Rec Limits	Qualifiers
Aluminum, Dissolved	ug/L	80	84.7	106	85-115	
Antimony, Dissolved	ug/L	80	83.4	104	85-115	
Arsenic, Dissolved	ug/L	80	82.2	103	85-115	
Barium, Dissolved	ug/L	80	83.8	105	85-115	
Beryllium, Dissolved	ug/L	80	84.1	105	85-115	
Cadmium, Dissolved	ug/L	80	82.6	103	85-115	
Calcium, Dissolved	ug/L	1000	1050	105	85-115	
Chromium, Dissolved	ug/L	80	81.8	102	85-115	
Cobalt, Dissolved	ug/L	80	80.4	100	85-115	
Copper, Dissolved	ug/L	80	79.5	99	85-115	
Iron, Dissolved	ug/L	1000	1020	102	85-115	
Lead, Dissolved	ug/L	80	84.1	105	85-115	
Magnesium, Dissolved	ug/L	1000	1080	108	85-115	

This report shall not be reproduced, except in full,
without the written consent of Pace Analytical Services, Inc..

Pace Analytical Services, Inc.
9608 Loiret Blvd.
Lenexa, KS 66219
(913)599-5665

QUALITY CONTROL DATA

Project: July 2013 Rico Water Sampling
Pace Project No.: 60149302

LABORATORY CONTROL SAMPLE: 1485490

Parameter	Units	Spike Conc.	LCS Result	LCS % Rec	% Rec Limits	Qualifiers
Manganese, Dissolved	ug/L	80	82.6	103	85-115	
Molybdenum, Dissolved	ug/L	80	79.4	99	85-115	
Nickel, Dissolved	ug/L	80	79.3	99	85-115	
Potassium, Dissolved	ug/L	1000	1050	105	85-115	
Selenium, Dissolved	ug/L	80	84.1	105	85-115	
Silver, Dissolved	ug/L	80	78.8	98	85-115	
Sodium, Dissolved	ug/L	1000	1020	102	85-115	
Thallium, Dissolved	ug/L	80	82.1	103	85-115	
Vanadium, Dissolved	ug/L	80	81.0	101	85-115	
Zinc, Dissolved	ug/L	80	83.4	104	85-115	

MATRIX SPIKE & MATRIX SPIKE DUPLICATE: 1496972 1496973

Parameter	Units	60149200005 Result	MS Spike Conc.	MSD Spike Conc.	MS Result	MSD Result	MS % Rec	MSD % Rec	% Rec Limits	RPD	Max RPD	Qual
Aluminum, Dissolved	ug/L	82.0	80	80	166	165	106	104	70-130	.8	20	
Antimony, Dissolved	ug/L	ND	80	80	88.2	84.8	110	106	70-130	4	20	
Arsenic, Dissolved	ug/L	ND	80	80	91.5	89.1	114	111	70-130	3	20	
Barium, Dissolved	ug/L	14.4	80	80	102	97.7	110	104	70-130	4	20	
Beryllium, Dissolved	ug/L	ND	80	80	88.1	85.4	110	107	70-130	3	20	
Cadmium, Dissolved	ug/L	3.0	80	80	89.0	85.7	108	103	70-130	4	20	
Calcium, Dissolved	ug/L	294000	1000	1000	301000	300000	780	620	70-130	.5	20	E,M1
Chromium, Dissolved	ug/L	ND	80	80	84.7	81.7	105	102	70-130	4	20	
Cobalt, Dissolved	ug/L	0.70	80	80	88.2	84.4	109	105	70-130	4	20	
Copper, Dissolved	ug/L	6.3	80	80	88.2	84.6	102	98	70-130	4	20	
Iron, Dissolved	ug/L	ND	1000	1000	1030	1000	103	100	70-130	3	20	
Lead, Dissolved	ug/L	5.5	80	80	86.0	83.8	101	98	70-130	3	20	
Magnesium, Dissolved	ug/L	29800	1000	1000	31500	31300	173	151	70-130	.7	20	M1
Manganese, Dissolved	ug/L	17.4	80	80	100	98.1	104	101	70-130	2	20	
Molybdenum, Dissolved	ug/L	1.1	80	80	91.2	86.8	113	107	70-130	5	20	
Nickel, Dissolved	ug/L	6.7	80	80	91.6	88.2	106	102	70-130	4	20	
Potassium, Dissolved	ug/L	2800	1000	1000	3880	3840	109	104	70-130	1	20	
Selenium, Dissolved	ug/L	1.6	80	80	90.0	89.2	110	109	70-130	.8	20	
Silver, Dissolved	ug/L	ND	80	80	78.7	76.2	98	95	70-130	3	20	
Sodium, Dissolved	ug/L	8530	1000	1000	9890	9830	136	130	70-130	.5	20	M1
Thallium, Dissolved	ug/L	ND	80	80	80.6	78.7	101	98	70-130	2	20	
Vanadium, Dissolved	ug/L	ND	80	80	84.8	82.0	106	102	70-130	3	20	
Zinc, Dissolved	ug/L	189	80	80	284	280	119	114	70-130	1	20	

MATRIX SPIKE SAMPLE: 1496974

Parameter	Units	60149302004 Result	Spike Conc.	MS Result	MS % Rec	% Rec Limits	Qualifiers
Aluminum, Dissolved	ug/L	12.9	80	101	110	70-130	
Antimony, Dissolved	ug/L	ND	80	88.7	111	70-130	
Arsenic, Dissolved	ug/L	ND	80	91.5	114	70-130	

REPORT OF LABORATORY ANALYSIS

This report shall not be reproduced, except in full,
without the written consent of Pace Analytical Services, Inc..

Pace Analytical Services, Inc.
9608 Loiret Blvd.
Lenexa, KS 66219
(913)599-5665

QUALITY CONTROL DATA

Project: July 2013 Rico Water Sampling
Pace Project No.: 60149302

MATRIX SPIKE SAMPLE: 1496974

Parameter	Units	60149302004 Result	Spike Conc.	MS Result	MS % Rec	% Rec Limits	Qualifiers
Barium, Dissolved	ug/L	23.7	80	111	109	70-130	
Beryllium, Dissolved	ug/L	ND	80	85.4	107	70-130	
Cadmium, Dissolved	ug/L	2.0	80	86.2	105	70-130	
Calcium, Dissolved	ug/L	244000	1000	248000	400	70-130	E,M1
Chromium, Dissolved	ug/L	ND	80	83.6	104	70-130	
Cobalt, Dissolved	ug/L	ND	80	85.1	106	70-130	
Copper, Dissolved	ug/L	2.9	80	81.6	98	70-130	
Iron, Dissolved	ug/L	ND	1000	1060	103	70-130	
Lead, Dissolved	ug/L	0.82	80	82.8	103	70-130	
Magnesium, Dissolved	ug/L	19600	1000	21100	152	70-130	M1
Manganese, Dissolved	ug/L	12.7	80	96.0	104	70-130	
Molybdenum, Dissolved	ug/L	13.4	80	99.4	108	70-130	
Nickel, Dissolved	ug/L	4.4	80	85.0	101	70-130	
Potassium, Dissolved	ug/L	8260	1000	9370	111	70-130	
Selenium, Dissolved	ug/L	11.7	80	102	113	70-130	
Silver, Dissolved	ug/L	ND	80	74.9	94	70-130	
Sodium, Dissolved	ug/L	22800	1000	24000	122	70-130	
Thallium, Dissolved	ug/L	0.14	80	82.1	102	70-130	
Vanadium, Dissolved	ug/L	ND	80	85.4	107	70-130	
Zinc, Dissolved	ug/L	329	80	410	102	70-130	

This report shall not be reproduced, except in full,
without the written consent of Pace Analytical Services, Inc..

Pace Analytical Services, Inc.
9608 Loiret Blvd.
Lenexa, KS 66219
(913)599-5665

QUALITY CONTROL DATA

Project: July 2013 Rico Water Sampling
Pace Project No.: 60149302

QC Batch: MPRP/40829 | Analysis Method: EPA 200.8
QC Batch Method: EPA 200.8 | Analysis Description: 200.8 MET Dissolved
Associated Lab Samples: 60149302013, 60149302014, 60149302015, 60149302016, 60149302017, 60149302018, 60149302019

METHOD BLANK: 1486566 | Matrix: Water
Associated Lab Samples: 60149302013, 60149302014, 60149302015, 60149302016, 60149302017, 60149302018, 60149302019

Parameter	Units	Blank Result	Reporting Limit	Analyzed	Qualifiers
Aluminum, Dissolved	ug/L	ND	4.0	08/05/13 17:05	
Antimony, Dissolved	ug/L	ND	0.50	08/05/13 17:05	
Arsenic, Dissolved	ug/L	ND	0.50	08/05/13 17:05	
Barium, Dissolved	ug/L	ND	0.30	08/05/13 17:05	
Beryllium, Dissolved	ug/L	ND	0.20	08/05/13 17:05	
Cadmium, Dissolved	ug/L	ND	0.080	08/05/13 17:05	
Calcium, Dissolved	ug/L	ND	20.0	08/05/13 17:05	
Chromium, Dissolved	ug/L	ND	0.50	08/05/13 17:05	
Cobalt, Dissolved	ug/L	ND	0.50	08/05/13 17:05	
Copper, Dissolved	ug/L	ND	0.50	08/05/13 17:05	
Iron, Dissolved	ug/L	ND	50.0	08/05/13 17:05	
Lead, Dissolved	ug/L	ND	0.10	08/05/13 17:05	
Magnesium, Dissolved	ug/L	ND	5.0	08/05/13 17:05	
Manganese, Dissolved	ug/L	ND	0.50	08/05/13 17:05	
Molybdenum, Dissolved	ug/L	ND	0.50	08/05/13 17:05	
Nickel, Dissolved	ug/L	ND	0.50	08/05/13 17:05	
Potassium, Dissolved	ug/L	ND	20.0	08/05/13 17:05	
Selenium, Dissolved	ug/L	ND	0.50	08/05/13 17:05	
Silver, Dissolved	ug/L	ND	0.50	08/05/13 17:05	
Sodium, Dissolved	ug/L	ND	50.0	08/05/13 17:05	
Thallium, Dissolved	ug/L	ND	0.10	08/05/13 17:05	
Vanadium, Dissolved	ug/L	ND	0.10	08/05/13 17:05	
Zinc, Dissolved	ug/L	ND	5.0	08/05/13 17:05	

LABORATORY CONTROL SAMPLE: 1486567

Parameter	Units	Spike Conc.	LCS Result	LCS % Rec	% Rec Limits	Qualifiers
Aluminum, Dissolved	ug/L	80	85.9	107	85-115	
Antimony, Dissolved	ug/L	80	82.5	103	85-115	
Arsenic, Dissolved	ug/L	80	82.0	102	85-115	
Barium, Dissolved	ug/L	80	82.5	103	85-115	
Beryllium, Dissolved	ug/L	80	82.2	103	85-115	
Cadmium, Dissolved	ug/L	80	81.6	102	85-115	
Calcium, Dissolved	ug/L	1000	1120	112	85-115	
Chromium, Dissolved	ug/L	80	82.5	103	85-115	
Cobalt, Dissolved	ug/L	80	83.3	104	85-115	
Copper, Dissolved	ug/L	80	82.7	103	85-115	
Iron, Dissolved	ug/L	1000	1030	103	85-115	
Lead, Dissolved	ug/L	80	84.2	105	85-115	
Magnesium, Dissolved	ug/L	1000	1060	106	85-115	
Manganese, Dissolved	ug/L	80	83.5	104	85-115	

This report shall not be reproduced, except in full,
without the written consent of Pace Analytical Services, Inc..

Pace Analytical Services, Inc.
9608 Loiret Blvd.
Lenexa, KS 66219
(913)599-5665

QUALITY CONTROL DATA

Project: July 2013 Rico Water Sampling
Pace Project No.: 60149302

LABORATORY CONTROL SAMPLE: 1486567

Parameter	Units	Spike Conc.	LCS Result	LCS % Rec	% Rec Limits	Qualifiers
Molybdenum, Dissolved	ug/L	80	78.4	98	85-115	
Nickel, Dissolved	ug/L	80	81.8	102	85-115	
Potassium, Dissolved	ug/L	1000	1030	103	85-115	
Selenium, Dissolved	ug/L	80	84.4	105	85-115	
Silver, Dissolved	ug/L	80	83.2	104	85-115	
Sodium, Dissolved	ug/L	1000	1040	104	85-115	
Thallium, Dissolved	ug/L	80	86.6	108	85-115	
Vanadium, Dissolved	ug/L	80	81.8	102	85-115	
Zinc, Dissolved	ug/L	80	88.4	110	85-115	

MATRIX SPIKE & MATRIX SPIKE DUPLICATE: 1486568 1486569

Parameter	Units	60149302013 Result	MS Spike Conc.	MSD Spike Conc.	MS Result	MSD Result	MS % Rec	MSD % Rec	% Rec Limits	RPD	Max RPD	Qual
Aluminum, Dissolved	ug/L	5.1	80	80	90.8	85.9	107	101	70-130	6	20	
Antimony, Dissolved	ug/L	ND	80	80	84.9	82.2	106	103	70-130	3	20	
Arsenic, Dissolved	ug/L	ND	80	80	85.9	83.8	107	104	70-130	2	20	
Barium, Dissolved	ug/L	30.4	80	80	114	111	104	100	70-130	3	20	
Beryllium, Dissolved	ug/L	ND	80	80	83.4	81.8	104	102	70-130	2	20	
Cadmium, Dissolved	ug/L	0.29	80	80	83.0	81.7	103	102	70-130	2	20	
Calcium, Dissolved	ug/L	143000	1000	1000	146000	139000	322	-310	70-130	4	20	E,M1
Chromium, Dissolved	ug/L	ND	80	80	83.1	80.3	104	100	70-130	4	20	
Cobalt, Dissolved	ug/L	ND	80	80	83.4	81.8	104	102	70-130	2	20	
Copper, Dissolved	ug/L	2.4	80	80	82.4	80.0	100	97	70-130	3	20	
Iron, Dissolved	ug/L	ND	1000	1000	1050	1030	104	102	70-130	2	20	
Lead, Dissolved	ug/L	0.13	80	80	81.3	79.6	101	99	70-130	2	20	
Magnesium, Dissolved	ug/L	16200	1000	1000	17900	17100	164	89	70-130	4	20	M1
Manganese, Dissolved	ug/L	41.9	80	80	125	122	104	101	70-130	2	20	
Molybdenum, Dissolved	ug/L	0.54	80	80	81.8	78.9	102	98	70-130	4	20	
Nickel, Dissolved	ug/L	3.9	80	80	85.3	83.0	102	99	70-130	3	20	
Potassium, Dissolved	ug/L	2660	1000	1000	3760	3580	110	91	70-130	5	20	
Selenium, Dissolved	ug/L	3.2	80	80	89.5	87.7	108	106	70-130	2	20	
Silver, Dissolved	ug/L	ND	80	80	80.0	78.0	100	97	70-130	2	20	
Sodium, Dissolved	ug/L	2930	1000	1000	4040	3910	111	98	70-130	3	20	
Thallium, Dissolved	ug/L	ND	80	80	84.7	82.3	106	103	70-130	3	20	
Vanadium, Dissolved	ug/L	ND	80	80	83.2	80.9	104	101	70-130	3	20	
Zinc, Dissolved	ug/L	33.6	80	80	119	115	107	101	70-130	4	20	

This report shall not be reproduced, except in full,
without the written consent of Pace Analytical Services, Inc..

Pace Analytical Services, Inc.
9608 Loiret Blvd.
Lenexa, KS 66219
(913)599-5665

QUALITY CONTROL DATA

Project: July 2013 Rico Water Sampling
Pace Project No.: 60149302

QC Batch: MPRP/23586 | Analysis Method: EPA 200.8
QC Batch Method: EPA 200.8 | Analysis Description: 200.8 Potentially Dissolved Metals
Associated Lab Samples: 60149302001, 60149302002, 60149302003, 60149302004, 60149302005, 60149302006, 60149302007, 60149302008, 60149302009, 60149302010, 60149302011, 60149302012, 60149302013, 60149302014, 60149302015, 60149302016, 60149302017, 60149302018, 60149302019

METHOD BLANK: 1224384 | Matrix: Water
Associated Lab Samples: 60149302001, 60149302002, 60149302003, 60149302004, 60149302005, 60149302006, 60149302007, 60149302008, 60149302009, 60149302010, 60149302011, 60149302012, 60149302013, 60149302014, 60149302015, 60149302016, 60149302017, 60149302018, 60149302019

Parameter	Units	Blank Result	Reporting Limit	Analyzed	Qualifiers
Aluminum, Dissolved	ug/L	ND	50.0	08/15/13 23:17	
Antimony, Dissolved	ug/L	ND	1.0	08/15/13 23:17	
Arsenic, Dissolved	ug/L	ND	1.0	08/15/13 23:17	
Barium, Dissolved	ug/L	ND	1.0	08/15/13 23:17	
Beryllium, Dissolved	ug/L	ND	0.50	08/15/13 23:17	
Cadmium, Dissolved	ug/L	ND	0.50	08/15/13 23:17	
Chromium, Dissolved	ug/L	0.30J	1.0	08/15/13 23:17	
Cobalt, Dissolved	ug/L	ND	1.0	08/15/13 23:17	
Copper, Dissolved	ug/L	ND	1.0	08/15/13 23:17	
Iron, Dissolved	ug/L	9.3J	50.0	08/15/13 23:17	
Lead, Dissolved	ug/L	0.033J	1.0	08/15/13 23:17	
Manganese, Dissolved	ug/L	0.46J	1.0	08/15/13 23:17	
Molybdenum, Dissolved	ug/L	ND	1.0	08/15/13 23:17	
Nickel, Dissolved	ug/L	0.17J	1.0	08/15/13 23:17	
Selenium, Dissolved	ug/L	ND	1.0	08/15/13 23:17	
Silver, Dissolved	ug/L	ND	0.50	08/15/13 23:17	
Thallium, Dissolved	ug/L	0.24J	1.0	08/15/13 23:17	
Vanadium, Dissolved	ug/L	ND	1.0	08/15/13 23:17	
Zinc, Dissolved	ug/L	ND	10.0	08/15/13 23:17	

LABORATORY CONTROL SAMPLE: 1224385

Parameter	Units	Spike Conc.	LCS Result	LCS % Rec	% Rec Limits	Qualifiers
Aluminum, Dissolved	ug/L	1000	970	97	85-115	
Antimony, Dissolved	ug/L	40	41.0	103	85-115	
Arsenic, Dissolved	ug/L	40	40.3	101	85-115	
Barium, Dissolved	ug/L	40	39.8	100	85-115	
Beryllium, Dissolved	ug/L	40	39.7	99	85-115	
Cadmium, Dissolved	ug/L	40	40.3	101	85-115	
Chromium, Dissolved	ug/L	40	40.5	101	85-115	
Cobalt, Dissolved	ug/L	40	39.9	100	85-115	
Copper, Dissolved	ug/L	40	40.1	100	85-115	
Iron, Dissolved	ug/L	1000	993	99	85-115	
Lead, Dissolved	ug/L	40	40.1	100	85-115	
Manganese, Dissolved	ug/L	40	41.1	103	85-115	
Molybdenum, Dissolved	ug/L	40	40.2	101	85-115	
Nickel, Dissolved	ug/L	40	40.4	101	85-115	
Selenium, Dissolved	ug/L	40	41.2	103	85-115	

This report shall not be reproduced, except in full,
without the written consent of Pace Analytical Services, Inc..

Pace Analytical Services, Inc.
9608 Loiret Blvd.
Lenexa, KS 66219
(913)599-5665

QUALITY CONTROL DATA

Project: July 2013 Rico Water Sampling
Pace Project No.: 60149302

LABORATORY CONTROL SAMPLE: 1224385

Parameter	Units	Spike Conc.	LCS Result	LCS % Rec	% Rec Limits	Qualifiers
Silver, Dissolved	ug/L	20	19.9	99	85-115	
Thallium, Dissolved	ug/L	40	38.2	95	85-115	
Vanadium, Dissolved	ug/L	40	40.1	100	85-115	
Zinc, Dissolved	ug/L	100	103	103	85-115	

MATRIX SPIKE & MATRIX SPIKE DUPLICATE: 1224386 1224387

Parameter	Units	60149302005 Result	MS Spike Conc.	MSD Spike Conc.	MS Result	MSD Result	MS % Rec	MSD % Rec	% Rec Limits	RPD	Max RPD	Qual
Aluminum, Dissolved	ug/L	1650	1000	1000	2540	2600	88	95	70-130	3	20	
Antimony, Dissolved	ug/L	0.20J	40	40	40.0	40.3	100	100	70-130	1	20	
Arsenic, Dissolved	ug/L	2.3	40	40	42.9	43.2	101	102	70-130	1	20	
Barium, Dissolved	ug/L	44.5	40	40	80.9	83.3	91	97	70-130	3	20	
Beryllium, Dissolved	ug/L	0.35J	40	40	36.7	36.4	91	90	70-130	1	20	
Cadmium, Dissolved	ug/L	0.70	40	40	38.8	39.5	95	97	70-130	2	20	
Chromium, Dissolved	ug/L	2.3	40	40	41.5	40.8	98	96	70-130	2	20	
Cobalt, Dissolved	ug/L	2.5	40	40	40.2	40.3	94	95	70-130	0	20	
Copper, Dissolved	ug/L	18.5	40	40	55.1	55.5	92	93	70-130	1	20	
Iron, Dissolved	ug/L	2510	1000	1000	3400	3490	89	98	70-130	3	20	
Lead, Dissolved	ug/L	55.3	40	40	93.6	96.7	96	104	70-130	3	20	
Manganese, Dissolved	ug/L	360	40	40	386	400	64	100	70-130	4	20	M1
Molybdenum, Dissolved	ug/L	4.8	40	40	46.2	46.7	104	105	70-130	1	20	
Nickel, Dissolved	ug/L	2.5	40	40	39.8	39.9	93	93	70-130	0	20	
Selenium, Dissolved	ug/L	5.9	40	40	47.0	47.6	103	104	70-130	1	20	
Silver, Dissolved	ug/L	0.47J	20	20	18.9	19.1	92	93	70-130	1	20	
Thallium, Dissolved	ug/L	0.28J	40	40	37.6	38.0	93	94	70-130	1	20	
Vanadium, Dissolved	ug/L	2.6	40	40	41.8	42.0	98	98	70-130	1	20	
Zinc, Dissolved	ug/L	118	100	100	209	215	92	97	70-130	2	20	

MATRIX SPIKE SAMPLE: 1224388

Parameter	Units	60149302006 Result	Spike Conc.	MS Result	MS % Rec	% Rec Limits	Qualifiers
Aluminum, Dissolved	ug/L	76.9	1000	1040	96	70-130	
Antimony, Dissolved	ug/L	0.10J	40	41.1	102	70-130	
Arsenic, Dissolved	ug/L	0.26J	40	41.8	104	70-130	
Barium, Dissolved	ug/L	16.1	40	55.5	98	70-130	
Beryllium, Dissolved	ug/L	ND	40	38.2	95	70-130	
Cadmium, Dissolved	ug/L	1.1	40	40.6	99	70-130	
Chromium, Dissolved	ug/L	0.77J	40	40.1	98	70-130	
Cobalt, Dissolved	ug/L	0.095J	40	38.8	97	70-130	
Copper, Dissolved	ug/L	1.2	40	39.3	95	70-130	
Iron, Dissolved	ug/L	282	1000	1270	98	70-130	
Lead, Dissolved	ug/L	7.1	40	47.3	101	70-130	
Manganese, Dissolved	ug/L	23.6	40	63.2	99	70-130	
Molybdenum, Dissolved	ug/L	7.2	40	49.6	106	70-130	

This report shall not be reproduced, except in full,
without the written consent of Pace Analytical Services, Inc..

Pace Analytical Services, Inc.
9608 Loiret Blvd.
Lenexa, KS 66219
(913)599-5665

QUALITY CONTROL DATA

Project: July 2013 Rico Water Sampling
Pace Project No.: 60149302

MATRIX SPIKE SAMPLE: 1224388

Parameter	Units	60149302006 Result	Spike Conc.	MS Result	MS % Rec	% Rec Limits	Qualifiers
Nickel, Dissolved	ug/L	0.34J	40	39.0	97	70-130	
Selenium, Dissolved	ug/L	1.5	40	44.0	106	70-130	
Silver, Dissolved	ug/L	0.064J	20	18.9	94	70-130	
Thallium, Dissolved	ug/L	0.31J	40	38.3	95	70-130	
Vanadium, Dissolved	ug/L	0.31J	40	40.4	100	70-130	
Zinc, Dissolved	ug/L	24.5	100	124	100	70-130	

This report shall not be reproduced, except in full,
without the written consent of Pace Analytical Services, Inc..

Pace Analytical Services, Inc.
9608 Loiret Blvd.
Lenexa, KS 66219
(913)599-5665

QUALITY CONTROL DATA

Project: July 2013 Rico Water Sampling
Pace Project No.: 60149302

QC Batch: MT/13020 | Analysis Method: SM 2510B
QC Batch Method: SM 2510B | Analysis Description: 2510B Specific Conductance
Associated Lab Samples: 60149302001, 60149302002, 60149302003, 60149302004, 60149302005, 60149302006, 60149302007, 60149302008, 60149302009, 60149302010

METHOD BLANK: 1492410 | Matrix: Water
Associated Lab Samples: 60149302001, 60149302002, 60149302003, 60149302004, 60149302005, 60149302006, 60149302007, 60149302008, 60149302009, 60149302010

Parameter	Units	Blank Result	Reporting Limit	Analyzed	Qualifiers
Specific Conductance	umhos/cm	ND	10.0	08/01/13 17:11	

LABORATORY CONTROL SAMPLE: 1492411

Parameter	Units	Spike Conc.	LCS Result	LCS % Rec	% Rec Limits	Qualifiers
Specific Conductance	umhos/cm	1000	958	96	90-110	

SAMPLE DUPLICATE: 1492412

Parameter	Units	10236163001 Result	Dup Result	RPD	Max RPD	Qualifiers
Specific Conductance	umhos/cm	145	149	3	20	

SAMPLE DUPLICATE: 1492413

Parameter	Units	10236454001 Result	Dup Result	RPD	Max RPD	Qualifiers
Specific Conductance	umhos/cm	1660	1680	.8	20	

This report shall not be reproduced, except in full,
without the written consent of Pace Analytical Services, Inc..

Pace Analytical Services, Inc.
9608 Loiret Blvd.
Lenexa, KS 66219
(913)599-5665

QUALITY CONTROL DATA

Project: July 2013 Rico Water Sampling
Pace Project No.: 60149302

QC Batch: MT/13035 | Analysis Method: SM 2510B
QC Batch Method: SM 2510B | Analysis Description: 2510B Specific Conductance
Associated Lab Samples: 60149302011, 60149302012, 60149302013, 60149302014, 60149302015, 60149302016, 60149302017, 60149302018, 60149302019

METHOD BLANK: 1492984 | Matrix: Water
Associated Lab Samples: 60149302011, 60149302012, 60149302013, 60149302014, 60149302015, 60149302016, 60149302017, 60149302018, 60149302019

Parameter	Units	Blank Result	Reporting Limit	Analyzed	Qualifiers
Specific Conductance	umhos/cm	ND	10.0	08/02/13 11:01	

LABORATORY CONTROL SAMPLE: 1492985

Parameter	Units	Spike Conc.	LCS Result	LCS % Rec	% Rec Limits	Qualifiers
Specific Conductance	umhos/cm	1000	990	99	90-110	

SAMPLE DUPLICATE: 1492986

Parameter	Units	10236510005 Result	Dup Result	RPD	Max RPD	Qualifiers
Specific Conductance	umhos/cm	4810	4820	.2	20	

SAMPLE DUPLICATE: 1492987

Parameter	Units	10236510025 Result	Dup Result	RPD	Max RPD	Qualifiers
Specific Conductance	umhos/cm	8380	8210	2	20	

This report shall not be reproduced, except in full,
without the written consent of Pace Analytical Services, Inc..

Pace Analytical Services, Inc.
9608 Loiret Blvd.
Lenexa, KS 66219
(913)599-5665

QUALITY CONTROL DATA

Project: July 2013 Rico Water Sampling
Pace Project No.: 60149302

QC Batch: WET/42488 Analysis Method: SM 2320B
QC Batch Method: SM 2320B Analysis Description: 2320B Alkalinity
Associated Lab Samples: 60149302001, 60149302002, 60149302003, 60149302004, 60149302005, 60149302006, 60149302007, 60149302008, 60149302009, 60149302010, 60149302011

METHOD BLANK: 1223994 Matrix: Water
Associated Lab Samples: 60149302001, 60149302002, 60149302003, 60149302004, 60149302005, 60149302006, 60149302007, 60149302008, 60149302009, 60149302010, 60149302011

Parameter	Units	Blank Result	Reporting Limit	Analyzed	Qualifiers
Alkalinity, Carbonate (CaCO3)	mg/L	ND	20.0	07/23/13 08:14	
Alkalinity, Total as CaCO3	mg/L	ND	20.0	07/23/13 08:14	
Alkalinity,Bicarbonate (CaCO3)	mg/L	ND	20.0	07/23/13 08:14	

LABORATORY CONTROL SAMPLE: 1223995

Parameter	Units	Spike Conc.	LCS Result	LCS % Rec	% Rec Limits	Qualifiers
Alkalinity, Total as CaCO3	mg/L	500	470	94	90-110	

SAMPLE DUPLICATE: 1223998

Parameter	Units	60149200002 Result	Dup Result	RPD	Max RPD	Qualifiers
Alkalinity, Carbonate (CaCO3)	mg/L	ND	ND		10	
Alkalinity, Total as CaCO3	mg/L	102	115	12	10	D6
Alkalinity,Bicarbonate (CaCO3)	mg/L	102	115	12	10	D6

SAMPLE DUPLICATE: 1223999

Parameter	Units	60149183001 Result	Dup Result	RPD	Max RPD	Qualifiers
Alkalinity, Carbonate (CaCO3)	mg/L	ND	ND		10	
Alkalinity, Total as CaCO3	mg/L	146	152	4	10	
Alkalinity,Bicarbonate (CaCO3)	mg/L	146	152	4	10	

This report shall not be reproduced, except in full,
without the written consent of Pace Analytical Services, Inc..

Pace Analytical Services, Inc.
9608 Loiret Blvd.
Lenexa, KS 66219
(913)599-5665

QUALITY CONTROL DATA

Project: July 2013 Rico Water Sampling
Pace Project No.: 60149302

QC Batch: WET/42534 Analysis Method: SM 2320B
QC Batch Method: SM 2320B Analysis Description: 2320B Alkalinity
Associated Lab Samples: 60149302012, 60149302013, 60149302014, 60149302015, 60149302016, 60149302017, 60149302018

METHOD BLANK: 1225305 Matrix: Water
Associated Lab Samples: 60149302012, 60149302013, 60149302014, 60149302015, 60149302016, 60149302017, 60149302018

Parameter	Units	Blank Result	Reporting Limit	Analyzed	Qualifiers
Alkalinity, Carbonate (CaCO3)	mg/L	ND	20.0	07/25/13 08:27	
Alkalinity, Total as CaCO3	mg/L	ND	20.0	07/25/13 08:27	
Alkalinity,Bicarbonate (CaCO3)	mg/L	ND	20.0	07/25/13 08:27	

LABORATORY CONTROL SAMPLE: 1225306

Parameter	Units	Spike Conc.	LCS Result	LCS % Rec	% Rec Limits	Qualifiers
Alkalinity, Total as CaCO3	mg/L	500	478	96	90-110	

SAMPLE DUPLICATE: 1225309

Parameter	Units	60149481002 Result	Dup Result	RPD	Max RPD	Qualifiers
Alkalinity, Carbonate (CaCO3)	mg/L	ND	ND		10	
Alkalinity, Total as CaCO3	mg/L	94.3	93.4	1	10	
Alkalinity,Bicarbonate (CaCO3)	mg/L	94.3	93.4	1	10	

SAMPLE DUPLICATE: 1225376

Parameter	Units	60149440001 Result	Dup Result	RPD	Max RPD	Qualifiers
Alkalinity, Carbonate (CaCO3)	mg/L	ND	ND		10	
Alkalinity, Total as CaCO3	mg/L	ND	ND		10	
Alkalinity,Bicarbonate (CaCO3)	mg/L	ND	ND		10	

This report shall not be reproduced, except in full,
without the written consent of Pace Analytical Services, Inc..

Pace Analytical Services, Inc.
9608 Loiret Blvd.
Lenexa, KS 66219
(913)599-5665

QUALITY CONTROL DATA

Project: July 2013 Rico Water Sampling
Pace Project No.: 60149302

QC Batch: WET/42582 | Analysis Method: SM 2320B
QC Batch Method: SM 2320B | Analysis Description: 2320B Alkalinity
Associated Lab Samples: 60149302019

METHOD BLANK: 1227159 | Matrix: Water
Associated Lab Samples: 60149302019

Parameter	Units	Blank Result	Reporting Limit	Analyzed	Qualifiers
Alkalinity, Carbonate (CaCO3)	mg/L	ND	20.0	07/29/13 09:06	
Alkalinity, Total as CaCO3	mg/L	ND	20.0	07/29/13 09:06	
Alkalinity,Bicarbonate (CaCO3)	mg/L	ND	20.0	07/29/13 09:06	

LABORATORY CONTROL SAMPLE: 1227160

Parameter	Units	Spike Conc.	LCS Result	LCS % Rec	% Rec Limits	Qualifiers
Alkalinity, Total as CaCO3	mg/L	500	487	97	90-110	

SAMPLE DUPLICATE: 1227163

Parameter	Units	60149538001 Result	Dup Result	RPD	Max RPD	Qualifiers
Alkalinity, Carbonate (CaCO3)	mg/L	ND	ND		10	
Alkalinity, Total as CaCO3	mg/L	1.7J	ND		10	
Alkalinity,Bicarbonate (CaCO3)	mg/L	1.7J	ND		10	

SAMPLE DUPLICATE: 1227164

Parameter	Units	60149539004 Result	Dup Result	RPD	Max RPD	Qualifiers
Alkalinity, Carbonate (CaCO3)	mg/L	ND	ND		10	
Alkalinity, Total as CaCO3	mg/L	237	247	4	10	
Alkalinity,Bicarbonate (CaCO3)	mg/L	237	247	4	10	

This report shall not be reproduced, except in full,
without the written consent of Pace Analytical Services, Inc..

Pace Analytical Services, Inc.
9608 Loiret Blvd.
Lenexa, KS 66219
(913)599-5665

QUALITY CONTROL DATA

Project: July 2013 Rico Water Sampling
Pace Project No.: 60149302

QC Batch: WET/42502 Analysis Method: SM 2540C
QC Batch Method: SM 2540C Analysis Description: 2540C Total Dissolved Solids
Associated Lab Samples: 60149302001, 60149302002, 60149302003, 60149302004, 60149302005, 60149302006, 60149302007, 60149302008, 60149302009, 60149302010, 60149302011, 60149302012, 60149302013, 60149302014, 60149302015, 60149302016, 60149302017, 60149302018, 60149302019

METHOD BLANK: 1224237 Matrix: Water
Associated Lab Samples: 60149302001, 60149302002, 60149302003, 60149302004, 60149302005, 60149302006, 60149302007, 60149302008, 60149302009, 60149302010, 60149302011, 60149302012, 60149302013, 60149302014, 60149302015, 60149302016, 60149302017, 60149302018, 60149302019

Parameter	Units	Blank Result	Reporting Limit	Analyzed	Qualifiers
Total Dissolved Solids	mg/L	ND	5.0	07/23/13 15:40	

LABORATORY CONTROL SAMPLE: 1224238

Parameter	Units	Spike Conc.	LCS Result	LCS % Rec	% Rec Limits	Qualifiers
Total Dissolved Solids	mg/L	1000	950	95	80-120	

SAMPLE DUPLICATE: 1224239

Parameter	Units	60149302001 Result	Dup Result	RPD	Max RPD	Qualifiers
Total Dissolved Solids	mg/L	481	493	2	17	

SAMPLE DUPLICATE: 1224240

Parameter	Units	60149302010 Result	Dup Result	RPD	Max RPD	Qualifiers
Total Dissolved Solids	mg/L	1030	1050	2	17	

This report shall not be reproduced, except in full,
without the written consent of Pace Analytical Services, Inc..

Pace Analytical Services, Inc.
9608 Loiret Blvd.
Lenexa, KS 66219
(913)599-5665

QUALITY CONTROL DATA

Project: July 2013 Rico Water Sampling
Pace Project No.: 60149302

QC Batch: WET/42484 | Analysis Method: SM 2540D
QC Batch Method: SM 2540D | Analysis Description: 2540D Total Suspended Solids
Associated Lab Samples: 60149302001

METHOD BLANK: 1223845 | Matrix: Water
Associated Lab Samples: 60149302001

Parameter	Units	Blank Result	Reporting Limit	Analyzed	Qualifiers
Total Suspended Solids	mg/L	ND	5.0	07/22/13 12:46	

SAMPLE DUPLICATE: 1223846

Parameter	Units	60149141004 Result	Dup Result	RPD	Max RPD	Qualifiers
Total Suspended Solids	mg/L	ND	ND		25	

SAMPLE DUPLICATE: 1223847

Parameter	Units	60149181001 Result	Dup Result	RPD	Max RPD	Qualifiers
Total Suspended Solids	mg/L	105	124	17	25	

This report shall not be reproduced, except in full,
without the written consent of Pace Analytical Services, Inc..

Pace Analytical Services, Inc.
9608 Loiret Blvd.
Lenexa, KS 66219
(913)599-5665

QUALITY CONTROL DATA

Project: July 2013 Rico Water Sampling
Pace Project No.: 60149302

QC Batch: WET/42490 Analysis Method: SM 2540D
QC Batch Method: SM 2540D Analysis Description: 2540D Total Suspended Solids
Associated Lab Samples: 60149302002, 60149302003, 60149302004, 60149302005, 60149302006, 60149302007, 60149302008, 60149302009, 60149302010, 60149302011, 60149302012

METHOD BLANK: 1224049 Matrix: Water
Associated Lab Samples: 60149302002, 60149302003, 60149302004, 60149302005, 60149302006, 60149302007, 60149302008, 60149302009, 60149302010, 60149302011, 60149302012

Parameter	Units	Blank Result	Reporting Limit	Analyzed	Qualifiers
Total Suspended Solids	mg/L	ND	5.0	07/23/13 08:18	

SAMPLE DUPLICATE: 1224050

Parameter	Units	60149302002 Result	Dup Result	RPD	Max RPD	Qualifiers
Total Suspended Solids	mg/L	120	124	3	25	

SAMPLE DUPLICATE: 1224051

Parameter	Units	60149302012 Result	Dup Result	RPD	Max RPD	Qualifiers
Total Suspended Solids	mg/L	ND	ND		25	

This report shall not be reproduced, except in full,
without the written consent of Pace Analytical Services, Inc..

Pace Analytical Services, Inc.
9608 Loiret Blvd.
Lenexa, KS 66219
(913)599-5665

QUALITY CONTROL DATA

Project: July 2013 Rico Water Sampling
Pace Project No.: 60149302

QC Batch: WET/42514 Analysis Method: SM 2540D
QC Batch Method: SM 2540D Analysis Description: 2540D Total Suspended Solids
Associated Lab Samples: 60149302013, 60149302014, 60149302015, 60149302016, 60149302017, 60149302018, 60149302019

METHOD BLANK: 1224648 Matrix: Water
Associated Lab Samples: 60149302013, 60149302014, 60149302015, 60149302016, 60149302017, 60149302018, 60149302019

Parameter	Units	Blank Result	Reporting Limit	Analyzed	Qualifiers
Total Suspended Solids	mg/L	ND	5.0	07/24/13 08:17	

SAMPLE DUPLICATE: 1224649

Parameter	Units	60149351002 Result	Dup Result	RPD	Max RPD	Qualifiers
Total Suspended Solids	mg/L	6.0	5.0	18	25	

SAMPLE DUPLICATE: 1224650

Parameter	Units	60149302017 Result	Dup Result	RPD	Max RPD	Qualifiers
Total Suspended Solids	mg/L	702	708	1	25	

This report shall not be reproduced, except in full,
without the written consent of Pace Analytical Services, Inc..

Pace Analytical Services, Inc.
9608 Loiret Blvd.
Lenexa, KS 66219
(913)599-5665

QUALITY CONTROL DATA

Project: July 2013 Rico Water Sampling
Pace Project No.: 60149302

QC Batch: WET/42548 — Analysis Method: SM 4500-S-2 D
QC Batch Method: SM 4500-S-2 D — Analysis Description: 4500S2D Sulfide, Total
Associated Lab Samples: 60149302001, 60149302002, 60149302003, 60149302004, 60149302005, 60149302006, 60149302007, 60149302008, 60149302009, 60149302010, 60149302011, 60149302012

METHOD BLANK: 1225752 — Matrix: Water
Associated Lab Samples: 60149302001, 60149302002, 60149302003, 60149302004, 60149302005, 60149302006, 60149302007, 60149302008, 60149302009, 60149302010, 60149302011, 60149302012

Parameter	Units	Blank Result	Reporting Limit	Analyzed	Qualifiers
Sulfide, Total	mg/L	ND	0.050	07/25/13 14:06	

LABORATORY CONTROL SAMPLE: 1225753

Parameter	Units	Spike Conc.	LCS Result	LCS % Rec	% Rec Limits	Qualifiers
Sulfide, Total	mg/L	.5	0.50	99	80-120	

MATRIX SPIKE SAMPLE: 1225754

Parameter	Units	60149302001 Result	Spike Conc.	MS Result	MS % Rec	% Rec Limits	Qualifiers
Sulfide, Total	mg/L	ND	.5	0.22	44	75-125	M1

SAMPLE DUPLICATE: 1225755

Parameter	Units	60149302011 Result	Dup Result	RPD	Max RPD	Qualifiers
Sulfide, Total	mg/L	ND	ND		20	

This report shall not be reproduced, except in full,
without the written consent of Pace Analytical Services, Inc..

Pace Analytical Services, Inc.
9608 Loiret Blvd.
Lenexa, KS 66219
(913)599-5665

QUALITY CONTROL DATA

Project: July 2013 Rico Water Sampling
Pace Project No.: 60149302

QC Batch: WET/42566 | Analysis Method: SM 4500-S-2 D
QC Batch Method: SM 4500-S-2 D | Analysis Description: 4500S2D Sulfide, Total
Associated Lab Samples: 60149302013, 60149302014, 60149302015, 60149302016, 60149302017, 60149302018, 60149302019

METHOD BLANK: 1226274 | Matrix: Water
Associated Lab Samples: 60149302013, 60149302014, 60149302015, 60149302016, 60149302017, 60149302018, 60149302019

Parameter	Units	Blank Result	Reporting Limit	Analyzed	Qualifiers
Sulfide, Total	mg/L	ND	0.050	07/26/13 12:41	

LABORATORY CONTROL SAMPLE: 1226275

Parameter	Units	Spike Conc.	LCS Result	LCS % Rec	% Rec Limits	Qualifiers
Sulfide, Total	mg/L	.5	0.48	96	80-120	

MATRIX SPIKE SAMPLE: 1226276

Parameter	Units	60149302013 Result	Spike Conc.	MS Result	MS % Rec	% Rec Limits	Qualifiers
Sulfide, Total	mg/L	ND	.5	0.48	95	75-125	

SAMPLE DUPLICATE: 1226277

Parameter	Units	60149302014 Result	Dup Result	RPD	Max RPD	Qualifiers
Sulfide, Total	mg/L	ND	ND		20	

This report shall not be reproduced, except in full,
without the written consent of Pace Analytical Services, Inc..

Pace Analytical Services, Inc.
9608 Loiret Blvd.
Lenexa, KS 66219
(913)599-5665

QUALITY CONTROL DATA

Project: July 2013 Rico Water Sampling
Pace Project No.: 60149302

QC Batch: WETA/25637 Analysis Method: EPA 300.0
QC Batch Method: EPA 300.0 Analysis Description: 300.0 IC Anions
Associated Lab Samples: 60149302001, 60149302002, 60149302003, 60149302004, 60149302005, 60149302006, 60149302007, 60149302008, 60149302009, 60149302010, 60149302011, 60149302012, 60149302013, 60149302014, 60149302015, 60149302016, 60149302017, 60149302018, 60149302019

METHOD BLANK: 1228552 Matrix: Water
Associated Lab Samples: 60149302001, 60149302002, 60149302003, 60149302004, 60149302005, 60149302006, 60149302007, 60149302008, 60149302009, 60149302010, 60149302011, 60149302013, 60149302014, 60149302015, 60149302016, 60149302017, 60149302018, 60149302019

Parameter	Units	Blank Result	Reporting Limit	Analyzed	Qualifiers
Chloride	mg/L	ND	1.0	07/31/13 16:45	

METHOD BLANK: 1229221 Matrix: Water
Associated Lab Samples: 60149302001, 60149302002, 60149302003, 60149302004, 60149302005, 60149302006, 60149302007, 60149302008, 60149302009, 60149302010, 60149302011, 60149302012, 60149302013, 60149302014, 60149302015, 60149302016, 60149302017, 60149302018, 60149302019

Parameter	Units	Blank Result	Reporting Limit	Analyzed	Qualifiers
Chloride	mg/L	ND	1.0	08/01/13 16:39	
Sulfate	mg/L	ND	1.0	08/01/13 16:39	

LABORATORY CONTROL SAMPLE: 1228553

Parameter	Units	Spike Conc.	LCS Result	LCS % Rec	% Rec Limits	Qualifiers
Chloride	mg/L	5	4.7	94	90-110	

LABORATORY CONTROL SAMPLE: 1229222

Parameter	Units	Spike Conc.	LCS Result	LCS % Rec	% Rec Limits	Qualifiers
Chloride	mg/L	5	4.8	97	90-110	
Sulfate	mg/L	5	4.8	96	90-110	

MATRIX SPIKE & MATRIX SPIKE DUPLICATE: 1228554 1228555

Parameter	Units	60149302001 Result	MS Spike Conc.	MSD Spike Conc.	MS Result	MSD Result	MS % Rec	MSD % Rec	% Rec Limits	RPD	Max RPD	Qual
Chloride	mg/L	1.9	5	5	6.7	6.5	96	92	64-118	3	12	
Sulfate	mg/L	219	100	100	317	317	98	99	61-119	0	10	

This report shall not be reproduced, except in full,
without the written consent of Pace Analytical Services, Inc..

Pace Analytical Services, Inc.
9608 Loiret Blvd.
Lenexa, KS 66219
(913)599-5665

QUALITY CONTROL DATA

Project: July 2013 Rico Water Sampling
Pace Project No.: 60149302

MATRIX SPIKE SAMPLE: 1228556

Parameter	Units	60149302010 Result	Spike Conc.	MS Result	MS % Rec	% Rec Limits	Qualifiers
Chloride	mg/L	ND	5	5.3	91	64-118	
Sulfate	mg/L	620	500	1080	92	61-119	

This report shall not be reproduced, except in full,
without the written consent of Pace Analytical Services, Inc..

Pace Analytical Services, Inc.
9608 Loiret Blvd.
Lenexa, KS 66219
(913)599-5665

QUALITY CONTROL DATA

Project: July 2013 Rico Water Sampling
Pace Project No.: 60149302

QC Batch: WETA/25543 | Analysis Method: EPA 353.2
QC Batch Method: EPA 353.2 | Analysis Description: 353.2 Nitrate + Nitrite, preserved
Associated Lab Samples: 60149302001

METHOD BLANK: 1224098 | Matrix: Water
Associated Lab Samples: 60149302001

Parameter	Units	Blank Result	Reporting Limit	Analyzed	Qualifiers
Nitrogen, NO2 plus NO3	mg/L	ND	0.10	07/24/13 08:56	

LABORATORY CONTROL SAMPLE: 1224099

Parameter	Units	Spike Conc.	LCS Result	LCS % Rec	% Rec Limits	Qualifiers
Nitrogen, NO2 plus NO3	mg/L	2	2.1	106	90-110	

MATRIX SPIKE SAMPLE: 1224100

Parameter	Units	60149202009 Result	Spike Conc.	MS Result	MS % Rec	% Rec Limits	Qualifiers
Nitrogen, NO2 plus NO3	mg/L	102	80	182	100	90-110	

MATRIX SPIKE SAMPLE: 1224101

Parameter	Units	60149247001 Result	Spike Conc.	MS Result	MS % Rec	% Rec Limits	Qualifiers
Nitrogen, NO2 plus NO3	mg/L	37.8	40	79.8	105	90-110	

This report shall not be reproduced, except in full,
without the written consent of Pace Analytical Services, Inc..

Pace Analytical Services, Inc.
9608 Loiret Blvd.
Lenexa, KS 66219
(913)599-5665

QUALITY CONTROL DATA

Project: July 2013 Rico Water Sampling
Pace Project No.: 60149302

QC Batch: WETA/25544 | Analysis Method: EPA 353.2
QC Batch Method: EPA 353.2 | Analysis Description: 353.2 Nitrate + Nitrite, preserved

Associated Lab Samples: 60149302002, 60149302003, 60149302004, 60149302005, 60149302006, 60149302007, 60149302008, 60149302009, 60149302010, 60149302011, 60149302012, 60149302013, 60149302014, 60149302015, 60149302016, 60149302017, 60149302018, 60149302019

METHOD BLANK: 1224102 | Matrix: Water

Associated Lab Samples: 60149302002, 60149302003, 60149302004, 60149302005, 60149302006, 60149302007, 60149302008, 60149302009, 60149302010, 60149302011, 60149302012, 60149302013, 60149302014, 60149302015, 60149302016, 60149302017, 60149302018, 60149302019

Parameter	Units	Blank Result	Reporting Limit	Analyzed	Qualifiers
Nitrogen, NO2 plus NO3	mg/L	ND	0.10	07/24/13 09:22	

LABORATORY CONTROL SAMPLE: 1224103

Parameter	Units	Spike Conc.	LCS Result	LCS % Rec	% Rec Limits	Qualifiers
Nitrogen, NO2 plus NO3	mg/L	2	2.2	108	90-110	

MATRIX SPIKE SAMPLE: 1224104

Parameter	Units	60149302002 Result	Spike Conc.	MS Result	MS % Rec	% Rec Limits	Qualifiers
Nitrogen, NO2 plus NO3	mg/L	ND	2	2.4	116	90-110	M1

MATRIX SPIKE SAMPLE: 1224105

Parameter	Units	60149302003 Result	Spike Conc.	MS Result	MS % Rec	% Rec Limits	Qualifiers
Nitrogen, NO2 plus NO3	mg/L	ND	2	2.4	120	90-110	M1

This report shall not be reproduced, except in full,
without the written consent of Pace Analytical Services, Inc..

Pace Analytical Services, Inc.
9608 Loiret Blvd.
Lenexa, KS 66219
(913)599-5665

QUALITY CONTROL DATA

Project: July 2013 Rico Water Sampling
Pace Project No.: 60149302

QC Batch: WETA/25559 Analysis Method: SM 4500-CN-E
QC Batch Method: SM 4500-CN-E Analysis Description: 4500CNE Cyanide, Total
Associated Lab Samples: 60149302001, 60149302002, 60149302003, 60149302004, 60149302005, 60149302006, 60149302007, 60149302008, 60149302009, 60149302010, 60149302011, 60149302012, 60149302013, 60149302014, 60149302015, 60149302016, 60149302017, 60149302018, 60149302019

METHOD BLANK: 1224570 Matrix: Water
Associated Lab Samples: 60149302001, 60149302002, 60149302003, 60149302004, 60149302005, 60149302006, 60149302007, 60149302008, 60149302009, 60149302010, 60149302011, 60149302012, 60149302013, 60149302014, 60149302015, 60149302016, 60149302017, 60149302018, 60149302019

Parameter	Units	Blank Result	Reporting Limit	Analyzed	Qualifiers
Cyanide	mg/L	ND	0.0050	07/24/13 17:39	

LABORATORY CONTROL SAMPLE: 1224571

Parameter	Units	Spike Conc.	LCS Result	LCS % Rec	% Rec Limits	Qualifiers
Cyanide	mg/L	.1	0.10	101	69-126	

MATRIX SPIKE SAMPLE: 1224572

Parameter	Units	60149302001 Result	Spike Conc.	MS Result	MS % Rec	% Rec Limits	Qualifiers
Cyanide	mg/L	ND	.1	0.082	82	41-136	

SAMPLE DUPLICATE: 1224573

Parameter	Units	60149302019 Result	Dup Result	RPD	Max RPD	Qualifiers
Cyanide	mg/L	ND	ND		26	

This report shall not be reproduced, except in full,
without the written consent of Pace Analytical Services, Inc..

Pace Analytical Services, Inc.
9608 Loiret Blvd.
Lenexa, KS 66219
(913)599-5665

QUALITY CONTROL DATA

Project: July 2013 Rico Water Sampling
Pace Project No.: 60149302

QC Batch: WETA/18729 Analysis Method: SM 5310C
QC Batch Method: SM 5310C Analysis Description: 5310C Total Organic Carbon
Associated Lab Samples: 60149302001, 60149302002, 60149302003, 60149302004, 60149302005, 60149302006, 60149302007, 60149302008, 60149302009

METHOD BLANK: 829902 Matrix: Water
Associated Lab Samples: 60149302001, 60149302002, 60149302003, 60149302004, 60149302005, 60149302006, 60149302007, 60149302008, 60149302009

Parameter	Units	Blank Result	Reporting Limit	Analyzed	Qualifiers
Total Organic Carbon	mg/L	ND	0.50	07/30/13 00:21	

LABORATORY CONTROL SAMPLE: 829903

Parameter	Units	Spike Conc.	LCS Result	LCS % Rec	% Rec Limits	Qualifiers
Total Organic Carbon	mg/L	2.5	2.5	98	80-120	

MATRIX SPIKE & MATRIX SPIKE DUPLICATE: 829904 829905

Parameter	Units	60149200003 Result	MS Spike Conc.	MSD Spike Conc.	MS Result	MSD Result	MS % Rec	MSD % Rec	% Rec Limits	RPD	Max RPD	Qual
Total Organic Carbon	mg/L	1.3	5	5	6.5	6.6	103	106	80-120	2	20	

MATRIX SPIKE & MATRIX SPIKE DUPLICATE: 829906 829907

Parameter	Units	60149302001 Result	MS Spike Conc.	MSD Spike Conc.	MS Result	MSD Result	MS % Rec	MSD % Rec	% Rec Limits	RPD	Max RPD	Qual
Total Organic Carbon	mg/L	1.4	2.5	2.5	3.8	3.9	94	98	80-120	3	20	

This report shall not be reproduced, except in full,
without the written consent of Pace Analytical Services, Inc..

Pace Analytical Services, Inc.
9608 Loiret Blvd.
Lenexa, KS 66219
(913)599-5665

QUALITY CONTROL DATA

Project: July 2013 Rico Water Sampling
Pace Project No.: 60149302

QC Batch: WETA/18753 — Analysis Method: SM 5310C
QC Batch Method: SM 5310C — Analysis Description: 5310C Total Organic Carbon
Associated Lab Samples: 60149302010, 60149302011, 60149302012, 60149302013, 60149302014, 60149302015, 60149302016, 60149302017, 60149302018, 60149302019

METHOD BLANK: 830183 — Matrix: Water
Associated Lab Samples: 60149302010, 60149302011, 60149302012, 60149302013, 60149302014, 60149302015, 60149302016, 60149302017, 60149302018, 60149302019

Parameter	Units	Blank Result	Reporting Limit	Analyzed	Qualifiers
Total Organic Carbon	mg/L	ND	0.50	07/30/13 17:33	

LABORATORY CONTROL SAMPLE: 830184

Parameter	Units	Spike Conc.	LCS Result	LCS % Rec	% Rec Limits	Qualifiers
Total Organic Carbon	mg/L	2.5	2.4	95	80-120	

MATRIX SPIKE & MATRIX SPIKE DUPLICATE: 830185 830186

Parameter	Units	60149302010 Result	MS Spike Conc.	MSD Spike Conc.	MS Result	MSD Result	MS % Rec	MSD % Rec	% Rec Limits	RPD	Max RPD	Qual
Total Organic Carbon	mg/L	ND	2.5	2.5	2.8	2.8	103	106	80-120	3	20	

MATRIX SPIKE & MATRIX SPIKE DUPLICATE: 830187 830188

Parameter	Units	60149302011 Result	MS Spike Conc.	MSD Spike Conc.	MS Result	MSD Result	MS % Rec	MSD % Rec	% Rec Limits	RPD	Max RPD	Qual
Total Organic Carbon	mg/L	0.57	2.5	2.5	3.1	3.2	102	104	80-120	2	20	

This report shall not be reproduced, except in full,
without the written consent of Pace Analytical Services, Inc..

Pace Analytical Services, Inc.
9608 Loiret Blvd.
Lenexa, KS 66219
(913)599-5665

QUALIFIERS

Project: July 2013 Rico Water Sampling
Pace Project No.: 60149302

DEFINITIONS

DF - Dilution Factor, if reported, represents the factor applied to the reported data due to changes in sample preparation, dilution of the sample aliquot, or moisture content.

ND - Not Detected at or above adjusted reporting limit.

J - Estimated concentration above the adjusted method detection limit and below the adjusted reporting limit.

MDL - Adjusted Method Detection Limit.

PRL - Pace Reporting Limit.

RL - Reporting Limit.

S - Surrogate

1,2-Diphenylhydrazine (8270 listed analyte) decomposes to Azobenzene.

Consistent with EPA guidelines, unrounded data are displayed and have been used to calculate % recovery and RPD values.

LCS(D) - Laboratory Control Sample (Duplicate)

MS(D) - Matrix Spike (Duplicate)

DUP - Sample Duplicate

RPD - Relative Percent Difference

NC - Not Calculable.

SG - Silica Gel - Clean-Up

U - Indicates the compound was analyzed for, but not detected.

N-Nitrosodiphenylamine decomposes and cannot be separated from Diphenylamine using Method 8270. The result reported for each analyte is a combined concentration.

Pace Analytical is TNI accredited. Contact your Pace PM for the current list of accredited analytes.

TNI - The NELAC Institute.

LABORATORIES

PASI-G	Pace Analytical Services - Green Bay
PASI-K	Pace Analytical Services - Kansas City
PASI-M	Pace Analytical Services - Minneapolis

ANALYTE QUALIFIERS

B	Analyte was detected in the associated method blank.
D3	Sample was diluted due to the presence of high levels of non-target analytes or other matrix interference.
D6	The relative percent difference (RPD) between the sample and sample duplicate exceeded laboratory control limits.
E	Analyte concentration exceeded the calibration range. The reported result is estimated.
M1	Matrix spike recovery exceeded QC limits. Batch accepted based on laboratory control sample (LCS) recovery.
R1	RPD value was outside control limits.

This report shall not be reproduced, except in full,
without the written consent of Pace Analytical Services, Inc..

Pace Analytical Services, Inc.
9608 Loiret Blvd.
Lenexa, KS 66219
(913)599-5665

QUALITY CONTROL DATA CROSS REFERENCE TABLE

Project: July 2013 Rico Water Sampling
Pace Project No.: 60149302

Lab ID	Sample ID	QC Batch Method	QC Batch	Analytical Method	Analytical Batch
60149302001	**GW-4_20130718**	EPA 200.7	MPRP/23585	EPA 200.7	ICP/18520
60149302002	**MW-103_20130718**	EPA 200.7	MPRP/23585	EPA 200.7	ICP/18520
60149302003	**MW-104_20130718**	EPA 200.7	MPRP/23585	EPA 200.7	ICP/18520
60149302004	**MW-1 DEEP_20130718**	EPA 200.7	MPRP/23585	EPA 200.7	ICP/18520
60149302005	**MW-1 SHALLOW_20130718**	EPA 200.7	MPRP/23585	EPA 200.7	ICP/18520
60149302006	**MW-2 DEEP_20130718**	EPA 200.7	MPRP/23585	EPA 200.7	ICP/18520
60149302007	**MW-3 DEEP_20130718**	EPA 200.7	MPRP/23585	EPA 200.7	ICP/18520
60149302008	**MW-6 DEEP_20130718**	EPA 200.7	MPRP/23585	EPA 200.7	ICP/18520
60149302009	**MW-6 SHALLOW_20130718**	EPA 200.7	MPRP/23585	EPA 200.7	ICP/18520
60149302010	**DR-10_20130718**	EPA 200.7	MPRP/23585	EPA 200.7	ICP/18520
60149302011	**DR-11_20130718**	EPA 200.7	MPRP/23585	EPA 200.7	ICP/18520
60149302012	**FB-FIELD_20130718**	EPA 200.7	MPRP/23585	EPA 200.7	ICP/18520
60149302013	**GW-3_20130719**	EPA 200.7	MPRP/23585	EPA 200.7	ICP/18520
60149302014	**P13-102_20130719**	EPA 200.7	MPRP/23585	EPA 200.7	ICP/18520
60149302015	**P13-103_20130719**	EPA 200.7	MPRP/23585	EPA 200.7	ICP/18520
60149302016	**CHV-101S_20130719**	EPA 200.7	MPRP/23585	EPA 200.7	ICP/18520
60149302017	**AT-2_20130719**	EPA 200.7	MPRP/23585	EPA 200.7	ICP/18520
60149302018	**BAH-01_20130719**	EPA 200.7	MPRP/23585	EPA 200.7	ICP/18520
60149302019	**DR-12_20130719**	EPA 200.7	MPRP/23585	EPA 200.7	ICP/18520
60149302001	**GW-4_20130718**	EPA 200.8	MPRP/40787	EPA 200.8	ICPM/17026
60149302002	**MW-103_20130718**	EPA 200.8	MPRP/40787	EPA 200.8	ICPM/17026
60149302003	**MW-104_20130718**	EPA 200.8	MPRP/40787	EPA 200.8	ICPM/17026
60149302004	**MW-1 DEEP_20130718**	EPA 200.8	MPRP/40787	EPA 200.8	ICPM/17026
60149302005	**MW-1 SHALLOW_20130718**	EPA 200.8	MPRP/40787	EPA 200.8	ICPM/17026
60149302006	**MW-2 DEEP_20130718**	EPA 200.8	MPRP/40787	EPA 200.8	ICPM/17026
60149302007	**MW-3 DEEP_20130718**	EPA 200.8	MPRP/40787	EPA 200.8	ICPM/17026
60149302008	**MW-6 DEEP_20130718**	EPA 200.8	MPRP/40787	EPA 200.8	ICPM/17026
60149302009	**MW-6 SHALLOW_20130718**	EPA 200.8	MPRP/40787	EPA 200.8	ICPM/17026
60149302010	**DR-10_20130718**	EPA 200.8	MPRP/40787	EPA 200.8	ICPM/17026
60149302011	**DR-11_20130718**	EPA 200.8	MPRP/40787	EPA 200.8	ICPM/17026
60149302012	**FB-FIELD_20130718**	EPA 200.8	MPRP/40831	EPA 200.8	ICPM/17089
60149302013	**GW-3_20130719**	EPA 200.8	MPRP/40831	EPA 200.8	ICPM/17089
60149302014	**P13-102_20130719**	EPA 200.8	MPRP/40831	EPA 200.8	ICPM/17089
60149302015	**P13-103_20130719**	EPA 200.8	MPRP/40831	EPA 200.8	ICPM/17089
60149302016	**CHV-101S_20130719**	EPA 200.8	MPRP/40831	EPA 200.8	ICPM/17089
60149302017	**AT-2_20130719**	EPA 200.8	MPRP/40831	EPA 200.8	ICPM/17089
60149302018	**BAH-01_20130719**	EPA 200.8	MPRP/40831	EPA 200.8	ICPM/17089
60149302019	**DR-12_20130719**	EPA 200.8	MPRP/40831	EPA 200.8	ICPM/17089
60149302001	**GW-4_20130718**	EPA 200.8	MPRP/40786	EPA 200.8	ICPM/17027
60149302002	**MW-103_20130718**	EPA 200.8	MPRP/40786	EPA 200.8	ICPM/17027
60149302003	**MW-104_20130718**	EPA 200.8	MPRP/40786	EPA 200.8	ICPM/17027
60149302004	**MW-1 DEEP_20130718**	EPA 200.8	MPRP/40786	EPA 200.8	ICPM/17027
60149302005	**MW-1 SHALLOW_20130718**	EPA 200.8	MPRP/40786	EPA 200.8	ICPM/17027
60149302006	**MW-2 DEEP_20130718**	EPA 200.8	MPRP/40786	EPA 200.8	ICPM/17027
60149302007	**MW-3 DEEP_20130718**	EPA 200.8	MPRP/40786	EPA 200.8	ICPM/17027
60149302008	**MW-6 DEEP_20130718**	EPA 200.8	MPRP/40786	EPA 200.8	ICPM/17027
60149302009	**MW-6 SHALLOW_20130718**	EPA 200.8	MPRP/40786	EPA 200.8	ICPM/17027

This report shall not be reproduced, except in full,
without the written consent of Pace Analytical Services, Inc..

Pace Analytical Services, Inc.
9608 Loiret Blvd.
Lenexa, KS 66219
(913)599-5665

QUALITY CONTROL DATA CROSS REFERENCE TABLE

Project: July 2013 Rico Water Sampling
Pace Project No.: 60149302

Lab ID	Sample ID	QC Batch Method	QC Batch	Analytical Method	Analytical Batch
60149302010	**DR-10_20130718**	EPA 200.8	MPRP/40786	EPA 200.8	ICPM/17027
60149302011	**DR-11_20130718**	EPA 200.8	MPRP/40786	EPA 200.8	ICPM/17027
60149302012	**FB-FIELD_20130718**	EPA 200.8	MPRP/40786	EPA 200.8	ICPM/17027
60149302013	**GW-3_20130719**	EPA 200.8	MPRP/40829	EPA 200.8	ICPM/17090
60149302014	**P13-102_20130719**	EPA 200.8	MPRP/40829	EPA 200.8	ICPM/17090
60149302015	**P13-103_20130719**	EPA 200.8	MPRP/40829	EPA 200.8	ICPM/17090
60149302016	**CHV-101S_20130719**	EPA 200.8	MPRP/40829	EPA 200.8	ICPM/17090
60149302017	**AT-2_20130719**	EPA 200.8	MPRP/40829	EPA 200.8	ICPM/17090
60149302018	**BAH-01_20130719**	EPA 200.8	MPRP/40829	EPA 200.8	ICPM/17090
60149302019	**DR-12_20130719**	EPA 200.8	MPRP/40829	EPA 200.8	ICPM/17090
60149302001	**GW-4_20130718**	EPA 200.8	MPRP/23586	EPA 200.8	ICPM/2405
60149302002	**MW-103_20130718**	EPA 200.8	MPRP/23586	EPA 200.8	ICPM/2405
60149302003	**MW-104_20130718**	EPA 200.8	MPRP/23586	EPA 200.8	ICPM/2405
60149302004	**MW-1 DEEP_20130718**	EPA 200.8	MPRP/23586	EPA 200.8	ICPM/2405
60149302005	**MW-1 SHALLOW_20130718**	EPA 200.8	MPRP/23586	EPA 200.8	ICPM/2405
60149302006	**MW-2 DEEP_20130718**	EPA 200.8	MPRP/23586	EPA 200.8	ICPM/2405
60149302007	**MW-3 DEEP_20130718**	EPA 200.8	MPRP/23586	EPA 200.8	ICPM/2405
60149302008	**MW-6 DEEP_20130718**	EPA 200.8	MPRP/23586	EPA 200.8	ICPM/2405
60149302009	**MW-6 SHALLOW_20130718**	EPA 200.8	MPRP/23586	EPA 200.8	ICPM/2405
60149302010	**DR-10_20130718**	EPA 200.8	MPRP/23586	EPA 200.8	ICPM/2405
60149302011	**DR-11_20130718**	EPA 200.8	MPRP/23586	EPA 200.8	ICPM/2405
60149302012	**FB-FIELD_20130718**	EPA 200.8	MPRP/23586	EPA 200.8	ICPM/2405
60149302013	**GW-3_20130719**	EPA 200.8	MPRP/23586	EPA 200.8	ICPM/2405
60149302014	**P13-102_20130719**	EPA 200.8	MPRP/23586	EPA 200.8	ICPM/2405
60149302015	**P13-103_20130719**	EPA 200.8	MPRP/23586	EPA 200.8	ICPM/2405
60149302016	**CHV-101S_20130719**	EPA 200.8	MPRP/23586	EPA 200.8	ICPM/2405
60149302017	**AT-2_20130719**	EPA 200.8	MPRP/23586	EPA 200.8	ICPM/2405
60149302018	**BAH-01_20130719**	EPA 200.8	MPRP/23586	EPA 200.8	ICPM/2405
60149302019	**DR-12_20130719**	EPA 200.8	MPRP/23586	EPA 200.8	ICPM/2405
60149302001	**GW-4_20130718**	EPA 245.1	MERP/8896	EPA 245.1	MERC/10181
60149302002	**MW-103_20130718**	EPA 245.1	MERP/8896	EPA 245.1	MERC/10181
60149302003	**MW-104_20130718**	EPA 245.1	MERP/8896	EPA 245.1	MERC/10181
60149302004	**MW-1 DEEP_20130718**	EPA 245.1	MERP/8896	EPA 245.1	MERC/10181
60149302005	**MW-1 SHALLOW_20130718**	EPA 245.1	MERP/8896	EPA 245.1	MERC/10181
60149302006	**MW-2 DEEP_20130718**	EPA 245.1	MERP/8896	EPA 245.1	MERC/10181
60149302007	**MW-3 DEEP_20130718**	EPA 245.1	MERP/8896	EPA 245.1	MERC/10181
60149302008	**MW-6 DEEP_20130718**	EPA 245.1	MERP/8896	EPA 245.1	MERC/10181
60149302009	**MW-6 SHALLOW_20130718**	EPA 245.1	MERP/8896	EPA 245.1	MERC/10181
60149302010	**DR-10_20130718**	EPA 245.1	MERP/8896	EPA 245.1	MERC/10181
60149302011	**DR-11_20130718**	EPA 245.1	MERP/8896	EPA 245.1	MERC/10181
60149302012	**FB-FIELD_20130718**	EPA 245.1	MERP/8896	EPA 245.1	MERC/10181
60149302013	**GW-3_20130719**	EPA 245.1	MERP/8896	EPA 245.1	MERC/10181
60149302014	**P13-102_20130719**	EPA 245.1	MERP/8896	EPA 245.1	MERC/10181
60149302015	**P13-103_20130719**	EPA 245.1	MERP/8896	EPA 245.1	MERC/10181
60149302016	**CHV-101S_20130719**	EPA 245.1	MERP/8896	EPA 245.1	MERC/10181
60149302017	**AT-2_20130719**	EPA 245.1	MERP/8896	EPA 245.1	MERC/10181
60149302018	**BAH-01_20130719**	EPA 245.1	MERP/8896	EPA 245.1	MERC/10181

This report shall not be reproduced, except in full,
without the written consent of Pace Analytical Services, Inc..

Pace Analytical Services, Inc.
9608 Loiret Blvd.
Lenexa, KS 66219
(913)599-5665

QUALITY CONTROL DATA CROSS REFERENCE TABLE

Project: July 2013 Rico Water Sampling
Pace Project No.: 60149302

Lab ID	Sample ID	QC Batch Method	QC Batch	Analytical Method	Analytical Batch
60149302019	**DR-12_20130719**	EPA 245.1	MERP/8896	EPA 245.1	MERC/10181
60149302001	**GW-4_20130718**	EPA 245.1	MERP/8895	EPA 245.1	MERC/10168
60149302002	**MW-103_20130718**	EPA 245.1	MERP/8895	EPA 245.1	MERC/10168
60149302003	**MW-104_20130718**	EPA 245.1	MERP/8895	EPA 245.1	MERC/10168
60149302004	**MW-1 DEEP_20130718**	EPA 245.1	MERP/8895	EPA 245.1	MERC/10168
60149302005	**MW-1 SHALLOW_20130718**	EPA 245.1	MERP/8895	EPA 245.1	MERC/10168
60149302006	**MW-2 DEEP_20130718**	EPA 245.1	MERP/8895	EPA 245.1	MERC/10168
60149302007	**MW-3 DEEP_20130718**	EPA 245.1	MERP/8895	EPA 245.1	MERC/10168
60149302008	**MW-6 DEEP_20130718**	EPA 245.1	MERP/8895	EPA 245.1	MERC/10168
60149302009	**MW-6 SHALLOW_20130718**	EPA 245.1	MERP/8895	EPA 245.1	MERC/10168
60149302010	**DR-10_20130718**	EPA 245.1	MERP/8895	EPA 245.1	MERC/10168
60149302011	**DR-11_20130718**	EPA 245.1	MERP/8895	EPA 245.1	MERC/10168
60149302012	**FB-FIELD_20130718**	EPA 245.1	MERP/8895	EPA 245.1	MERC/10168
60149302013	**GW-3_20130719**	EPA 245.1	MERP/8895	EPA 245.1	MERC/10168
60149302014	**P13-102_20130719**	EPA 245.1	MERP/8895	EPA 245.1	MERC/10168
60149302015	**P13-103_20130719**	EPA 245.1	MERP/8895	EPA 245.1	MERC/10168
60149302016	**CHV-101S_20130719**	EPA 245.1	MERP/8895	EPA 245.1	MERC/10168
60149302017	**AT-2_20130719**	EPA 245.1	MERP/8895	EPA 245.1	MERC/10168
60149302018	**BAH-01_20130719**	EPA 245.1	MERP/8895	EPA 245.1	MERC/10168
60149302019	**DR-12_20130719**	EPA 245.1	MERP/8895	EPA 245.1	MERC/10168
60149302001	**GW-4_20130718**	EPA 245.1	MERP/7535	EPA 245.1	MERC/7492
60149302002	**MW-103_20130718**	EPA 245.1	MERP/7535	EPA 245.1	MERC/7492
60149302003	**MW-104_20130718**	EPA 245.1	MERP/7535	EPA 245.1	MERC/7492
60149302004	**MW-1 DEEP_20130718**	EPA 245.1	MERP/7535	EPA 245.1	MERC/7492
60149302005	**MW-1 SHALLOW_20130718**	EPA 245.1	MERP/7535	EPA 245.1	MERC/7492
60149302006	**MW-2 DEEP_20130718**	EPA 245.1	MERP/7535	EPA 245.1	MERC/7492
60149302007	**MW-3 DEEP_20130718**	EPA 245.1	MERP/7535	EPA 245.1	MERC/7492
60149302008	**MW-6 DEEP_20130718**	EPA 245.1	MERP/7535	EPA 245.1	MERC/7492
60149302009	**MW-6 SHALLOW_20130718**	EPA 245.1	MERP/7535	EPA 245.1	MERC/7492
60149302010	**DR-10_20130718**	EPA 245.1	MERP/7535	EPA 245.1	MERC/7492
60149302011	**DR-11_20130718**	EPA 245.1	MERP/7535	EPA 245.1	MERC/7492
60149302012	**FB-FIELD_20130718**	EPA 245.1	MERP/7535	EPA 245.1	MERC/7492
60149302013	**GW-3_20130719**	EPA 245.1	MERP/7535	EPA 245.1	MERC/7492
60149302014	**P13-102_20130719**	EPA 245.1	MERP/7535	EPA 245.1	MERC/7492
60149302015	**P13-103_20130719**	EPA 245.1	MERP/7535	EPA 245.1	MERC/7492
60149302016	**CHV-101S_20130719**	EPA 245.1	MERP/7535	EPA 245.1	MERC/7492
60149302017	**AT-2_20130719**	EPA 245.1	MERP/7535	EPA 245.1	MERC/7492
60149302018	**BAH-01_20130719**	EPA 245.1	MERP/7535	EPA 245.1	MERC/7492
60149302019	**DR-12_20130719**	EPA 245.1	MERP/7535	EPA 245.1	MERC/7492
60149302001	**GW-4_20130718**	SM 2510B	MT/13020		
60149302002	**MW-103_20130718**	SM 2510B	MT/13020		
60149302003	**MW-104_20130718**	SM 2510B	MT/13020		
60149302004	**MW-1 DEEP_20130718**	SM 2510B	MT/13020		
60149302005	**MW-1 SHALLOW_20130718**	SM 2510B	MT/13020		
60149302006	**MW-2 DEEP_20130718**	SM 2510B	MT/13020		
60149302007	**MW-3 DEEP_20130718**	SM 2510B	MT/13020		
60149302008	**MW-6 DEEP_20130718**	SM 2510B	MT/13020		

This report shall not be reproduced, except in full,
without the written consent of Pace Analytical Services, Inc..

Pace Analytical Services, Inc.
9608 Loiret Blvd.
Lenexa, KS 66219
(913)599-5665

QUALITY CONTROL DATA CROSS REFERENCE TABLE

Project: July 2013 Rico Water Sampling
Pace Project No.: 60149302

Lab ID	Sample ID	QC Batch Method	QC Batch	Analytical Method	Analytical Batch
60149302009	**MW-6 SHALLOW_20130718**	SM 2510B	MT/13020		
60149302010	**DR-10_20130718**	SM 2510B	MT/13020		
60149302011	**DR-11_20130718**	SM 2510B	MT/13035		
60149302012	**FB-FIELD_20130718**	SM 2510B	MT/13035		
60149302013	**GW-3_20130719**	SM 2510B	MT/13035		
60149302014	**P13-102_20130719**	SM 2510B	MT/13035		
60149302015	**P13-103_20130719**	SM 2510B	MT/13035		
60149302016	**CHV-101S_20130719**	SM 2510B	MT/13035		
60149302017	**AT-2_20130719**	SM 2510B	MT/13035		
60149302018	**BAH-01_20130719**	SM 2510B	MT/13035		
60149302019	**DR-12_20130719**	SM 2510B	MT/13035		
60149302001	**GW-4_20130718**	Calculated	MT/13060		
60149302002	**MW-103_20130718**	Calculated	MT/13060		
60149302003	**MW-104_20130718**	Calculated	MT/13060		
60149302004	**MW-1 DEEP_20130718**	Calculated	MT/13060		
60149302005	**MW-1 SHALLOW_20130718**	Calculated	MT/13060		
60149302006	**MW-2 DEEP_20130718**	Calculated	MT/13060		
60149302007	**MW-3 DEEP_20130718**	Calculated	MT/13060		
60149302008	**MW-6 DEEP_20130718**	Calculated	MT/13060		
60149302009	**MW-6 SHALLOW_20130718**	Calculated	MT/13060		
60149302010	**DR-10_20130718**	Calculated	MT/13060		
60149302011	**DR-11_20130718**	Calculated	MT/13084		
60149302012	**FB-FIELD_20130718**	Calculated	MT/13084		
60149302013	**GW-3_20130719**	Calculated	MT/13084		
60149302014	**P13-102_20130719**	Calculated	MT/13084		
60149302015	**P13-103_20130719**	Calculated	MT/13084		
60149302016	**CHV-101S_20130719**	Calculated	MT/13084		
60149302017	**AT-2_20130719**	Calculated	MT/13084		
60149302018	**BAH-01_20130719**	Calculated	MT/13084		
60149302019	**DR-12_20130719**	Calculated	MT/13084		
60149302001	**GW-4_20130718**	SM 2320B	WET/42488		
60149302002	**MW-103_20130718**	SM 2320B	WET/42488		
60149302003	**MW-104_20130718**	SM 2320B	WET/42488		
60149302004	**MW-1 DEEP_20130718**	SM 2320B	WET/42488		
60149302005	**MW-1 SHALLOW_20130718**	SM 2320B	WET/42488		
60149302006	**MW-2 DEEP_20130718**	SM 2320B	WET/42488		
60149302007	**MW-3 DEEP_20130718**	SM 2320B	WET/42488		
60149302008	**MW-6 DEEP_20130718**	SM 2320B	WET/42488		
60149302009	**MW-6 SHALLOW_20130718**	SM 2320B	WET/42488		
60149302010	**DR-10_20130718**	SM 2320B	WET/42488		
60149302011	**DR-11_20130718**	SM 2320B	WET/42488		
60149302012	**FB-FIELD_20130718**	SM 2320B	WET/42534		
60149302013	**GW-3_20130719**	SM 2320B	WET/42534		
60149302014	**P13-102_20130719**	SM 2320B	WET/42534		
60149302015	**P13-103_20130719**	SM 2320B	WET/42534		
60149302016	**CHV-101S_20130719**	SM 2320B	WET/42534		

This report shall not be reproduced, except in full,
without the written consent of Pace Analytical Services, Inc..

Pace Analytical Services, Inc.
9608 Loiret Blvd.
Lenexa, KS 66219
(913)599-5665

QUALITY CONTROL DATA CROSS REFERENCE TABLE

Project: July 2013 Rico Water Sampling
Pace Project No.: 60149302

Lab ID	Sample ID	QC Batch Method	QC Batch	Analytical Method	Analytical Batch
60149302017	**AT-2_20130719**	SM 2320B	WET/42534		
60149302018	**BAH-01_20130719**	SM 2320B	WET/42534		
60149302019	**DR-12_20130719**	SM 2320B	WET/42582		
60149302001	**GW-4_20130718**	SM 2540C	WET/42502		
60149302002	**MW-103_20130718**	SM 2540C	WET/42502		
60149302003	**MW-104_20130718**	SM 2540C	WET/42502		
60149302004	**MW-1 DEEP_20130718**	SM 2540C	WET/42502		
60149302005	**MW-1 SHALLOW_20130718**	SM 2540C	WET/42502		
60149302006	**MW-2 DEEP_20130718**	SM 2540C	WET/42502		
60149302007	**MW-3 DEEP_20130718**	SM 2540C	WET/42502		
60149302008	**MW-6 DEEP_20130718**	SM 2540C	WET/42502		
60149302009	**MW-6 SHALLOW_20130718**	SM 2540C	WET/42502		
60149302010	**DR-10_20130718**	SM 2540C	WET/42502		
60149302011	**DR-11_20130718**	SM 2540C	WET/42502		
60149302012	**FB-FIELD_20130718**	SM 2540C	WET/42502		
60149302013	**GW-3_20130719**	SM 2540C	WET/42502		
60149302014	**P13-102_20130719**	SM 2540C	WET/42502		
60149302015	**P13-103_20130719**	SM 2540C	WET/42502		
60149302016	**CHV-101S_20130719**	SM 2540C	WET/42502		
60149302017	**AT-2_20130719**	SM 2540C	WET/42502		
60149302018	**BAH-01_20130719**	SM 2540C	WET/42502		
60149302019	**DR-12_20130719**	SM 2540C	WET/42502		
60149302001	**GW-4_20130718**	SM 2540D	WET/42484		
60149302002	**MW-103_20130718**	SM 2540D	WET/42490		
60149302003	**MW-104_20130718**	SM 2540D	WET/42490		
60149302004	**MW-1 DEEP_20130718**	SM 2540D	WET/42490		
60149302005	**MW-1 SHALLOW_20130718**	SM 2540D	WET/42490		
60149302006	**MW-2 DEEP_20130718**	SM 2540D	WET/42490		
60149302007	**MW-3 DEEP_20130718**	SM 2540D	WET/42490		
60149302008	**MW-6 DEEP_20130718**	SM 2540D	WET/42490		
60149302009	**MW-6 SHALLOW_20130718**	SM 2540D	WET/42490		
60149302010	**DR-10_20130718**	SM 2540D	WET/42490		
60149302011	**DR-11_20130718**	SM 2540D	WET/42490		
60149302012	**FB-FIELD_20130718**	SM 2540D	WET/42490		
60149302013	**GW-3_20130719**	SM 2540D	WET/42514		
60149302014	**P13-102_20130719**	SM 2540D	WET/42514		
60149302015	**P13-103_20130719**	SM 2540D	WET/42514		
60149302016	**CHV-101S_20130719**	SM 2540D	WET/42514		
60149302017	**AT-2_20130719**	SM 2540D	WET/42514		
60149302018	**BAH-01_20130719**	SM 2540D	WET/42514		
60149302019	**DR-12_20130719**	SM 2540D	WET/42514		
60149302001	**GW-4_20130718**	SM 4500-S-2 D	WET/42548		
60149302002	**MW-103_20130718**	SM 4500-S-2 D	WET/42548		
60149302003	**MW-104_20130718**	SM 4500-S-2 D	WET/42548		
60149302004	**MW-1 DEEP_20130718**	SM 4500-S-2 D	WET/42548		
60149302005	**MW-1 SHALLOW_20130718**	SM 4500-S-2 D	WET/42548		

This report shall not be reproduced, except in full,
without the written consent of Pace Analytical Services, Inc..

Pace Analytical Services, Inc.
9608 Loiret Blvd.
Lenexa, KS 66219
(913)599-5665

QUALITY CONTROL DATA CROSS REFERENCE TABLE

Project: July 2013 Rico Water Sampling
Pace Project No.: 60149302

Lab ID	Sample ID	QC Batch Method	QC Batch	Analytical Method	Analytical Batch
60149302006	**MW-2 DEEP_20130718**	SM 4500-S-2 D	WET/42548		
60149302007	**MW-3 DEEP_20130718**	SM 4500-S-2 D	WET/42548		
60149302008	**MW-6 DEEP_20130718**	SM 4500-S-2 D	WET/42548		
60149302009	**MW-6 SHALLOW_20130718**	SM 4500-S-2 D	WET/42548		
60149302010	**DR-10_20130718**	SM 4500-S-2 D	WET/42548		
60149302011	**DR-11_20130718**	SM 4500-S-2 D	WET/42548		
60149302012	**FB-FIELD_20130718**	SM 4500-S-2 D	WET/42548		
60149302013	**GW-3_20130719**	SM 4500-S-2 D	WET/42566		
60149302014	**P13-102_20130719**	SM 4500-S-2 D	WET/42566		
60149302015	**P13-103_20130719**	SM 4500-S-2 D	WET/42566		
60149302016	**CHV-101S_20130719**	SM 4500-S-2 D	WET/42566		
60149302017	**AT-2_20130719**	SM 4500-S-2 D	WET/42566		
60149302018	**BAH-01_20130719**	SM 4500-S-2 D	WET/42566		
60149302019	**DR-12_20130719**	SM 4500-S-2 D	WET/42566		
60149302001	**GW-4_20130718**	EPA 300.0	WETA/25637		
60149302002	**MW-103_20130718**	EPA 300.0	WETA/25637		
60149302003	**MW-104_20130718**	EPA 300.0	WETA/25637		
60149302004	**MW-1 DEEP_20130718**	EPA 300.0	WETA/25637		
60149302005	**MW-1 SHALLOW_20130718**	EPA 300.0	WETA/25637		
60149302006	**MW-2 DEEP_20130718**	EPA 300.0	WETA/25637		
60149302007	**MW-3 DEEP_20130718**	EPA 300.0	WETA/25637		
60149302008	**MW-6 DEEP_20130718**	EPA 300.0	WETA/25637		
60149302009	**MW-6 SHALLOW_20130718**	EPA 300.0	WETA/25637		
60149302010	**DR-10_20130718**	EPA 300.0	WETA/25637		
60149302011	**DR-11_20130718**	EPA 300.0	WETA/25637		
60149302012	**FB-FIELD_20130718**	EPA 300.0	WETA/25637		
60149302013	**GW-3_20130719**	EPA 300.0	WETA/25637		
60149302014	**P13-102_20130719**	EPA 300.0	WETA/25637		
60149302015	**P13-103_20130719**	EPA 300.0	WETA/25637		
60149302016	**CHV-101S_20130719**	EPA 300.0	WETA/25637		
60149302017	**AT-2_20130719**	EPA 300.0	WETA/25637		
60149302018	**BAH-01_20130719**	EPA 300.0	WETA/25637		
60149302019	**DR-12_20130719**	EPA 300.0	WETA/25637		
60149302001	**GW-4_20130718**	EPA 353.2	WETA/25543		
60149302002	**MW-103_20130718**	EPA 353.2	WETA/25544		
60149302003	**MW-104_20130718**	EPA 353.2	WETA/25544		
60149302004	**MW-1 DEEP_20130718**	EPA 353.2	WETA/25544		
60149302005	**MW-1 SHALLOW_20130718**	EPA 353.2	WETA/25544		
60149302006	**MW-2 DEEP_20130718**	EPA 353.2	WETA/25544		
60149302007	**MW-3 DEEP_20130718**	EPA 353.2	WETA/25544		
60149302008	**MW-6 DEEP_20130718**	EPA 353.2	WETA/25544		
60149302009	**MW-6 SHALLOW_20130718**	EPA 353.2	WETA/25544		
60149302010	**DR-10_20130718**	EPA 353.2	WETA/25544		
60149302011	**DR-11_20130718**	EPA 353.2	WETA/25544		
60149302012	**FB-FIELD_20130718**	EPA 353.2	WETA/25544		
60149302013	**GW-3_20130719**	EPA 353.2	WETA/25544		
60149302014	**P13-102_20130719**	EPA 353.2	WETA/25544		

This report shall not be reproduced, except in full,
without the written consent of Pace Analytical Services, Inc..

Pace Analytical Services, Inc.
9608 Loiret Blvd.
Lenexa, KS 66219
(913)599-5665

QUALITY CONTROL DATA CROSS REFERENCE TABLE

Project: July 2013 Rico Water Sampling
Pace Project No.: 60149302

Lab ID	Sample ID	QC Batch Method	QC Batch	Analytical Method	Analytical Batch
60149302015	**P13-103_20130719**	EPA 353.2	WETA/25544		
60149302016	**CHV-101S_20130719**	EPA 353.2	WETA/25544		
60149302017	**AT-2_20130719**	EPA 353.2	WETA/25544		
60149302018	**BAH-01_20130719**	EPA 353.2	WETA/25544		
60149302019	**DR-12_20130719**	EPA 353.2	WETA/25544		
60149302001	**GW-4_20130718**	SM 4500-CN-E	WETA/25559		
60149302002	**MW-103_20130718**	SM 4500-CN-E	WETA/25559		
60149302003	**MW-104_20130718**	SM 4500-CN-E	WETA/25559		
60149302004	**MW-1 DEEP_20130718**	SM 4500-CN-E	WETA/25559		
60149302005	**MW-1 SHALLOW_20130718**	SM 4500-CN-E	WETA/25559		
60149302006	**MW-2 DEEP_20130718**	SM 4500-CN-E	WETA/25559		
60149302007	**MW-3 DEEP_20130718**	SM 4500-CN-E	WETA/25559		
60149302008	**MW-6 DEEP_20130718**	SM 4500-CN-E	WETA/25559		
60149302009	**MW-6 SHALLOW_20130718**	SM 4500-CN-E	WETA/25559		
60149302010	**DR-10_20130718**	SM 4500-CN-E	WETA/25559		
60149302011	**DR-11_20130718**	SM 4500-CN-E	WETA/25559		
60149302012	**FB-FIELD_20130718**	SM 4500-CN-E	WETA/25559		
60149302013	**GW-3_20130719**	SM 4500-CN-E	WETA/25559		
60149302014	**P13-102_20130719**	SM 4500-CN-E	WETA/25559		
60149302015	**P13-103_20130719**	SM 4500-CN-E	WETA/25559		
60149302016	**CHV-101S_20130719**	SM 4500-CN-E	WETA/25559		
60149302017	**AT-2_20130719**	SM 4500-CN-E	WETA/25559		
60149302018	**BAH-01_20130719**	SM 4500-CN-E	WETA/25559		
60149302019	**DR-12_20130719**	SM 4500-CN-E	WETA/25559		
60149302001	**GW-4_20130718**	SM 5310C	WETA/18729		
60149302002	**MW-103_20130718**	SM 5310C	WETA/18729		
60149302003	**MW-104_20130718**	SM 5310C	WETA/18729		
60149302004	**MW-1 DEEP_20130718**	SM 5310C	WETA/18729		
60149302005	**MW-1 SHALLOW_20130718**	SM 5310C	WETA/18729		
60149302006	**MW-2 DEEP_20130718**	SM 5310C	WETA/18729		
60149302007	**MW-3 DEEP_20130718**	SM 5310C	WETA/18729		
60149302008	**MW-6 DEEP_20130718**	SM 5310C	WETA/18729		
60149302009	**MW-6 SHALLOW_20130718**	SM 5310C	WETA/18729		
60149302010	**DR-10_20130718**	SM 5310C	WETA/18753		
60149302011	**DR-11_20130718**	SM 5310C	WETA/18753		
60149302012	**FB-FIELD_20130718**	SM 5310C	WETA/18753		
60149302013	**GW-3_20130719**	SM 5310C	WETA/18753		
60149302014	**P13-102_20130719**	SM 5310C	WETA/18753		
60149302015	**P13-103_20130719**	SM 5310C	WETA/18753		
60149302016	**CHV-101S_20130719**	SM 5310C	WETA/18753		
60149302017	**AT-2_20130719**	SM 5310C	WETA/18753		
60149302018	**BAH-01_20130719**	SM 5310C	WETA/18753		
60149302019	**DR-12_20130719**	SM 5310C	WETA/18753		

This report shall not be reproduced, except in full,
without the written consent of Pace Analytical Services, Inc..

Appendix E

Flow Cross Sections

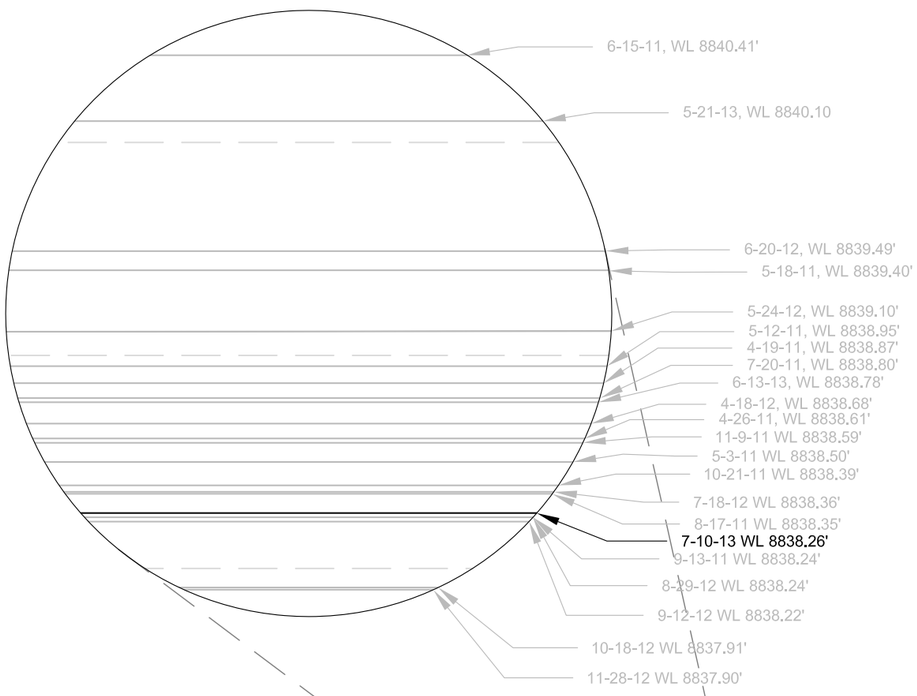

DR-1 CROSS SECTION

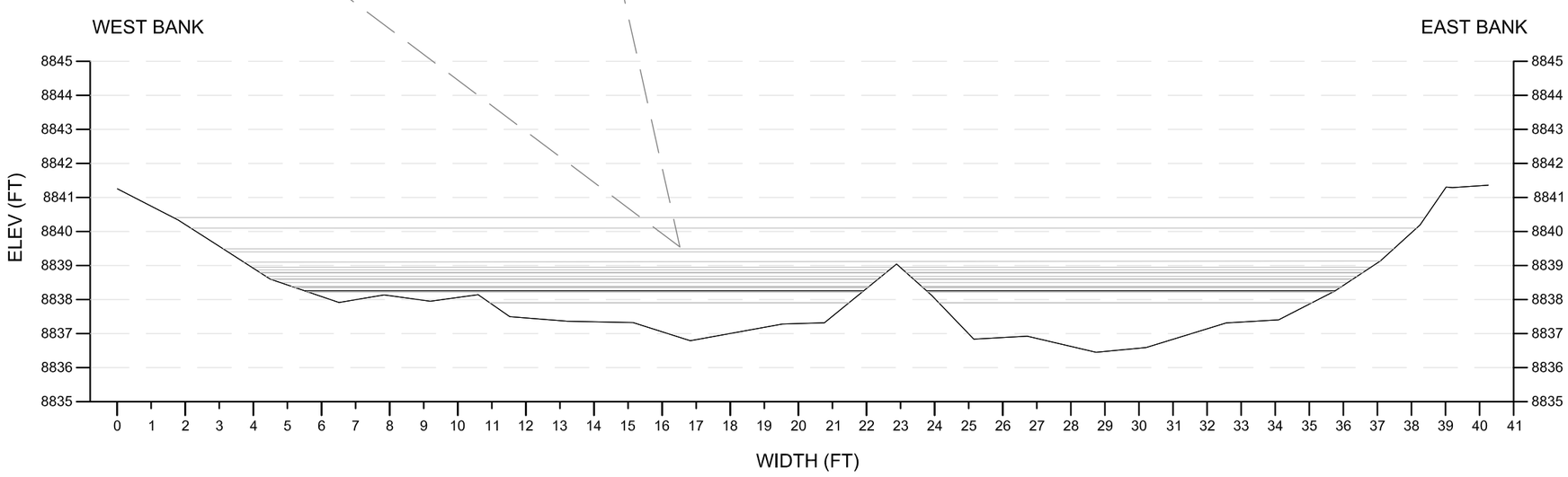

4 **CROSS SECTION AT DR-1**

SCALE - 1" = 4'

THESE PLANS AND SPECIFICATIONS ARE THE PROPERTY OF ANDERSON ENGINEERING COMPANY, INC., 977 WEST 2100 SOUTH, SALT LAKE CITY, UTAH, 84119 AND SHALL NOT BE COPIED, REDUCED, OR REPRODUCED WITHOUT THEIR WRITTEN PERMISSION.

General Notes

Scale in Feet
0 2 4

No.	Revision/Issue	Date

ATLANTIC RICHFIELD COMPANY

ANDERSON
ENGINEERING COMPANY, INC.

DRAWN BY: MAD
ENGINEER: CS, MAD
APPROVED:

RICO SURFACE WATER SAMPLING

DOLORES RIVER CROSS SECTION AT SAMPLING STATION DR-1

RICO, CO

Project	Figure
Date 10-JUL-2013	4
Scale	

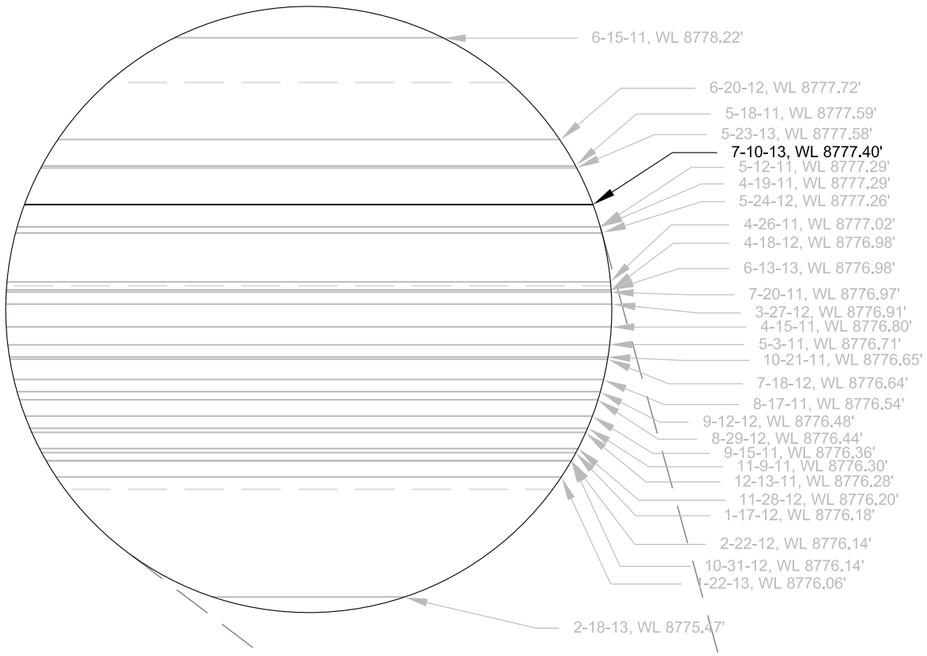

DR-2 CROSS SECTION

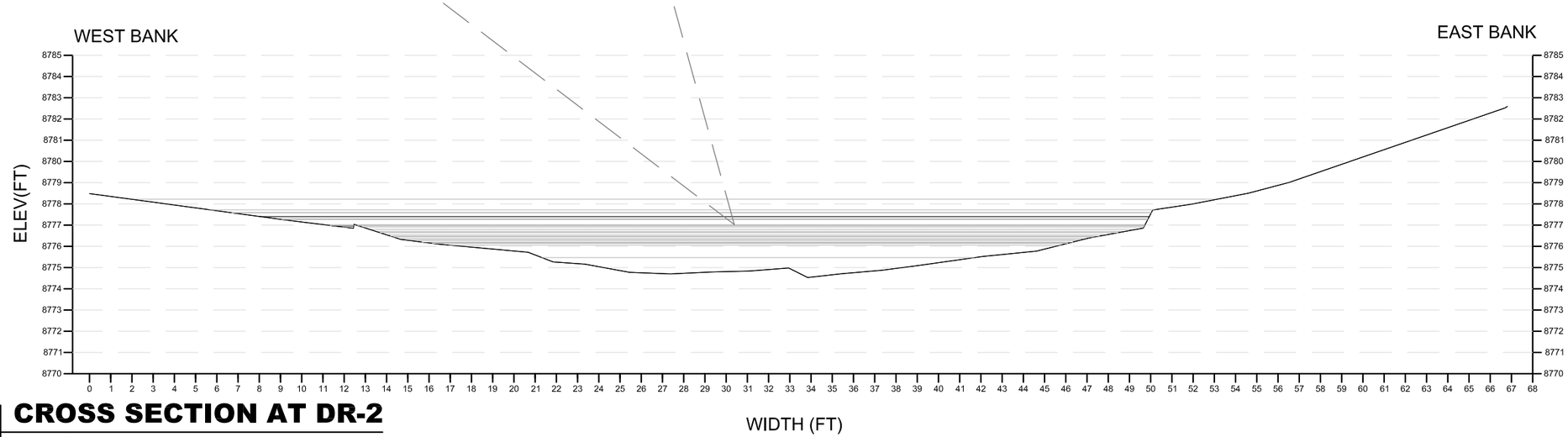

5 **CROSS SECTION AT DR-2**

SCALE - 1" = 6'

THESE PLANS AND SPECIFICATIONS ARE THE PROPERTY OF ANDERSON ENGINEERING COMPANY, INC., 977 WEST 2100 SOUTH, SALT LAKE CITY, UTAH, 84119 AND SHALL NOT BE COPIED, REDUCED, OR REPRODUCED WITHOUT THEIR WRITTEN PERMISSION.

General Notes

Scale in Feet

0 3 6

No.	Revision/Issue	Date

ATLANTIC RICHFIELD COMPANY

ANDERSON
ENGINEERING COMPANY, INC.

DRAWN BY: MAD
ENGINEER: CS, MAD
APPROVED:

RICO SURFACE WATER SAMPLING

DOLORES RIVER CROSS SECTION AT SAMPLING STATION DR-2

RICO, CO

Project
Date 10-JUL-2013
Scale
Figure 5

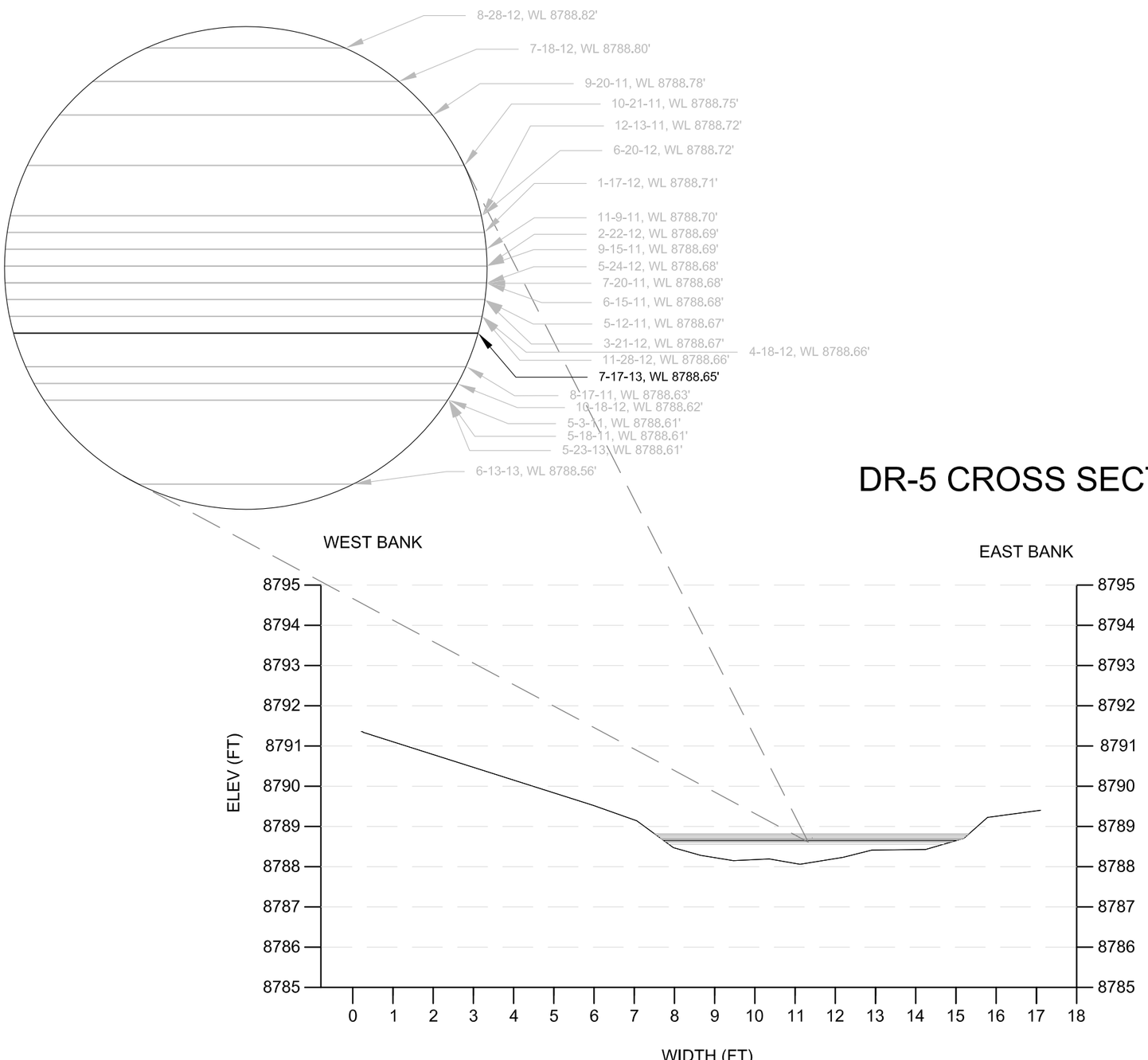

DR-5 CROSS SECTION

6 **CROSS SECTION AT DR-5**

SCALE - 1" = 3'

General Notes

Scale in Feet
0 1.5 3

No.	Revision/Issue	Date

ATLANTIC RICHFIELD COMPANY

ANDERSON
ENGINEERING COMPANY, INC.

DRAWN BY: MAD
ENGINEER: CS, MAD
APPROVED:

RICO SURFACE WATER SAMPLING

POND 8 EMBANKMENT CROSS SECTION AT SAMPLING STATION DR-5

RICO, CO

Project
Date 17-JUL-2013
Scale
Figure 6

THESE PLANS AND SPECIFICATIONS ARE THE PROPERTY OF ANDERSON ENGINEERING COMPANY, INC., 977 WEST 2100 SOUTH, SALT LAKE CITY, UTAH, 84119 AND SHALL NOT BE COPIED, REDUCED, OR REPRODUCED WITHOUT THEIR WRITTEN PERMISSION.

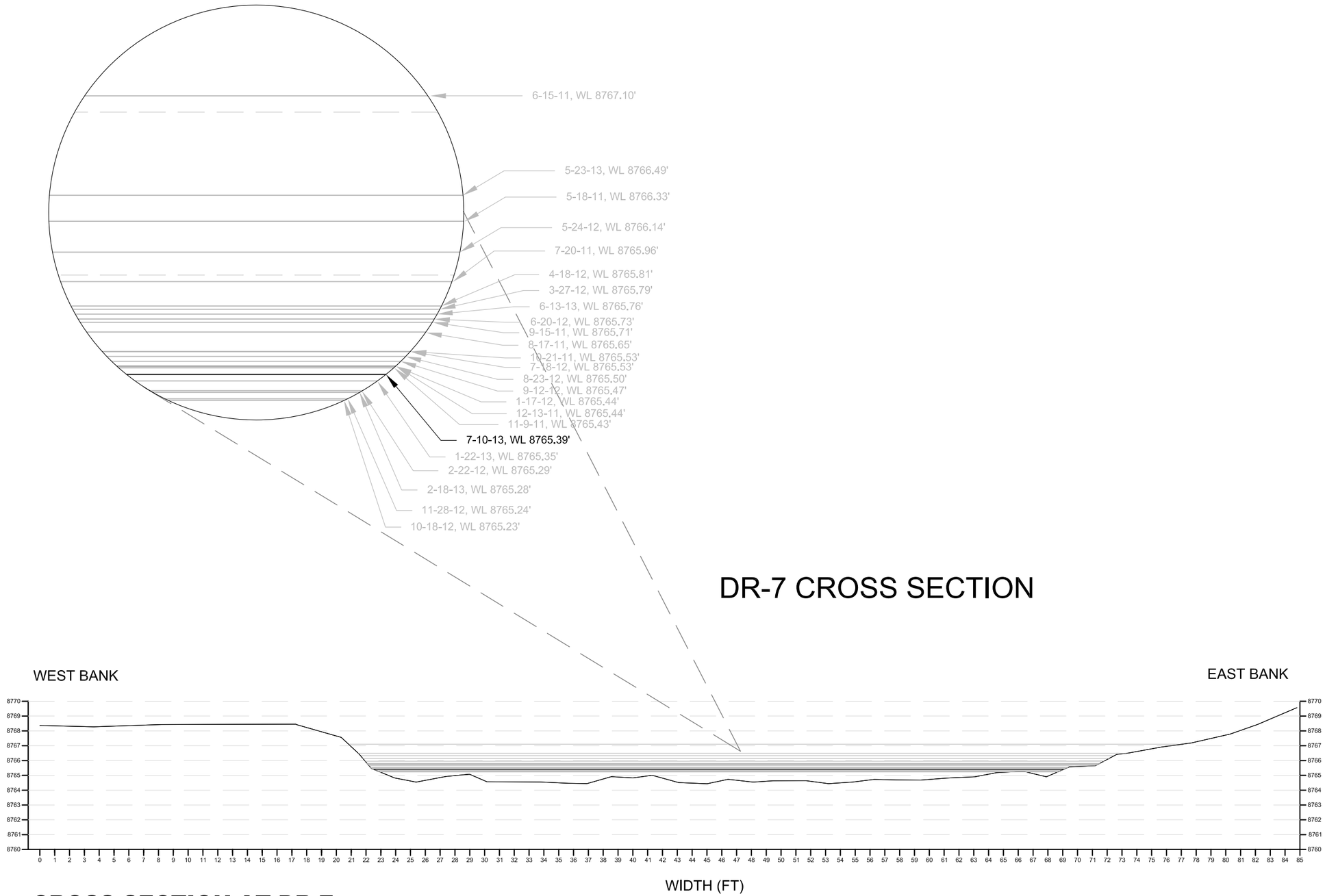

7 **CROSS SECTION AT DR-7**

SCALE - 1" = 7'

THESE PLANS AND SPECIFICATIONS ARE THE PROPERTY OF ANDERSON ENGINEERING COMPANY, INC., 977 WEST 2100 SOUTH, SALT LAKE CITY, UTAH, 84119 AND SHALL NOT BE COPIED, REDUCED, OR REPRODUCED WITHOUT THEIR WRITTEN PERMISSION.

General Notes

Scale in Feet

0 3.5 7

No.	Revision/Issue	Date

ATLANTIC RICHFIELD COMPANY

ANDERSON
ENGINEERING COMPANY, INC.

DRAWN BY: MAD

ENGINEER: CS, MAD

APPROVED:

RICO SURFACE WATER SAMPLING

DOLORES RIVER CROSS SECTION AT SAMPLING STATION DR-7

RICO, CO

Project

Date 10-JUL-2013

Scale

Figure 7

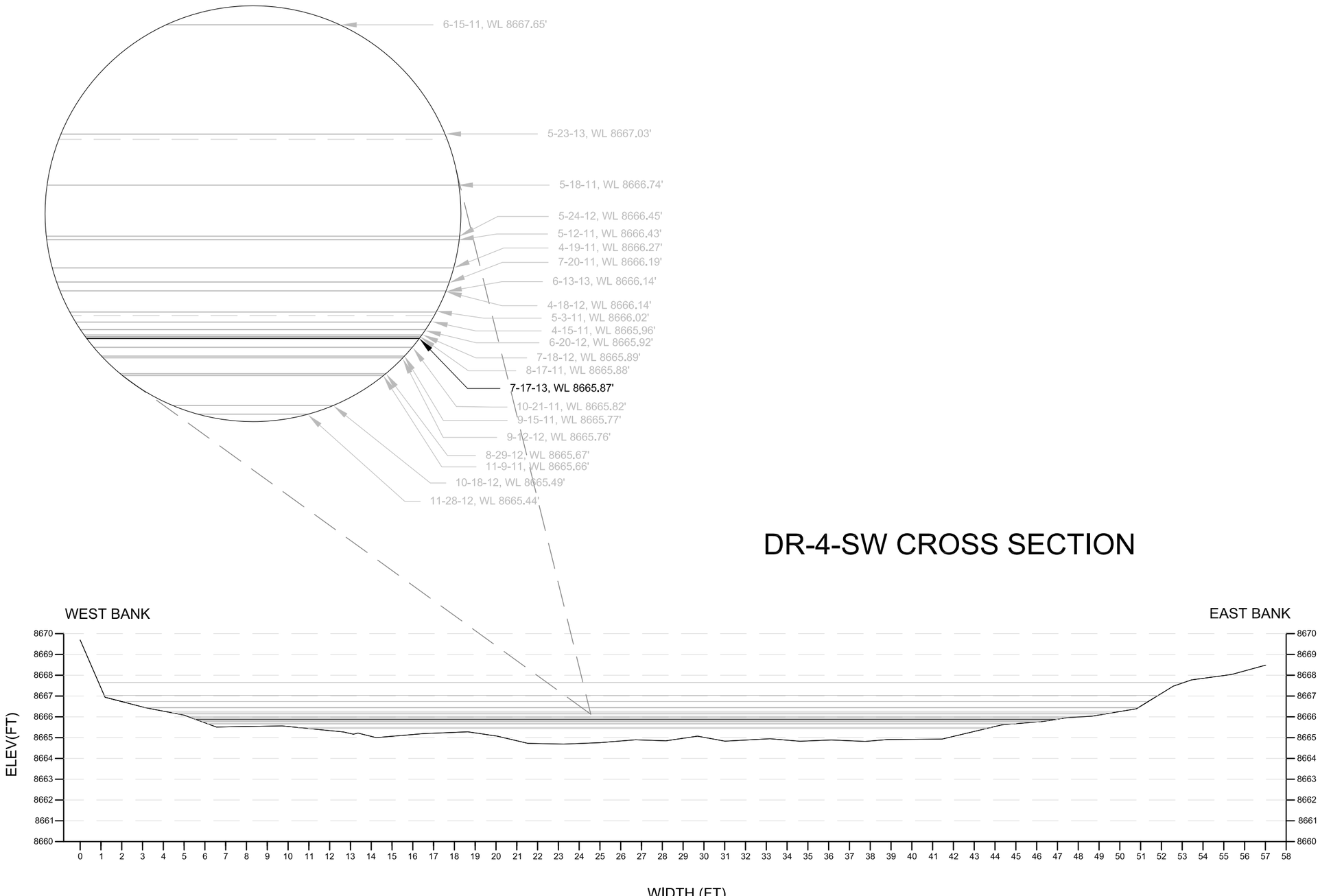

DR-4-SW CROSS SECTION

8 **CROSS SECTION AT DR-4-SW**

SCALE - 1" = 5'

General Notes

Scale in Feet
0 2.5 5

No.	Revision/Issue	Date

ATLANTIC RICHFIELD COMPANY

ANDERSON
ENGINEERING COMPANY, INC.

DRAWN BY: MAD
ENGINEER: CS, MAD
APPROVED:

RICO SURFACE WATER SAMPLING

DOLORES RIVER CROSS SECTION AT SAMPLING STATION DR-4-SW

RICO, CO

Project
Date 17-JUL-2013
Scale
Figure 8

THESE PLANS AND SPECIFICATIONS ARE THE PROPERTY OF ANDERSON ENGINEERING COMPANY, INC., 977 WEST 2100 SOUTH, SALT LAKE CITY, UTAH, 84119 AND SHALL NOT BE COPIED, REDUCED, OR REPRODUCED WITHOUT THEIR WRITTEN PERMISSION.

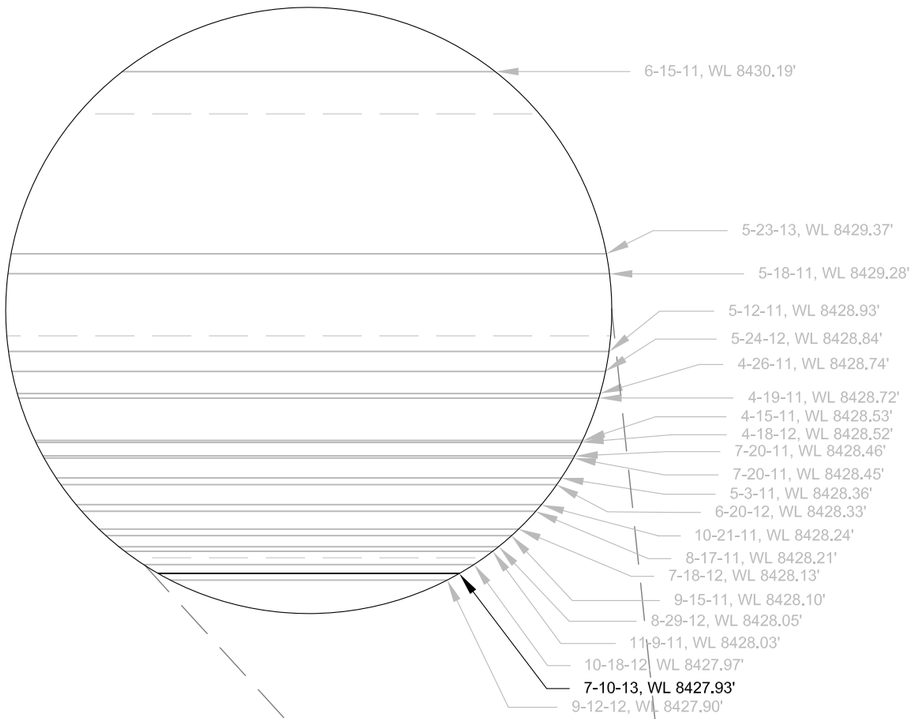

DR-G CROSS SECTION

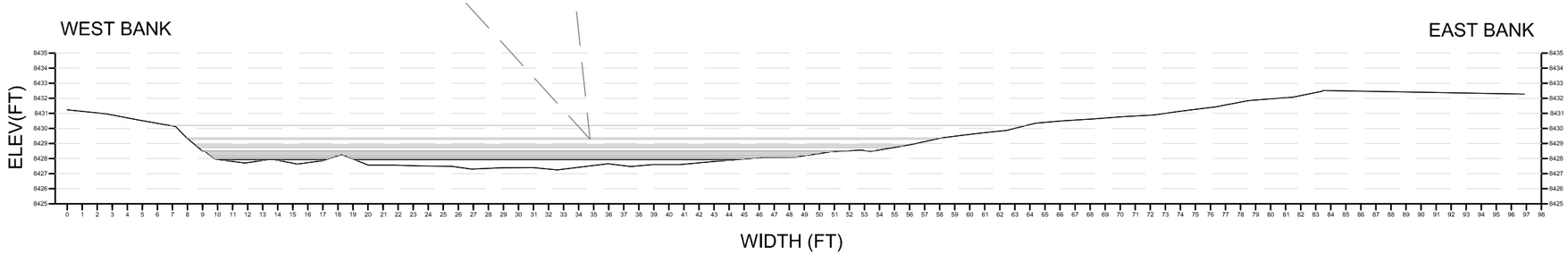

9 CROSS SECTION AT DR-G

SCALE - 1" = 9'

General Notes

Scale in Feet
0 4.5 9

No.	Revision/Issue	Date

ATLANTIC RICHFIELD COMPANY

ANDERSON ENGINEERING COMPANY, INC.

DRAWN BY: MAD
ENGINEER: CS, MAD
APPROVED:

RICO SURFACE WATER SAMPLING

DOLORES RIVER CROSS SECTION AT SAMPLING STATION DR-G

RICO, CO

Project
Date 10-JUL-2013
Scale
Figure 9

THESE PLANS AND SPECIFICATIONS ARE THE PROPERTY OF ANDERSON ENGINEERING COMPANY, INC., 977 WEST 2100 SOUTH, SALT LAKE CITY, UTAH, 84119 AND SHALL NOT BE COPIED, REDUCED, OR REPRODUCED WITHOUT THEIR WRITTEN PERMISSION.

Appendix F

Chain of Custody Records

Pace Analytical
www.pacelabs.com

Sample Condition Upon Receipt
ESI Tech Spec Client

WO#: 60148708

60148708

Client Name: BP Anderson

Optional
Proj Due Date:
Proj Name:

Courier: Fed Ex ☐ UPS ☒ USPS ☐ Client ☐ Commercial ☐ Pace ☐ Other ☐

Tracking #: 1Z733W671221005 4736; 4245 4718; 4727; 1284 Pace Shipping Label Used? Yes ☒ No ☐

Custody Seal on Cooler/Box Present: Yes ☒ No ☐ Seals intact: Yes ☒ No ☐

Packing Material: Bubble Wrap ☒ Bubble Bags ☒ Foam ☐ None ☐ Other ☐

Thermometer Used: T-112 / T-194 **Type of Ice:** Wet Blue None ☐ Samples received on ice, cooling process has begun.
(circle one)

Cooler Temperature: 5.6, 4.2, 5.4, 4.6, 4.2

Date and initials of person examining contents: JNS 7/12/13 1150

Temperature should be above freezing to 6°C

Chain of Custody present:	☒Yes ☐No ☐N/A	1.
Chain of Custody filled out:	☒Yes ☐No ☐N/A	2.
Chain of Custody relinquished:	☒Yes ☐No ☐N/A	3.
Sampler name & signature on COC:	☒Yes ☐No ☐N/A	4.
Samples arrived within holding time:	☒Yes ☐No ☐N/A	5.
Short Hold Time analyses (<72hr):	☐Yes ☒No ☐N/A	6.
Rush Turn Around Time requested:	☐Yes ☒No ☐N/A	7.
Sufficient volume:	☒Yes ☐No ☐N/A	8.
Correct containers used:	☒Yes ☐No ☐N/A	
Pace containers used:	☒Yes ☐No ☐N/A	9.
Containers intact:	☒Yes ☐No ☐N/A	10.
Unpreserved 5035A soils frozen w/in 48hrs?	☐Yes ☐No ☒N/A	11.
Filtered volume received for dissolved tests?	☒Yes ☐No ☒N/A	12.
Sample labels match COC: Includes date/time/ID/analyses Matrix: water	☒Yes ☐No ☐N/A	13.
All containers needing preservation have been checked.	☒Yes ☐No ☐N/A	
All containers needing preservation are found to be in compliance with EPA recommendation.	☒Yes ☐No ☐N/A	14.
Exceptions: VOA, coliform, TOC, O&G, WI-DRO (water), Phenolics	☒Yes ☐No	Initial when completed JNS / Lot # of added preservative
Trip Blank present: Pace Trip Blank lot # (if purchased): n/a	☐Yes ☐No ☒N/A	15.
Headspace in VOA vials (>6mm):	☐Yes ☐No ☒N/A	16.
Project sampled in USDA Regulated Area:	☐Yes ☐No ☒N/A	17. List State:

Client Notification/ Resolution: Copy COC to Client? Y / N Field Data Required? Y / N

Person Contacted: _____ Date/Time: _____

Comments/ Resolution: _____

Project Manager Review: [signature] Date: 7/12/13

7/19/13

Temp Log: Record start and finish times when unpacking cooler, if >20 min, recheck sample temps.

Start:	1132	Start:	
End:	1150	End:	
Temp:		Temp:	

ANDERSON
ENGINEERING COMPANY INC.

977 West 2100 South
Salt Lake City, UT 84119
(801) 972-6222
FAX (801) 972-6235

CHAIN OF CUSTODY RECORD

COC# 60148708
Page 1 of 2

Client: BP
Project: July 2013 Rico Water Sampling
AECI Contact Mark DeFriez (801) 234-9583

Lab Name: Pace Analytical Services
Lab Contact: Heather Wilson, (913) 563-1407
Lab Address: 9608 Loiret Blvd.
Lenexa, KS 66219

Matrix Codes
(W) Water
(S) Soil
(L) Liquid

QC: (circle one)
I II III IV

Field Location	Field Sample ID Number	Date	Time	Matrix	No. of Containers	Total Metals / Hardness / Silica	Potentially Dissolved Metals	Dissolved Metals	Alkalinity / TDS / TSS / Sulfate / Chloride	Cyanide	Salinity	Total Organic Carbon / Nitrate	Sulfide	COMMENTS	
DR-1	DR-1_20130710	7/10/2013	10:47 AM	W	8	X	X	X	X	X	X	X	X	1(BP2N) 1(BP3N) 1(BP1Z) 2(BP2Z) 1(AG3S) 2(BP3N) 1(BP3F)	001
DR-2	DR-2_20130710	7/10/2013	2:10 PM	W	8	X	X	X	X	X	X	X	X		002
DR-3	DR-3_20130710	7/10/2013	12:05 PM	W	8	X	X	X	X	X	X	X	X		003
DR-6	DR-6_20130710	7/10/2013	2:23 PM	W	8	X	X	X	X	X	X	X	X		004
DR-7	DR-7_20130710	7/10/2013	2:53 PM	W	8	X	X	X	X	X	X	X	X		005
DR-G	DR-G_20130710	7/10/2013	3:55 PM	W	8	X	X	X	X	X	X	X	X		006
DR-1 COMPOSITE	DR-1 COMPOSITE_20130710	7/10/2013	10:45 AM	W	8	X	X	X	X	X	X	X	X		007
DR-2 COMPOSITE	DR-2 COMPOSITE_20130710	7/10/2013	2:07 PM	W	8	X	X	X	X	X	X	X	X		008
DR-7 COMPOSITE	DR-7 COMPOSITE_20130710	7/10/2013	3:06 PM	W	8	X	X	X	X	X	X	X	X		009
DR-8	DR-8_20130710	7/10/2013	10:48 AM	W	8	X	X	X	X	X	X	X	X		010
DR-9	DR-9_20130710	7/10/2013	3:57 PM	W	8	X	X	X	X	X	X	X	X		011
FB-LAB	FB-LAB_20130710	7/10/2013	12:08 PM	W	8	X	X	X	X	X	X	X	X		012

Relinquished By: *signature*	Date	Time	Received By: *signature*	Date	Time	Special Instructions
			Pace	7/12/13	1030	S-G, A-2, S-A, A-B, A-2
Relinquished By: *signature*	Date	Time	Received By: *signature*		Time	
Relinquished By: *signature*	Date	Time	Received By: *signature*		Time	
Relinquished By: *signature*	Date	Time	Received By: *signature*		Time	

FLD-002

ANDERSON
ENGINEERING COMPANY INC.

977 West 2100 South
Salt Lake City, UT 84119
(801) 972-6222
FAX (801) 972-6235

CHAIN OF CUSTODY RECORD

COC# _____
Page 1 of 1

Client: BP
Project: July 2013 Rico Water Sampling
AECI Contact Mark DeFriez (801) 234-9583

Lab Name: Pace Analytical Services
Lab Contact: Heather Wilson, (913) 563-1407
Lab Address: 9608 Loiret Blvd.
Lenexa, KS 66219

Matrix Codes
(W) Water
(S) Soil
(L) Liquid

QC: (circle one)
I II III IV

60148708

Field Location	Field Sample ID Number	Date	Time	Matrix	No. of Containers	Total Metals / Hardness / Silica	Potentially Dissolved Metals	Dissolved Metals	Alkalinity / TDS / TSS / Sulfate / Chloride	Cyanide	Salinity	Total Organic Carbon / Nitrate	Sulfide			COMMENTS
GW-1	GW-1_20130709	7/9/2013	10:32 AM	W	8	X	X	X	X	X	X	X	X			1(BR2N) 1(BR3N) 1(BR32) 1(BR2) 1(AZ35) 1(BR3F) 2(BR3N) 013
GW-5	GW-5_20130709	7/9/2013	11:25 AM	W	8	X	X	X	X	X	X	X	X			014
GW-6	GW-6_20130709	7/9/2013	11:52 AM	W	8	X	X	X	X	X	X	X	X			015
MW-101	MW-101_20130709	7/9/2013	1:20 PM	W	8	X	X	X	X	X	X	X	X			016
MW-102	MW-102_20130709	7/9/2013	1:55 PM	W	8	X	X	X	X	X	X	X	X			017
MW-4 DEEP	MW-4 DEEP_20130709	7/9/2013	3:07 PM	W	8	X	X	X	X	X	X	X	X			018
MW-5 DEEP	MW-5 DEEP_20130709	7/9/2013	12:45 PM	W	8	X	X	X	X	X	X	X	X			019
MW-5 SHALLOW	MW-5 SHALLOW_20130709	7/9/2013	12:30 PM	W	8	X	X	X	X	X	X	X	X			020

Relinquished By: *signature*	Date	Time	Received By: *signature*		Time	Special Instructions
				7/12/13	1030	5-6, 4-2, 5-4, 4-8, 4-2
Relinquished By: *signature*	Date	Time	Received By: *signature*		Time	
Relinquished By: *signature*	Date	Time	Received By: *signature*		Time	
Relinquished By: *signature*	Date	Time	Received By: *signature*		Time	

FLD-002

WO#:60148708

60148708

2 of 2

Cindy Varga - TOCs that should arrive today...

From: MaryJane Walls
To: Cindy Varga
Date: 7/16/2013 11:30 AM
Subject: TOCs that should arrive today...
CC: Heather Wilson

GB # 4081164 project

Cindy,
You will be receiving TOCs for 60148708. We forgot to split any sample off for 353.2 nitrate+ nitrite. Could you/do you run this method? We report to 0.1 mg/L.

Thanks and let me know if you can keep and I'll add to the IRWO.

MJ

Cindy Varga - Re: TOCs that should arrive today...

From: MaryJane Walls
To: Cindy Varga
Date: 7/16/2013 12:55 PM
Subject: Re: TOCs that should arrive today...
CC: Heather Wilson

Oh sorry, yes, this client is a bit picky about RLs. If you can split and return a portion to us for nitrate/nitrite.

Thanks Cindy....you should have our FedEx number for shipping.

>>> Cindy Varga 7/16/2013 11:32 AM >>>
MJ,

GB's RL is 0.25 mg/L. Is this okay or do you need to sample returned?

Thanks,

Cindy Varga
Project Manager
Pace Analytical Services
Green Bay Lab
1241 Bellevue St Suite 9
Green Bay, WI 54302

Direct Line: 920-321-9455 ***New Number ***
Cell: 715-223-5638

E-mail: cindy.varga@pacelabs.com

Pace Analytical is now paperless! Reports are available via email or on-line through PacePort at www.pacelabs.com.
Please consider the environment before printing this email.

Chain of Custody

4081184

Pace Analytical®
www.pacelabs.com

Workorder: 60148708 **Workorder Name:** JULY 2013 RICO WATER SAMPLING **Owner Received Date:** 7/12/2013 **Results Requested By:** 7/26/2013

Report To	Subcontract To
Heather Wilson Pace Analytical Services, Inc. 9608 Loiret Blvd. Lenexa, KS 66219 Phone (913)599-5665 Fax (913)599-1759	Pace Analytical Green Bay 1241 Bellevue Street Suite 9 Green Bay, WI 54302 Phone (920)469-2436

	Item	Sample ID	Sample Type	Collect Date/Time	Lab ID	Matrix	Preserved Containers: H2SO4						Requested Analysis: 5310C TOC												LAB USE ONLY
1	1	DR-1_20130710	PS	7/10/2013 10:47	60148708001	Water	1						X												1-250mL Lag
2	2	DR-2_20130710	PS	7/10/2013 14:10	60148708002	Water	1						X												
3	3	DR-3_20130710	PS	7/10/2013 12:05	60148708003	Water	1						X												
4	4	DR-6_20130710	PS	7/10/2013 14:23	60148708004	Water	1						X												
5	5	DR-7_20130710	PS	7/10/2013 14:53	60148708005	Water	1						X												
6	6	DR-G_20130710	PS	7/10/2013 15:55	60148708006	Water	1						X												
7	7	DR-1 COMPOSITE_20130710	PS	7/10/2013 10:45	60148708007	Water	1						X												
8	8	DR-2 COMPOSITE_20130710	PS	7/10/2013 14:07	60148708008	Water	1						X												
9	9	DR-7 COMPOSITE_20130710	PS	7/10/2013 15:06	60148708009	Water	1						X												
10	10	DR-8_20130710	PS	7/10/2013 10:48	60148708010	Water	1						X												
11	11	DR-9_20130710	PS	7/10/2013 15:57	60148708011	Water	1						X												
12	12	FB-LAB_20130710	PS	7/10/2013 12:08	60148708012	Water	1						X												
13	13	GW-1_20130709	PS	7/9/2013 10:32	60148708013	Water	1						X												
14	14	GW-5_20130709	PS	7/9/2013 11:25	60148708014	Water	1						X												
15	15	GW-6_20130709	PS	7/9/2013 11:52	60148708015	Water	1						X												
16	16	MW-101_20130709	PS	7/9/2013 13:20	60148708016	Water	1						X												
17	17	MW-102_20130709	PS	7/9/2013 13:55	60148708017	Water	1						X												
18	18	MW-4 DEEP_20130709	PS	7/9/2013 15:07	60148708018	Water	1						X												
19	19	MW-5 DEEP_20130709	PS	7/9/2013 12:45	60148708019	Water	1						X												

4081184

Chain of Custody

Pace Analytical®
www.pacelabs.com

Workorder: 60148708 **Workorder Name:** JULY 2013 RICO WATER SAMPLING **Owner Received Date:** 7/12/2013 **Results Requested By:** 7/26/2013

Report To	Subcontract To
Heather Wilson Pace Analytical Services, Inc. 9608 Loiret Blvd. Lenexa, KS 66219 Phone (913)599-5665 Fax (913)599-1759	Pace Analytical Green Bay 1241 Bellevue Street Suite 9 Green Bay, WI 54302 Phone (920)469-2436

Item	Sample ID	Sample Type	Collect Date/Time	Lab ID	Matrix	Preserved Containers: H2SO4	Requested Analysis: 5310C TOC	LAB USE ONLY
20	MW-5 SHALLOW_201 30709	PS	7/9/2013 12:30	60148708020	Water	1	X	1-250mLag
21								
22								
23								
24								

Transfers	Released By	Date/Time	Received By	Date/Time
1	[signature]	7/15/13 1700		
2	Fed EX	7/16/13 1010	[signature] / Pace GB	7/16/13 1010
3			[signature]	7/19/13 0830

Comments: No J flags

Cooler Temperature on Receipt 0.5 °C **Custody Seal** Y or ~~N~~ 7/16/13 BF **Received on Ice** Y or N **Samples Intact** Y or N

Chain of Custody

4081184

Pace Analytical®
www.pacelabs.com

Workorder: 60148708 **Workorder Name:** JULY 2013 RICO WATER SAMPLING **Owner Received Date:** 7/12/2013 **Results Requested By:** 7/26/2013

Report To	Subcontract To
Heather Wilson Pace Analytical Services, Inc. 9608 Loiret Blvd. Lenexa, KS 66219 Phone (913)599-5665 Fax (913)599-1759	Pace Analytical Green Bay 1241 Bellevue Street Suite 9 Green Bay, WI 54302 Phone (920)469-2436

	Item	Sample ID	Sample Type	Collect Date/Time	Lab ID	Matrix	Preserved Containers: H2SO4						Requested Analysis: 5310C TOC												LAB USE ONLY
01	1	DR-1_20130710	PS	7/10/2013 10:47	60148708001	Water	1						X												1-250mL Ag
02	2	DR-2_20130710	PS	7/10/2013 14:10	60148708002	Water	1						X												
03	3	DR-3_20130710	PS	7/10/2013 12:05	60148708003	Water	1						X												
04	4	DR-6_20130710	PS	7/10/2013 14:23	60148708004	Water	1						X												
05	5	DR-7_20130710	PS	7/10/2013 14:53	60148708005	Water	1						X												
06	6	DR-G_20130710	PS	7/10/2013 15:55	60148708006	Water	1						X												
07	7	DR-1 COMPOSITE_20130710	PS	7/10/2013 10:45	60148708007	Water	1						X												
08	8	DR-2 COMPOSITE_20130710	PS	7/10/2013 14:07	60148708008	Water	1						X												
09	9	DR-7 COMPOSITE_20130710	PS	7/10/2013 15:06	60148708009	Water	1						X												
10	10	DR-8_20130710	PS	7/10/2013 10:48	60148708010	Water	1						X												
11	11	DR-9_20130710	PS	7/10/2013 15:57	60148708011	Water	1						X												
12	12	FB-LAB_20130710	PS	7/10/2013 12:08	60148708012	Water	1						X												
13	13	GW-1_20130709	PS	7/9/2013 10:32	60148708013	Water	1						X												
14	14	GW-5_20130709	PS	7/9/2013 11:25	60148708014	Water	1						X												
15	15	GW-6_20130709	PS	7/9/2013 11:52	60148708015	Water	1						X												
16	16	MW-101_20130709	PS	7/9/2013 13:20	60148708016	Water	1						X												
17	17	MW-102_20130709	PS	7/9/2013 13:55	60148708017	Water	1						X												
18	18	MW-4 DEEP_20130709	PS	7/9/2013 15:07	60148708018	Water	1						X												
19	19	MW-5 DEEP_20130709	PS	7/9/2013 12:45	60148708019	Water	1						X												

Chain of Custody

4081184

Pace Analytical®
www.pacelabs.com

Workorder: 60148708 **Workorder Name:** JULY 2013 RICO WATER SAMPLING **Owner Received Date:** 7/12/2013 **Results Requested By:** 7/26/2013

Report To	Subcontract To
Heather Wilson Pace Analytical Services, Inc. 9608 Loiret Blvd. Lenexa, KS 66219 Phone (913)599-5665 Fax (913)599-1759	Pace Analytical Green Bay 1241 Bellevue Street Suite 9 Green Bay, WI 54302 Phone (920)469-2436

						Preserved Containers						Requested Analysis												
Item	Sample ID	Sample Type	Collect Date/Time	Lab ID	Matrix	H2SO4						5310C TOC												LAB USE ONLY
20	MW-5 SHALLOW_201 30709	PS	7/9/2013 12:30	60148708020	Water	1						X												1-250mL Cag
21																								
22																								
23																								
24																								

Transfers	Released By	Date/Time	Received By	Date/Time
1	[signature]	7/15/13 1700		
2	Fed Ex	7/16/13 1010	[signature] / Pace GB	7/16/13 1010
3				

Comments: No J flags

Cooler Temperature on Receipt 0.5 °C **Custody Seal** Y or ~~N~~ 7/16/13 BJ **Received on Ice** Y or N **Samples Intact** Y or N

Pace Analytical Services, Inc.
1241 Bellevue Street, Suite 9
Green Bay, WI 54302

Pace Analytical™

Sample Condition Upon Receipt

Client Name: Pace-KS Project # 4081184

Courier: ☑ Fed Ex ☐ UPS ☐ USPS ☐ Client ☐ Commercial ☐ Pace Other _____

Tracking #: 5689 1277 9700

Custody Seal on Cooler/Box Present: ☑ yes ~~☐ no~~ 7-16-13 BF Seals intact: ☑ yes ☐ no

Custody Seal on Samples Present: ☐ yes ☑ no Seals intact: ☐ yes ☐ no

Packing Material: ☑ Bubble Wrap ☑ Bubble Bags ☐ None ☐ Other _____

Thermometer Used SR-47 **Type of Ice:** (Wet) Blue Dry None ☑ Samples on ice, cooling process has begun

Cooler Temperature Uncorr: 0.5 /Corr: 0.5°C **Biological Tissue is Frozen:** ☐ yes ☐ no

Temp Blank Present: ☑ yes ☐ no

Person examining contents:
Date: 7-16-13
Initials: BF

Temp should be above freezing to 6°C for all sample except Biota.
Frozen Biota Samples should be received ≤ 0°C.

		Comments:
Chain of Custody Present:	☑Yes ☐No ☐N/A	1.
Chain of Custody Filled Out:	☑Yes ☐No ☐N/A	2.
Chain of Custody Relinquished:	☑Yes ☐No ☐N/A	3.
Sampler Name & Signature on COC:	☐Yes ☐No ☑N/A	4. Sub work. 7-16-13BF
Samples Arrived within Hold Time:	☑Yes ☐No ☐N/A	5.
- VOA Samples frozen upon receipt	☐Yes ☐No	Date/Time:
Short Hold Time Analysis (<72hr):	☐Yes ☑No ☐N/A	6.
Rush Turn Around Time Requested:	☐Yes ☑No ☐N/A	7.
Sufficient Volume:	☑Yes ☐No ☐N/A	8.
Correct Containers Used:	☑Yes ☐No ☐N/A	9.
-Pace Containers Used:	☐Yes ☑No ☐N/A	
-Pace IR Containers Used:	☑Yes ☐No ☐N/A	
Containers Intact:	☑Yes ☐No ☐N/A	10.
Filtered volume received for Dissolved tests	☐Yes ☐No ☑N/A	11.
Sample Labels match COC:	☑Yes ☐No ☐N/A	12.
-Includes date/time/ID/Analysis Matrix: W		
All containers needing preservation have been checked. (Non-Compliance noted in 13.)	☐Yes ☐No ☑N/A	13. ☐ HNO3 ☐ H2SO4 ☐ NaOH ☐ NaOH +ZnAct
All containers needing preservation are found to be in compliance with EPA recommendation. (HNO3, H2SO4 ≤2; NaOH+ZnAct ≥9, NaOH ≥12)	☐Yes ☐No ☑N/A	
exceptions: VOA, coliform, (TOC), TOX, TOH, O&G, WIDROW, Phenolics, OTHER:	☑Yes ☐No	Initial when completed / Lab Std #ID of preservative / Date/Time:
Headspace in VOA Vials (>6mm):	☐Yes ☐No ☑N/A	14.
Trip Blank Present:	☐Yes ☐No ☑N/A	15.
Trip Blank Custody Seals Present	☐Yes ☐No ☑N/A	
Pace Trip Blank Lot # (if purchased):		

Client Notification/ Resolution: If checked, see attached form for additional comments ☐

Person Contacted: _____ Date/Time: _____

Comments/ Resolution: _____

Project Manager Review: CW **Date:** 7/16/13

F-GB-C-031-Rev.01 (01Mar2013) SCUR Form

Chain of Custody

Pace Analytical®
www.pacelabs.com

Workorder: 60148708 **Workorder Name:** JULY 2013 RICO WATER SAMPLING **Owner Received Date:** 7/12/2013 **Results Requested By:** 7/26/2013

Report To	Subcontract To
Heather Wilson Pace Analytical Services, Inc. 9608 Loiret Blvd. Lenexa, KS 66219 Phone (913)599-5665 Fax (913)599-1759	Pace Analytical Billings MT 602 S 25th Street Billings, MT, MT 591014549 Phone (406) 254-7226

Item	Sample ID	Sample Type	Collect Date/Time	Lab ID	Matrix	Preserved Containers: none						Requested Analysis: Salinity												10235424 LAB USE ONLY
1	DR-1_20130710	PS	7/10/2013 10:47	60148708001	Water	1						X												-001
2	DR-2_20130710	PS	7/10/2013 14:10	60148708002	Water	1						X												002
3	DR-3_20130710	PS	7/10/2013 12:05	60148708003	Water	1						X												003
4	DR-6_20130710	PS	7/10/2013 14:23	60148708004	Water	1						X												004
5	DR-7_20130710	PS	7/10/2013 14:53	60148708005	Water	1						X												005
6	DR-G_20130710	PS	7/10/2013 15:55	60148708006	Water	1						X												006
7	DR-1 COMPOSITE_20130710	PS	7/10/2013 10:45	60148708007	Water	1						X												007
8	DR-2 COMPOSITE_20130710	PS	7/10/2013 14:07	60148708008	Water	1						X												008
9	DR-7 COMPOSITE_20130710	PS	7/10/2013 15:06	60148708009	Water	1						X												009
10	DR-8_20130710	PS	7/10/2013 10:48	60148708010	Water	1						X												010
11	DR-9_20130710	PS	7/10/2013 15:57	60148708011	Water	1						X												011
12	FB-LAB_20130710	PS	7/10/2013 12:08	60148708012	Water	1						X												012
13	GW-1_20130709	PS	7/9/2013 10:32	60148708013	Water	1						X												013
14	GW-5_20130709	PS	7/9/2013 11:25	60148708014	Water	1						X												014
15	GW-6_20130709	PS	7/9/2013 11:52	60148708015	Water	1						X												015
16	MW-101_20130709	PS	7/9/2013 13:20	60148708016	Water	1						X												016
17	MW-102_20130709	PS	7/9/2013 13:55	60148708017	Water	1						X												017
18	MW-4 DEEP_20130709	PS	7/9/2013 15:07	60148708018	Water	1						X												018
19	MW-5 DEEP_20130709	PS	7/9/2013 12:45	60148708019	Water	1						X												019

Chain of Custody

Pace Analytical®
www.pacelabs.com

Workorder: 60148708 **Workorder Name:** JULY 2013 RICO WATER SAMPLING **Owner Received Date:** 7/12/2013 **Results Requested By:** 7/26/2013

Report To	Subcontract To
Heather Wilson Pace Analytical Services, Inc. 9608 Loiret Blvd. Lenexa, KS 66219 Phone (913)599-5665 Fax (913)599-1759	Pace Analytical Billings MT 602 S 25th Street Billings, MT, MT 591014549 Phone (406) 254-7226

Item	Sample ID	Sample Type	Collect Date/Time	Lab ID	Matrix	Preserved Containers: none	Requested Analysis: Salinity	LAB USE ONLY
20	MW-5 SHALLOW_201 30709	PS	7/9/2013 12:30	60148708020	Water	1	X	10255424 020
21								
22								
23								
24								

Transfers	Released By	Date/Time	Received By	Date/Time
1	[signature]	7/15/13 1700	[signature] / Pace	7/16/13 1415
2				
3				

Comments: No J flags

Cooler Temperature on Receipt 0.8 °C Custody Seal Y or N Received on ice Y or N Samples Intact Y or N

Pace Analytical	Document Name: **Sample Condition Upon Receipt Form**	Document Revised: 14Nov2012 Page 1 of 1
	Document No.: **F-MT-C-184-rev.02**	Issuing Authority: Pace Montana Quality Office

Sample Condition Upon Receipt

Client Name: Pace KS

Project #: WO#: 10235424 (10235424)

Courier: ☒ Fed Ex ☐ UPS ☐ USPS ☐ Client ☐ Commercial ☐ Pace ☐ Other: _____

Tracking Number: 5689 1277 9711

Custody Seal on Cooler/Box Present? ☒ Yes ☐ No **Seals Intact?** ☒ Yes ☐ No

Optional: Proj. Due Date: Proj. Name:

Packing Material: ☒ Bubble Wrap ☒ Bubble Bags ☐ None ☐ Other: _____ **Temp Blank?** ☒ Yes ☐ No

Thermometer Used: ☒ 1383045 ☐ 135 ☐ NA **Type of Ice:** ☒ Wet ☐ Blue ☐ None ☒ Samples on ice, cooling process has begun

Cooler Temp Read: 0.8 **Date and Initials of Person Examining Contents:** SM 7-16-13

Cooler Temp Corrected: 0.8 **Biological Tissue Frozen?** ☐ Yes ☒ No

Temp should be above freezing to 6°C

				Comments:
Chain of Custody Present?	☒ Yes	☐ No	☐ N/A	1.
Chain of Custody Filled Out?	☒ Yes	☐ No	☐ N/A	2.
Chain of Custody Relinquished?	☒ Yes	☐ No	☐ N/A	3.
Sampler Name and Signature on COC?	☐ Yes	☐ No	☒ N/A	4.
Samples Arrived within Hold Time?	☒ Yes	☐ No	☐ N/A	5.
Short Hold Time Analysis (<72 hr)?	☐ Yes	☒ No	☐ N/A	6.
Rush Turn Around Time Requested?	☐ Yes	☒ No	☐ N/A	7.
Sufficient Volume?	☒ Yes	☐ No	☐ N/A	8.
Correct Containers Used?	☒ Yes	☐ No	☐ N/A	9.
-Pace Containers Used?	☒ Yes	☐ No	☐ N/A	
Containers Intact?	☒ Yes	☐ No	☐ N/A	10.
Filtered Volume Received for Dissolved Tests?	☐ Yes	☐ No	☒ N/A	11.
Sample Labels Match COC? -Includes Date/Time/ID/Analysis Matrix: H_2O	☒ Yes	☐ No	☐ N/A	12.
All containers needing acid/base preservation have been checked? Noncompliances are noted in 13.	☐ Yes	☐ No	☒ N/A	13. ☐ HNO_3 ☐ H_2SO_4 ☐ NaOH ☐ HCl Sample #
All containers needing preservation are found to be in compliance with EPA recommendation? (HNO_3, H_2SO_4, HCl<2; NaOH>12)	☐ Yes	☐ No	☒ N/A	
Exceptions: VOA, Coliform, TOC, Oil and Grease, WI-DRO (water)	☐ Yes	☒ No		Initial when completed: _____ Lot # of added preservative: _____
Samples checked for dechlorination?	☐ Yes	☐ No	☒ N/A	14.
Headspace in VOA Vials (>6mm)?	☐ Yes	☐ No	☒ N/A	15.
Trip Blank Present?	☐ Yes	☐ No	☒ N/A	16.
Trip Blank Custody Seals Present?	☐ Yes	☐ No	☒ N/A	
Pace Trip Blank Lot # (if purchased): _____				

CLIENT NOTIFICATION/RESOLUTION **Field Data Required?** ☐ Yes ☐ No

Person Contacted: _____ Date/Time: _____

Comments/Resolution: _____

Project Manager Review: [signature] **Date:** 7-16-13

Note: Whenever there is a discrepancy affecting North Carolina compliance samples, a copy of this form will be sent to the North Carolina DEHNR Certification Office (i.e out of hold, incorrect preservative, out of temp, incorrect containers)

Chain of Custody

10235444

Pace Analytical®
www.pacelabs.com

Workorder: 60148708 **Workorder Name:** JULY 2013 RICO WATER SAMPLING **Owner Received Date:** 7/12/2013 **Results Requested By:** 7/26/2013

Report To	Subcontract To
Heather Wilson Pace Analytical Services, Inc. 9608 Loiret Blvd. Lenexa, KS 66219 Phone (913)599-5665 Fax (913)599-1759	Pace Analytical Minnesota 1700 Elm Street Suite 200 Minneapolis, MN 55414 Phone (612)607-1700

Item	Sample ID	Sample Type	Collect Date/Time	Lab ID	Matrix	Preserved Containers: HNO3						Requested Analysis: 200.8 Total Metal + Hardness + Silica	200.8 Dissolved Metals	245.1 Total Mercury	245.1 Dissolved Mercury									LAB USE ONLY
1	DR-1_20130710	PS	7/10/2013 10:47	60148708001	Water	2						X	X	X	X									001
2	DR-2_20130710	PS	7/10/2013 14:10	60148708002	Water	2						X	X	X	X									002
3	DR-3_20130710	PS	7/10/2013 12:05	60148708003	Water	2						X	X	X	X									003
4	DR-6_20130710	PS	7/10/2013 14:23	60148708004	Water	2						X	X	X	X									004
5	DR-7_20130710	PS	7/10/2013 14:53	60148708005	Water	2						X	X	X	X									005
6	DR-G_20130710	PS	7/10/2013 15:55	60148708006	Water	2						X	X	X	X									006
7	DR-1 COMPOSITE_20130710	PS	7/10/2013 10:45	60148708007	Water	2						X	X	X	X									007
8	DR-2 COMPOSITE_20130710	PS	7/10/2013 14:07	60148708008	Water	2						X	X	X	X									008
9	DR-7 COMPOSITE_20130710	PS	7/10/2013 15:06	60148708009	Water	2						X	X	X	X									009
10	DR-8_20130710	PS	7/10/2013 10:48	60148708010	Water	2						X	X	X	X									010
11	DR-9_20130710	PS	7/10/2013 15:57	60148708011	Water	2						X	X	X	X									011
12	FB-LAB_20130710	PS	7/10/2013 12:08	60148708012	Water	2						X	X	X	X									012
13	GW-1_20130709	PS	7/9/2013 10:32	60148708013	Water	2						X	X	X	X									013
14	GW-5_20130709	PS	7/9/2013 11:25	60148708014	Water	2						X	X	X	X									014
15	GW-6_20130709	PS	7/9/2013 11:52	60148708015	Water	2						X	X	X	X									015
16	MW-101_20130709	PS	7/9/2013 13:20	60148708016	Water	2						X	X	X	X									016
17	MW-102_20130709	PS	7/9/2013 13:55	60148708017	Water	2						X	X	X	X									017
18	MW-4 DEEP_20130709	PS	7/9/2013 15:07	60148708018	Water	2						X	X	X	X									018
19	MW-5 DEEP_20130709	PS	7/9/2013 12:45	60148708019	Water	2						X	X	X	X									019

10235444

Chain of Custody

Pace Analytical®
www.pacelabs.com

Workorder: 60148708 **Workorder Name:** JULY 2013 RICO WATER SAMPLING **Owner Received Date:** 7/12/2013 **Results Requested By:** 7/26/2013

Report To	Subcontract To
Heather Wilson Pace Analytical Services, Inc. 9608 Loiret Blvd. Lenexa, KS 66219 Phone (913)599-5665 Fax (913)599-1759	Pace Analytical Minnesota 1700 Elm Street Suite 200 Minneapolis, MN 55414 Phone (612)607-1700

Item	Sample ID	Sample Type	Collect Date/Time	Lab ID	Matrix	Preserved Containers: HNO3						Requested Analysis: 200.8 Total Metal + Hardness + Silica	200.8 Dissolved Metals	245.1 Total Mercury	245.1 Dissolved Mercury									LAB USE ONLY
20	MW-5 SHALLOW_201 30709	PS	7/9/2013 12:30	60148708020	Water	2						X	X	X	X									020
21																								
22																								
23																								
24																								

Transfers	Released By	Date/Time	Received By	Date/Time
1	[signature]	7/15/13 1700	[signature]/pace	7/16/13 09:10
2				
3				

Comments: Use Profile 26985. No J flags.

Cooler Temperature on Receipt 14.9°C **Custody Seal** Y or N **Received on Ice** Y or N **Samples Intact** Y or N

Pace Analytical®	Document Name: Sample Condition Upon Receipt Form	Document Revised: 28Jan2013 Page 1 of 1
	Document No.: F-MN-L-213-rev.06	Issuing Authority: Pace Minnesota Quality Office

Sample Condition Upon Receipt

Client Name: Pace Kansas

Project #: WO#: 10235444

10235444

Courier: ☑ Fed Ex ☐ UPS ☐ USPS ☐ Client ☐ Commercial ☐ Pace ☐ Other: _____

Tracking Number: 5689 1277 9722

Custody Seal on Cooler/Box Present? ☑ Yes ☑ No **Seals Intact?** ☑ Yes ☐ No

Optional: Proj. Due Date: Proj. Name:

Packing Material: ☐ Bubble Wrap ☐ Bubble Bags ☐ None ☑ Other: foam **Temp Blank?** ☐ Yes ☑ No

Thermom. Used: ☑ B88A912167504 ☐ 80512447 ☐ 72337080 **Type of Ice:** ☐ Wet ☐ Blue ☑ None ☐ Samples on ice, cooling process has begun

Cooler Temp Read (°C): 14.9 **Cooler Temp Corrected (°C):** 14.9 **Biological Tissue Frozen?** ☐ Yes ☐ No

Temp should be above freezing to 6°C **Correction Factor:** 0.0 **Date and Initials of Person Examining Contents:** KO 7-16-13

				Comments:
Chain of Custody Present?	☑ Yes	☐ No	☐ N/A	1.
Chain of Custody Filled Out?	☑ Yes	☐ No	☐ N/A	2.
Chain of Custody Relinquished?	☑ Yes	☐ No	☐ N/A	3.
Sampler Name and/or Signature on COC?	☐ Yes	☑ No	☐ N/A	4.
Samples Arrived within Hold Time?	☑ Yes	☐ No	☐ N/A	5.
Short Hold Time Analysis (<72 hr)?	☐ Yes	☑ No	☐ N/A	6.
Rush Turn Around Time Requested?	☐ Yes	☑ No	☐ N/A	7.
Sufficient Volume?	☑ Yes	☐ No	☐ N/A	8.
Correct Containers Used?	☑ Yes	☐ No	☐ N/A	9.
-Pace Containers Used?	☑ Yes	☐ No	☐ N/A	
Containers Intact?	☑ Yes	☐ No	☐ N/A	10.
Filtered Volume Received for Dissolved Tests?	☑ Yes	☐ No	☐ N/A	11.
Sample Labels Match COC? -Includes Date/Time/ID/Analysis Matrix: WT	☑ Yes	☐ No	☐ N/A	12.
All containers needing acid/base preservation have been checked? Noncompliances are noted in 13.	☑ Yes	☐ No	☐ N/A	13. ☑ HNO_3 ☐ H_2SO_4 ☐ NaOH ☐ HCl Sample # 1-1
All containers needing preservation are found to be in compliance with EPA recommendation? (HNO_3, H_2SO_4, HCl<2; NaOH>12)	☑ Yes	☐ No	☐ N/A	All
Exceptions: VOA, Coliform, TOC, Oil and Grease, WI-DRO (water)	☐ Yes	☑ No		Initial when completed: KO Lot # of added preservative:
Headspace in VOA Vials (>6mm)?	☐ Yes	☐ No	☑ N/A	14.
Trip Blank Present?	☐ Yes	☐ No	☑ N/A	15.
Trip Blank Custody Seals Present?	☐ Yes	☐ No	☑ N/A	
Pace Trip Blank Lot # (if purchased): _____				

CLIENT NOTIFICATION/RESOLUTION **Field Data Required?** ☐ Yes ☐ No

Person Contacted: _____ Date/Time: _____

Comments/Resolution: _____

Project Manager Review: Kalin Xiong **Date:** 7/17/13

Note: Whenever there is a discrepancy affecting North Carolina compliance samples, a copy of this form will be sent to the North Carolina DEHNR Certification Office (i.e out of hold, incorrect preservative, out of temp, incorrect containers)

Pace Analytical®
www.pacelabs.com

Sample Condition Upon Receipt
ESI Tech Spec Client

WO#: 60149200
60149200

Client Name: BP Anderson

Optional
Proj Due Date:
Proj Name:

Courier: Fed Ex ☐ UPS ☒ USPS ☐ Client ☐ Commercial ☐ Pace ☐ Other ☐

Tracking #: 1Z 733 W87 22 1005 4610
1Z 733 W87 22 1005 4629

Pace Shipping Label Used? Yes ☑ - No ☐

Custody Seal on Cooler/Box Present: Yes ☑ No ☐ Seals intact: Yes ☑ No ☐

Packing Material: Bubble Wrap ☐ Bubble Bags ☑ Foam ☐ None ☐ Other ☑ 2 P/C

Thermometer Used: T-112 / T-194 **Type of Ice:** Wet Blue None ☐ Samples received on ice, cooling process has begun.
(circle one)

Cooler Temperature: 5.5/4.9

Date and initials of person examining contents: pc 7/19/13

Temperature should be above freezing to 6°C

Chain of Custody present:	☑Yes ☐No ☐N/A	1.	
Chain of Custody filled out:	☑Yes ☐No ☐N/A	2.	
Chain of Custody relinquished:	☑Yes ☐No ☐N/A	3.	
Sampler name & signature on COC:	☑Yes ☐No ☐N/A	4.	
Samples arrived within holding time:	☑Yes ☐No ☐N/A	5.	
Short Hold Time analyses (<72hr):	☐Yes ☑No ☐N/A	6.	
Rush Turn Around Time requested:	☐Yes ☑No ☐N/A	7.	
Sufficient volume:	☑Yes ☐No ☐N/A	8.	
Correct containers used:	☑Yes ☐No ☐N/A		
Pace containers used:	☑Yes ☐No ☐N/A	9.	
Containers intact:	☑Yes ☐No ☐N/A	10.	
Unpreserved 5035A soils frozen w/in 48hrs?	☐Yes ☐No ☑N/A	11.	
Filtered volume received for dissolved tests?	☐Yes ☐No ☑N/A	12.	
Sample labels match COC: Includes date/time/ID/analyses Matrix: WT	☑Yes ☐No ☐N/A	13.	
All containers needing preservation have been checked.	☑Yes ☐No ☐N/A	14.	Added 1.0 ml of NaOH to 13P32 for EB-2. pH 8.0/12.0
All containers needing preservation are found to be in compliance with EPA recommendation.	☑Yes ☐No ☐N/A		
Exceptions: VOA, coliform, TOC, O&G, WI-DRO (water), Phenolics	☑Yes ☐No	Initial when completed pc	Lot # of added preservative 13164
Trip Blank present: Pace Trip Blank lot # (if purchased):	☐Yes ☐No ☑N/A	15.	
Headspace in VOA vials (>6mm):	☐Yes ☐No ☑N/A	16.	
Project sampled in USDA Regulated Area:	☐Yes ☐No ☑N/A	17. List State:	

Client Notification/ Resolution: Copy COC to Client? Y / N Field Data Required? Y / N

Person Contacted: _____ Date/Time: _____

Comments/ Resolution: _____

Temp Log: Record start and finish times when unpacking cooler, if >20 min, recheck sample temps.	
Start: 1100	Start:
End: 1120	End:
Temp:	Temp:

Project Manager Review: MJW for HMW Date: 7/19/13

ANDERSON
ENGINEERING COMPANY INC.

977 West 2100 South
Salt Lake City, UT 84119
(801) 972-6222
FAX (801) 972-6235

CHAIN OF CUSTODY RECORD

COC# _____
Page 1 of 1

Client: BP
Project: July 2013 Rico Water Sampling
AECI Contact: Mark DeFriez (801) 234-9583

Lab Name: Pace Analytical Services
Lab Contact: Heather Wilson, (913) 563-1407
Lab Address: 9608 Loiret Blvd.
Lenexa, KS 66219

Matrix Codes
(W) Water
(S) Soil
(L) Liquid

QC: (circle one)
I II III IV

60149200

Field Location	Field Sample ID Number	Date	Time	Matrix	No. of Containers	Total Metals / Hardness / Silica	Potentially Dissolved Metals	Dissolved Metals	Alkalinity / TDS / TSS / Sulfate / Chloride	Cyanide	Salinity	Total Organic Carbon / Nitrate	Sulfide			COMMENTS
DR-4	DR-4_20130717	7/17/2013	1:30 PM	W	8	X	X	X	X	X	X	X	X	1BP3N		1BG3S 1BP3N 1BP3Z4-5 1BP3Z 2 12-0 1BP3C 12-5 1BQ2N
DR-5	DR-5_20130717	7/17/2013	1:05 PM	W	8	X	X	X	X	X	X	X	X			
DR-4-SW	DR-4-SW_20130717	7/17/2013	10:50 AM	W	8	X	X	X	X	X	X	X	X			
DR-4-SW COMPOS	DR-4-SW COMPOSITE_20130717	7/17/2013	10:48 AM	W	8	X	X	X	X	X	X	X	X			
GW-7	GW-7_20130717	7/17/2013	2:30 PM	W	8	X	X	X	X	X	X	X	X			
EB-1	EB-1_20130717	7/17/2013	2:07 PM	W	8	X	X	X	X	X	X	X	X			
EB-2	EB-2_20130717	7/17/2013	1:55 PM	W	8	X	X	X	X	X	X	X	X			
MW-4 SHALLOW	MW-4 SHALLOW_20130717	7/17/2013	3:35 PM	W	8	X	X	X	X	X	X	X	X			

Relinquished By: *signature*	Date	Time	Received By: *signature*	Date	Time	Special Instructions
[signature]	7/18	0:23	[signature] PLASE	7/19/13	1000	5-5/4.9
Relinquished By: *signature*	Date	Time	Received By: *signature*		Time	
Relinquished By: *signature*	Date	Time	Received By: *signature*		Time	
Relinquished By: *signature*	Date	Time	Received By: *signature*		Time	

FLD-002

Chain of Custody

Jw

408747

Pace Analytical®
www.pacelabs.com

Workorder: 60149200 **Workorder Name:** JULY 2013 RICO WATER SAMPLING **Owner Received Date:** 7/19/2013 **Results Requested By:** 8/2/2013

Report To	Subcontract To
Heather Wilson Pace Analytical Services, Inc. 9608 Loiret Blvd. Lenexa, KS 66219 Phone (913)599-5665 Fax (913)599-1759	Pace Analytical Green Bay 1241 Bellevue Street Suite 9 Green Bay, WI 54302 Phone (920)469-2436

Item	Sample ID	Sample Type	Collect Date/Time	Lab ID	Matrix	Preserved Containers: H2SO4						Requested Analysis: 5310C TOC												LAB USE ONLY
1	DR-4_20130717	PS	7/17/2013 13:30	60149200001	Water	1						X												001 1-250mlag c
2	DR-5_20130717	PS	7/17/2013 13:05	60149200002	Water	1						X												002
3	DR-4-SW_20130717	PS	7/17/2013 10:50	60149200003	Water	1						X												003
4	DR-4-SW	PS	7/17/2013 10:48	60149200004	Water	1						X												004
5	GW-7_20130717	PS	7/17/2013 14:30	60149200005	Water	1						X												005
6	EB-1_20130717	PS	7/17/2013 14:07	60149200006	Water	1						X												006
7	EB-2_20130717	PS	7/17/2013 13:55	60149200007	Water	1						X												007
8	MW-4 SHALLOW_20130717	PS	7/17/2013 15:35	60149200008	Water	1						X												008

Transfers	Released By	Date/Time	Received By	Date/Time
1	[illegible]	7/24/13 1700		
2				
3	Fed Ex	7/25/13 1005	[illegible]	7/25/13 1005

Comments

No J flags

Cooler Temperature on Receipt 4 °C **Custody Seal** Y or N **Received on Ice** Y or N **Samples Intact** Y or N

Pace Analytical Services, Inc.
1241 Bellevue Street, Suite 9
Green Bay, WI 54302

Pace Analytical™

Sample Condition Upon Receipt

Client Name: Pace IN Project # 4081747

Courier: ☑ Fed Ex ☐ UPS ☐ USPS ☐ Client ☐ Commercial ☐ Pace Other _____

Tracking #: 0201 5689 1278 0450

Custody Seal on Cooler/Box Present: ☑ yes ☐ no Seals intact: ☑ yes ☐ no

Custody Seal on Samples Present: ☐ yes ☑ no Seals intact: ☐ yes ☐ no

Packing Material: ☑ Bubble Wrap ☑ Bubble Bags ☐ None ☐ Other _____

Thermometer Used SR-46 **Type of Ice:** (Wet) Blue Dry None ☑ Samples on ice, cooling process has begun

Cooler Temperature Uncorr: 4 /Corr: 4 **Biological Tissue is Frozen:** ☐ yes ☐ no

Temp Blank Present: ☑ yes ☐ no

Person examining contents:
Date: 7/25/13
Initials: MV

Temp should be above freezing to 6°C for all sample except Biota.
Frozen Biota Samples should be received ≤ 0°C.

		Comments:
Chain of Custody Present:	☑Yes ☐No ☐N/A	1.
Chain of Custody Filled Out:	☑Yes ☐No ☐N/A	2.
Chain of Custody Relinquished:	☑Yes ☐No ☐N/A	3.
Sampler Name & Signature on COC:	☐Yes ☐No ☑N/A	4.
Samples Arrived within Hold Time:	☑Yes ☐No ☐N/A	5.
- VOA Samples frozen upon receipt	☐Yes ☐No	Date/Time:
Short Hold Time Analysis (<72hr):	☐Yes ☑No ☐N/A	6.
Rush Turn Around Time Requested:	☐Yes ☑No ☐N/A	7.
Sufficient Volume:	☑Yes ☐No ☐N/A	8. Only ~1/2 full 7/25/13 MV
Correct Containers Used:	☑Yes ☐No ☐N/A	9.
-Pace Containers Used:	☐Yes ☑No ☐N/A	
-Pace IR Containers Used:	☑Yes ☐No ☐N/A	
Containers Intact:	☑Yes ☐No ☐N/A	10.
Filtered volume received for Dissolved tests	☐Yes ☐No ☑N/A	11.
Sample Labels match COC:	☑Yes ☐No ☐N/A	12.
-Includes date/time/ID/Analysis Matrix: WI		
All containers needing preservation have been checked. (Non-Compliance noted in 13.)	☐Yes ☐No ☑N/A	13. ☐ HNO3 ☐ H2SO4 ☐ NaOH ☐ NaOH +ZnAct
All containers needing preservation are found to be in compliance with EPA recommendation. (HNO3, H2SO4 ≤2; NaOH+ZnAct ≥9, NaOH ≥12)	☐Yes ☐No ☑N/A	
exceptions: VOA, coliform, TOC, TOX, TOH, O&G, WIDROW, Phenolics, OTHER:	☑Yes ☐No	Initial when completed / Lab Std #ID of preservative / Date/Time:
Headspace in VOA Vials (>6mm):	☐Yes ☐No ☑N/A	14.
Trip Blank Present:	☐Yes ☐No ☑N/A	15.
Trip Blank Custody Seals Present	☐Yes ☐No ☑N/A	
Pace Trip Blank Lot # (if purchased):		

Client Notification/ Resolution: If checked, see attached form for additional comments ☐

Person Contacted: _____ Date/Time: _____

Comments/ Resolution: _____

Project Manager Review: CKV **Date:** 7/25/13

F-GB-C-031-Rev.01 (01Mar2013) SCUR Form

Chain of Custody

1130 1023 6148

Pace Analytical®
www.pacelabs.com

Workorder: 60149200 **Workorder Name:** JULY 2013 RICO WATER SAMPLING **Owner Received Date:** 7/19/2013 **Results Requested By:** 8/2/2013

Report To

Heather Wilson
Pace Analytical Services, Inc.
9608 Loiret Blvd.
Lenexa, KS 66219
Phone (913)599-5665
Fax (913)599-1759

Subcontract To

Pace Analytical Minnesota
1700 Elm Street
Suite 200
Minneapolis, MN 55414
Phone (612)607-1700

Item	Sample ID	Sample Type	Collect Date/Time	Lab ID	Matrix	Preserved Containers: HNO3						Requested Analysis: 200.8 Total Metals + Hardness + Silica	200.8 Dissolved Metals	245.1 Total Mercury	245.1 Dissolved Mercury									LAB USE ONLY
1	DR-4_20130717	PS	7/17/2013 13:30	60149200001	Water	2						X	X	X	X									001
2	DR-5_20130717	PS	7/17/2013 13:05	60149200002	Water	2						X	X	X	X									002
3	DR-4-SW_20130717	PS	7/17/2013 10:50	60149200003	Water	2						X	X	X	X									003
4	DR-4-SW	PS	7/17/2013 10:48	60149200004	Water	2						X	X	X	X									004
5	GW-7_20130717	PS	7/17/2013 14:30	60149200005	Water	2						X	X	X	X									005
6	EB-1_20130717	PS	7/17/2013 14:07	60149200006	Water	2						X	X	X	X									006
7	EB-2_20130717	PS	7/17/2013 13:55	60149200007	Water	2						X	X	X	X									007
8	MW-4 SHALLOW_20130717	PS	7/17/2013 15:35	60149200008	Water	2						X	X	X	X									008

Transfers	Released By	Date/Time	Received By	Date/Time
1	[signature]	7/22/13 1700	TN/Pace	7/23/13/908
2				
3				

Comments

Use Profile 26985. No J Flags.

Cooler Temperature on Receipt 15.6 °C **Custody Seal** Y or N **Received on Ice** Y or N **Samples Intact** Y or N

Pace Analytical	Document Name: **Sample Condition Upon Receipt Form**	Document Revised: 28Jan2013 Page 1 of 1
	Document No.: **F-MN-L-213-rev.06**	Issuing Authority: Pace Minnesota Quality Office

Sample Condition Upon Receipt

Client Name: Pace KS

Project #: WO#: 10236148

10236148

Courier: ☒ Fed Ex ☐ UPS ☐ USPS ☐ Client ☐ Commercial ☐ Pace ☐ Other:

Tracking Number: 5659 1278 0244

Custody Seal on Cooler/Box Present? ☒ Yes ☐ No **Seals Intact?** ☒ Yes ☐ No

Optional: Proj. Due Date: Proj. Name:

Packing Material: ☐ Bubble Wrap ☐ Bubble Bags ☒ None ☐ Other: **Temp Blank?** ☐ Yes ☒ No

Thermom. Used: ☐ B88A912167504 ☐ 80512447 ☒ 72337080 **Type of Ice:** ☐ Wet ☐ Blue ☒ None ☐ Samples on ice, cooling process has begun

Cooler Temp Read (°C): 15.3 **Cooler Temp Corrected (°C):** ~~15.6~~ 15.6 TN 72313 **Biological Tissue Frozen?** ☐ Yes ☐ No

Temp should be above freezing to 6°C **Correction Factor:** +.3 **Date and Initials of Person Examining Contents:** 72313 TN

Comments:

Chain of Custody Present?	☒ Yes	☐ No	☐ N/A	1.
Chain of Custody Filled Out?	☒ Yes	☐ No	☐ N/A	2.
Chain of Custody Relinquished?	☒ Yes	☐ No	☐ N/A	3.
Sampler Name and/or Signature on COC?	☐ Yes	☒ No	☐ N/A	4.
Samples Arrived within Hold Time?	☒ Yes	☐ No	☐ N/A	5.
Short Hold Time Analysis (<72 hr)?	☐ Yes	☒ No	☐ N/A	6.
Rush Turn Around Time Requested?	☐ Yes	☒ No	☐ N/A	7.
Sufficient Volume?	☒ Yes	☐ No	☐ N/A	8.
Correct Containers Used?	☒ Yes	☐ No	☐ N/A	9.
-Pace Containers Used?	☒ Yes	☐ No	☐ N/A	
Containers Intact?	☒ Yes	☐ No	☐ N/A	10.
Filtered Volume Received for Dissolved Tests?	☐ Yes	☐ No	☒ N/A	11.
Sample Labels Match COC? -Includes Date/Time/ID/Analysis Matrix: WT	☒ Yes	☐ No	☐ N/A	12.
All containers needing acid/base preservation have been checked? Noncompliances are noted in 13.	☒ Yes	☐ No	☐ N/A	13. ☐ HNO_3 ☐ H_2SO_4 ☐ NaOH ☐ HCl Sample #
All containers needing preservation are found to be in compliance with EPA recommendation? (HNO_3, H_2SO_4, HCl<2; NaOH>12)	☒ Yes	☐ No	☐ N/A	
Exceptions: VOA, Coliform, TOC, Oil and Grease, WI-DRO (water)	☐ Yes	☒ No		Initial when completed: Lot # of added preservative:
Headspace in VOA Vials (>6mm)?	☐ Yes	☐ No	☒ N/A	14.
Trip Blank Present?	☐ Yes	☐ No	☒ N/A	15.
Trip Blank Custody Seals Present?	☐ Yes	☐ No	☒ N/A	
Pace Trip Blank Lot # (if purchased):				

CLIENT NOTIFICATION/RESOLUTION **Field Data Required?** ☐ Yes ☐ No

Person Contacted: Date/Time:

Comments/Resolution:

Project Manager Review: Kalen Xiang **Date:** 7/23/13

Note: Whenever there is a discrepancy affecting North Carolina compliance samples, a copy of this form will be sent to the North Carolina DEHNR Certification Office (i.e out of hold, incorrect preservative, out of temp, incorrect containers)

Chain of Custody

Pace Analytical®
www.pacelabs.com

Workorder: 60149200 **Workorder Name:** JULY 2013 RICO WATER SAMPLING **Owner Received Date:** 7/19/2013 **Results Requested By:** 8/2/2013

Report To

Heather Wilson
Pace Analytical Services, Inc.
9608 Loiret Blvd.
Lenexa, KS 66219
Phone (913)599-5665
Fax (913)599-1759

Subcontract To

Pace Analytical Billings MT
602 S 25th Street
Billings, MT, MT 591014549
Phone (406) 254-7226

Item	Sample ID	Sample Type	Collect Date/Time	Lab ID	Matrix	Preserved Containers: none	Requested Analysis: Salinity	LAB USE ONLY 10236252
1	DR-4_20130717	PS	7/17/2013 13:30	60149200001	Water	1	X	001
2	DR-5_20130717	PS	7/17/2013 13:05	60149200002	Water	1	X	002
3	DR-4-SW_20130717	PS	7/17/2013 10:50	60149200003	Water	1	X	003
4	DR-4-SW	PS	7/17/2013 10:48	60149200004	Water	1	X	004
5	GW-7_20130717	PS	7/17/2013 14:30	60149200005	Water	1	X	005
6	EB-1_20130717	PS	7/17/2013 14:07	60149200006	Water	1	X	006
7	EB-2_20130717	PS	7/17/2013 13:55	60149200007	Water	1	X	007
8	MW-4 SHALLOW_20130717	PS	7/17/2013 15:35	60149200008	Water	1	X	008

Transfers	Released By	Date/Time	Received By	Date/Time
1	[illegible] Pace	7/22/13 1200		
2	Fed Ex		[illegible] - Pace	7/23/13 1000
3				

Comments

No J flags.

Cooler Temperature on Receipt 2.8°C **Custody Seal** Y or N **Received on Ice** Y or N **Samples Intact** Y or N

Pace Analytical	Document Name: **Sample Condition Upon Receipt Form**	Document Revised: 14Nov2012 Page 1 of 1
	Document No.: **F-MT-C-184-rev.02**	Issuing Authority: Pace Montana Quality Office

Sample Condition Upon Receipt

Client Name: Pace-KS

Project #: WO#: 10236252

10236252

Courier: ☒ Fed Ex ☐ UPS ☐ USPS ☐ Client ☐ Commercial ☐ Pace ☐ Other: _____

Tracking Number: 5689 1278 0255

Custody Seal on Cooler/Box Present? ☒ Yes ☐ No **Seals Intact?** ☒ Yes ☐ No

Optional: Proj. Due Date: Proj. Name:

Packing Material: ☒ Bubble Wrap ☐ Bubble Bags ☐ None ☐ Other: _____ **Temp Blank?** ☒ Yes ☐ No

Thermometer Used: ☒ 1383045 ☐ 135 ☐ NA **Type of Ice:** ☒ Wet ☐ Blue ☐ None ☒ Samples on ice, cooling process has begun

Cooler Temp Read: 2.8 **Date and Initials of Person Examining Contents:** MW 7/23/13

Cooler Temp Corrected: 2.8 **Biological Tissue Frozen?** ☐ Yes ☒ No

Temp should be above freezing to 6°C

				Comments:
Chain of Custody Present?	☒ Yes	☐ No	☐ N/A	1.
Chain of Custody Filled Out?	☒ Yes	☐ No	☐ N/A	2.
Chain of Custody Relinquished?	☒ Yes	☐ No	☐ N/A	3.
Sampler Name and Signature on COC?	☐ Yes	☒ No	☐ N/A	4.
Samples Arrived within Hold Time?	☒ Yes	☐ No	☐ N/A	5.
Short Hold Time Analysis (<72 hr)?	☐ Yes	☒ No	☐ N/A	6.
Rush Turn Around Time Requested?	☐ Yes	☒ No	☐ N/A	7.
Sufficient Volume?	☒ Yes	☐ No	☐ N/A	8.
Correct Containers Used?	☒ Yes	☐ No	☐ N/A	9.
-Pace Containers Used?	☒ Yes	☐ No	☐ N/A	
Containers Intact?	☒ Yes	☐ No	☐ N/A	10.
Filtered Volume Received for Dissolved Tests?	☐ Yes	☐ No	☒ N/A	11.
Sample Labels Match COC?	☒ Yes	☐ No	☐ N/A	12.
-Includes Date/Time/ID/Analysis Matrix: H_2O				
All containers needing acid/base preservation have been checked? Noncompliances are noted in 13.	☐ Yes	☐ No	☒ N/A	13. ☐ HNO_3 ☐ H_2SO_4 ☐ NaOH ☐ HCl
All containers needing preservation are found to be in compliance with EPA recommendation? (HNO_3, H_2SO_4, HCl<2; NaOH>12)	☐ Yes	☐ No	☒ N/A	Sample #
Exceptions: VOA, Coliform, TOC, Oil and Grease, WI-DRO (water)	☐ Yes	☒ No		Initial when completed: _____ Lot # of added preservative: _____
Samples checked for dechlorination?	☐ Yes	☐ No	☒ N/A	14.
Headspace in VOA Vials (>6mm)?	☐ Yes	☐ No	☒ N/A	15.
Trip Blank Present?	☐ Yes	☐ No	☒ N/A	16.
Trip Blank Custody Seals Present?	☐ Yes	☐ No	☒ N/A	
Pace Trip Blank Lot # (if purchased): _____				

CLIENT NOTIFICATION/RESOLUTION **Field Data Required?** ☐ Yes ☐ No

Person Contacted: _____ Date/Time: _____

Comments/Resolution: _____

Project Manager Review: [signature] **Date:** 7-24-13

Note: Whenever there is a discrepancy affecting North Carolina compliance samples, a copy of this form will be sent to the North Carolina DEHNR Certification Office (i.e out of hold, incorrect preservative, out of temp, incorrect containers)

Pace Analytical
www.pacelabs.com

Sample Condition Upon Receipt
ESI Tech Spec Client

WO#: 60149302

60149302

Client Name: BP Anderson

Optional
Proj Due Date:
Proj Name:

Courier: Fed Ex ☐ UPS ☒ USPS ☐ Client ☐ Commercial ☐ Pace ☐ Other ☐

Tracking #: 127331187221005 4674, 4665, 4692, 4683, 4709 Pace Shipping Label Used? Yes ☒ No ☐

Custody Seal on Cooler/Box Present: Yes ☑ No ☐ Seals intact: Yes ☑ No ☐

Packing Material: Bubble Wrap ☐ Bubble Bags ☑ Foam ☐ None ☐ Other ☑ zip lc

Thermometer Used: T-112 / T-194 **Type of Ice:** Wet Blue None ☐ Samples received on ice, cooling process has begun.
(circle one)

Cooler Temperature: 1.5/2.3/3.4/3.1/2.9

Date and initials of person examining contents: pv 7/20/13

Temperature should be above freezing to 6°C

Chain of Custody present:	☑Yes ☐No ☐N/A	1.	
Chain of Custody filled out:	☑Yes ☐No ☐N/A	2.	
Chain of Custody relinquished:	☑Yes ☐No ☐N/A	3.	
Sampler name & signature on COC:	☑Yes ☐No ☐N/A	4.	
Samples arrived within holding time:	☑Yes ☐No ☐N/A	5.	
Short Hold Time analyses (<72hr):	☐Yes ☑No ☐N/A	6.	
Rush Turn Around Time requested:	☐Yes ☑No ☐N/A	7.	
Sufficient volume:	☑Yes ☐No ☐N/A	8.	
Correct containers used:	☑Yes ☐No ☐N/A		
Pace containers used:	☑Yes ☐No ☐N/A	9.	
Containers intact:	☑Yes ☐No ☐N/A	10.	
Unpreserved 5035A soils frozen w/in 48hrs?	☐Yes ☐No ☑N/A	11.	
Filtered volume received for dissolved tests?	☐Yes ☐No ☑N/A	12.	
Sample labels match COC: Includes date/time/ID/analyses Matrix: WT	☑Yes ☐No ☐N/A	13.	
All containers needing preservation have been checked.	☑Yes ☐No ☐N/A	Added 2.5 mL to BAH-01 BP3N. pH 6.0/1.5	
All containers needing preservation are found to be in compliance with EPA recommendation.	☑Yes ☐No ☐N/A	14.	
Exceptions: VOA, coliform, TOC, O&G, WI-DRO (water), Phenolics	☐Yes ☑No	Initial when completed pv	Lot # of added preservative 12510
Trip Blank present: Pace Trip Blank lot # (if purchased):	☐Yes ☐No ☑N/A	15.	
Headspace in VOA vials (>6mm):	☐Yes ☐No ☑N/A	16.	
Project sampled in USDA Regulated Area:	☐Yes ☐No ☑N/A	17. List State:	

Client Notification/ Resolution: Copy COC to Client? Y / N Field Data Required? Y / N

Person Contacted: _____ Date/Time: _____

Comments/ Resolution: _____

Temp Log: Record start and finish times when unpacking cooler, if >20 min, recheck sample temps.	
Start: 1040	Start:
End: 1100	End:
Temp:	Temp:

Project Manager Review: AMW Date: 7/22/13

00149302

ANDERSON
ENGINEERING COMPANY INC.

977 West 2100 South
Salt Lake City, UT 84119
(801) 972-6222
FAX (801) 972-6235

CHAIN OF CUSTODY RECORD

COC# _____
Page 1 of 1

Client: BP
Project: July 2013 Rico Water Sampling
AECI Contact: Mark DeFriez (801) 234-9583

Lab Name:
Lab Contact: Heather Wilson, (913) 563-1407
Lab Address: 9608 Loiret Blvd.
Lenexa, KS 66219

Matrix Codes
(W) Water
(S) Soil
(L) Liquid

QC: (circle one)
I II III IV

Field Location	Field Sample ID Number	Date	Time	Matrix	No. of Containers	Potentially Dissolved Metals	Dissolved Metals	Alkalinity / TDS / TSS / Sulfate / Chloride	Cyanide	Salinity	Total Organic Carbon / Nitrate	Sulfide			COMMENTS	
GW-4	GW-4_20130718	7/18/2013	11:05 AM	W	8	X	X	X	X	X	X	X	X		1BP3L 1AGS5 2BP3N 1-5 1BP3F 1-5 1BP3Z 11-6 1BP3C 12-5 1BP2L	001
MW-103	MW-103_20130718	7/18/2013	1:52 PM	W	8	X	X	X	X	X	X	X	X			002
MW-104	MW-104_20130718	7/18/2013	1:16 PM	W	8	X	X	X	X	X	X	X	X			003
MW-1 DEEP	MW-1 DEEP_20130718	7/18/2013	3:40 PM	W	8	X	X	X	X	X	X	X	X			004
MW-1 SHALLOW	MW-1 SHALLOW_20130718	7/18/2013	3:33 PM	W	8	X	X	X	X	X	X	X	X			005
MW-2 DEEP	MW-2 DEEP_20130718	7/18/2013	11:50 AM	W	8	X	X	X	X	X	X	X	X			006
MW-3 DEEP	MW-3 DEEP_20130718	7/18/2013	11:27 AM	W	8	X	X	X	X	X	X	X	X			007
MW-6 DEEP	MW-6 DEEP_20130718	7/18/2013	10:39 AM	W	8	X	X	X	X	X	X	X	X			008
MW-6 SHALLOW	MW-6 SHALLOW_20130718	7/18/2013	10:34 AM	W	8	X	X	X	X	X	X	X	X			009
DR-10	DR-10_20130718	7/18/2013	1:17 PM	W	8	X	X	X	X	X	X	X	X			010
DR-11	DR-11_20130718	7/18/2013	3:35 PM	W	8	X	X	X	X	X	X	X	X			011
FB-FIELD	FB-FIELD_20130718	7/18/2013	10:50 AM	W	8	X	X	X	X	X	X	X	X			012
GW-3	GW-3_20130719	7/19/2013	2:15 PM	W	8	X	X	X	X	X	X	X	X			013
P13-102	P13-102_20130719	7/19/2013	9:35 AM	W	8	X	X	X	X	X	X	X	X			014
P13-103	P13-103_20130719	7/19/2013	9:05 AM	W	8	X	X	X	X	X	X	X	X			015
CHV-101S	CHV-101S_20130719	7/19/2013	10:27 AM	W	8	X	X	X	X	X	X	X	X			016
AT-2	AT-2_20130719	7/19/2013	9:57 AM	W	8	X	X	X	X	X	X	X	X			017
BAH-01	BAH-01_20130719	7/19/2013	10:36 AM	W	8	X	X	X	X	X	X	X	X			018
DR-12	DR-12_20130719	7/19/2013	9:06 AM	W	8	X	X	X	X	X	X	X	X			019

Relinquished By: *signature*	Date	Time	Received By: *signature*		Time	Special Instructions
[signature]	7/19	12:00	[signature] PASI	7/20/13	0920	1-5/2-3/3-4/7-1/2-9
Relinquished By: *signature*	Date	Time	Received By: *signature*		Time	
Relinquished By: *signature*	Date	Time	Received By: *signature*		Time	
Relinquished By: *signature*	Date	Time	Received By: *signature*		Time	

FLD-002

Chain of Custody

Jw

408747

Pace Analytical
www.pacelabs.com

Workorder: 60149200 **Workorder Name:** JULY 2013 RICO WATER SAMPLING **Owner Received Date:** 7/19/2013 **Results Requested By:** 8/2/2013

Report To	Subcontract To
Heather Wilson Pace Analytical Services, Inc. 9608 Loiret Blvd. Lenexa, KS 66219 Phone (913)599-5665 Fax (913)599-1759	Pace Analytical Green Bay 1241 Bellevue Street Suite 9 Green Bay, WI 54302 Phone (920)469-2436

Item	Sample ID	Sample Type	Collect Date/Time	Lab ID	Matrix	Preserved Containers: H2SO4						Requested Analysis: 5310C TOC												LAB USE ONLY
1	DR-4_20130717	PS	7/17/2013 13:30	60149200001	Water	1						X												001 1-250mlag c
2	DR-5_20130717	PS	7/17/2013 13:05	60149200002	Water	1						X												002
3	DR-4-SW_20130717	PS	7/17/2013 10:50	60149200003	Water	1						X												003
4	DR-4-SW	PS	7/17/2013 10:48	60149200004	Water	1						X												004
5	GW-7_20130717	PS	7/17/2013 14:30	60149200005	Water	1						X												005
6	EB-1_20130717	PS	7/17/2013 14:07	60149200006	Water	1						X												006
7	EB-2_20130717	PS	7/17/2013 13:55	60149200007	Water	1						X												007
8	MW-4 SHALLOW_20130717	PS	7/17/2013 15:35	60149200008	Water	1						X												008

Transfers	Released By	Date/Time	Received By	Date/Time
1	[illegible]	7/24/13 1700		
2				
3	Fed Ex	7/25/13 1005	[illegible]	7/25/13 1005

Comments

No J flags

Cooler Temperature on Receipt 4 °C **Custody Seal** Y or N **Received on Ice** Y or N **Samples Intact** Y or N

Pace Analytical Services, Inc.
1241 Bellevue Street, Suite 9
Green Bay, WI 54302

Pace Analytical™

Sample Condition Upon Receipt

Client Name: Pace IN Project # 4081747

Courier: ☑ Fed Ex ☐ UPS ☐ USPS ☐ Client ☐ Commercial ☐ Pace Other _____

Tracking #: 0201 5689 1278 0450

Custody Seal on Cooler/Box Present: ☑ yes ☐ no Seals intact: ☑ yes ☐ no

Custody Seal on Samples Present: ☐ yes ☑ no Seals intact: ☐ yes ☐ no

Packing Material: ☑ Bubble Wrap ☑ Bubble Bags ☐ None ☐ Other _____

Thermometer Used SR-446 **Type of Ice:** (Wet) Blue Dry None ☑ Samples on ice, cooling process has begun

Cooler Temperature Uncorr: 4 /Corr: 4 **Biological Tissue is Frozen:** ☐ yes ☐ no

Temp Blank Present: ☑ yes ☐ no

Person examining contents:
Date: 7/25/13
Initials: MV

Temp should be above freezing to 6°C for all sample except Biota.
Frozen Biota Samples should be received ≤ 0°C.

		Comments:
Chain of Custody Present:	☑Yes ☐No ☐N/A	1.
Chain of Custody Filled Out:	☑Yes ☐No ☐N/A	2.
Chain of Custody Relinquished:	☑Yes ☐No ☐N/A	3.
Sampler Name & Signature on COC:	☐Yes ☐No ☑N/A	4.
Samples Arrived within Hold Time:	☑Yes ☐No ☐N/A	5.
- VOA Samples frozen upon receipt	☐Yes ☐No	Date/Time:
Short Hold Time Analysis (<72hr):	☐Yes ☑No ☐N/A	6.
Rush Turn Around Time Requested:	☐Yes ☑No ☐N/A	7.
Sufficient Volume:	☑Yes ☐No ☐N/A	8. Only ~1/2 full 7/25/13 MV
Correct Containers Used:	☑Yes ☐No ☐N/A	9.
-Pace Containers Used:	☐Yes ☑No ☐N/A	
-Pace IR Containers Used:	☑Yes ☐No ☐N/A	
Containers Intact:	☑Yes ☐No ☐N/A	10.
Filtered volume received for Dissolved tests	☐Yes ☐No ☑N/A	11.
Sample Labels match COC:	☑Yes ☐No ☐N/A	12.
-Includes date/time/ID/Analysis Matrix: WI		
All containers needing preservation have been checked. (Non-Compliance noted in 13.)	☐Yes ☐No ☑N/A	13. ☐ HNO3 ☐ H2SO4 ☐ NaOH ☐ NaOH +ZnAct
All containers needing preservation are found to be in compliance with EPA recommendation. (HNO3, H2SO4 ≤2; NaOH+ZnAct ≥9, NaOH ≥12)	☐Yes ☐No ☑N/A	
exceptions: VOA, coliform, TOC, TOX, TOH, O&G, WIDROW, Phenolics, OTHER:	☑Yes ☐No	Initial when completed / Lab Std #ID of preservative / Date/Time:
Headspace in VOA Vials (>6mm):	☐Yes ☐No ☑N/A	14.
Trip Blank Present:	☐Yes ☐No ☑N/A	15.
Trip Blank Custody Seals Present	☐Yes ☐No ☑N/A	
Pace Trip Blank Lot # (if purchased):		

Client Notification/ Resolution: If checked, see attached form for additional comments ☐

Person Contacted: _____ Date/Time: _____

Comments/ Resolution: _____

Project Manager Review: CKV **Date:** 7/25/13

F-GB-C-031-Rev.01 (01Mar2013) SCUR Form

Chain of Custody

1130 1023 6148

Pace Analytical®
www.pacelabs.com

Workorder: 60149200 **Workorder Name:** JULY 2013 RICO WATER SAMPLING **Owner Received Date:** 7/19/2013 **Results Requested By:** 8/2/2013

Report To

Heather Wilson
Pace Analytical Services, Inc.
9608 Loiret Blvd.
Lenexa, KS 66219
Phone (913)599-5665
Fax (913)599-1759

Subcontract To

Pace Analytical Minnesota
1700 Elm Street
Suite 200
Minneapolis, MN 55414
Phone (612)607-1700

Item	Sample ID	Sample Type	Collect Date/Time	Lab ID	Matrix	Preserved Containers: HNO3						Requested Analysis: 200.8 Total Metals + Hardness + Silica	200.8 Dissolved Metals	245.1 Total Mercury	245.1 Dissolved Mercury									LAB USE ONLY
1	DR-4_20130717	PS	7/17/2013 13:30	60149200001	Water	2						X	X	X	X									001
2	DR-5_20130717	PS	7/17/2013 13:05	60149200002	Water	2						X	X	X	X									002
3	DR-4-SW_20130717	PS	7/17/2013 10:50	60149200003	Water	2						X	X	X	X									003
4	DR-4-SW	PS	7/17/2013 10:48	60149200004	Water	2						X	X	X	X									004
5	GW-7_20130717	PS	7/17/2013 14:30	60149200005	Water	2						X	X	X	X									005
6	EB-1_20130717	PS	7/17/2013 14:07	60149200006	Water	2						X	X	X	X									006
7	EB-2_20130717	PS	7/17/2013 13:55	60149200007	Water	2						X	X	X	X									007
8	MW-4 SHALLOW_20130717	PS	7/17/2013 15:35	60149200008	Water	2						X	X	X	X									008

Transfers	Released By	Date/Time	Received By	Date/Time
1	[signature]	7/22/13 1700	TN/Pace	7/23/13/908
2				
3				

Comments

Use Profile 26985. No J Flags.

Cooler Temperature on Receipt 15.6 °C **Custody Seal** Y or N **Received on Ice** Y or N **Samples Intact** Y or N

Pace Analytical	Document Name: **Sample Condition Upon Receipt Form**	Document Revised: 28Jan2013 Page 1 of 1
	Document No.: **F-MN-L-213-rev.06**	Issuing Authority: Pace Minnesota Quality Office

Sample Condition Upon Receipt

Client Name: Pace KS

Project #: WO#: 10236148

10236148

Courier: ☒ Fed Ex ☐ UPS ☐ USPS ☐ Client ☐ Commercial ☐ Pace ☐ Other:

Tracking Number: 5659 1278 0244

Custody Seal on Cooler/Box Present? ☒ Yes ☐ No **Seals Intact?** ☒ Yes ☐ No

Optional: Proj. Due Date: Proj. Name:

Packing Material: ☐ Bubble Wrap ☐ Bubble Bags ☒ None ☐ Other: **Temp Blank?** ☐ Yes ☒ No

Thermom. Used: ☐ B88A912167504 ☐ 80512447 ☒ 72337080 **Type of Ice:** ☐ Wet ☐ Blue ☒ None ☐ Samples on ice, cooling process has begun

Cooler Temp Read (°C): 15.3 **Cooler Temp Corrected (°C):** ~~15.6~~ 15.6 TN 72313 **Biological Tissue Frozen?** ☐ Yes ☐ No

Temp should be above freezing to 6°C **Correction Factor:** +.3 **Date and Initials of Person Examining Contents:** 72313 TN

Comments:

Chain of Custody Present?	☒ Yes	☐ No	☐ N/A	1.
Chain of Custody Filled Out?	☒ Yes	☐ No	☐ N/A	2.
Chain of Custody Relinquished?	☒ Yes	☐ No	☐ N/A	3.
Sampler Name and/or Signature on COC?	☐ Yes	☒ No	☐ N/A	4.
Samples Arrived within Hold Time?	☒ Yes	☐ No	☐ N/A	5.
Short Hold Time Analysis (<72 hr)?	☐ Yes	☒ No	☐ N/A	6.
Rush Turn Around Time Requested?	☐ Yes	☒ No	☐ N/A	7.
Sufficient Volume?	☒ Yes	☐ No	☐ N/A	8.
Correct Containers Used?	☒ Yes	☐ No	☐ N/A	9.
-Pace Containers Used?	☒ Yes	☐ No	☐ N/A	
Containers Intact?	☒ Yes	☐ No	☐ N/A	10.
Filtered Volume Received for Dissolved Tests?	☐ Yes	☐ No	☒ N/A	11.
Sample Labels Match COC? -Includes Date/Time/ID/Analysis Matrix: WT	☒ Yes	☐ No	☐ N/A	12.
All containers needing acid/base preservation have been checked? Noncompliances are noted in 13.	☒ Yes	☐ No	☐ N/A	13. ☐ HNO_3 ☐ H_2SO_4 ☐ NaOH ☐ HCl Sample #
All containers needing preservation are found to be in compliance with EPA recommendation? (HNO_3, H_2SO_4, HCl<2; NaOH>12)	☒ Yes	☐ No	☐ N/A	
Exceptions: VOA, Coliform, TOC, Oil and Grease, WI-DRO (water)	☐ Yes	☒ No		Initial when completed: Lot # of added preservative:
Headspace in VOA Vials (>6mm)?	☐ Yes	☐ No	☒ N/A	14.
Trip Blank Present?	☐ Yes	☐ No	☒ N/A	15.
Trip Blank Custody Seals Present?	☐ Yes	☐ No	☒ N/A	
Pace Trip Blank Lot # (if purchased):				

CLIENT NOTIFICATION/RESOLUTION **Field Data Required?** ☐ Yes ☐ No

Person Contacted: Date/Time:

Comments/Resolution:

Project Manager Review: Kalen Xiang **Date:** 7/23/13

Note: Whenever there is a discrepancy affecting North Carolina compliance samples, a copy of this form will be sent to the North Carolina DEHNR Certification Office (i.e out of hold, incorrect preservative, out of temp, incorrect containers)

Chain of Custody

Pace Analytical®
www.pacelabs.com

Workorder: 60149302 **Workorder Name:** July 2013 Rico Water Sampling **Owner Received Date:** 7/20/2013 **Results Requested By:** 8/5/2013

Report To

Heather Wilson
Pace Analytical Services, Inc.
9608 Loiret Blvd.
Lenexa, KS 66219
Phone (913)599-5665
Fax (913)599-1759

Subcontract To

Pace Analytical Billings MT
602 S 25th Street
Billings, MT, MT 591014549
Phone (406) 254-7226

Item	Sample ID	Sample Type	Collect Date/Time	Lab ID	Matrix	Preserved Containers: none	Requested Analysis: Salinity	10236257 LAB USE ONLY
1	GW-4_20130718	PS	7/18/2013 11:05	60149302001	Water	1	X	001
2	MW-103_20130718	PS	7/18/2013 13:52	60149302002	Water	1	X	002
3	MW-104_20130718	PS	7/18/2013 13:16	60149302003	Water	1	X	003
4	MW-1 DEEP_20130718	PS	7/18/2013 15:40	60149302004	Water	1	X	004
5	MW-1 SHALLOW_20130718	PS	7/18/2013 15:33	60149302005	Water	1	X	005
6	MW-2 DEEP_20130718	PS	7/18/2013 11:50	60149302006	Water	1	X	006
7	MW-3 DEEP_20130718	PS	7/18/2013 11:27	60149302007	Water	1	X	007
8	MW-6 DEEP_20130718	PS	7/18/2013 10:39	60149302008	Water	1	X	008
9	MW-6 SHALLOW_20130718	PS	7/18/2013 10:34	60149302009	Water	1	X	009
10	DR-10_20130718	PS	7/18/2013 13:17	60149302010	Water	1	X	010
11	DR-11_20130718	PS	7/18/2013 15:35	60149302011	Water	1	X	011
12	FB-FIELD_20130718	PS	7/18/2013 10:50	60149302012	Water	1	X	012
13	GW-3_20130719	PS	7/19/2013 14:15	60149302013	Water	1	X	013
14	P13-102_20130719	PS	7/19/2013 09:35	60149302014	Water	1	X	014
15	P13-103_20130719	PS	7/19/2013 09:05	60149302015	Water	1	X	015
16	CHV-101S_20130719	PS	7/19/2013 10:27	60149302016	Water	1	X	016
17	AT-2_20130719	PS	7/19/2013 09:57	60149302017	Water	1	X	017
18	BAH-01_20130719	PS	7/19/2013 10:36	60149302018	Water	1	X	018
19	DR-12_20130719	PS	7/19/2013 09:06	60149302019	Water	1	X	019

Transfers	Released By	Date/Time	Received By	Date/Time	Comments
1	[illegible]	7/24/13 1700			No J flags
2	Fed Ex		[illegible]	7/25/13 1000	
3					

Cooler Temperature on Receipt 2.8 °C Custody Seal (Y) or N Received on Ice (Y) or N Samples Intact (Y) or N

Pace Analytical	Document Name: **Sample Condition Upon Receipt Form**	Document Revised: 14Nov2012 Page 1 of 1
	Document No.: **F-MT-C-184-rev.02**	Issuing Authority: Pace Montana Quality Office

Sample Condition Upon Receipt

Client Name: Pace-KS

Project #: WO#: 10236257

10236257

Courier: ☒ Fed Ex ☐ UPS ☐ USPS ☐ Client ☐ Commercial ☐ Pace ☐ Other: _____

Tracking Number: 5689 1278 0255

Custody Seal on Cooler/Box Present? ☒ Yes ☐ No **Seals Intact?** ☒ Yes ☐ No **Optional:** Proj. Due Date: Proj. Name:

Packing Material: ☒ Bubble Wrap ☐ Bubble Bags ☐ None ☐ Other: _____ **Temp Blank?** ☒ Yes ☐ No

Thermometer Used: ☒ 1383045 ☐ 135 ☐ NA **Type of Ice:** ☒ Wet ☐ Blue ☐ None ☒ Samples on ice, cooling process has begun

Cooler Temp Read: 2.8 **Date and Initials of Person Examining Contents:** MW 7/23/13

Cooler Temp Corrected: 2.8 **Biological Tissue Frozen?** ☐ Yes ☒ No

Temp should be above freezing to 6°C

				Comments:
Chain of Custody Present?	☒ Yes	☐ No	☐ N/A	1.
Chain of Custody Filled Out?	☒ Yes	☐ No	☐ N/A	2.
Chain of Custody Relinquished?	☒ Yes	☐ No	☐ N/A	3.
Sampler Name and Signature on COC?	☐ Yes	☒ No	☐ N/A	4.
Samples Arrived within Hold Time?	☒ Yes	☐ No	☐ N/A	5.
Short Hold Time Analysis (<72 hr)?	☐ Yes	☒ No	☐ N/A	6.
Rush Turn Around Time Requested?	☐ Yes	☒ No	☐ N/A	7.
Sufficient Volume?	☒ Yes	☐ No	☐ N/A	8.
Correct Containers Used?	☒ Yes	☐ No	☐ N/A	9.
-Pace Containers Used?	☒ Yes	☐ No	☐ N/A	
Containers Intact?	☒ Yes	☐ No	☐ N/A	10.
Filtered Volume Received for Dissolved Tests?	☐ Yes	☐ No	☒ N/A	11.
Sample Labels Match COC? -Includes Date/Time/ID/Analysis Matrix: H_2O	☒ Yes	☐ No	☐ N/A	12.
All containers needing acid/base preservation have been checked? Noncompliances are noted in 13.	☐ Yes	☐ No	☒ N/A	13. ☐ HNO_3 ☐ H_2SO_4 ☐ NaOH ☐ HCl Sample #
All containers needing preservation are found to be in compliance with EPA recommendation? (HNO_3, H_2SO_4, HCl<2; NaOH>12)	☐ Yes	☐ No	☒ N/A	
Exceptions: VOA, Coliform, TOC, Oil and Grease, WI-DRO (water)	☐ Yes	☒ No		Initial when completed: _____ Lot # of added preservative: _____
Samples checked for dechlorination?	☐ Yes	☐ No	☒ N/A	14.
Headspace in VOA Vials (>6mm)?	☐ Yes	☐ No	☒ N/A	15.
Trip Blank Present?	☐ Yes	☐ No	☒ N/A	16.
Trip Blank Custody Seals Present?	☐ Yes	☐ No	☒ N/A	
Pace Trip Blank Lot # (if purchased): _____				

CLIENT NOTIFICATION/RESOLUTION **Field Data Required?** ☐ Yes ☐ No

Person Contacted: _____ Date/Time: _____

Comments/Resolution: _____

Project Manager Review: [signature] **Date:** 7-24-13

Note: Whenever there is a discrepancy affecting North Carolina compliance samples, a copy of this form will be sent to the North Carolina DEHNR Certification Office (i.e out of hold, incorrect preservative, out of temp, incorrect containers)

Appendix G

Field Photos

July 2013 Field Photos

Cross Section at Station DR-1

Cross Section at Station DR-5

Cross Section at Station DR-2

Cross Section at Station DR-7

July 2013 Field Photos

Cross Section at Station DR-4-SW

Cross Section at Station DR-G

Appendix H

Field Log Book Records

Rico Water Sampling Form: *Calibration Record*

Instrument Model / SN: Hanna HI 9828

Perfom calibrations in order listed below. Calibrate Electric Conductivity and ORP before each sampling event. Calibrate pH and DO daily.

Date Initals	Parameter	Calibration Standard	Calibration or Cal Check	Initial Reading	Final Reading
10/13/13	Elec Conduct		Cal		
	pH	7.01, 4.01, 10.01	cal		7.02, 4.06, 9.93
	ORP		—		
	DO 100% Sat		Cal		
6/30/13	Elec Conduct		cal		
	pH	7.01, 4.01, 10.01	Cal		7.02, 4.00, 9.99
	ORP		—		
	DO 100% Sat		cal		
7/3	Elec Conduct				
	pH	7.01, 4.01, 10.01	[illegible]		7.04/4.11
	ORP				
	DO 100% Sat				
7/9	Elec Conduct		cal		
	pH	7.01, 4.01, 10.01	~~7.45~~ cal		7.45/4.38/9.92
	ORP		—		
	DO 100% Sat		cal		
7/10	Elec Conduct		Cal		
	pH	7.01, 4.01, 10.01	cal		7.30/4.22/9.89
	ORP		—		
	DO 100% Sat		cal		
7/17	Elec Conduct		cal		
	pH	7.01, 4.01, 10.01	cal		7.06/4.08/9.94
	ORP		—		
	DO 100% Sat		cal		

Rico Water Sampling Form: *Calibration Record*

Instrument Model / SN: Hanna HI 9828

Perfom calibrations in order listed below. Calibrate Electric Conductivity and ORP before each sampling event. Calibrate pH and DO daily.

Date Initals	Parameter	Calibration Standard	Calibration or Cal Check	Initial Reading	Final Reading
7/18	Elec Conduct	Cal	Cal		
	pH	7.01, 4.01, 10.01	Cal		7.62/4.34/9.69
	ORP	—	—		
	DO 100% Sat	Cal	Cal		
7/19	Elec Conduct		Cal		
	pH	7.01, 4.01, 10.01	Cal		7.71/4.43/9.69
	ORP		—		
	DO 100% Sat		Cal		
7/25	Elec Conduct		Cal		
	pH	7.01, 4.01, 10.01	Cal		7.55/4.67/10.02
	ORP		—		
	DO 100% Sat		Cal		
	Elec Conduct				
	pH	7.01, 4.01, 10.01			
	ORP				
	DO 100% Sat				
	Elec Conduct				
	pH	7.01, 4.01, 10.01			
	ORP				
	DO 100% Sat				
	Elec Conduct				
	pH	7.01, 4.01, 10.01			
	ORP				
	DO 100% Sat				

Rico Water Sampling: Sampling Event Main Checklist **July 2013**

Check off each item as their corresponding forms are completed. An item is **NOT** to be checked off until its cooresponding form is completed in full. If a water sample cannot be completed, its sampling form **must** still be completed, noting reasons for problems, and it still must be checked off on this list.

X sections taken 7/19/13

Surface Water Samples

Grab Samples

- [X] DR-1 7/10/13
- [X] DR-2 7/10/13
- [X] DR-3 7/10/13
- [X] DR-4 7/17/13
- [X] DR-5 7/17/13
- [X] DR-6 7/10/13
- [X] DR-7 7/10/13
- [X] DR-4-SW 7/17/13
- [X] DR-G 7/10/13

Composite Samples

- [X] DR-1 COMPOSITE 7/10/13
- [X] DR-2 COMPOSITE 7/10/13
- [X] DR-7 COMPOSITE 7/10/13
- [X] DR-4-SW COMPOSITE 7/17/13

Groundwater Samples

- [X] GW-1 7/9/13
- [X] GW-3 ~~7/18/13~~ 7/19/13
- [X] GW-4 7/18/13
- [X] GW-5 7/9/13
- [X] GW-6 7/9/13
- [X] GW-7 7/17/13
- [X] EB-1 7/17/13
- [X] EB-2 7/17/13
- [X] MW-101 7/9/13
- [X] MW-102 7/9/13
- [X] MW-103 7/18/13
- [X] MW-104 7/18/13
- [X] MW-202 7/19/13
- [X] MW-204 7/19/13
- [X] P13-102 7/19/13
- [X] P13-103 7/19/13
- [X] MW-1 DEEP 7/18/13
- [X] MW-1 SHALLOW 7/18/13
- [X] MW-2 DEEP 7/18/13
- [X] MW-2 SHALLOW 7/18/13
- [X] MW-3 DEEP 7/18/13

Groundwater Samples (cont.)

- [X] MW-3 SHALLOW 7/18/13
- [X] MW-4 DEEP 7/9/13
- [X] MW-4 SHALLOW 7/17/13
- [X] MW-5 DEEP 7/9/13
- [X] MW-5 SHALLOW 7/9/13
- [X] MW-6 DEEP 7/18/13
- [X] MW-6 SHALLOW 7/18/13
- [X] CHV-101 S 7/19/13

Other Samples

- [X] AT-2 7/19/13
- [X] BAH-01 7/19/13

Quality Control Samples

Blind Duplicates

- [X] DR-8 7/10/13
- [X] DR-9 7/10/13
- [X] DR-10 7/18/13
- [X] DR-11 7/18/13
- [X] DR-12 7/19/13

Field Blanks

- [X] FB-LAB 7/10/13
- [X] FB-FIELD 7/18/13

Flowrate Measurements

- [X] DR-1 7/10/13
- [X] DR-2 7/10/13
- [X] DR-7 7/10/13
- [X] DR-4-SW 7/17/13
- [X] DR-G 7/10/13
- [X] DR-1A 7/10/13
- [X] DR-2A 7/17/13
- [X] DR-3A 7/17/13

Additional Tasks

- [ ] Pond inspection completed
- [X] Pond water levels measured

TODO:
- Manual flume water depth measurement
- BAH-01

Rico Water Sampling Form: *Station Information*

Sampling completed at this location ☒
(Do not check box until **ALL** items have been completed)

☒ Surface Water ☐ Groundwater ☐ Other

Sample Location: **DR-1**
Date(s) of Sample Collection: 7/10/13
Time(s) of Sample Collection: 10:47
Sampler's Identity: MC/TB

Picture taken of cross section? ☒ Yes
By whom? MC/TB
***Email photo to mdefriez@andersoneng.com**

FIELD PARAMETERS / MEASUREMENTS

pH	EC, µS/cm	DO, ppm	Temp, °C	ORP, mV
8.04	285	7.05	12.62	-21.6

SAMPLE BOTTLE INFORMATION - Check off each bottle when completed

X	Field Sample ID on Bottle		Analysis	Bottle size/Type/Preservative
✓	DR-1_201307	10	Total Metals, Hardness, Silica	250 mL / HDPE / HNO3 (RED)
✓	DR-1_201307		Dissolved Metals (Field Filtered)	250 mL / HDPE / HNO3 (RED)
✓	DR-1_201307		Potentially Dissolved Metals	250 mL / HDPE / HNO3 (RED)
✓	DR-1_201307		Alkalinity, TSS, TDS, Chloride, Sulfate	500 mL / HDPE / None
✓	DR-1_201307		Salinity	250 mL / HDPE / None
✓	DR-1_201307		Cyanide	250 mL / HDPE / NaOH (GREEN)
✓	DR-1_201307		Sulfide	250 mL / HDPE / NaOH + Zn Acetate (BLACK)
✓	DR-1_201307		Total Organic Carbon, Nitrate	250 mL / Amber Glass / H2SO4 (YELLOW)

Notes:

Rico Water Sampling Form: *Station Information*

Sampling completed at this location ☒
(Do not check box until **ALL** items have been completed)

☒ Surface Water ☐ Groundwater ☐ Other

Sample Location: **DR-2**
Date(s) of Sample Collection: 7/10/13
Time(s) of Sample Collection: 2:10
Sampler's Identity: MC/TB

Picture taken of cross section? ☒ Yes
By whom? MC/TB
***Email photo to mdefriez@andersoneng.com**

FIELD PARAMETERS / MEASUREMENTS

pH	EC, µS/cm	DO, ppm	Temp, °C	ORP, mV
7.77	3489	6.33	17.54	-39.5

SAMPLE BOTTLE INFORMATION - Check off each bottle when completed

X	Field Sample ID on Bottle		Analysis	Bottle size/Type/Preservative
✓	DR-2_201307	10	Total Metals, Hardness, Silica	250 mL / HDPE / HNO3 (RED)
✓	DR-2_201307		Dissolved Metals (Field Filtered)	250 mL / HDPE / HNO3 (RED)
✓	DR-2_201307		Potentially Dissolved Metals	250 mL / HDPE / HNO3 (RED)
✓	DR-2_201307		Alkalinity, TSS, TDS, Chloride, Sulfate	500 mL / HDPE / None
✓	DR-2_201307		Salinity	250 mL / HDPE / None
✓	DR-2_201307		Cyanide	250 mL / HDPE / NaOH (GREEN)
✓	DR-2_201307		Sulfide	250 mL / HDPE / NaOH + Zn Acetate (BLACK)
✓	DR-2_201307		Total Organic Carbon, Nitrate	250 mL / Amber Glass / H2SO4 (YELLOW)

Notes:

Rico Water Sampling Form: *Station Information*

Sampling completed at this location ☑
(Do not check box until **ALL** items have been completed)

☒ Surface Water ☐ Groundwater ☐ Other

Sample Location:	**DR-3**
Date(s) of Sample Collection:	7-10-13
Time(s) of Sample Collection:	12:05
Sampler's Identity:	TB MC

FIELD PARAMETERS / MEASUREMENTS

pH	EC, µS/cm	DO, ppm	Temp, °C	ORP, mV	Manual Flume Water Depth Measurement, ft
7.15	1466	2.97	20.02	-37.9	~~0.00~~ 0.51 @ 4:00pm on 7/23/13

Data downloaded from transducer? ☐ Yes ☑ No
Has transducer been cleaned and recalibrated? ☐ Yes ☑ No

SAMPLE BOTTLE INFORMATION - Check off each bottle when completed

X	Field Sample ID on Bottle		Analysis	Bottle size/Type/Preservative
✓	DR-3_201307	10	Total Metals, Hardness, Silica	250 mL / HDPE / HNO3 (RED)
✓	DR-3_201307		Dissolved Metals (Field Filtered)	250 mL / HDPE / HNO3 (RED)
✓	DR-3_201307		Potentially Dissolved Metals	250 mL / HDPE / HNO3 (RED)
✓	DR-3_201307		Alkalinity, TSS, TDS, Chloride, Sulfate	500 mL / HDPE / None
✓	DR-3_201307		Salinity	250 mL / HDPE / None
✓	DR-3_201307		Cyanide	250 mL / HDPE / NaOH (GREEN)
✓	DR-3_201307		Sulfide	250 mL / HDPE / NaOH + Zn Acetate (BLACK)
✓	DR-3_201307		Total Organic Carbon, Nitrate	250 mL / Amber Glass / H2SO4 (YELLOW)

Notes:

$3.23' - 2.72 = 0.51$

Rico Water Sampling Form: *Station Information*

Sampling completed at this location ☒
(Do not check box until **ALL** items have been completed)

☒ Surface Water ☐ Groundwater ☐ Other

Sample Location:	**DR-4**
Date(s) of Sample Collection:	7/17/13
Time(s) of Sample Collection:	1:30
Sampler's Identity:	MC/TB

FIELD PARAMETERS / MEASUREMENTS

pH	EC, µS/cm	DO, ppm	Temp, °C	ORP, mV
7.68	1392	6.66	20.09	4.4

Discharge Pipe Flowrates			
Upper Pipe		Lower Pipe	
Depth	Velocity	Depth	Velocity
0.19	7.28	0	0

*If measuring pipe discharge by other means, describe in "Notes" section

SAMPLE BOTTLE INFORMATION - Check off each bottle when completed

X	Field Sample ID on Bottle		Analysis	Bottle size/Type/Preservative
✓	DR-4_201307	17	Total Metals, Hardness, Silica	250 mL / HDPE / HNO3 (RED)
✓	DR-4_201307	1	Dissolved Metals (Field Filtered)	250 mL / HDPE / HNO3 (RED)
✓	DR-4_201307	1	Potentially Dissolved Metals	250 mL / HDPE / HNO3 (RED)
✓	DR-4_201307	1	Alkalinity, TSS, TDS, Chloride, Sulfate	500 mL / HDPE / None
✓	DR-4_201307	1	Salinity	250 mL / HDPE / None
✓	DR-4_201307	1	Cyanide	250 mL / HDPE / NaOH (GREEN)
✓	DR-4_201307	1	Sulfide	250 mL / HDPE / NaOH + Zn Acetate (BLACK)
✓	DR-4_201307	1	Total Organic Carbon, Nitrate	250 mL / Amber Glass / H2SO4 (YELLOW)

Notes:

Rico Water Sampling Form: *Station Information*

☒ Surface Water ☐ Groundwater ☐ Other

Sample Location:	**DR-5**
Date(s) of Sample Collection:	7/17/13
Time(s) of Sample Collection:	1:05
Sampler's Identity:	MC/TB

Sampling completed at this location ☒
(Do not check box until **ALL** items have been completed)

Benchmark Elevation:	6 26
Spillway Water Elevation:	8 97

☒ East to West
☐ West to East

Velocity (ft/sec)		Depth (ft)	
0.2	0.20	0.1	0.4
0.23	0.18	0.35	0.3
0.21	0	0.4	0.2

FIELD PARAMETERS / MEASUREMENTS

pH	EC, µS/cm	DO, ppm	Temp, °C	ORP, mV
8.00	1462	6.25	18.58	-61.3

Picture taken of cross section? ☒
By whom? MC
***Email photo to mdefriez@andersoneng.com**

SAMPLE BOTTLE INFORMATION - Check off each bottle when completed

X	Field Sample ID on Bottle		Analysis	Bottle size/Type/Preservative
✓	DR-5_201307	17	Total Metals, Hardness, Silica	250 mL / HDPE / HNO3 (RED)
✓	DR-5_201307		Dissolved Metals (Field Filtered)	250 mL / HDPE / HNO3 (RED)
✓	DR-5_201307		Potentially Dissolved Metals	250 mL / HDPE / HNO3 (RED)
✓	DR-5_201307		Alkalinity, TSS, TDS, Chloride, Sulfate	500 mL / HDPE / None
✓	DR-5_201307		Salinity	250 mL / HDPE / None
✓	DR-5_201307		Cyanide	250 mL / HDPE / NaOH (GREEN)
✓	DR-5_201307		Sulfide	250 mL / HDPE / NaOH + Zn Acetate (BLACK)
✓	DR-5_201307		Total Organic Carbon, Nitrate	250 mL / Amber Glass / H2SO4 (YELLOW)

Notes:

(000)

Rico Water Sampling Form: *Station Information*

Sampling completed at this location ☒
(Do not check box until **ALL** items have been completed)

☒ Surface Water ☐ Groundwater ☐ Other

Sample Location: **DR-6**
Date(s) of Sample Collection: 7/10/13
Time(s) of Sample Collection: 2:23
Sampler's Identity: TB MC

FIELD PARAMETERS / MEASUREMENTS

pH	EC, µS/cm	DO, ppm	Temp, °C	ORP, mV	Manual Flume Water Depth Measurement, ft
6.88	1624	6.9	20.09	4.9	.49 ~~@ 2:25pm~~ MC 7/10/13 @ 2:15pm

Data downloaded from transducer? ☐ Yes ☒ No
Has transducer been cleaned and recalibrated? ☐ Yes ☒ No

SAMPLE BOTTLE INFORMATION - Check off each bottle when completed

X	Field Sample ID on Bottle		Analysis	Bottle size/Type/Preservative
✓	DR-6_201307	10	Total Metals, Hardness, Silica	250 mL / HDPE / HNO3 (RED)
✓	DR-6_201307		Dissolved Metals (Field Filtered)	250 mL / HDPE / HNO3 (RED)
✓	DR-6_201307		Potentially Dissolved Metals	250 mL / HDPE / HNO3 (RED)
✓	DR-6_201307		Alkalinity, TSS, TDS, Chloride, Sulfate	500 mL / HDPE / None
✓	DR-6_201307		Salinity	250 mL / HDPE / None
✓	DR-6_201307		Cyanide	250 mL / HDPE / NaOH (GREEN)
✓	DR-6_201307		Sulfide	250 mL / HDPE / NaOH + Zn Acetate (BLACK)
✓	DR-6_201307		Total Organic Carbon, Nitrate	250 mL / Amber Glass / H2SO4 (YELLOW)

Notes:

Rico Water Sampling Form: *Station Information*

Sampling completed at this location ☑
(Do not check box until **ALL** items have been completed)

☒ Surface Water ☐ Groundwater ☐ Other

Sample Location: **DR-7**
Date(s) of Sample Collection: 7/10/13
Time(s) of Sample Collection: 2:53
Sampler's Identity: MC/TB

Picture taken of cross section? ☒ Yes
By whom? MC/TB
***Email photo to mdefriez@andersoneng.com**

FIELD PARAMETERS / MEASUREMENTS

pH	EC, µS/cm	DO, ppm	Temp, °C	ORP, mV
6.98	563	6.836	18.23	-23.6

SAMPLE BOTTLE INFORMATION - Check off each bottle when completed

X	Field Sample ID on Bottle		Analysis	Bottle size/Type/Preservative
✓	DR-7_201307	10	Total Metals, Hardness, Silica	250 mL / HDPE / HNO3 (RED)
✓	DR-7_201307		Dissolved Metals (Field Filtered)	250 mL / HDPE / HNO3 (RED)
✓	DR-7_201307		Potentially Dissolved Metals	250 mL / HDPE / HNO3 (RED)
✓	DR-7_201307		Alkalinity, TSS, TDS, Chloride, Sulfate	500 mL / HDPE / None
✓	DR-7_201307		Salinity	250 mL / HDPE / None
✓	DR-7_201307		Cyanide	250 mL / HDPE / NaOH (GREEN)
✓	DR-7_201307		Sulfide	250 mL / HDPE / NaOH + Zn Acetate (BLACK)
✓	DR-7_201307		Total Organic Carbon, Nitrate	250 mL / Amber Glass / H2SO4 (YELLOW)

Notes:

Rico Water Sampling Form: *Station Information*

Sampling completed at this location ☒
(Do not check box until **ALL** items have been completed)

☒ Surface Water ☐ Groundwater ☐ Other

Sample Location: **DR-4-SW**
Date(s) of Sample Collection: 7/17/13
Time(s) of Sample Collection: 10:50
Sampler's Identity: MC/TB

Picture taken of cross section? ☒ Yes
By whom? MC/TB
***Email photo to mdefriez@andersoneng.com**

FIELD PARAMETERS / MEASUREMENTS

pH	EC, µS/cm	DO, ppm	Temp, °C	ORP, mV
7.5	405	7.60	13.86	-6.2

SAMPLE BOTTLE INFORMATION - Check off each bottle when completed

X	Field Sample ID on Bottle		Analysis	Bottle size/Type/Preservative
✓	DR-4-SW_201307	17	Total Metals, Hardness, Silica	250 mL / HDPE / HNO3 (RED)
✓	DR-4-SW_201307		Dissolved Metals (Field Filtered)	250 mL / HDPE / HNO3 (RED)
✓	DR-4-SW_201307		Potentially Dissolved Metals	250 mL / HDPE / HNO3 (RED)
✓	DR-4-SW_201307		Alkalinity, TSS, TDS, Chloride, Sulfate	500 mL / HDPE / None
✓	DR-4-SW_201307		Salinity	250 mL / HDPE / None
✓	DR-4-SW_201307		Cyanide	250 mL / HDPE / NaOH (GREEN)
✓	DR-4-SW_201307		Sulfide	250 mL / HDPE / NaOH + Zn Acetate (BLACK)
✓	DR-4-SW_201307		Total Organic Carbon, Nitrate	250 mL / Amber Glass / H2SO4 (YELLOW)

Notes:

Rico Water Sampling Form: *Station Information*

Sampling completed at this location [X]
(Do not check box until **ALL** items have been completed)

[X] Surface Water [ ] Groundwater [ ] Other

Sample Location: **DR-G**
Date(s) of Sample Collection: 7/10/13
Time(s) of Sample Collection: 3:55
Sampler's Identity: MC/TB

Picture taken of cross section? [X] Yes
By whom? MC/TB
***Email photo to mdefriez@andersoneng.com**

FIELD PARAMETERS / MEASUREMENTS

pH	EC, µS/cm	DO, ppm	Temp, °C	ORP, mV
8.37	445	6.59	19.21	-38.8

SAMPLE BOTTLE INFORMATION - Check off each bottle when completed

X	Field Sample ID on Bottle		Analysis	Bottle size/Type/Preservative
✓	DR-G_201307	10	Total Metals, Hardness, Silica	250 mL / HDPE / HNO3 (RED)
✓	DR-G_201307		Dissolved Metals (Field Filtered)	250 mL / HDPE / HNO3 (RED)
✓	DR-G_201307		Potentially Dissolved Metals	250 mL / HDPE / HNO3 (RED)
✓	DR-G_201307		Alkalinity, TSS, TDS, Chloride, Sulfate	500 mL / HDPE / None
✓	DR-G_201307		Salinity	250 mL / HDPE / None
✓	DR-G_201307		Cyanide	250 mL / HDPE / NaOH (GREEN)
✓	DR-G_201307		Sulfide	250 mL / HDPE / NaOH + Zn Acetate (BLACK)
✓	DR-G_201307		Total Organic Carbon, Nitrate	250 mL / Amber Glass / H2SO4 (YELLOW)

Notes:

Rico Water Sampling Form: *Station Information*

Sampling completed at this location ☒
(Do not check box until **ALL** items have been completed)

☒ Surface Water ☐ Groundwater ☐ Other

Sample Location: **DR-1 COMPOSITE**
Date(s) of Sample Collection: 7/10/13
Time(s) of Sample Collection: 10:45
Sampler's Identity: MCMB

Collected:
☒ East to West
☐ West to East

FIELD PARAMETERS / MEASUREMENTS

Compartment Number	Compartment Width, ft	pH	EC, µS/cm	DO, ppm	Temp, °C	ORP, mV
1	5	7.88	284	7.66	12.44	-21.2
2	5	7.99	284	7.56	12.50	-22.4
3	5	8.00	285	7.37	12.57	-21.9
4	5	8.03	285	7.56	12.64	-22.1
5	5	8.04	285	7.31	12.71	-22.2
Total Composite	Total Width*: 25	8.01	283	5.07	14.97	-18.7

*Width here must match width on corresponding flow measurement sheet from Stream Flow Measurements Form

SAMPLE BOTTLE INFORMATION - Check off each bottle when completed

X	Field Sample ID on Bottle		Analysis	Bottle size/Type/Preservative
✓	DR-1 COMPOSITE_201307	10	Total Metals, Hardness, Silica	250 mL / HDPE / HNO3 (RED)
✓	DR-1 COMPOSITE_201307		Dissolved Metals (Field Filtered)	250 mL / HDPE / HNO3 (RED)
✓	DR-1 COMPOSITE_201307		Potentially Dissolved Metals	250 mL / HDPE / HNO3 (RED)
✓	DR-1 COMPOSITE_201307		Alkalinity, TSS, TDS, Chloride, Sulfate	500 mL / HDPE / None
✓	DR-1 COMPOSITE_201307		Salinity	250 mL / HDPE / None
✓	DR-1 COMPOSITE_201307		Cyanide	250 mL / HDPE / NaOH (GREEN)
✓	DR-1 COMPOSITE_201307		Sulfide	250 mL / HDPE / NaOH + Zn Acetate (BLACK)
✓	DR-1 COMPOSITE_201307		Total Organic Carbon, Nitrate	250 mL / Amber Glass / H2SO4 (YELLOW)

Notes:

*Collect composite sample, grab sample, and flow measurements at the same time (not on different days).

Rico Water Sampling Form: *Station Information*

Sampling completed at this location ☒
(Do not check box until **ALL** items have been completed)

☒ Surface Water ☐ Groundwater ☐ Other

Sample Location: **DR-2 COMPOSITE**
Date(s) of Sample Collection: 7/10/13
Time(s) of Sample Collection: 2:07
Sampler's Identity: MC/TB

Collected:
☒ East to West
☐ West to East

FIELD PARAMETERS / MEASUREMENTS

Compartment Number	Compartment Width, ft	pH	EC, µS/cm	DO, ppm	Temp, °C	ORP, mV
1	6	7.81	347	6.75	17.54	-33.0
2	6	7.88	334	6.83	17.53	-32.7
3	6	7.85	333	6.72	17.53	-30.2
4	6	7.76	350	6.73	17.55	-27.1
5	6	7.63	386	6.57	17.62	-23.3
Total Composite	Total Width*: 30	7.27	341	4.29	19.07	-44.0

*Width here must match width on corresponding flow measurement sheet from Stream Flow Measurements Form

SAMPLE BOTTLE INFORMATION - Check off each bottle when completed

X	Field Sample ID on Bottle		Analysis	Bottle size/Type/Preservative
✓	DR-2 COMPOSITE_201307	10	Total Metals, Hardness, Silica	250 mL / HDPE / HNO3 (RED)
✓	DR-2 COMPOSITE_201307		Dissolved Metals (Field Filtered)	250 mL / HDPE / HNO3 (RED)
✓	DR-2 COMPOSITE_201307		Potentially Dissolved Metals	250 mL / HDPE / HNO3 (RED)
✓	DR-2 COMPOSITE_201307		Alkalinity, TSS, TDS, Chloride, Sulfate	500 mL / HDPE / None
✓	DR-2 COMPOSITE_201307		Salinity	250 mL / HDPE / None
✓	DR-2 COMPOSITE_201307		Cyanide	250 mL / HDPE / NaOH (GREEN)
✓	DR-2 COMPOSITE_201307		Sulfide	250 mL / HDPE / NaOH + Zn Acetate (BLACK)
✓	DR-2 COMPOSITE_201307		Total Organic Carbon, Nitrate	250 mL / Amber Glass / H2SO4 (YELLOW)

Notes:

*Collect composite sample, grab sample, and flow measurements at the same time (not on different days).

Rico Water Sampling Form: *Station Information*

Sampling completed at this location ☒
(Do not check box until **ALL** items have been completed)

☒ Surface Water ☐ Groundwater ☐ Other

Sample Location: **DR-7 COMPOSITE**

Date(s) of Sample Collection: 7/10/13

Time(s) of Sample Collection: 3:00

Sampler's Identity: MLTB

Collected:
☑ East to West
☐ West to East

FIELD PARAMETERS / MEASUREMENTS

Compartment Number	Compartment Width, ft	pH	EC, µS/cm	DO, ppm	Temp, °C	ORP, mV
1	7 6	6.9	543	6.47	18.24	-25.9
2	7 6	6.89	523	6.80	18.11	-28.5
3	7 6	6.98	476	6.66	17.98	-29.4
4	7 6	7.02	442	6.75	17.89	-29.5
5	7 6	7.04	419	6.89	17.85	-30.0
6	7 6	7.03	414	6.85	17.87	-29.8
7	6	6.95	414	6.59	17.97	-28.4
Total Composite	Total Width*: 42	8.40	439	4.69	20.13	-78.0

*Width here must match width on corresponding flow measurement sheet from Stream Flow Measurements Form

SAMPLE BOTTLE INFORMATION - Check off each bottle when completed

X	Field Sample ID on Bottle		Analysis	Bottle size/Type/Preservative
✓	DR-7 COMPOSITE_201307	10	Total Metals, Hardness, Silica	250 mL / HDPE / HNO3 (RED)
✓	DR-7 COMPOSITE_201307		Dissolved Metals (Field Filtered)	250 mL / HDPE / HNO3 (RED)
✓	DR-7 COMPOSITE_201307		Potentially Dissolved Metals	250 mL / HDPE / HNO3 (RED)
✓	DR-7 COMPOSITE_201307		Alkalinity, TSS, TDS, Chloride, Sulfate	500 mL / HDPE / None
✓	DR-7 COMPOSITE_201307		Salinity	250 mL / HDPE / None
✓	DR-7 COMPOSITE_201307		Cyanide	250 mL / HDPE / NaOH (GREEN)
✓	DR-7 COMPOSITE_201307		Sulfide	250 mL / HDPE / NaOH + Zn Acetate (BLACK)
✓	DR-7 COMPOSITE_201307		Total Organic Carbon, Nitrate	250 mL / Amber Glass / H2SO4 (YELLOW)

Notes:

*Collect composite sample, grab sample, and flow measurements at the same time (not on different days).

Rico Water Sampling Form: *Station Information*

Sampling completed at this location ☒
(Do not check box until **ALL** items have been completed)

☒ Surface Water ☐ Groundwater ☐ Other

Sample Location: **DR-4-SW COMPOSITE**

Date(s) of Sample Collection: 7/17/13

Time(s) of Sample Collection: 10:48

Sampler's Identity: MC/TB

Collected:
☐ East to West
☒ West to East

FIELD PARAMETERS / MEASUREMENTS

Compartment Number	Compartment Width, ft		pH	EC, µS/cm	DO, ppm	Temp, °C	ORP, mV
			4	1	3	5	2
1	6		7.17	405	7.82	13.78	1.8
2	6		7.29	404	7.78	13.72	-0.3
3	6		7.33	404	7.76	13.65	-1.0
4	6		7.38	404	8.02	13.65	-1.6
5	6		7.42	404	7.62	13.67	-2.1
6	6		7.52	400	7.49	15.78	~~-2.1~~ -7.0
7	6		7.51	405	7.43	13.82	~~-7.~~ -6.4
Total Composite	Total Width*:	42	7.55	404	5.75	15.57	-7.1

*Width here must match width on corresponding flow measurement sheet from Stream Flow Measurements Form

SAMPLE BOTTLE INFORMATION - Check off each bottle when completed

X	Field Sample ID on Bottle		Analysis	Bottle size/Type/Preservative
✓	DR-4-SW COMPOSITE_201307	17	Total Metals, Hardness, Silica	250 mL / HDPE / HNO3 (RED)
✓	DR-4-SW COMPOSITE_201307		Dissolved Metals (Field Filtered)	250 mL / HDPE / HNO3 (RED)
✓	DR-4-SW COMPOSITE_201307		Potentially Dissolved Metals	250 mL / HDPE / HNO3 (RED)
✓	DR-4-SW COMPOSITE_201307		Alkalinity, TSS, TDS, Chloride, Sulfate	500 mL / HDPE / None
✓	DR-4-SW COMPOSITE_201307		Salinity	250 mL / HDPE / None
✓	DR-4-SW COMPOSITE_201307		Cyanide	250 mL / HDPE / NaOH (GREEN)
✓	DR-4-SW COMPOSITE_201307		Sulfide	250 mL / HDPE / NaOH + Zn Acetate (BLACK)
✓	DR-4-SW COMPOSITE_201307		Total Organic Carbon, Nitrate	250 mL / Amber Glass / H2SO4 (YELLOW)

Notes:

*Collect composite sample, grab sample, and flow measurements at the same time (not on different days).

Rico Water Sampling Form: *Station Information*

Sampling completed at this location ☒
(Do not check box until **ALL** items have been completed)

☐ Surface Water ☐ Groundwater ☐ Other

Sample Location:	**DR-8**
Date(s) of Sample Collection:	7/10/13
Time(s) of Sample Collection:	10:48
Sampler's Identity:	ML/TB
***Duplicate sample of:**	DR-1

FIELD PARAMETERS / MEASUREMENTS

pH	EC, µS/cm	DO, ppm	Temp, °C	ORP, mV
8.15	285	7.11	12.69	-21.1

SAMPLE BOTTLE INFORMATION - Check off each bottle when completed

X	Field Sample ID on Bottle		Analysis	Bottle size/Type/Preservative
✓	DR-8_201307	10	Total Metals, Hardness, Silica	250 mL / HDPE / HNO3 (RED)
✓	DR-8_201307		Dissolved Metals (Field Filtered)	250 mL / HDPE / HNO3 (RED)
✓	DR-8_201307		Potentially Dissolved Metals	250 mL / HDPE / HNO3 (RED)
✓	DR-8_201307		Alkalinity, TSS, TDS, Chloride, Sulfate	500 mL / HDPE / None
✓	DR-8_201307		Salinity	250 mL / HDPE / None
✓	DR-8_201307		Cyanide	250 mL / HDPE / NaOH (GREEN)
✓	DR-8_201307		Sulfide	250 mL / HDPE / NaOH + Zn Acetate (BLACK)
✓	DR-8_201307		Total Organic Carbon, Nitrate	250 mL / Amber Glass / H2SO4 (YELLOW)

Notes:

*This sample is a Blind Duplicate Sample. Collect one blind duplicate sample for every 10 samples collected.

Rico Water Sampling Form: *Station Information*

Sampling completed at this location ☒
(Do not check box until **ALL** items have been completed)

☐ Surface Water ☐ Groundwater ☐ Other

Sample Location:	**DR-9**
Date(s) of Sample Collection:	7/10/13
Time(s) of Sample Collection:	3:57
Sampler's Identity:	MC/TB
***Duplicate sample of:**	DR-6

FIELD PARAMETERS / MEASUREMENTS

pH	EC, µS/cm	DO, ppm	Temp, °C	ORP, mV
8.35	444	6.54	19.23	-37.2

SAMPLE BOTTLE INFORMATION - Check off each bottle when completed

X	Field Sample ID on Bottle		Analysis	Bottle size/Type/Preservative
✓	DR-9_201307	10	Total Metals, Hardness, Silica	250 mL / HDPE / HNO3 (RED)
✓	DR-9_201307		Dissolved Metals (Field Filtered)	250 mL / HDPE / HNO3 (RED)
✓	DR-9_201307		Potentially Dissolved Metals	250 mL / HDPE / HNO3 (RED)
✓	DR-9_201307		Alkalinity, TSS, TDS, Chloride, Sulfate	500 mL / HDPE / None
✓	DR-9_201307		Salinity	250 mL / HDPE / None
✓	DR-9_201307		Cyanide	250 mL / HDPE / NaOH (GREEN)
✓	DR-9_201307		Sulfide	250 mL / HDPE / NaOH + Zn Acetate (BLACK)
✓	DR-9_201307		Total Organic Carbon, Nitrate	250 mL / Amber Glass / H2SO4 (YELLOW)

Notes:

*This sample is a Blind Duplicate Sample. Collect one blind duplicate sample for every 10 samples collected.

Rico Water Sampling Form: *Station Information*

Sampling completed at this location ☒
(Do not check box until **ALL** items have been completed)

☐ Surface Water ☑ Groundwater ☐ Other

Sample Location:	**DR-10**
Date(s) of Sample Collection:	7-18-13
Time(s) of Sample Collection:	1:17
Sampler's Identity:	TB MC
***Duplicate sample of:**	MW 104

FIELD PARAMETERS / MEASUREMENTS

pH	EC, µS/cm	DO, ppm	Temp, °C	ORP, mV
6.73	1573	~~22.2~~ 0.81	17.73	-22.2

SAMPLE BOTTLE INFORMATION - Check off each bottle when completed

X	Field Sample ID on Bottle		Analysis	Bottle size/Type/Preservative
✓	DR-10_201307	18	Total Metals, Hardness, Silica	250 mL / HDPE / HNO3 (RED)
✓	DR-10_201307		Dissolved Metals (Field Filtered)	250 mL / HDPE / HNO3 (RED)
✓	DR-10_201307		Potentially Dissolved Metals	250 mL / HDPE / HNO3 (RED)
✓	DR-10_201307		Alkalinity, TSS, TDS, Chloride, Sulfate	500 mL / HDPE / None
✓	DR-10_201307		Salinity	250 mL / HDPE / None
✓	DR-10_201307		Cyanide	250 mL / HDPE / NaOH (GREEN)
✓	DR-10_201307		Sulfide	250 mL / HDPE / NaOH + Zn Acetate (BLACK)
✓	DR-10_201307		Total Organic Carbon, Nitrate	250 mL / Amber Glass / H2SO4 (YELLOW)

Notes:

*This sample is a Blind Duplicate Sample. Collect one blind duplicate sample for every 10 samples collected.

Rico Water Sampling Form: *Station Information*

Sampling completed at this location ☑
(Do not check box until **ALL** items have been completed)

☐ Surface Water ☐ Groundwater ☐ Other

Sample Location:	**DR-11**
Date(s) of Sample Collection:	7/18/13
Time(s) of Sample Collection:	3:35
Sampler's Identity:	TBMC
***Duplicate sample of:**	MW-1 Shallow

FIELD PARAMETERS / MEASUREMENTS

pH	EC, µS/cm	DO, ppm	Temp, °C	ORP, mV
6.74	1549	0.90	16.96	11.9

SAMPLE BOTTLE INFORMATION - Check off each bottle when completed

X	Field Sample ID on Bottle		Analysis	Bottle size/Type/Preservative
✓	DR-11_201305	NB	Total Metals, Hardness, Silica	250 mL / HDPE / HNO3 (RED)
✓	DR-11_201305		Dissolved Metals (Field Filtered)	250 mL / HDPE / HNO3 (RED)
✓	DR-11_201305		Potentially Dissolved Metals	250 mL / HDPE / HNO3 (RED)
✓	DR-11_201305		Alkalinity, TSS, TDS, Chloride, Sulfate	500 mL / HDPE / None
✓	DR-11_201305		Salinity	250 mL / HDPE / None
✓	DR-11_201305		Cyanide	250 mL / HDPE / NaOH (GREEN)
✓	DR-11_201305		Sulfide	250 mL / HDPE / NaOH + Zn Acetate (BLACK)
✓	DR-11_201305		Total Organic Carbon, Nitrate	250 mL / Amber Glass / H2SO4 (YELLOW)

Notes:

*This sample is a Blind Duplicate Sample. Collect one blind duplicate sample for every 10 samples collected.

Rico Water Sampling Form: *Station Information*

Sampling completed at this location ☑
(Do not check box until **ALL** items have been completed)

☐ Surface Water ☑ Groundwater ☐ Other

Sample Location:	**DR-12**
Date(s) of Sample Collection:	7/19/13
Time(s) of Sample Collection:	906
Sampler's Identity:	TB mC
***Duplicate sample of:**	P13-103

FIELD PARAMETERS / MEASUREMENTS

pH	EC, µS/cm	DO, ppm	Temp, °C	ORP, mV
632	1650	0	8.86	-86.1

SAMPLE BOTTLE INFORMATION - Check off each bottle when completed

X	Field Sample ID on Bottle		Analysis	Bottle size/Type/Preservative
✓	DR-12_201305	19	Total Metals, Hardness, Silica	250 mL / HDPE / HNO3 (RED)
✓	DR-12_201305	1	Dissolved Metals (Field Filtered)	250 mL / HDPE / HNO3 (RED)
✓	DR-12_201305	1	Potentially Dissolved Metals	250 mL / HDPE / HNO3 (RED)
✓	DR-12_201305	1	Alkalinity, TSS, TDS, Chloride, Sulfate	500 mL / HDPE / None
✓	DR-12_201305	1	Salinity	250 mL / HDPE / None
✓	DR-12_201305	1	Cyanide	250 mL / HDPE / NaOH (GREEN)
✓	DR-12_201305	1	Sulfide	250 mL / HDPE / NaOH + Zn Acetate (BLACK)
✓	DR-12_201305		Total Organic Carbon, Nitrate	250 mL / Amber Glass / H2SO4 (YELLOW)

Notes:

*This sample is a Blind Duplicate Sample. Collect one blind duplicate sample for every 10 samples collected.

Rico Water Sampling Form: *Station Information*

Sampling completed at this location [X]
(Do not check box until **ALL** items have been completed)

[ ] Surface Water [X] Groundwater [ ] Other

Sample Location: GW-1

Date(s) of Sample Collection: 7/9/13

Time(s) of Sample Collection: 10:32

Sampler's Identity: MC TB

FIELD PARAMETERS / MEASUREMENTS

Measured Depth to Water: 1.95 ft

# of Purge Volumes	Time	Cummulative Volume (gal)	pH	EC, µS/cm	DO, ppm	Temp, °C	ORP, mV
1	10:27	1.5	6.41	302	1.38	13.60	-6.5
2	10:29	3.0	6.70	313	1.27	10.26	-22.4
3	10:31	4.5	6.85	319	0.81	10.42	-31.4
Collected Sample Parameters:			6.92	307	0.83	10.54	-37.3

Well purged dry? [ ] Yes [X] No

If Yes, did well recover to 80% within 24 hours?** [ ] Yes [ ] No

SAMPLE BOTTLE INFORMATION - Check off each bottle when completed

X	Field Sample ID on Bottle		Analysis	Bottle size/Type/Preservative
	GW-1_201307		Total Metals, Hardness, Silica	250 mL / HDPE / HNO3 (RED)
	GW-1_201307		Dissolved Metals (Field Filtered)	250 mL / HDPE / HNO3 (RED)
	GW-1_201307		Potentially Dissolved Metals	250 mL / HDPE / HNO3 (RED)
	GW-1_201307		Alkalinity, TSS, TDS, Chloride, Sulfate	500 mL / HDPE / None
	GW-1_201307		Salinity	250 mL / HDPE / None
	GW-1_201307		Cyanide	250 mL / HDPE / NaOH (GREEN)
	GW-1_201307		Sulfide	250 mL / HDPE / NaOH + Zn Acetate (BLACK)
	GW-1_201307		Total Organic Carbon, Nitrate	250 mL / Amber Glass / H2SO4 (YELLOW)

Notes:

* If conditions significantly change, purge volume can be calculated as follows:

One purge volume = 0.174305 x (Measured Depth to Water - Depth to Well Bottom)

** If "No", well is declared dry for the sampling event.

Measured Depth to Water (ft)	Qua (gal Pur Volu 1
0.00	1.70
0.25	1.66
0.50	1.61
0.75	1.57
1.00	1.53
1.25	1.48
1.50	1.44
1.75	1.39
2.00	1.35
2.25	1.31
2.50	1.26
2.75	1.22
3.00	1.18
3.25	1.13
3.50	1.09
3.75	1.05
4.00	1.00
4.25	0.96
4.50	0.92
4.75	0.87
5.00	0.83
5.25	0.78
5.50	0.74
5.75	0.70
6.00	0.65
6.25	0.61
6.50	0.57
6.75	0.52
7.00	0.48
7.25	0.44
7.50	0.39
7.75	0.35
8.00	0.31
8.25	0.26
8.50	0.22
8.75	0.17
9.00	0.13
9.25	0.09
9.50	0.04

Rico Water Sampling Form: *Station Information*

Sampling completed at this location ☒
(Do not check box until **ALL** items have been completed)

☐ Surface Water ☒ Groundwater ☐ Other

Sample Location: **GW-3**

Date(s) of Sample Collection: 7/9/13

Time(s) of Sample Collection: 2:15

Sampler's Identity: MC TB

FIELD PARAMETERS / MEASUREMENTS

Measured Depth to Water: 12.96 ft

# of Purge Volumes	Time	Cummulative Volume (gal)	pH	EC, µS/cm	DO, ppm	Temp, °C	ORP, mV
1	10:45	0.5	6.72	815	1.67	14.48	-11.3
2							
3							
Collected Sample Parameters:			7.13	932	1.21	10.26	-53.9

Well purged dry? ☒ Yes ☐ No

If Yes, did well recover to 80% within 24 hours?** ☐ Yes ☐ No

SAMPLE BOTTLE INFORMATION - Check off each bottle when completed

X	Field Sample ID on Bottle		Analysis	Bottle size/Type/Preservative
✓	GW-3_201307	9	Total Metals, Hardness, Silica	250 mL / HDPE / HNO3 (RED)
✓	GW-3_201307		Dissolved Metals (Field Filtered)	250 mL / HDPE / HNO3 (RED)
✓	GW-3_201307		Potentially Dissolved Metals	250 mL / HDPE / HNO3 (RED)
✓	GW-3_201307		Alkalinity, TSS, TDS, Chloride, Sulfate	500 mL / HDPE / None
✓	GW-3_201307		Salinity	250 mL / HDPE / None
✓	GW-3_201307		Cyanide	250 mL / HDPE / NaOH (GREEN)
✓	GW-3_201307		Sulfide	250 mL / HDPE / NaOH + Zn Acetate (BLACK)
✓	GW-3_201307		Total Organic Carbon, Nitrate	250 mL / Amber Glass / H2SO4 (YELLOW)

Notes:

* If conditions significantly change, purge volume can be calculated as follows:

One purge volume = 0.174305 x (Measured Depth to Water - Depth to Well Bottom)

** If "No", well is declared dry for the sampling event.

Measured Depth to Water (ft)	Qua (gal Pur Volu 1
5.75	1.66
6.00	1.62
6.25	1.58
6.50	1.53
6.75	1.49
7.00	1.45
7.25	1.40
7.50	1.36
7.75	1.32
8.00	1.27
8.25	1.23
8.50	1.19
8.75	1.14
9.00	1.10
9.25	1.05
9.50	1.01
9.75	0.97
10.00	0.92
10.25	0.88
10.50	0.84
10.75	0.79
11.00	0.75
11.25	0.71
11.50	0.66
11.75	0.62
12.00	0.58
12.25	0.53
12.50	0.49
12.75	0.44
13.00	0.40
13.25	0.36
13.50	0.31
13.75	0.27
14.00	0.23
14.25	0.18
14.50	0.14
14.75	0.10
15.00	0.05
15.25	0.01

Rico Water Sampling Form: *Station Information*

Sampling completed at this location [X]
(Do not check box until **ALL** items have been completed)

[ ] Surface Water [X] Groundwater [ ] Other

Sample Location: **GW-4**

Date(s) of Sample Collection: 7/18/13

Time(s) of Sample Collection: 1105

Sampler's Identity: TB MC

FIELD PARAMETERS / MEASUREMENTS

Measured Depth to Water: 10.59 ft

# of Purge Volumes	Time	Cummulative Volume (gal)	pH	EC, µS/cm	DO, ppm	Temp, °C	ORP, mV
1	1055	1.	6.33	823	0	12.30	-37.2
2	1059	1.75	6.42	853		10.76	
3	1103	2.50	6.46	854		10.55	
Collected Sample Parameters:			6.52	852	.03	11.32	-45.7

Well purged dry? [ ] Yes [X] No

If Yes, did well recover to 80% within 24 hours?** [X] Yes [X] No

SAMPLE BOTTLE INFORMATION - Check off each bottle when completed

X	Field Sample ID on Bottle		Analysis	Bottle size/Type/Preservative
✓	GW-4_201307	18	Total Metals, Hardness, Silica	250 mL / HDPE / HNO3 (RED)
✓	GW-4_201307		Dissolved Metals (Field Filtered)	250 mL / HDPE / HNO3 (RED)
✓	GW-4_201307		Potentially Dissolved Metals	250 mL / HDPE / HNO3 (RED)
✓	GW-4_201307		Alkalinity, TSS, TDS, Chloride, Sulfate	500 mL / HDPE / None
✓	GW-4_201307		Salinity	250 mL / HDPE / None
✓	GW-4_201307		Cyanide	250 mL / HDPE / NaOH (GREEN)
✓	GW-4_201307		Sulfide	250 mL / HDPE / NaOH + Zn Acetate (BLACK)
✓	GW-4_201307		Total Organic Carbon, Nitrate	250 mL / Amber Glass / H2SO4 (YELLOW)

Notes:

* If conditions significantly change, purge volume can be calculated as follows:

One purge volume = 0.174305 x (Measured Depth to Water - Depth to Well Bottom)

** If "No", well is declared dry for the sampling event.

Measured Depth to Water (ft)	Qua (gal Pur Volu 1
5.50	1.68
5.75	1.64
6.00	1.59
6.25	1.55
6.50	1.51
6.75	1.46
7.00	1.42
7.25	1.38
7.50	1.33
7.75	1.29
8.00	1.25
8.25	1.20
8.50	1.16
8.75	1.12
9.00	1.07
9.25	1.03
9.50	0.98
9.75	0.94
10.00	0.90
10.25	0.85
10.50	0.81
10.75	0.77
11.00	0.72
11.25	0.68
11.50	0.64
11.75	0.59
12.00	0.55
12.25	0.51
12.50	0.46
12.75	0.42
13.00	0.37
13.25	0.33
13.50	0.29
13.75	0.24
14.00	0.20
14.25	0.16
14.50	0.11
14.75	0.07
15.00	0.03

Rico Water Sampling Form: *Station Information*

Sampling completed at this location ☒
(Do not check box until **ALL** items have been completed)

☐ Surface Water ☒ Groundwater ☐ Other

Sample Location: **GW-5**

Date(s) of Sample Collection: 7-9-13

Time(s) of Sample Collection: 11:25

Sampler's Identity: TB ML

FIELD PARAMETERS / MEASUREMENTS

Measured Depth to Water: 22.41 ft

# of Purge Volumes	Time	Cummulative Volume (gal)	pH	EC, µS/cm	DO, ppm	Temp, °C	ORP, mV
1	11:18	0.5	6.65	2784	0.00	11.19	-82.8
2	11:20	1.0	6.69	2878	0.00	10.19	-85.3
3	11:22	1.5	6.76	2820	0.36	9.87	-91.0
Collected Sample Parameters:			6.79	2925	0.52	9.99	-81.1

Well purged dry? ☐ Yes ☒ No

If Yes, did well recover to 80% within 24 hours?** ☐ Yes ☐ No

SAMPLE BOTTLE INFORMATION - Check off each bottle when completed

X	Field Sample ID on Bottle		Analysis	Bottle size/Type/Preservative
✓	GW-5_201307	01	Total Metals, Hardness, Silica	250 mL / HDPE / HNO3 (RED)
✓	GW-5_201307		Dissolved Metals (Field Filtered)	250 mL / HDPE / HNO3 (RED)
✓	GW-5_201307		Potentially Dissolved Metals	250 mL / HDPE / HNO3 (RED)
✓	GW-5_201307		Alkalinity, TSS, TDS, Chloride, Sulfate	500 mL / HDPE / None
✓	GW-5_201307		Salinity	250 mL / HDPE / None
✓	GW-5_201307		Cyanide	250 mL / HDPE / NaOH (GREEN)
✓	GW-5_201307		Sulfide	250 mL / HDPE / NaOH + Zn Acetate (BLACK)
✓	GW-5_201307		Total Organic Carbon, Nitrate	250 mL / Amber Glass / H2SO4 (YELLOW)

Notes:

* If conditions significantly change, purge volume can be calculated as follows:

One purge volume = 0.174305 x (Measured Depth to Water - Depth to Well Bottom)

** If "No", well is declared dry for the sampling event.

Measured Depth to Water (ft)	Qua (gal Pur Volu 1
15.00	1.66
15.25	1.61
15.50	1.57
15.75	1.53
16.00	1.48
16.25	1.44
16.50	1.39
16.75	1.35
17.00	1.31
17.25	1.26
17.50	1.22
17.75	1.18
18.00	1.13
18.25	1.09
18.50	1.05
18.75	1.00
19.00	0.96
19.25	0.92
19.50	0.87
19.75	0.83
20.00	0.78
20.25	0.74
20.50	0.70
20.75	0.65
21.00	0.61
21.25	0.57
21.50	0.52
21.75	0.48
22.00	0.44
22.25	0.39
22.50	0.35
22.75	0.31
23.00	0.26
23.25	0.22
23.50	0.17
23.75	0.13
24.00	0.09
24.25	0.04
24.50	0.00

Rico Water Sampling Form: *Station Information*

Sampling completed at this location ☐
(Do not check box until **ALL** items have been completed)

☐ Surface Water ☒ Groundwater ☐ Other

Sample Location: **GW-6**

Date(s) of Sample Collection: 7/9/13

Time(s) of Sample Collection: 11:52

Sampler's Identity: ML/TB

FIELD PARAMETERS / MEASUREMENTS

Measured Depth to Water: 21.86 ft

# of Purge Volumes	Time	Cummulative Volume (gal)	pH	EC, µS/cm	DO, ppm	Temp, °C	ORP, mV
1	11:45	1.0	9.21	2594	0.59	13.80	-110.8
2	11:48	2.0	7.56	2210	0.29	11.13	-76.5
3	11:50	3.0	7.03	2153	0.00	10.22	-71.9
Collected Sample Parameters:			6.98	2157	0.62	10.18	-67.2

Well purged dry? ☐ Yes ☒ No

If Yes, did well recover to 80% within 24 hours?** ☐ Yes ☐ No

SAMPLE BOTTLE INFORMATION - Check off each bottle when completed

X	Field Sample ID on Bottle		Analysis	Bottle size/Type/Preservative
✓	GW-6_201307	01	Total Metals, Hardness, Silica	250 mL / HDPE / HNO3 (RED)
✓	GW-6_201307		Dissolved Metals (Field Filtered)	250 mL / HDPE / HNO3 (RED)
✓	GW-6_201307		Potentially Dissolved Metals	250 mL / HDPE / HNO3 (RED)
✓	GW-6_201307		Alkalinity, TSS, TDS, Chloride, Sulfate	500 mL / HDPE / None
✓	GW-6_201307		Salinity	250 mL / HDPE / None
✓	GW-6_201307		Cyanide	250 mL / HDPE / NaOH (GREEN)
✓	GW-6_201307		Sulfide	250 mL / HDPE / NaOH + Zn Acetate (BLACK)
✓	GW-6_201307		Total Organic Carbon, Nitrate	250 mL / Amber Glass / H2SO4 (YELLOW)

Notes:

* If conditions significantly change, purge volume can be calculated as follows:

One purge volume = 0.174305 x (Measured Depth to Water - Depth to Well Bottom)

** If "No", well is declared dry for the sampling event.

Measured Depth to Water (ft)	Qua (gal Pur Volu 1
17.25	1.68
17.50	1.63
17.75	1.59
18.00	1.54
18.25	1.50
18.50	1.46
18.75	1.41
19.00	1.37
19.25	1.33
19.50	1.28
19.75	1.24
20.00	1.20
20.25	1.15
20.50	1.11
20.75	1.07
21.00	1.02
21.25	0.98
21.50	0.93
21.75	0.89
22.00	0.85
22.25	0.80
22.50	0.76
22.75	0.72
23.00	0.67
23.25	0.63
23.50	0.59
23.75	0.54
24.00	0.50
24.25	0.45
24.50	0.41
24.75	0.37
25.00	0.32
25.25	0.28
25.50	0.24
25.75	0.19
26.00	0.15
26.25	0.11
26.50	0.06
26.75	0.02

Rico Water Sampling Form: *Station Information*

Sampling completed at this location [X]
(Do not check box until **ALL** items have been completed)

[ ] Surface Water [X] Groundwater [ ] Other

Sample Location: **GW-7**

Date(s) of Sample Collection: 7/17/13

Time(s) of Sample Collection: 2:30

Sampler's Identity: MC/DB

FIELD PARAMETERS / MEASUREMENTS

Measured Depth to Water: 23.27 ft

# of Purge Volumes	Time	Cummulative Volume (gal)	pH	EC, µS/cm	DO, ppm	Temp, °C	ORP, mV
1	1:25	0.5	~~6.34~~ 6.08		0.02	13.75	43.1
2							
3							
Collected Sample Parameters:			6.54	1665	0	13.51	79.8

Well purged dry? [X] Yes [ ] No

If Yes, did well recover to 80% within 24 hours?** [X] Yes [ ] No

SAMPLE BOTTLE INFORMATION - Check off each bottle when completed

X	Field Sample ID on Bottle		Analysis	Bottle size/Type/Preservative
✓	GW-7_201307	M	Total Metals, Hardness, Silica	250 mL / HDPE / HNO3 (RED)
✓	GW-7_201307		Dissolved Metals (Field Filtered)	250 mL / HDPE / HNO3 (RED)
✓	GW-7_201307		Potentially Dissolved Metals	250 mL / HDPE / HNO3 (RED)
✓	GW-7_201307		Alkalinity, TSS, TDS, Chloride, Sulfate	500 mL / HDPE / None
✓	GW-7_201307		Salinity	250 mL / HDPE / None
✓	GW-7_201307		Cyanide	250 mL / HDPE / NaOH (GREEN)
✓	GW-7_201307		Sulfide	250 mL / HDPE / NaOH + Zn Acetate (BLACK)
✓	GW-7_201307		Total Organic Carbon, Nitrate	250 mL / Amber Glass / H2SO4 (YELLOW)

Notes:

* If conditions significantly change, purge volume can be calculated as follows:

One purge volume = 0.174305 x (Measured Depth to Water - Depth to Well Bottom)

** If "No", well is declared dry for the sampling event.

DRY

Measured Depth to Water (ft)	Qua (gal Pur Volu 1
15.25	1.76
15.50	1.72
15.75	1.67
16.00	1.63
16.25	1.58
16.50	1.54
16.75	1.50
17.00	1.45
17.25	1.41
17.50	1.37
17.75	1.32
18.00	1.28
18.25	1.24
18.50	1.19
18.75	1.15
19.00	1.11
19.25	1.06
19.50	1.02
19.75	0.97
20.00	0.93
20.25	0.89
20.50	0.84
20.75	0.80
21.00	0.76
21.25	0.71
21.50	0.67
21.75	0.63
22.00	0.58
22.25	0.54
22.50	0.50
22.75	0.45
23.00	0.41
23.25	0.36
23.50	0.32
23.75	0.28
24.00	0.23
24.25	0.19
24.50	0.15
24.75	0.10

Rico Water Sampling Form: *Station Information*

Sampling completed at this location ☐
(Do not check box until **ALL** items have been completed)

☐ Surface Water ☒ Groundwater ☐ Other

Sample Location: **EB-1**

Date(s) of Sample Collection: 7/9/13 7/17/13

Time(s) of Sample Collection: 2:07

Sampler's Identity: MLTB

FIELD PARAMETERS / MEASUREMENTS

Measured Depth to Water: 22.81 ft

# of Purge Volumes	Time	Cummulative Volume (gal)	pH	EC, µS/cm	DO, ppm	Temp, °C	ORP, mV
1	11:07	2.25	6.63	2318	0.00	13.00	-66.7
2							
3							
Collected Sample Parameters:			7.68	2102	0.29	10.54	-81.1

Well purged dry? ☒ Yes ☐ No

If Yes, did well recover to 80% within 24 hours?** ☒ Yes ☐ No

SAMPLE BOTTLE INFORMATION - Check off each bottle when completed

X	Field Sample ID on Bottle		Analysis	Bottle size/Type/Preservative
✓	EB-1_201307	17	Total Metals, Hardness, Silica	250 mL / HDPE / HNO3 (RED)
✓	EB-1_201307		Dissolved Metals (Field Filtered)	250 mL / HDPE / HNO3 (RED)
✓	EB-1_201307		Potentially Dissolved Metals	250 mL / HDPE / HNO3 (RED)
✓	EB-1_201307		Alkalinity, TSS, TDS, Chloride, Sulfate	500 mL / HDPE / None
✓	EB-1_201307		Salinity	250 mL / HDPE / None
✓	EB-1_201307		Cyanide	250 mL / HDPE / NaOH (GREEN)
✓	EB-1_201307		Sulfide	250 mL / HDPE / NaOH + Zn Acetate (BLACK)
✓	EB-1_201307		Total Organic Carbon, Nitrate	250 mL / Amber Glass / H2SO4 (YELLOW)

Notes:

* If conditions significantly change, purge volume can be calculated as follows:

One purge volume = 0.174305 x (Measured Depth to Water - Depth to Well Bottom)

** If "No", well is declared dry for the sampling event.

Measured Depth to Water (ft)	Qua (gal Pur Volu 1
19.00	2.85
19.25	2.81
19.50	2.76
19.75	2.72
20.00	2.68
20.25	2.63
20.50	2.59
20.75	2.54
21.00	2.50
21.25	2.46
21.50	2.41
21.75	2.37
22.00	2.33
22.25	2.28
22.50	2.24
22.75	2.20
23.00	2.15
23.25	2.11
23.50	2.07
23.75	2.02
24.00	1.98
24.25	1.93
24.50	1.89
24.75	1.85
25.00	1.80
25.25	1.76
25.50	1.72
25.75	1.67
26.00	1.63
26.25	1.59
26.50	1.54
26.75	1.50
27.00	1.46
27.25	1.41
27.50	1.37
27.75	1.32
28.00	1.28
28.25	1.24
28.50	1.19

Rico Water Sampling Form: *Station Information*

Sampling completed at this location ☒
(Do not check box until **ALL** items have been completed)

☐ Surface Water ☒ Groundwater ☐ Other

Sample Location: **EB-2**

Date(s) of Sample Collection: 7/9/13 7/10/13

Time(s) of Sample Collection: 1:55

Sampler's Identity: TB MC

FIELD PARAMETERS / MEASUREMENTS

Measured Depth to Water: 17.11 ft

# of Purge Volumes	Time	Cummulative Volume (gal)	pH	EC, µS/cm	DO, ppm	Temp, °C	ORP, mV
1	1202	1.75	5.91	3044	0	11.06	-45.5
2							
3							
Collected Sample Parameters:			6.32	3508	0	12.58	-98.1

Well purged dry? ☑ Yes ☐ No

If Yes, did well recover to 80% within 24 hours?** ☑ Yes ☐ No

SAMPLE BOTTLE INFORMATION - Check off each bottle when completed

X	Field Sample ID on Bottle		Analysis	Bottle size/Type/Preservative
✓	EB-2_201307		Total Metals, Hardness, Silica	250 mL / HDPE / HNO3 (RED)
✓	EB-2_201307		Dissolved Metals (Field Filtered)	250 mL / HDPE / HNO3 (RED)
✓	EB-2_201307		Potentially Dissolved Metals	250 mL / HDPE / HNO3 (RED)
✓	EB-2_201307		Alkalinity, TSS, TDS, Chloride, Sulfate	500 mL / HDPE / None
✓	EB-2_201307		Salinity	250 mL / HDPE / None
✓	EB-2_201307		Cyanide	250 mL / HDPE / NaOH (GREEN)
✓	EB-2_201307		Sulfide	250 mL / HDPE / NaOH + Zn Acetate (BLACK)
✓	EB-2_201307		Total Organic Carbon, Nitrate	250 mL / Amber Glass / H2SO4 (YELLOW)

Notes:

* If conditions significantly change, purge volume can be calculated as follows:

One purge volume = 0.174305 x (Measured Depth to Water - Depth to Well Bottom)

** If "No", well is declared dry for the sampling event.

Measured Depth to Water (ft)	Qua (gal Pur Volu 1
14.00	2.18
14.25	2.14
14.50	2.09
14.75	2.05
15.00	2.00
15.25	1.96
15.50	1.92
15.75	1.87
16.00	1.83
16.25	1.79
16.50	1.74
16.75	1.70
17.00	1.66
17.25	1.61
17.50	1.57
17.75	1.53
18.00	1.48
18.25	1.44
18.50	1.39
18.75	1.35
19.00	1.31
19.25	1.26
19.50	1.22
19.75	1.18
20.00	1.13
20.25	1.09
20.50	1.05
20.75	1.00
21.00	0.96
21.25	0.92
21.50	0.87
21.75	0.83
22.00	0.78
22.25	0.74
22.50	0.70
22.75	0.65
23.00	0.61
23.25	0.57
23.50	0.52

Rico Water Sampling Form: *Station Information*

☐ Surface Water ☒ Groundwater ☐ Other

Sampling completed at this location ☒
(Do not check box until **ALL** items have been completed)

Sample Location: **MW-101**

Date(s) of Sample Collection: 7/9/13

Time(s) of Sample Collection: 1:28

Sampler's Identity: MC/TB

FIELD PARAMETERS / MEASUREMENTS

Measured Depth to Water: 27.91 ft

# of Purge Volumes	Time	Cummulative Volume (gal)	pH	EC, µS/cm	DO, ppm	Temp, °C	ORP, mV
1	1:05	1.75	6.39	1867	0.92	14.06	~~-29~~ -37.9
2	1:11	4.00	6.33	1801	0.20	13.86	-33.8
3	1:15	6.00	6.35	1801	0.60	13.30	-21.1
Collected Sample Parameters:			6.23	1801	0.76	13.08	-12.8

Well purged dry? ☐ Yes ☐ No

If Yes, did well recover to 80% within 24 hours?** ☐ Yes ☐ No

SAMPLE BOTTLE INFORMATION - Check off each bottle when completed

X	Field Sample ID on Bottle		Analysis	Bottle size/Type/Preservative
✓	MW-101_201307	9	Total Metals, Hardness, Silica	250 mL / HDPE / HNO3 (RED)
✓	MW-101_201307		Dissolved Metals (Field Filtered)	250 mL / HDPE / HNO3 (RED)
✓	MW-101_201307		Potentially Dissolved Metals	250 mL / HDPE / HNO3 (RED)
✓	MW-101_201307		Alkalinity, TSS, TDS, Chloride, Sulfate	500 mL / HDPE / None
✓	MW-101_201307		Salinity	250 mL / HDPE / None
✓	MW-101_201307		Cyanide	250 mL / HDPE / NaOH (GREEN)
✓	MW-101_201307		Sulfide	250 mL / HDPE / NaOH + Zn Acetate (BLACK)
✓	MW-101_201307		Total Organic Carbon, Nitrate	250 mL / Amber Glass / H2SO4 (YELLOW)

Notes:

* If conditions significantly change, purge volume can be calculated as follows:

One purge volume = 0.174305 x (Measured Depth to Water - Depth to Well Bottom)

** If "No", well is declared dry for the sampling event.

Measured Depth to Water (ft)	Qua (gal Pur Volu 1
23.00	2.55
23.25	2.50
23.50	2.46
23.75	2.42
24.00	2.37
24.25	2.33
24.50	2.28
24.75	2.24
25.00	2.20
25.25	2.15
25.50	2.11
25.75	2.07
26.00	2.02
26.25	1.98
26.50	1.94
26.75	1.89
27.00	1.85
27.25	1.81
27.50	1.76
27.75	1.72
28.00	1.67
28.25	1.63
28.50	1.59
28.75	1.54
29.00	1.50
29.25	1.46
29.50	1.41
29.75	1.37
30.00	1.33
30.25	1.28
30.50	1.24
30.75	1.20
31.00	1.15
31.25	1.11
31.50	1.06
31.75	1.02
32.00	0.98
32.25	0.93
32.50	0.89

Rico Water Sampling Form: *Station Information*

Sampling completed at this location ☒
(Do not check box until **ALL** items have been completed)

☐ Surface Water ☒ Groundwater ☐ Other

Sample Location: **MW-102**

Date(s) of Sample Collection: 7-9-13

Time(s) of Sample Collection: 1:55

Sampler's Identity: TB MC

FIELD PARAMETERS / MEASUREMENTS

Measured Depth to Water: 24.48 ft

# of Purge Volumes	Time	Cummulative Volume (gal)	pH	EC, µS/cm	DO, ppm	Temp, °C	ORP, mV
1	1:42	1.25	6.64	1303		13.24	
2	1:50	2.5	6.77	1292		14.29	
3	1:53	3.75	6.42	1300		13.48	
Collected Sample Parameters:			6.45	1315	1.04	12.23	27.6

Well purged dry? ☐ Yes ☒ No

If Yes, did well recover to 80% within 24 hours?** ☒ Yes ☐ No

SAMPLE BOTTLE INFORMATION - Check off each bottle when completed

X	Field Sample ID on Bottle		Analysis	Bottle size/Type/Preservative
✓	MW-102_201307	9	Total Metals, Hardness, Silica	250 mL / HDPE / HNO3 (RED)
✓	MW-102_201307		Dissolved Metals (Field Filtered)	250 mL / HDPE / HNO3 (RED)
✓	MW-102_201307		Potentially Dissolved Metals	250 mL / HDPE / HNO3 (RED)
✓	MW-102_201307		Alkalinity, TSS, TDS, Chloride, Sulfate	500 mL / HDPE / None
✓	MW-102_201307		Salinity	250 mL / HDPE / None
✓	MW-102_201307		Cyanide	250 mL / HDPE / NaOH (GREEN)
✓	MW-102_201307		Sulfide	250 mL / HDPE / NaOH + Zn Acetate (BLACK)
✓	MW-102_201307		Total Organic Carbon, Nitrate	250 mL / Amber Glass / H2SO4 (YELLOW)

Notes:

* If conditions significantly change, purge volume can be calculated as follows:

One purge volume = 0.174305 x (Measured Depth to Water - Depth to Well Bottom)

** If "No", well is declared dry for the sampling event.

Measured Depth to Water (ft)	Qua (gal Pur Volu 1
21.50	1.66
21.75	1.62
22.00	1.58
22.25	1.53
22.50	1.49
22.75	1.45
23.00	1.40
23.25	1.36
23.50	1.31
23.75	1.27
24.00	1.23
24.25	1.18
24.50	1.14
24.75	1.10
25.00	1.05
25.25	1.01
25.50	0.97
25.75	0.92
26.00	0.88
26.25	0.84
26.50	0.79
26.75	0.75
27.00	0.70
27.25	0.66
27.50	0.62
27.75	0.57
28.00	0.53
28.25	0.49
28.50	0.44
28.75	0.40
29.00	0.36
29.25	0.31
29.50	0.27
29.75	0.23
30.00	0.18
30.25	0.14
30.50	0.09
30.75	0.05
31.00	0.01

Rico Water Sampling Form: *Station Information*

Sampling completed at this location ☒
(Do not check box until **ALL** items have been completed)

☐ Surface Water ☒ Groundwater ☐ Other

Sample Location: **MW-103**

Date(s) of Sample Collection: 7/18/13

Time(s) of Sample Collection: 13:52

Sampler's Identity: MC/TB

FIELD PARAMETERS / MEASUREMENTS

Measured Depth to Water: 6.76 ft

# of Purge Volumes	Time	Cummulative Volume (gal)	pH	EC, µS/cm	DO, ppm	Temp, °C	ORP, mV
1	13:30	2.5	6.18	1882	0.67	14.52	-48.8
2	13:37	5.0	6.78	1903	0.75	13.75	-51.3
3	13:45	7.0	6.39	1907	0.45	13.54	-42.2
Collected Sample Parameters:			6.40	1912	0.52	13.54	-44.3

Well purged dry? ☐ Yes ☒ No

If Yes, did well recover to 80% within 24 hours?** ☐ Yes ☐ No

SAMPLE BOTTLE INFORMATION - Check off each bottle when completed

X	Field Sample ID on Bottle		Analysis	Bottle size/Type/Preservative
✓	MW-103_201307	10	Total Metals, Hardness, Silica	250 mL / HDPE / HNO3 (RED)
✓	MW-103_201307		Dissolved Metals (Field Filtered)	250 mL / HDPE / HNO3 (RED)
✓	MW-103_201307		Potentially Dissolved Metals	250 mL / HDPE / HNO3 (RED)
✓	MW-103_201307		Alkalinity, TSS, TDS, Chloride, Sulfate	500 mL / HDPE / None
✓	MW-103_201307		Salinity	250 mL / HDPE / None
✓	MW-103_201307		Cyanide	250 mL / HDPE / NaOH (GREEN)
✓	MW-103_201307		Sulfide	250 mL / HDPE / NaOH + Zn Acetate (BLACK)
✓	MW-103_201307		Total Organic Carbon, Nitrate	250 mL / Amber Glass / H2SO4 (YELLOW)

Notes:

* If conditions significantly change, purge volume can be calculated as follows:

One purge volume = 0.174305 x (Measured Depth to Water - Depth to Well Bottom)

** If "No", well is declared dry for the sampling event.

Measured Depth to Water (ft)	Qua (gal Pur Volu 1
3.00	2.94
3.25	2.90
3.50	2.85
3.75	2.81
4.00	2.76
4.25	2.72
4.50	2.68
4.75	2.63
5.00	2.59
5.25	2.55
5.50	2.50
5.75	2.46
6.00	2.42
6.25	2.37
6.50	2.33
6.75	2.28
7.00	2.24
7.25	2.20
7.50	2.15
7.75	2.11
8.00	2.07
8.25	2.02
8.50	1.98
8.75	1.94
9.00	1.89
9.25	1.85
9.50	1.81
9.75	1.76
10.00	1.72
10.25	1.67
10.50	1.63
10.75	1.59
11.00	1.54
11.25	1.50
11.50	1.46
11.75	1.41
12.00	1.37
12.25	1.33
12.50	1.28

Rico Water Sampling Form: *Station Information*

☐ Surface Water ☒ Groundwater ☐ Other

Sample Location: **MW-104**

Date(s) of Sample Collection: 7-18-13

Time(s) of Sample Collection: 116

Sampler's Identity: MC / TB

Sampling completed at this location ☒
(Do not check box until **ALL** items have been completed)

FIELD PARAMETERS / MEASUREMENTS

Measured Depth to Water: 3.94 ft

# of Purge Volumes	Time	Cummulative Volume (gal)	pH	EC, µS/cm	DO, ppm	Temp, °C	ORP, mV
1	105	2.5	6.94	1557	.94	18.72	-33.1
2	110	5.0	6.86	1566	1.32	18.12	-19.3
3	115	7.5	6.75	1569	1.42	17.83	-20.4
Collected Sample Parameters:			6.76	1570	1.41	17.64	-20.4

Well purged dry? ☐ Yes ☐ No

If Yes, did well recover to 80% within 24 hours?** ☐ Yes ☐ No

SAMPLE BOTTLE INFORMATION - Check off each bottle when completed

X	Field Sample ID on Bottle		Analysis	Bottle size/Type/Preservative
✓	MW-104_201307	10	Total Metals, Hardness, Silica	250 mL / HDPE / HNO3 (RED)
✓	MW-104_201307		Dissolved Metals (Field Filtered)	250 mL / HDPE / HNO3 (RED)
✓	MW-104_201307		Potentially Dissolved Metals	250 mL / HDPE / HNO3 (RED)
✓	MW-104_201307		Alkalinity, TSS, TDS, Chloride, Sulfate	500 mL / HDPE / None
✓	MW-104_201307		Salinity	250 mL / HDPE / None
✓	MW-104_201307		Cyanide	250 mL / HDPE / NaOH (GREEN)
✓	MW-104_201307		Sulfide	250 mL / HDPE / NaOH + Zn Acetate (BLACK)
✓	MW-104_201307		Total Organic Carbon, Nitrate	250 mL / Amber Glass / H2SO4 (YELLOW)

Notes:

* If conditions significantly change, purge volume can be calculated as follows:

One purge volume = 0.174305 x (Measured Depth to Water - Depth to Well Bottom)

** If "No", well is declared dry for the sampling event.

Measured Depth to Water (ft)	Qua (gal Pur Volu 1
0.00	3.11
0.25	3.07
0.50	3.03
0.75	2.98
1.00	2.94
1.25	2.89
1.50	2.85
1.75	2.81
2.00	2.76
2.25	2.72
2.50	2.68
2.75	2.63
3.00	2.59
3.25	2.55
3.50	2.50
3.75	2.46
4.00	2.42
4.25	2.37
4.50	2.33
4.75	2.28
5.00	2.24
5.25	2.20
5.50	2.15
5.75	2.11
6.00	2.07
6.25	2.02
6.50	1.98
6.75	1.94
7.00	1.89
7.25	1.85
7.50	1.81
7.75	1.76
8.00	1.72
8.25	1.67
8.50	1.63
8.75	1.59
9.00	1.54
9.25	1.50
9.50	1.46

Rico Water Sampling Form: *Station Information*

Sampling completed at this location ☐
(Do not check box until **ALL** items have been completed)

☐ Surface Water ☒ Groundwater ☐ Other

Sample Location: **MW-202**

Date(s) of Sample Collection: 7/19/13

Time(s) of Sample Collection:

Sampler's Identity: MC/PB

FIELD PARAMETERS / MEASUREMENTS

Measured Depth to Water: 32.30 ft

# of Purge Volumes	Time	Cummulative Volume (gal)	pH	EC, µS/cm	DO, ppm	Temp, °C	ORP, mV
1							
2							
3							
Collected Sample Parameters:							

Well purged dry? ☐ Yes ☐ No

If Yes, did well recover to 80% within 24 hours?** ☐ Yes ☐ No

SAMPLE BOTTLE INFORMATION - Check off each bottle when completed

X	Field Sample ID on Bottle		Analysis	Bottle size/Type/Preservative
	MW-202_201307		Total Metals, Hardness, Silica	250 mL / HDPE / HNO3 (RED)
	MW-202_201307		Dissolved Metals (Field Filtered)	250 mL / HDPE / HNO3 (RED)
	MW-202_201307		Potentially Dissolved Metals	250 mL / HDPE / HNO3 (RED)
	MW-202_201307		Alkalinity, TSS, TDS, Chloride, Sulfate	500 mL / HDPE / None
	MW-202_201307		Salinity	250 mL / HDPE / None
	MW-202_201307		Cyanide	250 mL / HDPE / NaOH (GREEN)
	MW-202_201307		Sulfide	250 mL / HDPE / NaOH + Zn Acetate (BLACK)
	MW-202_201307		Total Organic Carbon, Nitrate	250 mL / Amber Glass / H2SO4 (YELLOW)

Notes:

* If conditions significantly change, purge volume can be calculated as follows:

One purge volume = 0.174305 x (Measured Depth to Water - Depth to Well Bottom)

** If "No", well is declared dry for the sampling event.

Dry - could not sample

Measured Depth to Water (ft)	Qua (gal Pur Volu 1

Rico Water Sampling Form: *Station Information*

☐ Surface Water ☒ Groundwater ☐ Other

Sample Location: **MW-204**

Date(s) of Sample Collection: 7/19/13

Time(s) of Sample Collection: 10:07

Sampler's Identity: MC / TB

Sampling completed at this location ☐
(Do not check box until **ALL** items have been completed)

FIELD PARAMETERS / MEASUREMENTS

Measured Depth to Water: 15.32 ft

# of Purge Volumes	Time	Cummulative Volume (gal)	pH	EC, µS/cm	DO, ppm	Temp, °C	ORP, mV
1							
2							
3							
Collected Sample Parameters:							

Well purged dry? ☐ Yes ☐ No

If Yes, did well recover to 80% within 24 hours?** ☐ Yes ☐ No

SAMPLE BOTTLE INFORMATION - Check off each bottle when completed

X	Field Sample ID on Bottle		Analysis	Bottle size/Type/Preservative
	MW-204_201307		Total Metals, Hardness, Silica	250 mL / HDPE / HNO3 (RED)
	MW-204_201307		Dissolved Metals (Field Filtered)	250 mL / HDPE / HNO3 (RED)
	MW-204_201307		Potentially Dissolved Metals	250 mL / HDPE / HNO3 (RED)
	MW-204_201307		Alkalinity, TSS, TDS, Chloride, Sulfate	500 mL / HDPE / None
	MW-204_201307		Salinity	250 mL / HDPE / None
	MW-204_201307		Cyanide	250 mL / HDPE / NaOH (GREEN)
	MW-204_201307		Sulfide	250 mL / HDPE / NaOH + Zn Acetate (BLACK)
	MW-204_201307		Total Organic Carbon, Nitrate	250 mL / Amber Glass / H2SO4 (YELLOW)

Notes:

* If conditions significantly change, purge volume can be calculated as follows:

One purge volume = 0.174305 x (Measured Depth to Water - Depth to Well Bottom)

** If "No", well is declared dry for the sampling event.

Broke pipe - could not sample

Measured Depth to Water (ft)	Qua (gal Pur Volu 1
11.00	3.09
11.25	3.04
11.50	3.00
11.75	2.96
12.00	2.91
12.25	2.87
12.50	2.82
12.75	2.78
13.00	2.74
13.25	2.69
13.50	2.65
13.75	2.61
14.00	2.56
14.25	2.52
14.50	2.48
14.75	2.43
15.00	2.39
15.25	2.35
15.50	2.30
15.75	2.26
16.00	2.21
16.25	2.17
16.50	2.13
16.75	2.08
17.00	2.04
17.25	2.00
17.50	1.95
17.75	1.91
18.00	1.87
18.25	1.82
18.50	1.78
18.75	1.74
19.00	1.69
19.25	1.65
19.50	1.60
19.75	1.56
20.00	1.52
20.25	1.47
20.50	1.43

Rico Water Sampling Form: *Station Information*

Sampling completed at this location ☒
(Do not check box until **ALL** items have been completed)

☐ Surface Water ☒ Groundwater ☐ Other

Sample Location: **P13-102**

Date(s) of Sample Collection: 7/19/13

Time(s) of Sample Collection: 9:35

Sampler's Identity: MC/TB

FIELD PARAMETERS / MEASUREMENTS

Measured Depth to Water: 10.51 ft

# of Purge Volumes	Time	Cummulative Volume (gal)	pH	EC, µS/cm	DO, ppm	Temp, °C	ORP, mV
1	9:18	4.5	6.43	1902	0.41	6.43	-56.0
2	9:25	9.0	6.33	1927	0.43	9.72	-31.7
3	9:33	13.5	6.29	1972	0.70	9.41	-27.8
Collected Sample Parameters:			6.29	1993	0.54	9.01	-26.3

Well purged dry? ☐ Yes ☒ No

If Yes, did well recover to 80% within 24 hours?** ☐ Yes ☐ No

SAMPLE BOTTLE INFORMATION - Check off each bottle when completed

X	Field Sample ID on Bottle		Analysis	Bottle size/Type/Preservative
✓	P13-102_201307	19	Total Metals, Hardness, Silica	250 mL / HDPE / HNO3 (RED)
✓	P13-102_201307		Dissolved Metals (Field Filtered)	250 mL / HDPE / HNO3 (RED)
✓	P13-102_201307		Potentially Dissolved Metals	250 mL / HDPE / HNO3 (RED)
✓	P13-102_201307		Alkalinity, TSS, TDS, Chloride, Sulfate	500 mL / HDPE / None
✓	P13-102_201307		Salinity	250 mL / HDPE / None
✓	P13-102_201307		Cyanide	250 mL / HDPE / NaOH (GREEN)
✓	P13-102_201307		Sulfide	250 mL / HDPE / NaOH + Zn Acetate (BLACK)
✓	P13-102_201307		Total Organic Carbon, Nitrate	250 mL / Amber Glass / H2SO4 (YELLOW)

Notes:

* If conditions significantly change, purge volume can be calculated as follows:

One purge volume = 0.174305 x (Measured Depth to Water - Depth to Well Bottom)

** If "No", well is declared dry for the sampling event.

Measured Depth to Water (ft)	Qua (ga Pur Volu 1
6.00	5.13
6.25	5.08
6.50	5.04
6.75	5.00
7.00	4.95
7.25	4.91
7.50	4.87
7.75	4.82
8.00	4.78
8.25	4.73
8.50	4.69
8.75	4.65
9.00	4.60
9.25	4.56
9.50	4.52
9.75	4.47
10.00	4.43
10.25	4.39
10.50	4.34
10.75	4.30
11.00	4.26
11.25	4.21
11.50	4.17
11.75	4.12
12.00	4.08
12.25	4.04
12.50	3.99
12.75	3.95
13.00	3.91
13.25	3.86
13.50	3.82
13.75	3.78
14.00	3.73
14.25	3.69
14.50	3.65
14.75	3.60
15.00	3.56
15.25	3.51
15.50	3.47

Rico Water Sampling Form: *Station Information*

Sampling completed at this location ☑
(Do not check box until **ALL** items have been completed)

☐ Surface Water ☒ Groundwater ☐ Other

Sample Location: **P13-103**

Date(s) of Sample Collection: 7/19/13

Time(s) of Sample Collection: 19.05

Sampler's Identity: TB me

FIELD PARAMETERS / MEASUREMENTS

Measured Depth to Water: 10.68 ft

# of Purge Volumes	Time	Cummulative Volume (gal)	pH	EC, µS/cm	DO, ppm	Temp, °C	ORP, mV
1	8:52	1.75	5.89	1617		9.77	
2	8:56	3.00	6.17	1633		8.27	
3	9:01	4.75	6.30	1647		8.61	
Collected Sample Parameters:			6.32	1650	0.42	8.58	-87.2

Well purged dry? ☐ Yes ☑ No

If Yes, did well recover to 80% within 24 hours?** ☑ Yes ☐ No

SAMPLE BOTTLE INFORMATION - Check off each bottle when completed

X	Field Sample ID on Bottle		Analysis	Bottle size/Type/Preservative
✓	P13-103_201307	19	Total Metals, Hardness, Silica	250 mL / HDPE / HNO3 (RED)
✓	P13-103_201307		Dissolved Metals (Field Filtered)	250 mL / HDPE / HNO3 (RED)
✓	P13-103_201307		Potentially Dissolved Metals	250 mL / HDPE / HNO3 (RED)
✓	P13-103_201307		Alkalinity, TSS, TDS, Chloride, Sulfate	500 mL / HDPE / None
✓	P13-103_201307		Salinity	250 mL / HDPE / None
✓	P13-103_201307		Cyanide	250 mL / HDPE / NaOH (GREEN)
✓	P13-103_201307		Sulfide	250 mL / HDPE / NaOH + Zn Acetate (BLACK)
✓	P13-103_201307		Total Organic Carbon, Nitrate	250 mL / Amber Glass / H2SO4 (YELLOW)

Notes:

* If conditions significantly change, purge volume can be calculated as follows:

One purge volume = 0.174305 x (Measured Depth to Water - Depth to Well Bottom)

** If "No", well is declared dry for the sampling event.

Measured Depth to Water (ft)	Qua (ga Pur Volu 1
6.00	2.50
6.25	2.45
6.50	2.41
6.75	2.37
7.00	2.32
7.25	2.28
7.50	2.24
7.75	2.19
8.00	2.15
8.25	2.11
8.50	2.06
8.75	2.02
9.00	1.98
9.25	1.93
9.50	1.89
9.75	1.84
10.00	1.80
10.25	1.76
10.50	1.71
10.75	1.67
11.00	1.63
11.25	1.58
11.50	1.54
11.75	1.50
12.00	1.45
12.25	1.41
12.50	1.37
12.75	1.32
13.00	1.28
13.25	1.23
13.50	1.19
13.75	1.15
14.00	1.10
14.25	1.06
14.50	1.02
14.75	0.97
15.00	0.93
15.25	0.89
15.50	0.84

Rico Water Sampling Form: *Station Information*

☐ Surface Water ☒ Groundwater ☐ Other

Sampling completed at this location ☒
(Do not check box until **ALL** items have been completed)

Sample Location: **MW-1 DEEP**
Date(s) of Sample Collection: 7/18/13
Time(s) of Sample Collection: 3:40
Sampler's Identity: MCTB

FIELD PARAMETERS / MEASUREMENTS

Measured Depth to Water: 9.25 ft

# of Purge Volumes	Time	Cummulative Volume (gal)	pH	EC, µS/cm	DO, ppm	Temp, °C	ORP, mV
1	3:25	3.00	6.70	1517		16.34	
2	3:29	6.0	6.77	1516		16.18	
3	3:34	9.0	6.72	1513		16.12	
Collected Sample Parameters:			6.77	1523	1.11	16.10	-7.8

Well purged dry? ☐ Yes ☒ No
If Yes, did well recover to 80% within 24 hours?** ☐ Yes ☐ No

SAMPLE BOTTLE INFORMATION - Check off each bottle when completed

X	Field Sample ID on Bottle		Analysis	Bottle size/Type/Preservative
✓	MW-1 DEEP_201307	10	Total Metals, Hardness, Silica	250 mL / HDPE / HNO3 (RED)
✓	MW-1 DEEP_201307		Dissolved Metals (Field Filtered)	250 mL / HDPE / HNO3 (RED)
✓	MW-1 DEEP_201307		Potentially Dissolved Metals	250 mL / HDPE / HNO3 (RED)
✓	MW-1 DEEP_201307		Alkalinity, TSS, TDS, Chloride, Sulfate	500 mL / HDPE / None
✓	MW-1 DEEP_201307		Salinity	250 mL / HDPE / None
✓	MW-1 DEEP_201307		Cyanide	250 mL / HDPE / NaOH (GREEN)
✓	MW-1 DEEP_201307		Sulfide	250 mL / HDPE / NaOH + Zn Acetate (BLACK)
✓	MW-1 DEEP_201307		Total Organic Carbon, Nitrate	250 mL / Amber Glass / H2SO4 (YELLOW)

Notes:

* If conditions significantly change, purge volume can be calculated as follows:

One purge volume = 0.174305 x (Measured Depth to Water - Depth to Well Bottom)

** If "No", well is declared dry for the sampling event.

Measured Depth to Water (ft)	Qua (ga Pur Volu 1
6.00	3.32
6.25	3.28
6.50	3.24
6.75	3.19
7.00	3.15
7.25	3.11
7.50	3.06
7.75	3.02
8.00	2.98
8.25	2.93
8.50	2.89
8.75	2.84
9.00	2.80
9.25	2.76
9.50	2.71
9.75	2.67
10.00	2.63
10.25	2.58
10.50	2.54
10.75	2.50
11.00	2.45
11.25	2.41
11.50	2.37
11.75	2.32
12.00	2.28
12.25	2.23
12.50	2.19
12.75	2.15
13.00	2.10
13.25	2.06
13.50	2.02
13.75	1.97
14.00	1.93
14.25	1.89
14.50	1.84
14.75	1.80
15.00	1.76
15.25	1.71
15.50	1.67

Rico Water Sampling Form: *Station Information*

Sampling completed at this location ☒
(Do not check box until **ALL** items have been completed)

☐ Surface Water ☒ Groundwater ☐ Other

Sample Location: **MW-1 SHALLOW**

Date(s) of Sample Collection: 7/18/13

Time(s) of Sample Collection: 3:33

Sampler's Identity: MCTS

FIELD PARAMETERS / MEASUREMENTS

Measured Depth to Water: 6.13 ft

# of Purge Volumes	Time	Cummulative Volume (gal)	pH	EC, µS/cm	DO, ppm	Temp, °C	ORP, mV
1	3:25	0.75	6.65	1555	0.66	16.67	-38.7
2	3:27	1.50	6.66	1554	0.71	16.89	-19.6
3	3:30	2.25	6.71	1551	0.83	17.04	-14.5
Collected Sample Parameters:			6.74	1549	0.90	16.97	-11.9

Well purged dry? ☐ Yes ☒ No

If Yes, did well recover to 80% within 24 hours?** ☐ Yes ☐ No

SAMPLE BOTTLE INFORMATION - Check off each bottle when completed

X	Field Sample ID on Bottle		Analysis	Bottle size/Type/Preservative
✓	MW-1 SHALLOW_201307	18	Total Metals, Hardness, Silica	250 mL / HDPE / HNO3 (RED)
✓	MW-1 SHALLOW_201307		Dissolved Metals (Field Filtered)	250 mL / HDPE / HNO3 (RED)
✓	MW-1 SHALLOW_201307		Potentially Dissolved Metals	250 mL / HDPE / HNO3 (RED)
✓	MW-1 SHALLOW_201307		Alkalinity, TSS, TDS, Chloride, Sulfate	500 mL / HDPE / None
✓	MW-1 SHALLOW_201307		Salinity	250 mL / HDPE / None
✓	MW-1 SHALLOW_201307		Cyanide	250 mL / HDPE / NaOH (GREEN)
✓	MW-1 SHALLOW_201307		Sulfide	250 mL / HDPE / NaOH + Zn Acetate (BLACK)
✓	MW-1 SHALLOW_201307		Total Organic Carbon, Nitrate	250 mL / Amber Glass / H2SO4 (YELLOW)

Notes:

* If conditions significantly change, purge volume can be calculated as follows:

One purge volume = 0.174305 x (Measured Depth to Water - Depth to Well Bottom)

** If "No", well is declared dry for the sampling event.

Measured Depth to Water (ft)	Qua (ga Pur Volu 1
0.75	1.66
1.00	1.62
1.25	1.58
1.50	1.53
1.75	1.49
2.00	1.44
2.25	1.40
2.50	1.36
2.75	1.31
3.00	1.27
3.25	1.23
3.50	1.18
3.75	1.14
4.00	1.10
4.25	1.05
4.50	1.01
4.75	0.97
5.00	0.92
5.25	0.88
5.50	0.83
5.75	0.79
6.00	0.75
6.25	0.70
6.50	0.66
6.75	0.62
7.00	0.57
7.25	0.53
7.50	0.49
7.75	0.44
8.00	0.40
8.25	0.36
8.50	0.31
8.75	0.27
9.00	0.22
9.25	0.18
9.50	0.14
9.75	0.09
10.00	0.05
10.25	0.01

Rico Water Sampling Form: *Station Information*

☐ Surface Water ☒ Groundwater ☐ Other

Sampling completed at this location ☒
(Do not check box until **ALL** items have been completed)

Sample Location: **MW-2 DEEP**

Date(s) of Sample Collection: 7/10/13

Time(s) of Sample Collection: 11:50

Sampler's Identity: MLTB

FIELD PARAMETERS / MEASUREMENTS

Measured Depth to Water: 9.99 ft

# of Purge Volumes	Time	Cummulative Volume (gal)	pH	EC, µS/cm	DO, ppm	Temp, °C	ORP, mV
1	11:35	2.5	6.73	1513	2.37	13.62	-39.8
2	11:40	5	6.73	1528	2.38	12.62	-24.2
3	11:45	7.5	6.70	1513	2.06	12.55	-23.0
Collected Sample Parameters:			6.67	1533	2.14	11.91	-21.8

Well purged dry? ☐ Yes ☐ No

If Yes, did well recover to 80% within 24 hours?** ☐ Yes ☐ No

SAMPLE BOTTLE INFORMATION - Check off each bottle when completed

X	Field Sample ID on Bottle		Analysis	Bottle size/Type/Preservative
✓	MW-2 DEEP_201307	18	Total Metals, Hardness, Silica	250 mL / HDPE / HNO3 (RED)
✓	MW-2 DEEP_201307		Dissolved Metals (Field Filtered)	250 mL / HDPE / HNO3 (RED)
✓	MW-2 DEEP_201307		Potentially Dissolved Metals	250 mL / HDPE / HNO3 (RED)
✓	MW-2 DEEP_201307		Alkalinity, TSS, TDS, Chloride, Sulfate	500 mL / HDPE / None
✓	MW-2 DEEP_201307		Salinity	250 mL / HDPE / None
✓	MW-2 DEEP_201307		Cyanide	250 mL / HDPE / NaOH (GREEN)
✓	MW-2 DEEP_201307		Sulfide	250 mL / HDPE / NaOH + Zn Acetate (BLACK)
✓	MW-2 DEEP_201307		Total Organic Carbon, Nitrate	250 mL / Amber Glass / H2SO4 (YELLOW)

Notes:

* If conditions significantly change, purge volume can be calculated as follows:

One purge volume = 0.174305 x (Measured Depth to Water - Depth to Well Bottom)

** If "No", well is declared dry for the sampling event.

Measured Depth to Water (ft)	Qua (ga Pur Volu 1
6.00	2.97
6.25	2.93
6.50	2.88
6.75	2.84
7.00	2.80
7.25	2.75
7.50	2.71
7.75	2.67
8.00	2.62
8.25	2.58
8.50	2.54
8.75	2.49
9.00	2.45
9.25	2.41
9.50	2.36
9.75	2.32
10.00	2.27
~~10.25~~	2.23
10.50	2.19
10.75	2.14
11.00	2.10
11.25	2.06
11.50	2.01
11.75	1.97
12.00	1.93
12.25	1.88
12.50	1.84
12.75	1.80
13.00	1.75
13.25	1.71
13.50	1.66
13.75	1.62
14.00	1.58
14.25	1.53
14.50	1.49
14.75	1.45
15.00	1.40
15.25	1.36
15.50	1.32

Rico Water Sampling Form: *Station Information*

Sampling completed at this location ☐
(Do not check box until **ALL** items have been completed)

☐ Surface Water ☒ Groundwater ☐ Other

Sample Location: **MW-2 SHALLOW**

Date(s) of Sample Collection: 7/10/13

Time(s) of Sample Collection:

Sampler's Identity: MC/TB

FIELD PARAMETERS / MEASUREMENTS

Measured Depth to Water: 10.02 ft

# of Purge Volumes	Time	Cummulative Volume (gal)	pH	EC, µS/cm	DO, ppm	Temp, °C	ORP, mV
1							
2							
3							
Collected Sample Parameters:							

Well purged dry? ☐ Yes ☐ No

If Yes, did well recover to 80% within 24 hours?** ☐ Yes ☐ No

SAMPLE BOTTLE INFORMATION - Check off each bottle when completed

X	Field Sample ID on Bottle		Analysis	Bottle size/Type/Preservative
	MW-2 SHALLOW_201307		Total Metals, Hardness, Silica	250 mL / HDPE / HNO3 (RED)
	MW-2 SHALLOW_201307		Dissolved Metals (Field Filtered)	250 mL / HDPE / HNO3 (RED)
	MW-2 SHALLOW_201307		Potentially Dissolved Metals	250 mL / HDPE / HNO3 (RED)
	MW-2 SHALLOW_201307		Alkalinity, TSS, TDS, Chloride, Sulfate	500 mL / HDPE / None
	MW-2 SHALLOW_201307		Salinity	250 mL / HDPE / None
	MW-2 SHALLOW_201307		Cyanide	250 mL / HDPE / NaOH (GREEN)
	MW-2 SHALLOW_201307		Sulfide	250 mL / HDPE / NaOH + Zn Acetate (BLACK)
	MW-2 SHALLOW_201307		Total Organic Carbon, Nitrate	250 mL / Amber Glass / H2SO4 (YELLOW)

Notes:

* If conditions significantly change, purge volume can be calculated as follows:

One purge volume = 0.174305 x (Measured Depth to Water - Depth to Well Bottom)

** If "No", well is declared dry for the sampling event.

~~= 0.174305 x (10.02 -~~

DRY - not enough to measure

Measured Depth to Water (ft)	Qua (ga Pur Volu
	1

Rico Water Sampling Form: *Station Information*

Sampling completed at this location ☒
(Do not check box until **ALL** items have been completed)

☐ Surface Water ☒ Groundwater ☐ Other

Sample Location: **MW-3 DEEP**

Date(s) of Sample Collection: 7/10/13

Time(s) of Sample Collection: 11:27

Sampler's Identity: ML/TB

FIELD PARAMETERS / MEASUREMENTS

Measured Depth to Water: 9.84 ft

# of Purge Volumes	Time	Cummulative Volume (gal)	pH	EC, µS/cm	DO, ppm	Temp, °C	ORP, mV
1	11:15	2.50	6.68	1539	0.28	15.65	-72.4
2	11:20	5.00	7.42	1533	0.27	15.22	-96.6
3	11:25	7.50	6.69	1485	0.30	17.01	-67.1
Collected Sample Parameters:			6.68	1539	~~0.05~~ 0.44	15.28	-62.9

Well purged dry? ☐ Yes ☒ No

If Yes, did well recover to 80% within 24 hours?** ☐ Yes ☐ No

SAMPLE BOTTLE INFORMATION - Check off each bottle when completed

X	Field Sample ID on Bottle		Analysis	Bottle size/Type/Preservative
✓	MW-3 DEEP_201307	10	Total Metals, Hardness, Silica	250 mL / HDPE / HNO3 (RED)
✓	MW-3 DEEP_201307		Dissolved Metals (Field Filtered)	250 mL / HDPE / HNO3 (RED)
✓	MW-3 DEEP_201307		Potentially Dissolved Metals	250 mL / HDPE / HNO3 (RED)
✓	MW-3 DEEP_201307		Alkalinity, TSS, TDS, Chloride, Sulfate	500 mL / HDPE / None
✓	MW-3 DEEP_201307		Salinity	250 mL / HDPE / None
✓	MW-3 DEEP_201307		Cyanide	250 mL / HDPE / NaOH (GREEN)
✓	MW-3 DEEP_201307		Sulfide	250 mL / HDPE / NaOH + Zn Acetate (BLACK)
✓	MW-3 DEEP_201307		Total Organic Carbon, Nitrate	250 mL / Amber Glass / H2SO4 (YELLOW)

Notes:

* If conditions significantly change, purge volume can be calculated as follows:

One purge volume = 0.174305 x (Measured Depth to Water - Depth to Well Bottom)

** If "No", well is declared dry for the sampling event.

Measured Depth to Water (ft)	Qua (ga Pur Volu 1
6.00	3.01
6.25	2.97
6.50	2.93
6.75	2.88
7.00	2.84
7.25	2.80
7.50	2.75
7.75	2.71
8.00	2.67
8.25	2.62
8.50	2.58
8.75	2.53
9.00	2.49
9.25	2.45
9.50	2.40
9.75	2.36
10.00	2.32
10.25	2.27
10.50	2.23
10.75	2.19
11.00	2.14
11.25	2.10
11.50	2.06
11.75	2.01
12.00	1.97
12.25	1.92
12.50	1.88
12.75	1.84
13.00	1.79
13.25	1.75
13.50	1.71
13.75	1.66
14.00	1.62
14.25	1.58
14.50	1.53
14.75	1.49
15.00	1.44
15.25	1.40
15.50	1.36

Rico Water Sampling Form: *Station Information*

Sampling completed at this location ☐
(Do not check box until **ALL** items have been completed)

☐ Surface Water ☒ Groundwater ☐ Other

Sample Location: **MW-3 SHALLOW**

Date(s) of Sample Collection: 7/18/13

Time(s) of Sample Collection: 11:10

Sampler's Identity:

Measured Depth to Water (ft)	Qua (ga Pur Volu
	1

FIELD PARAMETERS / MEASUREMENTS

Measured Depth to Water: — ft

# of Purge Volumes	Time	Cummulative Volume (gal)	pH	EC, µS/cm	DO, ppm	Temp, °C	ORP, mV
1							
2							
3							
Collected Sample Parameters:							

Well purged dry? ☐ Yes ☐ No

If Yes, did well recover to 80% within 24 hours?** ☐ Yes ☐ No

SAMPLE BOTTLE INFORMATION - Check off each bottle when completed

X	Field Sample ID on Bottle		Analysis	Bottle size/Type/Preservative
	MW-3 SHALLOW_201307		Total Metals, Hardness, Silica	250 mL / HDPE / HNO3 (RED)
	MW-3 SHALLOW_201307		Dissolved Metals (Field Filtered)	250 mL / HDPE / HNO3 (RED)
	MW-3 SHALLOW_201307		Potentially Dissolved Metals	250 mL / HDPE / HNO3 (RED)
	MW-3 SHALLOW_201307		Alkalinity, TSS, TDS, Chloride, Sulfate	500 mL / HDPE / None
	MW-3 SHALLOW_201307		Salinity	250 mL / HDPE / None
	MW-3 SHALLOW_201307		Cyanide	250 mL / HDPE / NaOH (GREEN)
	MW-3 SHALLOW_201307		Sulfide	250 mL / HDPE / NaOH + Zn Acetate (BLACK)
	MW-3 SHALLOW_201307		Total Organic Carbon, Nitrate	250 mL / Amber Glass / H2SO4 (YELLOW)

Notes:

* If conditions significantly change, purge volume can be calculated as follows:

One purge volume = 0.174305 x (Measured Depth to Water - Depth to Well Bottom)

** If "No", well is declared dry for the sampling event.

DRY

Rico Water Sampling Form: *Station Information*

☐ Surface Water ☒ Groundwater ☐ Other

Sample Location: **MW-4 DEEP**

Date(s) of Sample Collection: 7/9/13

Time(s) of Sample Collection: 3:07

Sampler's Identity: TB mc

Sampling completed at this location ☒
(Do not check box until **ALL** items have been completed)

FIELD PARAMETERS / MEASUREMENTS

Measured Depth to Water: 17.21 ft

# of Purge Volumes	Time	Cummulative Volume (gal)	pH	EC, µS/cm	DO, ppm	Temp, °C	ORP, mV
1	2:35	2.5	6.18	1660	0.60	18.48	19.7
2	2:47	5.0	6.23	1692	0.59	13.36	25.8
3	3:05	7.5	6.31	1703	0.53	13.38	27.4
Collected Sample Parameters:			6.32	1705	0.52	13.37	27.1

Well purged dry? ☐ Yes ☒ No

If Yes, did well recover to 80% within 24 hours?** ☐ Yes ☐ No

SAMPLE BOTTLE INFORMATION - Check off each bottle when completed

X	Field Sample ID on Bottle		Analysis	Bottle size/Type/Preservative
✓	MW-4 DEEP_201307	9	Total Metals, Hardness, Silica	250 mL / HDPE / HNO3 (RED)
✓	MW-4 DEEP_201307		Dissolved Metals (Field Filtered)	250 mL / HDPE / HNO3 (RED)
✓	MW-4 DEEP_201307		Potentially Dissolved Metals	250 mL / HDPE / HNO3 (RED)
✓	MW-4 DEEP_201307		Alkalinity, TSS, TDS, Chloride, Sulfate	500 mL / HDPE / None
✓	MW-4 DEEP_201307		Salinity	250 mL / HDPE / None
✓	MW-4 DEEP_201307		Cyanide	250 mL / HDPE / NaOH (GREEN)
✓	MW-4 DEEP_201307		Sulfide	250 mL / HDPE / NaOH + Zn Acetate (BLACK)
✓	MW-4 DEEP_201307		Total Organic Carbon, Nitrate	250 mL / Amber Glass / H2SO4 (YELLOW)

Notes:

* If conditions significantly change, purge volume can be calculated as follows:

One purge volume = 0.174305 x (Measured Depth to Water - Depth to Well Bottom)

** If "No", well is declared dry for the sampling event.

Measured Depth to Water (ft)	Qua (ga Pur Volu 1
13.00	3.18
13.25	3.14
13.50	3.09
13.75	3.05
14.00	3.01
14.25	2.96
14.50	2.92
14.75	2.87
15.00	2.83
15.25	2.79
15.50	2.74
15.75	2.70
16.00	2.66
16.25	2.61
16.50	2.57
16.75	2.53
17.00	2.48
17.25	2.44
17.50	2.39
17.75	2.35
18.00	2.31
18.25	2.26
18.50	2.22
18.75	2.18
19.00	2.13
19.25	2.09
19.50	2.05
19.75	2.00
20.00	1.96
20.25	1.92
20.50	1.87
20.75	1.83
21.00	1.78
21.25	1.74
21.50	1.70
21.75	1.65
22.00	1.61
22.25	1.57
22.50	1.52

Rico Water Sampling Form: *Station Information*

Sampling completed at this location ☒
(Do not check box until **ALL** items have been completed)

☐ Surface Water ☒ Groundwater ☐ Other

Sample Location: **MW-4 SHALLOW**

Date(s) of Sample Collection: ~~7-9-13~~ 7/17/13

Time(s) of Sample Collection: ~~2:27~~ 3:35

Sampler's Identity: ~~17.27~~ TDG MC

FIELD PARAMETERS / MEASUREMENTS

Measured Depth to Water: 17.27 ft

Purge Dry

# of Purge Volumes	Time	Cummulative Volume (gal)	pH	EC, µS/cm	DO, ppm	Temp, °C	ORP, mV
1	2:27	.25	~~6.32~~ 7.63	1439		12.75	
2							
3							
Collected Sample Parameters:			~~11.80~~ 6.62	1.85	2.33	12.61	-15.6

Well purged dry? ☒ Yes ☐ No

If Yes, did well recover to 80% within 24 hours?** ☒ Yes ☐ No

SAMPLE BOTTLE INFORMATION - Check off each bottle when completed

X	Field Sample ID on Bottle		Analysis	Bottle size/Type/Preservative
✓	MW-4 SHALLOW_201307	n	Total Metals, Hardness, Silica	250 mL / HDPE / HNO3 (RED)
✓	MW-4 SHALLOW_201307	f	Dissolved Metals (Field Filtered)	250 mL / HDPE / HNO3 (RED)
✓	MW-4 SHALLOW_201307		Potentially Dissolved Metals	250 mL / HDPE / HNO3 (RED)
✓	MW-4 SHALLOW_201307		Alkalinity, TSS, TDS, Chloride, Sulfate	500 mL / HDPE / None
✓	MW-4 SHALLOW_201307		Salinity	250 mL / HDPE / None
✓	MW-4 SHALLOW_201307		Cyanide	250 mL / HDPE / NaOH (GREEN)
✓	MW-4 SHALLOW_201307		Sulfide	250 mL / HDPE / NaOH + Zn Acetate (BLACK)
✓	MW-4 SHALLOW_201307		Total Organic Carbon, Nitrate	250 mL / Amber Glass / H2SO4 (YELLOW)

Notes:

* If conditions significantly change, purge volume can be calculated as follows:

One purge volume = 0.174305 x (Measured Depth to Water - Depth to Well Bottom)

** If "No", well is declared dry for the sampling event.

Measured Depth to Water (ft)	Qua (ga Pur Volu 1
8.75	1.68
9.00	1.64
9.25	1.59
9.50	1.55
9.75	1.51
10.00	1.46
10.25	1.42
10.50	1.38
10.75	1.33
11.00	1.29
11.25	1.24
11.50	1.20
11.75	1.16
12.00	1.11
12.25	1.07
12.50	1.03
12.75	0.98
13.00	0.94
13.25	0.90
13.50	0.85
13.75	0.81
14.00	0.77
14.25	0.72
14.50	0.68
14.75	0.63
15.00	0.59
15.25	0.55
15.50	0.50
15.75	0.46
16.00	0.42
16.25	0.37
16.50	0.33
16.75	0.29
17.00	0.24
17.25	0.20
17.50	0.16
17.75	0.11
18.00	0.07
18.25	0.02

Rico Water Sampling Form: *Station Information*

☐ Surface Water ☒ Groundwater ☐ Other

Sampling completed at this location ☐
(Do not check box until **ALL** items have been completed)

Sample Location: **MW-5 DEEP**
Date(s) of Sample Collection: 2/9/13
Time(s) of Sample Collection: 12:45
Sampler's Identity: MCMB

FIELD PARAMETERS / MEASUREMENTS

Measured Depth to Water: 17.66 ft

# of Purge Volumes	Time	Cummulative Volume (gal)	pH	EC, µS/cm	DO, ppm	Temp, °C	ORP, mV
1	12:21	30	6.09	2530		11.84	
2	12:35	60	6.21	2429		11.79	
3	12:40	9.0	6.35	2205	0.32	11.27	-023
Collected Sample Parameters:			6.40	2246	0.91	11.41	-86.5

Well purged dry? ☐ Yes ☒ No
If Yes, did well recover to 80% within 24 hours?** ☐ Yes ☐ No

SAMPLE BOTTLE INFORMATION - Check off each bottle when completed

X	Field Sample ID on Bottle		Analysis	Bottle size/Type/Preservative
✓	MW-5 DEEP_201307	9	Total Metals, Hardness, Silica	250 mL / HDPE / HNO3 (RED)
✓	MW-5 DEEP_201307		Dissolved Metals (Field Filtered)	250 mL / HDPE / HNO3 (RED)
✓	MW-5 DEEP_201307		Potentially Dissolved Metals	250 mL / HDPE / HNO3 (RED)
✓	MW-5 DEEP_201307		Alkalinity, TSS, TDS, Chloride, Sulfate	500 mL / HDPE / None
✓	MW-5 DEEP_201307		Salinity	250 mL / HDPE / None
✓	MW-5 DEEP_201307		Cyanide	250 mL / HDPE / NaOH (GREEN)
✓	MW-5 DEEP_201307		Sulfide	250 mL / HDPE / NaOH + Zn Acetate (BLACK)
✓	MW-5 DEEP_201307		Total Organic Carbon, Nitrate	250 mL / Amber Glass / H2SO4 (YELLOW)

Notes:

* If conditions significantly change, purge volume can be calculated as follows:

One purge volume = 0.174305 x (Measured Depth to Water - Depth to Well Bottom)

** If "No", well is declared dry for the sampling event.

Measured Depth to Water (ft)	Qua (ga Pur Volu 1
14.00	3.52
14.25	3.48
14.50	3.43
14.75	3.39
15.00	3.35
15.25	3.30
15.50	3.26
15.75	3.22
16.00	3.17
16.25	3.13
16.50	3.09
16.75	3.04
17.00	3.00
17.25	2.95
17.50	2.91
17.75	2.87
18.00	2.82
18.25	2.78
18.50	2.74
18.75	2.69
19.00	2.65
19.25	2.61
19.50	2.56
19.75	2.52
20.00	2.48
20.25	2.43
20.50	2.39
20.75	2.34
21.00	2.30
21.25	2.26
21.50	2.21
21.75	2.17
22.00	2.13
22.25	2.08
22.50	2.04
22.75	2.00
23.00	1.95
23.25	1.91
23.50	1.87

Rico Water Sampling Form: *Station Information*

☐ Surface Water ☒ Groundwater ☐ Other

Sampling completed at this location ☒
(Do not check box until **ALL** items have been completed)

Sample Location: **MW-5 SHALLOW**

Date(s) of Sample Collection: 7/9/13

Time(s) of Sample Collection: 12:30

Sampler's Identity: MC/TB

FIELD PARAMETERS / MEASUREMENTS

Measured Depth to Water: 16.5 ft

# of Purge Volumes	Time	Cummulative Volume (gal)	pH	EC, µS/cm	DO, ppm	Temp, °C	ORP, mV
1	12:16	.79	4.78	3830	0	11.02	40.3
2	12:20	2.00	4.67	3039	0.00	12.40	53.4
3	12:25	2.00	4.62	3000	0.05	11.18	57.7
Collected Sample Parameters:			4.45	3697	0.11	11.18	71.0

Well purged dry? ☐ Yes ☒ No

If Yes, did well recover to 80% within 24 hours?** ☐ Yes ☐ No

SAMPLE BOTTLE INFORMATION - Check off each bottle when completed

X	Field Sample ID on Bottle		Analysis	Bottle size/Type/Preservative
✓	MW-5 SHALLOW_201307	9	Total Metals, Hardness, Silica	250 mL / HDPE / HNO3 (RED)
✓	MW-5 SHALLOW_201307		Dissolved Metals (Field Filtered)	250 mL / HDPE / HNO3 (RED)
✓	MW-5 SHALLOW_201307		Potentially Dissolved Metals	250 mL / HDPE / HNO3 (RED)
✓	MW-5 SHALLOW_201307		Alkalinity, TSS, TDS, Chloride, Sulfate	500 mL / HDPE / None
✓	MW-5 SHALLOW_201307		Salinity	250 mL / HDPE / None
✓	MW-5 SHALLOW_201307		Cyanide	250 mL / HDPE / NaOH (GREEN)
✓	MW-5 SHALLOW_201307		Sulfide	250 mL / HDPE / NaOH + Zn Acetate (BLACK)
✓	MW-5 SHALLOW_201307		Total Organic Carbon, Nitrate	250 mL / Amber Glass / H2SO4 (YELLOW)

Notes:

* If conditions significantly change, purge volume can be calculated as follows:

One purge volume = 0.174305 x (Measured Depth to Water - Depth to Well Bottom)

** If "No", well is declared dry for the sampling event.

Measured Depth to Water (ft)	Qua (ga Pur Volu 1
11.50	1.66
11.75	1.62
12.00	1.57
12.25	1.53
12.50	1.49
12.75	1.44
13.00	1.40
13.25	1.35
13.50	1.31
13.75	1.27
14.00	1.22
14.25	1.18
14.50	1.14
14.75	1.09
15.00	1.05
15.25	1.01
15.50	0.96
15.75	0.92
16.00	0.88
16.25	0.83
16.50	0.79
16.75	0.74
17.00	0.70
17.25	0.66
17.50	0.61
17.75	0.57
18.00	0.53
18.25	0.48
18.50	0.44
18.75	0.40
19.00	0.35
19.25	0.31
19.50	0.26
19.75	0.22
20.00	0.18
20.25	0.13
20.50	0.09
20.75	0.05
21.00	0.00

Rico Water Sampling Form: *Station Information*

☐ Surface Water ☒ Groundwater ☐ Other

Sample Location: **MW-6 DEEP**

Date(s) of Sample Collection: 7/18/13

Time(s) of Sample Collection: 10:39

Sampler's Identity: MC ITB

Sampling completed at this location ☒
(Do not check box until **ALL** items have been completed)

FIELD PARAMETERS / MEASUREMENTS

Measured Depth to Water: 23.39 ft

# of Purge Volumes	Time	Cummulative Volume (gal)	pH	EC, µS/cm	DO, ppm	Temp, °C	ORP, mV
1	~~10:20~~	3	6.12	1899		11.99	-79.1
2	10:30	6	6.14	1841	0.00	12.21	-66.0
3	10:37	9	6.07	1886	0.23	11.47	-61.2
Collected Sample Parameters:			6.27	1885	0.23	11.62	-63.8

Well purged dry? ☐ Yes ☒ No

If Yes, did well recover to 80% within 24 hours?** ☐ Yes ☐ No

SAMPLE BOTTLE INFORMATION - Check off each bottle when completed

X	Field Sample ID on Bottle		Analysis	Bottle size/Type/Preservative
✓	MW-6 DEEP_201307	1	Total Metals, Hardness, Silica	250 mL / HDPE / HNO3 (RED)
✓	MW-6 DEEP_201307		Dissolved Metals (Field Filtered)	250 mL / HDPE / HNO3 (RED)
✓	MW-6 DEEP_201307		Potentially Dissolved Metals	250 mL / HDPE / HNO3 (RED)
✓	MW-6 DEEP_201307		Alkalinity, TSS, TDS, Chloride, Sulfate	500 mL / HDPE / None
✓	MW-6 DEEP_201307		Salinity	250 mL / HDPE / None
✓	MW-6 DEEP_201307		Cyanide	250 mL / HDPE / NaOH (GREEN)
✓	MW-6 DEEP_201307		Sulfide	250 mL / HDPE / NaOH + Zn Acetate (BLACK)
✓	MW-6 DEEP_201307		Total Organic Carbon, Nitrate	250 mL / Amber Glass / H2SO4 (YELLOW)

Notes:

* If conditions significantly change, purge volume can be calculated as follows:

One purge volume = 0.174305 x (Measured Depth to Water - Depth to Well Bottom)

** If "No", well is declared dry for the sampling event.

Measured Depth to Water (ft)	Qua (ga Pur Volu 1
19.00	3.71
19.25	3.67
19.50	3.63
19.75	3.58
20.00	3.54
20.25	3.49
20.50	3.45
20.75	3.41
21.00	3.36
21.25	3.32
21.50	3.28
21.75	3.23
22.00	3.19
22.25	3.15
22.50	3.10
22.75	3.06
23.00	3.02
23.25	2.97
23.50	2.93
23.75	2.88
24.00	2.84
24.25	2.80
24.50	2.75
24.75	2.71
25.00	2.67
25.25	2.62
25.50	2.58
25.75	2.54
26.00	2.49
26.25	2.45
26.50	2.41
26.75	2.36
27.00	2.32
27.25	2.27
27.50	2.23
27.75	2.19
28.00	2.14
28.25	2.10
28.50	2.06

Rico Water Sampling Form: *Station Information*

Sampling completed at this location [X]
(Do not check box until **ALL** items have been completed)

[ ] Surface Water [X] Groundwater [ ] Other

Sample Location: **MW-6 SHALLOW**

Date(s) of Sample Collection: 7/18/13

Time(s) of Sample Collection: 10:34

Sampler's Identity: ML ITB

FIELD PARAMETERS / MEASUREMENTS

Measured Depth to Water: 23.58 ft

# of Purge Volumes	Time	Cummulative Volume (gal)	pH	EC, µS/cm	DO, ppm	Temp, °C	ORP, mV
1	10:15	0.75	5.91	2399	0.00	12.09	-78.5
2	10:21	1.50	6.06	2384	0.00	11.38	-76.0
3	10:24	2.25	6.10	2414	0.00	10.95	-76.0
Collected Sample Parameters:			6.07	2414	0.00	11.19	-65.9

Well purged dry? [ ] Yes [X] No

If Yes, did well recover to 80% within 24 hours?** [ ] Yes [ ] No

SAMPLE BOTTLE INFORMATION - Check off each bottle when completed

X	Field Sample ID on Bottle		Analysis	Bottle size/Type/Preservative
	MW-6 SHALLOW_201307	18	Total Metals, Hardness, Silica	250 mL / HDPE / HNO3 (RED)
	MW-6 SHALLOW_201307		Dissolved Metals (Field Filtered)	250 mL / HDPE / HNO3 (RED)
	MW-6 SHALLOW_201307		Potentially Dissolved Metals	250 mL / HDPE / HNO3 (RED)
	MW-6 SHALLOW_201307		Alkalinity, TSS, TDS, Chloride, Sulfate	500 mL / HDPE / None
	MW-6 SHALLOW_201307		Salinity	250 mL / HDPE / None
	MW-6 SHALLOW_201307		Cyanide	250 mL / HDPE / NaOH (GREEN)
	MW-6 SHALLOW_201307		Sulfide	250 mL / HDPE / NaOH + Zn Acetate (BLACK)
	MW-6 SHALLOW_201307		Total Organic Carbon, Nitrate	250 mL / Amber Glass / H2SO4 (YELLOW)

Notes:

* If conditions significantly change, purge volume can be calculated as follows:

One purge volume = 0.174305 x (Measured Depth to Water - Depth to Well Bottom)

** If "No", well is declared dry for the sampling event.

Measured Depth to Water (ft)	Qua (ga Pur Volu 1
17.50	1.70
17.75	1.65
18.00	1.61
18.25	1.57
18.50	1.52
18.75	1.48
19.00	1.44
19.25	1.39
19.50	1.35
19.75	1.31
20.00	1.26
20.25	1.22
20.50	1.17
20.75	1.13
21.00	1.09
21.25	1.04
21.50	1.00
21.75	0.96
22.00	0.91
22.25	0.87
22.50	0.83
22.75	0.78
23.00	0.74
23.25	0.70
23.50	0.65
23.75	0.61
24.00	0.56
24.25	0.52
24.50	0.48
24.75	0.43
25.00	0.39
25.25	0.35
25.50	0.30
25.75	0.26
26.00	0.22
26.25	0.17
26.50	0.13
26.75	0.09
27.00	0.04

Rico Water Sampling Form: *Station Information*

Sampling completed at this location ☒
(Do not check box until **ALL** items have been completed)

☐ Surface Water ☒ Groundwater ☐ Other

Sample Location: **CHV-101 S**

Date(s) of Sample Collection: 7/19/13

Time(s) of Sample Collection: 10:27

Sampler's Identity: MC/TB

FIELD PARAMETERS / MEASUREMENTS

Measured Depth to Water: 37.21 ft

# of Purge Volumes	Time	Cummulative Volume (gal)	pH	EC, µS/cm	DO, ppm	Temp, °C	ORP, mV
1	1009	4.0	6.4	1489		16.04	
2	1010	8.0	6.25	1488	1.96	16.64	-5.3
3	1025	12.0	6.29	1489	2.44	15.64	-4.4
Collected Sample Parameters:			6.27	1492	2.20	15.49	-3.9

Well purged dry? ☐ Yes ☒ No

If Yes, did well recover to 80% within 24 hours?** ☐ Yes ☐ No

SAMPLE BOTTLE INFORMATION - Check off each bottle when completed

X	Field Sample ID on Bottle		Analysis	Bottle size/Type/Preservative
✓	CHV-101 S_201307	19	Total Metals, Hardness, Silica	250 mL / HDPE / HNO3 (RED)
✓	CHV-101 S_201307		Dissolved Metals (Field Filtered)	250 mL / HDPE / HNO3 (RED)
✓	CHV-101 S_201307		Potentially Dissolved Metals	250 mL / HDPE / HNO3 (RED)
✓	CHV-101 S_201307		Alkalinity, TSS, TDS, Chloride, Sulfate	500 mL / HDPE / None
✓	CHV-101 S_201307		Salinity	250 mL / HDPE / None
✓	CHV-101 S_201307		Cyanide	250 mL / HDPE / NaOH (GREEN)
✓	CHV-101 S_201307		Sulfide	250 mL / HDPE / NaOH + Zn Acetate (BLACK)
✓	CHV-101 S_201307		Total Organic Carbon, Nitrate	250 mL / Amber Glass / H2SO4 (YELLOW)

Notes:

* If conditions significantly change, purge volume can be calculated as follows:

One purge volume = 0.174305 x (Measured Depth to Water - Depth to Well Bottom)

** If "No", well is declared dry for the sampling event.

Measured Depth to Water (ft)	Qua (ga Pur Volu 1
33.00	5.25
33.25	5.16
33.50	5.07
33.75	4.99
34.00	4.90
34.25	4.81
34.50	4.72
34.75	4.64
35.00	4.55
35.25	4.46
35.50	4.38
35.75	4.29
36.00	4.20
36.25	4.11
36.50	4.03
36.75	3.94
37.00	3.85
37.25	3.76
37.50	3.68
37.75	3.59
38.00	3.50
38.25	3.42
38.50	3.33
38.75	3.24
39.00	3.15
39.25	3.07
39.50	2.98
39.75	2.89
40.00	2.81
40.25	2.72
40.50	2.63
40.75	2.54
41.00	2.46
41.25	2.37
41.50	2.28
41.75	2.20
42.00	2.11
42.25	2.02
42.50	1.93

Rico Water Sampling Form: *Station Information*

Sampling completed at this location ☒
(Do not check box until **ALL** items have been completed)

☒ Surface Water ☐ Groundwater ☐ Other

Sample Location:	**BAH-01**
Date(s) of Sample Collection:	7/19/13
Time(s) of Sample Collection:	1036
Sampler's Identity:	TB MC

FIELD PARAMETERS / MEASUREMENTS

pH	EC, µS/cm	DO, ppm	Temp, °C	ORP, mV	Depth along angle from casing invert (ft)
6.42	1299	0	17.21	135.4	

SAMPLE BOTTLE INFORMATION - Check off each bottle when completed

X	Field Sample ID on Bottle		Analysis	Bottle size/Type/Preservative
✓	BAH-01_201307	19	Total Metals, Hardness, Silica	250 mL / HDPE / HNO3 (RED)
✓	BAH-01_201307		Dissolved Metals (Field Filtered)	250 mL / HDPE / HNO3 (RED)
✓	BAH-01_201307		Potentially Dissolved Metals	250 mL / HDPE / HNO3 (RED)
✓	BAH-01_201307		Alkalinity, TSS, TDS, Chloride, Sulfate	500 mL / HDPE / None
✓	BAH-01_201307		Salinity	250 mL / HDPE / None
✓	BAH-01_201307		Cyanide	250 mL / HDPE / NaOH (GREEN)
✓	BAH-01_201307		Sulfide	250 mL / HDPE / NaOH + Zn Acetate (BLACK)
✓	BAH-01_201307		Total Organic Carbon, Nitrate	250 mL / Amber Glass / H2SO4 (YELLOW)

Notes:

Rico Water Sampling Form: *Station Information*

Sampling completed at this location ☐
(Do not check box until **ALL** items have been completed)

☒ Surface Water ☐ Groundwater ☐ Other

Sample Location: **AT-2**
Date(s) of Sample Collection: 7/19/13
Time(s) of Sample Collection: 9:57
Sampler's Identity: MC/TB

FIELD PARAMETERS / MEASUREMENTS

pH	EC, µS/cm	DO, ppm	Temp, °C	ORP, mV	Depth along angle from casing invert (ft)
8.39	1067	0.00	18.32	-124.4	11.83

Data downloaded from transducer? ☐ Yes ☐ No
Has transducer been cleaned and recalibrated? ☐ Yes ☐ No

SAMPLE BOTTLE INFORMATION - Check off each bottle when completed

X	Field Sample ID on Bottle		Analysis	Bottle size/Type/Preservative
✓	AT-2_201307	1a	Total Metals, Hardness, Silica	250 mL / HDPE / HNO3 (RED)
✓	AT-2_201307		Dissolved Metals (Field Filtered)	250 mL / HDPE / HNO3 (RED)
✓	AT-2_201307		Potentially Dissolved Metals	250 mL / HDPE / HNO3 (RED)
✓	AT-2_201307		Alkalinity, TSS, TDS, Chloride, Sulfate	500 mL / HDPE / None
✓	AT-2_201307		Salinity	250 mL / HDPE / None
✓	AT-2_201307		Cyanide	250 mL / HDPE / NaOH (GREEN)
✓	AT-2_201307		Sulfide	250 mL / HDPE / NaOH + Zn Acetate (BLACK)
✓	AT-2_201307		Total Organic Carbon, Nitrate	250 mL / Amber Glass / H2SO4 (YELLOW)

Notes:

Rico Water Sampling Form: *Station Information*

Sampling completed at this location ☐
(Do not check box until **ALL** items have been completed)

☐ Surface Water ☐ Groundwater ☒ Other

Sample Location:	**FB-LAB**
Date of Sample Collection:	7/10/13
Time of Sample Collection:	1208
Sampler's Identity:	TB mc

FIELD PARAMETERS / MEASUREMENTS

pH	EC, µS/cm	DO, ppm	Temp, °C	ORP, mV
8.05	12	4.48	19.87	-76.9

SAMPLE BOTTLE INFORMATION - Check off each bottle when completed

X	Field Sample ID on Bottle		Analysis	Bottle size/Type/Preservative
✓	FB-LAB_201305	10	Total Metals, Hardness, Silica	250 mL / HDPE / HNO3 (RED)
✓	FB-LAB_201305		Dissolved Metals (Field Filtered)	250 mL / HDPE / HNO3 (RED)
✓	FB-LAB_201305		Potentially Dissolved Metals	250 mL / HDPE / HNO3 (RED)
✓	FB-LAB_201305		Alkalinity, TSS, TDS, Chloride, Sulfate	500 mL / HDPE / None
✓	FB-LAB_201305		Salinity	250 mL / HDPE / None
✓	FB-LAB_201305		Cyanide	250 mL / HDPE / NaOH (GREEN)
✓	FB-LAB_201305		Sulfide	250 mL / HDPE / NaOH + Zn Acetate (BLACK)
✓	FB-LAB_201305		Total Organic Carbon, Nitrate	250 mL / Amber Glass / H2SO4 (YELLOW)

Notes:
*Sample is a Field Blank. Run distilled water through all standard sampling procedures

Rico Water Sampling Form: *Station Information*

Sampling completed at this location ☒
(Do not check box until **ALL** items have been completed)

☐ Surface Water ☐ Groundwater ☒ Other

Sample Location:	**FB-FIELD**
Date of Sample Collection:	7/18/13
Time of Sample Collection:	1050
Sampler's Identity:	TB MC

FIELD PARAMETERS / MEASUREMENTS

pH	EC, µS/cm	DO, ppm	Temp, °C	ORP, mV
7.08	12	3.78	17.53	-77.6

SAMPLE BOTTLE INFORMATION - Check off each bottle when completed

X	Field Sample ID on Bottle		Analysis	Bottle size/Type/Preservative
	FB-FIELD_201305	18	Total Metals, Hardness, Silica	250 mL / HDPE / HNO3 (RED)
	FB-FIELD_201305		Dissolved Metals (Field Filtered)	250 mL / HDPE / HNO3 (RED)
	FB-FIELD_201305		Potentially Dissolved Metals	250 mL / HDPE / HNO3 (RED)
	FB-FIELD_201305		Alkalinity, TSS, TDS, Chloride, Sulfate	500 mL / HDPE / None
	FB-FIELD_201305		Salinity	250 mL / HDPE / None
	FB-FIELD_201305		Cyanide	250 mL / HDPE / NaOH (GREEN)
	FB-FIELD_201305		Sulfide	250 mL / HDPE / NaOH + Zn Acetate (BLACK)
	FB-FIELD_201305		Total Organic Carbon, Nitrate	250 mL / Amber Glass / H2SO4 (YELLOW)

Notes:
*Sample is a Field Blank. Run distilled water through all standard sampling procedures

Rico Water Sampling Form: *Stream Flow Measurements*

Location:	DR-1			Location:	DR-2			Location:	DR-7		
Benchmark Elevation:	6 03			Benchmark Elevation:	5 86			Benchmark Elevation:	7 32		
River Water Elevation:	9 13			River Water Elevation:	11 04			River Water Elevation:	11 50		
☒ East to West				☒ East to West				☒ East to West			
☐ West to East				☐ West to East				☐ West to East			
Velocity (ft/sec)		Depth (ft)		Velocity (ft/sec)		Depth (ft)		Velocity (ft/sec)		Depth (ft)	
0		0		0		0		0	1.21	0	0.2
0.22		0.2		0.3		0.2		0	1.93	0.1	0.8
0		0.2		0.32		0.5		0.04	1.41	0.2	0.2
1.34		0.5		0.33		0.8		0.04	0.1	0.3	0.2
1.57		0.5		0.77		0.7		0.33	0.32	0.5	0.3
1.69		0.8		0.58		0.7		0.12	0.77	0.5	0.2
1.61		0.8		0.2		0.9		0.57	0.1	0.5	0.7
1.22		0.7		0.11		1.1		0.22	0	0.6	0.6
2.25		1.2		0.80		1.6		0.4		0.6	
2.18		1.5		1.35		1.4		0.4		0.2	
2.66		1.6		1.09		1.4		1.10		0.6	
1.59		0.6		1.19		1.4		1.81		0.5	
0.51		0.14		1.24		1.4		2.02		0.8	
0.33		1.4		1.53		1.4		1.61		0.8	
0.9		1.0		1.18		1.0		0.29		0.9	
1.2		1.2		0.83		1.4		2.22		0.7	
1.9		1.5		0.44		1.4		1.27		0.7	
0.22		1.5		1.25		1.2		1.25		0.6	
1.25		0.4		1.45		1.4		1.48		0.4	
0.44		1.3		1.32		1.3		1.10		0.2	
0.13		1.3		1.59		1.3		1.76		0.9	
0.11		0.5		0.3		1.2		2.05		0.9	
0.09		0.5		0.33		0.8		1.90		0.8	
0.09		0.5		0.145		0.9		1.76		0.8	
0		0.4		0.90		0.5		1.13		0.5	
				0		0		1.12		0.6	
				0.57		0.3		0		0.3	
				0.23		0.2		0		0.3	
				0.0		0.1		1.38		0.3	
				0.0		0.1		0.43		0.2	
								0		0	
								~~0~~ 1.11		~~0~~ 0.4	
								2.02		0.8	
								0.14		0.5	
								1.35		0.7	

NOTE: Each velocity reading must have a corresponding depth reading with matching cell number. Each cell represents a 1-foot subsection. Measurements are to be taken every foot.

Rico Water Sampling Form: *Stream Flow Measurements*

Location:	DR-4-SW			Location:	DR-G			Location:			
Benchmark Elevation: 2.21				Benchmark Elevation: 5.34				Benchmark Elevation:			
River Water Elevation: 4.83				River Water Elevation: 9.69				River Water Elevation:			
☐ East to West				☐ East to West				☐ East to West			
☒ West to East				☐ West to East				☐ West to East			
Velocity (ft/sec)		Depth (ft)		Velocity (ft/sec)		Depth (ft)		Velocity (ft/sec)		Depth (ft)	
0.35	0	0.1	1.0	0		0					
0.77	1.69	0.2	0.5	0		0.1					
0.25	1.95	0.2	1.0	0.68		0.2					
0.11	0	0.2	0	0.2		0.3					
2.1	0	0.3	0.1	0.92		0.4					
0	0	0.1	0.1	0.37		0.5					
1.69		0.6		0.32		0.7					
1.56		0.4		0.28		0.7					
2.51		0.5		0.35		0.8					
0.69		0.5		2.2		0.8					
1.95		0.5		1.48		0.8					
2.55		0.6		1.84		0.8					
2.05		0.5		1.68		0.8					
2.38		0.4		1.81		1.0					
2.46		0.4		1.87		1.0					
2.54		0.4		1.99		0.5					
2.59		0.2		1.94		0.8					
1.14		1.1		1.88		1.0					
1.81		1.0		2.31		1.0					
0.82		0.9		2.30		1.0					
1.66		1.2		2.06		0.8					
2.90		1.3		1.37		1.0					
2.15		1.0		2.34		0.5					
1.51		1.1		1.12		1.0					
1.09		0.8		2.16		0.6					
1.62		0.8		0.0		0.0					
2.01		0.8		1.72		0.6					
1.78		0.7		1.11		0.5					
2.66		0.5		0.14		0.4					
2.66		0.8		0.30		0.4					
2.38		0.8		0.98		0.4					
2.03		1.0		0.83		0.2					
1.48		1.1		0		0					
2.22		1.1									
0.91		1.0									

NOTE: Each velocity reading must have a corresponding depth reading with matching cell number. Each cell represents a 1-foot subsection. Measurements are to be taken every foot.

Appendix I

North Flume OTT PLS Data with Flowrates

OTT PLS Data at North Flume, July 2013

Date, Time	Depth Reading (ft)	Flowrate (cfs)	Flowrate (gpm)
7/2/2013 12:10	0.55	1.23	552.0
7/2/2013 12:20	0.55	1.23	552.0
7/2/2013 12:30	0.55	1.23	552.0
7/2/2013 12:40	0.55	1.23	552.0
7/2/2013 12:50	0.55	1.23	552.0
7/2/2013 12:56	0.55	1.23	552.0
7/2/2013 13:00	0.55	1.23	552.0
7/2/2013 13:10	0.55	1.23	552.0
7/2/2013 13:20	0.55	1.23	552.0
7/2/2013 13:30	0.55	1.23	552.0
7/2/2013 13:40	0.55	1.23	552.0
7/2/2013 13:50	0.55	1.23	552.0
7/2/2013 14:00	0.55	1.23	552.0
7/2/2013 14:10	0.55	1.23	552.0
7/2/2013 14:20	0.55	1.23	552.0
7/2/2013 14:30	0.55	1.23	552.0
7/2/2013 14:40	0.55	1.23	552.0
7/2/2013 14:50	0.55	1.23	552.0
7/2/2013 15:00	0.55	1.23	552.0
7/2/2013 15:10	0.55	1.23	552.0
7/2/2013 15:20	0.55	1.23	552.0
7/2/2013 15:30	0.55	1.23	552.0
7/2/2013 15:40	0.55	1.23	552.0
7/2/2013 15:50	0.55	1.23	552.0
7/2/2013 15:51	0.55	1.23	552.0
7/2/2013 15:56	0.55	1.23	552.0
7/2/2013 16:00	0.55	1.23	552.0
7/2/2013 16:10	0.55	1.23	552.0
7/2/2013 16:20	0.55	1.23	552.0
7/2/2013 16:30	0.55	1.23	552.0
7/2/2013 16:40	0.55	1.23	552.0
7/2/2013 16:50	0.55	1.23	552.0
7/2/2013 17:00	0.55	1.23	552.0
7/2/2013 17:10	0.54	1.20	536.7
7/2/2013 17:20	0.55	1.23	552.0
7/2/2013 17:30	0.55	1.23	552.0
7/2/2013 17:40	0.55	1.23	552.0
7/2/2013 17:50	0.55	1.23	552.0
7/2/2013 18:00	0.55	1.23	552.0
7/2/2013 18:10	0.55	1.23	552.0
7/2/2013 18:20	0.55	1.23	552.0
7/2/2013 18:30	0.55	1.23	552.0

7/2/2013 18:40	0.55	1.23	552.0
7/2/2013 18:50	0.55	1.23	552.0
7/2/2013 19:00	0.55	1.23	552.0
7/2/2013 19:10	0.55	1.23	552.0
7/2/2013 19:20	0.55	1.23	552.0
7/2/2013 19:30	0.55	1.23	552.0
7/2/2013 19:40	0.55	1.23	552.0
7/2/2013 19:50	0.55	1.23	552.0
7/2/2013 20:00	0.55	1.23	552.0
7/2/2013 20:10	0.55	1.23	552.0
7/2/2013 20:20	0.55	1.23	552.0
7/2/2013 20:30	0.55	1.23	552.0
7/2/2013 20:40	0.55	1.23	552.0
7/2/2013 20:50	0.55	1.23	552.0
7/2/2013 21:00	0.55	1.23	552.0
7/2/2013 21:10	0.55	1.23	552.0
7/2/2013 21:20	0.55	1.23	552.0
7/2/2013 21:30	0.55	1.23	552.0
7/3/2013 7:40	0.55	1.23	552.0
7/3/2013 7:50	0.55	1.23	552.0
7/3/2013 8:10	0.55	1.23	552.0
7/3/2013 8:20	0.55	1.23	552.0
7/3/2013 8:30	0.55	1.23	552.0
7/3/2013 8:40	0.55	1.23	552.0
7/3/2013 8:50	0.55	1.23	552.0
7/3/2013 9:00	0.55	1.23	552.0
7/3/2013 9:10	0.55	1.23	552.0
7/3/2013 11:10	0.55	1.23	552.0
7/3/2013 11:20	0.55	1.23	552.0
7/3/2013 11:30	0.55	1.23	552.0
7/3/2013 11:40	0.55	1.23	552.0
7/3/2013 11:50	0.55	1.23	552.0
7/3/2013 12:00	0.55	1.23	552.0
7/3/2013 12:20	0.55	1.23	552.0
7/3/2013 12:40	0.55	1.23	552.0
7/3/2013 13:10	0.55	1.23	552.0
7/3/2013 13:20	0.55	1.23	552.0
7/3/2013 13:50	0.55	1.23	552.0
7/4/2013 9:40	0.55	1.23	552.0
7/4/2013 9:50	0.55	1.23	552.0
7/4/2013 10:00	0.55	1.23	552.0
7/4/2013 10:10	0.55	1.23	552.0
7/4/2013 10:20	0.55	1.23	552.0
7/4/2013 10:30	0.55	1.23	552.0
7/4/2013 13:40	0.55	1.23	552.0
7/5/2013 8:40	0.55	1.23	552.0
7/5/2013 8:50	0.55	1.23	552.0

7/5/2013 9:00	0.55	1.23	552.0
7/5/2013 9:10	0.55	1.23	552.0
7/5/2013 9:20	0.55	1.23	552.0
7/5/2013 9:30	0.55	1.23	552.0
7/5/2013 10:30	0.55	1.23	552.0
7/5/2013 10:40	0.55	1.23	552.0
7/5/2013 10:50	0.55	1.23	552.0
7/5/2013 11:10	0.55	1.23	552.0
7/5/2013 11:20	0.55	1.23	552.0
7/5/2013 11:30	0.55	1.23	552.0
7/5/2013 11:50	0.55	1.23	552.0
7/5/2013 12:10	0.54	1.20	536.7
7/5/2013 13:20	0.55	1.23	552.0
7/6/2013 8:40	0.55	1.23	552.0
7/6/2013 8:50	0.55	1.23	552.0
7/6/2013 9:10	0.55	1.23	552.0
7/6/2013 9:20	0.55	1.23	552.0
7/6/2013 9:30	0.55	1.23	552.0
7/6/2013 9:40	0.55	1.23	552.0
7/6/2013 11:30	0.55	1.23	552.0
7/6/2013 12:10	0.55	1.23	552.0
7/6/2013 12:20	0.55	1.23	552.0
7/6/2013 12:30	0.55	1.23	552.0
7/6/2013 12:50	0.55	1.23	552.0
7/6/2013 13:00	0.55	1.23	552.0
7/7/2013 8:50	0.55	1.23	552.0
7/7/2013 9:00	0.55	1.23	552.0
7/7/2013 9:10	0.55	1.23	552.0
7/7/2013 9:20	0.55	1.23	552.0
7/7/2013 9:30	0.55	1.23	552.0
7/7/2013 9:40	0.55	1.23	552.0
7/7/2013 9:50	0.55	1.23	552.0
7/7/2013 10:30	0.55	1.23	552.0
7/7/2013 10:40	0.55	1.23	552.0
7/7/2013 10:50	0.55	1.23	552.0
7/7/2013 11:10	0.55	1.23	552.0
7/7/2013 11:20	0.55	1.23	552.0
7/7/2013 11:30	0.55	1.23	552.0
7/7/2013 12:20	0.55	1.23	552.0
7/7/2013 12:40	0.55	1.23	552.0
7/7/2013 12:50	0.55	1.23	552.0
7/7/2013 14:20	0.55	1.23	552.0
7/8/2013 8:40	0.55	1.23	552.0
7/8/2013 8:50	0.55	1.23	552.0
7/8/2013 9:00	0.55	1.23	552.0
7/8/2013 9:10	0.55	1.23	552.0
7/8/2013 9:20	0.55	1.23	552.0

7/8/2013 10:30	0.55	1.23	552.0
7/8/2013 11:10	0.55	1.23	552.0
7/8/2013 11:20	0.55	1.23	552.0
7/8/2013 11:30	0.55	1.23	552.0
7/8/2013 11:40	0.55	1.23	552.0
7/8/2013 11:50	0.55	1.23	552.0
7/8/2013 12:10	0.55	1.23	552.0
7/8/2013 12:20	0.55	1.23	552.0
7/8/2013 12:40	0.55	1.23	552.0
7/8/2013 13:00	0.55	1.23	552.0
7/8/2013 13:10	0.55	1.23	552.0
7/8/2013 13:40	0.55	1.23	552.0
7/8/2013 14:10	0.55	1.23	552.0
7/9/2013 9:00	0.55	1.23	552.0
7/9/2013 9:10	0.55	1.23	552.0
7/9/2013 9:20	0.55	1.23	552.0
7/9/2013 11:10	0.55	1.23	552.0
7/9/2013 12:50	0.55	1.23	552.0
7/10/2013 9:10	0.55	1.23	552.0
7/10/2013 9:20	0.55	1.23	552.0
7/10/2013 11:40	0.55	1.23	552.0
7/10/2013 11:50	0.55	1.23	552.0
7/10/2013 12:30	0.55	1.23	552.0
7/10/2013 12:40	0.55	1.23	552.0
7/10/2013 12:50	0.55	1.23	552.0
7/10/2013 12:54	0.55	1.23	552.0
7/10/2013 13:40	0.55	1.23	552.0
7/10/2013 14:00	0.55	1.23	552.0
7/10/2013 14:10	0.55	1.23	552.0
7/10/2013 14:40	0.55	1.23	552.0
7/10/2013 15:20	0.55	1.23	552.0
7/10/2013 15:30	0.55	1.23	552.0
7/10/2013 15:40	0.55	1.23	552.0
7/10/2013 15:50	0.55	1.23	552.0
7/10/2013 16:00	0.55	1.23	552.0
7/10/2013 16:10	0.55	1.23	552.0
7/10/2013 16:20	0.55	1.23	552.0
7/10/2013 16:30	0.55	1.23	552.0
7/10/2013 16:40	0.55	1.23	552.0
7/10/2013 16:50	0.55	1.23	552.0
7/10/2013 17:00	0.55	1.23	552.0
7/10/2013 17:10	0.55	1.23	552.0
7/10/2013 17:20	0.55	1.23	552.0
7/10/2013 17:30	0.55	1.23	552.0
7/10/2013 17:40	0.55	1.23	552.0
7/10/2013 17:50	0.55	1.23	552.0
7/11/2013 7:20	0.54	1.20	536.7

7/11/2013 7:30	0.55	1.23	552.0
7/11/2013 7:40	0.55	1.23	552.0
7/11/2013 7:50	0.55	1.23	552.0
7/11/2013 8:00	0.55	1.23	552.0
7/11/2013 8:10	0.55	1.23	552.0
7/11/2013 8:20	0.55	1.23	552.0
7/11/2013 8:30	0.55	1.23	552.0
7/11/2013 9:10	0.55	1.23	552.0
7/11/2013 9:20	0.55	1.23	552.0
7/11/2013 9:30	0.55	1.23	552.0
7/11/2013 9:40	0.55	1.23	552.0
7/11/2013 9:50	0.55	1.23	552.0
7/11/2013 10:00	0.55	1.23	552.0
7/11/2013 10:10	0.55	1.23	552.0
7/11/2013 10:20	0.55	1.23	552.0
7/11/2013 10:30	0.55	1.23	552.0
7/11/2013 10:40	0.55	1.23	552.0
7/11/2013 10:50	0.55	1.23	552.0
7/11/2013 11:00	0.55	1.23	552.0
7/11/2013 11:10	0.55	1.23	552.0
7/11/2013 11:20	0.55	1.23	552.0
7/11/2013 11:30	0.55	1.23	552.0
7/11/2013 11:40	0.55	1.23	552.0
7/11/2013 11:50	0.55	1.23	552.0
7/11/2013 12:00	0.55	1.23	552.0
7/11/2013 12:10	0.55	1.23	552.0
7/11/2013 12:20	0.55	1.23	552.0
7/11/2013 12:30	0.55	1.23	552.0
7/11/2013 12:40	0.55	1.23	552.0
7/11/2013 12:50	0.55	1.23	552.0
7/11/2013 13:00	0.55	1.23	552.0
7/11/2013 13:10	0.55	1.23	552.0
7/11/2013 13:20	0.55	1.23	552.0
7/11/2013 13:30	0.55	1.23	552.0
7/11/2013 13:40	0.55	1.23	552.0
7/11/2013 13:50	0.55	1.23	552.0
7/11/2013 14:00	0.55	1.23	552.0
7/11/2013 14:10	0.55	1.23	552.0
7/11/2013 14:20	0.55	1.23	552.0
7/11/2013 14:30	0.55	1.23	552.0
7/11/2013 14:40	0.55	1.23	552.0
7/11/2013 15:50	0.54	1.20	536.7
7/11/2013 16:00	0.55	1.23	552.0
7/11/2013 16:10	0.55	1.23	552.0
7/11/2013 16:20	0.55	1.23	552.0
7/11/2013 16:30	0.55	1.23	552.0
7/11/2013 16:51	0.54	1.20	536.7

7/12/2013 7:40	0.55	1.23	552.0
7/12/2013 7:50	0.55	1.23	552.0
7/12/2013 8:00	0.55	1.23	552.0
7/12/2013 8:10	0.55	1.23	552.0
7/12/2013 8:20	0.55	1.23	552.0
7/12/2013 8:30	0.55	1.23	552.0
7/12/2013 8:40	0.55	1.23	552.0
7/12/2013 8:50	0.55	1.23	552.0
7/12/2013 9:00	0.55	1.23	552.0
7/12/2013 9:10	0.55	1.23	552.0
7/12/2013 9:20	0.55	1.23	552.0
7/12/2013 9:30	0.55	1.23	552.0
7/12/2013 9:40	0.55	1.23	552.0
7/12/2013 9:50	0.55	1.23	552.0
7/12/2013 10:00	0.55	1.23	552.0
7/12/2013 10:10	0.55	1.23	552.0
7/12/2013 10:20	0.55	1.23	552.0
7/12/2013 10:30	0.55	1.23	552.0
7/12/2013 10:40	0.55	1.23	552.0
7/12/2013 10:50	0.55	1.23	552.0
7/12/2013 11:00	0.55	1.23	552.0
7/12/2013 11:10	0.55	1.23	552.0
7/12/2013 11:20	0.55	1.23	552.0
7/12/2013 11:30	0.55	1.23	552.0
7/12/2013 11:40	0.55	1.23	552.0
7/12/2013 11:50	0.55	1.23	552.0
7/12/2013 12:00	0.55	1.23	552.0
7/12/2013 12:10	0.55	1.23	552.0
7/12/2013 12:20	0.55	1.23	552.0
7/12/2013 12:30	0.55	1.23	552.0
7/12/2013 12:40	0.55	1.23	552.0
7/12/2013 12:50	0.55	1.23	552.0
7/12/2013 13:00	0.55	1.23	552.0
7/12/2013 13:10	0.55	1.23	552.0
7/12/2013 13:20	0.55	1.23	552.0
7/12/2013 13:30	0.55	1.23	552.0
7/12/2013 13:40	0.55	1.23	552.0
7/12/2013 13:50	0.55	1.23	552.0
7/12/2013 14:00	0.55	1.23	552.0
7/12/2013 14:10	0.55	1.23	552.0
7/12/2013 14:20	0.55	1.23	552.0
7/12/2013 14:30	0.55	1.23	552.0
7/12/2013 14:40	0.55	1.23	552.0
7/12/2013 14:50	0.55	1.23	552.0
7/12/2013 15:00	0.55	1.23	552.0
7/12/2013 15:10	0.55	1.23	552.0
7/12/2013 15:20	0.55	1.23	552.0

7/12/2013 15:30	0.55	1.23	552.0
7/12/2013 15:40	0.54	1.20	536.7
7/12/2013 15:50	0.54	1.20	536.7
7/12/2013 16:00	0.55	1.23	552.0
7/12/2013 16:10	0.55	1.23	552.0
7/12/2013 16:20	0.55	1.23	552.0
7/12/2013 16:40	0.55	1.23	552.0
7/12/2013 16:50	0.54	1.20	536.7
7/12/2013 17:30	0.54	1.20	536.7
7/12/2013 17:40	0.55	1.23	552.0
7/12/2013 17:50	0.54	1.20	536.7
7/13/2013 6:50	0.54	1.20	536.7
7/13/2013 7:00	0.54	1.20	536.7
7/13/2013 7:30	0.54	1.20	536.7
7/13/2013 7:40	0.55	1.23	552.0
7/13/2013 7:50	0.55	1.23	552.0
7/13/2013 8:00	0.55	1.23	552.0
7/13/2013 8:10	0.55	1.23	552.0
7/13/2013 8:20	0.55	1.23	552.0
7/13/2013 8:30	0.55	1.23	552.0
7/13/2013 8:40	0.55	1.23	552.0
7/13/2013 8:50	0.55	1.23	552.0
7/13/2013 9:00	0.55	1.23	552.0
7/13/2013 9:10	0.55	1.23	552.0
7/13/2013 9:20	0.55	1.23	552.0
7/13/2013 9:30	0.55	1.23	552.0
7/13/2013 9:40	0.55	1.23	552.0
7/13/2013 9:50	0.55	1.23	552.0
7/13/2013 10:00	0.55	1.23	552.0
7/13/2013 10:10	0.55	1.23	552.0
7/13/2013 10:20	0.55	1.23	552.0
7/13/2013 10:30	0.55	1.23	552.0
7/13/2013 10:40	0.55	1.23	552.0
7/13/2013 10:50	0.55	1.23	552.0
7/13/2013 11:00	0.54	1.20	536.7
7/13/2013 11:10	0.55	1.23	552.0
7/13/2013 11:20	0.55	1.23	552.0
7/13/2013 11:30	0.54	1.20	536.7
7/13/2013 11:40	0.55	1.23	552.0
7/13/2013 11:50	0.55	1.23	552.0
7/13/2013 12:00	0.55	1.23	552.0
7/13/2013 12:10	0.55	1.23	552.0
7/13/2013 12:20	0.55	1.23	552.0
7/13/2013 12:30	0.55	1.23	552.0
7/13/2013 12:40	0.55	1.23	552.0
7/13/2013 12:50	0.55	1.23	552.0
7/13/2013 13:00	0.55	1.23	552.0

7/13/2013 13:10	0.55	1.23	552.0
7/13/2013 13:20	0.55	1.23	552.0
7/13/2013 13:30	0.55	1.23	552.0
7/13/2013 13:40	0.55	1.23	552.0
7/13/2013 13:50	0.55	1.23	552.0
7/13/2013 14:00	0.55	1.23	552.0
7/13/2013 14:10	0.55	1.23	552.0
7/13/2013 14:20	0.55	1.23	552.0
7/13/2013 14:30	0.55	1.23	552.0
7/13/2013 14:40	0.55	1.23	552.0
7/13/2013 14:50	0.55	1.23	552.0
7/13/2013 15:00	0.55	1.23	552.0
7/13/2013 15:10	0.55	1.23	552.0
7/13/2013 15:20	0.54	1.20	536.7
7/13/2013 15:30	0.55	1.23	552.0
7/13/2013 15:40	0.54	1.20	536.7
7/13/2013 15:50	0.55	1.23	552.0
7/13/2013 16:00	0.55	1.23	552.0
7/13/2013 16:10	0.55	1.23	552.0
7/13/2013 16:20	0.55	1.23	552.0
7/13/2013 16:30	0.55	1.23	552.0
7/13/2013 16:40	0.55	1.23	552.0
7/13/2013 17:30	0.55	1.23	552.0
7/13/2013 17:40	0.55	1.23	552.0
7/13/2013 17:50	0.55	1.23	552.0
7/13/2013 18:00	0.54	1.20	536.7
7/13/2013 18:10	0.54	1.20	536.7
7/14/2013 7:40	0.55	1.23	552.0
7/14/2013 7:50	0.55	1.23	552.0
7/14/2013 8:00	0.55	1.23	552.0
7/14/2013 8:10	0.55	1.23	552.0
7/14/2013 8:20	0.55	1.23	552.0
7/14/2013 8:30	0.55	1.23	552.0
7/14/2013 8:40	0.55	1.23	552.0
7/14/2013 8:50	0.54	1.20	536.7
7/14/2013 9:00	0.55	1.23	552.0
7/14/2013 9:10	0.55	1.23	552.0
7/14/2013 9:20	0.55	1.23	552.0
7/14/2013 9:30	0.55	1.23	552.0
7/14/2013 9:40	0.55	1.23	552.0
7/14/2013 9:50	0.55	1.23	552.0
7/14/2013 10:00	0.55	1.23	552.0
7/14/2013 10:10	0.55	1.23	552.0
7/14/2013 10:20	0.55	1.23	552.0
7/14/2013 10:30	0.55	1.23	552.0
7/14/2013 10:40	0.55	1.23	552.0
7/14/2013 10:50	0.55	1.23	552.0

7/14/2013 11:00	0.55	1.23	552.0
7/14/2013 11:10	0.55	1.23	552.0
7/14/2013 11:20	0.55	1.23	552.0
7/14/2013 11:30	0.55	1.23	552.0
7/14/2013 11:40	0.55	1.23	552.0
7/14/2013 11:50	0.55	1.23	552.0
7/14/2013 12:00	0.55	1.23	552.0
7/14/2013 12:10	0.55	1.23	552.0
7/14/2013 12:20	0.55	1.23	552.0
7/14/2013 12:30	0.55	1.23	552.0
7/14/2013 12:40	0.55	1.23	552.0
7/14/2013 12:50	0.55	1.23	552.0
7/14/2013 13:00	0.55	1.23	552.0
7/14/2013 13:10	0.55	1.23	552.0
7/14/2013 13:20	0.55	1.23	552.0
7/14/2013 13:30	0.55	1.23	552.0
7/14/2013 13:40	0.55	1.23	552.0
7/14/2013 13:50	0.55	1.23	552.0
7/14/2013 14:00	0.54	1.20	536.7
7/14/2013 14:50	0.54	1.20	536.7
7/14/2013 15:00	0.55	1.23	552.0
7/14/2013 15:10	0.55	1.23	552.0
7/14/2013 15:40	0.54	1.20	536.7
7/14/2013 15:50	0.55	1.23	552.0
7/14/2013 16:00	0.55	1.23	552.0
7/14/2013 16:10	0.55	1.23	552.0
7/14/2013 16:20	0.55	1.23	552.0
7/14/2013 16:30	0.54	1.20	536.7
7/14/2013 16:40	0.55	1.23	552.0
7/14/2013 16:50	0.55	1.23	552.0
7/14/2013 17:00	0.55	1.23	552.0
7/14/2013 17:10	0.55	1.23	552.0
7/14/2013 17:20	0.55	1.23	552.0
7/14/2013 17:30	0.55	1.23	552.0
7/14/2013 17:40	0.55	1.23	552.0
7/14/2013 17:50	0.54	1.20	536.7
7/15/2013 7:40	0.55	1.23	552.0
7/15/2013 7:50	0.55	1.23	552.0
7/15/2013 8:10	0.55	1.23	552.0
7/15/2013 8:20	0.55	1.23	552.0
7/15/2013 8:30	0.55	1.23	552.0
7/15/2013 8:40	0.55	1.23	552.0
7/15/2013 8:50	0.55	1.23	552.0
7/15/2013 9:00	0.55	1.23	552.0
7/15/2013 9:10	0.55	1.23	552.0
7/15/2013 9:20	0.55	1.23	552.0
7/15/2013 9:30	0.55	1.23	552.0

7/15/2013 9:40	0.55	1.23	552.0
7/15/2013 9:50	0.55	1.23	552.0
7/15/2013 10:00	0.55	1.23	552.0
7/15/2013 10:10	0.54	1.20	536.7
7/15/2013 10:20	0.55	1.23	552.0
7/15/2013 10:30	0.53	1.16	521.6
7/15/2013 10:40	0.55	1.23	552.0
7/15/2013 10:50	0.54	1.20	536.7
7/15/2013 11:00	0.55	1.23	552.0
7/15/2013 11:10	0.55	1.23	552.0
7/15/2013 11:20	0.55	1.23	552.0
7/15/2013 11:30	0.55	1.23	552.0
7/15/2013 11:40	0.55	1.23	552.0
7/15/2013 11:50	0.55	1.23	552.0
7/15/2013 12:00	0.54	1.20	536.7
7/15/2013 12:10	0.55	1.23	552.0
7/15/2013 12:20	0.55	1.23	552.0
7/15/2013 12:30	0.55	1.23	552.0
7/15/2013 12:40	0.55	1.23	552.0
7/15/2013 12:50	0.55	1.23	552.0
7/15/2013 13:00	0.55	1.23	552.0
7/15/2013 13:10	0.55	1.23	552.0
7/15/2013 13:20	0.55	1.23	552.0
7/15/2013 13:30	0.55	1.23	552.0
7/15/2013 13:40	0.55	1.23	552.0
7/15/2013 13:50	0.55	1.23	552.0
7/15/2013 15:40	0.55	1.23	552.0
7/15/2013 15:50	0.55	1.23	552.0
7/15/2013 16:00	0.55	1.23	552.0
7/15/2013 16:10	0.55	1.23	552.0
7/15/2013 16:20	0.55	1.23	552.0
7/15/2013 16:30	0.55	1.23	552.0
7/16/2013 7:10	0.54	1.20	536.7
7/16/2013 7:20	0.55	1.23	552.0
7/16/2013 7:30	0.55	1.23	552.0
7/16/2013 7:40	0.55	1.23	552.0
7/16/2013 7:50	0.55	1.23	552.0
7/16/2013 8:00	0.55	1.23	552.0
7/16/2013 8:10	0.55	1.23	552.0
7/16/2013 8:20	0.55	1.23	552.0
7/16/2013 8:30	0.55	1.23	552.0
7/16/2013 9:10	0.55	1.23	552.0
7/16/2013 9:10	0.55	1.23	552.0
7/16/2013 9:10	0.55	1.23	552.0
7/16/2013 9:10	0.55	1.23	552.0
7/16/2013 9:20	0.55	1.23	552.0
7/16/2013 9:30	0.55	1.23	552.0

7/16/2013 9:40	0.54	1.20	536.7
7/16/2013 9:50	0.55	1.23	552.0
7/16/2013 10:00	0.55	1.23	552.0
7/16/2013 10:10	0.55	1.23	552.0
7/16/2013 10:20	0.55	1.23	552.0
7/16/2013 10:30	0.55	1.23	552.0
7/16/2013 10:40	0.55	1.23	552.0
7/16/2013 10:50	0.55	1.23	552.0
7/16/2013 11:00	0.55	1.23	552.0
7/16/2013 11:10	0.55	1.23	552.0
7/16/2013 11:20	0.55	1.23	552.0
7/16/2013 11:30	0.55	1.23	552.0
7/16/2013 11:40	0.55	1.23	552.0
7/16/2013 11:50	0.55	1.23	552.0
7/16/2013 12:00	0.55	1.23	552.0
7/16/2013 12:10	0.55	1.23	552.0
7/16/2013 12:20	0.55	1.23	552.0
7/16/2013 12:30	0.55	1.23	552.0
7/16/2013 12:40	0.55	1.23	552.0
7/16/2013 12:50	0.55	1.23	552.0
7/16/2013 13:00	0.55	1.23	552.0
7/16/2013 13:10	0.55	1.23	552.0
7/16/2013 13:20	0.55	1.23	552.0
7/16/2013 13:30	0.55	1.23	552.0
7/16/2013 13:40	0.55	1.23	552.0
7/16/2013 13:50	0.55	1.23	552.0
7/16/2013 14:00	0.55	1.23	552.0
7/16/2013 14:10	0.55	1.23	552.0
7/16/2013 14:20	0.55	1.23	552.0
7/16/2013 14:30	0.54	1.20	536.7
7/16/2013 15:00	0.55	1.23	552.0
7/16/2013 15:10	0.55	1.23	552.0
7/16/2013 15:20	0.55	1.23	552.0
7/16/2013 15:30	0.55	1.23	552.0
7/16/2013 15:40	0.55	1.23	552.0
7/16/2013 15:50	0.55	1.23	552.0
7/16/2013 16:00	0.55	1.23	552.0
7/16/2013 16:10	0.55	1.23	552.0
7/16/2013 16:20	0.55	1.23	552.0
7/16/2013 16:30	0.55	1.23	552.0
7/16/2013 16:40	0.55	1.23	552.0
7/16/2013 16:50	0.55	1.23	552.0
7/16/2013 17:00	0.54	1.20	536.7
7/17/2013 6:40	0.54	1.20	536.7
7/17/2013 6:40	0.54	1.20	536.7
7/17/2013 6:50	0.55	1.23	552.0
7/17/2013 7:00	0.55	1.23	552.0

7/17/2013 7:10	0.55	1.23	552.0
7/17/2013 7:20	0.55	1.23	552.0
7/17/2013 7:30	0.55	1.23	552.0
7/17/2013 7:40	0.54	1.20	536.7
7/17/2013 7:50	0.55	1.23	552.0
7/17/2013 8:00	0.54	1.20	536.7
7/17/2013 8:10	0.55	1.23	552.0
7/17/2013 8:20	0.55	1.23	552.0
7/17/2013 8:30	0.55	1.23	552.0
7/17/2013 8:40	0.54	1.20	536.7
7/17/2013 8:50	0.55	1.23	552.0
7/17/2013 9:00	0.54	1.20	536.7
7/17/2013 9:10	0.55	1.23	552.0
7/17/2013 9:20	0.55	1.23	552.0
7/17/2013 9:30	0.55	1.23	552.0
7/17/2013 9:40	0.55	1.23	552.0
7/17/2013 9:50	0.55	1.23	552.0
7/17/2013 10:00	0.55	1.23	552.0
7/17/2013 10:10	0.55	1.23	552.0
7/17/2013 10:20	0.55	1.23	552.0
7/17/2013 10:30	0.55	1.23	552.0
7/17/2013 10:40	0.55	1.23	552.0
7/17/2013 10:50	0.54	1.20	536.7
7/17/2013 11:00	0.55	1.23	552.0
7/17/2013 11:10	0.55	1.23	552.0
7/17/2013 11:20	0.55	1.23	552.0
7/17/2013 11:30	0.55	1.23	552.0
7/17/2013 11:40	0.55	1.23	552.0
7/17/2013 11:50	0.55	1.23	552.0
7/17/2013 12:00	0.55	1.23	552.0
7/17/2013 12:10	0.55	1.23	552.0
7/17/2013 12:20	0.55	1.23	552.0
7/17/2013 12:30	0.55	1.23	552.0
7/17/2013 12:40	0.55	1.23	552.0
7/17/2013 12:50	0.55	1.23	552.0
7/17/2013 13:00	0.55	1.23	552.0
7/17/2013 13:10	0.55	1.23	552.0
7/17/2013 13:40	0.54	1.20	536.7
7/17/2013 13:40	0.55	1.23	552.0
7/17/2013 13:50	0.55	1.23	552.0
7/17/2013 14:00	0.55	1.23	552.0
7/17/2013 14:10	0.55	1.23	552.0
7/17/2013 14:20	0.55	1.23	552.0
7/17/2013 14:40	0.54	1.20	536.7
7/17/2013 14:50	0.54	1.20	536.7
7/17/2013 15:00	0.55	1.23	552.0
7/17/2013 15:10	0.55	1.23	552.0

7/17/2013 15:20	0.55	1.23	552.0
7/18/2013 7:40	0.55	1.23	552.0
7/18/2013 7:50	0.55	1.23	552.0
7/18/2013 8:00	0.55	1.23	552.0
7/18/2013 8:10	0.55	1.23	552.0
7/18/2013 8:20	0.54	1.20	536.7
7/18/2013 8:30	0.54	1.20	536.7
7/18/2013 8:40	0.55	1.23	552.0
7/18/2013 8:50	0.55	1.23	552.0
7/18/2013 9:00	0.55	1.23	552.0
7/18/2013 9:10	0.54	1.20	536.7
7/18/2013 9:20	0.55	1.23	552.0
7/18/2013 9:30	0.54	1.20	536.7
7/18/2013 9:40	0.55	1.23	552.0
7/18/2013 9:50	0.54	1.20	536.7
7/18/2013 10:00	0.55	1.23	552.0
7/18/2013 10:10	0.55	1.23	552.0
7/18/2013 10:20	0.55	1.23	552.0
7/18/2013 10:30	0.55	1.23	552.0
7/18/2013 10:40	0.54	1.20	536.7
7/18/2013 10:50	0.55	1.23	552.0
7/18/2013 11:00	0.55	1.23	552.0
7/18/2013 11:10	0.55	1.23	552.0
7/18/2013 11:20	0.55	1.23	552.0
7/18/2013 11:30	0.55	1.23	552.0
7/18/2013 11:40	0.55	1.23	552.0
7/18/2013 11:50	0.55	1.23	552.0
7/18/2013 12:00	0.55	1.23	552.0
7/18/2013 12:10	0.55	1.23	552.0
7/18/2013 12:20	0.54	1.20	536.7
7/18/2013 15:59	0.53	1.16	521.6
7/18/2013 16:00	0.41	0.78	352.2
7/18/2013 17:10	0.41	0.78	352.2
7/18/2013 17:20	0.55	1.23	552.0
7/18/2013 17:40	0.41	0.78	352.2
7/18/2013 17:50	0.54	1.20	536.7
7/19/2013 6:40	0.54	1.20	536.7
7/19/2013 6:50	0.55	1.23	552.0
7/19/2013 7:00	0.55	1.23	552.0
7/19/2013 7:10	0.55	1.23	552.0
7/19/2013 7:40	0.55	1.23	552.0
7/19/2013 7:40	0.55	1.23	552.0
7/19/2013 7:50	0.55	1.23	552.0
7/19/2013 8:00	0.55	1.23	552.0
7/19/2013 8:10	0.55	1.23	552.0
7/19/2013 8:20	0.54	1.20	536.7
7/19/2013 8:40	0.55	1.23	552.0

7/19/2013 8:50	0.55	1.23	552.0
7/19/2013 9:00	0.55	1.23	552.0
7/19/2013 9:10	0.55	1.23	552.0
7/19/2013 9:20	0.55	1.23	552.0
7/19/2013 9:30	0.55	1.23	552.0
7/19/2013 9:40	0.55	1.23	552.0
7/19/2013 9:50	0.55	1.23	552.0
7/19/2013 10:00	0.55	1.23	552.0
7/19/2013 10:10	0.54	1.20	536.7
7/19/2013 10:20	0.55	1.23	552.0
7/19/2013 10:30	0.55	1.23	552.0
7/19/2013 10:40	0.55	1.23	552.0
7/19/2013 10:50	0.55	1.23	552.0
7/19/2013 11:00	0.55	1.23	552.0
7/19/2013 11:10	0.54	1.20	536.7
7/19/2013 11:20	0.55	1.23	552.0
7/19/2013 11:30	0.55	1.23	552.0
7/19/2013 11:40	0.55	1.23	552.0
7/19/2013 11:50	0.55	1.23	552.0
7/19/2013 12:00	0.55	1.23	552.0
7/19/2013 12:10	0.55	1.23	552.0
7/19/2013 12:20	0.55	1.23	552.0
7/19/2013 12:30	0.55	1.23	552.0
7/19/2013 12:40	0.55	1.23	552.0
7/19/2013 14:40	0.53	1.16	521.6
7/19/2013 14:40	0.54	1.20	536.7
7/19/2013 14:40	0.54	1.20	536.7
7/19/2013 14:40	0.54	1.20	536.7
7/19/2013 14:40	0.55	1.23	552.0
7/19/2013 14:40	0.55	1.23	552.0
7/19/2013 14:40	0.55	1.23	552.0
7/19/2013 14:50	0.55	1.23	552.0
7/19/2013 14:50	0.55	1.23	552.0
7/19/2013 15:00	0.55	1.23	552.0
7/19/2013 15:10	0.55	1.23	552.0
7/19/2013 15:20	0.55	1.23	552.0
7/19/2013 15:30	0.55	1.23	552.0
7/19/2013 15:40	0.55	1.23	552.0
7/19/2013 15:50	0.55	1.23	552.0
7/19/2013 16:00	0.55	1.23	552.0
7/19/2013 16:10	0.55	1.23	552.0
7/19/2013 16:20	0.55	1.23	552.0
7/19/2013 16:30	0.55	1.23	552.0
7/19/2013 16:40	0.55	1.23	552.0
7/19/2013 16:50	0.55	1.23	552.0
7/19/2013 17:00	0.55	1.23	552.0
7/19/2013 17:10	0.55	1.23	552.0

7/19/2013 17:20	0.55	1.23	552.0
7/19/2013 17:30	0.55	1.23	552.0
7/19/2013 17:40	0.55	1.23	552.0
7/19/2013 17:50	0.55	1.23	552.0
7/20/2013 7:40	0.55	1.23	552.0
7/20/2013 7:50	0.55	1.23	552.0
7/20/2013 8:00	0.55	1.23	552.0
7/20/2013 8:10	0.55	1.23	552.0
7/20/2013 8:20	0.55	1.23	552.0
7/20/2013 8:30	0.55	1.23	552.0
7/20/2013 8:40	0.55	1.23	552.0
7/20/2013 8:50	0.55	1.23	552.0
7/20/2013 9:00	0.55	1.23	552.0
7/20/2013 9:10	0.55	1.23	552.0
7/20/2013 9:20	0.55	1.23	552.0
7/20/2013 9:30	0.54	1.20	536.7
7/20/2013 9:40	0.55	1.23	552.0
7/20/2013 9:50	0.55	1.23	552.0
7/20/2013 10:00	0.55	1.23	552.0
7/20/2013 10:10	0.55	1.23	552.0
7/20/2013 10:20	0.55	1.23	552.0
7/20/2013 10:30	0.55	1.23	552.0
7/20/2013 10:40	0.55	1.23	552.0
7/20/2013 10:50	0.54	1.20	536.7
7/20/2013 11:00	0.55	1.23	552.0
7/20/2013 11:10	0.55	1.23	552.0
7/20/2013 11:20	0.55	1.23	552.0
7/20/2013 11:30	0.55	1.23	552.0
7/20/2013 11:40	0.55	1.23	552.0
7/20/2013 11:50	0.55	1.23	552.0
7/20/2013 12:00	0.55	1.23	552.0
7/20/2013 12:10	0.54	1.20	536.7
7/20/2013 12:20	0.55	1.23	552.0
7/20/2013 12:30	0.55	1.23	552.0
7/20/2013 12:40	0.55	1.23	552.0
7/20/2013 12:50	0.55	1.23	552.0
7/20/2013 13:00	0.55	1.23	552.0
7/20/2013 13:10	0.55	1.23	552.0
7/20/2013 13:20	0.55	1.23	552.0
7/20/2013 13:30	0.55	1.23	552.0
7/20/2013 13:40	0.55	1.23	552.0
7/20/2013 13:50	0.55	1.23	552.0
7/20/2013 14:00	0.55	1.23	552.0
7/20/2013 14:10	0.55	1.23	552.0
7/20/2013 14:20	0.55	1.23	552.0
7/20/2013 14:30	0.55	1.23	552.0
7/20/2013 14:40	0.55	1.23	552.0

7/20/2013 14:50	0.55	1.23	552.0
7/20/2013 15:00	0.55	1.23	552.0
7/20/2013 15:10	0.55	1.23	552.0
7/20/2013 15:20	0.55	1.23	552.0
7/20/2013 15:30	0.55	1.23	552.0
7/20/2013 15:40	0.55	1.23	552.0
7/20/2013 15:50	0.55	1.23	552.0
7/20/2013 16:00	0.55	1.23	552.0
7/20/2013 16:10	0.55	1.23	552.0
7/20/2013 16:20	0.55	1.23	552.0
7/20/2013 16:30	0.55	1.23	552.0
7/20/2013 16:40	0.55	1.23	552.0
7/20/2013 16:50	0.55	1.23	552.0
7/20/2013 17:00	0.55	1.23	552.0
7/20/2013 17:10	0.55	1.23	552.0
7/20/2013 17:20	0.55	1.23	552.0
7/20/2013 17:30	0.55	1.23	552.0
7/20/2013 17:40	0.55	1.23	552.0
7/20/2013 17:50	0.55	1.23	552.0
7/20/2013 18:00	0.55	1.23	552.0
7/21/2013 6:50	0.55	1.23	552.0
7/21/2013 7:00	0.55	1.23	552.0
7/21/2013 7:10	0.55	1.23	552.0
7/21/2013 7:20	0.55	1.23	552.0
7/21/2013 7:40	0.55	1.23	552.0
7/21/2013 7:50	0.55	1.23	552.0
7/21/2013 8:00	0.55	1.23	552.0
7/21/2013 8:10	0.55	1.23	552.0
7/21/2013 8:20	0.55	1.23	552.0
7/21/2013 8:30	0.55	1.23	552.0
7/21/2013 8:40	0.55	1.23	552.0
7/21/2013 8:50	0.55	1.23	552.0
7/21/2013 9:00	0.55	1.23	552.0
7/21/2013 9:10	0.55	1.23	552.0
7/21/2013 9:20	0.55	1.23	552.0
7/21/2013 9:30	0.55	1.23	552.0
7/21/2013 9:40	0.55	1.23	552.0
7/21/2013 9:50	0.55	1.23	552.0
7/21/2013 10:00	0.55	1.23	552.0
7/21/2013 10:10	0.55	1.23	552.0
7/21/2013 10:20	0.55	1.23	552.0
7/21/2013 10:30	0.55	1.23	552.0
7/21/2013 10:40	0.55	1.23	552.0
7/21/2013 10:50	0.55	1.23	552.0
7/21/2013 11:00	0.55	1.23	552.0
7/21/2013 11:10	0.55	1.23	552.0
7/21/2013 11:20	0.55	1.23	552.0

7/21/2013 11:30	0.55	1.23	552.0
7/21/2013 11:40	0.55	1.23	552.0
7/21/2013 11:50	0.55	1.23	552.0
7/21/2013 12:00	0.55	1.23	552.0
7/21/2013 12:10	0.55	1.23	552.0
7/21/2013 12:20	0.55	1.23	552.0
7/21/2013 12:30	0.54	1.20	536.7
7/21/2013 13:56	0.54	1.20	536.7
7/21/2013 14:00	0.54	1.20	536.7
7/21/2013 14:10	0.55	1.23	552.0
7/21/2013 14:20	0.55	1.23	552.0
7/21/2013 14:30	0.54	1.20	536.7
7/21/2013 14:40	0.54	1.20	536.7
7/21/2013 15:10	0.55	1.23	552.0
7/21/2013 15:20	0.55	1.23	552.0
7/21/2013 15:30	0.55	1.23	552.0
7/21/2013 15:40	0.55	1.23	552.0
7/21/2013 15:50	0.55	1.23	552.0
7/21/2013 16:00	0.55	1.23	552.0
7/21/2013 16:10	0.55	1.23	552.0
7/21/2013 16:20	0.55	1.23	552.0
7/21/2013 17:30	0.54	1.20	536.7
7/21/2013 17:30	0.55	1.23	552.0
7/21/2013 17:40	0.55	1.23	552.0
7/21/2013 17:50	0.55	1.23	552.0
7/22/2013 7:40	0.55	1.23	552.0
7/22/2013 7:50	0.55	1.23	552.0
7/22/2013 8:00	0.55	1.23	552.0
7/22/2013 8:10	0.55	1.23	552.0
7/22/2013 8:20	0.55	1.23	552.0
7/22/2013 8:30	0.55	1.23	552.0
7/22/2013 8:40	0.55	1.23	552.0
7/22/2013 8:50	0.55	1.23	552.0
7/22/2013 9:00	0.55	1.23	552.0
7/22/2013 9:10	0.55	1.23	552.0
7/22/2013 9:20	0.55	1.23	552.0
7/22/2013 9:30	0.55	1.23	552.0
7/22/2013 9:40	0.55	1.23	552.0
7/22/2013 9:50	0.55	1.23	552.0
7/22/2013 10:00	0.55	1.23	552.0
7/22/2013 10:10	0.55	1.23	552.0
7/22/2013 10:20	0.55	1.23	552.0
7/22/2013 10:30	0.55	1.23	552.0
7/22/2013 10:40	0.55	1.23	552.0
7/22/2013 10:50	0.55	1.23	552.0
7/22/2013 11:00	0.55	1.23	552.0
7/22/2013 11:10	0.55	1.23	552.0

7/22/2013 11:20	0.55	1.23	552.0
7/22/2013 11:30	0.55	1.23	552.0
7/22/2013 11:40	0.55	1.23	552.0
7/22/2013 11:50	0.55	1.23	552.0
7/22/2013 12:00	0.55	1.23	552.0
7/22/2013 12:40	0.55	1.23	552.0
7/22/2013 12:40	0.55	1.23	552.0
7/22/2013 12:40	0.55	1.23	552.0
7/22/2013 12:40	0.55	1.23	552.0
7/22/2013 12:50	0.55	1.23	552.0
7/22/2013 13:00	0.55	1.23	552.0
7/22/2013 13:10	0.55	1.23	552.0
7/22/2013 13:20	0.55	1.23	552.0
7/22/2013 13:30	0.55	1.23	552.0
7/22/2013 13:40	0.55	1.23	552.0
7/22/2013 13:50	0.55	1.23	552.0
7/22/2013 14:00	0.55	1.23	552.0
7/22/2013 14:10	0.55	1.23	552.0
7/22/2013 14:20	0.55	1.23	552.0
7/22/2013 14:30	0.53	1.16	521.6
7/22/2013 14:40	0.54	1.20	536.7
7/22/2013 15:10	0.55	1.23	552.0
7/22/2013 15:20	0.55	1.23	552.0
7/22/2013 15:30	0.55	1.23	552.0
7/22/2013 15:40	0.55	1.23	552.0
7/22/2013 15:50	0.55	1.23	552.0
7/22/2013 16:00	0.55	1.23	552.0
7/22/2013 16:10	0.55	1.23	552.0
7/22/2013 16:20	0.54	1.20	536.7
7/22/2013 16:30	0.55	1.23	552.0
7/22/2013 16:40	0.55	1.23	552.0
7/22/2013 16:50	0.55	1.23	552.0
7/22/2013 17:00	0.55	1.23	552.0
7/22/2013 17:10	0.55	1.23	552.0
7/22/2013 17:20	0.55	1.23	552.0
7/22/2013 17:30	0.54	1.20	536.7
7/23/2013 7:10	0.55	1.23	552.0
7/23/2013 7:20	0.55	1.23	552.0
7/23/2013 7:30	0.55	1.23	552.0
7/23/2013 7:40	0.54	1.20	536.7
7/23/2013 7:50	0.55	1.23	552.0
7/23/2013 8:00	0.55	1.23	552.0
7/23/2013 8:10	0.54	1.20	536.7
7/23/2013 8:20	0.55	1.23	552.0
7/23/2013 8:30	0.55	1.23	552.0
7/23/2013 8:40	0.55	1.23	552.0
7/23/2013 8:50	0.55	1.23	552.0

7/23/2013 9:00	0.55	1.23	552.0
7/23/2013 9:10	0.55	1.23	552.0
7/23/2013 9:20	0.55	1.23	552.0
7/23/2013 9:30	0.55	1.23	552.0
7/23/2013 9:40	0.55	1.23	552.0
7/23/2013 9:50	0.55	1.23	552.0
7/23/2013 10:00	0.55	1.23	552.0
7/23/2013 10:10	0.55	1.23	552.0
7/23/2013 10:20	0.55	1.23	552.0
7/23/2013 10:30	0.55	1.23	552.0
7/23/2013 10:40	0.55	1.23	552.0
7/23/2013 10:50	0.55	1.23	552.0
7/23/2013 11:00	0.55	1.23	552.0
7/23/2013 11:10	0.55	1.23	552.0
7/23/2013 11:20	0.55	1.23	552.0
7/23/2013 11:30	0.55	1.23	552.0
7/23/2013 11:40	0.55	1.23	552.0
7/23/2013 11:50	0.55	1.23	552.0
7/23/2013 12:00	0.55	1.23	552.0
7/23/2013 12:10	0.55	1.23	552.0
7/23/2013 12:20	0.55	1.23	552.0
7/23/2013 12:30	0.55	1.23	552.0
7/23/2013 12:40	0.55	1.23	552.0
7/23/2013 12:50	0.55	1.23	552.0
7/23/2013 13:00	0.55	1.23	552.0
7/23/2013 13:10	0.55	1.23	552.0
7/23/2013 13:20	0.55	1.23	552.0
7/23/2013 13:30	0.55	1.23	552.0
7/23/2013 13:40	0.55	1.23	552.0
7/23/2013 13:50	0.55	1.23	552.0
7/23/2013 14:00	0.55	1.23	552.0
7/23/2013 14:10	0.55	1.23	552.0
7/23/2013 14:20	0.55	1.23	552.0
7/23/2013 14:30	0.55	1.23	552.0
7/23/2013 14:40	0.55	1.23	552.0
7/23/2013 14:50	0.55	1.23	552.0
7/23/2013 15:10	0.55	1.23	552.0
7/23/2013 15:20	0.54	1.20	536.7
7/23/2013 16:52	0.54	1.20	536.7
7/23/2013 16:52	0.54	1.20	536.7
7/23/2013 16:53	0.54	1.20	536.7
7/24/2013 8:30	0.54	1.20	536.7
7/24/2013 8:30	0.55	1.23	552.0
7/24/2013 8:40	0.55	1.23	552.0
7/24/2013 8:50	0.55	1.23	552.0
7/24/2013 9:00	0.55	1.23	552.0
7/24/2013 9:10	0.55	1.23	552.0

7/24/2013 9:20	0.55	1.23	552.0
7/24/2013 9:30	0.55	1.23	552.0
7/24/2013 9:40	0.55	1.23	552.0
7/24/2013 9:50	0.55	1.23	552.0
7/24/2013 10:00	0.55	1.23	552.0
7/24/2013 10:10	0.55	1.23	552.0
7/24/2013 10:20	0.55	1.23	552.0
7/24/2013 10:30	0.55	1.23	552.0
7/24/2013 10:40	0.55	1.23	552.0
7/24/2013 10:50	0.55	1.23	552.0
7/24/2013 11:00	0.55	1.23	552.0
7/24/2013 11:10	0.55	1.23	552.0
7/24/2013 11:20	0.55	1.23	552.0
7/24/2013 11:30	0.55	1.23	552.0
7/24/2013 11:40	0.55	1.23	552.0
7/24/2013 11:50	0.55	1.23	552.0
7/24/2013 12:00	0.55	1.23	552.0
7/24/2013 12:10	0.55	1.23	552.0
7/24/2013 12:20	0.55	1.23	552.0
7/24/2013 12:30	0.55	1.23	552.0
7/24/2013 12:40	0.55	1.23	552.0
7/24/2013 12:50	0.55	1.23	552.0
7/24/2013 13:00	0.55	1.23	552.0
7/24/2013 13:10	0.55	1.23	552.0
7/24/2013 13:20	0.55	1.23	552.0
7/24/2013 13:30	0.55	1.23	552.0
7/24/2013 13:40	0.55	1.23	552.0
7/24/2013 13:50	0.55	1.23	552.0
7/24/2013 14:00	0.55	1.23	552.0
7/24/2013 14:10	0.55	1.23	552.0
7/24/2013 14:20	0.55	1.23	552.0
7/24/2013 14:30	0.55	1.23	552.0
7/24/2013 14:40	0.55	1.23	552.0
7/24/2013 14:50	0.55	1.23	552.0
7/24/2013 15:00	0.55	1.23	552.0
7/24/2013 15:10	0.55	1.23	552.0
7/24/2013 15:20	0.55	1.23	552.0
7/24/2013 15:30	0.55	1.23	552.0
7/24/2013 15:40	0.55	1.23	552.0
7/24/2013 15:50	0.55	1.23	552.0
7/24/2013 16:00	0.55	1.23	552.0
7/24/2013 16:10	0.55	1.23	552.0
7/24/2013 16:20	0.55	1.23	552.0
7/24/2013 16:30	0.55	1.23	552.0
7/24/2013 16:40	0.55	1.23	552.0
7/24/2013 16:50	0.55	1.23	552.0
7/24/2013 17:00	0.55	1.23	552.0

7/24/2013 17:10	0.55	1.23	552.0
7/24/2013 17:20	0.55	1.23	552.0
7/24/2013 17:30	0.55	1.23	552.0
7/25/2013 7:40	0.55	1.23	552.0
7/25/2013 7:50	0.55	1.23	552.0
7/25/2013 8:00	0.55	1.23	552.0
7/25/2013 8:10	0.55	1.23	552.0
7/25/2013 8:20	0.55	1.23	552.0
7/25/2013 8:30	0.55	1.23	552.0
7/25/2013 8:40	0.55	1.23	552.0
7/25/2013 8:50	0.55	1.23	552.0
7/25/2013 9:00	0.55	1.23	552.0
7/25/2013 9:10	0.55	1.23	552.0
7/25/2013 9:20	0.55	1.23	552.0
7/25/2013 9:30	0.55	1.23	552.0
7/25/2013 9:40	0.55	1.23	552.0
7/25/2013 9:50	0.55	1.23	552.0
7/25/2013 10:00	0.55	1.23	552.0
7/25/2013 10:10	0.55	1.23	552.0
7/25/2013 10:20	0.55	1.23	552.0
7/25/2013 10:30	0.55	1.23	552.0
7/25/2013 10:40	0.55	1.23	552.0
7/25/2013 10:50	0.55	1.23	552.0
7/25/2013 11:00	0.55	1.23	552.0
7/25/2013 11:10	0.55	1.23	552.0
7/25/2013 11:20	0.55	1.23	552.0
7/25/2013 11:30	0.55	1.23	552.0
7/25/2013 11:40	0.55	1.23	552.0
7/25/2013 11:50	0.55	1.23	552.0
7/25/2013 12:00	0.55	1.23	552.0
7/25/2013 12:10	0.55	1.23	552.0
7/25/2013 12:20	0.55	1.23	552.0
7/25/2013 12:30	0.55	1.23	552.0
7/25/2013 12:40	0.55	1.23	552.0
7/25/2013 12:50	0.55	1.23	552.0
7/25/2013 13:00	0.55	1.23	552.0
7/25/2013 13:10	0.55	1.23	552.0
7/25/2013 13:20	0.55	1.23	552.0
7/25/2013 13:30	0.55	1.23	552.0
7/25/2013 13:40	0.55	1.23	552.0
7/25/2013 13:50	0.55	1.23	552.0
7/25/2013 14:00	0.55	1.23	552.0
7/25/2013 14:10	0.55	1.23	552.0
7/25/2013 14:20	0.55	1.23	552.0
7/25/2013 14:30	0.55	1.23	552.0
7/25/2013 14:40	0.55	1.23	552.0
7/25/2013 14:50	0.55	1.23	552.0

7/25/2013 15:00	0.55	1.23	552.0
7/25/2013 15:10	0.55	1.23	552.0
7/25/2013 15:20	0.55	1.23	552.0
7/25/2013 15:30	0.55	1.23	552.0
7/25/2013 15:40	0.55	1.23	552.0
7/25/2013 15:50	0.55	1.23	552.0
7/25/2013 16:00	0.55	1.23	552.0
7/25/2013 16:10	0.55	1.23	552.0
7/25/2013 16:20	0.55	1.23	552.0
7/25/2013 16:30	0.55	1.23	552.0
7/25/2013 16:40	0.55	1.23	552.0
7/25/2013 16:50	0.55	1.23	552.0
7/25/2013 17:00	0.55	1.23	552.0
7/25/2013 17:10	0.55	1.23	552.0
7/25/2013 17:20	0.55	1.23	552.0
7/26/2013 7:40	0.55	1.23	552.0
7/26/2013 7:40	0.55	1.23	552.0
7/26/2013 7:40	0.55	1.23	552.0
7/26/2013 7:40	0.55	1.23	552.0
7/26/2013 7:50	0.55	1.23	552.0
7/26/2013 7:50	0.55	1.23	552.0
7/26/2013 7:50	0.55	1.23	552.0
7/26/2013 7:50	0.55	1.23	552.0
7/26/2013 7:50	0.55	1.23	552.0
7/26/2013 7:50	0.55	1.23	552.0
7/26/2013 8:00	0.55	1.23	552.0
7/26/2013 8:10	0.55	1.23	552.0
7/26/2013 8:20	0.55	1.23	552.0
7/26/2013 8:30	0.55	1.23	552.0
7/26/2013 8:40	0.55	1.23	552.0
7/26/2013 8:50	0.55	1.23	552.0
7/26/2013 9:00	0.55	1.23	552.0
7/26/2013 9:10	0.55	1.23	552.0
7/26/2013 9:20	0.55	1.23	552.0
7/26/2013 9:30	0.55	1.23	552.0
7/26/2013 9:40	0.55	1.23	552.0
7/26/2013 9:50	0.55	1.23	552.0
7/26/2013 10:00	0.55	1.23	552.0
7/26/2013 10:10	0.55	1.23	552.0
7/26/2013 10:20	0.55	1.23	552.0
7/26/2013 10:30	0.55	1.23	552.0
7/26/2013 10:40	0.55	1.23	552.0
7/26/2013 10:50	0.55	1.23	552.0
7/26/2013 11:00	0.55	1.23	552.0
7/26/2013 11:10	0.55	1.23	552.0
7/26/2013 11:20	0.55	1.23	552.0
7/26/2013 11:30	0.55	1.23	552.0

7/26/2013 11:40	0.55	1.23	552.0
7/26/2013 11:50	0.55	1.23	552.0
7/26/2013 12:00	0.55	1.23	552.0
7/26/2013 12:10	0.55	1.23	552.0
7/26/2013 12:20	0.55	1.23	552.0
7/26/2013 12:30	0.55	1.23	552.0
7/26/2013 12:40	0.55	1.23	552.0
7/26/2013 12:50	0.55	1.23	552.0
7/26/2013 13:00	0.55	1.23	552.0
7/26/2013 13:10	0.55	1.23	552.0
7/26/2013 13:20	0.55	1.23	552.0
7/26/2013 13:30	0.55	1.23	552.0
7/26/2013 13:40	0.55	1.23	552.0
7/26/2013 13:50	0.55	1.23	552.0
7/26/2013 14:00	0.55	1.23	552.0
7/26/2013 14:10	0.55	1.23	552.0
7/26/2013 14:20	0.55	1.23	552.0
7/26/2013 14:30	0.55	1.23	552.0
7/26/2013 14:40	0.55	1.23	552.0
7/26/2013 14:50	0.55	1.23	552.0
7/26/2013 15:00	0.55	1.23	552.0
7/26/2013 15:10	0.55	1.23	552.0
7/26/2013 15:20	0.55	1.23	552.0
7/26/2013 15:30	0.55	1.23	552.0
7/26/2013 15:40	0.55	1.23	552.0
7/26/2013 15:50	0.55	1.23	552.0
7/26/2013 16:00	0.55	1.23	552.0
7/26/2013 16:10	0.55	1.23	552.0
7/26/2013 16:20	0.55	1.23	552.0
7/26/2013 16:30	0.55	1.23	552.0
7/26/2013 16:40	0.55	1.23	552.0
7/26/2013 16:50	0.55	1.23	552.0
7/26/2013 17:00	0.55	1.23	552.0
7/27/2013 7:40	0.55	1.23	552.0
7/27/2013 7:50	0.56	1.26	567.4
7/27/2013 8:00	0.55	1.23	552.0
7/27/2013 8:10	0.55	1.23	552.0
7/27/2013 8:20	0.55	1.23	552.0
7/27/2013 8:30	0.56	1.26	567.4
7/27/2013 8:40	0.55	1.23	552.0
7/27/2013 8:50	0.55	1.23	552.0
7/27/2013 9:00	0.55	1.23	552.0
7/27/2013 9:10	0.55	1.23	552.0
7/27/2013 9:20	0.55	1.23	552.0
7/27/2013 9:30	0.55	1.23	552.0
7/27/2013 9:40	0.55	1.23	552.0
7/27/2013 9:50	0.56	1.26	567.4

7/27/2013 10:00	0.55	1.23	552.0
7/27/2013 10:10	0.55	1.23	552.0
7/27/2013 10:20	0.55	1.23	552.0
7/27/2013 10:30	0.55	1.23	552.0
7/27/2013 10:40	0.55	1.23	552.0
7/27/2013 10:50	0.55	1.23	552.0
7/27/2013 11:00	0.55	1.23	552.0
7/27/2013 11:10	0.55	1.23	552.0
7/27/2013 11:20	0.55	1.23	552.0
7/27/2013 11:30	0.55	1.23	552.0
7/27/2013 11:40	0.55	1.23	552.0
7/27/2013 11:50	0.55	1.23	552.0
7/27/2013 12:00	0.55	1.23	552.0
7/27/2013 12:10	0.55	1.23	552.0
7/27/2013 12:20	0.55	1.23	552.0
7/27/2013 12:30	0.55	1.23	552.0
7/27/2013 12:40	0.55	1.23	552.0
7/27/2013 12:50	0.55	1.23	552.0
7/27/2013 13:00	0.55	1.23	552.0
7/27/2013 13:10	0.55	1.23	552.0
7/27/2013 13:20	0.55	1.23	552.0
7/27/2013 13:30	0.55	1.23	552.0
7/27/2013 13:40	0.55	1.23	552.0
7/27/2013 13:50	0.55	1.23	552.0
7/27/2013 14:00	0.55	1.23	552.0
7/27/2013 14:10	0.55	1.23	552.0
7/27/2013 14:20	0.55	1.23	552.0
7/27/2013 14:30	0.55	1.23	552.0
7/27/2013 14:40	0.55	1.23	552.0
7/27/2013 14:50	0.55	1.23	552.0
7/27/2013 15:00	0.55	1.23	552.0
7/27/2013 15:10	0.55	1.23	552.0
7/27/2013 15:20	0.55	1.23	552.0
7/27/2013 15:30	0.55	1.23	552.0
7/27/2013 15:40	0.55	1.23	552.0
7/27/2013 15:50	0.55	1.23	552.0
7/27/2013 16:00	0.55	1.23	552.0
7/27/2013 16:10	0.55	1.23	552.0
7/27/2013 16:20	0.55	1.23	552.0
7/27/2013 16:30	0.55	1.23	552.0
7/27/2013 16:40	0.54	1.20	536.7
7/27/2013 16:50	0.54	1.20	536.7
7/28/2013 8:10	0.54	1.20	536.7
7/28/2013 8:10	0.54	1.20	536.7
7/28/2013 8:20	0.55	1.23	552.0
7/28/2013 9:20	0.54	1.20	536.7
7/28/2013 9:20	0.55	1.23	552.0

7/28/2013 9:30	0.55	1.23	552.0
7/28/2013 9:30	0.55	1.23	552.0
7/28/2013 9:40	0.55	1.23	552.0
7/28/2013 9:50	0.55	1.23	552.0
7/28/2013 10:00	0.55	1.23	552.0
7/28/2013 10:10	0.55	1.23	552.0
7/28/2013 10:20	0.55	1.23	552.0
7/28/2013 10:30	0.55	1.23	552.0
7/28/2013 10:40	0.55	1.23	552.0
7/28/2013 10:50	0.55	1.23	552.0
7/28/2013 11:00	0.55	1.23	552.0
7/28/2013 11:10	0.55	1.23	552.0
7/28/2013 11:20	0.55	1.23	552.0
7/28/2013 11:30	0.55	1.23	552.0
7/28/2013 11:40	0.55	1.23	552.0
7/28/2013 11:50	0.55	1.23	552.0
7/28/2013 12:00	0.55	1.23	552.0
7/28/2013 12:10	0.55	1.23	552.0
7/28/2013 12:20	0.55	1.23	552.0
7/28/2013 12:30	0.55	1.23	552.0
7/28/2013 12:40	0.55	1.23	552.0
7/28/2013 12:50	0.55	1.23	552.0
7/28/2013 13:00	0.55	1.23	552.0
7/28/2013 13:10	0.55	1.23	552.0
7/28/2013 13:20	0.55	1.23	552.0
7/28/2013 13:30	0.55	1.23	552.0
7/28/2013 14:20	0.54	1.20	536.7
7/28/2013 14:20	0.55	1.23	552.0
7/28/2013 14:20	0.55	1.23	552.0
7/28/2013 14:20	0.55	1.23	552.0
7/28/2013 14:30	0.55	1.23	552.0
7/28/2013 14:40	0.55	1.23	552.0
7/28/2013 14:50	0.55	1.23	552.0
7/28/2013 15:00	0.55	1.23	552.0
7/28/2013 15:10	0.55	1.23	552.0
7/28/2013 15:20	0.55	1.23	552.0
7/28/2013 15:30	0.55	1.23	552.0
7/28/2013 16:00	0.55	1.23	552.0
7/28/2013 16:10	0.55	1.23	552.0
7/28/2013 16:40	0.54	1.20	536.7
7/28/2013 16:40	0.55	1.23	552.0
7/28/2013 16:50	0.55	1.23	552.0
7/28/2013 17:00	0.55	1.23	552.0
7/28/2013 17:10	0.55	1.23	552.0
7/28/2013 17:20	0.55	1.23	552.0
7/29/2013 6:50	0.55	1.23	552.0
7/29/2013 7:00	0.55	1.23	552.0

7/29/2013 7:10	0.55	1.23	552.0
7/29/2013 7:20	0.55	1.23	552.0
7/29/2013 7:30	0.55	1.23	552.0
7/29/2013 7:40	0.55	1.23	552.0
7/29/2013 7:50	0.55	1.23	552.0
7/29/2013 8:00	0.55	1.23	552.0
7/29/2013 8:10	0.55	1.23	552.0
7/29/2013 8:20	0.55	1.23	552.0
7/29/2013 8:30	0.55	1.23	552.0
7/29/2013 8:40	0.55	1.23	552.0
7/29/2013 8:50	0.55	1.23	552.0
7/29/2013 9:00	0.55	1.23	552.0
7/29/2013 9:10	0.55	1.23	552.0
7/29/2013 9:20	0.55	1.23	552.0
7/29/2013 9:30	0.55	1.23	552.0
7/29/2013 9:40	0.55	1.23	552.0
7/29/2013 9:50	0.55	1.23	552.0
7/29/2013 10:00	0.55	1.23	552.0
7/29/2013 10:10	0.55	1.23	552.0
7/29/2013 10:20	0.55	1.23	552.0
7/29/2013 10:30	0.55	1.23	552.0
7/29/2013 10:40	0.55	1.23	552.0
7/29/2013 10:50	0.55	1.23	552.0
7/29/2013 11:00	0.55	1.23	552.0
7/29/2013 11:10	0.55	1.23	552.0
7/29/2013 11:20	0.55	1.23	552.0
7/29/2013 11:30	0.55	1.23	552.0
7/29/2013 11:40	0.55	1.23	552.0
7/29/2013 11:50	0.55	1.23	552.0
7/29/2013 12:00	0.55	1.23	552.0
7/29/2013 12:10	0.55	1.23	552.0
7/29/2013 12:20	0.55	1.23	552.0
7/29/2013 12:30	0.55	1.23	552.0
7/29/2013 12:40	0.55	1.23	552.0
7/29/2013 12:50	0.55	1.23	552.0
7/29/2013 13:00	0.55	1.23	552.0
7/29/2013 13:10	0.55	1.23	552.0
7/29/2013 13:20	0.55	1.23	552.0
7/29/2013 13:30	0.55	1.23	552.0
7/29/2013 13:40	0.55	1.23	552.0
7/29/2013 13:50	0.55	1.23	552.0
7/29/2013 14:00	0.55	1.23	552.0
7/29/2013 14:20	0.54	1.20	536.7
7/29/2013 14:20	0.55	1.23	552.0
7/29/2013 14:30	0.55	1.23	552.0
7/29/2013 14:40	0.55	1.23	552.0
7/29/2013 14:50	0.55	1.23	552.0

7/29/2013 15:00	0.55	1.23	552.0
7/29/2013 15:10	0.55	1.23	552.0
7/29/2013 15:20	0.55	1.23	552.0
7/29/2013 15:30	0.55	1.23	552.0
7/29/2013 15:40	0.55	1.23	552.0
7/29/2013 15:50	0.55	1.23	552.0
7/29/2013 16:00	0.55	1.23	552.0
7/29/2013 16:10	0.55	1.23	552.0
7/29/2013 16:20	0.55	1.23	552.0
7/29/2013 16:30	0.55	1.23	552.0
7/29/2013 16:40	0.55	1.23	552.0
7/29/2013 16:50	0.55	1.23	552.0
7/29/2013 17:00	0.55	1.23	552.0
7/29/2013 17:10	0.55	1.23	552.0
7/29/2013 17:20	0.54	1.20	536.7
7/29/2013 17:55	0.54	1.20	536.7
7/29/2013 18:10	0.54	1.20	536.7
7/30/2013 7:50	0.55	1.23	552.0
7/30/2013 8:00	0.55	1.23	552.0
7/30/2013 8:10	0.55	1.23	552.0
7/30/2013 8:20	0.55	1.23	552.0
7/30/2013 8:30	0.55	1.23	552.0
7/30/2013 8:40	0.55	1.23	552.0
7/30/2013 8:50	0.55	1.23	552.0
7/30/2013 9:00	0.55	1.23	552.0
7/30/2013 9:10	0.55	1.23	552.0
7/30/2013 9:20	0.55	1.23	552.0
7/30/2013 9:30	0.55	1.23	552.0
7/30/2013 9:40	0.55	1.23	552.0
7/30/2013 9:50	0.55	1.23	552.0
7/30/2013 10:00	0.55	1.23	552.0
7/30/2013 10:10	0.55	1.23	552.0
7/30/2013 10:20	0.55	1.23	552.0
7/30/2013 10:30	0.55	1.23	552.0
7/30/2013 10:40	0.55	1.23	552.0
7/30/2013 10:50	0.55	1.23	552.0
7/30/2013 11:00	0.55	1.23	552.0
7/30/2013 11:10	0.55	1.23	552.0
7/30/2013 11:20	0.55	1.23	552.0
7/30/2013 11:30	0.55	1.23	552.0
7/30/2013 11:40	0.55	1.23	552.0
7/30/2013 11:50	0.55	1.23	552.0
7/30/2013 12:00	0.55	1.23	552.0
7/30/2013 12:10	0.55	1.23	552.0
7/30/2013 12:20	0.55	1.23	552.0
7/30/2013 12:30	0.55	1.23	552.0
7/30/2013 12:40	0.55	1.23	552.0

7/30/2013 12:50	0.55	1.23	552.0
7/30/2013 13:00	0.55	1.23	552.0
7/30/2013 13:10	0.55	1.23	552.0
7/30/2013 13:20	0.55	1.23	552.0
7/30/2013 13:30	0.55	1.23	552.0
7/30/2013 13:40	0.55	1.23	552.0
7/30/2013 13:50	0.55	1.23	552.0
7/30/2013 14:00	0.55	1.23	552.0
7/30/2013 14:10	0.55	1.23	552.0
7/30/2013 14:20	0.55	1.23	552.0
7/30/2013 14:30	0.55	1.23	552.0
7/30/2013 14:40	0.55	1.23	552.0
7/30/2013 14:50	0.55	1.23	552.0
7/30/2013 15:00	0.55	1.23	552.0
7/30/2013 15:10	0.55	1.23	552.0
7/30/2013 15:20	0.55	1.23	552.0
7/30/2013 15:30	0.55	1.23	552.0
7/30/2013 15:40	0.55	1.23	552.0
7/30/2013 15:50	0.55	1.23	552.0
7/30/2013 16:00	0.55	1.23	552.0
7/30/2013 16:10	0.55	1.23	552.0
7/30/2013 16:20	0.55	1.23	552.0
7/30/2013 16:30	0.55	1.23	552.0
7/30/2013 16:50	0.54	1.20	536.7
7/30/2013 17:00	0.55	1.23	552.0
7/30/2013 17:10	0.55	1.23	552.0
7/30/2013 17:20	0.55	1.23	552.0
7/31/2013 7:50	0.55	1.23	552.0
7/31/2013 8:00	0.55	1.23	552.0
7/31/2013 8:10	0.55	1.23	552.0
7/31/2013 8:20	0.55	1.23	552.0
7/31/2013 8:30	0.55	1.23	552.0
7/31/2013 8:40	0.55	1.23	552.0
7/31/2013 8:50	0.55	1.23	552.0
7/31/2013 9:00	0.55	1.23	552.0
7/31/2013 9:10	0.55	1.23	552.0
7/31/2013 9:20	0.55	1.23	552.0
7/31/2013 9:30	0.55	1.23	552.0
7/31/2013 9:40	0.55	1.23	552.0
7/31/2013 9:50	0.55	1.23	552.0
7/31/2013 10:00	0.55	1.23	552.0
7/31/2013 10:10	0.55	1.23	552.0
7/31/2013 10:20	0.55	1.23	552.0
7/31/2013 10:30	0.55	1.23	552.0
7/31/2013 10:40	0.55	1.23	552.0
7/31/2013 10:50	0.55	1.23	552.0
7/31/2013 11:00	0.55	1.23	552.0

7/31/2013 11:10	0.55	1.23	552.0
7/31/2013 11:20	0.55	1.23	552.0
7/31/2013 11:30	0.55	1.23	552.0
7/31/2013 11:40	0.55	1.23	552.0
7/31/2013 11:50	0.55	1.23	552.0
7/31/2013 12:00	0.55	1.23	552.0
7/31/2013 12:10	0.55	1.23	552.0
7/31/2013 12:20	0.55	1.23	552.0
7/31/2013 12:30	0.55	1.23	552.0
7/31/2013 12:40	0.55	1.23	552.0
7/31/2013 12:50	0.55	1.23	552.0
7/31/2013 13:00	0.55	1.23	552.0
7/31/2013 13:10	0.55	1.23	552.0
7/31/2013 13:20	0.55	1.23	552.0
7/31/2013 13:30	0.55	1.23	552.0
7/31/2013 13:40	0.55	1.23	552.0
7/31/2013 13:50	0.55	1.23	552.0
7/31/2013 14:00	0.55	1.23	552.0
7/31/2013 14:10	0.55	1.23	552.0
7/31/2013 14:20	0.55	1.23	552.0
7/31/2013 14:30	0.55	1.23	552.0
7/31/2013 14:40	0.55	1.23	552.0
7/31/2013 14:50	0.55	1.23	552.0
7/31/2013 15:00	0.55	1.23	552.0
7/31/2013 15:10	0.55	1.23	552.0
7/31/2013 15:20	0.55	1.23	552.0
7/31/2013 15:30	0.55	1.23	552.0
7/31/2013 15:40	0.55	1.23	552.0
7/31/2013 15:50	0.55	1.23	552.0
7/31/2013 16:00	0.55	1.23	552.0
7/31/2013 16:10	0.55	1.23	552.0
7/31/2013 16:20	0.55	1.23	552.0
7/31/2013 16:40	0.55	1.23	552.0
7/31/2013 16:50	0.55	1.23	552.0
7/31/2013 17:10	0.55	1.23	552.0
7/31/2013 17:20	0.55	1.23	552.0

Appendix J

North Flume Ultrasonic Sensor Data with Flowrates

Ultrasonic Sensor Data at North Flume, July 2013

Date, Time	Depth of Flow (ft)	Depth of Flow (in)	Flowrate (cfs)	Flowrate (gpm)
7/2/2013 12:02	0.55	6.6	1.23	552.0
7/2/2013 12:02	0.54	6.48	1.20	536.7
7/2/2013 12:03	0.55	6.6	1.23	552.0
7/2/2013 12:03	0.55	6.6	1.23	552.0
7/2/2013 12:04	0.55	6.6	1.23	552.0
7/2/2013 12:04	0.55	6.6	1.23	552.0
7/2/2013 12:05	0.55	6.6	1.23	552.0
7/2/2013 12:05	0.55	6.6	1.23	552.0
7/2/2013 12:06	0.55	6.6	1.23	552.0
7/2/2013 12:06	0.55	6.6	1.23	552.0
7/2/2013 12:07	0.55	6.6	1.23	552.0
7/2/2013 12:07	0.55	6.6	1.23	552.0
7/2/2013 12:08	0.55	6.6	1.23	552.0
7/2/2013 12:08	0.55	6.6	1.23	552.0
7/2/2013 12:09	0.55	6.6	1.23	552.0
7/2/2013 12:09	0.55	6.6	1.23	552.0
7/2/2013 12:10	0.55	6.6	1.23	552.0
7/2/2013 12:10	0.55	6.6	1.23	552.0
7/2/2013 12:11	0.55	6.6	1.23	552.0
7/2/2013 12:11	0.55	6.6	1.23	552.0
7/2/2013 12:12	0.55	6.6	1.23	552.0
7/2/2013 12:12	0.55	6.6	1.23	552.0
7/2/2013 12:13	0.55	6.6	1.23	552.0
7/2/2013 12:13	0.54	6.48	1.20	536.7
7/2/2013 12:14	0.55	6.6	1.23	552.0
7/2/2013 12:14	0.55	6.6	1.23	552.0
7/2/2013 12:15	0.55	6.6	1.23	552.0
7/2/2013 12:15	0.55	6.6	1.23	552.0
7/2/2013 12:16	0.55	6.6	1.23	552.0
7/2/2013 12:16	0.55	6.6	1.23	552.0
7/2/2013 12:17	0.55	6.6	1.23	552.0
7/2/2013 12:17	0.55	6.6	1.23	552.0
7/2/2013 12:18	0.55	6.6	1.23	552.0
7/2/2013 12:18	0.55	6.6	1.23	552.0
7/2/2013 12:19	0.55	6.6	1.23	552.0
7/2/2013 12:19	0.55	6.6	1.23	552.0
7/2/2013 12:20	0.55	6.6	1.23	552.0
7/2/2013 12:21	0.55	6.6	1.23	552.0
7/2/2013 12:23	0.55	6.6	1.23	552.0
7/2/2013 12:23	0.55	6.6	1.23	552.0
7/2/2013 12:24	0.55	6.6	1.23	552.0
7/2/2013 12:24	0.55	6.6	1.23	552.0
7/2/2013 12:25	0.55	6.6	1.23	552.0

7/2/2013 12:25	0.55	6.6	1.23	552.0
7/2/2013 12:26	0.55	6.6	1.23	552.0
7/2/2013 12:27	0.55	6.6	1.23	552.0
7/2/2013 12:28	0.55	6.6	1.23	552.0
7/2/2013 12:29	0.54	6.48	1.20	536.7
7/2/2013 12:30	0.54	6.48	1.20	536.7
7/2/2013 12:31	0.55	6.6	1.23	552.0
7/2/2013 12:31	0.55	6.6	1.23	552.0
7/2/2013 12:32	0.55	6.6	1.23	552.0
7/2/2013 12:32	0.55	6.6	1.23	552.0
7/2/2013 12:33	0.55	6.6	1.23	552.0
7/2/2013 12:34	0.55	6.6	1.23	552.0
7/2/2013 12:34	0.55	6.6	1.23	552.0
7/2/2013 12:35	0.54	6.48	1.20	536.7
7/2/2013 12:35	0.55	6.6	1.23	552.0
7/2/2013 12:36	0.55	6.6	1.23	552.0
7/2/2013 12:36	0.55	6.6	1.23	552.0
7/2/2013 12:37	0.55	6.6	1.23	552.0
7/2/2013 12:37	0.55	6.6	1.23	552.0
7/2/2013 12:38	0.55	6.6	1.23	552.0
7/2/2013 12:38	0.55	6.6	1.23	552.0
7/2/2013 12:39	0.55	6.6	1.23	552.0
7/2/2013 12:39	0.55	6.6	1.23	552.0
7/2/2013 12:40	0.55	6.6	1.23	552.0
7/2/2013 12:40	0.55	6.6	1.23	552.0
7/2/2013 12:41	0.55	6.6	1.23	552.0
7/2/2013 12:41	0.55	6.6	1.23	552.0
7/2/2013 12:42	0.55	6.6	1.23	552.0
7/2/2013 12:42	0.55	6.6	1.23	552.0
7/2/2013 12:43	0.55	6.6	1.23	552.0
7/2/2013 12:43	0.55	6.6	1.23	552.0
7/2/2013 12:44	0.55	6.6	1.23	552.0
7/2/2013 12:44	0.55	6.6	1.23	552.0
7/2/2013 12:45	0.55	6.6	1.23	552.0
7/2/2013 12:45	0.55	6.6	1.23	552.0
7/2/2013 12:46	0.54	6.48	1.20	536.7
7/2/2013 12:46	0.55	6.6	1.23	552.0
7/2/2013 12:47	0.55	6.6	1.23	552.0
7/2/2013 12:47	0.55	6.6	1.23	552.0
7/2/2013 12:48	0.55	6.6	1.23	552.0
7/2/2013 12:48	0.55	6.6	1.23	552.0
7/2/2013 12:49	0.55	6.6	1.23	552.0
7/2/2013 12:49	0.55	6.6	1.23	552.0
7/2/2013 12:50	0.55	6.6	1.23	552.0
7/2/2013 12:50	0.55	6.6	1.23	552.0
7/2/2013 12:51	0.55	6.6	1.23	552.0
7/2/2013 12:51	0.55	6.6	1.23	552.0

7/2/2013 12:52	0.55	6.6	1.23	552.0
7/2/2013 12:52	0.55	6.6	1.23	552.0
7/2/2013 12:53	0.55	6.6	1.23	552.0
7/2/2013 12:53	0.55	6.6	1.23	552.0
7/2/2013 12:54	0.55	6.6	1.23	552.0
7/2/2013 12:54	0.55	6.6	1.23	552.0
7/2/2013 12:55	0.55	6.6	1.23	552.0
7/2/2013 12:55	0.55	6.6	1.23	552.0
7/2/2013 12:56	0.55	6.6	1.23	552.0
7/2/2013 12:56	0.55	6.6	1.23	552.0
7/2/2013 12:56	0.55	6.6	1.23	552.0
7/2/2013 12:57	0.55	6.6	1.23	552.0
7/2/2013 12:57	0.55	6.6	1.23	552.0
7/2/2013 12:58	0.55	6.6	1.23	552.0
7/2/2013 12:58	0.55	6.6	1.23	552.0
7/2/2013 12:59	0.55	6.6	1.23	552.0
7/2/2013 12:59	0.55	6.6	1.23	552.0
7/2/2013 13:00	0.55	6.6	1.23	552.0
7/2/2013 13:00	0.55	6.6	1.23	552.0
7/2/2013 13:01	0.55	6.6	1.23	552.0
7/2/2013 13:01	0.55	6.6	1.23	552.0
7/2/2013 13:02	0.55	6.6	1.23	552.0
7/2/2013 13:02	0.55	6.6	1.23	552.0
7/2/2013 13:03	0.55	6.6	1.23	552.0
7/2/2013 13:03	0.55	6.6	1.23	552.0
7/2/2013 13:04	0.55	6.6	1.23	552.0
7/2/2013 13:04	0.54	6.48	1.20	536.7
7/2/2013 13:05	0.55	6.6	1.23	552.0
7/2/2013 13:05	0.55	6.6	1.23	552.0
7/2/2013 13:06	0.55	6.6	1.23	552.0
7/2/2013 13:07	0.55	6.6	1.23	552.0
7/2/2013 13:07	0.55	6.6	1.23	552.0
7/2/2013 13:08	0.55	6.6	1.23	552.0
7/2/2013 13:08	0.55	6.6	1.23	552.0
7/2/2013 13:09	0.55	6.6	1.23	552.0
7/2/2013 13:10	0.55	6.6	1.23	552.0
7/2/2013 13:10	0.54	6.48	1.20	536.7
7/2/2013 13:12	0.55	6.6	1.23	552.0
7/2/2013 13:13	0.55	6.6	1.23	552.0
7/2/2013 13:13	0.55	6.6	1.23	552.0
7/2/2013 13:14	0.55	6.6	1.23	552.0
7/2/2013 13:14	0.55	6.6	1.23	552.0
7/2/2013 13:15	0.55	6.6	1.23	552.0
7/2/2013 13:15	0.55	6.6	1.23	552.0
7/2/2013 13:16	0.55	6.6	1.23	552.0
7/2/2013 13:16	0.55	6.6	1.23	552.0
7/2/2013 13:17	0.55	6.6	1.23	552.0

7/2/2013 13:17	0.55	6.6	1.23	552.0
7/2/2013 13:18	0.55	6.6	1.23	552.0
7/2/2013 13:18	0.55	6.6	1.23	552.0
7/2/2013 13:19	0.55	6.6	1.23	552.0
7/2/2013 13:19	0.55	6.6	1.23	552.0
7/2/2013 13:20	0.55	6.6	1.23	552.0
7/2/2013 13:21	0.55	6.6	1.23	552.0
7/2/2013 13:21	0.55	6.6	1.23	552.0
7/2/2013 13:22	0.55	6.6	1.23	552.0
7/2/2013 13:23	0.55	6.6	1.23	552.0
7/2/2013 13:24	0.55	6.6	1.23	552.0
7/2/2013 13:24	0.55	6.6	1.23	552.0
7/2/2013 13:25	0.55	6.6	1.23	552.0
7/2/2013 13:26	0.55	6.6	1.23	552.0
7/2/2013 13:26	0.55	6.6	1.23	552.0
7/2/2013 13:27	0.55	6.6	1.23	552.0
7/2/2013 13:27	0.55	6.6	1.23	552.0
7/2/2013 13:28	0.55	6.6	1.23	552.0
7/2/2013 13:28	0.55	6.6	1.23	552.0
7/2/2013 13:29	0.55	6.6	1.23	552.0
7/2/2013 13:30	0.55	6.6	1.23	552.0
7/2/2013 13:30	0.55	6.6	1.23	552.0
7/2/2013 13:31	0.55	6.6	1.23	552.0
7/2/2013 13:32	0.55	6.6	1.23	552.0
7/2/2013 13:32	0.55	6.6	1.23	552.0
7/2/2013 13:33	0.54	6.48	1.20	536.7
7/2/2013 13:33	0.55	6.6	1.23	552.0
7/2/2013 13:34	0.55	6.6	1.23	552.0
7/2/2013 13:34	0.55	6.6	1.23	552.0
7/2/2013 13:35	0.55	6.6	1.23	552.0
7/2/2013 13:35	0.55	6.6	1.23	552.0
7/2/2013 13:37	0.55	6.6	1.23	552.0
7/2/2013 13:37	0.55	6.6	1.23	552.0
7/2/2013 13:37	0.55	6.6	1.23	552.0
7/2/2013 13:38	0.55	6.6	1.23	552.0
7/2/2013 13:38	0.55	6.6	1.23	552.0
7/2/2013 13:39	0.55	6.6	1.23	552.0
7/2/2013 13:39	0.55	6.6	1.23	552.0
7/2/2013 13:40	0.55	6.6	1.23	552.0
7/2/2013 13:40	0.55	6.6	1.23	552.0
7/2/2013 13:41	0.55	6.6	1.23	552.0
7/2/2013 13:41	0.55	6.6	1.23	552.0
7/2/2013 13:42	0.55	6.6	1.23	552.0
7/2/2013 13:42	0.55	6.6	1.23	552.0
7/2/2013 13:43	0.55	6.6	1.23	552.0
7/2/2013 13:43	0.55	6.6	1.23	552.0
7/2/2013 13:44	0.55	6.6	1.23	552.0

7/2/2013 13:45	0.55	6.6	1.23	552.0
7/2/2013 13:45	0.55	6.6	1.23	552.0
7/2/2013 13:45	0.55	6.6	1.23	552.0
7/2/2013 13:46	0.55	6.6	1.23	552.0
7/2/2013 13:46	0.55	6.6	1.23	552.0
7/2/2013 13:47	0.55	6.6	1.23	552.0
7/2/2013 13:47	0.55	6.6	1.23	552.0
7/2/2013 13:48	0.55	6.6	1.23	552.0
7/2/2013 13:48	0.55	6.6	1.23	552.0
7/2/2013 13:49	0.55	6.6	1.23	552.0
7/2/2013 13:49	0.55	6.6	1.23	552.0
7/2/2013 13:50	0.55	6.6	1.23	552.0
7/2/2013 13:50	0.55	6.6	1.23	552.0
7/2/2013 13:51	0.55	6.6	1.23	552.0
7/2/2013 13:51	0.55	6.6	1.23	552.0
7/2/2013 13:52	0.55	6.6	1.23	552.0
7/2/2013 13:52	0.54	6.48	1.20	536.7
7/2/2013 13:53	0.54	6.48	1.20	536.7
7/2/2013 13:53	0.55	6.6	1.23	552.0
7/2/2013 13:54	0.55	6.6	1.23	552.0
7/2/2013 13:54	0.55	6.6	1.23	552.0
7/2/2013 13:55	0.55	6.6	1.23	552.0
7/2/2013 13:55	0.55	6.6	1.23	552.0
7/2/2013 13:56	0.54	6.48	1.20	536.7
7/2/2013 13:56	0.55	6.6	1.23	552.0
7/2/2013 13:57	0.55	6.6	1.23	552.0
7/2/2013 13:57	0.55	6.6	1.23	552.0
7/2/2013 13:58	0.55	6.6	1.23	552.0
7/2/2013 13:58	0.55	6.6	1.23	552.0
7/2/2013 13:59	0.55	6.6	1.23	552.0
7/2/2013 13:59	0.55	6.6	1.23	552.0
7/2/2013 14:00	0.55	6.6	1.23	552.0
7/2/2013 14:00	0.55	6.6	1.23	552.0
7/2/2013 14:01	0.55	6.6	1.23	552.0
7/2/2013 14:01	0.55	6.6	1.23	552.0
7/2/2013 14:02	0.55	6.6	1.23	552.0
7/2/2013 14:02	0.55	6.6	1.23	552.0
7/2/2013 14:03	0.55	6.6	1.23	552.0
7/2/2013 14:04	0.55	6.6	1.23	552.0
7/2/2013 14:04	0.55	6.6	1.23	552.0
7/2/2013 14:05	0.55	6.6	1.23	552.0
7/2/2013 14:06	0.55	6.6	1.23	552.0
7/2/2013 14:06	0.55	6.6	1.23	552.0
7/2/2013 14:07	0.55	6.6	1.23	552.0
7/2/2013 14:07	0.55	6.6	1.23	552.0
7/2/2013 14:08	0.55	6.6	1.23	552.0
7/2/2013 14:08	0.55	6.6	1.23	552.0

7/2/2013 14:09	0.55	6.6	1.23	552.0
7/2/2013 14:09	0.55	6.6	1.23	552.0
7/2/2013 14:10	0.55	6.6	1.23	552.0
7/2/2013 14:10	0.55	6.6	1.23	552.0
7/2/2013 14:11	0.54	6.48	1.20	536.7
7/2/2013 14:11	0.55	6.6	1.23	552.0
7/2/2013 14:12	0.55	6.6	1.23	552.0
7/2/2013 14:12	0.55	6.6	1.23	552.0
7/2/2013 14:13	0.55	6.6	1.23	552.0
7/2/2013 14:13	0.55	6.6	1.23	552.0
7/2/2013 14:14	0.55	6.6	1.23	552.0
7/2/2013 14:14	0.55	6.6	1.23	552.0
7/2/2013 14:14	0.54	6.48	1.20	536.7
7/2/2013 14:15	0.55	6.6	1.23	552.0
7/2/2013 14:16	0.55	6.6	1.23	552.0
7/2/2013 14:16	0.55	6.6	1.23	552.0
7/2/2013 14:17	0.55	6.6	1.23	552.0
7/2/2013 14:17	0.55	6.6	1.23	552.0
7/2/2013 14:18	0.55	6.6	1.23	552.0
7/2/2013 14:18	0.55	6.6	1.23	552.0
7/2/2013 14:19	0.55	6.6	1.23	552.0
7/2/2013 14:19	0.55	6.6	1.23	552.0
7/2/2013 14:20	0.55	6.6	1.23	552.0
7/2/2013 14:20	0.55	6.6	1.23	552.0
7/2/2013 14:21	0.55	6.6	1.23	552.0
7/2/2013 14:21	0.55	6.6	1.23	552.0
7/2/2013 14:22	0.55	6.6	1.23	552.0
7/2/2013 14:22	0.55	6.6	1.23	552.0
7/2/2013 14:24	0.55	6.6	1.23	552.0
7/2/2013 14:25	0.55	6.6	1.23	552.0
7/2/2013 14:25	0.55	6.6	1.23	552.0
7/2/2013 14:26	0.55	6.6	1.23	552.0
7/2/2013 14:26	0.55	6.6	1.23	552.0
7/2/2013 14:28	0.55	6.6	1.23	552.0
7/2/2013 14:29	0.55	6.6	1.23	552.0
7/2/2013 14:29	0.55	6.6	1.23	552.0
7/2/2013 14:30	0.54	6.48	1.20	536.7
7/2/2013 14:30	0.55	6.6	1.23	552.0
7/2/2013 14:30	0.55	6.6	1.23	552.0
7/2/2013 14:31	0.55	6.6	1.23	552.0
7/2/2013 14:31	0.55	6.6	1.23	552.0
7/2/2013 14:32	0.55	6.6	1.23	552.0
7/2/2013 14:32	0.55	6.6	1.23	552.0
7/2/2013 14:33	0.55	6.6	1.23	552.0
7/2/2013 14:33	0.55	6.6	1.23	552.0
7/2/2013 14:34	0.55	6.6	1.23	552.0
7/2/2013 14:34	0.54	6.48	1.20	536.7

7/2/2013 14:35	0.55	6.6	1.23	552.0
7/2/2013 14:35	0.55	6.6	1.23	552.0
7/2/2013 14:36	0.54	6.48	1.20	536.7
7/2/2013 14:36	0.55	6.6	1.23	552.0
7/2/2013 14:37	0.55	6.6	1.23	552.0
7/2/2013 14:37	0.55	6.6	1.23	552.0
7/2/2013 14:38	0.55	6.6	1.23	552.0
7/2/2013 14:38	0.54	6.48	1.20	536.7
7/2/2013 14:39	0.55	6.6	1.23	552.0
7/2/2013 14:39	0.55	6.6	1.23	552.0
7/2/2013 14:40	0.55	6.6	1.23	552.0
7/2/2013 14:40	0.55	6.6	1.23	552.0
7/2/2013 14:41	0.55	6.6	1.23	552.0
7/2/2013 14:41	0.55	6.6	1.23	552.0
7/2/2013 14:42	0.55	6.6	1.23	552.0
7/2/2013 14:42	0.55	6.6	1.23	552.0
7/2/2013 14:43	0.54	6.48	1.20	536.7
7/2/2013 14:43	0.55	6.6	1.23	552.0
7/2/2013 14:44	0.55	6.6	1.23	552.0
7/2/2013 14:44	0.55	6.6	1.23	552.0
7/2/2013 14:45	0.55	6.6	1.23	552.0
7/2/2013 14:45	0.55	6.6	1.23	552.0
7/2/2013 15:00	0.55	6.6	1.23	552.0
7/2/2013 15:15	0.55	6.6	1.23	552.0
7/2/2013 15:30	0.55	6.6	1.23	552.0
7/2/2013 15:45	0.55	6.6	1.23	552.0
7/2/2013 16:00	0.55	6.6	1.23	552.0
7/2/2013 16:15	0.55	6.6	1.23	552.0
7/2/2013 16:30	0.54	6.48	1.20	536.7
7/2/2013 16:45	0.55	6.6	1.23	552.0
7/2/2013 17:00	0.55	6.6	1.23	552.0
7/2/2013 17:15	0.55	6.6	1.23	552.0
7/2/2013 17:30	0.55	6.6	1.23	552.0
7/2/2013 17:45	0.55	6.6	1.23	552.0
7/2/2013 18:00	0.55	6.6	1.23	552.0
7/2/2013 18:15	0.55	6.6	1.23	552.0
7/2/2013 18:30	0.55	6.6	1.23	552.0
7/2/2013 18:45	0.55	6.6	1.23	552.0
7/2/2013 19:00	0.54	6.48	1.20	536.7
7/2/2013 19:15	0.55	6.6	1.23	552.0
7/2/2013 19:30	0.55	6.6	1.23	552.0
7/2/2013 19:45	0.55	6.6	1.23	552.0
7/2/2013 20:00	0.54	6.48	1.20	536.7
7/2/2013 20:15	0.55	6.6	1.23	552.0
7/2/2013 20:30	0.55	6.6	1.23	552.0
7/2/2013 20:45	0.55	6.6	1.23	552.0
7/2/2013 21:00	0.55	6.6	1.23	552.0

7/2/2013 21:15	0.55	6.6	1.23	552.0
7/2/2013 21:30	0.55	6.6	1.23	552.0
7/3/2013 7:40	0.55	6.6	1.23	552.0
7/3/2013 7:41	0.55	6.6	1.23	552.0
7/3/2013 7:41	0.55	6.6	1.23	552.0
7/3/2013 7:42	0.55	6.6	1.23	552.0
7/3/2013 8:07	0.55	6.6	1.23	552.0
7/3/2013 8:08	0.55	6.6	1.23	552.0
7/3/2013 8:10	0.55	6.6	1.23	552.0
7/3/2013 8:11	0.55	6.6	1.23	552.0
7/3/2013 8:11	0.54	6.48	1.20	536.7
7/3/2013 8:12	0.55	6.6	1.23	552.0
7/3/2013 8:12	0.55	6.6	1.23	552.0
7/3/2013 8:13	0.55	6.6	1.23	552.0
7/3/2013 8:13	0.55	6.6	1.23	552.0
7/3/2013 8:14	0.55	6.6	1.23	552.0
7/3/2013 8:15	0.55	6.6	1.23	552.0
7/3/2013 8:15	0.54	6.48	1.20	536.7
7/3/2013 8:16	0.55	6.6	1.23	552.0
7/3/2013 8:16	0.55	6.6	1.23	552.0
7/3/2013 8:17	0.55	6.6	1.23	552.0
7/3/2013 8:17	0.55	6.6	1.23	552.0
7/3/2013 8:17	0.55	6.6	1.23	552.0
7/3/2013 8:18	0.55	6.6	1.23	552.0
7/3/2013 8:18	0.55	6.6	1.23	552.0
7/3/2013 8:19	0.55	6.6	1.23	552.0
7/3/2013 8:19	0.55	6.6	1.23	552.0
7/3/2013 8:20	0.55	6.6	1.23	552.0
7/3/2013 8:20	0.55	6.6	1.23	552.0
7/3/2013 8:21	0.55	6.6	1.23	552.0
7/3/2013 8:21	0.55	6.6	1.23	552.0
7/3/2013 8:22	0.55	6.6	1.23	552.0
7/3/2013 8:22	0.55	6.6	1.23	552.0
7/3/2013 8:23	0.55	6.6	1.23	552.0
7/3/2013 8:23	0.55	6.6	1.23	552.0
7/3/2013 8:24	0.55	6.6	1.23	552.0
7/3/2013 8:24	0.55	6.6	1.23	552.0
7/3/2013 8:25	0.55	6.6	1.23	552.0
7/3/2013 8:25	0.55	6.6	1.23	552.0
7/3/2013 8:26	0.55	6.6	1.23	552.0
7/3/2013 8:26	0.54	6.48	1.20	536.7
7/3/2013 8:27	0.55	6.6	1.23	552.0
7/3/2013 8:28	0.55	6.6	1.23	552.0
7/3/2013 8:28	0.55	6.6	1.23	552.0
7/3/2013 8:29	0.55	6.6	1.23	552.0
7/3/2013 8:30	0.55	6.6	1.23	552.0
7/3/2013 8:45	0.55	6.6	1.23	552.0

7/3/2013 9:00	0.55	6.6	1.23	552.0
7/3/2013 10:55	0.55	6.6	1.23	552.0
7/3/2013 10:57	0.55	6.6	1.23	552.0
7/3/2013 10:58	0.55	6.6	1.23	552.0
7/3/2013 11:09	0.55	6.6	1.23	552.0
7/3/2013 11:12	0.55	6.6	1.23	552.0
7/3/2013 11:14	0.55	6.6	1.23	552.0
7/3/2013 11:15	0.55	6.6	1.23	552.0
7/3/2013 11:16	0.55	6.6	1.23	552.0
7/3/2013 11:16	0.55	6.6	1.23	552.0
7/3/2013 11:31	0.55	6.6	1.23	552.0
7/3/2013 11:45	0.55	6.6	1.23	552.0
7/3/2013 12:00	0.54	6.48	1.20	536.7
7/3/2013 12:15	0.55	6.6	1.23	552.0
7/3/2013 12:32	0.54	6.48	1.20	536.7
7/3/2013 12:45	0.55	6.6	1.23	552.0
7/3/2013 13:04	0.55	6.6	1.23	552.0
7/3/2013 13:15	0.55	6.6	1.23	552.0
7/3/2013 13:49	0.55	6.6	1.23	552.0
7/4/2013 9:31	0.55	6.6	1.23	552.0
7/4/2013 9:31	0.55	6.6	1.23	552.0
7/4/2013 9:32	0.55	6.6	1.23	552.0
7/4/2013 9:33	0.55	6.6	1.23	552.0
7/4/2013 9:33	0.55	6.6	1.23	552.0
7/4/2013 9:34	0.55	6.6	1.23	552.0
7/4/2013 9:34	0.55	6.6	1.23	552.0
7/4/2013 9:35	0.55	6.6	1.23	552.0
7/4/2013 9:35	0.55	6.6	1.23	552.0
7/4/2013 9:36	0.55	6.6	1.23	552.0
7/4/2013 9:36	0.55	6.6	1.23	552.0
7/4/2013 9:37	0.55	6.6	1.23	552.0
7/4/2013 9:37	0.55	6.6	1.23	552.0
7/4/2013 9:38	0.55	6.6	1.23	552.0
7/4/2013 9:38	0.55	6.6	1.23	552.0
7/4/2013 9:39	0.55	6.6	1.23	552.0
7/4/2013 9:39	0.55	6.6	1.23	552.0
7/4/2013 9:41	0.55	6.6	1.23	552.0
7/4/2013 9:42	0.55	6.6	1.23	552.0
7/4/2013 9:43	0.55	6.6	1.23	552.0
7/4/2013 9:43	0.55	6.6	1.23	552.0
7/4/2013 9:44	0.55	6.6	1.23	552.0
7/4/2013 9:44	0.55	6.6	1.23	552.0
7/4/2013 9:45	0.55	6.6	1.23	552.0
7/4/2013 9:46	0.55	6.6	1.23	552.0
7/4/2013 9:58	0.55	6.6	1.23	552.0
7/4/2013 9:58	0.55	6.6	1.23	552.0
7/4/2013 10:00	0.55	6.6	1.23	552.0

7/4/2013 10:04	0.55	6.6	1.23	552.0
7/4/2013 10:05	0.55	6.6	1.23	552.0
7/4/2013 10:05	0.55	6.6	1.23	552.0
7/4/2013 10:06	0.55	6.6	1.23	552.0
7/4/2013 10:06	0.55	6.6	1.23	552.0
7/4/2013 10:07	0.55	6.6	1.23	552.0
7/4/2013 10:07	0.54	6.48	1.20	536.7
7/4/2013 10:07	0.55	6.6	1.23	552.0
7/4/2013 10:08	0.55	6.6	1.23	552.0
7/4/2013 10:09	0.55	6.6	1.23	552.0
7/4/2013 10:09	0.55	6.6	1.23	552.0
7/4/2013 10:10	0.55	6.6	1.23	552.0
7/4/2013 10:11	0.55	6.6	1.23	552.0
7/4/2013 10:11	0.55	6.6	1.23	552.0
7/4/2013 10:13	0.55	6.6	1.23	552.0
7/4/2013 10:15	0.55	6.6	1.23	552.0
7/4/2013 10:21	0.55	6.6	1.23	552.0
7/4/2013 10:22	0.55	6.6	1.23	552.0
7/4/2013 13:32	0.55	6.6	1.23	552.0
7/4/2013 13:34	0.55	6.6	1.23	552.0
7/5/2013 8:40	0.54	6.48	1.20	536.7
7/5/2013 8:41	0.55	6.6	1.23	552.0
7/5/2013 8:41	0.55	6.6	1.23	552.0
7/5/2013 8:42	0.55	6.6	1.23	552.0
7/5/2013 8:42	0.55	6.6	1.23	552.0
7/5/2013 8:43	0.55	6.6	1.23	552.0
7/5/2013 8:44	0.55	6.6	1.23	552.0
7/5/2013 8:45	0.55	6.6	1.23	552.0
7/5/2013 8:45	0.55	6.6	1.23	552.0
7/5/2013 8:46	0.55	6.6	1.23	552.0
7/5/2013 8:46	0.55	6.6	1.23	552.0
7/5/2013 8:47	0.54	6.48	1.20	536.7
7/5/2013 8:47	0.55	6.6	1.23	552.0
7/5/2013 8:48	0.55	6.6	1.23	552.0
7/5/2013 8:48	0.55	6.6	1.23	552.0
7/5/2013 8:49	0.55	6.6	1.23	552.0
7/5/2013 8:49	0.55	6.6	1.23	552.0
7/5/2013 8:50	0.55	6.6	1.23	552.0
7/5/2013 8:50	0.55	6.6	1.23	552.0
7/5/2013 8:51	0.55	6.6	1.23	552.0
7/5/2013 8:51	0.55	6.6	1.23	552.0
7/5/2013 8:52	0.55	6.6	1.23	552.0
7/5/2013 8:52	0.55	6.6	1.23	552.0
7/5/2013 8:53	0.55	6.6	1.23	552.0
7/5/2013 8:53	0.55	6.6	1.23	552.0
7/5/2013 8:54	0.55	6.6	1.23	552.0
7/5/2013 8:54	0.55	6.6	1.23	552.0

7/5/2013 8:55	0.55	6.6	1.23	552.0
7/5/2013 8:55	0.55	6.6	1.23	552.0
7/5/2013 8:56	0.55	6.6	1.23	552.0
7/5/2013 8:56	0.55	6.6	1.23	552.0
7/5/2013 8:57	0.55	6.6	1.23	552.0
7/5/2013 8:57	0.55	6.6	1.23	552.0
7/5/2013 8:58	0.54	6.48	1.20	536.7
7/5/2013 8:58	0.55	6.6	1.23	552.0
7/5/2013 8:59	0.55	6.6	1.23	552.0
7/5/2013 8:59	0.55	6.6	1.23	552.0
7/5/2013 9:00	0.55	6.6	1.23	552.0
7/5/2013 9:00	0.55	6.6	1.23	552.0
7/5/2013 9:01	0.55	6.6	1.23	552.0
7/5/2013 9:01	0.55	6.6	1.23	552.0
7/5/2013 9:02	0.55	6.6	1.23	552.0
7/5/2013 9:02	0.55	6.6	1.23	552.0
7/5/2013 9:03	0.55	6.6	1.23	552.0
7/5/2013 9:03	0.55	6.6	1.23	552.0
7/5/2013 9:04	0.55	6.6	1.23	552.0
7/5/2013 9:04	0.55	6.6	1.23	552.0
7/5/2013 9:05	0.55	6.6	1.23	552.0
7/5/2013 9:05	0.55	6.6	1.23	552.0
7/5/2013 9:06	0.55	6.6	1.23	552.0
7/5/2013 9:06	0.55	6.6	1.23	552.0
7/5/2013 9:07	0.55	6.6	1.23	552.0
7/5/2013 9:07	0.55	6.6	1.23	552.0
7/5/2013 9:08	0.55	6.6	1.23	552.0
7/5/2013 9:12	0.55	6.6	1.23	552.0
7/5/2013 9:13	0.55	6.6	1.23	552.0
7/5/2013 9:13	0.55	6.6	1.23	552.0
7/5/2013 9:14	0.55	6.6	1.23	552.0
7/5/2013 9:14	0.55	6.6	1.23	552.0
7/5/2013 9:15	0.55	6.6	1.23	552.0
7/5/2013 9:15	0.55	6.6	1.23	552.0
7/5/2013 9:16	0.55	6.6	1.23	552.0
7/5/2013 9:16	0.55	6.6	1.23	552.0
7/5/2013 9:17	0.55	6.6	1.23	552.0
7/5/2013 9:17	0.55	6.6	1.23	552.0
7/5/2013 9:18	0.55	6.6	1.23	552.0
7/5/2013 9:19	0.55	6.6	1.23	552.0
7/5/2013 9:20	0.55	6.6	1.23	552.0
7/5/2013 9:20	0.55	6.6	1.23	552.0
7/5/2013 9:21	0.55	6.6	1.23	552.0
7/5/2013 9:21	0.55	6.6	1.23	552.0
7/5/2013 10:25	0.55	6.6	1.23	552.0
7/5/2013 10:32	0.55	6.6	1.23	552.0
7/5/2013 10:37	0.55	6.6	1.23	552.0

7/5/2013 10:38	0.55	6.6	1.23	552.0
7/5/2013 10:38	0.55	6.6	1.23	552.0
7/5/2013 10:39	0.55	6.6	1.23	552.0
7/5/2013 10:40	0.55	6.6	1.23	552.0
7/5/2013 10:40	0.55	6.6	1.23	552.0
7/5/2013 10:41	0.55	6.6	1.23	552.0
7/5/2013 10:42	0.55	6.6	1.23	552.0
7/5/2013 10:43	0.55	6.6	1.23	552.0
7/5/2013 10:44	0.55	6.6	1.23	552.0
7/5/2013 10:45	0.55	6.6	1.23	552.0
7/5/2013 10:47	0.55	6.6	1.23	552.0
7/5/2013 10:48	0.55	6.6	1.23	552.0
7/5/2013 10:49	0.55	6.6	1.23	552.0
7/5/2013 10:49	0.55	6.6	1.23	552.0
7/5/2013 10:52	0.55	6.6	1.23	552.0
7/5/2013 10:53	0.55	6.6	1.23	552.0
7/5/2013 10:55	0.55	6.6	1.23	552.0
7/5/2013 10:56	0.55	6.6	1.23	552.0
7/5/2013 10:59	0.55	6.6	1.23	552.0
7/5/2013 11:09	0.55	6.6	1.23	552.0
7/5/2013 11:09	0.55	6.6	1.23	552.0
7/5/2013 11:10	0.55	6.6	1.23	552.0
7/5/2013 11:11	0.55	6.6	1.23	552.0
7/5/2013 11:13	0.55	6.6	1.23	552.0
7/5/2013 11:14	0.55	6.6	1.23	552.0
7/5/2013 11:15	0.55	6.6	1.23	552.0
7/5/2013 11:15	0.55	6.6	1.23	552.0
7/5/2013 11:17	0.55	6.6	1.23	552.0
7/5/2013 11:18	0.55	6.6	1.23	552.0
7/5/2013 11:23	0.55	6.6	1.23	552.0
7/5/2013 11:27	0.55	6.6	1.23	552.0
7/5/2013 11:41	0.54	6.48	1.20	536.7
7/5/2013 11:42	0.55	6.6	1.23	552.0
7/5/2013 11:53	0.55	6.6	1.23	552.0
7/5/2013 11:53	0.55	6.6	1.23	552.0
7/5/2013 11:55	0.55	6.6	1.23	552.0
7/5/2013 12:09	0.54	6.48	1.20	536.7
7/5/2013 13:16	0.55	6.6	1.23	552.0
7/5/2013 13:17	0.55	6.6	1.23	552.0
7/5/2013 13:18	0.55	6.6	1.23	552.0
7/5/2013 13:19	0.55	6.6	1.23	552.0
7/6/2013 8:31	0.55	6.6	1.23	552.0
7/6/2013 8:33	0.55	6.6	1.23	552.0
7/6/2013 8:34	0.55	6.6	1.23	552.0
7/6/2013 8:37	0.54	6.48	1.20	536.7
7/6/2013 8:37	0.55	6.6	1.23	552.0
7/6/2013 8:39	0.55	6.6	1.23	552.0

7/6/2013 8:39	0.55	6.6	1.23	552.0
7/6/2013 8:40	0.55	6.6	1.23	552.0
7/6/2013 8:40	0.54	6.48	1.20	536.7
7/6/2013 8:41	0.55	6.6	1.23	552.0
7/6/2013 8:48	0.55	6.6	1.23	552.0
7/6/2013 8:54	0.55	6.6	1.23	552.0
7/6/2013 8:55	0.55	6.6	1.23	552.0
7/6/2013 8:55	0.55	6.6	1.23	552.0
7/6/2013 8:56	0.55	6.6	1.23	552.0
7/6/2013 8:56	0.55	6.6	1.23	552.0
7/6/2013 8:57	0.55	6.6	1.23	552.0
7/6/2013 8:57	0.55	6.6	1.23	552.0
7/6/2013 8:58	0.55	6.6	1.23	552.0
7/6/2013 8:58	0.55	6.6	1.23	552.0
7/6/2013 8:59	0.55	6.6	1.23	552.0
7/6/2013 9:01	0.55	6.6	1.23	552.0
7/6/2013 9:02	0.55	6.6	1.23	552.0
7/6/2013 9:02	0.55	6.6	1.23	552.0
7/6/2013 9:03	0.55	6.6	1.23	552.0
7/6/2013 9:03	0.55	6.6	1.23	552.0
7/6/2013 9:04	0.55	6.6	1.23	552.0
7/6/2013 9:04	0.55	6.6	1.23	552.0
7/6/2013 9:05	0.55	6.6	1.23	552.0
7/6/2013 9:05	0.55	6.6	1.23	552.0
7/6/2013 9:06	0.55	6.6	1.23	552.0
7/6/2013 9:06	0.55	6.6	1.23	552.0
7/6/2013 9:07	0.55	6.6	1.23	552.0
7/6/2013 9:07	0.55	6.6	1.23	552.0
7/6/2013 9:08	0.55	6.6	1.23	552.0
7/6/2013 9:08	0.55	6.6	1.23	552.0
7/6/2013 9:09	0.55	6.6	1.23	552.0
7/6/2013 9:09	0.55	6.6	1.23	552.0
7/6/2013 9:10	0.55	6.6	1.23	552.0
7/6/2013 9:10	0.55	6.6	1.23	552.0
7/6/2013 9:11	0.55	6.6	1.23	552.0
7/6/2013 9:11	0.55	6.6	1.23	552.0
7/6/2013 9:12	0.55	6.6	1.23	552.0
7/6/2013 9:12	0.55	6.6	1.23	552.0
7/6/2013 9:13	0.55	6.6	1.23	552.0
7/6/2013 9:13	0.55	6.6	1.23	552.0
7/6/2013 9:14	0.55	6.6	1.23	552.0
7/6/2013 9:14	0.55	6.6	1.23	552.0
7/6/2013 9:15	0.55	6.6	1.23	552.0
7/6/2013 9:15	0.55	6.6	1.23	552.0
7/6/2013 9:16	0.55	6.6	1.23	552.0
7/6/2013 9:16	0.55	6.6	1.23	552.0
7/6/2013 9:16	0.55	6.6	1.23	552.0

7/6/2013 9:17	0.55	6.6	1.23	552.0
7/6/2013 9:17	0.55	6.6	1.23	552.0
7/6/2013 9:18	0.55	6.6	1.23	552.0
7/6/2013 9:18	0.55	6.6	1.23	552.0
7/6/2013 9:19	0.55	6.6	1.23	552.0
7/6/2013 9:19	0.55	6.6	1.23	552.0
7/6/2013 9:26	0.55	6.6	1.23	552.0
7/6/2013 9:29	0.55	6.6	1.23	552.0
7/6/2013 9:29	0.55	6.6	1.23	552.0
7/6/2013 9:30	0.55	6.6	1.23	552.0
7/6/2013 9:30	0.55	6.6	1.23	552.0
7/6/2013 9:31	0.55	6.6	1.23	552.0
7/6/2013 9:32	0.55	6.6	1.23	552.0
7/6/2013 11:22	0.55	6.6	1.23	552.0
7/6/2013 11:22	0.55	6.6	1.23	552.0
7/6/2013 11:23	0.55	6.6	1.23	552.0
7/6/2013 11:23	0.55	6.6	1.23	552.0
7/6/2013 11:25	0.55	6.6	1.23	552.0
7/6/2013 11:25	0.55	6.6	1.23	552.0
7/6/2013 11:28	0.55	6.6	1.23	552.0
7/6/2013 11:29	0.55	6.6	1.23	552.0
7/6/2013 11:29	0.55	6.6	1.23	552.0
7/6/2013 11:53	0.55	6.6	1.23	552.0
7/6/2013 11:54	0.55	6.6	1.23	552.0
7/6/2013 11:54	0.55	6.6	1.23	552.0
7/6/2013 11:55	0.55	6.6	1.23	552.0
7/6/2013 11:56	0.55	6.6	1.23	552.0
7/6/2013 11:56	0.55	6.6	1.23	552.0
7/6/2013 12:03	0.54	6.48	1.20	536.7
7/6/2013 12:03	0.55	6.6	1.23	552.0
7/6/2013 12:10	0.55	6.6	1.23	552.0
7/6/2013 12:10	0.55	6.6	1.23	552.0
7/6/2013 12:11	0.55	6.6	1.23	552.0
7/6/2013 12:18	0.55	6.6	1.23	552.0
7/6/2013 12:23	0.55	6.6	1.23	552.0
7/6/2013 12:24	0.55	6.6	1.23	552.0
7/6/2013 12:42	0.55	6.6	1.23	552.0
7/6/2013 12:57	0.55	6.6	1.23	552.0
7/6/2013 13:00	0.55	6.6	1.23	552.0
7/7/2013 8:45	0.55	6.6	1.23	552.0
7/7/2013 8:46	0.55	6.6	1.23	552.0
7/7/2013 8:47	0.55	6.6	1.23	552.0
7/7/2013 8:47	0.55	6.6	1.23	552.0
7/7/2013 8:51	0.55	6.6	1.23	552.0
7/7/2013 8:51	0.55	6.6	1.23	552.0
7/7/2013 8:56	0.55	6.6	1.23	552.0
7/7/2013 8:57	0.55	6.6	1.23	552.0

7/7/2013 8:57	0.55	6.6	1.23	552.0
7/7/2013 8:58	0.55	6.6	1.23	552.0
7/7/2013 8:58	0.55	6.6	1.23	552.0
7/7/2013 8:59	0.55	6.6	1.23	552.0
7/7/2013 8:59	0.55	6.6	1.23	552.0
7/7/2013 9:00	0.55	6.6	1.23	552.0
7/7/2013 9:00	0.55	6.6	1.23	552.0
7/7/2013 9:01	0.55	6.6	1.23	552.0
7/7/2013 9:01	0.55	6.6	1.23	552.0
7/7/2013 9:02	0.55	6.6	1.23	552.0
7/7/2013 9:02	0.55	6.6	1.23	552.0
7/7/2013 9:03	0.55	6.6	1.23	552.0
7/7/2013 9:04	0.55	6.6	1.23	552.0
7/7/2013 9:04	0.55	6.6	1.23	552.0
7/7/2013 9:04	0.55	6.6	1.23	552.0
7/7/2013 9:05	0.55	6.6	1.23	552.0
7/7/2013 9:05	0.55	6.6	1.23	552.0
7/7/2013 9:06	0.55	6.6	1.23	552.0
7/7/2013 9:06	0.55	6.6	1.23	552.0
7/7/2013 9:07	0.55	6.6	1.23	552.0
7/7/2013 9:07	0.55	6.6	1.23	552.0
7/7/2013 9:08	0.55	6.6	1.23	552.0
7/7/2013 9:08	0.55	6.6	1.23	552.0
7/7/2013 9:09	0.54	6.48	1.20	536.7
7/7/2013 9:09	0.55	6.6	1.23	552.0
7/7/2013 9:10	0.55	6.6	1.23	552.0
7/7/2013 9:10	0.55	6.6	1.23	552.0
7/7/2013 9:11	0.55	6.6	1.23	552.0
7/7/2013 9:11	0.55	6.6	1.23	552.0
7/7/2013 9:12	0.55	6.6	1.23	552.0
7/7/2013 9:12	0.55	6.6	1.23	552.0
7/7/2013 9:13	0.55	6.6	1.23	552.0
7/7/2013 9:13	0.55	6.6	1.23	552.0
7/7/2013 9:14	0.55	6.6	1.23	552.0
7/7/2013 9:14	0.55	6.6	1.23	552.0
7/7/2013 9:15	0.55	6.6	1.23	552.0
7/7/2013 9:15	0.55	6.6	1.23	552.0
7/7/2013 9:16	0.55	6.6	1.23	552.0
7/7/2013 9:16	0.55	6.6	1.23	552.0
7/7/2013 9:17	0.55	6.6	1.23	552.0
7/7/2013 9:17	0.55	6.6	1.23	552.0
7/7/2013 9:18	0.55	6.6	1.23	552.0
7/7/2013 9:18	0.55	6.6	1.23	552.0
7/7/2013 9:19	0.55	6.6	1.23	552.0
7/7/2013 9:19	0.55	6.6	1.23	552.0
7/7/2013 9:20	0.55	6.6	1.23	552.0
7/7/2013 9:20	0.55	6.6	1.23	552.0

7/7/2013 9:21	0.55	6.6	1.23	552.0
7/7/2013 9:21	0.55	6.6	1.23	552.0
7/7/2013 9:22	0.55	6.6	1.23	552.0
7/7/2013 9:22	0.55	6.6	1.23	552.0
7/7/2013 9:23	0.55	6.6	1.23	552.0
7/7/2013 9:23	0.55	6.6	1.23	552.0
7/7/2013 9:24	0.55	6.6	1.23	552.0
7/7/2013 9:24	0.55	6.6	1.23	552.0
7/7/2013 9:25	0.55	6.6	1.23	552.0
7/7/2013 9:25	0.55	6.6	1.23	552.0
7/7/2013 9:26	0.55	6.6	1.23	552.0
7/7/2013 9:26	0.55	6.6	1.23	552.0
7/7/2013 9:27	0.55	6.6	1.23	552.0
7/7/2013 9:27	0.55	6.6	1.23	552.0
7/7/2013 9:28	0.55	6.6	1.23	552.0
7/7/2013 9:28	0.55	6.6	1.23	552.0
7/7/2013 9:29	0.55	6.6	1.23	552.0
7/7/2013 9:29	0.55	6.6	1.23	552.0
7/7/2013 9:30	0.55	6.6	1.23	552.0
7/7/2013 9:31	0.55	6.6	1.23	552.0
7/7/2013 9:31	0.55	6.6	1.23	552.0
7/7/2013 9:32	0.55	6.6	1.23	552.0
7/7/2013 9:32	0.55	6.6	1.23	552.0
7/7/2013 9:45	0.55	6.6	1.23	552.0
7/7/2013 9:45	0.55	6.6	1.23	552.0
7/7/2013 9:46	0.55	6.6	1.23	552.0
7/7/2013 9:46	0.55	6.6	1.23	552.0
7/7/2013 9:47	0.55	6.6	1.23	552.0
7/7/2013 9:59	0.55	6.6	1.23	552.0
7/7/2013 10:24	0.55	6.6	1.23	552.0
7/7/2013 10:24	0.55	6.6	1.23	552.0
7/7/2013 10:25	0.55	6.6	1.23	552.0
7/7/2013 10:25	0.55	6.6	1.23	552.0
7/7/2013 10:35	0.55	6.6	1.23	552.0
7/7/2013 10:36	0.55	6.6	1.23	552.0
7/7/2013 10:37	0.55	6.6	1.23	552.0
7/7/2013 10:37	0.55	6.6	1.23	552.0
7/7/2013 10:50	0.55	6.6	1.23	552.0
7/7/2013 10:52	0.55	6.6	1.23	552.0
7/7/2013 10:54	0.55	6.6	1.23	552.0
7/7/2013 10:56	0.55	6.6	1.23	552.0
7/7/2013 10:56	0.55	6.6	1.23	552.0
7/7/2013 10:57	0.55	6.6	1.23	552.0
7/7/2013 10:58	0.55	6.6	1.23	552.0
7/7/2013 10:59	0.55	6.6	1.23	552.0
7/7/2013 10:59	0.55	6.6	1.23	552.0
7/7/2013 11:02	0.55	6.6	1.23	552.0

7/7/2013 11:03	0.55	6.6	1.23	552.0
7/7/2013 11:04	0.55	6.6	1.23	552.0
7/7/2013 11:07	0.55	6.6	1.23	552.0
7/7/2013 11:07	0.55	6.6	1.23	552.0
7/7/2013 11:08	0.55	6.6	1.23	552.0
7/7/2013 11:08	0.55	6.6	1.23	552.0
7/7/2013 11:09	0.55	6.6	1.23	552.0
7/7/2013 11:14	0.55	6.6	1.23	552.0
7/7/2013 11:15	0.55	6.6	1.23	552.0
7/7/2013 11:15	0.55	6.6	1.23	552.0
7/7/2013 11:16	0.54	6.48	1.20	536.7
7/7/2013 11:16	0.55	6.6	1.23	552.0
7/7/2013 11:17	0.55	6.6	1.23	552.0
7/7/2013 11:17	0.55	6.6	1.23	552.0
7/7/2013 11:21	0.55	6.6	1.23	552.0
7/7/2013 11:21	0.55	6.6	1.23	552.0
7/7/2013 11:22	0.55	6.6	1.23	552.0
7/7/2013 11:23	0.55	6.6	1.23	552.0
7/7/2013 12:15	0.55	6.6	1.23	552.0
7/7/2013 12:16	0.55	6.6	1.23	552.0
7/7/2013 12:34	0.55	6.6	1.23	552.0
7/7/2013 12:35	0.55	6.6	1.23	552.0
7/7/2013 12:35	0.55	6.6	1.23	552.0
7/7/2013 14:12	0.55	6.6	1.23	552.0
7/7/2013 14:19	0.55	6.6	1.23	552.0
7/8/2013 8:39	0.55	6.6	1.23	552.0
7/8/2013 8:40	0.55	6.6	1.23	552.0
7/8/2013 8:41	0.55	6.6	1.23	552.0
7/8/2013 8:41	0.55	6.6	1.23	552.0
7/8/2013 8:42	0.55	6.6	1.23	552.0
7/8/2013 8:43	0.55	6.6	1.23	552.0
7/8/2013 8:44	0.55	6.6	1.23	552.0
7/8/2013 8:46	0.55	6.6	1.23	552.0
7/8/2013 8:48	0.55	6.6	1.23	552.0
7/8/2013 8:48	0.55	6.6	1.23	552.0
7/8/2013 8:49	0.55	6.6	1.23	552.0
7/8/2013 8:58	0.55	6.6	1.23	552.0
7/8/2013 8:59	0.55	6.6	1.23	552.0
7/8/2013 9:00	0.55	6.6	1.23	552.0
7/8/2013 9:01	0.55	6.6	1.23	552.0
7/8/2013 9:01	0.55	6.6	1.23	552.0
7/8/2013 9:03	0.55	6.6	1.23	552.0
7/8/2013 9:03	0.55	6.6	1.23	552.0
7/8/2013 9:04	0.55	6.6	1.23	552.0
7/8/2013 9:04	0.55	6.6	1.23	552.0
7/8/2013 9:05	0.55	6.6	1.23	552.0
7/8/2013 9:06	0.55	6.6	1.23	552.0

7/8/2013 9:06	0.55	6.6	1.23	552.0
7/8/2013 9:07	0.55	6.6	1.23	552.0
7/8/2013 9:07	0.55	6.6	1.23	552.0
7/8/2013 9:08	0.55	6.6	1.23	552.0
7/8/2013 9:08	0.55	6.6	1.23	552.0
7/8/2013 9:09	0.55	6.6	1.23	552.0
7/8/2013 9:09	0.55	6.6	1.23	552.0
7/8/2013 9:10	0.55	6.6	1.23	552.0
7/8/2013 9:10	0.55	6.6	1.23	552.0
7/8/2013 9:11	0.54	6.48	1.20	536.7
7/8/2013 9:11	0.55	6.6	1.23	552.0
7/8/2013 9:12	0.55	6.6	1.23	552.0
7/8/2013 9:12	0.55	6.6	1.23	552.0
7/8/2013 9:13	0.55	6.6	1.23	552.0
7/8/2013 9:13	0.55	6.6	1.23	552.0
7/8/2013 9:14	0.55	6.6	1.23	552.0
7/8/2013 9:14	0.54	6.48	1.20	536.7
7/8/2013 9:15	0.55	6.6	1.23	552.0
7/8/2013 9:15	0.55	6.6	1.23	552.0
7/8/2013 9:16	0.55	6.6	1.23	552.0
7/8/2013 9:16	0.55	6.6	1.23	552.0
7/8/2013 9:17	0.55	6.6	1.23	552.0
7/8/2013 9:17	0.55	6.6	1.23	552.0
7/8/2013 9:18	0.55	6.6	1.23	552.0
7/8/2013 9:18	0.55	6.6	1.23	552.0
7/8/2013 9:19	0.55	6.6	1.23	552.0
7/8/2013 9:19	0.55	6.6	1.23	552.0
7/8/2013 10:25	0.55	6.6	1.23	552.0
7/8/2013 10:56	0.55	6.6	1.23	552.0
7/8/2013 11:03	0.55	6.6	1.23	552.0
7/8/2013 11:04	0.55	6.6	1.23	552.0
7/8/2013 11:04	0.55	6.6	1.23	552.0
7/8/2013 11:06	0.55	6.6	1.23	552.0
7/8/2013 11:06	0.55	6.6	1.23	552.0
7/8/2013 11:07	0.55	6.6	1.23	552.0
7/8/2013 11:08	0.55	6.6	1.23	552.0
7/8/2013 11:08	0.55	6.6	1.23	552.0
7/8/2013 11:09	0.55	6.6	1.23	552.0
7/8/2013 11:10	0.55	6.6	1.23	552.0
7/8/2013 11:10	0.55	6.6	1.23	552.0
7/8/2013 11:11	0.55	6.6	1.23	552.0
7/8/2013 11:11	0.55	6.6	1.23	552.0
7/8/2013 11:12	0.54	6.48	1.20	536.7
7/8/2013 11:12	0.55	6.6	1.23	552.0
7/8/2013 11:13	0.55	6.6	1.23	552.0
7/8/2013 11:14	0.55	6.6	1.23	552.0
7/8/2013 11:15	0.55	6.6	1.23	552.0

7/8/2013 11:15	0.55	6.6	1.23	552.0
7/8/2013 11:16	0.54	6.48	1.20	536.7
7/8/2013 11:17	0.55	6.6	1.23	552.0
7/8/2013 11:19	0.55	6.6	1.23	552.0
7/8/2013 11:20	0.55	6.6	1.23	552.0
7/8/2013 11:20	0.55	6.6	1.23	552.0
7/8/2013 11:21	0.55	6.6	1.23	552.0
7/8/2013 11:23	0.55	6.6	1.23	552.0
7/8/2013 11:25	0.55	6.6	1.23	552.0
7/8/2013 11:25	0.55	6.6	1.23	552.0
7/8/2013 11:27	0.55	6.6	1.23	552.0
7/8/2013 11:30	0.55	6.6	1.23	552.0
7/8/2013 11:30	0.55	6.6	1.23	552.0
7/8/2013 11:33	0.55	6.6	1.23	552.0
7/8/2013 11:39	0.55	6.6	1.23	552.0
7/8/2013 11:40	0.54	6.48	1.20	536.7
7/8/2013 11:40	0.55	6.6	1.23	552.0
7/8/2013 11:41	0.55	6.6	1.23	552.0
7/8/2013 11:41	0.55	6.6	1.23	552.0
7/8/2013 11:42	0.55	6.6	1.23	552.0
7/8/2013 11:44	0.55	6.6	1.23	552.0
7/8/2013 11:48	0.55	6.6	1.23	552.0
7/8/2013 12:02	0.55	6.6	1.23	552.0
7/8/2013 12:15	0.55	6.6	1.23	552.0
7/8/2013 12:37	0.55	6.6	1.23	552.0
7/8/2013 12:55	0.55	6.6	1.23	552.0
7/8/2013 13:00	0.55	6.6	1.23	552.0
7/8/2013 13:32	0.55	6.6	1.23	552.0
7/8/2013 13:34	0.54	6.48	1.20	536.7
7/8/2013 13:55	0.55	6.6	1.23	552.0
7/8/2013 14:06	0.55	6.6	1.23	552.0
7/9/2013 8:58	0.55	6.6	1.23	552.0
7/9/2013 8:59	0.55	6.6	1.23	552.0
7/9/2013 9:00	0.55	6.6	1.23	552.0
7/9/2013 9:00	0.55	6.6	1.23	552.0
7/9/2013 9:01	0.55	6.6	1.23	552.0
7/9/2013 9:01	0.55	6.6	1.23	552.0
7/9/2013 9:02	0.55	6.6	1.23	552.0
7/9/2013 9:03	0.55	6.6	1.23	552.0
7/9/2013 9:03	0.55	6.6	1.23	552.0
7/9/2013 9:04	0.55	6.6	1.23	552.0
7/9/2013 9:04	0.55	6.6	1.23	552.0
7/9/2013 9:05	0.55	6.6	1.23	552.0
7/9/2013 9:06	0.55	6.6	1.23	552.0
7/9/2013 9:06	0.54	6.48	1.20	536.7
7/9/2013 9:07	0.55	6.6	1.23	552.0
7/9/2013 9:07	0.55	6.6	1.23	552.0

7/9/2013 9:08	0.55	6.6	1.23	552.0
7/9/2013 9:08	0.55	6.6	1.23	552.0
7/9/2013 9:09	0.55	6.6	1.23	552.0
7/9/2013 9:09	0.55	6.6	1.23	552.0
7/9/2013 9:10	0.55	6.6	1.23	552.0
7/9/2013 9:10	0.54	6.48	1.20	536.7
7/9/2013 9:11	0.55	6.6	1.23	552.0
7/9/2013 9:11	0.55	6.6	1.23	552.0
7/9/2013 9:12	0.55	6.6	1.23	552.0
7/9/2013 9:12	0.55	6.6	1.23	552.0
7/9/2013 9:13	0.55	6.6	1.23	552.0
7/9/2013 9:13	0.54	6.48	1.20	536.7
7/9/2013 9:14	0.55	6.6	1.23	552.0
7/9/2013 9:14	0.55	6.6	1.23	552.0
7/9/2013 9:15	0.55	6.6	1.23	552.0
7/9/2013 9:15	0.55	6.6	1.23	552.0
7/9/2013 9:16	0.55	6.6	1.23	552.0
7/9/2013 9:16	0.55	6.6	1.23	552.0
7/9/2013 9:17	0.55	6.6	1.23	552.0
7/9/2013 9:17	0.55	6.6	1.23	552.0
7/9/2013 9:18	0.55	6.6	1.23	552.0
7/9/2013 9:18	0.55	6.6	1.23	552.0
7/9/2013 9:19	0.55	6.6	1.23	552.0
7/9/2013 9:19	0.55	6.6	1.23	552.0
7/9/2013 9:20	0.55	6.6	1.23	552.0
7/9/2013 9:20	0.55	6.6	1.23	552.0
7/9/2013 11:03	0.55	6.6	1.23	552.0
7/9/2013 11:03	0.55	6.6	1.23	552.0
7/9/2013 11:57	0.55	6.6	1.23	552.0
7/9/2013 11:58	0.55	6.6	1.23	552.0
7/9/2013 12:44	0.55	6.6	1.23	552.0
7/9/2013 12:46	0.55	6.6	1.23	552.0
7/10/2013 9:04	0.55	6.6	1.23	552.0
7/10/2013 9:05	0.55	6.6	1.23	552.0
7/10/2013 9:09	0.55	6.6	1.23	552.0
7/10/2013 9:10	0.55	6.6	1.23	552.0
7/10/2013 9:13	0.55	6.6	1.23	552.0
7/10/2013 9:13	0.55	6.6	1.23	552.0
7/10/2013 9:14	0.55	6.6	1.23	552.0
7/10/2013 9:15	0.55	6.6	1.23	552.0
7/10/2013 9:16	0.55	6.6	1.23	552.0
7/10/2013 9:16	0.54	6.48	1.20	536.7
7/10/2013 9:17	0.55	6.6	1.23	552.0
7/10/2013 9:18	0.55	6.6	1.23	552.0
7/10/2013 9:18	0.55	6.6	1.23	552.0
7/10/2013 9:19	0.55	6.6	1.23	552.0
7/10/2013 9:20	0.55	6.6	1.23	552.0

7/10/2013 11:40	0.55	6.6	1.23	552.0
7/10/2013 11:41	0.55	6.6	1.23	552.0
7/10/2013 12:21	0.55	6.6	1.23	552.0
7/10/2013 12:24	0.55	6.6	1.23	552.0
7/10/2013 12:35	0.54	6.48	1.20	536.7
7/10/2013 12:36	0.55	6.6	1.23	552.0
7/10/2013 12:37	0.55	6.6	1.23	552.0
7/10/2013 12:38	0.55	6.6	1.23	552.0
7/10/2013 12:43	0.55	6.6	1.23	552.0
7/10/2013 12:43	0.55	6.6	1.23	552.0
7/10/2013 12:44	0.55	6.6	1.23	552.0
7/10/2013 12:44	0.55	6.6	1.23	552.0
7/10/2013 12:45	0.55	6.6	1.23	552.0
7/10/2013 12:48	0.54	6.48	1.20	536.7
7/10/2013 12:48	0.54	6.48	1.20	536.7
7/10/2013 12:49	0.55	6.6	1.23	552.0
7/10/2013 12:49	0.55	6.6	1.23	552.0
7/10/2013 12:50	0.55	6.6	1.23	552.0
7/10/2013 12:50	0.55	6.6	1.23	552.0
7/10/2013 12:51	0.55	6.6	1.23	552.0
7/10/2013 12:51	0.55	6.6	1.23	552.0
7/10/2013 12:52	0.55	6.6	1.23	552.0
7/10/2013 12:52	0.55	6.6	1.23	552.0
7/10/2013 12:53	0.55	6.6	1.23	552.0
7/10/2013 12:54	0.55	6.6	1.23	552.0
7/10/2013 12:54	0.55	6.6	1.23	552.0
7/10/2013 13:31	0.55	6.6	1.23	552.0
7/10/2013 13:32	0.55	6.6	1.23	552.0
7/10/2013 13:32	0.55	6.6	1.23	552.0
7/10/2013 13:33	0.55	6.6	1.23	552.0
7/10/2013 13:33	0.55	6.6	1.23	552.0
7/10/2013 13:34	0.55	6.6	1.23	552.0
7/10/2013 13:35	0.55	6.6	1.23	552.0
7/10/2013 13:35	0.55	6.6	1.23	552.0
7/10/2013 13:36	0.55	6.6	1.23	552.0
7/10/2013 13:57	0.55	6.6	1.23	552.0
7/10/2013 13:58	0.55	6.6	1.23	552.0
7/10/2013 13:58	0.54	6.48	1.20	536.7
7/10/2013 13:59	0.55	6.6	1.23	552.0
7/10/2013 13:59	0.55	6.6	1.23	552.0
7/10/2013 14:00	0.55	6.6	1.23	552.0
7/10/2013 14:02	0.55	6.6	1.23	552.0
7/10/2013 15:13	0.55	6.6	1.23	552.0
7/10/2013 15:13	0.55	6.6	1.23	552.0
7/10/2013 15:15	0.55	6.6	1.23	552.0
7/10/2013 15:30	0.55	6.6	1.23	552.0
7/10/2013 15:45	0.55	6.6	1.23	552.0

7/10/2013 16:00	0.55	6.6	1.23	552.0
7/10/2013 16:15	0.54	6.48	1.20	536.7
7/10/2013 16:30	0.55	6.6	1.23	552.0
7/10/2013 16:45	0.55	6.6	1.23	552.0
7/10/2013 17:00	0.55	6.6	1.23	552.0
7/10/2013 17:15	0.55	6.6	1.23	552.0
7/10/2013 17:30	0.55	6.6	1.23	552.0
7/10/2013 17:45	0.54	6.48	1.20	536.7
7/10/2013 18:00	0.55	6.6	1.23	552.0
7/11/2013 7:15	0.55	6.6	1.23	552.0
7/11/2013 7:16	0.55	6.6	1.23	552.0
7/11/2013 7:30	0.55	6.6	1.23	552.0
7/11/2013 7:45	0.55	6.6	1.23	552.0
7/11/2013 8:00	0.55	6.6	1.23	552.0
7/11/2013 8:15	0.55	6.6	1.23	552.0
7/11/2013 8:30	0.55	6.6	1.23	552.0
7/11/2013 9:09	0.55	6.6	1.23	552.0
7/11/2013 9:09	0.55	6.6	1.23	552.0
7/11/2013 9:15	0.55	6.6	1.23	552.0
7/11/2013 9:30	0.55	6.6	1.23	552.0
7/11/2013 9:45	0.55	6.6	1.23	552.0
7/11/2013 10:00	0.55	6.6	1.23	552.0
7/11/2013 10:15	0.54	6.48	1.20	536.7
7/11/2013 10:30	0.55	6.6	1.23	552.0
7/11/2013 10:45	0.54	6.48	1.20	536.7
7/11/2013 11:00	0.54	6.48	1.20	536.7
7/11/2013 11:15	0.55	6.6	1.23	552.0
7/11/2013 11:30	0.54	6.48	1.20	536.7
7/11/2013 11:45	0.54	6.48	1.20	536.7
7/11/2013 12:00	0.55	6.6	1.23	552.0
7/11/2013 12:15	0.55	6.6	1.23	552.0
7/11/2013 12:30	0.55	6.6	1.23	552.0
7/11/2013 12:45	0.55	6.6	1.23	552.0
7/11/2013 13:00	0.55	6.6	1.23	552.0
7/11/2013 13:15	0.55	6.6	1.23	552.0
7/11/2013 13:30	0.55	6.6	1.23	552.0
7/11/2013 13:45	0.55	6.6	1.23	552.0
7/11/2013 14:00	0.55	6.6	1.23	552.0
7/11/2013 14:15	0.55	6.6	1.23	552.0
7/11/2013 14:30	0.54	6.48	1.20	536.7
7/11/2013 14:45	0.55	6.6	1.23	552.0
7/11/2013 15:49	0.55	6.6	1.23	552.0
7/11/2013 15:49	0.55	6.6	1.23	552.0
7/11/2013 15:50	0.55	6.6	1.23	552.0
7/11/2013 15:51	0.55	6.6	1.23	552.0
7/11/2013 16:00	0.55	6.6	1.23	552.0
7/11/2013 16:15	0.54	6.48	1.20	536.7

7/11/2013 16:30	0.54	6.48	1.20	536.7
7/11/2013 16:50	0.55	6.6	1.23	552.0
7/11/2013 17:00	0.55	6.6	1.23	552.0
7/12/2013 7:30	0.55	6.6	1.23	552.0
7/12/2013 7:31	0.55	6.6	1.23	552.0
7/12/2013 7:45	0.55	6.6	1.23	552.0
7/12/2013 8:00	0.55	6.6	1.23	552.0
7/12/2013 8:15	0.54	6.48	1.20	536.7
7/12/2013 8:30	0.55	6.6	1.23	552.0
7/12/2013 8:45	0.54	6.48	1.20	536.7
7/12/2013 9:00	0.54	6.48	1.20	536.7
7/12/2013 9:15	0.55	6.6	1.23	552.0
7/12/2013 9:30	0.54	6.48	1.20	536.7
7/12/2013 9:45	0.55	6.6	1.23	552.0
7/12/2013 10:00	0.55	6.6	1.23	552.0
7/12/2013 10:15	0.55	6.6	1.23	552.0
7/12/2013 10:30	0.55	6.6	1.23	552.0
7/12/2013 10:45	0.55	6.6	1.23	552.0
7/12/2013 11:00	0.55	6.6	1.23	552.0
7/12/2013 11:15	0.55	6.6	1.23	552.0
7/12/2013 11:30	0.55	6.6	1.23	552.0
7/12/2013 11:45	0.55	6.6	1.23	552.0
7/12/2013 12:00	0.54	6.48	1.20	536.7
7/12/2013 12:15	0.55	6.6	1.23	552.0
7/12/2013 12:30	0.55	6.6	1.23	552.0
7/12/2013 12:45	0.55	6.6	1.23	552.0
7/12/2013 13:00	0.55	6.6	1.23	552.0
7/12/2013 13:15	0.54	6.48	1.20	536.7
7/12/2013 13:30	0.54	6.48	1.20	536.7
7/12/2013 13:45	0.55	6.6	1.23	552.0
7/12/2013 14:00	0.55	6.6	1.23	552.0
7/12/2013 14:15	0.55	6.6	1.23	552.0
7/12/2013 14:30	0.54	6.48	1.20	536.7
7/12/2013 14:45	0.55	6.6	1.23	552.0
7/12/2013 15:00	0.55	6.6	1.23	552.0
7/12/2013 15:15	0.55	6.6	1.23	552.0
7/12/2013 15:30	0.55	6.6	1.23	552.0
7/12/2013 15:49	0.55	6.6	1.23	552.0
7/12/2013 16:00	0.55	6.6	1.23	552.0
7/12/2013 16:15	0.55	6.6	1.23	552.0
7/12/2013 16:30	0.55	6.6	1.23	552.0
7/12/2013 16:45	0.55	6.6	1.23	552.0
7/12/2013 17:25	0.55	6.6	1.23	552.0
7/12/2013 17:26	0.55	6.6	1.23	552.0
7/12/2013 17:30	0.55	6.6	1.23	552.0
7/12/2013 17:45	0.55	6.6	1.23	552.0
7/13/2013 6:48	0.55	6.6	1.23	552.0

7/13/2013 7:00	0.55	6.6	1.23	552.0
7/13/2013 7:22	0.55	6.6	1.23	552.0
7/13/2013 7:30	0.55	6.6	1.23	552.0
7/13/2013 7:45	0.55	6.6	1.23	552.0
7/13/2013 8:00	0.55	6.6	1.23	552.0
7/13/2013 8:15	0.55	6.6	1.23	552.0
7/13/2013 8:30	0.55	6.6	1.23	552.0
7/13/2013 8:45	0.55	6.6	1.23	552.0
7/13/2013 9:00	0.55	6.6	1.23	552.0
7/13/2013 9:15	0.55	6.6	1.23	552.0
7/13/2013 9:30	0.55	6.6	1.23	552.0
7/13/2013 9:45	0.55	6.6	1.23	552.0
7/13/2013 10:00	0.55	6.6	1.23	552.0
7/13/2013 10:15	0.55	6.6	1.23	552.0
7/13/2013 10:30	0.55	6.6	1.23	552.0
7/13/2013 10:45	0.55	6.6	1.23	552.0
7/13/2013 11:00	0.55	6.6	1.23	552.0
7/13/2013 11:15	0.55	6.6	1.23	552.0
7/13/2013 11:30	0.55	6.6	1.23	552.0
7/13/2013 11:45	0.55	6.6	1.23	552.0
7/13/2013 12:00	0.55	6.6	1.23	552.0
7/13/2013 12:15	0.55	6.6	1.23	552.0
7/13/2013 12:30	0.55	6.6	1.23	552.0
7/13/2013 12:45	0.54	6.48	1.20	536.7
7/13/2013 13:00	0.54	6.48	1.20	536.7
7/13/2013 13:15	0.54	6.48	1.20	536.7
7/13/2013 13:30	0.55	6.6	1.23	552.0
7/13/2013 13:45	0.55	6.6	1.23	552.0
7/13/2013 14:00	0.55	6.6	1.23	552.0
7/13/2013 14:15	0.55	6.6	1.23	552.0
7/13/2013 14:30	0.55	6.6	1.23	552.0
7/13/2013 14:45	0.55	6.6	1.23	552.0
7/13/2013 15:00	0.55	6.6	1.23	552.0
7/13/2013 15:15	0.55	6.6	1.23	552.0
7/13/2013 15:30	0.55	6.6	1.23	552.0
7/13/2013 15:45	0.55	6.6	1.23	552.0
7/13/2013 16:00	0.55	6.6	1.23	552.0
7/13/2013 16:15	0.55	6.6	1.23	552.0
7/13/2013 16:30	0.55	6.6	1.23	552.0
7/13/2013 17:22	0.55	6.6	1.23	552.0
7/13/2013 17:22	0.55	6.6	1.23	552.0
7/13/2013 17:23	0.55	6.6	1.23	552.0
7/13/2013 17:30	0.54	6.48	1.20	536.7
7/13/2013 17:45	0.54	6.48	1.20	536.7
7/13/2013 18:00	0.55	6.6	1.23	552.0
7/14/2013 7:45	0.55	6.6	1.23	552.0
7/14/2013 8:00	0.55	6.6	1.23	552.0

7/14/2013 8:15	0.55	6.6	1.23	552.0
7/14/2013 8:30	0.55	6.6	1.23	552.0
7/14/2013 8:45	0.55	6.6	1.23	552.0
7/14/2013 9:00	0.55	6.6	1.23	552.0
7/14/2013 9:15	0.54	6.48	1.20	536.7
7/14/2013 9:30	0.55	6.6	1.23	552.0
7/14/2013 9:45	0.54	6.48	1.20	536.7
7/14/2013 10:00	0.55	6.6	1.23	552.0
7/14/2013 10:15	0.55	6.6	1.23	552.0
7/14/2013 10:30	0.55	6.6	1.23	552.0
7/14/2013 10:45	0.55	6.6	1.23	552.0
7/14/2013 11:00	0.55	6.6	1.23	552.0
7/14/2013 11:15	0.54	6.48	1.20	536.7
7/14/2013 11:30	0.54	6.48	1.20	536.7
7/14/2013 11:45	0.54	6.48	1.20	536.7
7/14/2013 12:00	0.55	6.6	1.23	552.0
7/14/2013 12:15	0.55	6.6	1.23	552.0
7/14/2013 12:30	0.54	6.48	1.20	536.7
7/14/2013 12:45	0.55	6.6	1.23	552.0
7/14/2013 13:00	0.55	6.6	1.23	552.0
7/14/2013 13:15	0.55	6.6	1.23	552.0
7/14/2013 13:30	0.55	6.6	1.23	552.0
7/14/2013 13:45	0.55	6.6	1.23	552.0
7/14/2013 14:00	0.55	6.6	1.23	552.0
7/14/2013 14:49	0.55	6.6	1.23	552.0
7/14/2013 14:50	0.55	6.6	1.23	552.0
7/14/2013 14:50	0.55	6.6	1.23	552.0
7/14/2013 15:00	0.55	6.6	1.23	552.0
7/14/2013 15:15	0.55	6.6	1.23	552.0
7/14/2013 15:39	0.55	6.6	1.23	552.0
7/14/2013 15:45	0.55	6.6	1.23	552.0
7/14/2013 16:00	0.54	6.48	1.20	536.7
7/14/2013 16:15	0.54	6.48	1.20	536.7
7/14/2013 16:30	0.55	6.6	1.23	552.0
7/14/2013 16:45	0.55	6.6	1.23	552.0
7/14/2013 17:00	0.55	6.6	1.23	552.0
7/14/2013 17:15	0.55	6.6	1.23	552.0
7/14/2013 17:30	0.55	6.6	1.23	552.0
7/14/2013 17:45	0.55	6.6	1.23	552.0
7/15/2013 8:03	0.55	6.6	1.23	552.0
7/15/2013 8:15	0.55	6.6	1.23	552.0
7/15/2013 8:30	0.55	6.6	1.23	552.0
7/15/2013 8:45	0.54	6.48	1.20	536.7
7/15/2013 9:00	0.55	6.6	1.23	552.0
7/15/2013 9:15	0.55	6.6	1.23	552.0
7/15/2013 9:30	0.55	6.6	1.23	552.0
7/15/2013 9:45	0.54	6.48	1.20	536.7

7/15/2013 10:00	0.55	6.6	1.23	552.0
7/15/2013 10:15	0.55	6.6	1.23	552.0
7/15/2013 10:30	0.55	6.6	1.23	552.0
7/15/2013 10:45	0.55	6.6	1.23	552.0
7/15/2013 11:00	0.55	6.6	1.23	552.0
7/15/2013 11:15	0.55	6.6	1.23	552.0
7/15/2013 11:30	0.55	6.6	1.23	552.0
7/15/2013 11:45	0.55	6.6	1.23	552.0
7/15/2013 12:00	0.55	6.6	1.23	552.0
7/15/2013 12:15	0.54	6.48	1.20	536.7
7/15/2013 12:30	0.54	6.48	1.20	536.7
7/15/2013 12:45	0.55	6.6	1.23	552.0
7/15/2013 13:00	0.55	6.6	1.23	552.0
7/15/2013 13:15	0.55	6.6	1.23	552.0
7/15/2013 13:30	0.55	6.6	1.23	552.0
7/15/2013 13:45	0.54	6.48	1.20	536.7
7/15/2013 15:30	0.55	6.6	1.23	552.0
7/15/2013 15:45	0.55	6.6	1.23	552.0
7/15/2013 16:00	0.55	6.6	1.23	552.0
7/15/2013 16:15	0.55	6.6	1.23	552.0
7/15/2013 16:30	0.55	6.6	1.23	552.0
7/16/2013 7:15	0.55	6.6	1.23	552.0
7/16/2013 7:30	0.55	6.6	1.23	552.0
7/16/2013 7:45	0.55	6.6	1.23	552.0
7/16/2013 8:00	0.54	6.48	1.20	536.7
7/16/2013 8:15	0.55	6.6	1.23	552.0
7/16/2013 8:30	0.55	6.6	1.23	552.0
7/16/2013 9:08	0.55	6.6	1.23	552.0
7/16/2013 9:08	0.55	6.6	1.23	552.0
7/16/2013 9:15	0.55	6.6	1.23	552.0
7/16/2013 9:30	0.54	6.48	1.20	536.7
7/16/2013 9:45	0.55	6.6	1.23	552.0
7/16/2013 10:00	0.55	6.6	1.23	552.0
7/16/2013 10:15	0.55	6.6	1.23	552.0
7/16/2013 10:30	0.55	6.6	1.23	552.0
7/16/2013 10:45	0.54	6.48	1.20	536.7
7/16/2013 11:00	0.55	6.6	1.23	552.0
7/16/2013 11:15	0.55	6.6	1.23	552.0
7/16/2013 11:30	0.55	6.6	1.23	552.0
7/16/2013 11:45	0.55	6.6	1.23	552.0
7/16/2013 12:00	0.55	6.6	1.23	552.0
7/16/2013 12:15	0.55	6.6	1.23	552.0
7/16/2013 12:30	0.55	6.6	1.23	552.0
7/16/2013 12:45	0.55	6.6	1.23	552.0
7/16/2013 13:00	0.55	6.6	1.23	552.0
7/16/2013 13:15	0.55	6.6	1.23	552.0
7/16/2013 13:30	0.55	6.6	1.23	552.0

7/16/2013 13:45	0.55	6.6	1.23	552.0
7/16/2013 14:00	0.55	6.6	1.23	552.0
7/16/2013 14:15	0.54	6.48	1.20	536.7
7/16/2013 14:30	0.55	6.6	1.23	552.0
7/16/2013 15:00	0.55	6.6	1.23	552.0
7/16/2013 15:15	0.55	6.6	1.23	552.0
7/16/2013 15:30	0.54	6.48	1.20	536.7
7/16/2013 15:45	0.55	6.6	1.23	552.0
7/16/2013 16:00	0.55	6.6	1.23	552.0
7/16/2013 16:15	0.55	6.6	1.23	552.0
7/16/2013 16:30	0.55	6.6	1.23	552.0
7/16/2013 16:45	0.55	6.6	1.23	552.0
7/16/2013 17:00	0.55	6.6	1.23	552.0
7/17/2013 6:35	0.55	6.6	1.23	552.0
7/17/2013 6:36	0.55	6.6	1.23	552.0
7/17/2013 6:45	0.55	6.6	1.23	552.0
7/17/2013 7:00	0.54	6.48	1.20	536.7
7/17/2013 7:15	0.55	6.6	1.23	552.0
7/17/2013 7:30	0.55	6.6	1.23	552.0
7/17/2013 7:45	0.55	6.6	1.23	552.0
7/17/2013 8:00	0.55	6.6	1.23	552.0
7/17/2013 8:15	0.55	6.6	1.23	552.0
7/17/2013 8:30	0.55	6.6	1.23	552.0
7/17/2013 8:45	0.55	6.6	1.23	552.0
7/17/2013 9:00	0.55	6.6	1.23	552.0
7/17/2013 9:15	0.55	6.6	1.23	552.0
7/17/2013 9:30	0.54	6.48	1.20	536.7
7/17/2013 9:45	0.55	6.6	1.23	552.0
7/17/2013 10:00	0.55	6.6	1.23	552.0
7/17/2013 10:15	0.55	6.6	1.23	552.0
7/17/2013 10:30	0.54	6.48	1.20	536.7
7/17/2013 10:45	0.55	6.6	1.23	552.0
7/17/2013 11:00	0.55	6.6	1.23	552.0
7/17/2013 11:15	0.54	6.48	1.20	536.7
7/17/2013 11:30	0.54	6.48	1.20	536.7
7/17/2013 11:45	0.55	6.6	1.23	552.0
7/17/2013 12:00	0.55	6.6	1.23	552.0
7/17/2013 12:15	0.55	6.6	1.23	552.0
7/17/2013 12:30	0.55	6.6	1.23	552.0
7/17/2013 12:45	0.54	6.48	1.20	536.7
7/17/2013 13:00	0.54	6.48	1.20	536.7
7/17/2013 13:15	0.55	6.6	1.23	552.0
7/17/2013 13:35	0.55	6.6	1.23	552.0
7/17/2013 13:45	0.54	6.48	1.20	536.7
7/17/2013 14:00	0.54	6.48	1.20	536.7
7/17/2013 14:15	0.55	6.6	1.23	552.0
7/17/2013 14:35	0.55	6.6	1.23	552.0

7/17/2013 14:45	0.55	6.6	1.23	552.0
7/17/2013 15:00	0.55	6.6	1.23	552.0
7/17/2013 15:15	0.55	6.6	1.23	552.0
7/18/2013 7:45	0.55	6.6	1.23	552.0
7/18/2013 8:00	0.55	6.6	1.23	552.0
7/18/2013 8:15	0.55	6.6	1.23	552.0
7/18/2013 8:30	0.55	6.6	1.23	552.0
7/18/2013 8:45	0.55	6.6	1.23	552.0
7/18/2013 9:00	0.54	6.48	1.20	536.7
7/18/2013 9:15	0.54	6.48	1.20	536.7
7/18/2013 9:30	0.55	6.6	1.23	552.0
7/18/2013 9:45	0.55	6.6	1.23	552.0
7/18/2013 10:00	0.55	6.6	1.23	552.0
7/18/2013 10:15	0.55	6.6	1.23	552.0
7/18/2013 10:30	0.55	6.6	1.23	552.0
7/18/2013 10:45	0.55	6.6	1.23	552.0
7/18/2013 11:00	0.55	6.6	1.23	552.0
7/18/2013 11:15	0.54	6.48	1.20	536.7
7/18/2013 11:30	0.55	6.6	1.23	552.0
7/18/2013 11:45	0.55	6.6	1.23	552.0
7/18/2013 12:00	0.55	6.6	1.23	552.0
7/18/2013 12:15	0.55	6.6	1.23	552.0
7/18/2013 15:57	0.55	6.6	1.23	552.0
7/18/2013 15:58	0.55	6.6	1.23	552.0
7/18/2013 15:59	0.55	6.6	1.23	552.0
7/18/2013 15:59	0.55	6.6	1.23	552.0
7/18/2013 16:00	0.55	6.6	1.23	552.0
7/18/2013 16:00	0.55	6.6	1.23	552.0
7/18/2013 16:01	0.55	6.6	1.23	552.0
7/18/2013 16:02	0.55	6.6	1.23	552.0
7/18/2013 16:02	0.55	6.6	1.23	552.0
7/18/2013 16:15	0.54	6.48	1.20	536.7
7/18/2013 16:30	0.55	6.6	1.23	552.0
7/18/2013 16:45	0.55	6.6	1.23	552.0
7/18/2013 17:00	0.55	6.6	1.23	552.0
7/18/2013 17:15	0.55	6.6	1.23	552.0
7/18/2013 17:30	0.55	6.6	1.23	552.0
7/18/2013 17:45	0.55	6.6	1.23	552.0
7/18/2013 18:00	0.55	6.6	1.23	552.0
7/19/2013 6:38	0.55	6.6	1.23	552.0
7/19/2013 6:45	0.55	6.6	1.23	552.0
7/19/2013 7:00	0.55	6.6	1.23	552.0
7/19/2013 7:15	0.55	6.6	1.23	552.0
7/19/2013 7:35	0.55	6.6	1.23	552.0
7/19/2013 7:45	0.55	6.6	1.23	552.0
7/19/2013 8:00	0.55	6.6	1.23	552.0
7/19/2013 8:15	0.55	6.6	1.23	552.0

7/19/2013 8:32	0.55	6.6	1.23	552.0
7/19/2013 8:45	0.54	6.48	1.20	536.7
7/19/2013 9:00	0.55	6.6	1.23	552.0
7/19/2013 9:15	0.55	6.6	1.23	552.0
7/19/2013 9:30	0.55	6.6	1.23	552.0
7/19/2013 9:45	0.55	6.6	1.23	552.0
7/19/2013 10:00	0.55	6.6	1.23	552.0
7/19/2013 10:15	0.55	6.6	1.23	552.0
7/19/2013 10:30	0.54	6.48	1.20	536.7
7/19/2013 10:45	0.55	6.6	1.23	552.0
7/19/2013 11:00	0.55	6.6	1.23	552.0
7/19/2013 11:15	0.54	6.48	1.20	536.7
7/19/2013 11:30	0.55	6.6	1.23	552.0
7/19/2013 11:45	0.54	6.48	1.20	536.7
7/19/2013 12:00	0.55	6.6	1.23	552.0
7/19/2013 12:15	0.55	6.6	1.23	552.0
7/19/2013 12:30	0.55	6.6	1.23	552.0
7/19/2013 14:33	0.55	6.6	1.23	552.0
7/19/2013 14:35	0.55	6.6	1.23	552.0
7/19/2013 14:36	0.55	6.6	1.23	552.0
7/19/2013 14:37	0.55	6.6	1.23	552.0
7/19/2013 14:37	0.55	6.6	1.23	552.0
7/19/2013 14:38	0.55	6.6	1.23	552.0
7/19/2013 14:38	0.55	6.6	1.23	552.0
7/19/2013 14:39	0.55	6.6	1.23	552.0
7/19/2013 14:45	0.55	6.6	1.23	552.0
7/19/2013 15:00	0.55	6.6	1.23	552.0
7/19/2013 15:15	0.55	6.6	1.23	552.0
7/19/2013 15:30	0.55	6.6	1.23	552.0
7/19/2013 15:45	0.55	6.6	1.23	552.0
7/19/2013 16:00	0.55	6.6	1.23	552.0
7/19/2013 16:15	0.55	6.6	1.23	552.0
7/19/2013 16:30	0.55	6.6	1.23	552.0
7/19/2013 16:45	0.55	6.6	1.23	552.0
7/19/2013 17:00	0.55	6.6	1.23	552.0
7/19/2013 17:15	0.55	6.6	1.23	552.0
7/19/2013 17:30	0.54	6.48	1.20	536.7
7/19/2013 17:45	0.54	6.48	1.20	536.7
7/19/2013 18:00	0.55	6.6	1.23	552.0
7/20/2013 7:45	0.55	6.6	1.23	552.0
7/20/2013 8:00	0.55	6.6	1.23	552.0
7/20/2013 8:15	0.54	6.48	1.20	536.7
7/20/2013 8:30	0.55	6.6	1.23	552.0
7/20/2013 8:45	0.55	6.6	1.23	552.0
7/20/2013 9:00	0.55	6.6	1.23	552.0
7/20/2013 9:15	0.55	6.6	1.23	552.0
7/20/2013 9:30	0.55	6.6	1.23	552.0

7/20/2013 9:45	0.55	6.6	1.23	552.0
7/20/2013 10:00	0.55	6.6	1.23	552.0
7/20/2013 10:15	0.55	6.6	1.23	552.0
7/20/2013 10:30	0.55	6.6	1.23	552.0
7/20/2013 10:45	0.55	6.6	1.23	552.0
7/20/2013 11:00	0.54	6.48	1.20	536.7
7/20/2013 11:15	0.55	6.6	1.23	552.0
7/20/2013 11:30	0.55	6.6	1.23	552.0
7/20/2013 11:45	0.55	6.6	1.23	552.0
7/20/2013 12:00	0.55	6.6	1.23	552.0
7/20/2013 12:15	0.55	6.6	1.23	552.0
7/20/2013 12:30	0.55	6.6	1.23	552.0
7/20/2013 12:45	0.54	6.48	1.20	536.7
7/20/2013 13:00	0.55	6.6	1.23	552.0
7/20/2013 13:15	0.55	6.6	1.23	552.0
7/20/2013 13:30	0.55	6.6	1.23	552.0
7/20/2013 13:45	0.55	6.6	1.23	552.0
7/20/2013 14:00	0.55	6.6	1.23	552.0
7/20/2013 14:15	0.55	6.6	1.23	552.0
7/20/2013 14:30	0.54	6.48	1.20	536.7
7/20/2013 14:45	0.55	6.6	1.23	552.0
7/20/2013 15:00	0.55	6.6	1.23	552.0
7/20/2013 15:15	0.55	6.6	1.23	552.0
7/20/2013 15:30	0.55	6.6	1.23	552.0
7/20/2013 15:45	0.55	6.6	1.23	552.0
7/20/2013 16:00	0.55	6.6	1.23	552.0
7/20/2013 16:15	0.54	6.48	1.20	536.7
7/20/2013 16:30	0.55	6.6	1.23	552.0
7/20/2013 16:45	0.55	6.6	1.23	552.0
7/20/2013 17:00	0.55	6.6	1.23	552.0
7/20/2013 17:15	0.54	6.48	1.20	536.7
7/20/2013 17:30	0.55	6.6	1.23	552.0
7/20/2013 17:45	0.54	6.48	1.20	536.7
7/20/2013 18:00	0.55	6.6	1.23	552.0
7/21/2013 6:22	0.55	6.6	1.23	552.0
7/21/2013 6:30	0.55	6.6	1.23	552.0
7/21/2013 6:45	0.55	6.6	1.23	552.0
7/21/2013 7:00	0.54	6.48	1.20	536.7
7/21/2013 7:15	0.54	6.48	1.20	536.7
7/21/2013 7:30	0.55	6.6	1.23	552.0
7/21/2013 7:45	0.55	6.6	1.23	552.0
7/21/2013 8:00	0.55	6.6	1.23	552.0
7/21/2013 8:15	0.55	6.6	1.23	552.0
7/21/2013 8:30	0.55	6.6	1.23	552.0
7/21/2013 8:45	0.55	6.6	1.23	552.0
7/21/2013 9:00	0.55	6.6	1.23	552.0
7/21/2013 9:15	0.55	6.6	1.23	552.0

7/21/2013 9:30	0.55	6.6	1.23	552.0
7/21/2013 9:45	0.55	6.6	1.23	552.0
7/21/2013 10:00	0.55	6.6	1.23	552.0
7/21/2013 10:15	0.55	6.6	1.23	552.0
7/21/2013 10:30	0.55	6.6	1.23	552.0
7/21/2013 10:45	0.54	6.48	1.20	536.7
7/21/2013 11:00	0.55	6.6	1.23	552.0
7/21/2013 11:15	0.55	6.6	1.23	552.0
7/21/2013 11:30	0.55	6.6	1.23	552.0
7/21/2013 11:45	0.54	6.48	1.20	536.7
7/21/2013 12:00	0.55	6.6	1.23	552.0
7/21/2013 12:15	0.55	6.6	1.23	552.0
7/21/2013 12:30	0.55	6.6	1.23	552.0
7/21/2013 13:52	0.55	6.6	1.23	552.0
7/21/2013 13:53	0.55	6.6	1.23	552.0
7/21/2013 13:54	0.55	6.6	1.23	552.0
7/21/2013 13:55	0.55	6.6	1.23	552.0
7/21/2013 13:56	0.55	6.6	1.23	552.0
7/21/2013 14:00	0.55	6.6	1.23	552.0
7/21/2013 14:15	0.55	6.6	1.23	552.0
7/21/2013 14:30	0.55	6.6	1.23	552.0
7/21/2013 14:51	0.55	6.6	1.23	552.0
7/21/2013 15:00	0.55	6.6	1.23	552.0
7/21/2013 15:15	0.55	6.6	1.23	552.0
7/21/2013 15:30	0.55	6.6	1.23	552.0
7/21/2013 15:45	0.55	6.6	1.23	552.0
7/21/2013 16:00	0.55	6.6	1.23	552.0
7/21/2013 16:15	0.55	6.6	1.23	552.0
7/21/2013 16:30	0.55	6.6	1.23	552.0
7/21/2013 17:22	0.55	6.6	1.23	552.0
7/21/2013 17:23	0.55	6.6	1.23	552.0
7/21/2013 17:24	0.55	6.6	1.23	552.0
7/21/2013 17:30	0.54	6.48	1.20	536.7
7/21/2013 17:45	0.54	6.48	1.20	536.7
7/21/2013 18:00	0.55	6.6	1.23	552.0
7/22/2013 7:45	0.55	6.6	1.23	552.0
7/22/2013 8:00	0.54	6.48	1.20	536.7
7/22/2013 8:15	0.55	6.6	1.23	552.0
7/22/2013 8:30	0.55	6.6	1.23	552.0
7/22/2013 8:45	0.55	6.6	1.23	552.0
7/22/2013 9:00	0.55	6.6	1.23	552.0
7/22/2013 9:15	0.55	6.6	1.23	552.0
7/22/2013 9:30	0.55	6.6	1.23	552.0
7/22/2013 9:45	0.54	6.48	1.20	536.7
7/22/2013 10:00	0.55	6.6	1.23	552.0
7/22/2013 10:15	0.54	6.48	1.20	536.7
7/22/2013 10:30	0.55	6.6	1.23	552.0

7/22/2013 10:45	0.55	6.6	1.23	552.0
7/22/2013 11:00	0.55	6.6	1.23	552.0
7/22/2013 11:15	0.54	6.48	1.20	536.7
7/22/2013 11:30	0.55	6.6	1.23	552.0
7/22/2013 11:45	0.55	6.6	1.23	552.0
7/22/2013 12:00	0.55	6.6	1.23	552.0
7/22/2013 12:35	0.55	6.6	1.23	552.0
7/22/2013 12:35	0.55	6.6	1.23	552.0
7/22/2013 12:45	0.55	6.6	1.23	552.0
7/22/2013 13:00	0.55	6.6	1.23	552.0
7/22/2013 13:15	0.55	6.6	1.23	552.0
7/22/2013 13:30	0.55	6.6	1.23	552.0
7/22/2013 13:45	0.55	6.6	1.23	552.0
7/22/2013 14:00	0.55	6.6	1.23	552.0
7/22/2013 14:15	0.55	6.6	1.23	552.0
7/22/2013 14:30	0.55	6.6	1.23	552.0
7/22/2013 15:01	0.55	6.6	1.23	552.0
7/22/2013 15:01	0.55	6.6	1.23	552.0
7/22/2013 15:15	0.55	6.6	1.23	552.0
7/22/2013 15:30	0.54	6.48	1.20	536.7
7/22/2013 15:45	0.54	6.48	1.20	536.7
7/22/2013 16:00	0.55	6.6	1.23	552.0
7/22/2013 16:15	0.55	6.6	1.23	552.0
7/22/2013 16:30	0.55	6.6	1.23	552.0
7/22/2013 16:45	0.54	6.48	1.20	536.7
7/22/2013 17:00	0.54	6.48	1.20	536.7
7/22/2013 17:15	0.55	6.6	1.23	552.0
7/22/2013 17:30	0.55	6.6	1.23	552.0
7/23/2013 7:00	0.54	6.48	1.20	536.7
7/23/2013 7:15	0.54	6.48	1.20	536.7
7/23/2013 7:30	0.55	6.6	1.23	552.0
7/23/2013 7:45	0.55	6.6	1.23	552.0
7/23/2013 8:00	0.54	6.48	1.20	536.7
7/23/2013 8:15	0.54	6.48	1.20	536.7
7/23/2013 8:30	0.55	6.6	1.23	552.0
7/23/2013 8:45	0.54	6.48	1.20	536.7
7/23/2013 9:00	0.55	6.6	1.23	552.0
7/23/2013 9:15	0.54	6.48	1.20	536.7
7/23/2013 9:30	0.54	6.48	1.20	536.7
7/23/2013 9:45	0.55	6.6	1.23	552.0
7/23/2013 10:00	0.55	6.6	1.23	552.0
7/23/2013 10:15	0.55	6.6	1.23	552.0
7/23/2013 10:30	0.55	6.6	1.23	552.0
7/23/2013 10:45	0.55	6.6	1.23	552.0
7/23/2013 11:00	0.54	6.48	1.20	536.7
7/23/2013 11:15	0.55	6.6	1.23	552.0
7/23/2013 11:30	0.55	6.6	1.23	552.0

7/23/2013 11:45	0.54	6.48	1.20	536.7
7/23/2013 12:00	0.55	6.6	1.23	552.0
7/23/2013 12:15	0.55	6.6	1.23	552.0
7/23/2013 12:30	0.55	6.6	1.23	552.0
7/23/2013 12:45	0.54	6.48	1.20	536.7
7/23/2013 13:00	0.55	6.6	1.23	552.0
7/23/2013 13:15	0.55	6.6	1.23	552.0
7/23/2013 13:30	0.55	6.6	1.23	552.0
7/23/2013 13:45	0.55	6.6	1.23	552.0
7/23/2013 14:00	0.55	6.6	1.23	552.0
7/23/2013 14:15	0.55	6.6	1.23	552.0
7/23/2013 14:30	0.55	6.6	1.23	552.0
7/23/2013 14:45	0.55	6.6	1.23	552.0
7/23/2013 15:04	0.55	6.6	1.23	552.0
7/23/2013 15:15	0.55	6.6	1.23	552.0
7/23/2013 16:31	0.55	6.6	1.23	552.0
7/23/2013 16:48	0.55	6.6	1.23	552.0
7/23/2013 16:49	0.55	6.6	1.23	552.0
7/23/2013 16:50	0.55	6.6	1.23	552.0
7/23/2013 16:50	0.55	6.6	1.23	552.0
7/23/2013 16:51	0.55	6.6	1.23	552.0
7/23/2013 17:00	0.55	6.6	1.23	552.0
7/24/2013 8:25	0.55	6.6	1.23	552.0
7/24/2013 8:26	0.55	6.6	1.23	552.0
7/24/2013 8:27	0.55	6.6	1.23	552.0
7/24/2013 8:30	0.55	6.6	1.23	552.0
7/24/2013 8:45	0.55	6.6	1.23	552.0
7/24/2013 9:00	0.55	6.6	1.23	552.0
7/24/2013 9:15	0.55	6.6	1.23	552.0
7/24/2013 9:30	0.55	6.6	1.23	552.0
7/24/2013 9:45	0.55	6.6	1.23	552.0
7/24/2013 10:00	0.55	6.6	1.23	552.0
7/24/2013 10:15	0.54	6.48	1.20	536.7
7/24/2013 10:30	0.55	6.6	1.23	552.0
7/24/2013 10:45	0.55	6.6	1.23	552.0
7/24/2013 11:00	0.54	6.48	1.20	536.7
7/24/2013 11:15	0.55	6.6	1.23	552.0
7/24/2013 11:30	0.55	6.6	1.23	552.0
7/24/2013 11:45	0.55	6.6	1.23	552.0
7/24/2013 12:00	0.55	6.6	1.23	552.0
7/24/2013 12:15	0.55	6.6	1.23	552.0
7/24/2013 12:30	0.55	6.6	1.23	552.0
7/24/2013 12:45	0.55	6.6	1.23	552.0
7/24/2013 13:00	0.55	6.6	1.23	552.0
7/24/2013 13:15	0.54	6.48	1.20	536.7
7/24/2013 13:30	0.55	6.6	1.23	552.0
7/24/2013 13:45	0.55	6.6	1.23	552.0

7/24/2013 14:00	0.55	6.6	1.23	552.0
7/24/2013 14:15	0.55	6.6	1.23	552.0
7/24/2013 14:30	0.55	6.6	1.23	552.0
7/24/2013 14:45	0.55	6.6	1.23	552.0
7/24/2013 15:00	0.55	6.6	1.23	552.0
7/24/2013 15:15	0.54	6.48	1.20	536.7
7/24/2013 15:30	0.55	6.6	1.23	552.0
7/24/2013 15:45	0.55	6.6	1.23	552.0
7/24/2013 16:00	0.55	6.6	1.23	552.0
7/24/2013 16:15	0.54	6.48	1.20	536.7
7/24/2013 16:30	0.55	6.6	1.23	552.0
7/24/2013 16:45	0.55	6.6	1.23	552.0
7/24/2013 17:00	0.55	6.6	1.23	552.0
7/24/2013 17:15	0.55	6.6	1.23	552.0
7/24/2013 17:30	0.54	6.48	1.20	536.7
7/25/2013 7:45	0.55	6.6	1.23	552.0
7/25/2013 8:00	0.55	6.6	1.23	552.0
7/25/2013 8:15	0.55	6.6	1.23	552.0
7/25/2013 8:30	0.55	6.6	1.23	552.0
7/25/2013 8:45	0.55	6.6	1.23	552.0
7/25/2013 9:00	0.55	6.6	1.23	552.0
7/25/2013 9:15	0.55	6.6	1.23	552.0
7/25/2013 9:30	0.55	6.6	1.23	552.0
7/25/2013 9:45	0.55	6.6	1.23	552.0
7/25/2013 10:00	0.55	6.6	1.23	552.0
7/25/2013 10:15	0.55	6.6	1.23	552.0
7/25/2013 10:30	0.55	6.6	1.23	552.0
7/25/2013 10:45	0.54	6.48	1.20	536.7
7/25/2013 11:00	0.55	6.6	1.23	552.0
7/25/2013 11:15	0.54	6.48	1.20	536.7
7/25/2013 11:30	0.55	6.6	1.23	552.0
7/25/2013 11:45	0.55	6.6	1.23	552.0
7/25/2013 12:00	0.54	6.48	1.20	536.7
7/25/2013 12:15	0.55	6.6	1.23	552.0
7/25/2013 12:30	0.55	6.6	1.23	552.0
7/25/2013 12:45	0.55	6.6	1.23	552.0
7/25/2013 13:00	0.55	6.6	1.23	552.0
7/25/2013 13:15	0.55	6.6	1.23	552.0
7/25/2013 13:30	0.54	6.48	1.20	536.7
7/25/2013 13:45	0.55	6.6	1.23	552.0
7/25/2013 14:00	0.54	6.48	1.20	536.7
7/25/2013 14:15	0.55	6.6	1.23	552.0
7/25/2013 14:30	0.55	6.6	1.23	552.0
7/25/2013 14:45	0.54	6.48	1.20	536.7
7/25/2013 15:00	0.55	6.6	1.23	552.0
7/25/2013 15:15	0.55	6.6	1.23	552.0
7/25/2013 15:30	0.55	6.6	1.23	552.0

7/25/2013 15:45	0.55	6.6	1.23	552.0
7/25/2013 16:00	0.55	6.6	1.23	552.0
7/25/2013 16:15	0.55	6.6	1.23	552.0
7/25/2013 16:30	0.55	6.6	1.23	552.0
7/25/2013 16:45	0.55	6.6	1.23	552.0
7/25/2013 17:00	0.55	6.6	1.23	552.0
7/25/2013 17:15	0.55	6.6	1.23	552.0
7/25/2013 17:30	0.55	6.6	1.23	552.0
7/26/2013 7:38	0.55	6.6	1.23	552.0
7/26/2013 7:39	0.55	6.6	1.23	552.0
7/26/2013 7:39	0.55	6.6	1.23	552.0
7/26/2013 7:40	0.54	6.48	1.20	536.7
7/26/2013 7:40	0.55	6.6	1.23	552.0
7/26/2013 7:41	0.55	6.6	1.23	552.0
7/26/2013 7:45	0.55	6.6	1.23	552.0
7/26/2013 8:00	0.55	6.6	1.23	552.0
7/26/2013 8:15	0.55	6.6	1.23	552.0
7/26/2013 8:30	0.55	6.6	1.23	552.0
7/26/2013 8:45	0.55	6.6	1.23	552.0
7/26/2013 9:00	0.55	6.6	1.23	552.0
7/26/2013 9:15	0.55	6.6	1.23	552.0
7/26/2013 9:30	0.55	6.6	1.23	552.0
7/26/2013 9:45	0.55	6.6	1.23	552.0
7/26/2013 10:00	0.55	6.6	1.23	552.0
7/26/2013 10:15	0.54	6.48	1.20	536.7
7/26/2013 10:30	0.54	6.48	1.20	536.7
7/26/2013 10:45	0.55	6.6	1.23	552.0
7/26/2013 11:00	0.55	6.6	1.23	552.0
7/26/2013 11:15	0.55	6.6	1.23	552.0
7/26/2013 11:45	0.55	6.6	1.23	552.0
7/26/2013 12:00	0.55	6.6	1.23	552.0
7/26/2013 12:15	0.55	6.6	1.23	552.0
7/26/2013 12:30	0.55	6.6	1.23	552.0
7/26/2013 12:45	0.54	6.48	1.20	536.7
7/26/2013 13:00	0.55	6.6	1.23	552.0
7/26/2013 13:15	0.55	6.6	1.23	552.0
7/26/2013 13:30	0.54	6.48	1.20	536.7
7/26/2013 13:45	0.55	6.6	1.23	552.0
7/26/2013 14:00	0.55	6.6	1.23	552.0
7/26/2013 14:15	0.55	6.6	1.23	552.0
7/26/2013 14:30	0.55	6.6	1.23	552.0
7/26/2013 14:45	0.55	6.6	1.23	552.0
7/26/2013 15:00	0.55	6.6	1.23	552.0
7/26/2013 15:15	0.55	6.6	1.23	552.0
7/26/2013 15:30	0.55	6.6	1.23	552.0
7/26/2013 15:45	0.55	6.6	1.23	552.0
7/26/2013 16:00	0.55	6.6	1.23	552.0

7/26/2013 16:15	0.55	6.6	1.23	552.0
7/26/2013 16:30	0.55	6.6	1.23	552.0
7/26/2013 16:45	0.54	6.48	1.20	536.7
7/26/2013 17:00	0.55	6.6	1.23	552.0
7/27/2013 7:45	0.55	6.6	1.23	552.0
7/27/2013 8:00	0.55	6.6	1.23	552.0
7/27/2013 8:15	0.55	6.6	1.23	552.0
7/27/2013 8:30	0.55	6.6	1.23	552.0
7/27/2013 8:45	0.54	6.48	1.20	536.7
7/27/2013 9:00	0.55	6.6	1.23	552.0
7/27/2013 9:15	0.55	6.6	1.23	552.0
7/27/2013 9:30	0.55	6.6	1.23	552.0
7/27/2013 9:45	0.55	6.6	1.23	552.0
7/27/2013 10:00	0.55	6.6	1.23	552.0
7/27/2013 10:15	0.55	6.6	1.23	552.0
7/27/2013 10:30	0.55	6.6	1.23	552.0
7/27/2013 10:45	0.55	6.6	1.23	552.0
7/27/2013 11:00	0.55	6.6	1.23	552.0
7/27/2013 11:15	0.55	6.6	1.23	552.0
7/27/2013 11:30	0.55	6.6	1.23	552.0
7/27/2013 11:45	0.54	6.48	1.20	536.7
7/27/2013 12:00	0.55	6.6	1.23	552.0
7/27/2013 12:15	0.54	6.48	1.20	536.7
7/27/2013 12:30	0.55	6.6	1.23	552.0
7/27/2013 12:45	0.54	6.48	1.20	536.7
7/27/2013 13:00	0.55	6.6	1.23	552.0
7/27/2013 13:15	0.55	6.6	1.23	552.0
7/27/2013 13:30	0.55	6.6	1.23	552.0
7/27/2013 13:45	0.55	6.6	1.23	552.0
7/27/2013 14:00	0.55	6.6	1.23	552.0
7/27/2013 14:15	0.55	6.6	1.23	552.0
7/27/2013 14:30	0.55	6.6	1.23	552.0
7/27/2013 14:45	0.54	6.48	1.20	536.7
7/27/2013 15:00	0.55	6.6	1.23	552.0
7/27/2013 15:15	0.55	6.6	1.23	552.0
7/27/2013 15:30	0.55	6.6	1.23	552.0
7/27/2013 15:45	0.55	6.6	1.23	552.0
7/27/2013 16:00	0.55	6.6	1.23	552.0
7/27/2013 16:15	0.54	6.48	1.20	536.7
7/27/2013 16:30	0.55	6.6	1.23	552.0
7/27/2013 16:45	0.55	6.6	1.23	552.0
7/28/2013 8:01	0.55	6.6	1.23	552.0
7/28/2013 8:15	0.54	6.48	1.20	536.7
7/28/2013 9:06	0.55	6.6	1.23	552.0
7/28/2013 9:19	0.55	6.6	1.23	552.0
7/28/2013 9:20	0.55	6.6	1.23	552.0
7/28/2013 9:20	0.55	6.6	1.23	552.0

7/28/2013 9:31	0.55	6.6	1.23	552.0
7/28/2013 9:45	0.55	6.6	1.23	552.0
7/28/2013 10:00	0.55	6.6	1.23	552.0
7/28/2013 10:15	0.55	6.6	1.23	552.0
7/28/2013 10:30	0.55	6.6	1.23	552.0
7/28/2013 10:45	0.55	6.6	1.23	552.0
7/28/2013 11:00	0.54	6.48	1.20	536.7
7/28/2013 11:15	0.55	6.6	1.23	552.0
7/28/2013 11:30	0.55	6.6	1.23	552.0
7/28/2013 11:45	0.55	6.6	1.23	552.0
7/28/2013 12:00	0.55	6.6	1.23	552.0
7/28/2013 12:15	0.55	6.6	1.23	552.0
7/28/2013 12:30	0.55	6.6	1.23	552.0
7/28/2013 12:45	0.55	6.6	1.23	552.0
7/28/2013 13:00	0.54	6.48	1.20	536.7
7/28/2013 13:15	0.55	6.6	1.23	552.0
7/28/2013 13:30	0.55	6.6	1.23	552.0
7/28/2013 14:11	0.55	6.6	1.23	552.0
7/28/2013 14:11	0.54	6.48	1.20	536.7
7/28/2013 14:15	0.55	6.6	1.23	552.0
7/28/2013 14:30	0.55	6.6	1.23	552.0
7/28/2013 14:45	0.55	6.6	1.23	552.0
7/28/2013 15:00	0.55	6.6	1.23	552.0
7/28/2013 15:15	0.55	6.6	1.23	552.0
7/28/2013 15:30	0.55	6.6	1.23	552.0
7/28/2013 15:53	0.55	6.6	1.23	552.0
7/28/2013 16:00	0.55	6.6	1.23	552.0
7/28/2013 16:15	0.55	6.6	1.23	552.0
7/28/2013 16:34	0.54	6.48	1.20	536.7
7/28/2013 16:45	0.55	6.6	1.23	552.0
7/28/2013 17:00	0.55	6.6	1.23	552.0
7/28/2013 17:15	0.55	6.6	1.23	552.0
7/28/2013 17:30	0.55	6.6	1.23	552.0
7/29/2013 6:48	0.55	6.6	1.23	552.0
7/29/2013 7:00	0.55	6.6	1.23	552.0
7/29/2013 7:15	0.55	6.6	1.23	552.0
7/29/2013 7:30	0.54	6.48	1.20	536.7
7/29/2013 7:45	0.55	6.6	1.23	552.0
7/29/2013 8:00	0.55	6.6	1.23	552.0
7/29/2013 8:15	0.55	6.6	1.23	552.0
7/29/2013 8:30	0.54	6.48	1.20	536.7
7/29/2013 8:45	0.55	6.6	1.23	552.0
7/29/2013 9:00	0.55	6.6	1.23	552.0
7/29/2013 9:15	0.55	6.6	1.23	552.0
7/29/2013 9:30	0.55	6.6	1.23	552.0
7/29/2013 9:45	0.55	6.6	1.23	552.0
7/29/2013 10:00	0.55	6.6	1.23	552.0

7/29/2013 10:15	0.55	6.6	1.23	552.0
7/29/2013 10:30	0.55	6.6	1.23	552.0
7/29/2013 10:45	0.54	6.48	1.20	536.7
7/29/2013 11:00	0.55	6.6	1.23	552.0
7/29/2013 11:15	0.55	6.6	1.23	552.0
7/29/2013 11:30	0.55	6.6	1.23	552.0
7/29/2013 11:45	0.55	6.6	1.23	552.0
7/29/2013 12:00	0.55	6.6	1.23	552.0
7/29/2013 12:15	0.55	6.6	1.23	552.0
7/29/2013 12:30	0.54	6.48	1.20	536.7
7/29/2013 12:45	0.55	6.6	1.23	552.0
7/29/2013 13:00	0.55	6.6	1.23	552.0
7/29/2013 13:15	0.55	6.6	1.23	552.0
7/29/2013 13:30	0.55	6.6	1.23	552.0
7/29/2013 13:45	0.55	6.6	1.23	552.0
7/29/2013 14:00	0.54	6.48	1.20	536.7
7/29/2013 14:15	0.55	6.6	1.23	552.0
7/29/2013 14:30	0.55	6.6	1.23	552.0
7/29/2013 14:45	0.55	6.6	1.23	552.0
7/29/2013 15:00	0.55	6.6	1.23	552.0
7/29/2013 15:15	0.54	6.48	1.20	536.7
7/29/2013 15:30	0.54	6.48	1.20	536.7
7/29/2013 15:45	0.55	6.6	1.23	552.0
7/29/2013 16:00	0.55	6.6	1.23	552.0
7/29/2013 16:15	0.54	6.48	1.20	536.7
7/29/2013 16:30	0.54	6.48	1.20	536.7
7/29/2013 16:45	0.55	6.6	1.23	552.0
7/29/2013 17:00	0.55	6.6	1.23	552.0
7/29/2013 17:15	0.55	6.6	1.23	552.0
7/29/2013 17:32	0.55	6.6	1.23	552.0
7/29/2013 17:55	0.55	6.6	1.23	552.0
7/29/2013 18:00	0.55	6.6	1.23	552.0
7/30/2013 7:45	0.55	6.6	1.23	552.0
7/30/2013 8:00	0.55	6.6	1.23	552.0
7/30/2013 8:15	0.55	6.6	1.23	552.0
7/30/2013 8:30	0.54	6.48	1.20	536.7
7/30/2013 8:45	0.55	6.6	1.23	552.0
7/30/2013 9:00	0.55	6.6	1.23	552.0
7/30/2013 9:15	0.55	6.6	1.23	552.0
7/30/2013 9:30	0.55	6.6	1.23	552.0
7/30/2013 9:45	0.55	6.6	1.23	552.0
7/30/2013 10:00	0.55	6.6	1.23	552.0
7/30/2013 10:15	0.55	6.6	1.23	552.0
7/30/2013 10:30	0.55	6.6	1.23	552.0
7/30/2013 10:45	0.55	6.6	1.23	552.0
7/30/2013 11:00	0.55	6.6	1.23	552.0
7/30/2013 11:15	0.55	6.6	1.23	552.0

7/30/2013 11:30	0.55	6.6	1.23	552.0
7/30/2013 11:45	0.55	6.6	1.23	552.0
7/30/2013 12:00	0.55	6.6	1.23	552.0
7/30/2013 12:15	0.55	6.6	1.23	552.0
7/30/2013 12:30	0.55	6.6	1.23	552.0
7/30/2013 12:45	0.55	6.6	1.23	552.0
7/30/2013 13:00	0.55	6.6	1.23	552.0
7/30/2013 13:15	0.55	6.6	1.23	552.0
7/30/2013 13:30	0.54	6.48	1.20	536.7
7/30/2013 13:45	0.55	6.6	1.23	552.0
7/30/2013 14:00	0.55	6.6	1.23	552.0
7/30/2013 14:15	0.55	6.6	1.23	552.0
7/30/2013 14:30	0.55	6.6	1.23	552.0
7/30/2013 14:45	0.55	6.6	1.23	552.0
7/30/2013 15:00	0.55	6.6	1.23	552.0
7/30/2013 15:15	0.55	6.6	1.23	552.0
7/30/2013 15:30	0.55	6.6	1.23	552.0
7/30/2013 15:45	0.55	6.6	1.23	552.0
7/30/2013 16:00	0.54	6.48	1.20	536.7
7/30/2013 16:15	0.55	6.6	1.23	552.0
7/30/2013 16:30	0.55	6.6	1.23	552.0
7/30/2013 16:45	0.55	6.6	1.23	552.0
7/30/2013 17:00	0.55	6.6	1.23	552.0
7/30/2013 17:15	0.54	6.48	1.20	536.7
7/31/2013 7:45	0.55	6.6	1.23	552.0
7/31/2013 8:00	0.54	6.48	1.20	536.7
7/31/2013 8:15	0.55	6.6	1.23	552.0
7/31/2013 8:30	0.55	6.6	1.23	552.0
7/31/2013 8:45	0.55	6.6	1.23	552.0
7/31/2013 9:00	0.55	6.6	1.23	552.0
7/31/2013 9:15	0.55	6.6	1.23	552.0
7/31/2013 9:30	0.54	6.48	1.20	536.7
7/31/2013 9:45	0.54	6.48	1.20	536.7
7/31/2013 10:00	0.55	6.6	1.23	552.0
7/31/2013 10:15	0.55	6.6	1.23	552.0
7/31/2013 10:30	0.55	6.6	1.23	552.0
7/31/2013 10:45	0.55	6.6	1.23	552.0
7/31/2013 11:00	0.55	6.6	1.23	552.0
7/31/2013 11:15	0.54	6.48	1.20	536.7
7/31/2013 11:30	0.55	6.6	1.23	552.0
7/31/2013 11:45	0.54	6.48	1.20	536.7
7/31/2013 12:00	0.55	6.6	1.23	552.0
7/31/2013 12:15	0.55	6.6	1.23	552.0
7/31/2013 12:30	0.55	6.6	1.23	552.0
7/31/2013 12:45	0.55	6.6	1.23	552.0
7/31/2013 13:00	0.55	6.6	1.23	552.0
7/31/2013 13:15	0.55	6.6	1.23	552.0

7/31/2013 13:30	0.55	6.6	1.23	552.0
7/31/2013 13:45	0.55	6.6	1.23	552.0
7/31/2013 14:00	0.55	6.6	1.23	552.0
7/31/2013 14:15	0.55	6.6	1.23	552.0
7/31/2013 14:30	0.55	6.6	1.23	552.0
7/31/2013 14:45	0.55	6.6	1.23	552.0
7/31/2013 15:00	0.55	6.6	1.23	552.0
7/31/2013 15:15	0.54	6.48	1.20	536.7
7/31/2013 15:30	0.54	6.48	1.20	536.7
7/31/2013 15:45	0.55	6.6	1.23	552.0
7/31/2013 16:00	0.55	6.6	1.23	552.0
7/31/2013 16:15	0.55	6.6	1.23	552.0
7/31/2013 16:30	0.55	6.6	1.23	552.0
7/31/2013 16:45	0.55	6.6	1.23	552.0
7/31/2013 17:04	0.55	6.6	1.23	552.0
7/31/2013 17:15	0.55	6.6	1.23	552.0

Appendix K

South Flume Orpheus Mini Data with Flowrates

OTT Opheus Mini Data at South Flume, July 2013

Date	Time	Depth from top of flume to water (ft)	Depth of Flume Total (ft)	Depth of Flow (ft)	Flowrate (cfs)	Flowrate (gpm)
7/01/2013	12:00:00 AM	2.16	2.5	0.34	0.59	264.5
7/01/2013	1:00:00 AM	2.16	2.5	0.34	0.59	264.5
7/01/2013	2:00:00 AM	2.16	2.5	0.34	0.59	264.5
7/01/2013	3:00:00 AM	2.16	2.5	0.34	0.59	264.5
7/01/2013	4:00:00 AM	2.16	2.5	0.34	0.59	264.5
7/01/2013	5:00:00 AM	2.16	2.5	0.34	0.59	264.5
7/01/2013	6:00:00 AM	2.16	2.5	0.34	0.59	264.5
7/01/2013	7:00:00 AM	2.16	2.5	0.34	0.59	264.5
7/01/2013	8:00:00 AM	2.16	2.5	0.34	0.59	264.5
7/01/2013	9:00:00 AM	2.16	2.5	0.34	0.59	264.5
7/01/2013	10:00:00 AM	2.16	2.5	0.34	0.59	264.5
7/01/2013	11:00:00 AM	2.16	2.5	0.34	0.59	264.5
7/01/2013	12:00:00 PM	2.16	2.5	0.34	0.59	264.5
7/01/2013	1:00:00 PM	2.16	2.5	0.34	0.59	264.5
7/01/2013	2:00:00 PM	2.18	2.5	0.32	0.54	241.0
7/01/2013	3:00:00 PM	2.18	2.5	0.32	0.54	241.0
7/01/2013	4:00:00 PM	2.18	2.5	0.32	0.54	241.0
7/01/2013	5:00:00 PM	2.19	2.5	0.31	0.51	229.6
7/01/2013	6:00:00 PM	2.2	2.5	0.30	0.49	218.4
7/01/2013	7:00:00 PM	2.2	2.5	0.30	0.49	218.4
7/01/2013	8:00:00 PM	2.21	2.5	0.29	0.46	207.3
7/01/2013	9:00:00 PM	2.21	2.5	0.29	0.46	207.3
7/01/2013	10:00:00 PM	2.2	2.5	0.30	0.49	218.4
7/01/2013	11:00:00 PM	2.2	2.5	0.30	0.49	218.4
7/02/2013	12:00:00 AM	2.2	2.5	0.30	0.49	218.4
7/02/2013	1:00:00 AM	2.2	2.5	0.30	0.49	218.4
7/02/2013	2:00:00 AM	2.2	2.5	0.30	0.49	218.4
7/02/2013	3:00:00 AM	2.2	2.5	0.30	0.49	218.4
7/02/2013	4:00:00 AM	2.19	2.5	0.31	0.51	229.6
7/02/2013	5:00:00 AM	2.19	2.5	0.31	0.51	229.6
7/02/2013	6:00:00 AM	2.19	2.5	0.31	0.51	229.6
7/02/2013	7:00:00 AM	2.19	2.5	0.31	0.51	229.6
7/02/2013	8:00:00 AM	2.19	2.5	0.31	0.51	229.6
7/02/2013	9:00:00 AM	2.18	2.5	0.32	0.54	241.0
7/02/2013	10:00:00 AM	2.18	2.5	0.32	0.54	241.0
7/02/2013	11:00:00 AM	2.18	2.5	0.32	0.54	241.0
7/02/2013	12:00:00 PM	2.19	2.5	0.31	0.51	229.6
7/02/2013	1:00:00 PM	2.19	2.5	0.31	0.51	229.6
7/02/2013	2:00:00 PM	2.2	2.5	0.30	0.49	218.4
7/02/2013	3:00:00 PM	2.21	2.5	0.29	0.46	207.3
7/02/2013	4:00:00 PM	2.21	2.5	0.29	0.46	207.3
7/02/2013	5:00:00 PM	2.23	2.5	0.27	0.41	185.9
7/02/2013	6:00:00 PM	2.23	2.5	0.27	0.41	185.9

7/02/2013	7:00:00 PM	2.22	2.5	0.28	0.44	196.5
7/02/2013	8:00:00 PM	2.22	2.5	0.28	0.44	196.5
7/02/2013	9:00:00 PM	2.22	2.5	0.28	0.44	196.5
7/02/2013	10:00:00 PM	2.22	2.5	0.28	0.44	196.5
7/02/2013	11:00:00 PM	2.22	2.5	0.28	0.44	196.5
7/03/2013	12:00:00 AM	2.21	2.5	0.29	0.46	207.3
7/03/2013	1:00:00 AM	2.21	2.5	0.29	0.46	207.3
7/03/2013	2:00:00 AM	2.21	2.5	0.29	0.46	207.3
7/03/2013	3:00:00 AM	2.21	2.5	0.29	0.46	207.3
7/03/2013	4:00:00 AM	2.2	2.5	0.30	0.49	218.4
7/03/2013	5:00:00 AM	2.2	2.5	0.30	0.49	218.4
7/03/2013	6:00:00 AM	2.2	2.5	0.30	0.49	218.4
7/03/2013	7:00:00 AM	2.2	2.5	0.30	0.49	218.4
7/03/2013	8:00:00 AM	2.19	2.5	0.31	0.51	229.6
7/03/2013	9:00:00 AM	2.19	2.5	0.31	0.51	229.6
7/03/2013	10:00:00 AM	2.19	2.5	0.31	0.51	229.6
7/03/2013	11:00:00 AM	2.19	2.5	0.31	0.51	229.6
7/03/2013	12:00:00 PM	2.2	2.5	0.30	0.49	218.4
7/03/2013	1:00:00 PM	2.2	2.5	0.30	0.49	218.4
7/03/2013	2:00:00 PM	2.21	2.5	0.29	0.46	207.3
7/03/2013	3:00:00 PM	2.22	2.5	0.28	0.44	196.5
7/03/2013	4:00:00 PM	2.22	2.5	0.28	0.44	196.5
7/03/2013	5:00:00 PM	2.23	2.5	0.27	0.41	185.9
7/03/2013	6:00:00 PM	2.23	2.5	0.27	0.41	185.9
7/03/2013	7:00:00 PM	2.23	2.5	0.27	0.41	185.9
7/03/2013	8:00:00 PM	2.24	2.5	0.26	0.39	175.4
7/03/2013	9:00:00 PM	2.23	2.5	0.27	0.41	185.9
7/03/2013	10:00:00 PM	2.23	2.5	0.27	0.41	185.9
7/03/2013	11:00:00 PM	2.23	2.5	0.27	0.41	185.9
7/04/2013	12:00:00 AM	2.23	2.5	0.27	0.41	185.9
7/04/2013	1:00:00 AM	2.23	2.5	0.27	0.41	185.9
7/04/2013	2:00:00 AM	2.23	2.5	0.27	0.41	185.9
7/04/2013	3:00:00 AM	2.23	2.5	0.27	0.41	185.9
7/04/2013	4:00:00 AM	2.22	2.5	0.28	0.44	196.5
7/04/2013	5:00:00 AM	2.22	2.5	0.28	0.44	196.5
7/04/2013	6:00:00 AM	2.22	2.5	0.28	0.44	196.5
7/04/2013	7:00:00 AM	2.22	2.5	0.28	0.44	196.5
7/04/2013	8:00:00 AM	2.21	2.5	0.29	0.46	207.3
7/04/2013	9:00:00 AM	2.21	2.5	0.29	0.46	207.3
7/04/2013	10:00:00 AM	2.21	2.5	0.29	0.46	207.3
7/04/2013	11:00:00 AM	2.21	2.5	0.29	0.46	207.3
7/04/2013	12:00:00 PM	2.21	2.5	0.29	0.46	207.3
7/04/2013	1:00:00 PM	2.21	2.5	0.29	0.46	207.3
7/04/2013	2:00:00 PM	2.21	2.5	0.29	0.46	207.3
7/04/2013	3:00:00 PM	2.21	2.5	0.29	0.46	207.3
7/04/2013	4:00:00 PM	2.22	2.5	0.28	0.44	196.5
7/04/2013	5:00:00 PM	2.22	2.5	0.28	0.44	196.5

7/04/2013	6:00:00 PM	2.22	2.5	0.28	0.44	196.5
7/04/2013	7:00:00 PM	2.22	2.5	0.28	0.44	196.5
7/04/2013	8:00:00 PM	2.22	2.5	0.28	0.44	196.5
7/04/2013	9:00:00 PM	2.22	2.5	0.28	0.44	196.5
7/04/2013	10:00:00 PM	2.22	2.5	0.28	0.44	196.5
7/04/2013	11:00:00 PM	2.22	2.5	0.28	0.44	196.5
7/05/2013	12:00:00 AM	2.21	2.5	0.29	0.46	207.3
7/05/2013	1:00:00 AM	2.21	2.5	0.29	0.46	207.3
7/05/2013	2:00:00 AM	2.21	2.5	0.29	0.46	207.3
7/05/2013	3:00:00 AM	2.21	2.5	0.29	0.46	207.3
7/05/2013	4:00:00 AM	2.21	2.5	0.29	0.46	207.3
7/05/2013	5:00:00 AM	2.2	2.5	0.30	0.49	218.4
7/05/2013	6:00:00 AM	2.2	2.5	0.30	0.49	218.4
7/05/2013	7:00:00 AM	2.2	2.5	0.30	0.49	218.4
7/05/2013	8:00:00 AM	2.2	2.5	0.30	0.49	218.4
7/05/2013	9:00:00 AM	2.2	2.5	0.30	0.49	218.4
7/05/2013	10:00:00 AM	2.19	2.5	0.31	0.51	229.6
7/05/2013	11:00:00 AM	2.2	2.5	0.30	0.49	218.4
7/05/2013	12:00:00 PM	2.2	2.5	0.30	0.49	218.4
7/05/2013	1:00:00 PM	2.2	2.5	0.30	0.49	218.4
7/05/2013	2:00:00 PM	2.21	2.5	0.29	0.46	207.3
7/05/2013	3:00:00 PM	2.21	2.5	0.29	0.46	207.3
7/05/2013	4:00:00 PM	2.22	2.5	0.28	0.44	196.5
7/05/2013	5:00:00 PM	2.22	2.5	0.28	0.44	196.5
7/05/2013	6:00:00 PM	2.22	2.5	0.28	0.44	196.5
7/05/2013	7:00:00 PM	2.22	2.5	0.28	0.44	196.5
7/05/2013	8:00:00 PM	2.22	2.5	0.28	0.44	196.5
7/05/2013	9:00:00 PM	2.22	2.5	0.28	0.44	196.5
7/05/2013	10:00:00 PM	2.22	2.5	0.28	0.44	196.5
7/05/2013	11:00:00 PM	2.21	2.5	0.29	0.46	207.3
7/06/2013	12:00:00 AM	2.21	2.5	0.29	0.46	207.3
7/06/2013	1:00:00 AM	2.21	2.5	0.29	0.46	207.3
7/06/2013	2:00:00 AM	2.2	2.5	0.30	0.49	218.4
7/06/2013	3:00:00 AM	2.2	2.5	0.30	0.49	218.4
7/06/2013	4:00:00 AM	2.2	2.5	0.30	0.49	218.4
7/06/2013	5:00:00 AM	2.2	2.5	0.30	0.49	218.4
7/06/2013	6:00:00 AM	2.19	2.5	0.31	0.51	229.6
7/06/2013	7:00:00 AM	2.19	2.5	0.31	0.51	229.6
7/06/2013	8:00:00 AM	2.19	2.5	0.31	0.51	229.6
7/06/2013	9:00:00 AM	2.19	2.5	0.31	0.51	229.6
7/06/2013	10:00:00 AM	2.19	2.5	0.31	0.51	229.6
7/06/2013	11:00:00 AM	2.18	2.5	0.32	0.54	241.0
7/06/2013	12:00:00 PM	2.19	2.5	0.31	0.51	229.6
7/06/2013	1:00:00 PM	2.2	2.5	0.30	0.49	218.4
7/06/2013	2:00:00 PM	2.2	2.5	0.30	0.49	218.4
7/06/2013	3:00:00 PM	2.21	2.5	0.29	0.46	207.3
7/06/2013	4:00:00 PM	2.2	2.5	0.30	0.49	218.4

7/06/2013	5:00:00 PM	2.19	2.5	0.31	0.51	229.6
7/06/2013	6:00:00 PM	2.19	2.5	0.31	0.51	229.6
7/06/2013	7:00:00 PM	2.2	2.5	0.30	0.49	218.4
7/06/2013	8:00:00 PM	2.19	2.5	0.31	0.51	229.6
7/06/2013	9:00:00 PM	2.18	2.5	0.32	0.54	241.0
7/06/2013	10:00:00 PM	2.18	2.5	0.32	0.54	241.0
7/06/2013	11:00:00 PM	2.18	2.5	0.32	0.54	241.0
7/07/2013	12:00:00 AM	2.2	2.5	0.30	0.49	218.4
7/07/2013	1:00:00 AM	2.21	2.5	0.29	0.46	207.3
7/07/2013	2:00:00 AM	2.21	2.5	0.29	0.46	207.3
7/07/2013	3:00:00 AM	2.2	2.5	0.30	0.49	218.4
7/07/2013	4:00:00 AM	2.2	2.5	0.30	0.49	218.4
7/07/2013	5:00:00 AM	2.19	2.5	0.31	0.51	229.6
7/07/2013	6:00:00 AM	2.17	2.5	0.33	0.56	252.6
7/07/2013	7:00:00 AM	2.17	2.5	0.33	0.56	252.6
7/07/2013	8:00:00 AM	2.16	2.5	0.34	0.59	264.5
7/07/2013	9:00:00 AM	2.16	2.5	0.34	0.59	264.5
7/07/2013	10:00:00 AM	2.15	2.5	0.35	0.62	276.4
7/07/2013	11:00:00 AM	2.15	2.5	0.35	0.62	276.4
7/07/2013	12:00:00 PM	2.16	2.5	0.34	0.59	264.5
7/07/2013	1:00:00 PM	2.15	2.5	0.35	0.62	276.4
7/07/2013	2:00:00 PM	2.16	2.5	0.34	0.59	264.5
7/07/2013	3:00:00 PM	2.16	2.5	0.34	0.59	264.5
7/07/2013	4:00:00 PM	2.16	2.5	0.34	0.59	264.5
7/07/2013	5:00:00 PM	2.17	2.5	0.33	0.56	252.6
7/07/2013	6:00:00 PM	2.17	2.5	0.33	0.56	252.6
7/07/2013	7:00:00 PM	2.17	2.5	0.33	0.56	252.6
7/07/2013	8:00:00 PM	2.17	2.5	0.33	0.56	252.6
7/07/2013	9:00:00 PM	2.18	2.5	0.32	0.54	241.0
7/07/2013	10:00:00 PM	2.17	2.5	0.33	0.56	252.6
7/07/2013	11:00:00 PM	2.17	2.5	0.33	0.56	252.6
7/08/2013	12:00:00 AM	2.17	2.5	0.33	0.56	252.6
7/08/2013	1:00:00 AM	2.17	2.5	0.33	0.56	252.6
7/08/2013	2:00:00 AM	2.17	2.5	0.33	0.56	252.6
7/08/2013	3:00:00 AM	2.17	2.5	0.33	0.56	252.6
7/08/2013	4:00:00 AM	2.17	2.5	0.33	0.56	252.6
7/08/2013	5:00:00 AM	2.17	2.5	0.33	0.56	252.6
7/08/2013	6:00:00 AM	2.16	2.5	0.34	0.59	264.5
7/08/2013	7:00:00 AM	2.16	2.5	0.34	0.59	264.5
7/08/2013	8:00:00 AM	2.16	2.5	0.34	0.59	264.5
7/08/2013	9:00:00 AM	2.16	2.5	0.34	0.59	264.5
7/08/2013	10:00:00 AM	2.15	2.5	0.35	0.62	276.4
7/08/2013	11:00:00 AM	2.15	2.5	0.35	0.62	276.4
7/08/2013	12:00:00 PM	2.15	2.5	0.35	0.62	276.4
7/08/2013	1:00:00 PM	2.15	2.5	0.35	0.62	276.4
7/08/2013	2:00:00 PM	2.16	2.5	0.34	0.59	264.5
7/08/2013	3:00:00 PM	2.16	2.5	0.34	0.59	264.5

7/08/2013	4:00:00 PM	2.16	2.5	0.34	0.59	264.5
7/08/2013	5:00:00 PM	2.17	2.5	0.33	0.56	252.6
7/08/2013	6:00:00 PM	2.17	2.5	0.33	0.56	252.6
7/08/2013	7:00:00 PM	2.17	2.5	0.33	0.56	252.6
7/08/2013	8:00:00 PM	2.17	2.5	0.33	0.56	252.6
7/08/2013	9:00:00 PM	2.17	2.5	0.33	0.56	252.6
7/08/2013	10:00:00 PM	2.17	2.5	0.33	0.56	252.6
7/08/2013	11:00:00 PM	2.17	2.5	0.33	0.56	252.6
7/09/2013	12:00:00 AM	2.17	2.5	0.33	0.56	252.6
7/09/2013	1:00:00 AM	2.17	2.5	0.33	0.56	252.6
7/09/2013	2:00:00 AM	2.17	2.5	0.33	0.56	252.6
7/09/2013	3:00:00 AM	2.17	2.5	0.33	0.56	252.6
7/09/2013	4:00:00 AM	2.16	2.5	0.34	0.59	264.5
7/09/2013	5:00:00 AM	2.16	2.5	0.34	0.59	264.5
7/09/2013	6:00:00 AM	2.16	2.5	0.34	0.59	264.5
7/09/2013	7:00:00 AM	2.16	2.5	0.34	0.59	264.5
7/09/2013	8:00:00 AM	2.16	2.5	0.34	0.59	264.5
7/09/2013	9:00:00 AM	2.15	2.5	0.35	0.62	276.4
7/09/2013	10:00:00 AM	2.15	2.5	0.35	0.62	276.4
7/09/2013	11:00:00 AM	2.15	2.5	0.35	0.62	276.4
7/09/2013	12:00:00 PM	2.15	2.5	0.35	0.62	276.4
7/09/2013	1:00:00 PM	2.16	2.5	0.34	0.59	264.5
7/09/2013	2:00:00 PM	2.16	2.5	0.34	0.59	264.5
7/09/2013	3:00:00 PM	2.16	2.5	0.34	0.59	264.5
7/09/2013	4:00:00 PM	2.16	2.5	0.34	0.59	264.5
7/09/2013	5:00:00 PM	2.16	2.5	0.34	0.59	264.5
7/09/2013	6:00:00 PM	2.16	2.5	0.34	0.59	264.5
7/09/2013	7:00:00 PM	2.16	2.5	0.34	0.59	264.5
7/09/2013	8:00:00 PM	2.16	2.5	0.34	0.59	264.5
7/09/2013	9:00:00 PM	2.16	2.5	0.34	0.59	264.5
7/09/2013	10:00:00 PM	2.16	2.5	0.34	0.59	264.5
7/09/2013	11:00:00 PM	2.16	2.5	0.34	0.59	264.5
7/10/2013	12:00:00 AM	2.16	2.5	0.34	0.59	264.5
7/10/2013	1:00:00 AM	2.16	2.5	0.34	0.59	264.5
7/10/2013	2:00:00 AM	2.16	2.5	0.34	0.59	264.5
7/10/2013	3:00:00 AM	2.18	2.5	0.32	0.54	241.0
7/10/2013	4:00:00 AM	2.19	2.5	0.31	0.51	229.6
7/10/2013	5:00:00 AM	2.19	2.5	0.31	0.51	229.6
7/10/2013	6:00:00 AM	2.2	2.5	0.30	0.49	218.4
7/10/2013	7:00:00 AM	2.19	2.5	0.31	0.51	229.6
7/10/2013	8:00:00 AM	2.19	2.5	0.31	0.51	229.6
7/10/2013	9:00:00 AM	2.18	2.5	0.32	0.54	241.0
7/10/2013	10:00:00 AM	2.17	2.5	0.33	0.56	252.6
7/10/2013	11:00:00 AM	2.15	2.5	0.35	0.62	276.4
7/10/2013	12:00:00 PM	2.14	2.5	0.36	0.64	288.6
7/10/2013	1:00:00 PM	2.14	2.5	0.36	0.64	288.6
7/10/2013	2:00:00 PM	2.14	2.5	0.36	0.64	288.6

7/10/2013	3:00:00 PM	2.14	2.5	0.36	0.64	288.6
7/10/2013	4:00:00 PM	2.14	2.5	0.36	0.64	288.6
7/10/2013	5:00:00 PM	2.15	2.5	0.35	0.62	276.4
7/10/2013	6:00:00 PM	2.14	2.5	0.36	0.64	288.6
7/10/2013	7:00:00 PM	2.15	2.5	0.35	0.62	276.4
7/10/2013	8:00:00 PM	2.15	2.5	0.35	0.62	276.4
7/10/2013	9:00:00 PM	2.15	2.5	0.35	0.62	276.4
7/10/2013	10:00:00 PM	2.16	2.5	0.34	0.59	264.5
7/10/2013	11:00:00 PM	2.16	2.5	0.34	0.59	264.5
7/11/2013	12:00:00 AM	2.16	2.5	0.34	0.59	264.5
7/11/2013	1:00:00 AM	2.16	2.5	0.34	0.59	264.5
7/11/2013	2:00:00 AM	2.16	2.5	0.34	0.59	264.5
7/11/2013	3:00:00 AM	2.15	2.5	0.35	0.62	276.4
7/11/2013	4:00:00 AM	2.15	2.5	0.35	0.62	276.4
7/11/2013	5:00:00 AM	2.15	2.5	0.35	0.62	276.4
7/11/2013	6:00:00 AM	2.15	2.5	0.35	0.62	276.4
7/11/2013	7:00:00 AM	2.15	2.5	0.35	0.62	276.4
7/11/2013	8:00:00 AM	2.16	2.5	0.34	0.59	264.5
7/11/2013	9:00:00 AM	2.15	2.5	0.35	0.62	276.4
7/11/2013	10:00:00 AM	2.15	2.5	0.35	0.62	276.4
7/11/2013	11:00:00 AM	2.15	2.5	0.35	0.62	276.4
7/11/2013	12:00:00 PM	2.15	2.5	0.35	0.62	276.4
7/11/2013	1:00:00 PM	2.15	2.5	0.35	0.62	276.4
7/11/2013	2:00:00 PM	2.15	2.5	0.35	0.62	276.4
7/11/2013	3:00:00 PM	2.15	2.5	0.35	0.62	276.4
7/11/2013	4:00:00 PM	2.15	2.5	0.35	0.62	276.4
7/11/2013	5:00:00 PM	2.16	2.5	0.34	0.59	264.5
7/11/2013	6:00:00 PM	2.16	2.5	0.34	0.59	264.5
7/11/2013	7:00:00 PM	2.16	2.5	0.34	0.59	264.5
7/11/2013	8:00:00 PM	2.16	2.5	0.34	0.59	264.5
7/11/2013	9:00:00 PM	2.16	2.5	0.34	0.59	264.5
7/11/2013	10:00:00 PM	2.15	2.5	0.35	0.62	276.4
7/11/2013	11:00:00 PM	2.14	2.5	0.36	0.64	288.6
7/12/2013	12:00:00 AM	2.14	2.5	0.36	0.64	288.6
7/12/2013	1:00:00 AM	2.15	2.5	0.35	0.62	276.4
7/12/2013	2:00:00 AM	2.16	2.5	0.34	0.59	264.5
7/12/2013	3:00:00 AM	2.15	2.5	0.35	0.62	276.4
7/12/2013	4:00:00 AM	2.15	2.5	0.35	0.62	276.4
7/12/2013	5:00:00 AM	2.15	2.5	0.35	0.62	276.4
7/12/2013	6:00:00 AM	2.14	2.5	0.36	0.64	288.6
7/12/2013	7:00:00 AM	2.15	2.5	0.35	0.62	276.4
7/12/2013	8:00:00 AM	2.15	2.5	0.35	0.62	276.4
7/12/2013	9:00:00 AM	2.14	2.5	0.36	0.64	288.6
7/12/2013	10:00:00 AM	2.14	2.5	0.36	0.64	288.6
7/12/2013	11:00:00 AM	2.15	2.5	0.35	0.62	276.4
7/12/2013	12:00:00 PM	2.15	2.5	0.35	0.62	276.4
7/12/2013	1:00:00 PM	2.15	2.5	0.35	0.62	276.4

7/12/2013	2:00:00 PM	2.16	2.5	0.34	0.59	264.5
7/12/2013	3:00:00 PM	2.16	2.5	0.34	0.59	264.5
7/12/2013	4:00:00 PM	2.16	2.5	0.34	0.59	264.5
7/12/2013	5:00:00 PM	2.16	2.5	0.34	0.59	264.5
7/12/2013	6:00:00 PM	2.17	2.5	0.33	0.56	252.6
7/12/2013	7:00:00 PM	2.16	2.5	0.34	0.59	264.5
7/12/2013	8:00:00 PM	2.17	2.5	0.33	0.56	252.6
7/12/2013	9:00:00 PM	2.17	2.5	0.33	0.56	252.6
7/12/2013	10:00:00 PM	2.14	2.5	0.36	0.64	288.6
7/12/2013	11:00:00 PM	2.15	2.5	0.35	0.62	276.4
7/13/2013	12:00:00 AM	2.14	2.5	0.36	0.64	288.6
7/13/2013	1:00:00 AM	2.14	2.5	0.36	0.64	288.6
7/13/2013	2:00:00 AM	2.14	2.5	0.36	0.64	288.6
7/13/2013	3:00:00 AM	2.14	2.5	0.36	0.64	288.6
7/13/2013	4:00:00 AM	2.15	2.5	0.35	0.62	276.4
7/13/2013	5:00:00 AM	2.16	2.5	0.34	0.59	264.5
7/13/2013	6:00:00 AM	2.17	2.5	0.33	0.56	252.6
7/13/2013	7:00:00 AM	2.17	2.5	0.33	0.56	252.6
7/13/2013	8:00:00 AM	2.17	2.5	0.33	0.56	252.6
7/13/2013	9:00:00 AM	2.17	2.5	0.33	0.56	252.6
7/13/2013	10:00:00 AM	2.17	2.5	0.33	0.56	252.6
7/13/2013	11:00:00 AM	2.18	2.5	0.32	0.54	241.0
7/13/2013	12:00:00 PM	2.18	2.5	0.32	0.54	241.0
7/13/2013	1:00:00 PM	2.19	2.5	0.31	0.51	229.6
7/13/2013	2:00:00 PM	2.19	2.5	0.31	0.51	229.6
7/13/2013	3:00:00 PM	2.19	2.5	0.31	0.51	229.6
7/13/2013	4:00:00 PM	2.2	2.5	0.30	0.49	218.4
7/13/2013	5:00:00 PM	2.2	2.5	0.30	0.49	218.4
7/13/2013	6:00:00 PM	2.2	2.5	0.30	0.49	218.4
7/13/2013	7:00:00 PM	2.2	2.5	0.30	0.49	218.4
7/13/2013	8:00:00 PM	2.21	2.5	0.29	0.46	207.3
7/13/2013	9:00:00 PM	2.21	2.5	0.29	0.46	207.3
7/13/2013	10:00:00 PM	2.21	2.5	0.29	0.46	207.3
7/13/2013	11:00:00 PM	2.2	2.5	0.30	0.49	218.4
7/14/2013	12:00:00 AM	2.19	2.5	0.31	0.51	229.6
7/14/2013	1:00:00 AM	2.19	2.5	0.31	0.51	229.6
7/14/2013	2:00:00 AM	2.18	2.5	0.32	0.54	241.0
7/14/2013	3:00:00 AM	2.18	2.5	0.32	0.54	241.0
7/14/2013	4:00:00 AM	2.17	2.5	0.33	0.56	252.6
7/14/2013	5:00:00 AM	2.17	2.5	0.33	0.56	252.6
7/14/2013	6:00:00 AM	2.16	2.5	0.34	0.59	264.5
7/14/2013	7:00:00 AM	2.16	2.5	0.34	0.59	264.5
7/14/2013	8:00:00 AM	2.15	2.5	0.35	0.62	276.4
7/14/2013	9:00:00 AM	2.15	2.5	0.35	0.62	276.4
7/14/2013	10:00:00 AM	2.15	2.5	0.35	0.62	276.4
7/14/2013	11:00:00 AM	2.15	2.5	0.35	0.62	276.4
7/14/2013	12:00:00 PM	2.15	2.5	0.35	0.62	276.4

7/14/2013	1:00:00 PM	2.15	2.5	0.35	0.62	276.4
7/14/2013	2:00:00 PM	2.15	2.5	0.35	0.62	276.4
7/14/2013	3:00:00 PM	2.16	2.5	0.34	0.59	264.5
7/14/2013	4:00:00 PM	2.15	2.5	0.35	0.62	276.4
7/14/2013	5:00:00 PM	2.15	2.5	0.35	0.62	276.4
7/14/2013	6:00:00 PM	2.15	2.5	0.35	0.62	276.4
7/14/2013	7:00:00 PM	2.15	2.5	0.35	0.62	276.4
7/14/2013	8:00:00 PM	2.15	2.5	0.35	0.62	276.4
7/14/2013	9:00:00 PM	2.15	2.5	0.35	0.62	276.4
7/14/2013	10:00:00 PM	2.15	2.5	0.35	0.62	276.4
7/14/2013	11:00:00 PM	2.15	2.5	0.35	0.62	276.4
7/15/2013	12:00:00 AM	2.15	2.5	0.35	0.62	276.4
7/15/2013	1:00:00 AM	2.15	2.5	0.35	0.62	276.4
7/15/2013	2:00:00 AM	2.15	2.5	0.35	0.62	276.4
7/15/2013	3:00:00 AM	2.15	2.5	0.35	0.62	276.4
7/15/2013	4:00:00 AM	2.15	2.5	0.35	0.62	276.4
7/15/2013	5:00:00 AM	2.15	2.5	0.35	0.62	276.4
7/15/2013	6:00:00 AM	2.15	2.5	0.35	0.62	276.4
7/15/2013	7:00:00 AM	2.15	2.5	0.35	0.62	276.4
7/15/2013	8:00:00 AM	2.15	2.5	0.35	0.62	276.4
7/15/2013	9:00:00 AM	2.15	2.5	0.35	0.62	276.4
7/15/2013	10:00:00 AM	2.15	2.5	0.35	0.62	276.4
7/15/2013	11:00:00 AM	2.15	2.5	0.35	0.62	276.4
7/15/2013	12:00:00 PM	2.15	2.5	0.35	0.62	276.4
7/15/2013	1:00:00 PM	2.18	2.5	0.32	0.54	241.0
7/15/2013	2:00:00 PM	2.18	2.5	0.32	0.54	241.0
7/15/2013	3:00:00 PM	2.16	2.5	0.34	0.59	264.5
7/15/2013	4:00:00 PM	2.15	2.5	0.35	0.62	276.4
7/15/2013	5:00:00 PM	2.16	2.5	0.34	0.59	264.5
7/15/2013	6:00:00 PM	2.14	2.5	0.36	0.64	288.6
7/15/2013	7:00:00 PM	2.13	2.5	0.37	0.67	301.0
7/15/2013	8:00:00 PM	2.14	2.5	0.36	0.64	288.6
7/15/2013	9:00:00 PM	2.13	2.5	0.37	0.67	301.0
7/15/2013	10:00:00 PM	2.13	2.5	0.37	0.67	301.0
7/15/2013	11:00:00 PM	2.13	2.5	0.37	0.67	301.0
7/16/2013	12:00:00 AM	2.13	2.5	0.37	0.67	301.0
7/16/2013	1:00:00 AM	2.14	2.5	0.36	0.64	288.6
7/16/2013	2:00:00 AM	2.14	2.5	0.36	0.64	288.6
7/16/2013	3:00:00 AM	2.15	2.5	0.35	0.62	276.4
7/16/2013	4:00:00 AM	2.15	2.5	0.35	0.62	276.4
7/16/2013	5:00:00 AM	2.15	2.5	0.35	0.62	276.4
7/16/2013	6:00:00 AM	2.15	2.5	0.35	0.62	276.4
7/16/2013	7:00:00 AM	2.16	2.5	0.34	0.59	264.5
7/16/2013	8:00:00 AM	2.17	2.5	0.33	0.56	252.6
7/16/2013	9:00:00 AM	2.18	2.5	0.32	0.54	241.0
7/16/2013	10:00:00 AM	2.18	2.5	0.32	0.54	241.0
7/16/2013	11:00:00 AM	2.19	2.5	0.31	0.51	229.6

7/16/2013	12:00:00 PM	2.19	2.5	0.31	0.51	229.6
7/16/2013	1:00:00 PM	2.19	2.5	0.31	0.51	229.6
7/16/2013	2:00:00 PM	2.19	2.5	0.31	0.51	229.6
7/16/2013	3:00:00 PM	2.19	2.5	0.31	0.51	229.6
7/16/2013	4:00:00 PM	2.19	2.5	0.31	0.51	229.6
7/16/2013	5:00:00 PM	2.2	2.5	0.30	0.49	218.4
7/16/2013	6:00:00 PM	2.17	2.5	0.33	0.56	252.6
7/16/2013	7:00:00 PM	2.06	2.5	0.44	0.87	392.4
7/16/2013	8:00:00 PM	2.06	2.5	0.44	0.87	392.4
7/16/2013	9:00:00 PM	2.07	2.5	0.43	0.84	378.8
7/16/2013	10:00:00 PM	2.09	2.5	0.41	0.78	352.2
7/16/2013	11:00:00 PM	2.09	2.5	0.41	0.78	352.2
7/17/2013	12:00:00 AM	2.1	2.5	0.40	0.76	339.1
7/17/2013	1:00:00 AM	2.11	2.5	0.39	0.73	326.2
7/17/2013	2:00:00 AM	2.12	2.5	0.38	0.70	313.5
7/17/2013	3:00:00 AM	2.12	2.5	0.38	0.70	313.5
7/17/2013	4:00:00 AM	2.13	2.5	0.37	0.67	301.0
7/17/2013	5:00:00 AM	2.14	2.5	0.36	0.64	288.6
7/17/2013	6:00:00 AM	2.15	2.5	0.35	0.62	276.4
7/17/2013	7:00:00 AM	2.15	2.5	0.35	0.62	276.4
7/17/2013	8:00:00 AM	2.16	2.5	0.34	0.59	264.5
7/17/2013	9:00:00 AM	2.17	2.5	0.33	0.56	252.6
7/17/2013	10:00:00 AM	2.17	2.5	0.33	0.56	252.6
7/17/2013	11:00:00 AM	2.18	2.5	0.32	0.54	241.0
7/17/2013	12:00:00 PM	2.18	2.5	0.32	0.54	241.0
7/17/2013	1:00:00 PM	2.19	2.5	0.31	0.51	229.6
7/17/2013	2:00:00 PM	2.17	2.5	0.33	0.56	252.6
7/17/2013	3:00:00 PM	2.15	2.5	0.35	0.62	276.4
7/17/2013	4:00:00 PM	2.16	2.5	0.34	0.59	264.5
7/17/2013	5:00:00 PM	2.16	2.5	0.34	0.59	264.5
7/17/2013	6:00:00 PM	2.17	2.5	0.33	0.56	252.6
7/17/2013	7:00:00 PM	2.17	2.5	0.33	0.56	252.6
7/17/2013	8:00:00 PM	2.17	2.5	0.33	0.56	252.6
7/17/2013	9:00:00 PM	2.17	2.5	0.33	0.56	252.6
7/17/2013	10:00:00 PM	2.13	2.5	0.37	0.67	301.0
7/17/2013	11:00:00 PM	2.13	2.5	0.37	0.67	301.0
7/18/2013	12:00:00 AM	2.13	2.5	0.37	0.67	301.0
7/18/2013	1:00:00 AM	2.14	2.5	0.36	0.64	288.6
7/18/2013	2:00:00 AM	2.14	2.5	0.36	0.64	288.6
7/18/2013	3:00:00 AM	2.14	2.5	0.36	0.64	288.6
7/18/2013	4:00:00 AM	2.14	2.5	0.36	0.64	288.6
7/18/2013	5:00:00 AM	2.15	2.5	0.35	0.62	276.4
7/18/2013	6:00:00 AM	2.15	2.5	0.35	0.62	276.4
7/18/2013	7:00:00 AM	2.15	2.5	0.35	0.62	276.4
7/18/2013	8:00:00 AM	2.16	2.5	0.34	0.59	264.5
7/18/2013	9:00:00 AM	2.16	2.5	0.34	0.59	264.5
7/18/2013	10:00:00 AM	2.16	2.5	0.34	0.59	264.5

7/18/2013	11:00:00 AM	2.17	2.5	0.33	0.56	252.6
7/18/2013	12:00:00 PM	2.17	2.5	0.33	0.56	252.6
7/18/2013	1:00:00 PM	2.15	2.5	0.35	0.62	276.4
7/18/2013	2:00:00 PM	2.14	2.5	0.36	0.64	288.6
7/18/2013	3:00:00 PM	2.14	2.5	0.36	0.64	288.6
7/18/2013	4:00:00 PM	2.15	2.5	0.35	0.62	276.4
7/18/2013	5:00:00 PM	2.16	2.5	0.34	0.59	264.5
7/18/2013	6:00:00 PM	2.16	2.5	0.34	0.59	264.5
7/18/2013	7:00:00 PM	2.16	2.5	0.34	0.59	264.5
7/18/2013	8:00:00 PM	2.16	2.5	0.34	0.59	264.5
7/18/2013	9:00:00 PM	2.16	2.5	0.34	0.59	264.5
7/18/2013	10:00:00 PM	2.16	2.5	0.34	0.59	264.5
7/18/2013	11:00:00 PM	2.16	2.5	0.34	0.59	264.5
7/19/2013	12:00:00 AM	2.17	2.5	0.33	0.56	252.6
7/19/2013	1:00:00 AM	2.17	2.5	0.33	0.56	252.6
7/19/2013	2:00:00 AM	2.17	2.5	0.33	0.56	252.6
7/19/2013	3:00:00 AM	2.18	2.5	0.32	0.54	241.0
7/19/2013	4:00:00 AM	2.18	2.5	0.32	0.54	241.0
7/19/2013	5:00:00 AM	2.18	2.5	0.32	0.54	241.0
7/19/2013	6:00:00 AM	2.18	2.5	0.32	0.54	241.0
7/19/2013	7:00:00 AM	2.18	2.5	0.32	0.54	241.0
7/19/2013	8:00:00 AM	2.18	2.5	0.32	0.54	241.0
7/19/2013	9:00:00 AM	2.18	2.5	0.32	0.54	241.0
7/19/2013	10:00:00 AM	2.18	2.5	0.32	0.54	241.0
7/19/2013	11:00:00 AM	2.18	2.5	0.32	0.54	241.0
7/19/2013	12:00:00 PM	2.18	2.5	0.32	0.54	241.0
7/19/2013	1:00:00 PM	2.18	2.5	0.32	0.54	241.0
7/19/2013	2:00:00 PM	2.15	2.5	0.35	0.62	276.4
7/19/2013	3:00:00 PM	2.15	2.5	0.35	0.62	276.4
7/19/2013	4:00:00 PM	2.15	2.5	0.35	0.62	276.4
7/19/2013	5:00:00 PM	2.15	2.5	0.35	0.62	276.4
7/19/2013	6:00:00 PM	2.16	2.5	0.34	0.59	264.5
7/19/2013	7:00:00 PM	2.16	2.5	0.34	0.59	264.5
7/19/2013	8:00:00 PM	2.16	2.5	0.34	0.59	264.5
7/19/2013	9:00:00 PM	2.15	2.5	0.35	0.62	276.4
7/19/2013	10:00:00 PM	2.15	2.5	0.35	0.62	276.4
7/19/2013	11:00:00 PM	2.15	2.5	0.35	0.62	276.4
7/20/2013	12:00:00 AM	2.15	2.5	0.35	0.62	276.4
7/20/2013	1:00:00 AM	2.16	2.5	0.34	0.59	264.5
7/20/2013	2:00:00 AM	2.15	2.5	0.35	0.62	276.4
7/20/2013	3:00:00 AM	2.14	2.5	0.36	0.64	288.6
7/20/2013	4:00:00 AM	2.13	2.5	0.37	0.67	301.0
7/20/2013	5:00:00 AM	2.13	2.5	0.37	0.67	301.0
7/20/2013	6:00:00 AM	2.13	2.5	0.37	0.67	301.0
7/20/2013	7:00:00 AM	2.13	2.5	0.37	0.67	301.0
7/20/2013	8:00:00 AM	2.12	2.5	0.38	0.70	313.5
7/20/2013	9:00:00 AM	2.13	2.5	0.37	0.67	301.0

7/20/2013	10:00:00 AM	2.13	2.5	0.37	0.67	301.0
7/20/2013	11:00:00 AM	2.13	2.5	0.37	0.67	301.0
7/20/2013	12:00:00 PM	2.13	2.5	0.37	0.67	301.0
7/20/2013	1:00:00 PM	2.14	2.5	0.36	0.64	288.6
7/20/2013	2:00:00 PM	2.14	2.5	0.36	0.64	288.6
7/20/2013	3:00:00 PM	2.14	2.5	0.36	0.64	288.6
7/20/2013	4:00:00 PM	2.16	2.5	0.34	0.59	264.5
7/20/2013	5:00:00 PM	2.15	2.5	0.35	0.62	276.4
7/20/2013	6:00:00 PM	2.16	2.5	0.34	0.59	264.5
7/20/2013	7:00:00 PM	2.16	2.5	0.34	0.59	264.5
7/20/2013	8:00:00 PM	2.16	2.5	0.34	0.59	264.5
7/20/2013	9:00:00 PM	2.16	2.5	0.34	0.59	264.5
7/20/2013	10:00:00 PM	2.16	2.5	0.34	0.59	264.5
7/20/2013	11:00:00 PM	2.16	2.5	0.34	0.59	264.5
7/21/2013	12:00:00 AM	2.16	2.5	0.34	0.59	264.5
7/21/2013	1:00:00 AM	2.16	2.5	0.34	0.59	264.5
7/21/2013	2:00:00 AM	2.16	2.5	0.34	0.59	264.5
7/21/2013	3:00:00 AM	2.16	2.5	0.34	0.59	264.5
7/21/2013	4:00:00 AM	2.16	2.5	0.34	0.59	264.5
7/21/2013	5:00:00 AM	2.16	2.5	0.34	0.59	264.5
7/21/2013	6:00:00 AM	2.16	2.5	0.34	0.59	264.5
7/21/2013	7:00:00 AM	2.16	2.5	0.34	0.59	264.5
7/21/2013	8:00:00 AM	2.16	2.5	0.34	0.59	264.5
7/21/2013	9:00:00 AM	2.15	2.5	0.35	0.62	276.4
7/21/2013	10:00:00 AM	2.15	2.5	0.35	0.62	276.4
7/21/2013	11:00:00 AM	2.16	2.5	0.34	0.59	264.5
7/21/2013	12:00:00 PM	2.16	2.5	0.34	0.59	264.5
7/21/2013	1:00:00 PM	2.16	2.5	0.34	0.59	264.5
7/21/2013	2:00:00 PM	2.16	2.5	0.34	0.59	264.5
7/21/2013	3:00:00 PM	2.17	2.5	0.33	0.56	252.6
7/21/2013	4:00:00 PM	2.16	2.5	0.34	0.59	264.5
7/21/2013	5:00:00 PM	2.17	2.5	0.33	0.56	252.6
7/21/2013	6:00:00 PM	2.16	2.5	0.34	0.59	264.5
7/21/2013	7:00:00 PM	2.16	2.5	0.34	0.59	264.5
7/21/2013	8:00:00 PM	2.17	2.5	0.33	0.56	252.6
7/21/2013	9:00:00 PM	2.16	2.5	0.34	0.59	264.5
7/21/2013	10:00:00 PM	2.16	2.5	0.34	0.59	264.5
7/21/2013	11:00:00 PM	2.17	2.5	0.33	0.56	252.6
7/22/2013	12:00:00 AM	2.17	2.5	0.33	0.56	252.6
7/22/2013	1:00:00 AM	2.17	2.5	0.33	0.56	252.6
7/22/2013	2:00:00 AM	2.16	2.5	0.34	0.59	264.5
7/22/2013	3:00:00 AM	2.16	2.5	0.34	0.59	264.5
7/22/2013	4:00:00 AM	2.16	2.5	0.34	0.59	264.5
7/22/2013	5:00:00 AM	2.16	2.5	0.34	0.59	264.5
7/22/2013	6:00:00 AM	2.16	2.5	0.34	0.59	264.5
7/22/2013	7:00:00 AM	2.16	2.5	0.34	0.59	264.5
7/22/2013	8:00:00 AM	2.16	2.5	0.34	0.59	264.5

7/22/2013	9:00:00 AM	2.16	2.5	0.34	0.59	264.5
7/22/2013	10:00:00 AM	2.16	2.5	0.34	0.59	264.5
7/22/2013	11:00:00 AM	2.17	2.5	0.33	0.56	252.6
7/22/2013	12:00:00 PM	2.17	2.5	0.33	0.56	252.6
7/22/2013	1:00:00 PM	2.17	2.5	0.33	0.56	252.6
7/22/2013	2:00:00 PM	2.17	2.5	0.33	0.56	252.6
7/22/2013	3:00:00 PM	2.17	2.5	0.33	0.56	252.6
7/22/2013	4:00:00 PM	2.16	2.5	0.34	0.59	264.5
7/22/2013	5:00:00 PM	2.17	2.5	0.33	0.56	252.6
7/22/2013	6:00:00 PM	2.17	2.5	0.33	0.56	252.6
7/22/2013	7:00:00 PM	2.17	2.5	0.33	0.56	252.6
7/22/2013	8:00:00 PM	2.17	2.5	0.33	0.56	252.6
7/22/2013	9:00:00 PM	2.17	2.5	0.33	0.56	252.6
7/22/2013	10:00:00 PM	2.17	2.5	0.33	0.56	252.6
7/22/2013	11:00:00 PM	2.17	2.5	0.33	0.56	252.6
7/23/2013	12:00:00 AM	2.18	2.5	0.32	0.54	241.0
7/23/2013	1:00:00 AM	2.18	2.5	0.32	0.54	241.0
7/23/2013	2:00:00 AM	2.17	2.5	0.33	0.56	252.6
7/23/2013	3:00:00 AM	2.17	2.5	0.33	0.56	252.6
7/23/2013	4:00:00 AM	2.17	2.5	0.33	0.56	252.6
7/23/2013	5:00:00 AM	2.17	2.5	0.33	0.56	252.6
7/23/2013	6:00:00 AM	2.17	2.5	0.33	0.56	252.6
7/23/2013	7:00:00 AM	2.17	2.5	0.33	0.56	252.6
7/23/2013	8:00:00 AM	2.17	2.5	0.33	0.56	252.6
7/23/2013	9:00:00 AM	2.17	2.5	0.33	0.56	252.6
7/23/2013	10:00:00 AM	2.17	2.5	0.33	0.56	252.6
7/23/2013	11:00:00 AM	2.17	2.5	0.33	0.56	252.6
7/23/2013	12:00:00 PM	2.17	2.5	0.33	0.56	252.6
7/23/2013	1:00:00 PM	2.17	2.5	0.33	0.56	252.6
7/23/2013	2:00:00 PM	2.18	2.5	0.32	0.54	241.0
7/23/2013	3:00:00 PM	2.17	2.5	0.33	0.56	252.6
7/23/2013	4:00:00 PM	2.17	2.5	0.33	0.56	252.6
7/23/2013	5:00:00 PM	2.17	2.5	0.33	0.56	252.6
7/23/2013	6:00:00 PM	2.17	2.5	0.33	0.56	252.6
7/23/2013	7:00:00 PM	2.17	2.5	0.33	0.56	252.6
7/23/2013	8:00:00 PM	2.17	2.5	0.33	0.56	252.6
7/23/2013	9:00:00 PM	2.18	2.5	0.32	0.54	241.0
7/23/2013	10:00:00 PM	2.18	2.5	0.32	0.54	241.0
7/23/2013	11:00:00 PM	2.17	2.5	0.33	0.56	252.6
7/24/2013	12:00:00 AM	2.17	2.5	0.33	0.56	252.6
7/24/2013	1:00:00 AM	2.17	2.5	0.33	0.56	252.6
7/24/2013	2:00:00 AM	2.17	2.5	0.33	0.56	252.6
7/24/2013	3:00:00 AM	2.17	2.5	0.33	0.56	252.6
7/24/2013	4:00:00 AM	2.17	2.5	0.33	0.56	252.6
7/24/2013	5:00:00 AM	2.17	2.5	0.33	0.56	252.6
7/24/2013	6:00:00 AM	2.17	2.5	0.33	0.56	252.6
7/24/2013	7:00:00 AM	2.17	2.5	0.33	0.56	252.6

7/24/2013	8:00:00 AM	2.16	2.5	0.34	0.59	264.5
7/24/2013	9:00:00 AM	2.16	2.5	0.34	0.59	264.5
7/24/2013	10:00:00 AM	2.16	2.5	0.34	0.59	264.5
7/24/2013	11:00:00 AM	2.16	2.5	0.34	0.59	264.5
7/24/2013	12:00:00 PM	2.16	2.5	0.34	0.59	264.5
7/24/2013	1:00:00 PM	2.16	2.5	0.34	0.59	264.5
7/24/2013	2:00:00 PM	2.16	2.5	0.34	0.59	264.5
7/24/2013	3:00:00 PM	2.16	2.5	0.34	0.59	264.5
7/24/2013	4:00:00 PM	2.16	2.5	0.34	0.59	264.5
7/24/2013	5:00:00 PM	2.15	2.5	0.35	0.62	276.4
7/24/2013	6:00:00 PM	2.15	2.5	0.35	0.62	276.4
7/24/2013	7:00:00 PM	2.15	2.5	0.35	0.62	276.4
7/24/2013	8:00:00 PM	2.15	2.5	0.35	0.62	276.4
7/24/2013	9:00:00 PM	2.15	2.5	0.35	0.62	276.4
7/24/2013	10:00:00 PM	2.15	2.5	0.35	0.62	276.4
7/24/2013	11:00:00 PM	2.15	2.5	0.35	0.62	276.4
7/25/2013	12:00:00 AM	2.15	2.5	0.35	0.62	276.4
7/25/2013	1:00:00 AM	2.15	2.5	0.35	0.62	276.4
7/25/2013	2:00:00 AM	2.15	2.5	0.35	0.62	276.4
7/25/2013	3:00:00 AM	2.15	2.5	0.35	0.62	276.4
7/25/2013	4:00:00 AM	2.14	2.5	0.36	0.64	288.6
7/25/2013	5:00:00 AM	2.14	2.5	0.36	0.64	288.6
7/25/2013	6:00:00 AM	2.14	2.5	0.36	0.64	288.6
7/25/2013	7:00:00 AM	2.14	2.5	0.36	0.64	288.6
7/25/2013	8:00:00 AM	2.14	2.5	0.36	0.64	288.6
7/25/2013	9:00:00 AM	2.14	2.5	0.36	0.64	288.6
7/25/2013	10:00:00 AM	2.14	2.5	0.36	0.64	288.6
7/25/2013	11:00:00 AM	2.14	2.5	0.36	0.64	288.6
7/25/2013	12:00:00 PM	2.15	2.5	0.35	0.62	276.4
7/25/2013	1:00:00 PM	2.16	2.5	0.34	0.59	264.5
7/25/2013	2:00:00 PM	2.16	2.5	0.34	0.59	264.5
7/25/2013	3:00:00 PM	2.16	2.5	0.34	0.59	264.5
7/25/2013	4:00:00 PM	2.16	2.5	0.34	0.59	264.5
7/25/2013	5:00:00 PM	2.17	2.5	0.33	0.56	252.6
7/25/2013	6:00:00 PM	2.17	2.5	0.33	0.56	252.6
7/25/2013	7:00:00 PM	2.17	2.5	0.33	0.56	252.6
7/25/2013	8:00:00 PM	2.17	2.5	0.33	0.56	252.6
7/25/2013	9:00:00 PM	2.17	2.5	0.33	0.56	252.6
7/25/2013	10:00:00 PM	2.17	2.5	0.33	0.56	252.6
7/25/2013	11:00:00 PM	2.17	2.5	0.33	0.56	252.6
7/26/2013	12:00:00 AM	2.16	2.5	0.34	0.59	264.5
7/26/2013	1:00:00 AM	2.16	2.5	0.34	0.59	264.5
7/26/2013	2:00:00 AM	2.16	2.5	0.34	0.59	264.5
7/26/2013	3:00:00 AM	2.16	2.5	0.34	0.59	264.5
7/26/2013	4:00:00 AM	2.16	2.5	0.34	0.59	264.5
7/26/2013	5:00:00 AM	2.16	2.5	0.34	0.59	264.5
7/26/2013	6:00:00 AM	2.15	2.5	0.35	0.62	276.4

7/26/2013	7:00:00 AM	2.15	2.5	0.35	0.62	276.4
7/26/2013	8:00:00 AM	2.15	2.5	0.35	0.62	276.4
7/26/2013	9:00:00 AM	2.15	2.5	0.35	0.62	276.4
7/26/2013	10:00:00 AM	2.15	2.5	0.35	0.62	276.4
7/26/2013	11:00:00 AM	2.15	2.5	0.35	0.62	276.4
7/26/2013	12:00:00 PM	2.15	2.5	0.35	0.62	276.4
7/26/2013	1:00:00 PM	2.15	2.5	0.35	0.62	276.4
7/26/2013	2:00:00 PM	2.15	2.5	0.35	0.62	276.4
7/26/2013	3:00:00 PM	2.15	2.5	0.35	0.62	276.4
7/26/2013	4:00:00 PM	2.16	2.5	0.34	0.59	264.5
7/26/2013	5:00:00 PM	2.16	2.5	0.34	0.59	264.5
7/26/2013	6:00:00 PM	2.16	2.5	0.34	0.59	264.5
7/26/2013	7:00:00 PM	2.16	2.5	0.34	0.59	264.5
7/26/2013	8:00:00 PM	2.15	2.5	0.35	0.62	276.4
7/26/2013	9:00:00 PM	2.15	2.5	0.35	0.62	276.4
7/26/2013	10:00:00 PM	2.15	2.5	0.35	0.62	276.4
7/26/2013	11:00:00 PM	2.15	2.5	0.35	0.62	276.4
7/27/2013	12:00:00 AM	2.15	2.5	0.35	0.62	276.4
7/27/2013	1:00:00 AM	2.15	2.5	0.35	0.62	276.4
7/27/2013	2:00:00 AM	2.14	2.5	0.36	0.64	288.6
7/27/2013	3:00:00 AM	2.14	2.5	0.36	0.64	288.6
7/27/2013	4:00:00 AM	2.14	2.5	0.36	0.64	288.6
7/27/2013	5:00:00 AM	2.13	2.5	0.37	0.67	301.0
7/27/2013	6:00:00 AM	2.13	2.5	0.37	0.67	301.0
7/27/2013	7:00:00 AM	2.13	2.5	0.37	0.67	301.0
7/27/2013	8:00:00 AM	2.13	2.5	0.37	0.67	301.0
7/27/2013	9:00:00 AM	2.14	2.5	0.36	0.64	288.6
7/27/2013	10:00:00 AM	2.13	2.5	0.37	0.67	301.0
7/27/2013	11:00:00 AM	2.14	2.5	0.36	0.64	288.6
7/27/2013	12:00:00 PM	2.14	2.5	0.36	0.64	288.6
7/27/2013	1:00:00 PM	2.14	2.5	0.36	0.64	288.6
7/27/2013	2:00:00 PM	2.14	2.5	0.36	0.64	288.6
7/27/2013	3:00:00 PM	2.14	2.5	0.36	0.64	288.6
7/27/2013	4:00:00 PM	2.15	2.5	0.35	0.62	276.4
7/27/2013	5:00:00 PM	2.15	2.5	0.35	0.62	276.4
7/27/2013	6:00:00 PM	2.09	2.5	0.41	0.78	352.2
7/27/2013	7:00:00 PM	2.07	2.5	0.43	0.84	378.8
7/27/2013	8:00:00 PM	2.07	2.5	0.43	0.84	378.8
7/27/2013	9:00:00 PM	2.08	2.5	0.42	0.81	365.4
7/27/2013	10:00:00 PM	2.08	2.5	0.42	0.81	365.4
7/27/2013	11:00:00 PM	2.09	2.5	0.41	0.78	352.2
7/28/2013	12:00:00 AM	2.08	2.5	0.42	0.81	365.4
7/28/2013	1:00:00 AM	2.08	2.5	0.42	0.81	365.4
7/28/2013	2:00:00 AM	2.08	2.5	0.42	0.81	365.4
7/28/2013	3:00:00 AM	2.08	2.5	0.42	0.81	365.4
7/28/2013	4:00:00 AM	2.08	2.5	0.42	0.81	365.4
7/28/2013	5:00:00 AM	2.08	2.5	0.42	0.81	365.4

7/28/2013	6:00:00 AM	2.08	2.5	0.42	0.81	365.4
7/28/2013	7:00:00 AM	2.08	2.5	0.42	0.81	365.4
7/28/2013	8:00:00 AM	2.08	2.5	0.42	0.81	365.4
7/28/2013	9:00:00 AM	2.08	2.5	0.42	0.81	365.4
7/28/2013	10:00:00 AM	2.08	2.5	0.42	0.81	365.4
7/28/2013	11:00:00 AM	2.08	2.5	0.42	0.81	365.4
7/28/2013	12:00:00 PM	2.08	2.5	0.42	0.81	365.4
7/28/2013	1:00:00 PM	2.08	2.5	0.42	0.81	365.4
7/28/2013	2:00:00 PM	2.09	2.5	0.41	0.78	352.2
7/28/2013	3:00:00 PM	2.07	2.5	0.43	0.84	378.8
7/28/2013	4:00:00 PM	2.06	2.5	0.44	0.87	392.4
7/28/2013	5:00:00 PM	2.06	2.5	0.44	0.87	392.4
7/28/2013	6:00:00 PM	2.06	2.5	0.44	0.87	392.4
7/28/2013	7:00:00 PM	2.07	2.5	0.43	0.84	378.8
7/28/2013	8:00:00 PM	2.06	2.5	0.44	0.87	392.4
7/28/2013	9:00:00 PM	2.07	2.5	0.43	0.84	378.8
7/28/2013	10:00:00 PM	2.05	2.5	0.45	0.90	406.1
7/28/2013	11:00:00 PM	2.04	2.5	0.46	0.94	420.0
7/29/2013	12:00:00 AM	2.05	2.5	0.45	0.90	406.1
7/29/2013	1:00:00 AM	2.06	2.5	0.44	0.87	392.4
7/29/2013	2:00:00 AM	2.07	2.5	0.43	0.84	378.8
7/29/2013	3:00:00 AM	2.05	2.5	0.45	0.90	406.1
7/29/2013	4:00:00 AM	2.04	2.5	0.46	0.94	420.0
7/29/2013	5:00:00 AM	2.04	2.5	0.46	0.94	420.0
7/29/2013	6:00:00 AM	2.05	2.5	0.45	0.90	406.1
7/29/2013	7:00:00 AM	2.05	2.5	0.45	0.90	406.1
7/29/2013	8:00:00 AM	2.06	2.5	0.44	0.87	392.4
7/29/2013	9:00:00 AM	2.06	2.5	0.44	0.87	392.4
7/29/2013	10:00:00 AM	2.07	2.5	0.43	0.84	378.8
7/29/2013	11:00:00 AM	2.07	2.5	0.43	0.84	378.8
7/29/2013	12:00:00 PM	2.07	2.5	0.43	0.84	378.8
7/29/2013	1:00:00 PM	2.08	2.5	0.42	0.81	365.4
7/29/2013	2:00:00 PM	2.08	2.5	0.42	0.81	365.4
7/29/2013	3:00:00 PM	2.09	2.5	0.41	0.78	352.2
7/29/2013	4:00:00 PM	2.09	2.5	0.41	0.78	352.2
7/29/2013	5:00:00 PM	2.1	2.5	0.40	0.76	339.1
7/29/2013	6:00:00 PM	2.1	2.5	0.40	0.76	339.1
7/29/2013	7:00:00 PM	2.11	2.5	0.39	0.73	326.2
7/29/2013	8:00:00 PM	2.12	2.5	0.38	0.70	313.5
7/29/2013	9:00:00 PM	2.12	2.5	0.38	0.70	313.5
7/29/2013	10:00:00 PM	2.12	2.5	0.38	0.70	313.5
7/29/2013	11:00:00 PM	2.13	2.5	0.37	0.67	301.0
7/30/2013	12:00:00 AM	2.13	2.5	0.37	0.67	301.0
7/30/2013	1:00:00 AM	2.13	2.5	0.37	0.67	301.0
7/30/2013	2:00:00 AM	2.13	2.5	0.37	0.67	301.0
7/30/2013	3:00:00 AM	2.13	2.5	0.37	0.67	301.0
7/30/2013	4:00:00 AM	2.13	2.5	0.37	0.67	301.0

7/30/2013	5:00:00 AM	2.14	2.5	0.36	0.64	288.6
7/30/2013	6:00:00 AM	2.14	2.5	0.36	0.64	288.6
7/30/2013	7:00:00 AM	2.14	2.5	0.36	0.64	288.6
7/30/2013	8:00:00 AM	2.14	2.5	0.36	0.64	288.6
7/30/2013	9:00:00 AM	2.14	2.5	0.36	0.64	288.6
7/30/2013	10:00:00 AM	2.14	2.5	0.36	0.64	288.6
7/30/2013	11:00:00 AM	2.15	2.5	0.35	0.62	276.4
7/30/2013	12:00:00 PM	2.15	2.5	0.35	0.62	276.4
7/30/2013	1:00:00 PM	2.15	2.5	0.35	0.62	276.4
7/30/2013	2:00:00 PM	2.15	2.5	0.35	0.62	276.4
7/30/2013	3:00:00 PM	2.15	2.5	0.35	0.62	276.4
7/30/2013	4:00:00 PM	2.16	2.5	0.34	0.59	264.5
7/30/2013	5:00:00 PM	2.16	2.5	0.34	0.59	264.5
7/30/2013	6:00:00 PM	2.16	2.5	0.34	0.59	264.5
7/30/2013	7:00:00 PM	2.16	2.5	0.34	0.59	264.5
7/30/2013	8:00:00 PM	2.16	2.5	0.34	0.59	264.5
7/30/2013	9:00:00 PM	2.17	2.5	0.33	0.56	252.6
7/30/2013	10:00:00 PM	2.17	2.5	0.33	0.56	252.6
7/30/2013	11:00:00 PM	2.16	2.5	0.34	0.59	264.5
7/31/2013	12:00:00 AM	2.16	2.5	0.34	0.59	264.5
7/31/2013	1:00:00 AM	2.16	2.5	0.34	0.59	264.5
7/31/2013	2:00:00 AM	2.16	2.5	0.34	0.59	264.5
7/31/2013	3:00:00 AM	2.16	2.5	0.34	0.59	264.5
7/31/2013	4:00:00 AM	2.16	2.5	0.34	0.59	264.5
7/31/2013	5:00:00 AM	2.16	2.5	0.34	0.59	264.5
7/31/2013	6:00:00 AM	2.16	2.5	0.34	0.59	264.5
7/31/2013	7:00:00 AM	2.16	2.5	0.34	0.59	264.5
7/31/2013	8:00:00 AM	2.16	2.5	0.34	0.59	264.5
7/31/2013	9:00:00 AM	2.15	2.5	0.35	0.62	276.4
7/31/2013	10:00:00 AM	2.15	2.5	0.35	0.62	276.4
7/31/2013	11:00:00 AM	2.15	2.5	0.35	0.62	276.4
7/31/2013	12:00:00 PM	2.16	2.5	0.34	0.59	264.5
7/31/2013	1:00:00 PM	2.16	2.5	0.34	0.59	264.5
7/31/2013	2:00:00 PM	2.16	2.5	0.34	0.59	264.5
7/31/2013	3:00:00 PM	2.17	2.5	0.33	0.56	252.6
7/31/2013	4:00:00 PM	2.17	2.5	0.33	0.56	252.6
7/31/2013	5:00:00 PM	2.17	2.5	0.33	0.56	252.6
7/31/2013	6:00:00 PM	2.17	2.5	0.33	0.56	252.6
7/31/2013	7:00:00 PM	2.17	2.5	0.33	0.56	252.6
7/31/2013	8:00:00 PM	2.18	2.5	0.32	0.54	241.0
7/31/2013	9:00:00 PM	2.18	2.5	0.32	0.54	241.0
7/31/2013	10:00:00 PM	2.17	2.5	0.33	0.56	252.6
7/31/2013	11:00:00 PM	2.17	2.5	0.33	0.56	252.6

Appendix L

Technical Standard Operating Procedure – Collection of Cross-Channel Surface Water Samples

TABLE OF CONTENTS

1.0 PURPOSE ..... Page 2

2.0 SCOPE ..... Page 2

3.0 REQUIREMENTS ..... Page 2

3.1 Health and Safety ..... Page 2

4.0 REFERENCES ..... Page 2

5.0 DEFINITIONS ..... Page 3

6.0 RESPONSIBILITIES ..... Page 3

7.0 EQUIPMENT ..... Page 3

8.0 PROCEDURE ..... Page 3

8.1 General Procedures for Collection of Cross-Channel Water Samples ..... Page 3

8.2 Collection of Independent Samples in each Compartment ..... Page 4

8.3 Collection of a Composite Sample ..... Page 5

8.4 Dividing a Sample to Individual Analyte Bottles ..... Page 6

9.0 DOCUMENTATION/VERIFICATION ..... Page 6

Figure 1 ..... Page 7

1.0 PURPOSE

This standard operating procedure (SOP) describes the requirements and process for collecting surface water samples from multiple locations across the channel of a wadeable stream. Collecting multiple samples along a transect perpendicular to the stream flow will provide information on the homogeneity of water chemistry across the channel (if samples are analyzed independently) or will provide a representative sample of stream water chemistry (if individual samples are composited before analysis). This procedure can be used wherever it is possible to wade completely across the channel. Where the water is too deep for wading, these procedures maybe modified to be used from a stable boat. Samples collected using this method may be analyzed on-site or transported to a laboratory. Proper preservation techniques may vary depending on the target analytes. Site-specific deviations from this SOP must be approved by the AECI Project Manager or the Client Project Manager prior to initiation of the sampling activity.

2.0 SCOPE

Surface water sampling is applicable to most study sites with surface drainages directly on the site or that are located hydraulically downgradient from such drainages.

3.0 REQUIREMENTS

Factors that may affect the ability to collect cross-channel samples include channel width, water depth, water velocity, channel bed stability and composition of the substrata. For successful completion of this procedure, a site must be safely accessible by sampling personnel access to the entire width of the stream channel must be possible. Ultra clean methods shall be followed for sampling activities.

3.1 Health and Safety

Stream substrata, or bed material, can be highly variable, even within a small stream section, and may pose a risk to those working in the stream. Large rocks with significant algal growth can be slick and those pose a fall risk. Rocks and sand can shift when weight is applied to them. Sharp rocks, sticks and artificial debris (broken bottles, metals, barbed wire) can puncture boots and skin. Before wading into a new area of the stream, examine the area visually, if possible, and use one foot to gently probe and stream bottom for suitable footing. If necessary, use a wading staff for stability.

PPE: Waders, nitrile or similar gloves.

Operational or safety issues associated with this procedure shall be reported to the on-site supervisor, AECI Project Manager, SH&E Coordinator, or their designees for resolution. Employees and contractors are required to stop work when they believe work conditions are unsafe.

4.0 REFERENCES

USGS. 1999. *National Field Manual for the Collection of Water-Quality Data, Chapter A4. Collection of Water Samples*.

USEPA. *Water: Monitoring and Assessment*. Chapter 5 Water Quality Conditions. (website)

USEPA. 1999. Rapid *Bioassessment Protocols for use in Wadeable Streams and Rivers*. EPA 841-B-99-002.

USEPA. 1996. *Sampling Ambient Water for Trace Metals at EPA Water Quality Criteria Levels.* EPA Method 1669. Office of Water, Engineering and Analysis Division, Washington, DC.
USGS. 1985. *Study and Interpretation of the Chemical Characteristics of Natural Water*. USGS Water Supply Paper 2254.

5.0 DEFINITIONS

Environmental Sample – Low concentration sample typically collected offsite and not requiring DOT hazardous waste labeling as a high hazard sample.

Clean Hands – All operations involving contact with the sample bottle and transfer of the sample from the sample collection device to the sample bottle are handled by the individual designated as "clean hands."

Dirty Hands – All operations involving preparation of the sampler (except the sample container itself), operation of any machinery and all other activities that do not involve direct contact with the sample, shall be performed by the individual designated as "dirty hands."

6.0 RESPONSIBILITIES

Project Manager

The Project Manager (PM) is responsible for the selection of the appropriate methodology, technique and field procedure for conducting the sampling.

Field Project Leader

The Field Project Leader (FPL) may be an AECI employee or contractor who is responsible for overseeing the sampling activities. The FPL is also responsible for making on-site decisions as to slight shifts in the cross-channel sampling location in order to ensure a safe working environment and that representative samples will be collected. The FPL provides oversight for all work performed and verification that the activity satisfies the requirements of this SOP and the Project Plan.

7.0 EQUIPMENT

1. Sampling bottles (certified clean and pre-treated with preservatives, if necessary)
2. Large (~2 L to 5 gallon) mixing bottles (e.g., a clean cubitainer)
3. Decontamination equipment and supplies
4. Nitrile gloves
5. Shoulder-length gloves
6. Peristaltic sump, clean tubing and 0.45 µm inline filters, or
7. 60 cc syringes and 0.45 µm syringe filters
8. Labels
9. Sharpies® or other indelible markers
10. 100-foot tape measure or rope with accurately-marked intervals
11. ≥ 3 foot rebar or wooden stakes
12. Orange plastic flagging
13. Hammer

8.0 PROCEDURE

8.1 General Procedures for Collection of Cross-Channel Water Samples

- Determine whether the multiple samples collected across the channel will be composited into a single sample, or analyzed independently. If the latter, then sufficient volume must be collected at each site for all analyses.
- Acquire the necessary number and type of sample containers for all samples. A "sample" (composite or multiple individual samples) will consist of five (5) bottles, including two 250-mL acidified (to ≤ 2 pH with nitric acid) high density polyethylene (HDPE) bottles (one non-filtered for total metals and hardness analysis, and one filtered (0.45 µm) for dissolved metals analysis), one 250-mL HPDE bottle with NaOH (for cyanide analysis), one 250-mL HDPE bottle (unpreserved) for salinity, and one 500-mL HDPE bottle (unpreserved) for the remaining inorganic analyses.
- Upon arrival at the site, one member of the sampling shall be designated as "dirty hands" and a second member shall be designated as "clean hands."
- The cross-channel samples shall follow the general USGS procedure of equal-width-increment (EWI) sampling. Each stream section to be sampled will be of approximately equal width.
- If samples are to be collected at multiple transects, begin work at the furthest downstream location.
- Select the sampling transect location. One person shall stand at the edge of one bank of the stream holding the tape or rope and a second person shall carry the end of the tape or rope across the stream. As much as possible, minimize disturbance of the stream bottom and limit the area of travel to a narrow corridor. Samples shall always be collected upstream of the disturbed area.
- With the tape or rope as taut as possible, secure the tape/rope to stakes on each bank.
- Determine the number of sampling compartments (sections). See Figure 1 of this SOP and follow this general guidance:
    - Small stream (≤25 ft in width): 4-6 compartments
    - Intermediate stream (>25 – 50 ft in width): 6-12 compartments
    - Large stream (>50 ft in width): ≥ 12 compartments
- Stream features should also be used in determining the number of compartments. IT may be appropriate to place different features (pools, runs, ripples, eddies) into separate compartments. A seemingly homogenous reach (e.g., a consistent run) will probably require fewer compartments.
- Using the hammer, drive a stake into the stream bed marking the center of the compartment. Tie an orange flag at the top of each stake to make them more visible.

8.2 Collection of Independent Samples in each Compartment

- One of the unpreserved sample bottles may be used to collect water from the stream at each staked location, or a separate container may be used. As 1500 mL are needed for all analyses, a 2 L collection bottle would be adequate for collecting the individual compartment samples (new bottle for each compartment).
- Don clean gloves. Nitrile gloves are acceptable, however, for deeper water wear clean, shoulder-length gloves.
- Approach the location from the downstream side. Once in position, wait approximately 30 seconds (or longer if needed) for any disturbed fine sediment to be carried downstream.

- At the midpoint of the compartment, where the stake is located, rinse the bottle three times with stream water. Just upstream of the stake, place the sampling bottle into the water, gently lowering it through the water column. The mouth of the bottle should be facing generally upstream, but the bottle should be angled upward at ~20-45° to allow air to escape as the bottle fills. Do not touch the bottom of the stream, as that may disturb sediment. Raise the bottle slowly back up through the water column. The bottle should be full when it is lifted from the water.
- Securely replace the bottle cap and hand the filled bottle to another staff member (or place it on a rock or other location where it will not be carried downstream). Each bottle should be appropriately marked with the correct compartment number.
- Go to the next compartment, again approaching from the downstream side, and repeat the collection process.
- Divide the sample into the appropriate preserved and unpreserved bottles (see Section 8.4 of this SOP).

8.3 Collection of a Composite Sample

- Before collecting samples for analysis, determine in which compartment a sample bottle will fill the fastest when lowered and raised through the water column (e.g., 1 minute, 30 seconds, etc.). This will be the Transit time. Use this same Transit time at all compartments, even if a bottle is not completely filled when brought back to the surface.
- As 1500 mL are needed for all analyses, a 1 L collection bottle should be adequate for collecting the individual compartment samples, which will be mixed as a composite sample before being subdivided for analyses. Use a new bottle for each compartment.
- Don clean gloves. Nitrile gloves are acceptable, however, for deeper water wear clean, shoulder-length gloves.
- Approach the location from the downstream side. Once in position, wait approximately 30 seconds (or longer if needed) for any disturbed fine sediment to be carried downstream.
- At the midpoint of the compartment, where the stake is located, rinse the bottle three times with stream water. Just upstream of the stake, gently lower and raise the sampling bottle into the water within the pre-determined Transit time. The mouth of the bottle should be facing generally upstream, but the bottle should be angled upward at ~20-45° to allow air to escape as the bottle fills. Do not touch the bottom of the stream, as that may disturb sediment. The bottle may not be completely full when it is lifted from the water.
- Securely replace the bottle cap and hand the filled bottle to another staff member (or place it on a rock or other location where it will not be carried downstream). Each bottle should be appropriately marked with the correct compartment number.
- Go to the next compartment, again approaching from the downstream side, and repeat the collection process.

- When all compartment samples have been collected, mix each by vigorously inverting them no less than three times, and immediately emptying them into the large mixing bottle. Make sure the mixing bottle is large enough to contain the water collected.
- Cap the mixing bottle and homogenize the composite sample by vigorously and repeatedly swirling and inverting the bottle for no less than one minute.
- Divide the sample into the appropriate preserved and unpreserved bottles (see Section 8.4 of this SOP). Some sample may remain in the mixing bottle.

8.4 Dividing a Sample to Individual Analyte Bottles

- Fill all containers, <u>except</u> the one for dissolved metals, with the raw water sample, either the individual compartment samples, or the composite.
- <u>Do not</u> overfill the bottles that already contain preservative.
- For the dissolved metals sample, filter 250 mL of the raw water sample using a 1) peristaltic pump equipped with new, disposable tubing and a new, 0.45 µm filter, or 2) new, 60 cc syringe and 0.45 µm filter syringes.
- If using a pump, tubing and filter, place the intake tube into the raw sample and the outlet tube into the 250 mL sample bottle with preservative. Activate the pump and filter enough water to fill the sample bottle, without overfilling.
- If using a syringe and syringe filters, draw approximately 60 cc of the raw water sample into the syringe <u>before</u> the filter is attached. Attach the filter and depress the plunger while holding the syringe filter outlet over the preserved sample bottle. It may be necessary to stop and replace the filter if the raw water contains a high level of solids.
- Make sure all sample bottles are securely capped and labeled.

9.0 DOCUMENTATION/VERIFICATION

A record of field activities, including the number and type of samples collected, shall be recorded on field data sheets or in a field log. The log shall be reviewed by the FPL to verify the accuracy of the data.
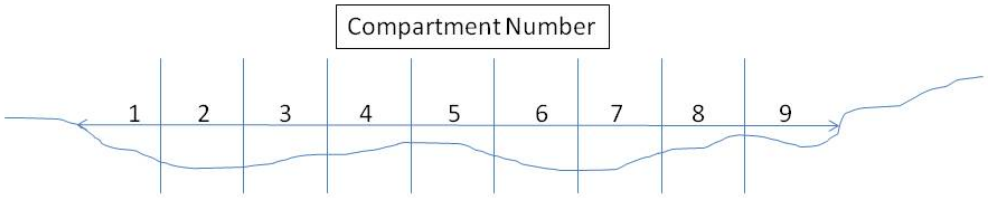
Figure 1. Example of the general placement of the cross-channel sampling compartments for the equal-width-increment (EWI) sampling procedure.