1290076

Rico Surface and Groundwater Sampling
Supplemental Surface Water Quality Monitoring
Rico, Colorado
Data Summary Report

Prepared for:
Atlantic Richfield Company
4 Centerpointe Drive
La Palma, CA 90623

Prepared by:

ANDERSON
ENGINEERING COMPANY INC.

977 West 2100 South
Salt Lake City, UT 84119
(801) 972-6222

March 2013

Table of Contents

1.0 Introduction 3
2.0 Field Sampling 3
2.1 Sampling Frequency 3
2.2 Water Quality and Flow Measurement Sampling Locations 3
2.3 Sampling Station Conditions and Desctiptions 5
2.4 Simultaneous Operations 6
3.0 Sampling and Analysis Parameters and Methods 6
4.0 Flow Measurement Methods 9
5.0 Analytical Results 9
6.0 Quality Control 9
6.1 Field QC 9
6.2 Laboratory QC 10

List of Figures

Figure 1 Northern St. Louis Ponds Sampling Locations
Figure 2 Southern St. Louis Ponds Sampling Locations
Figure 3 Sampling Locations South of Rico
Figure 4 Dolores River Cross Section at Sampling Station DR-1
Figure 5 Dolores River Cross Section at Sampling Station DR-2
Figure 6 Pond 8 Embankment Cross Section at Sampling Station DR-5
Figure 7 Dolores River Cross Section at Sampling Station DR-7
Figure 8 Dolores River Cross Section at Sampling Station DR-4-SW
Figure 9 Dolores River Cross Section at Sampling Station DR-G

List of Tables

Table 1 Sampling Location Descriptions
Table 2 Analytical Procedures Summary
Table 3A Surface Water Location Sampling Field Data and Station Information Summary, March 2013
Table 3B Groundwater Well Sampling Field Data and Station Information Summary, March 2013
Table 3C Quality Control Samples Field Data and Station Information Summary, March 2013
Table 3D DR-1 Cross Section Composite Sampling Field Data and Flow Information Summary, March 2013
Table 3E DR-2 Cross Section Composite Sampling Field Data and Flow Information Summary, March 2013
Table 3F DR-7 Cross Section Composite Sampling Field Data and Flow Information Summary, March 2013
Table 3G DR-4-SW Cross Section Composite Sampling Field Data and Flow Information Summary, March 2013
Table 4A Surface Water Sampling Analytical Sampling Results Summary, March 2013
Table 4B Groundwater Analytical Sampling Results Summary, March 2013
Table 4C Quality Control Samples Analytical Sampling Results Summary, March 2013
Table 4D Dolores River Composite Sampling Analytical Sampling Results Summary, March 2013
Table 5A Relative Percent Difference (RPD) of Lab Analysis between MW-6 SHALLOW and Duplicate Sample DR-8
Table 5B Relative Percent Difference (RPD) of Lab Analysis between MW-104 and Duplicate Sample DR-9

Table 5C Relative Percent Difference (RPD) of Lab Analysis between MW-5 SHALLOW and Duplicate Sample DR-10
Table 5D Relative Percent Difference (RPD) of Lab Analysis between DR-2 and Duplicate Sample DR-11

List of Appendices

Appendix A Sampling Location Maps
Appendix B Data Tables
Appendix C Project Narrative and Laboratory Analytical Reports
Appendix D Laboratory QC Results
Appendix E Flow Cross Sections
Appendix F Chain of Custody Records
Appendix G Field Photos
Appendix H Field Log Book Records
Appendix I North Flume OTT PLS Transducer Data with Flowrates
Appendix J North Flume Ultrasonic Sensor Data with Flowrates
Appendix K South Flume OTT Orpheus Mini Data with Flowrates
Appendix L Technical Standard Operating Procedure – Collection of Cross Channel Surface Water Samples

1.0 Introduction

In accordance with the Rico Sampling and Analysis Plan for Supplemental Surface and Groundwater Quality Monitoring at Rico, CO prepared by AECOM, dated November 2010, the surface and groundwater sampling event was completed on March 12th – 21th, 2013. Sampling was completed by Anderson Engineering Co. Inc., by technicians who are familiar with the Rico sites and the BP Control of Work Management System. Surface and groundwater samples were collected from prescribed locations within the St. Louis settling pond system and at the system discharge (DR-6) to the Dolores River (collectively referred to as the St. Louis pond system), and previously sampled locations along the Dolores River above, at and below the St. Louis pond system. Figures 1, 2, and 3 in Appendix A illustrate the locations of the various points sampled monthly. Sample results have been summarized and laboratory analytical results are attached with quality control documentation.

2.0 Field Sampling

2.1 Sampling Frequency

The sampling period represented by this sampling event is for the month of March of 2013. Sampling will be performed on a monthly basis through at least the end of 2013.

2.2 Water Quality and Flow Measurement Sampling Locations

Surface water and groundwater samples were collected from the locations described on Table 1 and shown on Figures 1, 2, and 3 in Appendix A. In the fall of 2011, twelve (12) new monitoring wells were drilled in the vicinity of the recently constructed interim drying facility. Beginning November 2011, those wells were sampled and will continue to be sampled monthly along with the other sampling locations mentioned. In the fall of 2012, eight (8) new monitoring wells were drilled throughout the St. Louis Ponds site. Beginning November 2012, those wells were sampled and will continue to be sampled monthly along with the other sampling locations mentioned. Additionally, eight (8) historic groundwater wells are sampled on a monthly basis.

The Dolores River was sampled above the St. Louis pond system, and below the adit outfalls downstream of the reclaimed Silver Swan Mine area. The river was also sampled at the USGS gaging station downstream of the Silver Swan site.

TABLE 1 - Sample Location Descriptions

SITE ID	SITE LOCATION / DESCRIPTION
Surface Water Locations	
DR-1	Cross-section on the Dolores River approximately 1000 feet North of Pond 18.
DR-2	Cross-section on the Dolores River approximately 150 feet North of the system outfall.
DR-3	St. Louis Tunnel discharge at adit entrance. Sampling location is at the parshll flume located approximately 50 ft west of the cinder block structure at the former adit entrance.

DR-4	Discharge of Pond 15. The sampling location is at the outlet of the upper discharge pipe located on the midpoint of the Pond 15 south embankment.
DR-5	Discharge of Pond 8. The sampling location is at the inlet of the discharge spillway located at the southwest corner of Pond 8.
DR-6	St. Louis settling ponds system outfall to the Dolores River (previous permit Outfall 002). Sample location is at installed 9" parshall flume.
DR-7	Dolores River below St. Louis settling ponds system outfall. Sampling/flow measurement location is located just off the entrance road to the St. Louis ponds site where the Dolores River is adjacent to the entrance road. The site is located approximately 75 feet downstream of a large bend in the river that first brings the Dolores adjacent to the entrance road.
DR-4-SW	Dolores River below Silver Swan. Sampling/flow measurement location is on the Dolores River below the Silver Swan site just downstream of a bend in the river and below a cemetery on the east bank.
DR-G	Located approximately 3.5 miles downstream of the Silver Swan site, at the USGS gauging station #09165000 immediately downstream of the bridge at this location.
Groundwater Locations	
GW-1	Well is located on the north end of the site, approximately 1000 feet north of the northern edge of Pond 18 and about 75 feet northeast of DR-1
GW-3	Located approximately 200 feet north of the northern edge of pond 18, and approximately 60 feet west of the main access road.
GW-4	Located on the western flood dike of Pond 18, approximately midway along the dike.
GW-5	Located on the northern edge of the former Pond 17 area, or on the northern dike of the newly constructed drying cell 1.
GW-6	Located on the middle of the former Pond 17 area, or on the western edge of the south dike of the newly constructed drying cell 1.
GW-7	Located on the eastern edge of the access road directly across from the former Pond 17, or directly across from the newly constructed drying cell 2.
EB-1	Located on the northern edge of the former Pond 17 area, or on the northern dike of the newly constructed drying cell 1. It is within ten feet of GW-5.
EB-2	Located on the southern portion of the former Pond 16 area, or on the western edge of the south dike of the newly constructed drying cell 3.
MW-1 Shallow MW-1 Deep	Both wells are located about 4 feet apart on the western embankment of Pond 13 at the division between Pond 11 and Pond 12.
MW-2 Shallow MW-2 Deep	Both wells are located about 4 feet apart on the western flood embankment of Pond 12, about mid-way along the pond.
MW-3 Shallow MW-3 Deep	Both wells are located about 4 feet apart on the western flood embankment of Pond 15, on the southern half of the embankment.
MW-4 Shallow MW-4 Deep	Both wells are located about 4 feet apart on the southern embankment of Pond 13, approximately 60 west of the main east access road.
MW-5 Shallow	Both wells are located about 4 feet apart on the western dike of drying cell 3 (refer to Figure 2).

MW-5 Deep	
MW-6 Shallow MW-6 Deep	Both wells are located about 4 feet apart on northern embankment of Pond 13, approximately 75 feet west of the main east access road
MW-101	Well is located approximately 200 feet south of the lime plant building in the large open clearing within the St. Louis Road loop.
MW-102	Well is located approximately 150 feet southeast of well GW-7 at the point that the access road splits in two directions.
MW-103	Well is located at the southwest corner of Pond 7 on the flood control dike adjacent to the Dolores River.
MW-104	Well is located approximately midway along the west flood control dike of Pond 9.
MW-202	Well is located approximately 25 feet southeast of the cinder block structure at the former adit entrance.
MW-204	Well is located approximately 200 feet east of the cinder block structure at the former adit entrance, adjacent to the collapsed tunnel.
P13-102	Well is located at approximately the southeast end of the newly constructed dike at the southwest corner of Pond 13.
P13-103	Well is located approximately midway along the newly constructed dike at the south corner of Pond 13.
AT-2	Angle borehole casing is located approximately 220 feet east of the cinder block structure at the former adit entrance, adjacent to the collapsed tunnel.

2.3 Sampling Station Conditions and Descriptions

The sampling requirements and stations are described in detail below, as well as the conditions at each station for this sampling period. Samples collected were collected per protocols identified in the Sampling and Analysis Plan (SAP). Flow measurements were collected per protocols identified in the SAP.

DR-1. Sampling location fully accessible. Grab sample collected from east bank of river and composite sample collected from stream cross section. Flow measurements were collected by flowmeter.

DR-2. Sampling location fully accessible. Grab sample collected from east bank of river and composite sample collected from stream cross section. Flow measurements were collected by flowmeter.

DR-3. Flow measurement collected monthly by an installed 9” flume and water level measurement devices at the sampling location. Due to winter storm activity in March, equipment at north flume suffered several power failures and data could not be obtained during a few time periods for this month. Manual measurement collected on 3-7-13 at 9:45 am.

DR-4. Sample location fully accessible. Sample collected from upper drain pipe inlet in Pond 15. Flow in both pipes estimated by collecting volumes of water and measuring collection times.

DR-5. Sampling location fully accessible. Sample collected at spillway. Flow measurements collected by flowmeter at spillway. Due to the shallow water and multiple paths, accurate flow measurements could not be determined for this sampling location and period. Flows estimated at spillway to be 40% of total flow.

DR-6. Flow measurement by an installed 9" flume and water level measurement devices at the sampling location. Manual measurement collected on 3-13-13 at 3:57 pm.

DR-7. Sampling location fully accessible. Grab sample collected from east bank of river and composite sample collected from stream cross section. Flow measurements were collected by flowmeter.

DR-4-SW. Sampling location partially accessible. Grab sample collected from east bank of river and composite sample collected from stream cross section. Flow measurements could not be collected.

DR-G. Sampling location partially accessible. Grab sample collected from east bank of river. Flow measurements could not be collected.

Monitoring Wells. All monitoring wells were sampled by use of a bailer, and field measurements were taken at the time of sampling, per protocols identified in the SAP. Depth measurements were also taken at this time. For the March 2013 sampling period, MW-2 Shallow, MW-3 Shallow, and MW-202 were dry. GW-6 well inaccessible due to ice formation and could not be sampled.

2.4 Simultaneous Operations

During the month of March 2013, other projects were occurring simultaneously at the St. Louis Ponds site.

- Operation of the pilot scale wetland test was occurring during the sampling period. Detrimental effects from this operation are little to none.

3.0 Sampling and Analysis Parameters and Methods

All samples were collected as grab or composite samples. Samples were collected from well-mixed locations, which are representative of conditions within the flow stream. Groundwater samples are purged according to protocols identified in the SAP. Lab-certified plastic bottles were used to collect sample water for analyses. Clean hands, dirty hands procedures were followed throughout the sampling. For quality control purposes, one duplicate sample was collected for every 10 samples collected and one field blank was included with the water samples being submitted to the laboratory for analysis. Composite river samples were collected in accordance with the technical standard operating procedure found in Appendix L.

Lab-certified plastic bottles were used to collect all water samples. Sample water was first collected in clean plastic jugs and field parameters were measured at the time of sample collection. Sample water was then placed in the sampling bottles soon thereafter per protocols identified in the SAP. The following sample bottles were used for collection and analysis (all samples collected without filtration unless otherwise indicated):

- One (1) 500mL HDPE bottle, unpreserved, for alkalinity, Total Dissolved Solids (TDS), Total Suspended Solids (TSS), chloride and sulfate analysis
- One (1) 250mL HDPE bottle, unpreserved, for salinity analysis
- One (1) 250mL HDPE bottle, preserved with HNO_3, for total metals, silica, and water hardness analysis

- One (1) 250mL HDPE bottle, preserved with HNO_3, for dissolved metals analysis. This sample is filtered in the field through a 0.45µm filter.
- One (1) 250mL HDPE bottle, preserved with HNO_3, for potentially dissolved metals analysis
- One (1) 250 mL HDPE bottle, preserved with NaOH and Zn Acetate, for sulfide analysis.
- One (1) 250 mL HDPE bottle, preserved with NaOH, for cyanide analysis
- One (1) 250 mL amber glass bottle, preserved with H_2SO_4, for Total Organic Carbon (TOC) and nitrate analysis

Field parameters were measured at the time of sample collection. Field measurement data for pH, temperature, electrical conductivity, dissolved oxygen, and Oxydation-Reduction Potential were recorded using a Hanna Instruments HI 9828 Multiparameter Meter and ExTech ExStik EC500 meter (for recording pH, electrical conductivity, and temperature of groundwater well purge water), and results were logged in the field log book. Results of field measurements for all samples collected on site can be found in Tables 3A – 3G in Appendix B. Weather parameters including temperature and precipitation were obtained and documented in the Daily Toolbox Meeting Record.

All sample bottles were labeled to identify sample number, date and time of collection, type of analysis, and appropriate preservative. In addition, sample analysis/chain of custody forms were completed and processed at the time of sample collection. Original chain of custody forms are signed, dated, and placed in the sample container prior to sealing the container for shipment.

Water samples were kept in cooled containers and sent to the analytical laboratory. Samples were submitted to Pace Analytical Laboratories in Lenexa, Kansas for analysis by analytical procedures listed on Table 2. Analysis was performed according to methods specified in 40 CFR, Part 136 or other methods approved by the EPA. Laboratory methods and reporting limits for all parameters are presented in Table 2. Laboratory results and supporting documentation including quality assurance results are contained in the Appendix C and Appendix D of this report. Results are summarized in Tables 4A – 4D in Appendix B of this report. During the March 2013 sampling event, the amber glass bottle for the Total Organic Carbon and the Nitrogen analyses for DR-7 composite sample broke in transit. A note of this appears in the case narratives for the lab report in Appendix C.

TABLE 2 - Analytical Procedures Summary

PARAMETER	DETECTION LIMIT (MDL)	REPORTING LIMIT (RL)	METHOD
FIELD PARAMETERS			
Dissolved Oxygen (ppm)	+/- 1.5% of reading	+/- 1.5% of reading	SM 4500-OG
Electrical Conductivity (mS/cm)	+/- 1% of reading	+/- 1% of reading	EPA 120.1
Temperature (°C)	+/- 0.15° C	+/- 0.15° C	Standard Method 2550
ORP (Oxidation Reduction Potential, mV)	+/- 1.0 mV	+/- 1.0 mV	Ag/AgCl Probe
pH (Standard pH Units)	+/- 0.02 pH	+/- 0.02 pH	EPA 150.2
NON-METALS			
Alkalinity (mg/L as $CaCO_3$)	20 mg/L	20 mg/L	SM 2320B
Chloride (mg/L)	1.0 mg/L	1.0 mg/L	EPA 300.0
Cyanide (μg/L as CN)	0.0021 mg/L	0.005 mg/L	SM 4500-CN-E
Hardness (mg/L as $CaCO_3$)	0.036 mg/L	0.071 mg/L	SM 2340B
Nitrogen, NO2 plus NO3 (mg/L)	0.022 mg/L	0.1 mg/L	EPA 353.2
Salinity (mg/L as dissolved solids)	6 mg/L	6 mg/L	SM 2510B (calculated)
Silica	0.027 mg/L	0.054 mg/L	EPA 200.8
Sulfate (mg/L as SO4)	0.15 mg/L	1.0 mg/L	EPA 300.0
Sulfides (mg/L)	0.018 mg/L	0.05 mg/L	4500-S-2 D
Total Dissolved Solids (mg/L as TDS)	5.0 mg/L	5.0 mg/L	SM 2540C
Total Organic Carbon (mg/L)	0.072 mg/L	0.5 mg/L	SM 5310C
Total Suspended Solids (mg/L as TSS)	5.0 mg/L	5.0 mg/L	SM 2540D
TOTAL, DISSOLVED, AND POTENTIALLY DISSOLVED METALS*			
Aluminum (μg/L as Al)	2.00 μg/L, 6.35 μg/L	4 μg/L, 50 μg/L	EPA 200.8, EPA 200.8
Antimony (μg/L as Sb)	0.100 μg/L, 0.03 μg/L	0.5 μg/L, 1 μg/L	EPA 200.8, EPA 200.8
Arsenic (μg/L as As)	0.138 μg/L, 0.05 μg/L	0.5 μg/L, 1 μg/L	EPA 200.8, EPA 200.8
Barium (μg/L as Ba)	0.150 μg/L, 0.08 μg/L	0.3 μg/L, 1 μg/L	EPA 200.8, EPA 200.8
Beryllium (μg/L as Be)	0.092 μg/L, 0.05 μg/L	0.2 μg/L, 0.5 μg/L	EPA 200.8, EPA 200.8
Cadmium (μg/L as Cd)	0.028 μg/L, 0.05 μg/L	0.08 μg/L, 0.5 μg/L	EPA 200.8, EPA 200.8
Calcium (μg/L as Ca)	10.000 μg/L, 10.35 μg/L	20 μg/L, 100 μg/L	EPA 200.8, EPA 200.7
Chromium (ug/l as Cr)	0.094 μg/L, 0.07 μg/L	0.5 μg/L, 1 μg/L	EPA 200.8, EPA 200.8
Cobalt (ug/l as Co)	0.250 μg/L, 0.08 μg/L	0.5 μg/L, 1 μg/L	EPA 200.8, EPA 200.8
Copper (μg/L as Cu)	0.184 μg/L, 0.12 μg/L	0.5 μg/L, 1 μg/L	EPA 200.8, EPA 200.8
Iron (μg/L as Fe)	10.00 μg/L, 2.95 μg/L	50 μg/L, 50 μg/L	EPA 200.8, EPA 200.8
Lead (μg/L as Pb)	0.018 μg/L, 0.03 μg/L	0.1 μg/L, 1 μg/L	EPA 200.8, EPA 200.8
Magnesium (μg/L as Mg)	2.31 μg/L, 6.48 μg/L	5 μg/L, 50 μg/L	EPA 200.8, EPA 200.7
Manganese (μg/L as Mn)	0.250 μg/L, 0.14 μg/L	0.5 μg/L, 1 μg/L	EPA 200.8, EPA 200.8
Mercury (μg/L as Hg)	0.1 μg/L, 0.053 μg/L	0.2 μg/L, 1 μg/L	EPA 245.1, EPA 245.1
Molybdenum (μg/L as Mo)	0.069 μg/L, 0.12 μg/L	0.5 μg/L, 1 μg/L	EPA 200.8, EPA 200.8
Nickel (μg/L as Ni)	0.151 μg/L, 0.07 μg/L	0.5 μg/L, 1 μg/L	EPA 200.8, EPA 200.8
Potassium (μg/L as K)	5.24 μg/L, 44.38 μg/L	20 μg/L, 500 μg/L	EPA 200.8, EPA 200.7
Selenium (ug/l as Se)	0.094 μg/L, 0.14 μg/L	0.5 μg/L, 1 μg/L	EPA 200.8, EPA 200.8
Silver (ug/L as Ag)	0.040 μg/L, 0.01 μg/L	0.5 μg/L, 0.5 μg/L	EPA 200.8, EPA 200.8
Sodium (μg/L as Na)	10.40 μg/L, 21.68 μg/L	50 μg/L, 500 μg/L	EPA 200.8, EPA 200.7
Thallium (μg/L as Tl)	0.019 μg/L, 0.02 μg/L	0.1 μg/L, 1 μg/L	EPA 200.8, EPA 200.8
Vanadium (μg/L as V)	0.037 μg/L, 0.11 μg/L	0.1 μg/L, 1 μg/L	EPA 200.8, EPA 200.8
Zinc (μg/L as Zn)	1.00 μg/L, 1.04 μg/L	5 μg/L, 10 μg/L	EPA 200.8, EPA 200.8

*Limits and methods for metals displayed in following format: Total and Dissolved Metals, Potentially Dissolved Metals

4.0 Flow Measurement Methods

Flow velocity measurements were taken at the river sampling locations where accessible. Flow measurements were not collected at areas where ice and snow buildup or high, fast flows prohibited safe access. The flow measurements obtained this sampling period are described in Section 2.3. For this sampling period, flowrates were not measured for river and pond sampling locations DR-4-SW and DR-G due to excessive ice buildup and unsafe access conditions. Flow measurements were collected at DR-1, DR-2, DR-3, DR-4, DR-5, DR-6, and DR-7. Refer to Figures 4 through 9 in Appendix E for Dolores River cross sections. The flowrates are presented on Tables 3A, 3D, 3E, 3F, and 3G in Appendix B.

The St. Louis tunnel flow (DR-3) and St. Louis pond discharge (DR-6) currently have Parshall flumes installed. Flow measurements can be determined at these flumes when the depth of flow is known at a particular point. In order to continuously monitor and measure the depth of flow, depth measurement devices were installed on May 11th, 2011 and May 12th, 2011 at both the north and south flumes. An STI Ultrasonic IRU-5180 automated water level detector was installed at the north Parshall flume. In order to obtain further flow data, an OTT PLS submersible pressure transducer was installed at the north flume in December 2011. In January 2012, it was decided that the OTT PLS would be used exclusively at the north flume to report flow data, and that the ultrasonic meter would remain only as a backup flow measurement system. This was due in large part to the stability and uniformity observed in the data from the OTT PLS, as opposed to the ultrasonic meter, which exhibited greater instability and variability in the readings that the OTT PLS. The south flume has a submersible pressure transducer called the OTT Orpheus Mini. It records deviations from a pre-programmed depth of air space from the top edge of the flume down to the water level. Knowing then the total depth of the flume, the depth of flow can be determined. The post processed data for the OTT PLS, the STI Ultrasonic IRU-5180, and the OTT Orpheus Mini are given in Appendix I, J, and K, respectively.

During the month of March 2013, snow storms on-site caused snow to build up on the solar panel that charges the battery powering the flow equipment at DR-3. As a result, the battery lost power multiple times throughout the month, specifically during certain brief hours on March 1st, 3rd, 5th, 7th, and 9th. Usable data was not recorded during these time intervals.

5.0 Analytical Results

The results of the laboratory analysis are summarized on Tables 4A – 4D in Appendix B. The data is organized by sample location. The Pace Lab reports for all results are contained in Appendix C.

6.0 Quality Control

In addition to the standard laboratory Quality Control (QC), field QC samples for this sampling event included one field duplicate for every 10 samples collected and a Field Blank (FB).

6.1 Field QC

A field duplicate water sample was obtained for every 10 samples collected. Field duplicate samples are assigned the Sample IDs DR-8, DR-9, DR-10, DR-11, and so forth for as many samples as are collected. During the March 2013

sampling period these duplicate samples were collected at stations MW-6 SHALLOW (DR-8), MW-104 (DR-9), MW-5 SHALLOW (DR-10), and DR-2 (DR-11). During sample collection, the duplicate sample bottles were filled simultaneously from the discharge stream or source of water. The duplicate sample was submitted to the analytical laboratory as “blind duplicate” samples.

Tables 5A – 5D in Appendix B compare the analytical results for all parameters from all duplicate sample collected and present the Relative Percent Difference (RPD). The RPD for aqueous samples should be +/- 20%. The trends in the results indicate that duplicate samples of groundwater wells had a high number of parameters outside of the +/- 20% range.

A Field Blank (FB) was collected by processing and analyzing a bottle of distilled water in the field in the same manner as any other sample. The FB was analyzed for the same constituents as the other samples. The FB had concentrations below the reporting limit for all metals except for a small number of total, dissolved, and potentially dissolved metals. The pH was slightly above neutral, the Electrical Conductivity (EC) was very low, it showed a non-detectable level of alkalinity, and a non-detectable level of TDS.

6.2 Laboratory QC

The laboratory control sample (LCS), method blank, matrix spike, and matrix spike duplicate sample results were all within the established limits of concentration, percent recovery, and relative percent difference, with several minor exceptions. Please refer to the Laboratory QC Results in Appendix D for exceptions and for a full QC report.

Appendix A

Sampling Location Maps

General Notes

SCALE IN FEET
0 175 350

No.	Revision/Issue	Date

BP

ANDERSON
ENGINEERING COMPANY, INC.
977 WEST 2100 SOUTH
SALT LAKE CITY, UTAH 84119
(801) 972-6222

RICO WATER SAMPLING

NORTHERN ST. LOUIS PONDS
SAMPLING LOCATIONS

RICO,
COLORADO

DRAWN BY:	MAD
ENGINEER:	MAD
APPROVED:	MAD

Project	Sheet
Date 22-Oct-12	1
Scale 1" = 350'	

1

NORTHERN ST. LOUIS PONDS SAMPLING LOCATIONS

SCALE - 1" = 350'

THESE PLANS AND SPECIFICATIONS ARE THE PROPERTY OF ANDERSON ENGINEERING COMPANY, INC., 977 WEST 2100 SOUTH, SALT LAKE CITY, UTAH, 84119 AND SHALL NOT BE COPIED, REDUCED, OR REPRODUCED WITHOUT THEIR WRITTEN PERMISSION.

E:\AutoCAD drawing\Rico 2012 sampling location map.dwg

2 SOUTHERN ST. LOUIS PONDS SAMPLING LOCATIONS

SCALE - 1" = 350'

THESE PLANS AND SPECIFICATIONS ARE THE PROPERTY OF ANDERSON ENGINEERING COMPANY, INC., 977 WEST 2100 SOUTH, SALT LAKE CITY, UTAH, 84119 AND SHALL NOT BE COPIED, REDUCED, OR REPRODUCED WITHOUT THEIR WRITTEN PERMISSION.

General Notes

SCALE IN FEET
0 175 350

No.	Revision/Issue	Date

BP

ANDERSON
ENGINEERING COMPANY, INC.
977 WEST 2100 SOUTH
SALT LAKE CITY, UTAH 84119
(801) 972-6222

RICO WATER SAMPLING

SOUTHERN ST. LOUIS PONDS
SAMPLING LOCATIONS

RICO,
COLORADO

DRAWN BY:	MAD
ENGINEER:	MAD
APPROVED:	MAD

Project	Sheet
Date 22-Oct-12	2
Scale 1" = 350'	

C:\Users\AEC2-MD\Documents\AECO\Rico Water Sampling\Monthly Sampling Data\December 2012\Appendices\Appendix A - Sampling Location Maps\Rico Map\2012 sampling locations map2.dwg

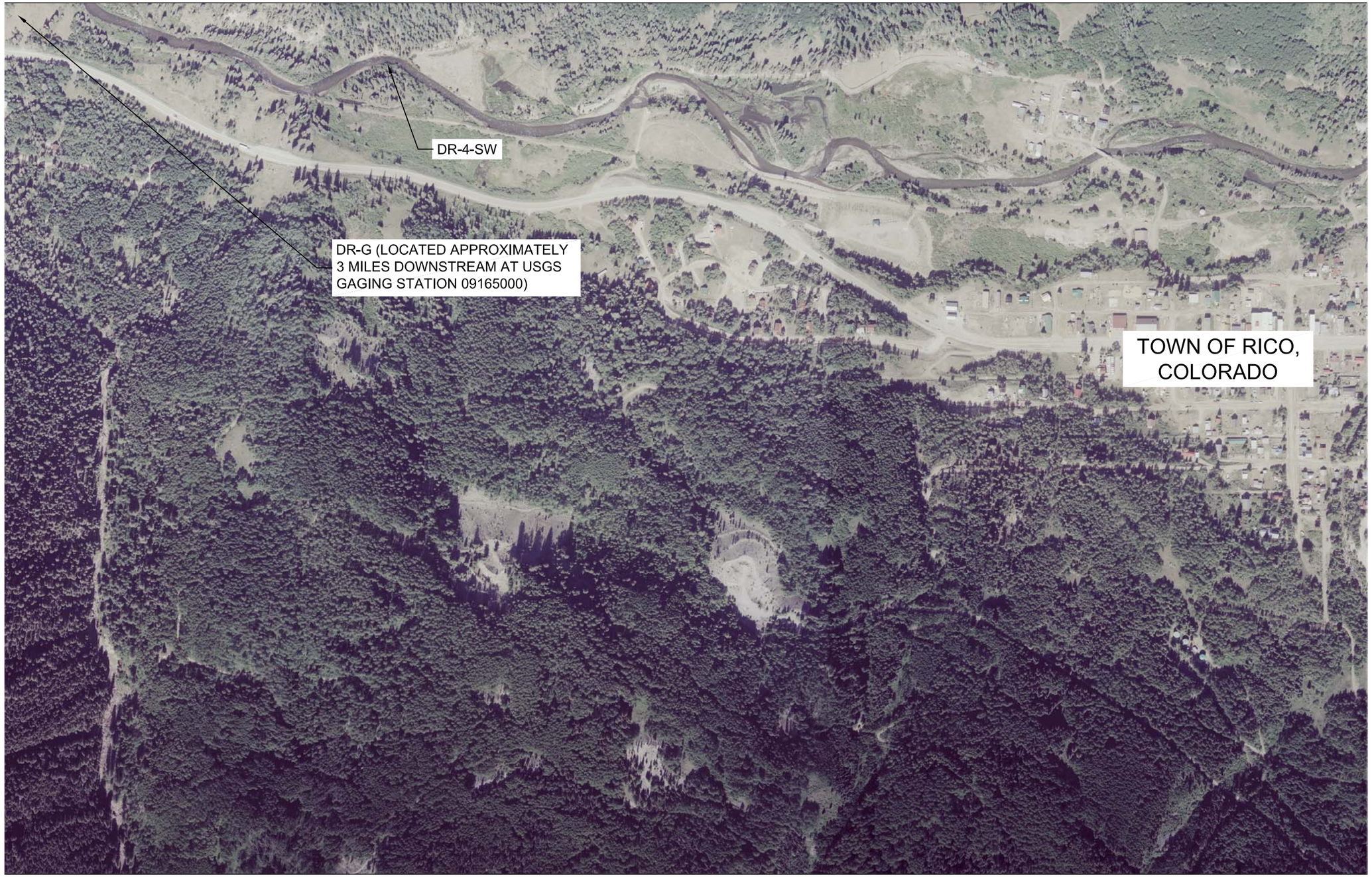

3 **SAMPLING LOCATIONS SOUTH OF RICO, CO**

SCALE - 1" = 500'

THESE PLANS AND SPECIFICATIONS ARE THE PROPERTY OF ANDERSON ENGINEERING COMPANY, INC., 977 WEST 2100 SOUTH, SALT LAKE CITY, UTAH, 84119 AND SHALL NOT BE COPIED, REDUCED, OR REPRODUCED WITHOUT THEIR WRITTEN PERMISSION.

General Notes

SCALE IN FEET
0 250 500

No.	Revision/Issue	Date

BP / ARCO

ANDERSON
ENGINEERING COMPANY, INC.
977 WEST 2100 SOUTH
SALT LAKE CITY, UTAH 84119
(801) 972-6222

RICO SURFACE WATER SAMOPLING

SAMPLING LOCATIONS SOUTH OF RICO, CO

RICO, COLORADO

DRAWN BY:	MAD
ENGINEER:	MAD
APPROVED:	CES

Project	Sheet 3
Date 5-Apr-12	
Scale 1" = 500'	

C:\Users\AECI-MD\Documents\RICO\Rico Water Sampling\Monthly Sampling Data\November 2012\Appendices\Appendix A - Sampling Location Maps\Locations south of Rico.dwg

Appendix B

Data Tables

TABLE 3A - Surface Water Location Sampling Field Data and Station Information Summary, March 2013

			Field Measurements							GPS Location (Colorado State Plane NAD83)		Flow Data				Comments
Sample Location	Date of Sample Collection	Field Technicians	pH	Temp (°C)	EC (mS/cm)	Dissolved Oxygen (ppm)	Oxydation Reduction Potential (ORP, mV)	Well Casing Elevation (ft)	Well Water Elevation (ft)	Northing	Easting	Stream Cross section area (ft^2)	Flowrate cfs / gpm			
DR-1	3/21/2013	J. Gisseman, M. DeFriez	8.65	4.57	0.382	9.21	-92.1	NA	NA	1389970.4600	2267573.6490	17.7	14.99		6729	Cross section on the Dolores River above St. Louis settling pond system (approximately 800 ft north of the northern edge of Pond 18). Flow measurements were collected by flowmeter.
DR-2	3/21/2013	J. Gisseman, M. DeFriez	8.39	6.37	0.452	7.64	-93.2	NA	NA	1386660.9610	2267971.4630	23.78	13.20		5924	Cross section on the Dolores River, approximately 150 ft north of system outfall. Flow measurements were collected by flowmeter.
DR-3	3/13/2013	T. Barbee	7.20	16.47	1.405	1.95	29.9	NA	NA	1388963.0808	2268004.6974	NA	Ultrasonic	1.11	498.17	St Louis adit discharge. Flow measurement by installed Parshall Flume. Due to winter storm activity in March, equipment at north flume suffered several power failures and data could not be obtained during a few time periods for this month. Manual measurement collected on 3-7-13 at 9:45 am.
													Transducer	1.11	497.28	
													Manual	1.14	511.73	
DR-4	3/13/2013	T. Barbee	8.11	14.50	1.440	2.16	29.5	NA	NA	1388153.6284	2267799.1579	NA	0.828		372	Pond 15 discharge. Flow measurements in both discharge pipes estimated by collecting volumes of water and measuring collection times.
DR-5	3/13/2013	T. Barbee	7.82	11.68	1.349	2.62	31.9	NA	NA	1387273.4503	2268024.8524	1.62	0.800		359	Pond 8 discharge. Flow measurements by flowmeter at spillway. Due to the shallow water and multiple paths, accurate flow measurements could not be determined for this sampling location and period. Flows estimated at spillway to be 40% of total flow.
DR-6	3/13/2013	T. Barbee	7.39	11.15	1.369	2.41	33.7	NA	NA	1386431.4984	2267964.5711	NA	Transducer	0.768	345	Outfall to Dolores River. Flow measurement by installed Parshall Flume. Water level by OTT Orpheus Mini submersible pressure transducer. Manual measurement collected on 3-13-13 at 3:57 pm.
													Manual	0.798	358	
DR-7	3/21/2013	J. Gisseman, M. DeFriez	7.81	4.18	0.705	6.17	-77.6	NA	NA	1385880.1050	2267983.4510	18.86	16.54		7424	Cross section on the Dolores River, approximately 500 ft below St. Louis settling pond system outfall. Flow measurements were collected by flowmeter.
DR-4-SW	3/21/2013	J. Gisseman, M. DeFriez	7.80	2.52	0.658	6.90	-81.5	NA	NA	1379176.1190	2266285.0850	CNO	CNO		CNO	Cross section on the Dolores River approximately 100 below the Silver Swan site. Flow measurements could not be collected due to excessive ice buildup preventing safe access.
DR-G	3/21/2013	J. Gisseman, M. DeFriez	8.56	0.40	0.581	11.61	-95.5	NA	NA	1364029.7850	2258752.9060	CNO	CNO		CNO	Cross section on the Dolores River at USGS gauging station #09165000, approximately 3.5 miles downstream of the Silver Swan site. Flow measurements could not be collected due to excessive ice buildup preventing safe access.

ANDERSON
ENGINEERING COMPANY INC.

TABLE 3B - Groundwater Well Sampling Field Data and Station Information Summary, March 2013

			Field Measurements							GPS Location (Colorado State Plane NAD83)		Flow Data			
Sample Location	Date of Sample Collection	Field Technicians	pH	Temp (°C)	EC (mS/cm)	Dissolved Oxygen (ppm)	Oxydation Reduction Potential (ORP, mV)	Well Casing Elevation (ft)	Well Water Elevation (ft)	Northing	Easting	Stream Cross section area (ft^2)	Flowrate cfs / gpm		Comments
GW-1	3/12/2013	T. Barbee	7.64	6.01	0.361	5.05	37.4	8840.13	8837.84	1390006.0210	2267642.6870	NA	NA	NA	Located on the north end of the site, approximately a quarter mile north of the northern edge of Pond 18.
GW-3	3/13/2013	T. Barbee	8.22	4.44	0.758	1.95	32.3	8836.68	8823.64	1389221.9930	2267708.3940	NA	NA	NA	Located approximately 200 feet north of the northern edge of pond 18, and approximately 60 feet west of the main access road. Sample collected over two days.
	3/6/2013		7.66	11.26	0.677	4.42	29.4								
GW-4	3/14/2013	T. Barbee	7.18	3.65	0.625	0.00	-27.4	8826.79	8815.9	1388790.0720	2267553.5420	NA	NA	NA	Located on the western flood dike of Pond 18, approximately midway along the dike.
GW-5	3/14/2013	J. Roehrig	7.17	7.98	1.985	0.57	-25.3	8839.52	8817.07	1388802.0650	2267911.8020	NA	NA	NA	Located on the northern edge of the former Pond 17 area, or on the northern dike of the newly constructed drying cell 1.
GW-6	3/13/2013	WELL FROZEN						8837.45	-	1388589.3950	2267922.5090	NA	NA	NA	Located on the middle of the former Pond 17 area, or on the western edge of the south dike of the newly constructed drying cell 1. Well frozen in 6 inches of ice; could not access.
GW-7	3/6/2013	T. Barbee, T. Barbee	6.59	12.50	2.908	2.36	30.2	8840.00	8816.49	1388611.4370	2268158.0170	NA	NA	NA	GW-7 Located on the eastern edge of the access road directly across from the former Pond 17, or directly across from the newly constructed drying cell 2. Well was inaccessible due to snow and ice formation and could not be sampled.
EB-1	3/6/2013	T. Barbee, T. Barbee	7.21	9.40	1.988	1.44	31.3	8839.86	8816.67	1388792.4420	2267916.9080	NA	NA	NA	Located on the northern edge of the former Pond 17 area, or on the northern dike of the newly constructed drying cell 1. It is within ten feet of GW-5.
EB-2	3/6/2013	T. Barbee, T. Barbee	6.25	8.95	2.988	0.37	28.3	8829.84	8812.45	1388306.1480	2267920.2500	NA	NA	NA	Located on the southern portion of the former Pond 16 area, or on the western edge of the south dike of the newly constructed drying cell 3.
MW-1 SHALLOW	3/12/2013	J. Gisseman	9.02	7.24	1.364	3.24	37.5	8810.85	8803.87	1387826.7470	2267944.5160	NA	NA	NA	Both wells are located about 4 feet apart on the western embankment of Pond 13 at the division between Pond 11 and Pond 12.
MW-1 DEEP	3/12/2013	J. Roehrig	8.60	4.82	1.395	3.17	38.3	8810.87	8801.55	1387829.4070	2267940.5680	NA	NA	NA	
MW-2 SHALLOW	3/13/2013	DRY WELL						8810.23	-	1387829.7580	2267759.0810	NA	NA	NA	Both wells are located about 4 feet apart on the western flood embankment of Pond 12, about mid-way along the pond. MW-2 SHALLOW was dry
MW-2 DEEP	3/13/2013	J. Roehrig	8.01	11.53	1.387	1.31	31.1	8810.21	8800.10	1387836.0950	2267756.0910	NA	NA	NA	
MW-3 SHALLOW	3/13/2013	DRY WELL						8819.57	-	1388308.0910	2267603.5420	NA	NA	NA	Both wells are located about 4 feet apart on the western flood embankment of Pond 15, on the southern half of the embankment. MW-3 SHALLOW was dry.
MW-3 DEEP	3/13/2013	J. Roehrig	7.63	10.11	1.416	0.00	22.9	8819.72	8809.79	1388313.2060	2267601.6050	NA	NA	NA	
MW-4 SHALLOW	3/6/2013	T. Barbee, T. Barbee	6.85	10.51	2.632	2.72	31.2	8816.83	8799.64	1387836.9670	2268221.9370	NA	NA	NA	Both wells are located about 4 feet apart on the southern embankment of Pond 13, approximately 60 west of the main east access road. pH value higher than expected, possibly due to slight degredation of pH probe. Replacement probe already on order.
MW-4 DEEP	3/12/2013	T. Barbee	7.12	11.27	1.614	0.60	35.6	8816.77	8799.66	1387839.1320	2268224.8950	NA	NA	NA	
MW-5 SHALLOW	3/13/2013	J. Gisseman	5.13	10.43	3.902	0.35	57.3	8830.95	8813.65	1388369.7050	2267814.3980	NA	NA	NA	Both wells are located about 4 feet apart on the western dike of drying cell 3 (refer to Figure 2). pH value higher than expected, possibly due to slight degredation of pH probe. Replacement probe already on order.
MW-5 DEEP	3/13/2013	J. Roehrig	6.82	11.42	2.029	0.58	12.2	8830.73	8812.89	1388374.5740	2267813.8150	NA	NA	NA	
MW-6 SHALLOW	3/12/2013	J. Gisseman	7.42	12.60	2.408	0.84	27.6	8830.58	8806.86	1388166.1000	2268148.1000	NA	NA	NA	Both wells are located about 4 feet apart on northern embankment of Pond 13, approximately 75 feet west of the main east access road.
MW-6 DEEP	3/12/2013	J. Roehrig	6.69	11.49	1.697	0.22	30.9	8830.11	8806.57	1388165.5290	2268153.3270	NA	NA	NA	
MW-101	3/13/2013	T. Barbee	7.63	11.74	1.791	0.73	23.7	8845.417	8817.14	1388742.4460	2268096.7400	NA	NA	NA	Located east of Drying Cells 1 / 2 boundary dike, inside the St Louis Access road loop, south of the St. Louis lab bldg.
MW-102	3/13/2013	T. Barbee	7.63	11.83	1.305	2.23	35.5	8841.30	8816.49	1388482.8360	2268230.4920	NA	NA	NA	Located east of Drying Cell 4, in the St Louis Access road at the south end of the road loop.
MW-103	3/13/2013	T. Barbee	8.15	7.14	1.761	0.21	32.0	8797.799	8790.81	1387371.9920	2268003.3380	NA	NA	NA	Located on the western flood embankment of Pond 9, approximately 175 feet south of the north west corner of Pond 9.
MW-104	3/13/2013	T. Barbee	9.40	5.63	1.503	2.49	31.1	8785.60	8781.23	1390006.0210	2267642.6870	NA	NA	NA	Located on the western flood embankment between Ponds 6 and 7.
MW-202	3/13/2013	DRY WELL						8859.206	-	1388999.6490	2268195.9780	NA	NA	NA	Located approximately 30 feet south of the remnant portal structure of the St. Louis Adit discharge. Well was dry and could not be sampled.
MW-204	3/13/2013	J. Roehrig	6.75	12.38	1.425	0.00	-21.4	8865.95	8850.54	1389122.4820	2268373.7870	NA	NA	NA	Located west of collapsed St. Louis adit base, approximately 30 feet west of AT-2.
P13-102	3/12/2013	T. Barbee	7.55	8.36	2.075	0.39	35.7	8810.643	8799.89	1387785.4540	2268076.6470	NA	NA	NA	Located on Pond 13 dike near southeast corner of pond. pH value higher than expected, possibly due to slight degredation of pH probe. Replacement probe already on order.
P13-103	3/12/2013	T. Barbee	7.54	7.87	1.656	0.00	23.8	8811.46	8800.39	1387856.4350	2267994.0830	NA	NA	NA	Located on Pond 13 causeway just north of the dike.
AT-2	3/13/2013	J. Gisseman	8.11	15.66	1.089	1.11	31.2	8866.206	8859.99	1389125.5680	2268405.5140	NA	NA	NA	Angle borehole casing is located approximately 220 feet east of the cinder block structure at the former adit entrance, adjacent to the collapsed tunnel.

ANDERSON
ENGINEERING COMPANY INC.

TABLE 3C - Quality Control Samples Field Data and Station Information Summary, March 2013

			Field Measurements							GPS Location (Colorado State Plane NAD83)		Flow Data			Comments
Sample Location	Date of Sample Collection	Field Technicians	pH	Temp (°C)	EC (mS/cm)	Dissolved Oxygen (ppm)	Oxydation Reduction Potential (ORP, mV)	Well Casing Elevation (ft)	Well Water Elevation (ft)	Northing	Easting	Stream Cross section area (ft^2)	Flowrate cfs / gpm		
Duplicate Samples															
DR-8	3/12/2013	J. Gisseman	6.75	12.09	2.410	0.91	28.4	NA	NA	NA	NA	NA	NA	NA	Duplicate of MW-6 SHALLOW.
DR-9	3/13/2013	T. Barbee	8.83	4.72	1.514	2.05	32.5	NA	NA	NA	NA	NA	NA	NA	Duplicate of MW-104.
DR-10	3/13/2013	J. Gisseman	5.04	10.49	3.901	0.32	47.4	NA	NA	NA	NA	NA	NA	NA	Duplicate of MW-5 SHALLOW
DR-11	3/21/2013	J.Gisseman, M. DeFriez	8.30	6.09	0.454	8.63	-88.9	NA	NA	NA	NA	NA	NA	NA	Duplicate of DR-2
Field Blanks															
FB	3/13/2013	T. Barbee	7.75	11.62	5.000	4.42	21.3	NA	NA	NA	NA	NA	NA	NA	Field blank

ANDERSON
ENGINEERING COMPANY INC.

Table 3D - DR-1 Cross Section Composite Sampling Field Data and Flow Information Summary, March 2013

			Field Measurements					GPS Location (Colorado State Plane NAD83)		Flow Data				Comments
Sample Location	Date of Sample Collection	Field Technicians	pH	Temp (°C)	EC (mS/cm)	Dissolved Oxygen (ppm)	Oxydation Reduction Potential (ORP, mV)	Northing*	Easting*	Compartment Geometry		Average Flowrate		
										Width (ft)	Area (ft^2)	cfs	gpm	
Compartment 1	3/21/2013	J. Gisseman, M. DeFriez	8.57	3.53	0.384	10.54	-93.9	1389969.1002	2267566.3730	5	3.87	3.85	1729	
Compartment 2	3/21/2013	J. Gisseman, M. DeFriez	8.52	3.52	0.384	10.60	-92.7	1389968.0876	2267561.4766	5	6.08	8.66	3887	
Compartment 3	3/21/2013	J. Gisseman, M. DeFriez	8.50	3.51	0.384	10.56	-93.1	1389967.0750	2267556.5802	5	5.01	1.92	860	
Compartment 4	3/21/2013	J. Gisseman, M. DeFriez	8.50	3.46	0.384	10.07	-92.9	1389966.0625	2267551.6838	5	2.74	0.56	253	
Total Composite	3/21/2013	J. Gisseman, M. DeFriez	8.62	4.57	0.381	8.80	-86.9	-	-	20	17.7	15.0	6729	

*Northing and easting values are estimates based on surveyed benchmark on east bank of river at this location

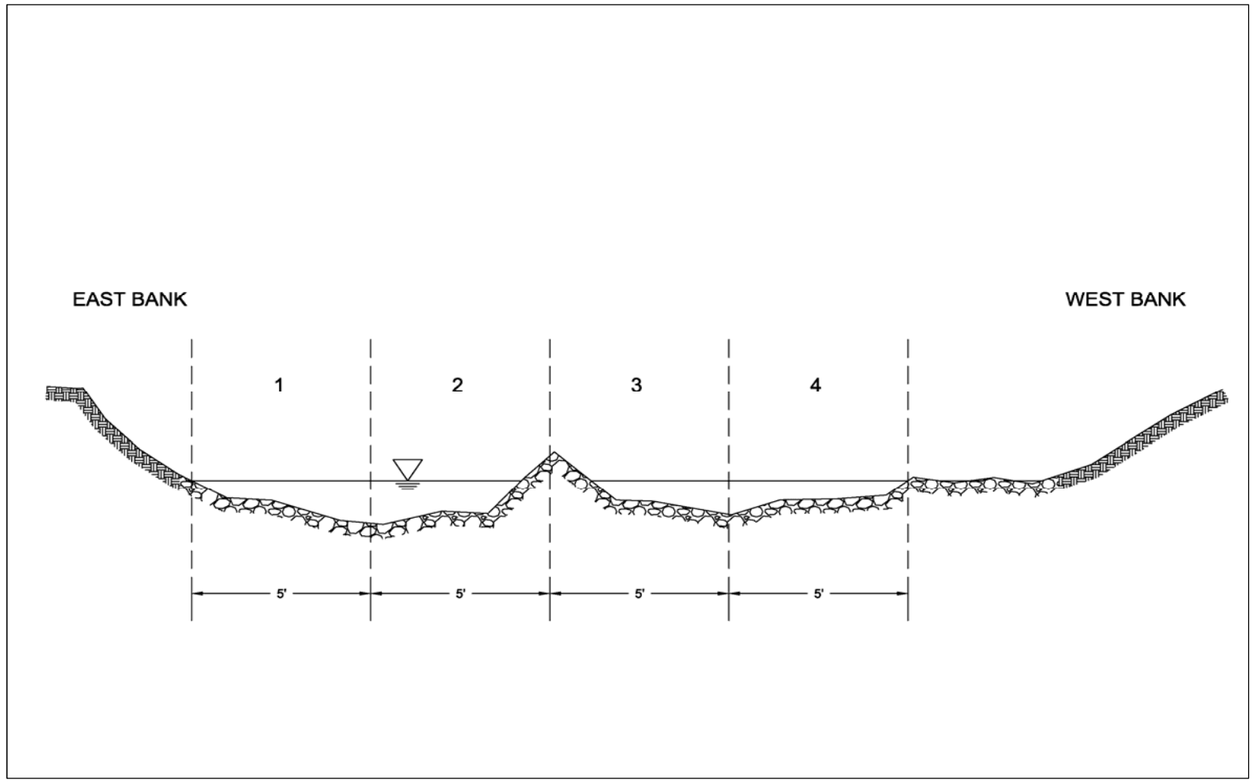

ANDERSON
ENGINEERING COMPANY INC.

Table 3E - DR-2 Cross Section Composite Sampling Field Data and Flow Information Summary, March 2013

			Field Measurements					GPS Location (Colorado State Plane NAD83)		Flow Data				Comments
Sample Location	Date of Sample Collection	Field Technicians	pH	Temp (°C)	EC (mS/cm)	Dissolved Oxygen (ppm)	Oxydation Reduction Potential (ORP, mV)	Northing*	Easting*	Compartment Geometry		Average Flowrate		
										Width (ft)	Area (ft^2)	cfs	gpm	
Compartment 1	3/21/2013	J. Gisseman, M. DeFriez	8.11	4.55	0.457	10.85	-100.8	1386655.0159	2267947.8759	7	5.34	1.32	593	
Compartment 2	3/21/2013	J. Gisseman, M. DeFriez	8.05	4.51	0.458	11.00	-95.0	1386653.3094	2267941.0871	7	7.47	7.45	3345	
Compartment 3	3/21/2013	J. Gisseman, M. DeFriez	7.90	4.70	0.494	10.68	-88.5	1386651.6030	2267934.2983	7	8.37	4.17	1869	
Compartment 4	3/21/2013	J. Gisseman, M. DeFriez	7.47	5.23	0.587	9.34	-79.2	1386649.8965	2267927.5095	7	2.60	0.26	117	
Total Composite	3/21/2013	J. Gisseman, M. DeFriez	8.35	6.50	0.486	7.05	-91.7	-	-	28	23.8	13.2	5924	

*Northing and easting values are estimates based on surveyed benchmark on east bank of river at this location

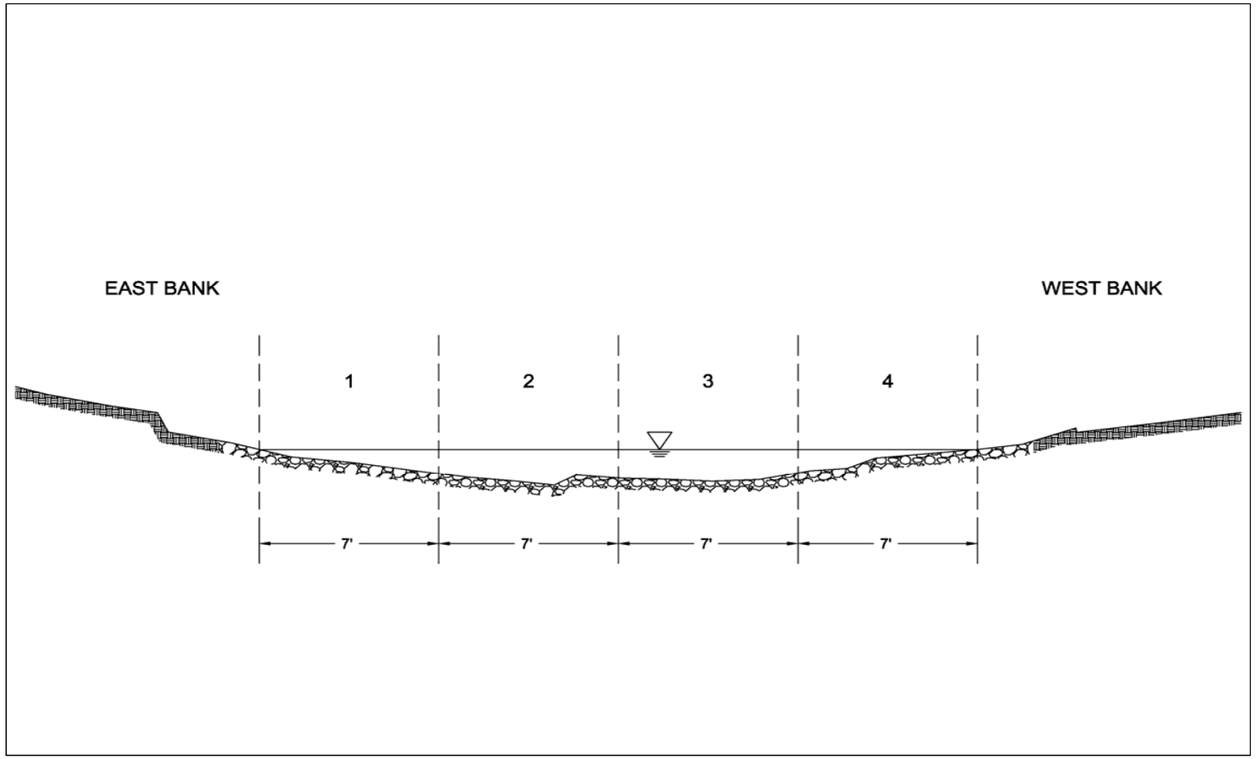

ANDERSON
ENGINEERING COMPANY INC.

Table 3F - DR-7 Cross Section Composite Sampling Field Data and Flow Information Summary, March 2013

			Field Measurements					GPS Location (Colorado State Plane NAD83)		Flow Data				Comments
Sample Location	Date of Sample Collection	Field Technicians	pH	Temp (°C)	EC (mS/cm)	Dissolved Oxygen (ppm)	Oxydation Reduction Potential (ORP, mV)	Northing*	Easting*	Compartment Geometry		Average Flowrate		
										Width (ft)	Area (ft^2)	cfs	gpm	
Compartment 1	3/21/2013	J. Gisseman, M. DeFriez	7.34	3.49	0.716	9.46	-79.6	1385878.9518	2267954.2003	7	2.52	0.63	285	
Compartment 2	3/21/2013	J. Gisseman, M. DeFriez	7.31	3.32	0.689	9.60	-82.5	1385877.0203	2267947.9939	6	3.37	3.43	1539	
Compartment 3	3/21/2013	J. Gisseman, M. DeFriez	7.36	3.17	0.643	9.75	-83.6	1385875.2373	2267942.2649	6	3.52	3.86	1734	
Compartment 4	3/21/2013	J. Gisseman, M. DeFriez	7.37	3.11	0.614	9.82	-84.3	1385873.4544	2267936.5360	6	3.39	4.56	2048	
Compartment 5	3/21/2013	J. Gisseman, M. DeFriez	7.37	3.14	0.609	9.45	-85.0	1385871.6714	2267930.8070	6	0.80	0.32	142	
Compartment 6	3/21/2013	J. Gisseman, M. DeFriez	7.33	3.27	0.608	9.66	-76.3	1385869.8885	2267925.0780	6	2.89	3.01	1351	
Compartment 7	3/21/2013	J. Gisseman, M. DeFriez	7.23	3.59	0.637	8.86	-78.6	1385867.9569	2267918.8717	7	2.37	0.73	326	
Total Composite	3/21/2013	J. Gisseman, M. DeFriez	7.50	4.46	0.649	0.52	-79.7	-	-	44	18.9	16.5	7424	

*Northing and easting values are estimates based on surveyed benchmark on east bank of river at this location

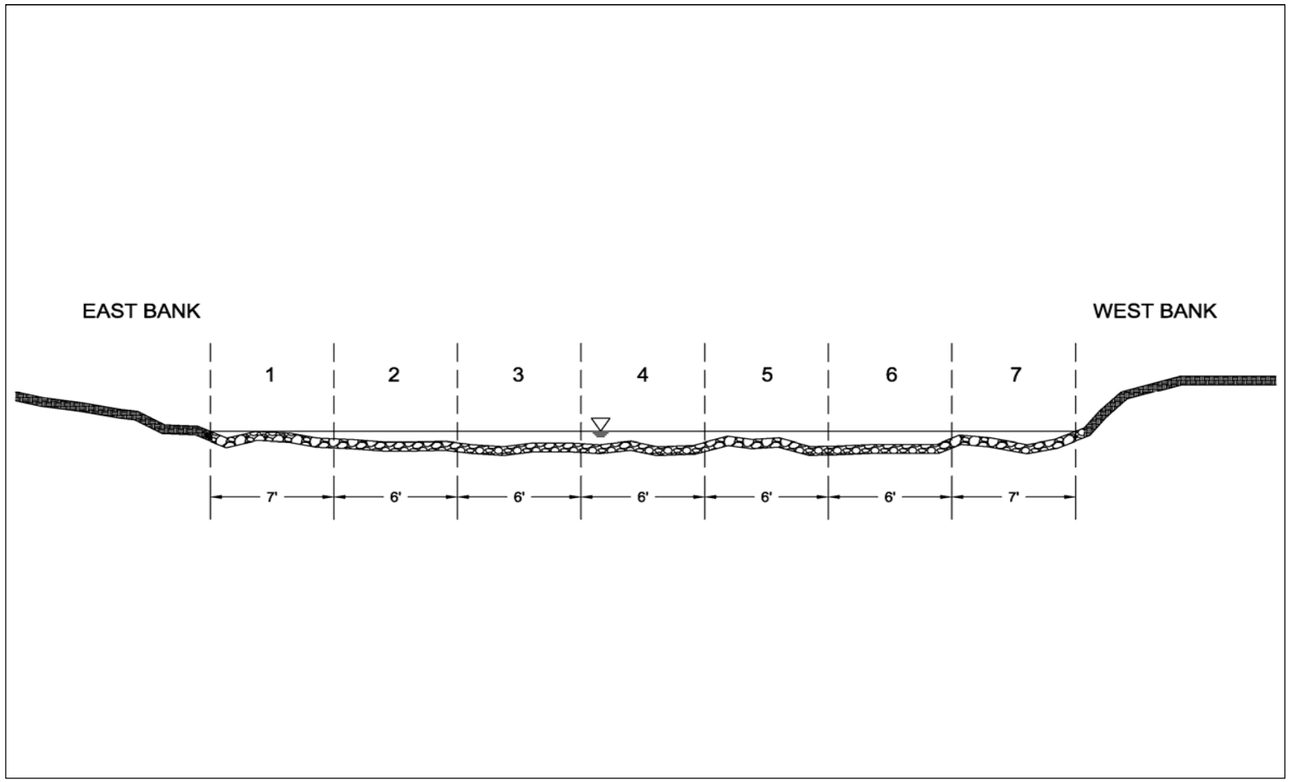

Table 3G - DR-4-SW Cross Section Composite Sampling Field Data and Flow Information Summary, March 2013

			Field Measurements					GPS Location (Colorado State Plane NAD83)		Flow Data				Comments
Sample Location	Date of Sample Collection	Field Technicians	pH	Temp (°C)	EC (mS/cm)	Dissolved Oxygen (ppm)	Oxydation Reduction Potential (ORP, mV)	Northing*	Easting*	Compartment Geometry		Average Flowrate		
										Width (ft)	Area (ft^2)	cfs	gpm	
Compartment 1	3/21/2013	J. Gisseman, M. DeFriez	7.76	1.23	0.668	10.63	-55.6	1379184.8232	2266265.7712	6	CNO	CNO	CNO	
Compartment 2	3/21/2013	J. Gisseman, M. DeFriez	7.63	1.25	0.668	10.56	-70.8	1379187.2717	2266260.2935	6	CNO	CNO	CNO	
Compartment 3	3/21/2013	J. Gisseman, M. DeFriez	7.60	1.27	0.669	10.35	-73.1	1379189.7202	2266254.8159	6	CNO	CNO	CNO	
Compartment 4	3/21/2013	J. Gisseman, M. DeFriez	7.58	1.27	0.669	10.43	-72.9	1379192.1688	2266249.3382	6	CNO	CNO	CNO	
Total Composite	3/21/2013	J. Gisseman, M. DeFriez	7.69	2.55	0.660	7.25	-81.8	-	-	24	-	-	-	

*Northing and easting values are estimates based on surveyed benchmark on east bank of river at this location

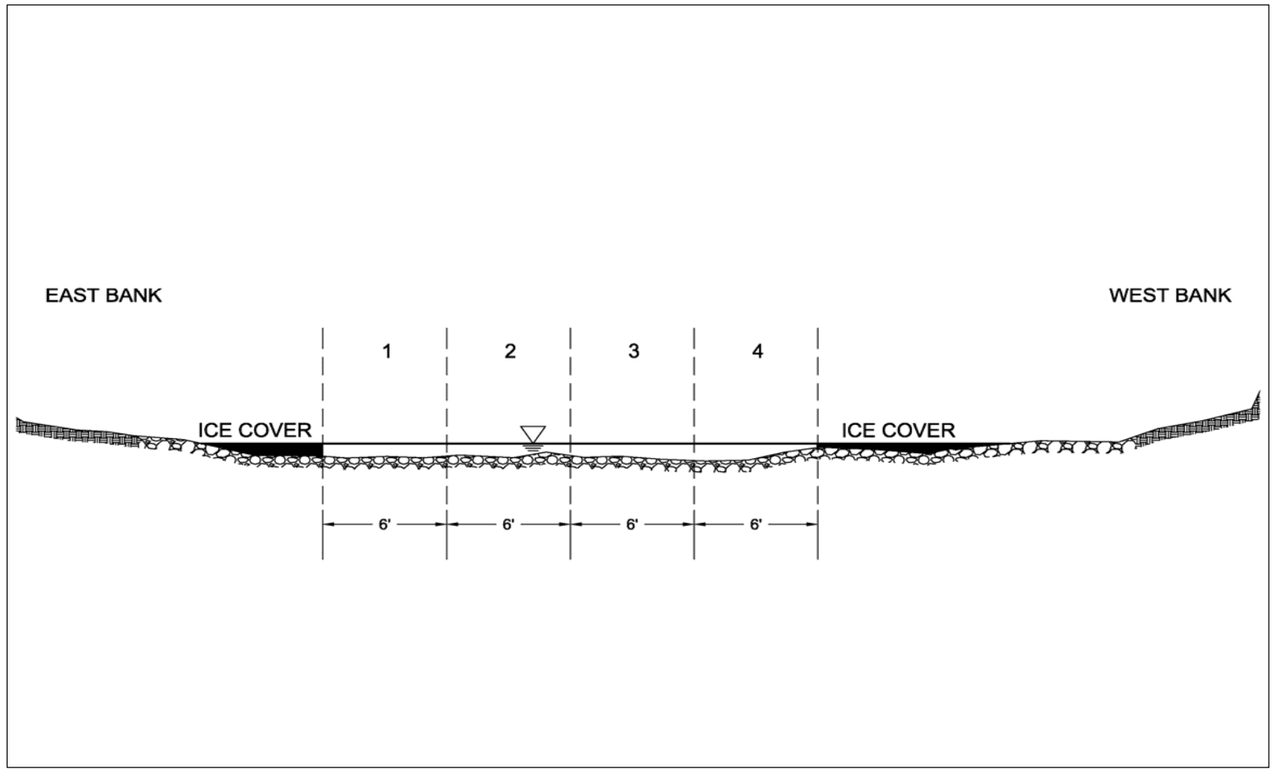

TABLE 4A - Surface Water Analytical Sampling Results Summary, March 2013

			Metals (µg/L)																								Non-Metals (mg/L, unless otherwise indicated)													
Field Sample ID	Date Collected	Fraction	Aluminum	Antimony	Arsenic	Barium	Beryllium	Cadmium	Calcium	Chromium	Cobalt	Copper	Iron	Lead	Magnesium	Manganese	Mercury	Molybdenum	Nickel	Potassium	Selenium	Silver	Sodium	Thallium	Vanadium	Zinc	Alkalinity, Bicarbonate (CaCO3)	Alkalinity, Carbonate (CaCO3)	Alkalinity, Total as CaCO3	Chloride	Cyanide	Hardness (µg/L as CaCO3)	Nitrogen, NO2 plus NO3	Salinity, as dissolved solids	Salinity, as sea water (PSU)	Silica (µg/L)	Sulfate	Sulfide	TDS	TOC	TSS
DR-1	3/21/13	Total	9.2	<0.50	<0.50	79.2	<0.20	<0.080	54800	<0.50	<0.50	<0.50	<50.0	<0.10	7800	9.7	<0.20	0.84	<0.50	687	0.66	<0.50	4540	<0.10	0.11	<5.0	109	<20.0	109	5.7	<0.0050	169000	0.10	222	0.17	5930	56.9	<0.050	206	0.86	<5.0
		Dissolved	<4.0	<0.50	<0.50	80.8	<0.20	<0.080	52700	<0.50	<0.50	0.55	<50.0	<0.10	7980	8.1	<0.20	0.85	<0.50	705	0.69	<0.50	4750	<0.10	0.10	<5.0															
		Potentially Dissolved	7.7J	<1.0	<1.0	76.7	<0.50	<0.50	48200	0.46J	<1.0	<1.0	28.7J	0.15J	6860	9.3	<0.20	0.88J	<1.0	656	1.0	<0.50	4630	<1.0	<1.0	4.9J															
DR-2	3/21/13	Total	8.1	<0.50	<0.50	75.9	<0.20	<0.080	71500	<0.50	<0.50	<0.50	86.8	<0.10	9690	162	<0.20	1.1	<0.50	1160	0.92	<0.50	5420	<0.10	<0.10	5.8	110	<20.0	110	5.4	<0.0050	218000	<0.10	250	0.19	8200	81.8	<0.050	241	0.70	<5.0
		Dissolved	<4.0	<0.50	<0.50	76.4	<0.20	<0.080	68400	<0.50	<0.50	0.58	<50.0	<0.10	9730	164	<0.20	1.1	<0.50	1150	0.84	<0.50	5560	<0.10	<0.10	<5.0															
		Potentially Dissolved	5.9J	<1.0	<1.0	70.9	<0.50	<0.50	58700	0.34J	0.050J	0.45J	48.8J	0.16J	7860	145	<0.20	1.2	<1.0	872	0.88J	<0.50	4790	<1.0	<1.0	8.7J															
DR-3	3/13/13	Total	1500	<0.50	2.9	20.9	1.4	14.6	251000	1.2	2.6	296	16500	27.6	19700	1640	<0.20	19.5	3.9	5420	<0.50	<0.50	11400	<0.10	0.34	3090	96.0	<20.0	96.0	<1.0	<0.0050	708000	<0.10	792	0.62	18900	623	<0.050	1030	<0.50	52.0
		Dissolved	25.2	<0.50	<0.50	20.6	<0.20	11.7	243000	<0.50	2.6	9.4	222	0.36	19600	1590	<0.20	14.7	6.9	5560	<0.50	<0.50	11700	<0.10	<0.10	2350															
		Potentially Dissolved	1100	0.58J	1.9	20.6	0.94	13.8	217000	1.4	2.4	214	12600	21.7	17000	1630	<0.20	15.4	2.7	5080	<1.0	0.12J	11000	0.30J	<1.0	2980															
DR-4	3/13/13	Total	338	<0.50	0.72	20.0	0.33	10.7	252000	0.52	2.5	71.9	3620	6.8	20000	1570	<0.20	17.4	3.4	5590	<0.50	<0.50	11700	<0.10	<0.10	2060	100	<20.0	100	<1.0	<0.0050	711000	<0.10	824	0.61	16800	657	<0.050	992	<0.50	10
		Dissolved	12.0	<0.50	<0.50	20.7	<0.20	8.9	249000	<0.50	2.5	3.6	<50.0	<0.10	20300	1570	<0.20	16.2	7.4	5850	<0.50	<0.50	12200	<0.10	<0.10	1580															
		Potentially Dissolved	309	0.49J	0.67J	19.2	0.27J	10.4	222000	0.98J	2.2	58.9	3200	6.8	17300	1530	<0.20	16.1	2.3	5400	<1.0	0.097J	11500	0.30J	<1.0	1930															
DR-5	3/13/13	Total	80.3	<0.50	<0.50	20.3	<0.20	7.4	244000	<0.50	2.1	18.0	1110	1.7	20300	1450	<0.20	15.4	3.3	5600	<0.50	<0.50	11400	<0.10	<0.10	1490	106	<20.0	106	<1.0	<0.0050	693000	<0.10	794	0.62	15300	688	0.052	948	<0.50	<5.0
		Dissolved	6.3	<0.50	<0.50	21.3	<0.20	0.20	250000	<0.50	2.3	1.3	<50.0	<0.10	20700	1490	<0.20	15.3	7.6	5890	<0.50	<0.50	12000	<0.10	<0.10	1260															
		Potentially Dissolved	75.8	0.44J	0.27J	20.0	0.098J	7.6	219000	0.70J	1.9	16.5	1040	2.1	17600	1460	<0.20	14.9	2.0	5240	<1.0	0.091J	11000	0.29J	<1.0	1550															
DR-6	3/13/13	Total	45.9	<0.50	<0.50	19.7	<0.20	4.5	244000	<0.50	2.0	8.8	823	0.86	22300	1420	<0.20	13.3	2.9	6160	<0.50	<0.50	13200	<0.10	<0.10	1400	130	<20.0	130	<1.0	<0.0050	701000	<0.10	848	0.66	17000	701	<0.050	1130	<0.50	<5.0
		Dissolved	9.9	<0.50	<0.50	20.9	<0.20	0.67	248000	<0.50	1.9	2.0	173	0.10	21500	1440	<0.20	13.3	3.4	6410	<0.50	<0.50	13800	<0.10	<0.10	1370															
		Potentially Dissolved	38.2J	0.42J	0.24J	18.6	0.067J	4.5	221000	0.56J	1.7	7.2	712	1.2	19600	1380	<0.20	12.6	1.7	5860	<1.0	0.086J	12900	0.28J	<1.0	1380															
DR-7	3/21/13	Total	40.2	<0.50	0.97	69.4	<0.20	1.8	109000	<0.50	<0.50	6.5	785	1.0	13800	359	<0.20	2.5	0.54	2470	0.66	<0.50	8230	<0.10	<0.10	190	147	<20.0	147	4.8	<0.0050	330000	<0.10	409	0.31	12600	173	<0.050	397	0.67	<5.0
		Dissolved	4.8	<0.50	0.68	69.0	<0.20	0.10	101000	1.0	<0.50	0.58	126	<0.10	13700	344	<0.20	2.3	0.68	2450	0.66	<0.50	8420	<0.10	<0.10	141															
		Potentially Dissolved	42.8J	<1.0	0.93J	63.6	0.10J	2.0	93700	0.64J	0.32J	6.6	865	1.3	12000	347	<0.20	2.5	<1.0	2240	0.90J	<0.50	7930	0.027J	<1.0	188															
DR-4-SW	3/21/13	Total	13.4	<0.50	<0.50	69.2	<0.20	0.54	99800	<0.50	<0.50	0.98	132	0.24	12200	322	<0.20	1.8	0.63	1870	0.60	<0.50	6720	<0.10	<0.10	170	152	<20.0	152	5.3	<0.0050	300000	0.15	375	0.28	10700	148	<0.050	372	0.62	<5.0
		Dissolved	6.0	<0.50	<0.50	72.1	<0.20	0.53	96500	<0.50	<0.50	0.71	<50.0	<0.10	12400	335	<0.20	1.7	0.59	1900	0.63	<0.50	7040	<0.10	<0.10	165															
		Potentially Dissolved	14.3J	<1.0	0.39J	65.7	<0.50	0.61	88500	0.98J	0.34J	0.82J	134	0.57J	11400	302	<0.20	2.1	<1.0	1770	0.78J	<0.50	6790	0.060J	<1.0	163															
DR-G	3/21/13	Total	7.8	<0.50	<0.50	84.9	<0.20	0.38	86200	0.69	<0.50	0.74	51.1	0.13	11100	110	<0.20	1.4	<0.50	1550	0.75	<0.50	5970	<0.10	0.12	96.1	150	<20.0	150	4.9	<0.0050	261000	<0.10	330	0.25	9250	111	<0.050	301	0.71	<5.0
		Dissolved	<4.0	<0.50	<0.50	84.9	<0.20	0.34	81400	<0.50	<0.50	1.0	<50.0	<0.10	11100	112	<0.20	1.3	<0.50	1530	0.72	<0.50	6040	<0.10	0.12	45.5															
		Potentially Dissolved	7.8J	<1.0	0.21J	79.6	<0.50	0.34J	78700	1.4	0.14J	0.66J	54.1	0.66J	10600	103	<0.20	1.7	<1.0	1490	0.86J	<0.50	6140	0.061J	0.38J	91.0															

ANDERSON
ENGINEERING COMPANY INC.

TABLE 4B - Groundwater Analytical Sampling Results Summary, March 2013

Field Sample ID	Date Collected	Fraction	Metals (µg/L)																								Non-Metals (mg/L, unless otherwise indicated)													
			Aluminum	Antimony	Arsenic	Barium	Beryllium	Cadmium	Calcium	Chromium	Cobalt	Copper	Iron	Lead	Magnesium	Manganese	Mercury	Molybdenum	Nickel	Potassium	Selenium	Silver	Sodium	Thallium	Vanadium	Zinc	Alkalinity, Bicarbonate (CaCO3)	Alkalinity, Carbonate (CaCO3)	Alkalinity, Total as CaCO3	Chloride	Cyanide	Hardness (µg/L as CaCO3)	Nitrogen, NO2 plus NO3	Salinity, as dissolved solids	Salinity, as seawater (PSU)	Silica (µg/L)	Sulfate	Sulfide	TDS	TOC	TSS
GW-1	3/12/13	Total	9650	<0.50	15.1	313	1.1	2.5	57400	10.3	11.1	80.4	17000	56.5	11000	2100	0.35	4.1	21.4	2910	1.7	0.90	3120	0.25	21.2	230	106	<20.0	106	2.3	<0.0050	189000	<0.10	221	0.17	35100	63.0	<0.050	219	1.3	805
		Dissolved	22.2	<0.50	<0.50	61.5	<0.20	<0.080	55000	<0.50	<0.50	1.5	<50.0	0.15	6730	4.9	<0.20	1.3	<0.50	685	0.67	<0.50	2850	<0.10	<0.10	<5.0															
		Potentially Dissolved	2270	0.38J	2.5	236	0.60	2.2	52200	3.0	4.2	49.6	3380	29.7	6600	1020	<0.20	0.26J	10.3	912	1.5	0.68	2740	0.25J	3.8	145															
GW-3	3/7/13	Total	16500	0.76	28.8	294	0.91	4.2	128000	24.8	14.8	145	30200	252	26300	3080	<0.20	4.0	20.1	5390	7.6	3.0	3430	0.32	34.8	762	177	<20.0	177	1.6	0.0054	423000	<0.10	431	0.33	60200	161	<0.050	446	2.4	440
		Dissolved	7900	<0.50	14.6	155	0.47	1.2	123000	11.6	5.5	65.7	13300	125	18000	893	<0.20	2.0	11.6	4050	4.9	1.2	3040	0.18	16.7	324															
		Potentially Dissolved	3160	0.28J	6.8	146	0.33J	1.8	124000	6.1	4.7	64.4	7220	112	15200	1120	<0.20	0.28J	5.0	2840	3.3	0.76	2860	0.023J	5.8	339															
GW-4	3/14/13	Total	46900	0.73	33.0	861	3.0	16.7	141000	78.7	31.0	249	97300	180	44200	2790	<0.20	19.8	63.0	7680	6.9	2.4	5540	0.75	99.4	1630	130	<20.0	130	1.6	<0.0050	535000	<0.10	379	0.29	136000	165	<0.050	408	2.1	2990
		Dissolved	195	<0.50	0.82	30.6	<0.20	0.42	94700	<0.50	0.68	1.6	529	0.73	10700	308	<0.20	9.0	5.1	1850	0.67	<0.50	4090	<0.10	0.54	29.9															
		Potentially Dissolved	6550	0.044J	8.9	136	1.5	16.0	111000	17.4	13.2	172	26400	186	12200	2310	<0.20	2.6	20.6	2550	3.4	<0.50	4000	0.25J	24.2	1220															
GW-5	3/14/13	Total	11600	2.3	286	108	1.2	98.2	407000	14.6	36.6	1610	58400	15600	40000	6100	<0.20	31.6	51.1	6040	4.5	64.9	7080	2.0	19.9	27200	169	<20.0	169	<1.0	<0.0050	1180000	<0.10	1160	0.92	71300	976	1.8	1510	0.67	1060
		Dissolved	525	<0.50	61.2	15.8	<0.20	4.2	393000	0.78	5.1	50.3	6950	583	32600	3310	<0.20	10.6	9.3	4020	<0.50	2.3	6890	0.10	0.97	3870															
		Potentially Dissolved	4750	<1.0	141	15.3	0.67	17.5	355000	5.3	10.7	0.60J	26500	2250	29200	4660	<0.20	1.2	19.9	3840	1.4	<0.50	6860	0.19J	11.0	23500															
GW-6	3/13/13	Total	COULD NOT OBTAIN - WELL WAS FROZEN																																					
		Dissolved																																						
		Potentially Dissolved																																						
GW-7	3/7/13	Total	3150	<0.5	4	20.6	0.41	3.2	278000	4.7	1.6	48.7	6900	145	28800	71.1	<0.2	2	4.8	3120	2.8	0.74	7720	0.17	3.6	316	244	<20	252	<1	0.0051	813000	0.35	849	0.66	17100	564	<0.05	1070	0.78	163
		Dissolved	1850	<0.5	2.7	17.8	0.3	3	281000	3.2	1.5	35.9	3960	93.3	27000	54.3	<0.2	1.7	7.7	2960	2.4	<0.5	7680	0.14	2.1	267															
		Potentially Dissolved	2110	0.11J	2	14.8	0.35J	2.9	264000	3.1	1.3	53.6	4540	213	25100	39.4	<0.2	0.93J	2.9	2650	2.1	0.23J	7610	0.10J	0.89J	276															
EB-1	3/7/13	Total	419	<0.50	11.2	15.5	<0.20	0.95	430000	1.1	5.5	22.3	6740	128	28300	3820	<0.20	13.3	5.0	5500	<0.50	0.81	7260	<0.10	0.68	1460	163	<20.0	163	1.2	<0.0050	1190000	<0.10	1160	0.92	21100	1090	<0.050	1700	1.1	60.0
		Dissolved	231	<0.50	9.9	13.9	<0.20	0.70	443000	0.70	5.6	15.1	4960	86.2	28000	3970	<0.20	14.1	8.5	5490	<0.50	<0.50	7150	<0.10	0.41	1450															
		Potentially Dissolved	262	0.18J	11.9	13.8	0.19J	0.84	431000	1.1	5.1	17.7	6160	166	27600	4260	<0.20	14.0	2.8	5440	<1.0	0.096J	7640	0.080J	0.30J	1280															
EB-2	3/7/13	Total	15500	0.50	311	21.3	6.7	4.7	333000	1.6	69.0	79.8	512000	851	131000	26700	<0.20	4.8	93.9	15000	2.1	3.7	6990	0.14	1.6	49100	20.7	<20.0	20.7	3.7	0.0062	1370000	<0.10	2040	1.7	40000	2490	<0.050	3520	0.53	232
		Dissolved	14200	<0.50	317	17.6	6.5	3.8	341000	1.4	69.1	60.7	460000	656	126000	25900	<0.20	4.3	101	14800	1.9	2.3	6820	0.13	1.1	47800															
		Potentially Dissolved	13400	0.34J	317	13.0	4.4	4.2	318000	1.7	65.1	79.2	528000	1190	118000	28100	<0.20	3.9	91.8	13900	3.4	0.092J	6880	0.10J	0.80J	51900															
MW-1 SHALLOW	3/12/13	Total	11500	0.65	20.8	166	1.1	2.3	231000	15.0	7.1	90.6	19300	271	25500	829	<0.20	9.1	12.0	8130	13.0	2.3	11100	0.40	20.0	362	88.6	<20.0	88.6	<1.0	<0.0050	682000	<0.10	908	0.71	48200	691	<0.050	982	0.87	478
		Dissolved	61.5	<0.50	<0.50	19.4	<0.20	0.48	234000	<0.50	<0.50	1.4	98.0	1.3	20700	11.7	<0.20	7.4	<0.50	6560	8.0	<0.50	11600	<0.10	0.11	66.0															
		Potentially Dissolved	2340	0.24J	3.8	39.0	0.47J	2.1	214000	3.6	3.6	48.1	3710	203	18900	672	<0.20	3.8	2.6	6280	9.0	1.2	10800	0.42J	4.7	272															
MW-1 DEEP	3/12/13	Total	938	<0.50	2.1	29.5	<0.20	2.8	224000	1.9	<0.50	21.6	1860	29.2	20000	218	<0.20	8.8	1.1	10300	10.3	<0.50	9900	0.12	1.6	523	89.9	<20.0	89.9	<1.0	<0.0050	641000	<0.10	936	0.73	13000	699	<0.050	976	<0.50	33.0
		Dissolved	<4.0	<0.50	<0.50	16.8	<0.20	1.7	233000	<0.50	<0.50	2.0	<50.0	<0.10	20000	17.2	<0.20	8.3	<0.50	10700	10.6	<0.50	11600	<0.10	<0.10	392															
		Potentially Dissolved	236	0.16J	0.96J	21.0	<0.50	2.1	211000	1.2	0.30J	11.0	692	14.4	18000	87.6	<0.20	7.3	<1.0	9790	9.4	<0.50	11000	0.35J	<1.0	415															
MW-2 SHALLOW	3/13/13	Total	COULD NOT OBTAIN - WELL WAS DRY																																					
		Dissolved																																						
		Potentially Dissolved																																						
MW-2 DEEP	3/13/13	Total	4800	<0.50	9.8	141	0.44	4.1	254000	7.2	3.0	29.5	10400	103	21900	493	<0.20	12.8	4.0	2950	3.4	0.54	11200	0.25	10.2	175	79.8	<20.0	79.8	<1.0	<0.0050	723000	<0.10	774	0.60	30200	649	<0.050	1970	0.85	138
		Dissolved	64.7	<0.50	<0.50	12.8	<0.20	0.80	238000	<0.50	<0.50	1.2	136	1.5	21700	6.6	<0.20	7.3	<0.50	1750	1.1	<0.50	10600	<0.10	0.14	17.2															
		Potentially Dissolved	968	0.047J	2.6	32.5	0.17J	3.3	214000	3.1	1.3	16.3	3360	56.9	19200	329	<0.20	2.8	0.84J	1680	1.4	0.77	10800	0.082J	3.2	140															
MW-3 SHALLOW	3/13/13	Total	COULD NOT OBTAIN - WELL WAS DRY																																					
		Dissolved																																						
		Potentially Dissolved																																						
MW-3 DEEP	3/13/13	Total	3040	<0.50	3.7	78.3	0.28	3.4	247000	3.5	2.2	33.5	6380	54.1	24700	1560	<0.20	9.6	2.4	5790	0.75	<0.50	12000	0.18	6.8	163	87.2	<20.0	87.2	<1.0	<0.0050	720000	<0.10	808	0.63	22200	649	<0.050	996	0.65	99.0
		Dissolved	172	<0.50	0.79	22.2	<0.20	0.27	242000	1.1	1.0	2.7	1800	3.5	24600	1510	<0.20	8.6	<0.50	5110	<0.50	<0.50	11500	<0.10	0.47	45.1															
		Potentially Dissolved	710	<1.0	1.7	27.9	0.11J	2.4	203000	1.7	1.2	20.2	3270	40.3	20700	1420	<0.20	4.9	<1.0	4610	<1.0	<0.50	11200	0.10J	2.4	124															
MW-4 SHALLOW	3/7/13	Total	5470	<0.50	3.9	77.4	0.50	1.7	283000	6.4	2.8	27.1	6120	30.9	32200	235	<0.20	2.3	4.7	3930	24.1	0.50	8010	0.14	7.1	215	305	<20.0	305	1.0	<0.0050	839000	0.31	850	0.66	31800	540	<0.050	1090	0.72	229
		Dissolved	1810	<0.50	1.7	47.4	0.30	1.6	285000	2.4	1.1	14.7	2060	16.3	29700	160	<0.20	1.6	2.7	3070	26.1	<0.50	7780	<0.10	2.4	180															
		Potentially Dissolved	1430	0.11J	1.8	46.1	0.24J	1.6	279000	3.2	1.3	16.3	1960	25.4	29200	179	<0.20	1.3	0.87J	2830	23.6	0.071J	7990	0.026J	1.7	175															
MW-4 DEEP	3/12/13	Total	11300	0.53	25.6	177	1.4	6.0	269000	12.6	13.8	144	22400	112	33800	2150	<0.20	10.1	11.8	4960	37.4	2.3	6820	0.31	21.9	753	358	<20.0	358	1.1	<0.0050	811000	<0.10	955	0.75	48300	551	<0.050	1060	0.96	235
		Dissolved	75.6	<0.50	<0.50	16.0	<0.20	2.1	285000	<0.50	<0.50	3.9	74.3	0.51	31600	9.4	<0.20	2.2	0.66	3360	36.4	<0.50	7260	<0.10	<0.10	320															
		Potentially Dissolved	4200	0.42J	5.5	67.4	1.0	7.1	244000	6.0	5.2	132	9670	101	27900	764	<0.20	0.67J	3.9	3140	35.7	2.0	6590	0.27J	6.2	714															
MW-5 SHALLOW	3/13/13	Total	30200	4.1	400	116	7.9	164	458000	20.7	91.4	1620	624000	9900	153000	29700	<0.20	8.3	174	5810	10.8	38.9	28800	0.99	16.1	144000	<20.0	<20.0	<20.0	1.8	<0.0050	1780000	<0.10	2660	2.2	87100	3430	<0.050	3780	1.1	294
		Dissolved	17200	<0.50	273	13.0	5.5	94.5	446000	2.5	83.2	45.4	545000	1090	144000	29600	<0.20	0.69	157	3170	4.2	1.1	25500	0.26	1.8	113000															
		Potentially Dissolved	17400	<10.0	340	3.8J	5.6	129	396000	6.1J	74.0	622	480000	2810	128000	26500	<0.20	<10.0	152	2940	<10.0	<5.0	25200	0.50J	3.0J	124000															
MW-5 DEEP	3/13/13	Total	5350	0.93	260	82.2	2.5	6.1	319000	5.3	10.6	108	100000	902	51200	9880	<0.20	20.1	11.0	8890	1.5	2.6	7290	0.29	9.6	8920	100	<20.0	100	1.4	<0.0050	1010000	<0.10	1090	0.86	44200	907	<0.050	1410	0.83	188
		Dissolved	603	<0.50	147	10.6	1.6	<0.080	309000	<0.50	8.3	2.4	60200	13.1	48100	8910	<0.20	11.6	10.6	8050	<0.50	<0.50	7330	<0.10	0.13	7360															
		Potentially Dissolved	2460	0.088J	199	15.7	1.6	2.3	272000	2.8	8.9	50.8	70500	856	43400	9350	<0.20	3.6	8.7	7640	0.70J	<0.50	7460	0.18J	3.7	8430															
MW-6 SHALLOW	3/12/13	Total	23200	0.67	111	144	2.4	23.7	397000	20.3	18.9	113	83300	237	64300	8640	<0.20	7.9	28.6	14700	2.9	0.68	4350	0.60	29.0	3990	121	<20.0	121	1.6	<0.0050	1260000	<0.10	1320	1.0	89900	1190	<0.050	1770	1.3	463
		Dissolved	727	<0.50	37.5	16.8	0.94	0.19	403000	<0.50	4.2	0.62	54300	0.11	55500	8380	<0.20	4.6	2.1	12100	<0.50	<0.50	4260	<0.10	<0.10	646															
		Potentially Dissolved	9860	0.43J	86.2	27.3	1.6	22.4	351000	8.4	12.3	66.1	63600	242	49900	8300	<0.20	3.4	14.9	11500	2.6	0.090J	4150	0.55J	9.0	3890															
MW-6 DEEP	3/12/13	Total	3320	0.51	52.9	46.4	0.94	1.7	266000	4.2	4.0	20.7	24100	34.1	38700	6660	<0.20	7.0	4.9	6710	1.3	<0.50	4930	<0.10	6.3	967	172	<20.0	172	1.3	<0.0050	824000	<0.10	932	0.73	27700	688	<0.050	1200	2.6	119
		Dissolved	304	<0.50	16.8	14.5	0.60	<0.080	270000	<0.50	2.7	0.94	19100	<0.10	36800	6610	<0.20	5.8	2.8	6250	0.66	<0.50	5090	<0.10	<0.10	406															
		Potentially Dissolved	1380	0.48J	43.6	21.2	0.63	1.5	251000	2.6	3.0	10.6	20500	14.3	35600	6430	<0.20	4.6	2.1	5950	0.80J	0.10J	4990	0.26J	2.1	825															
MW-101	3/13/13	Total	16100	<0.50	20.9	208	1.9	10.7	302000	30.2	18.8	153	67600	1920	43600	4750	<0.20	11.3	26.2	9340	4.7	6.5	12800	0.84	28.6	1550	325	<20.0	325	1.2	<0.0050	933000	0.25	982	0.77	64800	602	<0.050	1190	1.3	315
		Dissolved	73.0	<0.50	0.78	19.7	<0.20	0.11	298000	<0.50	9.2	0.92	27000	0.73	33200	3910	<0.20	2.4	9.6	7020	1.5	<0.50	12900	<0.10	<0.10	180															
		Potentially Dissolved	5040	0.35J	6.5	40.7	1.5	12.7	272000	13.3	13.7	109	41400	2160	31800	4940	<0.20	0.99J	14.7	6880	2.9	0.094J	12100	0.80J	11.8	1660															
MW-102	3/13/13	Total	19500	0.71	27.5	152	2.5	4.9	224000	25.2	34.3	97.5	28900	148	34100	3800	<0.20	10.5	29.1	4800	4.8	<0.50	6760	0.37	32.3	928	198	<20.0	198	1.3	<0.0050	699000	0.38	751	0.58	66500	486	<0.050	834	0.82	872
		Dissolved	9.3	<0.50	<0.50	14.4	<0.20	0.48	221000	<0.50	<0.50	0.86	<50.0	<0.10	21900	38.6	<0.20	0.90	0.56	2170	1.8	<0.50	6620	<0.10	<0.10	68.2															
		Potentially Dissolved	5720	0.38J	4.2	68.0	1.8	4.9	202000	7.0	12.5	59.3	5810	106	20900	1440	<0.20	0.34J	11.2	2410	5.0	0.54	6440	0.24J	4.8	791															
MW-103	3/13/13	Total	2330	<0.50	12.4	52.3	0.81	1.4	316000	3.1	5.2	10.6	13500	9.2	32100	8670	<0.20	8.3	3.8	4100	<0.50	<0.50	13700	0.18	4.6	236	343	<20.0	343	1.2	<0.0050	920000	<0.10	1010	0.79	36200	594	<0.050	1170	1.5	148
		Dissolved	42.4	<0.50	2.8	31.4	0.31	0.26	313000	<0.50	4.1	0.75	8010	0.18	31100	8610	<0.20	7.5	4.2	3890	<0.50	<0.50	14300	<0.10	<0.10	177															
		Potentially Dissolved	660	0.33J	6.5	35.5	0.57	1.5	277000	2.0	3.9	5.9	9420	10.1	29000	8180	<0.20	5.1	1.9	3670	<1.0	0.092J	13800	0.37J	1.4	232															
MW-104	3/13/13	Total	2690	<0.50	2.9	73.1	<0.20	3.2	257000	5.1	2.1	16.3	4480	22.5	23900	849	<0.20	11.5	3.8	10900	1.6	<0.50	14000	<0.10	5.5	1010	138	<20.0	138	<1.0	<0.0050	741000	<0.10	852	0.66	23300	640	<0.050	1010	<0.50	160
		Dissolved	325	<0.50	<0.50	24.4	<0.20	2.3	253000	0.93	<0.50	3.4	596	3.9	22200	169	<0.20	9.3	1.0	10400	1.3	<0.50	13900	<0.10	0.73	795															
		Potentially Dissolved	1020	0.42J	1.7	47.9	0.13J	4.0	226000	3.7	1.9	17.8	2380	40.2	20700	867	<0.20	2.9	2.8	9720	1.6	0.29J	13200	0.25J	2.1	1070															
MW-202		Total	COULD NOT OBTAIN - WELL WAS DRY																																					
		Dissolved																																						
		Potentially Dissolved																																						
MW-204	3/14/13	Total	15200	<0.50	5.9	166	1.0	13.2	260000	33.5	10.7	31.4	22900	48.4	35200	2090	<0.20	6.1	22.2	4360	1.5	0.57	12800	0.22	25.3	156	117	<20.0	117	<1.0	<0.0050	794000	<0.10	824	0.64	68800	550	<0.050	1070	<0.50	665
		Dissolved	209	<0.50	<0.50	36.2	<0.20	2.0	247000	0.55	0.62	0.99	296	0.85	21900	1590	<0.20	3.7	1.6	1940	<0.50	<0.50	11200	<0.10	0.39	12.6															
		Potentially Dissolved	2270	<1.0	1.4	54.2	0.41J	13.0	227000	8.9	5.4	17.0	5290	42.1	19900	1890	<0.20	1.9	7.4	2160	0.35J	<0.50	11700	0.077J	5.2	99.2															
P13-102	3/12/13	Total	1320	<0.50	3.0	39.5	0.36	0.20	340000	2.7	13.1	6.7	4030	7.2	50600	25100	<0.20	4.9	6.2	5480	<0.50	<0.50	13400	<0.10	2.8	88.4	160	<20.0	160	1.3	0.0094	1060000	<0.10	1150	0.91	27100	973	<0.050	1360	<0.50	44.0
		Dissolved	59.7	<0.50	0.74	19.1	0.22	0.093	360000	0.58	12.7	0.89	1680	0.24	50400	25300	<0.20	4.4	5.4	5340	<0.50	<0.50	13800	<0.10	<0.10	78.2															
		Potentially Dissolved	211	0.14J	1.1	22.1	0.090J	0.11J	323000	1.6	10.9	36.3	1990	5.6	45400	23100	<0.20	3.7	3.0	5200	<1.0	<0.50	13600	0.38J	<1.0	88.5															
P13-103	3/12/13	Total	12000	1.5	108	214	1.3	13.1	275000	19.9	13.6	769	108000	2700	33100	2910	<0.20	14.6	22.3	7060	12.8	20.8	10200	1.2	19.3	2050	127	<20.0	127	1.0	<0.0050	824000	<0.10	881	0.69	65500	736	<0.050	1180	0.80	336
		Dissolved	26.0	<0.50	40.1	19.6	<0.20	0.12	266000	<0.50	1.7	1.7	11900	5.1	28300	2460	<0.20	7.8	2.3	4060	<0.50	<0.50	9900	<0.10	0.10	127															
		Potentially Dissolved	2140	0.42J	70.7	28.3	0.48J	6.0	242000	6.3	3.5	241	22900	1750	26900	2660	<0.20	4.7	4.9	4000	1.1	0.15J	9300	0.64J	3.9	881															
AT-2	3/13/13	Total	2260	<0.50	2.9	76.7	0.34	1.4	181000	5.2	2.2	69.4	64300	27.3	15700	1490	<0.20	16.4	5.0	8000	<0.50	<0.50	12600	<0.10	3.5	584	<20.0	<20.0	<20.0	2.4	<0.0050	516000	<0.10	624	0.48	10300	455	<0.050	796	1.9	146
		Dissolved	67.1	<0.50	<0.50	60.5	<0.20	<0.080	179000	<0.50	<0.50	2.5	1740	0.84	14400	482	<0.20	5.9	<0.50	7690	<0.50	<0.50	11800	<0.10	0.11	17.2															
		Potentially Dissolved	553	<1.0	0.74J	65.3	0.20J	1.0	158000	2.5	1.2	42.9	33300	27.3	13400	1170	<0.20	2.2	2.6	7330	<1.0	<0.50	11700	<1.0	0.51J	466															

ANDERSON
ENGINEERING COMPANY INC.

TABLE 4C - Quality Control Samples Analytical Sampling Results Summary, March 2013

Field Sample ID	Date Collected	Fraction	Metals (µg/L)																								Non-Metals (mg/L, unless otherwise indicated)													
			Aluminum	Antimony	Arsenic	Barium	Beryllium	Cadmium	Calcium	Chromium	Cobalt	Copper	Iron	Lead	Magnesium	Manganese	Mercury	Molybdenum	Nickel	Potassium	Selenium	Silver	Sodium	Thallium	Vanadium	Zinc	Alkalinity, Bicarbonate (CaCO3)	Alkalinity, Carbonate (CaCO3)	Alkalinity, Total as CaCO3	Chloride	Cyanide	Hardness (µg/L as CaCO3)	Nitrogen, NO2 plus NO3	Salinity, as dissolved solids	Salinity, as sea water (PSU)	Silica (µg/L)	Sulfate	Sulfide	TDS	TOC	TSS
DR-8 DUPLICATE OF MW-6 SHALLOW	3/12/13	Total	35100	0.80	144	224	3.1	36.8	404000	32.5	26.7	181	99900	343	70400	8820	<0.20	11.2	43.0	16500	4.3	1.5	4400	0.83	45.7	5630	112	<20.0	112	1.7	<0.0050	1300000	<0.10	1300	1.0	108000	1190	<0.050	1710	1.1	1700
		Dissolved	741	<0.50	37.5	16.9	1.0	0.17	405000	0.65	4.3	0.61	55000	0.14	55800	8430	<0.20	4.6	2.5	12200	<0.50	<0.50	4310	<0.10	<0.10	662															
		Potentially Dissolved	5630	0.41J	62.9	29.7	1.2	8.9	359000	4.8	8.1	34.6	62600	103	52500	8440	<0.20	3.4	8.3	11900	1.1	0.09J	4310	0.43J	5.4	1980															
DR-9 DUPLICATE OF MW-104	3/13/13	Total	2730	<0.50	3.5	92.7	<0.20	4.0	254000	5.6	2.5	20.4	4850	26.6	23900	1140	<0.20	10.2	4.4	10800	1.9	<0.50	13700	<0.10	5.9	1110	137	<20.0	137	<1.0	<0.0050	732000	<0.10	879	0.69	23600	630	<0.050	1100	0.63	211
		Dissolved	158	<0.50	<0.50	20.1	<0.20	2.1	249000	0.56	<0.50	2.2	282	1.6	22400	85.5	<0.20	9.0	3.5	10400	1.6	<0.50	14000	<0.10	0.32	774															
		Potentially Dissolved	864	0.41J	1.4	39.3	0.089J	3.2	237000	2.8	1.1	10.8	1780	16.4	21200	483	<0.20	3.7	1.0	10400	1.5	0.26J	14000	0.24J	1.8	895															
DR-10 DUPLICATE OF MW-5 SHALLOW	3/13/13	Total	25300	3.2	348	97.9	7.1	148	445000	14.9	88.2	943	537000	6620	140000	26900	<0.20	6.1	169	5120	5.9	.26.1	26200	0.83	11.9	125000	<20.0	<20.0	<20.0	2.0	<0.0050	1690000	<0.10	2800	2.3	74300	4480	<0.050	3620	0.61	243
		Dissolved	16700	<0.50	279	9.2	5.4	102	448000	2.3	82.1	1.4	503000	668	138000	27600	<0.20	<0.50	160	2970	4.1	<0.50	25600	0.21	1.5	121000															
		Potentially Dissolved	20600	<10.0	357	5.7J	6.0	170	392000	9.9J	78.6	788	504000	2840	126000	28000	<0.20	<10.0	158	2890	4.8J	<5.0	25700	0.73J	4.8J	121000															
DR-11 DUPLICATE OF DR-2	3/21/13	Total	9.6	<0.50	<0.50	76.8	<0.20	<0.080	66900	<0.50	<0.50	<0.50	53.9	<0.10	8830	158	<0.20	1.1	0.66	951	0.80	<0.50	4830	<0.10	<0.10	6.6	112	<20.0	112	5.3	<0.0050	204000	<0.10	263	0.20	6750	82.9	<0.050	246	0.74	<5.0
		Dissolved	<4.0	<0.50	<0.50	76.5	<0.20	<0.080	63200	<0.50	<0.50	0.55	<50.0	<0.10	8930	160	<0.20	1.0	<0.50	942	0.76	<0.50	5010	<0.10	<0.10	<5.0															
		Potentially Dissolved	6.7J	<1.0	<1.0	72.6	<0.50	<0.50	60600	0.53J	0.075J	<1.0	49.3J	0.14J	8030	149	<0.20	1.2	<1.0	893	0.67J	<0.50	5000	<1.0	<1.0	8.2J															
FB	3/13/13	Total	<4.0	<0.50	<0.50	<0.30	<0.20	<0.080	35.0	<0.50	<0.50	<0.50	<50.0	<0.10	<5.0	0.85	<0.20	<0.50	<0.50	<20.0	<0.50	<0.50	596	<0.10	<0.10	<5.0	<20.0	<20.0	<20.0	<1.0	<0.0050	105	<0.10	<6.4	<0.014	109	<1.0	<0.050	<5.0	<0.50	<5.0
		Dissolved	<4.0	<0.50	<0.50	<0.30	<0.20	<0.080	64.2	<0.50	<0.50	<0.50	<50.0	<0.10	13.3	<0.50	<0.20	<0.50	<0.50	39.1	<0.50	<0.50	636	<0.10	<0.10	<5.0															
		Potentially Dissolved	<50.0	<1.0	<1.0	0.19J	<0.50	<0.50	98.1J	0.52J	<1.0	<1.0	<50.0	0.39J	16.6J	0.41J	<0.20	<1.0	<1.0	<500	<1.0	<0.50	737	0.063J	<1.0	<10.0															

ANDERSON
ENGINEERING COMPANY INC.

TABLE 4D - Dolores River Composite Sampling Analytical Sampling Results Summary, March 2013

			Metals (µg/L)																									Non-Metals (mg/L, unless otherwise indicated)													
Field Sample ID	Date Collected	Fraction	Aluminum	Antimony	Arsenic	Barium	Beryllium	Cadmium	Calcium	Chromium	Cobalt	Copper	Iron	Lead	Magnesium	Manganese	Mercury	Molybdenum	Nickel	Potassium	Selenium	Silver	Sodium	Thallium	Vanadium	Zinc	Alkalinity, Bicarbonate (CaCO3)	Alkalinity, Carbonate (CaCO3)	Alkalinity, Total as CaCO3	Chloride	Cyanide	Hardness (µg/L as CaCO3)	Nitrogen, NO2 plus NO3	Salinity, as dissolved solids	Salinity, as sea water (PSU)	Silica (µg/L)	Sulfate	Sulfide	TDS	TOC	TSS
DR-1 COMP	3/21/13	Total	11.3	<0.50	<0.50	79.9	<0.20	<0.080	54700	<0.50	<0.50	<0.50	<50.0	<0.10	7830	10.3	<0.20	0.90	<0.50	691	0.91	<0.50	4550	<0.10	<0.10	<5.0	108	<20.0	108	5.7	<0.0050	169000	<0.10	215	0.16	6200	57.6	<0.050	204	0.76	<5.0
		Dissolved	<4.0	<0.50	<0.50	80.6	<0.20	<0.080	52500	<0.50	<0.50	0.60	<50.0	<0.10	8020	8.1	<0.20	0.84	<0.50	700	0.87	<0.50	4780	<0.10	<0.10	<5.0															
		Potentially Dissolved	5.9J	<1.0	<1.0	74.8	<0.50	<0.50	46000	0.86J	<1.0	<1.0	31.0J	0.17J	6830	9.5	<0.20	0.93J	<1.0	604	0.78J	<0.50	4400	<1.0	0.38J	2.5J															
DR-2 COMP	3/21/13	Total	10.2	<0.50	<0.50	75.0	<0.20	<0.080	67000	<0.50	<0.50	<0.50	51.5	<0.10	8850	156	<0.20	1.1	<0.50	940	0.79	<0.50	4840	<0.10	0.10	6.3	133	<20.0	133	5.3	<0.0050	204000	<0.10	284	0.21	7110	89.3	<0.050	268	0.71	<5.0
		Dissolved	<4.0	<0.50	<0.50	77.6	<0.20	<0.080	63900	<0.50	<0.50	0.52	<50.0	<0.10	8980	161	<0.20	1.0	<0.50	946	0.85	<0.50	5010	<0.10	<0.10	<5.0															
		Potentially Dissolved	6.4J	<1.0	<1.0	72.6	<0.50	<0.50	65300	0.54J	0.11J	0.46J	114	0.23J	8770	156	<0.20	1.3	<1.0	1110	0.73J	<0.50	5520	<1.0	<1.0	6.9J															
DR-7 COMP	3/21/13	Total	40.8	<0.50	0.83	69.7	<0.20	1.6	100000	<0.50	<0.50	5.9	695	0.93	12200	328	<0.20	2.2	0.60	2040	0.62	<0.50	7140	<0.10	<0.10	158	138	<20.0	138	5.1	<0.0050	300000	-	368	0.28	11200	153	<0.050	379	-	<5.0
		Dissolved	<4.0	<0.50	<0.50	68.9	<0.20	0.092	92000	<0.50	<0.50	0.64	104	<0.10	12300	314	<0.20	1.9	<0.50	2020	0.68	<0.50	7380	<0.10	<0.10	114															
		Potentially Dissolved	37.7J	0.037J	0.79J	65.7	0.084J	1.7	90100	0.93J	0.30J	6.4	741	1.4	11400	317	<0.20	2.4	<1.0	1940	0.80J	<0.50	7330	0.026J	0.36J	156															
DR-4-SW COMP	3/21/13	Total	13.8	<0.50	<0.50	70.0	<0.20	0.64	101000	<0.50	<0.50	0.86	131	0.25	12500	328	<0.20	1.8	0.56	1910	0.75	<0.50	6840	<0.10	<0.10	176	150	<20.0	150	5.3	<0.0050	304000	<0.10	362	0.27	10600	147	<0.050	363	0.63	<5.0
		Dissolved	5.1	<0.50	<0.50	70.8	<0.20	0.56	94600	<0.50	<0.50	0.89	<50.0	<0.10	12300	333	<0.20	1.7	0.65	1890	0.64	<0.50	6900	<0.10	<0.10	163															
		Potentially Dissolved	12.7J	<1.0	0.34J	68.1	<0.50	0.67	95600	3.3	0.35J	1.2	143	0.87J	12300	316	<0.20	2.1	<1.0	1910	0.73J	<0.50	7550	0.025J	<1.0	169															

ANDERSON
ENGINEERING COMPANY INC.

Table 5A - Relative Percent Difference (RPD) of Lab Analysis Between MW-6 SHALLOW and DR-8

Analyte	Total Metals / Non Metals			Dissolved Metals			Potentially Dissolved Metals		
	MW-6 SHALLOW (µg/L)	DR-8 (µg/L)	RPD (%)	MW-6 SHALLOW (µg/L)	DR-8 (µg/L)	RPD (%)	MW-6 SHALLOW (µg/L)	DR-8 (µg/L)	RPD (%)
Aluminum	23200	35100	40.82	727	741	1.91	9860	5630	-54.62
Antimony	0.67	0.80	17.69	<0.50	<0.50	-	0.43J	0.41J	-
Arsenic	111	144	25.88	37.5	37.5	0.00	86.2	62.9	-31.25
Barium	144	224	43.48	16.8	16.9	0.59	27.3	29.7	8.42
Beryllium	2.4	3.1	25.45	0.94	1.0	6.19	1.6	1.2	-28.57
Cadmium	23.7	36.8	43.31	0.19	0.17	-11.11	22.4	8.9	-86.26
Calcium	397000	404000	1.75	403000	405000	0.50	351000	359000	2.25
Chromium	20.3	32.5	46.21	<0.50	0.65	-	8.4	4.8	-54.55
Cobalt	18.9	26.7	34.21	4.2	4.3	2.35	12.3	8.1	-41.18
Copper	113	181	46.26	0.62	0.61	-1.63	66.1	34.6	-62.56
Iron	83300	99900	18.12	54300	55000	1.28	63600	62600	-1.58
Lead	237	343	36.55	0.11	0.14	24.00	242	103	-80.58
Magnesium	64300	70400	9.06	55500	55800	0.54	49900	52500	5.08
Manganese	8640	8820	2.06	8380	8430	0.59	8300	8440	1.67
Mercury	<0.20	<0.20	-	<0.20	<0.20	-	<0.20	<0.20	-
Molybdenum	7.9	11.2	34.55	4.6	4.6	0.00	3.4	3.4	0.00
Nickel	28.6	43.0	40.22	2.1	2.5	17.39	14.9	8.3	-56.90
Potassium	14700	16500	11.54	12100	12200	0.82	11500	11900	3.42
Selenium	2.9	4.3	38.89	<0.50	<0.50	-	2.6	1.1	-
Silver	0.68	1.5	75.23	<0.50	<0.50	-	0.090J	0.099J	-
Sodium	4350	4400	1.14	4260	4310	1.17	4150	4310	3.78
Thallium	0.60	0.83	32.17	<0.10	<0.10	-	0.55J	0.43J	-
Vanadium	29.0	45.7	44.71	<0.10	<0.10	-	9.0	5.4	-
Zinc	3990	5630	34.10	646	662	2.45	3890	1980	-65.08
Alkalinity, Bicarbonate (CaCO3, mg/L)	121	112	-7.73	-	-	-	-	-	-
Alkalinity, Carbonate (CaCO3, mg/L)	<20.0	<20.0	-	-	-	-	-	-	-
Alkalinity, Total as CaCO3 (mg/L)	121	112	-7.73	-	-	-	-	-	-
Chloride (mg/L)	1.6	1.7	6.06	-	-	-	-	-	-
Cyanide	<0.0050	<0.0050	-	-	-	-	-	-	-
Hardness	1260000	1300000	3.13	-	-	-	-	-	-
Nitrogen, NO2 plus NO3 (mg/L)	<0.10	<0.10	-	-	-	-	-	-	-
Salinity, as dissolved solids (mg/L)	1320	1300	-1.53	-	-	-	-	-	-
Salinity, as sea water (PSU)	1.0	1.0	0.00	-	-	-	-	-	-
Silica	89900	108000	18.29	-	-	-	-	-	-
Sulfate (mg/L)	1190	1190	0.00	-	-	-	-	-	-
Sulfide (mg/L)	<0.050	<0.050	-	-	-	-	-	-	-
TDS (mg/L)	1770	1710	-3.45	-	-	-	-	-	-
TOC (mg/L)	1.3	1.1	-16.67	-	-	-	-	-	-
TSS (mg/L)	463	1700	114.38	-	-	-	-	-	-

Table 5B - Relative Percent Difference (RPD) of Lab Analysis Between MW-104 and DR-9

Analyte	Total Metals / Non Metals			Dissolved Metals			Potentially Dissolved Metals		
	MW-104 (µg/L)	DR-9 (µg/L)	RPD (%)	MW-104 (µg/L)	DR-9 (µg/L)	RPD (%)	MW-104 (µg/L)	DR-9 (µg/L)	RPD (%)
Aluminum	2690	2730	1.48	325	158	-69.15	1020	864	-16.56
Antimony	<0.50	<0.50	-	<0.50	<0.50	-	0.42J	0.41J	-
Arsenic	2.9	3.5	18.75	<0.50	<0.50	-	1.7	1.4	-19.35
Barium	73.1	92.7	23.64	24.4	20.1	-19.33	47.9	39.3	-19.72
Beryllium	<0.20	<0.20	-	<0.20	<0.20	-	0.13J	0.089J	-
Cadmium	3.2	4.0	22.22	2.3	2.1	-9.09	4.0	3.2	-22.22
Calcium	257000	254000	-1.17	253000	249000	-1.59	226000	237000	4.75
Chromium	5.1	5.6	9.35	0.93	0.56	-49.66	3.7	2.8	-27.69
Cobalt	2.1	2.5	17.39	<0.50	<0.50	-	1.9	1.1	-53.33
Copper	16.3	20.4	22.34	3.4	2.2	-42.86	17.8	10.8	-48.95
Iron	4480	4850	7.93	596	282	-71.53	2380	1780	-28.85
Lead	22.5	26.6	16.70	3.9	1.6	-83.64	40.2	16.4	-84.10
Magnesium	23900	23900	0.00	22200	22400	0.90	20700	21200	2.39
Manganese	849	1140	29.26	169	85.5	-65.62	867	483	-56.89
Mercury	<0.20	<0.20	-	<0.20	<0.20	-	<0.20	<0.20	-
Molybdenum	11.5	10.2	-11.98	9.3	9.0	-3.28	2.9	3.7	24.24
Nickel	3.8	4.4	14.63	1.0	3.5	111.11	2.8	1.0	-94.74
Potassium	10900	10800	-0.92	10400	10400	0.00	9720	10400	6.76
Selenium	1.6	1.9	17.14	1.3	1.6	20.69	1.6	1.5	-6.45
Silver	<0.50	<0.50	-	<0.50	<0.50	-	0.29J	0.26J	-
Sodium	14000	13700	-2.17	13900	14000	0.72	13200	14000	5.88
Thallium	<0.10	<0.10	-	<0.10	<0.10	-	0.25J	0.24J	-
Vanadium	5.5	5.9	7.02	0.73	0.32	-78.10	2.1	1.8	-15.38
Zinc	1010	1110	9.43	795	774	-2.68	1070	895	-17.81
Alkalinity, Bicarbonate (CaCO3, mg/L)	138	137	-0.73	-	-	-	-	-	-
Alkalinity, Carbonate (CaCO3, mg/L)	<20.0	<20.0	-	-	-	-	-	-	-
Alkalinity, Total as CaCO3 (mg/L)	138	137	-0.73	-	-	-	-	-	-
Chloride (mg/L)	<1.0	<1.0	-	-	-	-	-	-	-
Cyanide	<0.0050	<0.0050	-	-	-	-	-	-	-
Hardness	741000	732000	-1.22	-	-	-	-	-	-
Nitrogen, NO2 plus NO3 (mg/L)	<0.10	<0.10	-	-	-	-	-	-	-
Salinity, as dissolved solids (mg/L)	852	879	3.12	-	-	-	-	-	-
Salinity, as sea water (PSU)	0.66	0.69	4.44	-	-	-	-	-	-
Silica	23300	23600	1.28	-	-	-	-	-	-
Sulfate (mg/L)	640	630	-1.57	-	-	-	-	-	-
Sulfide (mg/L)	<0.050	<0.050	-	-	-	-	-	-	-
TDS (mg/L)	1010	1100	8.53	-	-	-	-	-	-
TOC (mg/L)	<0.50	0.63	-	-	-	-	-	-	-
TSS (mg/L)	160	211	27.49	-	-	-	-	-	-

Table 5C - Relative Percent Difference (RPD) of Lab Analysis Between MW-5 SHALLOW and DR-10

Analyte	Total Metals / Non Metals			Dissolved Metals			Potentially Dissolved Metals		
	MW-5 SHALLOW (µg/L)	DR-10 (µg/L)	RPD (%)	MW-5 SHALLOW (µg/L)	DR-10 (µg/L)	RPD (%)	MW-5 SHALLOW (µg/L)	DR-10 (µg/L)	RPD (%)
Aluminum	30200	25300	-17.66	17200	16700	-2.95	17400	20600	16.84
Antimony	4.1	3.2	-24.66	<0.50	<0.50	-	<10.0	<10.0	-
Arsenic	400	348	-13.90	273	279	2.17	340	357	4.88
Barium	116	97.9	-16.92	13.0	9.2	-34.23	3.8J	5.7J	-
Beryllium	7.9	7.1	-10.67	5.5	5.4	-1.83	5.6	6.0	6.90
Cadmium	164	148	-10.26	94.5	102	7.63	129	170	27.42
Calcium	458000	445000	-2.88	446000	448000	0.45	396000	392000	-1.02
Chromium	20.7	14.9	-32.58	2.5	2.3	-8.33	6.1J	9.9J	-
Cobalt	91.4	88.2	-3.56	83.2	82.1	-1.33	74.0	78.6	6.03
Copper	1620	943	-52.83	45.4	1.4	-188.03	622	788	23.55
Iron	624000	537000	-14.99	545000	503000	-8.02	480000	504000	4.88
Lead	9900	6620	-39.71	1090	668	-48.01	2810	2840	1.06
Magnesium	153000	140000	-8.87	144000	138000	-4.26	128000	126000	-1.57
Manganese	29700	26900	-9.89	29600	27600	-6.99	26500	28000	5.50
Mercury	<0.20	<0.20	-	<0.20	<0.20	-	<0.20	<0.20	-
Molybdenum	8.3	6.1	-30.56	0.69	<0.50	-	<10.0	<10.0	-
Nickel	174	169	-2.92	157	160	1.89	152	158	3.87
Potassium	5810	5120	-12.63	3170	2970	-6.51	2940	2890	-1.72
Selenium	10.8	5.9	-58.68	4.2	4.1	-2.41	<10.0	4.8J	-
Silver	38.9	26.1	-39.38	1.1	<0.50	-	<5.0	<5.0	-
Sodium	28800	26200	-9.45	25500	25600	0.39	25200	25700	1.96
Thallium	0.99	0.83	-17.58	0.26	0.21	-21.28	0.50J	0.73J	-
Vanadium	16.1	11.9	-30.00	1.8	1.5	-18.18	3.0J	4.8J	-
Zinc	144000	125000	-14.13	113000	121000	6.84	124000	121000	-2.45
Alkalinity, Bicarbonate (CaCO3, mg/L)	<20.0	<20.0	-	-	-	-	-	-	-
Alkalinity, Carbonate (CaCO3, mg/L)	<20.0	<20.0	-	-	-	-	-	-	-
Alkalinity, Total as CaCO3 (mg/L)	<20.0	<20.0	-	-	-	-	-	-	-
Chloride (mg/L)	1.8	2.0	10.53	-	-	-	-	-	-
Cyanide	<0.0050	<0.0050	-	-	-	-	-	-	-
Hardness	1780000	1690000	-5.19	-	-	-	-	-	-
Nitrogen, NO2 plus NO3 (mg/L)	<0.10	<0.10	-	-	-	-	-	-	-
Salinity, as dissolved solids (mg/L)	2660	2800	5.13	-	-	-	-	-	-
Salinity, as sea water (PSU)	2.2	2.3	4.44	-	-	-	-	-	-
Silica	87100	74300	-15.86	-	-	-	-	-	-
Sulfate (mg/L)	3430	4480	26.55	-	-	-	-	-	-
Sulfide (mg/L)	<0.050	<0.050	-	-	-	-	-	-	-
TDS (mg/L)	3780	3620	-4.32	-	-	-	-	-	-
TOC (mg/L)	1.1	0.61	-57.31	-	-	-	-	-	-
TSS (mg/L)	294	243	-18.99	-	-	-	-	-	-

Table 5D - Relative Percent Difference (RPD) of Lab Analysis Between DR-2 and DR-11

Analyte	Total Metals / Non Metals			Dissolved Metals			Potentially Dissolved Metals		
	DR-2 (µg/L)	DR-11 (µg/L)	RPD (%)	DR-2 (µg/L)	DR-11 (µg/L)	RPD (%)	DR-2 (µg/L)	DR-11 (µg/L)	RPD (%)
Aluminum	8.1	9.6	16.95	<4.0	<4.0	-	5.9J	6.7J	-
Antimony	<0.50	<0.50	-	<0.50	<0.50	-	<1.0	<1.0	-
Arsenic	<0.50	<0.50	-	<0.50	<0.50	-	<1.0	<1.0	-
Barium	75.9	76.8	1.18	76.4	76.5	0.13	70.9	72.6	2.37
Beryllium	<0.20	<0.20	-	<0.20	<0.20	-	<0.50	<0.50	-
Cadmium	<0.080	<0.080	-	<0.080	<0.080	-	<0.50	<0.50	-
Calcium	71500	66900	-6.65	68400	63200	-7.90	58700	60600	3.19
Chromium	<0.50	<0.50	-	<0.50	<0.50	-	0.34J	0.53J	-
Cobalt	<0.50	<0.50	-	<0.50	<0.50	-	0.050J	0.075J	-
Copper	<0.50	<0.50	-	0.58	0.55	-5.31	0.45J	<1.0	-
Iron	86.8	53.9	-46.77	<50.0	<50.0	-	48.8J	49.3J	-
Lead	<0.10	<0.10	-	<0.10	<0.10	-	0.16J	0.14J	-
Magnesium	9690	8830	-9.29	9730	8930	-8.57	7860	8030	2.14
Manganese	162	158	-2.50	164	160	-2.47	145	149	2.72
Mercury	<0.20	<0.20	-	<0.20	<0.20	-	<0.20	<0.20	-
Molybdenum	1.1	1.1	0.00	1.1	1.0	-9.52	1.2	1.2	0.00
Nickel	<0.50	0.66	-	<0.50	<0.50	-	<1.0	<1.0	-
Potassium	1160	951	-19.80	1150	942	-19.89	872	893	2.38
Selenium	0.92	0.80	-13.95	0.84	0.76	-10.00	0.88J	0.67J	-
Silver	<0.50	<0.50	-	<0.50	<0.50	-	<0.50	<0.50	-
Sodium	5420	4830	-11.51	5560	5010	-10.41	4790	5000	4.29
Thallium	<0.10	<0.10	-	<0.10	<0.10	-	<1.0	<1.0	-
Vanadium	<0.10	<0.10	-	<0.10	<0.10	-	<1.0	<1.0	-
Zinc	5.8	6.6	12.90	<5.0	<5.0	-	8.7J	8.2J	-
Alkalinity, Bicarbonate (CaCO3, mg/L)	110	112	1.80	-	-	-	-	-	-
Alkalinity, Carbonate (CaCO3, mg/L)	<20.0	<20.0	-	-	-	-	-	-	-
Alkalinity, Total as CaCO3 (mg/L)	110	112	1.80	-	-	-	-	-	-
Chloride (mg/L)	5.4	5.3	-1.87	-	-	-	-	-	-
Cyanide	<0.0050	<0.0050	-	-	-	-	-	-	-
Hardness	218000	204000	-6.64	-	-	-	-	-	-
Nitrogen, NO2 plus NO3 (mg/L)	<0.10	<0.10	-	-	-	-	-	-	-
Salinity, as dissolved solids (mg/L)	250	263	5.07	-	-	-	-	-	-
Salinity, as sea water (PSU)	0.19	0.20	5.13	-	-	-	-	-	-
Silica	8200	6750	-19.40	-	-	-	-	-	-
Sulfate (mg/L)	81.8	82.9	1.34	-	-	-	-	-	-
Sulfide (mg/L)	<0.050	<0.050	-	-	-	-	-	-	-
TDS (mg/L)	241	246	2.05	-	-	-	-	-	-
TOC (mg/L)	0.70	0.74	5.56	-	-	-	-	-	-
TSS (mg/L)	<5.0	<5.0	-	-	-	-	-	-	-

Appendix C

Project Narrative and Laboratory Analytical Reports

Pace Analytical Services, Inc.
9608 Loiret Blvd.
Lenexa, KS 66219
(913)599-5665

March 26, 2013

Mark DeFriez
Anderson Engineering Company I
977 W 2100 S.
Salt Lake City, UT 84119

RE: Project: MARCH 2013 RICO WATER SAMPLING
Pace Project No.: 60139978

Dear Mark DeFriez:
Enclosed are the analytical results for sample(s) received by the laboratory on March 08, 2013. The results relate only to the within this report conform to the most current version of the TNI standards, BP LaMP Technical Requirements Revision 10.1, and any applicable Quality Assurance Project Plan (QAPP), or Work Plan unless otherwise narrated in the body of this report.

If you have any questions concerning this report, please feel free to contact me.

Sincerely,

Heather M. Wilson

Heather Wilson

heather.wilson@pacelabs.com
Project Manager

Enclosures

This report shall not be reproduced, except in full,
without the written consent of Pace Analytical Services, Inc..

Pace Analytical Services, Inc.
9608 Loiret Blvd.
Lenexa, KS 66219
(913)599-5665

CERTIFICATIONS

Project: MARCH 2013 RICO WATER SAMPLING
Pace Project No.: 60139978

Minnesota Certification IDs
1700 Elm Street SE Suite 200, Minneapolis, MN 55414
A2LA Certification #: 2926.01
Alaska Certification #: UST-078
Alaska Certification #MN00064
Arizona Certification #: AZ-0014
Arkansas Certification #: 88-0680
California Certification #: 01155CA
Colorado Certification #Pace
Connecticut Certification #: PH-0256
EPA Region 8 Certification #: Pace
Florida/NELAP Certification #: E87605
Georgia Certification #: 959
Hawaii Certification #Pace
Idaho Certification #: MN00064
Illinois Certification #: 200011
Kansas Certification #: E-10167
Louisiana Certification #: 03086
Louisiana Certification #: LA080009
Maine Certification #: 2007029
Maryland Certification #: 322
Michigan DEQ Certification #: 9909
Minnesota Certification #: 027-053-137
Mississippi Certification #: Pace
Montana Certification #: MT CERT0092
Nebraska Certification #: Pace
Nevada Certification #: MN_00064
New Jersey Certification #: MN-002
New York Certification #: 11647
North Carolina Certification #: 530
North Dakota Certification #: R-036
North Dakota Certification #: R-036A
Ohio VAP Certification #: CL101
Oklahoma Certification #: 9507
Oregon Certification #: MN200001
Oregon Certification #: MN300001
Pennsylvania Certification #: 68-00563
Puerto Rico Certification
Tennessee Certification #: 02818
Texas Certification #: T104704192
Utah Certification #: MN00064
Virginia/DCLS Certification #: 002521
Virginia/VELAP Certification #: 460163
Washington Certification #: C754
West Virginia Certification #: 382
Wisconsin Certification #: 999407970

Montana Certification IDs
602 South 25th Street, Billings, MT 59101
EPA Region 8 Certification #: 8TMS-Q
Idaho Certification #: MT00012
Montana Certification #: MT CERT0040
NVLAP Certification #: 101292-0
Minnesota Dept of Health Certification #: 030-999-442
Washington Department of Ecology #: C993

Green Bay Certification IDs
1241 Bellevue Street, Green Bay, WI 54302
Florida/NELAP Certification #: E87948
Illinois Certification #: 200050
Kentucky Certification #: 82
Louisiana Certification #: 04168
Minnesota Certification #: 055-999-334
New York Certification #: 11888
North Dakota Certification #: R-150
South Carolina Certification #: 83006001
US Dept of Agriculture #: S-76505
Wisconsin Certification #: 405132750

Kansas Certification IDs
9608 Loiret Boulevard, Lenexa, KS 66219
A2LA Certification #: 2456.01
Arkansas Certification #: 12-019-0
Illinois Certification #: 002885
Iowa Certification #: 118
Kansas/NELAP Certification #: E-10116
Louisiana Certification #: 03055
Nevada Certification #: KS000212008A
Oklahoma Certification #: 9205/9935
Texas Certification #: T104704407-12-3
Utah Certification #: KS000212012-2
Illinois Certification #: 003097

This report shall not be reproduced, except in full,
without the written consent of Pace Analytical Services, Inc..

Pace Analytical Services, Inc.
9608 Loiret Blvd.
Lenexa, KS 66219
(913)599-5665

SAMPLE SUMMARY

Project: MARCH 2013 RICO WATER SAMPLING
Pace Project No.: 60139978

Lab ID	Sample ID	Matrix	Date Collected	Date Received
60139978001	**EB-1_20130307**	Water	03/07/13 10:15	03/08/13 10:20
60139978002	**EB-2_20130307**	Water	03/07/13 11:00	03/08/13 10:20
60139978003	**GW-7_20130307**	Water	03/07/13 12:30	03/08/13 10:20
60139978004	**GW-3_20130307**	Water	03/07/13 08:01	03/08/13 10:20
60139978005	**MW-4 SHALLOW_20130307**	Water	03/07/13 12:30	03/08/13 10:20

This report shall not be reproduced, except in full,
without the written consent of Pace Analytical Services, Inc..

Pace Analytical Services, Inc.
9608 Loiret Blvd.
Lenexa, KS 66219
(913)599-5665

SAMPLE ANALYTE COUNT

Project: MARCH 2013 RICO WATER SAMPLING
Pace Project No.: 60139978

Lab ID	Sample ID	Method	Analysts	Analytes Reported	Laboratory
60139978001	**EB-1_20130307**	EPA 200.7	TJT	4	PASI-K
		EPA 200.8	RJS	25	PASI-M
		EPA 200.8	RJS	23	PASI-M
		EPA 200.8	JGP	19	PASI-K
		EPA 245.1	TEM	1	PASI-M
		EPA 245.1	TEM	1	PASI-M
		EPA 245.1	NDJ	1	PASI-K
		SM 2510B	WT1	1	
		Calculated	WT1	2	
		SM 2320B	DJR	3	PASI-K
		SM 2540C	NDL	1	PASI-K
		SM 2540D	NDL	1	PASI-K
		SM 4500-S-2 D	AJM	1	PASI-K
		EPA 300.0	AJM	2	PASI-K
		EPA 353.2	AJM	1	PASI-K
		SM 4500-CN-E	OL	1	PASI-K
		SM 5310C	TJJ	1	PASI-G
60139978002	**EB-2_20130307**	EPA 200.7	TJT	4	PASI-K
		EPA 200.8	RJS	25	PASI-M
		EPA 200.8	RJS	23	PASI-M
		EPA 200.8	JGP	19	PASI-K
		EPA 245.1	TEM	1	PASI-M
		EPA 245.1	TEM	1	PASI-M
		EPA 245.1	NDJ	1	PASI-K
		SM 2510B	WT1	1	
		Calculated	WT1	2	
		SM 2320B	DJR	3	PASI-K
		SM 2540C	NDL	1	PASI-K
		SM 2540D	NDL	1	PASI-K
		SM 4500-S-2 D	AJM	1	PASI-K
		EPA 300.0	AJM	2	PASI-K
		EPA 353.2	AJM	1	PASI-K
		SM 4500-CN-E	OL	1	PASI-K
		SM 5310C	TJJ	1	PASI-G
60139978003	**GW-7_20130307**	EPA 200.7	TJT	4	PASI-K
		EPA 200.8	RJS	25	PASI-M
		EPA 200.8	RJS	23	PASI-M

This report shall not be reproduced, except in full,
without the written consent of Pace Analytical Services, Inc..

Pace Analytical Services, Inc.
9608 Loiret Blvd.
Lenexa, KS 66219
(913)599-5665

SAMPLE ANALYTE COUNT

Project: MARCH 2013 RICO WATER SAMPLING
Pace Project No.: 60139978

Lab ID	Sample ID	Method	Analysts	Analytes Reported	Laboratory
		EPA 200.8	JGP	19	PASI-K
		EPA 245.1	TEM	1	PASI-M
		EPA 245.1	TEM	1	PASI-M
		EPA 245.1	NDJ	1	PASI-K
		SM 2510B	WT1	1	
		Calculated	WT1	2	
		SM 2320B	DJR	3	PASI-K
		SM 2540C	NDL	1	PASI-K
		SM 2540D	NDL	1	PASI-K
		SM 4500-S-2 D	AJM	1	PASI-K
		EPA 300.0	AJM	2	PASI-K
		EPA 353.2	AJM	1	PASI-K
		SM 4500-CN-E	OL	1	PASI-K
		SM 5310C	TJJ	1	PASI-G
60139978004	**GW-3_20130307**	EPA 200.7	TJT	4	PASI-K
		EPA 200.8	RJS	25	PASI-M
		EPA 200.8	RJS	23	PASI-M
		EPA 200.8	JGP	19	PASI-K
		EPA 245.1	TEM	1	PASI-M
		EPA 245.1	TEM	1	PASI-M
		EPA 245.1	NDJ	1	PASI-K
		SM 4500-S-2 D	AJM	1	PASI-K
		SM 4500-CN-E	OL	1	PASI-K
60139978005	**MW-4 SHALLOW_20130307**	EPA 200.7	TJT	4	PASI-K
		EPA 200.8	RJS	25	PASI-M
		EPA 200.8	RJS	23	PASI-M
		EPA 200.8	JGP	19	PASI-K
		EPA 245.1	TEM	1	PASI-M
		EPA 245.1	TEM	1	PASI-M
		EPA 245.1	NDJ	1	PASI-K
		SM 2510B	WT1	1	
		Calculated	WT1	2	
		SM 2320B	DJR	3	PASI-K
		SM 2540C	NDL	1	PASI-K
		SM 2540D	NDL	1	PASI-K
		SM 4500-S-2 D	AJM	1	PASI-K
		EPA 300.0	AJM	2	PASI-K

This report shall not be reproduced, except in full,
without the written consent of Pace Analytical Services, Inc..

Pace Analytical Services, Inc.
9608 Loiret Blvd.
Lenexa, KS 66219
(913)599-5665

SAMPLE ANALYTE COUNT

Project: MARCH 2013 RICO WATER SAMPLING
Pace Project No.: 60139978

Lab ID	Sample ID	Method	Analysts	Analytes Reported	Laboratory
		EPA 353.2	AJM	1	PASI-K
		SM 4500-CN-E	OL	1	PASI-K
		SM 5310C	TJJ	1	PASI-G

This report shall not be reproduced, except in full,
without the written consent of Pace Analytical Services, Inc..

Pace Analytical Services, Inc.
9608 Loiret Blvd.
Lenexa, KS 66219
(913)599-5665

PROJECT NARRATIVE

Project: MARCH 2013 RICO WATER SAMPLING
Pace Project No.: 60139978

Method: **EPA 200.7**
Description: 200.7 Potentially Diss. Metals
Client: BP Anderson Engineering Company Inc.
Date: March 26, 2013

General Information:
5 samples were analyzed for EPA 200.7. All samples were received in acceptable condition with any exceptions noted below.

Hold Time:
The samples were analyzed within the method required hold times with any exceptions noted below.

Sample Preparation:
The samples were prepared in accordance with EPA 200.7 with any exceptions noted below.

Initial Calibrations (including MS Tune as applicable):
All criteria were within method requirements with any exceptions noted below.

Continuing Calibration:
All criteria were within method requirements with any exceptions noted below.

Method Blank:
All analytes were below the report limit in the method blank with any exceptions noted below.

Laboratory Control Spike:
All laboratory control spike compounds were within QC limits with any exceptions noted below.

Matrix Spikes:
All percent recoveries and relative percent differences (RPDs) were within acceptance criteria with any exceptions noted below.

QC Batch: MPRP/21794

A matrix spike and matrix spike duplicate (MS/MSD) were performed on the following sample(s): 60139978001

M1: Matrix spike recovery exceeded QC limits. Batch accepted based on laboratory control sample (LCS) recovery.

- MS (Lab ID: 1151353)
  - Calcium, Dissolved
- MSD (Lab ID: 1151354)
  - Calcium, Dissolved

Additional Comments:

This report shall not be reproduced, except in full,
without the written consent of Pace Analytical Services, Inc..

Pace Analytical Services, Inc.
9608 Loiret Blvd.
Lenexa, KS 66219
(913)599-5665

PROJECT NARRATIVE

Project: MARCH 2013 RICO WATER SAMPLING
Pace Project No.: 60139978

Method: **EPA 200.8**
Description: 200.8 MET ICPMS
Client: BP Anderson Engineering Company Inc.
Date: March 26, 2013

General Information:
5 samples were analyzed for EPA 200.8. All samples were received in acceptable condition with any exceptions noted below.

Hold Time:
The samples were analyzed within the method required hold times with any exceptions noted below.

Sample Preparation:
The samples were prepared in accordance with EPA 200.8 with any exceptions noted below.

Initial Calibrations (including MS Tune as applicable):
All criteria were within method requirements with any exceptions noted below.

Continuing Calibration:
All criteria were within method requirements with any exceptions noted below.

Internal Standards:
All internal standards were within QC limits with any exceptions noted below.

Method Blank:
All analytes were below the report limit in the method blank with any exceptions noted below.

Laboratory Control Spike:
All laboratory control spike compounds were within QC limits with any exceptions noted below.

Matrix Spikes:
All percent recoveries and relative percent differences (RPDs) were within acceptance criteria with any exceptions noted below.

Additional Comments:

This report shall not be reproduced, except in full,
without the written consent of Pace Analytical Services, Inc..

Pace Analytical Services, Inc.
9608 Loiret Blvd.
Lenexa, KS 66219
(913)599-5665

PROJECT NARRATIVE

Project: MARCH 2013 RICO WATER SAMPLING
Pace Project No.: 60139978

Method: **EPA 200.8**
Description: 200.8 MET ICPMS, Dissolved
Client: BP Anderson Engineering Company Inc.
Date: March 26, 2013

General Information:
5 samples were analyzed for EPA 200.8. All samples were received in acceptable condition with any exceptions noted below.

Hold Time:
The samples were analyzed within the method required hold times with any exceptions noted below.

Sample Preparation:
The samples were prepared in accordance with EPA 200.8 with any exceptions noted below.

Initial Calibrations (including MS Tune as applicable):
All criteria were within method requirements with any exceptions noted below.

Continuing Calibration:
All criteria were within method requirements with any exceptions noted below.

Internal Standards:
All internal standards were within QC limits with any exceptions noted below.

Method Blank:
All analytes were below the report limit in the method blank with any exceptions noted below.

Laboratory Control Spike:
All laboratory control spike compounds were within QC limits with any exceptions noted below.

Matrix Spikes:
All percent recoveries and relative percent differences (RPDs) were within acceptance criteria with any exceptions noted below.

Additional Comments:

Analyte Comments:

QC Batch: MPRP/37981

E: Analyte concentration exceeded the calibration range. The reported result is estimated.

- MS (Lab ID: 1390449)
  - Calcium, Dissolved
- MSD (Lab ID: 1390450)
  - Calcium, Dissolved

This report shall not be reproduced, except in full,
without the written consent of Pace Analytical Services, Inc..

Pace Analytical Services, Inc.
9608 Loiret Blvd.
Lenexa, KS 66219
(913)599-5665

PROJECT NARRATIVE

Project: MARCH 2013 RICO WATER SAMPLING
Pace Project No.: 60139978

Method: **EPA 200.8**
Description: 200.8 Potentially Diss. Metals
Client: BP Anderson Engineering Company Inc.
Date: March 26, 2013

General Information:
5 samples were analyzed for EPA 200.8. All samples were received in acceptable condition with any exceptions noted below.

Hold Time:
The samples were analyzed within the method required hold times with any exceptions noted below.

Sample Preparation:
The samples were prepared in accordance with EPA 200.8 with any exceptions noted below.

Initial Calibrations (including MS Tune as applicable):
All criteria were within method requirements with any exceptions noted below.

Continuing Calibration:
All criteria were within method requirements with any exceptions noted below.

Internal Standards:
All internal standards were within QC limits with any exceptions noted below.

Method Blank:
All analytes were below the report limit in the method blank with any exceptions noted below.

Laboratory Control Spike:
All laboratory control spike compounds were within QC limits with any exceptions noted below.

Matrix Spikes:
All percent recoveries and relative percent differences (RPDs) were within acceptance criteria with any exceptions noted below.

QC Batch: MPRP/21795

A matrix spike and matrix spike duplicate (MS/MSD) were performed on the following sample(s): 60139978002

M1: Matrix spike recovery exceeded QC limits. Batch accepted based on laboratory control sample (LCS) recovery.

- MS (Lab ID: 1151358)
  - Beryllium, Dissolved
- MSD (Lab ID: 1151359)
  - Beryllium, Dissolved
  - Lead, Dissolved

Additional Comments:

Analyte Comments:

QC Batch: MPRP/21795

1e: Post Digestion Spike Performed - 58.3% Recovery

- MS (Lab ID: 1151358)
  - Beryllium, Dissolved

This report shall not be reproduced, except in full,
without the written consent of Pace Analytical Services, Inc..

Pace Analytical Services, Inc.
9608 Loiret Blvd.
Lenexa, KS 66219
(913)599-5665

PROJECT NARRATIVE

Project: MARCH 2013 RICO WATER SAMPLING
Pace Project No.: 60139978

Method: **EPA 200.8**
Description: 200.8 Potentially Diss. Metals
Client: BP Anderson Engineering Company Inc.
Date: March 26, 2013

Analyte Comments:

QC Batch: MPRP/21795

1e: Post Digestion Spike Performed - 58.3% Recovery

- MSD (Lab ID: 1151359)
  - Beryllium, Dissolved

This report shall not be reproduced, except in full,
without the written consent of Pace Analytical Services, Inc..

Pace Analytical Services, Inc.
9608 Loiret Blvd.
Lenexa, KS 66219
(913)599-5665

PROJECT NARRATIVE

Project: MARCH 2013 RICO WATER SAMPLING
Pace Project No.: 60139978

Method: **EPA 245.1**
Description: 245.1 Mercury
Client: BP Anderson Engineering Company Inc.
Date: March 26, 2013

General Information:
5 samples were analyzed for EPA 245.1. All samples were received in acceptable condition with any exceptions noted below.

Hold Time:
The samples were analyzed within the method required hold times with any exceptions noted below.

Sample Preparation:
The samples were prepared in accordance with EPA 245.1 with any exceptions noted below.

Initial Calibrations (including MS Tune as applicable):
All criteria were within method requirements with any exceptions noted below.

Continuing Calibration:
All criteria were within method requirements with any exceptions noted below.

Method Blank:
All analytes were below the report limit in the method blank with any exceptions noted below.

Laboratory Control Spike:
All laboratory control spike compounds were within QC limits with any exceptions noted below.

Matrix Spikes:
All percent recoveries and relative percent differences (RPDs) were within acceptance criteria with any exceptions noted below.

QC Batch: MERP/8137

A matrix spike and matrix spike duplicate (MS/MSD) were performed on the following sample(s): 60139978005

M1: Matrix spike recovery exceeded QC limits. Batch accepted based on laboratory control sample (LCS) recovery.

- MS (Lab ID: 1390453)
  - Mercury

Additional Comments:

This report shall not be reproduced, except in full,
without the written consent of Pace Analytical Services, Inc..

Pace Analytical Services, Inc.
9608 Loiret Blvd.
Lenexa, KS 66219
(913)599-5665

PROJECT NARRATIVE

Project: MARCH 2013 RICO WATER SAMPLING
Pace Project No.: 60139978

Method: **EPA 245.1**
Description: 245.1 Mercury, Dissolved
Client: BP Anderson Engineering Company Inc.
Date: March 26, 2013

General Information:
5 samples were analyzed for EPA 245.1. All samples were received in acceptable condition with any exceptions noted below.

Hold Time:
The samples were analyzed within the method required hold times with any exceptions noted below.

Sample Preparation:
The samples were prepared in accordance with EPA 245.1 with any exceptions noted below.

Initial Calibrations (including MS Tune as applicable):
All criteria were within method requirements with any exceptions noted below.

Continuing Calibration:
All criteria were within method requirements with any exceptions noted below.

Method Blank:
All analytes were below the report limit in the method blank with any exceptions noted below.

Laboratory Control Spike:
All laboratory control spike compounds were within QC limits with any exceptions noted below.

Matrix Spikes:
All percent recoveries and relative percent differences (RPDs) were within acceptance criteria with any exceptions noted below.

Additional Comments:

This report shall not be reproduced, except in full,
without the written consent of Pace Analytical Services, Inc..

Pace Analytical Services, Inc.
9608 Loiret Blvd.
Lenexa, KS 66219
(913)599-5665

PROJECT NARRATIVE

Project: MARCH 2013 RICO WATER SAMPLING
Pace Project No.: 60139978

Method: **EPA 245.1**
Description: 245.1 Potentially Diss Mercury
Client: BP Anderson Engineering Company Inc.
Date: March 26, 2013

General Information:
5 samples were analyzed for EPA 245.1. All samples were received in acceptable condition with any exceptions noted below.

Hold Time:
The samples were analyzed within the method required hold times with any exceptions noted below.

Sample Preparation:
The samples were prepared in accordance with EPA 245.1 with any exceptions noted below.

Initial Calibrations (including MS Tune as applicable):
All criteria were within method requirements with any exceptions noted below.

Continuing Calibration:
All criteria were within method requirements with any exceptions noted below.

Method Blank:
All analytes were below the report limit in the method blank with any exceptions noted below.

Laboratory Control Spike:
All laboratory control spike compounds were within QC limits with any exceptions noted below.

Matrix Spikes:
All percent recoveries and relative percent differences (RPDs) were within acceptance criteria with any exceptions noted below.

Additional Comments:

This report shall not be reproduced, except in full,
without the written consent of Pace Analytical Services, Inc..

Pace Analytical Services, Inc.
9608 Loiret Blvd.
Lenexa, KS 66219
(913)599-5665

PROJECT NARRATIVE

Project: MARCH 2013 RICO WATER SAMPLING
Pace Project No.: 60139978

Method: **SM 2510B**
Description: 2510B Specific Conductance
Client: BP Anderson Engineering Company Inc.
Date: March 26, 2013

General Information:
4 samples were analyzed for SM 2510B. All samples were received in acceptable condition with any exceptions noted below.

Hold Time:
The samples were analyzed within the method required hold times with any exceptions noted below.

Initial Calibrations (including MS Tune as applicable):
All criteria were within method requirements with any exceptions noted below.

Continuing Calibration:
All criteria were within method requirements with any exceptions noted below.

Internal Standards:
All internal standards were within QC limits with any exceptions noted below.

Surrogates:
All surrogates were within QC limits with any exceptions noted below.

Method Blank:
All analytes were below the report limit in the method blank with any exceptions noted below.

Laboratory Control Spike:
All laboratory control spike compounds were within QC limits with any exceptions noted below.

Matrix Spikes:
All percent recoveries and relative percent differences (RPDs) were within acceptance criteria with any exceptions noted below.

Duplicate Sample:
All duplicate sample results were within method acceptance criteria with any exceptions noted below.

Additional Comments:

This report shall not be reproduced, except in full,
without the written consent of Pace Analytical Services, Inc..

Pace Analytical Services, Inc.
9608 Loiret Blvd.
Lenexa, KS 66219
(913)599-5665

PROJECT NARRATIVE

Project: MARCH 2013 RICO WATER SAMPLING
Pace Project No.: 60139978

Method: **Calculated**
Description: Salinity
Client: BP Anderson Engineering Company Inc.
Date: March 26, 2013

General Information:
4 samples were analyzed for Calculated. All samples were received in acceptable condition with any exceptions noted below.

Hold Time:
The samples were analyzed within the method required hold times with any exceptions noted below.

Initial Calibrations (including MS Tune as applicable):
All criteria were within method requirements with any exceptions noted below.

Continuing Calibration:
All criteria were within method requirements with any exceptions noted below.

Internal Standards:
All internal standards were within QC limits with any exceptions noted below.

Surrogates:
All surrogates were within QC limits with any exceptions noted below.

Method Blank:
All analytes were below the report limit in the method blank with any exceptions noted below.

Laboratory Control Spike:
All laboratory control spike compounds were within QC limits with any exceptions noted below.

Matrix Spikes:
All percent recoveries and relative percent differences (RPDs) were within acceptance criteria with any exceptions noted below.

Additional Comments:

This report shall not be reproduced, except in full,
without the written consent of Pace Analytical Services, Inc..

Pace Analytical Services, Inc.
9608 Loiret Blvd.
Lenexa, KS 66219
(913)599-5665

PROJECT NARRATIVE

Project: MARCH 2013 RICO WATER SAMPLING
Pace Project No.: 60139978

Method: **SM 2320B**
Description: 2320B Alkalinity
Client: BP Anderson Engineering Company Inc.
Date: March 26, 2013

General Information:
4 samples were analyzed for SM 2320B. All samples were received in acceptable condition with any exceptions noted below.

Hold Time:
The samples were analyzed within the method required hold times with any exceptions noted below.

Method Blank:
All analytes were below the report limit in the method blank with any exceptions noted below.

Laboratory Control Spike:
All laboratory control spike compounds were within QC limits with any exceptions noted below.

Matrix Spikes:
All percent recoveries and relative percent differences (RPDs) were within acceptance criteria with any exceptions noted below.

Duplicate Sample:
All duplicate sample results were within method acceptance criteria with any exceptions noted below.

Additional Comments:

This report shall not be reproduced, except in full,
without the written consent of Pace Analytical Services, Inc..

Pace Analytical Services, Inc.
9608 Loiret Blvd.
Lenexa, KS 66219
(913)599-5665

PROJECT NARRATIVE

Project: MARCH 2013 RICO WATER SAMPLING
Pace Project No.: 60139978

Method: **SM 2540C**
Description: 2540C Total Dissolved Solids
Client: BP Anderson Engineering Company Inc.
Date: March 26, 2013

General Information:
4 samples were analyzed for SM 2540C. All samples were received in acceptable condition with any exceptions noted below.

Hold Time:
The samples were analyzed within the method required hold times with any exceptions noted below.

Method Blank:
All analytes were below the report limit in the method blank with any exceptions noted below.

Laboratory Control Spike:
All laboratory control spike compounds were within QC limits with any exceptions noted below.

Matrix Spikes:
All percent recoveries and relative percent differences (RPDs) were within acceptance criteria with any exceptions noted below.

Duplicate Sample:
All duplicate sample results were within method acceptance criteria with any exceptions noted below.

Additional Comments:

This report shall not be reproduced, except in full,
without the written consent of Pace Analytical Services, Inc..

Pace Analytical Services, Inc.
9608 Loiret Blvd.
Lenexa, KS 66219
(913)599-5665

PROJECT NARRATIVE

Project: MARCH 2013 RICO WATER SAMPLING
Pace Project No.: 60139978

Method: **SM 2540D**
Description: 2540D Total Suspended Solids
Client: BP Anderson Engineering Company Inc.
Date: March 26, 2013

General Information:
4 samples were analyzed for SM 2540D. All samples were received in acceptable condition with any exceptions noted below.

Hold Time:
The samples were analyzed within the method required hold times with any exceptions noted below.

Method Blank:
All analytes were below the report limit in the method blank with any exceptions noted below.

Laboratory Control Spike:
All laboratory control spike compounds were within QC limits with any exceptions noted below.

Matrix Spikes:
All percent recoveries and relative percent differences (RPDs) were within acceptance criteria with any exceptions noted below.

Duplicate Sample:
All duplicate sample results were within method acceptance criteria with any exceptions noted below.

QC Batch: WET/40150

D6: The relative percent difference (RPD) between the sample and sample duplicate exceeded laboratory control limits.

- DUP (Lab ID: 1151511)
  - Total Suspended Solids

Additional Comments:

This report shall not be reproduced, except in full,
without the written consent of Pace Analytical Services, Inc..

Pace Analytical Services, Inc.
9608 Loiret Blvd.
Lenexa, KS 66219
(913)599-5665

PROJECT NARRATIVE

Project: MARCH 2013 RICO WATER SAMPLING
Pace Project No.: 60139978

Method: **SM 4500-S-2 D**
Description: 4500S2D Sulfide, Total
Client: BP Anderson Engineering Company Inc.
Date: March 26, 2013

General Information:
5 samples were analyzed for SM 4500-S-2 D. All samples were received in acceptable condition with any exceptions noted below.

Hold Time:
The samples were analyzed within the method required hold times with any exceptions noted below.

Method Blank:
All analytes were below the report limit in the method blank with any exceptions noted below.

Laboratory Control Spike:
All laboratory control spike compounds were within QC limits with any exceptions noted below.

Matrix Spikes:
All percent recoveries and relative percent differences (RPDs) were within acceptance criteria with any exceptions noted below.

QC Batch: WET/40129

A matrix spike and matrix spike duplicate (MS/MSD) were performed on the following sample(s): 60139978005

M1: Matrix spike recovery exceeded QC limits. Batch accepted based on laboratory control sample (LCS) recovery.

- MS (Lab ID: 1150995)
  - Sulfide, Total

Additional Comments:

This report shall not be reproduced, except in full,
without the written consent of Pace Analytical Services, Inc..

Pace Analytical Services, Inc.
9608 Loiret Blvd.
Lenexa, KS 66219
(913)599-5665

PROJECT NARRATIVE

Project: MARCH 2013 RICO WATER SAMPLING
Pace Project No.: 60139978

Method: **EPA 300.0**
Description: 300.0 IC Anions 28 Days
Client: BP Anderson Engineering Company Inc.
Date: March 26, 2013

General Information:
4 samples were analyzed for EPA 300.0. All samples were received in acceptable condition with any exceptions noted below.

Hold Time:
The samples were analyzed within the method required hold times with any exceptions noted below.

Initial Calibrations (including MS Tune as applicable):
All criteria were within method requirements with any exceptions noted below.

Continuing Calibration:
All criteria were within method requirements with any exceptions noted below.

Method Blank:
All analytes were below the report limit in the method blank with any exceptions noted below.

Laboratory Control Spike:
All laboratory control spike compounds were within QC limits with any exceptions noted below.

Matrix Spikes:
All percent recoveries and relative percent differences (RPDs) were within acceptance criteria with any exceptions noted below.

Additional Comments:

This report shall not be reproduced, except in full,
without the written consent of Pace Analytical Services, Inc..

Pace Analytical Services, Inc.
9608 Loiret Blvd.
Lenexa, KS 66219
(913)599-5665

PROJECT NARRATIVE

Project: MARCH 2013 RICO WATER SAMPLING
Pace Project No.: 60139978

Method: **EPA 353.2**
Description: 353.2 Nitrogen, NO2/NO3 pres.
Client: BP Anderson Engineering Company Inc.
Date: March 26, 2013

General Information:
4 samples were analyzed for EPA 353.2. All samples were received in acceptable condition with any exceptions noted below.

Hold Time:
The samples were analyzed within the method required hold times with any exceptions noted below.

Initial Calibrations (including MS Tune as applicable):
All criteria were within method requirements with any exceptions noted below.

Continuing Calibration:
All criteria were within method requirements with any exceptions noted below.

Method Blank:
All analytes were below the report limit in the method blank with any exceptions noted below.

Laboratory Control Spike:
All laboratory control spike compounds were within QC limits with any exceptions noted below.

Matrix Spikes:
All percent recoveries and relative percent differences (RPDs) were within acceptance criteria with any exceptions noted below.

QC Batch: WETA/23821

A matrix spike and matrix spike duplicate (MS/MSD) were performed on the following sample(s): 60139934002,60139978003

M1: Matrix spike recovery exceeded QC limits. Batch accepted based on laboratory control sample (LCS) recovery.

- MS (Lab ID: 1151144)
  - Nitrogen, NO2 plus NO3

Duplicate Sample:
All duplicate sample results were within method acceptance criteria with any exceptions noted below.

Additional Comments:

This report shall not be reproduced, except in full,
without the written consent of Pace Analytical Services, Inc..

Pace Analytical Services, Inc.
9608 Loiret Blvd.
Lenexa, KS 66219
(913)599-5665

PROJECT NARRATIVE

Project: MARCH 2013 RICO WATER SAMPLING
Pace Project No.: 60139978

Method: **SM 4500-CN-E**
Description: 4500CNE Cyanide, Total
Client: BP Anderson Engineering Company Inc.
Date: March 26, 2013

General Information:
5 samples were analyzed for SM 4500-CN-E. All samples were received in acceptable condition with any exceptions noted below.

Hold Time:
The samples were analyzed within the method required hold times with any exceptions noted below.

Initial Calibrations (including MS Tune as applicable):
All criteria were within method requirements with any exceptions noted below.

Continuing Calibration:
All criteria were within method requirements with any exceptions noted below.

Method Blank:
All analytes were below the report limit in the method blank with any exceptions noted below.

Laboratory Control Spike:
All laboratory control spike compounds were within QC limits with any exceptions noted below.

Matrix Spikes:
All percent recoveries and relative percent differences (RPDs) were within acceptance criteria with any exceptions noted below.

Duplicate Sample:
All duplicate sample results were within method acceptance criteria with any exceptions noted below.

Additional Comments:

This report shall not be reproduced, except in full,
without the written consent of Pace Analytical Services, Inc..

Pace Analytical Services, Inc.
9608 Loiret Blvd.
Lenexa, KS 66219
(913)599-5665

PROJECT NARRATIVE

Project: MARCH 2013 RICO WATER SAMPLING
Pace Project No.: 60139978

Method: **SM 5310C**
Description: 5310C TOC
Client: BP Anderson Engineering Company Inc.
Date: March 26, 2013

General Information:
4 samples were analyzed for SM 5310C. All samples were received in acceptable condition with any exceptions noted below.

Hold Time:
The samples were analyzed within the method required hold times with any exceptions noted below.

Initial Calibrations (including MS Tune as applicable):
All criteria were within method requirements with any exceptions noted below.

Continuing Calibration:
All criteria were within method requirements with any exceptions noted below.

Method Blank:
All analytes were below the report limit in the method blank with any exceptions noted below.

Laboratory Control Spike:
All laboratory control spike compounds were within QC limits with any exceptions noted below.

Matrix Spikes:
All percent recoveries and relative percent differences (RPDs) were within acceptance criteria with any exceptions noted below.

Additional Comments:

This data package has been reviewed for quality and completeness and is approved for release.

This report shall not be reproduced, except in full,
without the written consent of Pace Analytical Services, Inc..

Pace Analytical Services, Inc.
9608 Loiret Blvd.
Lenexa, KS 66219
(913)599-5665

ANALYTICAL RESULTS

Project: MARCH 2013 RICO WATER SAMPLING
Pace Project No.: 60139978

Sample: EB-1_20130307 **Lab ID: 60139978001** Collected: 03/07/13 10:15 Received: 03/08/13 10:20 Matrix: Water

Parameters	Results	Units	Report Limit	DF	Prepared	Analyzed	CAS No.	Qual
200.7 Potentially Diss. Metals	Analytical Method: EPA 200.7 Preparation Method: EPA 200.7							
Calcium, Dissolved	**431000**	ug/L	100	1	03/11/13 16:15	03/12/13 15:04	7440-70-2	M1
Magnesium, Dissolved	**27600**	ug/L	50.0	1	03/11/13 16:15	03/12/13 15:04	7439-95-4	
Potassium, Dissolved	**5440**	ug/L	500	1	03/11/13 16:15	03/12/13 15:04	7440-09-7	
Sodium, Dissolved	**7640**	ug/L	500	1	03/11/13 16:15	03/12/13 15:04	7440-23-5	
200.8 MET ICPMS	Analytical Method: EPA 200.8 Preparation Method: EPA 200.8							
Aluminum	**419**	ug/L	4.0	1	03/14/13 12:22	03/15/13 13:38	7429-90-5	
Antimony	ND	ug/L	0.50	1	03/14/13 12:22	03/15/13 13:38	7440-36-0	
Arsenic	**11.2**	ug/L	0.50	1	03/14/13 12:22	03/15/13 13:38	7440-38-2	
Barium	**15.5**	ug/L	0.30	1	03/14/13 12:22	03/15/13 13:38	7440-39-3	
Beryllium	ND	ug/L	0.20	1	03/14/13 12:22	03/15/13 13:38	7440-41-7	
Cadmium	**0.95**	ug/L	0.080	1	03/14/13 12:22	03/15/13 13:38	7440-43-9	
Calcium	**430000**	ug/L	400	20	03/14/13 12:22	03/15/13 13:43	7440-70-2	
Chromium	**1.1**	ug/L	0.50	1	03/14/13 12:22	03/15/13 13:38	7440-47-3	
Cobalt	**5.5**	ug/L	0.50	1	03/14/13 12:22	03/15/13 13:38	7440-48-4	
Copper	**22.3**	ug/L	0.50	1	03/14/13 12:22	03/15/13 13:38	7440-50-8	
Iron	**6740**	ug/L	50.0	1	03/14/13 12:22	03/15/13 13:38	7439-89-6	
Lead	**128**	ug/L	0.10	1	03/14/13 12:22	03/15/13 13:38	7439-92-1	
Magnesium	**28300**	ug/L	100	20	03/14/13 12:22	03/15/13 13:43	7439-95-4	
Manganese	**3820**	ug/L	10.0	20	03/14/13 12:22	03/15/13 13:43	7439-96-5	
Molybdenum	**13.3**	ug/L	0.50	1	03/14/13 12:22	03/15/13 13:38	7439-98-7	
Nickel	**5.0**	ug/L	0.50	1	03/14/13 12:22	03/15/13 13:38	7440-02-0	
Potassium	**5500**	ug/L	20.0	1	03/14/13 12:22	03/15/13 13:38	7440-09-7	
Selenium	ND	ug/L	0.50	1	03/14/13 12:22	03/15/13 13:38	7782-49-2	
Silica	**21100**	ug/L	1070	20	03/14/13 12:22	03/15/13 13:43	7631-86-9	
Silver	**0.81**	ug/L	0.50	1	03/14/13 12:22	03/15/13 13:38	7440-22-4	
Sodium	**7260**	ug/L	50.0	1	03/14/13 12:22	03/15/13 13:38	7440-23-5	
Thallium	ND	ug/L	0.10	1	03/14/13 12:22	03/15/13 13:38	7440-28-0	
Total Hardness by 2340B	**1190000**	ug/L	1420	20	03/14/13 12:22	03/15/13 13:43		
Vanadium	**0.68**	ug/L	0.10	1	03/14/13 12:22	03/15/13 13:38	7440-62-2	
Zinc	**1460**	ug/L	100	20	03/14/13 12:22	03/15/13 13:43	7440-66-6	
200.8 MET ICPMS, Dissolved	Analytical Method: EPA 200.8 Preparation Method: EPA 200.8							
Aluminum, Dissolved	**231**	ug/L	4.0	1	03/13/13 15:25	03/14/13 12:47	7429-90-5	M6
Antimony, Dissolved	ND	ug/L	0.50	1	03/13/13 15:25	03/14/13 12:47	7440-36-0	
Arsenic, Dissolved	**9.9**	ug/L	0.50	1	03/13/13 15:25	03/14/13 12:47	7440-38-2	
Barium, Dissolved	**13.9**	ug/L	0.30	1	03/13/13 15:25	03/14/13 12:47	7440-39-3	
Beryllium, Dissolved	ND	ug/L	0.20	1	03/13/13 15:25	03/14/13 12:47	7440-41-7	
Cadmium, Dissolved	**0.70**	ug/L	0.080	1	03/13/13 15:25	03/14/13 12:47	7440-43-9	
Calcium, Dissolved	**443000**	ug/L	1000	50	03/13/13 15:25	03/15/13 12:31	7440-70-2	M6
Chromium, Dissolved	**0.70**	ug/L	0.50	1	03/13/13 15:25	03/14/13 12:47	7440-47-3	
Cobalt, Dissolved	**5.6**	ug/L	0.50	1	03/13/13 15:25	03/14/13 12:47	7440-48-4	
Copper, Dissolved	**15.1**	ug/L	0.50	1	03/13/13 15:25	03/14/13 12:47	7440-50-8	
Iron, Dissolved	**4960**	ug/L	50.0	1	03/13/13 15:25	03/14/13 12:47	7439-89-6	
Lead, Dissolved	**86.2**	ug/L	0.10	1	03/13/13 15:25	03/14/13 12:47	7439-92-1	
Magnesium, Dissolved	**28000**	ug/L	25.0	5	03/13/13 15:25	03/14/13 13:07	7439-95-4	M6

This report shall not be reproduced, except in full,
without the written consent of Pace Analytical Services, Inc..

Pace Analytical Services, Inc.
9608 Loiret Blvd.
Lenexa, KS 66219
(913)599-5665

ANALYTICAL RESULTS

Project: MARCH 2013 RICO WATER SAMPLING
Pace Project No.: 60139978

Sample: EB-1_20130307 **Lab ID: 60139978001** Collected: 03/07/13 10:15 Received: 03/08/13 10:20 Matrix: Water

Parameters	Results	Units	Report Limit	DF	Prepared	Analyzed	CAS No.	Qual
200.8 MET ICPMS, Dissolved	Analytical Method: EPA 200.8 Preparation Method: EPA 200.8							
Manganese, Dissolved	**3970**	ug/L	25.0	50	03/13/13 15:25	03/15/13 12:31	7439-96-5	M6
Molybdenum, Dissolved	**14.1**	ug/L	0.50	1	03/13/13 15:25	03/14/13 12:47	7439-98-7	
Nickel, Dissolved	**8.5**	ug/L	0.50	1	03/13/13 15:25	03/14/13 12:47	7440-02-0	
Potassium, Dissolved	**5490**	ug/L	20.0	1	03/13/13 15:25	03/14/13 12:47	7440-09-7	
Selenium, Dissolved	ND	ug/L	0.50	1	03/13/13 15:25	03/14/13 12:47	7782-49-2	
Silver, Dissolved	ND	ug/L	0.50	1	03/13/13 15:25	03/14/13 12:47	7440-22-4	
Sodium, Dissolved	**7150**	ug/L	50.0	1	03/13/13 15:25	03/14/13 12:47	7440-23-5	
Thallium, Dissolved	ND	ug/L	0.10	1	03/13/13 15:25	03/14/13 12:47	7440-28-0	
Vanadium, Dissolved	**0.41**	ug/L	0.10	1	03/13/13 15:25	03/14/13 12:47	7440-62-2	
Zinc, Dissolved	**1450**	ug/L	25.0	5	03/13/13 15:25	03/14/13 13:07	7440-66-6	M6
200.8 Potentially Diss. Metals	Analytical Method: EPA 200.8 Preparation Method: EPA 200.8							
Aluminum, Dissolved	**262**	ug/L	50.0	1	03/11/13 16:15	03/14/13 14:09	7429-90-5	
Antimony, Dissolved	**0.18J**	ug/L	1.0	1	03/11/13 16:15	03/14/13 14:09	7440-36-0	
Arsenic, Dissolved	**11.9**	ug/L	1.0	1	03/11/13 16:15	03/14/13 14:09	7440-38-2	
Barium, Dissolved	**13.8**	ug/L	1.0	1	03/11/13 16:15	03/14/13 14:09	7440-39-3	
Beryllium, Dissolved	**0.19J**	ug/L	0.50	1	03/11/13 16:15	03/14/13 14:09	7440-41-7	
Cadmium, Dissolved	**0.84**	ug/L	0.50	1	03/11/13 16:15	03/14/13 14:09	7440-43-9	
Chromium, Dissolved	**1.1**	ug/L	1.0	1	03/11/13 16:15	03/14/13 14:09	7440-47-3	
Cobalt, Dissolved	**5.1**	ug/L	1.0	1	03/11/13 16:15	03/14/13 14:09	7440-48-4	
Copper, Dissolved	**17.7**	ug/L	1.0	1	03/11/13 16:15	03/14/13 14:09	7440-50-8	
Iron, Dissolved	**6160**	ug/L	50.0	1	03/11/13 16:15	03/14/13 14:09	7439-89-6	
Lead, Dissolved	**166**	ug/L	1.0	1	03/11/13 16:15	03/14/13 14:09	7439-92-1	
Manganese, Dissolved	**4260**	ug/L	1.0	1	03/11/13 16:15	03/14/13 14:09	7439-96-5	
Molybdenum, Dissolved	**14.0**	ug/L	1.0	1	03/11/13 16:15	03/14/13 14:09	7439-98-7	
Nickel, Dissolved	**2.8**	ug/L	1.0	1	03/11/13 16:15	03/14/13 14:09	7440-02-0	
Selenium, Dissolved	ND	ug/L	1.0	1	03/11/13 16:15	03/14/13 14:09	7782-49-2	
Silver, Dissolved	**0.096J**	ug/L	0.50	1	03/11/13 16:15	03/14/13 14:09	7440-22-4	
Thallium, Dissolved	**0.080J**	ug/L	1.0	1	03/11/13 16:15	03/14/13 14:09	7440-28-0	
Vanadium, Dissolved	**0.30J**	ug/L	1.0	1	03/11/13 16:15	03/14/13 14:09	7440-62-2	
Zinc, Dissolved	**1280**	ug/L	10.0	1	03/11/13 16:15	03/14/13 14:09	7440-66-6	
245.1 Mercury	Analytical Method: EPA 245.1 Preparation Method: EPA 245.1							
Mercury	ND	ug/L	0.20	1	03/13/13 13:41	03/14/13 10:49	7439-97-6	
245.1 Mercury, Dissolved	Analytical Method: EPA 245.1 Preparation Method: EPA 245.1							
Mercury, Dissolved	ND	ug/L	0.20	1	03/13/13 00:00	03/19/13 11:07	7439-97-6	
245.1 Potentially Diss Mercury	Analytical Method: EPA 245.1 Preparation Method: EPA 245.1							
Mercury, Dissolved	ND	ug/L	0.20	1	03/14/13 16:00	03/15/13 10:32	7439-97-6	
2510B Specific Conductance	Analytical Method: SM 2510B							
Specific Conductance	**1810**	umhos/cm	10.0	1		03/14/13 13:35		
Salinity	Analytical Method: Calculated							
Salinity (as dissolved solids)	**1160**	mg/L	6.4	1		03/15/13 09:55		

REPORT OF LABORATORY ANALYSIS

This report shall not be reproduced, except in full,
without the written consent of Pace Analytical Services, Inc..

Pace Analytical Services, Inc.
9608 Loiret Blvd.
Lenexa, KS 66219
(913)599-5665

ANALYTICAL RESULTS

Project: MARCH 2013 RICO WATER SAMPLING
Pace Project No.: 60139978

Sample: EB-1_20130307 **Lab ID: 60139978001** Collected: 03/07/13 10:15 Received: 03/08/13 10:20 Matrix: Water

Parameters	Results	Units	Report Limit	DF	Prepared	Analyzed	CAS No.	Qual
Salinity	Analytical Method: Calculated							
Salinity (as seawater)	**0.92**	PSU	0.014	1		03/15/13 09:55		
2320B Alkalinity	Analytical Method: SM 2320B							
Alkalinity,Bicarbonate (CaCO3)	**163**	mg/L	20.0	1		03/13/13 09:56		
Alkalinity, Carbonate (CaCO3)	ND	mg/L	20.0	1		03/13/13 09:56		
Alkalinity, Total as CaCO3	**163**	mg/L	20.0	1		03/13/13 09:56		
2540C Total Dissolved Solids	Analytical Method: SM 2540C							
Total Dissolved Solids	**1700**	mg/L	5.0	1		03/12/13 11:49		
2540D Total Suspended Solids	Analytical Method: SM 2540D							
Total Suspended Solids	**60.0**	mg/L	5.0	1		03/12/13 11:39		
4500S2D Sulfide, Total	Analytical Method: SM 4500-S-2 D							
Sulfide, Total	ND	mg/L	0.050	1		03/11/13 15:17	18496-25-8	
300.0 IC Anions 28 Days	Analytical Method: EPA 300.0							
Chloride	**1.2**	mg/L	1.0	1		03/09/13 18:14	16887-00-6	
Sulfate	**1090**	mg/L	100	100		03/09/13 18:32	14808-79-8	
353.2 Nitrogen, NO2/NO3 pres.	Analytical Method: EPA 353.2							
Nitrogen, NO2 plus NO3	ND	mg/L	0.10	1		03/11/13 15:42		
4500CNE Cyanide, Total	Analytical Method: SM 4500-CN-E							
Cyanide	ND	mg/L	0.0050	1		03/11/13 11:14	57-12-5	
5310C TOC	Analytical Method: SM 5310C							
Total Organic Carbon	**1.1**	mg/L	0.50	1		03/14/13 13:02	7440-44-0	

This report shall not be reproduced, except in full,
without the written consent of Pace Analytical Services, Inc..

Pace Analytical Services, Inc.
9608 Loiret Blvd.
Lenexa, KS 66219
(913)599-5665

ANALYTICAL RESULTS

Project: MARCH 2013 RICO WATER SAMPLING
Pace Project No.: 60139978

Sample: EB-2_20130307 **Lab ID: 60139978002** Collected: 03/07/13 11:00 Received: 03/08/13 10:20 Matrix: Water

Parameters	Results	Units	Report Limit	DF	Prepared	Analyzed	CAS No.	Qual
200.7 Potentially Diss. Metals	Analytical Method: EPA 200.7 Preparation Method: EPA 200.7							
Calcium, Dissolved	**318000**	ug/L	100	1	03/11/13 16:15	03/12/13 15:17	7440-70-2	
Magnesium, Dissolved	**118000**	ug/L	50.0	1	03/11/13 16:15	03/12/13 15:17	7439-95-4	
Potassium, Dissolved	**13900**	ug/L	500	1	03/11/13 16:15	03/12/13 15:17	7440-09-7	
Sodium, Dissolved	**6880**	ug/L	500	1	03/11/13 16:15	03/12/13 15:17	7440-23-5	
200.8 MET ICPMS	Analytical Method: EPA 200.8 Preparation Method: EPA 200.8							
Aluminum	**15500**	ug/L	4.0	1	03/14/13 12:22	03/15/13 13:52	7429-90-5	
Antimony	**0.50**	ug/L	0.50	1	03/14/13 12:22	03/15/13 13:52	7440-36-0	
Arsenic	**311**	ug/L	0.50	1	03/14/13 12:22	03/15/13 13:52	7440-38-2	
Barium	**21.3**	ug/L	0.30	1	03/14/13 12:22	03/15/13 13:52	7440-39-3	
Beryllium	**6.7**	ug/L	0.20	1	03/14/13 12:22	03/15/13 13:52	7440-41-7	
Cadmium	**4.7**	ug/L	0.080	1	03/14/13 12:22	03/15/13 13:52	7440-43-9	
Calcium	**333000**	ug/L	400	20	03/14/13 12:22	03/15/13 13:57	7440-70-2	
Chromium	**1.6**	ug/L	0.50	1	03/14/13 12:22	03/15/13 13:52	7440-47-3	
Cobalt	**69.0**	ug/L	0.50	1	03/14/13 12:22	03/15/13 13:52	7440-48-4	
Copper	**79.8**	ug/L	0.50	1	03/14/13 12:22	03/15/13 13:52	7440-50-8	
Iron	**512000**	ug/L	10000	200	03/14/13 12:22	03/15/13 14:01	7439-89-6	
Lead	**851**	ug/L	2.0	20	03/14/13 12:22	03/15/13 13:57	7439-92-1	
Magnesium	**131000**	ug/L	100	20	03/14/13 12:22	03/15/13 13:57	7439-95-4	
Manganese	**26700**	ug/L	100	200	03/14/13 12:22	03/15/13 14:01	7439-96-5	
Molybdenum	**4.8**	ug/L	0.50	1	03/14/13 12:22	03/15/13 13:52	7439-98-7	
Nickel	**93.9**	ug/L	0.50	1	03/14/13 12:22	03/15/13 13:52	7440-02-0	
Potassium	**15000**	ug/L	20.0	1	03/14/13 12:22	03/15/13 13:52	7440-09-7	
Selenium	**2.1**	ug/L	0.50	1	03/14/13 12:22	03/15/13 13:52	7782-49-2	
Silica	**40000**	ug/L	1070	20	03/14/13 12:22	03/15/13 13:57	7631-86-9	
Silver	**3.7**	ug/L	0.50	1	03/14/13 12:22	03/15/13 13:52	7440-22-4	
Sodium	**6990**	ug/L	50.0	1	03/14/13 12:22	03/15/13 13:52	7440-23-5	
Thallium	**0.14**	ug/L	0.10	1	03/14/13 12:22	03/15/13 13:52	7440-28-0	
Total Hardness by 2340B	**1370000**	ug/L	1420	20	03/14/13 12:22	03/15/13 13:57		
Vanadium	**1.6**	ug/L	0.10	1	03/14/13 12:22	03/15/13 13:52	7440-62-2	
Zinc	**49100**	ug/L	1000	200	03/14/13 12:22	03/15/13 14:01	7440-66-6	
200.8 MET ICPMS, Dissolved	Analytical Method: EPA 200.8 Preparation Method: EPA 200.8							
Aluminum, Dissolved	**14200**	ug/L	4.0	1	03/13/13 15:25	03/14/13 13:16	7429-90-5	
Antimony, Dissolved	ND	ug/L	0.50	1	03/13/13 15:25	03/14/13 13:16	7440-36-0	
Arsenic, Dissolved	**317**	ug/L	0.50	1	03/13/13 15:25	03/14/13 13:16	7440-38-2	
Barium, Dissolved	**17.6**	ug/L	0.30	1	03/13/13 15:25	03/14/13 13:16	7440-39-3	
Beryllium, Dissolved	**6.5**	ug/L	0.20	1	03/13/13 15:25	03/14/13 13:16	7440-41-7	
Cadmium, Dissolved	**3.8**	ug/L	0.080	1	03/13/13 15:25	03/14/13 13:16	7440-43-9	
Calcium, Dissolved	**341000**	ug/L	400	20	03/13/13 15:25	03/14/13 13:20	7440-70-2	
Chromium, Dissolved	**1.4**	ug/L	0.50	1	03/13/13 15:25	03/14/13 13:16	7440-47-3	
Cobalt, Dissolved	**69.1**	ug/L	0.50	1	03/13/13 15:25	03/14/13 13:16	7440-48-4	
Copper, Dissolved	**60.7**	ug/L	0.50	1	03/13/13 15:25	03/14/13 13:16	7440-50-8	
Iron, Dissolved	**460000**	ug/L	10000	200	03/13/13 15:25	03/14/13 13:25	7439-89-6	
Lead, Dissolved	**656**	ug/L	2.0	20	03/13/13 15:25	03/14/13 13:20	7439-92-1	
Magnesium, Dissolved	**126000**	ug/L	100	20	03/13/13 15:25	03/14/13 13:20	7439-95-4	

This report shall not be reproduced, except in full,
without the written consent of Pace Analytical Services, Inc..

Pace Analytical Services, Inc.
9608 Loiret Blvd.
Lenexa, KS 66219
(913)599-5665

ANALYTICAL RESULTS

Project: MARCH 2013 RICO WATER SAMPLING
Pace Project No.: 60139978

Sample: EB-2_20130307 **Lab ID: 60139978002** Collected: 03/07/13 11:00 Received: 03/08/13 10:20 Matrix: Water

Parameters	Results	Units	Report Limit	DF	Prepared	Analyzed	CAS No.	Qual
200.8 MET ICPMS, Dissolved	Analytical Method: EPA 200.8 Preparation Method: EPA 200.8							
Manganese, Dissolved	**25900**	ug/L	100	200	03/13/13 15:25	03/14/13 13:25	7439-96-5	
Molybdenum, Dissolved	**4.3**	ug/L	0.50	1	03/13/13 15:25	03/14/13 13:16	7439-98-7	
Nickel, Dissolved	**101**	ug/L	0.50	1	03/13/13 15:25	03/14/13 13:16	7440-02-0	
Potassium, Dissolved	**14800**	ug/L	20.0	1	03/13/13 15:25	03/14/13 13:16	7440-09-7	
Selenium, Dissolved	**1.9**	ug/L	0.50	1	03/13/13 15:25	03/14/13 13:16	7782-49-2	
Silver, Dissolved	**2.3**	ug/L	0.50	1	03/13/13 15:25	03/14/13 13:16	7440-22-4	
Sodium, Dissolved	**6820**	ug/L	50.0	1	03/13/13 15:25	03/14/13 13:16	7440-23-5	
Thallium, Dissolved	**0.13**	ug/L	0.10	1	03/13/13 15:25	03/14/13 13:16	7440-28-0	
Vanadium, Dissolved	**1.1**	ug/L	0.10	1	03/13/13 15:25	03/14/13 13:16	7440-62-2	
Zinc, Dissolved	**47800**	ug/L	1000	200	03/13/13 15:25	03/14/13 13:25	7440-66-6	
200.8 Potentially Diss. Metals	Analytical Method: EPA 200.8 Preparation Method: EPA 200.8							
Aluminum, Dissolved	**13400**	ug/L	50.0	1	03/11/13 16:15	03/14/13 15:15	7429-90-5	
Antimony, Dissolved	**0.34J**	ug/L	1.0	1	03/11/13 16:15	03/14/13 15:15	7440-36-0	
Arsenic, Dissolved	**317**	ug/L	1.0	1	03/11/13 16:15	03/14/13 15:15	7440-38-2	
Barium, Dissolved	**13.0**	ug/L	1.0	1	03/11/13 16:15	03/14/13 15:15	7440-39-3	
Beryllium, Dissolved	**4.4**	ug/L	0.50	1	03/11/13 16:15	03/14/13 15:15	7440-41-7	M1
Cadmium, Dissolved	**4.2**	ug/L	0.50	1	03/11/13 16:15	03/14/13 15:15	7440-43-9	
Chromium, Dissolved	**1.7**	ug/L	1.0	1	03/11/13 16:15	03/14/13 15:15	7440-47-3	
Cobalt, Dissolved	**65.1**	ug/L	1.0	1	03/11/13 16:15	03/14/13 15:15	7440-48-4	
Copper, Dissolved	**79.2**	ug/L	1.0	1	03/11/13 16:15	03/14/13 15:15	7440-50-8	
Iron, Dissolved	**528000**	ug/L	5000	100	03/11/13 16:15	03/14/13 14:13	7439-89-6	M6
Lead, Dissolved	**1190**	ug/L	1.0	1	03/11/13 16:15	03/14/13 15:15	7439-92-1	M1
Manganese, Dissolved	**28100**	ug/L	100	100	03/11/13 16:15	03/14/13 14:13	7439-96-5	M6
Molybdenum, Dissolved	**3.9**	ug/L	1.0	1	03/11/13 16:15	03/14/13 15:15	7439-98-7	
Nickel, Dissolved	**91.8**	ug/L	1.0	1	03/11/13 16:15	03/14/13 15:15	7440-02-0	
Selenium, Dissolved	**3.4**	ug/L	1.0	1	03/11/13 16:15	03/14/13 15:15	7782-49-2	
Silver, Dissolved	**0.092J**	ug/L	0.50	1	03/11/13 16:15	03/14/13 15:15	7440-22-4	
Thallium, Dissolved	**0.10J**	ug/L	1.0	1	03/11/13 16:15	03/14/13 15:15	7440-28-0	
Vanadium, Dissolved	**0.80J**	ug/L	1.0	1	03/11/13 16:15	03/14/13 15:15	7440-62-2	
Zinc, Dissolved	**51900**	ug/L	1000	100	03/11/13 16:15	03/14/13 14:13	7440-66-6	M6
245.1 Mercury	Analytical Method: EPA 245.1 Preparation Method: EPA 245.1							
Mercury	ND	ug/L	0.20	1	03/13/13 13:41	03/14/13 10:52	7439-97-6	
245.1 Mercury, Dissolved	Analytical Method: EPA 245.1 Preparation Method: EPA 245.1							
Mercury, Dissolved	ND	ug/L	0.20	1	03/13/13 00:00	03/19/13 11:09	7439-97-6	
245.1 Potentially Diss Mercury	Analytical Method: EPA 245.1 Preparation Method: EPA 245.1							
Mercury, Dissolved	ND	ug/L	0.20	1	03/14/13 16:00	03/15/13 10:39	7439-97-6	
2510B Specific Conductance	Analytical Method: SM 2510B							
Specific Conductance	**3200**	umhos/cm	10.0	1		03/14/13 13:37		
Salinity	Analytical Method: Calculated							
Salinity (as dissolved solids)	**2040**	mg/L	6.4	1		03/15/13 09:55		

REPORT OF LABORATORY ANALYSIS

This report shall not be reproduced, except in full,
without the written consent of Pace Analytical Services, Inc..

Pace Analytical Services, Inc.
9608 Loiret Blvd.
Lenexa, KS 66219
(913)599-5665

ANALYTICAL RESULTS

Project: MARCH 2013 RICO WATER SAMPLING
Pace Project No.: 60139978

Sample: EB-2_20130307 **Lab ID: 60139978002** Collected: 03/07/13 11:00 Received: 03/08/13 10:20 Matrix: Water

Parameters	Results	Units	Report Limit	DF	Prepared	Analyzed	CAS No.	Qual
Salinity	Analytical Method: Calculated							
Salinity (as seawater)	**1.7**	PSU	0.014	1		03/15/13 09:55		
2320B Alkalinity	Analytical Method: SM 2320B							
Alkalinity,Bicarbonate (CaCO3)	**20.7**	mg/L	20.0	1		03/13/13 10:02		
Alkalinity, Carbonate (CaCO3)	ND	mg/L	20.0	1		03/13/13 10:02		
Alkalinity, Total as CaCO3	**20.7**	mg/L	20.0	1		03/13/13 10:02		
2540C Total Dissolved Solids	Analytical Method: SM 2540C							
Total Dissolved Solids	**3520**	mg/L	5.0	1		03/12/13 11:49		
2540D Total Suspended Solids	Analytical Method: SM 2540D							
Total Suspended Solids	**232**	mg/L	5.0	1		03/12/13 11:40		
4500S2D Sulfide, Total	Analytical Method: SM 4500-S-2 D							
Sulfide, Total	ND	mg/L	0.050	1		03/11/13 15:17	18496-25-8	
300.0 IC Anions 28 Days	Analytical Method: EPA 300.0							
Chloride	**3.7**	mg/L	1.0	1		03/10/13 18:28	16887-00-6	
Sulfate	**2490**	mg/L	500	500		03/10/13 19:04	14808-79-8	
353.2 Nitrogen, NO2/NO3 pres.	Analytical Method: EPA 353.2							
Nitrogen, NO2 plus NO3	ND	mg/L	0.10	1		03/11/13 15:43		
4500CNE Cyanide, Total	Analytical Method: SM 4500-CN-E							
Cyanide	**0.0062**	mg/L	0.0050	1		03/11/13 11:14	57-12-5	
5310C TOC	Analytical Method: SM 5310C							
Total Organic Carbon	**0.53**	mg/L	0.50	1		03/14/13 13:57	7440-44-0	

This report shall not be reproduced, except in full,
without the written consent of Pace Analytical Services, Inc..

Pace Analytical Services, Inc.
9608 Loiret Blvd.
Lenexa, KS 66219
(913)599-5665

ANALYTICAL RESULTS

Project: MARCH 2013 RICO WATER SAMPLING
Pace Project No.: 60139978

Sample: GW-7_20130307 **Lab ID: 60139978003** Collected: 03/07/13 12:30 Received: 03/08/13 10:20 Matrix: Water

Parameters	Results	Units	Report Limit	DF	Prepared	Analyzed	CAS No.	Qual
200.7 Potentially Diss. Metals	Analytical Method: EPA 200.7 Preparation Method: EPA 200.7							
Calcium, Dissolved	**264000**	ug/L	100	1	03/11/13 16:15	03/12/13 15:34	7440-70-2	
Magnesium, Dissolved	**25100**	ug/L	50.0	1	03/11/13 16:15	03/12/13 15:34	7439-95-4	
Potassium, Dissolved	**2650**	ug/L	500	1	03/11/13 16:15	03/12/13 15:34	7440-09-7	
Sodium, Dissolved	**7610**	ug/L	500	1	03/11/13 16:15	03/12/13 15:34	7440-23-5	
200.8 MET ICPMS	Analytical Method: EPA 200.8 Preparation Method: EPA 200.8							
Aluminum	**3150**	ug/L	4.0	1	03/14/13 12:22	03/15/13 14:20	7429-90-5	
Antimony	ND	ug/L	0.50	1	03/14/13 12:22	03/15/13 14:20	7440-36-0	
Arsenic	**4.0**	ug/L	0.50	1	03/14/13 12:22	03/15/13 14:20	7440-38-2	
Barium	**20.6**	ug/L	0.30	1	03/14/13 12:22	03/15/13 14:20	7440-39-3	
Beryllium	**0.41**	ug/L	0.20	1	03/14/13 12:22	03/15/13 14:20	7440-41-7	
Cadmium	**3.2**	ug/L	0.080	1	03/14/13 12:22	03/15/13 14:20	7440-43-9	
Calcium	**278000**	ug/L	400	20	03/14/13 12:22	03/15/13 14:24	7440-70-2	
Chromium	**4.7**	ug/L	0.50	1	03/14/13 12:22	03/15/13 14:20	7440-47-3	
Cobalt	**1.6**	ug/L	0.50	1	03/14/13 12:22	03/15/13 14:20	7440-48-4	
Copper	**48.7**	ug/L	0.50	1	03/14/13 12:22	03/15/13 14:20	7440-50-8	
Iron	**6900**	ug/L	50.0	1	03/14/13 12:22	03/15/13 14:20	7439-89-6	
Lead	**145**	ug/L	0.10	1	03/14/13 12:22	03/15/13 14:20	7439-92-1	
Magnesium	**28800**	ug/L	100	20	03/14/13 12:22	03/15/13 14:24	7439-95-4	
Manganese	**71.1**	ug/L	0.50	1	03/14/13 12:22	03/15/13 14:20	7439-96-5	
Molybdenum	**2.0**	ug/L	0.50	1	03/14/13 12:22	03/15/13 14:20	7439-98-7	
Nickel	**4.8**	ug/L	0.50	1	03/14/13 12:22	03/15/13 14:20	7440-02-0	
Potassium	**3120**	ug/L	20.0	1	03/14/13 12:22	03/15/13 14:20	7440-09-7	
Selenium	**2.8**	ug/L	0.50	1	03/14/13 12:22	03/15/13 14:20	7782-49-2	
Silica	**17100**	ug/L	1070	20	03/14/13 12:22	03/15/13 14:24	7631-86-9	
Silver	**0.74**	ug/L	0.50	1	03/14/13 12:22	03/15/13 14:20	7440-22-4	
Sodium	**7720**	ug/L	50.0	1	03/14/13 12:22	03/15/13 14:20	7440-23-5	
Thallium	**0.17**	ug/L	0.10	1	03/14/13 12:22	03/15/13 14:20	7440-28-0	
Total Hardness by 2340B	**813000**	ug/L	1420	20	03/14/13 12:22	03/15/13 14:24		
Vanadium	**3.6**	ug/L	0.10	1	03/14/13 12:22	03/15/13 14:20	7440-62-2	
Zinc	**316**	ug/L	5.0	1	03/14/13 12:22	03/15/13 14:20	7440-66-6	
200.8 MET ICPMS, Dissolved	Analytical Method: EPA 200.8 Preparation Method: EPA 200.8							
Aluminum, Dissolved	**1850**	ug/L	4.0	1	03/13/13 15:25	03/14/13 13:43	7429-90-5	
Antimony, Dissolved	ND	ug/L	0.50	1	03/13/13 15:25	03/14/13 13:43	7440-36-0	
Arsenic, Dissolved	**2.7**	ug/L	0.50	1	03/13/13 15:25	03/14/13 13:43	7440-38-2	
Barium, Dissolved	**17.8**	ug/L	0.30	1	03/13/13 15:25	03/14/13 13:43	7440-39-3	
Beryllium, Dissolved	**0.30**	ug/L	0.20	1	03/13/13 15:25	03/14/13 13:43	7440-41-7	
Cadmium, Dissolved	**3.0**	ug/L	0.080	1	03/13/13 15:25	03/14/13 13:43	7440-43-9	
Calcium, Dissolved	**281000**	ug/L	400	20	03/13/13 15:25	03/14/13 13:48	7440-70-2	
Chromium, Dissolved	**3.2**	ug/L	0.50	1	03/13/13 15:25	03/14/13 13:43	7440-47-3	
Cobalt, Dissolved	**1.5**	ug/L	0.50	1	03/13/13 15:25	03/14/13 13:43	7440-48-4	
Copper, Dissolved	**35.9**	ug/L	0.50	1	03/13/13 15:25	03/14/13 13:43	7440-50-8	
Iron, Dissolved	**3960**	ug/L	50.0	1	03/13/13 15:25	03/14/13 13:43	7439-89-6	
Lead, Dissolved	**93.3**	ug/L	0.10	1	03/13/13 15:25	03/14/13 13:43	7439-92-1	
Magnesium, Dissolved	**27000**	ug/L	100	20	03/13/13 15:25	03/14/13 13:48	7439-95-4	

This report shall not be reproduced, except in full,
without the written consent of Pace Analytical Services, Inc..

Pace Analytical Services, Inc.
9608 Loiret Blvd.
Lenexa, KS 66219
(913)599-5665

ANALYTICAL RESULTS

Project: MARCH 2013 RICO WATER SAMPLING
Pace Project No.: 60139978

Sample: GW-7_20130307 **Lab ID: 60139978003** Collected: 03/07/13 12:30 Received: 03/08/13 10:20 Matrix: Water

Parameters	Results	Units	Report Limit	DF	Prepared	Analyzed	CAS No.	Qual
200.8 MET ICPMS, Dissolved	Analytical Method: EPA 200.8 Preparation Method: EPA 200.8							
Manganese, Dissolved	**54.3**	ug/L	0.50	1	03/13/13 15:25	03/14/13 13:43	7439-96-5	
Molybdenum, Dissolved	**1.7**	ug/L	0.50	1	03/13/13 15:25	03/14/13 13:43	7439-98-7	
Nickel, Dissolved	**7.7**	ug/L	0.50	1	03/13/13 15:25	03/14/13 13:43	7440-02-0	
Potassium, Dissolved	**2960**	ug/L	20.0	1	03/13/13 15:25	03/14/13 13:43	7440-09-7	
Selenium, Dissolved	**2.4**	ug/L	0.50	1	03/13/13 15:25	03/14/13 13:43	7782-49-2	
Silver, Dissolved	ND	ug/L	0.50	1	03/13/13 15:25	03/14/13 13:43	7440-22-4	
Sodium, Dissolved	**7680**	ug/L	50.0	1	03/13/13 15:25	03/14/13 13:43	7440-23-5	
Thallium, Dissolved	**0.14**	ug/L	0.10	1	03/13/13 15:25	03/14/13 13:43	7440-28-0	
Vanadium, Dissolved	**2.1**	ug/L	0.10	1	03/13/13 15:25	03/14/13 13:43	7440-62-2	
Zinc, Dissolved	**267**	ug/L	5.0	1	03/13/13 15:25	03/14/13 13:43	7440-66-6	
200.8 Potentially Diss. Metals	Analytical Method: EPA 200.8 Preparation Method: EPA 200.8							
Aluminum, Dissolved	**2110**	ug/L	50.0	1	03/11/13 16:15	03/14/13 14:29	7429-90-5	
Antimony, Dissolved	**0.11J**	ug/L	1.0	1	03/11/13 16:15	03/14/13 14:29	7440-36-0	
Arsenic, Dissolved	**2.0**	ug/L	1.0	1	03/11/13 16:15	03/14/13 14:29	7440-38-2	
Barium, Dissolved	**14.8**	ug/L	1.0	1	03/11/13 16:15	03/14/13 14:29	7440-39-3	
Beryllium, Dissolved	**0.35J**	ug/L	0.50	1	03/11/13 16:15	03/14/13 14:29	7440-41-7	
Cadmium, Dissolved	**2.9**	ug/L	0.50	1	03/11/13 16:15	03/14/13 14:29	7440-43-9	
Chromium, Dissolved	**3.1**	ug/L	1.0	1	03/11/13 16:15	03/14/13 14:29	7440-47-3	
Cobalt, Dissolved	**1.3**	ug/L	1.0	1	03/11/13 16:15	03/14/13 14:29	7440-48-4	
Copper, Dissolved	**53.6**	ug/L	1.0	1	03/11/13 16:15	03/14/13 14:29	7440-50-8	
Iron, Dissolved	**4540**	ug/L	50.0	1	03/11/13 16:15	03/14/13 14:29	7439-89-6	
Lead, Dissolved	**213**	ug/L	1.0	1	03/11/13 16:15	03/14/13 14:29	7439-92-1	
Manganese, Dissolved	**39.4**	ug/L	1.0	1	03/11/13 16:15	03/14/13 14:29	7439-96-5	
Molybdenum, Dissolved	**0.93J**	ug/L	1.0	1	03/11/13 16:15	03/14/13 14:29	7439-98-7	
Nickel, Dissolved	**2.9**	ug/L	1.0	1	03/11/13 16:15	03/14/13 14:29	7440-02-0	
Selenium, Dissolved	**2.1**	ug/L	1.0	1	03/11/13 16:15	03/14/13 14:29	7782-49-2	
Silver, Dissolved	**0.23J**	ug/L	0.50	1	03/11/13 16:15	03/14/13 14:29	7440-22-4	
Thallium, Dissolved	**0.10J**	ug/L	1.0	1	03/11/13 16:15	03/14/13 14:29	7440-28-0	
Vanadium, Dissolved	**0.89J**	ug/L	1.0	1	03/11/13 16:15	03/14/13 14:29	7440-62-2	
Zinc, Dissolved	**276**	ug/L	10.0	1	03/11/13 16:15	03/14/13 14:29	7440-66-6	
245.1 Mercury	Analytical Method: EPA 245.1 Preparation Method: EPA 245.1							
Mercury	ND	ug/L	0.20	1	03/13/13 13:41	03/14/13 10:54	7439-97-6	
245.1 Mercury, Dissolved	Analytical Method: EPA 245.1 Preparation Method: EPA 245.1							
Mercury, Dissolved	ND	ug/L	0.20	1	03/13/13 00:00	03/19/13 11:11	7439-97-6	
245.1 Potentially Diss Mercury	Analytical Method: EPA 245.1 Preparation Method: EPA 245.1							
Mercury, Dissolved	ND	ug/L	0.20	1	03/14/13 16:00	03/15/13 10:41	7439-97-6	
2510B Specific Conductance	Analytical Method: SM 2510B							
Specific Conductance	**1330**	umhos/cm	10.0	1		03/14/13 13:40		
Salinity	Analytical Method: Calculated							
Salinity (as dissolved solids)	**849**	mg/L	6.4	1		03/15/13 09:55		

This report shall not be reproduced, except in full,
without the written consent of Pace Analytical Services, Inc..

Pace Analytical Services, Inc.
9608 Loiret Blvd.
Lenexa, KS 66219
(913)599-5665

ANALYTICAL RESULTS

Project: MARCH 2013 RICO WATER SAMPLING
Pace Project No.: 60139978

Sample: GW-7_20130307 **Lab ID: 60139978003** Collected: 03/07/13 12:30 Received: 03/08/13 10:20 Matrix: Water

Parameters	Results	Units	Report Limit	DF	Prepared	Analyzed	CAS No.	Qual
Salinity	Analytical Method: Calculated							
Salinity (as seawater)	**0.66**	PSU	0.014	1		03/15/13 09:55		
2320B Alkalinity	Analytical Method: SM 2320B							
Alkalinity,Bicarbonate (CaCO3)	**244**	mg/L	20.0	1		03/13/13 10:10		
Alkalinity, Carbonate (CaCO3)	ND	mg/L	20.0	1		03/13/13 10:10		
Alkalinity, Total as CaCO3	**252**	mg/L	20.0	1		03/13/13 10:10		
2540C Total Dissolved Solids	Analytical Method: SM 2540C							
Total Dissolved Solids	**1070**	mg/L	5.0	1		03/12/13 11:49		
2540D Total Suspended Solids	Analytical Method: SM 2540D							
Total Suspended Solids	**163**	mg/L	5.0	1		03/12/13 11:40		
4500S2D Sulfide, Total	Analytical Method: SM 4500-S-2 D							
Sulfide, Total	ND	mg/L	0.050	1		03/11/13 15:17	18496-25-8	
300.0 IC Anions 28 Days	Analytical Method: EPA 300.0							
Chloride	ND	mg/L	1.0	1		03/09/13 19:25	16887-00-6	
Sulfate	**564**	mg/L	50.0	50		03/09/13 19:43	14808-79-8	
353.2 Nitrogen, NO2/NO3 pres.	Analytical Method: EPA 353.2							
Nitrogen, NO2 plus NO3	**0.35**	mg/L	0.10	1		03/11/13 15:44		
4500CNE Cyanide, Total	Analytical Method: SM 4500-CN-E							
Cyanide	**0.0051**	mg/L	0.0050	1		03/11/13 11:15	57-12-5	
5310C TOC	Analytical Method: SM 5310C							
Total Organic Carbon	**0.78**	mg/L	0.50	1		03/14/13 14:15	7440-44-0	

This report shall not be reproduced, except in full,
without the written consent of Pace Analytical Services, Inc..

Pace Analytical Services, Inc.
9608 Loiret Blvd.
Lenexa, KS 66219
(913)599-5665

ANALYTICAL RESULTS

Project: MARCH 2013 RICO WATER SAMPLING
Pace Project No.: 60139978

Sample: GW-3_20130307 **Lab ID: 60139978004** Collected: 03/07/13 08:01 Received: 03/08/13 10:20 Matrix: Water

Parameters	Results	Units	Report Limit	DF	Prepared	Analyzed	CAS No.	Qual
200.7 Potentially Diss. Metals	Analytical Method: EPA 200.7 Preparation Method: EPA 200.7							
Calcium, Dissolved	**124000**	ug/L	100	1	03/11/13 16:15	03/12/13 15:36	7440-70-2	
Magnesium, Dissolved	**15200**	ug/L	50.0	1	03/11/13 16:15	03/12/13 15:36	7439-95-4	
Potassium, Dissolved	**2840**	ug/L	500	1	03/11/13 16:15	03/12/13 15:36	7440-09-7	
Sodium, Dissolved	**2860**	ug/L	500	1	03/11/13 16:15	03/12/13 15:36	7440-23-5	
200.8 MET ICPMS	Analytical Method: EPA 200.8 Preparation Method: EPA 200.8							
Aluminum	**16500**	ug/L	4.0	1	03/14/13 12:22	03/15/13 14:33	7429-90-5	
Antimony	**0.76**	ug/L	0.50	1	03/14/13 12:22	03/15/13 14:33	7440-36-0	
Arsenic	**28.8**	ug/L	0.50	1	03/14/13 12:22	03/15/13 14:33	7440-38-2	
Barium	**294**	ug/L	0.30	1	03/14/13 12:22	03/15/13 14:33	7440-39-3	
Beryllium	**0.91**	ug/L	0.20	1	03/14/13 12:22	03/15/13 14:33	7440-41-7	
Cadmium	**4.2**	ug/L	0.080	1	03/14/13 12:22	03/15/13 14:33	7440-43-9	
Calcium	**128000**	ug/L	400	20	03/14/13 12:22	03/15/13 14:38	7440-70-2	
Chromium	**24.8**	ug/L	0.50	1	03/14/13 12:22	03/15/13 14:33	7440-47-3	
Cobalt	**14.8**	ug/L	0.50	1	03/14/13 12:22	03/15/13 14:33	7440-48-4	
Copper	**145**	ug/L	0.50	1	03/14/13 12:22	03/15/13 14:33	7440-50-8	
Iron	**30200**	ug/L	1000	20	03/14/13 12:22	03/15/13 14:38	7439-89-6	
Lead	**252**	ug/L	0.10	1	03/14/13 12:22	03/15/13 14:33	7439-92-1	
Magnesium	**25300**	ug/L	100	20	03/14/13 12:22	03/15/13 14:38	7439-95-4	
Manganese	**3080**	ug/L	10.0	20	03/14/13 12:22	03/15/13 14:38	7439-96-5	
Molybdenum	**4.0**	ug/L	0.50	1	03/14/13 12:22	03/15/13 14:33	7439-98-7	
Nickel	**20.1**	ug/L	0.50	1	03/14/13 12:22	03/15/13 14:33	7440-02-0	
Potassium	**5390**	ug/L	20.0	1	03/14/13 12:22	03/15/13 14:33	7440-09-7	
Selenium	**7.6**	ug/L	0.50	1	03/14/13 12:22	03/15/13 14:33	7782-49-2	
Silica	**60200**	ug/L	1070	20	03/14/13 12:22	03/15/13 14:38	7631-86-9	
Silver	**3.0**	ug/L	0.50	1	03/14/13 12:22	03/15/13 14:33	7440-22-4	
Sodium	**3430**	ug/L	50.0	1	03/14/13 12:22	03/15/13 14:33	7440-23-5	
Thallium	**0.32**	ug/L	0.10	1	03/14/13 12:22	03/15/13 14:33	7440-28-0	
Total Hardness by 2340B	**423000**	ug/L	1420	20	03/14/13 12:22	03/15/13 14:38		
Vanadium	**34.8**	ug/L	0.10	1	03/14/13 12:22	03/15/13 14:33	7440-62-2	
Zinc	**762**	ug/L	100	20	03/14/13 12:22	03/15/13 14:38	7440-66-6	
200.8 MET ICPMS, Dissolved	Analytical Method: EPA 200.8 Preparation Method: EPA 200.8							
Aluminum, Dissolved	**7900**	ug/L	4.0	1	03/13/13 15:25	03/14/13 13:57	7429-90-5	
Antimony, Dissolved	ND	ug/L	0.50	1	03/13/13 15:25	03/14/13 13:57	7440-36-0	
Arsenic, Dissolved	**14.6**	ug/L	0.50	1	03/13/13 15:25	03/14/13 13:57	7440-38-2	
Barium, Dissolved	**155**	ug/L	0.30	1	03/13/13 15:25	03/14/13 13:57	7440-39-3	
Beryllium, Dissolved	**0.47**	ug/L	0.20	1	03/13/13 15:25	03/14/13 13:57	7440-41-7	
Cadmium, Dissolved	**1.2**	ug/L	0.080	1	03/13/13 15:25	03/14/13 13:57	7440-43-9	
Calcium, Dissolved	**123000**	ug/L	400	20	03/13/13 15:25	03/14/13 14:02	7440-70-2	
Chromium, Dissolved	**11.6**	ug/L	0.50	1	03/13/13 15:25	03/14/13 13:57	7440-47-3	
Cobalt, Dissolved	**5.5**	ug/L	0.50	1	03/13/13 15:25	03/14/13 13:57	7440-48-4	
Copper, Dissolved	**65.7**	ug/L	0.50	1	03/13/13 15:25	03/14/13 13:57	7440-50-8	
Iron, Dissolved	**13300**	ug/L	50.0	1	03/13/13 15:25	03/14/13 13:57	7439-89-6	
Lead, Dissolved	**125**	ug/L	0.10	1	03/13/13 15:25	03/14/13 13:57	7439-92-1	
Magnesium, Dissolved	**18000**	ug/L	5.0	1	03/13/13 15:25	03/14/13 13:57	7439-95-4	

This report shall not be reproduced, except in full,
without the written consent of Pace Analytical Services, Inc..

Pace Analytical Services, Inc.
9608 Loiret Blvd.
Lenexa, KS 66219
(913)599-5665

ANALYTICAL RESULTS

Project: MARCH 2013 RICO WATER SAMPLING
Pace Project No.: 60139978

Sample: GW-3_20130307 **Lab ID: 60139978004** Collected: 03/07/13 08:01 Received: 03/08/13 10:20 Matrix: Water

Parameters	Results	Units	Report Limit	DF	Prepared	Analyzed	CAS No.	Qual
200.8 MET ICPMS, Dissolved	Analytical Method: EPA 200.8 Preparation Method: EPA 200.8							
Manganese, Dissolved	**893**	ug/L	10.0	20	03/13/13 15:25	03/14/13 14:02	7439-96-5	
Molybdenum, Dissolved	**2.0**	ug/L	0.50	1	03/13/13 15:25	03/14/13 13:57	7439-98-7	
Nickel, Dissolved	**11.6**	ug/L	0.50	1	03/13/13 15:25	03/14/13 13:57	7440-02-0	
Potassium, Dissolved	**4050**	ug/L	20.0	1	03/13/13 15:25	03/14/13 13:57	7440-09-7	
Selenium, Dissolved	**4.9**	ug/L	0.50	1	03/13/13 15:25	03/14/13 13:57	7782-49-2	
Silver, Dissolved	**1.2**	ug/L	0.50	1	03/13/13 15:25	03/14/13 13:57	7440-22-4	
Sodium, Dissolved	**3040**	ug/L	50.0	1	03/13/13 15:25	03/14/13 13:57	7440-23-5	
Thallium, Dissolved	**0.18**	ug/L	0.10	1	03/13/13 15:25	03/14/13 13:57	7440-28-0	
Vanadium, Dissolved	**16.7**	ug/L	0.10	1	03/13/13 15:25	03/14/13 13:57	7440-62-2	
Zinc, Dissolved	**324**	ug/L	5.0	1	03/13/13 15:25	03/14/13 13:57	7440-66-6	
200.8 Potentially Diss. Metals	Analytical Method: EPA 200.8 Preparation Method: EPA 200.8							
Aluminum, Dissolved	**3160**	ug/L	50.0	1	03/11/13 16:15	03/14/13 14:33	7429-90-5	
Antimony, Dissolved	**0.28J**	ug/L	1.0	1	03/11/13 16:15	03/14/13 14:33	7440-36-0	
Arsenic, Dissolved	**6.8**	ug/L	1.0	1	03/11/13 16:15	03/14/13 14:33	7440-38-2	
Barium, Dissolved	**146**	ug/L	1.0	1	03/11/13 16:15	03/14/13 14:33	7440-39-3	
Beryllium, Dissolved	**0.33J**	ug/L	0.50	1	03/11/13 16:15	03/14/13 14:33	7440-41-7	
Cadmium, Dissolved	**1.8**	ug/L	0.50	1	03/11/13 16:15	03/14/13 14:33	7440-43-9	
Chromium, Dissolved	**6.1**	ug/L	1.0	1	03/11/13 16:15	03/14/13 14:33	7440-47-3	
Cobalt, Dissolved	**4.7**	ug/L	1.0	1	03/11/13 16:15	03/14/13 14:33	7440-48-4	
Copper, Dissolved	**64.4**	ug/L	1.0	1	03/11/13 16:15	03/14/13 14:33	7440-50-8	
Iron, Dissolved	**7220**	ug/L	50.0	1	03/11/13 16:15	03/14/13 14:33	7439-89-6	
Lead, Dissolved	**112**	ug/L	1.0	1	03/11/13 16:15	03/14/13 14:33	7439-92-1	
Manganese, Dissolved	**1120**	ug/L	1.0	1	03/11/13 16:15	03/14/13 14:33	7439-96-5	
Molybdenum, Dissolved	**0.28J**	ug/L	1.0	1	03/11/13 16:15	03/14/13 14:33	7439-98-7	
Nickel, Dissolved	**5.0**	ug/L	1.0	1	03/11/13 16:15	03/14/13 14:33	7440-02-0	
Selenium, Dissolved	**3.3**	ug/L	1.0	1	03/11/13 16:15	03/14/13 14:33	7782-49-2	
Silver, Dissolved	**0.76**	ug/L	0.50	1	03/11/13 16:15	03/14/13 14:33	7440-22-4	
Thallium, Dissolved	**0.023J**	ug/L	1.0	1	03/11/13 16:15	03/14/13 14:33	7440-28-0	
Vanadium, Dissolved	**5.8**	ug/L	1.0	1	03/11/13 16:15	03/14/13 14:33	7440-62-2	
Zinc, Dissolved	**339**	ug/L	10.0	1	03/11/13 16:15	03/14/13 14:33	7440-66-6	
245.1 Mercury	Analytical Method: EPA 245.1 Preparation Method: EPA 245.1							
Mercury	ND	ug/L	0.20	1	03/13/13 13:41	03/14/13 11:01	7439-97-6	
245.1 Mercury, Dissolved	Analytical Method: EPA 245.1 Preparation Method: EPA 245.1							
Mercury, Dissolved	ND	ug/L	0.20	1	03/13/13 00:00	03/19/13 11:18	7439-97-6	
245.1 Potentially Diss Mercury	Analytical Method: EPA 245.1 Preparation Method: EPA 245.1							
Mercury, Dissolved	ND	ug/L	0.20	1	03/14/13 16:00	03/15/13 10:43	7439-97-6	
4500S2D Sulfide, Total	Analytical Method: SM 4500-S-2 D							
Sulfide, Total	ND	mg/L	0.050	1		03/11/13 15:17	18496-25-8	
4500CNE Cyanide, Total	Analytical Method: SM 4500-CN-E							
Cyanide	**0.0054**	mg/L	0.0050	1		03/13/13 10:26	57-12-5	

This report shall not be reproduced, except in full,
without the written consent of Pace Analytical Services, Inc..

Pace Analytical Services, Inc.
9608 Loiret Blvd.
Lenexa, KS 66219
(913)599-5665

ANALYTICAL RESULTS

Project: MARCH 2013 RICO WATER SAMPLING
Pace Project No.: 60139978

Sample: MW-4 SHALLOW_20130307 **Lab ID: 60139978005** Collected: 03/07/13 12:30 Received: 03/08/13 10:20 Matrix: Water

Parameters	Results	Units	Report Limit	DF	Prepared	Analyzed	CAS No.	Qual
200.7 Potentially Diss. Metals	Analytical Method: EPA 200.7 Preparation Method: EPA 200.7							
Calcium, Dissolved	**279000**	ug/L	100	1	03/11/13 16:15	03/12/13 15:38	7440-70-2	
Magnesium, Dissolved	**29200**	ug/L	50.0	1	03/11/13 16:15	03/12/13 15:38	7439-95-4	
Potassium, Dissolved	**2830**	ug/L	500	1	03/11/13 16:15	03/12/13 15:38	7440-09-7	
Sodium, Dissolved	**7990**	ug/L	500	1	03/11/13 16:15	03/12/13 15:38	7440-23-5	
200.8 MET ICPMS	Analytical Method: EPA 200.8 Preparation Method: EPA 200.8							
Aluminum	**5470**	ug/L	4.0	1	03/14/13 12:22	03/15/13 14:46	7429-90-5	
Antimony	ND	ug/L	0.50	1	03/14/13 12:22	03/15/13 14:46	7440-36-0	
Arsenic	**3.9**	ug/L	0.50	1	03/14/13 12:22	03/15/13 14:46	7440-38-2	
Barium	**77.4**	ug/L	0.30	1	03/14/13 12:22	03/15/13 14:46	7440-39-3	
Beryllium	**0.50**	ug/L	0.20	1	03/14/13 12:22	03/15/13 14:46	7440-41-7	
Cadmium	**1.7**	ug/L	0.080	1	03/14/13 12:22	03/15/13 14:46	7440-43-9	
Calcium	**283000**	ug/L	400	20	03/14/13 12:22	03/15/13 14:51	7440-70-2	
Chromium	**6.4**	ug/L	0.50	1	03/14/13 12:22	03/15/13 14:46	7440-47-3	
Cobalt	**2.8**	ug/L	0.50	1	03/14/13 12:22	03/15/13 14:46	7440-48-4	
Copper	**27.1**	ug/L	0.50	1	03/14/13 12:22	03/15/13 14:46	7440-50-8	
Iron	**6120**	ug/L	50.0	1	03/14/13 12:22	03/15/13 14:46	7439-89-6	
Lead	**30.9**	ug/L	0.10	1	03/14/13 12:22	03/15/13 14:46	7439-92-1	
Magnesium	**32200**	ug/L	100	20	03/14/13 12:22	03/15/13 14:51	7439-95-4	
Manganese	**235**	ug/L	0.50	1	03/14/13 12:22	03/15/13 14:46	7439-96-5	
Molybdenum	**2.3**	ug/L	0.50	1	03/14/13 12:22	03/15/13 14:46	7439-98-7	
Nickel	**4.7**	ug/L	0.50	1	03/14/13 12:22	03/15/13 14:46	7440-02-0	
Potassium	**3930**	ug/L	20.0	1	03/14/13 12:22	03/15/13 14:46	7440-09-7	
Selenium	**24.1**	ug/L	0.50	1	03/14/13 12:22	03/15/13 14:46	7782-49-2	
Silica	**31800**	ug/L	1070	20	03/14/13 12:22	03/15/13 14:51	7631-86-9	
Silver	**0.50**	ug/L	0.50	1	03/14/13 12:22	03/15/13 14:46	7440-22-4	
Sodium	**8010**	ug/L	50.0	1	03/14/13 12:22	03/15/13 14:46	7440-23-5	
Thallium	**0.14**	ug/L	0.10	1	03/14/13 12:22	03/15/13 14:46	7440-28-0	
Total Hardness by 2340B	**839000**	ug/L	1420	20	03/14/13 12:22	03/15/13 14:51		
Vanadium	**7.1**	ug/L	0.10	1	03/14/13 12:22	03/15/13 14:46	7440-62-2	
Zinc	**215**	ug/L	5.0	1	03/14/13 12:22	03/15/13 14:46	7440-66-6	
200.8 MET ICPMS, Dissolved	Analytical Method: EPA 200.8 Preparation Method: EPA 200.8							
Aluminum, Dissolved	**1810**	ug/L	4.0	1	03/13/13 15:25	03/14/13 14:11	7429-90-5	
Antimony, Dissolved	ND	ug/L	0.50	1	03/13/13 15:25	03/14/13 14:11	7440-36-0	
Arsenic, Dissolved	**1.7**	ug/L	0.50	1	03/13/13 15:25	03/14/13 14:11	7440-38-2	
Barium, Dissolved	**47.4**	ug/L	0.30	1	03/13/13 15:25	03/14/13 14:11	7440-39-3	
Beryllium, Dissolved	**0.30**	ug/L	0.20	1	03/13/13 15:25	03/14/13 14:11	7440-41-7	
Cadmium, Dissolved	**1.6**	ug/L	0.080	1	03/13/13 15:25	03/14/13 14:11	7440-43-9	
Calcium, Dissolved	**285000**	ug/L	400	20	03/13/13 15:25	03/14/13 14:15	7440-70-2	
Chromium, Dissolved	**2.4**	ug/L	0.50	1	03/13/13 15:25	03/14/13 14:11	7440-47-3	
Cobalt, Dissolved	**1.1**	ug/L	0.50	1	03/13/13 15:25	03/14/13 14:11	7440-48-4	
Copper, Dissolved	**14.7**	ug/L	0.50	1	03/13/13 15:25	03/14/13 14:11	7440-50-8	
Iron, Dissolved	**2060**	ug/L	50.0	1	03/13/13 15:25	03/14/13 14:11	7439-89-6	
Lead, Dissolved	**16.3**	ug/L	0.10	1	03/13/13 15:25	03/14/13 14:11	7439-92-1	
Magnesium, Dissolved	**29700**	ug/L	100	20	03/13/13 15:25	03/14/13 14:15	7439-95-4	

This report shall not be reproduced, except in full,
without the written consent of Pace Analytical Services, Inc..

Pace Analytical Services, Inc.
9608 Loiret Blvd.
Lenexa, KS 66219
(913)599-5665

ANALYTICAL RESULTS

Project: MARCH 2013 RICO WATER SAMPLING
Pace Project No.: 60139978

Sample: MW-4 SHALLOW_20130307 **Lab ID: 60139978005** Collected: 03/07/13 12:30 Received: 03/08/13 10:20 Matrix: Water

Parameters	Results	Units	Report Limit	DF	Prepared	Analyzed	CAS No.	Qual
200.8 MET ICPMS, Dissolved	Analytical Method: EPA 200.8 Preparation Method: EPA 200.8							
Manganese, Dissolved	**160**	ug/L	0.50	1	03/13/13 15:25	03/14/13 14:11	7439-96-5	
Molybdenum, Dissolved	**1.6**	ug/L	0.50	1	03/13/13 15:25	03/14/13 14:11	7439-98-7	
Nickel, Dissolved	**2.7**	ug/L	0.50	1	03/13/13 15:25	03/14/13 14:11	7440-02-0	
Potassium, Dissolved	**3070**	ug/L	20.0	1	03/13/13 15:25	03/14/13 14:11	7440-09-7	
Selenium, Dissolved	**26.1**	ug/L	0.50	1	03/13/13 15:25	03/14/13 14:11	7782-49-2	
Silver, Dissolved	ND	ug/L	0.50	1	03/13/13 15:25	03/14/13 14:11	7440-22-4	
Sodium, Dissolved	**7780**	ug/L	50.0	1	03/13/13 15:25	03/14/13 14:11	7440-23-5	
Thallium, Dissolved	ND	ug/L	0.10	1	03/13/13 15:25	03/14/13 14:11	7440-28-0	
Vanadium, Dissolved	**2.4**	ug/L	0.10	1	03/13/13 15:25	03/14/13 14:11	7440-62-2	
Zinc, Dissolved	**180**	ug/L	5.0	1	03/13/13 15:25	03/14/13 14:11	7440-66-6	
200.8 Potentially Diss. Metals	Analytical Method: EPA 200.8 Preparation Method: EPA 200.8							
Aluminum, Dissolved	**1430**	ug/L	50.0	1	03/11/13 16:15	03/14/13 14:38	7429-90-5	
Antimony, Dissolved	**0.11J**	ug/L	1.0	1	03/11/13 16:15	03/14/13 14:38	7440-36-0	
Arsenic, Dissolved	**1.8**	ug/L	1.0	1	03/11/13 16:15	03/14/13 14:38	7440-38-2	
Barium, Dissolved	**46.1**	ug/L	1.0	1	03/11/13 16:15	03/14/13 14:38	7440-39-3	
Beryllium, Dissolved	**0.24J**	ug/L	0.50	1	03/11/13 16:15	03/14/13 14:38	7440-41-7	
Cadmium, Dissolved	**1.6**	ug/L	0.50	1	03/11/13 16:15	03/14/13 14:38	7440-43-9	
Chromium, Dissolved	**3.2**	ug/L	1.0	1	03/11/13 16:15	03/14/13 14:38	7440-47-3	
Cobalt, Dissolved	**1.3**	ug/L	1.0	1	03/11/13 16:15	03/14/13 14:38	7440-48-4	
Copper, Dissolved	**16.3**	ug/L	1.0	1	03/11/13 16:15	03/14/13 14:38	7440-50-8	
Iron, Dissolved	**1960**	ug/L	50.0	1	03/11/13 16:15	03/14/13 14:38	7439-89-6	
Lead, Dissolved	**25.4**	ug/L	1.0	1	03/11/13 16:15	03/14/13 14:38	7439-92-1	
Manganese, Dissolved	**179**	ug/L	1.0	1	03/11/13 16:15	03/14/13 14:38	7439-96-5	
Molybdenum, Dissolved	**1.3**	ug/L	1.0	1	03/11/13 16:15	03/14/13 14:38	7439-98-7	
Nickel, Dissolved	**0.87J**	ug/L	1.0	1	03/11/13 16:15	03/14/13 14:38	7440-02-0	
Selenium, Dissolved	**23.6**	ug/L	1.0	1	03/11/13 16:15	03/14/13 14:38	7782-49-2	
Silver, Dissolved	**0.077J**	ug/L	0.50	1	03/11/13 16:15	03/14/13 14:38	7440-22-4	
Thallium, Dissolved	**0.026J**	ug/L	1.0	1	03/11/13 16:15	03/14/13 14:38	7440-28-0	
Vanadium, Dissolved	**1.7**	ug/L	1.0	1	03/11/13 16:15	03/14/13 14:38	7440-62-2	
Zinc, Dissolved	**175**	ug/L	10.0	1	03/11/13 16:15	03/14/13 14:38	7440-66-6	
245.1 Mercury	Analytical Method: EPA 245.1 Preparation Method: EPA 245.1							
Mercury	ND	ug/L	0.20	1	03/13/13 13:41	03/14/13 11:03	7439-97-6	M1
245.1 Mercury, Dissolved	Analytical Method: EPA 245.1 Preparation Method: EPA 245.1							
Mercury, Dissolved	ND	ug/L	0.20	1	03/13/13 00:00	03/19/13 11:20	7439-97-6	
245.1 Potentially Diss Mercury	Analytical Method: EPA 245.1 Preparation Method: EPA 245.1							
Mercury, Dissolved	ND	ug/L	0.20	1	03/14/13 16:00	03/15/13 10:50	7439-97-6	
2510B Specific Conductance	Analytical Method: SM 2510B							
Specific Conductance	**1330**	umhos/cm	10.0	1		03/14/13 13:44		

This report shall not be reproduced, except in full,
without the written consent of Pace Analytical Services, Inc..

Pace Analytical Services, Inc.
9608 Loiret Blvd.
Lenexa, KS 66219
(913)599-5665

ANALYTICAL RESULTS

Project: MARCH 2013 RICO WATER SAMPLING
Pace Project No.: 60139978

Sample: MW-4 SHALLOW_20130307 **Lab ID: 60139978005** Collected: 03/07/13 12:30 Received: 03/08/13 10:20 Matrix: Water

Parameters	Results	Units	Report Limit	DF	Prepared	Analyzed	CAS No.	Qual
Salinity	Analytical Method: Calculated							
Salinity (as dissolved solids)	**850**	mg/L	6.4	1		03/15/13 09:55		
Salinity (as seawater)	**0.66**	PSU	0.014	1		03/15/13 09:55		
2320B Alkalinity	Analytical Method: SM 2320B							
Alkalinity,Bicarbonate (CaCO3)	**305**	mg/L	20.0	1		03/13/13 10:15		
Alkalinity, Carbonate (CaCO3)	ND	mg/L	20.0	1		03/13/13 10:15		
Alkalinity, Total as CaCO3	**305**	mg/L	20.0	1		03/13/13 10:15		
2540C Total Dissolved Solids	Analytical Method: SM 2540C							
Total Dissolved Solids	**1090**	mg/L	5.0	1		03/12/13 11:50		
2540D Total Suspended Solids	Analytical Method: SM 2540D							
Total Suspended Solids	**229**	mg/L	5.0	1		03/12/13 11:40		
4500S2D Sulfide, Total	Analytical Method: SM 4500-S-2 D							
Sulfide, Total	ND	mg/L	0.050	1		03/11/13 15:18	18496-25-8	M1
300.0 IC Anions 28 Days	Analytical Method: EPA 300.0							
Chloride	**1.0**	mg/L	1.0	1		03/09/13 21:46	16887-00-6	
Sulfate	**540**	mg/L	50.0	50		03/09/13 22:04	14808-79-8	
353.2 Nitrogen, NO2/NO3 pres.	Analytical Method: EPA 353.2							
Nitrogen, NO2 plus NO3	**0.31**	mg/L	0.10	1		03/11/13 15:46		
4500CNE Cyanide, Total	Analytical Method: SM 4500-CN-E							
Cyanide	ND	mg/L	0.0050	1		03/13/13 10:27	57-12-5	
5310C TOC	Analytical Method: SM 5310C							
Total Organic Carbon	**0.72**	mg/L	0.50	1		03/14/13 14:33	7440-44-0	

This report shall not be reproduced, except in full,
without the written consent of Pace Analytical Services, Inc..

Pace Analytical Services, Inc.
9608 Loiret Blvd.
Lenexa, KS 66219
(913)599-5665

April 11, 2013

Mark DeFriez
Anderson Engineering Company I
977 W 2100 S.
Salt Lake City, UT 84119

RE: Project: MARCH 2013 RICO WATER SAMPLING
Pace Project No.: 60140509

Dear Mark DeFriez:
Enclosed are the analytical results for sample(s) received by the laboratory on March 15, 2013. The results relate only to the within this report conform to the most current version of the TNI standards, BP LaMP Technical Requirements Revision 10.1, and any applicable Quality Assurance Project Plan (QAPP), or Work Plan unless otherwise narrated in the body of this report.

If you have any questions concerning this report, please feel free to contact me.

Sincerely,

Heather M. Wilson

Heather Wilson

heather.wilson@pacelabs.com
Project Manager

Enclosures

This report shall not be reproduced, except in full,
without the written consent of Pace Analytical Services, Inc..

Pace Analytical Services, Inc.
9608 Loiret Blvd.
Lenexa, KS 66219
(913)599-5665

CERTIFICATIONS

Project: MARCH 2013 RICO WATER SAMPLING
Pace Project No.: 60140509

Minnesota Certification IDs
1700 Elm Street SE Suite 200, Minneapolis, MN 55414
A2LA Certification #: 2926.01
Alaska Certification #: UST-078
Alaska Certification #MN00064
Arizona Certification #: AZ-0014
Arkansas Certification #: 88-0680
California Certification #: 01155CA
Colorado Certification #Pace
Connecticut Certification #: PH-0256
EPA Region 8 Certification #: Pace
Florida/NELAP Certification #: E87605
Georgia Certification #: 959
Hawaii Certification #Pace
Idaho Certification #: MN00064
Illinois Certification #: 200011
Kansas Certification #: E-10167
Louisiana Certification #: 03086
Louisiana Certification #: LA080009
Maine Certification #: 2007029
Maryland Certification #: 322
Michigan DEQ Certification #: 9909
Minnesota Certification #: 027-053-137
Mississippi Certification #: Pace
Montana Certification #: MT CERT0092
Nebraska Certification #: Pace
Nevada Certification #: MN_00064
New Jersey Certification #: MN-002
New York Certification #: 11647
North Carolina Certification #: 530
North Dakota Certification #: R-036
North Dakota Certification #: R-036A
Ohio VAP Certification #: CL101
Oklahoma Certification #: 9507
Oregon Certification #: MN200001
Oregon Certification #: MN300001
Pennsylvania Certification #: 68-00563
Puerto Rico Certification
Tennessee Certification #: 02818
Texas Certification #: T104704192
Utah Certification #: MN00064
Virginia/DCLS Certification #: 002521
Virginia/VELAP Certification #: 460163
Washington Certification #: C754
West Virginia Certification #: 382
Wisconsin Certification #: 999407970

Montana Certification IDs
602 South 25th Street, Billings, MT 59101
EPA Region 8 Certification #: 8TMS-Q
Idaho Certification #: MT00012
Montana Certification #: MT CERT0040
NVLAP Certification #: 101292-0
Minnesota Dept of Health Certification #: 030-999-442
Washington Department of Ecology #: C993

Green Bay Certification IDs
1241 Bellevue Street, Green Bay, WI 54302
Florida/NELAP Certification #: E87948
Illinois Certification #: 200050
Kentucky Certification #: 82
Louisiana Certification #: 04168
Minnesota Certification #: 055-999-334
New York Certification #: 11888
North Dakota Certification #: R-150
South Carolina Certification #: 83006001
US Dept of Agriculture #: S-76505
Wisconsin Certification #: 405132750

Kansas Certification IDs
9608 Loiret Boulevard, Lenexa, KS 66219
A2LA Certification #: 2456.01
Arkansas Certification #: 12-019-0
Illinois Certification #: 002885
Iowa Certification #: 118
Kansas/NELAP Certification #: E-10116
Louisiana Certification #: 03055
Nevada Certification #: KS000212008A
Oklahoma Certification #: 9205/9935
Texas Certification #: T104704407-12-3
Utah Certification #: KS000212012-2
Illinois Certification #: 003097

This report shall not be reproduced, except in full,
without the written consent of Pace Analytical Services, Inc..

Pace Analytical Services, Inc.
9608 Loiret Blvd.
Lenexa, KS 66219
(913)599-5665

SAMPLE SUMMARY

Project: MARCH 2013 RICO WATER SAMPLING
Pace Project No.: 60140509

Lab ID	Sample ID	Matrix	Date Collected	Date Received
60140509001	**P13-102_20130312**	Water	03/12/13 15:25	03/15/13 10:10
60140509002	**P13-103_20130313**	Water	03/12/13 15:46	03/15/13 10:10
60140509003	**MW-1 DEEP_20130312**	Water	03/12/13 15:30	03/15/13 10:10
60140509004	**MW-1 SHALLOW_20130312**	Water	03/12/13 15:14	03/15/13 10:10
60140509005	**MW-4 DEEP_20130312**	Water	03/12/13 14:25	03/15/13 10:10
60140509006	**MW-6 DEEP_20130312**	Water	03/12/13 13:20	03/15/13 10:10
60140509007	**MW-6 SHALLOW_20130312**	Water	03/12/13 13:07	03/15/13 10:10
60140509008	**GW-1_20130312**	Water	03/12/13 12:45	03/15/13 10:10
60140509009	**DR-8_20130312**	Water	03/12/13 13:13	03/15/13 10:10
60140509010	**DR-3_20130313**	Water	03/13/13 16:21	03/15/13 10:10
60140509011	**DR-4_20130313**	Water	03/13/13 16:04	03/15/13 10:10
60140509012	**DR-5_20130313**	Water	03/13/13 16:01	03/15/13 10:10
60140509013	**DR-6_20130313**	Water	03/13/13 15:57	03/15/13 10:10
60140509014	**DR-9_20130313**	Water	03/13/13 14:46	03/15/13 10:10
60140509015	**MW-101_20130313**	Water	03/13/13 12:42	03/15/13 10:10
60140509016	**MW-102_20130313**	Water	03/13/13 11:37	03/15/13 10:10
60140509017	**MW-103_20130313**	Water	03/13/13 13:54	03/15/13 10:10
60140509018	**MW-104_20130313**	Water	03/13/13 14:45	03/15/13 10:10
60140509019	**DR-10_20130313**	Water	03/13/13 12:55	03/15/13 10:10
60140509020	**MW-3 DEEP_20130313**	Water	03/13/13 15:50	03/15/13 10:10
60140509021	**MW-5 DEEP_20130313**	Water	03/13/13 13:07	03/15/13 10:10
60140509022	**MW-5 SHALLOW_20130313**	Water	03/13/13 12:43	03/15/13 10:10
60140509023	**AT-2_20130313**	Water	03/13/13 11:00	03/15/13 10:10
60140509024	**FB_20130313**	Water	03/13/13 15:32	03/15/13 10:10
60140509025	**GW-5_20130314**	Water	03/14/13 09:35	03/15/13 10:10
60140509026	**MW-204_20130314**	Water	03/14/13 09:10	03/15/13 10:10
60140509027	**GW-4_20130314**	Water	03/14/13 10:09	03/15/13 10:10
60140509028	**GW-3_20130313**	Water	03/13/13 15:08	03/15/13 10:10
60140509029	**MW-2 DEEP_20130313**	Water	03/13/13 15:10	03/15/13 10:10

This report shall not be reproduced, except in full,
without the written consent of Pace Analytical Services, Inc..

Pace Analytical Services, Inc.
9608 Loiret Blvd.
Lenexa, KS 66219
(913)599-5665

SAMPLE ANALYTE COUNT

Project: MARCH 2013 RICO WATER SAMPLING
Pace Project No.: 60140509

Lab ID	Sample ID	Method	Analysts	Analytes Reported	Laboratory
60140509001	**P13-102_20130312**	EPA 200.7	JGP	4	PASI-K
		EPA 200.8	RJS	25	PASI-M
		EPA 200.8	RJS	23	PASI-M
		EPA 200.8	SMW	19	PASI-K
		EPA 245.1	TEM	1	PASI-M
		EPA 245.1	TEM	1	PASI-M
		EPA 245.1	TJT	1	PASI-K
		SM 2510B	DC1	1	
		Calculated	DC1	2	
		SM 2320B	DJR	3	PASI-K
		SM 2540C	JML	1	PASI-K
		SM 2540D	JML	1	PASI-K
		SM 4500-S-2 D	OL	1	PASI-K
		EPA 300.0	OL	2	PASI-K
		EPA 353.2	DJR	1	PASI-K
		SM 4500-CN-E	AJM	1	PASI-K
		SM 5310C	TJJ	1	PASI-G
60140509002	**P13-103_20130313**	EPA 200.7	JGP	4	PASI-K
		EPA 200.8	RJS	25	PASI-M
		EPA 200.8	RJS	23	PASI-M
		EPA 200.8	SMW	19	PASI-K
		EPA 245.1	TEM	1	PASI-M
		EPA 245.1	TEM	1	PASI-M
		EPA 245.1	TJT	1	PASI-K
		SM 2510B	DC1	1	
		Calculated	DC1	2	
		SM 2320B	DJR	3	PASI-K
		SM 2540C	JML	1	PASI-K
		SM 2540D	JML	1	PASI-K
		SM 4500-S-2 D	OL	1	PASI-K
		EPA 300.0	OL	2	PASI-K
		EPA 353.2	DJR	1	PASI-K
		SM 4500-CN-E	AJM	1	PASI-K
		SM 5310C	TJJ	1	PASI-G
60140509003	**MW-1 DEEP_20130312**	EPA 200.7	JGP	4	PASI-K
		EPA 200.8	RJS	25	PASI-M
		EPA 200.8	RJS	23	PASI-M

This report shall not be reproduced, except in full,
without the written consent of Pace Analytical Services, Inc..

Pace Analytical Services, Inc.
9608 Loiret Blvd.
Lenexa, KS 66219
(913)599-5665

SAMPLE ANALYTE COUNT

Project: MARCH 2013 RICO WATER SAMPLING
Pace Project No.: 60140509

Lab ID	Sample ID	Method	Analysts	Analytes Reported	Laboratory
		EPA 200.8	SMW	19	PASI-K
		EPA 245.1	TEM	1	PASI-M
		EPA 245.1	TEM	1	PASI-M
		EPA 245.1	TJT	1	PASI-K
		SM 2510B	DC1	1	
		Calculated	DC1	2	
		SM 2320B	DJR	3	PASI-K
		SM 2540C	JML	1	PASI-K
		SM 2540D	JML	1	PASI-K
		SM 4500-S-2 D	OL	1	PASI-K
		EPA 300.0	OL	2	PASI-K
		EPA 353.2	DJR	1	PASI-K
		SM 4500-CN-E	AJM	1	PASI-K
		SM 5310C	TJJ	1	PASI-G
60140509004	**MW-1 SHALLOW_20130312**	EPA 200.7	JGP	4	PASI-K
		EPA 200.8	RJS	25	PASI-M
		EPA 200.8	RJS	23	PASI-M
		EPA 200.8	SMW	19	PASI-K
		EPA 245.1	TEM	1	PASI-M
		EPA 245.1	TEM	1	PASI-M
		EPA 245.1	TJT	1	PASI-K
		SM 2510B	DC1	1	
		Calculated	DC1	2	
		SM 2320B	DJR	3	PASI-K
		SM 2540C	JML	1	PASI-K
		SM 2540D	JML	1	PASI-K
		SM 4500-S-2 D	OL	1	PASI-K
		EPA 300.0	OL	2	PASI-K
		EPA 353.2	DJR	1	PASI-K
		SM 4500-CN-E	AJM	1	PASI-K
		SM 5310C	TJJ	1	PASI-G
60140509005	**MW-4 DEEP_20130312**	EPA 200.7	JGP	4	PASI-K
		EPA 200.8	RJS	25	PASI-M
		EPA 200.8	RJS	23	PASI-M
		EPA 200.8	SMW	19	PASI-K
		EPA 245.1	TEM	1	PASI-M
		EPA 245.1	TEM	1	PASI-M

This report shall not be reproduced, except in full,
without the written consent of Pace Analytical Services, Inc..

Pace Analytical Services, Inc.
9608 Loiret Blvd.
Lenexa, KS 66219
(913)599-5665

SAMPLE ANALYTE COUNT

Project: MARCH 2013 RICO WATER SAMPLING
Pace Project No.: 60140509

Lab ID	Sample ID	Method	Analysts	Analytes Reported	Laboratory
		EPA 245.1	TJT	1	PASI-K
		SM 2510B	DC1	1	
		Calculated	DC1	2	
		SM 2320B	DJR	3	PASI-K
		SM 2540C	JML	1	PASI-K
		SM 2540D	JML	1	PASI-K
		SM 4500-S-2 D	OL	1	PASI-K
		EPA 300.0	OL	2	PASI-K
		EPA 353.2	DJR	1	PASI-K
		SM 4500-CN-E	AJM	1	PASI-K
		SM 5310C	TJJ	1	PASI-G
60140509006	**MW-6 DEEP_20130312**	EPA 200.7	JGP	4	PASI-K
		EPA 200.8	RJS	25	PASI-M
		EPA 200.8	RJS	23	PASI-M
		EPA 200.8	SMW	19	PASI-K
		EPA 245.1	TEM	1	PASI-M
		EPA 245.1	TEM	1	PASI-M
		EPA 245.1	TJT	1	PASI-K
		SM 2510B	DC1	1	
		Calculated	DC1	2	
		SM 2320B	DJR	3	PASI-K
		SM 2540C	JML	1	PASI-K
		SM 2540D	JML	1	PASI-K
		SM 4500-S-2 D	OL	1	PASI-K
		EPA 300.0	OL	2	PASI-K
		EPA 353.2	DJR	1	PASI-K
		SM 4500-CN-E	AJM	1	PASI-K
		SM 5310C	TJJ	1	PASI-G
60140509007	**MW-6 SHALLOW_20130312**	EPA 200.7	JGP	4	PASI-K
		EPA 200.8	RJS	25	PASI-M
		EPA 200.8	RJS	23	PASI-M
		EPA 200.8	SMW	19	PASI-K
		EPA 245.1	TEM	1	PASI-M
		EPA 245.1	TEM	1	PASI-M
		EPA 245.1	TJT	1	PASI-K
		SM 2510B	DC1	1	
		Calculated	DC1	2	

This report shall not be reproduced, except in full,
without the written consent of Pace Analytical Services, Inc..

Pace Analytical Services, Inc.
9608 Loiret Blvd.
Lenexa, KS 66219
(913)599-5665

SAMPLE ANALYTE COUNT

Project: MARCH 2013 RICO WATER SAMPLING
Pace Project No.: 60140509

Lab ID	Sample ID	Method	Analysts	Analytes Reported	Laboratory
		SM 2320B	DJR	3	PASI-K
		SM 2540C	JML	1	PASI-K
		SM 2540D	JML	1	PASI-K
		SM 4500-S-2 D	OL	1	PASI-K
		EPA 300.0	OL	2	PASI-K
		EPA 353.2	DJR	1	PASI-K
		SM 4500-CN-E	AJM	1	PASI-K
		SM 5310C	TJJ	1	PASI-G
60140509008	**GW-1_20130312**	EPA 200.7	JGP	4	PASI-K
		EPA 200.8	RJS	25	PASI-M
		EPA 200.8	RJS	23	PASI-M
		EPA 200.8	SMW	19	PASI-K
		EPA 245.1	TEM	1	PASI-M
		EPA 245.1	TEM	1	PASI-M
		EPA 245.1	TJT	1	PASI-K
		SM 2510B	DC1	1	
		Calculated	DC1	2	
		SM 2320B	DJR	3	PASI-K
		SM 2540C	JML	1	PASI-K
		SM 2540D	JML	1	PASI-K
		SM 4500-S-2 D	OL	1	PASI-K
		EPA 300.0	OL	2	PASI-K
		EPA 353.2	DJR	1	PASI-K
		SM 4500-CN-E	AJM	1	PASI-K
		SM 5310C	TJJ	1	PASI-G
60140509009	**DR-8_20130312**	EPA 200.7	JGP	4	PASI-K
		EPA 200.8	RJS	25	PASI-M
		EPA 200.8	RJS	23	PASI-M
		EPA 200.8	SMW	19	PASI-K
		EPA 245.1	TEM	1	PASI-M
		EPA 245.1	TEM	1	PASI-M
		EPA 245.1	TJT	1	PASI-K
		SM 2510B	DC1	1	
		Calculated	DC1	2	
		SM 2320B	DJR	3	PASI-K
		SM 2540C	JML	1	PASI-K
		SM 2540D	JML	1	PASI-K

This report shall not be reproduced, except in full,
without the written consent of Pace Analytical Services, Inc..

Pace Analytical Services, Inc.
9608 Loiret Blvd.
Lenexa, KS 66219
(913)599-5665

SAMPLE ANALYTE COUNT

Project: MARCH 2013 RICO WATER SAMPLING
Pace Project No.: 60140509

Lab ID	Sample ID	Method	Analysts	Analytes Reported	Laboratory
		SM 4500-S-2 D	OL	1	PASI-K
		EPA 300.0	OL	2	PASI-K
		EPA 353.2	DJR	1	PASI-K
		SM 4500-CN-E	AJM	1	PASI-K
		SM 5310C	TJJ	1	PASI-G
60140509010	**DR-3_20130313**	EPA 200.7	JGP	4	PASI-K
		EPA 200.8	RJS	25	PASI-M
		EPA 200.8	RJS	23	PASI-M
		EPA 200.8	SMW	19	PASI-K
		EPA 245.1	TEM	1	PASI-M
		EPA 245.1	TEM	1	PASI-M
		EPA 245.1	TJT	1	PASI-K
		SM 2510B	DC1	1	
		Calculated	DC1	2	
		SM 2320B	DJR	3	PASI-K
		SM 2540C	JML	1	PASI-K
		SM 2540D	JML	1	PASI-K
		SM 4500-S-2 D	OL	1	PASI-K
		EPA 300.0	OL	2	PASI-K
		EPA 353.2	DJR	1	PASI-K
		SM 4500-CN-E	AJM	1	PASI-K
		SM 5310C	TJJ	1	PASI-G
60140509011	**DR-4_20130313**	EPA 200.7	JGP	4	PASI-K
		EPA 200.8	RJS	25	PASI-M
		EPA 200.8	RJS	23	PASI-M
		EPA 200.8	SMW	19	PASI-K
		EPA 245.1	TEM	1	PASI-M
		EPA 245.1	TEM	1	PASI-M
		EPA 245.1	TJT	1	PASI-K
		SM 2510B	DC1	1	
		Calculated	DC1	2	
		SM 2320B	DJR	3	PASI-K
		SM 2540C	JML	1	PASI-K
		SM 2540D	JML	1	PASI-K
		SM 4500-S-2 D	OL	1	PASI-K
		EPA 300.0	OL	2	PASI-K
		EPA 353.2	DJR	1	PASI-K

This report shall not be reproduced, except in full,
without the written consent of Pace Analytical Services, Inc..

Pace Analytical Services, Inc.
9608 Loiret Blvd.
Lenexa, KS 66219
(913)599-5665

SAMPLE ANALYTE COUNT

Project: MARCH 2013 RICO WATER SAMPLING
Pace Project No.: 60140509

Lab ID	Sample ID	Method	Analysts	Analytes Reported	Laboratory
		SM 4500-CN-E	AJM	1	PASI-K
		SM 5310C	TJJ	1	PASI-G
60140509012	**DR-5_20130313**	EPA 200.7	JGP	4	PASI-K
		EPA 200.8	RJS	25	PASI-M
		EPA 200.8	RJS	23	PASI-M
		EPA 200.8	SMW	19	PASI-K
		EPA 245.1	TEM	1	PASI-M
		EPA 245.1	TEM	1	PASI-M
		EPA 245.1	TJT	1	PASI-K
		SM 2510B	DC1	1	
		Calculated	DC1	2	
		SM 2320B	DJR	3	PASI-K
		SM 2540C	JML	1	PASI-K
		SM 2540D	JML	1	PASI-K
		SM 4500-S-2 D	OL	1	PASI-K
		EPA 300.0	OL	2	PASI-K
		EPA 353.2	DJR	1	PASI-K
		SM 4500-CN-E	AJM	1	PASI-K
		SM 5310C	TJJ	1	PASI-G
60140509013	**DR-6_20130313**	EPA 200.7	JGP	4	PASI-K
		EPA 200.8	RJS	25	PASI-M
		EPA 200.8	RJS	23	PASI-M
		EPA 200.8	SMW	19	PASI-K
		EPA 245.1	TEM	1	PASI-M
		EPA 245.1	TEM	1	PASI-M
		EPA 245.1	TJT	1	PASI-K
		SM 2510B	DC1	1	
		Calculated	DC1	2	
		SM 2320B	DJR	3	PASI-K
		SM 2540C	JML	1	PASI-K
		SM 2540D	JML	1	PASI-K
		SM 4500-S-2 D	OL	1	PASI-K
		EPA 300.0	OL	2	PASI-K
		EPA 353.2	DJR	1	PASI-K
		SM 4500-CN-E	AJM	1	PASI-K
		SM 5310C	TJJ	1	PASI-G
60140509014	**DR-9_20130313**	EPA 200.7	JGP	4	PASI-K

This report shall not be reproduced, except in full,
without the written consent of Pace Analytical Services, Inc..

Pace Analytical Services, Inc.
9608 Loiret Blvd.
Lenexa, KS 66219
(913)599-5665

SAMPLE ANALYTE COUNT

Project: MARCH 2013 RICO WATER SAMPLING
Pace Project No.: 60140509

Lab ID	Sample ID	Method	Analysts	Analytes Reported	Laboratory
		EPA 200.8	RJS	25	PASI-M
		EPA 200.8	RJS	23	PASI-M
		EPA 200.8	SMW	19	PASI-K
		EPA 245.1	TEM	1	PASI-M
		EPA 245.1	TEM	1	PASI-M
		EPA 245.1	TJT	1	PASI-K
		SM 2510B	DC1	1	
		Calculated	DC1	2	
		SM 2320B	DJR	3	PASI-K
		SM 2540C	JML	1	PASI-K
		SM 2540D	JML	1	PASI-K
		SM 4500-S-2 D	OL	1	PASI-K
		EPA 300.0	OL	2	PASI-K
		EPA 353.2	DJR	1	PASI-K
		SM 4500-CN-E	AJM	1	PASI-K
		SM 5310C	TJJ	1	PASI-G
60140509015	**MW-101_20130313**	EPA 200.7	JGP	4	PASI-K
		EPA 200.8	RJS	25	PASI-M
		EPA 200.8	RJS	23	PASI-M
		EPA 200.8	SMW	19	PASI-K
		EPA 245.1	TEM	1	PASI-M
		EPA 245.1	TEM	1	PASI-M
		EPA 245.1	TJT	1	PASI-K
		SM 2510B	DC1	1	
		Calculated	DC1	2	
		SM 2320B	DJR	3	PASI-K
		SM 2540C	JML	1	PASI-K
		SM 2540D	JML	1	PASI-K
		SM 4500-S-2 D	OL	1	PASI-K
		EPA 300.0	OL	2	PASI-K
		EPA 353.2	DJR	1	PASI-K
		SM 4500-CN-E	AJM	1	PASI-K
		SM 5310C	TJJ	1	PASI-G
60140509016	**MW-102_20130313**	EPA 200.7	JGP	4	PASI-K
		EPA 200.8	RJS	25	PASI-M
		EPA 200.8	RJS	23	PASI-M
		EPA 200.8	SMW	19	PASI-K

This report shall not be reproduced, except in full,
without the written consent of Pace Analytical Services, Inc..

Pace Analytical Services, Inc.
9608 Loiret Blvd.
Lenexa, KS 66219
(913)599-5665

SAMPLE ANALYTE COUNT

Project: MARCH 2013 RICO WATER SAMPLING
Pace Project No.: 60140509

Lab ID	Sample ID	Method	Analysts	Analytes Reported	Laboratory
		EPA 245.1	TEM	1	PASI-M
		EPA 245.1	TEM	1	PASI-M
		EPA 245.1	TJT	1	PASI-K
		SM 2510B	DC1	1	
		Calculated	DC1	2	
		SM 2320B	DJR	3	PASI-K
		SM 2540C	JML	1	PASI-K
		SM 2540D	JML	1	PASI-K
		SM 4500-S-2 D	OL	1	PASI-K
		EPA 300.0	OL	2	PASI-K
		EPA 353.2	DJR	1	PASI-K
		SM 4500-CN-E	AJM	1	PASI-K
		SM 5310C	TJJ	1	PASI-G
60140509017	**MW-103_20130313**	EPA 200.7	JGP	4	PASI-K
		EPA 200.8	RJS	25	PASI-M
		EPA 200.8	RJS	23	PASI-M
		EPA 200.8	SMW	19	PASI-K
		EPA 245.1	TEM	1	PASI-M
		EPA 245.1	TEM	1	PASI-M
		EPA 245.1	TJT	1	PASI-K
		SM 2510B	DC1	1	
		Calculated	DC1	2	
		SM 2320B	DJR	3	PASI-K
		SM 2540C	JML	1	PASI-K
		SM 2540D	JML	1	PASI-K
		SM 4500-S-2 D	OL	1	PASI-K
		EPA 300.0	OL	2	PASI-K
		EPA 353.2	DJR	1	PASI-K
		SM 4500-CN-E	AJM	1	PASI-K
		SM 5310C	TJJ	1	PASI-G
60140509018	**MW-104_20130313**	EPA 200.7	JGP	4	PASI-K
		EPA 200.8	RJS	25	PASI-M
		EPA 200.8	RJS	23	PASI-M
		EPA 200.8	SMW	19	PASI-K
		EPA 245.1	TEM	1	PASI-M
		EPA 245.1	TEM	1	PASI-M
		EPA 245.1	TJT	1	PASI-K

This report shall not be reproduced, except in full,
without the written consent of Pace Analytical Services, Inc..

Pace Analytical Services, Inc.
9608 Loiret Blvd.
Lenexa, KS 66219
(913)599-5665

SAMPLE ANALYTE COUNT

Project: MARCH 2013 RICO WATER SAMPLING
Pace Project No.: 60140509

Lab ID	Sample ID	Method	Analysts	Analytes Reported	Laboratory
		SM 2510B	DC1	1	
		Calculated	DC1	2	
		SM 2320B	DJR	3	PASI-K
		SM 2540C	JML	1	PASI-K
		SM 2540D	JML	1	PASI-K
		SM 4500-S-2 D	OL	1	PASI-K
		EPA 300.0	OL	2	PASI-K
		EPA 353.2	DJR	1	PASI-K
		SM 4500-CN-E	AJM	1	PASI-K
		SM 5310C	TJJ	1	PASI-G
60140509019	**DR-10_20130313**	EPA 200.7	JGP	4	PASI-K
		EPA 200.8	RJS	25	PASI-M
		EPA 200.8	RJS	23	PASI-M
		EPA 200.8	JGP, SMW	19	PASI-K
		EPA 245.1	TEM	1	PASI-M
		EPA 245.1	TEM	1	PASI-M
		EPA 245.1	TJT	1	PASI-K
		SM 2510B	DC1	1	
		Calculated	DC1	2	
		SM 2320B	DJR	3	PASI-K
		SM 2540C	JML	1	PASI-K
		SM 2540D	JML	1	PASI-K
		SM 4500-S-2 D	OL	1	PASI-K
		EPA 300.0	OL	2	PASI-K
		EPA 353.2	DJR	1	PASI-K
		SM 4500-CN-E	AJM	1	PASI-K
		SM 5310C	TJJ	1	PASI-G
60140509020	**MW-3 DEEP_20130313**	EPA 200.7	JGP	4	PASI-K
		EPA 200.8	RJS	25	PASI-M
		EPA 200.8	RJS	23	PASI-M
		EPA 200.8	JGP, SMW	19	PASI-K
		EPA 245.1	TEM	1	PASI-M
		EPA 245.1	TEM	1	PASI-M
		EPA 245.1	TJT	1	PASI-K
		SM 2510B	DC1	1	
		Calculated	DC1	2	
		SM 2320B	DJR	3	PASI-K

This report shall not be reproduced, except in full,
without the written consent of Pace Analytical Services, Inc..

Pace Analytical Services, Inc.
9608 Loiret Blvd.
Lenexa, KS 66219
(913)599-5665

SAMPLE ANALYTE COUNT

Project: MARCH 2013 RICO WATER SAMPLING
Pace Project No.: 60140509

Lab ID	Sample ID	Method	Analysts	Analytes Reported	Laboratory
		SM 2540C	JML	1	PASI-K
		SM 2540D	JML	1	PASI-K
		SM 4500-S-2 D	OL	1	PASI-K
		EPA 300.0	OL	2	PASI-K
		EPA 353.2	DJR	1	PASI-K
		SM 4500-CN-E	AJM	1	PASI-K
		SM 5310C	TJJ	1	PASI-G
60140509021	**MW-5 DEEP_20130313**	EPA 200.7	JGP	4	PASI-K
		EPA 200.8	TT3	25	PASI-M
		EPA 200.8	RJS	23	PASI-M
		EPA 200.8	JGP, SMW	19	PASI-K
		EPA 245.1	TEM	1	PASI-M
		EPA 245.1	TEM	1	PASI-M
		EPA 245.1	TJT	1	PASI-K
		SM 2510B	DC1	1	
		Calculated	DC1	2	
		SM 2320B	DJR	3	PASI-K
		SM 2540C	JML	1	PASI-K
		SM 2540D	JML	1	PASI-K
		SM 4500-S-2 D	OL	1	PASI-K
		EPA 300.0	OL	2	PASI-K
		EPA 353.2	DJR	1	PASI-K
		SM 4500-CN-E	AJM	1	PASI-K
		SM 5310C	TJJ	1	PASI-G
60140509022	**MW-5 SHALLOW_20130313**	EPA 200.7	JGP	4	PASI-K
		EPA 200.8	TT3	25	PASI-M
		EPA 200.8	RJS	23	PASI-M
		EPA 200.8	JGP, SMW	19	PASI-K
		EPA 245.1	TEM	1	PASI-M
		EPA 245.1	TEM	1	PASI-M
		EPA 245.1	TJT	1	PASI-K
		SM 2510B	DC1	1	
		Calculated	DC1	2	
		SM 2320B	DJR	3	PASI-K
		SM 2540C	JML	1	PASI-K
		SM 2540D	JML	1	PASI-K
		SM 4500-S-2 D	OL	1	PASI-K

This report shall not be reproduced, except in full,
without the written consent of Pace Analytical Services, Inc..

Pace Analytical Services, Inc.
9608 Loiret Blvd.
Lenexa, KS 66219
(913)599-5665

SAMPLE ANALYTE COUNT

Project: MARCH 2013 RICO WATER SAMPLING
Pace Project No.: 60140509

Lab ID	Sample ID	Method	Analysts	Analytes Reported	Laboratory
		EPA 300.0	OL	2	PASI-K
		EPA 353.2	DJR	1	PASI-K
		SM 4500-CN-E	AJM	1	PASI-K
		SM 5310C	TJJ	1	PASI-G
60140509023	**AT-2_20130313**	EPA 200.7	JGP	4	PASI-K
		EPA 200.8	TT3	25	PASI-M
		EPA 200.8	RJS	23	PASI-M
		EPA 200.8	JGP, SMW	19	PASI-K
		EPA 245.1	TEM	1	PASI-M
		EPA 245.1	TEM	1	PASI-M
		EPA 245.1	TJT	1	PASI-K
		SM 2510B	DC1	1	
		Calculated	DC1	2	
		SM 2320B	DJR	3	PASI-K
		SM 2540C	JML	1	PASI-K
		SM 2540D	JML	1	PASI-K
		SM 4500-S-2 D	OL	1	PASI-K
		EPA 300.0	OL	2	PASI-K
		EPA 353.2	DJR	1	PASI-K
		SM 4500-CN-E	AJM	1	PASI-K
		SM 5310C	TJJ	1	PASI-G
60140509024	**FB_20130313**	EPA 200.7	JGP	4	PASI-K
		EPA 200.8	TT3	25	PASI-M
		EPA 200.8	RJS	23	PASI-M
		EPA 200.8	JGP, SMW	19	PASI-K
		EPA 245.1	TEM	1	PASI-M
		EPA 245.1	TEM	1	PASI-M
		EPA 245.1	TJT	1	PASI-K
		SM 2510B	DC1	1	
		Calculated	DC1	2	
		SM 2320B	DJR	3	PASI-K
		SM 2540C	JML	1	PASI-K
		SM 2540D	JML	1	PASI-K
		SM 4500-S-2 D	OL	1	PASI-K
		EPA 300.0	OL	2	PASI-K
		EPA 353.2	DJR	1	PASI-K
		SM 4500-CN-E	AJM	1	PASI-K

This report shall not be reproduced, except in full,
without the written consent of Pace Analytical Services, Inc..

Pace Analytical Services, Inc.
9608 Loiret Blvd.
Lenexa, KS 66219
(913)599-5665

SAMPLE ANALYTE COUNT

Project: MARCH 2013 RICO WATER SAMPLING
Pace Project No.: 60140509

Lab ID	Sample ID	Method	Analysts	Analytes Reported	Laboratory
		SM 5310C	TJJ	1	PASI-G
60140509025	**GW-5_20130314**	EPA 200.7	JGP	4	PASI-K
		EPA 200.8	TT3	25	PASI-M
		EPA 200.8	RJS	23	PASI-M
		EPA 200.8	JGP, SMW	19	PASI-K
		EPA 245.1	TEM	1	PASI-M
		EPA 245.1	TEM	1	PASI-M
		EPA 245.1	TJT	1	PASI-K
		SM 2510B	DC1	1	
		Calculated	DC1	2	
		SM 2320B	DJR	3	PASI-K
		SM 2540C	JML	1	PASI-K
		SM 2540D	JML	1	PASI-K
		SM 4500-S-2 D	OL	1	PASI-K
		EPA 300.0	OL	2	PASI-K
		EPA 353.2	DJR	1	PASI-K
		SM 4500-CN-E	AJM	1	PASI-K
		SM 5310C	TJJ	1	PASI-G
60140509026	**MW-204_20130314**	EPA 200.7	JGP	4	PASI-K
		EPA 200.8	TT3	25	PASI-M
		EPA 200.8	RJS	23	PASI-M
		EPA 200.8	JGP, SMW	19	PASI-K
		EPA 245.1	TEM	1	PASI-M
		EPA 245.1	TEM	1	PASI-M
		EPA 245.1	TJT	1	PASI-K
		SM 2510B	DC1	1	
		Calculated	DC1	2	
		SM 2320B	DJR	3	PASI-K
		SM 2540C	JML	1	PASI-K
		SM 2540D	JML	1	PASI-K
		SM 4500-S-2 D	OL	1	PASI-K
		EPA 300.0	OL	2	PASI-K
		EPA 353.2	DJR	1	PASI-K
		SM 4500-CN-E	AJM	1	PASI-K
		SM 5310C	TJJ	1	PASI-G
60140509027	**GW-4_20130314**	EPA 200.7	JGP	4	PASI-K
		EPA 200.8	TT3	25	PASI-M

This report shall not be reproduced, except in full,
without the written consent of Pace Analytical Services, Inc..

Pace Analytical Services, Inc.
9608 Loiret Blvd.
Lenexa, KS 66219
(913)599-5665

SAMPLE ANALYTE COUNT

Project: MARCH 2013 RICO WATER SAMPLING
Pace Project No.: 60140509

Lab ID	Sample ID	Method	Analysts	Analytes Reported	Laboratory
		EPA 200.8	RJS	23	PASI-M
		EPA 200.8	JGP, SMW	19	PASI-K
		EPA 245.1	TEM	1	PASI-M
		EPA 245.1	TEM	1	PASI-M
		EPA 245.1	TJT	1	PASI-K
		SM 2510B	DC1	1	
		Calculated	DC1	2	
		SM 2320B	DJR	3	PASI-K
		SM 2540C	JML	1	PASI-K
		SM 2540D	JML	1	PASI-K
		SM 4500-S-2 D	OL	1	PASI-K
		EPA 300.0	OL	2	PASI-K
		EPA 353.2	DJR	1	PASI-K
		SM 4500-CN-E	AJM	1	PASI-K
		SM 5310C	TJJ	1	PASI-G
60140509028	**GW-3_20130313**	SM 2510B	DC1	1	
		Calculated	DC1	2	
		SM 2320B	DJR	3	PASI-K
		SM 2540C	JML	1	PASI-K
		SM 2540D	JML	1	PASI-K
		EPA 300.0	OL	2	PASI-K
		EPA 353.2	DJR	1	PASI-K
		SM 5310C	TJJ	1	PASI-G
60140509029	**MW-2 DEEP_20130313**	EPA 200.7	JGP	4	PASI-K
		EPA 200.8	TT3	25	PASI-M
		EPA 200.8	RJS	23	PASI-M
		EPA 200.8	JGP, SMW	19	PASI-K
		EPA 245.1	TEM	1	PASI-M
		EPA 245.1	TEM	1	PASI-M
		EPA 245.1	TJT	1	PASI-K
		SM 2510B	DC1	1	
		Calculated	DC1	2	
		SM 2320B	DJR	3	PASI-K
		SM 2540C	JML	1	PASI-K
		SM 2540D	JML	1	PASI-K
		SM 4500-S-2 D	OL	1	PASI-K
		EPA 300.0	OL	2	PASI-K

This report shall not be reproduced, except in full,
without the written consent of Pace Analytical Services, Inc..

Pace Analytical Services, Inc.
9608 Loiret Blvd.
Lenexa, KS 66219
(913)599-5665

SAMPLE ANALYTE COUNT

Project: MARCH 2013 RICO WATER SAMPLING
Pace Project No.: 60140509

Lab ID	Sample ID	Method	Analysts	Analytes Reported	Laboratory
		EPA 353.2	DJR	1	PASI-K
		SM 4500-CN-E	AJM	1	PASI-K
		SM 5310C	TJJ	1	PASI-G

This report shall not be reproduced, except in full,
without the written consent of Pace Analytical Services, Inc..

Pace Analytical Services, Inc.
9608 Loiret Blvd.
Lenexa, KS 66219
(913)599-5665

PROJECT NARRATIVE

Project: MARCH 2013 RICO WATER SAMPLING
Pace Project No.: 60140509

Method: **EPA 200.7**
Description: 200.7 Potentially Diss. Metals
Client: BP Anderson Engineering Company Inc.
Date: April 11, 2013

General Information:
28 samples were analyzed for EPA 200.7. All samples were received in acceptable condition with any exceptions noted below.

Hold Time:
The samples were analyzed within the method required hold times with any exceptions noted below.

Sample Preparation:
The samples were prepared in accordance with EPA 200.7 with any exceptions noted below.

Initial Calibrations (including MS Tune as applicable):
All criteria were within method requirements with any exceptions noted below.

Continuing Calibration:
All criteria were within method requirements with any exceptions noted below.

Method Blank:
All analytes were below the report limit in the method blank with any exceptions noted below.

QC Batch: MPRP/21897

B: Analyte was detected in the associated method blank.

- BLANK for HBN 283254 [MPRP/218 (Lab ID: 1155524)
  - Calcium, Dissolved
  - Magnesium, Dissolved

Laboratory Control Spike:
All laboratory control spike compounds were within QC limits with any exceptions noted below.

Matrix Spikes:
All percent recoveries and relative percent differences (RPDs) were within acceptance criteria with any exceptions noted below.

QC Batch: MPRP/21895

A matrix spike and matrix spike duplicate (MS/MSD) were performed on the following sample(s): 60140509002,60140509004

M1: Matrix spike recovery exceeded QC limits. Batch accepted based on laboratory control sample (LCS) recovery.

- MS (Lab ID: 1155517)
  - Calcium, Dissolved
- MS (Lab ID: 1155519)
  - Calcium, Dissolved
- MSD (Lab ID: 1155518)
  - Calcium, Dissolved

QC Batch: MPRP/21897

A matrix spike and matrix spike duplicate (MS/MSD) were performed on the following sample(s): 60140509020

M1: Matrix spike recovery exceeded QC limits. Batch accepted based on laboratory control sample (LCS) recovery.

- MSD (Lab ID: 1155527)

This report shall not be reproduced, except in full,
without the written consent of Pace Analytical Services, Inc..

Pace Analytical Services, Inc.
9608 Loiret Blvd.
Lenexa, KS 66219
(913)599-5665

PROJECT NARRATIVE

Project: MARCH 2013 RICO WATER SAMPLING
Pace Project No.: 60140509

Method: **EPA 200.7**
Description: 200.7 Potentially Diss. Metals
Client: BP Anderson Engineering Company Inc.
Date: April 11, 2013

QC Batch: MPRP/21897

A matrix spike and matrix spike duplicate (MS/MSD) were performed on the following sample(s): 60140509020

M1: Matrix spike recovery exceeded QC limits. Batch accepted based on laboratory control sample (LCS) recovery.

- Calcium, Dissolved

Additional Comments:

This report shall not be reproduced, except in full,
without the written consent of Pace Analytical Services, Inc..

Pace Analytical Services, Inc.
9608 Loiret Blvd.
Lenexa, KS 66219
(913)599-5665

PROJECT NARRATIVE

Project: MARCH 2013 RICO WATER SAMPLING
Pace Project No.: 60140509

Method: **EPA 200.8**
Description: 200.8 MET ICPMS
Client: BP Anderson Engineering Company Inc.
Date: April 11, 2013

General Information:
28 samples were analyzed for EPA 200.8. All samples were received in acceptable condition with any exceptions noted below.

Hold Time:
The samples were analyzed within the method required hold times with any exceptions noted below.

Sample Preparation:
The samples were prepared in accordance with EPA 200.8 with any exceptions noted below.

Initial Calibrations (including MS Tune as applicable):
All criteria were within method requirements with any exceptions noted below.

Continuing Calibration:
All criteria were within method requirements with any exceptions noted below.

Internal Standards:
All internal standards were within QC limits with any exceptions noted below.

Method Blank:
All analytes were below the report limit in the method blank with any exceptions noted below.

Laboratory Control Spike:
All laboratory control spike compounds were within QC limits with any exceptions noted below.

Matrix Spikes:
All percent recoveries and relative percent differences (RPDs) were within acceptance criteria with any exceptions noted below.

QC Batch: MPRP/38092

A matrix spike and matrix spike duplicate (MS/MSD) were performed on the following sample(s): 60140509021

M1: Matrix spike recovery exceeded QC limits. Batch accepted based on laboratory control sample (LCS) recovery.

- MS (Lab ID: 1394311)
  - Aluminum
  - Calcium
  - Iron
  - Lead
  - Magnesium
  - Manganese
  - Potassium
  - Silica
  - Sodium
  - Total Hardness by 2340B
  - Zinc
- MSD (Lab ID: 1394312)
  - Aluminum

This report shall not be reproduced, except in full,
without the written consent of Pace Analytical Services, Inc..

Pace Analytical Services, Inc.
9608 Loiret Blvd.
Lenexa, KS 66219
(913)599-5665

PROJECT NARRATIVE

Project: MARCH 2013 RICO WATER SAMPLING
Pace Project No.: 60140509

Method: **EPA 200.8**
Description: 200.8 MET ICPMS
Client: BP Anderson Engineering Company Inc.
Date: April 11, 2013

QC Batch: MPRP/38092

A matrix spike and matrix spike duplicate (MS/MSD) were performed on the following sample(s): 60140509021

M1: Matrix spike recovery exceeded QC limits. Batch accepted based on laboratory control sample (LCS) recovery.

- Calcium
- Iron
- Magnesium
- Manganese
- Potassium
- Silica
- Sodium
- Zinc

Additional Comments:

Analyte Comments:

QC Batch: MPRP/38091

E: Analyte concentration exceeded the calibration range. The reported result is estimated.

- MS (Lab ID: 1394307)
  - Calcium
  - Manganese
- MSD (Lab ID: 1394308)
  - Calcium
  - Manganese

QC Batch: MPRP/38092

E: Analyte concentration exceeded the calibration range. The reported result is estimated.

- MS (Lab ID: 1394311)
  - Calcium
  - Manganese
  - Zinc
- MSD (Lab ID: 1394312)
  - Calcium
  - Manganese
  - Zinc

This report shall not be reproduced, except in full,
without the written consent of Pace Analytical Services, Inc..

Pace Analytical Services, Inc.
9608 Loiret Blvd.
Lenexa, KS 66219
(913)599-5665

PROJECT NARRATIVE

Project: MARCH 2013 RICO WATER SAMPLING
Pace Project No.: 60140509

Method: **EPA 200.8**
Description: 200.8 MET ICPMS, Dissolved
Client: BP Anderson Engineering Company Inc.
Date: April 11, 2013

General Information:
28 samples were analyzed for EPA 200.8. All samples were received in acceptable condition with any exceptions noted below.

Hold Time:
The samples were analyzed within the method required hold times with any exceptions noted below.

Sample Preparation:
The samples were prepared in accordance with EPA 200.8 with any exceptions noted below.

Initial Calibrations (including MS Tune as applicable):
All criteria were within method requirements with any exceptions noted below.

Continuing Calibration:
All criteria were within method requirements with any exceptions noted below.

Internal Standards:
All internal standards were within QC limits with any exceptions noted below.

Method Blank:
All analytes were below the report limit in the method blank with any exceptions noted below.

Laboratory Control Spike:
All laboratory control spike compounds were within QC limits with any exceptions noted below.

Matrix Spikes:
All percent recoveries and relative percent differences (RPDs) were within acceptance criteria with any exceptions noted below.

Additional Comments:

Analyte Comments:

QC Batch: MPRP/38094

E: Analyte concentration exceeded the calibration range. The reported result is estimated.

- MS (Lab ID: 1394319)
  - Calcium, Dissolved
  - Manganese, Dissolved
- MSD (Lab ID: 1394320)
  - Calcium, Dissolved
  - Manganese, Dissolved

QC Batch: MPRP/38095

E: Analyte concentration exceeded the calibration range. The reported result is estimated.

- MS (Lab ID: 1394323)
  - Calcium, Dissolved

This report shall not be reproduced, except in full,
without the written consent of Pace Analytical Services, Inc..

Pace Analytical Services, Inc.
9608 Loiret Blvd.
Lenexa, KS 66219
(913)599-5665

PROJECT NARRATIVE

Project: MARCH 2013 RICO WATER SAMPLING
Pace Project No.: 60140509

Method: **EPA 200.8**
Description: 200.8 MET ICPMS, Dissolved
Client: BP Anderson Engineering Company Inc.
Date: April 11, 2013

Analyte Comments:

QC Batch: MPRP/38095

E: Analyte concentration exceeded the calibration range. The reported result is estimated.

- MSD (Lab ID: 1394324)
  - Calcium, Dissolved

This report shall not be reproduced, except in full,
without the written consent of Pace Analytical Services, Inc..

Pace Analytical Services, Inc.
9608 Loiret Blvd.
Lenexa, KS 66219
(913)599-5665

PROJECT NARRATIVE

Project: MARCH 2013 RICO WATER SAMPLING
Pace Project No.: 60140509

Method: **EPA 200.8**
Description: 200.8 Potentially Diss. Metals
Client: BP Anderson Engineering Company Inc.
Date: April 11, 2013

General Information:
28 samples were analyzed for EPA 200.8. All samples were received in acceptable condition with any exceptions noted below.

Hold Time:
The samples were analyzed within the method required hold times with any exceptions noted below.

Sample Preparation:
The samples were prepared in accordance with EPA 200.8 with any exceptions noted below.

Initial Calibrations (including MS Tune as applicable):
All criteria were within method requirements with any exceptions noted below.

Continuing Calibration:
All criteria were within method requirements with any exceptions noted below.

Internal Standards:
All internal standards were within QC limits with any exceptions noted below.

Method Blank:
All analytes were below the report limit in the method blank with any exceptions noted below.

QC Batch: MPRP/21894

B: Analyte was detected in the associated method blank.

- BLANK for HBN 283251 [MPRP/218 (Lab ID: 1155510)
  - Antimony, Dissolved
  - Chromium, Dissolved
  - Cobalt, Dissolved
  - Lead, Dissolved
  - Thallium, Dissolved

QC Batch: MPRP/21896

B: Analyte was detected in the associated method blank.

- BLANK for HBN 283253 [MPRP/218 (Lab ID: 1155520)
  - Chromium, Dissolved
  - Lead, Dissolved

Laboratory Control Spike:
All laboratory control spike compounds were within QC limits with any exceptions noted below.

Matrix Spikes:
All percent recoveries and relative percent differences (RPDs) were within acceptance criteria with any exceptions noted below.

This report shall not be reproduced, except in full,
without the written consent of Pace Analytical Services, Inc..

Pace Analytical Services, Inc.
9608 Loiret Blvd.
Lenexa, KS 66219
(913)599-5665

PROJECT NARRATIVE

Project: MARCH 2013 RICO WATER SAMPLING
Pace Project No.: 60140509

Method: **EPA 200.8**
Description: 200.8 Potentially Diss. Metals
Client: BP Anderson Engineering Company Inc.
Date: April 11, 2013

QC Batch: MPRP/21894

A matrix spike and matrix spike duplicate (MS/MSD) were performed on the following sample(s): 60140509001,60140509003

M1: Matrix spike recovery exceeded QC limits. Batch accepted based on laboratory control sample (LCS) recovery.

- MS (Lab ID: 1155512)
  - Beryllium, Dissolved

QC Batch: MPRP/21896

A matrix spike and matrix spike duplicate (MS/MSD) were performed on the following sample(s): 60140509019

M1: Matrix spike recovery exceeded QC limits. Batch accepted based on laboratory control sample (LCS) recovery.

- MSD (Lab ID: 1155523)
  - Arsenic, Dissolved

Additional Comments:

Analyte Comments:

QC Batch: MPRP/21896

D3: Sample was diluted due to the presence of high levels of non-target analytes or other matrix interference.

- DR-10_20130313 (Lab ID: 60140509019)
  - Silver, Dissolved
  - Molybdenum, Dissolved
  - Antimony, Dissolved
- MW-5 SHALLOW_20130313 (Lab ID: 60140509022)
  - Silver, Dissolved
  - Molybdenum, Dissolved
  - Antimony, Dissolved
  - Selenium, Dissolved

This report shall not be reproduced, except in full,
without the written consent of Pace Analytical Services, Inc..

Pace Analytical Services, Inc.
9608 Loiret Blvd.
Lenexa, KS 66219
(913)599-5665

PROJECT NARRATIVE

Project: MARCH 2013 RICO WATER SAMPLING
Pace Project No.: 60140509

Method: **EPA 245.1**
Description: 245.1 Mercury
Client: BP Anderson Engineering Company Inc.
Date: April 11, 2013

General Information:
28 samples were analyzed for EPA 245.1. All samples were received in acceptable condition with any exceptions noted below.

Hold Time:
The samples were analyzed within the method required hold times with any exceptions noted below.

Sample Preparation:
The samples were prepared in accordance with EPA 245.1 with any exceptions noted below.

Initial Calibrations (including MS Tune as applicable):
All criteria were within method requirements with any exceptions noted below.

Continuing Calibration:
All criteria were within method requirements with any exceptions noted below.

Method Blank:
All analytes were below the report limit in the method blank with any exceptions noted below.

Laboratory Control Spike:
All laboratory control spike compounds were within QC limits with any exceptions noted below.

Matrix Spikes:
All percent recoveries and relative percent differences (RPDs) were within acceptance criteria with any exceptions noted below.

Additional Comments:

This report shall not be reproduced, except in full,
without the written consent of Pace Analytical Services, Inc..

Pace Analytical Services, Inc.
9608 Loiret Blvd.
Lenexa, KS 66219
(913)599-5665

PROJECT NARRATIVE

Project: MARCH 2013 RICO WATER SAMPLING
Pace Project No.: 60140509

Method: **EPA 245.1**
Description: 245.1 Mercury, Dissolved
Client: BP Anderson Engineering Company Inc.
Date: April 11, 2013

General Information:
28 samples were analyzed for EPA 245.1. All samples were received in acceptable condition with any exceptions noted below.

Hold Time:
The samples were analyzed within the method required hold times with any exceptions noted below.

Sample Preparation:
The samples were prepared in accordance with EPA 245.1 with any exceptions noted below.

Initial Calibrations (including MS Tune as applicable):
All criteria were within method requirements with any exceptions noted below.

Continuing Calibration:
All criteria were within method requirements with any exceptions noted below.

Method Blank:
All analytes were below the report limit in the method blank with any exceptions noted below.

Laboratory Control Spike:
All laboratory control spike compounds were within QC limits with any exceptions noted below.

Matrix Spikes:
All percent recoveries and relative percent differences (RPDs) were within acceptance criteria with any exceptions noted below.

Additional Comments:

This report shall not be reproduced, except in full,
without the written consent of Pace Analytical Services, Inc..

Pace Analytical Services, Inc.
9608 Loiret Blvd.
Lenexa, KS 66219
(913)599-5665

PROJECT NARRATIVE

Project: MARCH 2013 RICO WATER SAMPLING
Pace Project No.: 60140509

Method: **EPA 245.1**
Description: 245.1 Potentially Diss Mercury
Client: BP Anderson Engineering Company Inc.
Date: April 11, 2013

General Information:
28 samples were analyzed for EPA 245.1. All samples were received in acceptable condition with any exceptions noted below.

Hold Time:
The samples were analyzed within the method required hold times with any exceptions noted below.

Sample Preparation:
The samples were prepared in accordance with EPA 245.1 with any exceptions noted below.

Initial Calibrations (including MS Tune as applicable):
All criteria were within method requirements with any exceptions noted below.

Continuing Calibration:
All criteria were within method requirements with any exceptions noted below.

Method Blank:
All analytes were below the report limit in the method blank with any exceptions noted below.

Laboratory Control Spike:
All laboratory control spike compounds were within QC limits with any exceptions noted below.

Matrix Spikes:
All percent recoveries and relative percent differences (RPDs) were within acceptance criteria with any exceptions noted below.

Additional Comments:

This report shall not be reproduced, except in full,
without the written consent of Pace Analytical Services, Inc..

Pace Analytical Services, Inc.
9608 Loiret Blvd.
Lenexa, KS 66219
(913)599-5665

PROJECT NARRATIVE

Project: MARCH 2013 RICO WATER SAMPLING
Pace Project No.: 60140509

Method: **SM 2510B**
Description: 2510B Specific Conductance
Client: BP Anderson Engineering Company Inc.
Date: April 11, 2013

General Information:
29 samples were analyzed for SM 2510B. All samples were received in acceptable condition with any exceptions noted below.

Hold Time:
The samples were analyzed within the method required hold times with any exceptions noted below.

Initial Calibrations (including MS Tune as applicable):
All criteria were within method requirements with any exceptions noted below.

Continuing Calibration:
All criteria were within method requirements with any exceptions noted below.

Internal Standards:
All internal standards were within QC limits with any exceptions noted below.

Surrogates:
All surrogates were within QC limits with any exceptions noted below.

Method Blank:
All analytes were below the report limit in the method blank with any exceptions noted below.

Laboratory Control Spike:
All laboratory control spike compounds were within QC limits with any exceptions noted below.

Matrix Spikes:
All percent recoveries and relative percent differences (RPDs) were within acceptance criteria with any exceptions noted below.

Duplicate Sample:
All duplicate sample results were within method acceptance criteria with any exceptions noted below.

Additional Comments:

This report shall not be reproduced, except in full,
without the written consent of Pace Analytical Services, Inc..

Pace Analytical Services, Inc.
9608 Loiret Blvd.
Lenexa, KS 66219
(913)599-5665

PROJECT NARRATIVE

Project: MARCH 2013 RICO WATER SAMPLING
Pace Project No.: 60140509

Method: **Calculated**
Description: Salinity
Client: BP Anderson Engineering Company Inc.
Date: April 11, 2013

General Information:
29 samples were analyzed for Calculated. All samples were received in acceptable condition with any exceptions noted below.

Hold Time:
The samples were analyzed within the method required hold times with any exceptions noted below.

Initial Calibrations (including MS Tune as applicable):
All criteria were within method requirements with any exceptions noted below.

Continuing Calibration:
All criteria were within method requirements with any exceptions noted below.

Internal Standards:
All internal standards were within QC limits with any exceptions noted below.

Surrogates:
All surrogates were within QC limits with any exceptions noted below.

Method Blank:
All analytes were below the report limit in the method blank with any exceptions noted below.

Laboratory Control Spike:
All laboratory control spike compounds were within QC limits with any exceptions noted below.

Matrix Spikes:
All percent recoveries and relative percent differences (RPDs) were within acceptance criteria with any exceptions noted below.

Additional Comments:

This report shall not be reproduced, except in full,
without the written consent of Pace Analytical Services, Inc..

Pace Analytical Services, Inc.
9608 Loiret Blvd.
Lenexa, KS 66219
(913)599-5665

PROJECT NARRATIVE

Project: MARCH 2013 RICO WATER SAMPLING
Pace Project No.: 60140509

Method: **SM 2320B**
Description: 2320B Alkalinity
Client: BP Anderson Engineering Company Inc.
Date: April 11, 2013

General Information:
29 samples were analyzed for SM 2320B. All samples were received in acceptable condition with any exceptions noted below.

Hold Time:
The samples were analyzed within the method required hold times with any exceptions noted below.

Method Blank:
All analytes were below the report limit in the method blank with any exceptions noted below.

Laboratory Control Spike:
All laboratory control spike compounds were within QC limits with any exceptions noted below.

Matrix Spikes:
All percent recoveries and relative percent differences (RPDs) were within acceptance criteria with any exceptions noted below.

Duplicate Sample:
All duplicate sample results were within method acceptance criteria with any exceptions noted below.

Additional Comments:

This report shall not be reproduced, except in full,
without the written consent of Pace Analytical Services, Inc..

Pace Analytical Services, Inc.
9608 Loiret Blvd.
Lenexa, KS 66219
(913)599-5665

PROJECT NARRATIVE

Project: MARCH 2013 RICO WATER SAMPLING
Pace Project No.: 60140509

Method: **SM 2540C**
Description: 2540C Total Dissolved Solids
Client: BP Anderson Engineering Company Inc.
Date: April 11, 2013

General Information:
29 samples were analyzed for SM 2540C. All samples were received in acceptable condition with any exceptions noted below.

Hold Time:
The samples were analyzed within the method required hold times with any exceptions noted below.

Method Blank:
All analytes were below the report limit in the method blank with any exceptions noted below.

Laboratory Control Spike:
All laboratory control spike compounds were within QC limits with any exceptions noted below.

Matrix Spikes:
All percent recoveries and relative percent differences (RPDs) were within acceptance criteria with any exceptions noted below.

Duplicate Sample:
All duplicate sample results were within method acceptance criteria with any exceptions noted below.

Additional Comments:

This report shall not be reproduced, except in full,
without the written consent of Pace Analytical Services, Inc..

Pace Analytical Services, Inc.
9608 Loiret Blvd.
Lenexa, KS 66219
(913)599-5665

PROJECT NARRATIVE

Project: MARCH 2013 RICO WATER SAMPLING
Pace Project No.: 60140509

Method: **SM 2540D**
Description: 2540D Total Suspended Solids
Client: BP Anderson Engineering Company Inc.
Date: April 11, 2013

General Information:
29 samples were analyzed for SM 2540D. All samples were received in acceptable condition with any exceptions noted below.

Hold Time:
The samples were analyzed within the method required hold times with any exceptions noted below.

Method Blank:
All analytes were below the report limit in the method blank with any exceptions noted below.

Laboratory Control Spike:
All laboratory control spike compounds were within QC limits with any exceptions noted below.

Matrix Spikes:
All percent recoveries and relative percent differences (RPDs) were within acceptance criteria with any exceptions noted below.

Duplicate Sample:
All duplicate sample results were within method acceptance criteria with any exceptions noted below.

Additional Comments:

This report shall not be reproduced, except in full,
without the written consent of Pace Analytical Services, Inc..

Pace Analytical Services, Inc.
9608 Loiret Blvd.
Lenexa, KS 66219
(913)599-5665

PROJECT NARRATIVE

Project: MARCH 2013 RICO WATER SAMPLING
Pace Project No.: 60140509

Method: **SM 4500-S-2 D**
Description: 4500S2D Sulfide, Total
Client: BP Anderson Engineering Company Inc.
Date: April 11, 2013

General Information:
28 samples were analyzed for SM 4500-S-2 D. All samples were received in acceptable condition with any exceptions noted below.

Hold Time:
The samples were analyzed within the method required hold times with any exceptions noted below.

Method Blank:
All analytes were below the report limit in the method blank with any exceptions noted below.

Laboratory Control Spike:
All laboratory control spike compounds were within QC limits with any exceptions noted below.

Matrix Spikes:
All percent recoveries and relative percent differences (RPDs) were within acceptance criteria with any exceptions noted below.

Additional Comments:

This report shall not be reproduced, except in full,
without the written consent of Pace Analytical Services, Inc..

Pace Analytical Services, Inc.
9608 Loiret Blvd.
Lenexa, KS 66219
(913)599-5665

PROJECT NARRATIVE

Project: MARCH 2013 RICO WATER SAMPLING
Pace Project No.: 60140509

Method: **EPA 300.0**
Description: 300.0 IC Anions 28 Days
Client: BP Anderson Engineering Company Inc.
Date: April 11, 2013

General Information:
29 samples were analyzed for EPA 300.0. All samples were received in acceptable condition with any exceptions noted below.

Hold Time:
The samples were analyzed within the method required hold times with any exceptions noted below.

Initial Calibrations (including MS Tune as applicable):
All criteria were within method requirements with any exceptions noted below.

Continuing Calibration:
All criteria were within method requirements with any exceptions noted below.

Method Blank:
All analytes were below the report limit in the method blank with any exceptions noted below.

Laboratory Control Spike:
All laboratory control spike compounds were within QC limits with any exceptions noted below.

Matrix Spikes:
All percent recoveries and relative percent differences (RPDs) were within acceptance criteria with any exceptions noted below.

QC Batch: WETA/24041

A matrix spike and matrix spike duplicate (MS/MSD) were performed on the following sample(s): 60140894001,60140894005

M1: Matrix spike recovery exceeded QC limits. Batch accepted based on laboratory control sample (LCS) recovery.

- MS (Lab ID: 1161093)
  - Sulfate

Additional Comments:

This report shall not be reproduced, except in full,
without the written consent of Pace Analytical Services, Inc..

Pace Analytical Services, Inc.
9608 Loiret Blvd.
Lenexa, KS 66219
(913)599-5665

PROJECT NARRATIVE

Project: MARCH 2013 RICO WATER SAMPLING
Pace Project No.: 60140509

Method: **EPA 353.2**
Description: 353.2 Nitrogen, NO2/NO3 pres.
Client: BP Anderson Engineering Company Inc.
Date: April 11, 2013

General Information:
29 samples were analyzed for EPA 353.2. All samples were received in acceptable condition with any exceptions noted below.

Hold Time:
The samples were analyzed within the method required hold times with any exceptions noted below.

Initial Calibrations (including MS Tune as applicable):
All criteria were within method requirements with any exceptions noted below.

Continuing Calibration:
All criteria were within method requirements with any exceptions noted below.

QC Batch: WETA/24004

CU: The continuing calibration for this compound is outside of Pace Analytical acceptance limits. Analyte presence below reporting limits in associated samples. Results unaffected by high bias.

- AT-2_20130313 (Lab ID: 60140509023)
  - Nitrogen, NO2 plus NO3
- FB_20130313 (Lab ID: 60140509024)
  - Nitrogen, NO2 plus NO3
- GW-5_20130314 (Lab ID: 60140509025)
  - Nitrogen, NO2 plus NO3
- MW-204_20130314 (Lab ID: 60140509026)
  - Nitrogen, NO2 plus NO3
- MW-5 DEEP_20130313 (Lab ID: 60140509021)
  - Nitrogen, NO2 plus NO3
- MW-5 SHALLOW_20130313 (Lab ID: 60140509022)
  - Nitrogen, NO2 plus NO3

Method Blank:
All analytes were below the report limit in the method blank with any exceptions noted below.

Laboratory Control Spike:
All laboratory control spike compounds were within QC limits with any exceptions noted below.

Matrix Spikes:
All percent recoveries and relative percent differences (RPDs) were within acceptance criteria with any exceptions noted below.

QC Batch: WETA/24004

A matrix spike and matrix spike duplicate (MS/MSD) were performed on the following sample(s): 60140509007,60140509009

M1: Matrix spike recovery exceeded QC limits. Batch accepted based on laboratory control sample (LCS) recovery.

- MS (Lab ID: 1159349)
  - Nitrogen, NO2 plus NO3
- MS (Lab ID: 1159351)
  - Nitrogen, NO2 plus NO3

This report shall not be reproduced, except in full,
without the written consent of Pace Analytical Services, Inc..

Pace Analytical Services, Inc.
9608 Loiret Blvd.
Lenexa, KS 66219
(913)599-5665

PROJECT NARRATIVE

Project: MARCH 2013 RICO WATER SAMPLING
Pace Project No.: 60140509

Method: **EPA 353.2**
Description: 353.2 Nitrogen, NO2/NO3 pres.
Client: BP Anderson Engineering Company Inc.
Date: April 11, 2013

Duplicate Sample:
All duplicate sample results were within method acceptance criteria with any exceptions noted below.

Additional Comments:

This report shall not be reproduced, except in full,
without the written consent of Pace Analytical Services, Inc..

Pace Analytical Services, Inc.
9608 Loiret Blvd.
Lenexa, KS 66219
(913)599-5665

PROJECT NARRATIVE

Project: MARCH 2013 RICO WATER SAMPLING
Pace Project No.: 60140509

Method: **SM 4500-CN-E**
Description: 4500CNE Cyanide, Total
Client: BP Anderson Engineering Company Inc.
Date: April 11, 2013

General Information:
28 samples were analyzed for SM 4500-CN-E. All samples were received in acceptable condition with any exceptions noted below.

Hold Time:
The samples were analyzed within the method required hold times with any exceptions noted below.

Initial Calibrations (including MS Tune as applicable):
All criteria were within method requirements with any exceptions noted below.

Continuing Calibration:
All criteria were within method requirements with any exceptions noted below.

Method Blank:
All analytes were below the report limit in the method blank with any exceptions noted below.

Laboratory Control Spike:
All laboratory control spike compounds were within QC limits with any exceptions noted below.

Matrix Spikes:
All percent recoveries and relative percent differences (RPDs) were within acceptance criteria with any exceptions noted below.

Duplicate Sample:
All duplicate sample results were within method acceptance criteria with any exceptions noted below.

Additional Comments:

This report shall not be reproduced, except in full,
without the written consent of Pace Analytical Services, Inc..

Pace Analytical Services, Inc.
9608 Loiret Blvd.
Lenexa, KS 66219
(913)599-5665

PROJECT NARRATIVE

Project: MARCH 2013 RICO WATER SAMPLING
Pace Project No.: 60140509

Method: **SM 5310C**
Description: 5310C TOC
Client: BP Anderson Engineering Company Inc.
Date: April 11, 2013

General Information:
29 samples were analyzed for SM 5310C. All samples were received in acceptable condition with any exceptions noted below.

Hold Time:
The samples were analyzed within the method required hold times with any exceptions noted below.

Initial Calibrations (including MS Tune as applicable):
All criteria were within method requirements with any exceptions noted below.

Continuing Calibration:
All criteria were within method requirements with any exceptions noted below.

Method Blank:
All analytes were below the report limit in the method blank with any exceptions noted below.

Laboratory Control Spike:
All laboratory control spike compounds were within QC limits with any exceptions noted below.

Matrix Spikes:
All percent recoveries and relative percent differences (RPDs) were within acceptance criteria with any exceptions noted below.

Additional Comments:

This data package has been reviewed for quality and completeness and is approved for release.

This report shall not be reproduced, except in full,
without the written consent of Pace Analytical Services, Inc..

Pace Analytical Services, Inc.
9608 Loiret Blvd.
Lenexa, KS 66219
(913)599-5665

ANALYTICAL RESULTS

Project: MARCH 2013 RICO WATER SAMPLING
Pace Project No.: 60140509

Sample: P13-102_20130312 **Lab ID: 60140509001** Collected: 03/12/13 15:25 Received: 03/15/13 10:10 Matrix: Water

Parameters	Results	Units	Report Limit	DF	Prepared	Analyzed	CAS No.	Qual
200.7 Potentially Diss. Metals	Analytical Method: EPA 200.7 Preparation Method: EPA 200.7							
Calcium, Dissolved	**323000**	ug/L	100	1	03/18/13 16:30	03/29/13 09:29	7440-70-2	
Magnesium, Dissolved	**45400**	ug/L	100	2	03/18/13 16:30	03/29/13 12:06	7439-95-4	
Potassium, Dissolved	**5200**	ug/L	500	1	03/18/13 16:30	03/29/13 09:29	7440-09-7	
Sodium, Dissolved	**13600**	ug/L	500	1	03/18/13 16:30	03/29/13 09:29	7440-23-5	
200.8 MET ICPMS	Analytical Method: EPA 200.8 Preparation Method: EPA 200.8							
Aluminum	**1320**	ug/L	4.0	1	03/20/13 08:33	03/22/13 03:26	7429-90-5	M6
Antimony	ND	ug/L	0.50	1	03/20/13 08:33	03/22/13 03:26	7440-36-0	
Arsenic	**3.0**	ug/L	0.50	1	03/20/13 08:33	03/22/13 03:26	7440-38-2	
Barium	**39.5**	ug/L	0.30	1	03/20/13 08:33	03/22/13 03:26	7440-39-3	
Beryllium	**0.36**	ug/L	0.20	1	03/20/13 08:33	03/22/13 03:26	7440-41-7	
Cadmium	**0.20**	ug/L	0.080	1	03/20/13 08:33	03/22/13 03:26	7440-43-9	
Calcium	**340000**	ug/L	500	25	03/20/13 08:33	03/22/13 03:52	7440-70-2	M6
Chromium	**2.7**	ug/L	0.50	1	03/20/13 08:33	03/22/13 03:26	7440-47-3	
Cobalt	**13.1**	ug/L	0.50	1	03/20/13 08:33	03/22/13 03:26	7440-48-4	
Copper	**6.7**	ug/L	0.50	1	03/20/13 08:33	03/22/13 03:26	7440-50-8	
Iron	**4030**	ug/L	50.0	1	03/20/13 08:33	03/22/13 03:26	7439-89-6	
Lead	**7.2**	ug/L	0.10	1	03/20/13 08:33	03/22/13 03:26	7439-92-1	
Magnesium	**50600**	ug/L	25.0	5	03/20/13 08:33	03/22/13 03:48	7439-95-4	M6
Manganese	**25100**	ug/L	50.0	100	03/20/13 08:33	03/22/13 15:45	7439-96-5	M6
Molybdenum	**4.9**	ug/L	0.50	1	03/20/13 08:33	03/22/13 03:26	7439-98-7	
Nickel	**6.2**	ug/L	0.50	1	03/20/13 08:33	03/22/13 03:26	7440-02-0	
Potassium	**5480**	ug/L	20.0	1	03/20/13 08:33	03/22/13 03:26	7440-09-7	
Selenium	ND	ug/L	0.50	1	03/20/13 08:33	03/22/13 03:26	7782-49-2	
Silica	**27100**	ug/L	1340	25	03/20/13 08:33	03/22/13 03:52	7631-86-9	M6
Silver	ND	ug/L	0.50	1	03/20/13 08:33	03/22/13 03:26	7440-22-4	
Sodium	**13400**	ug/L	50.0	1	03/20/13 08:33	03/22/13 03:26	7440-23-5	
Thallium	ND	ug/L	0.10	1	03/20/13 08:33	03/22/13 03:26	7440-28-0	
Total Hardness by 2340B	**1060000**	ug/L	1780	25	03/20/13 08:33	03/22/13 03:52		M6
Vanadium	**2.8**	ug/L	0.10	1	03/20/13 08:33	03/22/13 03:26	7440-62-2	
Zinc	**88.4**	ug/L	5.0	1	03/20/13 08:33	03/22/13 03:26	7440-66-6	
200.8 MET ICPMS, Dissolved	Analytical Method: EPA 200.8 Preparation Method: EPA 200.8							
Aluminum, Dissolved	**59.7**	ug/L	4.0	1	03/20/13 08:32	03/22/13 21:13	7429-90-5	M6
Antimony, Dissolved	ND	ug/L	0.50	1	03/20/13 08:32	03/22/13 21:13	7440-36-0	
Arsenic, Dissolved	**0.74**	ug/L	0.50	1	03/20/13 08:32	03/22/13 21:13	7440-38-2	
Barium, Dissolved	**19.1**	ug/L	0.30	1	03/20/13 08:32	03/22/13 21:13	7440-39-3	
Beryllium, Dissolved	**0.22**	ug/L	0.20	1	03/20/13 08:32	03/22/13 21:13	7440-41-7	
Cadmium, Dissolved	**0.093**	ug/L	0.080	1	03/20/13 08:32	03/22/13 21:13	7440-43-9	
Calcium, Dissolved	**360000**	ug/L	500	25	03/20/13 08:32	03/22/13 21:39	7440-70-2	M6
Chromium, Dissolved	**0.58**	ug/L	0.50	1	03/20/13 08:32	03/22/13 21:13	7440-47-3	
Cobalt, Dissolved	**12.7**	ug/L	0.50	1	03/20/13 08:32	03/22/13 21:13	7440-48-4	
Copper, Dissolved	**0.89**	ug/L	0.50	1	03/20/13 08:32	03/22/13 21:13	7440-50-8	
Iron, Dissolved	**1680**	ug/L	50.0	1	03/20/13 08:32	03/22/13 21:13	7439-89-6	
Lead, Dissolved	**0.24**	ug/L	0.10	1	03/20/13 08:32	03/22/13 21:13	7439-92-1	
Magnesium, Dissolved	**50400**	ug/L	25.0	5	03/20/13 08:32	03/22/13 21:34	7439-95-4	M6

This report shall not be reproduced, except in full,
without the written consent of Pace Analytical Services, Inc..

Pace Analytical Services, Inc.
9608 Loiret Blvd.
Lenexa, KS 66219
(913)599-5665

ANALYTICAL RESULTS

Project: MARCH 2013 RICO WATER SAMPLING
Pace Project No.: 60140509

Sample: P13-102_20130312 **Lab ID: 60140509001** Collected: 03/12/13 15:25 Received: 03/15/13 10:10 Matrix: Water

Parameters	Results	Units	Report Limit	DF	Prepared	Analyzed	CAS No.	Qual
200.8 MET ICPMS, Dissolved	Analytical Method: EPA 200.8 Preparation Method: EPA 200.8							
Manganese, Dissolved	**25300**	ug/L	100	200	03/20/13 08:32	03/25/13 14:18	7439-96-5	M6
Molybdenum, Dissolved	**4.4**	ug/L	0.50	1	03/20/13 08:32	03/22/13 21:13	7439-98-7	
Nickel, Dissolved	**5.4**	ug/L	0.50	1	03/20/13 08:32	03/22/13 21:13	7440-02-0	
Potassium, Dissolved	**5340**	ug/L	20.0	1	03/20/13 08:32	03/22/13 21:13	7440-09-7	
Selenium, Dissolved	ND	ug/L	0.50	1	03/20/13 08:32	03/22/13 21:13	7782-49-2	
Silver, Dissolved	ND	ug/L	0.50	1	03/20/13 08:32	03/22/13 21:13	7440-22-4	
Sodium, Dissolved	**13800**	ug/L	50.0	1	03/20/13 08:32	03/22/13 21:13	7440-23-5	
Thallium, Dissolved	ND	ug/L	0.10	1	03/20/13 08:32	03/22/13 21:13	7440-28-0	
Vanadium, Dissolved	ND	ug/L	0.10	1	03/20/13 08:32	03/22/13 21:13	7440-62-2	
Zinc, Dissolved	**78.2**	ug/L	5.0	1	03/20/13 08:32	03/22/13 21:13	7440-66-6	
200.8 Potentially Diss. Metals	Analytical Method: EPA 200.8 Preparation Method: EPA 200.8							
Aluminum, Dissolved	**211**	ug/L	50.0	1	03/18/13 16:30	03/29/13 11:41	7429-90-5	
Antimony, Dissolved	**0.14J**	ug/L	1.0	1	03/18/13 16:30	03/29/13 11:41	7440-36-0	B
Arsenic, Dissolved	**1.1**	ug/L	1.0	1	03/18/13 16:30	03/29/13 11:41	7440-38-2	
Barium, Dissolved	**22.1**	ug/L	1.0	1	03/18/13 16:30	03/29/13 11:41	7440-39-3	
Beryllium, Dissolved	**0.090J**	ug/L	0.50	1	03/18/13 16:30	03/29/13 11:41	7440-41-7	M1
Cadmium, Dissolved	**0.11J**	ug/L	0.50	1	03/18/13 16:30	03/29/13 11:41	7440-43-9	
Chromium, Dissolved	**1.6**	ug/L	1.0	1	03/18/13 16:30	03/29/13 11:41	7440-47-3	B
Cobalt, Dissolved	**10.9**	ug/L	1.0	1	03/18/13 16:30	03/29/13 11:41	7440-48-4	
Copper, Dissolved	**36.3**	ug/L	1.0	1	03/18/13 16:30	03/29/13 11:41	7440-50-8	
Iron, Dissolved	**1990**	ug/L	50.0	1	03/18/13 16:30	03/29/13 11:41	7439-89-6	
Lead, Dissolved	**5.6**	ug/L	1.0	1	03/18/13 16:30	03/29/13 11:41	7439-92-1	
Manganese, Dissolved	**23100**	ug/L	50.0	50	03/18/13 16:30	04/05/13 13:08	7439-96-5	M6
Molybdenum, Dissolved	**3.7**	ug/L	1.0	1	03/18/13 16:30	03/29/13 11:41	7439-98-7	
Nickel, Dissolved	**3.0**	ug/L	1.0	1	03/18/13 16:30	03/29/13 11:41	7440-02-0	
Selenium, Dissolved	ND	ug/L	1.0	1	03/18/13 16:30	03/29/13 11:41	7782-49-2	
Silver, Dissolved	ND	ug/L	0.50	1	03/18/13 16:30	03/29/13 11:41	7440-22-4	
Thallium, Dissolved	**0.38J**	ug/L	1.0	1	03/18/13 16:30	03/29/13 11:41	7440-28-0	B
Vanadium, Dissolved	ND	ug/L	1.0	1	03/18/13 16:30	03/29/13 11:41	7440-62-2	
Zinc, Dissolved	**88.5**	ug/L	10.0	1	03/18/13 16:30	03/29/13 11:41	7440-66-6	
245.1 Mercury	Analytical Method: EPA 245.1 Preparation Method: EPA 245.1							
Mercury	ND	ug/L	0.20	1	03/20/13 15:28	03/27/13 11:18	7439-97-6	
245.1 Mercury, Dissolved	Analytical Method: EPA 245.1 Preparation Method: EPA 245.1							
Mercury, Dissolved	ND	ug/L	0.20	1	03/20/13 15:36	03/26/13 09:10	7439-97-6	
245.1 Potentially Diss Mercury	Analytical Method: EPA 245.1 Preparation Method: EPA 245.1							
Mercury, Dissolved	ND	ug/L	0.20	1	03/20/13 10:10	03/20/13 14:41	7439-97-6	
2510B Specific Conductance	Analytical Method: SM 2510B							
Specific Conductance	**1790**	umhos/cm	10.0	1		03/21/13 12:47		
Salinity	Analytical Method: Calculated							
Salinity (as dissolved solids)	**1150**	mg/L	6.4	1		03/25/13 16:02		

REPORT OF LABORATORY ANALYSIS

This report shall not be reproduced, except in full,
without the written consent of Pace Analytical Services, Inc..

Pace Analytical Services, Inc.
9608 Loiret Blvd.
Lenexa, KS 66219
(913)599-5665

ANALYTICAL RESULTS

Project: MARCH 2013 RICO WATER SAMPLING
Pace Project No.: 60140509

Sample: P13-102_20130312 **Lab ID: 60140509001** Collected: 03/12/13 15:25 Received: 03/15/13 10:10 Matrix: Water

Parameters	Results	Units	Report Limit	DF	Prepared	Analyzed	CAS No.	Qual
Salinity	Analytical Method: Calculated							
Salinity (as seawater)	**0.91**	PSU	0.014	1		03/25/13 16:02		
2320B Alkalinity	Analytical Method: SM 2320B							
Alkalinity,Bicarbonate (CaCO3)	**160**	mg/L	20.0	1		03/19/13 08:12		
Alkalinity, Carbonate (CaCO3)	ND	mg/L	20.0	1		03/19/13 08:12		
Alkalinity, Total as CaCO3	**160**	mg/L	20.0	1		03/19/13 08:12		
2540C Total Dissolved Solids	Analytical Method: SM 2540C							
Total Dissolved Solids	**1360**	mg/L	5.0	1		03/19/13 16:59		
2540D Total Suspended Solids	Analytical Method: SM 2540D							
Total Suspended Solids	**44.0**	mg/L	5.0	1		03/18/13 14:17		
4500S2D Sulfide, Total	Analytical Method: SM 4500-S-2 D							
Sulfide, Total	ND	mg/L	0.050	1		03/19/13 02:47	18496-25-8	
300.0 IC Anions 28 Days	Analytical Method: EPA 300.0							
Chloride	**1.3**	mg/L	1.0	1		03/27/13 09:36	16887-00-6	
Sulfate	**973**	mg/L	100	100		03/27/13 10:29	14808-79-8	
353.2 Nitrogen, NO2/NO3 pres.	Analytical Method: EPA 353.2							
Nitrogen, NO2 plus NO3	ND	mg/L	0.10	1		03/25/13 15:21		
4500CNE Cyanide, Total	Analytical Method: SM 4500-CN-E							
Cyanide	**0.0094**	mg/L	0.0050	1		03/20/13 14:46	57-12-5	
5310C TOC	Analytical Method: SM 5310C							
Total Organic Carbon	ND	mg/L	0.50	1		03/22/13 15:54	7440-44-0	

This report shall not be reproduced, except in full,
without the written consent of Pace Analytical Services, Inc..

Pace Analytical Services, Inc.
9608 Loiret Blvd.
Lenexa, KS 66219
(913)599-5665

ANALYTICAL RESULTS

Project: MARCH 2013 RICO WATER SAMPLING
Pace Project No.: 60140509

Sample: P13-103_20130313 **Lab ID: 60140509002** Collected: 03/12/13 15:46 Received: 03/15/13 10:10 Matrix: Water

Parameters	Results	Units	Report Limit	DF	Prepared	Analyzed	CAS No.	Qual
200.7 Potentially Diss. Metals	Analytical Method: EPA 200.7 Preparation Method: EPA 200.7							
Calcium, Dissolved	**242000**	ug/L	100	1	03/18/13 16:30	03/29/13 09:31	7440-70-2	M1
Magnesium, Dissolved	**26900**	ug/L	50.0	1	03/18/13 16:30	03/29/13 09:31	7439-95-4	
Potassium, Dissolved	**4000**	ug/L	500	1	03/18/13 16:30	03/29/13 09:31	7440-09-7	
Sodium, Dissolved	**9300**	ug/L	500	1	03/18/13 16:30	03/29/13 09:31	7440-23-5	
200.8 MET ICPMS	Analytical Method: EPA 200.8 Preparation Method: EPA 200.8							
Aluminum	**12000**	ug/L	4.0	1	03/20/13 08:33	03/22/13 02:29	7429-90-5	
Antimony	**1.5**	ug/L	0.50	1	03/20/13 08:33	03/22/13 02:29	7440-36-0	
Arsenic	**108**	ug/L	0.50	1	03/20/13 08:33	03/22/13 02:29	7440-38-2	
Barium	**214**	ug/L	0.30	1	03/20/13 08:33	03/22/13 02:29	7440-39-3	
Beryllium	**1.3**	ug/L	0.20	1	03/20/13 08:33	03/22/13 02:29	7440-41-7	
Cadmium	**13.1**	ug/L	0.080	1	03/20/13 08:33	03/22/13 02:29	7440-43-9	
Calcium	**275000**	ug/L	400	20	03/20/13 08:33	03/22/13 02:35	7440-70-2	
Chromium	**19.9**	ug/L	0.50	1	03/20/13 08:33	03/22/13 02:29	7440-47-3	
Cobalt	**13.6**	ug/L	0.50	1	03/20/13 08:33	03/22/13 02:29	7440-48-4	
Copper	**769**	ug/L	10.0	20	03/20/13 08:33	03/22/13 02:35	7440-50-8	
Iron	**108000**	ug/L	1000	20	03/20/13 08:33	03/22/13 02:35	7439-89-6	
Lead	**2700**	ug/L	2.0	20	03/20/13 08:33	03/22/13 02:35	7439-92-1	
Magnesium	**33100**	ug/L	100	20	03/20/13 08:33	03/22/13 02:35	7439-95-4	
Manganese	**2910**	ug/L	10.0	20	03/20/13 08:33	03/22/13 02:35	7439-96-5	
Molybdenum	**14.6**	ug/L	0.50	1	03/20/13 08:33	03/22/13 02:29	7439-98-7	
Nickel	**22.3**	ug/L	0.50	1	03/20/13 08:33	03/22/13 02:29	7440-02-0	
Potassium	**7060**	ug/L	20.0	1	03/20/13 08:33	03/22/13 02:29	7440-09-7	
Selenium	**12.8**	ug/L	0.50	1	03/20/13 08:33	03/22/13 02:29	7782-49-2	
Silica	**65500**	ug/L	1070	20	03/20/13 08:33	03/22/13 02:35	7631-86-9	
Silver	**20.8**	ug/L	0.50	1	03/20/13 08:33	03/22/13 02:29	7440-22-4	
Sodium	**10200**	ug/L	50.0	1	03/20/13 08:33	03/22/13 02:29	7440-23-5	
Thallium	**1.2**	ug/L	0.10	1	03/20/13 08:33	03/22/13 02:29	7440-28-0	
Total Hardness by 2340B	**824000**	ug/L	1420	20	03/20/13 08:33	03/22/13 02:35		
Vanadium	**19.3**	ug/L	0.10	1	03/20/13 08:33	03/22/13 02:29	7440-62-2	
Zinc	**2050**	ug/L	100	20	03/20/13 08:33	03/22/13 02:35	7440-66-6	
200.8 MET ICPMS, Dissolved	Analytical Method: EPA 200.8 Preparation Method: EPA 200.8							
Aluminum, Dissolved	**26.0**	ug/L	4.0	1	03/20/13 08:32	03/22/13 17:21	7429-90-5	
Antimony, Dissolved	ND	ug/L	0.50	1	03/20/13 08:32	03/22/13 17:21	7440-36-0	
Arsenic, Dissolved	**40.1**	ug/L	0.50	1	03/20/13 08:32	03/22/13 17:21	7440-38-2	
Barium, Dissolved	**19.6**	ug/L	0.30	1	03/20/13 08:32	03/22/13 17:21	7440-39-3	
Beryllium, Dissolved	ND	ug/L	0.20	1	03/20/13 08:32	03/22/13 17:21	7440-41-7	
Cadmium, Dissolved	**0.12**	ug/L	0.080	1	03/20/13 08:32	03/22/13 17:21	7440-43-9	
Calcium, Dissolved	**266000**	ug/L	400	20	03/20/13 08:32	03/22/13 17:25	7440-70-2	
Chromium, Dissolved	ND	ug/L	0.50	1	03/20/13 08:32	03/22/13 17:21	7440-47-3	
Cobalt, Dissolved	**1.7**	ug/L	0.50	1	03/20/13 08:32	03/22/13 17:21	7440-48-4	
Copper, Dissolved	**1.7**	ug/L	0.50	1	03/20/13 08:32	03/22/13 17:21	7440-50-8	
Iron, Dissolved	**11900**	ug/L	50.0	1	03/20/13 08:32	03/22/13 17:21	7439-89-6	
Lead, Dissolved	**5.1**	ug/L	0.10	1	03/20/13 08:32	03/22/13 17:21	7439-92-1	
Magnesium, Dissolved	**28300**	ug/L	100	20	03/20/13 08:32	03/22/13 17:25	7439-95-4	

This report shall not be reproduced, except in full,
without the written consent of Pace Analytical Services, Inc..

Pace Analytical Services, Inc.
9608 Loiret Blvd.
Lenexa, KS 66219
(913)599-5665

ANALYTICAL RESULTS

Project: MARCH 2013 RICO WATER SAMPLING
Pace Project No.: 60140509

Sample: P13-103_20130313 **Lab ID: 60140509002** Collected: 03/12/13 15:46 Received: 03/15/13 10:10 Matrix: Water

Parameters	Results	Units	Report Limit	DF	Prepared	Analyzed	CAS No.	Qual
200.8 MET ICPMS, Dissolved	Analytical Method: EPA 200.8 Preparation Method: EPA 200.8							
Manganese, Dissolved	**2460**	ug/L	10.0	20	03/20/13 08:32	03/22/13 17:25	7439-96-5	
Molybdenum, Dissolved	**7.8**	ug/L	0.50	1	03/20/13 08:32	03/22/13 17:21	7439-98-7	
Nickel, Dissolved	**2.3**	ug/L	0.50	1	03/20/13 08:32	03/22/13 17:21	7440-02-0	
Potassium, Dissolved	**4060**	ug/L	20.0	1	03/20/13 08:32	03/22/13 17:21	7440-09-7	
Selenium, Dissolved	ND	ug/L	0.50	1	03/20/13 08:32	03/22/13 17:21	7782-49-2	
Silver, Dissolved	ND	ug/L	0.50	1	03/20/13 08:32	03/22/13 17:21	7440-22-4	
Sodium, Dissolved	**9900**	ug/L	50.0	1	03/20/13 08:32	03/22/13 17:21	7440-23-5	
Thallium, Dissolved	ND	ug/L	0.10	1	03/20/13 08:32	03/22/13 17:21	7440-28-0	
Vanadium, Dissolved	**0.10**	ug/L	0.10	1	03/20/13 08:32	03/22/13 17:21	7440-62-2	
Zinc, Dissolved	**127**	ug/L	5.0	1	03/20/13 08:32	03/22/13 17:21	7440-66-6	
200.8 Potentially Diss. Metals	Analytical Method: EPA 200.8 Preparation Method: EPA 200.8							
Aluminum, Dissolved	**2140**	ug/L	50.0	1	03/18/13 16:30	03/29/13 11:58	7429-90-5	
Antimony, Dissolved	**0.42J**	ug/L	1.0	1	03/18/13 16:30	03/29/13 11:58	7440-36-0	B
Arsenic, Dissolved	**70.7**	ug/L	1.0	1	03/18/13 16:30	03/29/13 11:58	7440-38-2	
Barium, Dissolved	**28.3**	ug/L	1.0	1	03/18/13 16:30	03/29/13 11:58	7440-39-3	
Beryllium, Dissolved	**0.48J**	ug/L	0.50	1	03/18/13 16:30	03/29/13 11:58	7440-41-7	
Cadmium, Dissolved	**6.0**	ug/L	0.50	1	03/18/13 16:30	03/29/13 11:58	7440-43-9	
Chromium, Dissolved	**6.3**	ug/L	1.0	1	03/18/13 16:30	03/29/13 11:58	7440-47-3	
Cobalt, Dissolved	**3.5**	ug/L	1.0	1	03/18/13 16:30	03/29/13 11:58	7440-48-4	
Copper, Dissolved	**241**	ug/L	1.0	1	03/18/13 16:30	03/29/13 11:58	7440-50-8	
Iron, Dissolved	**22900**	ug/L	50.0	1	03/18/13 16:30	03/29/13 11:58	7439-89-6	
Lead, Dissolved	**1750**	ug/L	2.0	2	03/18/13 16:30	04/05/13 11:24	7439-92-1	
Manganese, Dissolved	**2660**	ug/L	1.0	1	03/18/13 16:30	03/29/13 11:58	7439-96-5	
Molybdenum, Dissolved	**4.7**	ug/L	1.0	1	03/18/13 16:30	03/29/13 11:58	7439-98-7	
Nickel, Dissolved	**4.9**	ug/L	1.0	1	03/18/13 16:30	03/29/13 11:58	7440-02-0	
Selenium, Dissolved	**1.1**	ug/L	1.0	1	03/18/13 16:30	03/29/13 11:58	7782-49-2	
Silver, Dissolved	**0.15J**	ug/L	0.50	1	03/18/13 16:30	03/29/13 11:58	7440-22-4	
Thallium, Dissolved	**0.64J**	ug/L	2.0	2	03/18/13 16:30	04/05/13 11:24	7440-28-0	B
Vanadium, Dissolved	**3.9**	ug/L	1.0	1	03/18/13 16:30	03/29/13 11:58	7440-62-2	
Zinc, Dissolved	**881**	ug/L	10.0	1	03/18/13 16:30	03/29/13 11:58	7440-66-6	
245.1 Mercury	Analytical Method: EPA 245.1 Preparation Method: EPA 245.1							
Mercury	ND	ug/L	0.20	1	03/20/13 15:28	03/27/13 11:21	7439-97-6	
245.1 Mercury, Dissolved	Analytical Method: EPA 245.1 Preparation Method: EPA 245.1							
Mercury, Dissolved	ND	ug/L	0.20	1	03/20/13 15:36	03/26/13 09:12	7439-97-6	
245.1 Potentially Diss Mercury	Analytical Method: EPA 245.1 Preparation Method: EPA 245.1							
Mercury, Dissolved	ND	ug/L	0.20	1	03/20/13 10:10	03/20/13 14:43	7439-97-6	
2510B Specific Conductance	Analytical Method: SM 2510B							
Specific Conductance	**1380**	umhos/cm	10.0	1		03/21/13 12:51		
Salinity	Analytical Method: Calculated							
Salinity (as dissolved solids)	**881**	mg/L	6.4	1		03/25/13 16:02		

REPORT OF LABORATORY ANALYSIS

This report shall not be reproduced, except in full,
without the written consent of Pace Analytical Services, Inc..

Pace Analytical Services, Inc.
9608 Loiret Blvd.
Lenexa, KS 66219
(913)599-5665

ANALYTICAL RESULTS

Project: MARCH 2013 RICO WATER SAMPLING
Pace Project No.: 60140509

Sample: P13-103_20130313 **Lab ID: 60140509002** Collected: 03/12/13 15:46 Received: 03/15/13 10:10 Matrix: Water

Parameters	Results	Units	Report Limit	DF	Prepared	Analyzed	CAS No.	Qual
Salinity	Analytical Method: Calculated							
Salinity (as seawater)	**0.69**	PSU	0.014	1		03/25/13 16:02		
2320B Alkalinity	Analytical Method: SM 2320B							
Alkalinity,Bicarbonate (CaCO3)	**127**	mg/L	20.0	1		03/19/13 08:17		
Alkalinity, Carbonate (CaCO3)	ND	mg/L	20.0	1		03/19/13 08:17		
Alkalinity, Total as CaCO3	**127**	mg/L	20.0	1		03/19/13 08:17		
2540C Total Dissolved Solids	Analytical Method: SM 2540C							
Total Dissolved Solids	**1180**	mg/L	5.0	1		03/19/13 16:59		
2540D Total Suspended Solids	Analytical Method: SM 2540D							
Total Suspended Solids	**336**	mg/L	5.0	1		03/18/13 14:17		
4500S2D Sulfide, Total	Analytical Method: SM 4500-S-2 D							
Sulfide, Total	ND	mg/L	0.050	1		03/19/13 02:41	18496-25-8	
300.0 IC Anions 28 Days	Analytical Method: EPA 300.0							
Chloride	**1.0**	mg/L	1.0	1		03/27/13 11:57	16887-00-6	
Sulfate	**736**	mg/L	100	100		03/27/13 12:15	14808-79-8	
353.2 Nitrogen, NO2/NO3 pres.	Analytical Method: EPA 353.2							
Nitrogen, NO2 plus NO3	ND	mg/L	0.10	1		03/25/13 15:22		
4500CNE Cyanide, Total	Analytical Method: SM 4500-CN-E							
Cyanide	ND	mg/L	0.0050	1		03/20/13 14:51	57-12-5	
5310C TOC	Analytical Method: SM 5310C							
Total Organic Carbon	**0.80**	mg/L	0.50	1		03/22/13 16:12	7440-44-0	

This report shall not be reproduced, except in full,
without the written consent of Pace Analytical Services, Inc..

Pace Analytical Services, Inc.
9608 Loiret Blvd.
Lenexa, KS 66219
(913)599-5665

ANALYTICAL RESULTS

Project: MARCH 2013 RICO WATER SAMPLING
Pace Project No.: 60140509

Sample: MW-1 DEEP_20130312 **Lab ID: 60140509003** Collected: 03/12/13 15:30 Received: 03/15/13 10:10 Matrix: Water

Parameters	Results	Units	Report Limit	DF	Prepared	Analyzed	CAS No.	Qual
200.7 Potentially Diss. Metals	Analytical Method: EPA 200.7 Preparation Method: EPA 200.7							
Calcium, Dissolved	**211000**	ug/L	100	1	03/18/13 16:30	03/29/13 09:38	7440-70-2	
Magnesium, Dissolved	**18000**	ug/L	50.0	1	03/18/13 16:30	03/29/13 09:38	7439-95-4	
Potassium, Dissolved	**9790**	ug/L	500	1	03/18/13 16:30	03/29/13 09:38	7440-09-7	
Sodium, Dissolved	**11000**	ug/L	500	1	03/18/13 16:30	03/29/13 09:38	7440-23-5	
200.8 MET ICPMS	Analytical Method: EPA 200.8 Preparation Method: EPA 200.8							
Aluminum	**938**	ug/L	4.0	1	03/20/13 08:33	03/22/13 02:44	7429-90-5	
Antimony	ND	ug/L	0.50	1	03/20/13 08:33	03/22/13 02:44	7440-36-0	
Arsenic	**2.1**	ug/L	0.50	1	03/20/13 08:33	03/22/13 02:44	7440-38-2	
Barium	**29.5**	ug/L	0.30	1	03/20/13 08:33	03/22/13 02:44	7440-39-3	
Beryllium	ND	ug/L	0.20	1	03/20/13 08:33	03/22/13 02:44	7440-41-7	
Cadmium	**2.8**	ug/L	0.080	1	03/20/13 08:33	03/22/13 02:44	7440-43-9	
Calcium	**224000**	ug/L	400	20	03/20/13 08:33	03/22/13 02:49	7440-70-2	
Chromium	**1.9**	ug/L	0.50	1	03/20/13 08:33	03/22/13 02:44	7440-47-3	
Cobalt	ND	ug/L	0.50	1	03/20/13 08:33	03/22/13 02:44	7440-48-4	
Copper	**21.6**	ug/L	0.50	1	03/20/13 08:33	03/22/13 02:44	7440-50-8	
Iron	**1860**	ug/L	50.0	1	03/20/13 08:33	03/22/13 02:44	7439-89-6	
Lead	**29.2**	ug/L	0.10	1	03/20/13 08:33	03/22/13 02:44	7439-92-1	
Magnesium	**20000**	ug/L	5.0	1	03/20/13 08:33	03/22/13 02:44	7439-95-4	
Manganese	**218**	ug/L	0.50	1	03/20/13 08:33	03/22/13 02:44	7439-96-5	
Molybdenum	**8.8**	ug/L	0.50	1	03/20/13 08:33	03/22/13 02:44	7439-98-7	
Nickel	**1.1**	ug/L	0.50	1	03/20/13 08:33	03/22/13 02:44	7440-02-0	
Potassium	**10300**	ug/L	20.0	1	03/20/13 08:33	03/22/13 02:44	7440-09-7	
Selenium	**10.3**	ug/L	0.50	1	03/20/13 08:33	03/22/13 02:44	7782-49-2	
Silica	**13000**	ug/L	1070	20	03/20/13 08:33	03/22/13 02:49	7631-86-9	
Silver	ND	ug/L	0.50	1	03/20/13 08:33	03/22/13 02:44	7440-22-4	
Sodium	**10900**	ug/L	50.0	1	03/20/13 08:33	03/22/13 02:44	7440-23-5	
Thallium	**0.12**	ug/L	0.10	1	03/20/13 08:33	03/22/13 02:44	7440-28-0	
Total Hardness by 2340B	**641000**	ug/L	1420	20	03/20/13 08:33	03/22/13 02:49		
Vanadium	**1.6**	ug/L	0.10	1	03/20/13 08:33	03/22/13 02:44	7440-62-2	
Zinc	**523**	ug/L	100	20	03/20/13 08:33	03/22/13 02:49	7440-66-6	
200.8 MET ICPMS, Dissolved	Analytical Method: EPA 200.8 Preparation Method: EPA 200.8							
Aluminum, Dissolved	ND	ug/L	4.0	1	03/20/13 08:32	03/22/13 17:30	7429-90-5	
Antimony, Dissolved	ND	ug/L	0.50	1	03/20/13 08:32	03/22/13 17:30	7440-36-0	
Arsenic, Dissolved	ND	ug/L	0.50	1	03/20/13 08:32	03/22/13 17:30	7440-38-2	
Barium, Dissolved	**16.8**	ug/L	0.30	1	03/20/13 08:32	03/22/13 17:30	7440-39-3	
Beryllium, Dissolved	ND	ug/L	0.20	1	03/20/13 08:32	03/22/13 17:30	7440-41-7	
Cadmium, Dissolved	**1.7**	ug/L	0.080	1	03/20/13 08:32	03/22/13 17:30	7440-43-9	
Calcium, Dissolved	**233000**	ug/L	400	20	03/20/13 08:32	03/22/13 17:34	7440-70-2	
Chromium, Dissolved	ND	ug/L	0.50	1	03/20/13 08:32	03/22/13 17:30	7440-47-3	
Cobalt, Dissolved	ND	ug/L	0.50	1	03/20/13 08:32	03/22/13 17:30	7440-48-4	
Copper, Dissolved	**2.0**	ug/L	0.50	1	03/20/13 08:32	03/22/13 17:30	7440-50-8	
Iron, Dissolved	ND	ug/L	50.0	1	03/20/13 08:32	03/22/13 17:30	7439-89-6	
Lead, Dissolved	ND	ug/L	0.10	1	03/20/13 08:32	03/22/13 17:30	7439-92-1	
Magnesium, Dissolved	**20000**	ug/L	5.0	1	03/20/13 08:32	03/22/13 17:30	7439-95-4	

This report shall not be reproduced, except in full,
without the written consent of Pace Analytical Services, Inc..

Pace Analytical Services, Inc.
9608 Loiret Blvd.
Lenexa, KS 66219
(913)599-5665

ANALYTICAL RESULTS

Project: MARCH 2013 RICO WATER SAMPLING
Pace Project No.: 60140509

Sample: MW-1 DEEP_20130312 **Lab ID: 60140509003** Collected: 03/12/13 15:30 Received: 03/15/13 10:10 Matrix: Water

Parameters	Results	Units	Report Limit	DF	Prepared	Analyzed	CAS No.	Qual
200.8 MET ICPMS, Dissolved	Analytical Method: EPA 200.8 Preparation Method: EPA 200.8							
Manganese, Dissolved	**17.2**	ug/L	0.50	1	03/20/13 08:32	03/22/13 17:30	7439-96-5	
Molybdenum, Dissolved	**8.3**	ug/L	0.50	1	03/20/13 08:32	03/22/13 17:30	7439-98-7	
Nickel, Dissolved	ND	ug/L	0.50	1	03/20/13 08:32	03/22/13 17:30	7440-02-0	
Potassium, Dissolved	**10700**	ug/L	20.0	1	03/20/13 08:32	03/22/13 17:30	7440-09-7	
Selenium, Dissolved	**10.6**	ug/L	0.50	1	03/20/13 08:32	03/22/13 17:30	7782-49-2	
Silver, Dissolved	ND	ug/L	0.50	1	03/20/13 08:32	03/22/13 17:30	7440-22-4	
Sodium, Dissolved	**11600**	ug/L	50.0	1	03/20/13 08:32	03/22/13 17:30	7440-23-5	
Thallium, Dissolved	ND	ug/L	0.10	1	03/20/13 08:32	03/22/13 17:30	7440-28-0	
Vanadium, Dissolved	ND	ug/L	0.10	1	03/20/13 08:32	03/22/13 17:30	7440-62-2	
Zinc, Dissolved	**392**	ug/L	5.0	1	03/20/13 08:32	03/22/13 17:30	7440-66-6	
200.8 Potentially Diss. Metals	Analytical Method: EPA 200.8 Preparation Method: EPA 200.8							
Aluminum, Dissolved	**236**	ug/L	50.0	1	03/18/13 16:30	03/29/13 12:02	7429-90-5	
Antimony, Dissolved	**0.16J**	ug/L	1.0	1	03/18/13 16:30	03/29/13 12:02	7440-36-0	B
Arsenic, Dissolved	**0.96J**	ug/L	1.0	1	03/18/13 16:30	03/29/13 12:02	7440-38-2	
Barium, Dissolved	**21.0**	ug/L	1.0	1	03/18/13 16:30	03/29/13 12:02	7440-39-3	
Beryllium, Dissolved	ND	ug/L	0.50	1	03/18/13 16:30	03/29/13 12:02	7440-41-7	
Cadmium, Dissolved	**2.1**	ug/L	0.50	1	03/18/13 16:30	03/29/13 12:02	7440-43-9	
Chromium, Dissolved	**1.2**	ug/L	1.0	1	03/18/13 16:30	03/29/13 12:02	7440-47-3	B
Cobalt, Dissolved	**0.30J**	ug/L	1.0	1	03/18/13 16:30	03/29/13 12:02	7440-48-4	B
Copper, Dissolved	**11.0**	ug/L	1.0	1	03/18/13 16:30	03/29/13 12:02	7440-50-8	
Iron, Dissolved	**692**	ug/L	50.0	1	03/18/13 16:30	03/29/13 12:02	7439-89-6	
Lead, Dissolved	**14.4**	ug/L	1.0	1	03/18/13 16:30	03/29/13 12:02	7439-92-1	
Manganese, Dissolved	**87.6**	ug/L	1.0	1	03/18/13 16:30	03/29/13 12:02	7439-96-5	
Molybdenum, Dissolved	**7.3**	ug/L	1.0	1	03/18/13 16:30	03/29/13 12:02	7439-98-7	
Nickel, Dissolved	ND	ug/L	1.0	1	03/18/13 16:30	03/29/13 12:02	7440-02-0	
Selenium, Dissolved	**9.4**	ug/L	1.0	1	03/18/13 16:30	03/29/13 12:02	7782-49-2	
Silver, Dissolved	ND	ug/L	0.50	1	03/18/13 16:30	03/29/13 12:02	7440-22-4	
Thallium, Dissolved	**0.35J**	ug/L	1.0	1	03/18/13 16:30	03/29/13 12:02	7440-28-0	B
Vanadium, Dissolved	ND	ug/L	1.0	1	03/18/13 16:30	03/29/13 12:02	7440-62-2	
Zinc, Dissolved	**415**	ug/L	10.0	1	03/18/13 16:30	03/29/13 12:02	7440-66-6	
245.1 Mercury	Analytical Method: EPA 245.1 Preparation Method: EPA 245.1							
Mercury	ND	ug/L	0.20	1	03/20/13 15:28	03/27/13 11:33	7439-97-6	
245.1 Mercury, Dissolved	Analytical Method: EPA 245.1 Preparation Method: EPA 245.1							
Mercury, Dissolved	ND	ug/L	0.20	1	03/20/13 15:36	03/26/13 09:19	7439-97-6	
245.1 Potentially Diss Mercury	Analytical Method: EPA 245.1 Preparation Method: EPA 245.1							
Mercury, Dissolved	ND	ug/L	0.20	1	03/20/13 10:10	03/20/13 14:45	7439-97-6	
2510B Specific Conductance	Analytical Method: SM 2510B							
Specific Conductance	**1460**	umhos/cm	10.0	1		03/21/13 12:54		
Salinity	Analytical Method: Calculated							
Salinity (as dissolved solids)	**936**	mg/L	6.4	1		03/25/13 16:02		

REPORT OF LABORATORY ANALYSIS

This report shall not be reproduced, except in full,
without the written consent of Pace Analytical Services, Inc..

Pace Analytical Services, Inc.
9608 Loiret Blvd.
Lenexa, KS 66219
(913)599-5665

ANALYTICAL RESULTS

Project: MARCH 2013 RICO WATER SAMPLING
Pace Project No.: 60140509

Sample: MW-1 DEEP_20130312 **Lab ID: 60140509003** Collected: 03/12/13 15:30 Received: 03/15/13 10:10 Matrix: Water

Parameters	Results	Units	Report Limit	DF	Prepared	Analyzed	CAS No.	Qual
Salinity	Analytical Method: Calculated							
Salinity (as seawater)	**0.73**	PSU	0.014	1		03/25/13 16:02		
2320B Alkalinity	Analytical Method: SM 2320B							
Alkalinity,Bicarbonate (CaCO3)	**89.9**	mg/L	20.0	1		03/19/13 08:21		
Alkalinity, Carbonate (CaCO3)	ND	mg/L	20.0	1		03/19/13 08:21		
Alkalinity, Total as CaCO3	**89.9**	mg/L	20.0	1		03/19/13 08:21		
2540C Total Dissolved Solids	Analytical Method: SM 2540C							
Total Dissolved Solids	**976**	mg/L	5.0	1		03/19/13 16:59		
2540D Total Suspended Solids	Analytical Method: SM 2540D							
Total Suspended Solids	**33.0**	mg/L	5.0	1		03/18/13 14:17		
4500S2D Sulfide, Total	Analytical Method: SM 4500-S-2 D							
Sulfide, Total	ND	mg/L	0.050	1		03/19/13 02:42	18496-25-8	
300.0 IC Anions 28 Days	Analytical Method: EPA 300.0							
Chloride	ND	mg/L	1.0	1		03/27/13 12:33	16887-00-6	
Sulfate	**699**	mg/L	50.0	50		03/27/13 12:50	14808-79-8	
353.2 Nitrogen, NO2/NO3 pres.	Analytical Method: EPA 353.2							
Nitrogen, NO2 plus NO3	ND	mg/L	0.10	1		03/25/13 15:22		
4500CNE Cyanide, Total	Analytical Method: SM 4500-CN-E							
Cyanide	ND	mg/L	0.0050	1		03/20/13 14:51	57-12-5	
5310C TOC	Analytical Method: SM 5310C							
Total Organic Carbon	ND	mg/L	0.50	1		03/22/13 16:30	7440-44-0	

This report shall not be reproduced, except in full,
without the written consent of Pace Analytical Services, Inc..

Pace Analytical Services, Inc.
9608 Loiret Blvd.
Lenexa, KS 66219
(913)599-5665

ANALYTICAL RESULTS

Project: MARCH 2013 RICO WATER SAMPLING
Pace Project No.: 60140509

Sample: MW-1 SHALLOW_20130312 **Lab ID: 60140509004** Collected: 03/12/13 15:14 Received: 03/15/13 10:10 Matrix: Water

Parameters	Results	Units	Report Limit	DF	Prepared	Analyzed	CAS No.	Qual
200.7 Potentially Diss. Metals	Analytical Method: EPA 200.7 Preparation Method: EPA 200.7							
Calcium, Dissolved	**214000**	ug/L	100	1	03/18/13 16:30	03/29/13 09:40	7440-70-2	M1
Magnesium, Dissolved	**18900**	ug/L	50.0	1	03/18/13 16:30	03/29/13 09:40	7439-95-4	
Potassium, Dissolved	**6280**	ug/L	500	1	03/18/13 16:30	03/29/13 09:40	7440-09-7	
Sodium, Dissolved	**10800**	ug/L	500	1	03/18/13 16:30	03/29/13 09:40	7440-23-5	
200.8 MET ICPMS	Analytical Method: EPA 200.8 Preparation Method: EPA 200.8							
Aluminum	**11500**	ug/L	4.0	1	03/20/13 08:33	03/22/13 02:53	7429-90-5	
Antimony	**0.65**	ug/L	0.50	1	03/20/13 08:33	03/22/13 02:53	7440-36-0	
Arsenic	**20.8**	ug/L	0.50	1	03/20/13 08:33	03/22/13 02:53	7440-38-2	
Barium	**166**	ug/L	0.30	1	03/20/13 08:33	03/22/13 02:53	7440-39-3	
Beryllium	**1.1**	ug/L	0.20	1	03/20/13 08:33	03/22/13 02:53	7440-41-7	
Cadmium	**2.3**	ug/L	0.080	1	03/20/13 08:33	03/22/13 02:53	7440-43-9	
Calcium	**231000**	ug/L	400	20	03/20/13 08:33	03/22/13 02:59	7440-70-2	
Chromium	**15.0**	ug/L	0.50	1	03/20/13 08:33	03/22/13 02:53	7440-47-3	
Cobalt	**7.1**	ug/L	0.50	1	03/20/13 08:33	03/22/13 02:53	7440-48-4	
Copper	**90.6**	ug/L	0.50	1	03/20/13 08:33	03/22/13 02:53	7440-50-8	
Iron	**19300**	ug/L	50.0	1	03/20/13 08:33	03/22/13 02:53	7439-89-6	
Lead	**271**	ug/L	0.10	1	03/20/13 08:33	03/22/13 02:53	7439-92-1	
Magnesium	**25500**	ug/L	100	20	03/20/13 08:33	03/22/13 02:59	7439-95-4	
Manganese	**829**	ug/L	10.0	20	03/20/13 08:33	03/22/13 02:59	7439-96-5	
Molybdenum	**9.1**	ug/L	0.50	1	03/20/13 08:33	03/22/13 02:53	7439-98-7	
Nickel	**12.0**	ug/L	0.50	1	03/20/13 08:33	03/22/13 02:53	7440-02-0	
Potassium	**8130**	ug/L	20.0	1	03/20/13 08:33	03/22/13 02:53	7440-09-7	
Selenium	**13.0**	ug/L	0.50	1	03/20/13 08:33	03/22/13 02:53	7782-49-2	
Silica	**48200**	ug/L	1070	20	03/20/13 08:33	03/22/13 02:59	7631-86-9	
Silver	**2.3**	ug/L	0.50	1	03/20/13 08:33	03/22/13 02:53	7440-22-4	
Sodium	**11100**	ug/L	50.0	1	03/20/13 08:33	03/22/13 02:53	7440-23-5	
Thallium	**0.40**	ug/L	0.10	1	03/20/13 08:33	03/22/13 02:53	7440-28-0	
Total Hardness by 2340B	**682000**	ug/L	1420	20	03/20/13 08:33	03/22/13 02:59		
Vanadium	**20.0**	ug/L	0.10	1	03/20/13 08:33	03/22/13 02:53	7440-62-2	
Zinc	**362**	ug/L	5.0	1	03/20/13 08:33	03/22/13 02:53	7440-66-6	
200.8 MET ICPMS, Dissolved	Analytical Method: EPA 200.8 Preparation Method: EPA 200.8							
Aluminum, Dissolved	**61.5**	ug/L	4.0	1	03/20/13 08:32	03/22/13 17:39	7429-90-5	
Antimony, Dissolved	ND	ug/L	0.50	1	03/20/13 08:32	03/22/13 17:39	7440-36-0	
Arsenic, Dissolved	ND	ug/L	0.50	1	03/20/13 08:32	03/22/13 17:39	7440-38-2	
Barium, Dissolved	**19.4**	ug/L	0.30	1	03/20/13 08:32	03/22/13 17:39	7440-39-3	
Beryllium, Dissolved	ND	ug/L	0.20	1	03/20/13 08:32	03/22/13 17:39	7440-41-7	
Cadmium, Dissolved	**0.48**	ug/L	0.080	1	03/20/13 08:32	03/22/13 17:39	7440-43-9	
Calcium, Dissolved	**234000**	ug/L	400	20	03/20/13 08:32	03/22/13 17:43	7440-70-2	
Chromium, Dissolved	ND	ug/L	0.50	1	03/20/13 08:32	03/22/13 17:39	7440-47-3	
Cobalt, Dissolved	ND	ug/L	0.50	1	03/20/13 08:32	03/22/13 17:39	7440-48-4	
Copper, Dissolved	**1.4**	ug/L	0.50	1	03/20/13 08:32	03/22/13 17:39	7440-50-8	
Iron, Dissolved	**98.0**	ug/L	50.0	1	03/20/13 08:32	03/22/13 17:39	7439-89-6	
Lead, Dissolved	**1.3**	ug/L	0.10	1	03/20/13 08:32	03/22/13 17:39	7439-92-1	
Magnesium, Dissolved	**20700**	ug/L	5.0	1	03/20/13 08:32	03/22/13 17:39	7439-95-4	

This report shall not be reproduced, except in full,
without the written consent of Pace Analytical Services, Inc..

Pace Analytical Services, Inc.
9608 Loiret Blvd.
Lenexa, KS 66219
(913)599-5665

ANALYTICAL RESULTS

Project: MARCH 2013 RICO WATER SAMPLING
Pace Project No.: 60140509

Sample: MW-1 SHALLOW_20130312 **Lab ID: 60140509004** Collected: 03/12/13 15:14 Received: 03/15/13 10:10 Matrix: Water

Parameters	Results	Units	Report Limit	DF	Prepared	Analyzed	CAS No.	Qual
200.8 MET ICPMS, Dissolved	Analytical Method: EPA 200.8 Preparation Method: EPA 200.8							
Manganese, Dissolved	**11.7**	ug/L	0.50	1	03/20/13 08:32	03/22/13 17:39	7439-96-5	
Molybdenum, Dissolved	**7.4**	ug/L	0.50	1	03/20/13 08:32	03/22/13 17:39	7439-98-7	
Nickel, Dissolved	ND	ug/L	0.50	1	03/20/13 08:32	03/22/13 17:39	7440-02-0	
Potassium, Dissolved	**6560**	ug/L	20.0	1	03/20/13 08:32	03/22/13 17:39	7440-09-7	
Selenium, Dissolved	**8.0**	ug/L	0.50	1	03/20/13 08:32	03/22/13 17:39	7782-49-2	
Silver, Dissolved	ND	ug/L	0.50	1	03/20/13 08:32	03/22/13 17:39	7440-22-4	
Sodium, Dissolved	**11600**	ug/L	50.0	1	03/20/13 08:32	03/22/13 17:39	7440-23-5	
Thallium, Dissolved	ND	ug/L	0.10	1	03/20/13 08:32	03/22/13 17:39	7440-28-0	
Vanadium, Dissolved	**0.11**	ug/L	0.10	1	03/20/13 08:32	03/22/13 17:39	7440-62-2	
Zinc, Dissolved	**66.0**	ug/L	5.0	1	03/20/13 08:32	03/22/13 17:39	7440-66-6	
200.8 Potentially Diss. Metals	Analytical Method: EPA 200.8 Preparation Method: EPA 200.8							
Aluminum, Dissolved	**2340**	ug/L	50.0	1	03/18/13 16:30	03/29/13 12:10	7429-90-5	
Antimony, Dissolved	**0.24J**	ug/L	1.0	1	03/18/13 16:30	03/29/13 12:10	7440-36-0	B
Arsenic, Dissolved	**3.8**	ug/L	1.0	1	03/18/13 16:30	03/29/13 12:10	7440-38-2	
Barium, Dissolved	**39.0**	ug/L	1.0	1	03/18/13 16:30	03/29/13 12:10	7440-39-3	
Beryllium, Dissolved	**0.47J**	ug/L	0.50	1	03/18/13 16:30	03/29/13 12:10	7440-41-7	
Cadmium, Dissolved	**2.1**	ug/L	0.50	1	03/18/13 16:30	03/29/13 12:10	7440-43-9	
Chromium, Dissolved	**3.6**	ug/L	1.0	1	03/18/13 16:30	03/29/13 12:10	7440-47-3	B
Cobalt, Dissolved	**3.6**	ug/L	1.0	1	03/18/13 16:30	03/29/13 12:10	7440-48-4	
Copper, Dissolved	**48.1**	ug/L	1.0	1	03/18/13 16:30	03/29/13 12:10	7440-50-8	
Iron, Dissolved	**3710**	ug/L	50.0	1	03/18/13 16:30	03/29/13 12:10	7439-89-6	
Lead, Dissolved	**203**	ug/L	1.0	1	03/18/13 16:30	03/29/13 12:10	7439-92-1	
Manganese, Dissolved	**672**	ug/L	1.0	1	03/18/13 16:30	03/29/13 12:10	7439-96-5	
Molybdenum, Dissolved	**3.8**	ug/L	1.0	1	03/18/13 16:30	03/29/13 12:10	7439-98-7	
Nickel, Dissolved	**2.6**	ug/L	1.0	1	03/18/13 16:30	03/29/13 12:10	7440-02-0	
Selenium, Dissolved	**9.0**	ug/L	1.0	1	03/18/13 16:30	03/29/13 12:10	7782-49-2	
Silver, Dissolved	**1.2**	ug/L	0.50	1	03/18/13 16:30	03/29/13 12:10	7440-22-4	
Thallium, Dissolved	**0.42J**	ug/L	1.0	1	03/18/13 16:30	03/29/13 12:10	7440-28-0	B
Vanadium, Dissolved	**4.7**	ug/L	1.0	1	03/18/13 16:30	03/29/13 12:10	7440-62-2	
Zinc, Dissolved	**272**	ug/L	10.0	1	03/18/13 16:30	03/29/13 12:10	7440-66-6	
245.1 Mercury	Analytical Method: EPA 245.1 Preparation Method: EPA 245.1							
Mercury	ND	ug/L	0.20	1	03/20/13 15:28	03/27/13 11:36	7439-97-6	
245.1 Mercury, Dissolved	Analytical Method: EPA 245.1 Preparation Method: EPA 245.1							
Mercury, Dissolved	ND	ug/L	0.20	1	03/20/13 15:36	03/26/13 09:22	7439-97-6	
245.1 Potentially Diss Mercury	Analytical Method: EPA 245.1 Preparation Method: EPA 245.1							
Mercury, Dissolved	ND	ug/L	0.20	1	03/20/13 10:10	03/20/13 14:47	7439-97-6	
2510B Specific Conductance	Analytical Method: SM 2510B							
Specific Conductance	**1420**	umhos/cm	10.0	1		03/21/13 12:56		

This report shall not be reproduced, except in full,
without the written consent of Pace Analytical Services, Inc..

Pace Analytical Services, Inc.
9608 Loiret Blvd.
Lenexa, KS 66219
(913)599-5665

ANALYTICAL RESULTS

Project: MARCH 2013 RICO WATER SAMPLING
Pace Project No.: 60140509

Sample: MW-1 SHALLOW_20130312 **Lab ID: 60140509004** Collected: 03/12/13 15:14 Received: 03/15/13 10:10 Matrix: Water

Parameters	Results	Units	Report Limit	DF	Prepared	Analyzed	CAS No.	Qual
Salinity	Analytical Method: Calculated							
Salinity (as dissolved solids)	**908**	mg/L	6.4	1		03/25/13 16:02		
Salinity (as seawater)	**0.71**	PSU	0.014	1		03/25/13 16:02		
2320B Alkalinity	Analytical Method: SM 2320B							
Alkalinity,Bicarbonate (CaCO3)	**88.6**	mg/L	20.0	1		03/19/13 08:26		
Alkalinity, Carbonate (CaCO3)	ND	mg/L	20.0	1		03/19/13 08:26		
Alkalinity, Total as CaCO3	**88.6**	mg/L	20.0	1		03/19/13 08:26		
2540C Total Dissolved Solids	Analytical Method: SM 2540C							
Total Dissolved Solids	**982**	mg/L	5.0	1		03/19/13 16:59		
2540D Total Suspended Solids	Analytical Method: SM 2540D							
Total Suspended Solids	**478**	mg/L	5.0	1		03/18/13 14:17		
4500S2D Sulfide, Total	Analytical Method: SM 4500-S-2 D							
Sulfide, Total	ND	mg/L	0.050	1		03/19/13 02:43	18496-25-8	
300.0 IC Anions 28 Days	Analytical Method: EPA 300.0							
Chloride	ND	mg/L	1.0	1		03/27/13 13:08	16887-00-6	
Sulfate	**691**	mg/L	50.0	50		03/27/13 13:26	14808-79-8	
353.2 Nitrogen, NO2/NO3 pres.	Analytical Method: EPA 353.2							
Nitrogen, NO2 plus NO3	ND	mg/L	0.10	1		03/25/13 15:23		
4500CNE Cyanide, Total	Analytical Method: SM 4500-CN-E							
Cyanide	ND	mg/L	0.0050	1		03/25/13 12:35	57-12-5	
5310C TOC	Analytical Method: SM 5310C							
Total Organic Carbon	**0.87**	mg/L	0.50	1		03/22/13 16:48	7440-44-0	

This report shall not be reproduced, except in full,
without the written consent of Pace Analytical Services, Inc..

Pace Analytical Services, Inc.
9608 Loiret Blvd.
Lenexa, KS 66219
(913)599-5665

ANALYTICAL RESULTS

Project: MARCH 2013 RICO WATER SAMPLING
Pace Project No.: 60140509

Sample: MW-4 DEEP_20130312 **Lab ID: 60140509005** Collected: 03/12/13 14:25 Received: 03/15/13 10:10 Matrix: Water

Parameters	Results	Units	Report Limit	DF	Prepared	Analyzed	CAS No.	Qual
200.7 Potentially Diss. Metals	Analytical Method: EPA 200.7 Preparation Method: EPA 200.7							
Calcium, Dissolved	**244000**	ug/L	100	1	03/18/13 16:30	03/29/13 09:47	7440-70-2	
Magnesium, Dissolved	**27900**	ug/L	50.0	1	03/18/13 16:30	03/29/13 09:47	7439-95-4	
Potassium, Dissolved	**3140**	ug/L	500	1	03/18/13 16:30	03/29/13 09:47	7440-09-7	
Sodium, Dissolved	**6590**	ug/L	500	1	03/18/13 16:30	03/29/13 09:47	7440-23-5	
200.8 MET ICPMS	Analytical Method: EPA 200.8 Preparation Method: EPA 200.8							
Aluminum	**11300**	ug/L	4.0	1	03/20/13 08:33	03/22/13 03:57	7429-90-5	
Antimony	**0.53**	ug/L	0.50	1	03/20/13 08:33	03/22/13 03:57	7440-36-0	
Arsenic	**25.6**	ug/L	0.50	1	03/20/13 08:33	03/22/13 03:57	7440-38-2	
Barium	**177**	ug/L	0.30	1	03/20/13 08:33	03/22/13 03:57	7440-39-3	
Beryllium	**1.4**	ug/L	0.20	1	03/20/13 08:33	03/22/13 03:57	7440-41-7	
Cadmium	**6.0**	ug/L	0.080	1	03/20/13 08:33	03/22/13 03:57	7440-43-9	
Calcium	**269000**	ug/L	400	20	03/20/13 08:33	03/22/13 04:02	7440-70-2	
Chromium	**12.6**	ug/L	0.50	1	03/20/13 08:33	03/22/13 03:57	7440-47-3	
Cobalt	**13.8**	ug/L	0.50	1	03/20/13 08:33	03/22/13 03:57	7440-48-4	
Copper	**144**	ug/L	0.50	1	03/20/13 08:33	03/22/13 03:57	7440-50-8	
Iron	**22400**	ug/L	50.0	1	03/20/13 08:33	03/22/13 03:57	7439-89-6	
Lead	**112**	ug/L	0.10	1	03/20/13 08:33	03/22/13 03:57	7439-92-1	
Magnesium	**33800**	ug/L	100	20	03/20/13 08:33	03/22/13 04:02	7439-95-4	
Manganese	**2150**	ug/L	10.0	20	03/20/13 08:33	03/22/13 04:02	7439-96-5	
Molybdenum	**10.1**	ug/L	0.50	1	03/20/13 08:33	03/22/13 03:57	7439-98-7	
Nickel	**11.8**	ug/L	0.50	1	03/20/13 08:33	03/22/13 03:57	7440-02-0	
Potassium	**4960**	ug/L	20.0	1	03/20/13 08:33	03/22/13 03:57	7440-09-7	
Selenium	**37.4**	ug/L	0.50	1	03/20/13 08:33	03/22/13 03:57	7782-49-2	
Silica	**48300**	ug/L	1070	20	03/20/13 08:33	03/22/13 04:02	7631-86-9	
Silver	**2.3**	ug/L	0.50	1	03/20/13 08:33	03/22/13 03:57	7440-22-4	
Sodium	**6820**	ug/L	50.0	1	03/20/13 08:33	03/22/13 03:57	7440-23-5	
Thallium	**0.31**	ug/L	0.10	1	03/20/13 08:33	03/22/13 03:57	7440-28-0	
Total Hardness by 2340B	**811000**	ug/L	1420	20	03/20/13 08:33	03/22/13 04:02		
Vanadium	**21.9**	ug/L	0.10	1	03/20/13 08:33	03/22/13 03:57	7440-62-2	
Zinc	**753**	ug/L	100	20	03/20/13 08:33	03/22/13 04:02	7440-66-6	
200.8 MET ICPMS, Dissolved	Analytical Method: EPA 200.8 Preparation Method: EPA 200.8							
Aluminum, Dissolved	**75.6**	ug/L	4.0	1	03/20/13 08:32	03/22/13 18:09	7429-90-5	
Antimony, Dissolved	ND	ug/L	0.50	1	03/20/13 08:32	03/22/13 18:09	7440-36-0	
Arsenic, Dissolved	ND	ug/L	0.50	1	03/20/13 08:32	03/22/13 18:09	7440-38-2	
Barium, Dissolved	**16.0**	ug/L	0.30	1	03/20/13 08:32	03/22/13 18:09	7440-39-3	
Beryllium, Dissolved	ND	ug/L	0.20	1	03/20/13 08:32	03/22/13 18:09	7440-41-7	
Cadmium, Dissolved	**2.1**	ug/L	0.080	1	03/20/13 08:32	03/22/13 18:09	7440-43-9	
Calcium, Dissolved	**285000**	ug/L	400	20	03/20/13 08:32	03/22/13 18:13	7440-70-2	
Chromium, Dissolved	ND	ug/L	0.50	1	03/20/13 08:32	03/22/13 18:09	7440-47-3	
Cobalt, Dissolved	ND	ug/L	0.50	1	03/20/13 08:32	03/22/13 18:09	7440-48-4	
Copper, Dissolved	**3.9**	ug/L	0.50	1	03/20/13 08:32	03/22/13 18:09	7440-50-8	
Iron, Dissolved	**74.3**	ug/L	50.0	1	03/20/13 08:32	03/22/13 18:09	7439-89-6	
Lead, Dissolved	**0.51**	ug/L	0.10	1	03/20/13 08:32	03/22/13 18:09	7439-92-1	
Magnesium, Dissolved	**31600**	ug/L	100	20	03/20/13 08:32	03/22/13 18:13	7439-95-4	

This report shall not be reproduced, except in full,
without the written consent of Pace Analytical Services, Inc..

Pace Analytical Services, Inc.
9608 Loiret Blvd.
Lenexa, KS 66219
(913)599-5665

ANALYTICAL RESULTS

Project: MARCH 2013 RICO WATER SAMPLING
Pace Project No.: 60140509

Sample: MW-4 DEEP_20130312 **Lab ID: 60140509005** Collected: 03/12/13 14:25 Received: 03/15/13 10:10 Matrix: Water

Parameters	Results	Units	Report Limit	DF	Prepared	Analyzed	CAS No.	Qual
200.8 MET ICPMS, Dissolved	Analytical Method: EPA 200.8 Preparation Method: EPA 200.8							
Manganese, Dissolved	**9.4**	ug/L	0.50	1	03/20/13 08:32	03/22/13 18:09	7439-96-5	
Molybdenum, Dissolved	**2.2**	ug/L	0.50	1	03/20/13 08:32	03/22/13 18:09	7439-98-7	
Nickel, Dissolved	**0.66**	ug/L	0.50	1	03/20/13 08:32	03/22/13 18:09	7440-02-0	
Potassium, Dissolved	**3360**	ug/L	20.0	1	03/20/13 08:32	03/22/13 18:09	7440-09-7	
Selenium, Dissolved	**36.4**	ug/L	0.50	1	03/20/13 08:32	03/22/13 18:09	7782-49-2	
Silver, Dissolved	ND	ug/L	0.50	1	03/20/13 08:32	03/22/13 18:09	7440-22-4	
Sodium, Dissolved	**7260**	ug/L	50.0	1	03/20/13 08:32	03/22/13 18:09	7440-23-5	
Thallium, Dissolved	ND	ug/L	0.10	1	03/20/13 08:32	03/22/13 18:09	7440-28-0	
Vanadium, Dissolved	ND	ug/L	0.10	1	03/20/13 08:32	03/22/13 18:09	7440-62-2	
Zinc, Dissolved	**320**	ug/L	5.0	1	03/20/13 08:32	03/22/13 18:09	7440-66-6	
200.8 Potentially Diss. Metals	Analytical Method: EPA 200.8 Preparation Method: EPA 200.8							
Aluminum, Dissolved	**4200**	ug/L	50.0	1	03/18/13 16:30	04/05/13 11:28	7429-90-5	
Antimony, Dissolved	**0.42J**	ug/L	1.0	1	03/18/13 16:30	04/05/13 11:28	7440-36-0	B
Arsenic, Dissolved	**5.5**	ug/L	1.0	1	03/18/13 16:30	04/05/13 11:28	7440-38-2	
Barium, Dissolved	**67.4**	ug/L	1.0	1	03/18/13 16:30	03/29/13 12:51	7440-39-3	
Beryllium, Dissolved	**1.0**	ug/L	0.50	1	03/18/13 16:30	04/05/13 11:28	7440-41-7	
Cadmium, Dissolved	**7.1**	ug/L	0.50	1	03/18/13 16:30	04/05/13 11:28	7440-43-9	
Chromium, Dissolved	**6.0**	ug/L	1.0	1	03/18/13 16:30	03/29/13 12:51	7440-47-3	
Cobalt, Dissolved	**5.2**	ug/L	1.0	1	03/18/13 16:30	03/29/13 12:51	7440-48-4	
Copper, Dissolved	**132**	ug/L	1.0	1	03/18/13 16:30	03/29/13 12:51	7440-50-8	
Iron, Dissolved	**9670**	ug/L	50.0	1	03/18/13 16:30	03/29/13 12:51	7439-89-6	
Lead, Dissolved	**101**	ug/L	1.0	1	03/18/13 16:30	03/29/13 12:51	7439-92-1	
Manganese, Dissolved	**764**	ug/L	1.0	1	03/18/13 16:30	03/29/13 12:51	7439-96-5	
Molybdenum, Dissolved	**0.67J**	ug/L	1.0	1	03/18/13 16:30	04/05/13 11:28	7439-98-7	
Nickel, Dissolved	**3.9**	ug/L	1.0	1	03/18/13 16:30	03/29/13 12:51	7440-02-0	
Selenium, Dissolved	**35.7**	ug/L	1.0	1	03/18/13 16:30	04/05/13 11:28	7782-49-2	
Silver, Dissolved	**2.0**	ug/L	0.50	1	03/18/13 16:30	04/05/13 11:28	7440-22-4	
Thallium, Dissolved	**0.27J**	ug/L	1.0	1	03/18/13 16:30	03/29/13 12:51	7440-28-0	B
Vanadium, Dissolved	**6.2**	ug/L	1.0	1	03/18/13 16:30	03/29/13 12:51	7440-62-2	
Zinc, Dissolved	**714**	ug/L	10.0	1	03/18/13 16:30	03/29/13 12:51	7440-66-6	
245.1 Mercury	Analytical Method: EPA 245.1 Preparation Method: EPA 245.1							
Mercury	ND	ug/L	0.20	1	03/20/13 15:28	03/27/13 11:38	7439-97-6	
245.1 Mercury, Dissolved	Analytical Method: EPA 245.1 Preparation Method: EPA 245.1							
Mercury, Dissolved	ND	ug/L	0.20	1	03/20/13 15:36	03/26/13 09:29	7439-97-6	
245.1 Potentially Diss Mercury	Analytical Method: EPA 245.1 Preparation Method: EPA 245.1							
Mercury, Dissolved	ND	ug/L	0.20	1	03/20/13 10:10	03/20/13 14:54	7439-97-6	
2510B Specific Conductance	Analytical Method: SM 2510B							
Specific Conductance	**1490**	umhos/cm	10.0	1		03/21/13 12:58		
Salinity	Analytical Method: Calculated							
Salinity (as dissolved solids)	**955**	mg/L	6.4	1		03/25/13 16:02		

REPORT OF LABORATORY ANALYSIS

This report shall not be reproduced, except in full,
without the written consent of Pace Analytical Services, Inc..

Pace Analytical Services, Inc.
9608 Loiret Blvd.
Lenexa, KS 66219
(913)599-5665

ANALYTICAL RESULTS

Project: MARCH 2013 RICO WATER SAMPLING
Pace Project No.: 60140509

Sample: MW-4 DEEP_20130312 **Lab ID: 60140509005** Collected: 03/12/13 14:25 Received: 03/15/13 10:10 Matrix: Water

Parameters	Results	Units	Report Limit	DF	Prepared	Analyzed	CAS No.	Qual
Salinity	Analytical Method: Calculated							
Salinity (as seawater)	**0.75**	PSU	0.014	1		03/25/13 16:02		
2320B Alkalinity	Analytical Method: SM 2320B							
Alkalinity,Bicarbonate (CaCO3)	**358**	mg/L	20.0	1		03/19/13 08:31		
Alkalinity, Carbonate (CaCO3)	ND	mg/L	20.0	1		03/19/13 08:31		
Alkalinity, Total as CaCO3	**358**	mg/L	20.0	1		03/19/13 08:31		
2540C Total Dissolved Solids	Analytical Method: SM 2540C							
Total Dissolved Solids	**1060**	mg/L	5.0	1		03/19/13 16:59		
2540D Total Suspended Solids	Analytical Method: SM 2540D							
Total Suspended Solids	**235**	mg/L	5.0	1		03/18/13 14:18		
4500S2D Sulfide, Total	Analytical Method: SM 4500-S-2 D							
Sulfide, Total	ND	mg/L	0.050	1		03/19/13 02:44	18496-25-8	
300.0 IC Anions 28 Days	Analytical Method: EPA 300.0							
Chloride	**1.1**	mg/L	1.0	1		03/27/13 13:43	16887-00-6	
Sulfate	**551**	mg/L	50.0	50		03/28/13 13:37	14808-79-8	
353.2 Nitrogen, NO2/NO3 pres.	Analytical Method: EPA 353.2							
Nitrogen, NO2 plus NO3	ND	mg/L	0.10	1		03/25/13 15:24		
4500CNE Cyanide, Total	Analytical Method: SM 4500-CN-E							
Cyanide	ND	mg/L	0.0050	1		03/20/13 14:54	57-12-5	
5310C TOC	Analytical Method: SM 5310C							
Total Organic Carbon	**0.96**	mg/L	0.50	1		03/22/13 17:06	7440-44-0	

This report shall not be reproduced, except in full,
without the written consent of Pace Analytical Services, Inc..

Pace Analytical Services, Inc.
9608 Loiret Blvd.
Lenexa, KS 66219
(913)599-5665

ANALYTICAL RESULTS

Project: MARCH 2013 RICO WATER SAMPLING
Pace Project No.: 60140509

Sample: MW-6 DEEP_20130312 **Lab ID: 60140509006** Collected: 03/12/13 13:20 Received: 03/15/13 10:10 Matrix: Water

Parameters	Results	Units	Report Limit	DF	Prepared	Analyzed	CAS No.	Qual
200.7 Potentially Diss. Metals	Analytical Method: EPA 200.7 Preparation Method: EPA 200.7							
Calcium, Dissolved	**251000**	ug/L	100	1	03/18/13 16:30	03/29/13 09:49	7440-70-2	
Magnesium, Dissolved	**35600**	ug/L	50.0	1	03/18/13 16:30	03/29/13 09:49	7439-95-4	
Potassium, Dissolved	**5950**	ug/L	500	1	03/18/13 16:30	03/29/13 09:49	7440-09-7	
Sodium, Dissolved	**4990**	ug/L	500	1	03/18/13 16:30	03/29/13 09:49	7440-23-5	
200.8 MET ICPMS	Analytical Method: EPA 200.8 Preparation Method: EPA 200.8							
Aluminum	**3320**	ug/L	4.0	1	03/20/13 08:33	03/22/13 04:26	7429-90-5	
Antimony	**0.51**	ug/L	0.50	1	03/20/13 08:33	03/22/13 04:26	7440-36-0	
Arsenic	**52.9**	ug/L	0.50	1	03/20/13 08:33	03/22/13 04:26	7440-38-2	
Barium	**46.4**	ug/L	0.30	1	03/20/13 08:33	03/22/13 04:26	7440-39-3	
Beryllium	**0.94**	ug/L	0.20	1	03/20/13 08:33	03/22/13 04:26	7440-41-7	
Cadmium	**1.7**	ug/L	0.080	1	03/20/13 08:33	03/22/13 04:26	7440-43-9	
Calcium	**266000**	ug/L	400	20	03/20/13 08:33	03/22/13 04:30	7440-70-2	
Chromium	**4.2**	ug/L	0.50	1	03/20/13 08:33	03/22/13 04:26	7440-47-3	
Cobalt	**4.0**	ug/L	0.50	1	03/20/13 08:33	03/22/13 04:26	7440-48-4	
Copper	**20.7**	ug/L	0.50	1	03/20/13 08:33	03/22/13 04:26	7440-50-8	
Iron	**24100**	ug/L	1000	20	03/20/13 08:33	03/22/13 04:30	7439-89-6	
Lead	**34.1**	ug/L	0.10	1	03/20/13 08:33	03/22/13 04:26	7439-92-1	
Magnesium	**38700**	ug/L	100	20	03/20/13 08:33	03/22/13 04:30	7439-95-4	
Manganese	**6660**	ug/L	10.0	20	03/20/13 08:33	03/22/13 04:30	7439-96-5	
Molybdenum	**7.0**	ug/L	0.50	1	03/20/13 08:33	03/22/13 04:26	7439-98-7	
Nickel	**4.9**	ug/L	0.50	1	03/20/13 08:33	03/22/13 04:26	7440-02-0	
Potassium	**6710**	ug/L	20.0	1	03/20/13 08:33	03/22/13 04:26	7440-09-7	
Selenium	**1.3**	ug/L	0.50	1	03/20/13 08:33	03/22/13 04:26	7782-49-2	
Silica	**27700**	ug/L	1070	20	03/20/13 08:33	03/22/13 04:30	7631-86-9	
Silver	ND	ug/L	0.50	1	03/20/13 08:33	03/22/13 04:26	7440-22-4	
Sodium	**4930**	ug/L	50.0	1	03/20/13 08:33	03/22/13 04:26	7440-23-5	
Thallium	ND	ug/L	0.10	1	03/20/13 08:33	03/22/13 04:26	7440-28-0	
Total Hardness by 2340B	**824000**	ug/L	1420	20	03/20/13 08:33	03/22/13 04:30		
Vanadium	**6.3**	ug/L	0.10	1	03/20/13 08:33	03/22/13 04:26	7440-62-2	
Zinc	**967**	ug/L	100	20	03/20/13 08:33	03/22/13 04:30	7440-66-6	
200.8 MET ICPMS, Dissolved	Analytical Method: EPA 200.8 Preparation Method: EPA 200.8							
Aluminum, Dissolved	**304**	ug/L	4.0	1	03/20/13 08:32	03/22/13 18:18	7429-90-5	
Antimony, Dissolved	ND	ug/L	0.50	1	03/20/13 08:32	03/22/13 18:18	7440-36-0	
Arsenic, Dissolved	**16.8**	ug/L	0.50	1	03/20/13 08:32	03/22/13 18:18	7440-38-2	
Barium, Dissolved	**14.5**	ug/L	0.30	1	03/20/13 08:32	03/22/13 18:18	7440-39-3	
Beryllium, Dissolved	**0.60**	ug/L	0.20	1	03/20/13 08:32	03/22/13 18:18	7440-41-7	
Cadmium, Dissolved	ND	ug/L	0.080	1	03/20/13 08:32	03/22/13 18:18	7440-43-9	
Calcium, Dissolved	**270000**	ug/L	400	20	03/20/13 08:32	03/22/13 18:22	7440-70-2	
Chromium, Dissolved	ND	ug/L	0.50	1	03/20/13 08:32	03/22/13 18:18	7440-47-3	
Cobalt, Dissolved	**2.7**	ug/L	0.50	1	03/20/13 08:32	03/22/13 18:18	7440-48-4	
Copper, Dissolved	**0.94**	ug/L	0.50	1	03/20/13 08:32	03/22/13 18:18	7440-50-8	
Iron, Dissolved	**19100**	ug/L	50.0	1	03/20/13 08:32	03/22/13 18:18	7439-89-6	
Lead, Dissolved	ND	ug/L	0.10	1	03/20/13 08:32	03/22/13 18:18	7439-92-1	
Magnesium, Dissolved	**36800**	ug/L	100	20	03/20/13 08:32	03/22/13 18:22	7439-95-4	

This report shall not be reproduced, except in full,
without the written consent of Pace Analytical Services, Inc..

Pace Analytical Services, Inc.
9608 Loiret Blvd.
Lenexa, KS 66219
(913)599-5665

ANALYTICAL RESULTS

Project: MARCH 2013 RICO WATER SAMPLING
Pace Project No.: 60140509

Sample: MW-6 DEEP_20130312 **Lab ID: 60140509006** Collected: 03/12/13 13:20 Received: 03/15/13 10:10 Matrix: Water

Parameters	Results	Units	Report Limit	DF	Prepared	Analyzed	CAS No.	Qual
200.8 MET ICPMS, Dissolved	Analytical Method: EPA 200.8 Preparation Method: EPA 200.8							
Manganese, Dissolved	**6610**	ug/L	10.0	20	03/20/13 08:32	03/22/13 18:22	7439-96-5	
Molybdenum, Dissolved	**5.8**	ug/L	0.50	1	03/20/13 08:32	03/22/13 18:18	7439-98-7	
Nickel, Dissolved	**2.8**	ug/L	0.50	1	03/20/13 08:32	03/22/13 18:18	7440-02-0	
Potassium, Dissolved	**6250**	ug/L	20.0	1	03/20/13 08:32	03/22/13 18:18	7440-09-7	
Selenium, Dissolved	**0.66**	ug/L	0.50	1	03/20/13 08:32	03/22/13 18:18	7782-49-2	
Silver, Dissolved	ND	ug/L	0.50	1	03/20/13 08:32	03/22/13 18:18	7440-22-4	
Sodium, Dissolved	**5090**	ug/L	50.0	1	03/20/13 08:32	03/22/13 18:18	7440-23-5	
Thallium, Dissolved	ND	ug/L	0.10	1	03/20/13 08:32	03/22/13 18:18	7440-28-0	
Vanadium, Dissolved	ND	ug/L	0.10	1	03/20/13 08:32	03/22/13 18:18	7440-62-2	
Zinc, Dissolved	**406**	ug/L	5.0	1	03/20/13 08:32	03/22/13 18:18	7440-66-6	
200.8 Potentially Diss. Metals	Analytical Method: EPA 200.8 Preparation Method: EPA 200.8							
Aluminum, Dissolved	**1380**	ug/L	50.0	1	03/18/13 16:30	04/05/13 11:32	7429-90-5	
Antimony, Dissolved	**0.48J**	ug/L	1.0	1	03/18/13 16:30	04/05/13 11:32	7440-36-0	
Arsenic, Dissolved	**43.6**	ug/L	1.0	1	03/18/13 16:30	04/05/13 11:32	7440-38-2	
Barium, Dissolved	**21.2**	ug/L	1.0	1	03/18/13 16:30	03/29/13 12:55	7440-39-3	
Beryllium, Dissolved	**0.63**	ug/L	0.50	1	03/18/13 16:30	04/05/13 11:32	7440-41-7	
Cadmium, Dissolved	**1.5**	ug/L	0.50	1	03/18/13 16:30	04/05/13 11:32	7440-43-9	
Chromium, Dissolved	**2.6**	ug/L	1.0	1	03/18/13 16:30	03/29/13 12:55	7440-47-3	B
Cobalt, Dissolved	**3.0**	ug/L	1.0	1	03/18/13 16:30	03/29/13 12:55	7440-48-4	
Copper, Dissolved	**10.6**	ug/L	1.0	1	03/18/13 16:30	03/29/13 12:55	7440-50-8	
Iron, Dissolved	**20500**	ug/L	50.0	1	03/18/13 16:30	03/29/13 12:55	7439-89-6	
Lead, Dissolved	**14.3**	ug/L	1.0	1	03/18/13 16:30	03/29/13 12:55	7439-92-1	
Manganese, Dissolved	**6430**	ug/L	20.0	20	03/18/13 16:30	04/05/13 13:12	7439-96-5	
Molybdenum, Dissolved	**4.6**	ug/L	1.0	1	03/18/13 16:30	04/05/13 11:32	7439-98-7	
Nickel, Dissolved	**2.1**	ug/L	1.0	1	03/18/13 16:30	03/29/13 12:55	7440-02-0	
Selenium, Dissolved	**0.80J**	ug/L	1.0	1	03/18/13 16:30	04/05/13 11:32	7782-49-2	
Silver, Dissolved	**0.10J**	ug/L	0.50	1	03/18/13 16:30	04/05/13 11:32	7440-22-4	
Thallium, Dissolved	**0.26J**	ug/L	1.0	1	03/18/13 16:30	03/29/13 12:55	7440-28-0	B
Vanadium, Dissolved	**2.1**	ug/L	1.0	1	03/18/13 16:30	03/29/13 12:55	7440-62-2	
Zinc, Dissolved	**825**	ug/L	10.0	1	03/18/13 16:30	03/29/13 12:55	7440-66-6	
245.1 Mercury	Analytical Method: EPA 245.1 Preparation Method: EPA 245.1							
Mercury	ND	ug/L	0.20	1	03/20/13 15:28	03/27/13 11:40	7439-97-6	
245.1 Mercury, Dissolved	Analytical Method: EPA 245.1 Preparation Method: EPA 245.1							
Mercury, Dissolved	ND	ug/L	0.20	1	03/20/13 15:36	03/26/13 09:32	7439-97-6	
245.1 Potentially Diss Mercury	Analytical Method: EPA 245.1 Preparation Method: EPA 245.1							
Mercury, Dissolved	ND	ug/L	0.20	1	03/20/13 10:10	03/20/13 14:56	7439-97-6	
2510B Specific Conductance	Analytical Method: SM 2510B							
Specific Conductance	**1460**	umhos/cm	10.0	1		03/21/13 13:00		
Salinity	Analytical Method: Calculated							
Salinity (as dissolved solids)	**932**	mg/L	6.4	1		03/25/13 16:02		

REPORT OF LABORATORY ANALYSIS

This report shall not be reproduced, except in full,
without the written consent of Pace Analytical Services, Inc..

Pace Analytical Services, Inc.
9608 Loiret Blvd.
Lenexa, KS 66219
(913)599-5665

ANALYTICAL RESULTS

Project: MARCH 2013 RICO WATER SAMPLING
Pace Project No.: 60140509

Sample: MW-6 DEEP_20130312 **Lab ID: 60140509006** Collected: 03/12/13 13:20 Received: 03/15/13 10:10 Matrix: Water

Parameters	Results	Units	Report Limit	DF	Prepared	Analyzed	CAS No.	Qual
Salinity	Analytical Method: Calculated							
Salinity (as seawater)	**0.73**	PSU	0.014	1		03/25/13 16:02		
2320B Alkalinity	Analytical Method: SM 2320B							
Alkalinity,Bicarbonate (CaCO3)	**172**	mg/L	20.0	1		03/19/13 08:44		
Alkalinity, Carbonate (CaCO3)	ND	mg/L	20.0	1		03/19/13 08:44		
Alkalinity, Total as CaCO3	**172**	mg/L	20.0	1		03/19/13 08:44		
2540C Total Dissolved Solids	Analytical Method: SM 2540C							
Total Dissolved Solids	**1200**	mg/L	5.0	1		03/19/13 17:00		
2540D Total Suspended Solids	Analytical Method: SM 2540D							
Total Suspended Solids	**119**	mg/L	5.0	1		03/18/13 14:20		
4500S2D Sulfide, Total	Analytical Method: SM 4500-S-2 D							
Sulfide, Total	ND	mg/L	0.050	1		03/19/13 02:49	18496-25-8	
300.0 IC Anions 28 Days	Analytical Method: EPA 300.0							
Chloride	**1.3**	mg/L	1.0	1		03/27/13 15:51	16887-00-6	
Sulfate	**688**	mg/L	100	100		03/28/13 09:47	14808-79-8	
353.2 Nitrogen, NO2/NO3 pres.	Analytical Method: EPA 353.2							
Nitrogen, NO2 plus NO3	ND	mg/L	0.10	1		03/25/13 15:25		
4500CNE Cyanide, Total	Analytical Method: SM 4500-CN-E							
Cyanide	ND	mg/L	0.0050	1		03/20/13 14:54	57-12-5	
5310C TOC	Analytical Method: SM 5310C							
Total Organic Carbon	**2.6**	mg/L	1.5	3		03/22/13 17:24	7440-44-0	

This report shall not be reproduced, except in full,
without the written consent of Pace Analytical Services, Inc..

Pace Analytical Services, Inc.
9608 Loiret Blvd.
Lenexa, KS 66219
(913)599-5665

ANALYTICAL RESULTS

Project: MARCH 2013 RICO WATER SAMPLING
Pace Project No.: 60140509

Sample: MW-6 SHALLOW_20130312 **Lab ID: 60140509007** Collected: 03/12/13 13:07 Received: 03/15/13 10:10 Matrix: Water

Parameters	Results	Units	Report Limit	DF	Prepared	Analyzed	CAS No.	Qual
200.7 Potentially Diss. Metals	Analytical Method: EPA 200.7 Preparation Method: EPA 200.7							
Calcium, Dissolved	**351000**	ug/L	100	1	03/18/13 16:30	03/29/13 09:51	7440-70-2	
Magnesium, Dissolved	**49900**	ug/L	50.0	1	03/18/13 16:30	03/29/13 09:51	7439-95-4	
Potassium, Dissolved	**11500**	ug/L	500	1	03/18/13 16:30	03/29/13 09:51	7440-09-7	
Sodium, Dissolved	**4150**	ug/L	500	1	03/18/13 16:30	03/29/13 09:51	7440-23-5	
200.8 MET ICPMS	Analytical Method: EPA 200.8 Preparation Method: EPA 200.8							
Aluminum	**23200**	ug/L	80.0	20	03/20/13 08:33	03/22/13 04:40	7429-90-5	
Antimony	**0.67**	ug/L	0.50	1	03/20/13 08:33	03/22/13 04:35	7440-36-0	
Arsenic	**111**	ug/L	0.50	1	03/20/13 08:33	03/22/13 04:35	7440-38-2	
Barium	**144**	ug/L	0.30	1	03/20/13 08:33	03/22/13 04:35	7440-39-3	
Beryllium	**2.4**	ug/L	0.20	1	03/20/13 08:33	03/22/13 04:35	7440-41-7	
Cadmium	**23.7**	ug/L	0.080	1	03/20/13 08:33	03/22/13 04:35	7440-43-9	
Calcium	**397000**	ug/L	400	20	03/20/13 08:33	03/22/13 04:40	7440-70-2	
Chromium	**20.3**	ug/L	0.50	1	03/20/13 08:33	03/22/13 04:35	7440-47-3	
Cobalt	**18.9**	ug/L	0.50	1	03/20/13 08:33	03/22/13 04:35	7440-48-4	
Copper	**113**	ug/L	0.50	1	03/20/13 08:33	03/22/13 04:35	7440-50-8	
Iron	**83300**	ug/L	1000	20	03/20/13 08:33	03/22/13 04:40	7439-89-6	
Lead	**237**	ug/L	0.10	1	03/20/13 08:33	03/22/13 04:35	7439-92-1	
Magnesium	**64300**	ug/L	100	20	03/20/13 08:33	03/22/13 04:40	7439-95-4	
Manganese	**8640**	ug/L	10.0	20	03/20/13 08:33	03/22/13 04:40	7439-96-5	
Molybdenum	**7.9**	ug/L	0.50	1	03/20/13 08:33	03/22/13 04:35	7439-98-7	
Nickel	**28.6**	ug/L	0.50	1	03/20/13 08:33	03/22/13 04:35	7440-02-0	
Potassium	**14700**	ug/L	20.0	1	03/20/13 08:33	03/22/13 04:35	7440-09-7	
Selenium	**2.9**	ug/L	0.50	1	03/20/13 08:33	03/22/13 04:35	7782-49-2	
Silica	**89900**	ug/L	1070	20	03/20/13 08:33	03/22/13 04:40	7631-86-9	
Silver	**0.68**	ug/L	0.50	1	03/20/13 08:33	03/22/13 04:35	7440-22-4	
Sodium	**4350**	ug/L	50.0	1	03/20/13 08:33	03/22/13 04:35	7440-23-5	
Thallium	**0.60**	ug/L	0.10	1	03/20/13 08:33	03/22/13 04:35	7440-28-0	
Total Hardness by 2340B	**1260000**	ug/L	1420	20	03/20/13 08:33	03/22/13 04:40		
Vanadium	**29.0**	ug/L	0.10	1	03/20/13 08:33	03/22/13 04:35	7440-62-2	
Zinc	**3990**	ug/L	100	20	03/20/13 08:33	03/22/13 04:40	7440-66-6	
200.8 MET ICPMS, Dissolved	Analytical Method: EPA 200.8 Preparation Method: EPA 200.8							
Aluminum, Dissolved	**727**	ug/L	4.0	1	03/20/13 08:32	03/22/13 18:27	7429-90-5	
Antimony, Dissolved	ND	ug/L	0.50	1	03/20/13 08:32	03/22/13 18:27	7440-36-0	
Arsenic, Dissolved	**37.5**	ug/L	0.50	1	03/20/13 08:32	03/22/13 18:27	7440-38-2	
Barium, Dissolved	**16.8**	ug/L	0.30	1	03/20/13 08:32	03/22/13 18:27	7440-39-3	
Beryllium, Dissolved	**0.94**	ug/L	0.20	1	03/20/13 08:32	03/22/13 18:27	7440-41-7	
Cadmium, Dissolved	**0.19**	ug/L	0.080	1	03/20/13 08:32	03/22/13 18:27	7440-43-9	
Calcium, Dissolved	**403000**	ug/L	400	20	03/20/13 08:32	03/22/13 18:31	7440-70-2	
Chromium, Dissolved	ND	ug/L	0.50	1	03/20/13 08:32	03/22/13 18:27	7440-47-3	
Cobalt, Dissolved	**4.2**	ug/L	0.50	1	03/20/13 08:32	03/22/13 18:27	7440-48-4	
Copper, Dissolved	**0.62**	ug/L	0.50	1	03/20/13 08:32	03/22/13 18:27	7440-50-8	
Iron, Dissolved	**54300**	ug/L	1000	20	03/20/13 08:32	03/22/13 18:31	7439-89-6	
Lead, Dissolved	**0.11**	ug/L	0.10	1	03/20/13 08:32	03/22/13 18:27	7439-92-1	
Magnesium, Dissolved	**55500**	ug/L	100	20	03/20/13 08:32	03/22/13 18:31	7439-95-4	

This report shall not be reproduced, except in full,
without the written consent of Pace Analytical Services, Inc..

Pace Analytical Services, Inc.
9608 Loiret Blvd.
Lenexa, KS 66219
(913)599-5665

ANALYTICAL RESULTS

Project: MARCH 2013 RICO WATER SAMPLING
Pace Project No.: 60140509

Sample: MW-6 SHALLOW_20130312 **Lab ID: 60140509007** Collected: 03/12/13 13:07 Received: 03/15/13 10:10 Matrix: Water

Parameters	Results	Units	Report Limit	DF	Prepared	Analyzed	CAS No.	Qual
200.8 MET ICPMS, Dissolved	Analytical Method: EPA 200.8 Preparation Method: EPA 200.8							
Manganese, Dissolved	**8380**	ug/L	10.0	20	03/20/13 08:32	03/22/13 18:31	7439-96-5	
Molybdenum, Dissolved	**4.6**	ug/L	0.50	1	03/20/13 08:32	03/22/13 18:27	7439-98-7	
Nickel, Dissolved	**2.1**	ug/L	0.50	1	03/20/13 08:32	03/22/13 18:27	7440-02-0	
Potassium, Dissolved	**12100**	ug/L	20.0	1	03/20/13 08:32	03/22/13 18:27	7440-09-7	
Selenium, Dissolved	ND	ug/L	0.50	1	03/20/13 08:32	03/22/13 18:27	7782-49-2	
Silver, Dissolved	ND	ug/L	0.50	1	03/20/13 08:32	03/22/13 18:27	7440-22-4	
Sodium, Dissolved	**4260**	ug/L	50.0	1	03/20/13 08:32	03/22/13 18:27	7440-23-5	
Thallium, Dissolved	ND	ug/L	0.10	1	03/20/13 08:32	03/22/13 18:27	7440-28-0	
Vanadium, Dissolved	ND	ug/L	0.10	1	03/20/13 08:32	03/22/13 18:27	7440-62-2	
Zinc, Dissolved	**646**	ug/L	100	20	03/20/13 08:32	03/22/13 18:31	7440-66-6	
200.8 Potentially Diss. Metals	Analytical Method: EPA 200.8 Preparation Method: EPA 200.8							
Aluminum, Dissolved	**9860**	ug/L	100	2	03/18/13 16:30	04/05/13 19:45	7429-90-5	
Antimony, Dissolved	**0.43J**	ug/L	1.0	1	03/18/13 16:30	04/05/13 11:36	7440-36-0	
Arsenic, Dissolved	**86.2**	ug/L	1.0	1	03/18/13 16:30	04/05/13 11:36	7440-38-2	
Barium, Dissolved	**27.3**	ug/L	1.0	1	03/18/13 16:30	03/29/13 12:59	7440-39-3	
Beryllium, Dissolved	**1.6**	ug/L	1.0	2	03/18/13 16:30	04/05/13 19:45	7440-41-7	
Cadmium, Dissolved	**22.4**	ug/L	0.50	1	03/18/13 16:30	04/05/13 11:36	7440-43-9	
Chromium, Dissolved	**8.4**	ug/L	1.0	1	03/18/13 16:30	03/29/13 12:59	7440-47-3	
Cobalt, Dissolved	**12.3**	ug/L	1.0	1	03/18/13 16:30	03/29/13 12:59	7440-48-4	
Copper, Dissolved	**66.1**	ug/L	1.0	1	03/18/13 16:30	03/29/13 12:59	7440-50-8	
Iron, Dissolved	**63600**	ug/L	50.0	1	03/18/13 16:30	03/29/13 12:59	7439-89-6	
Lead, Dissolved	**242**	ug/L	1.0	1	03/18/13 16:30	03/29/13 12:59	7439-92-1	
Manganese, Dissolved	**8300**	ug/L	20.0	20	03/18/13 16:30	04/05/13 13:16	7439-96-5	
Molybdenum, Dissolved	**3.4**	ug/L	1.0	1	03/18/13 16:30	04/05/13 11:36	7439-98-7	
Nickel, Dissolved	**14.9**	ug/L	1.0	1	03/18/13 16:30	03/29/13 12:59	7440-02-0	
Selenium, Dissolved	**2.6**	ug/L	1.0	1	03/18/13 16:30	04/05/13 11:36	7782-49-2	
Silver, Dissolved	**0.090J**	ug/L	0.50	1	03/18/13 16:30	04/05/13 11:36	7440-22-4	
Thallium, Dissolved	**0.55J**	ug/L	1.0	1	03/18/13 16:30	03/29/13 12:59	7440-28-0	B
Vanadium, Dissolved	**9.0**	ug/L	1.0	1	03/18/13 16:30	03/29/13 12:59	7440-62-2	
Zinc, Dissolved	**3890**	ug/L	10.0	1	03/18/13 16:30	03/29/13 12:59	7440-66-6	
245.1 Mercury	Analytical Method: EPA 245.1 Preparation Method: EPA 245.1							
Mercury	ND	ug/L	0.20	1	03/20/13 15:28	03/27/13 11:43	7439-97-6	
245.1 Mercury, Dissolved	Analytical Method: EPA 245.1 Preparation Method: EPA 245.1							
Mercury, Dissolved	ND	ug/L	0.20	1	03/20/13 15:36	03/26/13 09:34	7439-97-6	
245.1 Potentially Diss Mercury	Analytical Method: EPA 245.1 Preparation Method: EPA 245.1							
Mercury, Dissolved	ND	ug/L	0.20	1	03/20/13 10:10	03/20/13 14:59	7439-97-6	
2510B Specific Conductance	Analytical Method: SM 2510B							
Specific Conductance	**2060**	umhos/cm	10.0	1		03/21/13 13:03		

This report shall not be reproduced, except in full,
without the written consent of Pace Analytical Services, Inc..

Pace Analytical Services, Inc.
9608 Loiret Blvd.
Lenexa, KS 66219
(913)599-5665

ANALYTICAL RESULTS

Project: MARCH 2013 RICO WATER SAMPLING
Pace Project No.: 60140509

Sample: MW-6 SHALLOW_20130312 **Lab ID: 60140509007** Collected: 03/12/13 13:07 Received: 03/15/13 10:10 Matrix: Water

Parameters	Results	Units	Report Limit	DF	Prepared	Analyzed	CAS No.	Qual
Salinity	Analytical Method: Calculated							
Salinity (as dissolved solids)	**1320**	mg/L	6.4	1		03/25/13 16:02		
Salinity (as seawater)	**1.0**	PSU	0.014	1		03/25/13 16:02		
2320B Alkalinity	Analytical Method: SM 2320B							
Alkalinity,Bicarbonate (CaCO3)	**121**	mg/L	20.0	1		03/19/13 08:47		
Alkalinity, Carbonate (CaCO3)	ND	mg/L	20.0	1		03/19/13 08:47		
Alkalinity, Total as CaCO3	**121**	mg/L	20.0	1		03/19/13 08:47		
2540C Total Dissolved Solids	Analytical Method: SM 2540C							
Total Dissolved Solids	**1770**	mg/L	5.0	1		03/19/13 17:00		
2540D Total Suspended Solids	Analytical Method: SM 2540D							
Total Suspended Solids	**463**	mg/L	5.0	1		03/18/13 14:20		
4500S2D Sulfide, Total	Analytical Method: SM 4500-S-2 D							
Sulfide, Total	ND	mg/L	0.050	1		03/19/13 02:46	18496-25-8	
300.0 IC Anions 28 Days	Analytical Method: EPA 300.0							
Chloride	**1.6**	mg/L	1.0	1		03/27/13 16:26	16887-00-6	
Sulfate	**1190**	mg/L	100	100		03/28/13 10:04	14808-79-8	
353.2 Nitrogen, NO2/NO3 pres.	Analytical Method: EPA 353.2							
Nitrogen, NO2 plus NO3	ND	mg/L	0.10	1		03/26/13 09:48		M1
4500CNE Cyanide, Total	Analytical Method: SM 4500-CN-E							
Cyanide	ND	mg/L	0.0050	1		03/20/13 14:55	57-12-5	
5310C TOC	Analytical Method: SM 5310C							
Total Organic Carbon	**1.3**	mg/L	0.50	1		03/22/13 17:43	7440-44-0	

This report shall not be reproduced, except in full,
without the written consent of Pace Analytical Services, Inc..

Pace Analytical Services, Inc.
9608 Loiret Blvd.
Lenexa, KS 66219
(913)599-5665

ANALYTICAL RESULTS

Project: MARCH 2013 RICO WATER SAMPLING
Pace Project No.: 60140509

Sample: GW-1_20130312 **Lab ID: 60140509008** Collected: 03/12/13 12:45 Received: 03/15/13 10:10 Matrix: Water

Parameters	Results	Units	Report Limit	DF	Prepared	Analyzed	CAS No.	Qual
200.7 Potentially Diss. Metals	Analytical Method: EPA 200.7 Preparation Method: EPA 200.7							
Calcium, Dissolved	**52200**	ug/L	100	1	03/18/13 16:30	03/29/13 09:53	7440-70-2	
Magnesium, Dissolved	**6600**	ug/L	50.0	1	03/18/13 16:30	03/29/13 09:53	7439-95-4	
Potassium, Dissolved	**912**	ug/L	500	1	03/18/13 16:30	03/29/13 09:53	7440-09-7	
Sodium, Dissolved	**2740**	ug/L	500	1	03/18/13 16:30	03/29/13 09:53	7440-23-5	
200.8 MET ICPMS	Analytical Method: EPA 200.8 Preparation Method: EPA 200.8							
Aluminum	**9650**	ug/L	4.0	1	03/20/13 08:33	03/22/13 04:49	7429-90-5	
Antimony	ND	ug/L	0.50	1	03/20/13 08:33	03/22/13 04:49	7440-36-0	
Arsenic	**15.1**	ug/L	0.50	1	03/20/13 08:33	03/22/13 04:49	7440-38-2	
Barium	**313**	ug/L	0.30	1	03/20/13 08:33	03/22/13 04:49	7440-39-3	
Beryllium	**1.1**	ug/L	0.20	1	03/20/13 08:33	03/22/13 04:49	7440-41-7	
Cadmium	**2.5**	ug/L	0.080	1	03/20/13 08:33	03/22/13 04:49	7440-43-9	
Calcium	**57400**	ug/L	400	20	03/20/13 08:33	03/22/13 04:54	7440-70-2	
Chromium	**10.3**	ug/L	0.50	1	03/20/13 08:33	03/22/13 04:49	7440-47-3	
Cobalt	**11.1**	ug/L	0.50	1	03/20/13 08:33	03/22/13 04:49	7440-48-4	
Copper	**80.4**	ug/L	0.50	1	03/20/13 08:33	03/22/13 04:49	7440-50-8	
Iron	**17000**	ug/L	50.0	1	03/20/13 08:33	03/22/13 04:49	7439-89-6	
Lead	**56.5**	ug/L	0.10	1	03/20/13 08:33	03/22/13 04:49	7439-92-1	
Magnesium	**11000**	ug/L	5.0	1	03/20/13 08:33	03/22/13 04:49	7439-95-4	
Manganese	**2100**	ug/L	10.0	20	03/20/13 08:33	03/22/13 04:54	7439-96-5	
Molybdenum	**4.1**	ug/L	0.50	1	03/20/13 08:33	03/22/13 04:49	7439-98-7	
Nickel	**21.4**	ug/L	0.50	1	03/20/13 08:33	03/22/13 04:49	7440-02-0	
Potassium	**2910**	ug/L	20.0	1	03/20/13 08:33	03/22/13 04:49	7440-09-7	
Selenium	**1.7**	ug/L	0.50	1	03/20/13 08:33	03/22/13 04:49	7782-49-2	
Silica	**35100**	ug/L	1070	20	03/20/13 08:33	03/22/13 04:54	7631-86-9	
Silver	**0.90**	ug/L	0.50	1	03/20/13 08:33	03/22/13 04:49	7440-22-4	
Sodium	**3120**	ug/L	50.0	1	03/20/13 08:33	03/22/13 04:49	7440-23-5	
Thallium	**0.25**	ug/L	0.10	1	03/20/13 08:33	03/22/13 04:49	7440-28-0	
Total Hardness by 2340B	**189000**	ug/L	1420	20	03/20/13 08:33	03/22/13 04:54		
Vanadium	**21.2**	ug/L	0.10	1	03/20/13 08:33	03/22/13 04:49	7440-62-2	
Zinc	**230**	ug/L	5.0	1	03/20/13 08:33	03/22/13 04:49	7440-66-6	
200.8 MET ICPMS, Dissolved	Analytical Method: EPA 200.8 Preparation Method: EPA 200.8							
Aluminum, Dissolved	**22.2**	ug/L	4.0	1	03/20/13 08:32	03/22/13 18:36	7429-90-5	
Antimony, Dissolved	ND	ug/L	0.50	1	03/20/13 08:32	03/22/13 18:36	7440-36-0	
Arsenic, Dissolved	ND	ug/L	0.50	1	03/20/13 08:32	03/22/13 18:36	7440-38-2	
Barium, Dissolved	**61.5**	ug/L	0.30	1	03/20/13 08:32	03/22/13 18:36	7440-39-3	
Beryllium, Dissolved	ND	ug/L	0.20	1	03/20/13 08:32	03/22/13 18:36	7440-41-7	
Cadmium, Dissolved	ND	ug/L	0.080	1	03/20/13 08:32	03/22/13 18:36	7440-43-9	
Calcium, Dissolved	**55000**	ug/L	400	20	03/20/13 08:32	03/22/13 18:40	7440-70-2	
Chromium, Dissolved	ND	ug/L	0.50	1	03/20/13 08:32	03/22/13 18:36	7440-47-3	
Cobalt, Dissolved	ND	ug/L	0.50	1	03/20/13 08:32	03/22/13 18:36	7440-48-4	
Copper, Dissolved	**1.5**	ug/L	0.50	1	03/20/13 08:32	03/22/13 18:36	7440-50-8	
Iron, Dissolved	ND	ug/L	50.0	1	03/20/13 08:32	03/22/13 18:36	7439-89-6	
Lead, Dissolved	**0.15**	ug/L	0.10	1	03/20/13 08:32	03/22/13 18:36	7439-92-1	
Magnesium, Dissolved	**6730**	ug/L	5.0	1	03/20/13 08:32	03/22/13 18:36	7439-95-4	

This report shall not be reproduced, except in full,
without the written consent of Pace Analytical Services, Inc..

Pace Analytical Services, Inc.
9608 Loiret Blvd.
Lenexa, KS 66219
(913)599-5665

ANALYTICAL RESULTS

Project: MARCH 2013 RICO WATER SAMPLING
Pace Project No.: 60140509

Sample: GW-1_20130312 **Lab ID: 60140509008** Collected: 03/12/13 12:45 Received: 03/15/13 10:10 Matrix: Water

Parameters	Results	Units	Report Limit	DF	Prepared	Analyzed	CAS No.	Qual
200.8 MET ICPMS, Dissolved	Analytical Method: EPA 200.8 Preparation Method: EPA 200.8							
Manganese, Dissolved	**4.9**	ug/L	0.50	1	03/20/13 08:32	03/22/13 18:36	7439-96-5	
Molybdenum, Dissolved	**1.3**	ug/L	0.50	1	03/20/13 08:32	03/22/13 18:36	7439-98-7	
Nickel, Dissolved	ND	ug/L	0.50	1	03/20/13 08:32	03/22/13 18:36	7440-02-0	
Potassium, Dissolved	**685**	ug/L	20.0	1	03/20/13 08:32	03/22/13 18:36	7440-09-7	
Selenium, Dissolved	**0.67**	ug/L	0.50	1	03/20/13 08:32	03/22/13 18:36	7782-49-2	
Silver, Dissolved	ND	ug/L	0.50	1	03/20/13 08:32	03/22/13 18:36	7440-22-4	
Sodium, Dissolved	**2850**	ug/L	50.0	1	03/20/13 08:32	03/22/13 18:36	7440-23-5	
Thallium, Dissolved	ND	ug/L	0.10	1	03/20/13 08:32	03/22/13 18:36	7440-28-0	
Vanadium, Dissolved	ND	ug/L	0.10	1	03/20/13 08:32	03/22/13 18:36	7440-62-2	
Zinc, Dissolved	ND	ug/L	5.0	1	03/20/13 08:32	03/22/13 18:36	7440-66-6	
200.8 Potentially Diss. Metals	Analytical Method: EPA 200.8 Preparation Method: EPA 200.8							
Aluminum, Dissolved	**2270**	ug/L	50.0	1	03/18/13 16:30	04/05/13 11:41	7429-90-5	
Antimony, Dissolved	**0.39J**	ug/L	1.0	1	03/18/13 16:30	04/05/13 11:41	7440-36-0	B
Arsenic, Dissolved	**2.5**	ug/L	1.0	1	03/18/13 16:30	04/05/13 11:41	7440-38-2	
Barium, Dissolved	**236**	ug/L	1.0	1	03/18/13 16:30	03/29/13 13:04	7440-39-3	
Beryllium, Dissolved	**0.60**	ug/L	0.50	1	03/18/13 16:30	04/05/13 11:41	7440-41-7	
Cadmium, Dissolved	**2.2**	ug/L	0.50	1	03/18/13 16:30	04/05/13 11:41	7440-43-9	
Chromium, Dissolved	**3.0**	ug/L	1.0	1	03/18/13 16:30	03/29/13 13:04	7440-47-3	B
Cobalt, Dissolved	**4.2**	ug/L	1.0	1	03/18/13 16:30	03/29/13 13:04	7440-48-4	
Copper, Dissolved	**49.6**	ug/L	1.0	1	03/18/13 16:30	03/29/13 13:04	7440-50-8	
Iron, Dissolved	**3380**	ug/L	50.0	1	03/18/13 16:30	03/29/13 13:04	7439-89-6	
Lead, Dissolved	**29.7**	ug/L	1.0	1	03/18/13 16:30	03/29/13 13:04	7439-92-1	
Manganese, Dissolved	**1020**	ug/L	1.0	1	03/18/13 16:30	03/29/13 13:04	7439-96-5	
Molybdenum, Dissolved	**0.26J**	ug/L	1.0	1	03/18/13 16:30	04/05/13 11:41	7439-98-7	
Nickel, Dissolved	**10.3**	ug/L	1.0	1	03/18/13 16:30	03/29/13 13:04	7440-02-0	
Selenium, Dissolved	**1.5**	ug/L	1.0	1	03/18/13 16:30	04/05/13 11:41	7782-49-2	
Silver, Dissolved	**0.68**	ug/L	0.50	1	03/18/13 16:30	04/05/13 11:41	7440-22-4	
Thallium, Dissolved	**0.25J**	ug/L	1.0	1	03/18/13 16:30	03/29/13 13:04	7440-28-0	B
Vanadium, Dissolved	**3.8**	ug/L	1.0	1	03/18/13 16:30	03/29/13 13:04	7440-62-2	
Zinc, Dissolved	**145**	ug/L	10.0	1	03/18/13 16:30	03/29/13 13:04	7440-66-6	
245.1 Mercury	Analytical Method: EPA 245.1 Preparation Method: EPA 245.1							
Mercury	**0.35**	ug/L	0.20	1	03/20/13 15:28	03/27/13 11:50	7439-97-6	
245.1 Mercury, Dissolved	Analytical Method: EPA 245.1 Preparation Method: EPA 245.1							
Mercury, Dissolved	ND	ug/L	0.20	1	03/20/13 15:36	03/26/13 09:37	7439-97-6	
245.1 Potentially Diss Mercury	Analytical Method: EPA 245.1 Preparation Method: EPA 245.1							
Mercury, Dissolved	ND	ug/L	0.20	1	03/20/13 10:10	03/20/13 15:07	7439-97-6	
2510B Specific Conductance	Analytical Method: SM 2510B							
Specific Conductance	**345**	umhos/cm	10.0	1		03/21/13 13:07		
Salinity	Analytical Method: Calculated							
Salinity (as dissolved solids)	**221**	mg/L	6.4	1		03/25/13 16:02		

REPORT OF LABORATORY ANALYSIS

This report shall not be reproduced, except in full,
without the written consent of Pace Analytical Services, Inc..

Pace Analytical Services, Inc.
9608 Loiret Blvd.
Lenexa, KS 66219
(913)599-5665

ANALYTICAL RESULTS

Project: MARCH 2013 RICO WATER SAMPLING
Pace Project No.: 60140509

Sample: GW-1_20130312 **Lab ID: 60140509008** Collected: 03/12/13 12:45 Received: 03/15/13 10:10 Matrix: Water

Parameters	Results	Units	Report Limit	DF	Prepared	Analyzed	CAS No.	Qual
Salinity	Analytical Method: Calculated							
Salinity (as seawater)	**0.17**	PSU	0.014	1		03/25/13 16:02		
2320B Alkalinity	Analytical Method: SM 2320B							
Alkalinity,Bicarbonate (CaCO3)	**106**	mg/L	20.0	1		03/19/13 08:51		
Alkalinity, Carbonate (CaCO3)	ND	mg/L	20.0	1		03/19/13 08:51		
Alkalinity, Total as CaCO3	**106**	mg/L	20.0	1		03/19/13 08:51		
2540C Total Dissolved Solids	Analytical Method: SM 2540C							
Total Dissolved Solids	**219**	mg/L	5.0	1		03/19/13 17:00		
2540D Total Suspended Solids	Analytical Method: SM 2540D							
Total Suspended Solids	**805**	mg/L	5.0	1		03/18/13 14:20		
4500S2D Sulfide, Total	Analytical Method: SM 4500-S-2 D							
Sulfide, Total	ND	mg/L	0.050	1		03/19/13 02:48	18496-25-8	
300.0 IC Anions 28 Days	Analytical Method: EPA 300.0							
Chloride	**2.3**	mg/L	1.0	1		03/27/13 17:01	16887-00-6	
Sulfate	**63.0**	mg/L	10.0	10		03/28/13 10:22	14808-79-8	
353.2 Nitrogen, NO2/NO3 pres.	Analytical Method: EPA 353.2							
Nitrogen, NO2 plus NO3	ND	mg/L	0.10	1		03/26/13 09:50		
4500CNE Cyanide, Total	Analytical Method: SM 4500-CN-E							
Cyanide	ND	mg/L	0.0050	1		03/20/13 14:55	57-12-5	
5310C TOC	Analytical Method: SM 5310C							
Total Organic Carbon	**1.3**	mg/L	0.50	1		03/22/13 18:01	7440-44-0	

This report shall not be reproduced, except in full,
without the written consent of Pace Analytical Services, Inc..

Pace Analytical Services, Inc.
9608 Loiret Blvd.
Lenexa, KS 66219
(913)599-5665

ANALYTICAL RESULTS

Project: MARCH 2013 RICO WATER SAMPLING
Pace Project No.: 60140509

Sample: DR-8_20130312 **Lab ID: 60140509009** Collected: 03/12/13 13:13 Received: 03/15/13 10:10 Matrix: Water

Parameters	Results	Units	Report Limit	DF	Prepared	Analyzed	CAS No.	Qual
200.7 Potentially Diss. Metals	Analytical Method: EPA 200.7 Preparation Method: EPA 200.7							
Calcium, Dissolved	**359000**	ug/L	100	1	03/18/13 16:30	03/29/13 09:55	7440-70-2	
Magnesium, Dissolved	**52500**	ug/L	50.0	1	03/18/13 16:30	03/29/13 09:55	7439-95-4	
Potassium, Dissolved	**11900**	ug/L	500	1	03/18/13 16:30	03/29/13 09:55	7440-09-7	
Sodium, Dissolved	**4310**	ug/L	500	1	03/18/13 16:30	03/29/13 09:55	7440-23-5	
200.8 MET ICPMS	Analytical Method: EPA 200.8 Preparation Method: EPA 200.8							
Aluminum	**35100**	ug/L	80.0	20	03/20/13 08:33	03/22/13 05:04	7429-90-5	
Antimony	**0.80**	ug/L	0.50	1	03/20/13 08:33	03/22/13 04:58	7440-36-0	
Arsenic	**144**	ug/L	0.50	1	03/20/13 08:33	03/22/13 04:58	7440-38-2	
Barium	**224**	ug/L	0.30	1	03/20/13 08:33	03/22/13 04:58	7440-39-3	
Beryllium	**3.1**	ug/L	0.20	1	03/20/13 08:33	03/22/13 04:58	7440-41-7	
Cadmium	**36.8**	ug/L	0.080	1	03/20/13 08:33	03/22/13 04:58	7440-43-9	
Calcium	**404000**	ug/L	400	20	03/20/13 08:33	03/22/13 05:04	7440-70-2	
Chromium	**32.5**	ug/L	0.50	1	03/20/13 08:33	03/22/13 04:58	7440-47-3	
Cobalt	**26.7**	ug/L	0.50	1	03/20/13 08:33	03/22/13 04:58	7440-48-4	
Copper	**181**	ug/L	0.50	1	03/20/13 08:33	03/22/13 04:58	7440-50-8	
Iron	**99900**	ug/L	1000	20	03/20/13 08:33	03/22/13 05:04	7439-89-6	
Lead	**343**	ug/L	0.10	1	03/20/13 08:33	03/22/13 04:58	7439-92-1	
Magnesium	**70400**	ug/L	100	20	03/20/13 08:33	03/22/13 05:04	7439-95-4	
Manganese	**8820**	ug/L	10.0	20	03/20/13 08:33	03/22/13 05:04	7439-96-5	
Molybdenum	**11.2**	ug/L	0.50	1	03/20/13 08:33	03/22/13 04:58	7439-98-7	
Nickel	**43.0**	ug/L	0.50	1	03/20/13 08:33	03/22/13 04:58	7440-02-0	
Potassium	**16500**	ug/L	20.0	1	03/20/13 08:33	03/22/13 04:58	7440-09-7	
Selenium	**4.3**	ug/L	0.50	1	03/20/13 08:33	03/22/13 04:58	7782-49-2	
Silica	**108000**	ug/L	10700	200	03/20/13 08:33	03/22/13 05:08	7631-86-9	
Silver	**1.5**	ug/L	0.50	1	03/20/13 08:33	03/22/13 04:58	7440-22-4	
Sodium	**4400**	ug/L	50.0	1	03/20/13 08:33	03/22/13 04:58	7440-23-5	
Thallium	**0.83**	ug/L	0.10	1	03/20/13 08:33	03/22/13 04:58	7440-28-0	
Total Hardness by 2340B	**1300000**	ug/L	1420	20	03/20/13 08:33	03/22/13 05:04		
Vanadium	**45.7**	ug/L	0.10	1	03/20/13 08:33	03/22/13 04:58	7440-62-2	
Zinc	**5630**	ug/L	100	20	03/20/13 08:33	03/22/13 05:04	7440-66-6	
200.8 MET ICPMS, Dissolved	Analytical Method: EPA 200.8 Preparation Method: EPA 200.8							
Aluminum, Dissolved	**741**	ug/L	4.0	1	03/20/13 08:32	03/22/13 18:45	7429-90-5	
Antimony, Dissolved	ND	ug/L	0.50	1	03/20/13 08:32	03/22/13 18:45	7440-36-0	
Arsenic, Dissolved	**37.5**	ug/L	0.50	1	03/20/13 08:32	03/22/13 18:45	7440-38-2	
Barium, Dissolved	**16.9**	ug/L	0.30	1	03/20/13 08:32	03/22/13 18:45	7440-39-3	
Beryllium, Dissolved	**1.0**	ug/L	0.20	1	03/20/13 08:32	03/22/13 18:45	7440-41-7	
Cadmium, Dissolved	**0.17**	ug/L	0.080	1	03/20/13 08:32	03/22/13 18:45	7440-43-9	
Calcium, Dissolved	**405000**	ug/L	400	20	03/20/13 08:32	03/22/13 18:49	7440-70-2	
Chromium, Dissolved	**0.65**	ug/L	0.50	1	03/20/13 08:32	03/22/13 18:45	7440-47-3	
Cobalt, Dissolved	**4.3**	ug/L	0.50	1	03/20/13 08:32	03/22/13 18:45	7440-48-4	
Copper, Dissolved	**0.61**	ug/L	0.50	1	03/20/13 08:32	03/22/13 18:45	7440-50-8	
Iron, Dissolved	**55000**	ug/L	1000	20	03/20/13 08:32	03/22/13 18:49	7439-89-6	
Lead, Dissolved	**0.14**	ug/L	0.10	1	03/20/13 08:32	03/22/13 18:45	7439-92-1	
Magnesium, Dissolved	**55800**	ug/L	100	20	03/20/13 08:32	03/22/13 18:49	7439-95-4	

This report shall not be reproduced, except in full,
without the written consent of Pace Analytical Services, Inc..

Pace Analytical Services, Inc.
9608 Loiret Blvd.
Lenexa, KS 66219
(913)599-5665

ANALYTICAL RESULTS

Project: MARCH 2013 RICO WATER SAMPLING
Pace Project No.: 60140509

Sample: DR-8_20130312 **Lab ID: 60140509009** Collected: 03/12/13 13:13 Received: 03/15/13 10:10 Matrix: Water

Parameters	Results	Units	Report Limit	DF	Prepared	Analyzed	CAS No.	Qual
200.8 MET ICPMS, Dissolved	Analytical Method: EPA 200.8 Preparation Method: EPA 200.8							
Manganese, Dissolved	**8430**	ug/L	10.0	20	03/20/13 08:32	03/22/13 18:49	7439-96-5	
Molybdenum, Dissolved	**4.6**	ug/L	0.50	1	03/20/13 08:32	03/22/13 18:45	7439-98-7	
Nickel, Dissolved	**2.5**	ug/L	0.50	1	03/20/13 08:32	03/22/13 18:45	7440-02-0	
Potassium, Dissolved	**12200**	ug/L	20.0	1	03/20/13 08:32	03/22/13 18:45	7440-09-7	
Selenium, Dissolved	ND	ug/L	0.50	1	03/20/13 08:32	03/22/13 18:45	7782-49-2	
Silver, Dissolved	ND	ug/L	0.50	1	03/20/13 08:32	03/22/13 18:45	7440-22-4	
Sodium, Dissolved	**4310**	ug/L	50.0	1	03/20/13 08:32	03/22/13 18:45	7440-23-5	
Thallium, Dissolved	ND	ug/L	0.10	1	03/20/13 08:32	03/22/13 18:45	7440-28-0	
Vanadium, Dissolved	ND	ug/L	0.10	1	03/20/13 08:32	03/22/13 18:45	7440-62-2	
Zinc, Dissolved	**662**	ug/L	100	20	03/20/13 08:32	03/22/13 18:49	7440-66-6	
200.8 Potentially Diss. Metals	Analytical Method: EPA 200.8 Preparation Method: EPA 200.8							
Aluminum, Dissolved	**5630**	ug/L	100	2	03/18/13 16:30	04/05/13 19:49	7429-90-5	
Antimony, Dissolved	**0.41J**	ug/L	1.0	1	03/18/13 16:30	04/05/13 11:45	7440-36-0	B
Arsenic, Dissolved	**62.9**	ug/L	1.0	1	03/18/13 16:30	04/05/13 11:45	7440-38-2	
Barium, Dissolved	**29.7**	ug/L	1.0	1	03/18/13 16:30	03/29/13 13:08	7440-39-3	
Beryllium, Dissolved	**1.2**	ug/L	1.0	2	03/18/13 16:30	04/05/13 19:49	7440-41-7	
Cadmium, Dissolved	**8.9**	ug/L	0.50	1	03/18/13 16:30	04/05/13 11:45	7440-43-9	
Chromium, Dissolved	**4.8**	ug/L	1.0	1	03/18/13 16:30	03/29/13 13:08	7440-47-3	
Cobalt, Dissolved	**8.1**	ug/L	1.0	1	03/18/13 16:30	03/29/13 13:08	7440-48-4	
Copper, Dissolved	**34.6**	ug/L	1.0	1	03/18/13 16:30	03/29/13 13:08	7440-50-8	
Iron, Dissolved	**62600**	ug/L	50.0	1	03/18/13 16:30	03/29/13 13:08	7439-89-6	
Lead, Dissolved	**103**	ug/L	1.0	1	03/18/13 16:30	03/29/13 13:08	7439-92-1	
Manganese, Dissolved	**8440**	ug/L	20.0	20	03/18/13 16:30	04/05/13 13:28	7439-96-5	
Molybdenum, Dissolved	**3.4**	ug/L	1.0	1	03/18/13 16:30	04/05/13 11:45	7439-98-7	
Nickel, Dissolved	**8.3**	ug/L	1.0	1	03/18/13 16:30	03/29/13 13:08	7440-02-0	
Selenium, Dissolved	**1.1**	ug/L	1.0	1	03/18/13 16:30	04/05/13 11:45	7782-49-2	
Silver, Dissolved	**0.099J**	ug/L	0.50	1	03/18/13 16:30	04/05/13 11:45	7440-22-4	
Thallium, Dissolved	**0.43J**	ug/L	1.0	1	03/18/13 16:30	03/29/13 13:08	7440-28-0	B
Vanadium, Dissolved	**5.4**	ug/L	1.0	1	03/18/13 16:30	03/29/13 13:08	7440-62-2	
Zinc, Dissolved	**1980**	ug/L	10.0	1	03/18/13 16:30	03/29/13 13:08	7440-66-6	
245.1 Mercury	Analytical Method: EPA 245.1 Preparation Method: EPA 245.1							
Mercury	ND	ug/L	0.20	1	03/20/13 15:28	03/27/13 11:53	7439-97-6	
245.1 Mercury, Dissolved	Analytical Method: EPA 245.1 Preparation Method: EPA 245.1							
Mercury, Dissolved	ND	ug/L	0.20	1	03/20/13 15:36	03/26/13 09:39	7439-97-6	
245.1 Potentially Diss Mercury	Analytical Method: EPA 245.1 Preparation Method: EPA 245.1							
Mercury, Dissolved	ND	ug/L	0.20	1	03/20/13 10:10	03/20/13 15:10	7439-97-6	
2510B Specific Conductance	Analytical Method: SM 2510B							
Specific Conductance	**2030**	umhos/cm	10.0	1		03/21/13 13:09		
Salinity	Analytical Method: Calculated							
Salinity (as dissolved solids)	**1300**	mg/L	6.4	1		03/25/13 16:02		

REPORT OF LABORATORY ANALYSIS

This report shall not be reproduced, except in full,
without the written consent of Pace Analytical Services, Inc..

Pace Analytical Services, Inc.
9608 Loiret Blvd.
Lenexa, KS 66219
(913)599-5665

ANALYTICAL RESULTS

Project: MARCH 2013 RICO WATER SAMPLING
Pace Project No.: 60140509

Sample: DR-8_20130312 **Lab ID: 60140509009** Collected: 03/12/13 13:13 Received: 03/15/13 10:10 Matrix: Water

Parameters	Results	Units	Report Limit	DF	Prepared	Analyzed	CAS No.	Qual
Salinity	Analytical Method: Calculated							
Salinity (as seawater)	**1.0**	PSU	0.014	1		03/25/13 16:02		
2320B Alkalinity	Analytical Method: SM 2320B							
Alkalinity,Bicarbonate (CaCO3)	**112**	mg/L	20.0	1		03/19/13 09:03		
Alkalinity, Carbonate (CaCO3)	ND	mg/L	20.0	1		03/19/13 09:03		
Alkalinity, Total as CaCO3	**112**	mg/L	20.0	1		03/19/13 09:03		
2540C Total Dissolved Solids	Analytical Method: SM 2540C							
Total Dissolved Solids	**1710**	mg/L	5.0	1		03/19/13 17:00		
2540D Total Suspended Solids	Analytical Method: SM 2540D							
Total Suspended Solids	**1700**	mg/L	5.0	1		03/18/13 14:20		
4500S2D Sulfide, Total	Analytical Method: SM 4500-S-2 D							
Sulfide, Total	ND	mg/L	0.050	1		03/19/13 02:50	18496-25-8	
300.0 IC Anions 28 Days	Analytical Method: EPA 300.0							
Chloride	**1.7**	mg/L	1.0	1		03/27/13 17:37	16887-00-6	
Sulfate	**1190**	mg/L	100	100		03/28/13 11:15	14808-79-8	
353.2 Nitrogen, NO2/NO3 pres.	Analytical Method: EPA 353.2							
Nitrogen, NO2 plus NO3	ND	mg/L	0.10	1		03/26/13 09:51		M1
4500CNE Cyanide, Total	Analytical Method: SM 4500-CN-E							
Cyanide	ND	mg/L	0.0050	1		03/20/13 14:58	57-12-5	
5310C TOC	Analytical Method: SM 5310C							
Total Organic Carbon	**1.1**	mg/L	0.50	1		03/22/13 18:37	7440-44-0	

This report shall not be reproduced, except in full,
without the written consent of Pace Analytical Services, Inc..

Pace Analytical Services, Inc.
9608 Loiret Blvd.
Lenexa, KS 66219
(913)599-5665

ANALYTICAL RESULTS

Project: MARCH 2013 RICO WATER SAMPLING
Pace Project No.: 60140509

Sample: DR-3_20130313 **Lab ID: 60140509010** Collected: 03/13/13 16:21 Received: 03/15/13 10:10 Matrix: Water

Parameters	Results	Units	Report Limit	DF	Prepared	Analyzed	CAS No.	Qual
200.7 Potentially Diss. Metals	Analytical Method: EPA 200.7 Preparation Method: EPA 200.7							
Calcium, Dissolved	**217000**	ug/L	100	1	03/18/13 16:30	03/29/13 09:57	7440-70-2	
Magnesium, Dissolved	**17000**	ug/L	50.0	1	03/18/13 16:30	03/29/13 09:57	7439-95-4	
Potassium, Dissolved	**5080**	ug/L	500	1	03/18/13 16:30	03/29/13 09:57	7440-09-7	
Sodium, Dissolved	**11000**	ug/L	500	1	03/18/13 16:30	03/29/13 09:57	7440-23-5	
200.8 MET ICPMS	Analytical Method: EPA 200.8 Preparation Method: EPA 200.8							
Aluminum	**1500**	ug/L	4.0	1	03/20/13 08:33	03/22/13 05:27	7429-90-5	
Antimony	ND	ug/L	0.50	1	03/20/13 08:33	03/22/13 05:27	7440-36-0	
Arsenic	**2.9**	ug/L	0.50	1	03/20/13 08:33	03/22/13 05:27	7440-38-2	
Barium	**20.9**	ug/L	0.30	1	03/20/13 08:33	03/22/13 05:27	7440-39-3	
Beryllium	**1.4**	ug/L	0.20	1	03/20/13 08:33	03/22/13 05:27	7440-41-7	
Cadmium	**14.6**	ug/L	0.080	1	03/20/13 08:33	03/22/13 05:27	7440-43-9	
Calcium	**251000**	ug/L	400	20	03/20/13 08:33	03/22/13 16:09	7440-70-2	
Chromium	**1.2**	ug/L	0.50	1	03/20/13 08:33	03/22/13 05:27	7440-47-3	
Cobalt	**2.6**	ug/L	0.50	1	03/20/13 08:33	03/22/13 05:27	7440-48-4	
Copper	**296**	ug/L	0.50	1	03/20/13 08:33	03/22/13 05:27	7440-50-8	
Iron	**16500**	ug/L	50.0	1	03/20/13 08:33	03/22/13 05:27	7439-89-6	
Lead	**27.6**	ug/L	0.10	1	03/20/13 08:33	03/22/13 05:27	7439-92-1	
Magnesium	**19700**	ug/L	5.0	1	03/20/13 08:33	03/22/13 05:27	7439-95-4	
Manganese	**1640**	ug/L	10.0	20	03/20/13 08:33	03/22/13 16:09	7439-96-5	
Molybdenum	**19.5**	ug/L	0.50	1	03/20/13 08:33	03/22/13 05:27	7439-98-7	
Nickel	**3.9**	ug/L	0.50	1	03/20/13 08:33	03/22/13 05:27	7440-02-0	
Potassium	**5420**	ug/L	20.0	1	03/20/13 08:33	03/22/13 05:27	7440-09-7	
Selenium	ND	ug/L	0.50	1	03/20/13 08:33	03/22/13 05:27	7782-49-2	
Silica	**18900**	ug/L	1070	20	03/20/13 08:33	03/22/13 16:09	7631-86-9	
Silver	ND	ug/L	0.50	1	03/20/13 08:33	03/22/13 05:27	7440-22-4	
Sodium	**11400**	ug/L	50.0	1	03/20/13 08:33	03/22/13 05:27	7440-23-5	
Thallium	ND	ug/L	0.10	1	03/20/13 08:33	03/22/13 05:27	7440-28-0	
Total Hardness by 2340B	**708000**	ug/L	1420	20	03/20/13 08:33	03/22/13 16:09		
Vanadium	**0.34**	ug/L	0.10	1	03/20/13 08:33	03/22/13 05:27	7440-62-2	
Zinc	**3090**	ug/L	100	20	03/20/13 08:33	03/22/13 16:09	7440-66-6	
200.8 MET ICPMS, Dissolved	Analytical Method: EPA 200.8 Preparation Method: EPA 200.8							
Aluminum, Dissolved	**25.2**	ug/L	4.0	1	03/20/13 08:32	03/22/13 19:09	7429-90-5	
Antimony, Dissolved	ND	ug/L	0.50	1	03/20/13 08:32	03/22/13 19:09	7440-36-0	
Arsenic, Dissolved	ND	ug/L	0.50	1	03/20/13 08:32	03/22/13 19:09	7440-38-2	
Barium, Dissolved	**20.6**	ug/L	0.30	1	03/20/13 08:32	03/22/13 19:09	7440-39-3	
Beryllium, Dissolved	ND	ug/L	0.20	1	03/20/13 08:32	03/22/13 19:09	7440-41-7	
Cadmium, Dissolved	**11.7**	ug/L	0.080	1	03/20/13 08:32	03/22/13 19:09	7440-43-9	
Calcium, Dissolved	**243000**	ug/L	400	20	03/20/13 08:32	03/22/13 19:13	7440-70-2	
Chromium, Dissolved	ND	ug/L	0.50	1	03/20/13 08:32	03/22/13 19:09	7440-47-3	
Cobalt, Dissolved	**2.6**	ug/L	0.50	1	03/20/13 08:32	03/22/13 19:09	7440-48-4	
Copper, Dissolved	**9.4**	ug/L	0.50	1	03/20/13 08:32	03/22/13 19:09	7440-50-8	
Iron, Dissolved	**222**	ug/L	50.0	1	03/20/13 08:32	03/22/13 19:09	7439-89-6	
Lead, Dissolved	**0.36**	ug/L	0.10	1	03/20/13 08:32	03/22/13 19:09	7439-92-1	
Magnesium, Dissolved	**19600**	ug/L	5.0	1	03/20/13 08:32	03/22/13 19:09	7439-95-4	

This report shall not be reproduced, except in full,
without the written consent of Pace Analytical Services, Inc..

Pace Analytical Services, Inc.
9608 Loiret Blvd.
Lenexa, KS 66219
(913)599-5665

ANALYTICAL RESULTS

Project: MARCH 2013 RICO WATER SAMPLING
Pace Project No.: 60140509

Sample: DR-3_20130313 **Lab ID: 60140509010** Collected: 03/13/13 16:21 Received: 03/15/13 10:10 Matrix: Water

Parameters	Results	Units	Report Limit	DF	Prepared	Analyzed	CAS No.	Qual
200.8 MET ICPMS, Dissolved	Analytical Method: EPA 200.8 Preparation Method: EPA 200.8							
Manganese, Dissolved	**1590**	ug/L	10.0	20	03/20/13 08:32	03/22/13 19:13	7439-96-5	
Molybdenum, Dissolved	**14.7**	ug/L	0.50	1	03/20/13 08:32	03/22/13 19:09	7439-98-7	
Nickel, Dissolved	**6.9**	ug/L	0.50	1	03/20/13 08:32	03/22/13 19:09	7440-02-0	
Potassium, Dissolved	**5560**	ug/L	20.0	1	03/20/13 08:32	03/22/13 19:09	7440-09-7	
Selenium, Dissolved	ND	ug/L	0.50	1	03/20/13 08:32	03/22/13 19:09	7782-49-2	
Silver, Dissolved	ND	ug/L	0.50	1	03/20/13 08:32	03/22/13 19:09	7440-22-4	
Sodium, Dissolved	**11700**	ug/L	50.0	1	03/20/13 08:32	03/22/13 19:09	7440-23-5	
Thallium, Dissolved	ND	ug/L	0.10	1	03/20/13 08:32	03/22/13 19:09	7440-28-0	
Vanadium, Dissolved	ND	ug/L	0.10	1	03/20/13 08:32	03/22/13 19:09	7440-62-2	
Zinc, Dissolved	**2350**	ug/L	100	20	03/20/13 08:32	03/22/13 19:13	7440-66-6	
200.8 Potentially Diss. Metals	Analytical Method: EPA 200.8 Preparation Method: EPA 200.8							
Aluminum, Dissolved	**1100**	ug/L	50.0	1	03/18/13 16:30	04/05/13 11:49	7429-90-5	
Antimony, Dissolved	**0.58J**	ug/L	1.0	1	03/18/13 16:30	04/05/13 11:49	7440-36-0	
Arsenic, Dissolved	**1.9**	ug/L	1.0	1	03/18/13 16:30	04/05/13 11:49	7440-38-2	
Barium, Dissolved	**20.6**	ug/L	1.0	1	03/18/13 16:30	03/29/13 13:12	7440-39-3	
Beryllium, Dissolved	**0.94**	ug/L	0.50	1	03/18/13 16:30	04/05/13 11:49	7440-41-7	
Cadmium, Dissolved	**13.8**	ug/L	0.50	1	03/18/13 16:30	04/05/13 11:49	7440-43-9	
Chromium, Dissolved	**1.4**	ug/L	1.0	1	03/18/13 16:30	03/29/13 13:12	7440-47-3	B
Cobalt, Dissolved	**2.4**	ug/L	1.0	1	03/18/13 16:30	03/29/13 13:12	7440-48-4	
Copper, Dissolved	**214**	ug/L	1.0	1	03/18/13 16:30	03/29/13 13:12	7440-50-8	
Iron, Dissolved	**12600**	ug/L	50.0	1	03/18/13 16:30	03/29/13 13:12	7439-89-6	
Lead, Dissolved	**21.7**	ug/L	1.0	1	03/18/13 16:30	03/29/13 13:12	7439-92-1	
Manganese, Dissolved	**1630**	ug/L	1.0	1	03/18/13 16:30	03/29/13 13:12	7439-96-5	
Molybdenum, Dissolved	**15.4**	ug/L	1.0	1	03/18/13 16:30	04/05/13 11:49	7439-98-7	
Nickel, Dissolved	**2.7**	ug/L	1.0	1	03/18/13 16:30	03/29/13 13:12	7440-02-0	
Selenium, Dissolved	ND	ug/L	1.0	1	03/18/13 16:30	04/05/13 11:49	7782-49-2	
Silver, Dissolved	**0.12J**	ug/L	0.50	1	03/18/13 16:30	04/05/13 11:49	7440-22-4	
Thallium, Dissolved	**0.30J**	ug/L	1.0	1	03/18/13 16:30	03/29/13 13:12	7440-28-0	B
Vanadium, Dissolved	ND	ug/L	1.0	1	03/18/13 16:30	03/29/13 13:12	7440-62-2	
Zinc, Dissolved	**2980**	ug/L	10.0	1	03/18/13 16:30	03/29/13 13:12	7440-66-6	
245.1 Mercury	Analytical Method: EPA 245.1 Preparation Method: EPA 245.1							
Mercury	ND	ug/L	0.20	1	03/20/13 15:28	03/27/13 11:55	7439-97-6	
245.1 Mercury, Dissolved	Analytical Method: EPA 245.1 Preparation Method: EPA 245.1							
Mercury, Dissolved	ND	ug/L	0.20	1	03/20/13 15:36	03/26/13 09:42	7439-97-6	
245.1 Potentially Diss Mercury	Analytical Method: EPA 245.1 Preparation Method: EPA 245.1							
Mercury, Dissolved	ND	ug/L	0.20	1	03/20/13 10:10	03/20/13 15:12	7439-97-6	
2510B Specific Conductance	Analytical Method: SM 2510B							
Specific Conductance	**1240**	umhos/cm	10.0	1		03/21/13 13:10		
Salinity	Analytical Method: Calculated							
Salinity (as dissolved solids)	**792**	mg/L	6.4	1		03/25/13 16:02		

REPORT OF LABORATORY ANALYSIS

This report shall not be reproduced, except in full,
without the written consent of Pace Analytical Services, Inc..

Pace Analytical Services, Inc.
9608 Loiret Blvd.
Lenexa, KS 66219
(913)599-5665

ANALYTICAL RESULTS

Project: MARCH 2013 RICO WATER SAMPLING
Pace Project No.: 60140509

Sample: DR-3_20130313 **Lab ID: 60140509010** Collected: 03/13/13 16:21 Received: 03/15/13 10:10 Matrix: Water

Parameters	Results	Units	Report Limit	DF	Prepared	Analyzed	CAS No.	Qual
Salinity	Analytical Method: Calculated							
Salinity (as seawater)	**0.62**	PSU	0.014	1		03/25/13 16:02		
2320B Alkalinity	Analytical Method: SM 2320B							
Alkalinity,Bicarbonate (CaCO3)	**96.0**	mg/L	20.0	1		03/19/13 09:11		
Alkalinity, Carbonate (CaCO3)	ND	mg/L	20.0	1		03/19/13 09:11		
Alkalinity, Total as CaCO3	**96.0**	mg/L	20.0	1		03/19/13 09:11		
2540C Total Dissolved Solids	Analytical Method: SM 2540C							
Total Dissolved Solids	**1030**	mg/L	5.0	1		03/19/13 17:00		
2540D Total Suspended Solids	Analytical Method: SM 2540D							
Total Suspended Solids	**52.0**	mg/L	5.0	1		03/19/13 14:52		
4500S2D Sulfide, Total	Analytical Method: SM 4500-S-2 D							
Sulfide, Total	ND	mg/L	0.050	1		03/19/13 02:50	18496-25-8	
300.0 IC Anions 28 Days	Analytical Method: EPA 300.0							
Chloride	ND	mg/L	1.0	1		03/27/13 18:48	16887-00-6	
Sulfate	**623**	mg/L	100	100		03/28/13 11:33	14808-79-8	
353.2 Nitrogen, NO2/NO3 pres.	Analytical Method: EPA 353.2							
Nitrogen, NO2 plus NO3	ND	mg/L	0.10	1		03/26/13 09:55		
4500CNE Cyanide, Total	Analytical Method: SM 4500-CN-E							
Cyanide	ND	mg/L	0.0050	1		03/20/13 14:58	57-12-5	
5310C TOC	Analytical Method: SM 5310C							
Total Organic Carbon	ND	mg/L	0.50	1		03/22/13 18:55	7440-44-0	

This report shall not be reproduced, except in full,
without the written consent of Pace Analytical Services, Inc..

Pace Analytical Services, Inc.
9608 Loiret Blvd.
Lenexa, KS 66219
(913)599-5665

ANALYTICAL RESULTS

Project: MARCH 2013 RICO WATER SAMPLING
Pace Project No.: 60140509

Sample: DR-4_20130313 **Lab ID: 60140509011** Collected: 03/13/13 16:04 Received: 03/15/13 10:10 Matrix: Water

Parameters	Results	Units	Report Limit	DF	Prepared	Analyzed	CAS No.	Qual
200.7 Potentially Diss. Metals	Analytical Method: EPA 200.7 Preparation Method: EPA 200.7							
Calcium, Dissolved	**222000**	ug/L	100	1	03/18/13 16:30	03/29/13 09:59	7440-70-2	
Magnesium, Dissolved	**17300**	ug/L	50.0	1	03/18/13 16:30	03/29/13 09:59	7439-95-4	
Potassium, Dissolved	**5400**	ug/L	500	1	03/18/13 16:30	03/29/13 09:59	7440-09-7	
Sodium, Dissolved	**11500**	ug/L	500	1	03/18/13 16:30	03/29/13 09:59	7440-23-5	
200.8 MET ICPMS	Analytical Method: EPA 200.8 Preparation Method: EPA 200.8							
Aluminum	**338**	ug/L	4.0	1	03/20/13 08:33	03/22/13 05:35	7429-90-5	
Antimony	ND	ug/L	0.50	1	03/20/13 08:33	03/22/13 05:35	7440-36-0	
Arsenic	**0.72**	ug/L	0.50	1	03/20/13 08:33	03/22/13 05:35	7440-38-2	
Barium	**20.0**	ug/L	0.30	1	03/20/13 08:33	03/22/13 05:35	7440-39-3	
Beryllium	**0.33**	ug/L	0.20	1	03/20/13 08:33	03/22/13 05:35	7440-41-7	
Cadmium	**10.7**	ug/L	0.080	1	03/20/13 08:33	03/22/13 05:35	7440-43-9	
Calcium	**252000**	ug/L	400	20	03/20/13 08:33	03/22/13 16:13	7440-70-2	
Chromium	**0.52**	ug/L	0.50	1	03/20/13 08:33	03/22/13 05:35	7440-47-3	
Cobalt	**2.5**	ug/L	0.50	1	03/20/13 08:33	03/22/13 05:35	7440-48-4	
Copper	**71.9**	ug/L	0.50	1	03/20/13 08:33	03/22/13 05:35	7440-50-8	
Iron	**3620**	ug/L	50.0	1	03/20/13 08:33	03/22/13 05:35	7439-89-6	
Lead	**6.8**	ug/L	0.10	1	03/20/13 08:33	03/22/13 05:35	7439-92-1	
Magnesium	**20000**	ug/L	5.0	1	03/20/13 08:33	03/22/13 05:35	7439-95-4	
Manganese	**1570**	ug/L	10.0	20	03/20/13 08:33	03/22/13 16:13	7439-96-5	
Molybdenum	**17.4**	ug/L	0.50	1	03/20/13 08:33	03/22/13 05:35	7439-98-7	
Nickel	**3.4**	ug/L	0.50	1	03/20/13 08:33	03/22/13 05:35	7440-02-0	
Potassium	**5590**	ug/L	20.0	1	03/20/13 08:33	03/22/13 05:35	7440-09-7	
Selenium	ND	ug/L	0.50	1	03/20/13 08:33	03/22/13 05:35	7782-49-2	
Silica	**16800**	ug/L	1070	20	03/20/13 08:33	03/22/13 16:13	7631-86-9	
Silver	ND	ug/L	0.50	1	03/20/13 08:33	03/22/13 05:35	7440-22-4	
Sodium	**11700**	ug/L	50.0	1	03/20/13 08:33	03/22/13 05:35	7440-23-5	
Thallium	ND	ug/L	0.10	1	03/20/13 08:33	03/22/13 05:35	7440-28-0	
Total Hardness by 2340B	**711000**	ug/L	1420	20	03/20/13 08:33	03/22/13 16:13		
Vanadium	ND	ug/L	0.10	1	03/20/13 08:33	03/22/13 05:35	7440-62-2	
Zinc	**2060**	ug/L	100	20	03/20/13 08:33	03/22/13 16:13	7440-66-6	
200.8 MET ICPMS, Dissolved	Analytical Method: EPA 200.8 Preparation Method: EPA 200.8							
Aluminum, Dissolved	**12.0**	ug/L	4.0	1	03/20/13 08:32	03/22/13 19:18	7429-90-5	
Antimony, Dissolved	ND	ug/L	0.50	1	03/20/13 08:32	03/22/13 19:18	7440-36-0	
Arsenic, Dissolved	ND	ug/L	0.50	1	03/20/13 08:32	03/22/13 19:18	7440-38-2	
Barium, Dissolved	**20.7**	ug/L	0.30	1	03/20/13 08:32	03/22/13 19:18	7440-39-3	
Beryllium, Dissolved	ND	ug/L	0.20	1	03/20/13 08:32	03/22/13 19:18	7440-41-7	
Cadmium, Dissolved	**8.9**	ug/L	0.080	1	03/20/13 08:32	03/22/13 19:18	7440-43-9	
Calcium, Dissolved	**249000**	ug/L	400	20	03/20/13 08:32	03/22/13 19:22	7440-70-2	
Chromium, Dissolved	ND	ug/L	0.50	1	03/20/13 08:32	03/22/13 19:18	7440-47-3	
Cobalt, Dissolved	**2.5**	ug/L	0.50	1	03/20/13 08:32	03/22/13 19:18	7440-48-4	
Copper, Dissolved	**3.6**	ug/L	0.50	1	03/20/13 08:32	03/22/13 19:18	7440-50-8	
Iron, Dissolved	ND	ug/L	50.0	1	03/20/13 08:32	03/22/13 19:18	7439-89-6	
Lead, Dissolved	ND	ug/L	0.10	1	03/20/13 08:32	03/22/13 19:18	7439-92-1	
Magnesium, Dissolved	**20300**	ug/L	5.0	1	03/20/13 08:32	03/22/13 19:18	7439-95-4	

This report shall not be reproduced, except in full,
without the written consent of Pace Analytical Services, Inc..

Pace Analytical Services, Inc.
9608 Loiret Blvd.
Lenexa, KS 66219
(913)599-5665

ANALYTICAL RESULTS

Project: MARCH 2013 RICO WATER SAMPLING
Pace Project No.: 60140509

Sample: DR-4_20130313 **Lab ID: 60140509011** Collected: 03/13/13 16:04 Received: 03/15/13 10:10 Matrix: Water

Parameters	Results	Units	Report Limit	DF	Prepared	Analyzed	CAS No.	Qual
200.8 MET ICPMS, Dissolved	Analytical Method: EPA 200.8 Preparation Method: EPA 200.8							
Manganese, Dissolved	**1570**	ug/L	10.0	20	03/20/13 08:32	03/22/13 19:22	7439-96-5	
Molybdenum, Dissolved	**16.2**	ug/L	0.50	1	03/20/13 08:32	03/22/13 19:18	7439-98-7	
Nickel, Dissolved	**7.4**	ug/L	0.50	1	03/20/13 08:32	03/22/13 19:18	7440-02-0	
Potassium, Dissolved	**5850**	ug/L	20.0	1	03/20/13 08:32	03/22/13 19:18	7440-09-7	
Selenium, Dissolved	ND	ug/L	0.50	1	03/20/13 08:32	03/22/13 19:18	7782-49-2	
Silver, Dissolved	ND	ug/L	0.50	1	03/20/13 08:32	03/22/13 19:18	7440-22-4	
Sodium, Dissolved	**12200**	ug/L	50.0	1	03/20/13 08:32	03/22/13 19:18	7440-23-5	
Thallium, Dissolved	ND	ug/L	0.10	1	03/20/13 08:32	03/22/13 19:18	7440-28-0	
Vanadium, Dissolved	ND	ug/L	0.10	1	03/20/13 08:32	03/22/13 19:18	7440-62-2	
Zinc, Dissolved	**1580**	ug/L	100	20	03/20/13 08:32	03/22/13 19:22	7440-66-6	
200.8 Potentially Diss. Metals	Analytical Method: EPA 200.8 Preparation Method: EPA 200.8							
Aluminum, Dissolved	**309**	ug/L	50.0	1	03/18/13 16:30	04/05/13 11:53	7429-90-5	
Antimony, Dissolved	**0.49J**	ug/L	1.0	1	03/18/13 16:30	04/05/13 11:53	7440-36-0	
Arsenic, Dissolved	**0.67J**	ug/L	1.0	1	03/18/13 16:30	04/05/13 11:53	7440-38-2	
Barium, Dissolved	**19.2**	ug/L	1.0	1	03/18/13 16:30	03/29/13 13:16	7440-39-3	
Beryllium, Dissolved	**0.27J**	ug/L	0.50	1	03/18/13 16:30	04/05/13 11:53	7440-41-7	
Cadmium, Dissolved	**10.4**	ug/L	0.50	1	03/18/13 16:30	04/05/13 11:53	7440-43-9	
Chromium, Dissolved	**0.98J**	ug/L	1.0	1	03/18/13 16:30	03/29/13 13:16	7440-47-3	B
Cobalt, Dissolved	**2.2**	ug/L	1.0	1	03/18/13 16:30	03/29/13 13:16	7440-48-4	
Copper, Dissolved	**58.9**	ug/L	1.0	1	03/18/13 16:30	03/29/13 13:16	7440-50-8	
Iron, Dissolved	**3200**	ug/L	50.0	1	03/18/13 16:30	03/29/13 13:16	7439-89-6	
Lead, Dissolved	**6.8**	ug/L	1.0	1	03/18/13 16:30	03/29/13 13:16	7439-92-1	
Manganese, Dissolved	**1530**	ug/L	1.0	1	03/18/13 16:30	03/29/13 13:16	7439-96-5	
Molybdenum, Dissolved	**16.1**	ug/L	1.0	1	03/18/13 16:30	04/05/13 11:53	7439-98-7	
Nickel, Dissolved	**2.3**	ug/L	1.0	1	03/18/13 16:30	03/29/13 13:16	7440-02-0	
Selenium, Dissolved	ND	ug/L	1.0	1	03/18/13 16:30	04/05/13 11:53	7782-49-2	
Silver, Dissolved	**0.097J**	ug/L	0.50	1	03/18/13 16:30	04/05/13 11:53	7440-22-4	
Thallium, Dissolved	**0.30J**	ug/L	1.0	1	03/18/13 16:30	03/29/13 13:16	7440-28-0	B
Vanadium, Dissolved	ND	ug/L	1.0	1	03/18/13 16:30	03/29/13 13:16	7440-62-2	
Zinc, Dissolved	**1930**	ug/L	10.0	1	03/18/13 16:30	03/29/13 13:16	7440-66-6	
245.1 Mercury	Analytical Method: EPA 245.1 Preparation Method: EPA 245.1							
Mercury	ND	ug/L	0.20	1	03/20/13 15:28	03/27/13 11:58	7439-97-6	
245.1 Mercury, Dissolved	Analytical Method: EPA 245.1 Preparation Method: EPA 245.1							
Mercury, Dissolved	ND	ug/L	0.20	1	03/20/13 15:36	03/26/13 09:52	7439-97-6	
245.1 Potentially Diss Mercury	Analytical Method: EPA 245.1 Preparation Method: EPA 245.1							
Mercury, Dissolved	ND	ug/L	0.20	1	03/20/13 10:10	03/20/13 15:14	7439-97-6	
2510B Specific Conductance	Analytical Method: SM 2510B							
Specific Conductance	**1290**	umhos/cm	10.0	1		03/21/13 13:12		
Salinity	Analytical Method: Calculated							
Salinity (as dissolved solids)	**824**	mg/L	6.4	1		03/25/13 16:02		

REPORT OF LABORATORY ANALYSIS

This report shall not be reproduced, except in full,
without the written consent of Pace Analytical Services, Inc..

Pace Analytical Services, Inc.
9608 Loiret Blvd.
Lenexa, KS 66219
(913)599-5665

ANALYTICAL RESULTS

Project: MARCH 2013 RICO WATER SAMPLING
Pace Project No.: 60140509

Sample: DR-4_20130313 **Lab ID: 60140509011** Collected: 03/13/13 16:04 Received: 03/15/13 10:10 Matrix: Water

Parameters	Results	Units	Report Limit	DF	Prepared	Analyzed	CAS No.	Qual
Salinity	Analytical Method: Calculated							
Salinity (as seawater)	**0.61**	PSU	0.014	1		03/25/13 16:02		
2320B Alkalinity	Analytical Method: SM 2320B							
Alkalinity,Bicarbonate (CaCO3)	**100**	mg/L	20.0	1		03/19/13 09:15		
Alkalinity, Carbonate (CaCO3)	ND	mg/L	20.0	1		03/19/13 09:15		
Alkalinity, Total as CaCO3	**100**	mg/L	20.0	1		03/19/13 09:15		
2540C Total Dissolved Solids	Analytical Method: SM 2540C							
Total Dissolved Solids	**992**	mg/L	5.0	1		03/19/13 17:01		
2540D Total Suspended Solids	Analytical Method: SM 2540D							
Total Suspended Solids	**10**	mg/L	5.0	1		03/19/13 14:52		
4500S2D Sulfide, Total	Analytical Method: SM 4500-S-2 D							
Sulfide, Total	ND	mg/L	0.050	1		03/19/13 02:51	18496-25-8	
300.0 IC Anions 28 Days	Analytical Method: EPA 300.0							
Chloride	ND	mg/L	1.0	1		03/27/13 19:58	16887-00-6	
Sulfate	**657**	mg/L	50.0	50		03/28/13 12:08	14808-79-8	
353.2 Nitrogen, NO2/NO3 pres.	Analytical Method: EPA 353.2							
Nitrogen, NO2 plus NO3	ND	mg/L	0.10	1		03/26/13 09:56		
4500CNE Cyanide, Total	Analytical Method: SM 4500-CN-E							
Cyanide	ND	mg/L	0.0050	1		03/20/13 14:59	57-12-5	
5310C TOC	Analytical Method: SM 5310C							
Total Organic Carbon	ND	mg/L	0.50	1		03/22/13 19:14	7440-44-0	

This report shall not be reproduced, except in full,
without the written consent of Pace Analytical Services, Inc..

Pace Analytical Services, Inc.
9608 Loiret Blvd.
Lenexa, KS 66219
(913)599-5665

ANALYTICAL RESULTS

Project: MARCH 2013 RICO WATER SAMPLING
Pace Project No.: 60140509

Sample: DR-5_20130313 **Lab ID: 60140509012** Collected: 03/13/13 16:01 Received: 03/15/13 10:10 Matrix: Water

Parameters	Results	Units	Report Limit	DF	Prepared	Analyzed	CAS No.	Qual
200.7 Potentially Diss. Metals	Analytical Method: EPA 200.7 Preparation Method: EPA 200.7							
Calcium, Dissolved	**219000**	ug/L	100	1	03/18/13 16:30	03/29/13 10:01	7440-70-2	
Magnesium, Dissolved	**17600**	ug/L	50.0	1	03/18/13 16:30	03/29/13 10:01	7439-95-4	
Potassium, Dissolved	**5240**	ug/L	500	1	03/18/13 16:30	03/29/13 10:01	7440-09-7	
Sodium, Dissolved	**11000**	ug/L	500	1	03/18/13 16:30	03/29/13 10:01	7440-23-5	
200.8 MET ICPMS	Analytical Method: EPA 200.8 Preparation Method: EPA 200.8							
Aluminum	**80.3**	ug/L	4.0	1	03/20/13 08:33	03/22/13 05:48	7429-90-5	
Antimony	ND	ug/L	0.50	1	03/20/13 08:33	03/22/13 05:48	7440-36-0	
Arsenic	ND	ug/L	0.50	1	03/20/13 08:33	03/22/13 05:48	7440-38-2	
Barium	**20.3**	ug/L	0.30	1	03/20/13 08:33	03/22/13 05:48	7440-39-3	
Beryllium	ND	ug/L	0.20	1	03/20/13 08:33	03/22/13 05:48	7440-41-7	
Cadmium	**7.4**	ug/L	0.080	1	03/20/13 08:33	03/22/13 05:48	7440-43-9	
Calcium	**244000**	ug/L	400	20	03/20/13 08:33	03/22/13 05:53	7440-70-2	
Chromium	ND	ug/L	0.50	1	03/20/13 08:33	03/22/13 05:48	7440-47-3	
Cobalt	**2.1**	ug/L	0.50	1	03/20/13 08:33	03/22/13 05:48	7440-48-4	
Copper	**18.0**	ug/L	0.50	1	03/20/13 08:33	03/22/13 05:48	7440-50-8	
Iron	**1110**	ug/L	50.0	1	03/20/13 08:33	03/22/13 05:48	7439-89-6	
Lead	**1.7**	ug/L	0.10	1	03/20/13 08:33	03/22/13 05:48	7439-92-1	
Magnesium	**20300**	ug/L	5.0	1	03/20/13 08:33	03/22/13 05:48	7439-95-4	
Manganese	**1450**	ug/L	10.0	20	03/20/13 08:33	03/22/13 05:53	7439-96-5	
Molybdenum	**15.4**	ug/L	0.50	1	03/20/13 08:33	03/22/13 05:48	7439-98-7	
Nickel	**3.3**	ug/L	0.50	1	03/20/13 08:33	03/22/13 05:48	7440-02-0	
Potassium	**5600**	ug/L	20.0	1	03/20/13 08:33	03/22/13 05:48	7440-09-7	
Selenium	ND	ug/L	0.50	1	03/20/13 08:33	03/22/13 05:48	7782-49-2	
Silica	**15300**	ug/L	1070	20	03/20/13 08:33	03/22/13 05:53	7631-86-9	
Silver	ND	ug/L	0.50	1	03/20/13 08:33	03/22/13 05:48	7440-22-4	
Sodium	**11400**	ug/L	50.0	1	03/20/13 08:33	03/22/13 05:48	7440-23-5	
Thallium	ND	ug/L	0.10	1	03/20/13 08:33	03/22/13 05:48	7440-28-0	
Total Hardness by 2340B	**693000**	ug/L	1420	20	03/20/13 08:33	03/22/13 05:53		
Vanadium	ND	ug/L	0.10	1	03/20/13 08:33	03/22/13 05:48	7440-62-2	
Zinc	**1490**	ug/L	100	20	03/20/13 08:33	03/22/13 05:53	7440-66-6	
200.8 MET ICPMS, Dissolved	Analytical Method: EPA 200.8 Preparation Method: EPA 200.8							
Aluminum, Dissolved	**6.3**	ug/L	4.0	1	03/20/13 08:32	03/22/13 19:26	7429-90-5	
Antimony, Dissolved	ND	ug/L	0.50	1	03/20/13 08:32	03/22/13 19:26	7440-36-0	
Arsenic, Dissolved	ND	ug/L	0.50	1	03/20/13 08:32	03/22/13 19:26	7440-38-2	
Barium, Dissolved	**21.3**	ug/L	0.30	1	03/20/13 08:32	03/22/13 19:26	7440-39-3	
Beryllium, Dissolved	ND	ug/L	0.20	1	03/20/13 08:32	03/22/13 19:26	7440-41-7	
Cadmium, Dissolved	**0.20**	ug/L	0.080	1	03/20/13 08:32	03/22/13 19:26	7440-43-9	
Calcium, Dissolved	**250000**	ug/L	400	20	03/20/13 08:32	03/22/13 19:31	7440-70-2	
Chromium, Dissolved	ND	ug/L	0.50	1	03/20/13 08:32	03/22/13 19:26	7440-47-3	
Cobalt, Dissolved	**2.3**	ug/L	0.50	1	03/20/13 08:32	03/22/13 19:26	7440-48-4	
Copper, Dissolved	**1.3**	ug/L	0.50	1	03/20/13 08:32	03/22/13 19:26	7440-50-8	
Iron, Dissolved	ND	ug/L	50.0	1	03/20/13 08:32	03/22/13 19:26	7439-89-6	
Lead, Dissolved	ND	ug/L	0.10	1	03/20/13 08:32	03/22/13 19:26	7439-92-1	
Magnesium, Dissolved	**20700**	ug/L	5.0	1	03/20/13 08:32	03/22/13 19:26	7439-95-4	

This report shall not be reproduced, except in full,
without the written consent of Pace Analytical Services, Inc..

Pace Analytical Services, Inc.
9608 Loiret Blvd.
Lenexa, KS 66219
(913)599-5665

ANALYTICAL RESULTS

Project: MARCH 2013 RICO WATER SAMPLING
Pace Project No.: 60140509

Sample: DR-5_20130313 **Lab ID: 60140509012** Collected: 03/13/13 16:01 Received: 03/15/13 10:10 Matrix: Water

Parameters	Results	Units	Report Limit	DF	Prepared	Analyzed	CAS No.	Qual
200.8 MET ICPMS, Dissolved	Analytical Method: EPA 200.8 Preparation Method: EPA 200.8							
Manganese, Dissolved	**1490**	ug/L	10.0	20	03/20/13 08:32	03/22/13 19:31	7439-96-5	
Molybdenum, Dissolved	**15.3**	ug/L	0.50	1	03/20/13 08:32	03/22/13 19:26	7439-98-7	
Nickel, Dissolved	**7.6**	ug/L	0.50	1	03/20/13 08:32	03/22/13 19:26	7440-02-0	
Potassium, Dissolved	**5890**	ug/L	20.0	1	03/20/13 08:32	03/22/13 19:26	7440-09-7	
Selenium, Dissolved	ND	ug/L	0.50	1	03/20/13 08:32	03/22/13 19:26	7782-49-2	
Silver, Dissolved	ND	ug/L	0.50	1	03/20/13 08:32	03/22/13 19:26	7440-22-4	
Sodium, Dissolved	**12000**	ug/L	50.0	1	03/20/13 08:32	03/22/13 19:26	7440-23-5	
Thallium, Dissolved	ND	ug/L	0.10	1	03/20/13 08:32	03/22/13 19:26	7440-28-0	
Vanadium, Dissolved	ND	ug/L	0.10	1	03/20/13 08:32	03/22/13 19:26	7440-62-2	
Zinc, Dissolved	**1260**	ug/L	100	20	03/20/13 08:32	03/22/13 19:31	7440-66-6	
200.8 Potentially Diss. Metals	Analytical Method: EPA 200.8 Preparation Method: EPA 200.8							
Aluminum, Dissolved	**75.8**	ug/L	50.0	1	03/18/13 16:30	04/05/13 11:57	7429-90-5	
Antimony, Dissolved	**0.44J**	ug/L	1.0	1	03/18/13 16:30	04/05/13 11:57	7440-36-0	
Arsenic, Dissolved	**0.27J**	ug/L	1.0	1	03/18/13 16:30	04/05/13 11:57	7440-38-2	
Barium, Dissolved	**20.0**	ug/L	1.0	1	03/18/13 16:30	03/29/13 13:20	7440-39-3	
Beryllium, Dissolved	**0.098J**	ug/L	0.50	1	03/18/13 16:30	04/05/13 11:57	7440-41-7	
Cadmium, Dissolved	**7.6**	ug/L	0.50	1	03/18/13 16:30	04/05/13 11:57	7440-43-9	
Chromium, Dissolved	**0.70J**	ug/L	1.0	1	03/18/13 16:30	03/29/13 13:20	7440-47-3	B
Cobalt, Dissolved	**1.9**	ug/L	1.0	1	03/18/13 16:30	03/29/13 13:20	7440-48-4	
Copper, Dissolved	**16.5**	ug/L	1.0	1	03/18/13 16:30	03/29/13 13:20	7440-50-8	
Iron, Dissolved	**1040**	ug/L	50.0	1	03/18/13 16:30	03/29/13 13:20	7439-89-6	
Lead, Dissolved	**2.1**	ug/L	1.0	1	03/18/13 16:30	03/29/13 13:20	7439-92-1	B
Manganese, Dissolved	**1460**	ug/L	1.0	1	03/18/13 16:30	03/29/13 13:20	7439-96-5	
Molybdenum, Dissolved	**14.9**	ug/L	1.0	1	03/18/13 16:30	04/05/13 11:57	7439-98-7	
Nickel, Dissolved	**2.0**	ug/L	1.0	1	03/18/13 16:30	03/29/13 13:20	7440-02-0	
Selenium, Dissolved	ND	ug/L	1.0	1	03/18/13 16:30	04/05/13 11:57	7782-49-2	
Silver, Dissolved	**0.091J**	ug/L	0.50	1	03/18/13 16:30	04/05/13 11:57	7440-22-4	
Thallium, Dissolved	**0.29J**	ug/L	1.0	1	03/18/13 16:30	03/29/13 13:20	7440-28-0	B
Vanadium, Dissolved	ND	ug/L	1.0	1	03/18/13 16:30	03/29/13 13:20	7440-62-2	
Zinc, Dissolved	**1550**	ug/L	10.0	1	03/18/13 16:30	03/29/13 13:20	7440-66-6	
245.1 Mercury	Analytical Method: EPA 245.1 Preparation Method: EPA 245.1							
Mercury	ND	ug/L	0.20	1	03/20/13 15:28	03/27/13 12:00	7439-97-6	
245.1 Mercury, Dissolved	Analytical Method: EPA 245.1 Preparation Method: EPA 245.1							
Mercury, Dissolved	ND	ug/L	0.20	1	03/20/13 15:36	03/26/13 09:54	7439-97-6	
245.1 Potentially Diss Mercury	Analytical Method: EPA 245.1 Preparation Method: EPA 245.1							
Mercury, Dissolved	ND	ug/L	0.20	1	03/20/13 10:10	03/20/13 15:16	7439-97-6	
2510B Specific Conductance	Analytical Method: SM 2510B							
Specific Conductance	**1240**	umhos/cm	10.0	1		03/21/13 13:17		
Salinity	Analytical Method: Calculated							
Salinity (as dissolved solids)	**794**	mg/L	6.4	1		03/25/13 16:02		

REPORT OF LABORATORY ANALYSIS

This report shall not be reproduced, except in full,
without the written consent of Pace Analytical Services, Inc..

Pace Analytical Services, Inc.
9608 Loiret Blvd.
Lenexa, KS 66219
(913)599-5665

ANALYTICAL RESULTS

Project: MARCH 2013 RICO WATER SAMPLING
Pace Project No.: 60140509

Sample: DR-5_20130313 **Lab ID: 60140509012** Collected: 03/13/13 16:01 Received: 03/15/13 10:10 Matrix: Water

Parameters	Results	Units	Report Limit	DF	Prepared	Analyzed	CAS No.	Qual
Salinity	Analytical Method: Calculated							
Salinity (as seawater)	**0.62**	PSU	0.014	1		03/25/13 16:02		
2320B Alkalinity	Analytical Method: SM 2320B							
Alkalinity,Bicarbonate (CaCO3)	**106**	mg/L	20.0	1		03/19/13 09:19		
Alkalinity, Carbonate (CaCO3)	ND	mg/L	20.0	1		03/19/13 09:19		
Alkalinity, Total as CaCO3	**106**	mg/L	20.0	1		03/19/13 09:19		
2540C Total Dissolved Solids	Analytical Method: SM 2540C							
Total Dissolved Solids	**948**	mg/L	5.0	1		03/19/13 17:01		
2540D Total Suspended Solids	Analytical Method: SM 2540D							
Total Suspended Solids	ND	mg/L	5.0	1		03/19/13 14:52		
4500S2D Sulfide, Total	Analytical Method: SM 4500-S-2 D							
Sulfide, Total	**0.052**	mg/L	0.050	1		03/19/13 02:52	18496-25-8	
300.0 IC Anions 28 Days	Analytical Method: EPA 300.0							
Chloride	ND	mg/L	1.0	1		03/27/13 20:34	16887-00-6	
Sulfate	**688**	mg/L	50.0	50		03/28/13 12:26	14808-79-8	
353.2 Nitrogen, NO2/NO3 pres.	Analytical Method: EPA 353.2							
Nitrogen, NO2 plus NO3	ND	mg/L	0.10	1		03/26/13 09:57		
4500CNE Cyanide, Total	Analytical Method: SM 4500-CN-E							
Cyanide	ND	mg/L	0.0050	1		03/20/13 15:02	57-12-5	
5310C TOC	Analytical Method: SM 5310C							
Total Organic Carbon	ND	mg/L	0.50	1		03/22/13 19:32	7440-44-0	

This report shall not be reproduced, except in full,
without the written consent of Pace Analytical Services, Inc..

Pace Analytical Services, Inc.
9608 Loiret Blvd.
Lenexa, KS 66219
(913)599-5665

ANALYTICAL RESULTS

Project: MARCH 2013 RICO WATER SAMPLING
Pace Project No.: 60140509

Sample: DR-6_20130313 **Lab ID: 60140509013** Collected: 03/13/13 15:57 Received: 03/15/13 10:10 Matrix: Water

Parameters	Results	Units	Report Limit	DF	Prepared	Analyzed	CAS No.	Qual
200.7 Potentially Diss. Metals	Analytical Method: EPA 200.7 Preparation Method: EPA 200.7							
Calcium, Dissolved	**221000**	ug/L	100	1	03/18/13 16:30	03/29/13 10:02	7440-70-2	
Magnesium, Dissolved	**19600**	ug/L	50.0	1	03/18/13 16:30	03/29/13 10:02	7439-95-4	
Potassium, Dissolved	**5860**	ug/L	500	1	03/18/13 16:30	03/29/13 10:02	7440-09-7	
Sodium, Dissolved	**12900**	ug/L	500	1	03/18/13 16:30	03/29/13 10:02	7440-23-5	
200.8 MET ICPMS	Analytical Method: EPA 200.8 Preparation Method: EPA 200.8							
Aluminum	**45.9**	ug/L	4.0	1	03/20/13 08:33	03/22/13 05:57	7429-90-5	
Antimony	ND	ug/L	0.50	1	03/20/13 08:33	03/22/13 05:57	7440-36-0	
Arsenic	ND	ug/L	0.50	1	03/20/13 08:33	03/22/13 05:57	7440-38-2	
Barium	**19.7**	ug/L	0.30	1	03/20/13 08:33	03/22/13 05:57	7440-39-3	
Beryllium	ND	ug/L	0.20	1	03/20/13 08:33	03/22/13 05:57	7440-41-7	
Cadmium	**4.5**	ug/L	0.080	1	03/20/13 08:33	03/22/13 05:57	7440-43-9	
Calcium	**244000**	ug/L	400	20	03/20/13 08:33	03/22/13 06:01	7440-70-2	
Chromium	ND	ug/L	0.50	1	03/20/13 08:33	03/22/13 05:57	7440-47-3	
Cobalt	**2.0**	ug/L	0.50	1	03/20/13 08:33	03/22/13 05:57	7440-48-4	
Copper	**8.8**	ug/L	0.50	1	03/20/13 08:33	03/22/13 05:57	7440-50-8	
Iron	**823**	ug/L	50.0	1	03/20/13 08:33	03/22/13 05:57	7439-89-6	
Lead	**0.86**	ug/L	0.10	1	03/20/13 08:33	03/22/13 05:57	7439-92-1	
Magnesium	**22300**	ug/L	5.0	1	03/20/13 08:33	03/22/13 05:57	7439-95-4	
Manganese	**1420**	ug/L	10.0	20	03/20/13 08:33	03/22/13 06:01	7439-96-5	
Molybdenum	**13.3**	ug/L	0.50	1	03/20/13 08:33	03/22/13 05:57	7439-98-7	
Nickel	**2.9**	ug/L	0.50	1	03/20/13 08:33	03/22/13 05:57	7440-02-0	
Potassium	**6160**	ug/L	20.0	1	03/20/13 08:33	03/22/13 05:57	7440-09-7	
Selenium	ND	ug/L	0.50	1	03/20/13 08:33	03/22/13 05:57	7782-49-2	
Silica	**17000**	ug/L	1070	20	03/20/13 08:33	03/22/13 06:01	7631-86-9	
Silver	ND	ug/L	0.50	1	03/20/13 08:33	03/22/13 05:57	7440-22-4	
Sodium	**13200**	ug/L	50.0	1	03/20/13 08:33	03/22/13 05:57	7440-23-5	
Thallium	ND	ug/L	0.10	1	03/20/13 08:33	03/22/13 05:57	7440-28-0	
Total Hardness by 2340B	**701000**	ug/L	1420	20	03/20/13 08:33	03/22/13 06:01		
Vanadium	ND	ug/L	0.10	1	03/20/13 08:33	03/22/13 05:57	7440-62-2	
Zinc	**1400**	ug/L	100	20	03/20/13 08:33	03/22/13 06:01	7440-66-6	
200.8 MET ICPMS, Dissolved	Analytical Method: EPA 200.8 Preparation Method: EPA 200.8							
Aluminum, Dissolved	**9.9**	ug/L	4.0	1	03/20/13 08:32	03/22/13 19:35	7429-90-5	
Antimony, Dissolved	ND	ug/L	0.50	1	03/20/13 08:32	03/22/13 19:35	7440-36-0	
Arsenic, Dissolved	ND	ug/L	0.50	1	03/20/13 08:32	03/22/13 19:35	7440-38-2	
Barium, Dissolved	**20.9**	ug/L	0.30	1	03/20/13 08:32	03/22/13 19:35	7440-39-3	
Beryllium, Dissolved	ND	ug/L	0.20	1	03/20/13 08:32	03/22/13 19:35	7440-41-7	
Cadmium, Dissolved	**0.67**	ug/L	0.080	1	03/20/13 08:32	03/22/13 19:35	7440-43-9	
Calcium, Dissolved	**248000**	ug/L	400	20	03/20/13 08:32	03/22/13 19:40	7440-70-2	
Chromium, Dissolved	ND	ug/L	0.50	1	03/20/13 08:32	03/22/13 19:35	7440-47-3	
Cobalt, Dissolved	**1.9**	ug/L	0.50	1	03/20/13 08:32	03/22/13 19:35	7440-48-4	
Copper, Dissolved	**2.0**	ug/L	0.50	1	03/20/13 08:32	03/22/13 19:35	7440-50-8	
Iron, Dissolved	**173**	ug/L	50.0	1	03/20/13 08:32	03/22/13 19:35	7439-89-6	
Lead, Dissolved	**0.10**	ug/L	0.10	1	03/20/13 08:32	03/22/13 19:35	7439-92-1	
Magnesium, Dissolved	**21500**	ug/L	100	20	03/20/13 08:32	03/22/13 19:40	7439-95-4	

This report shall not be reproduced, except in full,
without the written consent of Pace Analytical Services, Inc..

Pace Analytical Services, Inc.
9608 Loiret Blvd.
Lenexa, KS 66219
(913)599-5665

ANALYTICAL RESULTS

Project: MARCH 2013 RICO WATER SAMPLING
Pace Project No.: 60140509

Sample: DR-6_20130313 **Lab ID: 60140509013** Collected: 03/13/13 15:57 Received: 03/15/13 10:10 Matrix: Water

Parameters	Results	Units	Report Limit	DF	Prepared	Analyzed	CAS No.	Qual
200.8 MET ICPMS, Dissolved	Analytical Method: EPA 200.8 Preparation Method: EPA 200.8							
Manganese, Dissolved	**1440**	ug/L	10.0	20	03/20/13 08:32	03/22/13 19:40	7439-96-5	
Molybdenum, Dissolved	**13.3**	ug/L	0.50	1	03/20/13 08:32	03/22/13 19:35	7439-98-7	
Nickel, Dissolved	**3.4**	ug/L	0.50	1	03/20/13 08:32	03/22/13 19:35	7440-02-0	
Potassium, Dissolved	**6410**	ug/L	20.0	1	03/20/13 08:32	03/22/13 19:35	7440-09-7	
Selenium, Dissolved	ND	ug/L	0.50	1	03/20/13 08:32	03/22/13 19:35	7782-49-2	
Silver, Dissolved	ND	ug/L	0.50	1	03/20/13 08:32	03/22/13 19:35	7440-22-4	
Sodium, Dissolved	**13800**	ug/L	50.0	1	03/20/13 08:32	03/22/13 19:35	7440-23-5	
Thallium, Dissolved	ND	ug/L	0.10	1	03/20/13 08:32	03/22/13 19:35	7440-28-0	
Vanadium, Dissolved	ND	ug/L	0.10	1	03/20/13 08:32	03/22/13 19:35	7440-62-2	
Zinc, Dissolved	**1370**	ug/L	100	20	03/20/13 08:32	03/22/13 19:40	7440-66-6	
200.8 Potentially Diss. Metals	Analytical Method: EPA 200.8 Preparation Method: EPA 200.8							
Aluminum, Dissolved	**38.2J**	ug/L	50.0	1	03/18/13 16:30	04/05/13 12:01	7429-90-5	
Antimony, Dissolved	**0.42J**	ug/L	1.0	1	03/18/13 16:30	04/05/13 12:01	7440-36-0	B
Arsenic, Dissolved	**0.24J**	ug/L	1.0	1	03/18/13 16:30	04/05/13 12:01	7440-38-2	
Barium, Dissolved	**18.6**	ug/L	1.0	1	03/18/13 16:30	03/29/13 13:24	7440-39-3	
Beryllium, Dissolved	**0.067J**	ug/L	0.50	1	03/18/13 16:30	04/05/13 12:01	7440-41-7	
Cadmium, Dissolved	**4.5**	ug/L	0.50	1	03/18/13 16:30	04/05/13 12:01	7440-43-9	
Chromium, Dissolved	**0.56J**	ug/L	1.0	1	03/18/13 16:30	03/29/13 13:24	7440-47-3	B
Cobalt, Dissolved	**1.7**	ug/L	1.0	1	03/18/13 16:30	03/29/13 13:24	7440-48-4	
Copper, Dissolved	**7.2**	ug/L	1.0	1	03/18/13 16:30	03/29/13 13:24	7440-50-8	
Iron, Dissolved	**712**	ug/L	50.0	1	03/18/13 16:30	03/29/13 13:24	7439-89-6	
Lead, Dissolved	**1.2**	ug/L	1.0	1	03/18/13 16:30	03/29/13 13:24	7439-92-1	B
Manganese, Dissolved	**1380**	ug/L	1.0	1	03/18/13 16:30	03/29/13 13:24	7439-96-5	
Molybdenum, Dissolved	**12.6**	ug/L	1.0	1	03/18/13 16:30	04/05/13 12:01	7439-98-7	
Nickel, Dissolved	**1.7**	ug/L	1.0	1	03/18/13 16:30	03/29/13 13:24	7440-02-0	
Selenium, Dissolved	ND	ug/L	1.0	1	03/18/13 16:30	04/05/13 12:01	7782-49-2	
Silver, Dissolved	**0.086J**	ug/L	0.50	1	03/18/13 16:30	04/05/13 12:01	7440-22-4	
Thallium, Dissolved	**0.28J**	ug/L	1.0	1	03/18/13 16:30	03/29/13 13:24	7440-28-0	B
Vanadium, Dissolved	ND	ug/L	1.0	1	03/18/13 16:30	03/29/13 13:24	7440-62-2	
Zinc, Dissolved	**1380**	ug/L	10.0	1	03/18/13 16:30	03/29/13 13:24	7440-66-6	
245.1 Mercury	Analytical Method: EPA 245.1 Preparation Method: EPA 245.1							
Mercury	ND	ug/L	0.20	1	03/20/13 15:28	03/27/13 12:03	7439-97-6	
245.1 Mercury, Dissolved	Analytical Method: EPA 245.1 Preparation Method: EPA 245.1							
Mercury, Dissolved	ND	ug/L	0.20	1	03/20/13 15:36	03/26/13 09:57	7439-97-6	
245.1 Potentially Diss Mercury	Analytical Method: EPA 245.1 Preparation Method: EPA 245.1							
Mercury, Dissolved	ND	ug/L	0.20	1	03/20/13 10:10	03/20/13 15:19	7439-97-6	
2510B Specific Conductance	Analytical Method: SM 2510B							
Specific Conductance	**1320**	umhos/cm	10.0	1		03/21/13 13:19		
Salinity	Analytical Method: Calculated							
Salinity (as dissolved solids)	**848**	mg/L	6.4	1		03/25/13 16:02		

REPORT OF LABORATORY ANALYSIS

This report shall not be reproduced, except in full,
without the written consent of Pace Analytical Services, Inc..

Pace Analytical Services, Inc.
9608 Loiret Blvd.
Lenexa, KS 66219
(913)599-5665

ANALYTICAL RESULTS

Project: MARCH 2013 RICO WATER SAMPLING
Pace Project No.: 60140509

Sample: DR-6_20130313 **Lab ID: 60140509013** Collected: 03/13/13 15:57 Received: 03/15/13 10:10 Matrix: Water

Parameters	Results	Units	Report Limit	DF	Prepared	Analyzed	CAS No.	Qual
Salinity	Analytical Method: Calculated							
Salinity (as seawater)	**0.66**	PSU	0.014	1		03/25/13 16:02		
2320B Alkalinity	Analytical Method: SM 2320B							
Alkalinity,Bicarbonate (CaCO3)	**130**	mg/L	20.0	1		03/19/13 09:23		
Alkalinity, Carbonate (CaCO3)	ND	mg/L	20.0	1		03/19/13 09:23		
Alkalinity, Total as CaCO3	**130**	mg/L	20.0	1		03/19/13 09:23		
2540C Total Dissolved Solids	Analytical Method: SM 2540C							
Total Dissolved Solids	**1130**	mg/L	5.0	1		03/19/13 17:01		
2540D Total Suspended Solids	Analytical Method: SM 2540D							
Total Suspended Solids	ND	mg/L	5.0	1		03/19/13 14:52		
4500S2D Sulfide, Total	Analytical Method: SM 4500-S-2 D							
Sulfide, Total	ND	mg/L	0.050	1		03/19/13 02:53	18496-25-8	
300.0 IC Anions 28 Days	Analytical Method: EPA 300.0							
Chloride	ND	mg/L	1.0	1		03/27/13 21:09	16887-00-6	
Sulfate	**701**	mg/L	50.0	50		03/28/13 12:44	14808-79-8	
353.2 Nitrogen, NO2/NO3 pres.	Analytical Method: EPA 353.2							
Nitrogen, NO2 plus NO3	ND	mg/L	0.10	1		03/26/13 09:58		
4500CNE Cyanide, Total	Analytical Method: SM 4500-CN-E							
Cyanide	ND	mg/L	0.0050	1		03/20/13 15:03	57-12-5	
5310C TOC	Analytical Method: SM 5310C							
Total Organic Carbon	ND	mg/L	0.50	1		03/22/13 19:50	7440-44-0	

This report shall not be reproduced, except in full,
without the written consent of Pace Analytical Services, Inc..

Pace Analytical Services, Inc.
9608 Loiret Blvd.
Lenexa, KS 66219
(913)599-5665

ANALYTICAL RESULTS

Project: MARCH 2013 RICO WATER SAMPLING
Pace Project No.: 60140509

Sample: DR-9_20130313 **Lab ID: 60140509014** Collected: 03/13/13 14:46 Received: 03/15/13 10:10 Matrix: Water

Parameters	Results	Units	Report Limit	DF	Prepared	Analyzed	CAS No.	Qual
200.7 Potentially Diss. Metals	Analytical Method: EPA 200.7 Preparation Method: EPA 200.7							
Calcium, Dissolved	**237000**	ug/L	100	1	03/18/13 16:30	03/29/13 10:04	7440-70-2	
Magnesium, Dissolved	**21200**	ug/L	50.0	1	03/18/13 16:30	03/29/13 10:04	7439-95-4	
Potassium, Dissolved	**10400**	ug/L	500	1	03/18/13 16:30	03/29/13 10:04	7440-09-7	
Sodium, Dissolved	**14000**	ug/L	500	1	03/18/13 16:30	03/29/13 10:04	7440-23-5	
200.8 MET ICPMS	Analytical Method: EPA 200.8 Preparation Method: EPA 200.8							
Aluminum	**2730**	ug/L	4.0	1	03/20/13 08:33	03/22/13 06:25	7429-90-5	
Antimony	ND	ug/L	0.50	1	03/20/13 08:33	03/22/13 06:25	7440-36-0	
Arsenic	**3.5**	ug/L	0.50	1	03/20/13 08:33	03/22/13 06:25	7440-38-2	
Barium	**92.7**	ug/L	0.30	1	03/20/13 08:33	03/22/13 06:25	7440-39-3	
Beryllium	ND	ug/L	0.20	1	03/20/13 08:33	03/22/13 06:25	7440-41-7	
Cadmium	**4.0**	ug/L	0.080	1	03/20/13 08:33	03/22/13 06:25	7440-43-9	
Calcium	**254000**	ug/L	400	20	03/20/13 08:33	03/22/13 06:30	7440-70-2	
Chromium	**5.6**	ug/L	0.50	1	03/20/13 08:33	03/22/13 06:25	7440-47-3	
Cobalt	**2.5**	ug/L	0.50	1	03/20/13 08:33	03/22/13 06:25	7440-48-4	
Copper	**20.4**	ug/L	0.50	1	03/20/13 08:33	03/22/13 06:25	7440-50-8	
Iron	**4850**	ug/L	50.0	1	03/20/13 08:33	03/22/13 06:25	7439-89-6	
Lead	**26.6**	ug/L	0.10	1	03/20/13 08:33	03/22/13 06:25	7439-92-1	
Magnesium	**23900**	ug/L	100	20	03/20/13 08:33	03/22/13 06:30	7439-95-4	
Manganese	**1140**	ug/L	10.0	20	03/20/13 08:33	03/22/13 06:30	7439-96-5	
Molybdenum	**10.2**	ug/L	0.50	1	03/20/13 08:33	03/22/13 06:25	7439-98-7	
Nickel	**4.4**	ug/L	0.50	1	03/20/13 08:33	03/22/13 06:25	7440-02-0	
Potassium	**10800**	ug/L	20.0	1	03/20/13 08:33	03/22/13 06:25	7440-09-7	
Selenium	**1.9**	ug/L	0.50	1	03/20/13 08:33	03/22/13 06:25	7782-49-2	
Silica	**23600**	ug/L	1070	20	03/20/13 08:33	03/22/13 06:30	7631-86-9	
Silver	ND	ug/L	0.50	1	03/20/13 08:33	03/22/13 06:25	7440-22-4	
Sodium	**13700**	ug/L	50.0	1	03/20/13 08:33	03/22/13 06:25	7440-23-5	
Thallium	ND	ug/L	0.10	1	03/20/13 08:33	03/22/13 06:25	7440-28-0	
Total Hardness by 2340B	**732000**	ug/L	1420	20	03/20/13 08:33	03/22/13 06:30		
Vanadium	**5.9**	ug/L	0.10	1	03/20/13 08:33	03/22/13 06:25	7440-62-2	
Zinc	**1110**	ug/L	100	20	03/20/13 08:33	03/22/13 06:30	7440-66-6	
200.8 MET ICPMS, Dissolved	Analytical Method: EPA 200.8 Preparation Method: EPA 200.8							
Aluminum, Dissolved	**158**	ug/L	4.0	1	03/20/13 08:32	03/22/13 19:44	7429-90-5	
Antimony, Dissolved	ND	ug/L	0.50	1	03/20/13 08:32	03/22/13 19:44	7440-36-0	
Arsenic, Dissolved	ND	ug/L	0.50	1	03/20/13 08:32	03/22/13 19:44	7440-38-2	
Barium, Dissolved	**20.1**	ug/L	0.30	1	03/20/13 08:32	03/22/13 19:44	7440-39-3	
Beryllium, Dissolved	ND	ug/L	0.20	1	03/20/13 08:32	03/22/13 19:44	7440-41-7	
Cadmium, Dissolved	**2.1**	ug/L	0.080	1	03/20/13 08:32	03/22/13 19:44	7440-43-9	
Calcium, Dissolved	**249000**	ug/L	400	20	03/20/13 08:32	03/22/13 19:49	7440-70-2	
Chromium, Dissolved	**0.56**	ug/L	0.50	1	03/20/13 08:32	03/22/13 19:44	7440-47-3	
Cobalt, Dissolved	ND	ug/L	0.50	1	03/20/13 08:32	03/22/13 19:44	7440-48-4	
Copper, Dissolved	**2.2**	ug/L	0.50	1	03/20/13 08:32	03/22/13 19:44	7440-50-8	
Iron, Dissolved	**282**	ug/L	50.0	1	03/20/13 08:32	03/22/13 19:44	7439-89-6	
Lead, Dissolved	**1.6**	ug/L	0.10	1	03/20/13 08:32	03/22/13 19:44	7439-92-1	
Magnesium, Dissolved	**22400**	ug/L	100	20	03/20/13 08:32	03/22/13 19:49	7439-95-4	

This report shall not be reproduced, except in full,
without the written consent of Pace Analytical Services, Inc..

Pace Analytical Services, Inc.
9608 Loiret Blvd.
Lenexa, KS 66219
(913)599-5665

ANALYTICAL RESULTS

Project: MARCH 2013 RICO WATER SAMPLING
Pace Project No.: 60140509

Sample: DR-9_20130313 **Lab ID: 60140509014** Collected: 03/13/13 14:46 Received: 03/15/13 10:10 Matrix: Water

Parameters	Results	Units	Report Limit	DF	Prepared	Analyzed	CAS No.	Qual
200.8 MET ICPMS, Dissolved	Analytical Method: EPA 200.8 Preparation Method: EPA 200.8							
Manganese, Dissolved	**85.5**	ug/L	0.50	1	03/20/13 08:32	03/22/13 19:44	7439-96-5	
Molybdenum, Dissolved	**9.0**	ug/L	0.50	1	03/20/13 08:32	03/22/13 19:44	7439-98-7	
Nickel, Dissolved	**3.5**	ug/L	0.50	1	03/20/13 08:32	03/22/13 19:44	7440-02-0	
Potassium, Dissolved	**10400**	ug/L	20.0	1	03/20/13 08:32	03/22/13 19:44	7440-09-7	
Selenium, Dissolved	**1.6**	ug/L	0.50	1	03/20/13 08:32	03/22/13 19:44	7782-49-2	
Silver, Dissolved	ND	ug/L	0.50	1	03/20/13 08:32	03/22/13 19:44	7440-22-4	
Sodium, Dissolved	**14000**	ug/L	50.0	1	03/20/13 08:32	03/22/13 19:44	7440-23-5	
Thallium, Dissolved	ND	ug/L	0.10	1	03/20/13 08:32	03/22/13 19:44	7440-28-0	
Vanadium, Dissolved	**0.32**	ug/L	0.10	1	03/20/13 08:32	03/22/13 19:44	7440-62-2	
Zinc, Dissolved	**774**	ug/L	100	20	03/20/13 08:32	03/22/13 19:49	7440-66-6	
200.8 Potentially Diss. Metals	Analytical Method: EPA 200.8 Preparation Method: EPA 200.8							
Aluminum, Dissolved	**864**	ug/L	50.0	1	03/18/13 16:30	04/05/13 12:39	7429-90-5	
Antimony, Dissolved	**0.41J**	ug/L	1.0	1	03/18/13 16:30	04/05/13 12:39	7440-36-0	B
Arsenic, Dissolved	**1.4**	ug/L	1.0	1	03/18/13 16:30	04/05/13 12:39	7440-38-2	
Barium, Dissolved	**39.3**	ug/L	1.0	1	03/18/13 16:30	03/29/13 13:30	7440-39-3	
Beryllium, Dissolved	**0.089J**	ug/L	0.50	1	03/18/13 16:30	04/05/13 12:39	7440-41-7	
Cadmium, Dissolved	**3.2**	ug/L	0.50	1	03/18/13 16:30	04/05/13 12:39	7440-43-9	
Chromium, Dissolved	**2.8**	ug/L	1.0	1	03/18/13 16:30	03/29/13 13:30	7440-47-3	B
Cobalt, Dissolved	**1.1**	ug/L	1.0	1	03/18/13 16:30	03/29/13 13:30	7440-48-4	
Copper, Dissolved	**10.8**	ug/L	1.0	1	03/18/13 16:30	03/29/13 13:30	7440-50-8	
Iron, Dissolved	**1780**	ug/L	50.0	1	03/18/13 16:30	03/29/13 13:30	7439-89-6	
Lead, Dissolved	**16.4**	ug/L	1.0	1	03/18/13 16:30	03/29/13 13:30	7439-92-1	
Manganese, Dissolved	**483**	ug/L	1.0	1	03/18/13 16:30	03/29/13 13:30	7439-96-5	
Molybdenum, Dissolved	**3.7**	ug/L	1.0	1	03/18/13 16:30	04/05/13 12:39	7439-98-7	
Nickel, Dissolved	**1.0**	ug/L	1.0	1	03/18/13 16:30	03/29/13 13:30	7440-02-0	
Selenium, Dissolved	**1.5**	ug/L	1.0	1	03/18/13 16:30	04/05/13 12:39	7782-49-2	
Silver, Dissolved	**0.26J**	ug/L	0.50	1	03/18/13 16:30	04/05/13 12:39	7440-22-4	
Thallium, Dissolved	**0.24J**	ug/L	1.0	1	03/18/13 16:30	03/29/13 13:30	7440-28-0	B
Vanadium, Dissolved	**1.8**	ug/L	1.0	1	03/18/13 16:30	03/29/13 13:30	7440-62-2	
Zinc, Dissolved	**895**	ug/L	10.0	1	03/18/13 16:30	03/29/13 13:30	7440-66-6	
245.1 Mercury	Analytical Method: EPA 245.1 Preparation Method: EPA 245.1							
Mercury	ND	ug/L	0.20	1	03/20/13 15:28	03/27/13 12:10	7439-97-6	
245.1 Mercury, Dissolved	Analytical Method: EPA 245.1 Preparation Method: EPA 245.1							
Mercury, Dissolved	ND	ug/L	0.20	1	03/20/13 15:36	03/26/13 09:59	7439-97-6	
245.1 Potentially Diss Mercury	Analytical Method: EPA 245.1 Preparation Method: EPA 245.1							
Mercury, Dissolved	ND	ug/L	0.20	1	03/20/13 10:10	03/20/13 15:21	7439-97-6	
2510B Specific Conductance	Analytical Method: SM 2510B							
Specific Conductance	**1370**	umhos/cm	10.0	1		03/21/13 13:21		
Salinity	Analytical Method: Calculated							
Salinity (as dissolved solids)	**879**	mg/L	6.4	1		03/25/13 16:02		

REPORT OF LABORATORY ANALYSIS

This report shall not be reproduced, except in full,
without the written consent of Pace Analytical Services, Inc..

Pace Analytical Services, Inc.
9608 Loiret Blvd.
Lenexa, KS 66219
(913)599-5665

ANALYTICAL RESULTS

Project: MARCH 2013 RICO WATER SAMPLING
Pace Project No.: 60140509

Sample: DR-9_20130313 **Lab ID: 60140509014** Collected: 03/13/13 14:46 Received: 03/15/13 10:10 Matrix: Water

Parameters	Results	Units	Report Limit	DF	Prepared	Analyzed	CAS No.	Qual
Salinity	Analytical Method: Calculated							
Salinity (as seawater)	**0.69**	PSU	0.014	1		03/25/13 16:02		
2320B Alkalinity	Analytical Method: SM 2320B							
Alkalinity,Bicarbonate (CaCO3)	**137**	mg/L	20.0	1		03/19/13 09:37		
Alkalinity, Carbonate (CaCO3)	ND	mg/L	20.0	1		03/19/13 09:37		
Alkalinity, Total as CaCO3	**137**	mg/L	20.0	1		03/19/13 09:37		
2540C Total Dissolved Solids	Analytical Method: SM 2540C							
Total Dissolved Solids	**1100**	mg/L	5.0	1		03/19/13 17:02		
2540D Total Suspended Solids	Analytical Method: SM 2540D							
Total Suspended Solids	**211**	mg/L	5.0	1		03/19/13 14:53		
4500S2D Sulfide, Total	Analytical Method: SM 4500-S-2 D							
Sulfide, Total	ND	mg/L	0.050	1		03/19/13 02:54	18496-25-8	
300.0 IC Anions 28 Days	Analytical Method: EPA 300.0							
Chloride	ND	mg/L	1.0	1		03/27/13 22:38	16887-00-6	
Sulfate	**630**	mg/L	100	100		03/28/13 13:54	14808-79-8	
353.2 Nitrogen, NO2/NO3 pres.	Analytical Method: EPA 353.2							
Nitrogen, NO2 plus NO3	ND	mg/L	0.10	1		03/26/13 09:58		
4500CNE Cyanide, Total	Analytical Method: SM 4500-CN-E							
Cyanide	ND	mg/L	0.0050	1		03/20/13 15:03	57-12-5	
5310C TOC	Analytical Method: SM 5310C							
Total Organic Carbon	**0.63**	mg/L	0.50	1		03/22/13 20:08	7440-44-0	

This report shall not be reproduced, except in full,
without the written consent of Pace Analytical Services, Inc..

Pace Analytical Services, Inc.
9608 Loiret Blvd.
Lenexa, KS 66219
(913)599-5665

ANALYTICAL RESULTS

Project: MARCH 2013 RICO WATER SAMPLING
Pace Project No.: 60140509

Sample: MW-101_20130313 **Lab ID: 60140509015** Collected: 03/13/13 12:42 Received: 03/15/13 10:10 Matrix: Water

Parameters	Results	Units	Report Limit	DF	Prepared	Analyzed	CAS No.	Qual
200.7 Potentially Diss. Metals	Analytical Method: EPA 200.7 Preparation Method: EPA 200.7							
Calcium, Dissolved	**272000**	ug/L	100	1	03/18/13 16:30	03/29/13 10:10	7440-70-2	
Magnesium, Dissolved	**31800**	ug/L	50.0	1	03/18/13 16:30	03/29/13 10:10	7439-95-4	
Potassium, Dissolved	**6880**	ug/L	500	1	03/18/13 16:30	03/29/13 10:10	7440-09-7	
Sodium, Dissolved	**12100**	ug/L	500	1	03/18/13 16:30	03/29/13 10:10	7440-23-5	
200.8 MET ICPMS	Analytical Method: EPA 200.8 Preparation Method: EPA 200.8							
Aluminum	**16100**	ug/L	4.0	1	03/20/13 08:33	03/22/13 06:34	7429-90-5	
Antimony	ND	ug/L	0.50	1	03/20/13 08:33	03/22/13 06:34	7440-36-0	
Arsenic	**20.9**	ug/L	0.50	1	03/20/13 08:33	03/22/13 06:34	7440-38-2	
Barium	**208**	ug/L	0.30	1	03/20/13 08:33	03/22/13 06:34	7440-39-3	
Beryllium	**1.9**	ug/L	0.20	1	03/20/13 08:33	03/22/13 06:34	7440-41-7	
Cadmium	**10.7**	ug/L	0.080	1	03/20/13 08:33	03/22/13 06:34	7440-43-9	
Calcium	**302000**	ug/L	400	20	03/20/13 08:33	03/22/13 06:40	7440-70-2	
Chromium	**30.2**	ug/L	0.50	1	03/20/13 08:33	03/22/13 06:34	7440-47-3	
Cobalt	**18.8**	ug/L	0.50	1	03/20/13 08:33	03/22/13 06:34	7440-48-4	
Copper	**153**	ug/L	0.50	1	03/20/13 08:33	03/22/13 06:34	7440-50-8	
Iron	**67600**	ug/L	1000	20	03/20/13 08:33	03/22/13 06:40	7439-89-6	
Lead	**1920**	ug/L	2.0	20	03/20/13 08:33	03/22/13 06:40	7439-92-1	
Magnesium	**43600**	ug/L	100	20	03/20/13 08:33	03/22/13 06:40	7439-95-4	
Manganese	**4750**	ug/L	10.0	20	03/20/13 08:33	03/22/13 06:40	7439-96-5	
Molybdenum	**11.3**	ug/L	0.50	1	03/20/13 08:33	03/22/13 06:34	7439-98-7	
Nickel	**26.2**	ug/L	0.50	1	03/20/13 08:33	03/22/13 06:34	7440-02-0	
Potassium	**9340**	ug/L	20.0	1	03/20/13 08:33	03/22/13 06:34	7440-09-7	
Selenium	**4.7**	ug/L	0.50	1	03/20/13 08:33	03/22/13 06:34	7782-49-2	
Silica	**64800**	ug/L	1070	20	03/20/13 08:33	03/22/13 06:40	7631-86-9	
Silver	**6.5**	ug/L	0.50	1	03/20/13 08:33	03/22/13 06:34	7440-22-4	
Sodium	**12800**	ug/L	50.0	1	03/20/13 08:33	03/22/13 06:34	7440-23-5	
Thallium	**0.84**	ug/L	0.10	1	03/20/13 08:33	03/22/13 06:34	7440-28-0	
Total Hardness by 2340B	**933000**	ug/L	1420	20	03/20/13 08:33	03/22/13 06:40		
Vanadium	**28.6**	ug/L	0.10	1	03/20/13 08:33	03/22/13 06:34	7440-62-2	
Zinc	**1550**	ug/L	100	20	03/20/13 08:33	03/22/13 06:40	7440-66-6	
200.8 MET ICPMS, Dissolved	Analytical Method: EPA 200.8 Preparation Method: EPA 200.8							
Aluminum, Dissolved	**73.0**	ug/L	4.0	1	03/20/13 08:32	03/22/13 20:18	7429-90-5	
Antimony, Dissolved	ND	ug/L	0.50	1	03/20/13 08:32	03/22/13 20:18	7440-36-0	
Arsenic, Dissolved	**0.78**	ug/L	0.50	1	03/20/13 08:32	03/22/13 20:18	7440-38-2	
Barium, Dissolved	**19.7**	ug/L	0.30	1	03/20/13 08:32	03/22/13 20:18	7440-39-3	
Beryllium, Dissolved	ND	ug/L	0.20	1	03/20/13 08:32	03/22/13 20:18	7440-41-7	
Cadmium, Dissolved	**0.11**	ug/L	0.080	1	03/20/13 08:32	03/22/13 20:18	7440-43-9	
Calcium, Dissolved	**298000**	ug/L	400	20	03/20/13 08:32	03/22/13 20:22	7440-70-2	
Chromium, Dissolved	ND	ug/L	0.50	1	03/20/13 08:32	03/22/13 20:18	7440-47-3	
Cobalt, Dissolved	**9.2**	ug/L	0.50	1	03/20/13 08:32	03/22/13 20:18	7440-48-4	
Copper, Dissolved	**0.92**	ug/L	0.50	1	03/20/13 08:32	03/22/13 20:18	7440-50-8	
Iron, Dissolved	**27000**	ug/L	1000	20	03/20/13 08:32	03/22/13 20:22	7439-89-6	
Lead, Dissolved	**0.73**	ug/L	0.10	1	03/20/13 08:32	03/22/13 20:18	7439-92-1	
Magnesium, Dissolved	**33200**	ug/L	100	20	03/20/13 08:32	03/22/13 20:22	7439-95-4	

This report shall not be reproduced, except in full,
without the written consent of Pace Analytical Services, Inc..

Pace Analytical Services, Inc.
9608 Loiret Blvd.
Lenexa, KS 66219
(913)599-5665

ANALYTICAL RESULTS

Project: MARCH 2013 RICO WATER SAMPLING
Pace Project No.: 60140509

Sample: MW-101_20130313 **Lab ID: 60140509015** Collected: 03/13/13 12:42 Received: 03/15/13 10:10 Matrix: Water

Parameters	Results	Units	Report Limit	DF	Prepared	Analyzed	CAS No.	Qual
200.8 MET ICPMS, Dissolved	Analytical Method: EPA 200.8 Preparation Method: EPA 200.8							
Manganese, Dissolved	**3910**	ug/L	10.0	20	03/20/13 08:32	03/22/13 20:22	7439-96-5	
Molybdenum, Dissolved	**2.4**	ug/L	0.50	1	03/20/13 08:32	03/22/13 20:18	7439-98-7	
Nickel, Dissolved	**9.6**	ug/L	0.50	1	03/20/13 08:32	03/22/13 20:18	7440-02-0	
Potassium, Dissolved	**7020**	ug/L	20.0	1	03/20/13 08:32	03/22/13 20:18	7440-09-7	
Selenium, Dissolved	**1.5**	ug/L	0.50	1	03/20/13 08:32	03/22/13 20:18	7782-49-2	
Silver, Dissolved	ND	ug/L	0.50	1	03/20/13 08:32	03/22/13 20:18	7440-22-4	
Sodium, Dissolved	**12900**	ug/L	50.0	1	03/20/13 08:32	03/22/13 20:18	7440-23-5	
Thallium, Dissolved	ND	ug/L	0.10	1	03/20/13 08:32	03/22/13 20:18	7440-28-0	
Vanadium, Dissolved	ND	ug/L	0.10	1	03/20/13 08:32	03/22/13 20:18	7440-62-2	
Zinc, Dissolved	**180**	ug/L	5.0	1	03/20/13 08:32	03/22/13 20:18	7440-66-6	
200.8 Potentially Diss. Metals	Analytical Method: EPA 200.8 Preparation Method: EPA 200.8							
Aluminum, Dissolved	**5040**	ug/L	50.0	1	03/18/13 16:30	04/05/13 12:43	7429-90-5	
Antimony, Dissolved	**0.35J**	ug/L	1.0	1	03/18/13 16:30	04/05/13 12:43	7440-36-0	B
Arsenic, Dissolved	**6.5**	ug/L	1.0	1	03/18/13 16:30	04/05/13 12:43	7440-38-2	
Barium, Dissolved	**40.7**	ug/L	1.0	1	03/18/13 16:30	03/29/13 14:02	7440-39-3	
Beryllium, Dissolved	**1.5**	ug/L	0.50	1	03/18/13 16:30	04/05/13 12:43	7440-41-7	
Cadmium, Dissolved	**12.7**	ug/L	0.50	1	03/18/13 16:30	04/05/13 12:43	7440-43-9	
Chromium, Dissolved	**13.3**	ug/L	1.0	1	03/18/13 16:30	03/29/13 14:02	7440-47-3	
Cobalt, Dissolved	**13.7**	ug/L	1.0	1	03/18/13 16:30	03/29/13 14:02	7440-48-4	
Copper, Dissolved	**109**	ug/L	1.0	1	03/18/13 16:30	03/29/13 14:02	7440-50-8	
Iron, Dissolved	**41400**	ug/L	50.0	1	03/18/13 16:30	03/29/13 14:02	7439-89-6	
Lead, Dissolved	**2160**	ug/L	1.0	1	03/18/13 16:30	03/29/13 14:02	7439-92-1	
Manganese, Dissolved	**4940**	ug/L	1.0	1	03/18/13 16:30	03/29/13 14:02	7439-96-5	
Molybdenum, Dissolved	**0.99J**	ug/L	1.0	1	03/18/13 16:30	04/05/13 12:43	7439-98-7	
Nickel, Dissolved	**14.7**	ug/L	1.0	1	03/18/13 16:30	03/29/13 14:02	7440-02-0	
Selenium, Dissolved	**2.9**	ug/L	1.0	1	03/18/13 16:30	04/05/13 12:43	7782-49-2	
Silver, Dissolved	**0.094J**	ug/L	0.50	1	03/18/13 16:30	04/05/13 12:43	7440-22-4	
Thallium, Dissolved	**0.80J**	ug/L	1.0	1	03/18/13 16:30	03/29/13 14:02	7440-28-0	B
Vanadium, Dissolved	**11.8**	ug/L	1.0	1	03/18/13 16:30	03/29/13 14:02	7440-62-2	
Zinc, Dissolved	**1660**	ug/L	10.0	1	03/18/13 16:30	03/29/13 14:02	7440-66-6	
245.1 Mercury	Analytical Method: EPA 245.1 Preparation Method: EPA 245.1							
Mercury	ND	ug/L	0.20	1	03/20/13 15:28	03/27/13 12:12	7439-97-6	
245.1 Mercury, Dissolved	Analytical Method: EPA 245.1 Preparation Method: EPA 245.1							
Mercury, Dissolved	ND	ug/L	0.20	1	03/20/13 15:36	03/26/13 10:07	7439-97-6	
245.1 Potentially Diss Mercury	Analytical Method: EPA 245.1 Preparation Method: EPA 245.1							
Mercury, Dissolved	ND	ug/L	0.20	1	03/20/13 10:10	03/20/13 15:25	7439-97-6	
2510B Specific Conductance	Analytical Method: SM 2510B							
Specific Conductance	**1540**	umhos/cm	10.0	1		03/21/13 13:22		
Salinity	Analytical Method: Calculated							
Salinity (as dissolved solids)	**982**	mg/L	6.4	1		03/25/13 16:02		

REPORT OF LABORATORY ANALYSIS

This report shall not be reproduced, except in full,
without the written consent of Pace Analytical Services, Inc..

Pace Analytical Services, Inc.
9608 Loiret Blvd.
Lenexa, KS 66219
(913)599-5665

ANALYTICAL RESULTS

Project: MARCH 2013 RICO WATER SAMPLING
Pace Project No.: 60140509

Sample: MW-101_20130313 **Lab ID: 60140509015** Collected: 03/13/13 12:42 Received: 03/15/13 10:10 Matrix: Water

Parameters	Results	Units	Report Limit	DF	Prepared	Analyzed	CAS No.	Qual
Salinity	Analytical Method: Calculated							
Salinity (as seawater)	**0.77**	PSU	0.014	1		03/25/13 16:02		
2320B Alkalinity	Analytical Method: SM 2320B							
Alkalinity,Bicarbonate (CaCO3)	**325**	mg/L	20.0	1		03/19/13 09:43		
Alkalinity, Carbonate (CaCO3)	ND	mg/L	20.0	1		03/19/13 09:43		
Alkalinity, Total as CaCO3	**325**	mg/L	20.0	1		03/19/13 09:43		
2540C Total Dissolved Solids	Analytical Method: SM 2540C							
Total Dissolved Solids	**1190**	mg/L	5.0	1		03/19/13 17:02		
2540D Total Suspended Solids	Analytical Method: SM 2540D							
Total Suspended Solids	**315**	mg/L	5.0	1		03/19/13 14:53		
4500S2D Sulfide, Total	Analytical Method: SM 4500-S-2 D							
Sulfide, Total	ND	mg/L	0.050	1		03/19/13 02:55	18496-25-8	
300.0 IC Anions 28 Days	Analytical Method: EPA 300.0							
Chloride	**1.2**	mg/L	1.0	1		03/27/13 23:31	16887-00-6	
Sulfate	**602**	mg/L	100	100		03/28/13 15:34	14808-79-8	
353.2 Nitrogen, NO2/NO3 pres.	Analytical Method: EPA 353.2							
Nitrogen, NO2 plus NO3	**0.25**	mg/L	0.10	1		03/26/13 09:59		
4500CNE Cyanide, Total	Analytical Method: SM 4500-CN-E							
Cyanide	ND	mg/L	0.0050	1		03/20/13 15:06	57-12-5	
5310C TOC	Analytical Method: SM 5310C							
Total Organic Carbon	**1.3**	mg/L	0.50	1		03/22/13 20:26	7440-44-0	

This report shall not be reproduced, except in full,
without the written consent of Pace Analytical Services, Inc..

Pace Analytical Services, Inc.
9608 Loiret Blvd.
Lenexa, KS 66219
(913)599-5665

ANALYTICAL RESULTS

Project: MARCH 2013 RICO WATER SAMPLING
Pace Project No.: 60140509

Sample: MW-102_20130313 **Lab ID: 60140509016** Collected: 03/13/13 11:37 Received: 03/15/13 10:10 Matrix: Water

Parameters	Results	Units	Report Limit	DF	Prepared	Analyzed	CAS No.	Qual
200.7 Potentially Diss. Metals	Analytical Method: EPA 200.7 Preparation Method: EPA 200.7							
Calcium, Dissolved	**202000**	ug/L	100	1	03/18/13 16:30	03/29/13 10:12	7440-70-2	
Magnesium, Dissolved	**20900**	ug/L	50.0	1	03/18/13 16:30	03/29/13 10:12	7439-95-4	
Potassium, Dissolved	**2410**	ug/L	500	1	03/18/13 16:30	03/29/13 10:12	7440-09-7	
Sodium, Dissolved	**6440**	ug/L	500	1	03/18/13 16:30	03/29/13 10:12	7440-23-5	
200.8 MET ICPMS	Analytical Method: EPA 200.8 Preparation Method: EPA 200.8							
Aluminum	**19500**	ug/L	4.0	1	03/20/13 08:33	03/22/13 06:49	7429-90-5	
Antimony	**0.71**	ug/L	0.50	1	03/20/13 08:33	03/22/13 06:49	7440-36-0	
Arsenic	**27.5**	ug/L	0.50	1	03/20/13 08:33	03/22/13 06:49	7440-38-2	
Barium	**152**	ug/L	0.30	1	03/20/13 08:33	03/22/13 06:49	7440-39-3	
Beryllium	**2.5**	ug/L	0.20	1	03/20/13 08:33	03/22/13 06:49	7440-41-7	
Cadmium	**4.9**	ug/L	0.080	1	03/20/13 08:33	03/22/13 06:49	7440-43-9	
Calcium	**224000**	ug/L	400	20	03/20/13 08:33	03/22/13 06:54	7440-70-2	
Chromium	**25.2**	ug/L	0.50	1	03/20/13 08:33	03/22/13 06:49	7440-47-3	
Cobalt	**34.3**	ug/L	0.50	1	03/20/13 08:33	03/22/13 06:49	7440-48-4	
Copper	**97.5**	ug/L	0.50	1	03/20/13 08:33	03/22/13 06:49	7440-50-8	
Iron	**28900**	ug/L	1000	20	03/20/13 08:33	03/22/13 06:54	7439-89-6	
Lead	**148**	ug/L	0.10	1	03/20/13 08:33	03/22/13 06:49	7439-92-1	
Magnesium	**34100**	ug/L	100	20	03/20/13 08:33	03/22/13 06:54	7439-95-4	
Manganese	**3800**	ug/L	10.0	20	03/20/13 08:33	03/22/13 06:54	7439-96-5	
Molybdenum	**10.5**	ug/L	0.50	1	03/20/13 08:33	03/22/13 06:49	7439-98-7	
Nickel	**29.1**	ug/L	0.50	1	03/20/13 08:33	03/22/13 06:49	7440-02-0	
Potassium	**4800**	ug/L	20.0	1	03/20/13 08:33	03/22/13 06:49	7440-09-7	
Selenium	**4.8**	ug/L	0.50	1	03/20/13 08:33	03/22/13 06:49	7782-49-2	
Silica	**66500**	ug/L	1070	20	03/20/13 08:33	03/22/13 06:54	7631-86-9	
Silver	ND	ug/L	0.50	1	03/20/13 08:33	03/22/13 06:49	7440-22-4	
Sodium	**6760**	ug/L	50.0	1	03/20/13 08:33	03/22/13 06:49	7440-23-5	
Thallium	**0.37**	ug/L	0.10	1	03/20/13 08:33	03/22/13 06:49	7440-28-0	
Total Hardness by 2340B	**699000**	ug/L	1420	20	03/20/13 08:33	03/22/13 06:54		
Vanadium	**32.3**	ug/L	0.10	1	03/20/13 08:33	03/22/13 06:49	7440-62-2	
Zinc	**928**	ug/L	100	20	03/20/13 08:33	03/22/13 06:54	7440-66-6	
200.8 MET ICPMS, Dissolved	Analytical Method: EPA 200.8 Preparation Method: EPA 200.8							
Aluminum, Dissolved	**9.3**	ug/L	4.0	1	03/20/13 08:32	03/22/13 20:27	7429-90-5	
Antimony, Dissolved	ND	ug/L	0.50	1	03/20/13 08:32	03/22/13 20:27	7440-36-0	
Arsenic, Dissolved	ND	ug/L	0.50	1	03/20/13 08:32	03/22/13 20:27	7440-38-2	
Barium, Dissolved	**14.4**	ug/L	0.30	1	03/20/13 08:32	03/22/13 20:27	7440-39-3	
Beryllium, Dissolved	ND	ug/L	0.20	1	03/20/13 08:32	03/22/13 20:27	7440-41-7	
Cadmium, Dissolved	**0.48**	ug/L	0.080	1	03/20/13 08:32	03/22/13 20:27	7440-43-9	
Calcium, Dissolved	**221000**	ug/L	400	20	03/20/13 08:32	03/22/13 20:31	7440-70-2	
Chromium, Dissolved	ND	ug/L	0.50	1	03/20/13 08:32	03/22/13 20:27	7440-47-3	
Cobalt, Dissolved	ND	ug/L	0.50	1	03/20/13 08:32	03/22/13 20:27	7440-48-4	
Copper, Dissolved	**0.86**	ug/L	0.50	1	03/20/13 08:32	03/22/13 20:27	7440-50-8	
Iron, Dissolved	ND	ug/L	50.0	1	03/20/13 08:32	03/22/13 20:27	7439-89-6	
Lead, Dissolved	ND	ug/L	0.10	1	03/20/13 08:32	03/22/13 20:27	7439-92-1	
Magnesium, Dissolved	**21900**	ug/L	5.0	1	03/20/13 08:32	03/22/13 20:27	7439-95-4	

This report shall not be reproduced, except in full,
without the written consent of Pace Analytical Services, Inc..

Pace Analytical Services, Inc.
9608 Loiret Blvd.
Lenexa, KS 66219
(913)599-5665

ANALYTICAL RESULTS

Project: MARCH 2013 RICO WATER SAMPLING
Pace Project No.: 60140509

Sample: MW-102_20130313 **Lab ID: 60140509016** Collected: 03/13/13 11:37 Received: 03/15/13 10:10 Matrix: Water

Parameters	Results	Units	Report Limit	DF	Prepared	Analyzed	CAS No.	Qual
200.8 MET ICPMS, Dissolved	Analytical Method: EPA 200.8 Preparation Method: EPA 200.8							
Manganese, Dissolved	**38.6**	ug/L	0.50	1	03/20/13 08:32	03/22/13 20:27	7439-96-5	
Molybdenum, Dissolved	**0.90**	ug/L	0.50	1	03/20/13 08:32	03/22/13 20:27	7439-98-7	
Nickel, Dissolved	**0.56**	ug/L	0.50	1	03/20/13 08:32	03/22/13 20:27	7440-02-0	
Potassium, Dissolved	**2170**	ug/L	20.0	1	03/20/13 08:32	03/22/13 20:27	7440-09-7	
Selenium, Dissolved	**1.8**	ug/L	0.50	1	03/20/13 08:32	03/22/13 20:27	7782-49-2	
Silver, Dissolved	ND	ug/L	0.50	1	03/20/13 08:32	03/22/13 20:27	7440-22-4	
Sodium, Dissolved	**6620**	ug/L	50.0	1	03/20/13 08:32	03/22/13 20:27	7440-23-5	
Thallium, Dissolved	ND	ug/L	0.10	1	03/20/13 08:32	03/22/13 20:27	7440-28-0	
Vanadium, Dissolved	ND	ug/L	0.10	1	03/20/13 08:32	03/22/13 20:27	7440-62-2	
Zinc, Dissolved	**68.2**	ug/L	5.0	1	03/20/13 08:32	03/22/13 20:27	7440-66-6	
200.8 Potentially Diss. Metals	Analytical Method: EPA 200.8 Preparation Method: EPA 200.8							
Aluminum, Dissolved	**5720**	ug/L	50.0	1	03/18/13 16:30	04/05/13 12:47	7429-90-5	
Antimony, Dissolved	**0.38J**	ug/L	1.0	1	03/18/13 16:30	04/05/13 12:47	7440-36-0	B
Arsenic, Dissolved	**4.2**	ug/L	1.0	1	03/18/13 16:30	04/05/13 12:47	7440-38-2	
Barium, Dissolved	**68.0**	ug/L	1.0	1	03/18/13 16:30	03/29/13 14:06	7440-39-3	
Beryllium, Dissolved	**1.8**	ug/L	0.50	1	03/18/13 16:30	04/05/13 12:47	7440-41-7	
Cadmium, Dissolved	**4.9**	ug/L	0.50	1	03/18/13 16:30	04/05/13 12:47	7440-43-9	
Chromium, Dissolved	**7.0**	ug/L	1.0	1	03/18/13 16:30	03/29/13 14:06	7440-47-3	
Cobalt, Dissolved	**12.5**	ug/L	1.0	1	03/18/13 16:30	03/29/13 14:06	7440-48-4	
Copper, Dissolved	**59.3**	ug/L	1.0	1	03/18/13 16:30	03/29/13 14:06	7440-50-8	
Iron, Dissolved	**5810**	ug/L	50.0	1	03/18/13 16:30	03/29/13 14:06	7439-89-6	
Lead, Dissolved	**106**	ug/L	1.0	1	03/18/13 16:30	03/29/13 14:06	7439-92-1	
Manganese, Dissolved	**1440**	ug/L	1.0	1	03/18/13 16:30	03/29/13 14:06	7439-96-5	
Molybdenum, Dissolved	**0.34J**	ug/L	1.0	1	03/18/13 16:30	04/05/13 12:47	7439-98-7	
Nickel, Dissolved	**11.2**	ug/L	1.0	1	03/18/13 16:30	03/29/13 14:06	7440-02-0	
Selenium, Dissolved	**5.0**	ug/L	1.0	1	03/18/13 16:30	04/05/13 12:47	7782-49-2	
Silver, Dissolved	**0.54**	ug/L	0.50	1	03/18/13 16:30	04/05/13 12:47	7440-22-4	
Thallium, Dissolved	**0.24J**	ug/L	1.0	1	03/18/13 16:30	03/29/13 14:06	7440-28-0	B
Vanadium, Dissolved	**4.8**	ug/L	1.0	1	03/18/13 16:30	03/29/13 14:06	7440-62-2	
Zinc, Dissolved	**791**	ug/L	10.0	1	03/18/13 16:30	03/29/13 14:06	7440-66-6	
245.1 Mercury	Analytical Method: EPA 245.1 Preparation Method: EPA 245.1							
Mercury	ND	ug/L	0.20	1	03/20/13 15:28	03/27/13 12:15	7439-97-6	
245.1 Mercury, Dissolved	Analytical Method: EPA 245.1 Preparation Method: EPA 245.1							
Mercury, Dissolved	ND	ug/L	0.20	1	03/20/13 15:36	03/26/13 10:09	7439-97-6	
245.1 Potentially Diss Mercury	Analytical Method: EPA 245.1 Preparation Method: EPA 245.1							
Mercury, Dissolved	ND	ug/L	0.20	1	03/20/13 10:10	03/20/13 15:34	7439-97-6	
2510B Specific Conductance	Analytical Method: SM 2510B							
Specific Conductance	**1170**	umhos/cm	10.0	1		03/21/13 13:23		
Salinity	Analytical Method: Calculated							
Salinity (as dissolved solids)	**751**	mg/L	6.4	1		03/25/13 16:02		

REPORT OF LABORATORY ANALYSIS

This report shall not be reproduced, except in full,
without the written consent of Pace Analytical Services, Inc..

Pace Analytical Services, Inc.
9608 Loiret Blvd.
Lenexa, KS 66219
(913)599-5665

ANALYTICAL RESULTS

Project: MARCH 2013 RICO WATER SAMPLING
Pace Project No.: 60140509

Sample: MW-102_20130313 **Lab ID: 60140509016** Collected: 03/13/13 11:37 Received: 03/15/13 10:10 Matrix: Water

Parameters	Results	Units	Report Limit	DF	Prepared	Analyzed	CAS No.	Qual
Salinity	Analytical Method: Calculated							
Salinity (as seawater)	**0.58**	PSU	0.014	1		03/25/13 16:02		
2320B Alkalinity	Analytical Method: SM 2320B							
Alkalinity,Bicarbonate (CaCO3)	**198**	mg/L	20.0	1		03/19/13 09:47		
Alkalinity, Carbonate (CaCO3)	ND	mg/L	20.0	1		03/19/13 09:47		
Alkalinity, Total as CaCO3	**198**	mg/L	20.0	1		03/19/13 09:47		
2540C Total Dissolved Solids	Analytical Method: SM 2540C							
Total Dissolved Solids	**834**	mg/L	5.0	1		03/19/13 17:02		
2540D Total Suspended Solids	Analytical Method: SM 2540D							
Total Suspended Solids	**872**	mg/L	5.0	1		03/19/13 14:53		
4500S2D Sulfide, Total	Analytical Method: SM 4500-S-2 D							
Sulfide, Total	ND	mg/L	0.050	1		03/19/13 02:55	18496-25-8	
300.0 IC Anions 28 Days	Analytical Method: EPA 300.0							
Chloride	**1.3**	mg/L	1.0	1		03/27/13 23:48	16887-00-6	
Sulfate	**486**	mg/L	50.0	50		03/28/13 15:51	14808-79-8	
353.2 Nitrogen, NO2/NO3 pres.	Analytical Method: EPA 353.2							
Nitrogen, NO2 plus NO3	**0.38**	mg/L	0.10	1		03/26/13 10:00		
4500CNE Cyanide, Total	Analytical Method: SM 4500-CN-E							
Cyanide	ND	mg/L	0.0050	1		03/20/13 15:06	57-12-5	
5310C TOC	Analytical Method: SM 5310C							
Total Organic Carbon	**0.82**	mg/L	0.50	1		03/22/13 20:44	7440-44-0	

This report shall not be reproduced, except in full,
without the written consent of Pace Analytical Services, Inc..

Pace Analytical Services, Inc.
9608 Loiret Blvd.
Lenexa, KS 66219
(913)599-5665

ANALYTICAL RESULTS

Project: MARCH 2013 RICO WATER SAMPLING
Pace Project No.: 60140509

Sample: MW-103_20130313 **Lab ID: 60140509017** Collected: 03/13/13 13:54 Received: 03/15/13 10:10 Matrix: Water

Parameters	Results	Units	Report Limit	DF	Prepared	Analyzed	CAS No.	Qual
200.7 Potentially Diss. Metals	Analytical Method: EPA 200.7 Preparation Method: EPA 200.7							
Calcium, Dissolved	**277000**	ug/L	100	1	03/18/13 16:30	03/29/13 10:14	7440-70-2	
Magnesium, Dissolved	**29000**	ug/L	50.0	1	03/18/13 16:30	03/29/13 10:14	7439-95-4	
Potassium, Dissolved	**3670**	ug/L	500	1	03/18/13 16:30	03/29/13 10:14	7440-09-7	
Sodium, Dissolved	**13800**	ug/L	500	1	03/18/13 16:30	03/29/13 10:14	7440-23-5	
200.8 MET ICPMS	Analytical Method: EPA 200.8 Preparation Method: EPA 200.8							
Aluminum	**2330**	ug/L	4.0	1	03/20/13 08:33	03/22/13 06:59	7429-90-5	
Antimony	ND	ug/L	0.50	1	03/20/13 08:33	03/22/13 06:59	7440-36-0	
Arsenic	**12.4**	ug/L	0.50	1	03/20/13 08:33	03/22/13 06:59	7440-38-2	
Barium	**52.3**	ug/L	0.30	1	03/20/13 08:33	03/22/13 06:59	7440-39-3	
Beryllium	**0.81**	ug/L	0.20	1	03/20/13 08:33	03/22/13 06:59	7440-41-7	
Cadmium	**1.4**	ug/L	0.080	1	03/20/13 08:33	03/22/13 06:59	7440-43-9	
Calcium	**316000**	ug/L	400	20	03/20/13 08:33	03/22/13 16:17	7440-70-2	
Chromium	**3.1**	ug/L	0.50	1	03/20/13 08:33	03/22/13 06:59	7440-47-3	
Cobalt	**5.2**	ug/L	0.50	1	03/20/13 08:33	03/22/13 06:59	7440-48-4	
Copper	**10.6**	ug/L	0.50	1	03/20/13 08:33	03/22/13 06:59	7440-50-8	
Iron	**13500**	ug/L	50.0	1	03/20/13 08:33	03/22/13 06:59	7439-89-6	
Lead	**9.2**	ug/L	0.10	1	03/20/13 08:33	03/22/13 06:59	7439-92-1	
Magnesium	**32100**	ug/L	100	20	03/20/13 08:33	03/22/13 16:17	7439-95-4	
Manganese	**8670**	ug/L	10.0	20	03/20/13 08:33	03/22/13 16:17	7439-96-5	
Molybdenum	**8.3**	ug/L	0.50	1	03/20/13 08:33	03/22/13 06:59	7439-98-7	
Nickel	**3.8**	ug/L	0.50	1	03/20/13 08:33	03/22/13 06:59	7440-02-0	
Potassium	**4100**	ug/L	20.0	1	03/20/13 08:33	03/22/13 06:59	7440-09-7	
Selenium	ND	ug/L	0.50	1	03/20/13 08:33	03/22/13 06:59	7782-49-2	
Silica	**36200**	ug/L	1070	20	03/20/13 08:33	03/22/13 16:17	7631-86-9	
Silver	ND	ug/L	0.50	1	03/20/13 08:33	03/22/13 06:59	7440-22-4	
Sodium	**13700**	ug/L	50.0	1	03/20/13 08:33	03/22/13 06:59	7440-23-5	
Thallium	**0.18**	ug/L	0.10	1	03/20/13 08:33	03/22/13 06:59	7440-28-0	
Total Hardness by 2340B	**920000**	ug/L	1420	20	03/20/13 08:33	03/22/13 16:17		
Vanadium	**4.6**	ug/L	0.10	1	03/20/13 08:33	03/22/13 06:59	7440-62-2	
Zinc	**236**	ug/L	5.0	1	03/20/13 08:33	03/22/13 06:59	7440-66-6	
200.8 MET ICPMS, Dissolved	Analytical Method: EPA 200.8 Preparation Method: EPA 200.8							
Aluminum, Dissolved	**42.4**	ug/L	4.0	1	03/20/13 08:32	03/22/13 20:36	7429-90-5	
Antimony, Dissolved	ND	ug/L	0.50	1	03/20/13 08:32	03/22/13 20:36	7440-36-0	
Arsenic, Dissolved	**2.8**	ug/L	0.50	1	03/20/13 08:32	03/22/13 20:36	7440-38-2	
Barium, Dissolved	**31.4**	ug/L	0.30	1	03/20/13 08:32	03/22/13 20:36	7440-39-3	
Beryllium, Dissolved	**0.31**	ug/L	0.20	1	03/20/13 08:32	03/22/13 20:36	7440-41-7	
Cadmium, Dissolved	**0.26**	ug/L	0.080	1	03/20/13 08:32	03/22/13 20:36	7440-43-9	
Calcium, Dissolved	**313000**	ug/L	400	20	03/20/13 08:32	03/22/13 20:40	7440-70-2	
Chromium, Dissolved	ND	ug/L	0.50	1	03/20/13 08:32	03/22/13 20:36	7440-47-3	
Cobalt, Dissolved	**4.1**	ug/L	0.50	1	03/20/13 08:32	03/22/13 20:36	7440-48-4	
Copper, Dissolved	**0.75**	ug/L	0.50	1	03/20/13 08:32	03/22/13 20:36	7440-50-8	
Iron, Dissolved	**8010**	ug/L	50.0	1	03/20/13 08:32	03/22/13 20:36	7439-89-6	
Lead, Dissolved	**0.18**	ug/L	0.10	1	03/20/13 08:32	03/22/13 20:36	7439-92-1	
Magnesium, Dissolved	**31100**	ug/L	100	20	03/20/13 08:32	03/22/13 20:40	7439-95-4	

This report shall not be reproduced, except in full,
without the written consent of Pace Analytical Services, Inc..

Pace Analytical Services, Inc.
9608 Loiret Blvd.
Lenexa, KS 66219
(913)599-5665

ANALYTICAL RESULTS

Project: MARCH 2013 RICO WATER SAMPLING
Pace Project No.: 60140509

Sample: MW-103_20130313 **Lab ID: 60140509017** Collected: 03/13/13 13:54 Received: 03/15/13 10:10 Matrix: Water

Parameters	Results	Units	Report Limit	DF	Prepared	Analyzed	CAS No.	Qual
200.8 MET ICPMS, Dissolved	Analytical Method: EPA 200.8 Preparation Method: EPA 200.8							
Manganese, Dissolved	**8610**	ug/L	10.0	20	03/20/13 08:32	03/22/13 20:40	7439-96-5	
Molybdenum, Dissolved	**7.5**	ug/L	0.50	1	03/20/13 08:32	03/22/13 20:36	7439-98-7	
Nickel, Dissolved	**4.2**	ug/L	0.50	1	03/20/13 08:32	03/22/13 20:36	7440-02-0	
Potassium, Dissolved	**3890**	ug/L	20.0	1	03/20/13 08:32	03/22/13 20:36	7440-09-7	
Selenium, Dissolved	ND	ug/L	0.50	1	03/20/13 08:32	03/22/13 20:36	7782-49-2	
Silver, Dissolved	ND	ug/L	0.50	1	03/20/13 08:32	03/22/13 20:36	7440-22-4	
Sodium, Dissolved	**14300**	ug/L	50.0	1	03/20/13 08:32	03/22/13 20:36	7440-23-5	
Thallium, Dissolved	ND	ug/L	0.10	1	03/20/13 08:32	03/22/13 20:36	7440-28-0	
Vanadium, Dissolved	ND	ug/L	0.10	1	03/20/13 08:32	03/22/13 20:36	7440-62-2	
Zinc, Dissolved	**177**	ug/L	5.0	1	03/20/13 08:32	03/22/13 20:36	7440-66-6	
200.8 Potentially Diss. Metals	Analytical Method: EPA 200.8 Preparation Method: EPA 200.8							
Aluminum, Dissolved	**660**	ug/L	50.0	1	03/18/13 16:30	04/05/13 12:51	7429-90-5	
Antimony, Dissolved	**0.33J**	ug/L	1.0	1	03/18/13 16:30	04/05/13 12:51	7440-36-0	B
Arsenic, Dissolved	**6.5**	ug/L	1.0	1	03/18/13 16:30	04/05/13 12:51	7440-38-2	
Barium, Dissolved	**35.5**	ug/L	1.0	1	03/18/13 16:30	03/29/13 14:10	7440-39-3	
Beryllium, Dissolved	**0.57**	ug/L	0.50	1	03/18/13 16:30	04/05/13 12:51	7440-41-7	
Cadmium, Dissolved	**1.5**	ug/L	0.50	1	03/18/13 16:30	04/05/13 12:51	7440-43-9	
Chromium, Dissolved	**2.0**	ug/L	1.0	1	03/18/13 16:30	03/29/13 14:10	7440-47-3	B
Cobalt, Dissolved	**3.9**	ug/L	1.0	1	03/18/13 16:30	03/29/13 14:10	7440-48-4	
Copper, Dissolved	**5.9**	ug/L	1.0	1	03/18/13 16:30	03/29/13 14:10	7440-50-8	
Iron, Dissolved	**9420**	ug/L	50.0	1	03/18/13 16:30	03/29/13 14:10	7439-89-6	
Lead, Dissolved	**10.1**	ug/L	1.0	1	03/18/13 16:30	03/29/13 14:10	7439-92-1	
Manganese, Dissolved	**8180**	ug/L	50.0	50	03/18/13 16:30	04/05/13 13:33	7439-96-5	
Molybdenum, Dissolved	**5.1**	ug/L	1.0	1	03/18/13 16:30	04/05/13 12:51	7439-98-7	
Nickel, Dissolved	**1.9**	ug/L	1.0	1	03/18/13 16:30	03/29/13 14:10	7440-02-0	
Selenium, Dissolved	ND	ug/L	1.0	1	03/18/13 16:30	04/05/13 12:51	7782-49-2	
Silver, Dissolved	**0.092J**	ug/L	0.50	1	03/18/13 16:30	04/05/13 12:51	7440-22-4	
Thallium, Dissolved	**0.37J**	ug/L	1.0	1	03/18/13 16:30	03/29/13 14:10	7440-28-0	B
Vanadium, Dissolved	**1.4**	ug/L	1.0	1	03/18/13 16:30	03/29/13 14:10	7440-62-2	
Zinc, Dissolved	**232**	ug/L	10.0	1	03/18/13 16:30	03/29/13 14:10	7440-66-6	
245.1 Mercury	Analytical Method: EPA 245.1 Preparation Method: EPA 245.1							
Mercury	ND	ug/L	0.20	1	03/20/13 15:28	03/27/13 12:17	7439-97-6	
245.1 Mercury, Dissolved	Analytical Method: EPA 245.1 Preparation Method: EPA 245.1							
Mercury, Dissolved	ND	ug/L	0.20	1	03/20/13 15:36	03/26/13 10:12	7439-97-6	
245.1 Potentially Diss Mercury	Analytical Method: EPA 245.1 Preparation Method: EPA 245.1							
Mercury, Dissolved	ND	ug/L	0.20	1	03/20/13 10:10	03/20/13 15:36	7439-97-6	
2510B Specific Conductance	Analytical Method: SM 2510B							
Specific Conductance	**1580**	umhos/cm	10.0	1		03/21/13 13:25		
Salinity	Analytical Method: Calculated							
Salinity (as dissolved solids)	**1010**	mg/L	6.4	1		03/25/13 16:02		

REPORT OF LABORATORY ANALYSIS

This report shall not be reproduced, except in full,
without the written consent of Pace Analytical Services, Inc..

Pace Analytical Services, Inc.
9608 Loiret Blvd.
Lenexa, KS 66219
(913)599-5665

ANALYTICAL RESULTS

Project: MARCH 2013 RICO WATER SAMPLING
Pace Project No.: 60140509

Sample: MW-103_20130313 **Lab ID: 60140509017** Collected: 03/13/13 13:54 Received: 03/15/13 10:10 Matrix: Water

Parameters	Results	Units	Report Limit	DF	Prepared	Analyzed	CAS No.	Qual
Salinity	Analytical Method: Calculated							
Salinity (as seawater)	**0.79**	PSU	0.014	1		03/25/13 16:02		
2320B Alkalinity	Analytical Method: SM 2320B							
Alkalinity,Bicarbonate (CaCO3)	**343**	mg/L	20.0	1		03/19/13 09:52		
Alkalinity, Carbonate (CaCO3)	ND	mg/L	20.0	1		03/19/13 09:52		
Alkalinity, Total as CaCO3	**343**	mg/L	20.0	1		03/19/13 09:52		
2540C Total Dissolved Solids	Analytical Method: SM 2540C							
Total Dissolved Solids	**1170**	mg/L	5.0	1		03/19/13 17:02		
2540D Total Suspended Solids	Analytical Method: SM 2540D							
Total Suspended Solids	**148**	mg/L	5.0	1		03/19/13 14:54		
4500S2D Sulfide, Total	Analytical Method: SM 4500-S-2 D							
Sulfide, Total	ND	mg/L	0.050	1		03/19/13 02:56	18496-25-8	
300.0 IC Anions 28 Days	Analytical Method: EPA 300.0							
Chloride	**1.2**	mg/L	1.0	1		03/28/13 00:06	16887-00-6	
Sulfate	**594**	mg/L	100	100		03/28/13 16:09	14808-79-8	
353.2 Nitrogen, NO2/NO3 pres.	Analytical Method: EPA 353.2							
Nitrogen, NO2 plus NO3	ND	mg/L	0.10	1		03/26/13 10:01		
4500CNE Cyanide, Total	Analytical Method: SM 4500-CN-E							
Cyanide	ND	mg/L	0.0050	1		03/20/13 15:10	57-12-5	
5310C TOC	Analytical Method: SM 5310C							
Total Organic Carbon	**1.5**	mg/L	1.0	2		03/25/13 12:33	7440-44-0	

This report shall not be reproduced, except in full,
without the written consent of Pace Analytical Services, Inc..

Pace Analytical Services, Inc.
9608 Loiret Blvd.
Lenexa, KS 66219
(913)599-5665

ANALYTICAL RESULTS

Project: MARCH 2013 RICO WATER SAMPLING
Pace Project No.: 60140509

Sample: MW-104_20130313 **Lab ID: 60140509018** Collected: 03/13/13 14:45 Received: 03/15/13 10:10 Matrix: Water

Parameters	Results	Units	Report Limit	DF	Prepared	Analyzed	CAS No.	Qual
200.7 Potentially Diss. Metals	Analytical Method: EPA 200.7 Preparation Method: EPA 200.7							
Calcium, Dissolved	**226000**	ug/L	100	1	03/18/13 16:30	03/29/13 10:16	7440-70-2	
Magnesium, Dissolved	**20700**	ug/L	50.0	1	03/18/13 16:30	03/29/13 10:16	7439-95-4	
Potassium, Dissolved	**9720**	ug/L	500	1	03/18/13 16:30	03/29/13 10:16	7440-09-7	
Sodium, Dissolved	**13200**	ug/L	500	1	03/18/13 16:30	03/29/13 10:16	7440-23-5	
200.8 MET ICPMS	Analytical Method: EPA 200.8 Preparation Method: EPA 200.8							
Aluminum	**2690**	ug/L	4.0	1	03/20/13 08:33	03/22/13 16:22	7429-90-5	
Antimony	ND	ug/L	0.50	1	03/20/13 08:33	03/22/13 16:22	7440-36-0	
Arsenic	**2.9**	ug/L	0.50	1	03/20/13 08:33	03/22/13 16:22	7440-38-2	
Barium	**73.1**	ug/L	0.30	1	03/20/13 08:33	03/22/13 16:22	7440-39-3	
Beryllium	ND	ug/L	0.20	1	03/20/13 08:33	03/22/13 16:22	7440-41-7	
Cadmium	**3.2**	ug/L	0.080	1	03/20/13 08:33	03/22/13 16:22	7440-43-9	
Calcium	**257000**	ug/L	400	20	03/20/13 08:33	03/22/13 16:27	7440-70-2	
Chromium	**5.1**	ug/L	0.50	1	03/20/13 08:33	03/22/13 16:22	7440-47-3	
Cobalt	**2.1**	ug/L	0.50	1	03/20/13 08:33	03/22/13 16:22	7440-48-4	
Copper	**16.3**	ug/L	0.50	1	03/20/13 08:33	03/22/13 16:22	7440-50-8	
Iron	**4480**	ug/L	50.0	1	03/20/13 08:33	03/22/13 16:22	7439-89-6	
Lead	**22.5**	ug/L	0.10	1	03/20/13 08:33	03/22/13 16:22	7439-92-1	
Magnesium	**23900**	ug/L	100	20	03/20/13 08:33	03/22/13 16:27	7439-95-4	
Manganese	**849**	ug/L	10.0	20	03/20/13 08:33	03/22/13 16:27	7439-96-5	
Molybdenum	**11.5**	ug/L	0.50	1	03/20/13 08:33	03/22/13 16:22	7439-98-7	
Nickel	**3.8**	ug/L	0.50	1	03/20/13 08:33	03/22/13 16:22	7440-02-0	
Potassium	**10900**	ug/L	20.0	1	03/20/13 08:33	03/22/13 16:22	7440-09-7	
Selenium	**1.6**	ug/L	0.50	1	03/20/13 08:33	03/22/13 16:22	7782-49-2	
Silica	**23300**	ug/L	1070	20	03/20/13 08:33	03/22/13 16:27	7631-86-9	
Silver	ND	ug/L	0.50	1	03/20/13 08:33	03/22/13 16:22	7440-22-4	
Sodium	**14000**	ug/L	50.0	1	03/20/13 08:33	03/22/13 16:22	7440-23-5	
Thallium	ND	ug/L	0.10	1	03/20/13 08:33	03/22/13 16:22	7440-28-0	
Total Hardness by 2340B	**741000**	ug/L	1420	20	03/20/13 08:33	03/22/13 16:27		
Vanadium	**5.5**	ug/L	0.10	1	03/20/13 08:33	03/22/13 16:22	7440-62-2	
Zinc	**1010**	ug/L	100	20	03/20/13 08:33	03/22/13 16:27	7440-66-6	
200.8 MET ICPMS, Dissolved	Analytical Method: EPA 200.8 Preparation Method: EPA 200.8							
Aluminum, Dissolved	**325**	ug/L	4.0	1	03/20/13 08:32	03/22/13 20:45	7429-90-5	
Antimony, Dissolved	ND	ug/L	0.50	1	03/20/13 08:32	03/22/13 20:45	7440-36-0	
Arsenic, Dissolved	ND	ug/L	0.50	1	03/20/13 08:32	03/22/13 20:45	7440-38-2	
Barium, Dissolved	**24.4**	ug/L	0.30	1	03/20/13 08:32	03/22/13 20:45	7440-39-3	
Beryllium, Dissolved	ND	ug/L	0.20	1	03/20/13 08:32	03/22/13 20:45	7440-41-7	
Cadmium, Dissolved	**2.3**	ug/L	0.080	1	03/20/13 08:32	03/22/13 20:45	7440-43-9	
Calcium, Dissolved	**253000**	ug/L	400	20	03/20/13 08:32	03/22/13 20:49	7440-70-2	
Chromium, Dissolved	**0.93**	ug/L	0.50	1	03/20/13 08:32	03/22/13 20:45	7440-47-3	
Cobalt, Dissolved	ND	ug/L	0.50	1	03/20/13 08:32	03/22/13 20:45	7440-48-4	
Copper, Dissolved	**3.4**	ug/L	0.50	1	03/20/13 08:32	03/22/13 20:45	7440-50-8	
Iron, Dissolved	**596**	ug/L	50.0	1	03/20/13 08:32	03/22/13 20:45	7439-89-6	
Lead, Dissolved	**3.9**	ug/L	0.10	1	03/20/13 08:32	03/22/13 20:45	7439-92-1	
Magnesium, Dissolved	**22200**	ug/L	100	20	03/20/13 08:32	03/22/13 20:49	7439-95-4	

This report shall not be reproduced, except in full,
without the written consent of Pace Analytical Services, Inc..

Pace Analytical Services, Inc.
9608 Loiret Blvd.
Lenexa, KS 66219
(913)599-5665

ANALYTICAL RESULTS

Project: MARCH 2013 RICO WATER SAMPLING
Pace Project No.: 60140509

Sample: MW-104_20130313 **Lab ID: 60140509018** Collected: 03/13/13 14:45 Received: 03/15/13 10:10 Matrix: Water

Parameters	Results	Units	Report Limit	DF	Prepared	Analyzed	CAS No.	Qual
200.8 MET ICPMS, Dissolved	Analytical Method: EPA 200.8 Preparation Method: EPA 200.8							
Manganese, Dissolved	**169**	ug/L	0.50	1	03/20/13 08:32	03/22/13 20:45	7439-96-5	
Molybdenum, Dissolved	**9.3**	ug/L	0.50	1	03/20/13 08:32	03/22/13 20:45	7439-98-7	
Nickel, Dissolved	**1.0**	ug/L	0.50	1	03/20/13 08:32	03/22/13 20:45	7440-02-0	
Potassium, Dissolved	**10400**	ug/L	20.0	1	03/20/13 08:32	03/22/13 20:45	7440-09-7	
Selenium, Dissolved	**1.3**	ug/L	0.50	1	03/20/13 08:32	03/22/13 20:45	7782-49-2	
Silver, Dissolved	ND	ug/L	0.50	1	03/20/13 08:32	03/22/13 20:45	7440-22-4	
Sodium, Dissolved	**13900**	ug/L	50.0	1	03/20/13 08:32	03/22/13 20:45	7440-23-5	
Thallium, Dissolved	ND	ug/L	0.10	1	03/20/13 08:32	03/22/13 20:45	7440-28-0	
Vanadium, Dissolved	**0.73**	ug/L	0.10	1	03/20/13 08:32	03/22/13 20:45	7440-62-2	
Zinc, Dissolved	**795**	ug/L	100	20	03/20/13 08:32	03/22/13 20:49	7440-66-6	
200.8 Potentially Diss. Metals	Analytical Method: EPA 200.8 Preparation Method: EPA 200.8							
Aluminum, Dissolved	**1020**	ug/L	50.0	1	03/18/13 16:30	04/05/13 12:55	7429-90-5	
Antimony, Dissolved	**0.42J**	ug/L	1.0	1	03/18/13 16:30	04/05/13 12:55	7440-36-0	B
Arsenic, Dissolved	**1.7**	ug/L	1.0	1	03/18/13 16:30	04/05/13 12:55	7440-38-2	
Barium, Dissolved	**47.9**	ug/L	1.0	1	03/18/13 16:30	03/29/13 13:57	7440-39-3	
Beryllium, Dissolved	**0.13J**	ug/L	0.50	1	03/18/13 16:30	04/05/13 12:55	7440-41-7	
Cadmium, Dissolved	**4.0**	ug/L	0.50	1	03/18/13 16:30	04/05/13 12:55	7440-43-9	
Chromium, Dissolved	**3.7**	ug/L	1.0	1	03/18/13 16:30	03/29/13 13:57	7440-47-3	B
Cobalt, Dissolved	**1.9**	ug/L	1.0	1	03/18/13 16:30	03/29/13 13:57	7440-48-4	
Copper, Dissolved	**17.8**	ug/L	1.0	1	03/18/13 16:30	03/29/13 13:57	7440-50-8	
Iron, Dissolved	**2380**	ug/L	50.0	1	03/18/13 16:30	03/29/13 13:57	7439-89-6	
Lead, Dissolved	**40.2**	ug/L	1.0	1	03/18/13 16:30	03/29/13 13:57	7439-92-1	
Manganese, Dissolved	**867**	ug/L	1.0	1	03/18/13 16:30	03/29/13 13:57	7439-96-5	
Molybdenum, Dissolved	**2.9**	ug/L	1.0	1	03/18/13 16:30	04/05/13 12:55	7439-98-7	
Nickel, Dissolved	**2.8**	ug/L	1.0	1	03/18/13 16:30	03/29/13 13:57	7440-02-0	
Selenium, Dissolved	**1.6**	ug/L	1.0	1	03/18/13 16:30	04/05/13 12:55	7782-49-2	
Silver, Dissolved	**0.29J**	ug/L	0.50	1	03/18/13 16:30	04/05/13 12:55	7440-22-4	
Thallium, Dissolved	**0.25J**	ug/L	1.0	1	03/18/13 16:30	03/29/13 13:57	7440-28-0	B
Vanadium, Dissolved	**2.1**	ug/L	1.0	1	03/18/13 16:30	03/29/13 13:57	7440-62-2	
Zinc, Dissolved	**1070**	ug/L	10.0	1	03/18/13 16:30	03/29/13 13:57	7440-66-6	
245.1 Mercury	Analytical Method: EPA 245.1 Preparation Method: EPA 245.1							
Mercury	ND	ug/L	0.20	1	03/20/13 15:28	03/27/13 12:20	7439-97-6	
245.1 Mercury, Dissolved	Analytical Method: EPA 245.1 Preparation Method: EPA 245.1							
Mercury, Dissolved	ND	ug/L	0.20	1	03/20/13 15:36	03/26/13 10:14	7439-97-6	
245.1 Potentially Diss Mercury	Analytical Method: EPA 245.1 Preparation Method: EPA 245.1							
Mercury, Dissolved	ND	ug/L	0.20	1	03/20/13 10:10	03/20/13 15:39	7439-97-6	
2510B Specific Conductance	Analytical Method: SM 2510B							
Specific Conductance	**1330**	umhos/cm	10.0	1		03/21/13 13:24		
Salinity	Analytical Method: Calculated							
Salinity (as dissolved solids)	**852**	mg/L	6.4	1		03/25/13 16:02		

REPORT OF LABORATORY ANALYSIS

This report shall not be reproduced, except in full,
without the written consent of Pace Analytical Services, Inc..

Pace Analytical Services, Inc.
9608 Loiret Blvd.
Lenexa, KS 66219
(913)599-5665

ANALYTICAL RESULTS

Project: MARCH 2013 RICO WATER SAMPLING
Pace Project No.: 60140509

Sample: MW-104_20130313 **Lab ID: 60140509018** Collected: 03/13/13 14:45 Received: 03/15/13 10:10 Matrix: Water

Parameters	Results	Units	Report Limit	DF	Prepared	Analyzed	CAS No.	Qual
Salinity	Analytical Method: Calculated							
Salinity (as seawater)	**0.66**	PSU	0.014	1		03/25/13 16:02		
2320B Alkalinity	Analytical Method: SM 2320B							
Alkalinity,Bicarbonate (CaCO3)	**138**	mg/L	20.0	1		03/21/13 10:46		
Alkalinity, Carbonate (CaCO3)	ND	mg/L	20.0	1		03/21/13 10:46		
Alkalinity, Total as CaCO3	**138**	mg/L	20.0	1		03/21/13 10:46		
2540C Total Dissolved Solids	Analytical Method: SM 2540C							
Total Dissolved Solids	**1010**	mg/L	5.0	1		03/19/13 17:02		
2540D Total Suspended Solids	Analytical Method: SM 2540D							
Total Suspended Solids	**160**	mg/L	5.0	1		03/19/13 14:54		
4500S2D Sulfide, Total	Analytical Method: SM 4500-S-2 D							
Sulfide, Total	ND	mg/L	0.050	1		03/19/13 02:57	18496-25-8	
300.0 IC Anions 28 Days	Analytical Method: EPA 300.0							
Chloride	ND	mg/L	1.0	1		03/28/13 00:24	16887-00-6	
Sulfate	**640**	mg/L	100	100		03/28/13 16:27	14808-79-8	
353.2 Nitrogen, NO2/NO3 pres.	Analytical Method: EPA 353.2							
Nitrogen, NO2 plus NO3	ND	mg/L	0.10	1		03/26/13 10:02		
4500CNE Cyanide, Total	Analytical Method: SM 4500-CN-E							
Cyanide	ND	mg/L	0.0050	1		03/20/13 15:12	57-12-5	
5310C TOC	Analytical Method: SM 5310C							
Total Organic Carbon	ND	mg/L	0.50	1		03/22/13 21:02	7440-44-0	

This report shall not be reproduced, except in full,
without the written consent of Pace Analytical Services, Inc..

Pace Analytical Services, Inc.
9608 Loiret Blvd.
Lenexa, KS 66219
(913)599-5665

ANALYTICAL RESULTS

Project: MARCH 2013 RICO WATER SAMPLING
Pace Project No.: 60140509

Sample: DR-10_20130313 **Lab ID: 60140509019** Collected: 03/13/13 12:55 Received: 03/15/13 10:10 Matrix: Water

Parameters	Results	Units	Report Limit	DF	Prepared	Analyzed	CAS No.	Qual
200.7 Potentially Diss. Metals	Analytical Method: EPA 200.7 Preparation Method: EPA 200.7							
Calcium, Dissolved	**392000**	ug/L	500	5	03/18/13 16:30	03/29/13 10:26	7440-70-2	
Magnesium, Dissolved	**126000**	ug/L	250	5	03/18/13 16:30	03/29/13 10:26	7439-95-4	
Potassium, Dissolved	**2890**	ug/L	2500	5	03/18/13 16:30	03/29/13 10:26	7440-09-7	
Sodium, Dissolved	**25700**	ug/L	2500	5	03/18/13 16:30	03/29/13 10:26	7440-23-5	
200.8 MET ICPMS	Analytical Method: EPA 200.8 Preparation Method: EPA 200.8							
Aluminum	**25300**	ug/L	80.0	20	03/20/13 08:33	03/22/13 16:42	7429-90-5	
Antimony	**3.2**	ug/L	0.50	1	03/20/13 08:33	03/22/13 16:36	7440-36-0	
Arsenic	**348**	ug/L	0.50	1	03/20/13 08:33	03/22/13 16:36	7440-38-2	
Barium	**97.9**	ug/L	0.30	1	03/20/13 08:33	03/22/13 16:36	7440-39-3	
Beryllium	**7.1**	ug/L	0.20	1	03/20/13 08:33	03/22/13 16:36	7440-41-7	
Cadmium	**148**	ug/L	0.080	1	03/20/13 08:33	03/22/13 16:36	7440-43-9	
Calcium	**445000**	ug/L	400	20	03/20/13 08:33	03/22/13 16:42	7440-70-2	
Chromium	**14.9**	ug/L	0.50	1	03/20/13 08:33	03/22/13 16:36	7440-47-3	
Cobalt	**88.2**	ug/L	0.50	1	03/20/13 08:33	03/22/13 16:36	7440-48-4	
Copper	**943**	ug/L	10.0	20	03/20/13 08:33	03/22/13 16:42	7440-50-8	
Iron	**537000**	ug/L	10000	200	03/20/13 08:33	03/22/13 16:47	7439-89-6	
Lead	**6620**	ug/L	2.0	20	03/20/13 08:33	03/22/13 16:42	7439-92-1	
Magnesium	**140000**	ug/L	100	20	03/20/13 08:33	03/22/13 16:42	7439-95-4	
Manganese	**26900**	ug/L	100	200	03/20/13 08:33	03/22/13 16:47	7439-96-5	
Molybdenum	**6.1**	ug/L	0.50	1	03/20/13 08:33	03/22/13 16:36	7439-98-7	
Nickel	**169**	ug/L	0.50	1	03/20/13 08:33	03/22/13 16:36	7440-02-0	
Potassium	**5120**	ug/L	20.0	1	03/20/13 08:33	03/22/13 16:36	7440-09-7	
Selenium	**5.9**	ug/L	0.50	1	03/20/13 08:33	03/22/13 16:36	7782-49-2	
Silica	**74300**	ug/L	1070	20	03/20/13 08:33	03/22/13 16:42	7631-86-9	
Silver	**26.1**	ug/L	0.50	1	03/20/13 08:33	03/22/13 16:36	7440-22-4	
Sodium	**26200**	ug/L	1000	20	03/20/13 08:33	03/22/13 16:42	7440-23-5	
Thallium	**0.83**	ug/L	0.10	1	03/20/13 08:33	03/22/13 16:36	7440-28-0	
Total Hardness by 2340B	**1690000**	ug/L	1420	20	03/20/13 08:33	03/22/13 16:42		
Vanadium	**11.9**	ug/L	0.10	1	03/20/13 08:33	03/22/13 16:36	7440-62-2	
Zinc	**125000**	ug/L	5000	1000	03/20/13 08:33	03/25/13 14:13	7440-66-6	
200.8 MET ICPMS, Dissolved	Analytical Method: EPA 200.8 Preparation Method: EPA 200.8							
Aluminum, Dissolved	**16700**	ug/L	4.0	1	03/20/13 08:32	03/22/13 20:09	7429-90-5	
Antimony, Dissolved	ND	ug/L	0.50	1	03/20/13 08:32	03/22/13 20:09	7440-36-0	
Arsenic, Dissolved	**279**	ug/L	0.50	1	03/20/13 08:32	03/22/13 20:09	7440-38-2	
Barium, Dissolved	**9.2**	ug/L	0.30	1	03/20/13 08:32	03/22/13 20:09	7440-39-3	
Beryllium, Dissolved	**5.4**	ug/L	0.20	1	03/20/13 08:32	03/22/13 20:09	7440-41-7	
Cadmium, Dissolved	**102**	ug/L	0.080	1	03/20/13 08:32	03/22/13 20:09	7440-43-9	
Calcium, Dissolved	**448000**	ug/L	400	20	03/20/13 08:32	03/22/13 20:13	7440-70-2	
Chromium, Dissolved	**2.3**	ug/L	0.50	1	03/20/13 08:32	03/22/13 20:09	7440-47-3	
Cobalt, Dissolved	**82.1**	ug/L	0.50	1	03/20/13 08:32	03/22/13 20:09	7440-48-4	
Copper, Dissolved	**1.4**	ug/L	0.50	1	03/20/13 08:32	03/22/13 20:09	7440-50-8	
Iron, Dissolved	**503000**	ug/L	10000	200	03/20/13 08:32	03/25/13 13:45	7439-89-6	
Lead, Dissolved	**668**	ug/L	2.0	20	03/20/13 08:32	03/22/13 20:13	7439-92-1	
Magnesium, Dissolved	**138000**	ug/L	100	20	03/20/13 08:32	03/22/13 20:13	7439-95-4	

This report shall not be reproduced, except in full,
without the written consent of Pace Analytical Services, Inc..

Pace Analytical Services, Inc.
9608 Loiret Blvd.
Lenexa, KS 66219
(913)599-5665

ANALYTICAL RESULTS

Project: MARCH 2013 RICO WATER SAMPLING
Pace Project No.: 60140509

Sample: DR-10_20130313 **Lab ID: 60140509019** Collected: 03/13/13 12:55 Received: 03/15/13 10:10 Matrix: Water

Parameters	Results	Units	Report Limit	DF	Prepared	Analyzed	CAS No.	Qual
200.8 MET ICPMS, Dissolved	Analytical Method: EPA 200.8 Preparation Method: EPA 200.8							
Manganese, Dissolved	**27600**	ug/L	100	200	03/20/13 08:32	03/25/13 13:45	7439-96-5	
Molybdenum, Dissolved	ND	ug/L	0.50	1	03/20/13 08:32	03/22/13 20:09	7439-98-7	
Nickel, Dissolved	**160**	ug/L	0.50	1	03/20/13 08:32	03/22/13 20:09	7440-02-0	
Potassium, Dissolved	**2970**	ug/L	20.0	1	03/20/13 08:32	03/22/13 20:09	7440-09-7	
Selenium, Dissolved	**4.1**	ug/L	0.50	1	03/20/13 08:32	03/22/13 20:09	7782-49-2	
Silver, Dissolved	ND	ug/L	0.50	1	03/20/13 08:32	03/22/13 20:09	7440-22-4	
Sodium, Dissolved	**25600**	ug/L	1000	20	03/20/13 08:32	03/22/13 20:13	7440-23-5	
Thallium, Dissolved	**0.21**	ug/L	0.10	1	03/20/13 08:32	03/22/13 20:09	7440-28-0	
Vanadium, Dissolved	**1.5**	ug/L	0.10	1	03/20/13 08:32	03/22/13 20:09	7440-62-2	
Zinc, Dissolved	**121000**	ug/L	5000	1000	03/20/13 08:32	03/25/13 13:50	7440-66-6	
200.8 Potentially Diss. Metals	Analytical Method: EPA 200.8 Preparation Method: EPA 200.8							
Aluminum, Dissolved	**20600**	ug/L	500	10	03/18/13 16:30	03/29/13 16:20	7429-90-5	M6
Antimony, Dissolved	ND	ug/L	10.0	10	03/18/13 16:30	03/29/13 16:20	7440-36-0	D3
Arsenic, Dissolved	**357**	ug/L	5.0	5	03/18/13 16:30	04/08/13 15:59	7440-38-2	M1
Barium, Dissolved	**5.7J**	ug/L	10.0	10	03/18/13 16:30	03/29/13 16:20	7440-39-3	
Beryllium, Dissolved	**6.0**	ug/L	2.5	5	03/18/13 16:30	04/08/13 15:59	7440-41-7	
Cadmium, Dissolved	**170**	ug/L	5.0	10	03/18/13 16:30	03/29/13 16:20	7440-43-9	
Chromium, Dissolved	**9.9J**	ug/L	10.0	10	03/18/13 16:30	03/29/13 16:20	7440-47-3	
Cobalt, Dissolved	**78.6**	ug/L	10.0	10	03/18/13 16:30	03/29/13 16:20	7440-48-4	
Copper, Dissolved	**788**	ug/L	10.0	10	03/18/13 16:30	03/29/13 16:20	7440-50-8	M6
Iron, Dissolved	**504000**	ug/L	500	10	03/18/13 16:30	03/29/13 16:20	7439-89-6	M6
Lead, Dissolved	**2840**	ug/L	10.0	10	03/18/13 16:30	03/29/13 16:20	7439-92-1	M6
Manganese, Dissolved	**28000**	ug/L	10.0	10	03/18/13 16:30	03/29/13 16:20	7439-96-5	M6
Molybdenum, Dissolved	ND	ug/L	10.0	10	03/18/13 16:30	03/29/13 16:20	7439-98-7	D3
Nickel, Dissolved	**158**	ug/L	10.0	10	03/18/13 16:30	03/29/13 16:20	7440-02-0	
Selenium, Dissolved	**4.8J**	ug/L	10.0	10	03/18/13 16:30	03/29/13 16:20	7782-49-2	
Silver, Dissolved	ND	ug/L	5.0	10	03/18/13 16:30	03/29/13 16:20	7440-22-4	D3
Thallium, Dissolved	**0.73J**	ug/L	10.0	10	03/18/13 16:30	03/29/13 16:20	7440-28-0	
Vanadium, Dissolved	**4.8J**	ug/L	10.0	10	03/18/13 16:30	03/29/13 16:20	7440-62-2	
Zinc, Dissolved	**121000**	ug/L	100	10	03/18/13 16:30	03/29/13 16:20	7440-66-6	M6
245.1 Mercury	Analytical Method: EPA 245.1 Preparation Method: EPA 245.1							
Mercury	ND	ug/L	0.20	1	03/20/13 15:28	03/27/13 12:22	7439-97-6	
245.1 Mercury, Dissolved	Analytical Method: EPA 245.1 Preparation Method: EPA 245.1							
Mercury, Dissolved	ND	ug/L	0.20	1	03/20/13 15:36	03/26/13 10:19	7439-97-6	
245.1 Potentially Diss Mercury	Analytical Method: EPA 245.1 Preparation Method: EPA 245.1							
Mercury, Dissolved	ND	ug/L	0.20	1	03/20/13 10:10	03/20/13 15:41	7439-97-6	
2510B Specific Conductance	Analytical Method: SM 2510B							
Specific Conductance	**4380**	umhos/cm	10.0	1		03/21/13 13:31		
Salinity	Analytical Method: Calculated							
Salinity (as dissolved solids)	**2800**	mg/L	6.4	1		03/25/13 16:02		

REPORT OF LABORATORY ANALYSIS

This report shall not be reproduced, except in full,
without the written consent of Pace Analytical Services, Inc..

Pace Analytical Services, Inc.
9608 Loiret Blvd.
Lenexa, KS 66219
(913)599-5665

ANALYTICAL RESULTS

Project: MARCH 2013 RICO WATER SAMPLING
Pace Project No.: 60140509

Sample: DR-10_20130313 **Lab ID: 60140509019** Collected: 03/13/13 12:55 Received: 03/15/13 10:10 Matrix: Water

Parameters	Results	Units	Report Limit	DF	Prepared	Analyzed	CAS No.	Qual
Salinity	Analytical Method: Calculated							
Salinity (as seawater)	**2.3**	PSU	0.014	1		03/25/13 16:02		
2320B Alkalinity	Analytical Method: SM 2320B							
Alkalinity,Bicarbonate (CaCO3)	ND	mg/L	20.0	1		03/21/13 10:49		
Alkalinity, Carbonate (CaCO3)	ND	mg/L	20.0	1		03/21/13 10:49		
Alkalinity, Total as CaCO3	ND	mg/L	20.0	1		03/21/13 10:49		
2540C Total Dissolved Solids	Analytical Method: SM 2540C							
Total Dissolved Solids	**3620**	mg/L	5.0	1		03/19/13 17:02		
2540D Total Suspended Solids	Analytical Method: SM 2540D							
Total Suspended Solids	**243**	mg/L	5.0	1		03/19/13 14:55		
4500S2D Sulfide, Total	Analytical Method: SM 4500-S-2 D							
Sulfide, Total	ND	mg/L	0.050	1		03/19/13 02:57	18496-25-8	
300.0 IC Anions 28 Days	Analytical Method: EPA 300.0							
Chloride	**2.0**	mg/L	1.0	1		03/28/13 00:41	16887-00-6	
Sulfate	**4480**	mg/L	500	500		03/28/13 16:44	14808-79-8	
353.2 Nitrogen, NO2/NO3 pres.	Analytical Method: EPA 353.2							
Nitrogen, NO2 plus NO3	ND	mg/L	0.10	1		03/26/13 10:03		
4500CNE Cyanide, Total	Analytical Method: SM 4500-CN-E							
Cyanide	ND	mg/L	0.0050	1		03/20/13 15:16	57-12-5	
5310C TOC	Analytical Method: SM 5310C							
Total Organic Carbon	**0.61**	mg/L	0.50	1		03/22/13 21:20	7440-44-0	

This report shall not be reproduced, except in full,
without the written consent of Pace Analytical Services, Inc..

Pace Analytical Services, Inc.
9608 Loiret Blvd.
Lenexa, KS 66219
(913)599-5665

ANALYTICAL RESULTS

Project: MARCH 2013 RICO WATER SAMPLING
Pace Project No.: 60140509

Sample: MW-3 DEEP_20130313 **Lab ID: 60140509020** Collected: 03/13/13 15:50 Received: 03/15/13 10:10 Matrix: Water

Parameters	Results	Units	Report Limit	DF	Prepared	Analyzed	CAS No.	Qual
200.7 Potentially Diss. Metals	Analytical Method: EPA 200.7 Preparation Method: EPA 200.7							
Calcium, Dissolved	**203000**	ug/L	100	1	03/18/13 16:30	03/29/13 10:28	7440-70-2	M1
Magnesium, Dissolved	**20700**	ug/L	50.0	1	03/18/13 16:30	03/29/13 10:28	7439-95-4	
Potassium, Dissolved	**4610**	ug/L	500	1	03/18/13 16:30	03/29/13 10:28	7440-09-7	
Sodium, Dissolved	**11200**	ug/L	500	1	03/18/13 16:30	03/29/13 10:28	7440-23-5	
200.8 MET ICPMS	Analytical Method: EPA 200.8 Preparation Method: EPA 200.8							
Aluminum	**3040**	ug/L	4.0	1	03/20/13 08:33	03/22/13 17:07	7429-90-5	
Antimony	ND	ug/L	0.50	1	03/20/13 08:33	03/22/13 17:07	7440-36-0	
Arsenic	**3.7**	ug/L	0.50	1	03/20/13 08:33	03/22/13 17:07	7440-38-2	
Barium	**78.3**	ug/L	0.30	1	03/20/13 08:33	03/22/13 17:07	7440-39-3	
Beryllium	**0.28**	ug/L	0.20	1	03/20/13 08:33	03/22/13 17:07	7440-41-7	
Cadmium	**3.4**	ug/L	0.080	1	03/20/13 08:33	03/22/13 17:07	7440-43-9	
Calcium	**247000**	ug/L	400	20	03/20/13 08:33	03/22/13 17:12	7440-70-2	
Chromium	**3.5**	ug/L	0.50	1	03/20/13 08:33	03/22/13 17:07	7440-47-3	
Cobalt	**2.2**	ug/L	0.50	1	03/20/13 08:33	03/22/13 17:07	7440-48-4	
Copper	**33.5**	ug/L	0.50	1	03/20/13 08:33	03/22/13 17:07	7440-50-8	
Iron	**6380**	ug/L	50.0	1	03/20/13 08:33	03/22/13 17:07	7439-89-6	
Lead	**54.1**	ug/L	0.10	1	03/20/13 08:33	03/22/13 17:07	7439-92-1	
Magnesium	**24700**	ug/L	100	20	03/20/13 08:33	03/22/13 17:12	7439-95-4	
Manganese	**1560**	ug/L	10.0	20	03/20/13 08:33	03/22/13 17:12	7439-96-5	
Molybdenum	**9.6**	ug/L	0.50	1	03/20/13 08:33	03/22/13 17:07	7439-98-7	
Nickel	**2.4**	ug/L	0.50	1	03/20/13 08:33	03/22/13 17:07	7440-02-0	
Potassium	**5790**	ug/L	20.0	1	03/20/13 08:33	03/22/13 17:07	7440-09-7	
Selenium	**0.75**	ug/L	0.50	1	03/20/13 08:33	03/22/13 17:07	7782-49-2	
Silica	**22200**	ug/L	1070	20	03/20/13 08:33	03/22/13 17:12	7631-86-9	
Silver	ND	ug/L	0.50	1	03/20/13 08:33	03/22/13 17:07	7440-22-4	
Sodium	**12000**	ug/L	50.0	1	03/20/13 08:33	03/22/13 17:07	7440-23-5	
Thallium	**0.18**	ug/L	0.10	1	03/20/13 08:33	03/22/13 17:07	7440-28-0	
Total Hardness by 2340B	**720000**	ug/L	1420	20	03/20/13 08:33	03/22/13 17:12		
Vanadium	**6.8**	ug/L	0.10	1	03/20/13 08:33	03/22/13 17:07	7440-62-2	
Zinc	**163**	ug/L	5.0	1	03/20/13 08:33	03/22/13 17:07	7440-66-6	
200.8 MET ICPMS, Dissolved	Analytical Method: EPA 200.8 Preparation Method: EPA 200.8							
Aluminum, Dissolved	**172**	ug/L	4.0	1	03/20/13 19:52	03/21/13 21:56	7429-90-5	M6
Antimony, Dissolved	ND	ug/L	0.50	1	03/20/13 19:52	03/21/13 21:56	7440-36-0	
Arsenic, Dissolved	**0.79**	ug/L	0.50	1	03/20/13 19:52	03/21/13 21:56	7440-38-2	
Barium, Dissolved	**22.2**	ug/L	0.30	1	03/20/13 19:52	03/21/13 21:56	7440-39-3	
Beryllium, Dissolved	ND	ug/L	0.20	1	03/20/13 19:52	03/21/13 21:56	7440-41-7	
Cadmium, Dissolved	**0.27**	ug/L	0.080	1	03/20/13 19:52	03/21/13 21:56	7440-43-9	
Calcium, Dissolved	**242000**	ug/L	500	25	03/20/13 19:52	03/21/13 22:21	7440-70-2	M6
Chromium, Dissolved	**1.1**	ug/L	0.50	1	03/20/13 19:52	03/21/13 21:56	7440-47-3	
Cobalt, Dissolved	**1.0**	ug/L	0.50	1	03/20/13 19:52	03/21/13 21:56	7440-48-4	
Copper, Dissolved	**2.7**	ug/L	0.50	1	03/20/13 19:52	03/21/13 21:56	7440-50-8	
Iron, Dissolved	**1800**	ug/L	50.0	1	03/20/13 19:52	03/21/13 21:56	7439-89-6	
Lead, Dissolved	**3.5**	ug/L	0.10	1	03/20/13 19:52	03/21/13 21:56	7439-92-1	
Magnesium, Dissolved	**24600**	ug/L	25.0	5	03/20/13 19:52	03/21/13 22:17	7439-95-4	M6

This report shall not be reproduced, except in full,
without the written consent of Pace Analytical Services, Inc..

Pace Analytical Services, Inc.
9608 Loiret Blvd.
Lenexa, KS 66219
(913)599-5665

ANALYTICAL RESULTS

Project: MARCH 2013 RICO WATER SAMPLING
Pace Project No.: 60140509

Sample: MW-3 DEEP_20130313 **Lab ID: 60140509020** Collected: 03/13/13 15:50 Received: 03/15/13 10:10 Matrix: Water

Parameters	Results	Units	Report Limit	DF	Prepared	Analyzed	CAS No.	Qual
200.8 MET ICPMS, Dissolved	Analytical Method: EPA 200.8 Preparation Method: EPA 200.8							
Manganese, Dissolved	**1510**	ug/L	2.5	5	03/20/13 19:52	03/21/13 22:17	7439-96-5	
Molybdenum, Dissolved	**8.6**	ug/L	0.50	1	03/20/13 19:52	03/21/13 21:56	7439-98-7	
Nickel, Dissolved	ND	ug/L	0.50	1	03/20/13 19:52	03/21/13 21:56	7440-02-0	
Potassium, Dissolved	**5110**	ug/L	20.0	1	03/20/13 19:52	03/21/13 21:56	7440-09-7	
Selenium, Dissolved	ND	ug/L	0.50	1	03/20/13 19:52	03/21/13 21:56	7782-49-2	
Silver, Dissolved	ND	ug/L	0.50	1	03/20/13 19:52	03/21/13 21:56	7440-22-4	
Sodium, Dissolved	**11500**	ug/L	50.0	1	03/20/13 19:52	03/21/13 21:56	7440-23-5	
Thallium, Dissolved	ND	ug/L	0.10	1	03/20/13 19:52	03/21/13 21:56	7440-28-0	
Vanadium, Dissolved	**0.47**	ug/L	0.10	1	03/20/13 19:52	03/21/13 21:56	7440-62-2	
Zinc, Dissolved	**45.1**	ug/L	5.0	1	03/20/13 19:52	03/21/13 21:56	7440-66-6	
200.8 Potentially Diss. Metals	Analytical Method: EPA 200.8 Preparation Method: EPA 200.8							
Aluminum, Dissolved	**710**	ug/L	50.0	1	03/18/13 16:30	03/29/13 16:32	7429-90-5	
Antimony, Dissolved	ND	ug/L	1.0	1	03/18/13 16:30	03/29/13 16:32	7440-36-0	
Arsenic, Dissolved	**1.7**	ug/L	1.0	1	03/18/13 16:30	04/08/13 16:15	7440-38-2	
Barium, Dissolved	**27.9**	ug/L	1.0	1	03/18/13 16:30	03/29/13 16:32	7440-39-3	
Beryllium, Dissolved	**0.11J**	ug/L	0.50	1	03/18/13 16:30	04/08/13 16:15	7440-41-7	
Cadmium, Dissolved	**2.4**	ug/L	0.50	1	03/18/13 16:30	03/29/13 16:32	7440-43-9	
Chromium, Dissolved	**1.7**	ug/L	1.0	1	03/18/13 16:30	03/29/13 16:32	7440-47-3	B
Cobalt, Dissolved	**1.2**	ug/L	1.0	1	03/18/13 16:30	03/29/13 16:32	7440-48-4	
Copper, Dissolved	**20.2**	ug/L	1.0	1	03/18/13 16:30	03/29/13 16:32	7440-50-8	
Iron, Dissolved	**3270**	ug/L	50.0	1	03/18/13 16:30	03/29/13 16:32	7439-89-6	
Lead, Dissolved	**40.3**	ug/L	1.0	1	03/18/13 16:30	03/29/13 16:32	7439-92-1	
Manganese, Dissolved	**1420**	ug/L	1.0	1	03/18/13 16:30	03/29/13 16:32	7439-96-5	
Molybdenum, Dissolved	**4.9**	ug/L	1.0	1	03/18/13 16:30	03/29/13 16:32	7439-98-7	
Nickel, Dissolved	ND	ug/L	1.0	1	03/18/13 16:30	03/29/13 16:32	7440-02-0	
Selenium, Dissolved	ND	ug/L	1.0	1	03/18/13 16:30	03/29/13 16:32	7782-49-2	
Silver, Dissolved	ND	ug/L	0.50	1	03/18/13 16:30	03/29/13 16:32	7440-22-4	
Thallium, Dissolved	**0.10J**	ug/L	1.0	1	03/18/13 16:30	03/29/13 16:32	7440-28-0	
Vanadium, Dissolved	**2.4**	ug/L	1.0	1	03/18/13 16:30	03/29/13 16:32	7440-62-2	
Zinc, Dissolved	**124**	ug/L	10.0	1	03/18/13 16:30	03/29/13 16:32	7440-66-6	
245.1 Mercury	Analytical Method: EPA 245.1 Preparation Method: EPA 245.1							
Mercury	ND	ug/L	0.20	1	03/20/13 15:28	03/27/13 12:25	7439-97-6	
245.1 Mercury, Dissolved	Analytical Method: EPA 245.1 Preparation Method: EPA 245.1							
Mercury, Dissolved	ND	ug/L	0.20	1	03/20/13 15:36	03/26/13 10:22	7439-97-6	
245.1 Potentially Diss Mercury	Analytical Method: EPA 245.1 Preparation Method: EPA 245.1							
Mercury, Dissolved	ND	ug/L	0.20	1	03/20/13 10:10	03/20/13 15:43	7439-97-6	
2510B Specific Conductance	Analytical Method: SM 2510B							
Specific Conductance	**1260**	umhos/cm	10.0	1		03/21/13 13:37		
Salinity	Analytical Method: Calculated							
Salinity (as dissolved solids)	**808**	mg/L	6.4	1		03/25/13 16:02		

REPORT OF LABORATORY ANALYSIS

This report shall not be reproduced, except in full,
without the written consent of Pace Analytical Services, Inc..

Pace Analytical Services, Inc.
9608 Loiret Blvd.
Lenexa, KS 66219
(913)599-5665

ANALYTICAL RESULTS

Project: MARCH 2013 RICO WATER SAMPLING
Pace Project No.: 60140509

Sample: MW-3 DEEP_20130313 **Lab ID: 60140509020** Collected: 03/13/13 15:50 Received: 03/15/13 10:10 Matrix: Water

Parameters	Results	Units	Report Limit	DF	Prepared	Analyzed	CAS No.	Qual
Salinity	Analytical Method: Calculated							
Salinity (as seawater)	**0.63**	PSU	0.014	1		03/25/13 16:02		
2320B Alkalinity	Analytical Method: SM 2320B							
Alkalinity,Bicarbonate (CaCO3)	**87.2**	mg/L	20.0	1		03/21/13 11:02		
Alkalinity, Carbonate (CaCO3)	ND	mg/L	20.0	1		03/21/13 11:02		
Alkalinity, Total as CaCO3	**87.2**	mg/L	20.0	1		03/21/13 11:02		
2540C Total Dissolved Solids	Analytical Method: SM 2540C							
Total Dissolved Solids	**996**	mg/L	5.0	1		03/19/13 17:03		
2540D Total Suspended Solids	Analytical Method: SM 2540D							
Total Suspended Solids	**99.0**	mg/L	5.0	1		03/19/13 14:55		
4500S2D Sulfide, Total	Analytical Method: SM 4500-S-2 D							
Sulfide, Total	ND	mg/L	0.050	1		03/19/13 02:58	18496-25-8	
300.0 IC Anions 28 Days	Analytical Method: EPA 300.0							
Chloride	ND	mg/L	1.0	1		03/28/13 01:34	16887-00-6	
Sulfate	**649**	mg/L	100	100		03/28/13 17:02	14808-79-8	
353.2 Nitrogen, NO2/NO3 pres.	Analytical Method: EPA 353.2							
Nitrogen, NO2 plus NO3	ND	mg/L	0.10	1		03/26/13 10:05		
4500CNE Cyanide, Total	Analytical Method: SM 4500-CN-E							
Cyanide	ND	mg/L	0.0050	1		03/20/13 15:16	57-12-5	
5310C TOC	Analytical Method: SM 5310C							
Total Organic Carbon	**0.65**	mg/L	0.50	1		03/22/13 22:35	7440-44-0	

This report shall not be reproduced, except in full,
without the written consent of Pace Analytical Services, Inc..

Pace Analytical Services, Inc.
9608 Loiret Blvd.
Lenexa, KS 66219
(913)599-5665

ANALYTICAL RESULTS

Project: MARCH 2013 RICO WATER SAMPLING
Pace Project No.: 60140509

Sample: MW-5 DEEP_20130313 **Lab ID: 60140509021** Collected: 03/13/13 13:07 Received: 03/15/13 10:10 Matrix: Water

Parameters	Results	Units	Report Limit	DF	Prepared	Analyzed	CAS No.	Qual
200.7 Potentially Diss. Metals	Analytical Method: EPA 200.7 Preparation Method: EPA 200.7							
Calcium, Dissolved	**272000**	ug/L	100	1	03/18/13 16:30	03/29/13 10:36	7440-70-2	
Magnesium, Dissolved	**43400**	ug/L	50.0	1	03/18/13 16:30	03/29/13 10:36	7439-95-4	
Potassium, Dissolved	**7640**	ug/L	500	1	03/18/13 16:30	03/29/13 10:36	7440-09-7	
Sodium, Dissolved	**7460**	ug/L	500	1	03/18/13 16:30	03/29/13 10:36	7440-23-5	
200.8 MET ICPMS	Analytical Method: EPA 200.8 Preparation Method: EPA 200.8							
Aluminum	**5350**	ug/L	4.0	1	03/20/13 19:56	03/23/13 10:23	7429-90-5	M1
Antimony	**0.93**	ug/L	0.50	1	03/20/13 19:56	03/23/13 10:23	7440-36-0	
Arsenic	**260**	ug/L	0.50	1	03/20/13 19:56	03/23/13 10:23	7440-38-2	
Barium	**82.2**	ug/L	0.30	1	03/20/13 19:56	03/25/13 10:43	7440-39-3	
Beryllium	**2.5**	ug/L	0.20	1	03/20/13 19:56	03/23/13 10:23	7440-41-7	
Cadmium	**6.1**	ug/L	0.080	1	03/20/13 19:56	03/23/13 10:23	7440-43-9	
Calcium	**319000**	ug/L	400	20	03/20/13 19:56	03/23/13 10:29	7440-70-2	M1
Chromium	**5.3**	ug/L	0.50	1	03/20/13 19:56	03/23/13 10:23	7440-47-3	
Cobalt	**10.6**	ug/L	0.50	1	03/20/13 19:56	03/23/13 10:23	7440-48-4	
Copper	**108**	ug/L	0.50	1	03/20/13 19:56	03/23/13 10:23	7440-50-8	
Iron	**100000**	ug/L	250	5	03/20/13 19:56	03/23/13 10:55	7439-89-6	M1
Lead	**902**	ug/L	0.50	5	03/20/13 19:56	03/23/13 10:55	7439-92-1	M1
Magnesium	**51200**	ug/L	25.0	5	03/20/13 19:56	03/23/13 10:55	7439-95-4	M1
Manganese	**9880**	ug/L	25.0	50	03/20/13 19:56	03/25/13 10:50	7439-96-5	M1
Molybdenum	**20.1**	ug/L	0.50	1	03/20/13 19:56	03/23/13 10:23	7439-98-7	
Nickel	**11.0**	ug/L	0.50	1	03/20/13 19:56	03/23/13 10:23	7440-02-0	
Potassium	**8890**	ug/L	20.0	1	03/20/13 19:56	03/23/13 10:23	7440-09-7	M1
Selenium	**1.5**	ug/L	0.50	1	03/20/13 19:56	03/23/13 10:23	7782-49-2	
Silica	**44200**	ug/L	1070	20	03/20/13 19:56	03/23/13 10:29	7631-86-9	M1
Silver	**2.6**	ug/L	0.50	1	03/20/13 19:56	03/23/13 10:23	7440-22-4	
Sodium	**7290**	ug/L	50.0	1	03/20/13 19:56	03/23/13 10:23	7440-23-5	M1
Thallium	**0.29**	ug/L	0.10	1	03/20/13 19:56	03/23/13 10:23	7440-28-0	
Total Hardness by 2340B	**1010000**	ug/L	1420	20	03/20/13 19:56	03/23/13 10:29		M1
Vanadium	**9.6**	ug/L	0.10	1	03/20/13 19:56	03/23/13 10:23	7440-62-2	
Zinc	**8920**	ug/L	100	20	03/20/13 19:56	03/23/13 10:29	7440-66-6	M1
200.8 MET ICPMS, Dissolved	Analytical Method: EPA 200.8 Preparation Method: EPA 200.8							
Aluminum, Dissolved	**603**	ug/L	4.0	1	03/20/13 19:52	03/21/13 19:16	7429-90-5	
Antimony, Dissolved	ND	ug/L	0.50	1	03/20/13 19:52	03/21/13 19:16	7440-36-0	
Arsenic, Dissolved	**147**	ug/L	0.50	1	03/20/13 19:52	03/21/13 19:16	7440-38-2	
Barium, Dissolved	**10.6**	ug/L	0.30	1	03/20/13 19:52	03/21/13 19:16	7440-39-3	
Beryllium, Dissolved	**1.6**	ug/L	0.20	1	03/20/13 19:52	03/21/13 19:16	7440-41-7	
Cadmium, Dissolved	ND	ug/L	0.080	1	03/20/13 19:52	03/21/13 19:16	7440-43-9	
Calcium, Dissolved	**309000**	ug/L	400	20	03/20/13 19:52	03/22/13 15:18	7440-70-2	
Chromium, Dissolved	ND	ug/L	0.50	1	03/20/13 19:52	03/21/13 19:16	7440-47-3	
Cobalt, Dissolved	**8.3**	ug/L	0.50	1	03/20/13 19:52	03/21/13 19:16	7440-48-4	
Copper, Dissolved	**2.4**	ug/L	0.50	1	03/20/13 19:52	03/21/13 19:16	7440-50-8	
Iron, Dissolved	**60200**	ug/L	1000	20	03/20/13 19:52	03/22/13 15:18	7439-89-6	
Lead, Dissolved	**13.1**	ug/L	0.10	1	03/20/13 19:52	03/21/13 19:16	7439-92-1	
Magnesium, Dissolved	**48100**	ug/L	100	20	03/20/13 19:52	03/22/13 15:18	7439-95-4	

This report shall not be reproduced, except in full,
without the written consent of Pace Analytical Services, Inc..

Pace Analytical Services, Inc.
9608 Loiret Blvd.
Lenexa, KS 66219
(913)599-5665

ANALYTICAL RESULTS

Project: MARCH 2013 RICO WATER SAMPLING
Pace Project No.: 60140509

Sample: MW-5 DEEP_20130313 **Lab ID: 60140509021** Collected: 03/13/13 13:07 Received: 03/15/13 10:10 Matrix: Water

Parameters	Results	Units	Report Limit	DF	Prepared	Analyzed	CAS No.	Qual
200.8 MET ICPMS, Dissolved	Analytical Method: EPA 200.8 Preparation Method: EPA 200.8							
Manganese, Dissolved	**8910**	ug/L	100	200	03/20/13 19:52	03/22/13 15:22	7439-96-5	
Molybdenum, Dissolved	**11.6**	ug/L	0.50	1	03/20/13 19:52	03/21/13 19:16	7439-98-7	
Nickel, Dissolved	**10.6**	ug/L	0.50	1	03/20/13 19:52	03/21/13 19:16	7440-02-0	
Potassium, Dissolved	**8050**	ug/L	20.0	1	03/20/13 19:52	03/21/13 19:16	7440-09-7	
Selenium, Dissolved	ND	ug/L	0.50	1	03/20/13 19:52	03/21/13 19:16	7782-49-2	
Silver, Dissolved	ND	ug/L	0.50	1	03/20/13 19:52	03/21/13 19:16	7440-22-4	
Sodium, Dissolved	**7330**	ug/L	50.0	1	03/20/13 19:52	03/21/13 19:16	7440-23-5	
Thallium, Dissolved	ND	ug/L	0.10	1	03/20/13 19:52	03/21/13 19:16	7440-28-0	
Vanadium, Dissolved	**0.13**	ug/L	0.10	1	03/20/13 19:52	03/21/13 19:16	7440-62-2	
Zinc, Dissolved	**7360**	ug/L	100	20	03/20/13 19:52	03/22/13 15:18	7440-66-6	
200.8 Potentially Diss. Metals	Analytical Method: EPA 200.8 Preparation Method: EPA 200.8							
Aluminum, Dissolved	**2460**	ug/L	50.0	1	03/18/13 16:30	03/29/13 16:36	7429-90-5	
Antimony, Dissolved	**0.088J**	ug/L	1.0	1	03/18/13 16:30	03/29/13 16:36	7440-36-0	
Arsenic, Dissolved	**199**	ug/L	1.0	1	03/18/13 16:30	04/08/13 16:20	7440-38-2	
Barium, Dissolved	**15.7**	ug/L	1.0	1	03/18/13 16:30	03/29/13 16:36	7440-39-3	
Beryllium, Dissolved	**1.6**	ug/L	0.50	1	03/18/13 16:30	04/08/13 16:20	7440-41-7	
Cadmium, Dissolved	**2.3**	ug/L	0.50	1	03/18/13 16:30	03/29/13 16:36	7440-43-9	
Chromium, Dissolved	**2.8**	ug/L	1.0	1	03/18/13 16:30	03/29/13 16:36	7440-47-3	
Cobalt, Dissolved	**8.9**	ug/L	1.0	1	03/18/13 16:30	03/29/13 16:36	7440-48-4	
Copper, Dissolved	**50.8**	ug/L	1.0	1	03/18/13 16:30	03/29/13 16:36	7440-50-8	
Iron, Dissolved	**70500**	ug/L	50.0	1	03/18/13 16:30	03/29/13 16:36	7439-89-6	
Lead, Dissolved	**856**	ug/L	1.0	1	03/18/13 16:30	03/29/13 16:36	7439-92-1	
Manganese, Dissolved	**9350**	ug/L	50.0	50	03/18/13 16:30	04/08/13 16:24	7439-96-5	
Molybdenum, Dissolved	**3.6**	ug/L	1.0	1	03/18/13 16:30	03/29/13 16:36	7439-98-7	
Nickel, Dissolved	**8.7**	ug/L	1.0	1	03/18/13 16:30	03/29/13 16:36	7440-02-0	
Selenium, Dissolved	**0.70J**	ug/L	1.0	1	03/18/13 16:30	03/29/13 16:36	7782-49-2	
Silver, Dissolved	ND	ug/L	0.50	1	03/18/13 16:30	03/29/13 16:36	7440-22-4	
Thallium, Dissolved	**0.18J**	ug/L	1.0	1	03/18/13 16:30	03/29/13 16:36	7440-28-0	
Vanadium, Dissolved	**3.7**	ug/L	1.0	1	03/18/13 16:30	03/29/13 16:36	7440-62-2	
Zinc, Dissolved	**8430**	ug/L	10.0	1	03/18/13 16:30	03/29/13 16:36	7440-66-6	
245.1 Mercury	Analytical Method: EPA 245.1 Preparation Method: EPA 245.1							
Mercury	ND	ug/L	0.20	1	03/20/13 14:08	03/26/13 11:02	7439-97-6	
245.1 Mercury, Dissolved	Analytical Method: EPA 245.1 Preparation Method: EPA 245.1							
Mercury, Dissolved	ND	ug/L	0.20	1	03/20/13 11:28	03/26/13 12:22	7439-97-6	
245.1 Potentially Diss Mercury	Analytical Method: EPA 245.1 Preparation Method: EPA 245.1							
Mercury, Dissolved	ND	ug/L	0.20	1	03/20/13 10:10	03/20/13 15:50	7439-97-6	
2510B Specific Conductance	Analytical Method: SM 2510B							
Specific Conductance	**1710**	umhos/cm	10.0	1		03/21/13 13:41		
Salinity	Analytical Method: Calculated							
Salinity (as dissolved solids)	**1090**	mg/L	6.4	1		03/25/13 15:58		

REPORT OF LABORATORY ANALYSIS

This report shall not be reproduced, except in full,
without the written consent of Pace Analytical Services, Inc..

Pace Analytical Services, Inc.
9608 Loiret Blvd.
Lenexa, KS 66219
(913)599-5665

ANALYTICAL RESULTS

Project: MARCH 2013 RICO WATER SAMPLING
Pace Project No.: 60140509

Sample: MW-5 DEEP_20130313 **Lab ID: 60140509021** Collected: 03/13/13 13:07 Received: 03/15/13 10:10 Matrix: Water

Parameters	Results	Units	Report Limit	DF	Prepared	Analyzed	CAS No.	Qual
Salinity	Analytical Method: Calculated							
Salinity (as seawater)	**0.86**	PSU	0.014	1		03/25/13 15:58		
2320B Alkalinity	Analytical Method: SM 2320B							
Alkalinity,Bicarbonate (CaCO3)	**100**	mg/L	20.0	1		03/21/13 11:06		
Alkalinity, Carbonate (CaCO3)	ND	mg/L	20.0	1		03/21/13 11:06		
Alkalinity, Total as CaCO3	**100**	mg/L	20.0	1		03/21/13 11:06		
2540C Total Dissolved Solids	Analytical Method: SM 2540C							
Total Dissolved Solids	**1410**	mg/L	5.0	1		03/20/13 17:27		
2540D Total Suspended Solids	Analytical Method: SM 2540D							
Total Suspended Solids	**188**	mg/L	5.0	1		03/19/13 14:55		
4500S2D Sulfide, Total	Analytical Method: SM 4500-S-2 D							
Sulfide, Total	ND	mg/L	0.050	1		03/20/13 13:34	18496-25-8	
300.0 IC Anions 28 Days	Analytical Method: EPA 300.0							
Chloride	**1.4**	mg/L	1.0	1		03/28/13 01:52	16887-00-6	
Sulfate	**907**	mg/L	100	100		03/28/13 17:20	14808-79-8	
353.2 Nitrogen, NO2/NO3 pres.	Analytical Method: EPA 353.2							
Nitrogen, NO2 plus NO3	ND	mg/L	0.10	1		03/26/13 10:06		CU
4500CNE Cyanide, Total	Analytical Method: SM 4500-CN-E							
Cyanide	ND	mg/L	0.0050	1		03/20/13 15:19	57-12-5	
5310C TOC	Analytical Method: SM 5310C							
Total Organic Carbon	**0.83**	mg/L	0.50	1		03/22/13 22:53	7440-44-0	

This report shall not be reproduced, except in full,
without the written consent of Pace Analytical Services, Inc..

Pace Analytical Services, Inc.
9608 Loiret Blvd.
Lenexa, KS 66219
(913)599-5665

ANALYTICAL RESULTS

Project: MARCH 2013 RICO WATER SAMPLING
Pace Project No.: 60140509

Sample: MW-5 SHALLOW_20130313 **Lab ID: 60140509022** Collected: 03/13/13 12:43 Received: 03/15/13 10:10 Matrix: Water

Parameters	Results	Units	Report Limit	DF	Prepared	Analyzed	CAS No.	Qual
200.7 Potentially Diss. Metals	Analytical Method: EPA 200.7 Preparation Method: EPA 200.7							
Calcium, Dissolved	**396000**	ug/L	500	5	03/18/13 16:30	03/29/13 10:38	7440-70-2	
Magnesium, Dissolved	**128000**	ug/L	250	5	03/18/13 16:30	03/29/13 10:38	7439-95-4	
Potassium, Dissolved	**2940**	ug/L	2500	5	03/18/13 16:30	03/29/13 10:38	7440-09-7	
Sodium, Dissolved	**25200**	ug/L	2500	5	03/18/13 16:30	03/29/13 10:38	7440-23-5	
200.8 MET ICPMS	Analytical Method: EPA 200.8 Preparation Method: EPA 200.8							
Aluminum	**30200**	ug/L	80.0	20	03/20/13 19:56	03/23/13 11:19	7429-90-5	
Antimony	**4.1**	ug/L	0.50	1	03/20/13 19:56	03/23/13 11:13	7440-36-0	
Arsenic	**400**	ug/L	0.50	1	03/20/13 19:56	03/23/13 11:13	7440-38-2	
Barium	**116**	ug/L	0.30	1	03/20/13 19:56	03/25/13 11:29	7440-39-3	
Beryllium	**7.9**	ug/L	0.20	1	03/20/13 19:56	03/23/13 11:13	7440-41-7	
Cadmium	**164**	ug/L	0.080	1	03/20/13 19:56	03/23/13 11:13	7440-43-9	
Calcium	**458000**	ug/L	2000	100	03/20/13 19:56	03/23/13 12:53	7440-70-2	
Chromium	**20.7**	ug/L	0.50	1	03/20/13 19:56	03/23/13 11:13	7440-47-3	
Cobalt	**91.4**	ug/L	0.50	1	03/20/13 19:56	03/23/13 11:13	7440-48-4	
Copper	**1620**	ug/L	10.0	20	03/20/13 19:56	03/23/13 11:19	7440-50-8	
Iron	**624000**	ug/L	5000	100	03/20/13 19:56	03/23/13 12:53	7439-89-6	
Lead	**9900**	ug/L	10.0	100	03/20/13 19:56	03/23/13 12:53	7439-92-1	
Magnesium	**153000**	ug/L	100	20	03/20/13 19:56	03/23/13 11:19	7439-95-4	
Manganese	**29700**	ug/L	50.0	100	03/20/13 19:56	03/23/13 12:53	7439-96-5	
Molybdenum	**8.3**	ug/L	0.50	1	03/20/13 19:56	03/23/13 11:13	7439-98-7	
Nickel	**174**	ug/L	0.50	1	03/20/13 19:56	03/23/13 11:13	7440-02-0	
Potassium	**5810**	ug/L	20.0	1	03/20/13 19:56	03/23/13 11:13	7440-09-7	
Selenium	**10.8**	ug/L	0.50	1	03/20/13 19:56	03/23/13 11:13	7782-49-2	
Silica	**87100**	ug/L	1070	20	03/20/13 19:56	03/23/13 11:19	7631-86-9	
Silver	**38.9**	ug/L	0.50	1	03/20/13 19:56	03/23/13 11:13	7440-22-4	
Sodium	**28800**	ug/L	1000	20	03/20/13 19:56	03/23/13 11:19	7440-23-5	
Thallium	**0.99**	ug/L	0.10	1	03/20/13 19:56	03/23/13 11:13	7440-28-0	
Total Hardness by 2340B	**1780000**	ug/L	7100	100	03/20/13 19:56	03/23/13 12:53		
Vanadium	**16.1**	ug/L	0.10	1	03/20/13 19:56	03/23/13 11:13	7440-62-2	
Zinc	**144000**	ug/L	2500	500	03/20/13 19:56	03/25/13 11:35	7440-66-6	
200.8 MET ICPMS, Dissolved	Analytical Method: EPA 200.8 Preparation Method: EPA 200.8							
Aluminum, Dissolved	**17200**	ug/L	4.0	1	03/20/13 19:52	03/21/13 19:30	7429-90-5	
Antimony, Dissolved	ND	ug/L	0.50	1	03/20/13 19:52	03/21/13 19:30	7440-36-0	
Arsenic, Dissolved	**273**	ug/L	0.50	1	03/20/13 19:52	03/21/13 19:30	7440-38-2	
Barium, Dissolved	**13.0**	ug/L	0.30	1	03/20/13 19:52	03/21/13 19:30	7440-39-3	
Beryllium, Dissolved	**5.5**	ug/L	0.20	1	03/20/13 19:52	03/21/13 19:30	7440-41-7	
Cadmium, Dissolved	**94.5**	ug/L	0.080	1	03/20/13 19:52	03/21/13 19:30	7440-43-9	
Calcium, Dissolved	**446000**	ug/L	400	20	03/20/13 19:52	03/21/13 19:35	7440-70-2	
Chromium, Dissolved	**2.5**	ug/L	0.50	1	03/20/13 19:52	03/21/13 19:30	7440-47-3	
Cobalt, Dissolved	**83.2**	ug/L	0.50	1	03/20/13 19:52	03/21/13 19:30	7440-48-4	
Copper, Dissolved	**45.4**	ug/L	0.50	1	03/20/13 19:52	03/21/13 19:30	7440-50-8	
Iron, Dissolved	**545000**	ug/L	5000	100	03/20/13 19:52	03/22/13 15:27	7439-89-6	
Lead, Dissolved	**1090**	ug/L	2.0	20	03/20/13 19:52	03/21/13 19:35	7439-92-1	
Magnesium, Dissolved	**144000**	ug/L	100	20	03/20/13 19:52	03/21/13 19:35	7439-95-4	

This report shall not be reproduced, except in full,
without the written consent of Pace Analytical Services, Inc..

Pace Analytical Services, Inc.
9608 Loiret Blvd.
Lenexa, KS 66219
(913)599-5665

ANALYTICAL RESULTS

Project: MARCH 2013 RICO WATER SAMPLING
Pace Project No.: 60140509

Sample: MW-5 SHALLOW_20130313 **Lab ID: 60140509022** Collected: 03/13/13 12:43 Received: 03/15/13 10:10 Matrix: Water

Parameters	Results	Units	Report Limit	DF	Prepared	Analyzed	CAS No.	Qual
200.8 MET ICPMS, Dissolved	Analytical Method: EPA 200.8 Preparation Method: EPA 200.8							
Manganese, Dissolved	**29600**	ug/L	50.0	100	03/20/13 19:52	03/22/13 15:27	7439-96-5	
Molybdenum, Dissolved	**0.69**	ug/L	0.50	1	03/20/13 19:52	03/21/13 19:30	7439-98-7	
Nickel, Dissolved	**157**	ug/L	0.50	1	03/20/13 19:52	03/21/13 19:30	7440-02-0	
Potassium, Dissolved	**3170**	ug/L	20.0	1	03/20/13 19:52	03/21/13 19:30	7440-09-7	
Selenium, Dissolved	**4.2**	ug/L	0.50	1	03/20/13 19:52	03/21/13 19:30	7782-49-2	
Silver, Dissolved	**1.1**	ug/L	0.50	1	03/20/13 19:52	03/21/13 19:30	7440-22-4	
Sodium, Dissolved	**25500**	ug/L	1000	20	03/20/13 19:52	03/21/13 19:35	7440-23-5	
Thallium, Dissolved	**0.26**	ug/L	0.10	1	03/20/13 19:52	03/21/13 19:30	7440-28-0	
Vanadium, Dissolved	**1.8**	ug/L	0.10	1	03/20/13 19:52	03/21/13 19:30	7440-62-2	
Zinc, Dissolved	**113000**	ug/L	5000	1000	03/20/13 19:52	03/22/13 15:31	7440-66-6	
200.8 Potentially Diss. Metals	Analytical Method: EPA 200.8 Preparation Method: EPA 200.8							
Aluminum, Dissolved	**17400**	ug/L	500	10	03/18/13 16:30	03/29/13 16:41	7429-90-5	
Antimony, Dissolved	ND	ug/L	10.0	10	03/18/13 16:30	03/29/13 16:41	7440-36-0	D3
Arsenic, Dissolved	**340**	ug/L	5.0	5	03/18/13 16:30	04/08/13 16:36	7440-38-2	
Barium, Dissolved	**3.8J**	ug/L	10.0	10	03/18/13 16:30	03/29/13 16:41	7440-39-3	
Beryllium, Dissolved	**5.6**	ug/L	2.5	5	03/18/13 16:30	04/08/13 16:36	7440-41-7	
Cadmium, Dissolved	**129**	ug/L	5.0	10	03/18/13 16:30	03/29/13 16:41	7440-43-9	
Chromium, Dissolved	**6.1J**	ug/L	10.0	10	03/18/13 16:30	03/29/13 16:41	7440-47-3	B
Cobalt, Dissolved	**74.0**	ug/L	10.0	10	03/18/13 16:30	03/29/13 16:41	7440-48-4	
Copper, Dissolved	**622**	ug/L	10.0	10	03/18/13 16:30	03/29/13 16:41	7440-50-8	
Iron, Dissolved	**480000**	ug/L	500	10	03/18/13 16:30	03/29/13 16:41	7439-89-6	
Lead, Dissolved	**2810**	ug/L	10.0	10	03/18/13 16:30	03/29/13 16:41	7439-92-1	
Manganese, Dissolved	**26500**	ug/L	10.0	10	03/18/13 16:30	03/29/13 16:41	7439-96-5	
Molybdenum, Dissolved	ND	ug/L	10.0	10	03/18/13 16:30	03/29/13 16:41	7439-98-7	D3
Nickel, Dissolved	**152**	ug/L	10.0	10	03/18/13 16:30	03/29/13 16:41	7440-02-0	
Selenium, Dissolved	ND	ug/L	10.0	10	03/18/13 16:30	03/29/13 16:41	7782-49-2	D3
Silver, Dissolved	ND	ug/L	5.0	10	03/18/13 16:30	03/29/13 16:41	7440-22-4	D3
Thallium, Dissolved	**0.50J**	ug/L	10.0	10	03/18/13 16:30	03/29/13 16:41	7440-28-0	
Vanadium, Dissolved	**3.0J**	ug/L	10.0	10	03/18/13 16:30	03/29/13 16:41	7440-62-2	
Zinc, Dissolved	**124000**	ug/L	100	10	03/18/13 16:30	03/29/13 16:41	7440-66-6	
245.1 Mercury	Analytical Method: EPA 245.1 Preparation Method: EPA 245.1							
Mercury	ND	ug/L	0.20	1	03/20/13 14:08	03/26/13 11:08	7439-97-6	
245.1 Mercury, Dissolved	Analytical Method: EPA 245.1 Preparation Method: EPA 245.1							
Mercury, Dissolved	ND	ug/L	0.20	1	03/20/13 11:28	03/26/13 12:30	7439-97-6	
245.1 Potentially Diss Mercury	Analytical Method: EPA 245.1 Preparation Method: EPA 245.1							
Mercury, Dissolved	ND	ug/L	0.20	1	03/20/13 10:10	03/20/13 15:52	7439-97-6	
2510B Specific Conductance	Analytical Method: SM 2510B							
Specific Conductance	**4160**	umhos/cm	10.0	1		03/21/13 13:43		

REPORT OF LABORATORY ANALYSIS

This report shall not be reproduced, except in full,
without the written consent of Pace Analytical Services, Inc..

Pace Analytical Services, Inc.
9608 Loiret Blvd.
Lenexa, KS 66219
(913)599-5665

ANALYTICAL RESULTS

Project: MARCH 2013 RICO WATER SAMPLING
Pace Project No.: 60140509

Sample: MW-5 SHALLOW_20130313 **Lab ID: 60140509022** Collected: 03/13/13 12:43 Received: 03/15/13 10:10 Matrix: Water

Parameters	Results	Units	Report Limit	DF	Prepared	Analyzed	CAS No.	Qual
Salinity	Analytical Method: Calculated							
Salinity (as dissolved solids)	**2660**	mg/L	6.4	1		03/25/13 15:58		
Salinity (as seawater)	**2.2**	PSU	0.014	1		03/25/13 15:58		
2320B Alkalinity	Analytical Method: SM 2320B							
Alkalinity,Bicarbonate (CaCO3)	ND	mg/L	20.0	1		03/21/13 11:09		
Alkalinity, Carbonate (CaCO3)	ND	mg/L	20.0	1		03/21/13 11:09		
Alkalinity, Total as CaCO3	ND	mg/L	20.0	1		03/21/13 11:09		
2540C Total Dissolved Solids	Analytical Method: SM 2540C							
Total Dissolved Solids	**3780**	mg/L	5.0	1		03/20/13 17:27		
2540D Total Suspended Solids	Analytical Method: SM 2540D							
Total Suspended Solids	**294**	mg/L	5.0	1		03/19/13 14:55		
4500S2D Sulfide, Total	Analytical Method: SM 4500-S-2 D							
Sulfide, Total	ND	mg/L	0.050	1		03/20/13 13:35	18496-25-8	
300.0 IC Anions 28 Days	Analytical Method: EPA 300.0							
Chloride	**1.8**	mg/L	1.0	1		03/29/13 18:00	16887-00-6	
Sulfate	**3430**	mg/L	500	500		03/29/13 19:29	14808-79-8	
353.2 Nitrogen, NO2/NO3 pres.	Analytical Method: EPA 353.2							
Nitrogen, NO2 plus NO3	ND	mg/L	0.10	1		03/26/13 10:07		CU
4500CNE Cyanide, Total	Analytical Method: SM 4500-CN-E							
Cyanide	ND	mg/L	0.0050	1		03/20/13 15:19	57-12-5	
5310C TOC	Analytical Method: SM 5310C							
Total Organic Carbon	**1.1**	mg/L	0.50	1		03/22/13 23:11	7440-44-0	

This report shall not be reproduced, except in full,
without the written consent of Pace Analytical Services, Inc..

Pace Analytical Services, Inc.
9608 Loiret Blvd.
Lenexa, KS 66219
(913)599-5665

ANALYTICAL RESULTS

Project: MARCH 2013 RICO WATER SAMPLING
Pace Project No.: 60140509

Sample: AT-2_20130313 **Lab ID: 60140509023** Collected: 03/13/13 11:00 Received: 03/15/13 10:10 Matrix: Water

Parameters	Results	Units	Report Limit	DF	Prepared	Analyzed	CAS No.	Qual
200.7 Potentially Diss. Metals	Analytical Method: EPA 200.7 Preparation Method: EPA 200.7							
Calcium, Dissolved	**158000**	ug/L	100	1	03/18/13 16:30	03/29/13 10:40	7440-70-2	
Magnesium, Dissolved	**13400**	ug/L	50.0	1	03/18/13 16:30	03/29/13 10:40	7439-95-4	
Potassium, Dissolved	**7330**	ug/L	500	1	03/18/13 16:30	03/29/13 10:40	7440-09-7	
Sodium, Dissolved	**11700**	ug/L	500	1	03/18/13 16:30	03/29/13 10:40	7440-23-5	
200.8 MET ICPMS	Analytical Method: EPA 200.8 Preparation Method: EPA 200.8							
Aluminum	**2260**	ug/L	4.0	1	03/20/13 19:56	03/23/13 11:25	7429-90-5	
Antimony	ND	ug/L	0.50	1	03/20/13 19:56	03/23/13 11:25	7440-36-0	
Arsenic	**2.9**	ug/L	0.50	1	03/20/13 19:56	03/23/13 11:25	7440-38-2	
Barium	**76.7**	ug/L	0.30	1	03/20/13 19:56	03/25/13 11:41	7440-39-3	
Beryllium	**0.34**	ug/L	0.20	1	03/20/13 19:56	03/23/13 11:25	7440-41-7	
Cadmium	**1.4**	ug/L	0.080	1	03/20/13 19:56	03/23/13 11:25	7440-43-9	
Calcium	**181000**	ug/L	400	20	03/20/13 19:56	03/23/13 11:31	7440-70-2	
Chromium	**5.2**	ug/L	0.50	1	03/20/13 19:56	03/23/13 11:25	7440-47-3	
Cobalt	**2.2**	ug/L	0.50	1	03/20/13 19:56	03/23/13 11:25	7440-48-4	
Copper	**69.4**	ug/L	0.50	1	03/20/13 19:56	03/23/13 11:25	7440-50-8	
Iron	**64300**	ug/L	1000	20	03/20/13 19:56	03/23/13 11:31	7439-89-6	
Lead	**27.3**	ug/L	0.10	1	03/20/13 19:56	03/23/13 11:25	7439-92-1	
Magnesium	**15700**	ug/L	5.0	1	03/20/13 19:56	03/23/13 11:25	7439-95-4	
Manganese	**1490**	ug/L	10.0	20	03/20/13 19:56	03/23/13 11:31	7439-96-5	
Molybdenum	**16.4**	ug/L	0.50	1	03/20/13 19:56	03/23/13 11:25	7439-98-7	
Nickel	**5.0**	ug/L	0.50	1	03/20/13 19:56	03/23/13 11:25	7440-02-0	
Potassium	**8000**	ug/L	20.0	1	03/20/13 19:56	03/23/13 11:25	7440-09-7	
Selenium	ND	ug/L	0.50	1	03/20/13 19:56	03/23/13 11:25	7782-49-2	
Silica	**10300**	ug/L	1070	20	03/20/13 19:56	03/23/13 11:31	7631-86-9	
Silver	ND	ug/L	0.50	1	03/20/13 19:56	03/23/13 11:25	7440-22-4	
Sodium	**12600**	ug/L	50.0	1	03/20/13 19:56	03/23/13 11:25	7440-23-5	
Thallium	ND	ug/L	0.10	1	03/20/13 19:56	03/23/13 11:25	7440-28-0	
Total Hardness by 2340B	**516000**	ug/L	1420	20	03/20/13 19:56	03/23/13 11:31		
Vanadium	**3.5**	ug/L	0.10	1	03/20/13 19:56	03/23/13 11:25	7440-62-2	
Zinc	**584**	ug/L	100	20	03/20/13 19:56	03/23/13 11:31	7440-66-6	
200.8 MET ICPMS, Dissolved	Analytical Method: EPA 200.8 Preparation Method: EPA 200.8							
Aluminum, Dissolved	**67.1**	ug/L	4.0	1	03/20/13 19:52	03/22/13 15:35	7429-90-5	
Antimony, Dissolved	ND	ug/L	0.50	1	03/20/13 19:52	03/22/13 15:35	7440-36-0	
Arsenic, Dissolved	ND	ug/L	0.50	1	03/20/13 19:52	03/22/13 15:35	7440-38-2	
Barium, Dissolved	**60.5**	ug/L	0.30	1	03/20/13 19:52	03/22/13 15:35	7440-39-3	
Beryllium, Dissolved	ND	ug/L	0.20	1	03/20/13 19:52	03/22/13 15:35	7440-41-7	
Cadmium, Dissolved	ND	ug/L	0.080	1	03/20/13 19:52	03/22/13 15:35	7440-43-9	
Calcium, Dissolved	**179000**	ug/L	200	10	03/20/13 19:52	03/22/13 15:40	7440-70-2	
Chromium, Dissolved	ND	ug/L	0.50	1	03/20/13 19:52	03/22/13 15:35	7440-47-3	
Cobalt, Dissolved	ND	ug/L	0.50	1	03/20/13 19:52	03/22/13 15:35	7440-48-4	
Copper, Dissolved	**2.5**	ug/L	0.50	1	03/20/13 19:52	03/22/13 15:35	7440-50-8	
Iron, Dissolved	**1740**	ug/L	50.0	1	03/20/13 19:52	03/22/13 15:35	7439-89-6	
Lead, Dissolved	**0.84**	ug/L	0.10	1	03/20/13 19:52	03/22/13 15:35	7439-92-1	
Magnesium, Dissolved	**14400**	ug/L	5.0	1	03/20/13 19:52	03/22/13 15:35	7439-95-4	

This report shall not be reproduced, except in full,
without the written consent of Pace Analytical Services, Inc..

Pace Analytical Services, Inc.
9608 Loiret Blvd.
Lenexa, KS 66219
(913)599-5665

ANALYTICAL RESULTS

Project: MARCH 2013 RICO WATER SAMPLING
Pace Project No.: 60140509

Sample: AT-2_20130313 **Lab ID: 60140509023** Collected: 03/13/13 11:00 Received: 03/15/13 10:10 Matrix: Water

Parameters	Results	Units	Report Limit	DF	Prepared	Analyzed	CAS No.	Qual
200.8 MET ICPMS, Dissolved	Analytical Method: EPA 200.8 Preparation Method: EPA 200.8							
Manganese, Dissolved	**482**	ug/L	5.0	10	03/20/13 19:52	03/22/13 15:40	7439-96-5	
Molybdenum, Dissolved	**5.9**	ug/L	0.50	1	03/20/13 19:52	03/22/13 15:35	7439-98-7	
Nickel, Dissolved	ND	ug/L	0.50	1	03/20/13 19:52	03/22/13 15:35	7440-02-0	
Potassium, Dissolved	**7690**	ug/L	20.0	1	03/20/13 19:52	03/22/13 15:35	7440-09-7	
Selenium, Dissolved	ND	ug/L	0.50	1	03/20/13 19:52	03/22/13 15:35	7782-49-2	
Silver, Dissolved	ND	ug/L	0.50	1	03/20/13 19:52	03/22/13 15:35	7440-22-4	
Sodium, Dissolved	**11800**	ug/L	50.0	1	03/20/13 19:52	03/22/13 15:35	7440-23-5	
Thallium, Dissolved	ND	ug/L	0.10	1	03/20/13 19:52	03/22/13 15:35	7440-28-0	
Vanadium, Dissolved	**0.11**	ug/L	0.10	1	03/20/13 19:52	03/22/13 15:35	7440-62-2	
Zinc, Dissolved	**17.2**	ug/L	5.0	1	03/20/13 19:52	03/22/13 15:35	7440-66-6	
200.8 Potentially Diss. Metals	Analytical Method: EPA 200.8 Preparation Method: EPA 200.8							
Aluminum, Dissolved	**553**	ug/L	50.0	1	03/18/13 16:30	03/29/13 16:45	7429-90-5	
Antimony, Dissolved	ND	ug/L	1.0	1	03/18/13 16:30	03/29/13 16:45	7440-36-0	
Arsenic, Dissolved	**0.74J**	ug/L	1.0	1	03/18/13 16:30	04/08/13 16:40	7440-38-2	
Barium, Dissolved	**65.3**	ug/L	1.0	1	03/18/13 16:30	03/29/13 16:45	7440-39-3	
Beryllium, Dissolved	**0.20J**	ug/L	0.50	1	03/18/13 16:30	04/08/13 16:40	7440-41-7	
Cadmium, Dissolved	**1.0**	ug/L	0.50	1	03/18/13 16:30	03/29/13 16:45	7440-43-9	
Chromium, Dissolved	**2.5**	ug/L	1.0	1	03/18/13 16:30	03/29/13 16:45	7440-47-3	
Cobalt, Dissolved	**1.2**	ug/L	1.0	1	03/18/13 16:30	03/29/13 16:45	7440-48-4	
Copper, Dissolved	**42.9**	ug/L	1.0	1	03/18/13 16:30	03/29/13 16:45	7440-50-8	
Iron, Dissolved	**33300**	ug/L	50.0	1	03/18/13 16:30	03/29/13 16:45	7439-89-6	
Lead, Dissolved	**27.3**	ug/L	1.0	1	03/18/13 16:30	03/29/13 16:45	7439-92-1	
Manganese, Dissolved	**1170**	ug/L	1.0	1	03/18/13 16:30	03/29/13 16:45	7439-96-5	
Molybdenum, Dissolved	**2.2**	ug/L	1.0	1	03/18/13 16:30	03/29/13 16:45	7439-98-7	
Nickel, Dissolved	**2.6**	ug/L	1.0	1	03/18/13 16:30	03/29/13 16:45	7440-02-0	
Selenium, Dissolved	ND	ug/L	1.0	1	03/18/13 16:30	03/29/13 16:45	7782-49-2	
Silver, Dissolved	ND	ug/L	0.50	1	03/18/13 16:30	03/29/13 16:45	7440-22-4	
Thallium, Dissolved	ND	ug/L	1.0	1	03/18/13 16:30	03/29/13 16:45	7440-28-0	
Vanadium, Dissolved	**0.51J**	ug/L	1.0	1	03/18/13 16:30	03/29/13 16:45	7440-62-2	
Zinc, Dissolved	**466**	ug/L	10.0	1	03/18/13 16:30	03/29/13 16:45	7440-66-6	
245.1 Mercury	Analytical Method: EPA 245.1 Preparation Method: EPA 245.1							
Mercury	ND	ug/L	0.20	1	03/20/13 14:08	03/26/13 11:15	7439-97-6	
245.1 Mercury, Dissolved	Analytical Method: EPA 245.1 Preparation Method: EPA 245.1							
Mercury, Dissolved	ND	ug/L	0.20	1	03/20/13 11:28	03/26/13 12:32	7439-97-6	
245.1 Potentially Diss Mercury	Analytical Method: EPA 245.1 Preparation Method: EPA 245.1							
Mercury, Dissolved	ND	ug/L	0.20	1	03/20/13 10:10	03/20/13 16:01	7439-97-6	
2510B Specific Conductance	Analytical Method: SM 2510B							
Specific Conductance	**976**	umhos/cm	10.0	1		03/21/13 13:43		
Salinity	Analytical Method: Calculated							
Salinity (as dissolved solids)	**624**	mg/L	6.4	1		03/25/13 15:58		

REPORT OF LABORATORY ANALYSIS

This report shall not be reproduced, except in full,
without the written consent of Pace Analytical Services, Inc..

Pace Analytical Services, Inc.
9608 Loiret Blvd.
Lenexa, KS 66219
(913)599-5665

ANALYTICAL RESULTS

Project: MARCH 2013 RICO WATER SAMPLING
Pace Project No.: 60140509

Sample: AT-2_20130313 **Lab ID: 60140509023** Collected: 03/13/13 11:00 Received: 03/15/13 10:10 Matrix: Water

Parameters	Results	Units	Report Limit	DF	Prepared	Analyzed	CAS No.	Qual
Salinity	Analytical Method: Calculated							
Salinity (as seawater)	**0.48**	PSU	0.014	1		03/25/13 15:58		
2320B Alkalinity	Analytical Method: SM 2320B							
Alkalinity,Bicarbonate (CaCO3)	ND	mg/L	20.0	1		03/21/13 11:12		
Alkalinity, Carbonate (CaCO3)	ND	mg/L	20.0	1		03/21/13 11:12		
Alkalinity, Total as CaCO3	ND	mg/L	20.0	1		03/21/13 11:12		
2540C Total Dissolved Solids	Analytical Method: SM 2540C							
Total Dissolved Solids	**796**	mg/L	5.0	1		03/20/13 17:27		
2540D Total Suspended Solids	Analytical Method: SM 2540D							
Total Suspended Solids	**146**	mg/L	5.0	1		03/19/13 14:55		
4500S2D Sulfide, Total	Analytical Method: SM 4500-S-2 D							
Sulfide, Total	ND	mg/L	0.050	1		03/20/13 13:36	18496-25-8	
300.0 IC Anions 28 Days	Analytical Method: EPA 300.0							
Chloride	**2.4**	mg/L	1.0	1		03/29/13 18:18	16887-00-6	
Sulfate	**455**	mg/L	100	100		03/29/13 19:46	14808-79-8	
353.2 Nitrogen, NO2/NO3 pres.	Analytical Method: EPA 353.2							
Nitrogen, NO2 plus NO3	ND	mg/L	0.10	1		03/26/13 10:08		CU
4500CNE Cyanide, Total	Analytical Method: SM 4500-CN-E							
Cyanide	ND	mg/L	0.0050	1		03/20/13 15:20	57-12-5	
5310C TOC	Analytical Method: SM 5310C							
Total Organic Carbon	**1.9**	mg/L	0.50	1		03/22/13 23:29	7440-44-0	

This report shall not be reproduced, except in full,
without the written consent of Pace Analytical Services, Inc..

Pace Analytical Services, Inc.
9608 Loiret Blvd.
Lenexa, KS 66219
(913)599-5665

ANALYTICAL RESULTS

Project: MARCH 2013 RICO WATER SAMPLING
Pace Project No.: 60140509

Sample: FB_20130313 **Lab ID: 60140509024** Collected: 03/13/13 15:32 Received: 03/15/13 10:10 Matrix: Water

Parameters	Results	Units	Report Limit	DF	Prepared	Analyzed	CAS No.	Qual
200.7 Potentially Diss. Metals	Analytical Method: EPA 200.7 Preparation Method: EPA 200.7							
Calcium, Dissolved	**98.1J**	ug/L	100	1	03/18/13 16:30	03/29/13 10:45	7440-70-2	B
Magnesium, Dissolved	**16.6J**	ug/L	50.0	1	03/18/13 16:30	03/29/13 10:45	7439-95-4	B
Potassium, Dissolved	ND	ug/L	500	1	03/18/13 16:30	03/29/13 10:45	7440-09-7	
Sodium, Dissolved	**737**	ug/L	500	1	03/18/13 16:30	03/29/13 10:45	7440-23-5	
200.8 MET ICPMS	Analytical Method: EPA 200.8 Preparation Method: EPA 200.8							
Aluminum	ND	ug/L	4.0	1	03/20/13 19:56	03/25/13 11:46	7429-90-5	
Antimony	ND	ug/L	0.50	1	03/20/13 19:56	03/25/13 11:46	7440-36-0	
Arsenic	ND	ug/L	0.50	1	03/20/13 19:56	03/25/13 11:46	7440-38-2	
Barium	ND	ug/L	0.30	1	03/20/13 19:56	03/25/13 11:46	7440-39-3	
Beryllium	ND	ug/L	0.20	1	03/20/13 19:56	03/25/13 11:46	7440-41-7	
Cadmium	ND	ug/L	0.080	1	03/20/13 19:56	03/25/13 11:46	7440-43-9	
Calcium	**35.0**	ug/L	20.0	1	03/20/13 19:56	03/25/13 11:46	7440-70-2	
Chromium	ND	ug/L	0.50	1	03/20/13 19:56	03/25/13 11:46	7440-47-3	
Cobalt	ND	ug/L	0.50	1	03/20/13 19:56	03/25/13 11:46	7440-48-4	
Copper	ND	ug/L	0.50	1	03/20/13 19:56	03/25/13 11:46	7440-50-8	
Iron	ND	ug/L	50.0	1	03/20/13 19:56	03/25/13 11:46	7439-89-6	
Lead	ND	ug/L	0.10	1	03/20/13 19:56	03/26/13 00:19	7439-92-1	
Magnesium	ND	ug/L	5.0	1	03/20/13 19:56	03/25/13 11:46	7439-95-4	
Manganese	**0.85**	ug/L	0.50	1	03/20/13 19:56	03/25/13 11:46	7439-96-5	
Molybdenum	ND	ug/L	0.50	1	03/20/13 19:56	03/25/13 11:46	7439-98-7	
Nickel	ND	ug/L	0.50	1	03/20/13 19:56	03/25/13 11:46	7440-02-0	
Potassium	ND	ug/L	20.0	1	03/20/13 19:56	03/26/13 00:19	7440-09-7	
Selenium	ND	ug/L	0.50	1	03/20/13 19:56	03/25/13 11:46	7782-49-2	
Silica	**109**	ug/L	53.5	1	03/20/13 19:56	03/25/13 11:46	7631-86-9	
Silver	ND	ug/L	0.50	1	03/20/13 19:56	03/25/13 11:46	7440-22-4	
Sodium	**596**	ug/L	50.0	1	03/20/13 19:56	03/25/13 11:46	7440-23-5	
Thallium	ND	ug/L	0.10	1	03/20/13 19:56	03/26/13 00:19	7440-28-0	
Total Hardness by 2340B	**105**	ug/L	71.0	1	03/20/13 19:56	03/25/13 11:46		
Vanadium	ND	ug/L	0.10	1	03/20/13 19:56	03/25/13 11:46	7440-62-2	
Zinc	ND	ug/L	5.0	1	03/20/13 19:56	03/25/13 11:46	7440-66-6	
200.8 MET ICPMS, Dissolved	Analytical Method: EPA 200.8 Preparation Method: EPA 200.8							
Aluminum, Dissolved	ND	ug/L	4.0	1	03/20/13 19:52	03/21/13 20:13	7429-90-5	
Antimony, Dissolved	ND	ug/L	0.50	1	03/20/13 19:52	03/21/13 20:13	7440-36-0	
Arsenic, Dissolved	ND	ug/L	0.50	1	03/20/13 19:52	03/21/13 20:13	7440-38-2	
Barium, Dissolved	ND	ug/L	0.30	1	03/20/13 19:52	03/21/13 20:13	7440-39-3	
Beryllium, Dissolved	ND	ug/L	0.20	1	03/20/13 19:52	03/21/13 20:13	7440-41-7	
Cadmium, Dissolved	ND	ug/L	0.080	1	03/20/13 19:52	03/21/13 20:13	7440-43-9	
Calcium, Dissolved	**64.2**	ug/L	20.0	1	03/20/13 19:52	03/21/13 20:13	7440-70-2	
Chromium, Dissolved	ND	ug/L	0.50	1	03/20/13 19:52	03/21/13 20:13	7440-47-3	
Cobalt, Dissolved	ND	ug/L	0.50	1	03/20/13 19:52	03/21/13 20:13	7440-48-4	
Copper, Dissolved	ND	ug/L	0.50	1	03/20/13 19:52	03/21/13 20:13	7440-50-8	
Iron, Dissolved	ND	ug/L	50.0	1	03/20/13 19:52	03/21/13 20:13	7439-89-6	
Lead, Dissolved	ND	ug/L	0.10	1	03/20/13 19:52	03/21/13 20:13	7439-92-1	
Magnesium, Dissolved	**13.3**	ug/L	5.0	1	03/20/13 19:52	03/21/13 20:13	7439-95-4	

This report shall not be reproduced, except in full,
without the written consent of Pace Analytical Services, Inc..

Pace Analytical Services, Inc.
9608 Loiret Blvd.
Lenexa, KS 66219
(913)599-5665

ANALYTICAL RESULTS

Project: MARCH 2013 RICO WATER SAMPLING
Pace Project No.: 60140509

Sample: FB_20130313 **Lab ID: 60140509024** Collected: 03/13/13 15:32 Received: 03/15/13 10:10 Matrix: Water

Parameters	Results	Units	Report Limit	DF	Prepared	Analyzed	CAS No.	Qual
200.8 MET ICPMS, Dissolved	Analytical Method: EPA 200.8 Preparation Method: EPA 200.8							
Manganese, Dissolved	ND	ug/L	0.50	1	03/20/13 19:52	03/21/13 20:13	7439-96-5	
Molybdenum, Dissolved	ND	ug/L	0.50	1	03/20/13 19:52	03/21/13 20:13	7439-98-7	
Nickel, Dissolved	ND	ug/L	0.50	1	03/20/13 19:52	03/21/13 20:13	7440-02-0	
Potassium, Dissolved	**39.1**	ug/L	20.0	1	03/20/13 19:52	03/21/13 20:13	7440-09-7	
Selenium, Dissolved	ND	ug/L	0.50	1	03/20/13 19:52	03/21/13 20:13	7782-49-2	
Silver, Dissolved	ND	ug/L	0.50	1	03/20/13 19:52	03/21/13 20:13	7440-22-4	
Sodium, Dissolved	**636**	ug/L	50.0	1	03/20/13 19:52	03/21/13 20:13	7440-23-5	
Thallium, Dissolved	ND	ug/L	0.10	1	03/20/13 19:52	03/21/13 20:13	7440-28-0	
Vanadium, Dissolved	ND	ug/L	0.10	1	03/20/13 19:52	03/21/13 20:13	7440-62-2	
Zinc, Dissolved	ND	ug/L	5.0	1	03/20/13 19:52	03/21/13 20:13	7440-66-6	
200.8 Potentially Diss. Metals	Analytical Method: EPA 200.8 Preparation Method: EPA 200.8							
Aluminum, Dissolved	ND	ug/L	50.0	1	03/18/13 16:30	03/29/13 16:16	7429-90-5	
Antimony, Dissolved	ND	ug/L	1.0	1	03/18/13 16:30	03/29/13 16:16	7440-36-0	
Arsenic, Dissolved	ND	ug/L	1.0	1	03/18/13 16:30	04/08/13 15:55	7440-38-2	
Barium, Dissolved	**0.19J**	ug/L	1.0	1	03/18/13 16:30	03/29/13 16:16	7440-39-3	
Beryllium, Dissolved	ND	ug/L	0.50	1	03/18/13 16:30	04/08/13 15:55	7440-41-7	
Cadmium, Dissolved	ND	ug/L	0.50	1	03/18/13 16:30	03/29/13 16:16	7440-43-9	
Chromium, Dissolved	**0.52J**	ug/L	1.0	1	03/18/13 16:30	03/29/13 16:16	7440-47-3	B
Cobalt, Dissolved	ND	ug/L	1.0	1	03/18/13 16:30	03/29/13 16:16	7440-48-4	
Copper, Dissolved	ND	ug/L	1.0	1	03/18/13 16:30	03/29/13 16:16	7440-50-8	
Iron, Dissolved	ND	ug/L	50.0	1	03/18/13 16:30	03/29/13 16:16	7439-89-6	
Lead, Dissolved	**0.39J**	ug/L	1.0	1	03/18/13 16:30	03/29/13 16:16	7439-92-1	B
Manganese, Dissolved	**0.41J**	ug/L	1.0	1	03/18/13 16:30	03/29/13 16:16	7439-96-5	
Molybdenum, Dissolved	ND	ug/L	1.0	1	03/18/13 16:30	03/29/13 16:16	7439-98-7	
Nickel, Dissolved	ND	ug/L	1.0	1	03/18/13 16:30	03/29/13 16:16	7440-02-0	
Selenium, Dissolved	ND	ug/L	1.0	1	03/18/13 16:30	03/29/13 16:16	7782-49-2	
Silver, Dissolved	ND	ug/L	0.50	1	03/18/13 16:30	03/29/13 16:16	7440-22-4	
Thallium, Dissolved	**0.063J**	ug/L	1.0	1	03/18/13 16:30	03/29/13 16:16	7440-28-0	
Vanadium, Dissolved	ND	ug/L	1.0	1	03/18/13 16:30	03/29/13 16:16	7440-62-2	
Zinc, Dissolved	ND	ug/L	10.0	1	03/18/13 16:30	03/29/13 16:16	7440-66-6	
245.1 Mercury	Analytical Method: EPA 245.1 Preparation Method: EPA 245.1							
Mercury	ND	ug/L	0.20	1	03/20/13 14:08	03/26/13 11:17	7439-97-6	
245.1 Mercury, Dissolved	Analytical Method: EPA 245.1 Preparation Method: EPA 245.1							
Mercury, Dissolved	ND	ug/L	0.20	1	03/20/13 11:28	03/26/13 12:40	7439-97-6	
245.1 Potentially Diss Mercury	Analytical Method: EPA 245.1 Preparation Method: EPA 245.1							
Mercury, Dissolved	ND	ug/L	0.20	1	03/20/13 10:10	03/20/13 16:03	7439-97-6	
2510B Specific Conductance	Analytical Method: SM 2510B							
Specific Conductance	ND	umhos/cm	10.0	1		03/21/13 13:48		
Salinity	Analytical Method: Calculated							
Salinity (as dissolved solids)	ND	mg/L	6.4	1		03/25/13 15:58		

REPORT OF LABORATORY ANALYSIS

This report shall not be reproduced, except in full,
without the written consent of Pace Analytical Services, Inc..

Pace Analytical Services, Inc.
9608 Loiret Blvd.
Lenexa, KS 66219
(913)599-5665

ANALYTICAL RESULTS

Project: MARCH 2013 RICO WATER SAMPLING
Pace Project No.: 60140509

Sample: FB_20130313 **Lab ID: 60140509024** Collected: 03/13/13 15:32 Received: 03/15/13 10:10 Matrix: Water

Parameters	Results	Units	Report Limit	DF	Prepared	Analyzed	CAS No.	Qual
Salinity	Analytical Method: Calculated							
Salinity (as seawater)	ND	PSU	0.014	1		03/25/13 15:58		
2320B Alkalinity	Analytical Method: SM 2320B							
Alkalinity,Bicarbonate (CaCO3)	ND	mg/L	20.0	1		03/22/13 07:40		
Alkalinity, Carbonate (CaCO3)	ND	mg/L	20.0	1		03/22/13 07:40		
Alkalinity, Total as CaCO3	ND	mg/L	20.0	1		03/22/13 07:40		
2540C Total Dissolved Solids	Analytical Method: SM 2540C							
Total Dissolved Solids	ND	mg/L	5.0	1		03/20/13 17:27		
2540D Total Suspended Solids	Analytical Method: SM 2540D							
Total Suspended Solids	ND	mg/L	5.0	1		03/19/13 14:56		
4500S2D Sulfide, Total	Analytical Method: SM 4500-S-2 D							
Sulfide, Total	ND	mg/L	0.050	1		03/20/13 13:37	18496-25-8	
300.0 IC Anions 28 Days	Analytical Method: EPA 300.0							
Chloride	ND	mg/L	1.0	1		03/29/13 18:36	16887-00-6	
Sulfate	ND	mg/L	1.0	1		03/29/13 18:36	14808-79-8	
353.2 Nitrogen, NO2/NO3 pres.	Analytical Method: EPA 353.2							
Nitrogen, NO2 plus NO3	ND	mg/L	0.10	1		03/26/13 10:09		CU
4500CNE Cyanide, Total	Analytical Method: SM 4500-CN-E							
Cyanide	ND	mg/L	0.0050	1		03/20/13 15:20	57-12-5	
5310C TOC	Analytical Method: SM 5310C							
Total Organic Carbon	ND	mg/L	0.50	1		03/22/13 23:47	7440-44-0	

This report shall not be reproduced, except in full,
without the written consent of Pace Analytical Services, Inc..

Pace Analytical Services, Inc.
9608 Loiret Blvd.
Lenexa, KS 66219
(913)599-5665

ANALYTICAL RESULTS

Project: MARCH 2013 RICO WATER SAMPLING
Pace Project No.: 60140509

Sample: GW-5_20130314 **Lab ID: 60140509025** Collected: 03/14/13 09:35 Received: 03/15/13 10:10 Matrix: Water

Parameters	Results	Units	Report Limit	DF	Prepared	Analyzed	CAS No.	Qual
200.7 Potentially Diss. Metals	Analytical Method: EPA 200.7 Preparation Method: EPA 200.7							
Calcium, Dissolved	**355000**	ug/L	100	1	03/18/13 16:30	03/29/13 10:47	7440-70-2	
Magnesium, Dissolved	**29200**	ug/L	50.0	1	03/18/13 16:30	03/29/13 10:47	7439-95-4	
Potassium, Dissolved	**3840**	ug/L	500	1	03/18/13 16:30	03/29/13 10:47	7440-09-7	
Sodium, Dissolved	**6860**	ug/L	500	1	03/18/13 16:30	03/29/13 10:47	7440-23-5	
200.8 MET ICPMS	Analytical Method: EPA 200.8 Preparation Method: EPA 200.8							
Aluminum	**11600**	ug/L	4.0	1	03/20/13 19:56	03/23/13 12:06	7429-90-5	
Antimony	**2.3**	ug/L	0.50	1	03/20/13 19:56	03/23/13 12:06	7440-36-0	
Arsenic	**286**	ug/L	0.50	1	03/20/13 19:56	03/23/13 12:06	7440-38-2	
Barium	**108**	ug/L	0.30	1	03/20/13 19:56	03/25/13 11:51	7440-39-3	
Beryllium	**1.2**	ug/L	0.20	1	03/20/13 19:56	03/23/13 12:06	7440-41-7	
Cadmium	**98.2**	ug/L	0.080	1	03/20/13 19:56	03/23/13 12:06	7440-43-9	
Calcium	**407000**	ug/L	400	20	03/20/13 19:56	03/23/13 12:12	7440-70-2	
Chromium	**14.6**	ug/L	0.50	1	03/20/13 19:56	03/23/13 12:06	7440-47-3	
Cobalt	**36.6**	ug/L	0.50	1	03/20/13 19:56	03/23/13 12:06	7440-48-4	
Copper	**1610**	ug/L	10.0	20	03/20/13 19:56	03/23/13 12:12	7440-50-8	
Iron	**58400**	ug/L	1000	20	03/20/13 19:56	03/23/13 12:12	7439-89-6	
Lead	**15600**	ug/L	10.0	100	03/20/13 19:56	03/23/13 12:59	7439-92-1	
Magnesium	**40000**	ug/L	100	20	03/20/13 19:56	03/23/13 12:12	7439-95-4	
Manganese	**6100**	ug/L	10.0	20	03/20/13 19:56	03/23/13 12:12	7439-96-5	
Molybdenum	**31.6**	ug/L	0.50	1	03/20/13 19:56	03/23/13 12:06	7439-98-7	
Nickel	**51.1**	ug/L	0.50	1	03/20/13 19:56	03/23/13 12:06	7440-02-0	
Potassium	**6040**	ug/L	20.0	1	03/20/13 19:56	03/23/13 12:06	7440-09-7	
Selenium	**4.5**	ug/L	0.50	1	03/20/13 19:56	03/23/13 12:06	7782-49-2	
Silica	**71300**	ug/L	1070	20	03/20/13 19:56	03/23/13 12:12	7631-86-9	
Silver	**64.9**	ug/L	0.50	1	03/20/13 19:56	03/23/13 12:06	7440-22-4	
Sodium	**7080**	ug/L	50.0	1	03/20/13 19:56	03/23/13 12:06	7440-23-5	
Thallium	**2.0**	ug/L	0.10	1	03/20/13 19:56	03/23/13 12:06	7440-28-0	
Total Hardness by 2340B	**1180000**	ug/L	1420	20	03/20/13 19:56	03/23/13 12:12		
Vanadium	**19.9**	ug/L	0.10	1	03/20/13 19:56	03/23/13 12:06	7440-62-2	
Zinc	**27200**	ug/L	500	100	03/20/13 19:56	03/23/13 12:59	7440-66-6	
200.8 MET ICPMS, Dissolved	Analytical Method: EPA 200.8 Preparation Method: EPA 200.8							
Aluminum, Dissolved	**525**	ug/L	4.0	1	03/20/13 19:52	03/21/13 20:26	7429-90-5	
Antimony, Dissolved	ND	ug/L	0.50	1	03/20/13 19:52	03/21/13 20:26	7440-36-0	
Arsenic, Dissolved	**61.2**	ug/L	0.50	1	03/20/13 19:52	03/21/13 20:26	7440-38-2	
Barium, Dissolved	**15.8**	ug/L	0.30	1	03/20/13 19:52	03/21/13 20:26	7440-39-3	
Beryllium, Dissolved	ND	ug/L	0.20	1	03/20/13 19:52	03/21/13 20:26	7440-41-7	
Cadmium, Dissolved	**4.2**	ug/L	0.080	1	03/20/13 19:52	03/21/13 20:26	7440-43-9	
Calcium, Dissolved	**393000**	ug/L	400	20	03/20/13 19:52	03/21/13 20:32	7440-70-2	
Chromium, Dissolved	**0.78**	ug/L	0.50	1	03/20/13 19:52	03/21/13 20:26	7440-47-3	
Cobalt, Dissolved	**5.1**	ug/L	0.50	1	03/20/13 19:52	03/21/13 20:26	7440-48-4	
Copper, Dissolved	**50.3**	ug/L	0.50	1	03/20/13 19:52	03/21/13 20:26	7440-50-8	
Iron, Dissolved	**6950**	ug/L	50.0	1	03/20/13 19:52	03/21/13 20:26	7439-89-6	
Lead, Dissolved	**583**	ug/L	2.0	20	03/20/13 19:52	03/21/13 20:32	7439-92-1	
Magnesium, Dissolved	**32600**	ug/L	100	20	03/20/13 19:52	03/21/13 20:32	7439-95-4	

This report shall not be reproduced, except in full,
without the written consent of Pace Analytical Services, Inc..

Pace Analytical Services, Inc.
9608 Loiret Blvd.
Lenexa, KS 66219
(913)599-5665

ANALYTICAL RESULTS

Project: MARCH 2013 RICO WATER SAMPLING
Pace Project No.: 60140509

Sample: GW-5_20130314 **Lab ID: 60140509025** Collected: 03/14/13 09:35 Received: 03/15/13 10:10 Matrix: Water

Parameters	Results	Units	Report Limit	DF	Prepared	Analyzed	CAS No.	Qual
200.8 MET ICPMS, Dissolved	Analytical Method: EPA 200.8 Preparation Method: EPA 200.8							
Manganese, Dissolved	**3310**	ug/L	10.0	20	03/20/13 19:52	03/21/13 20:32	7439-96-5	
Molybdenum, Dissolved	**10.6**	ug/L	0.50	1	03/20/13 19:52	03/21/13 20:26	7439-98-7	
Nickel, Dissolved	**9.3**	ug/L	0.50	1	03/20/13 19:52	03/21/13 20:26	7440-02-0	
Potassium, Dissolved	**4020**	ug/L	20.0	1	03/20/13 19:52	03/21/13 20:26	7440-09-7	
Selenium, Dissolved	ND	ug/L	0.50	1	03/20/13 19:52	03/21/13 20:26	7782-49-2	
Silver, Dissolved	**2.3**	ug/L	0.50	1	03/20/13 19:52	03/21/13 20:26	7440-22-4	
Sodium, Dissolved	**6890**	ug/L	50.0	1	03/20/13 19:52	03/21/13 20:26	7440-23-5	
Thallium, Dissolved	**0.10**	ug/L	0.10	1	03/20/13 19:52	03/21/13 20:26	7440-28-0	
Vanadium, Dissolved	**0.97**	ug/L	0.10	1	03/20/13 19:52	03/21/13 20:26	7440-62-2	
Zinc, Dissolved	**3870**	ug/L	100	20	03/20/13 19:52	03/21/13 20:32	7440-66-6	
200.8 Potentially Diss. Metals	Analytical Method: EPA 200.8 Preparation Method: EPA 200.8							
Aluminum, Dissolved	**4750**	ug/L	50.0	1	03/18/13 16:30	03/29/13 16:57	7429-90-5	
Antimony, Dissolved	ND	ug/L	1.0	1	03/18/13 16:30	03/29/13 16:57	7440-36-0	
Arsenic, Dissolved	**141**	ug/L	1.0	1	03/18/13 16:30	04/08/13 16:44	7440-38-2	
Barium, Dissolved	**15.3**	ug/L	1.0	1	03/18/13 16:30	03/29/13 16:57	7440-39-3	
Beryllium, Dissolved	**0.67**	ug/L	0.50	1	03/18/13 16:30	04/08/13 16:44	7440-41-7	
Cadmium, Dissolved	**17.5**	ug/L	0.50	1	03/18/13 16:30	03/29/13 16:57	7440-43-9	
Chromium, Dissolved	**5.3**	ug/L	1.0	1	03/18/13 16:30	03/29/13 16:57	7440-47-3	
Cobalt, Dissolved	**10.7**	ug/L	1.0	1	03/18/13 16:30	03/29/13 16:57	7440-48-4	
Copper, Dissolved	**0.60J**	ug/L	1.0	1	03/18/13 16:30	03/29/13 16:57	7440-50-8	
Iron, Dissolved	**26500**	ug/L	50.0	1	03/18/13 16:30	03/29/13 16:57	7439-89-6	
Lead, Dissolved	**2250**	ug/L	1.0	1	03/18/13 16:30	03/29/13 16:57	7439-92-1	
Manganese, Dissolved	**4660**	ug/L	1.0	1	03/18/13 16:30	03/29/13 16:57	7439-96-5	
Molybdenum, Dissolved	**1.2**	ug/L	1.0	1	03/18/13 16:30	03/29/13 16:57	7439-98-7	
Nickel, Dissolved	**19.9**	ug/L	1.0	1	03/18/13 16:30	03/29/13 16:57	7440-02-0	
Selenium, Dissolved	**1.4**	ug/L	1.0	1	03/18/13 16:30	03/29/13 16:57	7782-49-2	
Silver, Dissolved	ND	ug/L	0.50	1	03/18/13 16:30	03/29/13 16:57	7440-22-4	
Thallium, Dissolved	**0.19J**	ug/L	1.0	1	03/18/13 16:30	03/29/13 16:57	7440-28-0	
Vanadium, Dissolved	**11.0**	ug/L	1.0	1	03/18/13 16:30	03/29/13 16:57	7440-62-2	
Zinc, Dissolved	**23500**	ug/L	500	50	03/18/13 16:30	04/08/13 16:49	7440-66-6	
245.1 Mercury	Analytical Method: EPA 245.1 Preparation Method: EPA 245.1							
Mercury	ND	ug/L	0.20	1	03/20/13 14:08	03/26/13 11:19	7439-97-6	
245.1 Mercury, Dissolved	Analytical Method: EPA 245.1 Preparation Method: EPA 245.1							
Mercury, Dissolved	ND	ug/L	0.20	1	03/20/13 11:28	03/26/13 12:42	7439-97-6	
245.1 Potentially Diss Mercury	Analytical Method: EPA 245.1 Preparation Method: EPA 245.1							
Mercury, Dissolved	ND	ug/L	0.20	1	03/20/13 10:10	03/20/13 16:10	7439-97-6	
2510B Specific Conductance	Analytical Method: SM 2510B							
Specific Conductance	**1810**	umhos/cm	10.0	1		03/21/13 13:51		
Salinity	Analytical Method: Calculated							
Salinity (as dissolved solids)	**1160**	mg/L	6.4	1		03/25/13 15:58		

REPORT OF LABORATORY ANALYSIS

This report shall not be reproduced, except in full,
without the written consent of Pace Analytical Services, Inc..

Pace Analytical Services, Inc.
9608 Loiret Blvd.
Lenexa, KS 66219
(913)599-5665

ANALYTICAL RESULTS

Project: MARCH 2013 RICO WATER SAMPLING
Pace Project No.: 60140509

Sample: GW-5_20130314 **Lab ID: 60140509025** Collected: 03/14/13 09:35 Received: 03/15/13 10:10 Matrix: Water

Parameters	Results	Units	Report Limit	DF	Prepared	Analyzed	CAS No.	Qual
Salinity	Analytical Method: Calculated							
Salinity (as seawater)	**0.92**	PSU	0.014	1		03/25/13 15:58		
2320B Alkalinity	Analytical Method: SM 2320B							
Alkalinity,Bicarbonate (CaCO3)	**169**	mg/L	20.0	1		03/22/13 08:27		
Alkalinity, Carbonate (CaCO3)	ND	mg/L	20.0	1		03/22/13 08:27		
Alkalinity, Total as CaCO3	**169**	mg/L	20.0	1		03/22/13 08:27		
2540C Total Dissolved Solids	Analytical Method: SM 2540C							
Total Dissolved Solids	**1510**	mg/L	5.0	1		03/20/13 17:28		
2540D Total Suspended Solids	Analytical Method: SM 2540D							
Total Suspended Solids	**1060**	mg/L	5.0	1		03/21/13 14:02		
4500S2D Sulfide, Total	Analytical Method: SM 4500-S-2 D							
Sulfide, Total	**1.8**	mg/L	0.10	2		03/20/13 13:44	18496-25-8	
300.0 IC Anions 28 Days	Analytical Method: EPA 300.0							
Chloride	ND	mg/L	1.0	1		03/28/13 03:21	16887-00-6	
Sulfate	**976**	mg/L	100	100		03/28/13 19:41	14808-79-8	
353.2 Nitrogen, NO2/NO3 pres.	Analytical Method: EPA 353.2							
Nitrogen, NO2 plus NO3	ND	mg/L	0.10	1		03/26/13 10:10		CU
4500CNE Cyanide, Total	Analytical Method: SM 4500-CN-E							
Cyanide	ND	mg/L	0.0050	1		03/20/13 15:23	57-12-5	
5310C TOC	Analytical Method: SM 5310C							
Total Organic Carbon	**0.67**	mg/L	0.50	1		03/23/13 00:06	7440-44-0	

This report shall not be reproduced, except in full,
without the written consent of Pace Analytical Services, Inc..

Pace Analytical Services, Inc.
9608 Loiret Blvd.
Lenexa, KS 66219
(913)599-5665

ANALYTICAL RESULTS

Project: MARCH 2013 RICO WATER SAMPLING
Pace Project No.: 60140509

Sample: MW-204_20130314 **Lab ID: 60140509026** Collected: 03/14/13 09:10 Received: 03/15/13 10:10 Matrix: Water

Parameters	Results	Units	Report Limit	DF	Prepared	Analyzed	CAS No.	Qual
200.7 Potentially Diss. Metals	Analytical Method: EPA 200.7 Preparation Method: EPA 200.7							
Calcium, Dissolved	**227000**	ug/L	100	1	03/18/13 16:30	03/29/13 10:49	7440-70-2	
Magnesium, Dissolved	**19900**	ug/L	50.0	1	03/18/13 16:30	03/29/13 10:49	7439-95-4	
Potassium, Dissolved	**2160**	ug/L	500	1	03/18/13 16:30	03/29/13 10:49	7440-09-7	
Sodium, Dissolved	**11700**	ug/L	500	1	03/18/13 16:30	03/29/13 10:49	7440-23-5	
200.8 MET ICPMS	Analytical Method: EPA 200.8 Preparation Method: EPA 200.8							
Aluminum	**15200**	ug/L	4.0	1	03/20/13 19:56	03/23/13 12:18	7429-90-5	
Antimony	ND	ug/L	0.50	1	03/20/13 19:56	03/23/13 12:18	7440-36-0	
Arsenic	**5.9**	ug/L	0.50	1	03/20/13 19:56	03/23/13 12:18	7440-38-2	
Barium	**166**	ug/L	0.30	1	03/20/13 19:56	03/25/13 11:57	7440-39-3	
Beryllium	**1.0**	ug/L	0.20	1	03/20/13 19:56	03/23/13 12:18	7440-41-7	
Cadmium	**13.2**	ug/L	0.080	1	03/20/13 19:56	03/23/13 12:18	7440-43-9	
Calcium	**260000**	ug/L	400	20	03/20/13 19:56	03/23/13 12:24	7440-70-2	
Chromium	**33.5**	ug/L	0.50	1	03/20/13 19:56	03/23/13 12:18	7440-47-3	
Cobalt	**10.7**	ug/L	0.50	1	03/20/13 19:56	03/23/13 12:18	7440-48-4	
Copper	**31.4**	ug/L	0.50	1	03/20/13 19:56	03/23/13 12:18	7440-50-8	
Iron	**22900**	ug/L	1000	20	03/20/13 19:56	03/23/13 12:24	7439-89-6	
Lead	**48.4**	ug/L	0.10	1	03/20/13 19:56	03/23/13 12:18	7439-92-1	
Magnesium	**35200**	ug/L	100	20	03/20/13 19:56	03/23/13 12:24	7439-95-4	
Manganese	**2090**	ug/L	10.0	20	03/20/13 19:56	03/23/13 12:24	7439-96-5	
Molybdenum	**6.1**	ug/L	0.50	1	03/20/13 19:56	03/23/13 12:18	7439-98-7	
Nickel	**22.2**	ug/L	0.50	1	03/20/13 19:56	03/23/13 12:18	7440-02-0	
Potassium	**4360**	ug/L	20.0	1	03/20/13 19:56	03/23/13 12:18	7440-09-7	
Selenium	**1.5**	ug/L	0.50	1	03/20/13 19:56	03/23/13 12:18	7782-49-2	
Silica	**68800**	ug/L	1070	20	03/20/13 19:56	03/23/13 12:24	7631-86-9	
Silver	**0.57**	ug/L	0.50	1	03/20/13 19:56	03/23/13 12:18	7440-22-4	
Sodium	**12800**	ug/L	50.0	1	03/20/13 19:56	03/23/13 12:18	7440-23-5	
Thallium	**0.22**	ug/L	0.10	1	03/20/13 19:56	03/23/13 12:18	7440-28-0	
Total Hardness by 2340B	**794000**	ug/L	1420	20	03/20/13 19:56	03/23/13 12:24		
Vanadium	**25.3**	ug/L	0.10	1	03/20/13 19:56	03/23/13 12:18	7440-62-2	
Zinc	**156**	ug/L	5.0	1	03/20/13 19:56	03/23/13 12:18	7440-66-6	
200.8 MET ICPMS, Dissolved	Analytical Method: EPA 200.8 Preparation Method: EPA 200.8							
Aluminum, Dissolved	**209**	ug/L	4.0	1	03/20/13 19:52	03/21/13 20:41	7429-90-5	
Antimony, Dissolved	ND	ug/L	0.50	1	03/20/13 19:52	03/21/13 20:41	7440-36-0	
Arsenic, Dissolved	ND	ug/L	0.50	1	03/20/13 19:52	03/21/13 20:41	7440-38-2	
Barium, Dissolved	**36.2**	ug/L	0.30	1	03/20/13 19:52	03/21/13 20:41	7440-39-3	
Beryllium, Dissolved	ND	ug/L	0.20	1	03/20/13 19:52	03/21/13 20:41	7440-41-7	
Cadmium, Dissolved	**2.0**	ug/L	0.080	1	03/20/13 19:52	03/21/13 20:41	7440-43-9	
Calcium, Dissolved	**247000**	ug/L	400	20	03/20/13 19:52	03/21/13 20:45	7440-70-2	
Chromium, Dissolved	**0.55**	ug/L	0.50	1	03/20/13 19:52	03/21/13 20:41	7440-47-3	
Cobalt, Dissolved	**0.62**	ug/L	0.50	1	03/20/13 19:52	03/21/13 20:41	7440-48-4	
Copper, Dissolved	**0.99**	ug/L	0.50	1	03/20/13 19:52	03/21/13 20:41	7440-50-8	
Iron, Dissolved	**296**	ug/L	50.0	1	03/20/13 19:52	03/21/13 20:41	7439-89-6	
Lead, Dissolved	**0.85**	ug/L	0.10	1	03/20/13 19:52	03/21/13 20:41	7439-92-1	
Magnesium, Dissolved	**21900**	ug/L	5.0	1	03/20/13 19:52	03/21/13 20:41	7439-95-4	

This report shall not be reproduced, except in full,
without the written consent of Pace Analytical Services, Inc..

Pace Analytical Services, Inc.
9608 Loiret Blvd.
Lenexa, KS 66219
(913)599-5665

ANALYTICAL RESULTS

Project: MARCH 2013 RICO WATER SAMPLING
Pace Project No.: 60140509

Sample: MW-204_20130314 **Lab ID: 60140509026** Collected: 03/14/13 09:10 Received: 03/15/13 10:10 Matrix: Water

Parameters	Results	Units	Report Limit	DF	Prepared	Analyzed	CAS No.	Qual
200.8 MET ICPMS, Dissolved	Analytical Method: EPA 200.8 Preparation Method: EPA 200.8							
Manganese, Dissolved	**1590**	ug/L	10.0	20	03/20/13 19:52	03/21/13 20:45	7439-96-5	
Molybdenum, Dissolved	**3.7**	ug/L	0.50	1	03/20/13 19:52	03/21/13 20:41	7439-98-7	
Nickel, Dissolved	**1.6**	ug/L	0.50	1	03/20/13 19:52	03/21/13 20:41	7440-02-0	
Potassium, Dissolved	**1940**	ug/L	20.0	1	03/20/13 19:52	03/21/13 20:41	7440-09-7	
Selenium, Dissolved	ND	ug/L	0.50	1	03/20/13 19:52	03/21/13 20:41	7782-49-2	
Silver, Dissolved	ND	ug/L	0.50	1	03/20/13 19:52	03/21/13 20:41	7440-22-4	
Sodium, Dissolved	**11200**	ug/L	50.0	1	03/20/13 19:52	03/21/13 20:41	7440-23-5	
Thallium, Dissolved	ND	ug/L	0.10	1	03/20/13 19:52	03/21/13 20:41	7440-28-0	
Vanadium, Dissolved	**0.39**	ug/L	0.10	1	03/20/13 19:52	03/21/13 20:41	7440-62-2	
Zinc, Dissolved	**12.6**	ug/L	5.0	1	03/20/13 19:52	03/21/13 20:41	7440-66-6	
200.8 Potentially Diss. Metals	Analytical Method: EPA 200.8 Preparation Method: EPA 200.8							
Aluminum, Dissolved	**2270**	ug/L	50.0	1	03/18/13 16:30	03/29/13 17:01	7429-90-5	
Antimony, Dissolved	ND	ug/L	1.0	1	03/18/13 16:30	03/29/13 17:01	7440-36-0	
Arsenic, Dissolved	**1.4**	ug/L	1.0	1	03/18/13 16:30	04/08/13 16:53	7440-38-2	
Barium, Dissolved	**54.2**	ug/L	1.0	1	03/18/13 16:30	03/29/13 17:01	7440-39-3	
Beryllium, Dissolved	**0.41J**	ug/L	0.50	1	03/18/13 16:30	04/08/13 16:53	7440-41-7	
Cadmium, Dissolved	**13.0**	ug/L	0.50	1	03/18/13 16:30	03/29/13 17:01	7440-43-9	
Chromium, Dissolved	**8.9**	ug/L	1.0	1	03/18/13 16:30	03/29/13 17:01	7440-47-3	
Cobalt, Dissolved	**5.4**	ug/L	1.0	1	03/18/13 16:30	03/29/13 17:01	7440-48-4	
Copper, Dissolved	**17.0**	ug/L	1.0	1	03/18/13 16:30	03/29/13 17:01	7440-50-8	
Iron, Dissolved	**5290**	ug/L	50.0	1	03/18/13 16:30	03/29/13 17:01	7439-89-6	
Lead, Dissolved	**42.1**	ug/L	1.0	1	03/18/13 16:30	03/29/13 17:01	7439-92-1	
Manganese, Dissolved	**1890**	ug/L	1.0	1	03/18/13 16:30	03/29/13 17:01	7439-96-5	
Molybdenum, Dissolved	**1.9**	ug/L	1.0	1	03/18/13 16:30	03/29/13 17:01	7439-98-7	
Nickel, Dissolved	**7.4**	ug/L	1.0	1	03/18/13 16:30	03/29/13 17:01	7440-02-0	
Selenium, Dissolved	**0.35J**	ug/L	1.0	1	03/18/13 16:30	03/29/13 17:01	7782-49-2	
Silver, Dissolved	ND	ug/L	0.50	1	03/18/13 16:30	03/29/13 17:01	7440-22-4	
Thallium, Dissolved	**0.077J**	ug/L	1.0	1	03/18/13 16:30	03/29/13 17:01	7440-28-0	
Vanadium, Dissolved	**5.2**	ug/L	1.0	1	03/18/13 16:30	03/29/13 17:01	7440-62-2	
Zinc, Dissolved	**99.2**	ug/L	10.0	1	03/18/13 16:30	03/29/13 17:01	7440-66-6	
245.1 Mercury	Analytical Method: EPA 245.1 Preparation Method: EPA 245.1							
Mercury	ND	ug/L	0.20	1	03/20/13 14:08	03/26/13 11:21	7439-97-6	
245.1 Mercury, Dissolved	Analytical Method: EPA 245.1 Preparation Method: EPA 245.1							
Mercury, Dissolved	ND	ug/L	0.20	1	03/20/13 11:28	03/26/13 12:45	7439-97-6	
245.1 Potentially Diss Mercury	Analytical Method: EPA 245.1 Preparation Method: EPA 245.1							
Mercury, Dissolved	ND	ug/L	0.20	1	03/20/13 10:10	03/20/13 16:12	7439-97-6	
2510B Specific Conductance	Analytical Method: SM 2510B							
Specific Conductance	**1290**	umhos/cm	10.0	1		03/21/13 13:53		
Salinity	Analytical Method: Calculated							
Salinity (as dissolved solids)	**824**	mg/L	6.4	1		03/25/13 15:58		

REPORT OF LABORATORY ANALYSIS

This report shall not be reproduced, except in full,
without the written consent of Pace Analytical Services, Inc..

Pace Analytical Services, Inc.
9608 Loiret Blvd.
Lenexa, KS 66219
(913)599-5665

ANALYTICAL RESULTS

Project: MARCH 2013 RICO WATER SAMPLING
Pace Project No.: 60140509

Sample: MW-204_20130314 **Lab ID: 60140509026** Collected: 03/14/13 09:10 Received: 03/15/13 10:10 Matrix: Water

Parameters	Results	Units	Report Limit	DF	Prepared	Analyzed	CAS No.	Qual
Salinity	Analytical Method: Calculated							
Salinity (as seawater)	**0.64**	PSU	0.014	1		03/25/13 15:58		
2320B Alkalinity	Analytical Method: SM 2320B							
Alkalinity,Bicarbonate (CaCO3)	**117**	mg/L	20.0	1		03/22/13 08:31		
Alkalinity, Carbonate (CaCO3)	ND	mg/L	20.0	1		03/22/13 08:31		
Alkalinity, Total as CaCO3	**117**	mg/L	20.0	1		03/22/13 08:31		
2540C Total Dissolved Solids	Analytical Method: SM 2540C							
Total Dissolved Solids	**1070**	mg/L	5.0	1		03/20/13 17:28		
2540D Total Suspended Solids	Analytical Method: SM 2540D							
Total Suspended Solids	**665**	mg/L	5.0	1		03/21/13 14:03		
4500S2D Sulfide, Total	Analytical Method: SM 4500-S-2 D							
Sulfide, Total	ND	mg/L	0.050	1		03/20/13 13:45	18496-25-8	
300.0 IC Anions 28 Days	Analytical Method: EPA 300.0							
Chloride	ND	mg/L	1.0	1		03/29/13 18:53	16887-00-6	
Sulfate	**550**	mg/L	100	100		03/29/13 20:04	14808-79-8	
353.2 Nitrogen, NO2/NO3 pres.	Analytical Method: EPA 353.2							
Nitrogen, NO2 plus NO3	ND	mg/L	0.10	1		03/26/13 10:11		CU
4500CNE Cyanide, Total	Analytical Method: SM 4500-CN-E							
Cyanide	ND	mg/L	0.0050	1		03/20/13 15:23	57-12-5	
5310C TOC	Analytical Method: SM 5310C							
Total Organic Carbon	ND	mg/L	0.50	1		03/23/13 00:24	7440-44-0	

This report shall not be reproduced, except in full,
without the written consent of Pace Analytical Services, Inc..

Pace Analytical Services, Inc.
9608 Loiret Blvd.
Lenexa, KS 66219
(913)599-5665

ANALYTICAL RESULTS

Project: MARCH 2013 RICO WATER SAMPLING
Pace Project No.: 60140509

Sample: GW-4_20130314 **Lab ID: 60140509027** Collected: 03/14/13 10:09 Received: 03/15/13 10:10 Matrix: Water

Parameters	Results	Units	Report Limit	DF	Prepared	Analyzed	CAS No.	Qual
200.7 Potentially Diss. Metals	Analytical Method: EPA 200.7 Preparation Method: EPA 200.7							
Calcium, Dissolved	**111000**	ug/L	100	1	03/18/13 16:30	03/29/13 10:51	7440-70-2	
Magnesium, Dissolved	**12200**	ug/L	50.0	1	03/18/13 16:30	03/29/13 10:51	7439-95-4	
Potassium, Dissolved	**2550**	ug/L	500	1	03/18/13 16:30	03/29/13 10:51	7440-09-7	
Sodium, Dissolved	**4000**	ug/L	500	1	03/18/13 16:30	03/29/13 10:51	7440-23-5	
200.8 MET ICPMS	Analytical Method: EPA 200.8 Preparation Method: EPA 200.8							
Aluminum	**46900**	ug/L	80.0	20	03/20/13 19:56	03/23/13 12:36	7429-90-5	
Antimony	**0.73**	ug/L	0.50	1	03/20/13 19:56	03/23/13 12:29	7440-36-0	
Arsenic	**33.0**	ug/L	0.50	1	03/20/13 19:56	03/23/13 12:29	7440-38-2	
Barium	**861**	ug/L	6.0	20	03/20/13 19:56	03/23/13 12:36	7440-39-3	
Beryllium	**3.0**	ug/L	0.20	1	03/20/13 19:56	03/23/13 12:29	7440-41-7	
Cadmium	**16.7**	ug/L	0.080	1	03/20/13 19:56	03/23/13 12:29	7440-43-9	
Calcium	**141000**	ug/L	400	20	03/20/13 19:56	03/23/13 12:36	7440-70-2	
Chromium	**78.7**	ug/L	0.50	1	03/20/13 19:56	03/23/13 12:29	7440-47-3	
Cobalt	**31.0**	ug/L	0.50	1	03/20/13 19:56	03/23/13 12:29	7440-48-4	
Copper	**249**	ug/L	0.50	1	03/20/13 19:56	03/23/13 12:29	7440-50-8	
Iron	**97300**	ug/L	1000	20	03/20/13 19:56	03/23/13 12:36	7439-89-6	
Lead	**180**	ug/L	0.10	1	03/20/13 19:56	03/23/13 12:29	7439-92-1	
Magnesium	**44200**	ug/L	100	20	03/20/13 19:56	03/23/13 12:36	7439-95-4	
Manganese	**2790**	ug/L	10.0	20	03/20/13 19:56	03/23/13 12:36	7439-96-5	
Molybdenum	**19.8**	ug/L	0.50	1	03/20/13 19:56	03/23/13 12:29	7439-98-7	
Nickel	**63.0**	ug/L	0.50	1	03/20/13 19:56	03/23/13 12:29	7440-02-0	
Potassium	**7680**	ug/L	20.0	1	03/20/13 19:56	03/23/13 12:29	7440-09-7	
Selenium	**6.9**	ug/L	0.50	1	03/20/13 19:56	03/23/13 12:29	7782-49-2	
Silica	**136000**	ug/L	5350	100	03/20/13 19:56	03/25/13 12:15	7631-86-9	
Silver	**2.4**	ug/L	0.50	1	03/20/13 19:56	03/23/13 12:29	7440-22-4	
Sodium	**5540**	ug/L	50.0	1	03/20/13 19:56	03/23/13 12:29	7440-23-5	
Thallium	**0.75**	ug/L	0.10	1	03/20/13 19:56	03/23/13 12:29	7440-28-0	
Total Hardness by 2340B	**535000**	ug/L	1420	20	03/20/13 19:56	03/23/13 12:36		
Vanadium	**99.4**	ug/L	0.10	1	03/20/13 19:56	03/23/13 12:29	7440-62-2	
Zinc	**1630**	ug/L	100	20	03/20/13 19:56	03/23/13 12:36	7440-66-6	
200.8 MET ICPMS, Dissolved	Analytical Method: EPA 200.8 Preparation Method: EPA 200.8							
Aluminum, Dissolved	**195**	ug/L	4.0	1	03/20/13 19:52	03/21/13 21:09	7429-90-5	
Antimony, Dissolved	ND	ug/L	0.50	1	03/20/13 19:52	03/21/13 21:09	7440-36-0	
Arsenic, Dissolved	**0.82**	ug/L	0.50	1	03/20/13 19:52	03/21/13 21:09	7440-38-2	
Barium, Dissolved	**30.6**	ug/L	0.30	1	03/20/13 19:52	03/21/13 21:09	7440-39-3	
Beryllium, Dissolved	ND	ug/L	0.20	1	03/20/13 19:52	03/21/13 21:09	7440-41-7	
Cadmium, Dissolved	**0.42**	ug/L	0.080	1	03/20/13 19:52	03/21/13 21:09	7440-43-9	
Calcium, Dissolved	**94700**	ug/L	400	20	03/20/13 19:52	03/21/13 21:14	7440-70-2	
Chromium, Dissolved	ND	ug/L	0.50	1	03/20/13 19:52	03/21/13 21:09	7440-47-3	
Cobalt, Dissolved	**0.68**	ug/L	0.50	1	03/20/13 19:52	03/21/13 21:09	7440-48-4	
Copper, Dissolved	**1.6**	ug/L	0.50	1	03/20/13 19:52	03/21/13 21:09	7440-50-8	
Iron, Dissolved	**529**	ug/L	50.0	1	03/20/13 19:52	03/21/13 21:09	7439-89-6	
Lead, Dissolved	**0.73**	ug/L	0.10	1	03/20/13 19:52	03/21/13 21:09	7439-92-1	
Magnesium, Dissolved	**10700**	ug/L	5.0	1	03/20/13 19:52	03/21/13 21:09	7439-95-4	

This report shall not be reproduced, except in full,
without the written consent of Pace Analytical Services, Inc..

Pace Analytical Services, Inc.
9608 Loiret Blvd.
Lenexa, KS 66219
(913)599-5665

ANALYTICAL RESULTS

Project: MARCH 2013 RICO WATER SAMPLING
Pace Project No.: 60140509

Sample: GW-4_20130314 **Lab ID: 60140509027** Collected: 03/14/13 10:09 Received: 03/15/13 10:10 Matrix: Water

Parameters	Results	Units	Report Limit	DF	Prepared	Analyzed	CAS No.	Qual
200.8 MET ICPMS, Dissolved	Analytical Method: EPA 200.8 Preparation Method: EPA 200.8							
Manganese, Dissolved	**308**	ug/L	0.50	1	03/20/13 19:52	03/21/13 21:09	7439-96-5	
Molybdenum, Dissolved	**9.0**	ug/L	0.50	1	03/20/13 19:52	03/21/13 21:09	7439-98-7	
Nickel, Dissolved	**5.1**	ug/L	0.50	1	03/20/13 19:52	03/21/13 21:09	7440-02-0	
Potassium, Dissolved	**1850**	ug/L	20.0	1	03/20/13 19:52	03/21/13 21:09	7440-09-7	
Selenium, Dissolved	**0.67**	ug/L	0.50	1	03/20/13 19:52	03/21/13 21:09	7782-49-2	
Silver, Dissolved	ND	ug/L	0.50	1	03/20/13 19:52	03/21/13 21:09	7440-22-4	
Sodium, Dissolved	**4090**	ug/L	50.0	1	03/20/13 19:52	03/21/13 21:09	7440-23-5	
Thallium, Dissolved	ND	ug/L	0.10	1	03/20/13 19:52	03/21/13 21:09	7440-28-0	
Vanadium, Dissolved	**0.54**	ug/L	0.10	1	03/20/13 19:52	03/21/13 21:09	7440-62-2	
Zinc, Dissolved	**29.9**	ug/L	5.0	1	03/20/13 19:52	03/21/13 21:09	7440-66-6	
200.8 Potentially Diss. Metals	Analytical Method: EPA 200.8 Preparation Method: EPA 200.8							
Aluminum, Dissolved	**6550**	ug/L	50.0	1	03/18/13 16:30	03/29/13 17:05	7429-90-5	
Antimony, Dissolved	**0.044J**	ug/L	1.0	1	03/18/13 16:30	03/29/13 17:05	7440-36-0	
Arsenic, Dissolved	**8.9**	ug/L	1.0	1	03/18/13 16:30	04/08/13 16:57	7440-38-2	
Barium, Dissolved	**136**	ug/L	1.0	1	03/18/13 16:30	03/29/13 17:05	7440-39-3	
Beryllium, Dissolved	**1.5**	ug/L	0.50	1	03/18/13 16:30	04/08/13 16:57	7440-41-7	
Cadmium, Dissolved	**16.0**	ug/L	0.50	1	03/18/13 16:30	03/29/13 17:05	7440-43-9	
Chromium, Dissolved	**17.4**	ug/L	1.0	1	03/18/13 16:30	03/29/13 17:05	7440-47-3	
Cobalt, Dissolved	**13.2**	ug/L	1.0	1	03/18/13 16:30	03/29/13 17:05	7440-48-4	
Copper, Dissolved	**172**	ug/L	1.0	1	03/18/13 16:30	03/29/13 17:05	7440-50-8	
Iron, Dissolved	**26400**	ug/L	50.0	1	03/18/13 16:30	03/29/13 17:05	7439-89-6	
Lead, Dissolved	**186**	ug/L	1.0	1	03/18/13 16:30	03/29/13 17:05	7439-92-1	
Manganese, Dissolved	**2310**	ug/L	1.0	1	03/18/13 16:30	03/29/13 17:05	7439-96-5	
Molybdenum, Dissolved	**2.6**	ug/L	1.0	1	03/18/13 16:30	03/29/13 17:05	7439-98-7	
Nickel, Dissolved	**20.6**	ug/L	1.0	1	03/18/13 16:30	03/29/13 17:05	7440-02-0	
Selenium, Dissolved	**3.4**	ug/L	1.0	1	03/18/13 16:30	03/29/13 17:05	7782-49-2	
Silver, Dissolved	ND	ug/L	0.50	1	03/18/13 16:30	03/29/13 17:05	7440-22-4	
Thallium, Dissolved	**0.25J**	ug/L	1.0	1	03/18/13 16:30	03/29/13 17:05	7440-28-0	
Vanadium, Dissolved	**24.2**	ug/L	1.0	1	03/18/13 16:30	03/29/13 17:05	7440-62-2	
Zinc, Dissolved	**1220**	ug/L	10.0	1	03/18/13 16:30	03/29/13 17:05	7440-66-6	
245.1 Mercury	Analytical Method: EPA 245.1 Preparation Method: EPA 245.1							
Mercury	ND	ug/L	0.20	1	03/20/13 14:08	03/26/13 11:23	7439-97-6	
245.1 Mercury, Dissolved	Analytical Method: EPA 245.1 Preparation Method: EPA 245.1							
Mercury, Dissolved	ND	ug/L	0.20	1	03/20/13 11:28	03/26/13 12:47	7439-97-6	
245.1 Potentially Diss Mercury	Analytical Method: EPA 245.1 Preparation Method: EPA 245.1							
Mercury, Dissolved	ND	ug/L	0.20	1	03/20/13 10:10	03/20/13 16:14	7439-97-6	
2510B Specific Conductance	Analytical Method: SM 2510B							
Specific Conductance	**592**	umhos/cm	10.0	1		03/21/13 13:55		
Salinity	Analytical Method: Calculated							
Salinity (as dissolved solids)	**379**	mg/L	6.4	1		03/25/13 15:58		

REPORT OF LABORATORY ANALYSIS

This report shall not be reproduced, except in full,
without the written consent of Pace Analytical Services, Inc..

Pace Analytical Services, Inc.
9608 Loiret Blvd.
Lenexa, KS 66219
(913)599-5665

ANALYTICAL RESULTS

Project: MARCH 2013 RICO WATER SAMPLING
Pace Project No.: 60140509

Sample: GW-4_20130314 **Lab ID: 60140509027** Collected: 03/14/13 10:09 Received: 03/15/13 10:10 Matrix: Water

Parameters	Results	Units	Report Limit	DF	Prepared	Analyzed	CAS No.	Qual
Salinity	Analytical Method: Calculated							
Salinity (as seawater)	**0.29**	PSU	0.014	1		03/25/13 15:58		
2320B Alkalinity	Analytical Method: SM 2320B							
Alkalinity,Bicarbonate (CaCO3)	**130**	mg/L	20.0	1		03/22/13 08:35		
Alkalinity, Carbonate (CaCO3)	ND	mg/L	20.0	1		03/22/13 08:35		
Alkalinity, Total as CaCO3	**130**	mg/L	20.0	1		03/22/13 08:35		
2540C Total Dissolved Solids	Analytical Method: SM 2540C							
Total Dissolved Solids	**408**	mg/L	5.0	1		03/20/13 17:28		
2540D Total Suspended Solids	Analytical Method: SM 2540D							
Total Suspended Solids	**2990**	mg/L	5.0	1		03/21/13 14:03		
4500S2D Sulfide, Total	Analytical Method: SM 4500-S-2 D							
Sulfide, Total	ND	mg/L	0.050	1		03/20/13 13:46	18496-25-8	
300.0 IC Anions 28 Days	Analytical Method: EPA 300.0							
Chloride	**1.6**	mg/L	1.0	1		03/28/13 03:56	16887-00-6	
Sulfate	**165**	mg/L	20.0	20		03/28/13 20:17	14808-79-8	
353.2 Nitrogen, NO2/NO3 pres.	Analytical Method: EPA 353.2							
Nitrogen, NO2 plus NO3	ND	mg/L	0.10	1		03/26/13 15:37		
4500CNE Cyanide, Total	Analytical Method: SM 4500-CN-E							
Cyanide	ND	mg/L	0.0050	1		03/20/13 15:24	57-12-5	
5310C TOC	Analytical Method: SM 5310C							
Total Organic Carbon	**2.1**	mg/L	0.50	1		03/23/13 00:42	7440-44-0	

This report shall not be reproduced, except in full,
without the written consent of Pace Analytical Services, Inc..

Pace Analytical Services, Inc.
9608 Loiret Blvd.
Lenexa, KS 66219
(913)599-5665

ANALYTICAL RESULTS

Project: MARCH 2013 RICO WATER SAMPLING
Pace Project No.: 60140509

Sample: GW-3_20130313 **Lab ID: 60140509028** Collected: 03/13/13 15:08 Received: 03/15/13 10:10 Matrix: Water

Parameters	Results	Units	Report Limit	DF	Prepared	Analyzed	CAS No.	Qual
2510B Specific Conductance	Analytical Method: SM 2510B							
Specific Conductance	**674**	umhos/cm	10.0	1		03/21/13 14:05		
Salinity	Analytical Method: Calculated							
Salinity (as dissolved solids)	**431**	mg/L	6.4	1		03/25/13 15:58		
Salinity (as seawater)	**0.33**	PSU	0.014	1		03/25/13 15:58		
2320B Alkalinity	Analytical Method: SM 2320B							
Alkalinity,Bicarbonate (CaCO3)	**177**	mg/L	20.0	1		03/22/13 07:44		
Alkalinity, Carbonate (CaCO3)	ND	mg/L	20.0	1		03/22/13 07:44		
Alkalinity, Total as CaCO3	**177**	mg/L	20.0	1		03/22/13 07:44		
2540C Total Dissolved Solids	Analytical Method: SM 2540C							
Total Dissolved Solids	**446**	mg/L	5.0	1		03/20/13 17:27		
2540D Total Suspended Solids	Analytical Method: SM 2540D							
Total Suspended Solids	**440**	mg/L	5.0	1		03/19/13 14:56		
300.0 IC Anions 28 Days	Analytical Method: EPA 300.0							
Chloride	**1.6**	mg/L	1.0	1		03/29/13 19:11	16887-00-6	
Sulfate	**161**	mg/L	20.0	20		03/29/13 20:57	14808-79-8	
353.2 Nitrogen, NO2/NO3 pres.	Analytical Method: EPA 353.2							
Nitrogen, NO2 plus NO3	ND	mg/L	0.10	1		03/26/13 15:39		
5310C TOC	Analytical Method: SM 5310C							
Total Organic Carbon	**2.4**	mg/L	1.5	3		03/25/13 11:57	7440-44-0	

This report shall not be reproduced, except in full,
without the written consent of Pace Analytical Services, Inc..

Pace Analytical Services, Inc.
9608 Loiret Blvd.
Lenexa, KS 66219
(913)599-5665

ANALYTICAL RESULTS

Project: MARCH 2013 RICO WATER SAMPLING
Pace Project No.: 60140509

Sample: MW-2 DEEP_20130313 **Lab ID: 60140509029** Collected: 03/13/13 15:10 Received: 03/15/13 10:10 Matrix: Water

Parameters	Results	Units	Report Limit	DF	Prepared	Analyzed	CAS No.	Qual
200.7 Potentially Diss. Metals	Analytical Method: EPA 200.7 Preparation Method: EPA 200.7							
Calcium, Dissolved	**214000**	ug/L	100	1	03/18/13 16:30	03/29/13 10:53	7440-70-2	
Magnesium, Dissolved	**19200**	ug/L	50.0	1	03/18/13 16:30	03/29/13 10:53	7439-95-4	
Potassium, Dissolved	**1680**	ug/L	500	1	03/18/13 16:30	03/29/13 10:53	7440-09-7	
Sodium, Dissolved	**10800**	ug/L	500	1	03/18/13 16:30	03/29/13 10:53	7440-23-5	
200.8 MET ICPMS	Analytical Method: EPA 200.8 Preparation Method: EPA 200.8							
Aluminum	**4800**	ug/L	4.0	1	03/20/13 19:56	03/23/13 12:42	7429-90-5	
Antimony	ND	ug/L	0.50	1	03/20/13 19:56	03/23/13 12:42	7440-36-0	
Arsenic	**9.8**	ug/L	0.50	1	03/20/13 19:56	03/23/13 12:42	7440-38-2	
Barium	**141**	ug/L	0.30	1	03/20/13 19:56	03/25/13 12:03	7440-39-3	
Beryllium	**0.44**	ug/L	0.20	1	03/20/13 19:56	03/23/13 12:42	7440-41-7	
Cadmium	**4.1**	ug/L	0.080	1	03/20/13 19:56	03/23/13 12:42	7440-43-9	
Calcium	**254000**	ug/L	400	20	03/20/13 19:56	03/23/13 12:47	7440-70-2	
Chromium	**7.2**	ug/L	0.50	1	03/20/13 19:56	03/23/13 12:42	7440-47-3	
Cobalt	**3.0**	ug/L	0.50	1	03/20/13 19:56	03/23/13 12:42	7440-48-4	
Copper	**29.5**	ug/L	0.50	1	03/20/13 19:56	03/23/13 12:42	7440-50-8	
Iron	**10400**	ug/L	50.0	1	03/20/13 19:56	03/23/13 12:42	7439-89-6	
Lead	**103**	ug/L	0.10	1	03/20/13 19:56	03/23/13 12:42	7439-92-1	
Magnesium	**21900**	ug/L	5.0	1	03/20/13 19:56	03/23/13 12:42	7439-95-4	
Manganese	**493**	ug/L	10.0	20	03/20/13 19:56	03/23/13 12:47	7439-96-5	
Molybdenum	**12.8**	ug/L	0.50	1	03/20/13 19:56	03/23/13 12:42	7439-98-7	
Nickel	**4.0**	ug/L	0.50	1	03/20/13 19:56	03/23/13 12:42	7440-02-0	
Potassium	**2950**	ug/L	20.0	1	03/20/13 19:56	03/23/13 12:42	7440-09-7	
Selenium	**3.4**	ug/L	0.50	1	03/20/13 19:56	03/23/13 12:42	7782-49-2	
Silica	**30200**	ug/L	1070	20	03/20/13 19:56	03/23/13 12:47	7631-86-9	
Silver	**0.54**	ug/L	0.50	1	03/20/13 19:56	03/23/13 12:42	7440-22-4	
Sodium	**11200**	ug/L	50.0	1	03/20/13 19:56	03/23/13 12:42	7440-23-5	
Thallium	**0.25**	ug/L	0.10	1	03/20/13 19:56	03/23/13 12:42	7440-28-0	
Total Hardness by 2340B	**723000**	ug/L	1420	20	03/20/13 19:56	03/23/13 12:47		
Vanadium	**10.2**	ug/L	0.10	1	03/20/13 19:56	03/23/13 12:42	7440-62-2	
Zinc	**175**	ug/L	5.0	1	03/20/13 19:56	03/23/13 12:42	7440-66-6	
200.8 MET ICPMS, Dissolved	Analytical Method: EPA 200.8 Preparation Method: EPA 200.8							
Aluminum, Dissolved	**64.7**	ug/L	4.0	1	03/20/13 19:52	03/21/13 21:23	7429-90-5	
Antimony, Dissolved	ND	ug/L	0.50	1	03/20/13 19:52	03/21/13 21:23	7440-36-0	
Arsenic, Dissolved	ND	ug/L	0.50	1	03/20/13 19:52	03/21/13 21:23	7440-38-2	
Barium, Dissolved	**12.8**	ug/L	0.30	1	03/20/13 19:52	03/21/13 21:23	7440-39-3	
Beryllium, Dissolved	ND	ug/L	0.20	1	03/20/13 19:52	03/21/13 21:23	7440-41-7	
Cadmium, Dissolved	**0.80**	ug/L	0.080	1	03/20/13 19:52	03/21/13 21:23	7440-43-9	
Calcium, Dissolved	**238000**	ug/L	400	20	03/20/13 19:52	03/21/13 21:27	7440-70-2	
Chromium, Dissolved	ND	ug/L	0.50	1	03/20/13 19:52	03/21/13 21:23	7440-47-3	
Cobalt, Dissolved	ND	ug/L	0.50	1	03/20/13 19:52	03/21/13 21:23	7440-48-4	
Copper, Dissolved	**1.2**	ug/L	0.50	1	03/20/13 19:52	03/21/13 21:23	7440-50-8	
Iron, Dissolved	**136**	ug/L	50.0	1	03/20/13 19:52	03/21/13 21:23	7439-89-6	
Lead, Dissolved	**1.5**	ug/L	0.10	1	03/20/13 19:52	03/21/13 21:23	7439-92-1	
Magnesium, Dissolved	**21700**	ug/L	5.0	1	03/20/13 19:52	03/21/13 21:23	7439-95-4	

This report shall not be reproduced, except in full,
without the written consent of Pace Analytical Services, Inc..

Pace Analytical Services, Inc.
9608 Loiret Blvd.
Lenexa, KS 66219
(913)599-5665

ANALYTICAL RESULTS

Project: MARCH 2013 RICO WATER SAMPLING
Pace Project No.: 60140509

Sample: MW-2 DEEP_20130313 **Lab ID: 60140509029** Collected: 03/13/13 15:10 Received: 03/15/13 10:10 Matrix: Water

Parameters	Results	Units	Report Limit	DF	Prepared	Analyzed	CAS No.	Qual
200.8 MET ICPMS, Dissolved	Analytical Method: EPA 200.8 Preparation Method: EPA 200.8							
Manganese, Dissolved	**6.6**	ug/L	0.50	1	03/20/13 19:52	03/21/13 21:23	7439-96-5	
Molybdenum, Dissolved	**7.3**	ug/L	0.50	1	03/20/13 19:52	03/21/13 21:23	7439-98-7	
Nickel, Dissolved	ND	ug/L	0.50	1	03/20/13 19:52	03/21/13 21:23	7440-02-0	
Potassium, Dissolved	**1750**	ug/L	20.0	1	03/20/13 19:52	03/21/13 21:23	7440-09-7	
Selenium, Dissolved	**1.1**	ug/L	0.50	1	03/20/13 19:52	03/21/13 21:23	7782-49-2	
Silver, Dissolved	ND	ug/L	0.50	1	03/20/13 19:52	03/21/13 21:23	7440-22-4	
Sodium, Dissolved	**10600**	ug/L	50.0	1	03/20/13 19:52	03/21/13 21:23	7440-23-5	
Thallium, Dissolved	ND	ug/L	0.10	1	03/20/13 19:52	03/21/13 21:23	7440-28-0	
Vanadium, Dissolved	**0.14**	ug/L	0.10	1	03/20/13 19:52	03/21/13 21:23	7440-62-2	
Zinc, Dissolved	**17.2**	ug/L	5.0	1	03/20/13 19:52	03/21/13 21:23	7440-66-6	
200.8 Potentially Diss. Metals	Analytical Method: EPA 200.8 Preparation Method: EPA 200.8							
Aluminum, Dissolved	**968**	ug/L	50.0	1	03/18/13 16:30	03/29/13 17:10	7429-90-5	
Antimony, Dissolved	**0.047J**	ug/L	1.0	1	03/18/13 16:30	03/29/13 17:10	7440-36-0	
Arsenic, Dissolved	**2.6**	ug/L	1.0	1	03/18/13 16:30	04/08/13 17:01	7440-38-2	
Barium, Dissolved	**32.5**	ug/L	1.0	1	03/18/13 16:30	03/29/13 17:10	7440-39-3	
Beryllium, Dissolved	**0.17J**	ug/L	0.50	1	03/18/13 16:30	04/08/13 17:01	7440-41-7	
Cadmium, Dissolved	**3.3**	ug/L	0.50	1	03/18/13 16:30	03/29/13 17:10	7440-43-9	
Chromium, Dissolved	**3.1**	ug/L	1.0	1	03/18/13 16:30	03/29/13 17:10	7440-47-3	
Cobalt, Dissolved	**1.3**	ug/L	1.0	1	03/18/13 16:30	03/29/13 17:10	7440-48-4	
Copper, Dissolved	**16.3**	ug/L	1.0	1	03/18/13 16:30	03/29/13 17:10	7440-50-8	
Iron, Dissolved	**3360**	ug/L	50.0	1	03/18/13 16:30	03/29/13 17:10	7439-89-6	
Lead, Dissolved	**56.9**	ug/L	1.0	1	03/18/13 16:30	03/29/13 17:10	7439-92-1	
Manganese, Dissolved	**329**	ug/L	1.0	1	03/18/13 16:30	03/29/13 17:10	7439-96-5	
Molybdenum, Dissolved	**2.8**	ug/L	1.0	1	03/18/13 16:30	03/29/13 17:10	7439-98-7	
Nickel, Dissolved	**0.84J**	ug/L	1.0	1	03/18/13 16:30	03/29/13 17:10	7440-02-0	
Selenium, Dissolved	**1.4**	ug/L	1.0	1	03/18/13 16:30	03/29/13 17:10	7782-49-2	
Silver, Dissolved	**0.77**	ug/L	0.50	1	03/18/13 16:30	03/29/13 17:10	7440-22-4	
Thallium, Dissolved	**0.082J**	ug/L	1.0	1	03/18/13 16:30	03/29/13 17:10	7440-28-0	
Vanadium, Dissolved	**3.2**	ug/L	1.0	1	03/18/13 16:30	03/29/13 17:10	7440-62-2	
Zinc, Dissolved	**140**	ug/L	10.0	1	03/18/13 16:30	03/29/13 17:10	7440-66-6	
245.1 Mercury	Analytical Method: EPA 245.1 Preparation Method: EPA 245.1							
Mercury	ND	ug/L	0.20	1	03/20/13 14:08	03/26/13 11:25	7439-97-6	
245.1 Mercury, Dissolved	Analytical Method: EPA 245.1 Preparation Method: EPA 245.1							
Mercury, Dissolved	ND	ug/L	0.20	1	03/20/13 11:28	03/26/13 12:50	7439-97-6	
245.1 Potentially Diss Mercury	Analytical Method: EPA 245.1 Preparation Method: EPA 245.1							
Mercury, Dissolved	ND	ug/L	0.20	1	03/20/13 10:10	03/20/13 16:16	7439-97-6	
2510B Specific Conductance	Analytical Method: SM 2510B							
Specific Conductance	**1210**	umhos/cm	10.0	1		03/21/13 14:07		
Salinity	Analytical Method: Calculated							
Salinity (as dissolved solids)	**774**	mg/L	6.4	1		03/25/13 15:58		

REPORT OF LABORATORY ANALYSIS

This report shall not be reproduced, except in full,
without the written consent of Pace Analytical Services, Inc..

Pace Analytical Services, Inc.
9608 Loiret Blvd.
Lenexa, KS 66219
(913)599-5665

ANALYTICAL RESULTS

Project: MARCH 2013 RICO WATER SAMPLING
Pace Project No.: 60140509

Sample: MW-2 DEEP_20130313 **Lab ID: 60140509029** Collected: 03/13/13 15:10 Received: 03/15/13 10:10 Matrix: Water

Parameters	Results	Units	Report Limit	DF	Prepared	Analyzed	CAS No.	Qual
Salinity	Analytical Method: Calculated							
Salinity (as seawater)	**0.60**	PSU	0.014	1		03/25/13 15:58		
2320B Alkalinity	Analytical Method: SM 2320B							
Alkalinity,Bicarbonate (CaCO3)	**79.8**	mg/L	20.0	1		03/22/13 07:49		
Alkalinity, Carbonate (CaCO3)	ND	mg/L	20.0	1		03/22/13 07:49		
Alkalinity, Total as CaCO3	**79.8**	mg/L	20.0	1		03/22/13 07:49		
2540C Total Dissolved Solids	Analytical Method: SM 2540C							
Total Dissolved Solids	**1970**	mg/L	5.0	1		03/20/13 17:28		
2540D Total Suspended Solids	Analytical Method: SM 2540D							
Total Suspended Solids	**138**	mg/L	5.0	1		03/19/13 14:57		
4500S2D Sulfide, Total	Analytical Method: SM 4500-S-2 D							
Sulfide, Total	ND	mg/L	0.050	1		03/20/13 13:39	18496-25-8	
300.0 IC Anions 28 Days	Analytical Method: EPA 300.0							
Chloride	ND	mg/L	1.0	1		03/28/13 22:03	16887-00-6	
Sulfate	**649**	mg/L	100	100		03/28/13 22:21	14808-79-8	
353.2 Nitrogen, NO2/NO3 pres.	Analytical Method: EPA 353.2							
Nitrogen, NO2 plus NO3	ND	mg/L	0.10	1		03/26/13 15:41		
4500CNE Cyanide, Total	Analytical Method: SM 4500-CN-E							
Cyanide	ND	mg/L	0.0050	1		03/20/13 15:27	57-12-5	
5310C TOC	Analytical Method: SM 5310C							
Total Organic Carbon	**0.85**	mg/L	0.50	1		03/25/13 12:15	7440-44-0	

This report shall not be reproduced, except in full,
without the written consent of Pace Analytical Services, Inc..

Pace Analytical Services, Inc.
9608 Loiret Blvd.
Lenexa, KS 66219
(913)599-5665

April 12, 2013

Mark DeFriez
Anderson Engineering Company I
977 W 2100 S.
Salt Lake City, UT 84119

RE: Project: MARCH 2013 RICO WATER SAMPLING
Pace Project No.: 60141075

Dear Mark DeFriez:
Enclosed are the analytical results for sample(s) received by the laboratory on March 23, 2013. The results relate only to the within this report conform to the most current version of the TNI standards, BP LaMP Technical Requirements Revision 10.1, and any applicable Quality Assurance Project Plan (QAPP), or Work Plan unless otherwise narrated in the body of this report.

Sample 60141075004 (DR-7 Composite_20130321) did not get the 5310C TOC and 353.2 Nitrate+ Nitrite analyses as the container was broken when the project arrived. If you have any questions concerning this report, please feel free to contact me.
Sincerely,

Heather M. Wilson

Heather Wilson

heather.wilson@pacelabs.com
Project Manager

Enclosures

REPORT OF LABORATORY ANALYSIS

This report shall not be reproduced, except in full,
without the written consent of Pace Analytical Services, Inc..

Pace Analytical Services, Inc.
9608 Loiret Blvd.
Lenexa, KS 66219
(913)599-5665

CERTIFICATIONS

Project: MARCH 2013 RICO WATER SAMPLING
Pace Project No.: 60141075

Minnesota Certification IDs
1700 Elm Street SE Suite 200, Minneapolis, MN 55414
A2LA Certification #: 2926.01
Alaska Certification #: UST-078
Alaska Certification #MN00064
Arizona Certification #: AZ-0014
Arkansas Certification #: 88-0680
California Certification #: 01155CA
Colorado Certification #Pace
Connecticut Certification #: PH-0256
EPA Region 8 Certification #: Pace
Florida/NELAP Certification #: E87605
Georgia Certification #: 959
Hawaii Certification #Pace
Idaho Certification #: MN00064
Illinois Certification #: 200011
Kansas Certification #: E-10167
Louisiana Certification #: 03086
Louisiana Certification #: LA080009
Maine Certification #: 2007029
Maryland Certification #: 322
Michigan DEQ Certification #: 9909
Minnesota Certification #: 027-053-137
Mississippi Certification #: Pace
Montana Certification #: MT CERT0092
Nebraska Certification #: Pace
Nevada Certification #: MN_00064
New Jersey Certification #: MN-002
New York Certification #: 11647
North Carolina Certification #: 530
North Dakota Certification #: R-036
North Dakota Certification #: R-036A
Ohio VAP Certification #: CL101
Oklahoma Certification #: 9507
Oregon Certification #: MN200001
Oregon Certification #: MN300001
Pennsylvania Certification #: 68-00563
Puerto Rico Certification
Tennessee Certification #: 02818
Texas Certification #: T104704192
Utah Certification #: MN00064
Virginia/DCLS Certification #: 002521
Virginia/VELAP Certification #: 460163
Washington Certification #: C754
West Virginia Certification #: 382
Wisconsin Certification #: 999407970

Montana Certification IDs
602 South 25th Street, Billings, MT 59101
EPA Region 8 Certification #: 8TMS-Q
Idaho Certification #: MT00012
Montana Certification #: MT CERT0040
NVLAP Certification #: 101292-0
Minnesota Dept of Health Certification #: 030-999-442
Washington Department of Ecology #: C993

Green Bay Certification IDs
1241 Bellevue Street, Green Bay, WI 54302
Florida/NELAP Certification #: E87948
Illinois Certification #: 200050
Kentucky Certification #: 82
Louisiana Certification #: 04168
Minnesota Certification #: 055-999-334
New York Certification #: 11888
North Dakota Certification #: R-150
South Carolina Certification #: 83006001
US Dept of Agriculture #: S-76505
Wisconsin Certification #: 405132750

Kansas Certification IDs
9608 Loiret Boulevard, Lenexa, KS 66219
A2LA Certification #: 2456.01
Arkansas Certification #: 12-019-0
Illinois Certification #: 002885
Iowa Certification #: 118
Kansas/NELAP Certification #: E-10116
Louisiana Certification #: 03055
Nevada Certification #: KS000212008A
Oklahoma Certification #: 9205/9935
Texas Certification #: T104704407-12-3
Utah Certification #: KS000212012-2
Illinois Certification #: 003097

This report shall not be reproduced, except in full,
without the written consent of Pace Analytical Services, Inc..

Pace Analytical Services, Inc.
9608 Loiret Blvd.
Lenexa, KS 66219
(913)599-5665

SAMPLE SUMMARY

Project: MARCH 2013 RICO WATER SAMPLING
Pace Project No.: 60141075

Lab ID	Sample ID	Matrix	Date Collected	Date Received
60141075001	**DR-G_20130321**	Water	03/21/13 09:15	03/23/13 08:55
60141075002	**DR-4SW COMPOSITE_20130321**	Water	03/21/13 10:00	03/23/13 08:55
60141075003	**DR-4-SW_20130321**	Water	03/21/13 10:02	03/23/13 08:55
60141075004	**DR-7 COMPOSITE_20130321**	Water	03/21/13 12:04	03/23/13 08:55
60141075005	**DR-7_20130321**	Water	03/21/13 12:06	03/23/13 08:55
60141075006	**DR-2_20130321**	Water	03/21/13 14:05	03/23/13 08:55
60141075007	**DR-2 COMPOSITE_20130321**	Water	03/21/13 13:57	03/23/13 08:55
60141075008	**DR-11_20130321**	Water	03/21/13 14:06	03/23/13 08:55
60141075009	**DR-1COMPOSITE_20130321**	Water	03/21/13 14:45	03/23/13 08:55
60141075010	**DR-1_20130321**	Water	03/21/13 14:43	03/23/13 08:55

This report shall not be reproduced, except in full,
without the written consent of Pace Analytical Services, Inc..

Pace Analytical Services, Inc.
9608 Loiret Blvd.
Lenexa, KS 66219
(913)599-5665

SAMPLE ANALYTE COUNT

Project: MARCH 2013 RICO WATER SAMPLING
Pace Project No.: 60141075

Lab ID	Sample ID	Method	Analysts	Analytes Reported	Laboratory
60141075001	**DR-G_20130321**	EPA 200.7	JGP	4	PASI-K
		EPA 200.8	RJS	25	PASI-M
		EPA 200.8	RJS	23	PASI-M
		EPA 200.8	JGP	19	PASI-K
		EPA 245.1	TEM	1	PASI-M
		EPA 245.1	TEM	1	PASI-M
		EPA 245.1	TJT	1	PASI-K
		SM 2510B	WT1	1	
		Calculated	WT1	2	
		SM 2320B	JMC	3	PASI-K
		SM 2540C	JML	1	PASI-K
		SM 2540D	JML	1	PASI-K
		SM 4500-S-2 D	OL	1	PASI-K
		EPA 300.0	OL	2	PASI-K
		EPA 353.2	DJR	1	PASI-K
		SM 4500-CN-E	AJM	1	PASI-K
		SM 5310C	TJJ	1	PASI-G
60141075002	**DR-4SW COMPOSITE_20130321**	EPA 200.7	JGP	4	PASI-K
		EPA 200.8	RJS	25	PASI-M
		EPA 200.8	RJS	23	PASI-M
		EPA 200.8	JGP	19	PASI-K
		EPA 245.1	TEM	1	PASI-M
		EPA 245.1	TEM	1	PASI-M
		EPA 245.1	TJT	1	PASI-K
		SM 2510B	WT1	1	
		Calculated	WT1	2	
		SM 2320B	JMC	3	PASI-K
		SM 2540C	JML	1	PASI-K
		SM 2540D	JML	1	PASI-K
		SM 4500-S-2 D	OL	1	PASI-K
		EPA 300.0	OL	2	PASI-K
		EPA 353.2	DJR	1	PASI-K
		SM 4500-CN-E	AJM	1	PASI-K
		SM 5310C	TJJ	1	PASI-G
60141075003	**DR-4-SW_20130321**	EPA 200.7	JGP	4	PASI-K
		EPA 200.8	RJS	25	PASI-M
		EPA 200.8	RJS	23	PASI-M

This report shall not be reproduced, except in full,
without the written consent of Pace Analytical Services, Inc..

Pace Analytical Services, Inc.
9608 Loiret Blvd.
Lenexa, KS 66219
(913)599-5665

SAMPLE ANALYTE COUNT

Project: MARCH 2013 RICO WATER SAMPLING
Pace Project No.: 60141075

Lab ID	Sample ID	Method	Analysts	Analytes Reported	Laboratory
		EPA 200.8	JGP	19	PASI-K
		EPA 245.1	TEM	1	PASI-M
		EPA 245.1	TEM	1	PASI-M
		EPA 245.1	TJT	1	PASI-K
		SM 2510B	WT1	1	
		Calculated	WT1	2	
		SM 2320B	JMC	3	PASI-K
		SM 2540C	JML	1	PASI-K
		SM 2540D	JML	1	PASI-K
		SM 4500-S-2 D	OL	1	PASI-K
		EPA 300.0	OL	2	PASI-K
		EPA 353.2	DJR	1	PASI-K
		SM 4500-CN-E	AJM	1	PASI-K
		SM 5310C	TJJ	1	PASI-G
60141075004	**DR-7 COMPOSITE_20130321**	EPA 200.7	JGP	4	PASI-K
		EPA 200.8	RJS	25	PASI-M
		EPA 200.8	RJS	23	PASI-M
		EPA 200.8	JGP	19	PASI-K
		EPA 245.1	TEM	1	PASI-M
		EPA 245.1	TEM	1	PASI-M
		EPA 245.1	TJT	1	PASI-K
		SM 2510B	WT1	1	
		Calculated	WT1	2	
		SM 2320B	JMC	3	PASI-K
		SM 2540C	JML	1	PASI-K
		SM 2540D	JML	1	PASI-K
		SM 4500-S-2 D	OL	1	PASI-K
		EPA 300.0	OL	2	PASI-K
		SM 4500-CN-E	AJM	1	PASI-K
60141075005	**DR-7_20130321**	EPA 200.7	JGP	4	PASI-K
		EPA 200.8	RJS	25	PASI-M
		EPA 200.8	RJS	23	PASI-M
		EPA 200.8	JGP	19	PASI-K
		EPA 245.1	TEM	1	PASI-M
		EPA 245.1	TEM	1	PASI-M
		EPA 245.1	TJT	1	PASI-K
		SM 2510B	WT1	1	

This report shall not be reproduced, except in full,
without the written consent of Pace Analytical Services, Inc..

Pace Analytical Services, Inc.
9608 Loiret Blvd.
Lenexa, KS 66219
(913)599-5665

SAMPLE ANALYTE COUNT

Project: MARCH 2013 RICO WATER SAMPLING
Pace Project No.: 60141075

Lab ID	Sample ID	Method	Analysts	Analytes Reported	Laboratory
		Calculated	WT1	2	
		SM 2320B	JMC	3	PASI-K
		SM 2540C	JML	1	PASI-K
		SM 2540D	JML	1	PASI-K
		SM 4500-S-2 D	OL	1	PASI-K
		EPA 300.0	OL	2	PASI-K
		EPA 353.2	DJR	1	PASI-K
		SM 4500-CN-E	AJM	1	PASI-K
		SM 5310C	TJJ	1	PASI-G
60141075006	**DR-2_20130321**	EPA 200.7	JGP	4	PASI-K
		EPA 200.8	RJS	25	PASI-M
		EPA 200.8	RJS	23	PASI-M
		EPA 200.8	JGP	19	PASI-K
		EPA 245.1	TEM	1	PASI-M
		EPA 245.1	TEM	1	PASI-M
		EPA 245.1	TJT	1	PASI-K
		SM 2510B	WT1	1	
		Calculated	WT1	2	
		SM 2320B	JMC	3	PASI-K
		SM 2540C	JML	1	PASI-K
		SM 2540D	JML	1	PASI-K
		SM 4500-S-2 D	OL	1	PASI-K
		EPA 300.0	OL	2	PASI-K
		EPA 353.2	DJR	1	PASI-K
		SM 4500-CN-E	AJM	1	PASI-K
		SM 5310C	TJJ	1	PASI-G
60141075007	**DR-2 COMPOSITE_20130321**	EPA 200.7	JGP	4	PASI-K
		EPA 200.8	RJS	25	PASI-M
		EPA 200.8	RJS	23	PASI-M
		EPA 200.8	JGP	19	PASI-K
		EPA 245.1	TEM	1	PASI-M
		EPA 245.1	TEM	1	PASI-M
		EPA 245.1	TJT	1	PASI-K
		SM 2510B	WT1	1	
		Calculated	WT1	2	
		SM 2320B	JMC	3	PASI-K
		SM 2540C	JML	1	PASI-K

This report shall not be reproduced, except in full,
without the written consent of Pace Analytical Services, Inc..

Pace Analytical Services, Inc.
9608 Loiret Blvd.
Lenexa, KS 66219
(913)599-5665

SAMPLE ANALYTE COUNT

Project: MARCH 2013 RICO WATER SAMPLING
Pace Project No.: 60141075

Lab ID	Sample ID	Method	Analysts	Analytes Reported	Laboratory
		SM 2540D	JML	1	PASI-K
		SM 4500-S-2 D	OL	1	PASI-K
		EPA 300.0	OL	2	PASI-K
		EPA 353.2	DJR	1	PASI-K
		SM 4500-CN-E	AJM	1	PASI-K
		SM 5310C	TJJ	1	PASI-G
60141075008	**DR-11_20130321**	EPA 200.7	JGP	4	PASI-K
		EPA 200.8	RJS	25	PASI-M
		EPA 200.8	RJS	23	PASI-M
		EPA 200.8	JGP	19	PASI-K
		EPA 245.1	TEM	1	PASI-M
		EPA 245.1	TEM	1	PASI-M
		EPA 245.1	TJT	1	PASI-K
		SM 2510B	WT1	1	
		Calculated	WT1	2	
		SM 2320B	JMC	3	PASI-K
		SM 2540C	JML	1	PASI-K
		SM 2540D	JML	1	PASI-K
		SM 4500-S-2 D	OL	1	PASI-K
		EPA 300.0	OL	2	PASI-K
		EPA 353.2	DJR	1	PASI-K
		SM 4500-CN-E	AJM	1	PASI-K
		SM 5310C	TJJ	1	PASI-G
60141075009	**DR-1COMPOSITE_20130321**	EPA 200.7	JGP	4	PASI-K
		EPA 200.8	RJS	25	PASI-M
		EPA 200.8	RJS	23	PASI-M
		EPA 200.8	JGP	19	PASI-K
		EPA 245.1	TEM	1	PASI-M
		EPA 245.1	TEM	1	PASI-M
		EPA 245.1	TJT	1	PASI-K
		SM 2510B	WT1	1	
		Calculated	WT1	2	
		SM 2320B	JMC	3	PASI-K
		SM 2540C	JML	1	PASI-K
		SM 2540D	JML	1	PASI-K
		SM 4500-S-2 D	OL	1	PASI-K
		EPA 300.0	OL	2	PASI-K

This report shall not be reproduced, except in full,
without the written consent of Pace Analytical Services, Inc..

Pace Analytical Services, Inc.
9608 Loiret Blvd.
Lenexa, KS 66219
(913)599-5665

SAMPLE ANALYTE COUNT

Project: MARCH 2013 RICO WATER SAMPLING
Pace Project No.: 60141075

Lab ID	Sample ID	Method	Analysts	Analytes Reported	Laboratory
		EPA 353.2	DJR	1	PASI-K
		SM 4500-CN-E	AJM	1	PASI-K
		SM 5310C	TJJ	1	PASI-G
60141075010	**DR-1_20130321**	EPA 200.7	JGP	4	PASI-K
		EPA 200.8	RJS	25	PASI-M
		EPA 200.8	RJS	23	PASI-M
		EPA 200.8	JGP	19	PASI-K
		EPA 245.1	TEM	1	PASI-M
		EPA 245.1	TEM	1	PASI-M
		EPA 245.1	TJT	1	PASI-K
		SM 2510B	WT1	1	
		Calculated	WT1	2	
		SM 2320B	JMC	3	PASI-K
		SM 2540C	JML	1	PASI-K
		SM 2540D	JML	1	PASI-K
		SM 4500-S-2 D	OL	1	PASI-K
		EPA 300.0	OL	2	PASI-K
		EPA 353.2	DJR	1	PASI-K
		SM 4500-CN-E	AJM	1	PASI-K
		SM 5310C	TJJ	1	PASI-G

This report shall not be reproduced, except in full,
without the written consent of Pace Analytical Services, Inc..

Pace Analytical Services, Inc.
9608 Loiret Blvd.
Lenexa, KS 66219
(913)599-5665

PROJECT NARRATIVE

Project: MARCH 2013 RICO WATER SAMPLING
Pace Project No.: 60141075

Method: **EPA 200.7**
Description: 200.7 Potentially Diss. Metals
Client: BP Anderson Engineering Company Inc.
Date: April 12, 2013

General Information:
10 samples were analyzed for EPA 200.7. All samples were received in acceptable condition with any exceptions noted below.

Hold Time:
The samples were analyzed within the method required hold times with any exceptions noted below.

Sample Preparation:
The samples were prepared in accordance with EPA 200.7 with any exceptions noted below.

Initial Calibrations (including MS Tune as applicable):
All criteria were within method requirements with any exceptions noted below.

Continuing Calibration:
All criteria were within method requirements with any exceptions noted below.

Method Blank:
All analytes were below the report limit in the method blank with any exceptions noted below.

Laboratory Control Spike:
All laboratory control spike compounds were within QC limits with any exceptions noted below.

Matrix Spikes:
All percent recoveries and relative percent differences (RPDs) were within acceptance criteria with any exceptions noted below.

QC Batch: MPRP/21998

A matrix spike and matrix spike duplicate (MS/MSD) were performed on the following sample(s): 60141075001

M1: Matrix spike recovery exceeded QC limits. Batch accepted based on laboratory control sample (LCS) recovery.

- MSD (Lab ID: 1159212)
  - Calcium, Dissolved

Additional Comments:

This report shall not be reproduced, except in full,
without the written consent of Pace Analytical Services, Inc..

Pace Analytical Services, Inc.
9608 Loiret Blvd.
Lenexa, KS 66219
(913)599-5665

PROJECT NARRATIVE

Project: MARCH 2013 RICO WATER SAMPLING
Pace Project No.: 60141075

Method: **EPA 200.8**
Description: 200.8 MET ICPMS
Client: BP Anderson Engineering Company Inc.
Date: April 12, 2013

General Information:
10 samples were analyzed for EPA 200.8. All samples were received in acceptable condition with any exceptions noted below.

Hold Time:
The samples were analyzed within the method required hold times with any exceptions noted below.

Sample Preparation:
The samples were prepared in accordance with EPA 200.8 with any exceptions noted below.

Initial Calibrations (including MS Tune as applicable):
All criteria were within method requirements with any exceptions noted below.

Continuing Calibration:
All criteria were within method requirements with any exceptions noted below.

Internal Standards:
All internal standards were within QC limits with any exceptions noted below.

Method Blank:
All analytes were below the report limit in the method blank with any exceptions noted below.

Laboratory Control Spike:
All laboratory control spike compounds were within QC limits with any exceptions noted below.

Matrix Spikes:
All percent recoveries and relative percent differences (RPDs) were within acceptance criteria with any exceptions noted below.

Additional Comments:

This report shall not be reproduced, except in full,
without the written consent of Pace Analytical Services, Inc..

Pace Analytical Services, Inc.
9608 Loiret Blvd.
Lenexa, KS 66219
(913)599-5665

PROJECT NARRATIVE

Project: MARCH 2013 RICO WATER SAMPLING
Pace Project No.: 60141075

Method: **EPA 200.8**
Description: 200.8 MET ICPMS, Dissolved
Client: BP Anderson Engineering Company Inc.
Date: April 12, 2013

General Information:
10 samples were analyzed for EPA 200.8. All samples were received in acceptable condition with any exceptions noted below.

Hold Time:
The samples were analyzed within the method required hold times with any exceptions noted below.

Sample Preparation:
The samples were prepared in accordance with EPA 200.8 with any exceptions noted below.

Initial Calibrations (including MS Tune as applicable):
All criteria were within method requirements with any exceptions noted below.

Continuing Calibration:
All criteria were within method requirements with any exceptions noted below.

Internal Standards:
All internal standards were within QC limits with any exceptions noted below.

Method Blank:
All analytes were below the report limit in the method blank with any exceptions noted below.

Laboratory Control Spike:
All laboratory control spike compounds were within QC limits with any exceptions noted below.

Matrix Spikes:
All percent recoveries and relative percent differences (RPDs) were within acceptance criteria with any exceptions noted below.

Additional Comments:

This report shall not be reproduced, except in full,
without the written consent of Pace Analytical Services, Inc..

Pace Analytical Services, Inc.
9608 Loiret Blvd.
Lenexa, KS 66219
(913)599-5665

PROJECT NARRATIVE

Project: MARCH 2013 RICO WATER SAMPLING
Pace Project No.: 60141075

Method: **EPA 200.8**
Description: 200.8 Potentially Diss. Metals
Client: BP Anderson Engineering Company Inc.
Date: April 12, 2013

General Information:
10 samples were analyzed for EPA 200.8. All samples were received in acceptable condition with any exceptions noted below.

Hold Time:
The samples were analyzed within the method required hold times with any exceptions noted below.

Sample Preparation:
The samples were prepared in accordance with EPA 200.8 with any exceptions noted below.

Initial Calibrations (including MS Tune as applicable):
All criteria were within method requirements with any exceptions noted below.

Continuing Calibration:
All criteria were within method requirements with any exceptions noted below.

Internal Standards:
All internal standards were within QC limits with any exceptions noted below.

Method Blank:
All analytes were below the report limit in the method blank with any exceptions noted below.

QC Batch: MPRP/21999

B: Analyte was detected in the associated method blank.

- BLANK for HBN 284106 [MPRP/219 (Lab ID: 1159213)
  - Chromium, Dissolved
  - Iron, Dissolved
  - Lead, Dissolved
  - Zinc, Dissolved

Laboratory Control Spike:
All laboratory control spike compounds were within QC limits with any exceptions noted below.

Matrix Spikes:
All percent recoveries and relative percent differences (RPDs) were within acceptance criteria with any exceptions noted below.

Additional Comments:

This report shall not be reproduced, except in full,
without the written consent of Pace Analytical Services, Inc..

Pace Analytical Services, Inc.
9608 Loiret Blvd.
Lenexa, KS 66219
(913)599-5665

PROJECT NARRATIVE

Project: MARCH 2013 RICO WATER SAMPLING
Pace Project No.: 60141075

Method: **EPA 245.1**
Description: 245.1 Mercury
Client: BP Anderson Engineering Company Inc.
Date: April 12, 2013

General Information:
10 samples were analyzed for EPA 245.1. All samples were received in acceptable condition with any exceptions noted below.

Hold Time:
The samples were analyzed within the method required hold times with any exceptions noted below.

Sample Preparation:
The samples were prepared in accordance with EPA 245.1 with any exceptions noted below.

Initial Calibrations (including MS Tune as applicable):
All criteria were within method requirements with any exceptions noted below.

Continuing Calibration:
All criteria were within method requirements with any exceptions noted below.

Method Blank:
All analytes were below the report limit in the method blank with any exceptions noted below.

Laboratory Control Spike:
All laboratory control spike compounds were within QC limits with any exceptions noted below.

Matrix Spikes:
All percent recoveries and relative percent differences (RPDs) were within acceptance criteria with any exceptions noted below.

Additional Comments:

This report shall not be reproduced, except in full,
without the written consent of Pace Analytical Services, Inc..

Pace Analytical Services, Inc.
9608 Loiret Blvd.
Lenexa, KS 66219
(913)599-5665

PROJECT NARRATIVE

Project: MARCH 2013 RICO WATER SAMPLING
Pace Project No.: 60141075

Method: **EPA 245.1**
Description: 245.1 Mercury, Dissolved
Client: BP Anderson Engineering Company Inc.
Date: April 12, 2013

General Information:
10 samples were analyzed for EPA 245.1. All samples were received in acceptable condition with any exceptions noted below.

Hold Time:
The samples were analyzed within the method required hold times with any exceptions noted below.

Sample Preparation:
The samples were prepared in accordance with EPA 245.1 with any exceptions noted below.

Initial Calibrations (including MS Tune as applicable):
All criteria were within method requirements with any exceptions noted below.

Continuing Calibration:
All criteria were within method requirements with any exceptions noted below.

Method Blank:
All analytes were below the report limit in the method blank with any exceptions noted below.

Laboratory Control Spike:
All laboratory control spike compounds were within QC limits with any exceptions noted below.

Matrix Spikes:
All percent recoveries and relative percent differences (RPDs) were within acceptance criteria with any exceptions noted below.

Additional Comments:

This report shall not be reproduced, except in full,
without the written consent of Pace Analytical Services, Inc..

Pace Analytical Services, Inc.
9608 Loiret Blvd.
Lenexa, KS 66219
(913)599-5665

PROJECT NARRATIVE

Project: MARCH 2013 RICO WATER SAMPLING
Pace Project No.: 60141075

Method: **EPA 245.1**
Description: 245.1 Potentially Diss Mercury
Client: BP Anderson Engineering Company Inc.
Date: April 12, 2013

General Information:
10 samples were analyzed for EPA 245.1. All samples were received in acceptable condition with any exceptions noted below.

Hold Time:
The samples were analyzed within the method required hold times with any exceptions noted below.

Sample Preparation:
The samples were prepared in accordance with EPA 245.1 with any exceptions noted below.

Initial Calibrations (including MS Tune as applicable):
All criteria were within method requirements with any exceptions noted below.

Continuing Calibration:
All criteria were within method requirements with any exceptions noted below.

Method Blank:
All analytes were below the report limit in the method blank with any exceptions noted below.

Laboratory Control Spike:
All laboratory control spike compounds were within QC limits with any exceptions noted below.

Matrix Spikes:
All percent recoveries and relative percent differences (RPDs) were within acceptance criteria with any exceptions noted below.

Additional Comments:

This report shall not be reproduced, except in full,
without the written consent of Pace Analytical Services, Inc..

Pace Analytical Services, Inc.
9608 Loiret Blvd.
Lenexa, KS 66219
(913)599-5665

PROJECT NARRATIVE

Project: MARCH 2013 RICO WATER SAMPLING
Pace Project No.: 60141075

Method: **SM 2510B**
Description: 2510B Specific Conductance
Client: BP Anderson Engineering Company Inc.
Date: April 12, 2013

General Information:
10 samples were analyzed for SM 2510B. All samples were received in acceptable condition with any exceptions noted below.

Hold Time:
The samples were analyzed within the method required hold times with any exceptions noted below.

Initial Calibrations (including MS Tune as applicable):
All criteria were within method requirements with any exceptions noted below.

Continuing Calibration:
All criteria were within method requirements with any exceptions noted below.

Internal Standards:
All internal standards were within QC limits with any exceptions noted below.

Surrogates:
All surrogates were within QC limits with any exceptions noted below.

Method Blank:
All analytes were below the report limit in the method blank with any exceptions noted below.

Laboratory Control Spike:
All laboratory control spike compounds were within QC limits with any exceptions noted below.

Matrix Spikes:
All percent recoveries and relative percent differences (RPDs) were within acceptance criteria with any exceptions noted below.

Duplicate Sample:
All duplicate sample results were within method acceptance criteria with any exceptions noted below.

Additional Comments:

This report shall not be reproduced, except in full,
without the written consent of Pace Analytical Services, Inc..

Pace Analytical Services, Inc.
9608 Loiret Blvd.
Lenexa, KS 66219
(913)599-5665

PROJECT NARRATIVE

Project: MARCH 2013 RICO WATER SAMPLING
Pace Project No.: 60141075

Method: **Calculated**
Description: Salinity
Client: BP Anderson Engineering Company Inc.
Date: April 12, 2013

General Information:
10 samples were analyzed for Calculated. All samples were received in acceptable condition with any exceptions noted below.

Hold Time:
The samples were analyzed within the method required hold times with any exceptions noted below.

Initial Calibrations (including MS Tune as applicable):
All criteria were within method requirements with any exceptions noted below.

Continuing Calibration:
All criteria were within method requirements with any exceptions noted below.

Internal Standards:
All internal standards were within QC limits with any exceptions noted below.

Surrogates:
All surrogates were within QC limits with any exceptions noted below.

Method Blank:
All analytes were below the report limit in the method blank with any exceptions noted below.

Laboratory Control Spike:
All laboratory control spike compounds were within QC limits with any exceptions noted below.

Matrix Spikes:
All percent recoveries and relative percent differences (RPDs) were within acceptance criteria with any exceptions noted below.

Additional Comments:

This report shall not be reproduced, except in full,
without the written consent of Pace Analytical Services, Inc..

Pace Analytical Services, Inc.
9608 Loiret Blvd.
Lenexa, KS 66219
(913)599-5665

PROJECT NARRATIVE

Project: MARCH 2013 RICO WATER SAMPLING
Pace Project No.: 60141075

Method: **SM 2320B**
Description: 2320B Alkalinity
Client: BP Anderson Engineering Company Inc.
Date: April 12, 2013

General Information:
10 samples were analyzed for SM 2320B. All samples were received in acceptable condition with any exceptions noted below.

Hold Time:
The samples were analyzed within the method required hold times with any exceptions noted below.

Method Blank:
All analytes were below the report limit in the method blank with any exceptions noted below.

Laboratory Control Spike:
All laboratory control spike compounds were within QC limits with any exceptions noted below.

Matrix Spikes:
All percent recoveries and relative percent differences (RPDs) were within acceptance criteria with any exceptions noted below.

Duplicate Sample:
All duplicate sample results were within method acceptance criteria with any exceptions noted below.

Additional Comments:

This report shall not be reproduced, except in full,
without the written consent of Pace Analytical Services, Inc..

Pace Analytical Services, Inc.
9608 Loiret Blvd.
Lenexa, KS 66219
(913)599-5665

PROJECT NARRATIVE

Project: MARCH 2013 RICO WATER SAMPLING
Pace Project No.: 60141075

Method: **SM 2540C**
Description: 2540C Total Dissolved Solids
Client: BP Anderson Engineering Company Inc.
Date: April 12, 2013

General Information:
10 samples were analyzed for SM 2540C. All samples were received in acceptable condition with any exceptions noted below.

Hold Time:
The samples were analyzed within the method required hold times with any exceptions noted below.

Method Blank:
All analytes were below the report limit in the method blank with any exceptions noted below.

Laboratory Control Spike:
All laboratory control spike compounds were within QC limits with any exceptions noted below.

Matrix Spikes:
All percent recoveries and relative percent differences (RPDs) were within acceptance criteria with any exceptions noted below.

Duplicate Sample:
All duplicate sample results were within method acceptance criteria with any exceptions noted below.

Additional Comments:

This report shall not be reproduced, except in full,
without the written consent of Pace Analytical Services, Inc..

Pace Analytical Services, Inc.
9608 Loiret Blvd.
Lenexa, KS 66219
(913)599-5665

PROJECT NARRATIVE

Project: MARCH 2013 RICO WATER SAMPLING
Pace Project No.: 60141075

Method: **SM 2540D**
Description: 2540D Total Suspended Solids
Client: BP Anderson Engineering Company Inc.
Date: April 12, 2013

General Information:
10 samples were analyzed for SM 2540D. All samples were received in acceptable condition with any exceptions noted below.

Hold Time:
The samples were analyzed within the method required hold times with any exceptions noted below.

Method Blank:
All analytes were below the report limit in the method blank with any exceptions noted below.

Laboratory Control Spike:
All laboratory control spike compounds were within QC limits with any exceptions noted below.

Matrix Spikes:
All percent recoveries and relative percent differences (RPDs) were within acceptance criteria with any exceptions noted below.

Duplicate Sample:
All duplicate sample results were within method acceptance criteria with any exceptions noted below.

Additional Comments:

This report shall not be reproduced, except in full,
without the written consent of Pace Analytical Services, Inc..

Pace Analytical Services, Inc.
9608 Loiret Blvd.
Lenexa, KS 66219
(913)599-5665

PROJECT NARRATIVE

Project: MARCH 2013 RICO WATER SAMPLING
Pace Project No.: 60141075

Method: **SM 4500-S-2 D**
Description: 4500S2D Sulfide, Total
Client: BP Anderson Engineering Company Inc.
Date: April 12, 2013

General Information:
10 samples were analyzed for SM 4500-S-2 D. All samples were received in acceptable condition with any exceptions noted below.

Hold Time:
The samples were analyzed within the method required hold times with any exceptions noted below.

Method Blank:
All analytes were below the report limit in the method blank with any exceptions noted below.

Laboratory Control Spike:
All laboratory control spike compounds were within QC limits with any exceptions noted below.

Matrix Spikes:
All percent recoveries and relative percent differences (RPDs) were within acceptance criteria with any exceptions noted below.

Additional Comments:

This report shall not be reproduced, except in full,
without the written consent of Pace Analytical Services, Inc..

Pace Analytical Services, Inc.
9608 Loiret Blvd.
Lenexa, KS 66219
(913)599-5665

PROJECT NARRATIVE

Project: MARCH 2013 RICO WATER SAMPLING
Pace Project No.: 60141075

Method: **EPA 300.0**
Description: 300.0 IC Anions 28 Days
Client: BP Anderson Engineering Company Inc.
Date: April 12, 2013

General Information:
10 samples were analyzed for EPA 300.0. All samples were received in acceptable condition with any exceptions noted below.

Hold Time:
The samples were analyzed within the method required hold times with any exceptions noted below.

Initial Calibrations (including MS Tune as applicable):
All criteria were within method requirements with any exceptions noted below.

Continuing Calibration:
All criteria were within method requirements with any exceptions noted below.

Method Blank:
All analytes were below the report limit in the method blank with any exceptions noted below.

QC Batch: WETA/24080

B: Analyte was detected in the associated method blank.

- BLANK for HBN 285060 [WETA/240 (Lab ID: 1162848)
  - Chloride

Laboratory Control Spike:
All laboratory control spike compounds were within QC limits with any exceptions noted below.

Matrix Spikes:
All percent recoveries and relative percent differences (RPDs) were within acceptance criteria with any exceptions noted below.

Additional Comments:

This report shall not be reproduced, except in full,
without the written consent of Pace Analytical Services, Inc..

Pace Analytical Services, Inc.
9608 Loiret Blvd.
Lenexa, KS 66219
(913)599-5665

PROJECT NARRATIVE

Project: MARCH 2013 RICO WATER SAMPLING
Pace Project No.: 60141075

Method: **EPA 353.2**
Description: 353.2 Nitrogen, NO2/NO3 pres.
Client: BP Anderson Engineering Company Inc.
Date: April 12, 2013

General Information:
9 samples were analyzed for EPA 353.2. All samples were received in acceptable condition with any exceptions noted below.

Hold Time:
The samples were analyzed within the method required hold times with any exceptions noted below.

Initial Calibrations (including MS Tune as applicable):
All criteria were within method requirements with any exceptions noted below.

Continuing Calibration:
All criteria were within method requirements with any exceptions noted below.

Method Blank:
All analytes were below the report limit in the method blank with any exceptions noted below.

Laboratory Control Spike:
All laboratory control spike compounds were within QC limits with any exceptions noted below.

Matrix Spikes:
All percent recoveries and relative percent differences (RPDs) were within acceptance criteria with any exceptions noted below.

Duplicate Sample:
All duplicate sample results were within method acceptance criteria with any exceptions noted below.

Additional Comments:

This report shall not be reproduced, except in full,
without the written consent of Pace Analytical Services, Inc..

Pace Analytical Services, Inc.
9608 Loiret Blvd.
Lenexa, KS 66219
(913)599-5665

PROJECT NARRATIVE

Project: MARCH 2013 RICO WATER SAMPLING
Pace Project No.: 60141075

Method: **SM 4500-CN-E**
Description: 4500CNE Cyanide, Total
Client: BP Anderson Engineering Company Inc.
Date: April 12, 2013

General Information:
10 samples were analyzed for SM 4500-CN-E. All samples were received in acceptable condition with any exceptions noted below.

Hold Time:
The samples were analyzed within the method required hold times with any exceptions noted below.

Initial Calibrations (including MS Tune as applicable):
All criteria were within method requirements with any exceptions noted below.

Continuing Calibration:
All criteria were within method requirements with any exceptions noted below.

Method Blank:
All analytes were below the report limit in the method blank with any exceptions noted below.

Laboratory Control Spike:
All laboratory control spike compounds were within QC limits with any exceptions noted below.

Matrix Spikes:
All percent recoveries and relative percent differences (RPDs) were within acceptance criteria with any exceptions noted below.

Duplicate Sample:
All duplicate sample results were within method acceptance criteria with any exceptions noted below.

Additional Comments:

This report shall not be reproduced, except in full,
without the written consent of Pace Analytical Services, Inc..

Pace Analytical Services, Inc.
9608 Loiret Blvd.
Lenexa, KS 66219
(913)599-5665

PROJECT NARRATIVE

Project: MARCH 2013 RICO WATER SAMPLING
Pace Project No.: 60141075

Method: **SM 5310C**
Description: 5310C TOC
Client: BP Anderson Engineering Company Inc.
Date: April 12, 2013

General Information:
9 samples were analyzed for SM 5310C. All samples were received in acceptable condition with any exceptions noted below.

Hold Time:
The samples were analyzed within the method required hold times with any exceptions noted below.

Initial Calibrations (including MS Tune as applicable):
All criteria were within method requirements with any exceptions noted below.

Continuing Calibration:
All criteria were within method requirements with any exceptions noted below.

Method Blank:
All analytes were below the report limit in the method blank with any exceptions noted below.

Laboratory Control Spike:
All laboratory control spike compounds were within QC limits with any exceptions noted below.

Matrix Spikes:
All percent recoveries and relative percent differences (RPDs) were within acceptance criteria with any exceptions noted below.

Additional Comments:

This data package has been reviewed for quality and completeness and is approved for release.

This report shall not be reproduced, except in full,
without the written consent of Pace Analytical Services, Inc..

Pace Analytical Services, Inc.
9608 Loiret Blvd.
Lenexa, KS 66219
(913)599-5665

ANALYTICAL RESULTS

Project: MARCH 2013 RICO WATER SAMPLING
Pace Project No.: 60141075

Sample: DR-G_20130321 **Lab ID: 60141075001** Collected: 03/21/13 09:15 Received: 03/23/13 08:55 Matrix: Water

Parameters	Results	Units	Report Limit	DF	Prepared	Analyzed	CAS No.	Qual
200.7 Potentially Diss. Metals	Analytical Method: EPA 200.7 Preparation Method: EPA 200.7							
Calcium, Dissolved	**78700**	ug/L	100	1	03/25/13 15:00	04/05/13 16:49	7440-70-2	M1
Magnesium, Dissolved	**10600**	ug/L	50.0	1	03/25/13 15:00	04/05/13 16:49	7439-95-4	
Potassium, Dissolved	**1490**	ug/L	500	1	03/25/13 15:00	04/05/13 16:49	7440-09-7	
Sodium, Dissolved	**6140**	ug/L	500	1	03/25/13 15:00	04/05/13 16:49	7440-23-5	
200.8 MET ICPMS	Analytical Method: EPA 200.8 Preparation Method: EPA 200.8							
Aluminum	**7.8**	ug/L	4.0	1	03/27/13 09:09	04/02/13 02:11	7429-90-5	
Antimony	ND	ug/L	0.50	1	03/27/13 09:09	04/02/13 02:11	7440-36-0	
Arsenic	ND	ug/L	0.50	1	03/27/13 09:09	04/02/13 02:11	7440-38-2	
Barium	**84.9**	ug/L	0.30	1	03/27/13 09:09	04/02/13 02:11	7440-39-3	
Beryllium	ND	ug/L	0.20	1	03/27/13 09:09	04/02/13 02:11	7440-41-7	
Cadmium	**0.38**	ug/L	0.080	1	03/27/13 09:09	04/02/13 02:11	7440-43-9	
Calcium	**86200**	ug/L	200	10	03/27/13 09:09	04/02/13 15:36	7440-70-2	M6
Chromium	**0.69**	ug/L	0.50	1	03/27/13 09:09	04/02/13 02:11	7440-47-3	
Cobalt	ND	ug/L	0.50	1	03/27/13 09:09	04/02/13 02:11	7440-48-4	
Copper	**0.74**	ug/L	0.50	1	03/27/13 09:09	04/02/13 02:11	7440-50-8	
Iron	**51.1**	ug/L	50.0	1	03/27/13 09:09	04/02/13 02:11	7439-89-6	
Lead	**0.13**	ug/L	0.10	1	03/27/13 09:09	04/02/13 02:11	7439-92-1	
Magnesium	**11100**	ug/L	5.0	1	03/27/13 09:09	04/02/13 02:11	7439-95-4	
Manganese	**110**	ug/L	0.50	1	03/27/13 09:09	04/02/13 02:11	7439-96-5	
Molybdenum	**1.4**	ug/L	0.50	1	03/27/13 09:09	04/02/13 02:11	7439-98-7	
Nickel	ND	ug/L	0.50	1	03/27/13 09:09	04/02/13 02:11	7440-02-0	
Potassium	**1550**	ug/L	20.0	1	03/27/13 09:09	04/02/13 02:11	7440-09-7	
Selenium	**0.75**	ug/L	0.50	1	03/27/13 09:09	04/02/13 02:11	7782-49-2	
Silica	**9250**	ug/L	268	5	03/27/13 09:09	04/02/13 02:29	7631-86-9	
Silver	ND	ug/L	0.50	1	03/27/13 09:09	04/02/13 02:11	7440-22-4	
Sodium	**5970**	ug/L	50.0	1	03/27/13 09:09	04/02/13 02:11	7440-23-5	
Thallium	ND	ug/L	0.10	1	03/27/13 09:09	04/02/13 02:11	7440-28-0	
Total Hardness by 2340B	**261000**	ug/L	710	10	03/27/13 09:09	04/02/13 15:36		
Vanadium	**0.12**	ug/L	0.10	1	03/27/13 09:09	04/02/13 02:11	7440-62-2	
Zinc	**96.1**	ug/L	5.0	1	03/27/13 09:09	04/02/13 02:11	7440-66-6	
200.8 MET ICPMS, Dissolved	Analytical Method: EPA 200.8 Preparation Method: EPA 200.8							
Aluminum, Dissolved	ND	ug/L	4.0	1	03/27/13 09:14	04/03/13 18:27	7429-90-5	
Antimony, Dissolved	ND	ug/L	0.50	1	03/27/13 09:14	04/03/13 18:27	7440-36-0	
Arsenic, Dissolved	ND	ug/L	0.50	1	03/27/13 09:14	04/03/13 18:27	7440-38-2	
Barium, Dissolved	**84.9**	ug/L	0.30	1	03/27/13 09:14	04/03/13 18:27	7440-39-3	
Beryllium, Dissolved	ND	ug/L	0.20	1	03/27/13 09:14	04/08/13 16:49	7440-41-7	
Cadmium, Dissolved	**0.34**	ug/L	0.080	1	03/27/13 09:14	04/03/13 18:27	7440-43-9	
Calcium, Dissolved	**81400**	ug/L	100	5	03/27/13 09:14	04/03/13 18:49	7440-70-2	M6
Chromium, Dissolved	ND	ug/L	0.50	1	03/27/13 09:14	04/03/13 18:27	7440-47-3	
Cobalt, Dissolved	ND	ug/L	0.50	1	03/27/13 09:14	04/03/13 18:27	7440-48-4	
Copper, Dissolved	**1.0**	ug/L	0.50	1	03/27/13 09:14	04/03/13 18:27	7440-50-8	
Iron, Dissolved	ND	ug/L	50.0	1	03/27/13 09:14	04/03/13 18:27	7439-89-6	
Lead, Dissolved	ND	ug/L	0.10	1	03/27/13 09:14	04/03/13 18:27	7439-92-1	
Magnesium, Dissolved	**11100**	ug/L	5.0	1	03/27/13 09:14	04/03/13 18:27	7439-95-4	M6

This report shall not be reproduced, except in full,
without the written consent of Pace Analytical Services, Inc..

Pace Analytical Services, Inc.
9608 Loiret Blvd.
Lenexa, KS 66219
(913)599-5665

ANALYTICAL RESULTS

Project: MARCH 2013 RICO WATER SAMPLING
Pace Project No.: 60141075

Sample: DR-G_20130321 **Lab ID: 60141075001** Collected: 03/21/13 09:15 Received: 03/23/13 08:55 Matrix: Water

Parameters	Results	Units	Report Limit	DF	Prepared	Analyzed	CAS No.	Qual
200.8 MET ICPMS, Dissolved	Analytical Method: EPA 200.8 Preparation Method: EPA 200.8							
Manganese, Dissolved	**112**	ug/L	0.50	1	03/27/13 09:14	04/03/13 18:27	7439-96-5	
Molybdenum, Dissolved	**1.3**	ug/L	0.50	1	03/27/13 09:14	04/03/13 18:27	7439-98-7	
Nickel, Dissolved	ND	ug/L	0.50	1	03/27/13 09:14	04/03/13 18:27	7440-02-0	
Potassium, Dissolved	**1530**	ug/L	20.0	1	03/27/13 09:14	04/03/13 18:27	7440-09-7	
Selenium, Dissolved	**0.72**	ug/L	0.50	1	03/27/13 09:14	04/08/13 16:49	7782-49-2	
Silver, Dissolved	ND	ug/L	0.50	1	03/27/13 09:14	04/03/13 18:27	7440-22-4	
Sodium, Dissolved	**6040**	ug/L	50.0	1	03/27/13 09:14	04/03/13 18:27	7440-23-5	
Thallium, Dissolved	ND	ug/L	0.10	1	03/27/13 09:14	04/03/13 18:27	7440-28-0	
Vanadium, Dissolved	**0.12**	ug/L	0.10	1	03/27/13 09:14	04/03/13 18:27	7440-62-2	
Zinc, Dissolved	**45.5**	ug/L	5.0	1	03/27/13 09:14	04/03/13 18:27	7440-66-6	
200.8 Potentially Diss. Metals	Analytical Method: EPA 200.8 Preparation Method: EPA 200.8							
Aluminum, Dissolved	**7.8J**	ug/L	50.0	1	03/25/13 15:00	04/08/13 17:47	7429-90-5	
Antimony, Dissolved	ND	ug/L	1.0	1	03/25/13 15:00	04/08/13 17:47	7440-36-0	
Arsenic, Dissolved	**0.21J**	ug/L	1.0	1	03/25/13 15:00	04/08/13 17:47	7440-38-2	
Barium, Dissolved	**79.6**	ug/L	1.0	1	03/25/13 15:00	04/08/13 17:47	7440-39-3	
Beryllium, Dissolved	ND	ug/L	0.50	1	03/25/13 15:00	04/08/13 17:47	7440-41-7	
Cadmium, Dissolved	**0.34J**	ug/L	0.50	1	03/25/13 15:00	04/08/13 17:47	7440-43-9	
Chromium, Dissolved	**1.4**	ug/L	1.0	1	03/25/13 15:00	04/08/13 17:47	7440-47-3	B
Cobalt, Dissolved	**0.14J**	ug/L	1.0	1	03/25/13 15:00	04/08/13 17:47	7440-48-4	
Copper, Dissolved	**0.66J**	ug/L	1.0	1	03/25/13 15:00	04/08/13 17:47	7440-50-8	
Iron, Dissolved	**54.1**	ug/L	50.0	1	03/25/13 15:00	04/08/13 17:47	7439-89-6	
Lead, Dissolved	**0.66J**	ug/L	1.0	1	03/25/13 15:00	04/08/13 17:47	7439-92-1	B
Manganese, Dissolved	**103**	ug/L	1.0	1	03/25/13 15:00	04/08/13 17:47	7439-96-5	
Molybdenum, Dissolved	**1.7**	ug/L	1.0	1	03/25/13 15:00	04/08/13 17:47	7439-98-7	
Nickel, Dissolved	ND	ug/L	1.0	1	03/25/13 15:00	04/08/13 17:47	7440-02-0	
Selenium, Dissolved	**0.86J**	ug/L	1.0	1	03/25/13 15:00	04/08/13 17:47	7782-49-2	
Silver, Dissolved	ND	ug/L	0.50	1	03/25/13 15:00	04/08/13 17:47	7440-22-4	
Thallium, Dissolved	**0.061J**	ug/L	1.0	1	03/25/13 15:00	04/08/13 17:47	7440-28-0	
Vanadium, Dissolved	**0.38J**	ug/L	1.0	1	03/25/13 15:00	04/08/13 17:47	7440-62-2	
Zinc, Dissolved	**91.0**	ug/L	10.0	1	03/25/13 15:00	04/08/13 17:47	7440-66-6	
245.1 Mercury	Analytical Method: EPA 245.1 Preparation Method: EPA 245.1							
Mercury	ND	ug/L	0.20	1	03/27/13 11:18	04/03/13 12:44	7439-97-6	
245.1 Mercury, Dissolved	Analytical Method: EPA 245.1 Preparation Method: EPA 245.1							
Mercury, Dissolved	ND	ug/L	0.20	1	03/27/13 11:12	04/03/13 13:42	7439-97-6	
245.1 Potentially Diss Mercury	Analytical Method: EPA 245.1 Preparation Method: EPA 245.1							
Mercury, Dissolved	ND	ug/L	0.20	1	03/26/13 16:35	03/27/13 13:25	7439-97-6	
2510B Specific Conductance	Analytical Method: SM 2510B							
Specific Conductance	**515**	umhos/cm	10.0	1		04/02/13 14:14		
Salinity	Analytical Method: Calculated							
Salinity (as dissolved solids)	**330**	mg/L	6.4	1		04/05/13 11:03		

REPORT OF LABORATORY ANALYSIS

This report shall not be reproduced, except in full,
without the written consent of Pace Analytical Services, Inc..

Pace Analytical Services, Inc.
9608 Loiret Blvd.
Lenexa, KS 66219
(913)599-5665

ANALYTICAL RESULTS

Project: MARCH 2013 RICO WATER SAMPLING
Pace Project No.: 60141075

Sample: DR-G_20130321 **Lab ID: 60141075001** Collected: 03/21/13 09:15 Received: 03/23/13 08:55 Matrix: Water

Parameters	Results	Units	Report Limit	DF	Prepared	Analyzed	CAS No.	Qual
Salinity	Analytical Method: Calculated							
Salinity (as seawater)	**0.25**	PSU	0.014	1		04/05/13 11:03		
2320B Alkalinity	Analytical Method: SM 2320B							
Alkalinity,Bicarbonate (CaCO3)	**150**	mg/L	20.0	1		04/01/13 11:30		
Alkalinity, Carbonate (CaCO3)	ND	mg/L	20.0	1		04/01/13 11:30		
Alkalinity, Total as CaCO3	**150**	mg/L	20.0	1		04/01/13 11:30		
2540C Total Dissolved Solids	Analytical Method: SM 2540C							
Total Dissolved Solids	**301**	mg/L	5.0	1		03/27/13 14:49		
2540D Total Suspended Solids	Analytical Method: SM 2540D							
Total Suspended Solids	ND	mg/L	5.0	1		03/27/13 09:06		
4500S2D Sulfide, Total	Analytical Method: SM 4500-S-2 D							
Sulfide, Total	ND	mg/L	0.050	1		03/28/13 13:05	18496-25-8	
300.0 IC Anions 28 Days	Analytical Method: EPA 300.0							
Chloride	**4.9**	mg/L	1.0	1		04/01/13 17:00	16887-00-6	B
Sulfate	**111**	mg/L	10.0	10		04/01/13 11:52	14808-79-8	
353.2 Nitrogen, NO2/NO3 pres.	Analytical Method: EPA 353.2							
Nitrogen, NO2 plus NO3	ND	mg/L	0.10	1		03/26/13 15:52		
4500CNE Cyanide, Total	Analytical Method: SM 4500-CN-E							
Cyanide	ND	mg/L	0.0050	1		03/27/13 15:47	57-12-5	
5310C TOC	Analytical Method: SM 5310C							
Total Organic Carbon	**0.71**	mg/L	0.50	1		04/02/13 04:04	7440-44-0	

This report shall not be reproduced, except in full,
without the written consent of Pace Analytical Services, Inc..

Pace Analytical Services, Inc.
9608 Loiret Blvd.
Lenexa, KS 66219
(913)599-5665

ANALYTICAL RESULTS

Project: MARCH 2013 RICO WATER SAMPLING
Pace Project No.: 60141075

Sample: DR-4SW COMPOSITE_20130321 **Lab ID: 60141075002** Collected: 03/21/13 10:00 Received: 03/23/13 08:55 Matrix: Water

Parameters	Results	Units	Report Limit	DF	Prepared	Analyzed	CAS No.	Qual
200.7 Potentially Diss. Metals	Analytical Method: EPA 200.7 Preparation Method: EPA 200.7							
Calcium, Dissolved	**95600**	ug/L	100	1	03/25/13 15:00	04/05/13 16:56	7440-70-2	
Magnesium, Dissolved	**12300**	ug/L	50.0	1	03/25/13 15:00	04/05/13 16:56	7439-95-4	
Potassium, Dissolved	**1910**	ug/L	500	1	03/25/13 15:00	04/05/13 16:56	7440-09-7	
Sodium, Dissolved	**7550**	ug/L	500	1	03/25/13 15:00	04/05/13 16:56	7440-23-5	
200.8 MET ICPMS	Analytical Method: EPA 200.8 Preparation Method: EPA 200.8							
Aluminum	**13.8**	ug/L	4.0	1	03/27/13 09:09	04/02/13 02:38	7429-90-5	
Antimony	ND	ug/L	0.50	1	03/27/13 09:09	04/02/13 02:38	7440-36-0	
Arsenic	ND	ug/L	0.50	1	03/27/13 09:09	04/02/13 02:38	7440-38-2	
Barium	**70.0**	ug/L	0.30	1	03/27/13 09:09	04/02/13 02:38	7440-39-3	
Beryllium	ND	ug/L	0.20	1	03/27/13 09:09	04/02/13 02:38	7440-41-7	
Cadmium	**0.64**	ug/L	0.080	1	03/27/13 09:09	04/02/13 02:38	7440-43-9	
Calcium	**101000**	ug/L	200	10	03/27/13 09:09	04/02/13 15:51	7440-70-2	
Chromium	ND	ug/L	0.50	1	03/27/13 09:09	04/02/13 02:38	7440-47-3	
Cobalt	ND	ug/L	0.50	1	03/27/13 09:09	04/02/13 02:38	7440-48-4	
Copper	**0.86**	ug/L	0.50	1	03/27/13 09:09	04/02/13 02:38	7440-50-8	
Iron	**131**	ug/L	50.0	1	03/27/13 09:09	04/02/13 02:38	7439-89-6	
Lead	**0.25**	ug/L	0.10	1	03/27/13 09:09	04/02/13 02:38	7439-92-1	
Magnesium	**12500**	ug/L	5.0	1	03/27/13 09:09	04/02/13 02:38	7439-95-4	
Manganese	**328**	ug/L	0.50	1	03/27/13 09:09	04/02/13 02:38	7439-96-5	
Molybdenum	**1.8**	ug/L	0.50	1	03/27/13 09:09	04/02/13 02:38	7439-98-7	
Nickel	**0.56**	ug/L	0.50	1	03/27/13 09:09	04/02/13 02:38	7440-02-0	
Potassium	**1910**	ug/L	20.0	1	03/27/13 09:09	04/02/13 02:38	7440-09-7	
Selenium	**0.75**	ug/L	0.50	1	03/27/13 09:09	04/02/13 02:38	7782-49-2	
Silica	**10600**	ug/L	535	10	03/27/13 09:09	04/02/13 15:51	7631-86-9	
Silver	ND	ug/L	0.50	1	03/27/13 09:09	04/02/13 02:38	7440-22-4	
Sodium	**6840**	ug/L	50.0	1	03/27/13 09:09	04/02/13 02:38	7440-23-5	
Thallium	ND	ug/L	0.10	1	03/27/13 09:09	04/02/13 02:38	7440-28-0	
Total Hardness by 2340B	**304000**	ug/L	710	10	03/27/13 09:09	04/02/13 15:51		
Vanadium	ND	ug/L	0.10	1	03/27/13 09:09	04/02/13 02:38	7440-62-2	
Zinc	**176**	ug/L	5.0	1	03/27/13 09:09	04/02/13 02:38	7440-66-6	
200.8 MET ICPMS, Dissolved	Analytical Method: EPA 200.8 Preparation Method: EPA 200.8							
Aluminum, Dissolved	**5.1**	ug/L	4.0	1	03/27/13 09:14	04/03/13 18:02	7429-90-5	
Antimony, Dissolved	ND	ug/L	0.50	1	03/27/13 09:14	04/03/13 18:02	7440-36-0	
Arsenic, Dissolved	ND	ug/L	0.50	1	03/27/13 09:14	04/03/13 18:02	7440-38-2	
Barium, Dissolved	**70.8**	ug/L	0.30	1	03/27/13 09:14	04/03/13 18:02	7440-39-3	
Beryllium, Dissolved	ND	ug/L	0.20	1	03/27/13 09:14	04/08/13 16:27	7440-41-7	
Cadmium, Dissolved	**0.56**	ug/L	0.080	1	03/27/13 09:14	04/03/13 18:02	7440-43-9	
Calcium, Dissolved	**94600**	ug/L	200	10	03/27/13 09:14	04/03/13 18:06	7440-70-2	
Chromium, Dissolved	ND	ug/L	0.50	1	03/27/13 09:14	04/03/13 18:02	7440-47-3	
Cobalt, Dissolved	ND	ug/L	0.50	1	03/27/13 09:14	04/03/13 18:02	7440-48-4	
Copper, Dissolved	**0.89**	ug/L	0.50	1	03/27/13 09:14	04/03/13 18:02	7440-50-8	
Iron, Dissolved	ND	ug/L	50.0	1	03/27/13 09:14	04/03/13 18:02	7439-89-6	
Lead, Dissolved	ND	ug/L	0.10	1	03/27/13 09:14	04/03/13 18:02	7439-92-1	
Magnesium, Dissolved	**12300**	ug/L	5.0	1	03/27/13 09:14	04/03/13 18:02	7439-95-4	

This report shall not be reproduced, except in full,
without the written consent of Pace Analytical Services, Inc..

Pace Analytical Services, Inc.
9608 Loiret Blvd.
Lenexa, KS 66219
(913)599-5665

ANALYTICAL RESULTS

Project: MARCH 2013 RICO WATER SAMPLING
Pace Project No.: 60141075

Sample: DR-4SW COMPOSITE_20130321 **Lab ID: 60141075002** Collected: 03/21/13 10:00 Received: 03/23/13 08:55 Matrix: Water

Parameters	Results	Units	Report Limit	DF	Prepared	Analyzed	CAS No.	Qual
200.8 MET ICPMS, Dissolved	Analytical Method: EPA 200.8 Preparation Method: EPA 200.8							
Manganese, Dissolved	**333**	ug/L	0.50	1	03/27/13 09:14	04/03/13 18:02	7439-96-5	
Molybdenum, Dissolved	**1.7**	ug/L	0.50	1	03/27/13 09:14	04/03/13 18:02	7439-98-7	
Nickel, Dissolved	**0.65**	ug/L	0.50	1	03/27/13 09:14	04/03/13 18:02	7440-02-0	
Potassium, Dissolved	**1890**	ug/L	20.0	1	03/27/13 09:14	04/03/13 18:02	7440-09-7	
Selenium, Dissolved	**0.64**	ug/L	0.50	1	03/27/13 09:14	04/08/13 16:27	7782-49-2	
Silver, Dissolved	ND	ug/L	0.50	1	03/27/13 09:14	04/03/13 18:02	7440-22-4	
Sodium, Dissolved	**6900**	ug/L	50.0	1	03/27/13 09:14	04/03/13 18:02	7440-23-5	
Thallium, Dissolved	ND	ug/L	0.10	1	03/27/13 09:14	04/03/13 18:02	7440-28-0	
Vanadium, Dissolved	ND	ug/L	0.10	1	03/27/13 09:14	04/03/13 18:02	7440-62-2	
Zinc, Dissolved	**163**	ug/L	5.0	1	03/27/13 09:14	04/03/13 18:02	7440-66-6	
200.8 Potentially Diss. Metals	Analytical Method: EPA 200.8 Preparation Method: EPA 200.8							
Aluminum, Dissolved	**12.7J**	ug/L	50.0	1	03/25/13 15:00	04/08/13 17:51	7429-90-5	
Antimony, Dissolved	ND	ug/L	1.0	1	03/25/13 15:00	04/08/13 17:51	7440-36-0	
Arsenic, Dissolved	**0.34J**	ug/L	1.0	1	03/25/13 15:00	04/08/13 17:51	7440-38-2	
Barium, Dissolved	**68.1**	ug/L	1.0	1	03/25/13 15:00	04/08/13 17:51	7440-39-3	
Beryllium, Dissolved	ND	ug/L	0.50	1	03/25/13 15:00	04/08/13 17:51	7440-41-7	
Cadmium, Dissolved	**0.67**	ug/L	0.50	1	03/25/13 15:00	04/08/13 17:51	7440-43-9	
Chromium, Dissolved	**3.3**	ug/L	1.0	1	03/25/13 15:00	04/08/13 17:51	7440-47-3	
Cobalt, Dissolved	**0.35J**	ug/L	1.0	1	03/25/13 15:00	04/08/13 17:51	7440-48-4	
Copper, Dissolved	**1.2**	ug/L	1.0	1	03/25/13 15:00	04/08/13 17:51	7440-50-8	
Iron, Dissolved	**143**	ug/L	50.0	1	03/25/13 15:00	04/08/13 17:51	7439-89-6	
Lead, Dissolved	**0.87J**	ug/L	1.0	1	03/25/13 15:00	04/08/13 17:51	7439-92-1	
Manganese, Dissolved	**316**	ug/L	1.0	1	03/25/13 15:00	04/08/13 17:51	7439-96-5	
Molybdenum, Dissolved	**2.1**	ug/L	1.0	1	03/25/13 15:00	04/08/13 17:51	7439-98-7	
Nickel, Dissolved	ND	ug/L	1.0	1	03/25/13 15:00	04/08/13 17:51	7440-02-0	
Selenium, Dissolved	**0.73J**	ug/L	1.0	1	03/25/13 15:00	04/08/13 17:51	7782-49-2	
Silver, Dissolved	ND	ug/L	0.50	1	03/25/13 15:00	04/08/13 17:51	7440-22-4	
Thallium, Dissolved	**0.025J**	ug/L	1.0	1	03/25/13 15:00	04/08/13 17:51	7440-28-0	
Vanadium, Dissolved	ND	ug/L	1.0	1	03/25/13 15:00	04/08/13 17:51	7440-62-2	
Zinc, Dissolved	**169**	ug/L	10.0	1	03/25/13 15:00	04/08/13 17:51	7440-66-6	
245.1 Mercury	Analytical Method: EPA 245.1 Preparation Method: EPA 245.1							
Mercury	ND	ug/L	0.20	1	03/27/13 11:18	04/03/13 12:51	7439-97-6	
245.1 Mercury, Dissolved	Analytical Method: EPA 245.1 Preparation Method: EPA 245.1							
Mercury, Dissolved	ND	ug/L	0.20	1	03/27/13 11:12	04/03/13 13:49	7439-97-6	
245.1 Potentially Diss Mercury	Analytical Method: EPA 245.1 Preparation Method: EPA 245.1							
Mercury, Dissolved	ND	ug/L	0.20	1	03/26/13 16:35	03/27/13 13:27	7439-97-6	
2510B Specific Conductance	Analytical Method: SM 2510B							
Specific Conductance	**565**	umhos/cm	10.0	1		04/02/13 14:47		

This report shall not be reproduced, except in full,
without the written consent of Pace Analytical Services, Inc..

Pace Analytical Services, Inc.
9608 Loiret Blvd.
Lenexa, KS 66219
(913)599-5665

ANALYTICAL RESULTS

Project: MARCH 2013 RICO WATER SAMPLING
Pace Project No.: 60141075

Sample: DR-4SW COMPOSITE_20130321 **Lab ID: 60141075002** Collected: 03/21/13 10:00 Received: 03/23/13 08:55 Matrix: Water

Parameters	Results	Units	Report Limit	DF	Prepared	Analyzed	CAS No.	Qual
Salinity	Analytical Method: Calculated							
Salinity (as dissolved solids)	**362**	mg/L	6.4	1		04/05/13 11:03		
Salinity (as seawater)	**0.27**	PSU	0.014	1		04/05/13 11:03		
2320B Alkalinity	Analytical Method: SM 2320B							
Alkalinity,Bicarbonate (CaCO3)	**150**	mg/L	20.0	1		04/01/13 11:35		
Alkalinity, Carbonate (CaCO3)	ND	mg/L	20.0	1		04/01/13 11:35		
Alkalinity, Total as CaCO3	**150**	mg/L	20.0	1		04/01/13 11:35		
2540C Total Dissolved Solids	Analytical Method: SM 2540C							
Total Dissolved Solids	**363**	mg/L	5.0	1		03/27/13 14:51		
2540D Total Suspended Solids	Analytical Method: SM 2540D							
Total Suspended Solids	ND	mg/L	5.0	1		03/27/13 09:06		
4500S2D Sulfide, Total	Analytical Method: SM 4500-S-2 D							
Sulfide, Total	ND	mg/L	0.050	1		03/28/13 13:05	18496-25-8	
300.0 IC Anions 28 Days	Analytical Method: EPA 300.0							
Chloride	**5.3**	mg/L	1.0	1		04/01/13 18:17	16887-00-6	B
Sulfate	**147**	mg/L	10.0	10		04/01/13 12:39	14808-79-8	
353.2 Nitrogen, NO2/NO3 pres.	Analytical Method: EPA 353.2							
Nitrogen, NO2 plus NO3	ND	mg/L	0.10	1		03/26/13 15:55		
4500CNE Cyanide, Total	Analytical Method: SM 4500-CN-E							
Cyanide	ND	mg/L	0.0050	1		03/27/13 15:48	57-12-5	
5310C TOC	Analytical Method: SM 5310C							
Total Organic Carbon	**0.63**	mg/L	0.50	1		04/02/13 04:23	7440-44-0	

This report shall not be reproduced, except in full,
without the written consent of Pace Analytical Services, Inc..

Pace Analytical Services, Inc.
9608 Loiret Blvd.
Lenexa, KS 66219
(913)599-5665

ANALYTICAL RESULTS

Project: MARCH 2013 RICO WATER SAMPLING
Pace Project No.: 60141075

Sample: DR-4-SW_20130321 **Lab ID: 60141075003** Collected: 03/21/13 10:02 Received: 03/23/13 08:55 Matrix: Water

Parameters	Results	Units	Report Limit	DF	Prepared	Analyzed	CAS No.	Qual
200.7 Potentially Diss. Metals	Analytical Method: EPA 200.7 Preparation Method: EPA 200.7							
Calcium, Dissolved	**88500**	ug/L	100	1	03/25/13 15:00	04/05/13 16:58	7440-70-2	
Magnesium, Dissolved	**11400**	ug/L	50.0	1	03/25/13 15:00	04/05/13 16:58	7439-95-4	
Potassium, Dissolved	**1770**	ug/L	500	1	03/25/13 15:00	04/05/13 16:58	7440-09-7	
Sodium, Dissolved	**6790**	ug/L	500	1	03/25/13 15:00	04/05/13 16:58	7440-23-5	
200.8 MET ICPMS	Analytical Method: EPA 200.8 Preparation Method: EPA 200.8							
Aluminum	**13.4**	ug/L	4.0	1	03/27/13 09:09	04/02/13 03:01	7429-90-5	
Antimony	ND	ug/L	0.50	1	03/27/13 09:09	04/02/13 03:01	7440-36-0	
Arsenic	ND	ug/L	0.50	1	03/27/13 09:09	04/02/13 03:01	7440-38-2	
Barium	**69.2**	ug/L	0.30	1	03/27/13 09:09	04/02/13 03:01	7440-39-3	
Beryllium	ND	ug/L	0.20	1	03/27/13 09:09	04/02/13 03:01	7440-41-7	
Cadmium	**0.54**	ug/L	0.080	1	03/27/13 09:09	04/02/13 03:01	7440-43-9	
Calcium	**99800**	ug/L	200	10	03/27/13 09:09	04/02/13 15:55	7440-70-2	
Chromium	ND	ug/L	0.50	1	03/27/13 09:09	04/02/13 03:01	7440-47-3	
Cobalt	ND	ug/L	0.50	1	03/27/13 09:09	04/02/13 03:01	7440-48-4	
Copper	**0.98**	ug/L	0.50	1	03/27/13 09:09	04/02/13 03:01	7440-50-8	
Iron	**132**	ug/L	50.0	1	03/27/13 09:09	04/02/13 03:01	7439-89-6	
Lead	**0.24**	ug/L	0.10	1	03/27/13 09:09	04/02/13 03:01	7439-92-1	
Magnesium	**12200**	ug/L	5.0	1	03/27/13 09:09	04/02/13 03:01	7439-95-4	
Manganese	**322**	ug/L	0.50	1	03/27/13 09:09	04/02/13 03:01	7439-96-5	
Molybdenum	**1.8**	ug/L	0.50	1	03/27/13 09:09	04/02/13 03:01	7439-98-7	
Nickel	**0.63**	ug/L	0.50	1	03/27/13 09:09	04/02/13 03:01	7440-02-0	
Potassium	**1870**	ug/L	20.0	1	03/27/13 09:09	04/02/13 03:01	7440-09-7	
Selenium	**0.60**	ug/L	0.50	1	03/27/13 09:09	04/02/13 03:01	7782-49-2	
Silica	**10700**	ug/L	535	10	03/27/13 09:09	04/02/13 15:55	7631-86-9	
Silver	ND	ug/L	0.50	1	03/27/13 09:09	04/02/13 03:01	7440-22-4	
Sodium	**6720**	ug/L	50.0	1	03/27/13 09:09	04/02/13 03:01	7440-23-5	
Thallium	ND	ug/L	0.10	1	03/27/13 09:09	04/02/13 03:01	7440-28-0	
Total Hardness by 2340B	**300000**	ug/L	710	10	03/27/13 09:09	04/02/13 15:55		
Vanadium	ND	ug/L	0.10	1	03/27/13 09:09	04/02/13 03:01	7440-62-2	
Zinc	**170**	ug/L	5.0	1	03/27/13 09:09	04/02/13 03:01	7440-66-6	
200.8 MET ICPMS, Dissolved	Analytical Method: EPA 200.8 Preparation Method: EPA 200.8							
Aluminum, Dissolved	**6.0**	ug/L	4.0	1	03/27/13 09:14	04/03/13 18:58	7429-90-5	
Antimony, Dissolved	ND	ug/L	0.50	1	03/27/13 09:14	04/03/13 18:58	7440-36-0	
Arsenic, Dissolved	ND	ug/L	0.50	1	03/27/13 09:14	04/03/13 18:58	7440-38-2	
Barium, Dissolved	**72.1**	ug/L	0.30	1	03/27/13 09:14	04/03/13 18:58	7440-39-3	
Beryllium, Dissolved	ND	ug/L	0.20	1	03/27/13 09:14	04/08/13 16:32	7440-41-7	
Cadmium, Dissolved	**0.53**	ug/L	0.080	1	03/27/13 09:14	04/03/13 18:58	7440-43-9	
Calcium, Dissolved	**96500**	ug/L	200	10	03/27/13 09:14	04/03/13 19:03	7440-70-2	
Chromium, Dissolved	ND	ug/L	0.50	1	03/27/13 09:14	04/03/13 18:58	7440-47-3	
Cobalt, Dissolved	ND	ug/L	0.50	1	03/27/13 09:14	04/03/13 18:58	7440-48-4	
Copper, Dissolved	**0.71**	ug/L	0.50	1	03/27/13 09:14	04/03/13 18:58	7440-50-8	
Iron, Dissolved	ND	ug/L	50.0	1	03/27/13 09:14	04/03/13 18:58	7439-89-6	
Lead, Dissolved	ND	ug/L	0.10	1	03/27/13 09:14	04/03/13 18:58	7439-92-1	
Magnesium, Dissolved	**12400**	ug/L	5.0	1	03/27/13 09:14	04/03/13 18:58	7439-95-4	

This report shall not be reproduced, except in full,
without the written consent of Pace Analytical Services, Inc..

Pace Analytical Services, Inc.
9608 Loiret Blvd.
Lenexa, KS 66219
(913)599-5665

ANALYTICAL RESULTS

Project: MARCH 2013 RICO WATER SAMPLING
Pace Project No.: 60141075

Sample: DR-4-SW_20130321 **Lab ID: 60141075003** Collected: 03/21/13 10:02 Received: 03/23/13 08:55 Matrix: Water

Parameters	Results	Units	Report Limit	DF	Prepared	Analyzed	CAS No.	Qual
200.8 MET ICPMS, Dissolved	Analytical Method: EPA 200.8 Preparation Method: EPA 200.8							
Manganese, Dissolved	**335**	ug/L	0.50	1	03/27/13 09:14	04/03/13 18:58	7439-96-5	
Molybdenum, Dissolved	**1.7**	ug/L	0.50	1	03/27/13 09:14	04/03/13 18:58	7439-98-7	
Nickel, Dissolved	**0.59**	ug/L	0.50	1	03/27/13 09:14	04/03/13 18:58	7440-02-0	
Potassium, Dissolved	**1900**	ug/L	20.0	1	03/27/13 09:14	04/03/13 18:58	7440-09-7	
Selenium, Dissolved	**0.63**	ug/L	0.50	1	03/27/13 09:14	04/08/13 16:32	7782-49-2	
Silver, Dissolved	ND	ug/L	0.50	1	03/27/13 09:14	04/03/13 18:58	7440-22-4	
Sodium, Dissolved	**7040**	ug/L	50.0	1	03/27/13 09:14	04/03/13 18:58	7440-23-5	
Thallium, Dissolved	ND	ug/L	0.10	1	03/27/13 09:14	04/03/13 18:58	7440-28-0	
Vanadium, Dissolved	ND	ug/L	0.10	1	03/27/13 09:14	04/03/13 18:58	7440-62-2	
Zinc, Dissolved	**165**	ug/L	5.0	1	03/27/13 09:14	04/03/13 18:58	7440-66-6	
200.8 Potentially Diss. Metals	Analytical Method: EPA 200.8 Preparation Method: EPA 200.8							
Aluminum, Dissolved	**14.3J**	ug/L	50.0	1	03/25/13 15:00	04/08/13 18:07	7429-90-5	
Antimony, Dissolved	ND	ug/L	1.0	1	03/25/13 15:00	04/08/13 18:07	7440-36-0	
Arsenic, Dissolved	**0.39J**	ug/L	1.0	1	03/25/13 15:00	04/08/13 18:07	7440-38-2	
Barium, Dissolved	**65.7**	ug/L	1.0	1	03/25/13 15:00	04/08/13 18:07	7440-39-3	
Beryllium, Dissolved	ND	ug/L	0.50	1	03/25/13 15:00	04/08/13 18:07	7440-41-7	
Cadmium, Dissolved	**0.61**	ug/L	0.50	1	03/25/13 15:00	04/08/13 18:07	7440-43-9	
Chromium, Dissolved	**0.98J**	ug/L	1.0	1	03/25/13 15:00	04/08/13 18:07	7440-47-3	B
Cobalt, Dissolved	**0.34J**	ug/L	1.0	1	03/25/13 15:00	04/08/13 18:07	7440-48-4	
Copper, Dissolved	**0.82J**	ug/L	1.0	1	03/25/13 15:00	04/08/13 18:07	7440-50-8	
Iron, Dissolved	**134**	ug/L	50.0	1	03/25/13 15:00	04/08/13 18:07	7439-89-6	
Lead, Dissolved	**0.57J**	ug/L	1.0	1	03/25/13 15:00	04/08/13 18:07	7439-92-1	B
Manganese, Dissolved	**302**	ug/L	1.0	1	03/25/13 15:00	04/08/13 18:07	7439-96-5	
Molybdenum, Dissolved	**2.1**	ug/L	1.0	1	03/25/13 15:00	04/08/13 18:07	7439-98-7	
Nickel, Dissolved	ND	ug/L	1.0	1	03/25/13 15:00	04/08/13 18:07	7440-02-0	
Selenium, Dissolved	**0.78J**	ug/L	1.0	1	03/25/13 15:00	04/08/13 18:07	7782-49-2	
Silver, Dissolved	ND	ug/L	0.50	1	03/25/13 15:00	04/08/13 18:07	7440-22-4	
Thallium, Dissolved	**0.060J**	ug/L	1.0	1	03/25/13 15:00	04/08/13 18:07	7440-28-0	
Vanadium, Dissolved	ND	ug/L	1.0	1	03/25/13 15:00	04/08/13 18:07	7440-62-2	
Zinc, Dissolved	**163**	ug/L	10.0	1	03/25/13 15:00	04/08/13 18:07	7440-66-6	
245.1 Mercury	Analytical Method: EPA 245.1 Preparation Method: EPA 245.1							
Mercury	ND	ug/L	0.20	1	03/27/13 11:18	04/03/13 13:01	7439-97-6	
245.1 Mercury, Dissolved	Analytical Method: EPA 245.1 Preparation Method: EPA 245.1							
Mercury, Dissolved	ND	ug/L	0.20	1	03/27/13 11:12	04/03/13 13:52	7439-97-6	
245.1 Potentially Diss Mercury	Analytical Method: EPA 245.1 Preparation Method: EPA 245.1							
Mercury, Dissolved	ND	ug/L	0.20	1	03/26/13 16:35	03/27/13 13:29	7439-97-6	
2510B Specific Conductance	Analytical Method: SM 2510B							
Specific Conductance	**586**	umhos/cm	10.0	1		04/02/13 14:48		
Salinity	Analytical Method: Calculated							
Salinity (as dissolved solids)	**375**	mg/L	6.4	1		04/05/13 11:03		

REPORT OF LABORATORY ANALYSIS

This report shall not be reproduced, except in full,
without the written consent of Pace Analytical Services, Inc..

Pace Analytical Services, Inc.
9608 Loiret Blvd.
Lenexa, KS 66219
(913)599-5665

ANALYTICAL RESULTS

Project: MARCH 2013 RICO WATER SAMPLING
Pace Project No.: 60141075

Sample: DR-4-SW_20130321 **Lab ID: 60141075003** Collected: 03/21/13 10:02 Received: 03/23/13 08:55 Matrix: Water

Parameters	Results	Units	Report Limit	DF	Prepared	Analyzed	CAS No.	Qual
Salinity	Analytical Method: Calculated							
Salinity (as seawater)	**0.28**	PSU	0.014	1		04/05/13 11:03		
2320B Alkalinity	Analytical Method: SM 2320B							
Alkalinity,Bicarbonate (CaCO3)	**152**	mg/L	20.0	1		04/01/13 11:40		
Alkalinity, Carbonate (CaCO3)	ND	mg/L	20.0	1		04/01/13 11:40		
Alkalinity, Total as CaCO3	**152**	mg/L	20.0	1		04/01/13 11:40		
2540C Total Dissolved Solids	Analytical Method: SM 2540C							
Total Dissolved Solids	**372**	mg/L	5.0	1		03/27/13 14:59		
2540D Total Suspended Solids	Analytical Method: SM 2540D							
Total Suspended Solids	ND	mg/L	5.0	1		03/27/13 09:07		
4500S2D Sulfide, Total	Analytical Method: SM 4500-S-2 D							
Sulfide, Total	ND	mg/L	0.050	1		03/28/13 13:06	18496-25-8	
300.0 IC Anions 28 Days	Analytical Method: EPA 300.0							
Chloride	**5.3**	mg/L	1.0	1		04/01/13 18:33	16887-00-6	B
Sulfate	**148**	mg/L	10.0	10		04/01/13 12:54	14808-79-8	
353.2 Nitrogen, NO2/NO3 pres.	Analytical Method: EPA 353.2							
Nitrogen, NO2 plus NO3	**0.15**	mg/L	0.10	1		03/26/13 15:56		
4500CNE Cyanide, Total	Analytical Method: SM 4500-CN-E							
Cyanide	ND	mg/L	0.0050	1		03/27/13 15:51	57-12-5	
5310C TOC	Analytical Method: SM 5310C							
Total Organic Carbon	**0.62**	mg/L	0.50	1		04/02/13 04:41	7440-44-0	

This report shall not be reproduced, except in full,
without the written consent of Pace Analytical Services, Inc..

Pace Analytical Services, Inc.
9608 Loiret Blvd.
Lenexa, KS 66219
(913)599-5665

ANALYTICAL RESULTS

Project: MARCH 2013 RICO WATER SAMPLING
Pace Project No.: 60141075

Sample: DR-7 COMPOSITE_20130321 **Lab ID: 60141075004** Collected: 03/21/13 12:04 Received: 03/23/13 08:55 Matrix: Water

Parameters	Results	Units	Report Limit	DF	Prepared	Analyzed	CAS No.	Qual
200.7 Potentially Diss. Metals	Analytical Method: EPA 200.7 Preparation Method: EPA 200.7							
Calcium, Dissolved	**90100**	ug/L	100	1	03/25/13 15:00	04/05/13 17:00	7440-70-2	
Magnesium, Dissolved	**11400**	ug/L	50.0	1	03/25/13 15:00	04/05/13 17:00	7439-95-4	
Potassium, Dissolved	**1940**	ug/L	500	1	03/25/13 15:00	04/05/13 17:00	7440-09-7	
Sodium, Dissolved	**7330**	ug/L	500	1	03/25/13 15:00	04/05/13 17:00	7440-23-5	
200.8 MET ICPMS	Analytical Method: EPA 200.8 Preparation Method: EPA 200.8							
Aluminum	**40.8**	ug/L	4.0	1	03/27/13 09:09	04/02/13 03:10	7429-90-5	
Antimony	ND	ug/L	0.50	1	03/27/13 09:09	04/02/13 03:10	7440-36-0	
Arsenic	**0.83**	ug/L	0.50	1	03/27/13 09:09	04/02/13 03:10	7440-38-2	
Barium	**69.7**	ug/L	0.30	1	03/27/13 09:09	04/02/13 03:10	7440-39-3	
Beryllium	ND	ug/L	0.20	1	03/27/13 09:09	04/02/13 03:10	7440-41-7	
Cadmium	**1.6**	ug/L	0.080	1	03/27/13 09:09	04/02/13 03:10	7440-43-9	
Calcium	**100000**	ug/L	200	10	03/27/13 09:09	04/02/13 16:00	7440-70-2	
Chromium	ND	ug/L	0.50	1	03/27/13 09:09	04/02/13 03:10	7440-47-3	
Cobalt	ND	ug/L	0.50	1	03/27/13 09:09	04/02/13 03:10	7440-48-4	
Copper	**5.9**	ug/L	0.50	1	03/27/13 09:09	04/02/13 03:10	7440-50-8	
Iron	**695**	ug/L	50.0	1	03/27/13 09:09	04/02/13 03:10	7439-89-6	
Lead	**0.93**	ug/L	0.10	1	03/27/13 09:09	04/02/13 03:10	7439-92-1	
Magnesium	**12200**	ug/L	5.0	1	03/27/13 09:09	04/02/13 03:10	7439-95-4	
Manganese	**328**	ug/L	0.50	1	03/27/13 09:09	04/02/13 03:10	7439-96-5	
Molybdenum	**2.2**	ug/L	0.50	1	03/27/13 09:09	04/02/13 03:10	7439-98-7	
Nickel	**0.60**	ug/L	0.50	1	03/27/13 09:09	04/02/13 03:10	7440-02-0	
Potassium	**2040**	ug/L	20.0	1	03/27/13 09:09	04/02/13 03:10	7440-09-7	
Selenium	**0.62**	ug/L	0.50	1	03/27/13 09:09	04/02/13 03:10	7782-49-2	
Silica	**11200**	ug/L	535	10	03/27/13 09:09	04/02/13 16:00	7631-86-9	
Silver	ND	ug/L	0.50	1	03/27/13 09:09	04/02/13 03:10	7440-22-4	
Sodium	**7140**	ug/L	50.0	1	03/27/13 09:09	04/02/13 03:10	7440-23-5	
Thallium	ND	ug/L	0.10	1	03/27/13 09:09	04/02/13 03:10	7440-28-0	
Total Hardness by 2340B	**300000**	ug/L	710	10	03/27/13 09:09	04/02/13 16:00		
Vanadium	ND	ug/L	0.10	1	03/27/13 09:09	04/02/13 03:10	7440-62-2	
Zinc	**158**	ug/L	5.0	1	03/27/13 09:09	04/02/13 03:10	7440-66-6	
200.8 MET ICPMS, Dissolved	Analytical Method: EPA 200.8 Preparation Method: EPA 200.8							
Aluminum, Dissolved	ND	ug/L	4.0	1	03/27/13 09:14	04/03/13 19:07	7429-90-5	
Antimony, Dissolved	ND	ug/L	0.50	1	03/27/13 09:14	04/03/13 19:07	7440-36-0	
Arsenic, Dissolved	ND	ug/L	0.50	1	03/27/13 09:14	04/03/13 19:07	7440-38-2	
Barium, Dissolved	**68.9**	ug/L	0.30	1	03/27/13 09:14	04/03/13 19:07	7440-39-3	
Beryllium, Dissolved	ND	ug/L	0.20	1	03/27/13 09:14	04/08/13 16:36	7440-41-7	
Cadmium, Dissolved	**0.092**	ug/L	0.080	1	03/27/13 09:14	04/03/13 19:07	7440-43-9	
Calcium, Dissolved	**92000**	ug/L	200	10	03/27/13 09:14	04/03/13 19:12	7440-70-2	
Chromium, Dissolved	ND	ug/L	0.50	1	03/27/13 09:14	04/03/13 19:07	7440-47-3	
Cobalt, Dissolved	ND	ug/L	0.50	1	03/27/13 09:14	04/03/13 19:07	7440-48-4	
Copper, Dissolved	**0.64**	ug/L	0.50	1	03/27/13 09:14	04/03/13 19:07	7440-50-8	
Iron, Dissolved	**104**	ug/L	50.0	1	03/27/13 09:14	04/03/13 19:07	7439-89-6	
Lead, Dissolved	ND	ug/L	0.10	1	03/27/13 09:14	04/03/13 19:07	7439-92-1	
Magnesium, Dissolved	**12300**	ug/L	5.0	1	03/27/13 09:14	04/03/13 19:07	7439-95-4	

This report shall not be reproduced, except in full,
without the written consent of Pace Analytical Services, Inc..

Pace Analytical Services, Inc.
9608 Loiret Blvd.
Lenexa, KS 66219
(913)599-5665

ANALYTICAL RESULTS

Project: MARCH 2013 RICO WATER SAMPLING
Pace Project No.: 60141075

Sample: DR-7 COMPOSITE_20130321 **Lab ID: 60141075004** Collected: 03/21/13 12:04 Received: 03/23/13 08:55 Matrix: Water

Parameters	Results	Units	Report Limit	DF	Prepared	Analyzed	CAS No.	Qual
200.8 MET ICPMS, Dissolved	Analytical Method: EPA 200.8 Preparation Method: EPA 200.8							
Manganese, Dissolved	**314**	ug/L	0.50	1	03/27/13 09:14	04/03/13 19:07	7439-96-5	
Molybdenum, Dissolved	**1.9**	ug/L	0.50	1	03/27/13 09:14	04/03/13 19:07	7439-98-7	
Nickel, Dissolved	ND	ug/L	0.50	1	03/27/13 09:14	04/03/13 19:07	7440-02-0	
Potassium, Dissolved	**2020**	ug/L	20.0	1	03/27/13 09:14	04/03/13 19:07	7440-09-7	
Selenium, Dissolved	**0.68**	ug/L	0.50	1	03/27/13 09:14	04/08/13 16:36	7782-49-2	
Silver, Dissolved	ND	ug/L	0.50	1	03/27/13 09:14	04/03/13 19:07	7440-22-4	
Sodium, Dissolved	**7380**	ug/L	50.0	1	03/27/13 09:14	04/03/13 19:07	7440-23-5	
Thallium, Dissolved	ND	ug/L	0.10	1	03/27/13 09:14	04/03/13 19:07	7440-28-0	
Vanadium, Dissolved	ND	ug/L	0.10	1	03/27/13 09:14	04/03/13 19:07	7440-62-2	
Zinc, Dissolved	**114**	ug/L	5.0	1	03/27/13 09:14	04/03/13 19:07	7440-66-6	
200.8 Potentially Diss. Metals	Analytical Method: EPA 200.8 Preparation Method: EPA 200.8							
Aluminum, Dissolved	**37.7J**	ug/L	50.0	1	03/25/13 15:00	04/08/13 18:11	7429-90-5	
Antimony, Dissolved	**0.037J**	ug/L	1.0	1	03/25/13 15:00	04/08/13 18:11	7440-36-0	
Arsenic, Dissolved	**0.79J**	ug/L	1.0	1	03/25/13 15:00	04/08/13 18:11	7440-38-2	
Barium, Dissolved	**65.7**	ug/L	1.0	1	03/25/13 15:00	04/08/13 18:11	7440-39-3	
Beryllium, Dissolved	**0.084J**	ug/L	0.50	1	03/25/13 15:00	04/08/13 18:11	7440-41-7	
Cadmium, Dissolved	**1.7**	ug/L	0.50	1	03/25/13 15:00	04/08/13 18:11	7440-43-9	
Chromium, Dissolved	**0.93J**	ug/L	1.0	1	03/25/13 15:00	04/08/13 18:11	7440-47-3	B
Cobalt, Dissolved	**0.30J**	ug/L	1.0	1	03/25/13 15:00	04/08/13 18:11	7440-48-4	
Copper, Dissolved	**6.4**	ug/L	1.0	1	03/25/13 15:00	04/08/13 18:11	7440-50-8	
Iron, Dissolved	**741**	ug/L	50.0	1	03/25/13 15:00	04/08/13 18:11	7439-89-6	
Lead, Dissolved	**1.4**	ug/L	1.0	1	03/25/13 15:00	04/08/13 18:11	7439-92-1	
Manganese, Dissolved	**317**	ug/L	1.0	1	03/25/13 15:00	04/08/13 18:11	7439-96-5	
Molybdenum, Dissolved	**2.4**	ug/L	1.0	1	03/25/13 15:00	04/08/13 18:11	7439-98-7	
Nickel, Dissolved	ND	ug/L	1.0	1	03/25/13 15:00	04/08/13 18:11	7440-02-0	
Selenium, Dissolved	**0.80J**	ug/L	1.0	1	03/25/13 15:00	04/08/13 18:11	7782-49-2	
Silver, Dissolved	ND	ug/L	0.50	1	03/25/13 15:00	04/08/13 18:11	7440-22-4	
Thallium, Dissolved	**0.026J**	ug/L	1.0	1	03/25/13 15:00	04/08/13 18:11	7440-28-0	
Vanadium, Dissolved	**0.36J**	ug/L	1.0	1	03/25/13 15:00	04/08/13 18:11	7440-62-2	
Zinc, Dissolved	**156**	ug/L	10.0	1	03/25/13 15:00	04/08/13 18:11	7440-66-6	
245.1 Mercury	Analytical Method: EPA 245.1 Preparation Method: EPA 245.1							
Mercury	ND	ug/L	0.20	1	03/27/13 11:18	04/03/13 13:04	7439-97-6	
245.1 Mercury, Dissolved	Analytical Method: EPA 245.1 Preparation Method: EPA 245.1							
Mercury, Dissolved	ND	ug/L	0.20	1	03/27/13 11:12	04/03/13 13:54	7439-97-6	
245.1 Potentially Diss Mercury	Analytical Method: EPA 245.1 Preparation Method: EPA 245.1							
Mercury, Dissolved	ND	ug/L	0.20	1	03/26/13 16:35	03/27/13 13:36	7439-97-6	
2510B Specific Conductance	Analytical Method: SM 2510B							
Specific Conductance	**575**	umhos/cm	10.0	1		04/02/13 14:49		

This report shall not be reproduced, except in full,
without the written consent of Pace Analytical Services, Inc..

Pace Analytical Services, Inc.
9608 Loiret Blvd.
Lenexa, KS 66219
(913)599-5665

ANALYTICAL RESULTS

Project: MARCH 2013 RICO WATER SAMPLING
Pace Project No.: 60141075

Sample: DR-7 COMPOSITE_20130321 **Lab ID: 60141075004** Collected: 03/21/13 12:04 Received: 03/23/13 08:55 Matrix: Water

Parameters	Results	Units	Report Limit	DF	Prepared	Analyzed	CAS No.	Qual
Salinity	Analytical Method: Calculated							
Salinity (as dissolved solids)	**368**	mg/L	6.4	1		04/05/13 11:03		
Salinity (as seawater)	**0.28**	PSU	0.014	1		04/05/13 11:03		
2320B Alkalinity	Analytical Method: SM 2320B							
Alkalinity,Bicarbonate (CaCO3)	**138**	mg/L	20.0	1		04/01/13 11:44		
Alkalinity, Carbonate (CaCO3)	ND	mg/L	20.0	1		04/01/13 11:44		
Alkalinity, Total as CaCO3	**138**	mg/L	20.0	1		04/01/13 11:44		
2540C Total Dissolved Solids	Analytical Method: SM 2540C							
Total Dissolved Solids	**379**	mg/L	5.0	1		03/27/13 14:59		
2540D Total Suspended Solids	Analytical Method: SM 2540D							
Total Suspended Solids	ND	mg/L	5.0	1		03/27/13 09:07		
4500S2D Sulfide, Total	Analytical Method: SM 4500-S-2 D							
Sulfide, Total	ND	mg/L	0.050	1		03/28/13 13:06	18496-25-8	
300.0 IC Anions 28 Days	Analytical Method: EPA 300.0							
Chloride	**5.1**	mg/L	1.0	1		04/01/13 18:48	16887-00-6	B
Sulfate	**153**	mg/L	10.0	10		04/01/13 13:09	14808-79-8	
4500CNE Cyanide, Total	Analytical Method: SM 4500-CN-E							
Cyanide	ND	mg/L	0.0050	1		03/27/13 15:52	57-12-5	

This report shall not be reproduced, except in full,
without the written consent of Pace Analytical Services, Inc..

Pace Analytical Services, Inc.
9608 Loiret Blvd.
Lenexa, KS 66219
(913)599-5665

ANALYTICAL RESULTS

Project: MARCH 2013 RICO WATER SAMPLING
Pace Project No.: 60141075

Sample: DR-7_20130321 **Lab ID: 60141075005** Collected: 03/21/13 12:06 Received: 03/23/13 08:55 Matrix: Water

Parameters	Results	Units	Report Limit	DF	Prepared	Analyzed	CAS No.	Qual
200.7 Potentially Diss. Metals	Analytical Method: EPA 200.7 Preparation Method: EPA 200.7							
Calcium, Dissolved	**93700**	ug/L	100	1	03/25/13 15:00	04/05/13 17:02	7440-70-2	
Magnesium, Dissolved	**12000**	ug/L	50.0	1	03/25/13 15:00	04/05/13 17:02	7439-95-4	
Potassium, Dissolved	**2240**	ug/L	500	1	03/25/13 15:00	04/05/13 17:02	7440-09-7	
Sodium, Dissolved	**7930**	ug/L	500	1	03/25/13 15:00	04/05/13 17:02	7440-23-5	
200.8 MET ICPMS	Analytical Method: EPA 200.8 Preparation Method: EPA 200.8							
Aluminum	**40.2**	ug/L	4.0	1	03/27/13 09:09	04/02/13 03:18	7429-90-5	
Antimony	ND	ug/L	0.50	1	03/27/13 09:09	04/02/13 03:18	7440-36-0	
Arsenic	**0.97**	ug/L	0.50	1	03/27/13 09:09	04/02/13 03:18	7440-38-2	
Barium	**69.4**	ug/L	0.30	1	03/27/13 09:09	04/02/13 03:18	7440-39-3	
Beryllium	ND	ug/L	0.20	1	03/27/13 09:09	04/02/13 03:18	7440-41-7	
Cadmium	**1.8**	ug/L	0.080	1	03/27/13 09:09	04/02/13 03:18	7440-43-9	
Calcium	**109000**	ug/L	200	10	03/27/13 09:09	04/02/13 16:19	7440-70-2	
Chromium	ND	ug/L	0.50	1	03/27/13 09:09	04/02/13 03:18	7440-47-3	
Cobalt	ND	ug/L	0.50	1	03/27/13 09:09	04/02/13 03:18	7440-48-4	
Copper	**6.5**	ug/L	0.50	1	03/27/13 09:09	04/02/13 03:18	7440-50-8	
Iron	**785**	ug/L	50.0	1	03/27/13 09:09	04/02/13 03:18	7439-89-6	
Lead	**1.0**	ug/L	0.10	1	03/27/13 09:09	04/02/13 03:18	7439-92-1	
Magnesium	**13800**	ug/L	5.0	1	03/27/13 09:09	04/02/13 03:18	7439-95-4	
Manganese	**359**	ug/L	0.50	1	03/27/13 09:09	04/02/13 03:18	7439-96-5	
Molybdenum	**2.5**	ug/L	0.50	1	03/27/13 09:09	04/02/13 03:18	7439-98-7	
Nickel	**0.54**	ug/L	0.50	1	03/27/13 09:09	04/02/13 03:18	7440-02-0	
Potassium	**2470**	ug/L	20.0	1	03/27/13 09:09	04/02/13 03:18	7440-09-7	
Selenium	**0.66**	ug/L	0.50	1	03/27/13 09:09	04/02/13 03:18	7782-49-2	
Silica	**12600**	ug/L	535	10	03/27/13 09:09	04/02/13 16:19	7631-86-9	
Silver	ND	ug/L	0.50	1	03/27/13 09:09	04/02/13 03:18	7440-22-4	
Sodium	**8230**	ug/L	50.0	1	03/27/13 09:09	04/02/13 03:18	7440-23-5	
Thallium	ND	ug/L	0.10	1	03/27/13 09:09	04/02/13 03:18	7440-28-0	
Total Hardness by 2340B	**330000**	ug/L	710	10	03/27/13 09:09	04/02/13 16:19		
Vanadium	ND	ug/L	0.10	1	03/27/13 09:09	04/02/13 03:18	7440-62-2	
Zinc	**190**	ug/L	5.0	1	03/27/13 09:09	04/02/13 03:18	7440-66-6	
200.8 MET ICPMS, Dissolved	Analytical Method: EPA 200.8 Preparation Method: EPA 200.8							
Aluminum, Dissolved	**4.8**	ug/L	4.0	1	03/27/13 09:14	04/03/13 19:33	7429-90-5	
Antimony, Dissolved	ND	ug/L	0.50	1	03/27/13 09:14	04/03/13 19:33	7440-36-0	
Arsenic, Dissolved	**0.68**	ug/L	0.50	1	03/27/13 09:14	04/03/13 19:33	7440-38-2	
Barium, Dissolved	**69.0**	ug/L	0.30	1	03/27/13 09:14	04/03/13 19:33	7440-39-3	
Beryllium, Dissolved	ND	ug/L	0.20	1	03/27/13 09:14	04/08/13 16:40	7440-41-7	
Cadmium, Dissolved	**0.10**	ug/L	0.080	1	03/27/13 09:14	04/03/13 19:33	7440-43-9	
Calcium, Dissolved	**101000**	ug/L	200	10	03/27/13 09:14	04/03/13 19:37	7440-70-2	
Chromium, Dissolved	**1.0**	ug/L	0.50	1	03/27/13 09:14	04/03/13 19:33	7440-47-3	
Cobalt, Dissolved	ND	ug/L	0.50	1	03/27/13 09:14	04/03/13 19:33	7440-48-4	
Copper, Dissolved	**0.58**	ug/L	0.50	1	03/27/13 09:14	04/03/13 19:33	7440-50-8	
Iron, Dissolved	**126**	ug/L	50.0	1	03/27/13 09:14	04/03/13 19:33	7439-89-6	
Lead, Dissolved	ND	ug/L	0.10	1	03/27/13 09:14	04/03/13 19:33	7439-92-1	
Magnesium, Dissolved	**13700**	ug/L	5.0	1	03/27/13 09:14	04/03/13 19:33	7439-95-4	

This report shall not be reproduced, except in full,
without the written consent of Pace Analytical Services, Inc..

Pace Analytical Services, Inc.
9608 Loiret Blvd.
Lenexa, KS 66219
(913)599-5665

ANALYTICAL RESULTS

Project: MARCH 2013 RICO WATER SAMPLING
Pace Project No.: 60141075

Sample: DR-7_20130321 **Lab ID: 60141075005** Collected: 03/21/13 12:06 Received: 03/23/13 08:55 Matrix: Water

Parameters	Results	Units	Report Limit	DF	Prepared	Analyzed	CAS No.	Qual
200.8 MET ICPMS, Dissolved	Analytical Method: EPA 200.8 Preparation Method: EPA 200.8							
Manganese, Dissolved	**344**	ug/L	0.50	1	03/27/13 09:14	04/03/13 19:33	7439-96-5	
Molybdenum, Dissolved	**2.3**	ug/L	0.50	1	03/27/13 09:14	04/03/13 19:33	7439-98-7	
Nickel, Dissolved	**0.68**	ug/L	0.50	1	03/27/13 09:14	04/03/13 19:33	7440-02-0	
Potassium, Dissolved	**2450**	ug/L	20.0	1	03/27/13 09:14	04/03/13 19:33	7440-09-7	
Selenium, Dissolved	**0.66**	ug/L	0.50	1	03/27/13 09:14	04/08/13 16:40	7782-49-2	
Silver, Dissolved	ND	ug/L	0.50	1	03/27/13 09:14	04/03/13 19:33	7440-22-4	
Sodium, Dissolved	**8420**	ug/L	50.0	1	03/27/13 09:14	04/03/13 19:33	7440-23-5	
Thallium, Dissolved	ND	ug/L	0.10	1	03/27/13 09:14	04/03/13 19:33	7440-28-0	
Vanadium, Dissolved	ND	ug/L	0.10	1	03/27/13 09:14	04/03/13 19:33	7440-62-2	
Zinc, Dissolved	**141**	ug/L	5.0	1	03/27/13 09:14	04/03/13 19:33	7440-66-6	
200.8 Potentially Diss. Metals	Analytical Method: EPA 200.8 Preparation Method: EPA 200.8							
Aluminum, Dissolved	**42.8J**	ug/L	50.0	1	03/25/13 15:00	04/08/13 18:16	7429-90-5	
Antimony, Dissolved	ND	ug/L	1.0	1	03/25/13 15:00	04/08/13 18:16	7440-36-0	
Arsenic, Dissolved	**0.93J**	ug/L	1.0	1	03/25/13 15:00	04/08/13 18:16	7440-38-2	
Barium, Dissolved	**63.6**	ug/L	1.0	1	03/25/13 15:00	04/08/13 18:16	7440-39-3	
Beryllium, Dissolved	**0.10J**	ug/L	0.50	1	03/25/13 15:00	04/08/13 18:16	7440-41-7	
Cadmium, Dissolved	**2.0**	ug/L	0.50	1	03/25/13 15:00	04/08/13 18:16	7440-43-9	
Chromium, Dissolved	**0.64J**	ug/L	1.0	1	03/25/13 15:00	04/08/13 18:16	7440-47-3	B
Cobalt, Dissolved	**0.32J**	ug/L	1.0	1	03/25/13 15:00	04/08/13 18:16	7440-48-4	
Copper, Dissolved	**6.6**	ug/L	1.0	1	03/25/13 15:00	04/08/13 18:16	7440-50-8	
Iron, Dissolved	**865**	ug/L	50.0	1	03/25/13 15:00	04/08/13 18:16	7439-89-6	
Lead, Dissolved	**1.3**	ug/L	1.0	1	03/25/13 15:00	04/08/13 18:16	7439-92-1	
Manganese, Dissolved	**347**	ug/L	1.0	1	03/25/13 15:00	04/08/13 18:16	7439-96-5	
Molybdenum, Dissolved	**2.5**	ug/L	1.0	1	03/25/13 15:00	04/08/13 18:16	7439-98-7	
Nickel, Dissolved	ND	ug/L	1.0	1	03/25/13 15:00	04/08/13 18:16	7440-02-0	
Selenium, Dissolved	**0.90J**	ug/L	1.0	1	03/25/13 15:00	04/08/13 18:16	7782-49-2	
Silver, Dissolved	ND	ug/L	0.50	1	03/25/13 15:00	04/08/13 18:16	7440-22-4	
Thallium, Dissolved	**0.027J**	ug/L	1.0	1	03/25/13 15:00	04/08/13 18:16	7440-28-0	
Vanadium, Dissolved	ND	ug/L	1.0	1	03/25/13 15:00	04/08/13 18:16	7440-62-2	
Zinc, Dissolved	**188**	ug/L	10.0	1	03/25/13 15:00	04/08/13 18:16	7440-66-6	
245.1 Mercury	Analytical Method: EPA 245.1 Preparation Method: EPA 245.1							
Mercury	ND	ug/L	0.20	1	03/27/13 11:18	04/03/13 13:06	7439-97-6	
245.1 Mercury, Dissolved	Analytical Method: EPA 245.1 Preparation Method: EPA 245.1							
Mercury, Dissolved	ND	ug/L	0.20	1	03/27/13 11:12	04/03/13 13:56	7439-97-6	
245.1 Potentially Diss Mercury	Analytical Method: EPA 245.1 Preparation Method: EPA 245.1							
Mercury, Dissolved	ND	ug/L	0.20	1	03/26/13 16:35	03/27/13 13:38	7439-97-6	
2510B Specific Conductance	Analytical Method: SM 2510B							
Specific Conductance	**639**	umhos/cm	10.0	1		04/02/13 14:50		
Salinity	Analytical Method: Calculated							
Salinity (as dissolved solids)	**409**	mg/L	6.4	1		04/05/13 11:03		

REPORT OF LABORATORY ANALYSIS

This report shall not be reproduced, except in full,
without the written consent of Pace Analytical Services, Inc..

Pace Analytical Services, Inc.
9608 Loiret Blvd.
Lenexa, KS 66219
(913)599-5665

ANALYTICAL RESULTS

Project: MARCH 2013 RICO WATER SAMPLING
Pace Project No.: 60141075

Sample: DR-7_20130321 **Lab ID: 60141075005** Collected: 03/21/13 12:06 Received: 03/23/13 08:55 Matrix: Water

Parameters	Results	Units	Report Limit	DF	Prepared	Analyzed	CAS No.	Qual
Salinity	Analytical Method: Calculated							
Salinity (as seawater)	**0.31**	PSU	0.014	1		04/05/13 11:03		
2320B Alkalinity	Analytical Method: SM 2320B							
Alkalinity,Bicarbonate (CaCO3)	**147**	mg/L	20.0	1		04/01/13 11:49		
Alkalinity, Carbonate (CaCO3)	ND	mg/L	20.0	1		04/01/13 11:49		
Alkalinity, Total as CaCO3	**147**	mg/L	20.0	1		04/01/13 11:49		
2540C Total Dissolved Solids	Analytical Method: SM 2540C							
Total Dissolved Solids	**397**	mg/L	5.0	1		03/27/13 15:00		
2540D Total Suspended Solids	Analytical Method: SM 2540D							
Total Suspended Solids	ND	mg/L	5.0	1		03/27/13 09:07		
4500S2D Sulfide, Total	Analytical Method: SM 4500-S-2 D							
Sulfide, Total	ND	mg/L	0.050	1		03/28/13 13:06	18496-25-8	
300.0 IC Anions 28 Days	Analytical Method: EPA 300.0							
Chloride	**4.8**	mg/L	1.0	1		04/01/13 19:04	16887-00-6	B
Sulfate	**173**	mg/L	10.0	10		04/01/13 13:25	14808-79-8	
353.2 Nitrogen, NO2/NO3 pres.	Analytical Method: EPA 353.2							
Nitrogen, NO2 plus NO3	ND	mg/L	0.10	1		03/26/13 15:56		
4500CNE Cyanide, Total	Analytical Method: SM 4500-CN-E							
Cyanide	ND	mg/L	0.0050	1		03/27/13 15:55	57-12-5	
5310C TOC	Analytical Method: SM 5310C							
Total Organic Carbon	**0.67**	mg/L	0.50	1		04/02/13 04:59	7440-44-0	

This report shall not be reproduced, except in full,
without the written consent of Pace Analytical Services, Inc..

Pace Analytical Services, Inc.
9608 Loiret Blvd.
Lenexa, KS 66219
(913)599-5665

ANALYTICAL RESULTS

Project: MARCH 2013 RICO WATER SAMPLING
Pace Project No.: 60141075

Sample: DR-2_20130321 **Lab ID: 60141075006** Collected: 03/21/13 14:05 Received: 03/23/13 08:55 Matrix: Water

Parameters	Results	Units	Report Limit	DF	Prepared	Analyzed	CAS No.	Qual
200.7 Potentially Diss. Metals	Analytical Method: EPA 200.7 Preparation Method: EPA 200.7							
Calcium, Dissolved	**58700**	ug/L	100	1	03/25/13 15:00	04/05/13 17:07	7440-70-2	
Magnesium, Dissolved	**7860**	ug/L	50.0	1	03/25/13 15:00	04/05/13 17:07	7439-95-4	
Potassium, Dissolved	**872**	ug/L	500	1	03/25/13 15:00	04/05/13 17:07	7440-09-7	
Sodium, Dissolved	**4790**	ug/L	500	1	03/25/13 15:00	04/05/13 17:07	7440-23-5	
200.8 MET ICPMS	Analytical Method: EPA 200.8 Preparation Method: EPA 200.8							
Aluminum	**8.1**	ug/L	4.0	1	03/27/13 09:09	04/02/13 03:27	7429-90-5	
Antimony	ND	ug/L	0.50	1	03/27/13 09:09	04/02/13 03:27	7440-36-0	
Arsenic	ND	ug/L	0.50	1	03/27/13 09:09	04/02/13 03:27	7440-38-2	
Barium	**75.9**	ug/L	0.30	1	03/27/13 09:09	04/02/13 03:27	7440-39-3	
Beryllium	ND	ug/L	0.20	1	03/27/13 09:09	04/02/13 03:27	7440-41-7	
Cadmium	ND	ug/L	0.080	1	03/27/13 09:09	04/02/13 03:27	7440-43-9	
Calcium	**71500**	ug/L	200	10	03/27/13 09:09	04/02/13 16:23	7440-70-2	
Chromium	ND	ug/L	0.50	1	03/27/13 09:09	04/02/13 03:27	7440-47-3	
Cobalt	ND	ug/L	0.50	1	03/27/13 09:09	04/02/13 03:27	7440-48-4	
Copper	ND	ug/L	0.50	1	03/27/13 09:09	04/02/13 03:27	7440-50-8	
Iron	**86.8**	ug/L	50.0	1	03/27/13 09:09	04/02/13 03:27	7439-89-6	
Lead	ND	ug/L	0.10	1	03/27/13 09:09	04/02/13 03:27	7439-92-1	
Magnesium	**9690**	ug/L	5.0	1	03/27/13 09:09	04/02/13 03:27	7439-95-4	
Manganese	**162**	ug/L	0.50	1	03/27/13 09:09	04/02/13 03:27	7439-96-5	
Molybdenum	**1.1**	ug/L	0.50	1	03/27/13 09:09	04/02/13 03:27	7439-98-7	
Nickel	ND	ug/L	0.50	1	03/27/13 09:09	04/02/13 03:27	7440-02-0	
Potassium	**1160**	ug/L	20.0	1	03/27/13 09:09	04/02/13 03:27	7440-09-7	
Selenium	**0.92**	ug/L	0.50	1	03/27/13 09:09	04/02/13 03:27	7782-49-2	
Silica	**8200**	ug/L	535	10	03/27/13 09:09	04/02/13 16:23	7631-86-9	
Silver	ND	ug/L	0.50	1	03/27/13 09:09	04/02/13 03:27	7440-22-4	
Sodium	**5420**	ug/L	50.0	1	03/27/13 09:09	04/02/13 03:27	7440-23-5	
Thallium	ND	ug/L	0.10	1	03/27/13 09:09	04/02/13 03:27	7440-28-0	
Total Hardness by 2340B	**218000**	ug/L	710	10	03/27/13 09:09	04/02/13 16:23		
Vanadium	ND	ug/L	0.10	1	03/27/13 09:09	04/02/13 03:27	7440-62-2	
Zinc	**5.8**	ug/L	5.0	1	03/27/13 09:09	04/02/13 03:27	7440-66-6	
200.8 MET ICPMS, Dissolved	Analytical Method: EPA 200.8 Preparation Method: EPA 200.8							
Aluminum, Dissolved	ND	ug/L	4.0	1	03/27/13 09:14	04/03/13 19:41	7429-90-5	
Antimony, Dissolved	ND	ug/L	0.50	1	03/27/13 09:14	04/03/13 19:41	7440-36-0	
Arsenic, Dissolved	ND	ug/L	0.50	1	03/27/13 09:14	04/03/13 19:41	7440-38-2	
Barium, Dissolved	**76.4**	ug/L	0.30	1	03/27/13 09:14	04/03/13 19:41	7440-39-3	
Beryllium, Dissolved	ND	ug/L	0.20	1	03/27/13 09:14	04/08/13 16:45	7440-41-7	
Cadmium, Dissolved	ND	ug/L	0.080	1	03/27/13 09:14	04/03/13 19:41	7440-43-9	
Calcium, Dissolved	**68400**	ug/L	200	10	03/27/13 09:14	04/03/13 19:46	7440-70-2	
Chromium, Dissolved	ND	ug/L	0.50	1	03/27/13 09:14	04/03/13 19:41	7440-47-3	
Cobalt, Dissolved	ND	ug/L	0.50	1	03/27/13 09:14	04/03/13 19:41	7440-48-4	
Copper, Dissolved	**0.58**	ug/L	0.50	1	03/27/13 09:14	04/03/13 19:41	7440-50-8	
Iron, Dissolved	ND	ug/L	50.0	1	03/27/13 09:14	04/03/13 19:41	7439-89-6	
Lead, Dissolved	ND	ug/L	0.10	1	03/27/13 09:14	04/03/13 19:41	7439-92-1	
Magnesium, Dissolved	**9730**	ug/L	5.0	1	03/27/13 09:14	04/03/13 19:41	7439-95-4	

This report shall not be reproduced, except in full,
without the written consent of Pace Analytical Services, Inc..

Pace Analytical Services, Inc.
9608 Loiret Blvd.
Lenexa, KS 66219
(913)599-5665

ANALYTICAL RESULTS

Project: MARCH 2013 RICO WATER SAMPLING
Pace Project No.: 60141075

Sample: DR-2_20130321 **Lab ID: 60141075006** Collected: 03/21/13 14:05 Received: 03/23/13 08:55 Matrix: Water

Parameters	Results	Units	Report Limit	DF	Prepared	Analyzed	CAS No.	Qual
200.8 MET ICPMS, Dissolved	Analytical Method: EPA 200.8 Preparation Method: EPA 200.8							
Manganese, Dissolved	**164**	ug/L	0.50	1	03/27/13 09:14	04/03/13 19:41	7439-96-5	
Molybdenum, Dissolved	**1.1**	ug/L	0.50	1	03/27/13 09:14	04/03/13 19:41	7439-98-7	
Nickel, Dissolved	ND	ug/L	0.50	1	03/27/13 09:14	04/03/13 19:41	7440-02-0	
Potassium, Dissolved	**1150**	ug/L	20.0	1	03/27/13 09:14	04/03/13 19:41	7440-09-7	
Selenium, Dissolved	**0.84**	ug/L	0.50	1	03/27/13 09:14	04/08/13 16:45	7782-49-2	
Silver, Dissolved	ND	ug/L	0.50	1	03/27/13 09:14	04/03/13 19:41	7440-22-4	
Sodium, Dissolved	**5560**	ug/L	50.0	1	03/27/13 09:14	04/03/13 19:41	7440-23-5	
Thallium, Dissolved	ND	ug/L	0.10	1	03/27/13 09:14	04/03/13 19:41	7440-28-0	
Vanadium, Dissolved	ND	ug/L	0.10	1	03/27/13 09:14	04/03/13 19:41	7440-62-2	
Zinc, Dissolved	ND	ug/L	5.0	1	03/27/13 09:14	04/03/13 19:41	7440-66-6	
200.8 Potentially Diss. Metals	Analytical Method: EPA 200.8 Preparation Method: EPA 200.8							
Aluminum, Dissolved	**5.9J**	ug/L	50.0	1	03/25/13 15:00	04/08/13 18:28	7429-90-5	
Antimony, Dissolved	ND	ug/L	1.0	1	03/25/13 15:00	04/08/13 18:28	7440-36-0	
Arsenic, Dissolved	ND	ug/L	1.0	1	03/25/13 15:00	04/08/13 18:28	7440-38-2	
Barium, Dissolved	**70.9**	ug/L	1.0	1	03/25/13 15:00	04/08/13 18:28	7440-39-3	
Beryllium, Dissolved	ND	ug/L	0.50	1	03/25/13 15:00	04/08/13 18:28	7440-41-7	
Cadmium, Dissolved	ND	ug/L	0.50	1	03/25/13 15:00	04/08/13 18:28	7440-43-9	
Chromium, Dissolved	**0.34J**	ug/L	1.0	1	03/25/13 15:00	04/08/13 18:28	7440-47-3	B
Cobalt, Dissolved	**0.050J**	ug/L	1.0	1	03/25/13 15:00	04/08/13 18:28	7440-48-4	
Copper, Dissolved	**0.45J**	ug/L	1.0	1	03/25/13 15:00	04/08/13 18:28	7440-50-8	
Iron, Dissolved	**48.8J**	ug/L	50.0	1	03/25/13 15:00	04/08/13 18:28	7439-89-6	
Lead, Dissolved	**0.16J**	ug/L	1.0	1	03/25/13 15:00	04/08/13 18:28	7439-92-1	B
Manganese, Dissolved	**145**	ug/L	1.0	1	03/25/13 15:00	04/08/13 18:28	7439-96-5	
Molybdenum, Dissolved	**1.2**	ug/L	1.0	1	03/25/13 15:00	04/08/13 18:28	7439-98-7	
Nickel, Dissolved	ND	ug/L	1.0	1	03/25/13 15:00	04/08/13 18:28	7440-02-0	
Selenium, Dissolved	**0.88J**	ug/L	1.0	1	03/25/13 15:00	04/08/13 18:28	7782-49-2	
Silver, Dissolved	ND	ug/L	0.50	1	03/25/13 15:00	04/08/13 18:28	7440-22-4	
Thallium, Dissolved	ND	ug/L	1.0	1	03/25/13 15:00	04/08/13 18:28	7440-28-0	
Vanadium, Dissolved	ND	ug/L	1.0	1	03/25/13 15:00	04/08/13 18:28	7440-62-2	
Zinc, Dissolved	**8.7J**	ug/L	10.0	1	03/25/13 15:00	04/08/13 18:28	7440-66-6	B
245.1 Mercury	Analytical Method: EPA 245.1 Preparation Method: EPA 245.1							
Mercury	ND	ug/L	0.20	1	03/27/13 11:18	04/03/13 13:09	7439-97-6	
245.1 Mercury, Dissolved	Analytical Method: EPA 245.1 Preparation Method: EPA 245.1							
Mercury, Dissolved	ND	ug/L	0.20	1	03/27/13 11:12	04/03/13 14:07	7439-97-6	
245.1 Potentially Diss Mercury	Analytical Method: EPA 245.1 Preparation Method: EPA 245.1							
Mercury, Dissolved	ND	ug/L	0.20	1	03/26/13 16:35	03/27/13 13:40	7439-97-6	
2510B Specific Conductance	Analytical Method: SM 2510B							
Specific Conductance	**391**	umhos/cm	10.0	1		04/02/13 14:51		
Salinity	Analytical Method: Calculated							
Salinity (as dissolved solids)	**250**	mg/L	6.4	1		04/05/13 11:03		

REPORT OF LABORATORY ANALYSIS

This report shall not be reproduced, except in full,
without the written consent of Pace Analytical Services, Inc..

Pace Analytical Services, Inc.
9608 Loiret Blvd.
Lenexa, KS 66219
(913)599-5665

ANALYTICAL RESULTS

Project: MARCH 2013 RICO WATER SAMPLING
Pace Project No.: 60141075

Sample: DR-2_20130321 **Lab ID: 60141075006** Collected: 03/21/13 14:05 Received: 03/23/13 08:55 Matrix: Water

Parameters	Results	Units	Report Limit	DF	Prepared	Analyzed	CAS No.	Qual
Salinity	Analytical Method: Calculated							
Salinity (as seawater)	**0.19**	PSU	0.014	1		04/05/13 11:03		
2320B Alkalinity	Analytical Method: SM 2320B							
Alkalinity,Bicarbonate (CaCO3)	**110**	mg/L	20.0	1		04/01/13 11:53		
Alkalinity, Carbonate (CaCO3)	ND	mg/L	20.0	1		04/01/13 11:53		
Alkalinity, Total as CaCO3	**110**	mg/L	20.0	1		04/01/13 11:53		
2540C Total Dissolved Solids	Analytical Method: SM 2540C							
Total Dissolved Solids	**241**	mg/L	5.0	1		03/27/13 15:00		
2540D Total Suspended Solids	Analytical Method: SM 2540D							
Total Suspended Solids	ND	mg/L	5.0	1		03/27/13 09:07		
4500S2D Sulfide, Total	Analytical Method: SM 4500-S-2 D							
Sulfide, Total	ND	mg/L	0.050	1		03/28/13 13:06	18496-25-8	
300.0 IC Anions 28 Days	Analytical Method: EPA 300.0							
Chloride	**5.4**	mg/L	1.0	1		04/01/13 19:34	16887-00-6	B
Sulfate	**81.8**	mg/L	10.0	10		04/01/13 13:56	14808-79-8	
353.2 Nitrogen, NO2/NO3 pres.	Analytical Method: EPA 353.2							
Nitrogen, NO2 plus NO3	ND	mg/L	0.10	1		03/26/13 15:57		
4500CNE Cyanide, Total	Analytical Method: SM 4500-CN-E							
Cyanide	ND	mg/L	0.0050	1		03/27/13 15:56	57-12-5	
5310C TOC	Analytical Method: SM 5310C							
Total Organic Carbon	**0.70**	mg/L	0.50	1		04/02/13 05:18	7440-44-0	

This report shall not be reproduced, except in full,
without the written consent of Pace Analytical Services, Inc..

Pace Analytical Services, Inc.
9608 Loiret Blvd.
Lenexa, KS 66219
(913)599-5665

ANALYTICAL RESULTS

Project: MARCH 2013 RICO WATER SAMPLING
Pace Project No.: 60141075

Sample: DR-2 COMPOSITE_20130321 **Lab ID: 60141075007** Collected: 03/21/13 13:57 Received: 03/23/13 08:55 Matrix: Water

Parameters	Results	Units	Report Limit	DF	Prepared	Analyzed	CAS No.	Qual
200.7 Potentially Diss. Metals	Analytical Method: EPA 200.7 Preparation Method: EPA 200.7							
Calcium, Dissolved	**65300**	ug/L	100	1	03/25/13 15:00	04/05/13 17:09	7440-70-2	
Magnesium, Dissolved	**8770**	ug/L	50.0	1	03/25/13 15:00	04/05/13 17:09	7439-95-4	
Potassium, Dissolved	**1110**	ug/L	500	1	03/25/13 15:00	04/05/13 17:09	7440-09-7	
Sodium, Dissolved	**5520**	ug/L	500	1	03/25/13 15:00	04/05/13 17:09	7440-23-5	
200.8 MET ICPMS	Analytical Method: EPA 200.8 Preparation Method: EPA 200.8							
Aluminum	**10.2**	ug/L	4.0	1	03/27/13 09:09	04/02/13 03:35	7429-90-5	
Antimony	ND	ug/L	0.50	1	03/27/13 09:09	04/02/13 03:35	7440-36-0	
Arsenic	ND	ug/L	0.50	1	03/27/13 09:09	04/02/13 03:35	7440-38-2	
Barium	**75.0**	ug/L	0.30	1	03/27/13 09:09	04/02/13 03:35	7440-39-3	
Beryllium	ND	ug/L	0.20	1	03/27/13 09:09	04/02/13 03:35	7440-41-7	
Cadmium	ND	ug/L	0.080	1	03/27/13 09:09	04/02/13 03:35	7440-43-9	
Calcium	**67000**	ug/L	200	10	03/27/13 09:09	04/02/13 16:28	7440-70-2	
Chromium	ND	ug/L	0.50	1	03/27/13 09:09	04/02/13 03:35	7440-47-3	
Cobalt	ND	ug/L	0.50	1	03/27/13 09:09	04/02/13 03:35	7440-48-4	
Copper	ND	ug/L	0.50	1	03/27/13 09:09	04/02/13 03:35	7440-50-8	
Iron	**51.5**	ug/L	50.0	1	03/27/13 09:09	04/02/13 03:35	7439-89-6	
Lead	ND	ug/L	0.10	1	03/27/13 09:09	04/02/13 03:35	7439-92-1	
Magnesium	**8850**	ug/L	5.0	1	03/27/13 09:09	04/02/13 03:35	7439-95-4	
Manganese	**156**	ug/L	0.50	1	03/27/13 09:09	04/02/13 03:35	7439-96-5	
Molybdenum	**1.1**	ug/L	0.50	1	03/27/13 09:09	04/02/13 03:35	7439-98-7	
Nickel	ND	ug/L	0.50	1	03/27/13 09:09	04/02/13 03:35	7440-02-0	
Potassium	**940**	ug/L	20.0	1	03/27/13 09:09	04/02/13 03:35	7440-09-7	
Selenium	**0.79**	ug/L	0.50	1	03/27/13 09:09	04/02/13 03:35	7782-49-2	
Silica	**7110**	ug/L	535	10	03/27/13 09:09	04/02/13 16:28	7631-86-9	
Silver	ND	ug/L	0.50	1	03/27/13 09:09	04/02/13 03:35	7440-22-4	
Sodium	**4840**	ug/L	50.0	1	03/27/13 09:09	04/02/13 03:35	7440-23-5	
Thallium	ND	ug/L	0.10	1	03/27/13 09:09	04/02/13 03:35	7440-28-0	
Total Hardness by 2340B	**204000**	ug/L	710	10	03/27/13 09:09	04/02/13 16:28		
Vanadium	**0.10**	ug/L	0.10	1	03/27/13 09:09	04/02/13 03:35	7440-62-2	
Zinc	**6.3**	ug/L	5.0	1	03/27/13 09:09	04/02/13 03:35	7440-66-6	
200.8 MET ICPMS, Dissolved	Analytical Method: EPA 200.8 Preparation Method: EPA 200.8							
Aluminum, Dissolved	ND	ug/L	4.0	1	03/27/13 09:14	04/03/13 19:51	7429-90-5	
Antimony, Dissolved	ND	ug/L	0.50	1	03/27/13 09:14	04/03/13 19:51	7440-36-0	
Arsenic, Dissolved	ND	ug/L	0.50	1	03/27/13 09:14	04/03/13 19:51	7440-38-2	
Barium, Dissolved	**77.6**	ug/L	0.30	1	03/27/13 09:14	04/03/13 19:51	7440-39-3	
Beryllium, Dissolved	ND	ug/L	0.20	1	03/27/13 09:14	04/08/13 17:32	7440-41-7	
Cadmium, Dissolved	ND	ug/L	0.080	1	03/27/13 09:14	04/03/13 19:51	7440-43-9	
Calcium, Dissolved	**63900**	ug/L	200	10	03/27/13 09:14	04/03/13 19:55	7440-70-2	
Chromium, Dissolved	ND	ug/L	0.50	1	03/27/13 09:14	04/03/13 19:51	7440-47-3	
Cobalt, Dissolved	ND	ug/L	0.50	1	03/27/13 09:14	04/03/13 19:51	7440-48-4	
Copper, Dissolved	**0.52**	ug/L	0.50	1	03/27/13 09:14	04/03/13 19:51	7440-50-8	
Iron, Dissolved	ND	ug/L	50.0	1	03/27/13 09:14	04/03/13 19:51	7439-89-6	
Lead, Dissolved	ND	ug/L	0.10	1	03/27/13 09:14	04/03/13 19:51	7439-92-1	
Magnesium, Dissolved	**8980**	ug/L	5.0	1	03/27/13 09:14	04/03/13 19:51	7439-95-4	

This report shall not be reproduced, except in full,
without the written consent of Pace Analytical Services, Inc..

Pace Analytical Services, Inc.
9608 Loiret Blvd.
Lenexa, KS 66219
(913)599-5665

ANALYTICAL RESULTS

Project: MARCH 2013 RICO WATER SAMPLING
Pace Project No.: 60141075

Sample: DR-2 COMPOSITE_20130321 **Lab ID: 60141075007** Collected: 03/21/13 13:57 Received: 03/23/13 08:55 Matrix: Water

Parameters	Results	Units	Report Limit	DF	Prepared	Analyzed	CAS No.	Qual
200.8 MET ICPMS, Dissolved	Analytical Method: EPA 200.8 Preparation Method: EPA 200.8							
Manganese, Dissolved	**161**	ug/L	0.50	1	03/27/13 09:14	04/03/13 19:51	7439-96-5	
Molybdenum, Dissolved	**1.0**	ug/L	0.50	1	03/27/13 09:14	04/03/13 19:51	7439-98-7	
Nickel, Dissolved	ND	ug/L	0.50	1	03/27/13 09:14	04/03/13 19:51	7440-02-0	
Potassium, Dissolved	**946**	ug/L	20.0	1	03/27/13 09:14	04/03/13 19:51	7440-09-7	
Selenium, Dissolved	**0.85**	ug/L	0.50	1	03/27/13 09:14	04/08/13 17:32	7782-49-2	
Silver, Dissolved	ND	ug/L	0.50	1	03/27/13 09:14	04/03/13 19:51	7440-22-4	
Sodium, Dissolved	**5010**	ug/L	50.0	1	03/27/13 09:14	04/03/13 19:51	7440-23-5	
Thallium, Dissolved	ND	ug/L	0.10	1	03/27/13 09:14	04/03/13 19:51	7440-28-0	
Vanadium, Dissolved	ND	ug/L	0.10	1	03/27/13 09:14	04/03/13 19:51	7440-62-2	
Zinc, Dissolved	ND	ug/L	5.0	1	03/27/13 09:14	04/03/13 19:51	7440-66-6	
200.8 Potentially Diss. Metals	Analytical Method: EPA 200.8 Preparation Method: EPA 200.8							
Aluminum, Dissolved	**6.4J**	ug/L	50.0	1	03/25/13 15:00	04/08/13 18:32	7429-90-5	
Antimony, Dissolved	ND	ug/L	1.0	1	03/25/13 15:00	04/08/13 18:32	7440-36-0	
Arsenic, Dissolved	ND	ug/L	1.0	1	03/25/13 15:00	04/08/13 18:32	7440-38-2	
Barium, Dissolved	**72.6**	ug/L	1.0	1	03/25/13 15:00	04/08/13 18:32	7440-39-3	
Beryllium, Dissolved	ND	ug/L	0.50	1	03/25/13 15:00	04/08/13 18:32	7440-41-7	
Cadmium, Dissolved	ND	ug/L	0.50	1	03/25/13 15:00	04/08/13 18:32	7440-43-9	
Chromium, Dissolved	**0.54J**	ug/L	1.0	1	03/25/13 15:00	04/08/13 18:32	7440-47-3	B
Cobalt, Dissolved	**0.11J**	ug/L	1.0	1	03/25/13 15:00	04/08/13 18:32	7440-48-4	
Copper, Dissolved	**0.46J**	ug/L	1.0	1	03/25/13 15:00	04/08/13 18:32	7440-50-8	
Iron, Dissolved	**114**	ug/L	50.0	1	03/25/13 15:00	04/08/13 18:32	7439-89-6	
Lead, Dissolved	**0.23J**	ug/L	1.0	1	03/25/13 15:00	04/08/13 18:32	7439-92-1	B
Manganese, Dissolved	**156**	ug/L	1.0	1	03/25/13 15:00	04/08/13 18:32	7439-96-5	
Molybdenum, Dissolved	**1.3**	ug/L	1.0	1	03/25/13 15:00	04/08/13 18:32	7439-98-7	
Nickel, Dissolved	ND	ug/L	1.0	1	03/25/13 15:00	04/08/13 18:32	7440-02-0	
Selenium, Dissolved	**0.73J**	ug/L	1.0	1	03/25/13 15:00	04/08/13 18:32	7782-49-2	
Silver, Dissolved	ND	ug/L	0.50	1	03/25/13 15:00	04/08/13 18:32	7440-22-4	
Thallium, Dissolved	ND	ug/L	1.0	1	03/25/13 15:00	04/08/13 18:32	7440-28-0	
Vanadium, Dissolved	ND	ug/L	1.0	1	03/25/13 15:00	04/08/13 18:32	7440-62-2	
Zinc, Dissolved	**6.9J**	ug/L	10.0	1	03/25/13 15:00	04/08/13 18:32	7440-66-6	B
245.1 Mercury	Analytical Method: EPA 245.1 Preparation Method: EPA 245.1							
Mercury	ND	ug/L	0.20	1	03/27/13 11:18	04/03/13 13:16	7439-97-6	
245.1 Mercury, Dissolved	Analytical Method: EPA 245.1 Preparation Method: EPA 245.1							
Mercury, Dissolved	ND	ug/L	0.20	1	03/27/13 11:12	04/03/13 14:09	7439-97-6	
245.1 Potentially Diss Mercury	Analytical Method: EPA 245.1 Preparation Method: EPA 245.1							
Mercury, Dissolved	ND	ug/L	0.20	1	03/26/13 16:35	03/27/13 13:49	7439-97-6	
2510B Specific Conductance	Analytical Method: SM 2510B							
Specific Conductance	**443**	umhos/cm	10.0	1		04/02/13 14:53		

This report shall not be reproduced, except in full,
without the written consent of Pace Analytical Services, Inc..

Pace Analytical Services, Inc.
9608 Loiret Blvd.
Lenexa, KS 66219
(913)599-5665

ANALYTICAL RESULTS

Project: MARCH 2013 RICO WATER SAMPLING
Pace Project No.: 60141075

Sample: DR-2 COMPOSITE_20130321 **Lab ID: 60141075007** Collected: 03/21/13 13:57 Received: 03/23/13 08:55 Matrix: Water

Parameters	Results	Units	Report Limit	DF	Prepared	Analyzed	CAS No.	Qual
Salinity	Analytical Method: Calculated							
Salinity (as dissolved solids)	**284**	mg/L	6.4	1		04/05/13 11:03		
Salinity (as seawater)	**0.21**	PSU	0.014	1		04/05/13 11:03		
2320B Alkalinity	Analytical Method: SM 2320B							
Alkalinity,Bicarbonate (CaCO3)	**133**	mg/L	20.0	1		04/01/13 12:08		
Alkalinity, Carbonate (CaCO3)	ND	mg/L	20.0	1		04/01/13 12:08		
Alkalinity, Total as CaCO3	**133**	mg/L	20.0	1		04/01/13 12:08		
2540C Total Dissolved Solids	Analytical Method: SM 2540C							
Total Dissolved Solids	**268**	mg/L	5.0	1		03/27/13 15:00		
2540D Total Suspended Solids	Analytical Method: SM 2540D							
Total Suspended Solids	ND	mg/L	5.0	1		03/27/13 09:08		
4500S2D Sulfide, Total	Analytical Method: SM 4500-S-2 D							
Sulfide, Total	ND	mg/L	0.050	1		03/28/13 13:07	18496-25-8	
300.0 IC Anions 28 Days	Analytical Method: EPA 300.0							
Chloride	**5.3**	mg/L	1.0	1		04/01/13 19:50	16887-00-6	B
Sulfate	**89.3**	mg/L	10.0	10		04/01/13 14:42	14808-79-8	
353.2 Nitrogen, NO2/NO3 pres.	Analytical Method: EPA 353.2							
Nitrogen, NO2 plus NO3	ND	mg/L	0.10	1		03/26/13 15:58		
4500CNE Cyanide, Total	Analytical Method: SM 4500-CN-E							
Cyanide	ND	mg/L	0.0050	1		03/27/13 15:56	57-12-5	
5310C TOC	Analytical Method: SM 5310C							
Total Organic Carbon	**0.71**	mg/L	0.50	1		04/02/13 05:36	7440-44-0	

This report shall not be reproduced, except in full,
without the written consent of Pace Analytical Services, Inc..

Pace Analytical Services, Inc.
9608 Loiret Blvd.
Lenexa, KS 66219
(913)599-5665

ANALYTICAL RESULTS

Project: MARCH 2013 RICO WATER SAMPLING
Pace Project No.: 60141075

Sample: DR-11_20130321 **Lab ID: 60141075008** Collected: 03/21/13 14:06 Received: 03/23/13 08:55 Matrix: Water

Parameters	Results	Units	Report Limit	DF	Prepared	Analyzed	CAS No.	Qual
200.7 Potentially Diss. Metals	Analytical Method: EPA 200.7 Preparation Method: EPA 200.7							
Calcium, Dissolved	**60600**	ug/L	100	1	03/25/13 15:00	04/05/13 17:11	7440-70-2	
Magnesium, Dissolved	**8030**	ug/L	50.0	1	03/25/13 15:00	04/05/13 17:11	7439-95-4	
Potassium, Dissolved	**893**	ug/L	500	1	03/25/13 15:00	04/05/13 17:11	7440-09-7	
Sodium, Dissolved	**5000**	ug/L	500	1	03/25/13 15:00	04/05/13 17:11	7440-23-5	
200.8 MET ICPMS	Analytical Method: EPA 200.8 Preparation Method: EPA 200.8							
Aluminum	**9.6**	ug/L	4.0	1	03/27/13 09:09	04/02/13 03:58	7429-90-5	
Antimony	ND	ug/L	0.50	1	03/27/13 09:09	04/02/13 03:58	7440-36-0	
Arsenic	ND	ug/L	0.50	1	03/27/13 09:09	04/02/13 03:58	7440-38-2	
Barium	**76.8**	ug/L	0.30	1	03/27/13 09:09	04/02/13 03:58	7440-39-3	
Beryllium	ND	ug/L	0.20	1	03/27/13 09:09	04/02/13 03:58	7440-41-7	
Cadmium	ND	ug/L	0.080	1	03/27/13 09:09	04/02/13 03:58	7440-43-9	
Calcium	**66900**	ug/L	200	10	03/27/13 09:09	04/02/13 16:32	7440-70-2	
Chromium	ND	ug/L	0.50	1	03/27/13 09:09	04/02/13 03:58	7440-47-3	
Cobalt	ND	ug/L	0.50	1	03/27/13 09:09	04/02/13 03:58	7440-48-4	
Copper	ND	ug/L	0.50	1	03/27/13 09:09	04/02/13 03:58	7440-50-8	
Iron	**53.9**	ug/L	50.0	1	03/27/13 09:09	04/02/13 03:58	7439-89-6	
Lead	ND	ug/L	0.10	1	03/27/13 09:09	04/02/13 03:58	7439-92-1	
Magnesium	**8830**	ug/L	5.0	1	03/27/13 09:09	04/02/13 03:58	7439-95-4	
Manganese	**158**	ug/L	0.50	1	03/27/13 09:09	04/02/13 03:58	7439-96-5	
Molybdenum	**1.1**	ug/L	0.50	1	03/27/13 09:09	04/02/13 03:58	7439-98-7	
Nickel	**0.66**	ug/L	0.50	1	03/27/13 09:09	04/02/13 03:58	7440-02-0	
Potassium	**951**	ug/L	20.0	1	03/27/13 09:09	04/02/13 03:58	7440-09-7	
Selenium	**0.80**	ug/L	0.50	1	03/27/13 09:09	04/02/13 03:58	7782-49-2	
Silica	**6750**	ug/L	535	10	03/27/13 09:09	04/02/13 16:32	7631-86-9	
Silver	ND	ug/L	0.50	1	03/27/13 09:09	04/02/13 03:58	7440-22-4	
Sodium	**4830**	ug/L	50.0	1	03/27/13 09:09	04/02/13 03:58	7440-23-5	
Thallium	ND	ug/L	0.10	1	03/27/13 09:09	04/02/13 03:58	7440-28-0	
Total Hardness by 2340B	**204000**	ug/L	710	10	03/27/13 09:09	04/02/13 16:32		
Vanadium	ND	ug/L	0.10	1	03/27/13 09:09	04/02/13 03:58	7440-62-2	
Zinc	**6.6**	ug/L	5.0	1	03/27/13 09:09	04/02/13 03:58	7440-66-6	
200.8 MET ICPMS, Dissolved	Analytical Method: EPA 200.8 Preparation Method: EPA 200.8							
Aluminum, Dissolved	ND	ug/L	4.0	1	03/27/13 09:14	04/03/13 20:00	7429-90-5	
Antimony, Dissolved	ND	ug/L	0.50	1	03/27/13 09:14	04/03/13 20:00	7440-36-0	
Arsenic, Dissolved	ND	ug/L	0.50	1	03/27/13 09:14	04/03/13 20:00	7440-38-2	
Barium, Dissolved	**76.5**	ug/L	0.30	1	03/27/13 09:14	04/03/13 20:00	7440-39-3	
Beryllium, Dissolved	ND	ug/L	0.20	1	03/27/13 09:14	04/08/13 17:36	7440-41-7	
Cadmium, Dissolved	ND	ug/L	0.080	1	03/27/13 09:14	04/03/13 20:00	7440-43-9	
Calcium, Dissolved	**63200**	ug/L	200	10	03/27/13 09:14	04/03/13 20:04	7440-70-2	
Chromium, Dissolved	ND	ug/L	0.50	1	03/27/13 09:14	04/03/13 20:00	7440-47-3	
Cobalt, Dissolved	ND	ug/L	0.50	1	03/27/13 09:14	04/03/13 20:00	7440-48-4	
Copper, Dissolved	**0.55**	ug/L	0.50	1	03/27/13 09:14	04/03/13 20:00	7440-50-8	
Iron, Dissolved	ND	ug/L	50.0	1	03/27/13 09:14	04/03/13 20:00	7439-89-6	
Lead, Dissolved	ND	ug/L	0.10	1	03/27/13 09:14	04/03/13 20:00	7439-92-1	
Magnesium, Dissolved	**8930**	ug/L	5.0	1	03/27/13 09:14	04/03/13 20:00	7439-95-4	

This report shall not be reproduced, except in full,
without the written consent of Pace Analytical Services, Inc..

Pace Analytical Services, Inc.
9608 Loiret Blvd.
Lenexa, KS 66219
(913)599-5665

ANALYTICAL RESULTS

Project: MARCH 2013 RICO WATER SAMPLING
Pace Project No.: 60141075

Sample: DR-11_20130321 **Lab ID: 60141075008** Collected: 03/21/13 14:06 Received: 03/23/13 08:55 Matrix: Water

Parameters	Results	Units	Report Limit	DF	Prepared	Analyzed	CAS No.	Qual
200.8 MET ICPMS, Dissolved	Analytical Method: EPA 200.8 Preparation Method: EPA 200.8							
Manganese, Dissolved	**160**	ug/L	0.50	1	03/27/13 09:14	04/03/13 20:00	7439-96-5	
Molybdenum, Dissolved	**1.0**	ug/L	0.50	1	03/27/13 09:14	04/03/13 20:00	7439-98-7	
Nickel, Dissolved	ND	ug/L	0.50	1	03/27/13 09:14	04/03/13 20:00	7440-02-0	
Potassium, Dissolved	**942**	ug/L	20.0	1	03/27/13 09:14	04/03/13 20:00	7440-09-7	
Selenium, Dissolved	**0.76**	ug/L	0.50	1	03/27/13 09:14	04/08/13 17:36	7782-49-2	
Silver, Dissolved	ND	ug/L	0.50	1	03/27/13 09:14	04/03/13 20:00	7440-22-4	
Sodium, Dissolved	**5010**	ug/L	50.0	1	03/27/13 09:14	04/03/13 20:00	7440-23-5	
Thallium, Dissolved	ND	ug/L	0.10	1	03/27/13 09:14	04/03/13 20:00	7440-28-0	
Vanadium, Dissolved	ND	ug/L	0.10	1	03/27/13 09:14	04/03/13 20:00	7440-62-2	
Zinc, Dissolved	ND	ug/L	5.0	1	03/27/13 09:14	04/03/13 20:00	7440-66-6	
200.8 Potentially Diss. Metals	Analytical Method: EPA 200.8 Preparation Method: EPA 200.8							
Aluminum, Dissolved	**6.7J**	ug/L	50.0	1	03/25/13 15:00	04/08/13 18:36	7429-90-5	
Antimony, Dissolved	ND	ug/L	1.0	1	03/25/13 15:00	04/08/13 18:36	7440-36-0	
Arsenic, Dissolved	ND	ug/L	1.0	1	03/25/13 15:00	04/08/13 18:36	7440-38-2	
Barium, Dissolved	**72.6**	ug/L	1.0	1	03/25/13 15:00	04/08/13 18:36	7440-39-3	
Beryllium, Dissolved	ND	ug/L	0.50	1	03/25/13 15:00	04/08/13 18:36	7440-41-7	
Cadmium, Dissolved	ND	ug/L	0.50	1	03/25/13 15:00	04/08/13 18:36	7440-43-9	
Chromium, Dissolved	**0.53J**	ug/L	1.0	1	03/25/13 15:00	04/08/13 18:36	7440-47-3	B
Cobalt, Dissolved	**0.075J**	ug/L	1.0	1	03/25/13 15:00	04/08/13 18:36	7440-48-4	
Copper, Dissolved	ND	ug/L	1.0	1	03/25/13 15:00	04/08/13 18:36	7440-50-8	
Iron, Dissolved	**49.3J**	ug/L	50.0	1	03/25/13 15:00	04/08/13 18:36	7439-89-6	
Lead, Dissolved	**0.14J**	ug/L	1.0	1	03/25/13 15:00	04/08/13 18:36	7439-92-1	B
Manganese, Dissolved	**149**	ug/L	1.0	1	03/25/13 15:00	04/08/13 18:36	7439-96-5	
Molybdenum, Dissolved	**1.2**	ug/L	1.0	1	03/25/13 15:00	04/08/13 18:36	7439-98-7	
Nickel, Dissolved	ND	ug/L	1.0	1	03/25/13 15:00	04/08/13 18:36	7440-02-0	
Selenium, Dissolved	**0.67J**	ug/L	1.0	1	03/25/13 15:00	04/08/13 18:36	7782-49-2	
Silver, Dissolved	ND	ug/L	0.50	1	03/25/13 15:00	04/08/13 18:36	7440-22-4	
Thallium, Dissolved	ND	ug/L	1.0	1	03/25/13 15:00	04/08/13 18:36	7440-28-0	
Vanadium, Dissolved	ND	ug/L	1.0	1	03/25/13 15:00	04/08/13 18:36	7440-62-2	
Zinc, Dissolved	**8.2J**	ug/L	10.0	1	03/25/13 15:00	04/08/13 18:36	7440-66-6	B
245.1 Mercury	Analytical Method: EPA 245.1 Preparation Method: EPA 245.1							
Mercury	ND	ug/L	0.20	1	03/27/13 11:18	04/03/13 13:19	7439-97-6	
245.1 Mercury, Dissolved	Analytical Method: EPA 245.1 Preparation Method: EPA 245.1							
Mercury, Dissolved	ND	ug/L	0.20	1	03/27/13 11:12	04/03/13 14:12	7439-97-6	
245.1 Potentially Diss Mercury	Analytical Method: EPA 245.1 Preparation Method: EPA 245.1							
Mercury, Dissolved	ND	ug/L	0.20	1	03/26/13 16:35	03/27/13 13:51	7439-97-6	
2510B Specific Conductance	Analytical Method: SM 2510B							
Specific Conductance	**411**	umhos/cm	10.0	1		04/02/13 14:55		
Salinity	Analytical Method: Calculated							
Salinity (as dissolved solids)	**263**	mg/L	6.4	1		04/05/13 11:03		

REPORT OF LABORATORY ANALYSIS

This report shall not be reproduced, except in full,
without the written consent of Pace Analytical Services, Inc..

Pace Analytical Services, Inc.
9608 Loiret Blvd.
Lenexa, KS 66219
(913)599-5665

ANALYTICAL RESULTS

Project: MARCH 2013 RICO WATER SAMPLING
Pace Project No.: 60141075

Sample: DR-11_20130321 **Lab ID: 60141075008** Collected: 03/21/13 14:06 Received: 03/23/13 08:55 Matrix: Water

Parameters	Results	Units	Report Limit	DF	Prepared	Analyzed	CAS No.	Qual
Salinity	Analytical Method: Calculated							
Salinity (as seawater)	**0.20**	PSU	0.014	1		04/05/13 11:03		
2320B Alkalinity	Analytical Method: SM 2320B							
Alkalinity,Bicarbonate (CaCO3)	**112**	mg/L	20.0	1		04/01/13 12:12		
Alkalinity, Carbonate (CaCO3)	ND	mg/L	20.0	1		04/01/13 12:12		
Alkalinity, Total as CaCO3	**112**	mg/L	20.0	1		04/01/13 12:12		
2540C Total Dissolved Solids	Analytical Method: SM 2540C							
Total Dissolved Solids	**246**	mg/L	5.0	1		03/27/13 15:01		
2540D Total Suspended Solids	Analytical Method: SM 2540D							
Total Suspended Solids	ND	mg/L	5.0	1		03/27/13 09:08		
4500S2D Sulfide, Total	Analytical Method: SM 4500-S-2 D							
Sulfide, Total	ND	mg/L	0.050	1		03/28/13 13:07	18496-25-8	
300.0 IC Anions 28 Days	Analytical Method: EPA 300.0							
Chloride	**5.3**	mg/L	1.0	1		04/01/13 20:05	16887-00-6	B
Sulfate	**82.9**	mg/L	10.0	10		04/01/13 14:57	14808-79-8	
353.2 Nitrogen, NO2/NO3 pres.	Analytical Method: EPA 353.2							
Nitrogen, NO2 plus NO3	ND	mg/L	0.10	1		03/26/13 15:59		
4500CNE Cyanide, Total	Analytical Method: SM 4500-CN-E							
Cyanide	ND	mg/L	0.0050	1		03/27/13 15:59	57-12-5	
5310C TOC	Analytical Method: SM 5310C							
Total Organic Carbon	**0.74**	mg/L	0.50	1		04/02/13 05:54	7440-44-0	

This report shall not be reproduced, except in full,
without the written consent of Pace Analytical Services, Inc..

Pace Analytical Services, Inc.
9608 Loiret Blvd.
Lenexa, KS 66219
(913)599-5665

ANALYTICAL RESULTS

Project: MARCH 2013 RICO WATER SAMPLING
Pace Project No.: 60141075

Sample: DR-1COMPOSITE_20130321 **Lab ID: 60141075009** Collected: 03/21/13 14:45 Received: 03/23/13 08:55 Matrix: Water

Parameters	Results	Units	Report Limit	DF	Prepared	Analyzed	CAS No.	Qual
200.7 Potentially Diss. Metals	Analytical Method: EPA 200.7 Preparation Method: EPA 200.7							
Calcium, Dissolved	**46000**	ug/L	100	1	03/25/13 15:00	04/05/13 17:13	7440-70-2	
Magnesium, Dissolved	**6830**	ug/L	50.0	1	03/25/13 15:00	04/05/13 17:13	7439-95-4	
Potassium, Dissolved	**604**	ug/L	500	1	03/25/13 15:00	04/05/13 17:13	7440-09-7	
Sodium, Dissolved	**4400**	ug/L	500	1	03/25/13 15:00	04/05/13 17:13	7440-23-5	
200.8 MET ICPMS	Analytical Method: EPA 200.8 Preparation Method: EPA 200.8							
Aluminum	**11.3**	ug/L	4.0	1	03/27/13 09:09	04/02/13 04:07	7429-90-5	
Antimony	ND	ug/L	0.50	1	03/27/13 09:09	04/02/13 04:07	7440-36-0	
Arsenic	ND	ug/L	0.50	1	03/27/13 09:09	04/02/13 04:07	7440-38-2	
Barium	**79.9**	ug/L	0.30	1	03/27/13 09:09	04/02/13 04:07	7440-39-3	
Beryllium	ND	ug/L	0.20	1	03/27/13 09:09	04/02/13 04:07	7440-41-7	
Cadmium	ND	ug/L	0.080	1	03/27/13 09:09	04/02/13 04:07	7440-43-9	
Calcium	**54700**	ug/L	200	10	03/27/13 09:09	04/02/13 16:37	7440-70-2	
Chromium	ND	ug/L	0.50	1	03/27/13 09:09	04/02/13 04:07	7440-47-3	
Cobalt	ND	ug/L	0.50	1	03/27/13 09:09	04/02/13 04:07	7440-48-4	
Copper	ND	ug/L	0.50	1	03/27/13 09:09	04/02/13 04:07	7440-50-8	
Iron	ND	ug/L	50.0	1	03/27/13 09:09	04/02/13 04:07	7439-89-6	
Lead	ND	ug/L	0.10	1	03/27/13 09:09	04/02/13 04:07	7439-92-1	
Magnesium	**7830**	ug/L	5.0	1	03/27/13 09:09	04/02/13 04:07	7439-95-4	
Manganese	**10.3**	ug/L	0.50	1	03/27/13 09:09	04/02/13 04:07	7439-96-5	
Molybdenum	**0.90**	ug/L	0.50	1	03/27/13 09:09	04/02/13 04:07	7439-98-7	
Nickel	ND	ug/L	0.50	1	03/27/13 09:09	04/02/13 04:07	7440-02-0	
Potassium	**691**	ug/L	20.0	1	03/27/13 09:09	04/02/13 04:07	7440-09-7	
Selenium	**0.91**	ug/L	0.50	1	03/27/13 09:09	04/02/13 04:07	7782-49-2	
Silica	**6200**	ug/L	535	10	03/27/13 09:09	04/02/13 16:37	7631-86-9	
Silver	ND	ug/L	0.50	1	03/27/13 09:09	04/02/13 04:07	7440-22-4	
Sodium	**4550**	ug/L	50.0	1	03/27/13 09:09	04/02/13 04:07	7440-23-5	
Thallium	ND	ug/L	0.10	1	03/27/13 09:09	04/02/13 04:07	7440-28-0	
Total Hardness by 2340B	**169000**	ug/L	710	10	03/27/13 09:09	04/02/13 16:37		
Vanadium	ND	ug/L	0.10	1	03/27/13 09:09	04/02/13 04:07	7440-62-2	
Zinc	ND	ug/L	5.0	1	03/27/13 09:09	04/02/13 04:07	7440-66-6	
200.8 MET ICPMS, Dissolved	Analytical Method: EPA 200.8 Preparation Method: EPA 200.8							
Aluminum, Dissolved	ND	ug/L	4.0	1	03/27/13 09:14	04/03/13 20:09	7429-90-5	
Antimony, Dissolved	ND	ug/L	0.50	1	03/27/13 09:14	04/03/13 20:09	7440-36-0	
Arsenic, Dissolved	ND	ug/L	0.50	1	03/27/13 09:14	04/03/13 20:09	7440-38-2	
Barium, Dissolved	**80.6**	ug/L	0.30	1	03/27/13 09:14	04/03/13 20:09	7440-39-3	
Beryllium, Dissolved	ND	ug/L	0.20	1	03/27/13 09:14	04/08/13 17:41	7440-41-7	
Cadmium, Dissolved	ND	ug/L	0.080	1	03/27/13 09:14	04/03/13 20:09	7440-43-9	
Calcium, Dissolved	**52500**	ug/L	200	10	03/27/13 09:14	04/03/13 20:13	7440-70-2	
Chromium, Dissolved	ND	ug/L	0.50	1	03/27/13 09:14	04/03/13 20:09	7440-47-3	
Cobalt, Dissolved	ND	ug/L	0.50	1	03/27/13 09:14	04/03/13 20:09	7440-48-4	
Copper, Dissolved	**0.60**	ug/L	0.50	1	03/27/13 09:14	04/03/13 20:09	7440-50-8	
Iron, Dissolved	ND	ug/L	50.0	1	03/27/13 09:14	04/03/13 20:09	7439-89-6	
Lead, Dissolved	ND	ug/L	0.10	1	03/27/13 09:14	04/03/13 20:09	7439-92-1	
Magnesium, Dissolved	**8020**	ug/L	5.0	1	03/27/13 09:14	04/03/13 20:09	7439-95-4	

This report shall not be reproduced, except in full,
without the written consent of Pace Analytical Services, Inc..

Pace Analytical Services, Inc.
9608 Loiret Blvd.
Lenexa, KS 66219
(913)599-5665

ANALYTICAL RESULTS

Project: MARCH 2013 RICO WATER SAMPLING
Pace Project No.: 60141075

Sample: DR-1COMPOSITE_20130321 **Lab ID: 60141075009** Collected: 03/21/13 14:45 Received: 03/23/13 08:55 Matrix: Water

Parameters	Results	Units	Report Limit	DF	Prepared	Analyzed	CAS No.	Qual
200.8 MET ICPMS, Dissolved	Analytical Method: EPA 200.8 Preparation Method: EPA 200.8							
Manganese, Dissolved	**8.1**	ug/L	0.50	1	03/27/13 09:14	04/03/13 20:09	7439-96-5	
Molybdenum, Dissolved	**0.84**	ug/L	0.50	1	03/27/13 09:14	04/03/13 20:09	7439-98-7	
Nickel, Dissolved	ND	ug/L	0.50	1	03/27/13 09:14	04/03/13 20:09	7440-02-0	
Potassium, Dissolved	**700**	ug/L	20.0	1	03/27/13 09:14	04/03/13 20:09	7440-09-7	
Selenium, Dissolved	**0.87**	ug/L	0.50	1	03/27/13 09:14	04/08/13 17:41	7782-49-2	
Silver, Dissolved	ND	ug/L	0.50	1	03/27/13 09:14	04/03/13 20:09	7440-22-4	
Sodium, Dissolved	**4780**	ug/L	50.0	1	03/27/13 09:14	04/03/13 20:09	7440-23-5	
Thallium, Dissolved	ND	ug/L	0.10	1	03/27/13 09:14	04/03/13 20:09	7440-28-0	
Vanadium, Dissolved	ND	ug/L	0.10	1	03/27/13 09:14	04/03/13 20:09	7440-62-2	
Zinc, Dissolved	ND	ug/L	5.0	1	03/27/13 09:14	04/03/13 20:09	7440-66-6	
200.8 Potentially Diss. Metals	Analytical Method: EPA 200.8 Preparation Method: EPA 200.8							
Aluminum, Dissolved	**5.9J**	ug/L	50.0	1	03/25/13 15:00	04/08/13 18:41	7429-90-5	
Antimony, Dissolved	ND	ug/L	1.0	1	03/25/13 15:00	04/08/13 18:41	7440-36-0	
Arsenic, Dissolved	ND	ug/L	1.0	1	03/25/13 15:00	04/08/13 18:41	7440-38-2	
Barium, Dissolved	**74.8**	ug/L	1.0	1	03/25/13 15:00	04/08/13 18:41	7440-39-3	
Beryllium, Dissolved	ND	ug/L	0.50	1	03/25/13 15:00	04/08/13 18:41	7440-41-7	
Cadmium, Dissolved	ND	ug/L	0.50	1	03/25/13 15:00	04/08/13 18:41	7440-43-9	
Chromium, Dissolved	**0.86J**	ug/L	1.0	1	03/25/13 15:00	04/08/13 18:41	7440-47-3	B
Cobalt, Dissolved	ND	ug/L	1.0	1	03/25/13 15:00	04/08/13 18:41	7440-48-4	
Copper, Dissolved	ND	ug/L	1.0	1	03/25/13 15:00	04/08/13 18:41	7440-50-8	
Iron, Dissolved	**31.0J**	ug/L	50.0	1	03/25/13 15:00	04/08/13 18:41	7439-89-6	B
Lead, Dissolved	**0.17J**	ug/L	1.0	1	03/25/13 15:00	04/08/13 18:41	7439-92-1	B
Manganese, Dissolved	**9.5**	ug/L	1.0	1	03/25/13 15:00	04/08/13 18:41	7439-96-5	
Molybdenum, Dissolved	**0.93J**	ug/L	1.0	1	03/25/13 15:00	04/08/13 18:41	7439-98-7	
Nickel, Dissolved	ND	ug/L	1.0	1	03/25/13 15:00	04/08/13 18:41	7440-02-0	
Selenium, Dissolved	**0.78J**	ug/L	1.0	1	03/25/13 15:00	04/08/13 18:41	7782-49-2	
Silver, Dissolved	ND	ug/L	0.50	1	03/25/13 15:00	04/08/13 18:41	7440-22-4	
Thallium, Dissolved	ND	ug/L	1.0	1	03/25/13 15:00	04/08/13 18:41	7440-28-0	
Vanadium, Dissolved	**0.38J**	ug/L	1.0	1	03/25/13 15:00	04/08/13 18:41	7440-62-2	
Zinc, Dissolved	**2.5J**	ug/L	10.0	1	03/25/13 15:00	04/08/13 18:41	7440-66-6	B
245.1 Mercury	Analytical Method: EPA 245.1 Preparation Method: EPA 245.1							
Mercury	ND	ug/L	0.20	1	03/27/13 11:18	04/03/13 13:21	7439-97-6	
245.1 Mercury, Dissolved	Analytical Method: EPA 245.1 Preparation Method: EPA 245.1							
Mercury, Dissolved	ND	ug/L	0.20	1	03/27/13 11:12	04/03/13 14:14	7439-97-6	
245.1 Potentially Diss Mercury	Analytical Method: EPA 245.1 Preparation Method: EPA 245.1							
Mercury, Dissolved	ND	ug/L	0.20	1	03/26/13 16:35	03/27/13 13:54	7439-97-6	
2510B Specific Conductance	Analytical Method: SM 2510B							
Specific Conductance	**336**	umhos/cm	10.0	1		04/02/13 14:56		

This report shall not be reproduced, except in full,
without the written consent of Pace Analytical Services, Inc..

Pace Analytical Services, Inc.
9608 Loiret Blvd.
Lenexa, KS 66219
(913)599-5665

ANALYTICAL RESULTS

Project: MARCH 2013 RICO WATER SAMPLING
Pace Project No.: 60141075

Sample: DR-1COMPOSITE_20130321 **Lab ID: 60141075009** Collected: 03/21/13 14:45 Received: 03/23/13 08:55 Matrix: Water

Parameters	Results	Units	Report Limit	DF	Prepared	Analyzed	CAS No.	Qual
Salinity	Analytical Method: Calculated							
Salinity (as dissolved solids)	**215**	mg/L	6.4	1		04/05/13 11:03		
Salinity (as seawater)	**0.16**	PSU	0.014	1		04/05/13 11:03		
2320B Alkalinity	Analytical Method: SM 2320B							
Alkalinity,Bicarbonate (CaCO3)	**108**	mg/L	20.0	1		04/01/13 12:17		
Alkalinity, Carbonate (CaCO3)	ND	mg/L	20.0	1		04/01/13 12:17		
Alkalinity, Total as CaCO3	**108**	mg/L	20.0	1		04/01/13 12:17		
2540C Total Dissolved Solids	Analytical Method: SM 2540C							
Total Dissolved Solids	**204**	mg/L	5.0	1		03/27/13 15:01		
2540D Total Suspended Solids	Analytical Method: SM 2540D							
Total Suspended Solids	ND	mg/L	5.0	1		03/27/13 09:09		
4500S2D Sulfide, Total	Analytical Method: SM 4500-S-2 D							
Sulfide, Total	ND	mg/L	0.050	1		03/28/13 13:08	18496-25-8	
300.0 IC Anions 28 Days	Analytical Method: EPA 300.0							
Chloride	**5.7**	mg/L	1.0	1		04/01/13 20:52	16887-00-6	B
Sulfate	**57.6**	mg/L	10.0	10		04/01/13 15:13	14808-79-8	
353.2 Nitrogen, NO2/NO3 pres.	Analytical Method: EPA 353.2							
Nitrogen, NO2 plus NO3	ND	mg/L	0.10	1		03/26/13 16:00		
4500CNE Cyanide, Total	Analytical Method: SM 4500-CN-E							
Cyanide	ND	mg/L	0.0050	1		03/27/13 15:59	57-12-5	
5310C TOC	Analytical Method: SM 5310C							
Total Organic Carbon	**0.76**	mg/L	0.50	1		04/02/13 06:12	7440-44-0	

This report shall not be reproduced, except in full,
without the written consent of Pace Analytical Services, Inc..

Pace Analytical Services, Inc.
9608 Loiret Blvd.
Lenexa, KS 66219
(913)599-5665

ANALYTICAL RESULTS

Project: MARCH 2013 RICO WATER SAMPLING
Pace Project No.: 60141075

Sample: DR-1_20130321 **Lab ID: 60141075010** Collected: 03/21/13 14:43 Received: 03/23/13 08:55 Matrix: Water

Parameters	Results	Units	Report Limit	DF	Prepared	Analyzed	CAS No.	Qual
200.7 Potentially Diss. Metals	Analytical Method: EPA 200.7 Preparation Method: EPA 200.7							
Calcium, Dissolved	**48200**	ug/L	100	1	03/25/13 15:00	04/05/13 17:15	7440-70-2	
Magnesium, Dissolved	**6860**	ug/L	50.0	1	03/25/13 15:00	04/05/13 17:15	7439-95-4	
Potassium, Dissolved	**656**	ug/L	500	1	03/25/13 15:00	04/05/13 17:15	7440-09-7	
Sodium, Dissolved	**4630**	ug/L	500	1	03/25/13 15:00	04/05/13 17:15	7440-23-5	
200.8 MET ICPMS	Analytical Method: EPA 200.8 Preparation Method: EPA 200.8							
Aluminum	**9.2**	ug/L	4.0	1	03/27/13 09:09	04/02/13 04:16	7429-90-5	
Antimony	ND	ug/L	0.50	1	03/27/13 09:09	04/02/13 04:16	7440-36-0	
Arsenic	ND	ug/L	0.50	1	03/27/13 09:09	04/02/13 04:16	7440-38-2	
Barium	**79.2**	ug/L	0.30	1	03/27/13 09:09	04/02/13 04:16	7440-39-3	
Beryllium	ND	ug/L	0.20	1	03/27/13 09:09	04/02/13 04:16	7440-41-7	
Cadmium	ND	ug/L	0.080	1	03/27/13 09:09	04/02/13 04:16	7440-43-9	
Calcium	**54800**	ug/L	200	10	03/27/13 09:09	04/02/13 16:41	7440-70-2	
Chromium	ND	ug/L	0.50	1	03/27/13 09:09	04/02/13 04:16	7440-47-3	
Cobalt	ND	ug/L	0.50	1	03/27/13 09:09	04/02/13 04:16	7440-48-4	
Copper	ND	ug/L	0.50	1	03/27/13 09:09	04/02/13 04:16	7440-50-8	
Iron	ND	ug/L	50.0	1	03/27/13 09:09	04/02/13 04:16	7439-89-6	
Lead	ND	ug/L	0.10	1	03/27/13 09:09	04/02/13 04:16	7439-92-1	
Magnesium	**7800**	ug/L	5.0	1	03/27/13 09:09	04/02/13 04:16	7439-95-4	
Manganese	**9.7**	ug/L	0.50	1	03/27/13 09:09	04/02/13 04:16	7439-96-5	
Molybdenum	**0.84**	ug/L	0.50	1	03/27/13 09:09	04/02/13 04:16	7439-98-7	
Nickel	ND	ug/L	0.50	1	03/27/13 09:09	04/02/13 04:16	7440-02-0	
Potassium	**687**	ug/L	20.0	1	03/27/13 09:09	04/02/13 04:16	7440-09-7	
Selenium	**0.66**	ug/L	0.50	1	03/27/13 09:09	04/02/13 04:16	7782-49-2	
Silica	**5930**	ug/L	535	10	03/27/13 09:09	04/02/13 16:41	7631-86-9	
Silver	ND	ug/L	0.50	1	03/27/13 09:09	04/02/13 04:16	7440-22-4	
Sodium	**4540**	ug/L	50.0	1	03/27/13 09:09	04/02/13 04:16	7440-23-5	
Thallium	ND	ug/L	0.10	1	03/27/13 09:09	04/02/13 04:16	7440-28-0	
Total Hardness by 2340B	**169000**	ug/L	710	10	03/27/13 09:09	04/02/13 16:41		
Vanadium	**0.11**	ug/L	0.10	1	03/27/13 09:09	04/02/13 04:16	7440-62-2	
Zinc	ND	ug/L	5.0	1	03/27/13 09:09	04/02/13 04:16	7440-66-6	
200.8 MET ICPMS, Dissolved	Analytical Method: EPA 200.8 Preparation Method: EPA 200.8							
Aluminum, Dissolved	ND	ug/L	4.0	1	03/27/13 09:14	04/03/13 20:47	7429-90-5	
Antimony, Dissolved	ND	ug/L	0.50	1	03/27/13 09:14	04/03/13 20:47	7440-36-0	
Arsenic, Dissolved	ND	ug/L	0.50	1	03/27/13 09:14	04/03/13 20:47	7440-38-2	
Barium, Dissolved	**80.8**	ug/L	0.30	1	03/27/13 09:14	04/03/13 20:47	7440-39-3	
Beryllium, Dissolved	ND	ug/L	0.20	1	03/27/13 09:14	04/08/13 17:45	7440-41-7	
Cadmium, Dissolved	ND	ug/L	0.080	1	03/27/13 09:14	04/03/13 20:47	7440-43-9	
Calcium, Dissolved	**52700**	ug/L	200	10	03/27/13 09:14	04/03/13 20:52	7440-70-2	
Chromium, Dissolved	ND	ug/L	0.50	1	03/27/13 09:14	04/03/13 20:47	7440-47-3	
Cobalt, Dissolved	ND	ug/L	0.50	1	03/27/13 09:14	04/03/13 20:47	7440-48-4	
Copper, Dissolved	**0.55**	ug/L	0.50	1	03/27/13 09:14	04/03/13 20:47	7440-50-8	
Iron, Dissolved	ND	ug/L	50.0	1	03/27/13 09:14	04/03/13 20:47	7439-89-6	
Lead, Dissolved	ND	ug/L	0.10	1	03/27/13 09:14	04/03/13 20:47	7439-92-1	
Magnesium, Dissolved	**7980**	ug/L	5.0	1	03/27/13 09:14	04/03/13 20:47	7439-95-4	

This report shall not be reproduced, except in full,
without the written consent of Pace Analytical Services, Inc..

Pace Analytical Services, Inc.
9608 Loiret Blvd.
Lenexa, KS 66219
(913)599-5665

ANALYTICAL RESULTS

Project: MARCH 2013 RICO WATER SAMPLING
Pace Project No.: 60141075

Sample: DR-1_20130321 **Lab ID: 60141075010** Collected: 03/21/13 14:43 Received: 03/23/13 08:55 Matrix: Water

Parameters	Results	Units	Report Limit	DF	Prepared	Analyzed	CAS No.	Qual
200.8 MET ICPMS, Dissolved	Analytical Method: EPA 200.8 Preparation Method: EPA 200.8							
Manganese, Dissolved	**8.1**	ug/L	0.50	1	03/27/13 09:14	04/03/13 20:47	7439-96-5	
Molybdenum, Dissolved	**0.85**	ug/L	0.50	1	03/27/13 09:14	04/03/13 20:47	7439-98-7	
Nickel, Dissolved	ND	ug/L	0.50	1	03/27/13 09:14	04/03/13 20:47	7440-02-0	
Potassium, Dissolved	**705**	ug/L	20.0	1	03/27/13 09:14	04/03/13 20:47	7440-09-7	
Selenium, Dissolved	**0.69**	ug/L	0.50	1	03/27/13 09:14	04/08/13 17:45	7782-49-2	
Silver, Dissolved	ND	ug/L	0.50	1	03/27/13 09:14	04/03/13 20:47	7440-22-4	
Sodium, Dissolved	**4750**	ug/L	50.0	1	03/27/13 09:14	04/03/13 20:47	7440-23-5	
Thallium, Dissolved	ND	ug/L	0.10	1	03/27/13 09:14	04/03/13 20:47	7440-28-0	
Vanadium, Dissolved	**0.10**	ug/L	0.10	1	03/27/13 09:14	04/03/13 20:47	7440-62-2	
Zinc, Dissolved	ND	ug/L	5.0	1	03/27/13 09:14	04/03/13 20:47	7440-66-6	
200.8 Potentially Diss. Metals	Analytical Method: EPA 200.8 Preparation Method: EPA 200.8							
Aluminum, Dissolved	**7.7J**	ug/L	50.0	1	03/25/13 15:00	04/08/13 18:45	7429-90-5	
Antimony, Dissolved	ND	ug/L	1.0	1	03/25/13 15:00	04/08/13 18:45	7440-36-0	
Arsenic, Dissolved	ND	ug/L	1.0	1	03/25/13 15:00	04/08/13 18:45	7440-38-2	
Barium, Dissolved	**76.7**	ug/L	1.0	1	03/25/13 15:00	04/08/13 18:45	7440-39-3	
Beryllium, Dissolved	ND	ug/L	0.50	1	03/25/13 15:00	04/08/13 18:45	7440-41-7	
Cadmium, Dissolved	ND	ug/L	0.50	1	03/25/13 15:00	04/08/13 18:45	7440-43-9	
Chromium, Dissolved	**0.46J**	ug/L	1.0	1	03/25/13 15:00	04/08/13 18:45	7440-47-3	B
Cobalt, Dissolved	ND	ug/L	1.0	1	03/25/13 15:00	04/08/13 18:45	7440-48-4	
Copper, Dissolved	ND	ug/L	1.0	1	03/25/13 15:00	04/08/13 18:45	7440-50-8	
Iron, Dissolved	**28.7J**	ug/L	50.0	1	03/25/13 15:00	04/08/13 18:45	7439-89-6	B
Lead, Dissolved	**0.15J**	ug/L	1.0	1	03/25/13 15:00	04/08/13 18:45	7439-92-1	B
Manganese, Dissolved	**9.3**	ug/L	1.0	1	03/25/13 15:00	04/08/13 18:45	7439-96-5	
Molybdenum, Dissolved	**0.88J**	ug/L	1.0	1	03/25/13 15:00	04/08/13 18:45	7439-98-7	
Nickel, Dissolved	ND	ug/L	1.0	1	03/25/13 15:00	04/08/13 18:45	7440-02-0	
Selenium, Dissolved	**1.0**	ug/L	1.0	1	03/25/13 15:00	04/08/13 18:45	7782-49-2	
Silver, Dissolved	ND	ug/L	0.50	1	03/25/13 15:00	04/08/13 18:45	7440-22-4	
Thallium, Dissolved	ND	ug/L	1.0	1	03/25/13 15:00	04/08/13 18:45	7440-28-0	
Vanadium, Dissolved	ND	ug/L	1.0	1	03/25/13 15:00	04/08/13 18:45	7440-62-2	
Zinc, Dissolved	**4.9J**	ug/L	10.0	1	03/25/13 15:00	04/08/13 18:45	7440-66-6	B
245.1 Mercury	Analytical Method: EPA 245.1 Preparation Method: EPA 245.1							
Mercury	ND	ug/L	0.20	1	03/27/13 11:18	04/03/13 13:23	7439-97-6	
245.1 Mercury, Dissolved	Analytical Method: EPA 245.1 Preparation Method: EPA 245.1							
Mercury, Dissolved	ND	ug/L	0.20	1	03/27/13 11:12	04/03/13 14:16	7439-97-6	
245.1 Potentially Diss Mercury	Analytical Method: EPA 245.1 Preparation Method: EPA 245.1							
Mercury, Dissolved	ND	ug/L	0.20	1	03/26/13 16:35	03/27/13 13:56	7439-97-6	
2510B Specific Conductance	Analytical Method: SM 2510B							
Specific Conductance	**348**	umhos/cm	10.0	1		04/04/13 11:51		
Salinity	Analytical Method: Calculated							
Salinity (as dissolved solids)	**222**	mg/L	6.4	1		04/05/13 11:03		

REPORT OF LABORATORY ANALYSIS

This report shall not be reproduced, except in full,
without the written consent of Pace Analytical Services, Inc..

Pace Analytical Services, Inc.
9608 Loiret Blvd.
Lenexa, KS 66219
(913)599-5665

ANALYTICAL RESULTS

Project: MARCH 2013 RICO WATER SAMPLING
Pace Project No.: 60141075

Sample: DR-1_20130321 **Lab ID: 60141075010** Collected: 03/21/13 14:43 Received: 03/23/13 08:55 Matrix: Water

Parameters	Results	Units	Report Limit	DF	Prepared	Analyzed	CAS No.	Qual
Salinity	Analytical Method: Calculated							
Salinity (as seawater)	**0.17**	PSU	0.014	1		04/05/13 11:03		
2320B Alkalinity	Analytical Method: SM 2320B							
Alkalinity,Bicarbonate (CaCO3)	**109**	mg/L	20.0	1		04/01/13 12:21		
Alkalinity, Carbonate (CaCO3)	ND	mg/L	20.0	1		04/01/13 12:21		
Alkalinity, Total as CaCO3	**109**	mg/L	20.0	1		04/01/13 12:21		
2540C Total Dissolved Solids	Analytical Method: SM 2540C							
Total Dissolved Solids	**206**	mg/L	5.0	1		03/27/13 15:01		
2540D Total Suspended Solids	Analytical Method: SM 2540D							
Total Suspended Solids	ND	mg/L	5.0	1		03/27/13 09:09		
4500S2D Sulfide, Total	Analytical Method: SM 4500-S-2 D							
Sulfide, Total	ND	mg/L	0.050	1		03/28/13 13:09	18496-25-8	
300.0 IC Anions 28 Days	Analytical Method: EPA 300.0							
Chloride	**5.7**	mg/L	1.0	1		04/01/13 21:07	16887-00-6	B
Sulfate	**56.9**	mg/L	10.0	10		04/01/13 15:28	14808-79-8	
353.2 Nitrogen, NO2/NO3 pres.	Analytical Method: EPA 353.2							
Nitrogen, NO2 plus NO3	**0.10**	mg/L	0.10	1		04/04/13 11:31		
4500CNE Cyanide, Total	Analytical Method: SM 4500-CN-E							
Cyanide	ND	mg/L	0.0050	1		03/27/13 16:00	57-12-5	
5310C TOC	Analytical Method: SM 5310C							
Total Organic Carbon	**0.86**	mg/L	0.50	1		04/02/13 13:10	7440-44-0	

This report shall not be reproduced, except in full,
without the written consent of Pace Analytical Services, Inc..

Appendix D

Laboratory QC Results

Pace Analytical Services, Inc.
9608 Loiret Blvd.
Lenexa, KS 66219
(913)599-5665

QUALITY CONTROL DATA

Project: MARCH 2013 RICO WATER SAMPLING
Pace Project No.: 60139978

QC Batch: MERP/8137 Analysis Method: EPA 245.1
QC Batch Method: EPA 245.1 Analysis Description: 245.1 Mercury
Associated Lab Samples: 60139978001, 60139978002, 60139978003, 60139978004, 60139978005

METHOD BLANK: 1390451 Matrix: Water
Associated Lab Samples: 60139978001, 60139978002, 60139978003, 60139978004, 60139978005

Parameter	Units	Blank Result	Reporting Limit	Analyzed	Qualifiers
Mercury	ug/L	ND	0.20	03/14/13 10:21	

LABORATORY CONTROL SAMPLE: 1390452

Parameter	Units	Spike Conc.	LCS Result	LCS % Rec	% Rec Limits	Qualifiers
Mercury	ug/L	5	5.2	105	85-115	

MATRIX SPIKE & MATRIX SPIKE DUPLICATE: 1390453 1390454

Parameter	Units	60139978005 Result	MS Spike Conc.	MSD Spike Conc.	MS Result	MSD Result	MS % Rec	MSD % Rec	% Rec Limits	RPD	Max RPD	Qual
Mercury	ug/L	ND	5	5	4.0	5.1	81	102	85-115	23	30	M1

This report shall not be reproduced, except in full,
without the written consent of Pace Analytical Services, Inc..

Pace Analytical Services, Inc.
9608 Loiret Blvd.
Lenexa, KS 66219
(913)599-5665

QUALITY CONTROL DATA

Project: MARCH 2013 RICO WATER SAMPLING
Pace Project No.: 60139978

QC Batch: MERP/8140 Analysis Method: EPA 245.1
QC Batch Method: EPA 245.1 Analysis Description: 245.1 Mercury - Dissolved
Associated Lab Samples: 60139978001, 60139978002, 60139978003, 60139978004, 60139978005

METHOD BLANK: 1390715 Matrix: Water
Associated Lab Samples: 60139978001, 60139978002, 60139978003, 60139978004, 60139978005

Parameter	Units	Blank Result	Reporting Limit	Analyzed	Qualifiers
Mercury, Dissolved	ug/L	ND	0.20	03/19/13 11:03	

LABORATORY CONTROL SAMPLE: 1390716

Parameter	Units	Spike Conc.	LCS Result	LCS % Rec	% Rec Limits	Qualifiers
Mercury, Dissolved	ug/L	5	5.0	100	85-115	

MATRIX SPIKE & MATRIX SPIKE DUPLICATE: 1390717 1390718

Parameter	Units	60139978003 Result	MS Spike Conc.	MSD Spike Conc.	MS Result	MSD Result	MS % Rec	MSD % Rec	% Rec Limits	RPD	Max RPD	Qual
Mercury, Dissolved	ug/L	ND	5	5	5.2	5.3	103	105	85-115	2	20	

This report shall not be reproduced, except in full,
without the written consent of Pace Analytical Services, Inc..

Pace Analytical Services, Inc.
9608 Loiret Blvd.
Lenexa, KS 66219
(913)599-5665

QUALITY CONTROL DATA

Project: MARCH 2013 RICO WATER SAMPLING
Pace Project No.: 60139978

QC Batch: MERP/7164 Analysis Method: EPA 245.1
QC Batch Method: EPA 245.1 Analysis Description: 245.1 Mercury, Potentially Dissolved
Associated Lab Samples: 60139978001, 60139978002, 60139978003, 60139978004, 60139978005

METHOD BLANK: 1153381 Matrix: Water
Associated Lab Samples: 60139978001, 60139978002, 60139978003, 60139978004, 60139978005

Parameter	Units	Blank Result	Reporting Limit	Analyzed	Qualifiers
Mercury, Dissolved	ug/L	ND	0.20	03/15/13 10:27	

LABORATORY CONTROL SAMPLE: 1153382

Parameter	Units	Spike Conc.	LCS Result	LCS % Rec	% Rec Limits	Qualifiers
Mercury, Dissolved	ug/L	5	4.7	95	85-115	

MATRIX SPIKE & MATRIX SPIKE DUPLICATE: 1153383 1153384

Parameter	Units	60139978003 Result	MS Spike Conc.	MSD Spike Conc.	MS Result	MSD Result	MS % Rec	MSD % Rec	% Rec Limits	RPD	Max RPD	Qual
Mercury, Dissolved	ug/L	ND	5	5	4.3	5.0	86	99	70-130	14	20	

This report shall not be reproduced, except in full,
without the written consent of Pace Analytical Services, Inc..

Pace Analytical Services, Inc.
9608 Loiret Blvd.
Lenexa, KS 66219
(913)599-5665

QUALITY CONTROL DATA

Project: MARCH 2013 RICO WATER SAMPLING
Pace Project No.: 60139978

QC Batch: MPRP/21794 Analysis Method: EPA 200.7
QC Batch Method: EPA 200.7 Analysis Description: 200.7 Potentially Dissolved Metals
Associated Lab Samples: 60139978001, 60139978002, 60139978003, 60139978004, 60139978005

METHOD BLANK: 1151351 Matrix: Water
Associated Lab Samples: 60139978001, 60139978002, 60139978003, 60139978004, 60139978005

Parameter	Units	Blank Result	Reporting Limit	Analyzed	Qualifiers
Calcium, Dissolved	ug/L	ND	100	03/12/13 15:00	
Magnesium, Dissolved	ug/L	ND	50.0	03/12/13 15:00	
Potassium, Dissolved	ug/L	ND	500	03/12/13 15:00	
Sodium, Dissolved	ug/L	ND	500	03/12/13 15:00	

LABORATORY CONTROL SAMPLE: 1151352

Parameter	Units	Spike Conc.	LCS Result	LCS % Rec	% Rec Limits	Qualifiers
Calcium, Dissolved	ug/L	10000	10100	101	85-115	
Magnesium, Dissolved	ug/L	10000	9900	99	85-115	
Potassium, Dissolved	ug/L	10000	9480	95	85-115	
Sodium, Dissolved	ug/L	10000	9830	98	85-115	

MATRIX SPIKE & MATRIX SPIKE DUPLICATE: 1151353 1151354

Parameter	Units	60139978001 Result	MS Spike Conc.	MSD Spike Conc.	MS Result	MSD Result	MS % Rec	MSD % Rec	% Rec Limits	RPD	Max RPD	Qual
Calcium, Dissolved	ug/L	431000	10000	10000	447000	437000	154	55	70-130	2	20	M1
Magnesium, Dissolved	ug/L	27600	10000	10000	37300	36700	97	92	70-130	1	20	
Potassium, Dissolved	ug/L	5440	10000	10000	15900	15600	104	102	70-130	2	20	
Sodium, Dissolved	ug/L	7640	10000	10000	18600	18200	109	106	70-130	2	20	

This report shall not be reproduced, except in full,
without the written consent of Pace Analytical Services, Inc..

Pace Analytical Services, Inc.
9608 Loiret Blvd.
Lenexa, KS 66219
(913)599-5665

QUALITY CONTROL DATA

Project: MARCH 2013 RICO WATER SAMPLING
Pace Project No.: 60139978

QC Batch: MPRP/37994 Analysis Method: EPA 200.8
QC Batch Method: EPA 200.8 Analysis Description: 200.8 MET
Associated Lab Samples: 60139978001, 60139978002, 60139978003, 60139978004, 60139978005

METHOD BLANK: 1391007 Matrix: Water
Associated Lab Samples: 60139978001, 60139978002, 60139978003, 60139978004, 60139978005

Parameter	Units	Blank Result	Reporting Limit	Analyzed	Qualifiers
Aluminum	ug/L	ND	4.0	03/15/13 13:25	
Antimony	ug/L	ND	0.50	03/15/13 13:25	
Arsenic	ug/L	ND	0.50	03/15/13 13:25	
Barium	ug/L	ND	0.30	03/15/13 13:25	
Beryllium	ug/L	ND	0.20	03/15/13 13:25	
Cadmium	ug/L	ND	0.080	03/15/13 13:25	
Calcium	ug/L	ND	20.0	03/15/13 13:25	
Chromium	ug/L	ND	0.50	03/15/13 13:25	
Cobalt	ug/L	ND	0.50	03/15/13 13:25	
Copper	ug/L	ND	0.50	03/18/13 11:17	
Iron	ug/L	ND	50.0	03/15/13 13:25	
Lead	ug/L	ND	0.10	03/15/13 13:25	
Magnesium	ug/L	ND	5.0	03/18/13 11:17	
Manganese	ug/L	ND	0.50	03/15/13 13:25	
Molybdenum	ug/L	ND	0.50	03/15/13 13:25	
Nickel	ug/L	ND	0.50	03/15/13 13:25	
Potassium	ug/L	ND	20.0	03/15/13 13:25	
Selenium	ug/L	ND	0.50	03/15/13 13:25	
Silica	ug/L	ND	53.5	03/18/13 11:17	
Silver	ug/L	ND	0.50	03/15/13 13:25	
Sodium	ug/L	ND	50.0	03/15/13 13:25	
Thallium	ug/L	ND	0.10	03/15/13 13:25	
Total Hardness by 2340B	ug/L	ND	71.0	03/15/13 13:25	
Vanadium	ug/L	ND	0.10	03/15/13 13:25	
Zinc	ug/L	ND	5.0	03/15/13 13:25	

LABORATORY CONTROL SAMPLE: 1391008

Parameter	Units	Spike Conc.	LCS Result	LCS % Rec	% Rec Limits	Qualifiers
Aluminum	ug/L	80	81.6	102	85-115	
Antimony	ug/L	80	76.2	95	85-115	
Arsenic	ug/L	80	77.2	97	85-115	
Barium	ug/L	80	78.2	98	85-115	
Beryllium	ug/L	80	80.5	101	85-115	
Cadmium	ug/L	80	77.4	97	85-115	
Calcium	ug/L	1000	1020	102	85-115	
Chromium	ug/L	80	81.4	102	85-115	
Cobalt	ug/L	80	82.5	103	85-115	
Copper	ug/L	80	85.1	106	85-115	
Iron	ug/L	1000	1020	102	85-115	
Lead	ug/L	80	77.6	97	85-115	

This report shall not be reproduced, except in full,
without the written consent of Pace Analytical Services, Inc..

Pace Analytical Services, Inc.
9608 Loiret Blvd.
Lenexa, KS 66219
(913)599-5665

QUALITY CONTROL DATA

Project: MARCH 2013 RICO WATER SAMPLING
Pace Project No.: 60139978

LABORATORY CONTROL SAMPLE: 1391008

Parameter	Units	Spike Conc.	LCS Result	LCS % Rec	% Rec Limits	Qualifiers
Magnesium	ug/L	1000	1020	102	85-115	
Manganese	ug/L	80	78.0	98	85-115	
Molybdenum	ug/L	80	78.6	98	85-115	
Nickel	ug/L	80	82.9	104	85-115	
Potassium	ug/L	1000	1000	100	85-115	
Selenium	ug/L	80	74.4	93	85-115	
Silica	ug/L	2140	2080	97	85-115	
Silver	ug/L	80	90.2	113	85-115	
Sodium	ug/L	1000	980	98	85-115	
Thallium	ug/L	80	79.0	99	85-115	
Total Hardness by 2340B	ug/L	6620	6750	102	85-115	
Vanadium	ug/L	80	79.4	99	85-115	
Zinc	ug/L	80	78.9	99	85-115	

MATRIX SPIKE & MATRIX SPIKE DUPLICATE: 1391009 1391010

Parameter	Units	10222355001 Result	MS Spike Conc.	MSD Spike Conc.	MS Result	MSD Result	MS % Rec	MSD % Rec	% Rec Limits	RPD	Max RPD	Qual
Aluminum	ug/L	0.061 mg/L	80	80	166	166	132	132	70-130	.06	20	M6
Antimony	ug/L	0.51	80	80	76.5	75.9	95	94	70-130	.8	20	
Arsenic	ug/L	0.0034 mg/L	80	80	78.0	77.8	93	93	70-130	.3	20	
Barium	ug/L	14.3	80	80	90.9	90.3	96	95	70-130	.7	20	
Beryllium	ug/L	ND	80	80	82.5	83.3	103	104	70-130	1	20	
Cadmium	ug/L	0.00035 mg/L	80	80	75.3	76.9	94	96	70-130	2	20	
Calcium	ug/L	130 mg/L	1000	1000	136000	134000	610	360	70-130	2	20	M6
Chromium	ug/L	0.65	80	80	81.0	79.8	100	99	70-130	1	20	
Cobalt	ug/L	0.64	80	80	81.4	79.9	101	99	70-130	2	20	
Copper	ug/L	0.022 mg/L	80	80	104	102	103	101	70-130	2	20	
Iron	ug/L	0.10 mg/L	1000	1000	1100	1110	100	101	70-130	.4	20	
Lead	ug/L	0.0014 mg/L	80	80	78.0	77.9	96	96	70-130	.05	20	
Magnesium	ug/L	35.4 mg/L	1000	1000	37300	37000	184	150	70-130	.9	20	M6
Manganese	ug/L	291	80	80	380	380	112	111	70-130	.2	20	
Molybdenum	ug/L	5.4	80	80	82.6	82.2	97	96	70-130	.4	20	
Nickel	ug/L	1.2	80	80	82.0	82.4	101	101	70-130	.5	20	
Potassium	ug/L	7420	1000	1000	8540	8460	111	104	70-130	.9	20	
Selenium	ug/L	0.17J	80	80	73.2	74.9	91	93	70-130	2	20	
Silica	ug/L	15100	2140	2140	17900	17400	128	107	70-130	3	20	
Silver	ug/L	ND	80	80	45.6	47.8	57	60	70-130	5	20	M6
Sodium	ug/L	53800	1000	1000	55900	55400	215	167	70-130	.9	20	M6
Thallium	ug/L	0.039J	80	80	78.2	78.0	98	97	70-130	.2	20	

This report shall not be reproduced, except in full,
without the written consent of Pace Analytical Services, Inc..

Pace Analytical Services, Inc.
9608 Loiret Blvd.
Lenexa, KS 66219
(913)599-5665

QUALITY CONTROL DATA

Project: MARCH 2013 RICO WATER SAMPLING
Pace Project No.: 60139978

MATRIX SPIKE & MATRIX SPIKE DUPLICATE: 1391009 1391010

Parameter	Units	10222355001 Result	MS Spike Conc.	MSD Spike Conc.	MS Result	MSD Result	MS % Rec	MSD % Rec	% Rec Limits	RPD	Max RPD	Qual
Total Hardness by 2340B	ug/L	471 mg/L	6620	6620	494000	486000	344	230	70-130	2	20	M6
Vanadium	ug/L	1.2	80	80	81.1	79.4	100	98	70-130	2	20	
Zinc	ug/L	0.066 mg/L	80	80	146	151	100	106	70-130	3	20	

This report shall not be reproduced, except in full,
without the written consent of Pace Analytical Services, Inc..

Pace Analytical Services, Inc.
9608 Loiret Blvd.
Lenexa, KS 66219
(913)599-5665

QUALITY CONTROL DATA

Project: MARCH 2013 RICO WATER SAMPLING
Pace Project No.: 60139978

QC Batch: MPRP/37981 Analysis Method: EPA 200.8
QC Batch Method: EPA 200.8 Analysis Description: 200.8 MET Dissolved
Associated Lab Samples: 60139978001, 60139978002, 60139978003, 60139978004, 60139978005

METHOD BLANK: 1390447 Matrix: Water
Associated Lab Samples: 60139978001, 60139978002, 60139978003, 60139978004, 60139978005

Parameter	Units	Blank Result	Reporting Limit	Analyzed	Qualifiers
Aluminum, Dissolved	ug/L	ND	4.0	03/15/13 12:27	
Antimony, Dissolved	ug/L	ND	0.50	03/15/13 12:27	
Arsenic, Dissolved	ug/L	ND	0.50	03/15/13 12:27	
Barium, Dissolved	ug/L	ND	0.30	03/15/13 12:27	
Beryllium, Dissolved	ug/L	ND	0.20	03/15/13 12:27	
Cadmium, Dissolved	ug/L	ND	0.080	03/15/13 12:27	
Calcium, Dissolved	ug/L	ND	20.0	03/15/13 12:27	
Chromium, Dissolved	ug/L	ND	0.50	03/15/13 12:27	
Cobalt, Dissolved	ug/L	ND	0.50	03/15/13 12:27	
Copper, Dissolved	ug/L	ND	0.50	03/15/13 12:27	
Iron, Dissolved	ug/L	ND	50.0	03/15/13 12:27	
Lead, Dissolved	ug/L	ND	0.10	03/15/13 12:27	
Magnesium, Dissolved	ug/L	ND	5.0	03/15/13 12:27	
Manganese, Dissolved	ug/L	ND	0.50	03/15/13 12:27	
Molybdenum, Dissolved	ug/L	ND	0.50	03/15/13 12:27	
Nickel, Dissolved	ug/L	ND	0.50	03/15/13 12:27	
Potassium, Dissolved	ug/L	ND	20.0	03/15/13 12:27	
Selenium, Dissolved	ug/L	ND	0.50	03/15/13 12:27	
Silver, Dissolved	ug/L	ND	0.50	03/15/13 12:27	
Sodium, Dissolved	ug/L	ND	50.0	03/15/13 12:27	
Thallium, Dissolved	ug/L	ND	0.10	03/15/13 12:27	
Vanadium, Dissolved	ug/L	ND	0.10	03/15/13 12:27	
Zinc, Dissolved	ug/L	ND	5.0	03/15/13 12:27	

LABORATORY CONTROL SAMPLE: 1390448

Parameter	Units	Spike Conc.	LCS Result	LCS % Rec	% Rec Limits	Qualifiers
Aluminum, Dissolved	ug/L	80	81.0	101	85-115	
Antimony, Dissolved	ug/L	80	79.4	99	85-115	
Arsenic, Dissolved	ug/L	80	81.5	102	85-115	
Barium, Dissolved	ug/L	80	80.7	101	85-115	
Beryllium, Dissolved	ug/L	80	86.4	108	85-115	
Cadmium, Dissolved	ug/L	80	83.1	104	85-115	
Calcium, Dissolved	ug/L	1000	1030	103	85-115	
Chromium, Dissolved	ug/L	80	81.6	102	85-115	
Cobalt, Dissolved	ug/L	80	79.8	100	85-115	
Copper, Dissolved	ug/L	80	92.3	115	85-115	
Iron, Dissolved	ug/L	1000	987	99	85-115	
Lead, Dissolved	ug/L	80	79.0	99	85-115	
Magnesium, Dissolved	ug/L	1000	994	99	85-115	
Manganese, Dissolved	ug/L	80	81.8	102	85-115	

This report shall not be reproduced, except in full,
without the written consent of Pace Analytical Services, Inc..

Pace Analytical Services, Inc.
9608 Loiret Blvd.
Lenexa, KS 66219
(913)599-5665

QUALITY CONTROL DATA

Project: MARCH 2013 RICO WATER SAMPLING
Pace Project No.: 60139978

LABORATORY CONTROL SAMPLE: 1390448

Parameter	Units	Spike Conc.	LCS Result	LCS % Rec	% Rec Limits	Qualifiers
Molybdenum, Dissolved	ug/L	80	80.7	101	85-115	
Nickel, Dissolved	ug/L	80	86.0	108	85-115	
Potassium, Dissolved	ug/L	1000	997	100	85-115	
Selenium, Dissolved	ug/L	80	81.6	102	85-115	
Silver, Dissolved	ug/L	80	85.6	107	85-115	
Sodium, Dissolved	ug/L	1000	979	98	85-115	
Thallium, Dissolved	ug/L	80	83.0	104	85-115	
Vanadium, Dissolved	ug/L	80	80.4	101	85-115	
Zinc, Dissolved	ug/L	80	86.5	108	85-115	

MATRIX SPIKE & MATRIX SPIKE DUPLICATE: 1390449 1390450

Parameter	Units	60139978001 Result	MS Spike Conc.	MSD Spike Conc.	MS Result	MSD Result	MS % Rec	MSD % Rec	% Rec Limits	RPD	Max RPD	Qual
Aluminum, Dissolved	ug/L	231	80	80	409	405	223	218	70-130	.9	20	M6
Antimony, Dissolved	ug/L	ND	80	80	76.6	77.4	96	97	70-130	1	20	
Arsenic, Dissolved	ug/L	9.9	80	80	87.7	90.2	97	100	70-130	3	20	
Barium, Dissolved	ug/L	13.9	80	80	91.4	95.4	97	102	70-130	4	20	
Beryllium, Dissolved	ug/L	ND	80	80	83.6	78.2	104	97	70-130	7	20	
Cadmium, Dissolved	ug/L	0.70	80	80	79.1	80.4	98	100	70-130	2	20	
Calcium, Dissolved	ug/L	443000	1000	1000	455000	451000	1220	815	70-130	.9	20	E,M6
Chromium, Dissolved	ug/L	0.70	80	80	80.5	79.9	100	99	70-130	.7	20	
Cobalt, Dissolved	ug/L	5.6	80	80	84.8	85.1	99	99	70-130	.3	20	
Copper, Dissolved	ug/L	15.1	80	80	100	99.6	106	106	70-130	.6	20	
Iron, Dissolved	ug/L	4960	1000	1000	6250	6200	129	124	70-130	.8	20	
Lead, Dissolved	ug/L	86.2	80	80	167	167	101	101	70-130	.3	20	
Magnesium, Dissolved	ug/L	28000	1000	1000	29800	29200	186	126	70-130	2	20	M6
Manganese, Dissolved	ug/L	3970	80	80	4170	4130	242	191	70-130	1	20	M6
Molybdenum, Dissolved	ug/L	14.1	80	80	94.8	93.9	101	100	70-130	.9	20	
Nickel, Dissolved	ug/L	8.5	80	80	92.7	93.1	105	106	70-130	.4	20	
Potassium, Dissolved	ug/L	5490	1000	1000	6600	6510	111	103	70-130	1	20	
Selenium, Dissolved	ug/L	ND	80	80	79.2	80.5	99	100	70-130	2	20	
Silver, Dissolved	ug/L	ND	80	80	82.1	82.9	102	103	70-130	1	20	
Sodium, Dissolved	ug/L	7150	1000	1000	8320	8220	117	107	70-130	1	20	
Thallium, Dissolved	ug/L	ND	80	80	79.2	79.2	99	99	70-130	.04	20	
Vanadium, Dissolved	ug/L	0.41	80	80	78.7	78.6	98	98	70-130	.2	20	
Zinc, Dissolved	ug/L	1450	80	80	1550	1540	131	111	70-130	1	20	M6

This report shall not be reproduced, except in full,
without the written consent of Pace Analytical Services, Inc..

Pace Analytical Services, Inc.
9608 Loiret Blvd.
Lenexa, KS 66219
(913)599-5665

QUALITY CONTROL DATA

Project: MARCH 2013 RICO WATER SAMPLING
Pace Project No.: 60139978

QC Batch: MPRP/21795 Analysis Method: EPA 200.8
QC Batch Method: EPA 200.8 Analysis Description: 200.8 Potentially Dissolved Metals
Associated Lab Samples: 60139978001, 60139978002, 60139978003, 60139978004, 60139978005

METHOD BLANK: 1151356 Matrix: Water
Associated Lab Samples: 60139978001, 60139978002, 60139978003, 60139978004, 60139978005

Parameter	Units	Blank Result	Reporting Limit	Analyzed	Qualifiers
Aluminum, Dissolved	ug/L	ND	50.0	03/14/13 14:00	
Antimony, Dissolved	ug/L	ND	1.0	03/14/13 14:00	
Arsenic, Dissolved	ug/L	ND	1.0	03/14/13 14:00	
Barium, Dissolved	ug/L	0.11J	1.0	03/14/13 14:00	
Beryllium, Dissolved	ug/L	ND	0.50	03/14/13 14:00	
Cadmium, Dissolved	ug/L	ND	0.50	03/14/13 14:00	
Chromium, Dissolved	ug/L	ND	1.0	03/14/13 14:00	
Cobalt, Dissolved	ug/L	ND	1.0	03/14/13 14:00	
Copper, Dissolved	ug/L	ND	1.0	03/14/13 14:00	
Iron, Dissolved	ug/L	6.7J	50.0	03/14/13 14:00	
Lead, Dissolved	ug/L	0.067J	1.0	03/14/13 14:00	
Manganese, Dissolved	ug/L	ND	1.0	03/14/13 14:00	
Molybdenum, Dissolved	ug/L	ND	1.0	03/14/13 14:00	
Nickel, Dissolved	ug/L	ND	1.0	03/14/13 14:00	
Selenium, Dissolved	ug/L	ND	1.0	03/14/13 14:00	
Silver, Dissolved	ug/L	ND	0.50	03/14/13 14:00	
Thallium, Dissolved	ug/L	ND	1.0	03/14/13 14:00	
Vanadium, Dissolved	ug/L	ND	1.0	03/14/13 14:00	
Zinc, Dissolved	ug/L	ND	10.0	03/14/13 14:00	

LABORATORY CONTROL SAMPLE: 1151357

Parameter	Units	Spike Conc.	LCS Result	LCS % Rec	% Rec Limits	Qualifiers
Aluminum, Dissolved	ug/L	1000	1020	102	85-115	
Antimony, Dissolved	ug/L	40	39.8	99	85-115	
Arsenic, Dissolved	ug/L	40	39.0	98	85-115	
Barium, Dissolved	ug/L	40	40.5	101	85-115	
Beryllium, Dissolved	ug/L	40	39.6	99	85-115	
Cadmium, Dissolved	ug/L	40	39.3	98	85-115	
Chromium, Dissolved	ug/L	40	41.4	104	85-115	
Cobalt, Dissolved	ug/L	40	40.8	102	85-115	
Copper, Dissolved	ug/L	40	41.1	103	85-115	
Iron, Dissolved	ug/L	1000	1040	104	85-115	
Lead, Dissolved	ug/L	40	40.3	101	85-115	
Manganese, Dissolved	ug/L	40	41.2	103	85-115	
Molybdenum, Dissolved	ug/L	40	41.1	103	85-115	
Nickel, Dissolved	ug/L	40	41.5	104	85-115	
Selenium, Dissolved	ug/L	40	36.5	91	85-115	
Silver, Dissolved	ug/L	20	20.0	100	85-115	
Thallium, Dissolved	ug/L	40	38.2	96	85-115	
Vanadium, Dissolved	ug/L	40	41.3	103	85-115	

This report shall not be reproduced, except in full,
without the written consent of Pace Analytical Services, Inc..

Pace Analytical Services, Inc.
9608 Loiret Blvd.
Lenexa, KS 66219
(913)599-5665

QUALITY CONTROL DATA

Project: MARCH 2013 RICO WATER SAMPLING
Pace Project No.: 60139978

LABORATORY CONTROL SAMPLE: 1151357

Parameter	Units	Spike Conc.	LCS Result	LCS % Rec	% Rec Limits	Qualifiers
Zinc, Dissolved	ug/L	100	101	101	85-115	

MATRIX SPIKE & MATRIX SPIKE DUPLICATE: 1151358 1151359

Parameter	Units	60139978002 Result	MS Spike Conc.	MSD Spike Conc.	MS Result	MSD Result	MS % Rec	MSD % Rec	% Rec Limits	RPD	Max RPD	Qual
Aluminum, Dissolved	ug/L	13400	1000	1000	14200	14100	82	77	70-130	0	20	
Antimony, Dissolved	ug/L	0.34J	40	40	38.6	38.6	96	96	70-130	0	20	
Arsenic, Dissolved	ug/L	317	40	40	365	366	118	123	70-130	0	20	
Barium, Dissolved	ug/L	13.0	40	40	50.7	50.7	94	94	70-130	0	20	
Beryllium, Dissolved	ug/L	4.4	40	40	28.4	27.7	60	58	70-130	3	20	1e,M1
Cadmium, Dissolved	ug/L	4.2	40	40	40.8	40.5	92	91	70-130	1	20	
Chromium, Dissolved	ug/L	1.7	40	40	40.8	41.0	98	98	70-130	0	20	
Cobalt, Dissolved	ug/L	65.1	40	40	103	103	95	95	70-130	0	20	
Copper, Dissolved	ug/L	79.2	40	40	116	116	92	93	70-130	0	20	
Iron, Dissolved	ug/L	528000	1000	1000	531000	538000	260	950	70-130	1	20	M6
Lead, Dissolved	ug/L	1190	40	40	1240	1240	122	138	70-130	0	20	M1
Manganese, Dissolved	ug/L	28100	40	40	28400	28800	575	1550	70-130	1	20	M6
Molybdenum, Dissolved	ug/L	3.9	40	40	48.7	48.8	112	112	70-130	0	20	
Nickel, Dissolved	ug/L	91.8	40	40	129	129	93	92	70-130	0	20	
Selenium, Dissolved	ug/L	3.4	40	40	40.0	40.7	92	93	70-130	2	20	
Silver, Dissolved	ug/L	0.092J	20	20	18.2	18.1	90	90	70-130	0	20	
Thallium, Dissolved	ug/L	0.10J	40	40	36.7	36.8	92	92	70-130	0	20	
Vanadium, Dissolved	ug/L	0.80J	40	40	41.0	41.5	100	102	70-130	1	20	
Zinc, Dissolved	ug/L	51900	100	100	51900	52300	10	380	70-130	1	20	M6

This report shall not be reproduced, except in full,
without the written consent of Pace Analytical Services, Inc..

Pace Analytical Services, Inc.
9608 Loiret Blvd.
Lenexa, KS 66219
(913)599-5665

QUALITY CONTROL DATA

Project: MARCH 2013 RICO WATER SAMPLING
Pace Project No.: 60139978

QC Batch: MT/11472 Analysis Method: SM 2510B
QC Batch Method: SM 2510B Analysis Description: 2510B Specific Conductance
Associated Lab Samples: 60139978001, 60139978002, 60139978003, 60139978005

METHOD BLANK: 1391342 Matrix: Water
Associated Lab Samples: 60139978001, 60139978002, 60139978003, 60139978005

Parameter	Units	Blank Result	Reporting Limit	Analyzed	Qualifiers
Specific Conductance	umhos/cm	ND	10.0	03/14/13 13:33	

LABORATORY CONTROL SAMPLE: 1391343

Parameter	Units	Spike Conc.	LCS Result	LCS % Rec	% Rec Limits	Qualifiers
Specific Conductance	umhos/cm	1000	1010	101	90-110	

SAMPLE DUPLICATE: 1391344

Parameter	Units	60139978003 Result	Dup Result	RPD	Max RPD	Qualifiers
Specific Conductance	umhos/cm	1330	1340	.8	20	

SAMPLE DUPLICATE: 1391345

Parameter	Units	10222261006 Result	Dup Result	RPD	Max RPD	Qualifiers
Specific Conductance	umhos/cm	2640	2650	.3	20	

This report shall not be reproduced, except in full,
without the written consent of Pace Analytical Services, Inc..

Pace Analytical Services, Inc.
9608 Loiret Blvd.
Lenexa, KS 66219
(913)599-5665

QUALITY CONTROL DATA

Project: MARCH 2013 RICO WATER SAMPLING
Pace Project No.: 60139978

QC Batch: WET/40164 Analysis Method: SM 2320B
QC Batch Method: SM 2320B Analysis Description: 2320B Alkalinity
Associated Lab Samples: 60139978001, 60139978002, 60139978003, 60139978005

METHOD BLANK: 1152025 Matrix: Water
Associated Lab Samples: 60139978001, 60139978002, 60139978003, 60139978005

Parameter	Units	Blank Result	Reporting Limit	Analyzed	Qualifiers
Alkalinity, Carbonate (CaCO3)	mg/L	ND	20.0	03/13/13 08:46	
Alkalinity, Total as CaCO3	mg/L	ND	20.0	03/13/13 08:46	
Alkalinity,Bicarbonate (CaCO3)	mg/L	ND	20.0	03/13/13 08:46	

LABORATORY CONTROL SAMPLE: 1152026

Parameter	Units	Spike Conc.	LCS Result	LCS % Rec	% Rec Limits	Qualifiers
Alkalinity, Total as CaCO3	mg/L	500	492	98	90-110	

SAMPLE DUPLICATE: 1152027

Parameter	Units	60140140001 Result	Dup Result	RPD	Max RPD	Qualifiers
Alkalinity, Carbonate (CaCO3)	mg/L	ND	ND		10	
Alkalinity, Total as CaCO3	mg/L	284	292	3	10	
Alkalinity,Bicarbonate (CaCO3)	mg/L	284	292	3	10	

SAMPLE DUPLICATE: 1152028

Parameter	Units	60139978001 Result	Dup Result	RPD	Max RPD	Qualifiers
Alkalinity, Carbonate (CaCO3)	mg/L	ND	ND		10	
Alkalinity, Total as CaCO3	mg/L	163	158	3	10	
Alkalinity,Bicarbonate (CaCO3)	mg/L	163	158	3	10	

This report shall not be reproduced, except in full,
without the written consent of Pace Analytical Services, Inc..

Pace Analytical Services, Inc.
9608 Loiret Blvd.
Lenexa, KS 66219
(913)599-5665

QUALITY CONTROL DATA

Project: MARCH 2013 RICO WATER SAMPLING
Pace Project No.: 60139978

QC Batch: WET/40147 Analysis Method: SM 2540C
QC Batch Method: SM 2540C Analysis Description: 2540C Total Dissolved Solids
Associated Lab Samples: 60139978001, 60139978002, 60139978003, 60139978005

METHOD BLANK: 1151501 Matrix: Water
Associated Lab Samples: 60139978001, 60139978002, 60139978003, 60139978005

Parameter	Units	Blank Result	Reporting Limit	Analyzed	Qualifiers
Total Dissolved Solids	mg/L	ND	5.0	03/12/13 11:49	

SAMPLE DUPLICATE: 1151502

Parameter	Units	60139978001 Result	Dup Result	RPD	Max RPD	Qualifiers
Total Dissolved Solids	mg/L	1700	1730	2	17	

This report shall not be reproduced, except in full,
without the written consent of Pace Analytical Services, Inc..

Pace Analytical Services, Inc.
9608 Loiret Blvd.
Lenexa, KS 66219
(913)599-5665

QUALITY CONTROL DATA

Project: MARCH 2013 RICO WATER SAMPLING
Pace Project No.: 60139978

QC Batch: WET/40149 | Analysis Method: SM 2540D
QC Batch Method: SM 2540D | Analysis Description: 2540D Total Suspended Solids
Associated Lab Samples: 60139978001, 60139978002

METHOD BLANK: 1151506 | Matrix: Water
Associated Lab Samples: 60139978001, 60139978002

Parameter	Units	Blank Result	Reporting Limit	Analyzed	Qualifiers
Total Suspended Solids	mg/L	ND	5.0	03/12/13 11:36	

SAMPLE DUPLICATE: 1151507

Parameter	Units	60139937004 Result	Dup Result	RPD	Max RPD	Qualifiers
Total Suspended Solids	mg/L	ND	ND		25	

SAMPLE DUPLICATE: 1151508

Parameter	Units	60139941001 Result	Dup Result	RPD	Max RPD	Qualifiers
Total Suspended Solids	mg/L	ND	ND		25	

This report shall not be reproduced, except in full,
without the written consent of Pace Analytical Services, Inc..

Pace Analytical Services, Inc.
9608 Loiret Blvd.
Lenexa, KS 66219
(913)599-5665

QUALITY CONTROL DATA

Project: MARCH 2013 RICO WATER SAMPLING
Pace Project No.: 60139978

QC Batch: WET/40150 | Analysis Method: SM 2540D
QC Batch Method: SM 2540D | Analysis Description: 2540D Total Suspended Solids
Associated Lab Samples: 60139978003, 60139978005

METHOD BLANK: 1151509 | Matrix: Water
Associated Lab Samples: 60139978003, 60139978005

Parameter	Units	Blank Result	Reporting Limit	Analyzed	Qualifiers
Total Suspended Solids	mg/L	ND	5.0	03/12/13 11:40	

SAMPLE DUPLICATE: 1151510

Parameter	Units	60139978003 Result	Dup Result	RPD	Max RPD	Qualifiers
Total Suspended Solids	mg/L	163	177	9	25	

SAMPLE DUPLICATE: 1151511

Parameter	Units	60140022001 Result	Dup Result	RPD	Max RPD	Qualifiers
Total Suspended Solids	mg/L	11.0	5.0	75	25	D6

This report shall not be reproduced, except in full,
without the written consent of Pace Analytical Services, Inc..

Pace Analytical Services, Inc.
9608 Loiret Blvd.
Lenexa, KS 66219
(913)599-5665

QUALITY CONTROL DATA

Project: MARCH 2013 RICO WATER SAMPLING
Pace Project No.: 60139978

QC Batch: WET/40129 Analysis Method: SM 4500-S-2 D
QC Batch Method: SM 4500-S-2 D Analysis Description: 4500S2D Sulfide, Total
Associated Lab Samples: 60139978001, 60139978002, 60139978003, 60139978004, 60139978005

METHOD BLANK: 1150993 Matrix: Water
Associated Lab Samples: 60139978001, 60139978002, 60139978003, 60139978004, 60139978005

Parameter	Units	Blank Result	Reporting Limit	Analyzed	Qualifiers
Sulfide, Total	mg/L	ND	0.050	03/11/13 15:16	

LABORATORY CONTROL SAMPLE: 1150994

Parameter	Units	Spike Conc.	LCS Result	LCS % Rec	% Rec Limits	Qualifiers
Sulfide, Total	mg/L	.5	0.50	100	80-120	

MATRIX SPIKE SAMPLE: 1150995

Parameter	Units	60139978005 Result	Spike Conc.	MS Result	MS % Rec	% Rec Limits	Qualifiers
Sulfide, Total	mg/L	ND	.5	0.33	65	75-125	M1

This report shall not be reproduced, except in full,
without the written consent of Pace Analytical Services, Inc..

Pace Analytical Services, Inc.
9608 Loiret Blvd.
Lenexa, KS 66219
(913)599-5665

QUALITY CONTROL DATA

Project: MARCH 2013 RICO WATER SAMPLING
Pace Project No.: 60139978

QC Batch: WETA/23804 Analysis Method: EPA 300.0
QC Batch Method: EPA 300.0 Analysis Description: 300.0 IC Anions
Associated Lab Samples: 60139978001, 60139978003, 60139978005

METHOD BLANK: 1150482 Matrix: Water
Associated Lab Samples: 60139978001, 60139978003, 60139978005

Parameter	Units	Blank Result	Reporting Limit	Analyzed	Qualifiers
Chloride	mg/L	ND	1.0	03/09/13 13:49	
Sulfate	mg/L	ND	1.0	03/09/13 13:49	

LABORATORY CONTROL SAMPLE: 1150483

Parameter	Units	Spike Conc.	LCS Result	LCS % Rec	% Rec Limits	Qualifiers
Chloride	mg/L	5	4.8	95	90-110	
Sulfate	mg/L	5	4.7	94	90-110	

MATRIX SPIKE SAMPLE: 1150484

Parameter	Units	60139979002 Result	Spike Conc.	MS Result	MS % Rec	% Rec Limits	Qualifiers
Chloride	mg/L	200	500	641	88	64-118	
Sulfate	mg/L	697	500	1140	88	61-119	

MATRIX SPIKE SAMPLE: 1150485

Parameter	Units	60139978003 Result	Spike Conc.	MS Result	MS % Rec	% Rec Limits	Qualifiers
Chloride	mg/L	ND	5	5.5	91	64-118	
Sulfate	mg/L	564	250	798	93	61-119	

This report shall not be reproduced, except in full,
without the written consent of Pace Analytical Services, Inc..

Pace Analytical Services, Inc.
9608 Loiret Blvd.
Lenexa, KS 66219
(913)599-5665

QUALITY CONTROL DATA

Project: MARCH 2013 RICO WATER SAMPLING
Pace Project No.: 60139978

QC Batch: WETA/23809 | Analysis Method: EPA 300.0
QC Batch Method: EPA 300.0 | Analysis Description: 300.0 IC Anions
Associated Lab Samples: 60139978002

METHOD BLANK: 1150887 | Matrix: Water
Associated Lab Samples: 60139978002

Parameter	Units	Blank Result	Reporting Limit	Analyzed	Qualifiers
Chloride	mg/L	ND	1.0	03/10/13 11:41	
Sulfate	mg/L	ND	1.0	03/10/13 11:41	

LABORATORY CONTROL SAMPLE: 1150888

Parameter	Units	Spike Conc.	LCS Result	LCS % Rec	% Rec Limits	Qualifiers
Chloride	mg/L	5	4.8	96	90-110	
Sulfate	mg/L	5	4.9	99	90-110	

MATRIX SPIKE & MATRIX SPIKE DUPLICATE: 1150889 1150890

Parameter	Units	60140062001 Result	MS Spike Conc.	MSD Spike Conc.	MS Result	MSD Result	MS % Rec	MSD % Rec	% Rec Limits	RPD	Max RPD	Qual
Chloride	mg/L	34.2J	250	250	245	242	84	83	64-118	2	12	
Sulfate	mg/L	248	250	250	474	468	90	88	61-119	1	10	

This report shall not be reproduced, except in full,
without the written consent of Pace Analytical Services, Inc..

Pace Analytical Services, Inc.
9608 Loiret Blvd.
Lenexa, KS 66219
(913)599-5665

QUALITY CONTROL DATA

Project: MARCH 2013 RICO WATER SAMPLING
Pace Project No.: 60139978

QC Batch: WETA/23821 | Analysis Method: EPA 353.2
QC Batch Method: EPA 353.2 | Analysis Description: 353.2 Nitrate + Nitrite, preserved
Associated Lab Samples: 60139978001, 60139978002, 60139978003, 60139978005

METHOD BLANK: 1151142 | Matrix: Water
Associated Lab Samples: 60139978001, 60139978002, 60139978003, 60139978005

Parameter	Units	Blank Result	Reporting Limit	Analyzed	Qualifiers
Nitrogen, NO2 plus NO3	mg/L	ND	0.10	03/11/13 15:26	

LABORATORY CONTROL SAMPLE: 1151143

Parameter	Units	Spike Conc.	LCS Result	LCS % Rec	% Rec Limits	Qualifiers
Nitrogen, NO2 plus NO3	mg/L	2	2.0	100	90-110	

MATRIX SPIKE SAMPLE: 1151144

Parameter	Units	60139934002 Result	Spike Conc.	MS Result	MS % Rec	% Rec Limits	Qualifiers
Nitrogen, NO2 plus NO3	mg/L	8.2	10	16.5	82	90-110	M1

MATRIX SPIKE SAMPLE: 1151145

Parameter	Units	60139978003 Result	Spike Conc.	MS Result	MS % Rec	% Rec Limits	Qualifiers
Nitrogen, NO2 plus NO3	mg/L	0.35	2	2.3	95	90-110	

SAMPLE DUPLICATE: 1151146

Parameter	Units	60139978005 Result	Dup Result	RPD	Max RPD	Qualifiers
Nitrogen, NO2 plus NO3	mg/L	0.31	0.30	5	13	

This report shall not be reproduced, except in full,
without the written consent of Pace Analytical Services, Inc..

Pace Analytical Services, Inc.
9608 Loiret Blvd.
Lenexa, KS 66219
(913)599-5665

QUALITY CONTROL DATA

Project: MARCH 2013 RICO WATER SAMPLING
Pace Project No.: 60139978

QC Batch: WETA/23802 | Analysis Method: SM 4500-CN-E
QC Batch Method: SM 4500-CN-E | Analysis Description: 4500CNE Cyanide, Total
Associated Lab Samples: 60139978001, 60139978002, 60139978003

METHOD BLANK: 1150248 | Matrix: Water
Associated Lab Samples: 60139978001, 60139978002, 60139978003

Parameter	Units	Blank Result	Reporting Limit	Analyzed	Qualifiers
Cyanide	mg/L	ND	0.0050	03/11/13 10:46	

LABORATORY CONTROL SAMPLE: 1150249

Parameter	Units	Spike Conc.	LCS Result	LCS % Rec	% Rec Limits	Qualifiers
Cyanide	mg/L	.1	0.096	96	69-126	

MATRIX SPIKE SAMPLE: 1150250

Parameter	Units	60139995001 Result	Spike Conc.	MS Result	MS % Rec	% Rec Limits	Qualifiers
Cyanide	mg/L	ND	.1	0.089	88	41-136	

SAMPLE DUPLICATE: 1150251

Parameter	Units	60139747001 Result	Dup Result	RPD	Max RPD	Qualifiers
Cyanide	mg/L	0.0052	ND		26	

This report shall not be reproduced, except in full,
without the written consent of Pace Analytical Services, Inc..

Pace Analytical Services, Inc.
9608 Loiret Blvd.
Lenexa, KS 66219
(913)599-5665

QUALITY CONTROL DATA

Project: MARCH 2013 RICO WATER SAMPLING
Pace Project No.: 60139978

QC Batch: WETA/23846 | Analysis Method: SM 4500-CN-E
QC Batch Method: SM 4500-CN-E | Analysis Description: 4500CNE Cyanide, Total
Associated Lab Samples: 60139978004, 60139978005

METHOD BLANK: 1152029 | Matrix: Water
Associated Lab Samples: 60139978004, 60139978005

Parameter	Units	Blank Result	Reporting Limit	Analyzed	Qualifiers
Cyanide	mg/L	ND	0.0050	03/13/13 10:15	

LABORATORY CONTROL SAMPLE: 1152030

Parameter	Units	Spike Conc.	LCS Result	LCS % Rec	% Rec Limits	Qualifiers
Cyanide	mg/L	.1	0.095	95	69-126	

MATRIX SPIKE SAMPLE: 1152031

Parameter	Units	60140198001 Result	Spike Conc.	MS Result	MS % Rec	% Rec Limits	Qualifiers
Cyanide	mg/L	ND	.1	0.078	78	41-136	

SAMPLE DUPLICATE: 1152032

Parameter	Units	60140052001 Result	Dup Result	RPD	Max RPD	Qualifiers
Cyanide	mg/L	<0.0021	ND		26	

This report shall not be reproduced, except in full,
without the written consent of Pace Analytical Services, Inc..

Pace Analytical Services, Inc.
9608 Loiret Blvd.
Lenexa, KS 66219
(913)599-5665

QUALITY CONTROL DATA

Project: MARCH 2013 RICO WATER SAMPLING
Pace Project No.: 60139978

QC Batch: WETA/16620 Analysis Method: SM 5310C
QC Batch Method: SM 5310C Analysis Description: 5310C Total Organic Carbon
Associated Lab Samples: 60139978001, 60139978002, 60139978003, 60139978005

METHOD BLANK: 760011 Matrix: Water
Associated Lab Samples: 60139978001, 60139978002, 60139978003, 60139978005

Parameter	Units	Blank Result	Reporting Limit	Analyzed	Qualifiers
Total Organic Carbon	mg/L	ND	0.50	03/14/13 12:25	

LABORATORY CONTROL SAMPLE: 760012

Parameter	Units	Spike Conc.	LCS Result	LCS % Rec	% Rec Limits	Qualifiers
Total Organic Carbon	mg/L	2.5	2.6	102	80-120	

MATRIX SPIKE & MATRIX SPIKE DUPLICATE: 760013 760014

Parameter	Units	60139978001 Result	MS Spike Conc.	MSD Spike Conc.	MS Result	MSD Result	MS % Rec	MSD % Rec	% Rec Limits	RPD	Max RPD	Qual
Total Organic Carbon	mg/L	1.1	2.5	2.5	3.8	3.7	109	107	80-120	2	20	

This report shall not be reproduced, except in full,
without the written consent of Pace Analytical Services, Inc..

Pace Analytical Services, Inc.
9608 Loiret Blvd.
Lenexa, KS 66219
(913)599-5665

QUALIFIERS

Project: MARCH 2013 RICO WATER SAMPLING
Pace Project No.: 60139978

DEFINITIONS

DF - Dilution Factor, if reported, represents the factor applied to the reported data due to changes in sample preparation, dilution of the sample aliquot, or moisture content.

ND - Not Detected at or above adjusted reporting limit.

J - Estimated concentration above the adjusted method detection limit and below the adjusted reporting limit.

MDL - Adjusted Method Detection Limit.

PRL - Pace Reporting Limit.

RL - Reporting Limit.

S - Surrogate

1,2-Diphenylhydrazine (8270 listed analyte) decomposes to Azobenzene.

Consistent with EPA guidelines, unrounded data are displayed and have been used to calculate % recovery and RPD values.

LCS(D) - Laboratory Control Sample (Duplicate)

MS(D) - Matrix Spike (Duplicate)

DUP - Sample Duplicate

RPD - Relative Percent Difference

NC - Not Calculable.

SG - Silica Gel - Clean-Up

U - Indicates the compound was analyzed for, but not detected.

N-Nitrosodiphenylamine decomposes and cannot be separated from Diphenylamine using Method 8270. The result reported for each analyte is a combined concentration.

Pace Analytical is TNI accredited. Contact your Pace PM for the current list of accredited analytes.

TNI - The NELAC Institute.

LABORATORIES

PASI-G	Pace Analytical Services - Green Bay
PASI-K	Pace Analytical Services - Kansas City
PASI-M	Pace Analytical Services - Minneapolis

ANALYTE QUALIFIERS

1e	Post Digestion Spike Performed - 58.3% Recovery
D6	The relative percent difference (RPD) between the sample and sample duplicate exceeded laboratory control limits.
E	Analyte concentration exceeded the calibration range. The reported result is estimated.
M1	Matrix spike recovery exceeded QC limits. Batch accepted based on laboratory control sample (LCS) recovery.
M6	Matrix spike and Matrix spike duplicate recovery not evaluated against control limits due to sample dilution.

This report shall not be reproduced, except in full,
without the written consent of Pace Analytical Services, Inc..

Pace Analytical Services, Inc.
9608 Loiret Blvd.
Lenexa, KS 66219
(913)599-5665

QUALITY CONTROL DATA CROSS REFERENCE TABLE

Project: MARCH 2013 RICO WATER SAMPLING
Pace Project No.: 60139978

Lab ID	Sample ID	QC Batch Method	QC Batch	Analytical Method	Analytical Batch
60139978001	**EB-1_20130307**	EPA 200.7	MPRP/21794	EPA 200.7	ICP/17453
60139978002	**EB-2_20130307**	EPA 200.7	MPRP/21794	EPA 200.7	ICP/17453
60139978003	**GW-7_20130307**	EPA 200.7	MPRP/21794	EPA 200.7	ICP/17453
60139978004	**GW-3_20130307**	EPA 200.7	MPRP/21794	EPA 200.7	ICP/17453
60139978005	**MW-4 SHALLOW_20130307**	EPA 200.7	MPRP/21794	EPA 200.7	ICP/17453
60139978001	**EB-1_20130307**	EPA 200.8	MPRP/37994	EPA 200.8	ICPM/15545
60139978002	**EB-2_20130307**	EPA 200.8	MPRP/37994	EPA 200.8	ICPM/15545
60139978003	**GW-7_20130307**	EPA 200.8	MPRP/37994	EPA 200.8	ICPM/15545
60139978004	**GW-3_20130307**	EPA 200.8	MPRP/37994	EPA 200.8	ICPM/15545
60139978005	**MW-4 SHALLOW_20130307**	EPA 200.8	MPRP/37994	EPA 200.8	ICPM/15545
60139978001	**EB-1_20130307**	EPA 200.8	MPRP/37981	EPA 200.8	ICPM/15535
60139978002	**EB-2_20130307**	EPA 200.8	MPRP/37981	EPA 200.8	ICPM/15535
60139978003	**GW-7_20130307**	EPA 200.8	MPRP/37981	EPA 200.8	ICPM/15535
60139978004	**GW-3_20130307**	EPA 200.8	MPRP/37981	EPA 200.8	ICPM/15535
60139978005	**MW-4 SHALLOW_20130307**	EPA 200.8	MPRP/37981	EPA 200.8	ICPM/15535
60139978001	**EB-1_20130307**	EPA 200.8	MPRP/21795	EPA 200.8	ICPM/2095
60139978002	**EB-2_20130307**	EPA 200.8	MPRP/21795	EPA 200.8	ICPM/2095
60139978003	**GW-7_20130307**	EPA 200.8	MPRP/21795	EPA 200.8	ICPM/2095
60139978004	**GW-3_20130307**	EPA 200.8	MPRP/21795	EPA 200.8	ICPM/2095
60139978005	**MW-4 SHALLOW_20130307**	EPA 200.8	MPRP/21795	EPA 200.8	ICPM/2095
60139978001	**EB-1_20130307**	EPA 245.1	MERP/8137	EPA 245.1	MERC/9196
60139978002	**EB-2_20130307**	EPA 245.1	MERP/8137	EPA 245.1	MERC/9196
60139978003	**GW-7_20130307**	EPA 245.1	MERP/8137	EPA 245.1	MERC/9196
60139978004	**GW-3_20130307**	EPA 245.1	MERP/8137	EPA 245.1	MERC/9196
60139978005	**MW-4 SHALLOW_20130307**	EPA 245.1	MERP/8137	EPA 245.1	MERC/9196
60139978001	**EB-1_20130307**	EPA 245.1	MERP/8140	EPA 245.1	MERC/9212
60139978002	**EB-2_20130307**	EPA 245.1	MERP/8140	EPA 245.1	MERC/9212
60139978003	**GW-7_20130307**	EPA 245.1	MERP/8140	EPA 245.1	MERC/9212
60139978004	**GW-3_20130307**	EPA 245.1	MERP/8140	EPA 245.1	MERC/9212
60139978005	**MW-4 SHALLOW_20130307**	EPA 245.1	MERP/8140	EPA 245.1	MERC/9212
60139978001	**EB-1_20130307**	EPA 245.1	MERP/7164	EPA 245.1	MERC/7124
60139978002	**EB-2_20130307**	EPA 245.1	MERP/7164	EPA 245.1	MERC/7124
60139978003	**GW-7_20130307**	EPA 245.1	MERP/7164	EPA 245.1	MERC/7124
60139978004	**GW-3_20130307**	EPA 245.1	MERP/7164	EPA 245.1	MERC/7124
60139978005	**MW-4 SHALLOW_20130307**	EPA 245.1	MERP/7164	EPA 245.1	MERC/7124
60139978001	**EB-1_20130307**	SM 2510B	MT/11472		
60139978002	**EB-2_20130307**	SM 2510B	MT/11472		
60139978003	**GW-7_20130307**	SM 2510B	MT/11472		
60139978005	**MW-4 SHALLOW_20130307**	SM 2510B	MT/11472		
60139978001	**EB-1_20130307**	Calculated	MT/11473		
60139978002	**EB-2_20130307**	Calculated	MT/11473		
60139978003	**GW-7_20130307**	Calculated	MT/11473		
60139978005	**MW-4 SHALLOW_20130307**	Calculated	MT/11473		
60139978001	**EB-1_20130307**	SM 2320B	WET/40164		

This report shall not be reproduced, except in full,
without the written consent of Pace Analytical Services, Inc..

Pace Analytical Services, Inc.
9608 Loiret Blvd.
Lenexa, KS 66219
(913)599-5665

QUALITY CONTROL DATA CROSS REFERENCE TABLE

Project: MARCH 2013 RICO WATER SAMPLING
Pace Project No.: 60139978

Lab ID	Sample ID	QC Batch Method	QC Batch	Analytical Method	Analytical Batch
60139978002	**EB-2_20130307**	SM 2320B	WET/40164		
60139978003	**GW-7_20130307**	SM 2320B	WET/40164		
60139978005	**MW-4 SHALLOW_20130307**	SM 2320B	WET/40164		
60139978001	**EB-1_20130307**	SM 2540C	WET/40147		
60139978002	**EB-2_20130307**	SM 2540C	WET/40147		
60139978003	**GW-7_20130307**	SM 2540C	WET/40147		
60139978005	**MW-4 SHALLOW_20130307**	SM 2540C	WET/40147		
60139978001	**EB-1_20130307**	SM 2540D	WET/40149		
60139978002	**EB-2_20130307**	SM 2540D	WET/40149		
60139978003	**GW-7_20130307**	SM 2540D	WET/40150		
60139978005	**MW-4 SHALLOW_20130307**	SM 2540D	WET/40150		
60139978001	**EB-1_20130307**	SM 4500-S-2 D	WET/40129		
60139978002	**EB-2_20130307**	SM 4500-S-2 D	WET/40129		
60139978003	**GW-7_20130307**	SM 4500-S-2 D	WET/40129		
60139978004	**GW-3_20130307**	SM 4500-S-2 D	WET/40129		
60139978005	**MW-4 SHALLOW_20130307**	SM 4500-S-2 D	WET/40129		
60139978001	**EB-1_20130307**	EPA 300.0	WETA/23804		
60139978002	**EB-2_20130307**	EPA 300.0	WETA/23809		
60139978003	**GW-7_20130307**	EPA 300.0	WETA/23804		
60139978005	**MW-4 SHALLOW_20130307**	EPA 300.0	WETA/23804		
60139978001	**EB-1_20130307**	EPA 353.2	WETA/23821		
60139978002	**EB-2_20130307**	EPA 353.2	WETA/23821		
60139978003	**GW-7_20130307**	EPA 353.2	WETA/23821		
60139978005	**MW-4 SHALLOW_20130307**	EPA 353.2	WETA/23821		
60139978001	**EB-1_20130307**	SM 4500-CN-E	WETA/23802		
60139978002	**EB-2_20130307**	SM 4500-CN-E	WETA/23802		
60139978003	**GW-7_20130307**	SM 4500-CN-E	WETA/23802		
60139978004	**GW-3_20130307**	SM 4500-CN-E	WETA/23846		
60139978005	**MW-4 SHALLOW_20130307**	SM 4500-CN-E	WETA/23846		
60139978001	**EB-1_20130307**	SM 5310C	WETA/16620		
60139978002	**EB-2_20130307**	SM 5310C	WETA/16620		
60139978003	**GW-7_20130307**	SM 5310C	WETA/16620		
60139978005	**MW-4 SHALLOW_20130307**	SM 5310C	WETA/16620		

This report shall not be reproduced, except in full,
without the written consent of Pace Analytical Services, Inc..

Pace Analytical Services, Inc.
9608 Loiret Blvd.
Lenexa, KS 66219
(913)599-5665

QUALITY CONTROL DATA

Project: MARCH 2013 RICO WATER SAMPLING
Pace Project No.: 60140509

QC Batch: MERP/8160 Analysis Method: EPA 245.1
QC Batch Method: EPA 245.1 Analysis Description: 245.1 Mercury
Associated Lab Samples: 60140509001, 60140509002, 60140509003, 60140509004, 60140509005, 60140509006, 60140509007, 60140509008, 60140509009, 60140509010, 60140509011, 60140509012, 60140509013, 60140509014, 60140509015, 60140509016, 60140509017, 60140509018, 60140509019, 60140509020

METHOD BLANK: 1394459 Matrix: Water
Associated Lab Samples: 60140509001, 60140509002, 60140509003, 60140509004, 60140509005, 60140509006, 60140509007, 60140509008, 60140509009, 60140509010, 60140509011, 60140509012, 60140509013, 60140509014, 60140509015, 60140509016, 60140509017, 60140509018, 60140509019, 60140509020

Parameter	Units	Blank Result	Reporting Limit	Analyzed	Qualifiers
Mercury	ug/L	ND	0.20	03/27/13 11:13	

LABORATORY CONTROL SAMPLE: 1394460

Parameter	Units	Spike Conc.	LCS Result	LCS % Rec	% Rec Limits	Qualifiers
Mercury	ug/L	5	5.2	104	85-115	

MATRIX SPIKE & MATRIX SPIKE DUPLICATE: 1394908 1394909

Parameter	Units	60140509002 Result	MS Spike Conc.	MSD Spike Conc.	MS Result	MSD Result	MS % Rec	MSD % Rec	% Rec Limits	RPD	Max RPD	Qual
Mercury	ug/L	ND	5	5	5.3	5.3	105	105	85-115	.2	30	

This report shall not be reproduced, except in full,
without the written consent of Pace Analytical Services, Inc..

Pace Analytical Services, Inc.
9608 Loiret Blvd.
Lenexa, KS 66219
(913)599-5665

QUALITY CONTROL DATA

Project: MARCH 2013 RICO WATER SAMPLING
Pace Project No.: 60140509

QC Batch: MERP/8161 | Analysis Method: EPA 245.1
QC Batch Method: EPA 245.1 | Analysis Description: 245.1 Mercury
Associated Lab Samples: 60140509021, 60140509022, 60140509023, 60140509024, 60140509025, 60140509026, 60140509027, 60140509029

METHOD BLANK: 1394464 | Matrix: Water
Associated Lab Samples: 60140509021, 60140509022, 60140509023, 60140509024, 60140509025, 60140509026, 60140509027, 60140509029

Parameter	Units	Blank Result	Reporting Limit	Analyzed	Qualifiers
Mercury	ug/L	ND	0.20	03/26/13 10:50	

LABORATORY CONTROL SAMPLE: 1394465

Parameter	Units	Spike Conc.	LCS Result	LCS % Rec	% Rec Limits	Qualifiers
Mercury	ug/L	5	5.3	105	85-115	

MATRIX SPIKE & MATRIX SPIKE DUPLICATE: 1394466 1394467

Parameter	Units	60140509021 Result	MS Spike Conc.	MSD Spike Conc.	MS Result	MSD Result	MS % Rec	MSD % Rec	% Rec Limits	RPD	Max RPD	Qual
Mercury	ug/L	ND	5	5	5.0	5.3	100	105	85-115	5	30	

This report shall not be reproduced, except in full,
without the written consent of Pace Analytical Services, Inc..

Pace Analytical Services, Inc.
9608 Loiret Blvd.
Lenexa, KS 66219
(913)599-5665

QUALITY CONTROL DATA

Project: MARCH 2013 RICO WATER SAMPLING
Pace Project No.: 60140509

QC Batch: MERP/8158 Analysis Method: EPA 245.1
QC Batch Method: EPA 245.1 Analysis Description: 245.1 Mercury - Dissolved
Associated Lab Samples: 60140509001, 60140509002, 60140509003, 60140509004, 60140509005, 60140509006, 60140509007, 60140509008, 60140509009, 60140509010, 60140509011, 60140509012, 60140509013, 60140509014, 60140509015, 60140509016, 60140509017, 60140509018, 60140509019, 60140509020

METHOD BLANK: 1394330 Matrix: Water
Associated Lab Samples: 60140509001, 60140509002, 60140509003, 60140509004, 60140509005, 60140509006, 60140509007, 60140509008, 60140509009, 60140509010, 60140509011, 60140509012, 60140509013, 60140509014, 60140509015, 60140509016, 60140509017, 60140509018, 60140509019, 60140509020

Parameter	Units	Blank Result	Reporting Limit	Analyzed	Qualifiers
Mercury, Dissolved	ug/L	ND	0.20	03/26/13 09:05	

LABORATORY CONTROL SAMPLE: 1394331

Parameter	Units	Spike Conc.	LCS Result	LCS % Rec	% Rec Limits	Qualifiers
Mercury, Dissolved	ug/L	5	5.1	103	85-115	

MATRIX SPIKE SAMPLE: 1394334

Parameter	Units	60140509020 Result	Spike Conc.	MS Result	MS % Rec	% Rec Limits	Qualifiers
Mercury, Dissolved	ug/L	ND	5	5.2	104	85-115	

MATRIX SPIKE & MATRIX SPIKE DUPLICATE: 1394913 1394914

Parameter	Units	60140509002 Result	MS Spike Conc.	MSD Spike Conc.	MS Result	MSD Result	MS % Rec	MSD % Rec	% Rec Limits	RPD	Max RPD	Qual
Mercury, Dissolved	ug/L	ND	5	5	5.2	5.2	103	103	85-115	.2	20	

REPORT OF LABORATORY ANALYSIS

This report shall not be reproduced, except in full,
without the written consent of Pace Analytical Services, Inc..

Pace Analytical Services, Inc.
9608 Loiret Blvd.
Lenexa, KS 66219
(913)599-5665

QUALITY CONTROL DATA

Project: MARCH 2013 RICO WATER SAMPLING
Pace Project No.: 60140509

QC Batch: MERP/8162 | Analysis Method: EPA 245.1
QC Batch Method: EPA 245.1 | Analysis Description: 245.1 Mercury - Dissolved
Associated Lab Samples: 60140509021, 60140509022, 60140509023, 60140509024, 60140509025, 60140509026, 60140509027, 60140509029

METHOD BLANK: 1394468 | Matrix: Water
Associated Lab Samples: 60140509021, 60140509022, 60140509023, 60140509024, 60140509025, 60140509026, 60140509027, 60140509029

Parameter	Units	Blank Result	Reporting Limit	Analyzed	Qualifiers
Mercury, Dissolved	ug/L	ND	0.20	03/26/13 12:18	

LABORATORY CONTROL SAMPLE: 1394469

Parameter	Units	Spike Conc.	LCS Result	LCS % Rec	% Rec Limits	Qualifiers
Mercury, Dissolved	ug/L	5	5.4	108	85-115	

MATRIX SPIKE & MATRIX SPIKE DUPLICATE: 1394470 1394471

Parameter	Units	60140509021 Result	MS Spike Conc.	MSD Spike Conc.	MS Result	MSD Result	MS % Rec	MSD % Rec	% Rec Limits	RPD	Max RPD	Qual
Mercury, Dissolved	ug/L	ND	5	5	4.9	5.2	98	104	85-115	6	20	

This report shall not be reproduced, except in full,
without the written consent of Pace Analytical Services, Inc..

Pace Analytical Services, Inc.
9608 Loiret Blvd.
Lenexa, KS 66219
(913)599-5665

QUALITY CONTROL DATA

Project: MARCH 2013 RICO WATER SAMPLING
Pace Project No.: 60140509

QC Batch: MERP/7182 | Analysis Method: EPA 245.1
QC Batch Method: EPA 245.1 | Analysis Description: 245.1 Mercury, Potentially Dissolved
Associated Lab Samples: 60140509001, 60140509002, 60140509003, 60140509004, 60140509005, 60140509006, 60140509007, 60140509008, 60140509009, 60140509010, 60140509011, 60140509012, 60140509013, 60140509014, 60140509015, 60140509016, 60140509017, 60140509018, 60140509019, 60140509020

METHOD BLANK: 1156301 | Matrix: Water
Associated Lab Samples: 60140509001, 60140509002, 60140509003, 60140509004, 60140509005, 60140509006, 60140509007, 60140509008, 60140509009, 60140509010, 60140509011, 60140509012, 60140509013, 60140509014, 60140509015, 60140509016, 60140509017, 60140509018, 60140509019, 60140509020

Parameter	Units	Blank Result	Reporting Limit	Analyzed	Qualifiers
Mercury, Dissolved	ug/L	ND	0.20	03/20/13 14:30	

LABORATORY CONTROL SAMPLE: 1156302

Parameter	Units	Spike Conc.	LCS Result	LCS % Rec	% Rec Limits	Qualifiers
Mercury, Dissolved	ug/L	5	5.2	104	85-115	

MATRIX SPIKE & MATRIX SPIKE DUPLICATE: 1156303 1156304

Parameter	Units	60140509004 Result	MS Spike Conc.	MSD Spike Conc.	MS Result	MSD Result	MS % Rec	MSD % Rec	% Rec Limits	RPD	Max RPD	Qual
Mercury, Dissolved	ug/L	ND	5	5	4.7	4.7	93	94	70-130	1	20	

MATRIX SPIKE SAMPLE: 1156305

Parameter	Units	60140509014 Result	Spike Conc.	MS Result	MS % Rec	% Rec Limits	Qualifiers
Mercury, Dissolved	ug/L	ND	5	5.0	100	70-130	

This report shall not be reproduced, except in full,
without the written consent of Pace Analytical Services, Inc..

Pace Analytical Services, Inc.
9608 Loiret Blvd.
Lenexa, KS 66219
(913)599-5665

QUALITY CONTROL DATA

Project: MARCH 2013 RICO WATER SAMPLING
Pace Project No.: 60140509

QC Batch: MERP/7183 | Analysis Method: EPA 245.1
QC Batch Method: EPA 245.1 | Analysis Description: 245.1 Mercury, Potentially Dissolved
Associated Lab Samples: 60140509021, 60140509022, 60140509023, 60140509024, 60140509025, 60140509026, 60140509027, 60140509029

METHOD BLANK: 1156306 | Matrix: Water
Associated Lab Samples: 60140509021, 60140509022, 60140509023, 60140509024, 60140509025, 60140509026, 60140509027, 60140509029

Parameter	Units	Blank Result	Reporting Limit	Analyzed	Qualifiers
Mercury, Dissolved	ug/L	ND	0.20	03/20/13 15:45	

LABORATORY CONTROL SAMPLE: 1156307

Parameter	Units	Spike Conc.	LCS Result	LCS % Rec	% Rec Limits	Qualifiers
Mercury, Dissolved	ug/L	5	4.9	98	85-115	

MATRIX SPIKE & MATRIX SPIKE DUPLICATE: 1156308 1156309

Parameter	Units	60140509024 Result	MS Spike Conc.	MSD Spike Conc.	MS Result	MSD Result	MS % Rec	MSD % Rec	% Rec Limits	RPD	Max RPD	Qual
Mercury, Dissolved	ug/L	ND	5	5	4.9	5.3	98	106	70-130	8	20	

REPORT OF LABORATORY ANALYSIS

This report shall not be reproduced, except in full,
without the written consent of Pace Analytical Services, Inc..

Pace Analytical Services, Inc.
9608 Loiret Blvd.
Lenexa, KS 66219
(913)599-5665

QUALITY CONTROL DATA

Project: MARCH 2013 RICO WATER SAMPLING
Pace Project No.: 60140509

QC Batch: MPRP/21895 Analysis Method: EPA 200.7
QC Batch Method: EPA 200.7 Analysis Description: 200.7 Potentially Dissolved Metals
Associated Lab Samples: 60140509001, 60140509002, 60140509003, 60140509004, 60140509005, 60140509006, 60140509007, 60140509008, 60140509009, 60140509010, 60140509011, 60140509012, 60140509013, 60140509014, 60140509015, 60140509016, 60140509017, 60140509018

METHOD BLANK: 1155515 Matrix: Water
Associated Lab Samples: 60140509001, 60140509002, 60140509003, 60140509004, 60140509005, 60140509006, 60140509007, 60140509008, 60140509009, 60140509010, 60140509011, 60140509012, 60140509013, 60140509014, 60140509015, 60140509016, 60140509017, 60140509018

Parameter	Units	Blank Result	Reporting Limit	Analyzed	Qualifiers
Calcium, Dissolved	ug/L	40.4J	100	03/29/13 09:25	
Magnesium, Dissolved	ug/L	9.2J	50.0	03/29/13 09:25	
Potassium, Dissolved	ug/L	ND	500	03/29/13 09:25	
Sodium, Dissolved	ug/L	52.7J	500	03/29/13 09:25	

LABORATORY CONTROL SAMPLE: 1155516

Parameter	Units	Spike Conc.	LCS Result	LCS % Rec	% Rec Limits	Qualifiers
Calcium, Dissolved	ug/L	10000	9740	97	85-115	
Magnesium, Dissolved	ug/L	10000	9890	99	85-115	
Potassium, Dissolved	ug/L	10000	9600	96	85-115	
Sodium, Dissolved	ug/L	10000	9930	99	85-115	

MATRIX SPIKE & MATRIX SPIKE DUPLICATE: 1155517 1155518

Parameter	Units	60140509002 Result	MS Spike Conc.	MSD Spike Conc.	MS Result	MSD Result	MS % Rec	MSD % Rec	% Rec Limits	RPD	Max RPD	Qual
Calcium, Dissolved	ug/L	242000	10000	10000	280000	262000	380	195	70-130	7	20	M1
Magnesium, Dissolved	ug/L	26900	10000	10000	39100	36400	122	96	70-130	7	20	
Potassium, Dissolved	ug/L	4000	10000	10000	14600	13600	106	96	70-130	7	20	
Sodium, Dissolved	ug/L	9300	10000	10000	20700	19300	114	100	70-130	7	20	

MATRIX SPIKE SAMPLE: 1155519

Parameter	Units	60140509004 Result	Spike Conc.	MS Result	MS % Rec	% Rec Limits	Qualifiers
Calcium, Dissolved	ug/L	214000	10000	230000	160	70-130	M1
Magnesium, Dissolved	ug/L	18900	10000	29000	101	70-130	
Potassium, Dissolved	ug/L	6280	10000	17000	107	70-130	
Sodium, Dissolved	ug/L	10800	10000	21900	110	70-130	

This report shall not be reproduced, except in full,
without the written consent of Pace Analytical Services, Inc..

Pace Analytical Services, Inc.
9608 Loiret Blvd.
Lenexa, KS 66219
(913)599-5665

QUALITY CONTROL DATA

Project: MARCH 2013 RICO WATER SAMPLING
Pace Project No.: 60140509

QC Batch: MPRP/21897 | Analysis Method: EPA 200.7
QC Batch Method: EPA 200.7 | Analysis Description: 200.7 Potentially Dissolved Metals
Associated Lab Samples: 60140509019, 60140509020, 60140509021, 60140509022, 60140509023, 60140509024, 60140509025, 60140509026, 60140509027, 60140509029

METHOD BLANK: 1155524 | Matrix: Water
Associated Lab Samples: 60140509019, 60140509020, 60140509021, 60140509022, 60140509023, 60140509024, 60140509025, 60140509026, 60140509027, 60140509029

Parameter	Units	Blank Result	Reporting Limit	Analyzed	Qualifiers
Calcium, Dissolved	ug/L	12.4J	100	03/29/13 10:23	
Magnesium, Dissolved	ug/L	7.0J	50.0	03/29/13 10:23	
Potassium, Dissolved	ug/L	ND	500	03/29/13 10:23	
Sodium, Dissolved	ug/L	60.0J	500	03/29/13 10:23	

LABORATORY CONTROL SAMPLE: 1155525

Parameter	Units	Spike Conc.	LCS Result	LCS % Rec	% Rec Limits	Qualifiers
Calcium, Dissolved	ug/L	10000	9590	96	85-115	
Magnesium, Dissolved	ug/L	10000	9600	96	85-115	
Potassium, Dissolved	ug/L	10000	9890	99	85-115	
Sodium, Dissolved	ug/L	10000	10200	102	85-115	

MATRIX SPIKE & MATRIX SPIKE DUPLICATE: 1155526 1155527

Parameter	Units	60140509020 Result	MS Spike Conc.	MSD Spike Conc.	MS Result	MSD Result	MS % Rec	MSD % Rec	% Rec Limits	RPD	Max RPD	Qual
Calcium, Dissolved	ug/L	203000	10000	10000	213000	219000	95	152	70-130	3	20	M1
Magnesium, Dissolved	ug/L	20700	10000	10000	29500	29900	88	93	70-130	1	20	
Potassium, Dissolved	ug/L	4610	10000	10000	14300	14400	97	98	70-130	1	20	
Sodium, Dissolved	ug/L	11200	10000	10000	21200	21500	100	103	70-130	1	20	

This report shall not be reproduced, except in full,
without the written consent of Pace Analytical Services, Inc..

Pace Analytical Services, Inc.
9608 Loiret Blvd.
Lenexa, KS 66219
(913)599-5665

QUALITY CONTROL DATA

Project: MARCH 2013 RICO WATER SAMPLING
Pace Project No.: 60140509

QC Batch: MPRP/38091 Analysis Method: EPA 200.8
QC Batch Method: EPA 200.8 Analysis Description: 200.8 MET
Associated Lab Samples: 60140509001, 60140509002, 60140509003, 60140509004, 60140509005, 60140509006, 60140509007, 60140509008, 60140509009, 60140509010, 60140509011, 60140509012, 60140509013, 60140509014, 60140509015, 60140509016, 60140509017, 60140509018, 60140509019, 60140509020

METHOD BLANK: 1394305 Matrix: Water
Associated Lab Samples: 60140509001, 60140509002, 60140509003, 60140509004, 60140509005, 60140509006, 60140509007, 60140509008, 60140509009, 60140509010, 60140509011, 60140509012, 60140509013, 60140509014, 60140509015, 60140509016, 60140509017, 60140509018, 60140509019, 60140509020

Parameter	Units	Blank Result	Reporting Limit	Analyzed	Qualifiers
Aluminum	ug/L	ND	4.0	03/22/13 03:22	
Antimony	ug/L	ND	0.50	03/22/13 03:22	
Arsenic	ug/L	ND	0.50	03/22/13 03:22	
Barium	ug/L	ND	0.30	03/22/13 03:22	
Beryllium	ug/L	ND	0.20	03/22/13 03:22	
Cadmium	ug/L	ND	0.080	03/22/13 03:22	
Calcium	ug/L	ND	20.0	03/22/13 03:22	
Chromium	ug/L	ND	0.50	03/22/13 03:22	
Cobalt	ug/L	ND	0.50	03/22/13 03:22	
Copper	ug/L	ND	0.50	03/25/13 14:09	
Iron	ug/L	ND	50.0	03/22/13 03:22	
Lead	ug/L	ND	0.10	03/22/13 03:22	
Magnesium	ug/L	ND	5.0	03/25/13 14:09	
Manganese	ug/L	ND	0.50	03/22/13 03:22	
Molybdenum	ug/L	ND	0.50	03/22/13 03:22	
Nickel	ug/L	ND	0.50	03/22/13 03:22	
Potassium	ug/L	ND	20.0	03/22/13 03:22	
Selenium	ug/L	ND	0.50	03/22/13 03:22	
Silica	ug/L	ND	53.5	03/25/13 14:09	
Silver	ug/L	ND	0.50	03/22/13 03:22	
Sodium	ug/L	ND	50.0	03/22/13 03:22	
Thallium	ug/L	ND	0.10	03/22/13 03:22	
Total Hardness by 2340B	ug/L	ND	71.0	03/25/13 14:09	
Vanadium	ug/L	ND	0.10	03/22/13 03:22	
Zinc	ug/L	ND	5.0	03/22/13 03:22	

LABORATORY CONTROL SAMPLE: 1394306

Parameter	Units	Spike Conc.	LCS Result	LCS % Rec	% Rec Limits	Qualifiers
Aluminum	ug/L	80	79.4	99	85-115	
Antimony	ug/L	80	78.6	98	85-115	
Arsenic	ug/L	80	77.9	97	85-115	
Barium	ug/L	80	76.5	96	85-115	
Beryllium	ug/L	80	81.0	101	85-115	
Cadmium	ug/L	80	78.1	98	85-115	
Calcium	ug/L	1000	958	96	85-115	
Chromium	ug/L	80	78.7	98	85-115	
Cobalt	ug/L	80	77.9	97	85-115	

This report shall not be reproduced, except in full,
without the written consent of Pace Analytical Services, Inc..

Pace Analytical Services, Inc.
9608 Loiret Blvd.
Lenexa, KS 66219
(913)599-5665

QUALITY CONTROL DATA

Project: MARCH 2013 RICO WATER SAMPLING
Pace Project No.: 60140509

LABORATORY CONTROL SAMPLE: 1394306

Parameter	Units	Spike Conc.	LCS Result	LCS % Rec	% Rec Limits	Qualifiers
Copper	ug/L	80	80.8	101	85-115	
Iron	ug/L	1000	990	99	85-115	
Lead	ug/L	80	77.9	97	85-115	
Magnesium	ug/L	1000	979	98	85-115	
Manganese	ug/L	80	78.5	98	85-115	
Molybdenum	ug/L	80	75.3	94	85-115	
Nickel	ug/L	80	80.1	100	85-115	
Potassium	ug/L	1000	948	95	85-115	
Selenium	ug/L	80	78.7	98	85-115	
Silica	ug/L	2140	2100	98	85-115	
Silver	ug/L	80	79.9	100	85-115	
Sodium	ug/L	1000	976	98	85-115	
Thallium	ug/L	80	78.0	97	85-115	
Total Hardness by 2340B	ug/L	6620	6430	97	85-115	
Vanadium	ug/L	80	76.6	96	85-115	
Zinc	ug/L	80	80.6	101	85-115	

MATRIX SPIKE & MATRIX SPIKE DUPLICATE: 1394307 1394308

Parameter	Units	60140509001 Result	MS Spike Conc.	MSD Spike Conc.	MS Result	MSD Result	MS % Rec	MSD % Rec	% Rec Limits	RPD	Max RPD	Qual
Aluminum	ug/L	1320	80	80	2240	2210	1150	1110	70-130	1	20	M6
Antimony	ug/L	ND	80	80	74.9	75.6	93	94	70-130	1	20	
Arsenic	ug/L	3.0	80	80	82.9	82.7	100	100	70-130	.3	20	
Barium	ug/L	39.5	80	80	115	118	94	98	70-130	3	20	
Beryllium	ug/L	0.36	80	80	79.1	78.4	98	97	70-130	1	20	
Cadmium	ug/L	0.20	80	80	78.0	77.0	97	96	70-130	1	20	
Calcium	ug/L	340000	1000	1000	354000	351000	1410	1120	70-130	.8	20	E,M6
Chromium	ug/L	2.7	80	80	79.3	81.4	96	98	70-130	3	20	
Cobalt	ug/L	13.1	80	80	90.9	91.4	97	98	70-130	.6	20	
Copper	ug/L	6.7	80	80	86.9	87.2	100	101	70-130	.4	20	
Iron	ug/L	4030	1000	1000	5260	5230	123	120	70-130	.6	20	
Lead	ug/L	7.2	80	80	82.2	81.6	94	93	70-130	.7	20	
Magnesium	ug/L	50600	1000	1000	53000	52000	243	142	70-130	2	20	M6
Manganese	ug/L	25100	80	80	24900	25000	-300	-175	70-130	.4	20	E,M6
Molybdenum	ug/L	4.9	80	80	81.9	83.0	96	98	70-130	1	20	
Nickel	ug/L	6.2	80	80	85.2	84.2	99	97	70-130	1	20	
Potassium	ug/L	5480	1000	1000	6540	6470	107	100	70-130	1	20	
Selenium	ug/L	ND	80	80	79.8	77.9	100	97	70-130	2	20	
Silica	ug/L	27100	2140	2140	33300	32800	289	265	70-130	2	20	M6
Silver	ug/L	ND	80	80	78.2	77.0	98	96	70-130	1	20	
Sodium	ug/L	13400	1000	1000	14200	14100	89	78	70-130	.8	20	
Thallium	ug/L	ND	80	80	74.7	74.4	93	93	70-130	.4	20	
Total Hardness by 2340B	ug/L	1060000	6620	6620	1100000	1090000	684	511	70-130	1	20	M6
Vanadium	ug/L	2.8	80	80	80.3	82.1	97	99	70-130	2	20	
Zinc	ug/L	88.4	80	80	171	168	104	99	70-130	2	20	

REPORT OF LABORATORY ANALYSIS

This report shall not be reproduced, except in full,
without the written consent of Pace Analytical Services, Inc..

Pace Analytical Services, Inc.
9608 Loiret Blvd.
Lenexa, KS 66219
(913)599-5665

QUALITY CONTROL DATA

Project: MARCH 2013 RICO WATER SAMPLING
Pace Project No.: 60140509

QC Batch: MPRP/38092 Analysis Method: EPA 200.8
QC Batch Method: EPA 200.8 Analysis Description: 200.8 MET
Associated Lab Samples: 60140509021, 60140509022, 60140509023, 60140509024, 60140509025, 60140509026, 60140509027, 60140509029

METHOD BLANK: 1394309 Matrix: Water
Associated Lab Samples: 60140509021, 60140509022, 60140509023, 60140509024, 60140509025, 60140509026, 60140509027, 60140509029

Parameter	Units	Blank Result	Reporting Limit	Analyzed	Qualifiers
Aluminum	ug/L	ND	4.0	03/25/13 10:33	
Antimony	ug/L	ND	0.50	03/25/13 10:33	
Arsenic	ug/L	ND	0.50	03/25/13 10:33	
Barium	ug/L	ND	0.30	03/25/13 10:33	
Beryllium	ug/L	ND	0.20	03/25/13 10:33	
Cadmium	ug/L	ND	0.080	03/25/13 10:33	
Calcium	ug/L	ND	20.0	03/25/13 10:33	
Chromium	ug/L	ND	0.50	03/25/13 10:33	
Cobalt	ug/L	ND	0.50	03/25/13 10:33	
Copper	ug/L	ND	0.50	03/25/13 10:33	
Iron	ug/L	ND	50.0	03/25/13 10:33	
Lead	ug/L	ND	0.10	03/26/13 00:15	
Magnesium	ug/L	ND	5.0	03/25/13 10:33	
Manganese	ug/L	ND	0.50	03/25/13 10:33	
Molybdenum	ug/L	ND	0.50	03/25/13 10:33	
Nickel	ug/L	ND	0.50	03/25/13 10:33	
Potassium	ug/L	ND	20.0	03/26/13 00:15	
Selenium	ug/L	ND	0.50	03/25/13 10:33	
Silica	ug/L	ND	53.5	03/25/13 10:33	
Silver	ug/L	ND	0.50	03/25/13 10:33	
Sodium	ug/L	ND	50.0	03/25/13 10:33	
Thallium	ug/L	ND	0.10	03/26/13 00:15	
Total Hardness by 2340B	ug/L	ND	71.0	03/25/13 10:33	
Vanadium	ug/L	ND	0.10	03/25/13 10:33	
Zinc	ug/L	ND	5.0	03/25/13 10:33	

LABORATORY CONTROL SAMPLE: 1394310

Parameter	Units	Spike Conc.	LCS Result	LCS % Rec	% Rec Limits	Qualifiers
Aluminum	ug/L	80	79.3	99	85-115	
Antimony	ug/L	80	76.6	96	85-115	
Arsenic	ug/L	80	79.9	100	85-115	
Barium	ug/L	80	80.7	101	85-115	
Beryllium	ug/L	80	79.9	100	85-115	
Cadmium	ug/L	80	77.6	97	85-115	
Calcium	ug/L	1000	1120	112	85-115	
Chromium	ug/L	80	81.6	102	85-115	
Cobalt	ug/L	80	80.0	100	85-115	
Copper	ug/L	80	82.3	103	85-115	
Iron	ug/L	1000	978	98	85-115	

This report shall not be reproduced, except in full,
without the written consent of Pace Analytical Services, Inc..

Pace Analytical Services, Inc.
9608 Loiret Blvd.
Lenexa, KS 66219
(913)599-5665

QUALITY CONTROL DATA

Project: MARCH 2013 RICO WATER SAMPLING
Pace Project No.: 60140509

LABORATORY CONTROL SAMPLE: 1394310

Parameter	Units	Spike Conc.	LCS Result	LCS % Rec	% Rec Limits	Qualifiers
Lead	ug/L	80	74.6	93	85-115	
Magnesium	ug/L	1000	986	99	85-115	
Manganese	ug/L	80	78.4	98	85-115	
Molybdenum	ug/L	80	76.0	95	85-115	
Nickel	ug/L	80	82.0	103	85-115	
Potassium	ug/L	1000	1000	100	85-115	
Selenium	ug/L	80	77.3	97	85-115	
Silica	ug/L	2140	2140	100	85-115	
Silver	ug/L	80	77.4	97	85-115	
Sodium	ug/L	1000	1020	102	85-115	
Thallium	ug/L	80	75.0	94	85-115	
Total Hardness by 2340B	ug/L	6620	6870	104	85-115	
Vanadium	ug/L	80	77.3	97	85-115	
Zinc	ug/L	80	78.4	98	85-115	

MATRIX SPIKE & MATRIX SPIKE DUPLICATE: 1394311 1394312

Parameter	Units	60140509021 Result	MS Spike Conc.	MSD Spike Conc.	MS Result	MSD Result	MS % Rec	MSD % Rec	% Rec Limits	RPD	Max RPD	Qual
Aluminum	ug/L	5350	80	80	6920	6900	1970	1940	70-130	.4	20	M1
Antimony	ug/L	0.93	80	80	78.0	76.6	96	95	70-130	2	20	
Arsenic	ug/L	260	80	80	351	345	114	106	70-130	2	20	
Barium	ug/L	82.2	80	80	170	173	110	114	70-130	2	20	
Beryllium	ug/L	2.5	80	80	82.2	81.2	100	98	70-130	1	20	
Cadmium	ug/L	6.1	80	80	87.9	87.0	102	101	70-130	1	20	
Calcium	ug/L	319000	1000	1000	324000	320000	430	30	70-130	1	20	E,M1
Chromium	ug/L	5.3	80	80	88.0	88.4	103	104	70-130	.5	20	
Cobalt	ug/L	10.6	80	80	92.0	90.4	102	100	70-130	2	20	
Copper	ug/L	108	80	80	200	197	114	111	70-130	1	20	
Iron	ug/L	100000	1000	1000	105000	104000	450	395	70-130	.5	20	M1
Lead	ug/L	902	80	80	1010	996	131	118	70-130	1	20	M1
Magnesium	ug/L	51200	1000	1000	53900	53000	275	180	70-130	2	20	M1
Manganese	ug/L	9880	80	80	10700	10700	1040	1040	70-130	.05	20	E,M1
Molybdenum	ug/L	20.1	80	80	97.8	96.1	97	95	70-130	2	20	
Nickel	ug/L	11.0	80	80	94.0	92.6	104	102	70-130	2	20	
Potassium	ug/L	8890	1000	1000	10500	10400	164	149	70-130	1	20	M1
Selenium	ug/L	1.5	80	80	77.7	77.8	95	95	70-130	.06	20	
Silica	ug/L	44200	2140	2140	48800	48500	216	204	70-130	.5	20	M1
Silver	ug/L	2.6	80	80	66.4	73.2	80	88	70-130	10	20	
Sodium	ug/L	7290	1000	1000	9100	9060	181	177	70-130	.4	20	M1
Thallium	ug/L	0.29	80	80	75.8	75.4	94	94	70-130	.5	20	
Total Hardness by 2340B	ug/L	1010000	6620	6620	1030000	1020000	334	123	70-130	1	20	M1
Vanadium	ug/L	9.6	80	80	91.6	91.2	103	102	70-130	.5	20	
Zinc	ug/L	8920	80	80	9340	9120	531	244	70-130	2	20	E,M1

This report shall not be reproduced, except in full,
without the written consent of Pace Analytical Services, Inc..

Pace Analytical Services, Inc.
9608 Loiret Blvd.
Lenexa, KS 66219
(913)599-5665

QUALITY CONTROL DATA

Project: MARCH 2013 RICO WATER SAMPLING
Pace Project No.: 60140509

QC Batch: MPRP/38094 Analysis Method: EPA 200.8
QC Batch Method: EPA 200.8 Analysis Description: 200.8 MET Dissolved
Associated Lab Samples: 60140509001, 60140509002, 60140509003, 60140509004, 60140509005, 60140509006, 60140509007, 60140509008, 60140509009, 60140509010, 60140509011, 60140509012, 60140509013, 60140509014, 60140509015, 60140509016, 60140509017, 60140509018, 60140509019

METHOD BLANK: 1394317 Matrix: Water
Associated Lab Samples: 60140509001, 60140509002, 60140509003, 60140509004, 60140509005, 60140509006, 60140509007, 60140509008, 60140509009, 60140509010, 60140509011, 60140509012, 60140509013, 60140509014, 60140509015, 60140509016, 60140509017, 60140509018, 60140509019

Parameter	Units	Blank Result	Reporting Limit	Analyzed	Qualifiers
Aluminum, Dissolved	ug/L	ND	4.0	03/22/13 21:09	
Antimony, Dissolved	ug/L	ND	0.50	03/22/13 21:09	
Arsenic, Dissolved	ug/L	ND	0.50	03/22/13 21:09	
Barium, Dissolved	ug/L	ND	0.30	03/22/13 21:09	
Beryllium, Dissolved	ug/L	ND	0.20	03/22/13 21:09	
Cadmium, Dissolved	ug/L	ND	0.080	03/22/13 21:09	
Calcium, Dissolved	ug/L	ND	20.0	03/22/13 21:09	
Chromium, Dissolved	ug/L	ND	0.50	03/22/13 21:09	
Cobalt, Dissolved	ug/L	ND	0.50	03/22/13 21:09	
Copper, Dissolved	ug/L	ND	0.50	03/22/13 21:09	
Iron, Dissolved	ug/L	ND	50.0	03/22/13 21:09	
Lead, Dissolved	ug/L	ND	0.10	03/22/13 21:09	
Magnesium, Dissolved	ug/L	ND	5.0	03/22/13 21:09	
Manganese, Dissolved	ug/L	ND	0.50	03/22/13 21:09	
Molybdenum, Dissolved	ug/L	ND	0.50	03/22/13 21:09	
Nickel, Dissolved	ug/L	ND	0.50	03/22/13 21:09	
Potassium, Dissolved	ug/L	ND	20.0	03/22/13 21:09	
Selenium, Dissolved	ug/L	ND	0.50	03/22/13 21:09	
Silver, Dissolved	ug/L	ND	0.50	03/22/13 21:09	
Sodium, Dissolved	ug/L	ND	50.0	03/22/13 21:09	
Thallium, Dissolved	ug/L	ND	0.10	03/22/13 21:09	
Vanadium, Dissolved	ug/L	ND	0.10	03/22/13 21:09	
Zinc, Dissolved	ug/L	ND	5.0	03/22/13 21:09	

LABORATORY CONTROL SAMPLE: 1394318

Parameter	Units	Spike Conc.	LCS Result	LCS % Rec	% Rec Limits	Qualifiers
Aluminum, Dissolved	ug/L	80	76.6	96	85-115	
Antimony, Dissolved	ug/L	80	77.8	97	85-115	
Arsenic, Dissolved	ug/L	80	77.4	97	85-115	
Barium, Dissolved	ug/L	80	76.5	96	85-115	
Beryllium, Dissolved	ug/L	80	77.7	97	85-115	
Cadmium, Dissolved	ug/L	80	77.8	97	85-115	
Calcium, Dissolved	ug/L	1000	950	95	85-115	
Chromium, Dissolved	ug/L	80	78.8	99	85-115	
Cobalt, Dissolved	ug/L	80	77.0	96	85-115	
Copper, Dissolved	ug/L	80	81.1	101	85-115	
Iron, Dissolved	ug/L	1000	985	98	85-115	

This report shall not be reproduced, except in full,
without the written consent of Pace Analytical Services, Inc..

Pace Analytical Services, Inc.
9608 Loiret Blvd.
Lenexa, KS 66219
(913)599-5665

QUALITY CONTROL DATA

Project: MARCH 2013 RICO WATER SAMPLING
Pace Project No.: 60140509

LABORATORY CONTROL SAMPLE: 1394318

Parameter	Units	Spike Conc.	LCS Result	LCS % Rec	% Rec Limits	Qualifiers
Lead, Dissolved	ug/L	80	76.1	95	85-115	
Magnesium, Dissolved	ug/L	1000	953	95	85-115	
Manganese, Dissolved	ug/L	80	76.9	96	85-115	
Molybdenum, Dissolved	ug/L	80	76.6	96	85-115	
Nickel, Dissolved	ug/L	80	79.6	99	85-115	
Potassium, Dissolved	ug/L	1000	935	93	85-115	
Selenium, Dissolved	ug/L	80	76.6	96	85-115	
Silver, Dissolved	ug/L	80	79.9	100	85-115	
Sodium, Dissolved	ug/L	1000	936	94	85-115	
Thallium, Dissolved	ug/L	80	76.4	95	85-115	
Vanadium, Dissolved	ug/L	80	77.5	97	85-115	
Zinc, Dissolved	ug/L	80	78.8	99	85-115	

MATRIX SPIKE & MATRIX SPIKE DUPLICATE: 1394319 1394320

Parameter	Units	60140509001 Result	MS Spike Conc.	MSD Spike Conc.	MS Result	MSD Result	MS % Rec	MSD % Rec	% Rec Limits	RPD	Max RPD	Qual
Aluminum, Dissolved	ug/L	59.7	80	80	162	166	128	133	70-130	3	20	M6
Antimony, Dissolved	ug/L	ND	80	80	82.1	80.4	103	100	70-130	2	20	
Arsenic, Dissolved	ug/L	0.74	80	80	81.2	82.6	101	102	70-130	2	20	
Barium, Dissolved	ug/L	19.1	80	80	97.2	96.7	98	97	70-130	.5	20	
Beryllium, Dissolved	ug/L	0.22	80	80	80.6	78.6	100	98	70-130	3	20	
Cadmium, Dissolved	ug/L	0.093	80	80	80.9	81.6	101	102	70-130	.9	20	
Calcium, Dissolved	ug/L	360000	1000	1000	374000	368000	1360	805	70-130	2	20	E,M6
Chromium, Dissolved	ug/L	0.58	80	80	81.8	81.5	102	101	70-130	.4	20	
Cobalt, Dissolved	ug/L	12.7	80	80	94.8	92.9	103	100	70-130	2	20	
Copper, Dissolved	ug/L	0.89	80	80	83.8	85.4	104	106	70-130	2	20	
Iron, Dissolved	ug/L	1680	1000	1000	2770	2730	109	105	70-130	1	20	
Lead, Dissolved	ug/L	0.24	80	80	78.7	77.6	98	97	70-130	1	20	
Magnesium, Dissolved	ug/L	50400	1000	1000	53500	52100	308	174	70-130	3	20	M6
Manganese, Dissolved	ug/L	25300	80	80	26200	25600	1100	425	70-130	2	20	E,M6
Molybdenum, Dissolved	ug/L	4.4	80	80	83.4	87.0	99	103	70-130	4	20	
Nickel, Dissolved	ug/L	5.4	80	80	87.9	86.9	103	102	70-130	1	20	
Potassium, Dissolved	ug/L	5340	1000	1000	6370	6300	103	96	70-130	1	20	
Selenium, Dissolved	ug/L	ND	80	80	78.4	79.7	98	100	70-130	2	20	
Silver, Dissolved	ug/L	ND	80	80	80.8	81.4	101	102	70-130	.8	20	
Sodium, Dissolved	ug/L	13800	1000	1000	14900	14700	103	85	70-130	1	20	
Thallium, Dissolved	ug/L	ND	80	80	79.1	78.0	99	97	70-130	1	20	
Vanadium, Dissolved	ug/L	ND	80	80	80.3	83.1	100	104	70-130	3	20	
Zinc, Dissolved	ug/L	78.2	80	80	167	164	112	107	70-130	2	20	

This report shall not be reproduced, except in full,
without the written consent of Pace Analytical Services, Inc..

Pace Analytical Services, Inc.
9608 Loiret Blvd.
Lenexa, KS 66219
(913)599-5665

QUALITY CONTROL DATA

Project: MARCH 2013 RICO WATER SAMPLING
Pace Project No.: 60140509

QC Batch: MPRP/38095 Analysis Method: EPA 200.8
QC Batch Method: EPA 200.8 Analysis Description: 200.8 MET Dissolved
Associated Lab Samples: 60140509020, 60140509021, 60140509022, 60140509023, 60140509024, 60140509025, 60140509026, 60140509027, 60140509029

METHOD BLANK: 1394321 Matrix: Water
Associated Lab Samples: 60140509020, 60140509021, 60140509022, 60140509023, 60140509024, 60140509025, 60140509026, 60140509027, 60140509029

Parameter	Units	Blank Result	Reporting Limit	Analyzed	Qualifiers
Aluminum, Dissolved	ug/L	ND	4.0	03/22/13 15:04	
Antimony, Dissolved	ug/L	ND	0.50	03/21/13 21:51	
Arsenic, Dissolved	ug/L	ND	0.50	03/21/13 21:51	
Barium, Dissolved	ug/L	ND	0.30	03/21/13 21:51	
Beryllium, Dissolved	ug/L	ND	0.20	03/21/13 21:51	
Cadmium, Dissolved	ug/L	ND	0.080	03/21/13 21:51	
Calcium, Dissolved	ug/L	ND	20.0	03/21/13 21:51	
Chromium, Dissolved	ug/L	ND	0.50	03/21/13 21:51	
Cobalt, Dissolved	ug/L	ND	0.50	03/21/13 21:51	
Copper, Dissolved	ug/L	ND	0.50	03/22/13 15:04	
Iron, Dissolved	ug/L	ND	50.0	03/21/13 21:51	
Lead, Dissolved	ug/L	ND	0.10	03/21/13 21:51	
Magnesium, Dissolved	ug/L	ND	5.0	03/22/13 15:04	
Manganese, Dissolved	ug/L	ND	0.50	03/21/13 21:51	
Molybdenum, Dissolved	ug/L	ND	0.50	03/21/13 21:51	
Nickel, Dissolved	ug/L	ND	0.50	03/21/13 21:51	
Potassium, Dissolved	ug/L	ND	20.0	03/21/13 21:51	
Selenium, Dissolved	ug/L	ND	0.50	03/21/13 21:51	
Silver, Dissolved	ug/L	ND	0.50	03/21/13 21:51	
Sodium, Dissolved	ug/L	ND	50.0	03/21/13 21:51	
Thallium, Dissolved	ug/L	ND	0.10	03/21/13 21:51	
Vanadium, Dissolved	ug/L	ND	0.10	03/21/13 21:51	
Zinc, Dissolved	ug/L	ND	5.0	03/21/13 21:51	

LABORATORY CONTROL SAMPLE: 1394322

Parameter	Units	Spike Conc.	LCS Result	LCS % Rec	% Rec Limits	Qualifiers
Aluminum, Dissolved	ug/L	80	81.3	102	85-115	
Antimony, Dissolved	ug/L	80	80.7	101	85-115	
Arsenic, Dissolved	ug/L	80	80.4	101	85-115	
Barium, Dissolved	ug/L	80	79.8	100	85-115	
Beryllium, Dissolved	ug/L	80	84.1	105	85-115	
Cadmium, Dissolved	ug/L	80	82.7	103	85-115	
Calcium, Dissolved	ug/L	1000	1020	102	85-115	
Chromium, Dissolved	ug/L	80	81.1	101	85-115	
Cobalt, Dissolved	ug/L	80	82.4	103	85-115	
Copper, Dissolved	ug/L	80	83.3	104	85-115	
Iron, Dissolved	ug/L	1000	1020	102	85-115	
Lead, Dissolved	ug/L	80	81.3	102	85-115	
Magnesium, Dissolved	ug/L	1000	1040	104	85-115	

This report shall not be reproduced, except in full,
without the written consent of Pace Analytical Services, Inc..

Pace Analytical Services, Inc.
9608 Loiret Blvd.
Lenexa, KS 66219
(913)599-5665

QUALITY CONTROL DATA

Project: MARCH 2013 RICO WATER SAMPLING
Pace Project No.: 60140509

LABORATORY CONTROL SAMPLE: 1394322

Parameter	Units	Spike Conc.	LCS Result	LCS % Rec	% Rec Limits	Qualifiers
Manganese, Dissolved	ug/L	80	80.6	101	85-115	
Molybdenum, Dissolved	ug/L	80	79.9	100	85-115	
Nickel, Dissolved	ug/L	80	82.5	103	85-115	
Potassium, Dissolved	ug/L	1000	1010	101	85-115	
Selenium, Dissolved	ug/L	80	81.7	102	85-115	
Silver, Dissolved	ug/L	80	85.4	107	85-115	
Sodium, Dissolved	ug/L	1000	983	98	85-115	
Thallium, Dissolved	ug/L	80	82.2	103	85-115	
Vanadium, Dissolved	ug/L	80	81.5	102	85-115	
Zinc, Dissolved	ug/L	80	82.4	103	85-115	

MATRIX SPIKE & MATRIX SPIKE DUPLICATE: 1394323 1394324

Parameter	Units	60140509020 Result	MS Spike Conc.	MSD Spike Conc.	MS Result	MSD Result	MS % Rec	MSD % Rec	% Rec Limits	RPD	Max RPD	Qual
Aluminum, Dissolved	ug/L	172	80	80	355	339	228	209	70-130	4	20	M6
Antimony, Dissolved	ug/L	ND	80	80	78.0	78.7	97	98	70-130	.9	20	
Arsenic, Dissolved	ug/L	0.79	80	80	78.7	79.7	97	99	70-130	1	20	
Barium, Dissolved	ug/L	22.2	80	80	99.9	101	97	98	70-130	.7	20	
Beryllium, Dissolved	ug/L	ND	80	80	85.0	79.8	106	100	70-130	6	20	
Cadmium, Dissolved	ug/L	0.27	80	80	81.5	85.1	102	106	70-130	4	20	
Calcium, Dissolved	ug/L	242000	1000	1000	242000	246000	38	398	70-130	1	20	E,M6
Chromium, Dissolved	ug/L	1.1	80	80	80.6	81.6	99	101	70-130	1	20	
Cobalt, Dissolved	ug/L	1.0	80	80	81.4	82.0	101	101	70-130	.7	20	
Copper, Dissolved	ug/L	2.7	80	80	82.5	87.0	100	105	70-130	5	20	
Iron, Dissolved	ug/L	1800	1000	1000	2850	2890	105	109	70-130	1	20	
Lead, Dissolved	ug/L	3.5	80	80	82.8	83.4	99	100	70-130	.8	20	
Magnesium, Dissolved	ug/L	24600	1000	1000	25800	26000	114	138	70-130	1	20	M6
Manganese, Dissolved	ug/L	1510	80	80	1590	1590	96	101	70-130	.3	20	
Molybdenum, Dissolved	ug/L	8.6	80	80	87.9	89.1	99	101	70-130	1	20	
Nickel, Dissolved	ug/L	ND	80	80	81.6	82.6	102	103	70-130	1	20	
Potassium, Dissolved	ug/L	5110	1000	1000	6190	6190	108	108	70-130	0	20	
Selenium, Dissolved	ug/L	ND	80	80	76.6	76.2	96	95	70-130	.6	20	
Silver, Dissolved	ug/L	ND	80	80	83.5	82.7	104	103	70-130	1	20	
Sodium, Dissolved	ug/L	11500	1000	1000	12500	12700	99	122	70-130	2	20	
Thallium, Dissolved	ug/L	ND	80	80	80.3	80.8	100	101	70-130	.7	20	
Vanadium, Dissolved	ug/L	0.47	80	80	81.8	81.9	102	102	70-130	.1	20	
Zinc, Dissolved	ug/L	45.1	80	80	126	126	100	101	70-130	.2	20	

This report shall not be reproduced, except in full,
without the written consent of Pace Analytical Services, Inc..

Pace Analytical Services, Inc.
9608 Loiret Blvd.
Lenexa, KS 66219
(913)599-5665

QUALITY CONTROL DATA

Project: MARCH 2013 RICO WATER SAMPLING
Pace Project No.: 60140509

QC Batch: MPRP/21894 | Analysis Method: EPA 200.8
QC Batch Method: EPA 200.8 | Analysis Description: 200.8 Potentially Dissolved Metals
Associated Lab Samples: 60140509001, 60140509002, 60140509003, 60140509004, 60140509005, 60140509006, 60140509007, 60140509008, 60140509009, 60140509010, 60140509011, 60140509012, 60140509013, 60140509014, 60140509015, 60140509016, 60140509017, 60140509018

METHOD BLANK: 1155510 | Matrix: Water
Associated Lab Samples: 60140509001, 60140509002, 60140509003, 60140509004, 60140509005, 60140509006, 60140509007, 60140509008, 60140509009, 60140509010, 60140509011, 60140509012, 60140509013, 60140509014, 60140509015, 60140509016, 60140509017, 60140509018

Parameter	Units	Blank Result	Reporting Limit	Analyzed	Qualifiers
Aluminum, Dissolved	ug/L	ND	50.0	03/29/13 11:33	
Antimony, Dissolved	ug/L	0.042J	1.0	03/29/13 11:33	
Arsenic, Dissolved	ug/L	ND	1.0	03/29/13 11:33	
Barium, Dissolved	ug/L	0.21J	1.0	03/29/13 11:33	
Beryllium, Dissolved	ug/L	ND	0.50	03/29/13 11:33	
Cadmium, Dissolved	ug/L	ND	0.50	03/29/13 11:33	
Chromium, Dissolved	ug/L	0.42J	1.0	03/29/13 11:33	
Cobalt, Dissolved	ug/L	0.096J	1.0	03/29/13 11:33	
Copper, Dissolved	ug/L	ND	1.0	03/29/13 11:33	
Iron, Dissolved	ug/L	13.5J	50.0	03/29/13 11:33	
Lead, Dissolved	ug/L	0.33J	1.0	03/29/13 11:33	
Manganese, Dissolved	ug/L	0.93J	1.0	03/29/13 11:33	
Molybdenum, Dissolved	ug/L	ND	1.0	03/29/13 11:33	
Nickel, Dissolved	ug/L	ND	1.0	03/29/13 11:33	
Selenium, Dissolved	ug/L	ND	1.0	03/29/13 11:33	
Silver, Dissolved	ug/L	ND	0.50	03/29/13 11:33	
Thallium, Dissolved	ug/L	0.25J	1.0	03/29/13 11:33	
Vanadium, Dissolved	ug/L	ND	1.0	03/29/13 11:33	
Zinc, Dissolved	ug/L	2.7J	10.0	03/29/13 11:33	

LABORATORY CONTROL SAMPLE: 1155511

Parameter	Units	Spike Conc.	LCS Result	LCS % Rec	% Rec Limits	Qualifiers
Aluminum, Dissolved	ug/L	1000	950	95	85-115	
Antimony, Dissolved	ug/L	40	39.4	98	85-115	
Arsenic, Dissolved	ug/L	40	38.5	96	85-115	
Barium, Dissolved	ug/L	40	37.1	93	85-115	
Beryllium, Dissolved	ug/L	40	35.2	88	85-115	
Cadmium, Dissolved	ug/L	40	39.0	97	85-115	
Chromium, Dissolved	ug/L	40	37.4	94	85-115	
Cobalt, Dissolved	ug/L	40	36.7	92	85-115	
Copper, Dissolved	ug/L	40	37.2	93	85-115	
Iron, Dissolved	ug/L	1000	957	96	85-115	
Lead, Dissolved	ug/L	40	36.8	92	85-115	
Manganese, Dissolved	ug/L	40	37.6	94	85-115	
Molybdenum, Dissolved	ug/L	40	39.0	97	85-115	
Nickel, Dissolved	ug/L	40	37.6	94	85-115	
Selenium, Dissolved	ug/L	40	39.2	98	85-115	

This report shall not be reproduced, except in full,
without the written consent of Pace Analytical Services, Inc..

Pace Analytical Services, Inc.
9608 Loiret Blvd.
Lenexa, KS 66219
(913)599-5665

QUALITY CONTROL DATA

Project: MARCH 2013 RICO WATER SAMPLING
Pace Project No.: 60140509

LABORATORY CONTROL SAMPLE: 1155511

Parameter	Units	Spike Conc.	LCS Result	LCS % Rec	% Rec Limits	Qualifiers
Silver, Dissolved	ug/L	20	19.0	95	85-115	
Thallium, Dissolved	ug/L	40	35.5	89	85-115	
Vanadium, Dissolved	ug/L	40	37.1	93	85-115	
Zinc, Dissolved	ug/L	100	101	101	85-115	

MATRIX SPIKE & MATRIX SPIKE DUPLICATE: 1155512 1155513

Parameter	Units	60140509001 Result	MS Spike Conc.	MSD Spike Conc.	MS Result	MSD Result	MS % Rec	MSD % Rec	% Rec Limits	RPD	Max RPD	Qual
Aluminum, Dissolved	ug/L	211	1000	1000	1050	1080	84	87	70-130	3	20	
Antimony, Dissolved	ug/L	0.14J	40	40	37.2	37.8	93	94	70-130	1	20	
Arsenic, Dissolved	ug/L	1.1	40	40	38.3	38.9	93	94	70-130	2	20	
Barium, Dissolved	ug/L	22.1	40	40	58.8	59.8	92	94	70-130	2	20	
Beryllium, Dissolved	ug/L	0.090J	40	40	27.2	28.0	68	70	70-130	3	20	M1
Cadmium, Dissolved	ug/L	0.11J	40	40	36.0	36.4	90	91	70-130	1	20	
Chromium, Dissolved	ug/L	1.6	40	40	36.9	37.2	88	89	70-130	1	20	
Cobalt, Dissolved	ug/L	10.9	40	40	44.5	45.2	84	86	70-130	2	20	
Copper, Dissolved	ug/L	36.3	40	40	67.1	68.3	77	80	70-130	2	20	
Iron, Dissolved	ug/L	1990	1000	1000	2880	2910	89	93	70-130	1	20	
Lead, Dissolved	ug/L	5.6	40	40	42.3	42.9	92	93	70-130	1	20	
Manganese, Dissolved	ug/L	23100	40	40	23600	24100	1250	2538	70-130	2	20	M6
Molybdenum, Dissolved	ug/L	3.7	40	40	44.7	45.7	102	105	70-130	2	20	
Nickel, Dissolved	ug/L	3.0	40	40	36.1	36.6	83	84	70-130	1	20	
Selenium, Dissolved	ug/L	ND	40	40	38.1	39.1	95	98	70-130	3	20	
Silver, Dissolved	ug/L	ND	20	20	17.3	17.4	86	87	70-130	1	20	
Thallium, Dissolved	ug/L	0.38J	40	40	36.2	36.9	89	91	70-130	2	20	
Vanadium, Dissolved	ug/L	ND	40	40	36.3	36.4	91	91	70-130	0	20	
Zinc, Dissolved	ug/L	88.5	100	100	164	168	76	79	70-130	2	20	

MATRIX SPIKE SAMPLE: 1155514

Parameter	Units	60140509003 Result	Spike Conc.	MS Result	MS % Rec	% Rec Limits	Qualifiers
Aluminum, Dissolved	ug/L	236	1000	1120	88	70-130	
Antimony, Dissolved	ug/L	0.16J	40	40.3	100	70-130	
Arsenic, Dissolved	ug/L	0.96J	40	39.7	97	70-130	
Barium, Dissolved	ug/L	21.0	40	60.5	99	70-130	
Beryllium, Dissolved	ug/L	ND	40	31.1	78	70-130	
Cadmium, Dissolved	ug/L	2.1	40	39.8	94	70-130	
Chromium, Dissolved	ug/L	1.2	40	37.4	90	70-130	
Cobalt, Dissolved	ug/L	0.30J	40	34.8	86	70-130	
Copper, Dissolved	ug/L	11.0	40	44.0	83	70-130	
Iron, Dissolved	ug/L	692	1000	1630	93	70-130	
Lead, Dissolved	ug/L	14.4	40	52.6	96	70-130	
Manganese, Dissolved	ug/L	87.6	40	124	90	70-130	
Molybdenum, Dissolved	ug/L	7.3	40	49.8	106	70-130	

This report shall not be reproduced, except in full,
without the written consent of Pace Analytical Services, Inc..

Pace Analytical Services, Inc.
9608 Loiret Blvd.
Lenexa, KS 66219
(913)599-5665

QUALITY CONTROL DATA

Project: MARCH 2013 RICO WATER SAMPLING
Pace Project No.: 60140509

MATRIX SPIKE SAMPLE: 1155514

Parameter	Units	60140509003 Result	Spike Conc.	MS Result	MS % Rec	% Rec Limits	Qualifiers
Nickel, Dissolved	ug/L	ND	40	33.9	85	70-130	
Selenium, Dissolved	ug/L	9.4	40	48.3	97	70-130	
Silver, Dissolved	ug/L	ND	20	18.1	90	70-130	
Thallium, Dissolved	ug/L	0.35J	40	37.1	92	70-130	
Vanadium, Dissolved	ug/L	ND	40	37.6	94	70-130	
Zinc, Dissolved	ug/L	415	100	505	90	70-130	

This report shall not be reproduced, except in full,
without the written consent of Pace Analytical Services, Inc..

Pace Analytical Services, Inc.
9608 Loiret Blvd.
Lenexa, KS 66219
(913)599-5665

QUALITY CONTROL DATA

Project: MARCH 2013 RICO WATER SAMPLING
Pace Project No.: 60140509

QC Batch: MPRP/21896 | Analysis Method: EPA 200.8
QC Batch Method: EPA 200.8 | Analysis Description: 200.8 Potentially Dissolved Metals
Associated Lab Samples: 60140509019, 60140509020, 60140509021, 60140509022, 60140509023, 60140509024, 60140509025, 60140509026, 60140509027, 60140509029

METHOD BLANK: 1155520 | Matrix: Water
Associated Lab Samples: 60140509019, 60140509020, 60140509021, 60140509022, 60140509023, 60140509024, 60140509025, 60140509026, 60140509027, 60140509029

Parameter	Units	Blank Result	Reporting Limit	Analyzed	Qualifiers
Aluminum, Dissolved	ug/L	5.9J	50.0	03/29/13 16:07	
Antimony, Dissolved	ug/L	ND	1.0	03/29/13 16:07	
Arsenic, Dissolved	ug/L	ND	1.0	04/08/13 15:46	
Barium, Dissolved	ug/L	ND	1.0	03/29/13 16:07	
Beryllium, Dissolved	ug/L	ND	0.50	04/08/13 15:46	
Cadmium, Dissolved	ug/L	ND	0.50	03/29/13 16:07	
Chromium, Dissolved	ug/L	0.22J	1.0	03/29/13 16:07	
Cobalt, Dissolved	ug/L	ND	1.0	03/29/13 16:07	
Copper, Dissolved	ug/L	ND	1.0	03/29/13 16:07	
Iron, Dissolved	ug/L	ND	50.0	03/29/13 16:07	
Lead, Dissolved	ug/L	0.25J	1.0	03/29/13 16:07	
Manganese, Dissolved	ug/L	ND	1.0	03/29/13 16:07	
Molybdenum, Dissolved	ug/L	ND	1.0	03/29/13 16:07	
Nickel, Dissolved	ug/L	ND	1.0	03/29/13 16:07	
Selenium, Dissolved	ug/L	ND	1.0	03/29/13 16:07	
Silver, Dissolved	ug/L	ND	0.50	03/29/13 16:07	
Thallium, Dissolved	ug/L	ND	1.0	03/29/13 16:07	
Vanadium, Dissolved	ug/L	ND	1.0	03/29/13 16:07	
Zinc, Dissolved	ug/L	1.8J	10.0	03/29/13 16:07	

LABORATORY CONTROL SAMPLE: 1155521

Parameter	Units	Spike Conc.	LCS Result	LCS % Rec	% Rec Limits	Qualifiers
Aluminum, Dissolved	ug/L	1000	966	97	85-115	
Antimony, Dissolved	ug/L	40	39.2	98	85-115	
Arsenic, Dissolved	ug/L	40	40.5	101	85-115	
Barium, Dissolved	ug/L	40	37.9	95	85-115	
Beryllium, Dissolved	ug/L	40	37.2	93	85-115	
Cadmium, Dissolved	ug/L	40	38.7	97	85-115	
Chromium, Dissolved	ug/L	40	38.3	96	85-115	
Cobalt, Dissolved	ug/L	40	37.7	94	85-115	
Copper, Dissolved	ug/L	40	37.7	94	85-115	
Iron, Dissolved	ug/L	1000	972	97	85-115	
Lead, Dissolved	ug/L	40	36.9	92	85-115	
Manganese, Dissolved	ug/L	40	37.9	95	85-115	
Molybdenum, Dissolved	ug/L	40	39.3	98	85-115	
Nickel, Dissolved	ug/L	40	38.0	95	85-115	
Selenium, Dissolved	ug/L	40	38.9	97	85-115	
Silver, Dissolved	ug/L	20	19.5	97	85-115	
Thallium, Dissolved	ug/L	40	35.3	88	85-115	

This report shall not be reproduced, except in full,
without the written consent of Pace Analytical Services, Inc..

Pace Analytical Services, Inc.
9608 Loiret Blvd.
Lenexa, KS 66219
(913)599-5665

QUALITY CONTROL DATA

Project: MARCH 2013 RICO WATER SAMPLING
Pace Project No.: 60140509

LABORATORY CONTROL SAMPLE: 1155521

Parameter	Units	Spike Conc.	LCS Result	LCS % Rec	% Rec Limits	Qualifiers
Vanadium, Dissolved	ug/L	40	38.3	96	85-115	
Zinc, Dissolved	ug/L	100	100	100	85-115	

MATRIX SPIKE & MATRIX SPIKE DUPLICATE: 1155522 1155523

Parameter	Units	60140509019 Result	MS Spike Conc.	MSD Spike Conc.	MS Result	MSD Result	MS % Rec	MSD % Rec	% Rec Limits	RPD	Max RPD	Qual
Aluminum, Dissolved	ug/L	20600	1000	1000	21000	21000	36	31	70-130	0	20	M6
Antimony, Dissolved	ug/L	ND	40	40	37.8	39.5	94	99	70-130	4	20	
Arsenic, Dissolved	ug/L	357	40	40	386	379	72	56	70-130	2	20	M1
Barium, Dissolved	ug/L	5.7J	40	40	41.5	43.1	89	93	70-130	4	20	
Beryllium, Dissolved	ug/L	6.0	40	40	38.1	37.4	80	78	70-130	2	20	
Cadmium, Dissolved	ug/L	170	40	40	204	211	86	102	70-130	3	20	
Chromium, Dissolved	ug/L	9.9J	40	40	46.9	49.0	92	98	70-130	4	20	
Cobalt, Dissolved	ug/L	78.6	40	40	113	118	87	100	70-130	4	20	
Copper, Dissolved	ug/L	788	40	40	807	840	47	129	70-130	4	20	M6
Iron, Dissolved	ug/L	504000	1000	1000	492000	494000	-1220	-1040	70-130	0	20	M6
Lead, Dissolved	ug/L	2840	40	40	2790	2870	-112	82	70-130	3	20	M6
Manganese, Dissolved	ug/L	28000	40	40	27300	27900	-1775	-250	70-130	2	20	M6
Molybdenum, Dissolved	ug/L	ND	40	40	31.4	32.1	78	80	70-130	2	20	
Nickel, Dissolved	ug/L	158	40	40	191	198	82	99	70-130	4	20	
Selenium, Dissolved	ug/L	4.8J	40	40	43.0	43.3	95	96	70-130	1	20	
Silver, Dissolved	ug/L	ND	20	20	18.7	19.3	92	95	70-130	3	20	
Thallium, Dissolved	ug/L	0.73J	40	40	33.8	34.9	83	85	70-130	3	20	
Vanadium, Dissolved	ug/L	4.8J	40	40	41.6	42.9	92	95	70-130	3	20	
Zinc, Dissolved	ug/L	121000	100	100	118000	121000	-3200	400	70-130	3	20	M6

This report shall not be reproduced, except in full,
without the written consent of Pace Analytical Services, Inc..

Pace Analytical Services, Inc.
9608 Loiret Blvd.
Lenexa, KS 66219
(913)599-5665

QUALITY CONTROL DATA

Project: MARCH 2013 RICO WATER SAMPLING
Pace Project No.: 60140509

QC Batch: MT/11514 | Analysis Method: SM 2510B
QC Batch Method: SM 2510B | Analysis Description: 2510B Specific Conductance

Associated Lab Samples: 60140509001, 60140509002, 60140509003, 60140509004, 60140509005, 60140509006, 60140509007, 60140509008, 60140509009, 60140509010, 60140509011, 60140509012, 60140509013, 60140509014, 60140509015, 60140509016, 60140509017

METHOD BLANK: 1395206 | Matrix: Water

Associated Lab Samples: 60140509001, 60140509002, 60140509003, 60140509004, 60140509005, 60140509006, 60140509007, 60140509008, 60140509009, 60140509010, 60140509011, 60140509012, 60140509013, 60140509014, 60140509015, 60140509016, 60140509017

Parameter	Units	Blank Result	Reporting Limit	Analyzed	Qualifiers
Specific Conductance	umhos/cm	ND	10.0	03/21/13 12:39	

LABORATORY CONTROL SAMPLE: 1395207

Parameter	Units	Spike Conc.	LCS Result	LCS % Rec	% Rec Limits	Qualifiers
Specific Conductance	umhos/cm	1000	978	98	90-110	

SAMPLE DUPLICATE: 1395208

Parameter	Units	60140509001 Result	Dup Result	RPD	Max RPD	Qualifiers
Specific Conductance	umhos/cm	1790	1900	6	20	

SAMPLE DUPLICATE: 1395209

Parameter	Units	60140509007 Result	Dup Result	RPD	Max RPD	Qualifiers
Specific Conductance	umhos/cm	2060	2050	.8	20	

This report shall not be reproduced, except in full,
without the written consent of Pace Analytical Services, Inc..

Pace Analytical Services, Inc.
9608 Loiret Blvd.
Lenexa, KS 66219
(913)599-5665

QUALITY CONTROL DATA

Project: MARCH 2013 RICO WATER SAMPLING
Pace Project No.: 60140509

QC Batch: MT/11515 | Analysis Method: SM 2510B
QC Batch Method: SM 2510B | Analysis Description: 2510B Specific Conductance
Associated Lab Samples: 60140509018, 60140509019, 60140509020, 60140509021, 60140509022, 60140509023, 60140509024, 60140509025, 60140509026, 60140509027, 60140509028, 60140509029

METHOD BLANK: 1395210 | Matrix: Water
Associated Lab Samples: 60140509018, 60140509019, 60140509020, 60140509021, 60140509022, 60140509023, 60140509024, 60140509025, 60140509026, 60140509027, 60140509028, 60140509029

Parameter	Units	Blank Result	Reporting Limit	Analyzed	Qualifiers
Specific Conductance	umhos/cm	ND	10.0	03/21/13 13:26	

LABORATORY CONTROL SAMPLE: 1395211

Parameter	Units	Spike Conc.	LCS Result	LCS % Rec	% Rec Limits	Qualifiers
Specific Conductance	umhos/cm	1000	991	99	90-110	

SAMPLE DUPLICATE: 1395212

Parameter	Units	60140509020 Result	Dup Result	RPD	Max RPD	Qualifiers
Specific Conductance	umhos/cm	1260	1240	2	20	

SAMPLE DUPLICATE: 1395213

Parameter	Units	60140509027 Result	Dup Result	RPD	Max RPD	Qualifiers
Specific Conductance	umhos/cm	592	589	.4	20	

This report shall not be reproduced, except in full,
without the written consent of Pace Analytical Services, Inc..

Pace Analytical Services, Inc.
9608 Loiret Blvd.
Lenexa, KS 66219
(913)599-5665

QUALITY CONTROL DATA

Project: MARCH 2013 RICO WATER SAMPLING
Pace Project No.: 60140509

QC Batch: WET/40257 Analysis Method: SM 2320B
QC Batch Method: SM 2320B Analysis Description: 2320B Alkalinity
Associated Lab Samples: 60140509001, 60140509002, 60140509003, 60140509004, 60140509005, 60140509006, 60140509007, 60140509008, 60140509009, 60140509010, 60140509011, 60140509012, 60140509013, 60140509014, 60140509015, 60140509016, 60140509017

METHOD BLANK: 1155587 Matrix: Water
Associated Lab Samples: 60140509001, 60140509002, 60140509003, 60140509004, 60140509005, 60140509006, 60140509007, 60140509008, 60140509009, 60140509010, 60140509011, 60140509012, 60140509013, 60140509014, 60140509015, 60140509016, 60140509017

Parameter	Units	Blank Result	Reporting Limit	Analyzed	Qualifiers
Alkalinity, Carbonate (CaCO3)	mg/L	ND	20.0	03/19/13 07:51	
Alkalinity, Total as CaCO3	mg/L	ND	20.0	03/19/13 07:51	
Alkalinity,Bicarbonate (CaCO3)	mg/L	ND	20.0	03/19/13 07:51	

LABORATORY CONTROL SAMPLE: 1155588

Parameter	Units	Spike Conc.	LCS Result	LCS % Rec	% Rec Limits	Qualifiers
Alkalinity, Total as CaCO3	mg/L	500	484	97	90-110	

SAMPLE DUPLICATE: 1155589

Parameter	Units	60140401001 Result	Dup Result	RPD	Max RPD	Qualifiers
Alkalinity, Carbonate (CaCO3)	mg/L	ND	ND		10	
Alkalinity, Total as CaCO3	mg/L	228	224	2	10	
Alkalinity,Bicarbonate (CaCO3)	mg/L	228	224	2	10	

SAMPLE DUPLICATE: 1155590

Parameter	Units	60140509008 Result	Dup Result	RPD	Max RPD	Qualifiers
Alkalinity, Carbonate (CaCO3)	mg/L	ND	ND		10	
Alkalinity, Total as CaCO3	mg/L	106	101	5	10	
Alkalinity,Bicarbonate (CaCO3)	mg/L	106	101	5	10	

This report shall not be reproduced, except in full,
without the written consent of Pace Analytical Services, Inc..

Pace Analytical Services, Inc.
9608 Loiret Blvd.
Lenexa, KS 66219
(913)599-5665

QUALITY CONTROL DATA

Project: MARCH 2013 RICO WATER SAMPLING
Pace Project No.: 60140509

QC Batch: WET/40308 Analysis Method: SM 2320B
QC Batch Method: SM 2320B Analysis Description: 2320B Alkalinity
Associated Lab Samples: 60140509018, 60140509019, 60140509020, 60140509021, 60140509022, 60140509023

METHOD BLANK: 1156990 Matrix: Water
Associated Lab Samples: 60140509018, 60140509019, 60140509020, 60140509021, 60140509022, 60140509023

Parameter	Units	Blank Result	Reporting Limit	Analyzed	Qualifiers
Alkalinity, Carbonate (CaCO3)	mg/L	ND	20.0	03/21/13 09:12	
Alkalinity, Total as CaCO3	mg/L	ND	20.0	03/21/13 09:12	
Alkalinity,Bicarbonate (CaCO3)	mg/L	ND	20.0	03/21/13 09:12	

LABORATORY CONTROL SAMPLE: 1156991

Parameter	Units	Spike Conc.	LCS Result	LCS % Rec	% Rec Limits	Qualifiers
Alkalinity, Total as CaCO3	mg/L	500	478	96	90-110	

SAMPLE DUPLICATE: 1156992

Parameter	Units	60140684001 Result	Dup Result	RPD	Max RPD	Qualifiers
Alkalinity, Carbonate (CaCO3)	mg/L	ND	ND		10	
Alkalinity, Total as CaCO3	mg/L	349	355	2	10	
Alkalinity,Bicarbonate (CaCO3)	mg/L	349	355	2	10	

SAMPLE DUPLICATE: 1156993

Parameter	Units	60140753004 Result	Dup Result	RPD	Max RPD	Qualifiers
Alkalinity, Carbonate (CaCO3)	mg/L	ND	ND		10	
Alkalinity, Total as CaCO3	mg/L	311	311	0	10	
Alkalinity,Bicarbonate (CaCO3)	mg/L	311	311	0	10	

This report shall not be reproduced, except in full,
without the written consent of Pace Analytical Services, Inc..

Pace Analytical Services, Inc.
9608 Loiret Blvd.
Lenexa, KS 66219
(913)599-5665

QUALITY CONTROL DATA

Project: MARCH 2013 RICO WATER SAMPLING
Pace Project No.: 60140509

QC Batch: WET/40334 Analysis Method: SM 2320B
QC Batch Method: SM 2320B Analysis Description: 2320B Alkalinity
Associated Lab Samples: 60140509024, 60140509025, 60140509026, 60140509027, 60140509028, 60140509029

METHOD BLANK: 1157924 Matrix: Water
Associated Lab Samples: 60140509024, 60140509025, 60140509026, 60140509027, 60140509028, 60140509029

Parameter	Units	Blank Result	Reporting Limit	Analyzed	Qualifiers
Alkalinity, Carbonate (CaCO3)	mg/L	ND	20.0	03/22/13 07:11	
Alkalinity, Total as CaCO3	mg/L	ND	20.0	03/22/13 07:11	
Alkalinity,Bicarbonate (CaCO3)	mg/L	ND	20.0	03/22/13 07:11	

LABORATORY CONTROL SAMPLE: 1157925

Parameter	Units	Spike Conc.	LCS Result	LCS % Rec	% Rec Limits	Qualifiers
Alkalinity, Total as CaCO3	mg/L	500	491	98	90-110	

SAMPLE DUPLICATE: 1157926

Parameter	Units	60140850001 Result	Dup Result	RPD	Max RPD	Qualifiers
Alkalinity, Carbonate (CaCO3)	mg/L	ND	ND		10	
Alkalinity, Total as CaCO3	mg/L	295	288	2	10	
Alkalinity,Bicarbonate (CaCO3)	mg/L	295	288	2	10	

SAMPLE DUPLICATE: 1157927

Parameter	Units	60140483003 Result	Dup Result	RPD	Max RPD	Qualifiers
Alkalinity, Carbonate (CaCO3)	mg/L	ND	ND		10	
Alkalinity, Total as CaCO3	mg/L	626	645	3	10	
Alkalinity,Bicarbonate (CaCO3)	mg/L	626	645	3	10	

This report shall not be reproduced, except in full,
without the written consent of Pace Analytical Services, Inc..

Pace Analytical Services, Inc.
9608 Loiret Blvd.
Lenexa, KS 66219
(913)599-5665

QUALITY CONTROL DATA

Project: MARCH 2013 RICO WATER SAMPLING
Pace Project No.: 60140509

QC Batch: WET/40277 Analysis Method: SM 2540C
QC Batch Method: SM 2540C Analysis Description: 2540C Total Dissolved Solids
Associated Lab Samples: 60140509001, 60140509002, 60140509003, 60140509004, 60140509005, 60140509006, 60140509007, 60140509008, 60140509009, 60140509010, 60140509011, 60140509012, 60140509013, 60140509014, 60140509015, 60140509016, 60140509017, 60140509018, 60140509019, 60140509020

METHOD BLANK: 1156191 Matrix: Water
Associated Lab Samples: 60140509001, 60140509002, 60140509003, 60140509004, 60140509005, 60140509006, 60140509007, 60140509008, 60140509009, 60140509010, 60140509011, 60140509012, 60140509013, 60140509014, 60140509015, 60140509016, 60140509017, 60140509018, 60140509019, 60140509020

Parameter	Units	Blank Result	Reporting Limit	Analyzed	Qualifiers
Total Dissolved Solids	mg/L	ND	5.0	03/19/13 16:59	

SAMPLE DUPLICATE: 1156192

Parameter	Units	60140509001 Result	Dup Result	RPD	Max RPD	Qualifiers
Total Dissolved Solids	mg/L	1360	1560	14	17	

SAMPLE DUPLICATE: 1156193

Parameter	Units	60140509011 Result	Dup Result	RPD	Max RPD	Qualifiers
Total Dissolved Solids	mg/L	992	1040	4	17	

This report shall not be reproduced, except in full,
without the written consent of Pace Analytical Services, Inc..

Pace Analytical Services, Inc.
9608 Loiret Blvd.
Lenexa, KS 66219
(913)599-5665

QUALITY CONTROL DATA

Project: MARCH 2013 RICO WATER SAMPLING
Pace Project No.: 60140509

QC Batch: WET/40296 | Analysis Method: SM 2540C
QC Batch Method: SM 2540C | Analysis Description: 2540C Total Dissolved Solids
Associated Lab Samples: 60140509021, 60140509022, 60140509023, 60140509024, 60140509025, 60140509026, 60140509027, 60140509028, 60140509029

METHOD BLANK: 1156849 | Matrix: Water
Associated Lab Samples: 60140509021, 60140509022, 60140509023, 60140509024, 60140509025, 60140509026, 60140509027, 60140509028, 60140509029

Parameter	Units	Blank Result	Reporting Limit	Analyzed	Qualifiers
Total Dissolved Solids	mg/L	ND	5.0	03/20/13 17:27	

SAMPLE DUPLICATE: 1156850

Parameter	Units	60140509021 Result	Dup Result	RPD	Max RPD	Qualifiers
Total Dissolved Solids	mg/L	1410	1420	1	17	

This report shall not be reproduced, except in full,
without the written consent of Pace Analytical Services, Inc..

Pace Analytical Services, Inc.
9608 Loiret Blvd.
Lenexa, KS 66219
(913)599-5665

QUALITY CONTROL DATA

Project: MARCH 2013 RICO WATER SAMPLING
Pace Project No.: 60140509

QC Batch: WET/40250 Analysis Method: SM 2540D
QC Batch Method: SM 2540D Analysis Description: 2540D Total Suspended Solids
Associated Lab Samples: 60140509001, 60140509002, 60140509003, 60140509004, 60140509005, 60140509006, 60140509007, 60140509008, 60140509009

METHOD BLANK: 1155482 Matrix: Water
Associated Lab Samples: 60140509001, 60140509002, 60140509003, 60140509004, 60140509005, 60140509006, 60140509007, 60140509008, 60140509009

Parameter	Units	Blank Result	Reporting Limit	Analyzed	Qualifiers
Total Suspended Solids	mg/L	ND	5.0	03/18/13 14:17	

SAMPLE DUPLICATE: 1155483

Parameter	Units	60140509001 Result	Dup Result	RPD	Max RPD	Qualifiers
Total Suspended Solids	mg/L	44.0	44.0	0	25	

SAMPLE DUPLICATE: 1155484

Parameter	Units	60140636001 Result	Dup Result	RPD	Max RPD	Qualifiers
Total Suspended Solids	mg/L	6.0	ND		25	

This report shall not be reproduced, except in full,
without the written consent of Pace Analytical Services, Inc..

Pace Analytical Services, Inc.
9608 Loiret Blvd.
Lenexa, KS 66219
(913)599-5665

QUALITY CONTROL DATA

Project: MARCH 2013 RICO WATER SAMPLING
Pace Project No.: 60140509

QC Batch: WET/40272 — Analysis Method: SM 2540D
QC Batch Method: SM 2540D — Analysis Description: 2540D Total Suspended Solids
Associated Lab Samples: 60140509010, 60140509011, 60140509012, 60140509013, 60140509014, 60140509015, 60140509016, 60140509017, 60140509018, 60140509019, 60140509020, 60140509021, 60140509022, 60140509023, 60140509024, 60140509028, 60140509029

METHOD BLANK: 1156022 — Matrix: Water
Associated Lab Samples: 60140509010, 60140509011, 60140509012, 60140509013, 60140509014, 60140509015, 60140509016, 60140509017, 60140509018, 60140509019, 60140509020, 60140509021, 60140509022, 60140509023, 60140509024, 60140509028, 60140509029

Parameter	Units	Blank Result	Reporting Limit	Analyzed	Qualifiers
Total Suspended Solids	mg/L	ND	5.0	03/19/13 14:50	

SAMPLE DUPLICATE: 1156023

Parameter	Units	60140426003 Result	Dup Result	RPD	Max RPD	Qualifiers
Total Suspended Solids	mg/L	661	625	6	25	

SAMPLE DUPLICATE: 1156024

Parameter	Units	60140509017 Result	Dup Result	RPD	Max RPD	Qualifiers
Total Suspended Solids	mg/L	148	139	7	25	

This report shall not be reproduced, except in full,
without the written consent of Pace Analytical Services, Inc..

Pace Analytical Services, Inc.
9608 Loiret Blvd.
Lenexa, KS 66219
(913)599-5665

QUALITY CONTROL DATA

Project: MARCH 2013 RICO WATER SAMPLING
Pace Project No.: 60140509

QC Batch: WET/40324 Analysis Method: SM 2540D
QC Batch Method: SM 2540D Analysis Description: 2540D Total Suspended Solids
Associated Lab Samples: 60140509025, 60140509026, 60140509027

METHOD BLANK: 1157495 Matrix: Water
Associated Lab Samples: 60140509025, 60140509026, 60140509027

Parameter	Units	Blank Result	Reporting Limit	Analyzed	Qualifiers
Total Suspended Solids	mg/L	ND	5.0	03/21/13 14:02	

SAMPLE DUPLICATE: 1157496

Parameter	Units	60140509025 Result	Dup Result	RPD	Max RPD	Qualifiers
Total Suspended Solids	mg/L	1060	1280	19	25	

SAMPLE DUPLICATE: 1157497

Parameter	Units	1218332005 Result	Dup Result	RPD	Max RPD	Qualifiers
Total Suspended Solids	mg/L	ND	ND		25	

This report shall not be reproduced, except in full,
without the written consent of Pace Analytical Services, Inc..

Pace Analytical Services, Inc.
9608 Loiret Blvd.
Lenexa, KS 66219
(913)599-5665

QUALITY CONTROL DATA

Project: MARCH 2013 RICO WATER SAMPLING
Pace Project No.: 60140509

QC Batch: WET/40269 | Analysis Method: SM 4500-S-2 D
QC Batch Method: SM 4500-S-2 D | Analysis Description: 4500S2D Sulfide, Total
Associated Lab Samples: 60140509001, 60140509002, 60140509003, 60140509004, 60140509005, 60140509006, 60140509007, 60140509008, 60140509009, 60140509010, 60140509011, 60140509012, 60140509013, 60140509014, 60140509015, 60140509016, 60140509017, 60140509018, 60140509019, 60140509020

METHOD BLANK: 1155999 | Matrix: Water
Associated Lab Samples: 60140509001, 60140509002, 60140509003, 60140509004, 60140509005, 60140509006, 60140509007, 60140509008, 60140509009, 60140509010, 60140509011, 60140509012, 60140509013, 60140509014, 60140509015, 60140509016, 60140509017, 60140509018, 60140509019, 60140509020

Parameter	Units	Blank Result	Reporting Limit	Analyzed	Qualifiers
Sulfide, Total	mg/L	ND	0.050	03/19/13 02:32	

LABORATORY CONTROL SAMPLE: 1156000

Parameter	Units	Spike Conc.	LCS Result	LCS % Rec	% Rec Limits	Qualifiers
Sulfide, Total	mg/L	.5	0.51	103	80-120	

MATRIX SPIKE SAMPLE: 1156001

Parameter	Units	60140509001 Result	Spike Conc.	MS Result	MS % Rec	% Rec Limits	Qualifiers
Sulfide, Total	mg/L	ND	.5	0.39	78	75-125	

This report shall not be reproduced, except in full,
without the written consent of Pace Analytical Services, Inc..

Pace Analytical Services, Inc.
9608 Loiret Blvd.
Lenexa, KS 66219
(913)599-5665

QUALITY CONTROL DATA

Project: MARCH 2013 RICO WATER SAMPLING
Pace Project No.: 60140509

QC Batch: WET/40293 | Analysis Method: SM 4500-S-2 D
QC Batch Method: SM 4500-S-2 D | Analysis Description: 4500S2D Sulfide, Total
Associated Lab Samples: 60140509021, 60140509022, 60140509023, 60140509024, 60140509025, 60140509026, 60140509027, 60140509029

METHOD BLANK: 1156680 | Matrix: Water
Associated Lab Samples: 60140509021, 60140509022, 60140509023, 60140509024, 60140509025, 60140509026, 60140509027, 60140509029

Parameter	Units	Blank Result	Reporting Limit	Analyzed	Qualifiers
Sulfide, Total	mg/L	ND	0.050	03/20/13 13:29	

LABORATORY CONTROL SAMPLE: 1156681

Parameter	Units	Spike Conc.	LCS Result	LCS % Rec	% Rec Limits	Qualifiers
Sulfide, Total	mg/L	.5	0.49	97	80-120	

MATRIX SPIKE SAMPLE: 1156682

Parameter	Units	60140509021 Result	Spike Conc.	MS Result	MS % Rec	% Rec Limits	Qualifiers
Sulfide, Total	mg/L	ND	.5	0.50	98	75-125	

This report shall not be reproduced, except in full,
without the written consent of Pace Analytical Services, Inc..

Pace Analytical Services, Inc.
9608 Loiret Blvd.
Lenexa, KS 66219
(913)599-5665

QUALITY CONTROL DATA

Project: MARCH 2013 RICO WATER SAMPLING
Pace Project No.: 60140509

QC Batch: WETA/24001 Analysis Method: EPA 300.0
QC Batch Method: EPA 300.0 Analysis Description: 300.0 IC Anions
Associated Lab Samples: 60140509001, 60140509002, 60140509003, 60140509004, 60140509005, 60140509006, 60140509007, 60140509008, 60140509009, 60140509010, 60140509011, 60140509012, 60140509013

METHOD BLANK: 1159198 Matrix: Water
Associated Lab Samples: 60140509001, 60140509002, 60140509003, 60140509004, 60140509005, 60140509006, 60140509007, 60140509008, 60140509009, 60140509010, 60140509011, 60140509012, 60140509013

Parameter	Units	Blank Result	Reporting Limit	Analyzed	Qualifiers
Chloride	mg/L	ND	1.0	03/27/13 14:58	
Sulfate	mg/L	ND	1.0	03/27/13 14:58	

METHOD BLANK: 1160807 Matrix: Water
Associated Lab Samples: 60140509005, 60140509006, 60140509007, 60140509008, 60140509009, 60140509010, 60140509011, 60140509012, 60140509013

Parameter	Units	Blank Result	Reporting Limit	Analyzed	Qualifiers
Sulfate	mg/L	ND	1.0	03/28/13 13:01	

LABORATORY CONTROL SAMPLE: 1159199

Parameter	Units	Spike Conc.	LCS Result	LCS % Rec	% Rec Limits	Qualifiers
Chloride	mg/L	5	5.1	102	90-110	
Sulfate	mg/L	5	5.4	107	90-110	

LABORATORY CONTROL SAMPLE: 1160808

Parameter	Units	Spike Conc.	LCS Result	LCS % Rec	% Rec Limits	Qualifiers
Sulfate	mg/L	5	5.5	109	90-110	

MATRIX SPIKE & MATRIX SPIKE DUPLICATE: 1159200 1159201

Parameter	Units	60140509001 Result	MS Spike Conc.	MSD Spike Conc.	MS Result	MSD Result	MS % Rec	MSD % Rec	% Rec Limits	RPD	Max RPD	Qual
Chloride	mg/L	1.3	5	5	6.0	6.0	93	92	64-118	0	12	
Sulfate	mg/L	973	500	500	1440	1420	93	89	61-119	1	10	

MATRIX SPIKE SAMPLE: 1159202

Parameter	Units	60140509010 Result	Spike Conc.	MS Result	MS % Rec	% Rec Limits	Qualifiers
Chloride	mg/L	ND	5	5.3	90	64-118	
Sulfate	mg/L	623	500	1020	80	61-119	

REPORT OF LABORATORY ANALYSIS

This report shall not be reproduced, except in full,
without the written consent of Pace Analytical Services, Inc..

Pace Analytical Services, Inc.
9608 Loiret Blvd.
Lenexa, KS 66219
(913)599-5665

QUALITY CONTROL DATA

Project: MARCH 2013 RICO WATER SAMPLING
Pace Project No.: 60140509

QC Batch: WETA/24027 Analysis Method: EPA 300.0
QC Batch Method: EPA 300.0 Analysis Description: 300.0 IC Anions
Associated Lab Samples: 60140509014, 60140509015, 60140509016, 60140509017, 60140509018, 60140509019, 60140509020, 60140509021, 60140509022, 60140509023, 60140509024, 60140509025, 60140509026, 60140509027, 60140509028

METHOD BLANK: 1160205 Matrix: Water
Associated Lab Samples: 60140509014, 60140509015, 60140509016, 60140509017, 60140509018, 60140509019, 60140509020, 60140509021, 60140509025, 60140509027

Parameter	Units	Blank Result	Reporting Limit	Analyzed	Qualifiers
Chloride	mg/L	ND	1.0	03/27/13 09:00	

METHOD BLANK: 1160803 Matrix: Water
Associated Lab Samples: 60140509014, 60140509015, 60140509016, 60140509017, 60140509018, 60140509019, 60140509020, 60140509021, 60140509025, 60140509027

Parameter	Units	Blank Result	Reporting Limit	Analyzed	Qualifiers
Sulfate	mg/L	ND	1.0	03/28/13 08:54	

METHOD BLANK: 1161420 Matrix: Water
Associated Lab Samples: 60140509022, 60140509023, 60140509024, 60140509026, 60140509028

Parameter	Units	Blank Result	Reporting Limit	Analyzed	Qualifiers
Chloride	mg/L	ND	1.0	03/29/13 17:25	
Sulfate	mg/L	ND	1.0	03/29/13 17:25	

LABORATORY CONTROL SAMPLE: 1160206

Parameter	Units	Spike Conc.	LCS Result	LCS % Rec	% Rec Limits	Qualifiers
Chloride	mg/L	5	4.9	98	90-110	

LABORATORY CONTROL SAMPLE: 1160804

Parameter	Units	Spike Conc.	LCS Result	LCS % Rec	% Rec Limits	Qualifiers
Sulfate	mg/L	5	5.3	105	90-110	

LABORATORY CONTROL SAMPLE: 1161421

Parameter	Units	Spike Conc.	LCS Result	LCS % Rec	% Rec Limits	Qualifiers
Chloride	mg/L	5	4.9	99	90-110	
Sulfate	mg/L	5	4.9	99	90-110	

This report shall not be reproduced, except in full,
without the written consent of Pace Analytical Services, Inc..

Pace Analytical Services, Inc.
9608 Loiret Blvd.
Lenexa, KS 66219
(913)599-5665

QUALITY CONTROL DATA

Project: MARCH 2013 RICO WATER SAMPLING
Pace Project No.: 60140509

MATRIX SPIKE & MATRIX SPIKE DUPLICATE: 1160207 1160208

Parameter	Units	60140509014 Result	MS Spike Conc.	MSD Spike Conc.	MS Result	MSD Result	MS % Rec	MSD % Rec	% Rec Limits	RPD	Max RPD	Qual
Chloride	mg/L	ND	5	5	5.4	5.4	91	92	64-118	1	12	
Sulfate	mg/L	630	500	500	1130	1110	101	96	61-119	2	10	

MATRIX SPIKE SAMPLE: 1160209

Parameter	Units	60140509021 Result	Spike Conc.	MS Result	MS % Rec	% Rec Limits	Qualifiers
Chloride	mg/L	1.4	5	5.9	90	64-118	
Sulfate	mg/L	907	500	1370	93	61-119	

This report shall not be reproduced, except in full,
without the written consent of Pace Analytical Services, Inc..

Pace Analytical Services, Inc.
9608 Loiret Blvd.
Lenexa, KS 66219
(913)599-5665

QUALITY CONTROL DATA

Project: MARCH 2013 RICO WATER SAMPLING
Pace Project No.: 60140509

QC Batch: WETA/24041 | Analysis Method: EPA 300.0
QC Batch Method: EPA 300.0 | Analysis Description: 300.0 IC Anions
Associated Lab Samples: 60140509029

METHOD BLANK: 1161091 | Matrix: Water
Associated Lab Samples: 60140509029

Parameter	Units	Blank Result	Reporting Limit	Analyzed	Qualifiers
Chloride	mg/L	ND	1.0	03/28/13 20:52	
Sulfate	mg/L	ND	1.0	03/28/13 20:52	

LABORATORY CONTROL SAMPLE: 1161092

Parameter	Units	Spike Conc.	LCS Result	LCS % Rec	% Rec Limits	Qualifiers
Chloride	mg/L	5	5.1	101	90-110	
Sulfate	mg/L	5	5.4	109	90-110	

MATRIX SPIKE & MATRIX SPIKE DUPLICATE: 1161093 1161094

Parameter	Units	60140894001 Result	MS Spike Conc.	MSD Spike Conc.	MS Result	MSD Result	MS % Rec	MSD % Rec	% Rec Limits	RPD	Max RPD	Qual
Chloride	mg/L	2.3	10	10	11.6	11.3	93	90	64-118	3	12	
Sulfate	mg/L	19.2	10	10	31.3	30.9	121	117	61-119	1	10	M1

MATRIX SPIKE SAMPLE: 1161095

Parameter	Units	60140894005 Result	Spike Conc.	MS Result	MS % Rec	% Rec Limits	Qualifiers
Chloride	mg/L	15.4	50	57.5	84	64-118	
Sulfate	mg/L	63.8	50	116	104	61-119	

This report shall not be reproduced, except in full,
without the written consent of Pace Analytical Services, Inc..

Pace Analytical Services, Inc.
9608 Loiret Blvd.
Lenexa, KS 66219
(913)599-5665

QUALITY CONTROL DATA

Project: MARCH 2013 RICO WATER SAMPLING
Pace Project No.: 60140509

QC Batch: WETA/24002 | Analysis Method: EPA 353.2
QC Batch Method: EPA 353.2 | Analysis Description: 353.2 Nitrate + Nitrite, preserved
Associated Lab Samples: 60140509001, 60140509002, 60140509003, 60140509004, 60140509005, 60140509006

METHOD BLANK: 1159267 | Matrix: Water
Associated Lab Samples: 60140509001, 60140509002, 60140509003, 60140509004, 60140509005, 60140509006

Parameter	Units	Blank Result	Reporting Limit	Analyzed	Qualifiers
Nitrogen, NO2 plus NO3	mg/L	ND	0.10	03/25/13 15:01	

LABORATORY CONTROL SAMPLE: 1159268

Parameter	Units	Spike Conc.	LCS Result	LCS % Rec	% Rec Limits	Qualifiers
Nitrogen, NO2 plus NO3	mg/L	2	2.2	109	90-110	

MATRIX SPIKE SAMPLE: 1159269

Parameter	Units	60140480005 Result	Spike Conc.	MS Result	MS % Rec	% Rec Limits	Qualifiers
Nitrogen, NO2 plus NO3	mg/L	5.2	4	8.9	94	90-110	

MATRIX SPIKE SAMPLE: 1159271

Parameter	Units	60140528002 Result	Spike Conc.	MS Result	MS % Rec	% Rec Limits	Qualifiers
Nitrogen, NO2 plus NO3	mg/L	1080	800	1690	76	90-110	M6

SAMPLE DUPLICATE: 1159270

Parameter	Units	60140528001 Result	Dup Result	RPD	Max RPD	Qualifiers
Nitrogen, NO2 plus NO3	mg/L	654	679	4	13	

This report shall not be reproduced, except in full,
without the written consent of Pace Analytical Services, Inc..

Pace Analytical Services, Inc.
9608 Loiret Blvd.
Lenexa, KS 66219
(913)599-5665

QUALITY CONTROL DATA

Project: MARCH 2013 RICO WATER SAMPLING
Pace Project No.: 60140509

QC Batch: WETA/24004 | Analysis Method: EPA 353.2
QC Batch Method: EPA 353.2 | Analysis Description: 353.2 Nitrate + Nitrite, preserved
Associated Lab Samples: 60140509007, 60140509008, 60140509009, 60140509010, 60140509011, 60140509012, 60140509013, 60140509014, 60140509015, 60140509016, 60140509017, 60140509018, 60140509019, 60140509020, 60140509021, 60140509022, 60140509023, 60140509024, 60140509025, 60140509026

METHOD BLANK: 1159347 | Matrix: Water
Associated Lab Samples: 60140509007, 60140509008, 60140509009, 60140509010, 60140509011, 60140509012, 60140509013, 60140509014, 60140509015, 60140509016, 60140509017, 60140509018, 60140509019, 60140509020, 60140509021, 60140509022, 60140509023, 60140509024, 60140509025, 60140509026

Parameter	Units	Blank Result	Reporting Limit	Analyzed	Qualifiers
Nitrogen, NO2 plus NO3	mg/L	ND	0.10	03/26/13 09:46	

LABORATORY CONTROL SAMPLE: 1159348

Parameter	Units	Spike Conc.	LCS Result	LCS % Rec	% Rec Limits	Qualifiers
Nitrogen, NO2 plus NO3	mg/L	2	2.2	109	90-110	

MATRIX SPIKE SAMPLE: 1159349

Parameter	Units	60140509007 Result	Spike Conc.	MS Result	MS % Rec	% Rec Limits	Qualifiers
Nitrogen, NO2 plus NO3	mg/L	ND	2	1.8	88	90-110	M1

MATRIX SPIKE SAMPLE: 1159351

Parameter	Units	60140509009 Result	Spike Conc.	MS Result	MS % Rec	% Rec Limits	Qualifiers
Nitrogen, NO2 plus NO3	mg/L	ND	2	1.7	87	90-110	M1

SAMPLE DUPLICATE: 1159350

Parameter	Units	60140509008 Result	Dup Result	RPD	Max RPD	Qualifiers
Nitrogen, NO2 plus NO3	mg/L	ND	ND		13	

This report shall not be reproduced, except in full,
without the written consent of Pace Analytical Services, Inc..

Pace Analytical Services, Inc.
9608 Loiret Blvd.
Lenexa, KS 66219
(913)599-5665

QUALITY CONTROL DATA

Project: MARCH 2013 RICO WATER SAMPLING
Pace Project No.: 60140509

QC Batch: WETA/24014 | Analysis Method: EPA 353.2
QC Batch Method: EPA 353.2 | Analysis Description: 353.2 Nitrate + Nitrite, preserved
Associated Lab Samples: 60140509027, 60140509028, 60140509029

METHOD BLANK: 1159694 | Matrix: Water
Associated Lab Samples: 60140509027, 60140509028, 60140509029

Parameter	Units	Blank Result	Reporting Limit	Analyzed	Qualifiers
Nitrogen, NO2 plus NO3	mg/L	ND	0.10	03/26/13 15:36	

LABORATORY CONTROL SAMPLE: 1159695

Parameter	Units	Spike Conc.	LCS Result	LCS % Rec	% Rec Limits	Qualifiers
Nitrogen, NO2 plus NO3	mg/L	2	2.2	109	90-110	

MATRIX SPIKE SAMPLE: 1159696

Parameter	Units	60140509027 Result	Spike Conc.	MS Result	MS % Rec	% Rec Limits	Qualifiers
Nitrogen, NO2 plus NO3	mg/L	ND	2	1.9	91	90-110	

MATRIX SPIKE SAMPLE: 1159698

Parameter	Units	60140509029 Result	Spike Conc.	MS Result	MS % Rec	% Rec Limits	Qualifiers
Nitrogen, NO2 plus NO3	mg/L	ND	2	2.1	106	90-110	

SAMPLE DUPLICATE: 1159697

Parameter	Units	60140509028 Result	Dup Result	RPD	Max RPD	Qualifiers
Nitrogen, NO2 plus NO3	mg/L	ND	ND		13	

This report shall not be reproduced, except in full,
without the written consent of Pace Analytical Services, Inc..

Pace Analytical Services, Inc.
9608 Loiret Blvd.
Lenexa, KS 66219
(913)599-5665

QUALITY CONTROL DATA

Project: MARCH 2013 RICO WATER SAMPLING
Pace Project No.: 60140509

QC Batch: WETA/23921 | Analysis Method: SM 4500-CN-E
QC Batch Method: SM 4500-CN-E | Analysis Description: 4500CNE Cyanide, Total
Associated Lab Samples: 60140509001, 60140509002, 60140509003, 60140509005, 60140509006, 60140509007, 60140509008, 60140509009, 60140509010, 60140509011, 60140509012, 60140509013, 60140509014, 60140509015, 60140509016

METHOD BLANK: 1156269 | Matrix: Water
Associated Lab Samples: 60140509001, 60140509002, 60140509003, 60140509005, 60140509006, 60140509007, 60140509008, 60140509009, 60140509010, 60140509011, 60140509012, 60140509013, 60140509014, 60140509015, 60140509016

Parameter	Units	Blank Result	Reporting Limit	Analyzed	Qualifiers
Cyanide	mg/L	ND	0.0050	03/20/13 14:38	

LABORATORY CONTROL SAMPLE: 1156270

Parameter	Units	Spike Conc.	LCS Result	LCS % Rec	% Rec Limits	Qualifiers
Cyanide	mg/L	.1	0.10	101	69-126	

MATRIX SPIKE SAMPLE: 1156272

Parameter	Units	60140509001 Result	Spike Conc.	MS Result	MS % Rec	% Rec Limits	Qualifiers
Cyanide	mg/L	0.0094	.1	0.10	95	41-136	

SAMPLE DUPLICATE: 1156271

Parameter	Units	60140717001 Result	Dup Result	RPD	Max RPD	Qualifiers
Cyanide	mg/L	ND	ND		26	

This report shall not be reproduced, except in full,
without the written consent of Pace Analytical Services, Inc..

Pace Analytical Services, Inc.
9608 Loiret Blvd.
Lenexa, KS 66219
(913)599-5665

QUALITY CONTROL DATA

Project: MARCH 2013 RICO WATER SAMPLING
Pace Project No.: 60140509

QC Batch: WETA/23922 | Analysis Method: SM 4500-CN-E
QC Batch Method: SM 4500-CN-E | Analysis Description: 4500CNE Cyanide, Total
Associated Lab Samples: 60140509017, 60140509018, 60140509019, 60140509020, 60140509021, 60140509022, 60140509023, 60140509024, 60140509025, 60140509026, 60140509027, 60140509029

METHOD BLANK: 1156273 | Matrix: Water
Associated Lab Samples: 60140509017, 60140509018, 60140509019, 60140509020, 60140509021, 60140509022, 60140509023, 60140509024, 60140509025, 60140509026, 60140509027, 60140509029

Parameter	Units	Blank Result	Reporting Limit	Analyzed	Qualifiers
Cyanide	mg/L	ND	0.0050	03/20/13 15:07	

LABORATORY CONTROL SAMPLE: 1156274

Parameter	Units	Spike Conc.	LCS Result	LCS % Rec	% Rec Limits	Qualifiers
Cyanide	mg/L	.1	0.10	101	69-126	

MATRIX SPIKE SAMPLE: 1156275

Parameter	Units	60140509017 Result	Spike Conc.	MS Result	MS % Rec	% Rec Limits	Qualifiers
Cyanide	mg/L	ND	.1	0.099	96	41-136	

SAMPLE DUPLICATE: 1156276

Parameter	Units	60140509018 Result	Dup Result	RPD	Max RPD	Qualifiers
Cyanide	mg/L	ND	ND		26	

This report shall not be reproduced, except in full,
without the written consent of Pace Analytical Services, Inc..

Pace Analytical Services, Inc.
9608 Loiret Blvd.
Lenexa, KS 66219
(913)599-5665

QUALITY CONTROL DATA

Project: MARCH 2013 RICO WATER SAMPLING
Pace Project No.: 60140509

QC Batch: WETA/23994 | Analysis Method: SM 4500-CN-E
QC Batch Method: SM 4500-CN-E | Analysis Description: 4500CNE Cyanide, Total
Associated Lab Samples: 60140509004

METHOD BLANK: 1159011 | Matrix: Water
Associated Lab Samples: 60140509004

Parameter	Units	Blank Result	Reporting Limit	Analyzed	Qualifiers
Cyanide	mg/L	ND	0.0050	03/25/13 12:32	

LABORATORY CONTROL SAMPLE: 1159012

Parameter	Units	Spike Conc.	LCS Result	LCS % Rec	% Rec Limits	Qualifiers
Cyanide	mg/L	.1	0.099	99	69-126	

MATRIX SPIKE SAMPLE: 1159013

Parameter	Units	60140509004 Result	Spike Conc.	MS Result	MS % Rec	% Rec Limits	Qualifiers
Cyanide	mg/L	ND	.1	0.095	95	41-136	

SAMPLE DUPLICATE: 1159014

Parameter	Units	60140889001 Result	Dup Result	RPD	Max RPD	Qualifiers
Cyanide	mg/L	ND	ND		26	

This report shall not be reproduced, except in full,
without the written consent of Pace Analytical Services, Inc..

Pace Analytical Services, Inc.
9608 Loiret Blvd.
Lenexa, KS 66219
(913)599-5665

QUALITY CONTROL DATA

Project: MARCH 2013 RICO WATER SAMPLING
Pace Project No.: 60140509

QC Batch: WETA/16733 | Analysis Method: SM 5310C
QC Batch Method: SM 5310C | Analysis Description: 5310C Total Organic Carbon

Associated Lab Samples: 60140509001, 60140509002, 60140509003, 60140509004, 60140509005, 60140509006, 60140509007, 60140509008, 60140509009, 60140509010, 60140509011, 60140509012, 60140509013, 60140509014, 60140509015, 60140509016, 60140509018, 60140509019

METHOD BLANK: 763509 | Matrix: Water

Associated Lab Samples: 60140509001, 60140509002, 60140509003, 60140509004, 60140509005, 60140509006, 60140509007, 60140509008, 60140509009, 60140509010, 60140509011, 60140509012, 60140509013, 60140509014, 60140509015, 60140509016, 60140509018, 60140509019

Parameter	Units	Blank Result	Reporting Limit	Analyzed	Qualifiers
Total Organic Carbon	mg/L	ND	0.50	03/22/13 12:32	

LABORATORY CONTROL SAMPLE: 763510

Parameter	Units	Spike Conc.	LCS Result	LCS % Rec	% Rec Limits	Qualifiers
Total Organic Carbon	mg/L	2.5	2.5	100	80-120	

MATRIX SPIKE & MATRIX SPIKE DUPLICATE: 763511 763512

Parameter	Units	60140767001 Result	MS Spike Conc.	MSD Spike Conc.	MS Result	MSD Result	MS % Rec	MSD % Rec	% Rec Limits	RPD	Max RPD	Qual
Total Organic Carbon	mg/L	0.10J	2.5	2.5	2.8	2.9	110	114	80-120	3	20	

MATRIX SPIKE & MATRIX SPIKE DUPLICATE: 763513 763514

Parameter	Units	60140767003 Result	MS Spike Conc.	MSD Spike Conc.	MS Result	MSD Result	MS % Rec	MSD % Rec	% Rec Limits	RPD	Max RPD	Qual
Total Organic Carbon	mg/L	10.9	37.5	37.5	51.7	52.4	109	111	80-120	1	20	

This report shall not be reproduced, except in full,
without the written consent of Pace Analytical Services, Inc..

Pace Analytical Services, Inc.
9608 Loiret Blvd.
Lenexa, KS 66219
(913)599-5665

QUALITY CONTROL DATA

Project: MARCH 2013 RICO WATER SAMPLING
Pace Project No.: 60140509

QC Batch: WETA/16734 — Analysis Method: SM 5310C
QC Batch Method: SM 5310C — Analysis Description: 5310C Total Organic Carbon
Associated Lab Samples: 60140509017, 60140509020, 60140509021, 60140509022, 60140509023, 60140509024, 60140509025, 60140509026, 60140509027, 60140509028, 60140509029

METHOD BLANK: 763515 — Matrix: Water
Associated Lab Samples: 60140509017, 60140509020, 60140509021, 60140509022, 60140509023, 60140509024, 60140509025, 60140509026, 60140509027, 60140509028, 60140509029

Parameter	Units	Blank Result	Reporting Limit	Analyzed	Qualifiers
Total Organic Carbon	mg/L	ND	0.50	03/22/13 21:57	

LABORATORY CONTROL SAMPLE: 763516

Parameter	Units	Spike Conc.	LCS Result	LCS % Rec	% Rec Limits	Qualifiers
Total Organic Carbon	mg/L	2.5	2.4	97	80-120	

MATRIX SPIKE & MATRIX SPIKE DUPLICATE: 763517 763518

Parameter	Units	60140671001 Result	MS Spike Conc.	MSD Spike Conc.	MS Result	MSD Result	MS % Rec	MSD % Rec	% Rec Limits	RPD	Max RPD	Qual
Total Organic Carbon	mg/L	2.3	7.5	7.5	9.4	9.5	96	97	80-120	1	20	

MATRIX SPIKE & MATRIX SPIKE DUPLICATE: 763519 763520

Parameter	Units	10223005001 Result	MS Spike Conc.	MSD Spike Conc.	MS Result	MSD Result	MS % Rec	MSD % Rec	% Rec Limits	RPD	Max RPD	Qual
Total Organic Carbon	mg/L	<0.041	2.5	2.5	2.8	2.9	111	113	80-120	2	20	

This report shall not be reproduced, except in full,
without the written consent of Pace Analytical Services, Inc..

Pace Analytical Services, Inc.
9608 Loiret Blvd.
Lenexa, KS 66219
(913)599-5665

QUALIFIERS

Project: MARCH 2013 RICO WATER SAMPLING
Pace Project No.: 60140509

DEFINITIONS

DF - Dilution Factor, if reported, represents the factor applied to the reported data due to changes in sample preparation, dilution of the sample aliquot, or moisture content.

ND - Not Detected at or above adjusted reporting limit.

J - Estimated concentration above the adjusted method detection limit and below the adjusted reporting limit.

MDL - Adjusted Method Detection Limit.

PRL - Pace Reporting Limit.

RL - Reporting Limit.

S - Surrogate

1,2-Diphenylhydrazine (8270 listed analyte) decomposes to Azobenzene.

Consistent with EPA guidelines, unrounded data are displayed and have been used to calculate % recovery and RPD values.

LCS(D) - Laboratory Control Sample (Duplicate)

MS(D) - Matrix Spike (Duplicate)

DUP - Sample Duplicate

RPD - Relative Percent Difference

NC - Not Calculable.

SG - Silica Gel - Clean-Up

U - Indicates the compound was analyzed for, but not detected.

N-Nitrosodiphenylamine decomposes and cannot be separated from Diphenylamine using Method 8270. The result reported for each analyte is a combined concentration.

Pace Analytical is TNI accredited. Contact your Pace PM for the current list of accredited analytes.

TNI - The NELAC Institute.

LABORATORIES

PASI-G	Pace Analytical Services - Green Bay
PASI-K	Pace Analytical Services - Kansas City
PASI-M	Pace Analytical Services - Minneapolis

ANALYTE QUALIFIERS

B	Analyte was detected in the associated method blank.
CU	The continuing calibration for this compound is outside of Pace Analytical acceptance limits. Analyte presence below reporting limits in associated samples. Results unaffected by high bias.
D3	Sample was diluted due to the presence of high levels of non-target analytes or other matrix interference.
E	Analyte concentration exceeded the calibration range. The reported result is estimated.
M1	Matrix spike recovery exceeded QC limits. Batch accepted based on laboratory control sample (LCS) recovery.
M6	Matrix spike and Matrix spike duplicate recovery not evaluated against control limits due to sample dilution.

This report shall not be reproduced, except in full,
without the written consent of Pace Analytical Services, Inc..

Pace Analytical Services, Inc.
9608 Loiret Blvd.
Lenexa, KS 66219
(913)599-5665

QUALITY CONTROL DATA CROSS REFERENCE TABLE

Project: MARCH 2013 RICO WATER SAMPLING
Pace Project No.: 60140509

Lab ID	Sample ID	QC Batch Method	QC Batch	Analytical Method	Analytical Batch
60140509001	**P13-102_20130312**	EPA 200.7	MPRP/21895	EPA 200.7	ICP/17510
60140509002	**P13-103_20130313**	EPA 200.7	MPRP/21895	EPA 200.7	ICP/17510
60140509003	**MW-1 DEEP_20130312**	EPA 200.7	MPRP/21895	EPA 200.7	ICP/17510
60140509004	**MW-1 SHALLOW_20130312**	EPA 200.7	MPRP/21895	EPA 200.7	ICP/17510
60140509005	**MW-4 DEEP_20130312**	EPA 200.7	MPRP/21895	EPA 200.7	ICP/17510
60140509006	**MW-6 DEEP_20130312**	EPA 200.7	MPRP/21895	EPA 200.7	ICP/17510
60140509007	**MW-6 SHALLOW_20130312**	EPA 200.7	MPRP/21895	EPA 200.7	ICP/17510
60140509008	**GW-1_20130312**	EPA 200.7	MPRP/21895	EPA 200.7	ICP/17510
60140509009	**DR-8_20130312**	EPA 200.7	MPRP/21895	EPA 200.7	ICP/17510
60140509010	**DR-3_20130313**	EPA 200.7	MPRP/21895	EPA 200.7	ICP/17510
60140509011	**DR-4_20130313**	EPA 200.7	MPRP/21895	EPA 200.7	ICP/17510
60140509012	**DR-5_20130313**	EPA 200.7	MPRP/21895	EPA 200.7	ICP/17510
60140509013	**DR-6_20130313**	EPA 200.7	MPRP/21895	EPA 200.7	ICP/17510
60140509014	**DR-9_20130313**	EPA 200.7	MPRP/21895	EPA 200.7	ICP/17510
60140509015	**MW-101_20130313**	EPA 200.7	MPRP/21895	EPA 200.7	ICP/17510
60140509016	**MW-102_20130313**	EPA 200.7	MPRP/21895	EPA 200.7	ICP/17510
60140509017	**MW-103_20130313**	EPA 200.7	MPRP/21895	EPA 200.7	ICP/17510
60140509018	**MW-104_20130313**	EPA 200.7	MPRP/21895	EPA 200.7	ICP/17510
60140509019	**DR-10_20130313**	EPA 200.7	MPRP/21897	EPA 200.7	ICP/17511
60140509020	**MW-3 DEEP_20130313**	EPA 200.7	MPRP/21897	EPA 200.7	ICP/17511
60140509021	**MW-5 DEEP_20130313**	EPA 200.7	MPRP/21897	EPA 200.7	ICP/17511
60140509022	**MW-5 SHALLOW_20130313**	EPA 200.7	MPRP/21897	EPA 200.7	ICP/17511
60140509023	**AT-2_20130313**	EPA 200.7	MPRP/21897	EPA 200.7	ICP/17511
60140509024	**FB_20130313**	EPA 200.7	MPRP/21897	EPA 200.7	ICP/17511
60140509025	**GW-5_20130314**	EPA 200.7	MPRP/21897	EPA 200.7	ICP/17511
60140509026	**MW-204_20130314**	EPA 200.7	MPRP/21897	EPA 200.7	ICP/17511
60140509027	**GW-4_20130314**	EPA 200.7	MPRP/21897	EPA 200.7	ICP/17511
60140509029	**MW-2 DEEP_20130313**	EPA 200.7	MPRP/21897	EPA 200.7	ICP/17511
60140509001	**P13-102_20130312**	EPA 200.8	MPRP/38091	EPA 200.8	ICPM/15581
60140509002	**P13-103_20130313**	EPA 200.8	MPRP/38091	EPA 200.8	ICPM/15581
60140509003	**MW-1 DEEP_20130312**	EPA 200.8	MPRP/38091	EPA 200.8	ICPM/15581
60140509004	**MW-1 SHALLOW_20130312**	EPA 200.8	MPRP/38091	EPA 200.8	ICPM/15581
60140509005	**MW-4 DEEP_20130312**	EPA 200.8	MPRP/38091	EPA 200.8	ICPM/15581
60140509006	**MW-6 DEEP_20130312**	EPA 200.8	MPRP/38091	EPA 200.8	ICPM/15581
60140509007	**MW-6 SHALLOW_20130312**	EPA 200.8	MPRP/38091	EPA 200.8	ICPM/15581
60140509008	**GW-1_20130312**	EPA 200.8	MPRP/38091	EPA 200.8	ICPM/15581
60140509009	**DR-8_20130312**	EPA 200.8	MPRP/38091	EPA 200.8	ICPM/15581
60140509010	**DR-3_20130313**	EPA 200.8	MPRP/38091	EPA 200.8	ICPM/15581
60140509011	**DR-4_20130313**	EPA 200.8	MPRP/38091	EPA 200.8	ICPM/15581
60140509012	**DR-5_20130313**	EPA 200.8	MPRP/38091	EPA 200.8	ICPM/15581
60140509013	**DR-6_20130313**	EPA 200.8	MPRP/38091	EPA 200.8	ICPM/15581
60140509014	**DR-9_20130313**	EPA 200.8	MPRP/38091	EPA 200.8	ICPM/15581
60140509015	**MW-101_20130313**	EPA 200.8	MPRP/38091	EPA 200.8	ICPM/15581
60140509016	**MW-102_20130313**	EPA 200.8	MPRP/38091	EPA 200.8	ICPM/15581
60140509017	**MW-103_20130313**	EPA 200.8	MPRP/38091	EPA 200.8	ICPM/15581
60140509018	**MW-104_20130313**	EPA 200.8	MPRP/38091	EPA 200.8	ICPM/15581
60140509019	**DR-10_20130313**	EPA 200.8	MPRP/38091	EPA 200.8	ICPM/15581
60140509020	**MW-3 DEEP_20130313**	EPA 200.8	MPRP/38091	EPA 200.8	ICPM/15581

This report shall not be reproduced, except in full,
without the written consent of Pace Analytical Services, Inc..

Pace Analytical Services, Inc.
9608 Loiret Blvd.
Lenexa, KS 66219
(913)599-5665

QUALITY CONTROL DATA CROSS REFERENCE TABLE

Project: MARCH 2013 RICO WATER SAMPLING
Pace Project No.: 60140509

Lab ID	Sample ID	QC Batch Method	QC Batch	Analytical Method	Analytical Batch
60140509021	**MW-5 DEEP_20130313**	EPA 200.8	MPRP/38092	EPA 200.8	ICPM/15602
60140509022	**MW-5 SHALLOW_20130313**	EPA 200.8	MPRP/38092	EPA 200.8	ICPM/15602
60140509023	**AT-2_20130313**	EPA 200.8	MPRP/38092	EPA 200.8	ICPM/15602
60140509024	**FB_20130313**	EPA 200.8	MPRP/38092	EPA 200.8	ICPM/15602
60140509025	**GW-5_20130314**	EPA 200.8	MPRP/38092	EPA 200.8	ICPM/15602
60140509026	**MW-204_20130314**	EPA 200.8	MPRP/38092	EPA 200.8	ICPM/15602
60140509027	**GW-4_20130314**	EPA 200.8	MPRP/38092	EPA 200.8	ICPM/15602
60140509029	**MW-2 DEEP_20130313**	EPA 200.8	MPRP/38092	EPA 200.8	ICPM/15602
60140509001	**P13-102_20130312**	EPA 200.8	MPRP/38094	EPA 200.8	ICPM/15595
60140509002	**P13-103_20130313**	EPA 200.8	MPRP/38094	EPA 200.8	ICPM/15595
60140509003	**MW-1 DEEP_20130312**	EPA 200.8	MPRP/38094	EPA 200.8	ICPM/15595
60140509004	**MW-1 SHALLOW_20130312**	EPA 200.8	MPRP/38094	EPA 200.8	ICPM/15595
60140509005	**MW-4 DEEP_20130312**	EPA 200.8	MPRP/38094	EPA 200.8	ICPM/15595
60140509006	**MW-6 DEEP_20130312**	EPA 200.8	MPRP/38094	EPA 200.8	ICPM/15595
60140509007	**MW-6 SHALLOW_20130312**	EPA 200.8	MPRP/38094	EPA 200.8	ICPM/15595
60140509008	**GW-1_20130312**	EPA 200.8	MPRP/38094	EPA 200.8	ICPM/15595
60140509009	**DR-8_20130312**	EPA 200.8	MPRP/38094	EPA 200.8	ICPM/15595
60140509010	**DR-3_20130313**	EPA 200.8	MPRP/38094	EPA 200.8	ICPM/15595
60140509011	**DR-4_20130313**	EPA 200.8	MPRP/38094	EPA 200.8	ICPM/15595
60140509012	**DR-5_20130313**	EPA 200.8	MPRP/38094	EPA 200.8	ICPM/15595
60140509013	**DR-6_20130313**	EPA 200.8	MPRP/38094	EPA 200.8	ICPM/15595
60140509014	**DR-9_20130313**	EPA 200.8	MPRP/38094	EPA 200.8	ICPM/15595
60140509015	**MW-101_20130313**	EPA 200.8	MPRP/38094	EPA 200.8	ICPM/15595
60140509016	**MW-102_20130313**	EPA 200.8	MPRP/38094	EPA 200.8	ICPM/15595
60140509017	**MW-103_20130313**	EPA 200.8	MPRP/38094	EPA 200.8	ICPM/15595
60140509018	**MW-104_20130313**	EPA 200.8	MPRP/38094	EPA 200.8	ICPM/15595
60140509019	**DR-10_20130313**	EPA 200.8	MPRP/38094	EPA 200.8	ICPM/15595
60140509020	**MW-3 DEEP_20130313**	EPA 200.8	MPRP/38095	EPA 200.8	ICPM/15582
60140509021	**MW-5 DEEP_20130313**	EPA 200.8	MPRP/38095	EPA 200.8	ICPM/15582
60140509022	**MW-5 SHALLOW_20130313**	EPA 200.8	MPRP/38095	EPA 200.8	ICPM/15582
60140509023	**AT-2_20130313**	EPA 200.8	MPRP/38095	EPA 200.8	ICPM/15582
60140509024	**FB_20130313**	EPA 200.8	MPRP/38095	EPA 200.8	ICPM/15582
60140509025	**GW-5_20130314**	EPA 200.8	MPRP/38095	EPA 200.8	ICPM/15582
60140509026	**MW-204_20130314**	EPA 200.8	MPRP/38095	EPA 200.8	ICPM/15582
60140509027	**GW-4_20130314**	EPA 200.8	MPRP/38095	EPA 200.8	ICPM/15582
60140509029	**MW-2 DEEP_20130313**	EPA 200.8	MPRP/38095	EPA 200.8	ICPM/15582
60140509001	**P13-102_20130312**	EPA 200.8	MPRP/21894	EPA 200.8	ICPM/2121
60140509002	**P13-103_20130313**	EPA 200.8	MPRP/21894	EPA 200.8	ICPM/2121
60140509003	**MW-1 DEEP_20130312**	EPA 200.8	MPRP/21894	EPA 200.8	ICPM/2121
60140509004	**MW-1 SHALLOW_20130312**	EPA 200.8	MPRP/21894	EPA 200.8	ICPM/2121
60140509005	**MW-4 DEEP_20130312**	EPA 200.8	MPRP/21894	EPA 200.8	ICPM/2121
60140509006	**MW-6 DEEP_20130312**	EPA 200.8	MPRP/21894	EPA 200.8	ICPM/2121
60140509007	**MW-6 SHALLOW_20130312**	EPA 200.8	MPRP/21894	EPA 200.8	ICPM/2121
60140509008	**GW-1_20130312**	EPA 200.8	MPRP/21894	EPA 200.8	ICPM/2121
60140509009	**DR-8_20130312**	EPA 200.8	MPRP/21894	EPA 200.8	ICPM/2121
60140509010	**DR-3_20130313**	EPA 200.8	MPRP/21894	EPA 200.8	ICPM/2121
60140509011	**DR-4_20130313**	EPA 200.8	MPRP/21894	EPA 200.8	ICPM/2121

This report shall not be reproduced, except in full,
without the written consent of Pace Analytical Services, Inc..

Pace Analytical Services, Inc.
9608 Loiret Blvd.
Lenexa, KS 66219
(913)599-5665

QUALITY CONTROL DATA CROSS REFERENCE TABLE

Project: MARCH 2013 RICO WATER SAMPLING
Pace Project No.: 60140509

Lab ID	Sample ID	QC Batch Method	QC Batch	Analytical Method	Analytical Batch
60140509012	**DR-5_20130313**	EPA 200.8	MPRP/21894	EPA 200.8	ICPM/2121
60140509013	**DR-6_20130313**	EPA 200.8	MPRP/21894	EPA 200.8	ICPM/2121
60140509014	**DR-9_20130313**	EPA 200.8	MPRP/21894	EPA 200.8	ICPM/2121
60140509015	**MW-101_20130313**	EPA 200.8	MPRP/21894	EPA 200.8	ICPM/2121
60140509016	**MW-102_20130313**	EPA 200.8	MPRP/21894	EPA 200.8	ICPM/2121
60140509017	**MW-103_20130313**	EPA 200.8	MPRP/21894	EPA 200.8	ICPM/2121
60140509018	**MW-104_20130313**	EPA 200.8	MPRP/21894	EPA 200.8	ICPM/2121
60140509019	**DR-10_20130313**	EPA 200.8	MPRP/21896	EPA 200.8	ICPM/2122
60140509020	**MW-3 DEEP_20130313**	EPA 200.8	MPRP/21896	EPA 200.8	ICPM/2122
60140509021	**MW-5 DEEP_20130313**	EPA 200.8	MPRP/21896	EPA 200.8	ICPM/2122
60140509022	**MW-5 SHALLOW_20130313**	EPA 200.8	MPRP/21896	EPA 200.8	ICPM/2122
60140509023	**AT-2_20130313**	EPA 200.8	MPRP/21896	EPA 200.8	ICPM/2122
60140509024	**FB_20130313**	EPA 200.8	MPRP/21896	EPA 200.8	ICPM/2122
60140509025	**GW-5_20130314**	EPA 200.8	MPRP/21896	EPA 200.8	ICPM/2122
60140509026	**MW-204_20130314**	EPA 200.8	MPRP/21896	EPA 200.8	ICPM/2122
60140509027	**GW-4_20130314**	EPA 200.8	MPRP/21896	EPA 200.8	ICPM/2122
60140509029	**MW-2 DEEP_20130313**	EPA 200.8	MPRP/21896	EPA 200.8	ICPM/2122
60140509001	**P13-102_20130312**	EPA 245.1	MERP/8160	EPA 245.1	MERC/9229
60140509002	**P13-103_20130313**	EPA 245.1	MERP/8160	EPA 245.1	MERC/9229
60140509003	**MW-1 DEEP_20130312**	EPA 245.1	MERP/8160	EPA 245.1	MERC/9229
60140509004	**MW-1 SHALLOW_20130312**	EPA 245.1	MERP/8160	EPA 245.1	MERC/9229
60140509005	**MW-4 DEEP_20130312**	EPA 245.1	MERP/8160	EPA 245.1	MERC/9229
60140509006	**MW-6 DEEP_20130312**	EPA 245.1	MERP/8160	EPA 245.1	MERC/9229
60140509007	**MW-6 SHALLOW_20130312**	EPA 245.1	MERP/8160	EPA 245.1	MERC/9229
60140509008	**GW-1_20130312**	EPA 245.1	MERP/8160	EPA 245.1	MERC/9229
60140509009	**DR-8_20130312**	EPA 245.1	MERP/8160	EPA 245.1	MERC/9229
60140509010	**DR-3_20130313**	EPA 245.1	MERP/8160	EPA 245.1	MERC/9229
60140509011	**DR-4_20130313**	EPA 245.1	MERP/8160	EPA 245.1	MERC/9229
60140509012	**DR-5_20130313**	EPA 245.1	MERP/8160	EPA 245.1	MERC/9229
60140509013	**DR-6_20130313**	EPA 245.1	MERP/8160	EPA 245.1	MERC/9229
60140509014	**DR-9_20130313**	EPA 245.1	MERP/8160	EPA 245.1	MERC/9229
60140509015	**MW-101_20130313**	EPA 245.1	MERP/8160	EPA 245.1	MERC/9229
60140509016	**MW-102_20130313**	EPA 245.1	MERP/8160	EPA 245.1	MERC/9229
60140509017	**MW-103_20130313**	EPA 245.1	MERP/8160	EPA 245.1	MERC/9229
60140509018	**MW-104_20130313**	EPA 245.1	MERP/8160	EPA 245.1	MERC/9229
60140509019	**DR-10_20130313**	EPA 245.1	MERP/8160	EPA 245.1	MERC/9229
60140509020	**MW-3 DEEP_20130313**	EPA 245.1	MERP/8160	EPA 245.1	MERC/9229
60140509021	**MW-5 DEEP_20130313**	EPA 245.1	MERP/8161	EPA 245.1	MERC/9225
60140509022	**MW-5 SHALLOW_20130313**	EPA 245.1	MERP/8161	EPA 245.1	MERC/9225
60140509023	**AT-2_20130313**	EPA 245.1	MERP/8161	EPA 245.1	MERC/9225
60140509024	**FB_20130313**	EPA 245.1	MERP/8161	EPA 245.1	MERC/9225
60140509025	**GW-5_20130314**	EPA 245.1	MERP/8161	EPA 245.1	MERC/9225
60140509026	**MW-204_20130314**	EPA 245.1	MERP/8161	EPA 245.1	MERC/9225
60140509027	**GW-4_20130314**	EPA 245.1	MERP/8161	EPA 245.1	MERC/9225
60140509029	**MW-2 DEEP_20130313**	EPA 245.1	MERP/8161	EPA 245.1	MERC/9225
60140509001	**P13-102_20130312**	EPA 245.1	MERP/8158	EPA 245.1	MERC/9248
60140509002	**P13-103_20130313**	EPA 245.1	MERP/8158	EPA 245.1	MERC/9248

This report shall not be reproduced, except in full,
without the written consent of Pace Analytical Services, Inc..

Pace Analytical Services, Inc.
9608 Loiret Blvd.
Lenexa, KS 66219
(913)599-5665

QUALITY CONTROL DATA CROSS REFERENCE TABLE

Project: MARCH 2013 RICO WATER SAMPLING
Pace Project No.: 60140509

Lab ID	Sample ID	QC Batch Method	QC Batch	Analytical Method	Analytical Batch
60140509003	**MW-1 DEEP_20130312**	EPA 245.1	MERP/8158	EPA 245.1	MERC/9248
60140509004	**MW-1 SHALLOW_20130312**	EPA 245.1	MERP/8158	EPA 245.1	MERC/9248
60140509005	**MW-4 DEEP_20130312**	EPA 245.1	MERP/8158	EPA 245.1	MERC/9248
60140509006	**MW-6 DEEP_20130312**	EPA 245.1	MERP/8158	EPA 245.1	MERC/9248
60140509007	**MW-6 SHALLOW_20130312**	EPA 245.1	MERP/8158	EPA 245.1	MERC/9248
60140509008	**GW-1_20130312**	EPA 245.1	MERP/8158	EPA 245.1	MERC/9248
60140509009	**DR-8_20130312**	EPA 245.1	MERP/8158	EPA 245.1	MERC/9248
60140509010	**DR-3_20130313**	EPA 245.1	MERP/8158	EPA 245.1	MERC/9248
60140509011	**DR-4_20130313**	EPA 245.1	MERP/8158	EPA 245.1	MERC/9248
60140509012	**DR-5_20130313**	EPA 245.1	MERP/8158	EPA 245.1	MERC/9248
60140509013	**DR-6_20130313**	EPA 245.1	MERP/8158	EPA 245.1	MERC/9248
60140509014	**DR-9_20130313**	EPA 245.1	MERP/8158	EPA 245.1	MERC/9248
60140509015	**MW-101_20130313**	EPA 245.1	MERP/8158	EPA 245.1	MERC/9248
60140509016	**MW-102_20130313**	EPA 245.1	MERP/8158	EPA 245.1	MERC/9248
60140509017	**MW-103_20130313**	EPA 245.1	MERP/8158	EPA 245.1	MERC/9248
60140509018	**MW-104_20130313**	EPA 245.1	MERP/8158	EPA 245.1	MERC/9248
60140509019	**DR-10_20130313**	EPA 245.1	MERP/8158	EPA 245.1	MERC/9248
60140509020	**MW-3 DEEP_20130313**	EPA 245.1	MERP/8158	EPA 245.1	MERC/9248
60140509021	**MW-5 DEEP_20130313**	EPA 245.1	MERP/8162	EPA 245.1	MERC/9226
60140509022	**MW-5 SHALLOW_20130313**	EPA 245.1	MERP/8162	EPA 245.1	MERC/9226
60140509023	**AT-2_20130313**	EPA 245.1	MERP/8162	EPA 245.1	MERC/9226
60140509024	**FB_20130313**	EPA 245.1	MERP/8162	EPA 245.1	MERC/9226
60140509025	**GW-5_20130314**	EPA 245.1	MERP/8162	EPA 245.1	MERC/9226
60140509026	**MW-204_20130314**	EPA 245.1	MERP/8162	EPA 245.1	MERC/9226
60140509027	**GW-4_20130314**	EPA 245.1	MERP/8162	EPA 245.1	MERC/9226
60140509029	**MW-2 DEEP_20130313**	EPA 245.1	MERP/8162	EPA 245.1	MERC/9226
60140509001	**P13-102_20130312**	EPA 245.1	MERP/7182	EPA 245.1	MERC/7142
60140509002	**P13-103_20130313**	EPA 245.1	MERP/7182	EPA 245.1	MERC/7142
60140509003	**MW-1 DEEP_20130312**	EPA 245.1	MERP/7182	EPA 245.1	MERC/7142
60140509004	**MW-1 SHALLOW_20130312**	EPA 245.1	MERP/7182	EPA 245.1	MERC/7142
60140509005	**MW-4 DEEP_20130312**	EPA 245.1	MERP/7182	EPA 245.1	MERC/7142
60140509006	**MW-6 DEEP_20130312**	EPA 245.1	MERP/7182	EPA 245.1	MERC/7142
60140509007	**MW-6 SHALLOW_20130312**	EPA 245.1	MERP/7182	EPA 245.1	MERC/7142
60140509008	**GW-1_20130312**	EPA 245.1	MERP/7182	EPA 245.1	MERC/7142
60140509009	**DR-8_20130312**	EPA 245.1	MERP/7182	EPA 245.1	MERC/7142
60140509010	**DR-3_20130313**	EPA 245.1	MERP/7182	EPA 245.1	MERC/7142
60140509011	**DR-4_20130313**	EPA 245.1	MERP/7182	EPA 245.1	MERC/7142
60140509012	**DR-5_20130313**	EPA 245.1	MERP/7182	EPA 245.1	MERC/7142
60140509013	**DR-6_20130313**	EPA 245.1	MERP/7182	EPA 245.1	MERC/7142
60140509014	**DR-9_20130313**	EPA 245.1	MERP/7182	EPA 245.1	MERC/7142
60140509015	**MW-101_20130313**	EPA 245.1	MERP/7182	EPA 245.1	MERC/7142
60140509016	**MW-102_20130313**	EPA 245.1	MERP/7182	EPA 245.1	MERC/7142
60140509017	**MW-103_20130313**	EPA 245.1	MERP/7182	EPA 245.1	MERC/7142
60140509018	**MW-104_20130313**	EPA 245.1	MERP/7182	EPA 245.1	MERC/7142
60140509019	**DR-10_20130313**	EPA 245.1	MERP/7182	EPA 245.1	MERC/7142
60140509020	**MW-3 DEEP_20130313**	EPA 245.1	MERP/7182	EPA 245.1	MERC/7142
60140509021	**MW-5 DEEP_20130313**	EPA 245.1	MERP/7183	EPA 245.1	MERC/7143

This report shall not be reproduced, except in full,
without the written consent of Pace Analytical Services, Inc..

Pace Analytical Services, Inc.
9608 Loiret Blvd.
Lenexa, KS 66219
(913)599-5665

QUALITY CONTROL DATA CROSS REFERENCE TABLE

Project: MARCH 2013 RICO WATER SAMPLING
Pace Project No.: 60140509

Lab ID	Sample ID	QC Batch Method	QC Batch	Analytical Method	Analytical Batch
60140509022	**MW-5 SHALLOW_20130313**	EPA 245.1	MERP/7183	EPA 245.1	MERC/7143
60140509023	**AT-2_20130313**	EPA 245.1	MERP/7183	EPA 245.1	MERC/7143
60140509024	**FB_20130313**	EPA 245.1	MERP/7183	EPA 245.1	MERC/7143
60140509025	**GW-5_20130314**	EPA 245.1	MERP/7183	EPA 245.1	MERC/7143
60140509026	**MW-204_20130314**	EPA 245.1	MERP/7183	EPA 245.1	MERC/7143
60140509027	**GW-4_20130314**	EPA 245.1	MERP/7183	EPA 245.1	MERC/7143
60140509029	**MW-2 DEEP_20130313**	EPA 245.1	MERP/7183	EPA 245.1	MERC/7143
60140509001	**P13-102_20130312**	SM 2510B	MT/11514		
60140509002	**P13-103_20130313**	SM 2510B	MT/11514		
60140509003	**MW-1 DEEP_20130312**	SM 2510B	MT/11514		
60140509004	**MW-1 SHALLOW_20130312**	SM 2510B	MT/11514		
60140509005	**MW-4 DEEP_20130312**	SM 2510B	MT/11514		
60140509006	**MW-6 DEEP_20130312**	SM 2510B	MT/11514		
60140509007	**MW-6 SHALLOW_20130312**	SM 2510B	MT/11514		
60140509008	**GW-1_20130312**	SM 2510B	MT/11514		
60140509009	**DR-8_20130312**	SM 2510B	MT/11514		
60140509010	**DR-3_20130313**	SM 2510B	MT/11514		
60140509011	**DR-4_20130313**	SM 2510B	MT/11514		
60140509012	**DR-5_20130313**	SM 2510B	MT/11514		
60140509013	**DR-6_20130313**	SM 2510B	MT/11514		
60140509014	**DR-9_20130313**	SM 2510B	MT/11514		
60140509015	**MW-101_20130313**	SM 2510B	MT/11514		
60140509016	**MW-102_20130313**	SM 2510B	MT/11514		
60140509017	**MW-103_20130313**	SM 2510B	MT/11514		
60140509018	**MW-104_20130313**	SM 2510B	MT/11515		
60140509019	**DR-10_20130313**	SM 2510B	MT/11515		
60140509020	**MW-3 DEEP_20130313**	SM 2510B	MT/11515		
60140509021	**MW-5 DEEP_20130313**	SM 2510B	MT/11515		
60140509022	**MW-5 SHALLOW_20130313**	SM 2510B	MT/11515		
60140509023	**AT-2_20130313**	SM 2510B	MT/11515		
60140509024	**FB_20130313**	SM 2510B	MT/11515		
60140509025	**GW-5_20130314**	SM 2510B	MT/11515		
60140509026	**MW-204_20130314**	SM 2510B	MT/11515		
60140509027	**GW-4_20130314**	SM 2510B	MT/11515		
60140509028	**GW-3_20130313**	SM 2510B	MT/11515		
60140509029	**MW-2 DEEP_20130313**	SM 2510B	MT/11515		
60140509001	**P13-102_20130312**	Calculated	MT/11535		
60140509002	**P13-103_20130313**	Calculated	MT/11535		
60140509003	**MW-1 DEEP_20130312**	Calculated	MT/11535		
60140509004	**MW-1 SHALLOW_20130312**	Calculated	MT/11535		
60140509005	**MW-4 DEEP_20130312**	Calculated	MT/11535		
60140509006	**MW-6 DEEP_20130312**	Calculated	MT/11535		
60140509007	**MW-6 SHALLOW_20130312**	Calculated	MT/11535		
60140509008	**GW-1_20130312**	Calculated	MT/11535		
60140509009	**DR-8_20130312**	Calculated	MT/11535		
60140509010	**DR-3_20130313**	Calculated	MT/11535		
60140509011	**DR-4_20130313**	Calculated	MT/11535		

This report shall not be reproduced, except in full,
without the written consent of Pace Analytical Services, Inc..

Pace Analytical Services, Inc.
9608 Loiret Blvd.
Lenexa, KS 66219
(913)599-5665

QUALITY CONTROL DATA CROSS REFERENCE TABLE

Project: MARCH 2013 RICO WATER SAMPLING
Pace Project No.: 60140509

Lab ID	Sample ID	QC Batch Method	QC Batch	Analytical Method	Analytical Batch
60140509012	**DR-5_20130313**	Calculated	MT/11535		
60140509013	**DR-6_20130313**	Calculated	MT/11535		
60140509014	**DR-9_20130313**	Calculated	MT/11535		
60140509015	**MW-101_20130313**	Calculated	MT/11535		
60140509016	**MW-102_20130313**	Calculated	MT/11535		
60140509017	**MW-103_20130313**	Calculated	MT/11535		
60140509018	**MW-104_20130313**	Calculated	MT/11535		
60140509019	**DR-10_20130313**	Calculated	MT/11535		
60140509020	**MW-3 DEEP_20130313**	Calculated	MT/11535		
60140509021	**MW-5 DEEP_20130313**	Calculated	MT/11536		
60140509022	**MW-5 SHALLOW_20130313**	Calculated	MT/11536		
60140509023	**AT-2_20130313**	Calculated	MT/11536		
60140509024	**FB_20130313**	Calculated	MT/11536		
60140509025	**GW-5_20130314**	Calculated	MT/11536		
60140509026	**MW-204_20130314**	Calculated	MT/11536		
60140509027	**GW-4_20130314**	Calculated	MT/11536		
60140509028	**GW-3_20130313**	Calculated	MT/11536		
60140509029	**MW-2 DEEP_20130313**	Calculated	MT/11536		
60140509001	**P13-102_20130312**	SM 2320B	WET/40257		
60140509002	**P13-103_20130313**	SM 2320B	WET/40257		
60140509003	**MW-1 DEEP_20130312**	SM 2320B	WET/40257		
60140509004	**MW-1 SHALLOW_20130312**	SM 2320B	WET/40257		
60140509005	**MW-4 DEEP_20130312**	SM 2320B	WET/40257		
60140509006	**MW-6 DEEP_20130312**	SM 2320B	WET/40257		
60140509007	**MW-6 SHALLOW_20130312**	SM 2320B	WET/40257		
60140509008	**GW-1_20130312**	SM 2320B	WET/40257		
60140509009	**DR-8_20130312**	SM 2320B	WET/40257		
60140509010	**DR-3_20130313**	SM 2320B	WET/40257		
60140509011	**DR-4_20130313**	SM 2320B	WET/40257		
60140509012	**DR-5_20130313**	SM 2320B	WET/40257		
60140509013	**DR-6_20130313**	SM 2320B	WET/40257		
60140509014	**DR-9_20130313**	SM 2320B	WET/40257		
60140509015	**MW-101_20130313**	SM 2320B	WET/40257		
60140509016	**MW-102_20130313**	SM 2320B	WET/40257		
60140509017	**MW-103_20130313**	SM 2320B	WET/40257		
60140509018	**MW-104_20130313**	SM 2320B	WET/40308		
60140509019	**DR-10_20130313**	SM 2320B	WET/40308		
60140509020	**MW-3 DEEP_20130313**	SM 2320B	WET/40308		
60140509021	**MW-5 DEEP_20130313**	SM 2320B	WET/40308		
60140509022	**MW-5 SHALLOW_20130313**	SM 2320B	WET/40308		
60140509023	**AT-2_20130313**	SM 2320B	WET/40308		
60140509024	**FB_20130313**	SM 2320B	WET/40334		
60140509025	**GW-5_20130314**	SM 2320B	WET/40334		
60140509026	**MW-204_20130314**	SM 2320B	WET/40334		
60140509027	**GW-4_20130314**	SM 2320B	WET/40334		
60140509028	**GW-3_20130313**	SM 2320B	WET/40334		
60140509029	**MW-2 DEEP_20130313**	SM 2320B	WET/40334		

This report shall not be reproduced, except in full,
without the written consent of Pace Analytical Services, Inc..

Pace Analytical Services, Inc.
9608 Loiret Blvd.
Lenexa, KS 66219
(913)599-5665

QUALITY CONTROL DATA CROSS REFERENCE TABLE

Project: MARCH 2013 RICO WATER SAMPLING
Pace Project No.: 60140509

Lab ID	Sample ID	QC Batch Method	QC Batch	Analytical Method	Analytical Batch
60140509001	**P13-102_20130312**	SM 2540C	WET/40277		
60140509002	**P13-103_20130313**	SM 2540C	WET/40277		
60140509003	**MW-1 DEEP_20130312**	SM 2540C	WET/40277		
60140509004	**MW-1 SHALLOW_20130312**	SM 2540C	WET/40277		
60140509005	**MW-4 DEEP_20130312**	SM 2540C	WET/40277		
60140509006	**MW-6 DEEP_20130312**	SM 2540C	WET/40277		
60140509007	**MW-6 SHALLOW_20130312**	SM 2540C	WET/40277		
60140509008	**GW-1_20130312**	SM 2540C	WET/40277		
60140509009	**DR-8_20130312**	SM 2540C	WET/40277		
60140509010	**DR-3_20130313**	SM 2540C	WET/40277		
60140509011	**DR-4_20130313**	SM 2540C	WET/40277		
60140509012	**DR-5_20130313**	SM 2540C	WET/40277		
60140509013	**DR-6_20130313**	SM 2540C	WET/40277		
60140509014	**DR-9_20130313**	SM 2540C	WET/40277		
60140509015	**MW-101_20130313**	SM 2540C	WET/40277		
60140509016	**MW-102_20130313**	SM 2540C	WET/40277		
60140509017	**MW-103_20130313**	SM 2540C	WET/40277		
60140509018	**MW-104_20130313**	SM 2540C	WET/40277		
60140509019	**DR-10_20130313**	SM 2540C	WET/40277		
60140509020	**MW-3 DEEP_20130313**	SM 2540C	WET/40277		
60140509021	**MW-5 DEEP_20130313**	SM 2540C	WET/40296		
60140509022	**MW-5 SHALLOW_20130313**	SM 2540C	WET/40296		
60140509023	**AT-2_20130313**	SM 2540C	WET/40296		
60140509024	**FB_20130313**	SM 2540C	WET/40296		
60140509025	**GW-5_20130314**	SM 2540C	WET/40296		
60140509026	**MW-204_20130314**	SM 2540C	WET/40296		
60140509027	**GW-4_20130314**	SM 2540C	WET/40296		
60140509028	**GW-3_20130313**	SM 2540C	WET/40296		
60140509029	**MW-2 DEEP_20130313**	SM 2540C	WET/40296		
60140509001	**P13-102_20130312**	SM 2540D	WET/40250		
60140509002	**P13-103_20130313**	SM 2540D	WET/40250		
60140509003	**MW-1 DEEP_20130312**	SM 2540D	WET/40250		
60140509004	**MW-1 SHALLOW_20130312**	SM 2540D	WET/40250		
60140509005	**MW-4 DEEP_20130312**	SM 2540D	WET/40250		
60140509006	**MW-6 DEEP_20130312**	SM 2540D	WET/40250		
60140509007	**MW-6 SHALLOW_20130312**	SM 2540D	WET/40250		
60140509008	**GW-1_20130312**	SM 2540D	WET/40250		
60140509009	**DR-8_20130312**	SM 2540D	WET/40250		
60140509010	**DR-3_20130313**	SM 2540D	WET/40272		
60140509011	**DR-4_20130313**	SM 2540D	WET/40272		
60140509012	**DR-5_20130313**	SM 2540D	WET/40272		
60140509013	**DR-6_20130313**	SM 2540D	WET/40272		
60140509014	**DR-9_20130313**	SM 2540D	WET/40272		
60140509015	**MW-101_20130313**	SM 2540D	WET/40272		
60140509016	**MW-102_20130313**	SM 2540D	WET/40272		
60140509017	**MW-103_20130313**	SM 2540D	WET/40272		
60140509018	**MW-104_20130313**	SM 2540D	WET/40272		

This report shall not be reproduced, except in full,
without the written consent of Pace Analytical Services, Inc..

Pace Analytical Services, Inc.
9608 Loiret Blvd.
Lenexa, KS 66219
(913)599-5665

QUALITY CONTROL DATA CROSS REFERENCE TABLE

Project: MARCH 2013 RICO WATER SAMPLING
Pace Project No.: 60140509

Lab ID	Sample ID	QC Batch Method	QC Batch	Analytical Method	Analytical Batch
60140509019	**DR-10_20130313**	SM 2540D	WET/40272		
60140509020	**MW-3 DEEP_20130313**	SM 2540D	WET/40272		
60140509021	**MW-5 DEEP_20130313**	SM 2540D	WET/40272		
60140509022	**MW-5 SHALLOW_20130313**	SM 2540D	WET/40272		
60140509023	**AT-2_20130313**	SM 2540D	WET/40272		
60140509024	**FB_20130313**	SM 2540D	WET/40272		
60140509025	**GW-5_20130314**	SM 2540D	WET/40324		
60140509026	**MW-204_20130314**	SM 2540D	WET/40324		
60140509027	**GW-4_20130314**	SM 2540D	WET/40324		
60140509028	**GW-3_20130313**	SM 2540D	WET/40272		
60140509029	**MW-2 DEEP_20130313**	SM 2540D	WET/40272		
60140509001	**P13-102_20130312**	SM 4500-S-2 D	WET/40269		
60140509002	**P13-103_20130313**	SM 4500-S-2 D	WET/40269		
60140509003	**MW-1 DEEP_20130312**	SM 4500-S-2 D	WET/40269		
60140509004	**MW-1 SHALLOW_20130312**	SM 4500-S-2 D	WET/40269		
60140509005	**MW-4 DEEP_20130312**	SM 4500-S-2 D	WET/40269		
60140509006	**MW-6 DEEP_20130312**	SM 4500-S-2 D	WET/40269		
60140509007	**MW-6 SHALLOW_20130312**	SM 4500-S-2 D	WET/40269		
60140509008	**GW-1_20130312**	SM 4500-S-2 D	WET/40269		
60140509009	**DR-8_20130312**	SM 4500-S-2 D	WET/40269		
60140509010	**DR-3_20130313**	SM 4500-S-2 D	WET/40269		
60140509011	**DR-4_20130313**	SM 4500-S-2 D	WET/40269		
60140509012	**DR-5_20130313**	SM 4500-S-2 D	WET/40269		
60140509013	**DR-6_20130313**	SM 4500-S-2 D	WET/40269		
60140509014	**DR-9_20130313**	SM 4500-S-2 D	WET/40269		
60140509015	**MW-101_20130313**	SM 4500-S-2 D	WET/40269		
60140509016	**MW-102_20130313**	SM 4500-S-2 D	WET/40269		
60140509017	**MW-103_20130313**	SM 4500-S-2 D	WET/40269		
60140509018	**MW-104_20130313**	SM 4500-S-2 D	WET/40269		
60140509019	**DR-10_20130313**	SM 4500-S-2 D	WET/40269		
60140509020	**MW-3 DEEP_20130313**	SM 4500-S-2 D	WET/40269		
60140509021	**MW-5 DEEP_20130313**	SM 4500-S-2 D	WET/40293		
60140509022	**MW-5 SHALLOW_20130313**	SM 4500-S-2 D	WET/40293		
60140509023	**AT-2_20130313**	SM 4500-S-2 D	WET/40293		
60140509024	**FB_20130313**	SM 4500-S-2 D	WET/40293		
60140509025	**GW-5_20130314**	SM 4500-S-2 D	WET/40293		
60140509026	**MW-204_20130314**	SM 4500-S-2 D	WET/40293		
60140509027	**GW-4_20130314**	SM 4500-S-2 D	WET/40293		
60140509029	**MW-2 DEEP_20130313**	SM 4500-S-2 D	WET/40293		
60140509001	**P13-102_20130312**	EPA 300.0	WETA/24001		
60140509002	**P13-103_20130313**	EPA 300.0	WETA/24001		
60140509003	**MW-1 DEEP_20130312**	EPA 300.0	WETA/24001		
60140509004	**MW-1 SHALLOW_20130312**	EPA 300.0	WETA/24001		
60140509005	**MW-4 DEEP_20130312**	EPA 300.0	WETA/24001		
60140509006	**MW-6 DEEP_20130312**	EPA 300.0	WETA/24001		
60140509007	**MW-6 SHALLOW_20130312**	EPA 300.0	WETA/24001		

This report shall not be reproduced, except in full,
without the written consent of Pace Analytical Services, Inc..

Pace Analytical Services, Inc.
9608 Loiret Blvd.
Lenexa, KS 66219
(913)599-5665

QUALITY CONTROL DATA CROSS REFERENCE TABLE

Project: MARCH 2013 RICO WATER SAMPLING
Pace Project No.: 60140509

Lab ID	Sample ID	QC Batch Method	QC Batch	Analytical Method	Analytical Batch
60140509008	**GW-1_20130312**	EPA 300.0	WETA/24001		
60140509009	**DR-8_20130312**	EPA 300.0	WETA/24001		
60140509010	**DR-3_20130313**	EPA 300.0	WETA/24001		
60140509011	**DR-4_20130313**	EPA 300.0	WETA/24001		
60140509012	**DR-5_20130313**	EPA 300.0	WETA/24001		
60140509013	**DR-6_20130313**	EPA 300.0	WETA/24001		
60140509014	**DR-9_20130313**	EPA 300.0	WETA/24027		
60140509015	**MW-101_20130313**	EPA 300.0	WETA/24027		
60140509016	**MW-102_20130313**	EPA 300.0	WETA/24027		
60140509017	**MW-103_20130313**	EPA 300.0	WETA/24027		
60140509018	**MW-104_20130313**	EPA 300.0	WETA/24027		
60140509019	**DR-10_20130313**	EPA 300.0	WETA/24027		
60140509020	**MW-3 DEEP_20130313**	EPA 300.0	WETA/24027		
60140509021	**MW-5 DEEP_20130313**	EPA 300.0	WETA/24027		
60140509022	**MW-5 SHALLOW_20130313**	EPA 300.0	WETA/24027		
60140509023	**AT-2_20130313**	EPA 300.0	WETA/24027		
60140509024	**FB_20130313**	EPA 300.0	WETA/24027		
60140509025	**GW-5_20130314**	EPA 300.0	WETA/24027		
60140509026	**MW-204_20130314**	EPA 300.0	WETA/24027		
60140509027	**GW-4_20130314**	EPA 300.0	WETA/24027		
60140509028	**GW-3_20130313**	EPA 300.0	WETA/24027		
60140509029	**MW-2 DEEP_20130313**	EPA 300.0	WETA/24041		
60140509001	**P13-102_20130312**	EPA 353.2	WETA/24002		
60140509002	**P13-103_20130313**	EPA 353.2	WETA/24002		
60140509003	**MW-1 DEEP_20130312**	EPA 353.2	WETA/24002		
60140509004	**MW-1 SHALLOW_20130312**	EPA 353.2	WETA/24002		
60140509005	**MW-4 DEEP_20130312**	EPA 353.2	WETA/24002		
60140509006	**MW-6 DEEP_20130312**	EPA 353.2	WETA/24002		
60140509007	**MW-6 SHALLOW_20130312**	EPA 353.2	WETA/24004		
60140509008	**GW-1_20130312**	EPA 353.2	WETA/24004		
60140509009	**DR-8_20130312**	EPA 353.2	WETA/24004		
60140509010	**DR-3_20130313**	EPA 353.2	WETA/24004		
60140509011	**DR-4_20130313**	EPA 353.2	WETA/24004		
60140509012	**DR-5_20130313**	EPA 353.2	WETA/24004		
60140509013	**DR-6_20130313**	EPA 353.2	WETA/24004		
60140509014	**DR-9_20130313**	EPA 353.2	WETA/24004		
60140509015	**MW-101_20130313**	EPA 353.2	WETA/24004		
60140509016	**MW-102_20130313**	EPA 353.2	WETA/24004		
60140509017	**MW-103_20130313**	EPA 353.2	WETA/24004		
60140509018	**MW-104_20130313**	EPA 353.2	WETA/24004		
60140509019	**DR-10_20130313**	EPA 353.2	WETA/24004		
60140509020	**MW-3 DEEP_20130313**	EPA 353.2	WETA/24004		
60140509021	**MW-5 DEEP_20130313**	EPA 353.2	WETA/24004		
60140509022	**MW-5 SHALLOW_20130313**	EPA 353.2	WETA/24004		
60140509023	**AT-2_20130313**	EPA 353.2	WETA/24004		
60140509024	**FB_20130313**	EPA 353.2	WETA/24004		
60140509025	**GW-5_20130314**	EPA 353.2	WETA/24004		

This report shall not be reproduced, except in full,
without the written consent of Pace Analytical Services, Inc..

Pace Analytical Services, Inc.
9608 Loiret Blvd.
Lenexa, KS 66219
(913)599-5665

QUALITY CONTROL DATA CROSS REFERENCE TABLE

Project: MARCH 2013 RICO WATER SAMPLING
Pace Project No.: 60140509

Lab ID	Sample ID	QC Batch Method	QC Batch	Analytical Method	Analytical Batch
60140509026	**MW-204_20130314**	EPA 353.2	WETA/24004		
60140509027	**GW-4_20130314**	EPA 353.2	WETA/24014		
60140509028	**GW-3_20130313**	EPA 353.2	WETA/24014		
60140509029	**MW-2 DEEP_20130313**	EPA 353.2	WETA/24014		
60140509001	**P13-102_20130312**	SM 4500-CN-E	WETA/23921		
60140509002	**P13-103_20130313**	SM 4500-CN-E	WETA/23921		
60140509003	**MW-1 DEEP_20130312**	SM 4500-CN-E	WETA/23921		
60140509004	**MW-1 SHALLOW_20130312**	SM 4500-CN-E	WETA/23994		
60140509005	**MW-4 DEEP_20130312**	SM 4500-CN-E	WETA/23921		
60140509006	**MW-6 DEEP_20130312**	SM 4500-CN-E	WETA/23921		
60140509007	**MW-6 SHALLOW_20130312**	SM 4500-CN-E	WETA/23921		
60140509008	**GW-1_20130312**	SM 4500-CN-E	WETA/23921		
60140509009	**DR-8_20130312**	SM 4500-CN-E	WETA/23921		
60140509010	**DR-3_20130313**	SM 4500-CN-E	WETA/23921		
60140509011	**DR-4_20130313**	SM 4500-CN-E	WETA/23921		
60140509012	**DR-5_20130313**	SM 4500-CN-E	WETA/23921		
60140509013	**DR-6_20130313**	SM 4500-CN-E	WETA/23921		
60140509014	**DR-9_20130313**	SM 4500-CN-E	WETA/23921		
60140509015	**MW-101_20130313**	SM 4500-CN-E	WETA/23921		
60140509016	**MW-102_20130313**	SM 4500-CN-E	WETA/23921		
60140509017	**MW-103_20130313**	SM 4500-CN-E	WETA/23922		
60140509018	**MW-104_20130313**	SM 4500-CN-E	WETA/23922		
60140509019	**DR-10_20130313**	SM 4500-CN-E	WETA/23922		
60140509020	**MW-3 DEEP_20130313**	SM 4500-CN-E	WETA/23922		
60140509021	**MW-5 DEEP_20130313**	SM 4500-CN-E	WETA/23922		
60140509022	**MW-5 SHALLOW_20130313**	SM 4500-CN-E	WETA/23922		
60140509023	**AT-2_20130313**	SM 4500-CN-E	WETA/23922		
60140509024	**FB_20130313**	SM 4500-CN-E	WETA/23922		
60140509025	**GW-5_20130314**	SM 4500-CN-E	WETA/23922		
60140509026	**MW-204_20130314**	SM 4500-CN-E	WETA/23922		
60140509027	**GW-4_20130314**	SM 4500-CN-E	WETA/23922		
60140509029	**MW-2 DEEP_20130313**	SM 4500-CN-E	WETA/23922		
60140509001	**P13-102_20130312**	SM 5310C	WETA/16733		
60140509002	**P13-103_20130313**	SM 5310C	WETA/16733		
60140509003	**MW-1 DEEP_20130312**	SM 5310C	WETA/16733		
60140509004	**MW-1 SHALLOW_20130312**	SM 5310C	WETA/16733		
60140509005	**MW-4 DEEP_20130312**	SM 5310C	WETA/16733		
60140509006	**MW-6 DEEP_20130312**	SM 5310C	WETA/16733		
60140509007	**MW-6 SHALLOW_20130312**	SM 5310C	WETA/16733		
60140509008	**GW-1_20130312**	SM 5310C	WETA/16733		
60140509009	**DR-8_20130312**	SM 5310C	WETA/16733		
60140509010	**DR-3_20130313**	SM 5310C	WETA/16733		
60140509011	**DR-4_20130313**	SM 5310C	WETA/16733		
60140509012	**DR-5_20130313**	SM 5310C	WETA/16733		
60140509013	**DR-6_20130313**	SM 5310C	WETA/16733		
60140509014	**DR-9_20130313**	SM 5310C	WETA/16733		

This report shall not be reproduced, except in full,
without the written consent of Pace Analytical Services, Inc..

Pace Analytical Services, Inc.
9608 Loiret Blvd.
Lenexa, KS 66219
(913)599-5665

QUALITY CONTROL DATA CROSS REFERENCE TABLE

Project: MARCH 2013 RICO WATER SAMPLING
Pace Project No.: 60140509

Lab ID	Sample ID	QC Batch Method	QC Batch	Analytical Method	Analytical Batch
60140509015	**MW-101_20130313**	SM 5310C	WETA/16733		
60140509016	**MW-102_20130313**	SM 5310C	WETA/16733		
60140509017	**MW-103_20130313**	SM 5310C	WETA/16734		
60140509018	**MW-104_20130313**	SM 5310C	WETA/16733		
60140509019	**DR-10_20130313**	SM 5310C	WETA/16733		
60140509020	**MW-3 DEEP_20130313**	SM 5310C	WETA/16734		
60140509021	**MW-5 DEEP_20130313**	SM 5310C	WETA/16734		
60140509022	**MW-5 SHALLOW_20130313**	SM 5310C	WETA/16734		
60140509023	**AT-2_20130313**	SM 5310C	WETA/16734		
60140509024	**FB_20130313**	SM 5310C	WETA/16734		
60140509025	**GW-5_20130314**	SM 5310C	WETA/16734		
60140509026	**MW-204_20130314**	SM 5310C	WETA/16734		
60140509027	**GW-4_20130314**	SM 5310C	WETA/16734		
60140509028	**GW-3_20130313**	SM 5310C	WETA/16734		
60140509029	**MW-2 DEEP_20130313**	SM 5310C	WETA/16734		

This report shall not be reproduced, except in full,
without the written consent of Pace Analytical Services, Inc..

Pace Analytical Services, Inc.
9608 Loiret Blvd.
Lenexa, KS 66219
(913)599-5665

QUALITY CONTROL DATA

Project: MARCH 2013 RICO WATER SAMPLING
Pace Project No.: 60141075

QC Batch: MERP/8188 — Analysis Method: EPA 245.1
QC Batch Method: EPA 245.1 — Analysis Description: 245.1 Mercury
Associated Lab Samples: 60141075001, 60141075002, 60141075003, 60141075004, 60141075005, 60141075006, 60141075007, 60141075008, 60141075009, 60141075010

METHOD BLANK: 1398415 — Matrix: Water
Associated Lab Samples: 60141075001, 60141075002, 60141075003, 60141075004, 60141075005, 60141075006, 60141075007, 60141075008, 60141075009, 60141075010

Parameter	Units	Blank Result	Reporting Limit	Analyzed	Qualifiers
Mercury	ug/L	ND	0.20	04/03/13 12:32	

LABORATORY CONTROL SAMPLE: 1398416

Parameter	Units	Spike Conc.	LCS Result	LCS % Rec	% Rec Limits	Qualifiers
Mercury	ug/L	5	4.6	93	85-115	

MATRIX SPIKE & MATRIX SPIKE DUPLICATE: 1398417 1398418

Parameter	Units	60141075001 Result	MS Spike Conc.	MSD Spike Conc.	MS Result	MSD Result	MS % Rec	MSD % Rec	% Rec Limits	RPD	Max RPD	Qual
Mercury	ug/L	ND	5	5	4.8	5.1	95	102	85-115	7	30	

MATRIX SPIKE SAMPLE: 1398419

Parameter	Units	60141075010 Result	Spike Conc.	MS Result	MS % Rec	% Rec Limits	Qualifiers
Mercury	ug/L	ND	5	5.0	101	85-115	

This report shall not be reproduced, except in full,
without the written consent of Pace Analytical Services, Inc..

Pace Analytical Services, Inc.
9608 Loiret Blvd.
Lenexa, KS 66219
(913)599-5665

QUALITY CONTROL DATA

Project: MARCH 2013 RICO WATER SAMPLING
Pace Project No.: 60141075

QC Batch: MERP/8187 — Analysis Method: EPA 245.1
QC Batch Method: EPA 245.1 — Analysis Description: 245.1 Mercury - Dissolved
Associated Lab Samples: 60141075001, 60141075002, 60141075003, 60141075004, 60141075005, 60141075006, 60141075007, 60141075008, 60141075009, 60141075010

METHOD BLANK: 1398411 — Matrix: Water
Associated Lab Samples: 60141075001, 60141075002, 60141075003, 60141075004, 60141075005, 60141075006, 60141075007, 60141075008, 60141075009, 60141075010

Parameter	Units	Blank Result	Reporting Limit	Analyzed	Qualifiers
Mercury, Dissolved	ug/L	ND	0.20	04/03/13 13:37	

LABORATORY CONTROL SAMPLE: 1398412

Parameter	Units	Spike Conc.	LCS Result	LCS % Rec	% Rec Limits	Qualifiers
Mercury, Dissolved	ug/L	5	4.8	95	85-115	

MATRIX SPIKE & MATRIX SPIKE DUPLICATE: 1398413 1398414

Parameter	Units	60141075001 Result	MS Spike Conc.	MSD Spike Conc.	MS Result	MSD Result	MS % Rec	MSD % Rec	% Rec Limits	RPD	Max RPD	Qual
Mercury, Dissolved	ug/L	ND	5	5	4.9	4.9	97	97	85-115	0	20	

This report shall not be reproduced, except in full,
without the written consent of Pace Analytical Services, Inc..

Pace Analytical Services, Inc.
9608 Loiret Blvd.
Lenexa, KS 66219
(913)599-5665

QUALITY CONTROL DATA

Project: MARCH 2013 RICO WATER SAMPLING
Pace Project No.: 60141075

QC Batch: MERP/7201 — Analysis Method: EPA 245.1
QC Batch Method: EPA 245.1 — Analysis Description: 245.1 Mercury, Potentially Dissolved
Associated Lab Samples: 60141075001, 60141075002, 60141075003, 60141075004, 60141075005, 60141075006, 60141075007, 60141075008, 60141075009, 60141075010

METHOD BLANK: 1159735 — Matrix: Water
Associated Lab Samples: 60141075001, 60141075002, 60141075003, 60141075004, 60141075005, 60141075006, 60141075007, 60141075008, 60141075009, 60141075010

Parameter	Units	Blank Result	Reporting Limit	Analyzed	Qualifiers
Mercury, Dissolved	ug/L	ND	0.20	03/27/13 13:14	

LABORATORY CONTROL SAMPLE: 1159736

Parameter	Units	Spike Conc.	LCS Result	LCS % Rec	% Rec Limits	Qualifiers
Mercury, Dissolved	ug/L	5	4.9	99	85-115	

MATRIX SPIKE & MATRIX SPIKE DUPLICATE: 1159737 1159738

Parameter	Units	60141075003 Result	MS Spike Conc.	MSD Spike Conc.	MS Result	MSD Result	MS % Rec	MSD % Rec	% Rec Limits	RPD	Max RPD	Qual
Mercury, Dissolved	ug/L	ND	5	5	4.3	4.3	84	84	70-130	0	20	

This report shall not be reproduced, except in full,
without the written consent of Pace Analytical Services, Inc..

Pace Analytical Services, Inc.
9608 Loiret Blvd.
Lenexa, KS 66219
(913)599-5665

QUALITY CONTROL DATA

Project: MARCH 2013 RICO WATER SAMPLING
Pace Project No.: 60141075

QC Batch: MPRP/21998 | Analysis Method: EPA 200.7
QC Batch Method: EPA 200.7 | Analysis Description: 200.7 Potentially Dissolved Metals
Associated Lab Samples: 60141075001, 60141075002, 60141075003, 60141075004, 60141075005, 60141075006, 60141075007, 60141075008, 60141075009, 60141075010

METHOD BLANK: 1159209 | Matrix: Water
Associated Lab Samples: 60141075001, 60141075002, 60141075003, 60141075004, 60141075005, 60141075006, 60141075007, 60141075008, 60141075009, 60141075010

Parameter	Units	Blank Result	Reporting Limit	Analyzed	Qualifiers
Calcium, Dissolved	ug/L	ND	100	04/05/13 16:45	
Magnesium, Dissolved	ug/L	17.9J	50.0	04/05/13 16:45	
Potassium, Dissolved	ug/L	ND	500	04/05/13 16:45	
Sodium, Dissolved	ug/L	114J	500	04/05/13 16:45	

LABORATORY CONTROL SAMPLE: 1159210

Parameter	Units	Spike Conc.	LCS Result	LCS % Rec	% Rec Limits	Qualifiers
Calcium, Dissolved	ug/L	10000	9340	93	85-115	
Magnesium, Dissolved	ug/L	10000	9610	96	85-115	
Potassium, Dissolved	ug/L	10000	9310	93	85-115	
Sodium, Dissolved	ug/L	10000	9460	95	85-115	

MATRIX SPIKE & MATRIX SPIKE DUPLICATE: 1159211 1159212

Parameter	Units	60141075001 Result	MS Spike Conc.	MSD Spike Conc.	MS Result	MSD Result	MS % Rec	MSD % Rec	% Rec Limits	RPD	Max RPD	Qual
Calcium, Dissolved	ug/L	78700	10000	10000	90700	92300	120	136	70-130	2	20	M1
Magnesium, Dissolved	ug/L	10600	10000	10000	20200	20400	97	98	70-130	1	20	
Potassium, Dissolved	ug/L	1490	10000	10000	11300	11800	98	103	70-130	4	20	
Sodium, Dissolved	ug/L	6140	10000	10000	16300	16900	102	108	70-130	3	20	

This report shall not be reproduced, except in full,
without the written consent of Pace Analytical Services, Inc..

Pace Analytical Services, Inc.
9608 Loiret Blvd.
Lenexa, KS 66219
(913)599-5665

QUALITY CONTROL DATA

Project: MARCH 2013 RICO WATER SAMPLING
Pace Project No.: 60141075

QC Batch: MPRP/38206 Analysis Method: EPA 200.8
QC Batch Method: EPA 200.8 Analysis Description: 200.8 MET
Associated Lab Samples: 60141075001, 60141075002, 60141075003, 60141075004, 60141075005, 60141075006, 60141075007, 60141075008, 60141075009, 60141075010

METHOD BLANK: 1398376 Matrix: Water
Associated Lab Samples: 60141075001, 60141075002, 60141075003, 60141075004, 60141075005, 60141075006, 60141075007, 60141075008, 60141075009, 60141075010

Parameter	Units	Blank Result	Reporting Limit	Analyzed	Qualifiers
Aluminum	ug/L	ND	4.0	04/02/13 02:06	
Antimony	ug/L	ND	0.50	04/02/13 02:06	
Arsenic	ug/L	ND	0.50	04/02/13 02:06	
Barium	ug/L	ND	0.30	04/02/13 02:06	
Beryllium	ug/L	ND	0.20	04/02/13 02:06	
Cadmium	ug/L	ND	0.080	04/02/13 02:06	
Calcium	ug/L	ND	20.0	04/03/13 10:26	
Chromium	ug/L	ND	0.50	04/02/13 02:06	
Cobalt	ug/L	ND	0.50	04/02/13 02:06	
Copper	ug/L	ND	0.50	04/02/13 02:06	
Iron	ug/L	ND	50.0	04/02/13 02:06	
Lead	ug/L	ND	0.10	04/02/13 02:06	
Magnesium	ug/L	ND	5.0	04/02/13 02:06	
Manganese	ug/L	ND	0.50	04/02/13 02:06	
Molybdenum	ug/L	ND	0.50	04/02/13 02:06	
Nickel	ug/L	ND	0.50	04/02/13 02:06	
Potassium	ug/L	ND	20.0	04/02/13 02:06	
Selenium	ug/L	ND	0.50	04/02/13 02:06	
Silica	ug/L	ND	53.5	04/03/13 10:26	
Silver	ug/L	ND	0.50	04/02/13 02:06	
Sodium	ug/L	ND	50.0	04/02/13 02:06	
Thallium	ug/L	ND	0.10	04/02/13 02:06	
Total Hardness by 2340B	ug/L	ND	71.0	04/03/13 10:26	
Vanadium	ug/L	ND	0.10	04/02/13 02:06	
Zinc	ug/L	ND	5.0	04/02/13 02:06	

LABORATORY CONTROL SAMPLE: 1398377

Parameter	Units	Spike Conc.	LCS Result	LCS % Rec	% Rec Limits	Qualifiers
Aluminum	ug/L	80	78.3	98	85-115	
Antimony	ug/L	80	79.3	99	85-115	
Arsenic	ug/L	80	77.2	96	85-115	
Barium	ug/L	80	79.9	100	85-115	
Beryllium	ug/L	80	82.7	103	85-115	
Cadmium	ug/L	80	81.0	101	85-115	
Calcium	ug/L	1000	974	97	85-115	
Chromium	ug/L	80	79.9	100	85-115	
Cobalt	ug/L	80	77.4	97	85-115	
Copper	ug/L	80	78.6	98	85-115	
Iron	ug/L	1000	1020	102	85-115	

This report shall not be reproduced, except in full,
without the written consent of Pace Analytical Services, Inc..

Pace Analytical Services, Inc.
9608 Loiret Blvd.
Lenexa, KS 66219
(913)599-5665

QUALITY CONTROL DATA

Project: MARCH 2013 RICO WATER SAMPLING
Pace Project No.: 60141075

LABORATORY CONTROL SAMPLE: 1398377

Parameter	Units	Spike Conc.	LCS Result	LCS % Rec	% Rec Limits	Qualifiers
Lead	ug/L	80	82.1	103	85-115	
Magnesium	ug/L	1000	1020	102	85-115	
Manganese	ug/L	80	80.9	101	85-115	
Molybdenum	ug/L	80	78.2	98	85-115	
Nickel	ug/L	80	78.1	98	85-115	
Potassium	ug/L	1000	971	97	85-115	
Selenium	ug/L	80	79.5	99	85-115	
Silica	ug/L	2140	2060	96	85-115	
Silver	ug/L	80	80.5	101	85-115	
Sodium	ug/L	1000	957	96	85-115	
Thallium	ug/L	80	82.2	103	85-115	
Vanadium	ug/L	80	78.5	98	85-115	
Zinc	ug/L	80	80.0	100	85-115	

MATRIX SPIKE & MATRIX SPIKE DUPLICATE: 1398378 1398379

Parameter	Units	60141075001 Result	MS Spike Conc.	MSD Spike Conc.	MS Result	MSD Result	MS % Rec	MSD % Rec	% Rec Limits	RPD	Max RPD	Qual
Aluminum	ug/L	7.8	80	80	88.2	90.4	101	103	70-130	2	20	
Antimony	ug/L	ND	80	80	79.9	78.0	100	97	70-130	2	20	
Arsenic	ug/L	ND	80	80	77.7	79.8	97	100	70-130	3	20	
Barium	ug/L	84.9	80	80	160	162	93	97	70-130	2	20	
Beryllium	ug/L	ND	80	80	79.0	83.1	99	104	70-130	5	20	
Cadmium	ug/L	0.38	80	80	81.8	80.7	102	100	70-130	1	20	
Calcium	ug/L	86200	1000	1000	82200	81200	-402	-506	70-130	1	20	M6
Chromium	ug/L	0.69	80	80	81.1	82.0	101	102	70-130	1	20	
Cobalt	ug/L	ND	80	80	80.6	80.1	101	100	70-130	.7	20	
Copper	ug/L	0.74	80	80	81.4	81.6	101	101	70-130	.2	20	
Iron	ug/L	51.1	1000	1000	1040	1080	99	103	70-130	3	20	
Lead	ug/L	0.13	80	80	79.9	80.6	100	101	70-130	.9	20	
Magnesium	ug/L	11100	1000	1000	12300	12400	118	124	70-130	.5	20	
Manganese	ug/L	110	80	80	189	192	98	102	70-130	2	20	
Molybdenum	ug/L	1.4	80	80	81.5	82.3	100	101	70-130	.9	20	
Nickel	ug/L	ND	80	80	82.0	79.7	102	99	70-130	3	20	
Potassium	ug/L	1550	1000	1000	2490	2520	94	97	70-130	1	20	
Selenium	ug/L	0.75	80	80	81.5	82.5	101	102	70-130	1	20	
Silica	ug/L	9250	2140	2140	11000	11600	82	110	70-130	5	20	
Silver	ug/L	ND	80	80	74.2	71.8	93	90	70-130	3	20	
Sodium	ug/L	5970	1000	1000	6840	6790	87	83	70-130	.7	20	
Thallium	ug/L	ND	80	80	80.4	80.6	101	101	70-130	.2	20	
Vanadium	ug/L	0.12	80	80	81.2	80.0	101	100	70-130	1	20	
Zinc	ug/L	96.1	80	80	176	177	100	101	70-130	.5	20	

This report shall not be reproduced, except in full,
without the written consent of Pace Analytical Services, Inc..

Pace Analytical Services, Inc.
9608 Loiret Blvd.
Lenexa, KS 66219
(913)599-5665

QUALITY CONTROL DATA

Project: MARCH 2013 RICO WATER SAMPLING
Pace Project No.: 60141075

QC Batch: MPRP/38208 Analysis Method: EPA 200.8
QC Batch Method: EPA 200.8 Analysis Description: 200.8 MET Dissolved
Associated Lab Samples: 60141075001, 60141075002, 60141075003, 60141075004, 60141075005, 60141075006, 60141075007, 60141075008, 60141075009, 60141075010

METHOD BLANK: 1398384 Matrix: Water
Associated Lab Samples: 60141075001, 60141075002, 60141075003, 60141075004, 60141075005, 60141075006, 60141075007, 60141075008, 60141075009, 60141075010

Parameter	Units	Blank Result	Reporting Limit	Analyzed	Qualifiers
Aluminum, Dissolved	ug/L	ND	4.0	04/03/13 20:34	
Antimony, Dissolved	ug/L	ND	0.50	04/03/13 20:34	
Arsenic, Dissolved	ug/L	ND	0.50	04/03/13 20:34	
Barium, Dissolved	ug/L	ND	0.30	04/03/13 20:34	
Beryllium, Dissolved	ug/L	ND	0.20	04/08/13 16:23	
Cadmium, Dissolved	ug/L	ND	0.080	04/03/13 20:34	
Calcium, Dissolved	ug/L	ND	20.0	04/03/13 20:34	
Chromium, Dissolved	ug/L	ND	0.50	04/03/13 20:34	
Cobalt, Dissolved	ug/L	ND	0.50	04/03/13 20:34	
Copper, Dissolved	ug/L	ND	0.50	04/03/13 20:34	
Iron, Dissolved	ug/L	ND	50.0	04/03/13 20:34	
Lead, Dissolved	ug/L	ND	0.10	04/03/13 20:34	
Magnesium, Dissolved	ug/L	ND	5.0	04/08/13 16:23	
Manganese, Dissolved	ug/L	ND	0.50	04/03/13 20:34	
Molybdenum, Dissolved	ug/L	ND	0.50	04/03/13 20:34	
Nickel, Dissolved	ug/L	ND	0.50	04/03/13 20:34	
Potassium, Dissolved	ug/L	ND	20.0	04/03/13 20:34	
Selenium, Dissolved	ug/L	ND	0.50	04/08/13 16:23	
Silver, Dissolved	ug/L	ND	0.50	04/03/13 20:34	
Sodium, Dissolved	ug/L	ND	50.0	04/03/13 20:34	
Thallium, Dissolved	ug/L	ND	0.10	04/03/13 20:34	
Vanadium, Dissolved	ug/L	ND	0.10	04/03/13 20:34	
Zinc, Dissolved	ug/L	ND	5.0	04/03/13 20:34	

LABORATORY CONTROL SAMPLE: 1398385

Parameter	Units	Spike Conc.	LCS Result	LCS % Rec	% Rec Limits	Qualifiers
Aluminum, Dissolved	ug/L	80	84.6	106	85-115	
Antimony, Dissolved	ug/L	80	81.8	102	85-115	
Arsenic, Dissolved	ug/L	80	81.1	101	85-115	
Barium, Dissolved	ug/L	80	81.6	102	85-115	
Beryllium, Dissolved	ug/L	80	84.1	105	85-115	
Cadmium, Dissolved	ug/L	80	83.8	105	85-115	
Calcium, Dissolved	ug/L	1000	959	96	85-115	
Chromium, Dissolved	ug/L	80	83.0	104	85-115	
Cobalt, Dissolved	ug/L	80	80.2	100	85-115	
Copper, Dissolved	ug/L	80	80.0	100	85-115	
Iron, Dissolved	ug/L	1000	1040	104	85-115	
Lead, Dissolved	ug/L	80	83.6	104	85-115	
Magnesium, Dissolved	ug/L	1000	1060	106	85-115	

This report shall not be reproduced, except in full,
without the written consent of Pace Analytical Services, Inc..

Pace Analytical Services, Inc.
9608 Loiret Blvd.
Lenexa, KS 66219
(913)599-5665

QUALITY CONTROL DATA

Project: MARCH 2013 RICO WATER SAMPLING
Pace Project No.: 60141075

LABORATORY CONTROL SAMPLE: 1398385

Parameter	Units	Spike Conc.	LCS Result	LCS % Rec	% Rec Limits	Qualifiers
Manganese, Dissolved	ug/L	80	84.0	105	85-115	
Molybdenum, Dissolved	ug/L	80	74.4	93	85-115	
Nickel, Dissolved	ug/L	80	80.1	100	85-115	
Potassium, Dissolved	ug/L	1000	990	99	85-115	
Selenium, Dissolved	ug/L	80	78.4	98	85-115	
Silver, Dissolved	ug/L	80	81.0	101	85-115	
Sodium, Dissolved	ug/L	1000	999	100	85-115	
Thallium, Dissolved	ug/L	80	85.9	107	85-115	
Vanadium, Dissolved	ug/L	80	77.4	97	85-115	
Zinc, Dissolved	ug/L	80	86.6	108	85-115	

MATRIX SPIKE & MATRIX SPIKE DUPLICATE: 1398386 1398387

Parameter	Units	60141075001 Result	MS Spike Conc.	MSD Spike Conc.	MS Result	MSD Result	MS % Rec	MSD % Rec	% Rec Limits	RPD	Max RPD	Qual
Aluminum, Dissolved	ug/L	ND	80	80	93.4	95.2	113	115	70-130	2	20	
Antimony, Dissolved	ug/L	ND	80	80	81.8	80.0	102	100	70-130	2	20	
Arsenic, Dissolved	ug/L	ND	80	80	81.7	79.7	102	99	70-130	2	20	
Barium, Dissolved	ug/L	84.9	80	80	163	160	98	94	70-130	2	20	
Beryllium, Dissolved	ug/L	ND	80	80	89.0	85.3	111	107	70-130	4	20	
Cadmium, Dissolved	ug/L	0.34	80	80	80.8	79.4	101	99	70-130	2	20	
Calcium, Dissolved	ug/L	81400	1000	1000	83400	82100	203	70	70-130	2	20	M6
Chromium, Dissolved	ug/L	ND	80	80	81.3	81.1	101	101	70-130	.2	20	
Cobalt, Dissolved	ug/L	ND	80	80	79.2	78.0	99	97	70-130	1	20	
Copper, Dissolved	ug/L	1.0	80	80	79.0	79.9	97	99	70-130	1	20	
Iron, Dissolved	ug/L	ND	1000	1000	1020	985	102	98	70-130	3	20	
Lead, Dissolved	ug/L	ND	80	80	82.1	81.0	103	101	70-130	1	20	
Magnesium, Dissolved	ug/L	11100	1000	1000	12400	12200	137	111	70-130	2	20	M6
Manganese, Dissolved	ug/L	112	80	80	198	193	108	102	70-130	2	20	
Molybdenum, Dissolved	ug/L	1.3	80	80	75.0	74.6	92	92	70-130	.5	20	
Nickel, Dissolved	ug/L	ND	80	80	77.5	77.5	96	96	70-130	.03	20	
Potassium, Dissolved	ug/L	1530	1000	1000	2500	2460	97	93	70-130	2	20	
Selenium, Dissolved	ug/L	0.72	80	80	94.4	88.9	117	110	70-130	6	20	
Silver, Dissolved	ug/L	ND	80	80	71.8	72.9	90	91	70-130	2	20	
Sodium, Dissolved	ug/L	6040	1000	1000	7080	6910	104	86	70-130	3	20	
Thallium, Dissolved	ug/L	ND	80	80	84.2	83.7	105	105	70-130	.6	20	
Vanadium, Dissolved	ug/L	0.12	80	80	77.8	76.0	97	95	70-130	2	20	
Zinc, Dissolved	ug/L	45.5	80	80	132	129	108	104	70-130	2	20	

This report shall not be reproduced, except in full,
without the written consent of Pace Analytical Services, Inc..

Pace Analytical Services, Inc.
9608 Loiret Blvd.
Lenexa, KS 66219
(913)599-5665

QUALITY CONTROL DATA

Project: MARCH 2013 RICO WATER SAMPLING
Pace Project No.: 60141075

QC Batch: MPRP/21999 | Analysis Method: EPA 200.8
QC Batch Method: EPA 200.8 | Analysis Description: 200.8 Potentially Dissolved Metals
Associated Lab Samples: 60141075001, 60141075002, 60141075003, 60141075004, 60141075005, 60141075006, 60141075007, 60141075008, 60141075009, 60141075010

METHOD BLANK: 1159213 | Matrix: Water
Associated Lab Samples: 60141075001, 60141075002, 60141075003, 60141075004, 60141075005, 60141075006, 60141075007, 60141075008, 60141075009, 60141075010

Parameter	Units	Blank Result	Reporting Limit	Analyzed	Qualifiers
Aluminum, Dissolved	ug/L	ND	50.0	04/08/13 17:38	
Antimony, Dissolved	ug/L	ND	1.0	04/08/13 17:38	
Arsenic, Dissolved	ug/L	ND	1.0	04/08/13 17:38	
Barium, Dissolved	ug/L	0.18J	1.0	04/08/13 17:38	
Beryllium, Dissolved	ug/L	ND	0.50	04/08/13 17:38	
Cadmium, Dissolved	ug/L	ND	0.50	04/08/13 17:38	
Chromium, Dissolved	ug/L	0.32J	1.0	04/08/13 17:38	
Cobalt, Dissolved	ug/L	ND	1.0	04/08/13 17:38	
Copper, Dissolved	ug/L	ND	1.0	04/08/13 17:38	
Iron, Dissolved	ug/L	4.7J	50.0	04/08/13 17:38	
Lead, Dissolved	ug/L	0.082J	1.0	04/08/13 17:38	
Manganese, Dissolved	ug/L	0.32J	1.0	04/08/13 17:38	
Molybdenum, Dissolved	ug/L	ND	1.0	04/08/13 17:38	
Nickel, Dissolved	ug/L	ND	1.0	04/08/13 17:38	
Selenium, Dissolved	ug/L	ND	1.0	04/08/13 17:38	
Silver, Dissolved	ug/L	ND	0.50	04/08/13 17:38	
Thallium, Dissolved	ug/L	ND	1.0	04/08/13 17:38	
Vanadium, Dissolved	ug/L	ND	1.0	04/08/13 17:38	
Zinc, Dissolved	ug/L	2.0J	10.0	04/08/13 17:38	

LABORATORY CONTROL SAMPLE: 1159214

Parameter	Units	Spike Conc.	LCS Result	LCS % Rec	% Rec Limits	Qualifiers
Aluminum, Dissolved	ug/L	1000	987	99	85-115	
Antimony, Dissolved	ug/L	40	39.6	99	85-115	
Arsenic, Dissolved	ug/L	40	39.9	100	85-115	
Barium, Dissolved	ug/L	40	37.5	94	85-115	
Beryllium, Dissolved	ug/L	40	36.8	92	85-115	
Cadmium, Dissolved	ug/L	40	37.8	94	85-115	
Chromium, Dissolved	ug/L	40	37.6	94	85-115	
Cobalt, Dissolved	ug/L	40	37.0	93	85-115	
Copper, Dissolved	ug/L	40	38.1	95	85-115	
Iron, Dissolved	ug/L	1000	1010	101	85-115	
Lead, Dissolved	ug/L	40	36.2	91	85-115	
Manganese, Dissolved	ug/L	40	37.4	94	85-115	
Molybdenum, Dissolved	ug/L	40	38.4	96	85-115	
Nickel, Dissolved	ug/L	40	37.9	95	85-115	
Selenium, Dissolved	ug/L	40	38.8	97	85-115	
Silver, Dissolved	ug/L	20	19.2	96	85-115	
Thallium, Dissolved	ug/L	40	35.0	88	85-115	

This report shall not be reproduced, except in full,
without the written consent of Pace Analytical Services, Inc..

Pace Analytical Services, Inc.
9608 Loiret Blvd.
Lenexa, KS 66219
(913)599-5665

QUALITY CONTROL DATA

Project: MARCH 2013 RICO WATER SAMPLING
Pace Project No.: 60141075

LABORATORY CONTROL SAMPLE: 1159214

Parameter	Units	Spike Conc.	LCS Result	LCS % Rec	% Rec Limits	Qualifiers
Vanadium, Dissolved	ug/L	40	38.6	96	85-115	
Zinc, Dissolved	ug/L	100	101	101	85-115	

MATRIX SPIKE & MATRIX SPIKE DUPLICATE: 1159215 1159216

Parameter	Units	60141075002 Result	MS Spike Conc.	MSD Spike Conc.	MS Result	MSD Result	MS % Rec	MSD % Rec	% Rec Limits	RPD	Max RPD	Qual
Aluminum, Dissolved	ug/L	12.7J	1000	1000	943	950	93	94	70-130	1	20	
Antimony, Dissolved	ug/L	ND	40	40	38.3	38.2	96	95	70-130	0	20	
Arsenic, Dissolved	ug/L	0.34J	40	40	41.8	41.1	104	102	70-130	1	20	
Barium, Dissolved	ug/L	68.1	40	40	104	106	90	95	70-130	2	20	
Beryllium, Dissolved	ug/L	ND	40	40	33.6	33.5	84	84	70-130	0	20	
Cadmium, Dissolved	ug/L	0.67	40	40	36.5	36.0	90	88	70-130	1	20	
Chromium, Dissolved	ug/L	3.3	40	40	41.0	40.5	94	93	70-130	1	20	
Cobalt, Dissolved	ug/L	0.35J	40	40	37.2	36.5	92	90	70-130	2	20	
Copper, Dissolved	ug/L	1.2	40	40	36.3	35.4	88	85	70-130	3	20	
Iron, Dissolved	ug/L	143	1000	1000	1120	1100	98	95	70-130	2	20	
Lead, Dissolved	ug/L	0.87J	40	40	37.9	38.4	92	94	70-130	1	20	
Manganese, Dissolved	ug/L	316	40	40	350	355	83	97	70-130	2	20	
Molybdenum, Dissolved	ug/L	2.1	40	40	44.0	45.5	105	109	70-130	3	20	
Nickel, Dissolved	ug/L	ND	40	40	35.7	34.2	89	85	70-130	4	20	
Selenium, Dissolved	ug/L	0.73J	40	40	40.9	39.4	100	97	70-130	4	20	
Silver, Dissolved	ug/L	ND	20	20	17.7	18.0	88	90	70-130	2	20	
Thallium, Dissolved	ug/L	0.025J	40	40	36.2	36.8	91	92	70-130	2	20	
Vanadium, Dissolved	ug/L	ND	40	40	39.8	38.1	99	95	70-130	4	20	
Zinc, Dissolved	ug/L	169	100	100	264	257	94	88	70-130	3	20	

MATRIX SPIKE SAMPLE: 1159217

Parameter	Units	60141084006 Result	Spike Conc.	MS Result	MS % Rec	% Rec Limits	Qualifiers
Aluminum, Dissolved	ug/L	ND	1000	964	93	70-130	
Antimony, Dissolved	ug/L	ND	40	39.2	97	70-130	
Arsenic, Dissolved	ug/L	4.4	40	45.5	103	70-130	
Barium, Dissolved	ug/L	56.0	40	90.7	87	70-130	
Beryllium, Dissolved	ug/L	ND	40	33.6	84	70-130	
Cadmium, Dissolved	ug/L	ND	40	35.2	88	70-130	
Chromium, Dissolved	ug/L	ND	40	37.3	92	70-130	
Cobalt, Dissolved	ug/L	ND	40	35.8	89	70-130	
Copper, Dissolved	ug/L	7.0	40	40.3	83	70-130	
Iron, Dissolved	ug/L	652	1000	1580	93	70-130	
Lead, Dissolved	ug/L	ND	40	38.4	95	70-130	
Manganese, Dissolved	ug/L	11.4	40	46.7	88	70-130	
Molybdenum, Dissolved	ug/L	1.4	40	45.1	109	70-130	
Nickel, Dissolved	ug/L	1.5	40	36.1	87	70-130	
Selenium, Dissolved	ug/L	ND	40	38.2	95	70-130	

This report shall not be reproduced, except in full,
without the written consent of Pace Analytical Services, Inc..

Pace Analytical Services, Inc.
9608 Loiret Blvd.
Lenexa, KS 66219
(913)599-5665

QUALITY CONTROL DATA

Project: MARCH 2013 RICO WATER SAMPLING
Pace Project No.: 60141075

MATRIX SPIKE SAMPLE: 1159217

Parameter	Units	60141084006 Result	Spike Conc.	MS Result	MS % Rec	% Rec Limits	Qualifiers
Silver, Dissolved	ug/L	ND	20	17.8	89	70-130	
Thallium, Dissolved	ug/L	ND	40	36.5	91	70-130	
Vanadium, Dissolved	ug/L	ND	40	38.5	95	70-130	
Zinc, Dissolved	ug/L	ND	100	93.8	88	70-130	

This report shall not be reproduced, except in full,
without the written consent of Pace Analytical Services, Inc..

Pace Analytical Services, Inc.
9608 Loiret Blvd.
Lenexa, KS 66219
(913)599-5665

QUALITY CONTROL DATA

Project: MARCH 2013 RICO WATER SAMPLING
Pace Project No.: 60141075

QC Batch: MT/11589 | Analysis Method: SM 2510B
QC Batch Method: SM 2510B | Analysis Description: 2510B Specific Conductance
Associated Lab Samples: 60141075001, 60141075002, 60141075003, 60141075004, 60141075005, 60141075006, 60141075007, 60141075008, 60141075009

METHOD BLANK: 1402006 | Matrix: Water
Associated Lab Samples: 60141075001, 60141075002, 60141075003, 60141075004, 60141075005, 60141075006, 60141075007, 60141075008, 60141075009

Parameter	Units	Blank Result	Reporting Limit	Analyzed	Qualifiers
Specific Conductance	umhos/cm	ND	10.0	04/02/13 13:55	

LABORATORY CONTROL SAMPLE: 1402007

Parameter	Units	Spike Conc.	LCS Result	LCS % Rec	% Rec Limits	Qualifiers
Specific Conductance	umhos/cm	1000	967	97	90-110	

SAMPLE DUPLICATE: 1402008

Parameter	Units	10223530001 Result	Dup Result	RPD	Max RPD	Qualifiers
Specific Conductance	umhos/cm	4480	4700	5	20	

SAMPLE DUPLICATE: 1402009

Parameter	Units	10223530008 Result	Dup Result	RPD	Max RPD	Qualifiers
Specific Conductance	umhos/cm	2380	2350	1	20	

This report shall not be reproduced, except in full,
without the written consent of Pace Analytical Services, Inc..

Pace Analytical Services, Inc.
9608 Loiret Blvd.
Lenexa, KS 66219
(913)599-5665

QUALITY CONTROL DATA

Project: MARCH 2013 RICO WATER SAMPLING
Pace Project No.: 60141075

QC Batch: MT/11611 | Analysis Method: SM 2510B
QC Batch Method: SM 2510B | Analysis Description: 2510B Specific Conductance
Associated Lab Samples: 60141075010

METHOD BLANK: 1403394 | Matrix: Water
Associated Lab Samples: 60141075010

Parameter	Units	Blank Result	Reporting Limit	Analyzed	Qualifiers
Specific Conductance	umhos/cm	ND	10.0	04/04/13 11:47	

LABORATORY CONTROL SAMPLE: 1403395

Parameter	Units	Spike Conc.	LCS Result	LCS % Rec	% Rec Limits	Qualifiers
Specific Conductance	umhos/cm	1000	1020	102	90-110	

SAMPLE DUPLICATE: 1403396

Parameter	Units	10223610001 Result	Dup Result	RPD	Max RPD	Qualifiers
Specific Conductance	umhos/cm	24.6	24.4	.9	20	

SAMPLE DUPLICATE: 1403397

Parameter	Units	10223670003 Result	Dup Result	RPD	Max RPD	Qualifiers
Specific Conductance	umhos/cm	2340	2450	4	20	

This report shall not be reproduced, except in full,
without the written consent of Pace Analytical Services, Inc..

Pace Analytical Services, Inc.
9608 Loiret Blvd.
Lenexa, KS 66219
(913)599-5665

QUALITY CONTROL DATA

Project: MARCH 2013 RICO WATER SAMPLING
Pace Project No.: 60141075

QC Batch: WET/40499 Analysis Method: SM 2320B
QC Batch Method: SM 2320B Analysis Description: 2320B Alkalinity
Associated Lab Samples: 60141075001, 60141075002, 60141075003, 60141075004, 60141075005, 60141075006, 60141075007, 60141075008, 60141075009, 60141075010

METHOD BLANK: 1162651 Matrix: Water
Associated Lab Samples: 60141075001, 60141075002, 60141075003, 60141075004, 60141075005, 60141075006, 60141075007, 60141075008, 60141075009, 60141075010

Parameter	Units	Blank Result	Reporting Limit	Analyzed	Qualifiers
Alkalinity, Carbonate (CaCO3)	mg/L	ND	20.0	04/01/13 09:50	
Alkalinity, Total as CaCO3	mg/L	ND	20.0	04/01/13 09:50	
Alkalinity,Bicarbonate (CaCO3)	mg/L	ND	20.0	04/01/13 09:50	

LABORATORY CONTROL SAMPLE: 1162652

Parameter	Units	Spike Conc.	LCS Result	LCS % Rec	% Rec Limits	Qualifiers
Alkalinity, Total as CaCO3	mg/L	500	468	94	90-110	

SAMPLE DUPLICATE: 1162655

Parameter	Units	60141133001 Result	Dup Result	RPD	Max RPD	Qualifiers
Alkalinity, Carbonate (CaCO3)	mg/L	ND	ND		10	
Alkalinity, Total as CaCO3	mg/L	543	566	4	10	
Alkalinity,Bicarbonate (CaCO3)	mg/L	543	566	4	10	

This report shall not be reproduced, except in full,
without the written consent of Pace Analytical Services, Inc..

Pace Analytical Services, Inc.
9608 Loiret Blvd.
Lenexa, KS 66219
(913)599-5665

QUALITY CONTROL DATA

Project: MARCH 2013 RICO WATER SAMPLING
Pace Project No.: 60141075

QC Batch: WET/40427 Analysis Method: SM 2540C
QC Batch Method: SM 2540C Analysis Description: 2540C Total Dissolved Solids
Associated Lab Samples: 60141075001, 60141075002, 60141075003, 60141075004, 60141075005, 60141075006, 60141075007, 60141075008, 60141075009, 60141075010

METHOD BLANK: 1160247 Matrix: Water
Associated Lab Samples: 60141075001, 60141075002, 60141075003, 60141075004, 60141075005, 60141075006, 60141075007, 60141075008, 60141075009, 60141075010

Parameter	Units	Blank Result	Reporting Limit	Analyzed	Qualifiers
Total Dissolved Solids	mg/L	ND	5.0	03/27/13 14:46	

SAMPLE DUPLICATE: 1160248

Parameter	Units	60141069004 Result	Dup Result	RPD	Max RPD	Qualifiers
Total Dissolved Solids	mg/L	63000	65000	3	17	

SAMPLE DUPLICATE: 1160249

Parameter	Units	60141075001 Result	Dup Result	RPD	Max RPD	Qualifiers
Total Dissolved Solids	mg/L	301	309	3	17	

This report shall not be reproduced, except in full,
without the written consent of Pace Analytical Services, Inc..

Pace Analytical Services, Inc.
9608 Loiret Blvd.
Lenexa, KS 66219
(913)599-5665

QUALITY CONTROL DATA

Project: MARCH 2013 RICO WATER SAMPLING
Pace Project No.: 60141075

QC Batch: WET/40413 Analysis Method: SM 2540D
QC Batch Method: SM 2540D Analysis Description: 2540D Total Suspended Solids
Associated Lab Samples: 60141075001, 60141075002, 60141075003, 60141075004, 60141075005, 60141075006, 60141075007

METHOD BLANK: 1159886 Matrix: Water
Associated Lab Samples: 60141075001, 60141075002, 60141075003, 60141075004, 60141075005, 60141075006, 60141075007

Parameter	Units	Blank Result	Reporting Limit	Analyzed	Qualifiers
Total Suspended Solids	mg/L	ND	5.0	03/27/13 09:03	

SAMPLE DUPLICATE: 1159887

Parameter	Units	60140950001 Result	Dup Result	RPD	Max RPD	Qualifiers
Total Suspended Solids	mg/L	2810	3250	15	25	

SAMPLE DUPLICATE: 1159888

Parameter	Units	60140998001 Result	Dup Result	RPD	Max RPD	Qualifiers
Total Suspended Solids	mg/L	132	124	6	25	

This report shall not be reproduced, except in full,
without the written consent of Pace Analytical Services, Inc..

Pace Analytical Services, Inc.
9608 Loiret Blvd.
Lenexa, KS 66219
(913)599-5665

QUALITY CONTROL DATA

Project: MARCH 2013 RICO WATER SAMPLING
Pace Project No.: 60141075

QC Batch: WET/40414 Analysis Method: SM 2540D
QC Batch Method: SM 2540D Analysis Description: 2540D Total Suspended Solids
Associated Lab Samples: 60141075008, 60141075009, 60141075010

METHOD BLANK: 1159891 Matrix: Water
Associated Lab Samples: 60141075008, 60141075009, 60141075010

Parameter	Units	Blank Result	Reporting Limit	Analyzed	Qualifiers
Total Suspended Solids	mg/L	ND	5.0	03/27/13 09:08	

SAMPLE DUPLICATE: 1159892

Parameter	Units	60141075008 Result	Dup Result	RPD	Max RPD	Qualifiers
Total Suspended Solids	mg/L	ND	ND		25	

SAMPLE DUPLICATE: 1159893

Parameter	Units	60141084004 Result	Dup Result	RPD	Max RPD	Qualifiers
Total Suspended Solids	mg/L	ND	ND		25	

This report shall not be reproduced, except in full,
without the written consent of Pace Analytical Services, Inc..

Pace Analytical Services, Inc.
9608 Loiret Blvd.
Lenexa, KS 66219
(913)599-5665

QUALITY CONTROL DATA

Project: MARCH 2013 RICO WATER SAMPLING
Pace Project No.: 60141075

QC Batch: WET/40458 | Analysis Method: SM 4500-S-2 D
QC Batch Method: SM 4500-S-2 D | Analysis Description: 4500S2D Sulfide, Total
Associated Lab Samples: 60141075001, 60141075002, 60141075003, 60141075004, 60141075005, 60141075006, 60141075007, 60141075008, 60141075009, 60141075010

METHOD BLANK: 1160828 | Matrix: Water
Associated Lab Samples: 60141075001, 60141075002, 60141075003, 60141075004, 60141075005, 60141075006, 60141075007, 60141075008, 60141075009, 60141075010

Parameter	Units	Blank Result	Reporting Limit	Analyzed	Qualifiers
Sulfide, Total	mg/L	ND	0.050	03/28/13 13:00	

LABORATORY CONTROL SAMPLE: 1160829

Parameter	Units	Spike Conc.	LCS Result	LCS % Rec	% Rec Limits	Qualifiers
Sulfide, Total	mg/L	.5	0.49	99	80-120	

MATRIX SPIKE SAMPLE: 1160830

Parameter	Units	60141077011 Result	Spike Conc.	MS Result	MS % Rec	% Rec Limits	Qualifiers
Sulfide, Total	mg/L	ND	.5	0.44	89	75-125	

This report shall not be reproduced, except in full,
without the written consent of Pace Analytical Services, Inc..

Pace Analytical Services, Inc.
9608 Loiret Blvd.
Lenexa, KS 66219
(913)599-5665

QUALITY CONTROL DATA

Project: MARCH 2013 RICO WATER SAMPLING
Pace Project No.: 60141075

QC Batch: WETA/24080 Analysis Method: EPA 300.0
QC Batch Method: EPA 300.0 Analysis Description: 300.0 IC Anions
Associated Lab Samples: 60141075001, 60141075002, 60141075003, 60141075004, 60141075005, 60141075006, 60141075007, 60141075008, 60141075009, 60141075010

METHOD BLANK: 1162848 Matrix: Water
Associated Lab Samples: 60141075001, 60141075002, 60141075003, 60141075004, 60141075005, 60141075006, 60141075007, 60141075008, 60141075009, 60141075010

Parameter	Units	Blank Result	Reporting Limit	Analyzed	Qualifiers
Chloride	mg/L	0.61J	1.0	04/01/13 09:13	
Sulfate	mg/L	0.21J	1.0	04/01/13 09:13	

LABORATORY CONTROL SAMPLE: 1162849

Parameter	Units	Spike Conc.	LCS Result	LCS % Rec	% Rec Limits	Qualifiers
Chloride	mg/L	5	4.8	96	90-110	
Sulfate	mg/L	5	4.8	96	90-110	

MATRIX SPIKE & MATRIX SPIKE DUPLICATE: 1162850 1162851

Parameter	Units	60141075001 Result	MS Spike Conc.	MSD Spike Conc.	MS Result	MSD Result	MS % Rec	MSD % Rec	% Rec Limits	RPD	Max RPD	Qual
Chloride	mg/L	4.9	5	5	9.2	9.2	86	87	64-118	1	12	
Sulfate	mg/L	111	50	50	153	152	85	82	61-119	1	10	

MATRIX SPIKE SAMPLE: 1162852

Parameter	Units	60141075005 Result	Spike Conc.	MS Result	MS % Rec	% Rec Limits	Qualifiers
Chloride	mg/L	4.8	5	9.2	88	64-118	
Sulfate	mg/L	173	50	210	75	61-119	

This report shall not be reproduced, except in full,
without the written consent of Pace Analytical Services, Inc..

Pace Analytical Services, Inc.
9608 Loiret Blvd.
Lenexa, KS 66219
(913)599-5665

QUALITY CONTROL DATA

Project: MARCH 2013 RICO WATER SAMPLING
Pace Project No.: 60141075

QC Batch: WETA/24014 | Analysis Method: EPA 353.2
QC Batch Method: EPA 353.2 | Analysis Description: 353.2 Nitrate + Nitrite, preserved
Associated Lab Samples: 60141075001, 60141075002, 60141075003, 60141075005, 60141075006, 60141075007, 60141075008, 60141075009

METHOD BLANK: 1159694 | Matrix: Water
Associated Lab Samples: 60141075001, 60141075002, 60141075003, 60141075005, 60141075006, 60141075007, 60141075008, 60141075009

Parameter	Units	Blank Result	Reporting Limit	Analyzed	Qualifiers
Nitrogen, NO2 plus NO3	mg/L	ND	0.10	03/26/13 15:36	

LABORATORY CONTROL SAMPLE: 1159695

Parameter	Units	Spike Conc.	LCS Result	LCS % Rec	% Rec Limits	Qualifiers
Nitrogen, NO2 plus NO3	mg/L	2	2.2	109	90-110	

MATRIX SPIKE SAMPLE: 1159696

Parameter	Units	60140509027 Result	Spike Conc.	MS Result	MS % Rec	% Rec Limits	Qualifiers
Nitrogen, NO2 plus NO3	mg/L	ND	2	1.9	91	90-110	

MATRIX SPIKE SAMPLE: 1159698

Parameter	Units	60140509029 Result	Spike Conc.	MS Result	MS % Rec	% Rec Limits	Qualifiers
Nitrogen, NO2 plus NO3	mg/L	ND	2	2.1	106	90-110	

SAMPLE DUPLICATE: 1159697

Parameter	Units	60140509028 Result	Dup Result	RPD	Max RPD	Qualifiers
Nitrogen, NO2 plus NO3	mg/L	ND	ND		13	

This report shall not be reproduced, except in full,
without the written consent of Pace Analytical Services, Inc..

Pace Analytical Services, Inc.
9608 Loiret Blvd.
Lenexa, KS 66219
(913)599-5665

QUALITY CONTROL DATA

Project: MARCH 2013 RICO WATER SAMPLING
Pace Project No.: 60141075

QC Batch: WETA/24116 | Analysis Method: EPA 353.2
QC Batch Method: EPA 353.2 | Analysis Description: 353.2 Nitrate + Nitrite, preserved
Associated Lab Samples: 60141075010

METHOD BLANK: 1164275 | Matrix: Water
Associated Lab Samples: 60141075010

Parameter	Units	Blank Result	Reporting Limit	Analyzed	Qualifiers
Nitrogen, NO2 plus NO3	mg/L	ND	0.10	04/04/13 11:19	

LABORATORY CONTROL SAMPLE: 1164276

Parameter	Units	Spike Conc.	LCS Result	LCS % Rec	% Rec Limits	Qualifiers
Nitrogen, NO2 plus NO3	mg/L	2	2.2	109	90-110	

MATRIX SPIKE SAMPLE: 1164277

Parameter	Units	60141389017 Result	Spike Conc.	MS Result	MS % Rec	% Rec Limits	Qualifiers
Nitrogen, NO2 plus NO3	mg/L	0.25	2	2.2	98	90-110	

MATRIX SPIKE SAMPLE: 1164279

Parameter	Units	60141389019 Result	Spike Conc.	MS Result	MS % Rec	% Rec Limits	Qualifiers
Nitrogen, NO2 plus NO3	mg/L	45.8	40	82.0	91	90-110	

SAMPLE DUPLICATE: 1164278

Parameter	Units	60141389018 Result	Dup Result	RPD	Max RPD	Qualifiers
Nitrogen, NO2 plus NO3	mg/L	45.5	44.4	2	13	

This report shall not be reproduced, except in full,
without the written consent of Pace Analytical Services, Inc..

Pace Analytical Services, Inc.
9608 Loiret Blvd.
Lenexa, KS 66219
(913)599-5665

QUALITY CONTROL DATA

Project: MARCH 2013 RICO WATER SAMPLING
Pace Project No.: 60141075

QC Batch: WETA/24020 — Analysis Method: SM 4500-CN-E
QC Batch Method: SM 4500-CN-E — Analysis Description: 4500CNE Cyanide, Total
Associated Lab Samples: 60141075001, 60141075002, 60141075003, 60141075004, 60141075005, 60141075006, 60141075007, 60141075008, 60141075009, 60141075010

METHOD BLANK: 1159911 — Matrix: Water
Associated Lab Samples: 60141075001, 60141075002, 60141075003, 60141075004, 60141075005, 60141075006, 60141075007, 60141075008, 60141075009, 60141075010

Parameter	Units	Blank Result	Reporting Limit	Analyzed	Qualifiers
Cyanide	mg/L	ND	0.0050	03/27/13 15:44	

LABORATORY CONTROL SAMPLE: 1159912

Parameter	Units	Spike Conc.	LCS Result	LCS % Rec	% Rec Limits	Qualifiers
Cyanide	mg/L	.1	0.10	101	69-126	

MATRIX SPIKE SAMPLE: 1159913

Parameter	Units	60141075001 Result	Spike Conc.	MS Result	MS % Rec	% Rec Limits	Qualifiers
Cyanide	mg/L	ND	.1	0.11	103	41-136	

SAMPLE DUPLICATE: 1159914

Parameter	Units	60141075002 Result	Dup Result	RPD	Max RPD	Qualifiers
Cyanide	mg/L	ND	ND		26	

This report shall not be reproduced, except in full,
without the written consent of Pace Analytical Services, Inc..

Pace Analytical Services, Inc.
9608 Loiret Blvd.
Lenexa, KS 66219
(913)599-5665

QUALITY CONTROL DATA

Project: MARCH 2013 RICO WATER SAMPLING
Pace Project No.: 60141075

QC Batch: WETA/16848 | Analysis Method: SM 5310C
QC Batch Method: SM 5310C | Analysis Description: 5310C Total Organic Carbon
Associated Lab Samples: 60141075001, 60141075002, 60141075003, 60141075005, 60141075006, 60141075007, 60141075008, 60141075009, 60141075010

METHOD BLANK: 767680 | Matrix: Water
Associated Lab Samples: 60141075001, 60141075002, 60141075003, 60141075005, 60141075006, 60141075007, 60141075008, 60141075009, 60141075010

Parameter	Units	Blank Result	Reporting Limit	Analyzed	Qualifiers
Total Organic Carbon	mg/L	ND	0.50	04/02/13 03:28	

LABORATORY CONTROL SAMPLE: 767681

Parameter	Units	Spike Conc.	LCS Result	LCS % Rec	% Rec Limits	Qualifiers
Total Organic Carbon	mg/L	2.5	2.4	95	80-120	

MATRIX SPIKE & MATRIX SPIKE DUPLICATE: 767682 767683

Parameter	Units	4075586015 Result	MS Spike Conc.	MSD Spike Conc.	MS Result	MSD Result	MS % Rec	MSD % Rec	% Rec Limits	RPD	Max RPD	Qual
Total Organic Carbon	mg/L	9.9	25	25	39.1	39.0	117	116	80-120	0	20	

MATRIX SPIKE & MATRIX SPIKE DUPLICATE: 767684 767685

Parameter	Units	4075587002 Result	MS Spike Conc.	MSD Spike Conc.	MS Result	MSD Result	MS % Rec	MSD % Rec	% Rec Limits	RPD	Max RPD	Qual
Total Organic Carbon	mg/L	14.2	50	50	71.7	71.2	115	114	80-120	1	20	

This report shall not be reproduced, except in full,
without the written consent of Pace Analytical Services, Inc..

Pace Analytical Services, Inc.
9608 Loiret Blvd.
Lenexa, KS 66219
(913)599-5665

QUALIFIERS

Project: MARCH 2013 RICO WATER SAMPLING
Pace Project No.: 60141075

DEFINITIONS

DF - Dilution Factor, if reported, represents the factor applied to the reported data due to changes in sample preparation, dilution of the sample aliquot, or moisture content.

ND - Not Detected at or above adjusted reporting limit.

J - Estimated concentration above the adjusted method detection limit and below the adjusted reporting limit.

MDL - Adjusted Method Detection Limit.

PRL - Pace Reporting Limit.

RL - Reporting Limit.

S - Surrogate

1,2-Diphenylhydrazine (8270 listed analyte) decomposes to Azobenzene.

Consistent with EPA guidelines, unrounded data are displayed and have been used to calculate % recovery and RPD values.

LCS(D) - Laboratory Control Sample (Duplicate)

MS(D) - Matrix Spike (Duplicate)

DUP - Sample Duplicate

RPD - Relative Percent Difference

NC - Not Calculable.

SG - Silica Gel - Clean-Up

U - Indicates the compound was analyzed for, but not detected.

N-Nitrosodiphenylamine decomposes and cannot be separated from Diphenylamine using Method 8270. The result reported for each analyte is a combined concentration.

Pace Analytical is TNI accredited. Contact your Pace PM for the current list of accredited analytes.

TNI - The NELAC Institute.

LABORATORIES

PASI-G	Pace Analytical Services - Green Bay
PASI-K	Pace Analytical Services - Kansas City
PASI-M	Pace Analytical Services - Minneapolis

ANALYTE QUALIFIERS

B	Analyte was detected in the associated method blank.
M1	Matrix spike recovery exceeded QC limits. Batch accepted based on laboratory control sample (LCS) recovery.
M6	Matrix spike and Matrix spike duplicate recovery not evaluated against control limits due to sample dilution.

This report shall not be reproduced, except in full,
without the written consent of Pace Analytical Services, Inc..

Pace Analytical Services, Inc.
9608 Loiret Blvd.
Lenexa, KS 66219
(913)599-5665

QUALITY CONTROL DATA CROSS REFERENCE TABLE

Project: MARCH 2013 RICO WATER SAMPLING
Pace Project No.: 60141075

Lab ID	Sample ID	QC Batch Method	QC Batch	Analytical Method	Analytical Batch
60141075001	**DR-G_20130321**	EPA 200.7	MPRP/21998	EPA 200.7	ICP/17566
60141075002	**DR-4SW COMPOSITE_20130321**	EPA 200.7	MPRP/21998	EPA 200.7	ICP/17566
60141075003	**DR-4-SW_20130321**	EPA 200.7	MPRP/21998	EPA 200.7	ICP/17566
60141075004	**DR-7 COMPOSITE_20130321**	EPA 200.7	MPRP/21998	EPA 200.7	ICP/17566
60141075005	**DR-7_20130321**	EPA 200.7	MPRP/21998	EPA 200.7	ICP/17566
60141075006	**DR-2_20130321**	EPA 200.7	MPRP/21998	EPA 200.7	ICP/17566
60141075007	**DR-2 COMPOSITE_20130321**	EPA 200.7	MPRP/21998	EPA 200.7	ICP/17566
60141075008	**DR-11_20130321**	EPA 200.7	MPRP/21998	EPA 200.7	ICP/17566
60141075009	**DR-1COMPOSITE_20130321**	EPA 200.7	MPRP/21998	EPA 200.7	ICP/17566
60141075010	**DR-1_20130321**	EPA 200.7	MPRP/21998	EPA 200.7	ICP/17566
60141075001	**DR-G_20130321**	EPA 200.8	MPRP/38206	EPA 200.8	ICPM/15681
60141075002	**DR-4SW COMPOSITE_20130321**	EPA 200.8	MPRP/38206	EPA 200.8	ICPM/15681
60141075003	**DR-4-SW_20130321**	EPA 200.8	MPRP/38206	EPA 200.8	ICPM/15681
60141075004	**DR-7 COMPOSITE_20130321**	EPA 200.8	MPRP/38206	EPA 200.8	ICPM/15681
60141075005	**DR-7_20130321**	EPA 200.8	MPRP/38206	EPA 200.8	ICPM/15681
60141075006	**DR-2_20130321**	EPA 200.8	MPRP/38206	EPA 200.8	ICPM/15681
60141075007	**DR-2 COMPOSITE_20130321**	EPA 200.8	MPRP/38206	EPA 200.8	ICPM/15681
60141075008	**DR-11_20130321**	EPA 200.8	MPRP/38206	EPA 200.8	ICPM/15681
60141075009	**DR-1COMPOSITE_20130321**	EPA 200.8	MPRP/38206	EPA 200.8	ICPM/15681
60141075010	**DR-1_20130321**	EPA 200.8	MPRP/38206	EPA 200.8	ICPM/15681
60141075001	**DR-G_20130321**	EPA 200.8	MPRP/38208	EPA 200.8	ICPM/15705
60141075002	**DR-4SW COMPOSITE_20130321**	EPA 200.8	MPRP/38208	EPA 200.8	ICPM/15705
60141075003	**DR-4-SW_20130321**	EPA 200.8	MPRP/38208	EPA 200.8	ICPM/15705
60141075004	**DR-7 COMPOSITE_20130321**	EPA 200.8	MPRP/38208	EPA 200.8	ICPM/15705
60141075005	**DR-7_20130321**	EPA 200.8	MPRP/38208	EPA 200.8	ICPM/15705
60141075006	**DR-2_20130321**	EPA 200.8	MPRP/38208	EPA 200.8	ICPM/15705
60141075007	**DR-2 COMPOSITE_20130321**	EPA 200.8	MPRP/38208	EPA 200.8	ICPM/15705
60141075008	**DR-11_20130321**	EPA 200.8	MPRP/38208	EPA 200.8	ICPM/15705
60141075009	**DR-1COMPOSITE_20130321**	EPA 200.8	MPRP/38208	EPA 200.8	ICPM/15705
60141075010	**DR-1_20130321**	EPA 200.8	MPRP/38208	EPA 200.8	ICPM/15705
60141075001	**DR-G_20130321**	EPA 200.8	MPRP/21999	EPA 200.8	ICPM/2136
60141075002	**DR-4SW COMPOSITE_20130321**	EPA 200.8	MPRP/21999	EPA 200.8	ICPM/2136
60141075003	**DR-4-SW_20130321**	EPA 200.8	MPRP/21999	EPA 200.8	ICPM/2136
60141075004	**DR-7 COMPOSITE_20130321**	EPA 200.8	MPRP/21999	EPA 200.8	ICPM/2136
60141075005	**DR-7_20130321**	EPA 200.8	MPRP/21999	EPA 200.8	ICPM/2136
60141075006	**DR-2_20130321**	EPA 200.8	MPRP/21999	EPA 200.8	ICPM/2136
60141075007	**DR-2 COMPOSITE_20130321**	EPA 200.8	MPRP/21999	EPA 200.8	ICPM/2136
60141075008	**DR-11_20130321**	EPA 200.8	MPRP/21999	EPA 200.8	ICPM/2136
60141075009	**DR-1COMPOSITE_20130321**	EPA 200.8	MPRP/21999	EPA 200.8	ICPM/2136
60141075010	**DR-1_20130321**	EPA 200.8	MPRP/21999	EPA 200.8	ICPM/2136
60141075001	**DR-G_20130321**	EPA 245.1	MERP/8188	EPA 245.1	MERC/9266
60141075002	**DR-4SW COMPOSITE_20130321**	EPA 245.1	MERP/8188	EPA 245.1	MERC/9266
60141075003	**DR-4-SW_20130321**	EPA 245.1	MERP/8188	EPA 245.1	MERC/9266
60141075004	**DR-7 COMPOSITE_20130321**	EPA 245.1	MERP/8188	EPA 245.1	MERC/9266
60141075005	**DR-7_20130321**	EPA 245.1	MERP/8188	EPA 245.1	MERC/9266
60141075006	**DR-2_20130321**	EPA 245.1	MERP/8188	EPA 245.1	MERC/9266
60141075007	**DR-2 COMPOSITE_20130321**	EPA 245.1	MERP/8188	EPA 245.1	MERC/9266

This report shall not be reproduced, except in full,
without the written consent of Pace Analytical Services, Inc..

Pace Analytical Services, Inc.
9608 Loiret Blvd.
Lenexa, KS 66219
(913)599-5665

QUALITY CONTROL DATA CROSS REFERENCE TABLE

Project: MARCH 2013 RICO WATER SAMPLING
Pace Project No.: 60141075

Lab ID	Sample ID	QC Batch Method	QC Batch	Analytical Method	Analytical Batch
60141075008	**DR-11_20130321**	EPA 245.1	MERP/8188	EPA 245.1	MERC/9266
60141075009	**DR-1COMPOSITE_20130321**	EPA 245.1	MERP/8188	EPA 245.1	MERC/9266
60141075010	**DR-1_20130321**	EPA 245.1	MERP/8188	EPA 245.1	MERC/9266
60141075001	**DR-G_20130321**	EPA 245.1	MERP/8187	EPA 245.1	MERC/9265
60141075002	**DR-4SW COMPOSITE_20130321**	EPA 245.1	MERP/8187	EPA 245.1	MERC/9265
60141075003	**DR-4-SW_20130321**	EPA 245.1	MERP/8187	EPA 245.1	MERC/9265
60141075004	**DR-7 COMPOSITE_20130321**	EPA 245.1	MERP/8187	EPA 245.1	MERC/9265
60141075005	**DR-7_20130321**	EPA 245.1	MERP/8187	EPA 245.1	MERC/9265
60141075006	**DR-2_20130321**	EPA 245.1	MERP/8187	EPA 245.1	MERC/9265
60141075007	**DR-2 COMPOSITE_20130321**	EPA 245.1	MERP/8187	EPA 245.1	MERC/9265
60141075008	**DR-11_20130321**	EPA 245.1	MERP/8187	EPA 245.1	MERC/9265
60141075009	**DR-1COMPOSITE_20130321**	EPA 245.1	MERP/8187	EPA 245.1	MERC/9265
60141075010	**DR-1_20130321**	EPA 245.1	MERP/8187	EPA 245.1	MERC/9265
60141075001	**DR-G_20130321**	EPA 245.1	MERP/7201	EPA 245.1	MERC/7161
60141075002	**DR-4SW COMPOSITE_20130321**	EPA 245.1	MERP/7201	EPA 245.1	MERC/7161
60141075003	**DR-4-SW_20130321**	EPA 245.1	MERP/7201	EPA 245.1	MERC/7161
60141075004	**DR-7 COMPOSITE_20130321**	EPA 245.1	MERP/7201	EPA 245.1	MERC/7161
60141075005	**DR-7_20130321**	EPA 245.1	MERP/7201	EPA 245.1	MERC/7161
60141075006	**DR-2_20130321**	EPA 245.1	MERP/7201	EPA 245.1	MERC/7161
60141075007	**DR-2 COMPOSITE_20130321**	EPA 245.1	MERP/7201	EPA 245.1	MERC/7161
60141075008	**DR-11_20130321**	EPA 245.1	MERP/7201	EPA 245.1	MERC/7161
60141075009	**DR-1COMPOSITE_20130321**	EPA 245.1	MERP/7201	EPA 245.1	MERC/7161
60141075010	**DR-1_20130321**	EPA 245.1	MERP/7201	EPA 245.1	MERC/7161
60141075001	**DR-G_20130321**	SM 2510B	MT/11589		
60141075002	**DR-4SW COMPOSITE_20130321**	SM 2510B	MT/11589		
60141075003	**DR-4-SW_20130321**	SM 2510B	MT/11589		
60141075004	**DR-7 COMPOSITE_20130321**	SM 2510B	MT/11589		
60141075005	**DR-7_20130321**	SM 2510B	MT/11589		
60141075006	**DR-2_20130321**	SM 2510B	MT/11589		
60141075007	**DR-2 COMPOSITE_20130321**	SM 2510B	MT/11589		
60141075008	**DR-11_20130321**	SM 2510B	MT/11589		
60141075009	**DR-1COMPOSITE_20130321**	SM 2510B	MT/11589		
60141075010	**DR-1_20130321**	SM 2510B	MT/11611		
60141075001	**DR-G_20130321**	Calculated	MT/11612		
60141075002	**DR-4SW COMPOSITE_20130321**	Calculated	MT/11612		
60141075003	**DR-4-SW_20130321**	Calculated	MT/11612		
60141075004	**DR-7 COMPOSITE_20130321**	Calculated	MT/11612		
60141075005	**DR-7_20130321**	Calculated	MT/11612		
60141075006	**DR-2_20130321**	Calculated	MT/11612		
60141075007	**DR-2 COMPOSITE_20130321**	Calculated	MT/11612		
60141075008	**DR-11_20130321**	Calculated	MT/11612		
60141075009	**DR-1COMPOSITE_20130321**	Calculated	MT/11612		
60141075010	**DR-1_20130321**	Calculated	MT/11612		
60141075001	**DR-G_20130321**	SM 2320B	WET/40499		
60141075002	**DR-4SW COMPOSITE_20130321**	SM 2320B	WET/40499		
60141075003	**DR-4-SW_20130321**	SM 2320B	WET/40499		

This report shall not be reproduced, except in full,
without the written consent of Pace Analytical Services, Inc..

Pace Analytical Services, Inc.
9608 Loiret Blvd.
Lenexa, KS 66219
(913)599-5665

QUALITY CONTROL DATA CROSS REFERENCE TABLE

Project: MARCH 2013 RICO WATER SAMPLING
Pace Project No.: 60141075

Lab ID	Sample ID	QC Batch Method	QC Batch	Analytical Method	Analytical Batch
60141075004	**DR-7 COMPOSITE_20130321**	SM 2320B	WET/40499		
60141075005	**DR-7_20130321**	SM 2320B	WET/40499		
60141075006	**DR-2_20130321**	SM 2320B	WET/40499		
60141075007	**DR-2 COMPOSITE_20130321**	SM 2320B	WET/40499		
60141075008	**DR-11_20130321**	SM 2320B	WET/40499		
60141075009	**DR-1COMPOSITE_20130321**	SM 2320B	WET/40499		
60141075010	**DR-1_20130321**	SM 2320B	WET/40499		
60141075001	**DR-G_20130321**	SM 2540C	WET/40427		
60141075002	**DR-4SW COMPOSITE_20130321**	SM 2540C	WET/40427		
60141075003	**DR-4-SW_20130321**	SM 2540C	WET/40427		
60141075004	**DR-7 COMPOSITE_20130321**	SM 2540C	WET/40427		
60141075005	**DR-7_20130321**	SM 2540C	WET/40427		
60141075006	**DR-2_20130321**	SM 2540C	WET/40427		
60141075007	**DR-2 COMPOSITE_20130321**	SM 2540C	WET/40427		
60141075008	**DR-11_20130321**	SM 2540C	WET/40427		
60141075009	**DR-1COMPOSITE_20130321**	SM 2540C	WET/40427		
60141075010	**DR-1_20130321**	SM 2540C	WET/40427		
60141075001	**DR-G_20130321**	SM 2540D	WET/40413		
60141075002	**DR-4SW COMPOSITE_20130321**	SM 2540D	WET/40413		
60141075003	**DR-4-SW_20130321**	SM 2540D	WET/40413		
60141075004	**DR-7 COMPOSITE_20130321**	SM 2540D	WET/40413		
60141075005	**DR-7_20130321**	SM 2540D	WET/40413		
60141075006	**DR-2_20130321**	SM 2540D	WET/40413		
60141075007	**DR-2 COMPOSITE_20130321**	SM 2540D	WET/40413		
60141075008	**DR-11_20130321**	SM 2540D	WET/40414		
60141075009	**DR-1COMPOSITE_20130321**	SM 2540D	WET/40414		
60141075010	**DR-1_20130321**	SM 2540D	WET/40414		
60141075001	**DR-G_20130321**	SM 4500-S-2 D	WET/40458		
60141075002	**DR-4SW COMPOSITE_20130321**	SM 4500-S-2 D	WET/40458		
60141075003	**DR-4-SW_20130321**	SM 4500-S-2 D	WET/40458		
60141075004	**DR-7 COMPOSITE_20130321**	SM 4500-S-2 D	WET/40458		
60141075005	**DR-7_20130321**	SM 4500-S-2 D	WET/40458		
60141075006	**DR-2_20130321**	SM 4500-S-2 D	WET/40458		
60141075007	**DR-2 COMPOSITE_20130321**	SM 4500-S-2 D	WET/40458		
60141075008	**DR-11_20130321**	SM 4500-S-2 D	WET/40458		
60141075009	**DR-1COMPOSITE_20130321**	SM 4500-S-2 D	WET/40458		
60141075010	**DR-1_20130321**	SM 4500-S-2 D	WET/40458		
60141075001	**DR-G_20130321**	EPA 300.0	WETA/24080		
60141075002	**DR-4SW COMPOSITE_20130321**	EPA 300.0	WETA/24080		
60141075003	**DR-4-SW_20130321**	EPA 300.0	WETA/24080		
60141075004	**DR-7 COMPOSITE_20130321**	EPA 300.0	WETA/24080		
60141075005	**DR-7_20130321**	EPA 300.0	WETA/24080		
60141075006	**DR-2_20130321**	EPA 300.0	WETA/24080		
60141075007	**DR-2 COMPOSITE_20130321**	EPA 300.0	WETA/24080		
60141075008	**DR-11_20130321**	EPA 300.0	WETA/24080		
60141075009	**DR-1COMPOSITE_20130321**	EPA 300.0	WETA/24080		

This report shall not be reproduced, except in full,
without the written consent of Pace Analytical Services, Inc..

Pace Analytical Services, Inc.
9608 Loiret Blvd.
Lenexa, KS 66219
(913)599-5665

QUALITY CONTROL DATA CROSS REFERENCE TABLE

Project: MARCH 2013 RICO WATER SAMPLING
Pace Project No.: 60141075

Lab ID	Sample ID	QC Batch Method	QC Batch	Analytical Method	Analytical Batch
60141075010	**DR-1_20130321**	EPA 300.0	WETA/24080		
60141075001	**DR-G_20130321**	EPA 353.2	WETA/24014		
60141075002	**DR-4SW COMPOSITE_20130321**	EPA 353.2	WETA/24014		
60141075003	**DR-4-SW_20130321**	EPA 353.2	WETA/24014		
60141075005	**DR-7_20130321**	EPA 353.2	WETA/24014		
60141075006	**DR-2_20130321**	EPA 353.2	WETA/24014		
60141075007	**DR-2 COMPOSITE_20130321**	EPA 353.2	WETA/24014		
60141075008	**DR-11_20130321**	EPA 353.2	WETA/24014		
60141075009	**DR-1COMPOSITE_20130321**	EPA 353.2	WETA/24014		
60141075010	**DR-1_20130321**	EPA 353.2	WETA/24116		
60141075001	**DR-G_20130321**	SM 4500-CN-E	WETA/24020		
60141075002	**DR-4SW COMPOSITE_20130321**	SM 4500-CN-E	WETA/24020		
60141075003	**DR-4-SW_20130321**	SM 4500-CN-E	WETA/24020		
60141075004	**DR-7 COMPOSITE_20130321**	SM 4500-CN-E	WETA/24020		
60141075005	**DR-7_20130321**	SM 4500-CN-E	WETA/24020		
60141075006	**DR-2_20130321**	SM 4500-CN-E	WETA/24020		
60141075007	**DR-2 COMPOSITE_20130321**	SM 4500-CN-E	WETA/24020		
60141075008	**DR-11_20130321**	SM 4500-CN-E	WETA/24020		
60141075009	**DR-1COMPOSITE_20130321**	SM 4500-CN-E	WETA/24020		
60141075010	**DR-1_20130321**	SM 4500-CN-E	WETA/24020		
60141075001	**DR-G_20130321**	SM 5310C	WETA/16848		
60141075002	**DR-4SW COMPOSITE_20130321**	SM 5310C	WETA/16848		
60141075003	**DR-4-SW_20130321**	SM 5310C	WETA/16848		
60141075005	**DR-7_20130321**	SM 5310C	WETA/16848		
60141075006	**DR-2_20130321**	SM 5310C	WETA/16848		
60141075007	**DR-2 COMPOSITE_20130321**	SM 5310C	WETA/16848		
60141075008	**DR-11_20130321**	SM 5310C	WETA/16848		
60141075009	**DR-1COMPOSITE_20130321**	SM 5310C	WETA/16848		
60141075010	**DR-1_20130321**	SM 5310C	WETA/16848		

This report shall not be reproduced, except in full,
without the written consent of Pace Analytical Services, Inc..

Appendix E

Flow Cross Sections

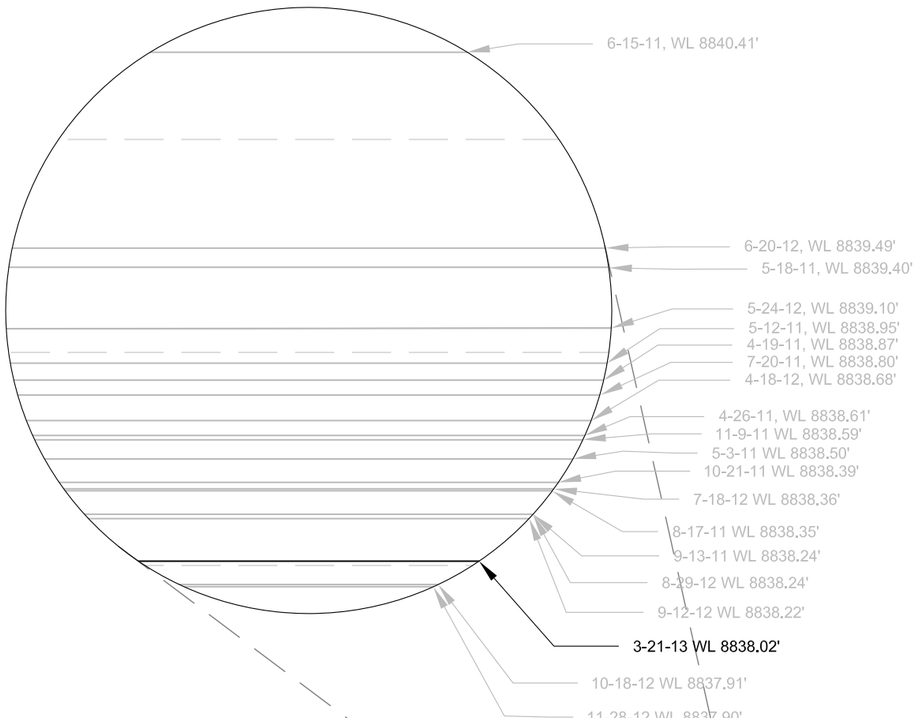

DR-1 CROSS SECTION

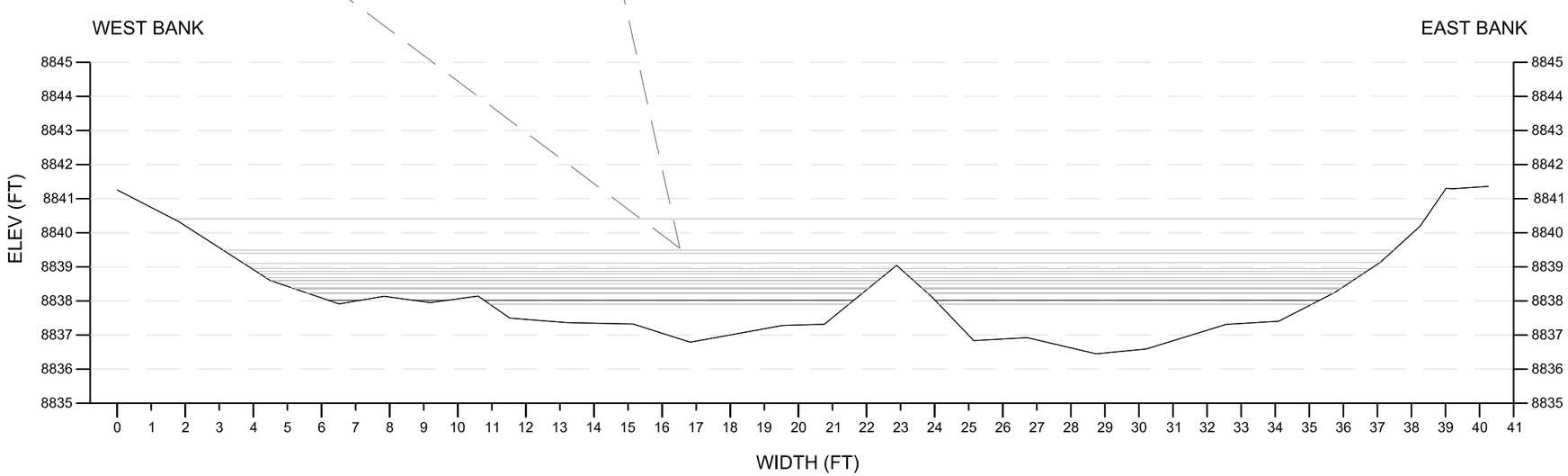

4 **CROSS SECTION AT DR-1**

SCALE - 1" = 4'

THESE PLANS AND SPECIFICATIONS ARE THE PROPERTY OF ANDERSON ENGINEERING COMPANY, INC., 977 WEST 2100 SOUTH, SALT LAKE CITY, UTAH, 84119 AND SHALL NOT BE COPIED, REDUCED, OR REPRODUCED WITHOUT THEIR WRITTEN PERMISSION.

General Notes

Scale in Feet
0 2 4

No.	Revision/Issue	Date

ATLANTIC RICHFIELD COMPANY

ANDERSON
ENGINEERING COMPANY, INC.

DRAWN BY: MAD
ENGINEER: CS, MAD
APPROVED:

RICO SURFACE WATER SAMPLING

DOLORES RIVER CROSS SECTION AT SAMPLING STATION DR-1

RICO, CO

Project
Date 21-MAR-2013
Scale
Figure 4

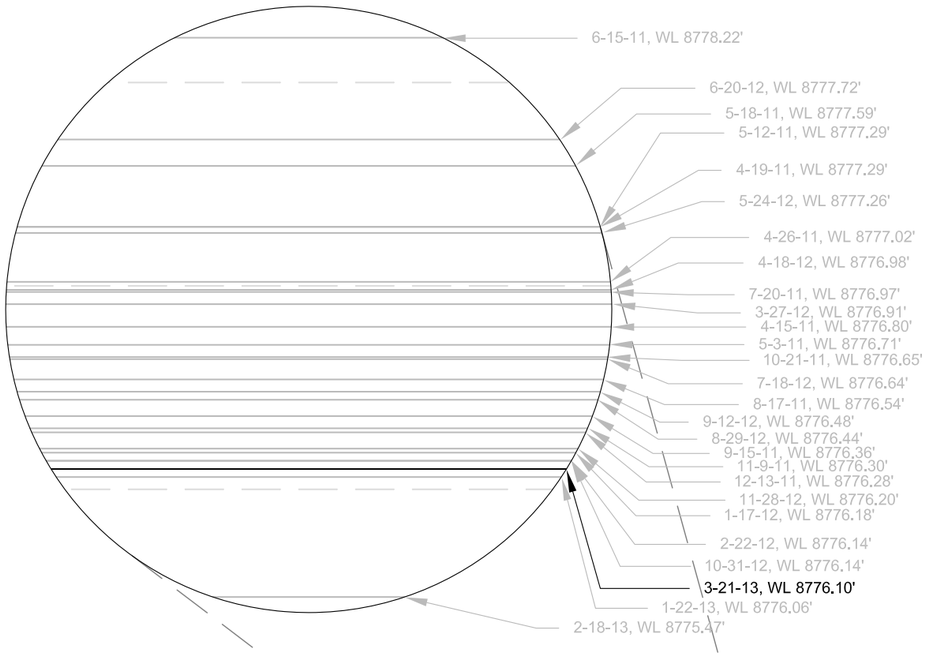

DR-2 CROSS SECTION

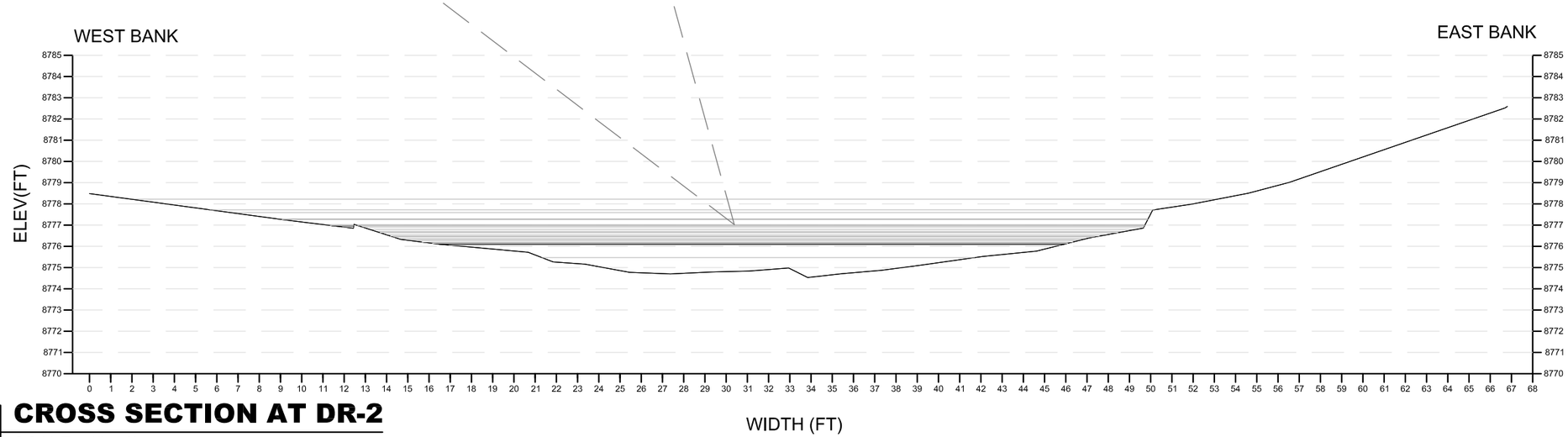

5 **CROSS SECTION AT DR-2**

SCALE - 1" = 6'

THESE PLANS AND SPECIFICATIONS ARE THE PROPERTY OF ANDERSON ENGINEERING COMPANY, INC., 977 WEST 2100 SOUTH, SALT LAKE CITY, UTAH, 84119 AND SHALL NOT BE COPIED, REDUCED, OR REPRODUCED WITHOUT THEIR WRITTEN PERMISSION.

General Notes

Scale in Feet

0 3 6

No.	Revision/Issue	Date

ATLANTIC RICHFIELD COMPANY

ANDERSON
ENGINEERING COMPANY, INC.

DRAWN BY: MAD
ENGINEER: CS, MAD
APPROVED:

RICO SURFACE WATER SAMPLING

DOLORES RIVER CROSS SECTION AT SAMPLING STATION DR-2

RICO, CO

Project	Figure
Date 21-MAR-2013	5
Scale	

DR-5 CROSS SECTION

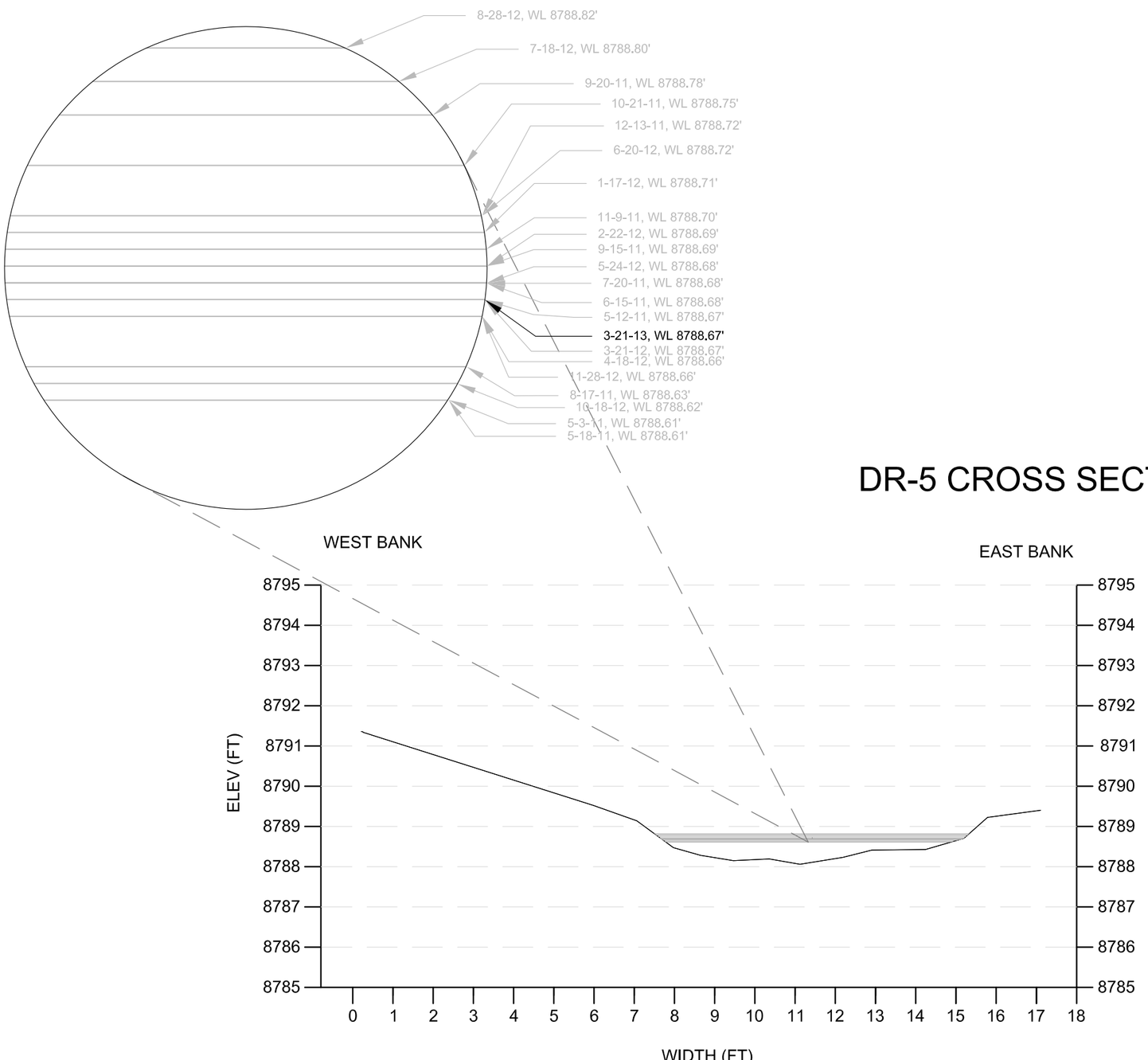

6 **CROSS SECTION AT DR-5**

SCALE - 1" = 3'

General Notes

Scale in Feet
0 1.5 3

No.	Revision/Issue	Date

ATLANTIC RICHFIELD COMPANY

ANDERSON
ENGINEERING COMPANY, INC.

DRAWN BY: MAD
ENGINEER: CS, MAD
APPROVED:

RICO SURFACE WATER SAMPLING

POND 8 EMBANKMENT CROSS SECTION AT SAMPLING STATION DR-5

RICO, CO

Project
Date 21-MAR-2013
Scale
Figure 6

THESE PLANS AND SPECIFICATIONS ARE THE PROPERTY OF ANDERSON ENGINEERING COMPANY, INC., 977 WEST 2100 SOUTH, SALT LAKE CITY, UTAH, 84119 AND SHALL NOT BE COPIED, REDUCED, OR REPRODUCED WITHOUT THEIR WRITTEN PERMISSION.

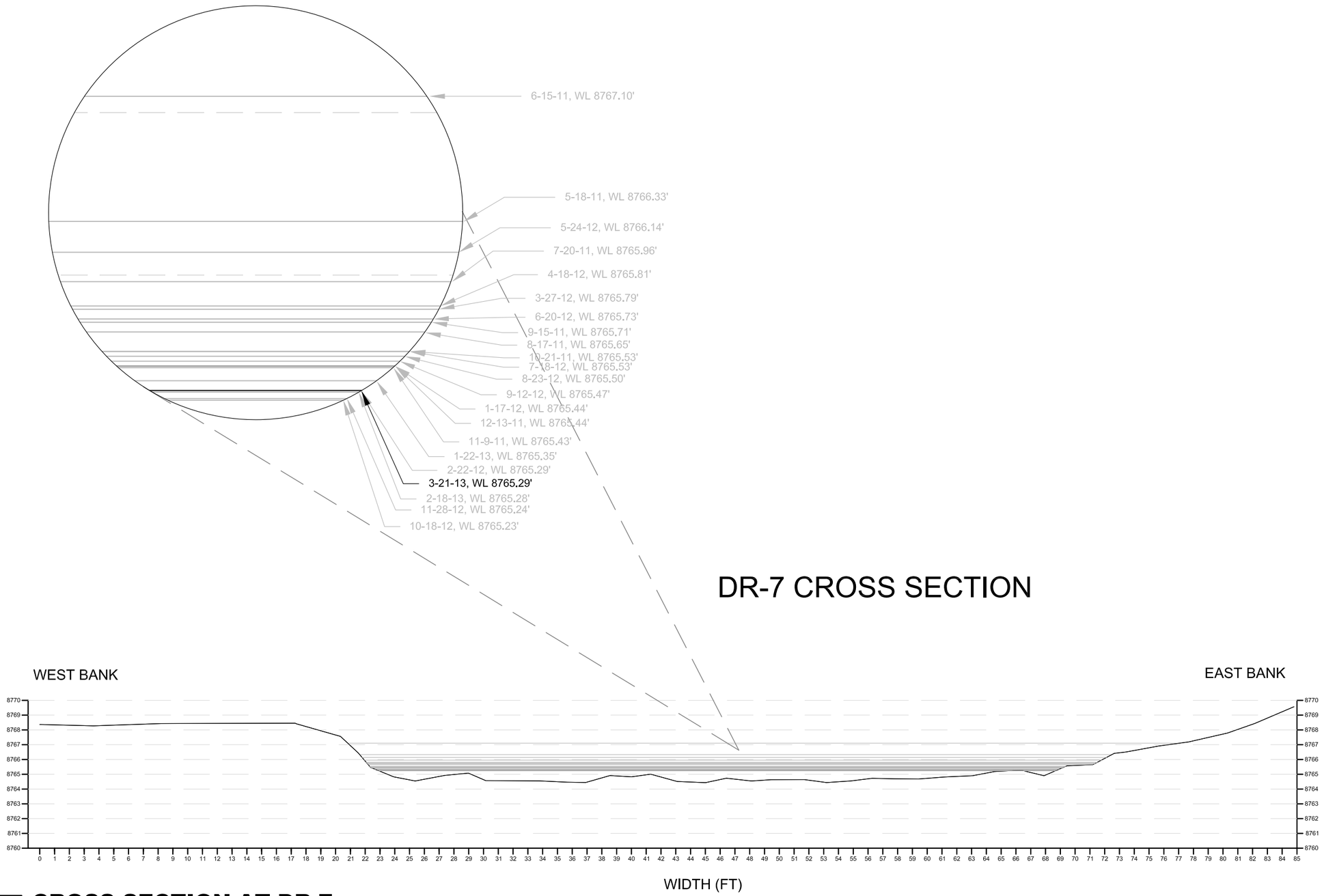

7 CROSS SECTION AT DR-7

SCALE - 1" = 7'

THESE PLANS AND SPECIFICATIONS ARE THE PROPERTY OF ANDERSON ENGINEERING COMPANY, INC., 977 WEST 2100 SOUTH, SALT LAKE CITY, UTAH, 84119 AND SHALL NOT BE COPIED, REDUCED, OR REPRODUCED WITHOUT THEIR WRITTEN PERMISSION.

General Notes

Scale in Feet
0 3.5 7

No.	Revision/Issue	Date

ATLANTIC RICHFIELD COMPANY

ANDERSON
ENGINEERING COMPANY, INC.

DRAWN BY: MAD
ENGINEER: CS, MAD
APPROVED:

RICO SURFACE WATER SAMPLING

DOLORES RIVER CROSS SECTION AT SAMPLING STATION DR-7

RICO, CO

Project
Date 21-MAR-2013
Scale
Figure 7

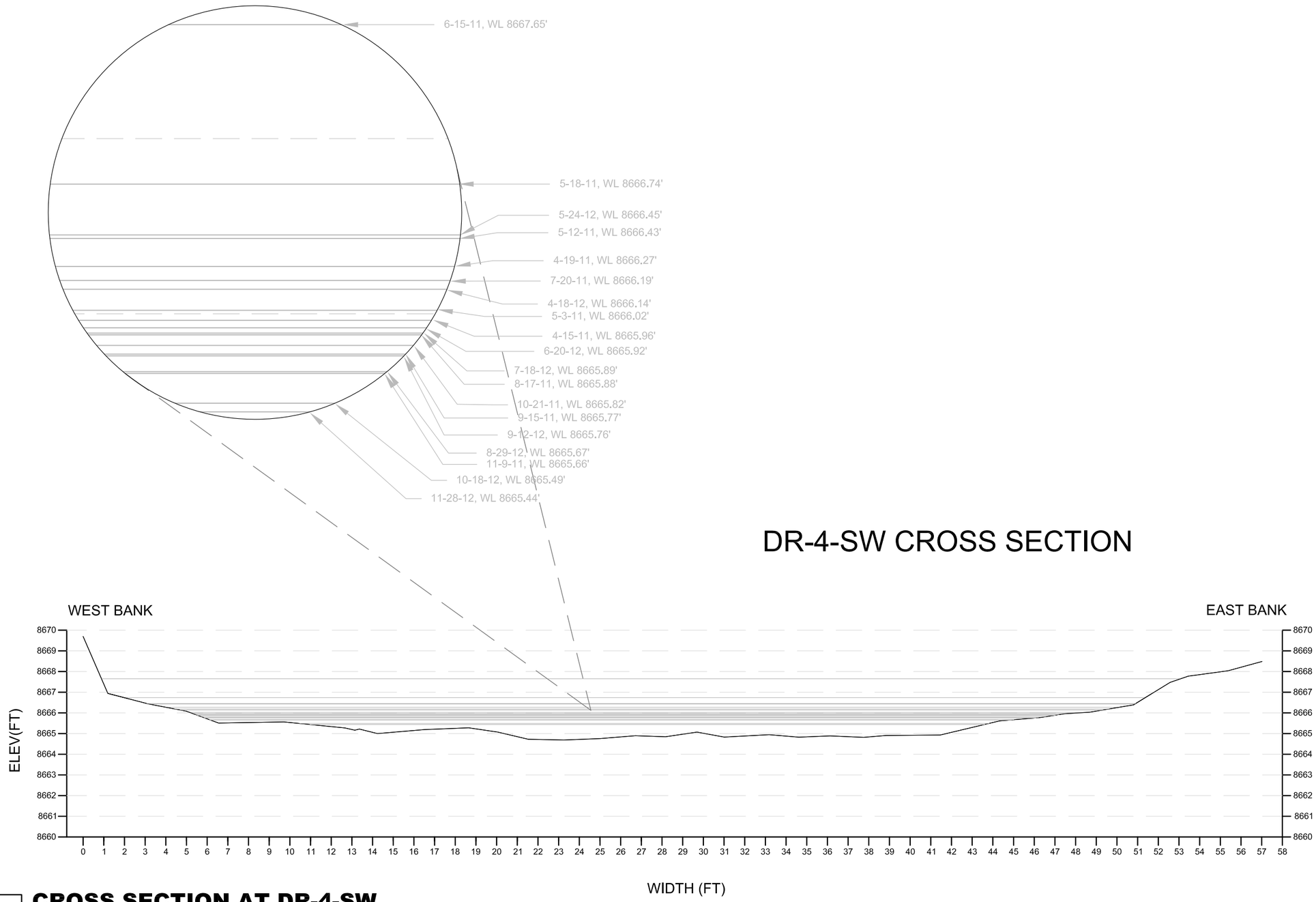

8 **CROSS SECTION AT DR-4-SW**

SCALE - 1" = 5'

General Notes

NOTE: COULD NOT OBTAIN FLOW DUE TO LARGE ICE SHELF OVER RIVER PREVENTING SAFE ACCESS

Scale in Feet
0 2.5 5

No.	Revision/Issue	Date

ATLANTIC RICHFIELD COMPANY

ANDERSON
ENGINEERING COMPANY, INC.

DRAWN BY: MAD
ENGINEER: CS, MAD
APPROVED:

RICO SURFACE WATER SAMPLING

DOLORES RIVER CROSS SECTION AT SAMPLING STATION DR-4-SW

RICO, CO

Project
Date 21-MAR-2013
Scale
Figure 8

THESE PLANS AND SPECIFICATIONS ARE THE PROPERTY OF ANDERSON ENGINEERING COMPANY, INC., 977 WEST 2100 SOUTH, SALT LAKE CITY, UTAH, 84119 AND SHALL NOT BE COPIED, REDUCED, OR REPRODUCED WITHOUT THEIR WRITTEN PERMISSION.

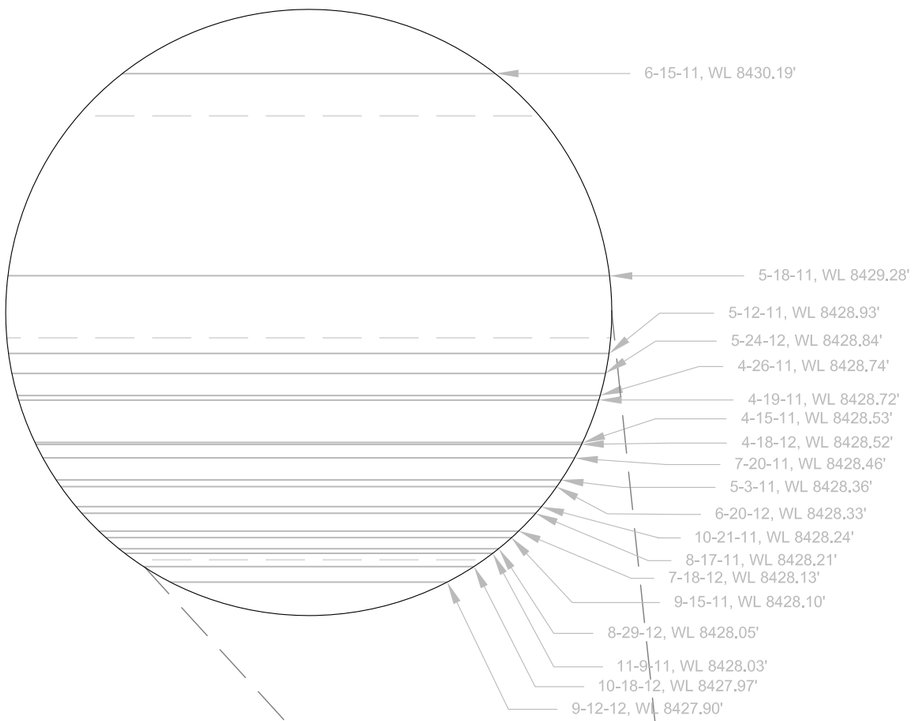

DR-G CROSS SECTION

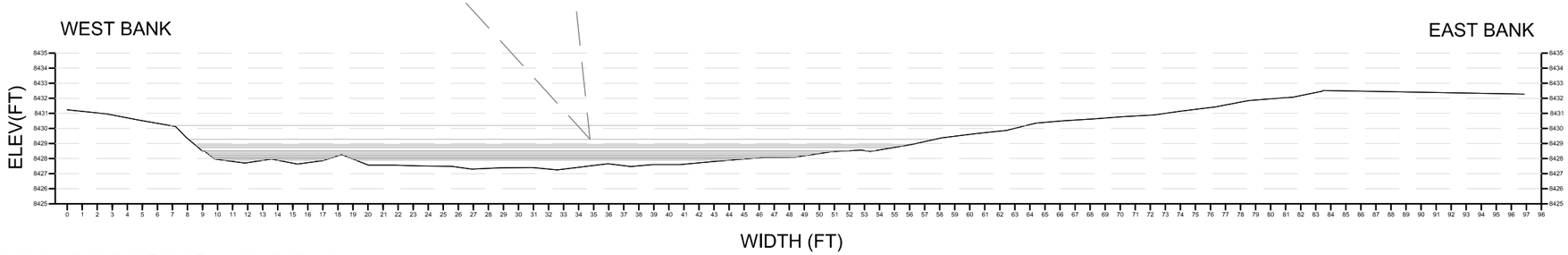

9 CROSS SECTION AT DR-G

SCALE - 1" = 9'

General Notes

NOTE: COULD NOT OBTAIN FLOW DUE TO LARGE ICE SHELF OVER RIVER PREVENTING SAFE ACCESS

Scale in Feet
0 4.5 9

No.	Revision/Issue	Date

ATLANTIC RICHFIELD COMPANY

ANDERSON ENGINEERING COMPANY, INC.

DRAWN BY: MAD
ENGINEER: CS, MAD
APPROVED:

RICO SURFACE WATER SAMPLING

DOLORES RIVER CROSS SECTION AT SAMPLING STATION DR-G

RICO, CO

Project
Date 21-MAR-2013
Scale
Figure 9

THESE PLANS AND SPECIFICATIONS ARE THE PROPERTY OF ANDERSON ENGINEERING COMPANY, INC., 977 WEST 2100 SOUTH, SALT LAKE CITY, UTAH, 84119 AND SHALL NOT BE COPIED, REDUCED, OR REPRODUCED WITHOUT THEIR WRITTEN PERMISSION.

Appendix F

Chain of Custody Records

Pace Analytical
www.pacelabs.com

Sample Condition Upon Receipt
ESI Tech Spec Client

WO#: 60139978

60139978

Client Name: BP Anderson

Optional
Proj Due Date:
Proj Name:

Courier: Fed Ex ☐ UPS ☑ USPS ☐ Client ☐ Commercial ☐ Pace ☐ Other ☐

Tracking #: 12733 W87 22 1005 7402 Pace Shipping Label Used? Yes ☑ No ☐

Custody Seal on Cooler/Box Present: Yes ☑ No ☐ Seals intact: Yes ☑ No ☐

Packing Material: Bubble Wrap ☐ Bubble Bags ☑ Foam ☐ None ☐ Other ☑ ZPLC

Thermometer Used: T-112 / T-194 **Type of Ice:** Wet Blue None ☐ Samples received on ice, cooling process has begun.
(circle one)

Cooler Temperature: 3.C

Temperature should be above freezing to 6°C

Date and initials of person examining contents: 3/8/13 BA

Chain of Custody present:	☑Yes	☐No	☐N/A	1.
Chain of Custody filled out:	☑Yes	☐No	☐N/A	2.
Chain of Custody relinquished:	☑Yes	☐No	☐N/A	3.
Sampler name & signature on COC:	☑Yes	☐No	☐N/A	4.
Samples arrived within holding time:	☑Yes	☐No	☐N/A	5.
Short Hold Time analyses (<72hr):	☐Yes	☑No	☐N/A	6.
Rush Turn Around Time requested:	☐Yes	☑No	☐N/A	7.
Sufficient volume:	☑Yes	☐No	☐N/A	8.
Correct containers used:	☑Yes	☐No	☐N/A	
Pace containers used:	☑Yes	☐No	☐N/A	9.
Containers intact:	☑Yes	☐No	☐N/A	10.
Unpreserved 5035A soils frozen w/in 48hrs?	☐Yes	☐No	☑N/A	11.
Filtered volume received for dissolved tests?	☑Yes	☐No	☐N/A	12.
Sample labels match COC: Includes date/time/ID/analyses Matrix: WT	☑Yes	☐No	☐N/A	EB-1: 1015 GW3: 0801 EB-2: 1100 ~~[illegible]~~ 13. GW7: 1230 MW-4 Shallow: 1230
All containers needing preservation have been checked.	☑Yes	☐No	☐N/A	
All containers needing preservation are found to be in compliance with EPA recommendation.	☑Yes	☐No	☐N/A	14.
Exceptions: VOA, coliform, TOC, O&G, WI-DRO (water), Phenolics	☑Yes	☐No		Initial when completed / Lot # of added preservative
Trip Blank present:	☐Yes	☐No	☑N/A	
Pace Trip Blank lot # (if purchased):				15.
Headspace in VOA vials (>6mm):	☐Yes	☐No	☑N/A	16.
Project sampled in USDA Regulated Area:	☐Yes	☐No	☑N/A	17. List State:

Client Notification/ Resolution: Copy COC to Client? Y / N Field Data Required? Y / N

Person Contacted: _____ Date/Time: _____

Comments/ Resolution: _____

Temp Log Record start and finish times when unpacking cooler, if >20 min, recheck sample temps.	
Start: 1100	Start:
End: 1110	End:
Temp:	Temp:

Project Manager Review: AMW Date: 3/8/13

ANDERSON
ENGINEERING COMPANY INC.

977 West 2100 South
Salt Lake City, UT
84119
(801) 972-6222
FAX (801) 972-6235

CHAIN OF CUSTODY RECORD

COC# _____
Page 1 of 1

Client: BP
Project: March 2013 Rico Water Sampling
AECI Contact Mark DeFriez (801) 234-9583

Lab Name: Pace Analytical Services
Lab Contact: Heather Wilson, (913) 563-1407
Lab Address: 9608 Loiret Blvd.
Lenexa, KS 66219

Matrix Codes
(W) Water
(S) Soil
(L) Liquid

QC: (circle one)
I II III IV

60139978

Field Location	Field Sample ID Number	Date	Time	Matrix	No. of Containers	Total Metals / Hardness / Silica	Potentially Dissolved Metals	Dissolved Metals	Alkalinity / TDS / TSS / Sulfate / Chloride	Cyanide	Salinity	Total Organic Carbon / Nitrate	Sulfide			COMMENTS
EB-1	EB-1_20130307	3/7/2013		W	8	X	X	X	X	X	X	X	X			1BP2U 1BP3U 2BP3N 1BP3F 1BP3C 1BP3Z 1AG3S
EB-2	EB-2_20130307	3/7/2013		W	8	X	X	X	X	X	X	X	X			
GW-7	GW-7_20130307	3/7/2013		W	8	X	X	X	X	X	X	X	X			
GW-3	GW-3_20130307	3/7/2013		W	5	X	X	X		X			X			3/8/13
MW-4 SHALLOW	MW-4 SHALLOW_20130307	3/7/2013		W	8	X	X	X	X	X	X	X	X			

Relinquished By: *signature*	Date	Time	Received By: *signature*		Time	Special Instructions
[signature]	3/7/13	1:30p	[signature]	3/8/13	1020	3.6°C
Relinquished By: *signature*	Date	Time	Received By: *signature*		Time	
Relinquished By: *signature*	Date	Time	Received By: *signature*		Time	
Relinquished By: *signature*	Date	Time	Received By: *signature*		Time	

FLD-002

Chain of Custody

4074836

Pace Analytical
www.pacelabs.com

Workorder: 60139978 **Workorder Name:** MARCH 2013 RICO WATER SAMPLING **Owner Received Date:** 3/8/2013 **Results Requested By:** 3/22/2013

Report To	Subcontract To
Heather Wilson Pace Analytical Services, Inc. 9608 Loiret Blvd. Lenexa, KS 66219 Phone (913)599-5665 Fax (913)599-1759	Pace Analytical Green Bay 1241 Bellevue Street Suite 9 Green Bay, WI 54302 Phone (920)469-2436

Item	Sample ID	Sample Type	Collect Date/Time	Lab ID	Matrix	Preserved Containers: H2SO4						Requested Analysis: 5310C TOC												LAB USE ONLY
1	EB-1_20130307 001	PS	3/7/2013 10:15	60139978001	Water	1						X												3-40ml ag c
2	EB-2_20130307 002	PS	3/7/2013 11:00	60139978002	Water	1						X												
3	GW-7_20130307 003	PS	3/7/2013 12:30	60139978003	Water	1						X												
4	MW-4 SHALLOW_201 30307 004	PS	3/7/2013 12:30	60139978005	Water	1						X												
5																								

Transfers	Released By	Date/Time	Received By	Date/Time
1	[illegible]	3/11/13 1700		
2	Fed Ex	3/12/13 1005	E Holding Pace GB	3/12/13 1005
3				

Comments: No Jflags

Cooler Temperature on Receipt 3 °C **Custody Seal** Y or N **Received on Ice** Y or N **Samples Intact** Y or N

Pace Analytical Services, Inc.
1241 Bellevue Street, Suite 9
Green Bay, WI 54302

Pace Analytical™

Sample Condition Upon Receipt

Client Name: Pace KS Project # 4074836

Courier: ☑ Fed Ex ☐ UPS ☐ USPS ☐ Client ☐ Commercial ☐ Pace Other _____

Tracking #: 5552 4796 1066

Custody Seal on Cooler/Box Present: ☑ yes ☐ no Seals intact: ☑ yes ☐ no

Custody Seal on Samples Present: ☐ yes ☑ no Seals intact: ☐ yes ☐ no

Packing Material: ☑ Bubble Wrap ☐ Bubble Bags ☐ None ☑ Other foam

Thermometer Used SR25 **Type of Ice:** (Wet) Blue Dry None ☑ Samples on ice, cooling process has begun

Cooler Temperature Uncorr: 3 /Corr: 3 **Biological Tissue is Frozen:** ☐ yes ☐ no

Temp Blank Present: ☑ yes ☐ no

Person examining contents:
Date: 3/12/13
Initials: EMH

Temp should be above freezing to 6°C for all sample except Biota.
Frozen Biota Samples should be received ≤ 0°C.

		Comments:
Chain of Custody Present:	☑Yes ☐No ☐N/A	1.
Chain of Custody Filled Out:	☑Yes ☐No ☐N/A	2.
Chain of Custody Relinquished:	☑Yes ☐No ☐N/A	3.
Sampler Name & Signature on COC:	☐Yes ☐No ☑N/A	4.
Samples Arrived within Hold Time:	☑Yes ☐No ☐N/A	5.
- VOA Samples frozen upon receipt	☐Yes ☐No	Date/Time:
Short Hold Time Analysis (<72hr):	☐Yes ☑No ☐N/A	6.
Rush Turn Around Time Requested:	☐Yes ☑No ☐N/A	7.
Sufficient Volume:	☑Yes ☐No ☐N/A	8.
Correct Containers Used:	☐Yes ☑No ☐N/A	9. No preservation info on samples. COC says they are H_2SO_4 preserved EMH 3/12/13
-Pace Containers Used:	☐Yes ☑No ☐N/A	
-Pace IR Containers Used:	☑Yes ☐No ☐N/A	
Containers Intact:	☑Yes ☐No ☐N/A	10.
Filtered volume received for Dissolved tests	☐Yes ☐No ☑N/A	11.
Sample Labels match COC: -Includes date/time/ID/Analysis Matrix: W	☐Yes ☑No ☐N/A	12. No dates or times on samples EMH 3/12/13
All containers needing preservation have been checked. (Non-Compliance noted in 13.)	☐Yes ☐No ☑N/A	13. ☐ HNO3 ☐ H2SO4 ☐ NaOH ☐ NaOH +ZnAct
All containers needing preservation are found to be in compliance with EPA recommendation. (HNO3, H2SO4 ≤2; NaOH+ZnAct ≥9, NaOH ≥12)	☐Yes ☐No ☑N/A	
exceptions: VOA, coliform, TOC, TOX, TOH, O&G, WIDROW, Phenolics, OTHER:	☑Yes ☐No	Initial when completed / Lab Std #ID of preservative / Date/Time:
Headspace in VOA Vials (>6mm):	☐Yes ☐No ☑N/A	14.
Trip Blank Present:	☐Yes ☐No ☑N/A	15.
Trip Blank Custody Seals Present	☐Yes ☐No ☑N/A	
Pace Trip Blank Lot # (if purchased):		

Client Notification/ Resolution: If checked, see attached form for additional comments ☐

Person Contacted: _____ Date/Time: _____

Comments/ Resolution: _____

Project Manager Review: CW **Date:** 3/12/13

Chain of Custody

10222279

Pace Analytical®
www.pacelabs.com

Workorder: 60139978 **Workorder Name:** MARCH 2013 RICO WATER SAMPLING **Owner Received Date:** 3/8/2013 **Results Requested By:** 3/22/2013

Report To	Subcontract To
Heather Wilson Pace Analytical Services, Inc. 9608 Loiret Blvd. Lenexa, KS 66219 Phone (913)599-5665 Fax (913)599-1759	Pace Analytical Minnesota 1700 Elm Street Suite 200 Minneapolis, MN 55414 Phone (612)607-1700

Item	Sample ID	Sample Type			Matrix	Preserved Containers: HNO3						Requested Analysis: 200.8 Metal + Hardness + Silica	200.8 Dissolved Metals	245.1 Total Mercury	245.1 Dissolved Mercury									LAB USE ONLY
1	EB-1_20130307	PS	3/7/2013 10:15	60139978001	Water	2						X	X	X	X									
2	EB-2_20130307	PS	3/7/2013 11:00	60139978002	Water	2						X	X	X	X									
3	GW-7_20130307	PS	3/7/2013 12:30	60139978003	Water	2						X	X	X	X									
4	GW-3_201 30307	PS	3/7/2013 08:01	60139978004	Water	2						X	X	X	X									
5	MW-4 SHALLOW_201 30307	PS	3/7/2013 12:30	60139978005	Water	2						X	X	X	X									

Transfers	Released By	Date/Time	Received By	Date/Time
1	[signature]	3/11/13 1700	JN/Pace	3/12/13/1020
2				
3				

Comments: No Jflags

Cooler Temperature on Receipt 3.0 °C **Custody Seal** Y or N **Received on Ice** Y or N **Samples Intact** Y or N

Pace Analytical	Document Name: Sample Condition Upon Receipt Form	Document Revised: 28Jan2013 Page 1 of 1
	Document No.: F-MN-L-213-rev.06	Issuing Authority: Pace Minnesota Quality Office

Sample Condition Upon Receipt

Client Name: Pace KS

Project #: WO#: 10222279

10222279

Courier: ☑ Fed Ex ☐ UPS ☐ USPS ☐ Client ☐ Commercial ☐ Pace ☐ Other: _____

Tracking Number: 5552 4796 1077

Custody Seal on Cooler/Box Present? ☑ Yes ☐ No **Seals Intact?** ☑ Yes ☐ No

Optional: Proj. Due Date: Proj. Name:

Packing Material: ☐ Bubble Wrap ☐ Bubble Bags ☐ None ☐ Other: _____ **Temp Blank?** ☑ Yes ☐ No

Thermom. Used: ☑ B88A912167504 ☐ 80512447 ☐ 72337080 **Type of Ice:** ☑ Wet ☐ Blue ☐ None ☐ Samples on ice, cooling process has begun

Cooler Temp Read (°C): 2.3 **Cooler Temp Corrected (°C):** 3.0 **Biological Tissue Frozen?** ☐ Yes ☐ No

Temp should be above freezing to 6°C **Correction Factor:** +.7 **Date and Initials of Person Examining Contents:** 3/12/13 LC

				Comments:
Chain of Custody Present?	☐ Yes	☐ No	☐ N/A	1.
Chain of Custody Filled Out?	☐ Yes	☐ No	☐ N/A	2.
Chain of Custody Relinquished?	☐ Yes	☐ No	☐ N/A	3.
Sampler Name and/or Signature on COC?	☐ Yes	☐ No	☐ N/A	4.
Samples Arrived within Hold Time?	☐ Yes	☐ No	☐ N/A	5.
Short Hold Time Analysis (<72 hr)?	☐ Yes	☐ No	☐ N/A	6.
Rush Turn Around Time Requested?	☐ Yes	☐ No	☐ N/A	7.
Sufficient Volume?	☐ Yes	☐ No	☐ N/A	8.
Correct Containers Used?	☐ Yes	☐ No	☐ N/A	9.
-Pace Containers Used?	☐ Yes	☐ No	☐ N/A	
Containers Intact?	☐ Yes	☐ No	☐ N/A	10.
Filtered Volume Received for Dissolved Tests?	☐ Yes	☐ No	☐ N/A	11.
Sample Labels Match COC? -Includes Date/Time/ID/Analysis Matrix: WT	☐ Yes	☐ No	☐ N/A	12.
All containers needing acid/base preservation have been checked? Noncompliances are noted in 13.	☑ Yes	☐ No	☐ N/A	13. ☑ HNO_3 ☐ H_2SO_4 ☐ NaOH ☐ HCl Sample # 2/2
All containers needing preservation are found to be in compliance with EPA recommendation? (HNO_3, H_2SO_4, HCl<2; NaOH>12)	☑ Yes	☐ No	☐ N/A	60139978-001-005
Exceptions: VOA, Coliform, TOC, Oil and Grease, WI-DRO (water)	☐ Yes	☐ No		Initial when completed: LC Lot # of added preservative:
Headspace in VOA Vials (>6mm)?	☐ Yes	☐ No	☐ N/A	14.
Trip Blank Present?	☐ Yes	☐ No	☐ N/A	15.
Trip Blank Custody Seals Present?	☐ Yes	☐ No	☐ N/A	
Pace Trip Blank Lot # (if purchased): _____				

CLIENT NOTIFICATION/RESOLUTION **Field Data Required?** ☐ Yes ☐ No

Person Contacted: _____ Date/Time: _____

Comments/Resolution: _____

Project Manager Review: _____ **Date:** 3/13/13

Note: Whenever there is a discrepancy affecting North Carolina compliance samples, a copy of this form will be sent to the North Carolina DEHNR Certification Office (i.e out of hold, incorrect preservative, out of temp, incorrect containers)

Pace Analytical	Document Name: Sample Container Count	Document Revised: 22Sept2011 Page 1 of 1
	Document No.: F-MN-C-090-Rev.00	Issuing Authority: Pace Minnesota Quality Office

Client: Pace KS **Project #:** _____

COC ID: _____ **COC Page** _____ of _____

Sample Line Item	DG9H	AG1U	WGFU	JGFU	BP2N	BP2U	BP2S	BP3N	BP3U	BP3S	AG3S	AG1H	VG9M	VG9H	VG9U	Comments
1								2								
2								2								
3								2								
4								2								
5								2								
6																
7																
8																
9																
10																
11																
12																

Container Codes:

DG9H	40mL HCL amber VOA vial	AF	Air Filter	BP1N	1 liter HNO3 plastic	DG9P	40mL TSP amber vial
AG1U	1liter unpreserved amber glass	AG1H	1 liter HCL amber glass	BP1S	1 liter H2SO4 plastic	DG9S	40mL H2SO4 amber vial
WGFU	4oz clear soil jar	AG1S	1 liter H2SO4 amber glass	BP1U	1 liter unpreserved plastic	DG9T	40mL Na Thio amber vial
R	terra core kit	AG1T	1 liter Na Thiosulfate amber glass	BP1Z	1 liter NaOH, Zn, Ac	DG9U	40mL unpreserved **amber** vial
BP2N	500mL HNO3 plastic	AG2N	500mL HNO3 amber glass	BP2A	500mL NaOH, Asc Acid plastic	I	Wipe/Swab
BP2U	500mL unpreserved plastic	AG2S	500mL H2SO4 amber glass	BP2O	500mL NaOH plastic	JGFU	4oz unpreserved amber wide
BP2S	500mL H2SO4 plastic	AG2U	500mL unpreserved amber glass	BP2Z	500mL NaOH, Zn Ac	U	Summa Can
BP3N	250mL HNO3 plastic	AG3U	250mL unpreserved amber glass	BP3A	250mL NaOh, Asc Acid plastic	VG9H	40mL HCL clear vial
BP3U	250mL unpreserved plastic	BG1H	1 liter HCL clear glass	BP3C	250mL NaOH plastic	VG9T	40mL Na Thio. clear vial
BP3S	250mL H2SO4 plastic	BG1S	1 liter H2SO4 clear glass	BP3Z	250mL NaOH, Zn Ac plastic	VG9U	40mL unpreserved **clear** vial
AG3S	250mL H2SO4 glass amber	BG1T	1 liter Na Thiosulfate clear glass	C	Air Cassettes	VSG	Headspace septa vial & HCL
AG1S	1 liter H2SO4 amber glass	BG1U	1 liter unpreserved glass	DG9B	40mL Na Bisulfate amber vial	WGFX	4oz wide jar w/hexane wipe
BP1U	1 liter unpreserved plastic	BP1A	1 liter NaOH, Asc Acid plastic	DG9M	40mL MeOH clear vial	ZPLC	Ziploc Bag

Chain of Custody

Pace Analytical
www.pacelabs.com

Workorder: 60139978 **Workorder Name:** MARCH 2013 RICO WATER SAMPLING **Owner Received Date:** 3/8/2013 **Results Requested By:** 3/22/2013

Report To	Subcontract To
Heather Wilson Pace Analytical Services, Inc. 9608 Loiret Blvd. Lenexa, KS 66219 Phone (913)599-5665 Fax (913)599-1759	Pace Analytical Billings MT 602 S 25th Street Billings, MT, MT 591014549 Phone (406) 254-7226

Requested Analysis

Preserved Containers

Item	Sample ID	Sample Type	Collect Date/Time	Lab ID	Matrix	none						Salinity												LAB USE ONLY
1	EB-1_20130307	PS	3/7/2013 10:15	60139978001	Water	1						X												001
2	EB-2_20130307	PS	3/7/2013 11:00	60139978002	Water	1						X												002
3	GW-7_20130307	PS	3/7/2013 12:30	60139978003	Water	1						X												003
4	MW-4 SHALLOW_201 30307	PS	3/7/2013 12:30	60139978005	Water	1						X												004
5																								

10222255

Transfers	Released By	Date/Time	Received By	Date/Time
1	[signature]	3/08/13 1700		
2	FedEx	3/12/13 1340	Norma C. Trombley/Pace	3/12/13 1340
3				

Comments: No Jflags

Cooler Temperature on Receipt 1.6 °C **Custody Seal** Y or N **Received on Ice** Y or N **Samples Intact** Y or N

Pace Analytical	Document Name: **Sample Condition Upon Receipt Form**	Document Revised: 14Nov2012 Page 1 of 1
	Document No.: **F-MT-C-184-rev.02**	Issuing Authority: Pace Montana Quality Office

Sample Condition Upon Receipt

Client Name: Pace - KS

Project #: WO#: 10222255 (10222255)

Courier: ☒ Fed Ex ☐ UPS ☐ USPS ☐ Client ☐ Commercial ☐ Pace ☐ Other:

Tracking Number: 5552 4796 1000

Custody Seal on Cooler/Box Present? ☒ Yes ☐ No **Seals Intact?** ☒ Yes ☐ No **Optional:** Proj. Due Date: Proj. Name:

Packing Material: ☒ Bubble Wrap ☐ Bubble Bags ☐ None ☒ Other: absorbent pad **Temp Blank?** ☒ Yes ☐ No

Thermometer Used: ☒ 1383045 ☐ 135 ☐ NA **Type of Ice:** ☒ Wet ☐ Blue ☐ None ☒ Samples on ice, cooling process has begun

Cooler Temp Read: 1.6 **Date and Initials of Person Examining Contents:** NCT 3/12/13

Cooler Temp Corrected: 1.6 **Biological Tissue Frozen?** ☐ Yes ☐ No

Temp should be above freezing to 6°C

				Comments:
Chain of Custody Present?	☒ Yes	☐ No	☐ N/A	1.
Chain of Custody Filled Out?	☒ Yes	☐ No	☐ N/A	2. See not on COC Re: 3 flags
Chain of Custody Relinquished?	☒ Yes	☐ No	☐ N/A	3.
Sampler Name and Signature on COC?	☐ Yes	☒ No	☐ N/A	4.
Samples Arrived within Hold Time?	☒ Yes	☐ No	☐ N/A	5.
Short Hold Time Analysis (<72 hr)?	☐ Yes	☒ No	☐ N/A	6.
Rush Turn Around Time Requested?	☐ Yes	☒ No	☐ N/A	7.
Sufficient Volume?	☒ Yes	☐ No	☐ N/A	8.
Correct Containers Used?	☒ Yes	☐ No	☐ N/A	9.
-Pace Containers Used?	☒ Yes	☐ No	☐ N/A	
Containers Intact?	☒ Yes	☐ No	☐ N/A	10.
Filtered Volume Received for Dissolved Tests?	☐ Yes	☐ No	☒ N/A	11.
Sample Labels Match COC? -Includes Date/Time/ID/Analysis Matrix: H_2O	☒ Yes	☐ No	☐ N/A	12.
All containers needing acid/base preservation have been checked? Noncompliances are noted in 13.	☐ Yes	☐ No	☒ N/A	13. ☐ HNO_3 ☐ H_2SO_4 ☐ NaOH ☐ HCl Sample #
All containers needing preservation are found to be in compliance with EPA recommendation? (HNO_3, H_2SO_4, HCl<2; NaOH>12)	☐ Yes	☐ No	☒ N/A	
Exceptions: VOA, Coliform, TOC, Oil and Grease, WI-DRO (water)	☐ Yes	☒ No		Initial when completed: Lot # of added preservative:
Samples checked for dechlorination?	☐ Yes	☐ No	☒ N/A	14.
Headspace in VOA Vials (>6mm)?	☐ Yes	☐ No	☒ N/A	15.
Trip Blank Present?	☐ Yes	☐ No	☒ N/A	16.
Trip Blank Custody Seals Present?	☐ Yes	☐ No	☒ N/A	
Pace Trip Blank Lot # (if purchased):				

CLIENT NOTIFICATION/RESOLUTION **Field Data Required?** ☐ Yes ☐ No

Person Contacted: Date/Time:

Comments/Resolution:

Project Manager Review: **Date:** 3-12-13

Note: Whenever there is a discrepancy affecting North Carolina compliance samples, a copy of this form will be sent to the North Carolina DEHNR Certification Office (i.e out of hold, incorrect preservative, out of temp, incorrect containers)

Pace Analytical®
www.pacelabs.com

Sample Condition Upon Receipt
ESI Tech Spec Client

WO#: 60140509

60140509

Client Name: BP Anderson

Optional
Proj Due Date:
Proj Name:

Courier: Fed Ex ☐ UPS ☑ USPS ☐ Client ☐ Commercial ☐ Pace ☐ Other ☐

Tracking #: 5253/5244/5235 (1273 3W8 7221 0055 2261 5262 1) Pace Shipping Label Used? Yes ☑ No ☐

Custody Seal on Cooler/Box Present: Yes ☑ No ☐ Seals intact: Yes ☑ No ☐

Packing Material: Bubble Wrap ☐ Bubble Bags ☐ Foam ☐ None ☐ Other ☑ ZPLC

Thermometer Used: T-112 / T-194 **Type of Ice:** Wet Blue None (circle one) ☐ Samples received on ice, cooling process has begun.

Cooler Temperature: 5.4, 5.0, 5.8, 5.2, 5.4

Date and initials of person examining contents: 3/15/13 BA

Temperature should be above freezing to 6°C

Chain of Custody present:	☑Yes	☐No	☐N/A	1.
Chain of Custody filled out:	☑Yes	☐No	☐N/A	2.
Chain of Custody relinquished:	☑Yes	☐No	☐N/A	3.
Sampler name & signature on COC:	☑Yes	☐No	☐N/A	4.
Samples arrived within holding time:	☑Yes	☐No	☐N/A	5.
Short Hold Time analyses (<72hr):	☑Yes	☐No	☐N/A	6. NO3
Rush Turn Around Time requested:	☐Yes	☑No	☐N/A	7.
Sufficient volume:	☑Yes	☐No	☐N/A	8.
Correct containers used:	☑Yes	☐No	☐N/A	
Pace containers used:	☑Yes	☐No	☐N/A	9.
Containers intact:	☑Yes	☐No	☐N/A	10.
Unpreserved 5035A soils frozen w/in 48hrs?	☐Yes	☐No	☑N/A	11.
Filtered volume received for dissolved tests?	☑Yes	☐No	☑N/A	12. BA 3/18/13
Sample labels match COC:	☑Yes	☐No	☐N/A	
Includes date/time/ID/analyses Matrix: WT				13.
All containers needing preservation have been checked.	☑Yes	☐No	☐N/A	
All containers needing preservation are found to be in compliance with EPA recommendation.	☑Yes	☐No	☐N/A	14.
Exceptions: VOA, coliform, TOC, O&G, WI-DRO (water), Phenolics	☑Yes	☐No		Initial when completed / Lot # of added preservative
Trip Blank present:	☐Yes	☐No	☑N/A	
Pace Trip Blank lot # (if purchased):				15.
Headspace in VOA vials (>6mm):	☐Yes	☐No	☑N/A	16.
Project sampled in USDA Regulated Area:	☐Yes	☐No	☑N/A	17. List State:

Client Notification/ Resolution: Copy COC to Client? Y / N Field Data Required? Y / N

Person Contacted: _____ Date/Time: _____

Comments/ Resolution: _____

Temp Log: Record start and finish times when unpacking cooler, if >20 min, recheck sample temps.	
Start: 1200	Start:
End: 1220	End:
Temp:	Temp:

Project Manager Review: [signature] Date: 3/18/13

ANDERSON
ENGINEERING COMPANY INC.

977 West 2100 South
Salt Lake City, UT
84119
(801) 972-6222
FAX (801) 972-6235

CHAIN OF CUSTODY RECORD

COC# _____
Page 1 of 2

Client: BP
Project: March 2013 Rico Water Sampling
AECI Contact Mark DeFriez (801) 234-9583

Lab Name: Pace Analytical Services
Lab Contact: Heather Wilson, (913) 563-1407
Lab Address: 9608 Loiret Blvd.
Lenexa, KS 66219

Matrix Codes
(W) Water
(S) Soil
(L) Liquid

QC: (circle one)
I II III IV

60140509

Field Location	Field Sample ID Number	Date	Time	Matrix	No. of Containers	Total Metals / Hardness / Silica	Potentially Dissolved Metals	Dissolved Metals	Alkalinity / TDS / TSS / Sulfate / Chloride	Cyanide	Salinity	Total Organic Carbon / Nitrate	Sulfide			COMMENTS
P13-102	P13-102_20130312	3/12/2013	15:25	W	8	X	X	X	X	X	X	X	X			1BP2U 1BP3U 1BP3C 12.5 1BP3Z 12.5 1BP3F 1.5 2BP3N 1.5 2AG3S 001
P13-103	P13-103_20130312	3/12/2013	15:46	W	8	X	X	X	X	X	X	X	X			002
MW-1 DEEP	MW-1 DEEP_20130312	3/12/2013	15:30	W	8	X	X	X	X	X	X	X	X			003
MW-1 SHALLOW	MW-1 SHALLOW_20130312	3/12/2013	15:14	W	8	X	X	X	X	X	X	X	X			004
MW-4 DEEP	MW-4 DEEP_20130312	3/12/2013	14:25	W	8	X	X	X	X	X	X	X	X			005
MW-6 DEEP	MW-6 DEEP_20130312	3/12/2013	13:20	W	8	X	X	X	X	X	X	X	X			006
MW-6 SHALLOW	MW-6 SHALLOW_20130312	3/12/2013	13:07	W	8	X	X	X	X	X	X	X	X			007
GW-1	GW-1_20130312	3/12/2013	12:45	W	8	X	X	X	X	X	X	X	X			008
DR-8	DR-8_20130312	3/12/2013	13:13	W	8	X	X	X	X	X	X	X	X			009
DR-3	DR-3_20130313	3/13/2013	16:21	W	8	X	X	X	X	X	X	X	X			010
DR-4	DR-4_20130313	3/13/2013	4:04 PM	W	8	X	X	X	X	X	X	X	X			011
DR-5	DR-5_20130313	3/13/2013	16:01	W	8	X	X	X	X	X	X	X	X			012
DR-6	DR-6_20130313	3/13/2013	15:57	W	8	X	X	X	X	X	X	X	X			013
DR-9	DR-9_20130313	3/13/2013	2:46 PM	W	8	X	X	X	X	X	X	X	X			014
MW-101	MW-101_20130313	3/13/2013	12:42	W	8	X	X	X	X	X	X	X	X			015
MW-102	MW-102_20130313	3/13/2013	11:37	W	8	X	X	X	X	X	X	X	X			016
MW-103	MW-103_20130313	3/13/2013	13:54	W	8	X	X	X	X	X	X	X	X			017
MW-104	MW-104_20130313	3/13/2013	2:45 PM	W	8	X	X	X	X	X	X	X	X			018
MW-2 DEEP	MW-2 DEEP_20130313	3/13/2013	15:10	W	8	X	X	X	X	X	X	X	X			019 ~~019~~
DR-10	DR-10_20130313	3/13/2013	12:55	W	8	X	X	X	X	X	X	X	X			019 020

Relinquished By: *signature*	Date	Time	Received By: *signature*		Time	Special Instructions
Joanne E Gusseman	3/14/13	13:30	UPS	3/14/13	13:30	
Relinquished By: *signature*	Date	Time	Received By: *signature*		Time	
			Benell Cks	3/15/13	1010	5.4° 5.0° 5.8° 5.2° 5.4°
Relinquished By: *signature*	Date	Time	Received By: *signature*		Time	
Relinquished By: *signature*	Date	Time	Received By: *signature*		Time	

FLD-002

ANDERSON
ENGINEERING COMPANY INC.

977 West 2100 South
Salt Lake City, UT
84119
(801) 972-6222
FAX (801) 972-6235

CHAIN OF CUSTODY RECORD

COC# _____
Page 2 of 2

Client: BP
Project: March 2013 Rico Water Sampling
AECI Contact Mark DeFriez (801) 234-9583

Lab Name: Pace Analytical Services
Lab Contact: Heather Wilson, (913) 563-1407
Lab Address: 9608 Loiret Blvd.
Lenexa, KS 66219

Matrix Codes
(W) Water
(S) Soil
(L) Liquid

QC: (circle one)
I II III IV

Field Location	Field Sample ID Number	Date	Time	Matrix	No. of Containers	Total Metals / Hardness / Silica	Potentially Dissolved Metals	Dissolved Metals	Alkalinity / TDS / TSS / Sulfate / Chloride	Cyanide	Salinity	Total Organic Carbon / Nitrate	Sulfide			COMMENTS
MW-3 DEEP	MW-3 DEEP_20130313	3/13/2013	15:50	W	8	X	X	X	X	X	X	X	X			1BP2U 1BP3U 1BP3C[1.5] 1BP3Z[10.5] 1BP3F[1.5] 2BP3N[1.5] 1AG3S 021
MW-5 DEEP	MW-5 DEEP_20130313	3/13/2013	13:07	W	8	X	X	X	X	X	X	X	X			022
MW-5 SHALLOW	MW-5 SHALLOW_20130313	3/13/2013	12:43	W	8	X	X	X	X	X	X	X	X			023
AT-2	AT-2_20130313	3/13/2013	11:00	W	8	X	X	X	X	X	X	X	X			024
FB	FB_20130313	3/13/2013	3:32 PM	W	8	X	X	X	X	X	X	X	X			025
GW-5	GW-5_20130314	3/14/2013	9:35	W	8	X	X	X	X	X	X	X	X			026
MW-204	MW-204_20130314	3/14/2013	9:10	W	8	X	X	X	X	X	X	X	X			027
GW-4	GW-4_20130314	3/14/2013	10:09	W	8	X	X	X	X	X	X	X	X			028
GW-3	GW-3_20130313	3/13/2013	15:08	W	3				X		X	X				1BP2U 1BP3U 1AG3S 028

Relinquished By: *signature*	Date	Time	Received By: *signature*		Time	Special Instructions
Joanne E Gessemann	3/14/13	13:30	UPS	3/14/13	13:30	
Relinquished By: *signature*	Date	Time	Received By: *signature*		Time	
			Benell Cl	3/15/13	1010	5.4° 5.0° 5.8° 5.2° 5.4°
Relinquished By: *signature*	Date	Time	Received By: *signature*		Time	
Relinquished By: *signature*	Date	Time	Received By: *signature*		Time	

FLD-002

Chain of Custody

Pace Analytical®
www.pacelabs.com

Workorder: 60140509 **Workorder Name:** MARCH 2013 RICO WATER SAMPLING **Owner Received Date:** 3/15/2013 **Results Requested By:** 3/29/2013

Report To	Subcontract To
Heather Wilson Pace Analytical Services, Inc. 9608 Loiret Blvd. Lenexa, KS 66219 Phone (913)599-5665 Fax (913)599-1759	Pace Analytical Billings MT 602 S 25th Street Billings, MT, MT 591014549 Phone (406) 254-7226

						Preserved Containers						Requested Analysis												
Item	Sample ID	Sample Type	Collect Date/Time	Lab ID	Matrix	none						Salinity												10222880 LAB USE ONLY
1	P13-102_20130312	PS	3/12/2013 15:25	60140509001	Water	1						X												001
2	P13-103_20130313	PS	3/12/2013 15:46	60140509002	Water	1						X												002
3	MW-1 DEEP_20130312	PS	3/12/2013 15:30	60140509003	Water	1						X												003
4	MW-1 SHALLOW_20130312	PS	3/12/2013 15:14	60140509004	Water	1						X												004
5	MW-4 DEEP_20130312	PS	3/12/2013 14:25	60140509005	Water	1						X												005
6	MW-6 DEEP_20130312	PS	3/12/2013 13:20	60140509006	Water	1						X												006
7	MW-6 SHALLOW_20130312	PS	3/12/2013 13:07	60140509007	Water	1						X												007
8	GW-1_20130312	PS	3/12/2013 12:45	60140509008	Water	1						X												008
9	DR-8_20130312	PS	3/12/2013 13:13	60140509009	Water	1						X												009
10	DR-3_20130313	PS	3/13/2013 16:21	60140509010	Water	1						X												010
11	DR-4_20130313	PS	3/13/2013 16:04	60140509011	Water	1						X												011
12	DR-5_20130313	PS	3/13/2013 16:01	60140509012	Water	1						X												012
13	DR-6_20130313	PS	3/13/2013 15:57	60140509013	Water	1						X												013
14	DR-9_20130313	PS	3/13/2013 14:46	60140509014	Water	1						X												014
15	MW-101_20130313	PS	3/13/2013 12:42	60140509015	Water	1						X												015
16	MW-102_20130313	PS	3/13/2013 11:37	60140509016	Water	1						X												016
17	MW-103_20130313	PS	3/13/2013 13:54	60140509017	Water	1						X												017
18	MW-104_20130313	PS	3/13/2013 14:45	60140509018	Water	1						X												018
19	DR-10_20130313	PS	3/13/2013 12:55	60140509019	Water	1						X												019

Chain of Custody

Pace Analytical®
www.pacelabs.com

Workorder: 60140509 **Workorder Name:** MARCH 2013 RICO WATER SAMPLING **Owner Received Date:** 3/15/2013 **Results Requested By:** 3/29/2013

Report To	Subcontract To
Heather Wilson Pace Analytical Services, Inc. 9608 Loiret Blvd. Lenexa, KS 66219 Phone (913)599-5665 Fax (913)599-1759	Pace Analytical Billings MT 602 S 25th Street Billings, MT, MT 591014549 Phone (406) 254-7226

Requested Analysis

Item	Sample ID	Sample Type	Collect Date/Time	Lab ID	Matrix	Preserved Containers: none	Salinity	LAB USE ONLY 10322880
20	MW-3 DEEP_20130313	PS	3/13/2013 15:50	60140509020	Water	1	X	020
21	MW-5 DEEP_20130313	PS	3/13/2013 13:07	60140509021	Water	1	X	021
22	MW-5 SHALLOW_20130313	PS	3/13/2013 12:43	60140509022	Water	1	X	022
23	AT-2_20130313	PS	3/13/2013 11:00	60140509023	Water	1	X	023
24	FB_20130313	PS	3/13/2013 15:32	60140509024	Water	1	X	024
25	GW-5_201 30314	PS	3/14/2013 09:35	60140509025	Water	1	X	025
26	MW-204_20130314	PS	3/14/2013 09:10	60140509026	Water	1	X	026
27	GW-4_20130314	PS	3/14/2013 10:09	60140509027	Water	1	X	027
28	GW-3_20130313	PS	3/13/2013 15:08	60140509028	Water	1	X	028
29	MW-2 DEEP_20130313	PS	3/13/2013 15:10	60140509029	Water	1	X	029

Transfers	Released By	Date/Time	Received By	Date/Time
1	[illegible]	3/18/13 1800		
2	FedEx		[illegible] Pace	3/19/13 0955
3				

Comments: No Jflags

Cooler Temperature on Receipt 2.6 °C Custody Seal (Y) or N Received on Ice (Y) or N Samples Intact (Y) or N

Pace Analytical	Document Name: **Sample Condition Upon Receipt Form**	Document Revised: 14Nov2012 Page 1 of 1
	Document No.: **F-MT-C-184-rev.02**	Issuing Authority: Pace Montana Quality Office

Sample Condition Upon Receipt

Client Name: Pace - KS

Project #: WO#: 10222880

10222880

Courier: ☒ Fed Ex ☐ UPS ☐ USPS ☐ Client ☐ Commercial ☐ Pace ☐ Other: _____

Tracking Number: 5652 4796 1386

Custody Seal on Cooler/Box Present? ☒ Yes ☐ No **Seals Intact?** ☒ Yes ☐ No

Optional: Proj. Due Date: Proj. Name:

Packing Material: ☒ Bubble Wrap ☐ Bubble Bags ☐ None ☐ Other: _____ **Temp Blank?** ☒ Yes ☐ No

Thermometer Used: ☒ 1383045 ☐ 135 ☐ NA **Type of Ice:** ☒ Wet ☐ Blue ☐ None ☒ Samples on ice, cooling process has begun

Cooler Temp Read: 2.6 **Date and Initials of Person Examining Contents:** _____

Cooler Temp Corrected: 2.6 **Biological Tissue Frozen?** ☐ Yes ☒ No

Temp should be above freezing to 6°C

Comments:

Chain of Custody Present?	☒ Yes	☐ No	☐ N/A	1.
Chain of Custody Filled Out?	☒ Yes	☐ No	☐ N/A	2.
Chain of Custody Relinquished?	☒ Yes	☐ No	☐ N/A	3.
Sampler Name and Signature on COC?	☐ Yes	☒ No	☐ N/A	4.
Samples Arrived within Hold Time?	☒ Yes	☐ No	☐ N/A	5.
Short Hold Time Analysis (<72 hr)?	☐ Yes	☒ No	☐ N/A	6.
Rush Turn Around Time Requested?	☐ Yes	☒ No	☐ N/A	7.
Sufficient Volume?	☒ Yes	☐ No	☐ N/A	8.
Correct Containers Used?	☒ Yes	☐ No	☐ N/A	9.
-Pace Containers Used?	☒ Yes	☐ No	☐ N/A	
Containers Intact?	☒ Yes	☐ No	☐ N/A	10.
Filtered Volume Received for Dissolved Tests?	☐ Yes	☐ No	☒ N/A	11.
Sample Labels Match COC? -Includes Date/Time/ID/Analysis Matrix: H_2O	☒ Yes	☐ No	☐ N/A	12.
All containers needing acid/base preservation have been checked? Noncompliances are noted in 13.	☐ Yes	☐ No	☒ N/A	13. ☐ HNO_3 ☐ H_2SO_4 ☐ NaOH ☐ HCl Sample #
All containers needing preservation are found to be in compliance with EPA recommendation? (HNO_3, H_2SO_4, HCl<2; NaOH>12)	☐ Yes	☐ No	☒ N/A	
Exceptions: VOA, Coliform, TOC, Oil and Grease, WI-DRO (water)	☐ Yes	☒ No		Initial when completed: _____ Lot # of added preservative: _____
Samples checked for dechlorination?	☐ Yes	☐ No	☒ N/A	14.
Headspace in VOA Vials (>6mm)?	☐ Yes	☐ No	☒ N/A	15.
Trip Blank Present?	☐ Yes	☐ No	☒ N/A	16.
Trip Blank Custody Seals Present?	☐ Yes	☐ No	☒ N/A	
Pace Trip Blank Lot # (if purchased): _____				

CLIENT NOTIFICATION/RESOLUTION **Field Data Required?** ☐ Yes ☐ No

Person Contacted: _____ Date/Time: _____

Comments/Resolution: _____

Project Manager Review: _____ **Date:** 3-19-13

ote: Whenever there is a discrepancy affecting North Carolina compliance samples, a copy of this form will be sent to the North Carolina DEHNR Certification Office (i.e out of old, incorrect preservative, out of temp, incorrect containers)

Chain of Custody

1129 -1131

Pace Analytical®
www.pacelabs.com

10222930

Workorder: 60140509 **Workorder Name:** MARCH 2013 RICO WATER SAMPLING **Owner Received Date:** 3/15/2013 **Results Requested By:** 3/29/2013

Report To	Subcontract To
Heather Wilson Pace Analytical Services, Inc. 9608 Loiret Blvd. Lenexa, KS 66219 Phone (913)599-5665 Fax (913)599-1759	Pace Analytical Minnesota 1700 Elm Street Suite 200 Minneapolis, MN 55414 Phone (612)607-1700

Item	Sample ID	Sample Type	Collect Date/Time	Lab ID	Matrix	Preserved Containers: HNO3						Requested Analysis: 200.8 Total Metal + Hardness + Silica	200.8 Dissolved Metals	245.1 Total Mercury	245.1 Dissolved Mercury									LAB USE ONLY
1	P13-102_20130312	PS	3/12/2013 15:25	60140509001	Water	2						X	X	X	X									
2	P13-103_20130313	PS	3/12/2013 15:46	60140509002	Water	2						X	X	X	X									
3	MW-1 DEEP_20130312	PS	3/12/2013 15:30	60140509003	Water	2						X	X	X	X									
4	MW-1 SHALLOW_20130312	PS	3/12/2013 15:14	60140509004	Water	2						X	X	X	X									
5	MW-4 DEEP_20130312	PS	3/12/2013 14:25	60140509005	Water	2						X	X	X	X									
6	MW-6 DEEP_20130312	PS	3/12/2013 13:20	60140509006	Water	2						X	X	X	X									
7	MW-6 SHALLOW_20130312	PS	3/12/2013 13:07	60140509007	Water	2						X	X	X	X									
8	GW-1_20130312	PS	3/12/2013 12:45	60140509008	Water	2						X	X	X	X									
9	DR-8_20130312	PS	3/12/2013 13:13	60140509009	Water	2						X	X	X	X									
10	DR-3_20130313	PS	3/13/2013 16:21	60140509010	Water	2						X	X	X	X									
11	DR-4_20130313	PS	3/13/2013 16:04	60140509011	Water	2						X	X	X	X									
12	DR-5_20130313	PS	3/13/2013 16:01	60140509012	Water	2						X	X	X	X									
13	DR-6_20130313	PS	3/13/2013 15:57	60140509013	Water	2						X	X	X	X									
14	DR-9_20130313	PS	3/13/2013 14:46	60140509014	Water	2						X	X	X	X									
15	MW-101_20130313	PS	3/13/2013 12:42	60140509015	Water	2						X	X	X	X									
16	MW-102_20130313	PS	3/13/2013 11:37	60140509016	Water	2						X	X	X	X									
17	MW-103_20130313	PS	3/13/2013 13:54	60140509017	Water	2						X	X	X	X									
18	MW-104_20130313	PS	3/13/2013 14:45	60140509018	Water	2						X	X	X	X									
19	DR-10_20130313	PS	3/13/2013 12:55	60140509019	Water	2						X	X	X	X									

Chain of Custody

Pace Analytical®
www.pacelabs.com

10222930

Workorder: 60140509 **Workorder Name:** MARCH 2013 RICO WATER SAMPLING **Owner Received Date:** 3/15/2013 **Results Requested By:** 3/29/2013

Report To	Subcontract To
Heather Wilson Pace Analytical Services, Inc. 9608 Loiret Blvd. Lenexa, KS 66219 Phone (913)599-5665 Fax (913)599-1759	Pace Analytical Minnesota 1700 Elm Street Suite 200 Minneapolis, MN 55414 Phone (612)607-1700

Item	Sample ID	Sample Type	Collect Date/Time	Lab ID	Matrix	Preserved Containers: HNO3						Requested Analysis: 200.8 Total Metal + Hardness + Silica	200.8 Dissolved Metals	245.1 Total Mercury	245.1 Dissolved Mercury									LAB USE ONLY
20	MW-3 DEEP_20130313	PS	3/13/2013 15:50	60140509020	Water	2						X	X	X	X									
21	MW-5 DEEP_20130313	PS	3/13/2013 13:07	60140509021	Water	2						X	X	X	X									
22	MW-5 SHALLOW_20130313	PS	3/13/2013 12:43	60140509022	Water	2						X	X	X	X									
23	AT-2_20130313	PS	3/13/2013 11:00	60140509023	Water	2						X	X	X	X									
24	FB_20130313	PS	3/13/2013 15:32	60140509024	Water	2						X	X	X	X									
25	GW-5_201 30314	PS	3/14/2013 09:35	60140509025	Water	2						X	X	X	X									
26	MW-204_20130314	PS	3/14/2013 09:10	60140509026	Water	2						X	X	X	X									
27	GW-4_20130314	PS	3/14/2013 10:09	60140509027	Water	2						X	X	X	X									
28	MW-2 DEEP_20130313	PS	3/13/2013 15:10	60140509029	Water	2						X	X	X	X									

X

ransfers	Released By	Date/Time	Received By	Date/Time
1	[signature]	3/08/13 1700	[signature] Pace	3/19/13 9:20
2				
3				

Comments

Use Profile 26985
No Jflags

Cooler Temperature on Receipt 6.1 °C **Custody Seal** Y or N **Received on Ice** Y or N **Samples Intact** Y or N

Pace Analytical	Document Name: Sample Condition Upon Receipt Form	Document Revised: 28Jan2013 Page 1 of 1
	Document No.: F-MN-L-213-rev.06	Issuing Authority: Pace Minnesota Quality Office

Sample Condition Upon Receipt

Client Name: Pasi, KS

Project #: WO#: 10222930

10222930

Courier: ☑ Fed Ex ☐ UPS ☐ USPS ☐ Client ☐ Commercial ☐ Pace ☐ Other:

Tracking Number: 5552 4796 1412

Custody Seal on Cooler/Box Present? ☑ Yes ☐ No **Seals Intact?** ☑ Yes ☐ No

Optional: Proj. Due Date: Proj. Name:

Packing Material: ☐ Bubble Wrap ☐ Bubble Bags ☑ None ☐ Other: **Temp Blank?** ☐ Yes ☑ No

Thermom. Used: ☐ B88A912167504 ☐ 80512447 ☑ 72337080 **Type of Ice:** ☐ Wet ☐ Blue ☑ None ☐ Samples on Ice, cooling process has begun

Cooler Temp Read (°C): 5.3 **Cooler Temp Corrected (°C):** 6.1 **Biological Tissue Frozen?** ☐ Yes ☐ No

Temp should be above freezing to 6°C **Correction Factor:** +.8 **Date and Initials of Person Examining Contents:** CLT 3/19/13

				Comments:
Chain of Custody Present?	☑ Yes	☐ No	☐ N/A	1.
Chain of Custody Filled Out?	☑ Yes	☐ No	☐ N/A	2.
Chain of Custody Relinquished?	☑ Yes	☐ No	☐ N/A	3.
Sampler Name and/or Signature on COC?	☐ Yes	☑ No	☐ N/A	4.
Samples Arrived within Hold Time?	☑ Yes	☐ No	☐ N/A	5.
Short Hold Time Analysis (<72 hr)?	☐ Yes	☑ No	☐ N/A	6.
Rush Turn Around Time Requested?	☐ Yes	☑ No	☐ N/A	7.
Sufficient Volume?	☑ Yes	☐ No	☐ N/A	8.
Correct Containers Used?	☑ Yes	☐ No	☐ N/A	9.
-Pace Containers Used?	☑ Yes	☐ No	☐ N/A	
Containers Intact?	☑ Yes	☐ No	☐ N/A	10.
Filtered Volume Received for Dissolved Tests?	☑ Yes	☑ No	☐ N/A	11. CLW 3/19/13
Sample Labels Match COC? -Includes Date/Time/ID/Analysis Matrix: WT	☑ Yes	☐ No	☐ N/A	12.
All containers needing acid/base preservation have been checked? Noncompliances are noted in 13.	☑ Yes	☐ No	☐ N/A	13. ☑ HNO_3 ☐ H_2SO_4 ☐ NaOH ☐ HCl Sample # 1-28 2/2
All containers needing preservation are found to be in compliance with EPA recommendation? (HNO_3, H_2SO_4, HCl<2; NaOH>12)	☑ Yes	☐ No	☐ N/A	
Exceptions: VOA, Coliform, TOC, Oil and Grease, WI-DRO (water)	☐ Yes	☐ No		Initial when completed: CLW Lot # of added preservative:
Headspace in VOA Vials (>6mm)?	☐ Yes	☐ No	☑ N/A	14.
Trip Blank Present?	☐ Yes	☐ No	☑ N/A	15.
Trip Blank Custody Seals Present?	☐ Yes	☐ No	☑ N/A	
Pace Trip Blank Lot # (If purchased):				

CLIENT NOTIFICATION/RESOLUTION **Field Data Required?** ☐ Yes ☐ No

Person Contacted: Date/Time:

Comments/Resolution:

Project Manager Review: Date: 3/20/13

Note: Whenever there is a discrepancy affecting North Carolina compliance samples, a copy of this form will be sent to the North Carolina DEHNR Certification Office (i.e out of hold, incorrect preservative, out of temp, incorrect containers)

Chain of Custody

4075263

Pace Analytical®
www.pacelabs.com

Workorder: 60140509 **Workorder Name:** MARCH 2013 RICO WATER SAMPLING **Owner Received Date:** 3/15/2013 **Results Requested By:** 3/29/2013

Report To	Subcontract To
Heather Wilson Pace Analytical Services, Inc. 9608 Loiret Blvd. Lenexa, KS 66219 Phone (913)599-5665 Fax (913)599-1759	Pace Analytical Green Bay 1241 Bellevue Street Suite 9 Green Bay, WI 54302 Phone (920)469-2436

						Preserved Containers						Requested Analysis												
Item	Sample ID	Sample Type	Collect Date/Time	Lab ID	Matrix	H2SO4						5310C TOC												LAB USE ONLY
1	P13-102_20130312	PS 001	3/12/2013 15:25	60140509001	Water	1						X												1-40ml ag
2	P13-103_20130313	PS 002	3/12/2013 15:46	60140509002	Water	1						X												
3	MW-1 DEEP_20130312	PS 003	3/12/2013 15:30	60140509003	Water	1						X												
4	MW-1 SHALLOW_20130312	PS 004	3/12/2013 15:14	60140509004	Water	1						X												
5	MW-4 DEEP_20130312	PS 005	3/12/2013 14:25	60140509005	Water	1						X												
6	MW-6 DEEP_20130312	PS 006	3/12/2013 13:20	60140509006	Water	1						X												
7	MW-6 SHALLOW_20130312	PS 007	3/12/2013 13:07	60140509007	Water	1						X												
8	GW-1_20130312	PS 008	3/12/2013 12:45	60140509008	Water	1						X												
9	DR-8_20130312	PS 009	3/12/2013 13:13	60140509009	Water	1						X												
10	DR-3_20130313	PS 010	3/13/2013 16:21	60140509010	Water	1						X												
11	DR-4_20130313	PS 011	3/13/2013 16:04	60140509011	Water	1						X												
12	DR-5_20130313	PS 012	3/13/2013 16:01	60140509012	Water	1						X												
13	DR-6_20130313	PS 013	3/13/2013 15:57	60140509013	Water	1						X												
14	DR-9_20130313	PS 014	3/13/2013 14:46	60140509014	Water	1						X												
15	MW-101_20130313	PS 015	3/13/2013 12:42	60140509015	Water	1						X												
16	MW-102_20130313	PS 016	3/13/2013 11:37	60140509016	Water	1						X												
17	MW-104_20130313	PS 017	3/13/2013 14:45	60140509018	Water	1						X												
18	DR-10_20130313	PS 018	3/13/2013 12:55	60140509019	Water	1						X												
19	MW-3 DEEP_20130313	PS 019	3/13/2013 15:50	60140509020	Water	1						X												

Chain of Custody

4075263

Pace Analytical®
www.pacelabs.com

Workorder: 60140509 **Workorder Name:** MARCH 2013 RICO WATER SAMPLING **Owner Received Date:** 3/15/2013 **Results Requested By:** 3/29/2013

Report To	Subcontract To
Heather Wilson Pace Analytical Services, Inc. 9608 Loiret Blvd. Lenexa, KS 66219 Phone (913)599-5665 Fax (913)599-1759	Pace Analytical Green Bay 1241 Bellevue Street Suite 9 Green Bay, WI 54302 Phone (920)469-2436

Item	Sample ID	Sample Type	Collect Date/Time	Lab ID	Matrix	Preserved Containers: H2SO4						Requested Analysis: 5310C TOC												LAB USE ONLY
20	MW-5 DEEP_20130313	PS 020	3/13/2013 13:07	60140509021	Water	1						X												1-40mlag C
21	MW-5 SHALLOW_20130313	PS 021	3/13/2013 12:43	60140509022	Water	1						X												
22	AT-2_20130313	PS 022	3/13/2013 11:00	60140509023	Water	1						X												
23	FB_20130313	PS 023	3/13/2013 15:32	60140509024	Water	1						X												
24	GW-5_201 30314	PS 024	3/14/2013 09:35	60140509025	Water	1						X												
25	MW-204_20130314	PS 025	3/14/2013 09:10	60140509026	Water	1						X												
26	GW-4_20130314	PS 026	3/14/2013 10:09	60140509027	Water	1						X												
27	GW-3_20130313	PS 027	3/13/2013 15:08	60140509028	Water	1						X												
28	MW-2 DEEP_20130313	PS 028	3/13/2013 15:10	60140509029	Water	1						X												

Transfers	Released By	Date/Time	Received By	Date/Time
1	[signature]	3/20/13 1700		
2	FedEx	3/21/13 1150	E. Holling Pace GB	3/21/13 1150
3				

Comments: No Jflags

Cooler Temperature on Receipt 2 °C **Custody Seal** Y or N **Received on Ice** Y or N **Samples Intact** Y or N

Pace Analytical Services, Inc.
1241 Bellevue Street, Suite 9
Green Bay, WI 54302

Pace Analytical™

Sample Condition Upon Receipt

Client Name: Pace KS Project # 4075263

Courier: ☑ Fed Ex ☐ UPS ☐ USPS ☐ Client ☐ Commercial ☐ Pace Other _____

Tracking #: 5552 4796 1684

Custody Seal on Cooler/Box Present: ☑ yes ☐ no Seals intact: ☑ yes ☐ no

Custody Seal on Samples Present: ☐ yes ☑ no Seals intact: ☐ yes ☐ no

Packing Material: ☐ Bubble Wrap ☐ Bubble Bags ☐ None ☐ Other _____

Thermometer Used SR45 **Type of Ice:** (Wet) Blue Dry None ☑ Samples on ice, cooling process has begun

Cooler Temperature Uncorr: 2 /Corr: 2 **Biological Tissue is Frozen:** ☐ yes ☐ no

Temp Blank Present: ☐ yes ☑ no

Person examining contents:
Date: 3/21/13
Initials: EMH

Temp should be above freezing to 6°C for all sample except Biota.
Frozen Biota Samples should be received ≤ 0°C.

		Comments:
Chain of Custody Present:	☑Yes ☐No ☐N/A	1.
Chain of Custody Filled Out:	☑Yes ☐No ☐N/A	2.
Chain of Custody Relinquished:	☑Yes ☐No ☐N/A	3.
Sampler Name & Signature on COC:	☐Yes ☐No ☑N/A	4.
Samples Arrived within Hold Time:	☑Yes ☐No ☐N/A	5.
- VOA Samples frozen upon receipt	☐Yes ☐No	Date/Time:
Short Hold Time Analysis (<72hr):	☐Yes ☑No ☐N/A	6.
Rush Turn Around Time Requested:	☑Yes ☐No ☐N/A	7.
Sufficient Volume:	☐Yes ☑No ☐N/A	8. No MS/MSD volume EMH 3/21/13
Correct Containers Used:	☐Yes ☑No ☐N/A	9. TOC volume received in 1-40mL vial EMH 3/21/13
-Pace Containers Used:	☐Yes ☑No ☐N/A	
-Pace IR Containers Used:	☑Yes ☐No ☐N/A	
Containers Intact:	☑Yes ☐No ☐N/A	10.
Filtered volume received for Dissolved tests	☐Yes ☐No ☑N/A	11.
Sample Labels match COC:	☑Yes ☐No ☐N/A	12.
-Includes date/time/ID/Analysis Matrix: W		
All containers needing preservation have been checked. (Non-Compliance noted in 13.)	☐Yes ☐No ☑N/A	13. ☐ HNO3 ☐ H2SO4 ☐ NaOH ☐ NaOH +ZnAct
All containers needing preservation are found to be in compliance with EPA recommendation. (HNO3, H2SO4 ≤2; NaOH+ZnAct ≥9, NaOH ≥12)	☐Yes ☐No ☑N/A	
exceptions: VOA, coliform, (TOC), TOX, TOH, O&G, WIDROW, Phenolics, OTHER:	☑Yes ☐No	Initial when completed / Lab Std #ID of preservative / Date/Time:
Headspace in VOA Vials (>6mm):	☐Yes ☐No ☑N/A	14.
Trip Blank Present:	☐Yes ☐No ☑N/A	15.
Trip Blank Custody Seals Present	☐Yes ☐No ☑N/A	
Pace Trip Blank Lot # (if purchased):		

If checked, see attached form for additional comments ☐

Client Notification/ Resolution:
Person Contacted: _____ Date/Time: _____
Comments/ Resolution: all labels are handwritten with KS #. Received -017 but not on COC. 3/21/13

per client add 60145096 17 ckv 3/21/13
MW-103 3/13/13 13:54 ckv 3/21/13

Project Manager Review: CH **Date:** 3/21/13

F-GB-C-031-Rev.01 (01Mar2013) SCUR Form

Pace Analytical
www.pacelabs.com

Sample Condition Upon Receipt

WO#: 60141075

60141075

Client Name: Anderson Eng.

Optional
Proj Due Date:
Proj Name:

Courier: Fed Ex ☐ UPS ☑ USPS ☐ Client ☐ Commercial ☐ Pace ☐ Other ☐

Tracking #: 1Z733W872210005 7386, 7395 Pace Shipping Label Used? Yes ☑ No ☐

Custody Seal on Cooler/Box Present: Yes ☑ No ☐ Seals intact: Yes ☑ No ☐

Packing Material: Bubble Wrap ☐ Bubble Bags ☑ Foam ☐ None ☐ Other ☑ Lplc

Thermometer Used: T-112 / T-194 **Type of Ice:** Wet Blue None (circle one) ☐ Samples received on ice, cooling process has begun.

Cooler Temperature: 2.0, 2.6

Temperature should be above freezing to 6°C

Date and initials of person examining contents: 3/23/13

Chain of Custody present:	☑Yes ☐No ☐N/A	1.
Chain of Custody filled out:	☑Yes ☐No ☐N/A	2.
Chain of Custody relinquished:	☑Yes ☐No ☐N/A	3.
Sampler name & signature on COC:	☑Yes ☐No ☐N/A	4.
Samples arrived within holding time:	☑Yes ☐No ☐N/A	5.
Short Hold Time analyses (<72hr):	☐Yes ☑No ☐N/A	6.
Rush Turn Around Time requested:	☐Yes ☑No ☐N/A	7.
Sufficient volume:	☑Yes ☐No ☐N/A	8.
Correct containers used:	☑Yes ☐No ☐N/A	
Pace containers used:	☑Yes ☐No ☐N/A	9.
Containers intact:	☑Yes ☐No ☐N/A	10.
Unpreserved 5035A soils frozen w/in 48hrs?	☐Yes ☐No ☑N/A	11.
Filtered volume received for dissolved tests?	☐Yes ☐No ☑N/A	12.
Sample labels match COC: Includes date/time/ID/analyses Matrix: WT	☑Yes ☐No ☐N/A	1 Broken AG3S for DR-7 comp 13.
All containers needing preservation have been checked.	☑Yes ☐No ☐N/A	
All containers needing preservation are found to be in compliance with EPA recommendation.	☑Yes ☐No ☐N/A	14.
Exceptions: VOA, coliform, TOC, O&G, WI-DRO (water), Phenolics	☐Yes ☑No	Initial when completed / Lot # of added preservative
Trip Blank present: Pace Trip Blank lot # (if purchased):	☐Yes ☐No ☑N/A	15.
Headspace in VOA vials (>6mm):	☐Yes ☐No ☑N/A	16.
Project sampled in USDA Regulated Area:	☐Yes ☐No ☑N/A	17. List State:

Client Notification/ Resolution: Copy COC to Client? Y / (N) Field Data Required? Y / N

Person Contacted: Mark DeFriez Date/Time: 3/25/13

Comments/ Resolution: Email - notify of broken AG3S for DR-7 Composite
AMW 3/25/13
Per Mark DeFriez follow sample IDs on -006 & -007 as the COC collection times were incorrect.
AMW 3/25/13

Project Manager Review: AMW Date: 3/25/13

ANDERSON
ENGINEERING COMPANY INC.

977 West 2100 South
Salt Lake City, UT
84119
(801) 972-6222
FAX (801) 972-6235

CHAIN OF CUSTODY RECORD

COC# _____
Page 1 of 1

Client: BP
Project: March 2013 Rico Water Sampling
AECI Contact Mark DeFriez (801) 234-9583

Lab Name: Pace Analytical Services
Lab Contact: Heather Wilson, (913) 563-1407
Lab Address: 9608 Loiret Blvd.
Lenexa, KS 66219

Matrix Codes
(W) Water
(S) Soil
(L) Liquid

QC: (circle one)
I II III IV

60141675

Field Location	Field Sample ID Number	Date	Time	Matrix	No. of Containers	Total Metals / Hardness / Silica	Potentially Dissolved Metals	Dissolved Metals	Alkalinity / TDS / TSS / Sulfate / Chloride	Cyanide	Salinity	Total Organic Carbon / Nitrate	Sulfide			COMMENTS
DR-G	DR-G_20130321	3/21/2013	9:15	W	8	X	X	X	X	X	X	X	X	1AG3S	2BP3N, 1BP3F, 1BP3U, 1BP2U, 1BP3C, 1BP3Z	CM
DR-4SW COMPOS	DR-4SW COMPOSITE_20130321	3/21/2013	10:00	W	8	X	X	X	X	X	X	X	X			CM
DR-4-SW	DR-4-SW_20130321	3/21/2013	10:02	W	8	X	X	X	X	X	X	X	X			CM
DR-7 COMPOSITE	DR-7 COMPOSITE_20130321	3/21/2013	12:04	W	8	X	X	X	X	X	X	X	X			CM
DR-7	DR-7_20130321	3/21/2013	12:06	W	8	X	X	X	X	X	X	X	X	1AG3S		CM
DR-2	DR-2_20130321	3/21/2013	13:57	W	8	X	X	X	X	X	X	X	X			CM
DR-2 COMPOSITE	DR-2 COMPOSITE_20130321	3/21/2013	14:05	W	8	X	X	X	X	X	X	X	X			CM
DR-11	DR-11_20130321	3/21/2013	14:06	W	8	X	X	X	X	X	X	X	X			CM
DR-1COMPOSITE	DR-1COMPOSITE_20130321	3/21/2013	14:45	W	8	X	X	X	X	X	X	X	X			CM
DR-1	DR-1_20130321	3/21/2013	14:43	W	8	X	X	X	X	X	X	X	X			CM

Relinquished By: *signature*	Date	Time	Received By: *signature*		Time	Special Instructions
Joanne E Grossman	3-22-13	11:00	E Brockett	3/23	0855	2.0 2.6
Relinquished By: *signature*	Date	Time	Received By: *signature*		Time	
Relinquished By: *signature*	Date	Time	Received By: *signature*		Time	
Relinquished By: *signature*	Date	Time	Received By: *signature*		Time	

FLD-002

Chain of Custody

Pace Analytical®
www.pacelab.com

Workorder: 60141075 **Workorder Name:** MARCH 2013 RICO WATER SAMPLING **Owner Received Date:** 3/23/2013 **Results Requested By:** 4/8/2013

Report To	Subcontract To
Heather Wilson Pace Analytical Services, Inc. 9608 Loiret Blvd. Lenexa, KS 66219 Phone (913)599-5665 Fax (913)599-1759	Pace Analytical Billings MT 602 S 25th Street Billings, MT, MT 591014549 Phone (406) 254-7226

Item	Sample ID	Sample Type	Collect Date/Time	Lab ID	Matrix	Preserved Containers: none	Requested Analysis: Salinity	LAB USE ONLY (10223631)
1	DR-G_20130321	PS	3/21/2013 09:15	60141075001	Water	1	X	001
2	DR-4SW COMPOSITE _20130321	PS	3/21/2013 10:00	60141075002	Water	1	X	002
3	DR-4-SW_20130321	PS	3/21/2013 10:02	60141075003	Water	1	X	003
4	DR-7 COMPOSITE_20130321	PS	3/21/2013 12:04	60141075004	Water	1	X	004
5	DR-7_20130321	PS	3/21/2013 12:06	60141075005	Water	1	X	005
6	DR-2_20130321	PS	3/21/2013 13:57	60141075006	Water	1	X	006
7	DR-2 COMPOSITE_20130321	PS	3/21/2013 14:05	60141075007	Water	1	X	007
8	DR-11_20130321	PS	3/21/2013 14:06	60141075008	Water	1	X	008
9	DR-1COMPOSITE_20130321	PS	3/21/2013 14:45	60141075009	Water	1	X	009
10	DR-1_20130321	PS	3/21/2013 14:43	60141075010	Water	1	X	010

Transfers	Released By	Date/Time	Received By	Date/Time
1	[signature]	3/25/13 1700		
2	Fedex	3/26/13 1335	Norma C Hamblin/Pace	3/26/13 1325
3				

Comments: No Jflags

Cooler Temperature on Receipt 3.4 °C **Custody Seal** Y or N **Received on Ice** Y or N **Samples Intact** Y or N

Pace Analytical	Document Name: **Sample Condition Upon Receipt Form**	Document Revised: 14Nov2012 Page 1 of 1
	Document No.: **F-MT-C-184-rev.02**	Issuing Authority: Pace Montana Quality Office

Sample Condition Upon Receipt

Client Name: Pace KS

Project #: WO#: 10223631

10223631

Courier: [X] Fed Ex [ ] UPS [ ] USPS [ ] Client [ ] Commercial [ ] Pace [ ] Other:

Tracking Number: 555247961846

Custody Seal on Cooler/Box Present? [X] Yes [ ] No **Seals Intact?** [ ] Yes [ ] No

Optional: Proj. Due Date: Proj. Name:

Packing Material: [X] Bubble Wrap [ ] Bubble Bags [ ] None [X] Other: NCT 3/26/13

Temp Blank? [X] Yes [ ] No

Thermometer Used: [X] 1383045 [ ] 135 [ ] NA **Type of Ice:** [X] Wet [ ] Blue [ ] None [X] Samples on ice, cooling process has begun

Cooler Temp Read: 3.4

Date and Initials of Person Examining Contents: NCT 3/26/13

Cooler Temp Corrected: 3.4

Biological Tissue Frozen? [ ] Yes [ ] No

Temp should be above freezing to 6°C

				Comments:
Chain of Custody Present?	[X] Yes	[ ] No	[ ] N/A	1.
Chain of Custody Filled Out?	[X] Yes	[ ] No	[ ] N/A	2.
Chain of Custody Relinquished?	[X] Yes	[ ] No	[ ] N/A	3.
Sampler Name and Signature on COC?	[ ] Yes	[X] No	[ ] N/A	4.
Samples Arrived within Hold Time?	[X] Yes	[ ] No	[ ] N/A	5.
Short Hold Time Analysis (<72 hr)?	[ ] Yes	[X] No	[ ] N/A	6.
Rush Turn Around Time Requested?	[ ] Yes	[X] No	[ ] N/A	7.
Sufficient Volume?	[X] Yes	[ ] No	[ ] N/A	8.
Correct Containers Used?	[X] Yes	[ ] No	[ ] N/A	9.
-Pace Containers Used?	[X] Yes	[ ] No	[ ] N/A	
Containers Intact?	[X] Yes	[ ] No	[ ] N/A	10.
Filtered Volume Received for Dissolved Tests?	[ ] Yes	[ ] No	[X] N/A	11.
Sample Labels Match COC? -Includes Date/Time/ID/Analysis Matrix: H_2O	[ ] Yes	[X] No	[ ] N/A	12. *see comments below
All containers needing acid/base preservation have been checked? Noncompliances are noted in 13.	[ ] Yes	[ ] No	[X] N/A	13. [ ] HNO_3 [ ] H_2SO_4 [ ] NaOH [ ] HCl
All containers needing preservation are found to be in compliance with EPA recommendation? (HNO_3, H_2SO_4, HCl<2; NaOH>12)	[ ] Yes	[ ] No	[X] N/A	Sample #
Exceptions: VOA, Coliform, TOC, Oil and Grease, WI-DRO (water)	[ ] Yes	[X] No		Initial when completed: Lot # of added preservative:
Samples checked for dechlorination?	[ ] Yes	[ ] No	[X] N/A	14.
Headspace in VOA Vials (>6mm)?	[ ] Yes	[ ] No	[X] N/A	15.
Trip Blank Present?	[ ] Yes	[ ] No	[X] N/A	16.
Trip Blank Custody Seals Present?	[ ] Yes	[ ] No	[X] N/A	
Pace Trip Blank Lot # (if purchased):				

CLIENT NOTIFICATION/RESOLUTION **Field Data Required?** [ ] Yes [ ] No

Person Contacted: Date/Time:

Comments/Resolution: *-006 & -007 seem to be mislabeled; -006 has KS-generated label id of DR-2-20130321, but client id on bottle is DR-2 COMP-20130321 & -007 has KS label id of DR-2COMPOSITE-20130321 while client label id is DR-2 201303. The times logged in as collected for each container is correct for the KS label, only the ids are in disagreement.

Project Manager Review: **Date:** 3-27-13

ote: Whenever there is a discrepancy affecting North Carolina compliance samples, a copy of this form will be sent to the North Carolina DEHNR Certification Office (i.e out of old, incorrect preservative, out of temp, incorrect containers)

Chain of Custody

4075412

EMHV

Pace Analytical®
www.pacelabs.com

Workorder: 60141075 **Workorder Name:** MARCH 2013 RICO WATER SAMPLING **Owner Received Date:** 3/23/2013 **Results Requested By:** 4/8/2013

Report To

Heather Wilson
Pace Analytical Services, Inc.
9608 Loiret Blvd.
Lenexa, KS 66219
Phone (913)599-5665
Fax (913)599-1759

Subcontract To

Pace Analytical Green Bay
1241 Bellevue Street
Suite 9
Green Bay, WI 54302
Phone (920)469-2436

Requested Analysis

	Item	Sample ID	Sample Type	Collect Date/Time	Lab ID	Matrix	Preserved Containers: H2SO4	5310C TOC	LAB USE ONLY
001	1	DR-G_20130321	PS	3/21/2013 09:15	60141075001	Water	1	X	1-40mlV C
002	2	DR-4SW COMPOSITE _20130321	PS	3/21/2013 10:00	60141075002	Water	1	X	
003	3	DR-4-SW_20130321	PS	3/21/2013 10:02	60141075003	Water	1	X	
004	4	DR-7_20130321	PS	3/21/2013 12:06	60141075005	Water	1	X	
005	5	DR-2_20130321	PS	3/21/2013 13:57	60141075006	Water	1	X	
006	6	DR-2 COMPOSITE_20130321	PS	3/21/2013 14:05	60141075007	Water	1	X	
007	7	DR-11_20130321	PS	3/21/2013 14:06	60141075008	Water	1	X	
008	8	DR-1COMPOSITE_20130321	PS	3/21/2013 14:45	60141075009	Water	1	X	
009	9	DR-1_20130321	PS	3/21/2013 14:43	60141075010	Water	1	X	

Transfers	Released By	Date/Time	Received By	Date/Time
1	[illegible]	3/25/13 1700		
2	FedEx	3/26/13 1045	Susan K Wyke	3/26/13 1045
3				

Comments

No Jflags

Cooler Temperature on Receipt 4.5 °C **Custody Seal** Y or N **Received on Ice** Y or N **Samples Intact** Y or N

Pace Analytical Services, Inc.
1241 Bellevue Street, Suite 9
Green Bay, WI 54302

Pace Analytical™

Sample Condition Upon Receipt

Client Name: Pace KS Project # 4075412

Courier: ☒ Fed Ex ☐ UPS ☐ USPS ☐ Client ☐ Commercial ☐ Pace Other _____

Tracking #: 0301 5552 4796 1835

Custody Seal on Cooler/Box Present: ☒ yes ☐ no Seals intact: ☒ yes ☐ no

Custody Seal on Samples Present: ☐ yes ☒ no Seals intact: ☐ yes ☐ no

Packing Material: ☐ Bubble Wrap ☐ Bubble Bags ☐ None ☒ Other foam

Thermometer Used SR41 Type of Ice: (Wet) Blue Dry None ☒ Samples on ice, cooling process has begun

Cooler Temperature Uncorr: 4.5 /Corr: 4.5 Biological Tissue is Frozen: ☐ yes ☐ no

Temp Blank Present: ☒ yes ☐ no

Person examining contents: Date: 3-26-13 Initials: SKW

Temp should be above freezing to 6°C for all sample except Biota.
Frozen Biota Samples should be received ≤ 0°C.

		Comments:
Chain of Custody Present:	☒ Yes ☐ No ☐ N/A	1.
Chain of Custody Filled Out:	☒ Yes ☐ No ☐ N/A	2.
Chain of Custody Relinquished:	☒ Yes ☐ No ☐ N/A	3.
Sampler Name & Signature on COC:	☐ Yes ☒ No ☐ N/A	4. IRWO 3/26/13 SKW
Samples Arrived within Hold Time:	☒ Yes ☐ No ☐ N/A	5.
- VOA Samples frozen upon receipt	☐ Yes ☒ No	Date/Time:
Short Hold Time Analysis (<72hr):	☐ Yes ☒ No ☐ N/A	6.
Rush Turn Around Time Requested:	☐ Yes ☒ No ☐ N/A	7.
Sufficient Volume:	☒ Yes ☐ No ☐ N/A	8.
Correct Containers Used:	☒ Yes ☐ No ☐ N/A	9.
-Pace Containers Used:	☐ Yes ☒ No ☐ N/A	
-Pace IR Containers Used:	☒ Yes ☐ No ☐ N/A	
Containers Intact:	☒ Yes ☐ No ☐ N/A	10.
Filtered volume received for Dissolved tests	☐ Yes ☐ No ☒ N/A	11.
Sample Labels match COC: -Includes date/time/ID/Analysis Matrix: W	☐ Yes ☒ No ☐ N/A	12. Only info on sample is Hand written sticker with Lab ID No preservation or Collect info. 3/26/ SKW
All containers needing preservation have been checked. (Non-Compliance noted in 13.)	☐ Yes ☐ No ☒ N/A	13. ☐ HNO3 ☐ H2SO4 ☐ NaOH ☐ NaOH +ZnAct
All containers needing preservation are found to be in compliance with EPA recommendation. (HNO3, H2SO4 ≤2; NaOH+ZnAct ≥9, NaOH ≥12)	☐ Yes ☐ No ☒ N/A	
exceptions: VOA, coliform, TOC, TOX, TOH, O&G, WIDROW, Phenolics, OTHER:	☒ Yes ☐ No	Initial when completed / Lab Std #ID of preservative / Date/Time:
Headspace in VOA Vials (>6mm):	☐ Yes ☒ No ☐ N/A	14.
Trip Blank Present:	☐ Yes ☒ No ☐ N/A	15.
Trip Blank Custody Seals Present	☐ Yes ☐ No ☒ N/A	
Pace Trip Blank Lot # (if purchased): _____		

Client Notification/ Resolution: If checked, see attached form for additional comments ☐

Person Contacted: _____ Date/Time: _____

Comments/ Resolution: _____

Project Manager Review: CW **Date:** 3/26/13

F-GB-C-031-Rev.01 (01Mar2013) SCUR Form

Chain of Custody

1130

10223548

Pace Analytical®
www.pacelabs.com

Workorder: 60141075 **Workorder Name:** MARCH 2013 RICO WATER SAMPLING **Owner Received Date:** 3/23/2013 **Results Requested By:** 4/8/2013

Report To	Subcontract To
Heather Wilson Pace Analytical Services, Inc. 9608 Loiret Blvd. Lenexa, KS 66219 Phone (913)599-5665 Fax (913)599-1759	Pace Analytical Minnesota 1700 Elm Street Suite 200 Minneapolis, MN 55414 Phone (612)607-1700

Item	Sample ID	Sample Type	Collect Date/Time	Lab ID	Matrix	Preserved Containers: HNO3						Requested Analysis: 200.8 Metal + Hardness + Silica	245.1 Total Mercury	200.8 Dissolved Metals	245.1 Dissolved Mercury									LAB USE ONLY
1	DR-G_20130321	PS	3/21/2013 09:15	60141075001	Water	2						X	X	X	X									
2	DR-4SW COMPOSITE _20130321	PS	3/21/2013 10:00	60141075002	Water	2						X	X	X	X									
3	DR-4-SW_20130321	PS	3/21/2013 10:02	60141075003	Water	2						X	X	X	X									
4	DR-7 COMPOSITE_20130321	PS	3/21/2013 12:04	60141075004	Water	2						X	X	X	X									
5	DR-7_20130321	PS	3/21/2013 12:06	60141075005	Water	2						X	X	X	X									
6	DR-2_20130321	PS	3/21/2013 13:57	60141075006	Water	2						X	X	X	X									
7	DR-2 COMPOSITE_20130321	PS	3/21/2013 14:05	60141075007	Water	2						X	X	X	X									
8	DR-11_20130321	PS	3/21/2013 14:06	60141075008	Water	2						X	X	X	X									
9	DR-1COMPOSITE_20130321	PS	3/21/2013 14:45	60141075009	Water	2						X	X	X	X									
10	DR-1_20130321	PS	3/21/2013 14:43	60141075010	Water	2						X	X	X	X									

Transfers	Released By	Date/Time	Received By	Date/Time
1	[signature]	3/25/13 1700	[signature]	3/26/13 10:02
2				
3				

Comments

Use Profile 26985

No Jflags

Cooler Temperature on Receipt 8.6 °C **Custody Seal** Y or N **Received on Ice** Y or N **Samples Intact** Y or N

Pace Analytical	Document Name: **Sample Container Count**	Document Revised: 21Mar2013 Page 1 of 1
	Document No.: **F-MN-C-090-Rev.01**	Issuing Authority: Pace Minnesota Quality Office

Client: _____ **Project #:** _____ **COC ID:** _____ **COC Page:** ____ **of** ____

Sample Line Item	BP1U	AG1U	BJFU	JGFU	BP2N	BP2U	BP2S	BP3N	BP3U	BP3S	AG3S	AG1H	VG9M	VG9H	VG9U			
☐	Check the box to the left to indicate that the container(s) received for line items - are identical to the container(s) documented for line item 1 for this CoC.																	
1								2										
2								2										
3								2										
4								2										
5								2										
6								2										
7								2										
8								2										
9								2										
10								2										
11																		
12																		

Comments:

Container Codes:

AF	Air Filter	BJFM	4 oz clear jar MeOH	BP3Z	250 mL plastic NaOH, Zn Ac	GNN	General preserved with Nitric Acid	U	Summa Can
AG1H	1 L amber glass HCL	BJFU	4 oz clear wide jar	BP4N	125 mL plastic HNO3	GNS	General preserved with H2SO4	VG9B	40 mL clear VOA vial Na Bisulfate
AG1S	1 L amber glass H2SO4	BJTM	2 oz clear MeOH	BP4U	125 mL plastic unpreserved	I	Wipe/Swab	VG9H	40 mL clear VOA vial HCl
AG1T	1 L amber glass Na Thiosulfate	BJTU	2 oz clear wide jar	BPB	Brown paper bag	JGCU	8 oz clear wide jar	VG9M	40 mL clear VOA vial MeOH
AG1U	1 L amber glass unpreserved	BP1A	1 L plastic NaOH	C	Air Cassettes	JGFM	4 oz amber wide jar MeOH	VG9S	40 mL clear VOA vial H2SO4
AG2H	500 mL amber glass HCl	BP1N	1 L plastic HNO3	CT	Carbon Filter Tubes	JGFS	4 oz amber wide jar H2SO4	VG9T	40 mL clear VOA vial Na Thiosulfate
AG2N	500 mL amber glass HNO3	BP1S	1 L plastic H2SO4	DG9H	40 mL amber VOA vial HCl	JGFU	4 oz amber wide jar	VG9U	40 mL clear VOA vial
AG2S	500 mL amber glass H2SO4	BP1U	1 L plastic unpreserved	DG9T	40 mL amber VOA vial Na Thio	JGLU	32 oz clear wide jar	VG9W	40 mL clear VOA vial DI Water/stir bar
AG2U	500 mL amber unpreserved	BP1Z	1 L plastic NaOH, Zn Ac	DG9U	40 mL amber VOA vial	KE	Endotoxin kit	VSG	Headspace septa vial and HCl
AG3H	250 mL amber glass HCl	BP2A	500 mL plastic NaOH	DIG	Lab digestate container	KL	Legionella kit	VSGU	20 mL scintillation vial
AG3S	250 mL amber glass H2SO4	BP2N	500 mL plastic HNO3	DWC	Dry weight container	M	Plate media	WGFC	4 oz wide jar and wipe with MeCl
AG3U	250 mL amber glass unpreserved	BP2S	500 mL plastic H2SO4	EXT	Lab extract container	NONE	No container needed	WGFU	4 oz wide jar unpreserved
AG4S	120 mL amber glass H2SO4	BP2U	500 mL plastic unpreserved	EZH	25 g Encore	PB	Clear zip-lock bag	WGFX	4 oz wide jar and wipe Hexane
AG4U	125 mL amber glass unpreserved	BP2Z	500 mL NaOH, Zn Ac	EZI	5 g Encore	PUF	Polyurethane Foam	WK	WhirlPak bag
BG1H	1 L clear glass HCl	BP3A	250 mL plastic NaOH, Asc Acid	F	Large air filter	SC	Solo cup	WPDU	16 oz clear wide mouth jar
BG1S	1 L clear glass H2SO4	BP3N	250 mL plastic HNO3	GJ	1 Gallon jug	SP5T	120 mL Coliform NA Thiosulfate	XAD	XAD trap
BG1T	1 L clear glass Na Thiosulfate	BP3S	250 mL plastic H2SO4	GN	General unpreserved	T	Tedlar Bag	ZPLC	Ziploc Bag
BG1U	1 L clear glass unpreserved	BP3U	250 mL plastic unpreserved	GNHC	General preserved with HCl	TDT	Thermal desorption tube		

Pace Analytical®	Document Name: Sample Condition Upon Receipt Form	Document Revised: 28Jan2013 Page 1 of 1
	Document No.: F-MN-L-213-rev.06	Issuing Authority: Pace Minnesota Quality Office

Sample Condition Upon Receipt

Client Name: Pace, KS

Project #: WO# : 10223548

10223548

Courier: ☑ Fed Ex ☐ UPS ☐ USPS ☐ Client ☐ Commercial ☐ Pace ☐ Other:

Tracking Number: 5552 4796 1813

Custody Seal on Cooler/Box Present? ☑ Yes ☐ No **Seals Intact?** ☑ Yes ☐ No

Optional: Proj. Due Date: Proj. Name:

Packing Material: ☐ Bubble Wrap ☐ Bubble Bags ☑ None ☐ Other: **Temp Blank?** ☐ Yes ☑ No

Thermom. Used: ☑ B88A912167504 ☐ 80512447 ☐ 72337080 **Type of Ice:** ☐ Wet ☐ Blue ☑ None ☐ Samples on ice, cooling process has begun

Cooler Temp Read (°C): 8.6 **Cooler Temp Corrected (°C):** 8.6 **Biological Tissue Frozen?** ☐ Yes ☑ No

Temp should be above freezing to 6°C **Correction Factor:** True **Date and Initials of Person Examining Contents:** CLT 3/26/13

				Comments:
Chain of Custody Present?	☑ Yes	☐ No	☐ N/A	1.
Chain of Custody Filled Out?	☑ Yes	☐ No	☐ N/A	2.
Chain of Custody Relinquished?	☑ Yes	☐ No	☐ N/A	3.
Sampler Name and/or Signature on COC?	☐ Yes	☑ No	☐ N/A	4.
Samples Arrived within Hold Time?	☑ Yes	☐ No	☐ N/A	5.
Short Hold Time Analysis (<72 hr)?	☐ Yes	☑ No	☐ N/A	6.
Rush Turn Around Time Requested?	☐ Yes	☑ No	☐ N/A	7.
Sufficient Volume?	☑ Yes	☐ No	☐ N/A	8.
Correct Containers Used?	☑ Yes	☐ No	☐ N/A	9.
-Pace Containers Used?	☑ Yes	☐ No	☐ N/A	
Containers Intact?	☑ Yes	☐ No	☐ N/A	10.
Filtered Volume Received for Dissolved Tests?	☑ Yes	☑ No	☐ N/A	11. CW 3/26/13
Sample Labels Match COC? -Includes Date/Time/ID/Analysis Matrix: WT	☑ Yes	☐ No	☐ N/A	12.
All containers needing acid/base preservation have been checked? Noncompliances are noted in 13.	☑ Yes	☐ No	☐ N/A	13. ☑ HNO_3 ☐ H_2SO_4 ☐ NaOH ☐ HCl
All containers needing preservation are found to be in compliance with EPA recommendation? (HNO_3, H_2SO_4, HCl<2; NaOH>12)	☑ Yes	☐ No	☐ N/A	Sample # 1-10 2/2
Exceptions: VOA, Coliform, TOC, Oil and Grease, WI-DRO (water)	☐ Yes	☑ No		Initial when completed: CW Lot # of added preservative:
Headspace in VOA Vials (>6mm)?	☐ Yes	☐ No	☑ N/A	14.
Trip Blank Present?	☐ Yes	☐ No	☑ N/A	15.
Trip Blank Custody Seals Present?	☐ Yes	☐ No	☑ N/A	
Pace Trip Blank Lot # (if purchased):				

CLIENT NOTIFICATION/RESOLUTION **Field Data Required?** ☐ Yes ☐ No

Person Contacted: Date/Time:

Comments/Resolution: Temp ok metals only.

Project Manager Review: 3/27/13 **Date:**

Note: Whenever there is a discrepancy affecting North Carolina compliance samples, a copy of this form will be sent to the North Carolina DEHNR Certification Office (i.e. out of hold, incorrect preservative, out of temp, incorrect containers)

Appendix G

Field Photos

March
2013 Field Photos

Cross Section at Station DR-1

Cross Section at Station DR-2

Cross Section at Station DR-5

Cross Section at Station DR-4-SW

March
2013 Field Photos

Cross Section at Station DR-G

Appendix H

Field Log Book Records

Rico Water Sampling Form: *Calibration Record*

Instrument Model:	EXTECH EXSTIK II	**Date:**	3-12-13
~~Rental~~ details:	CE 180695 #2	**Technician:**	J GISSEMAN

Perfom calibrations in order listed below.

Parameter		Time	Calibration Standard	Initial Reading	Final Reading	Calibration Successful?
Electrical Conductivity		SEE	3/6/13 cal	sheet		
notes:						
pH	7.0	~~710~~ 10:40	~~10~~ 7.0	6.94	7.02	OK
	4.0	10:48	4.01	4.06	4.00	OK
	10.0	10:51	10.01	10.19	10.10	OK
notes:						
Oxidation Reduction Potential						
notes:						
Dissolved Oxygen						
notes:						

Calibration Notes: SELF CAL OK

Rico Water Sampling Form: *Calibration Record*

Instrument Model:	EXTECH EXSTIK II	**Date:**	3-12-13
~~Rental~~ details:	CE 180499 #1	**Technician:**	J GISSEMAN

Perfom calibrations in order listed below.

Parameter		Time	Calibration Standard	Initial Reading	Final Reading	Calibration Successful?
Electrical Conductivity		See	3/6/13 Cal sheet			
notes:						
pH	7.0	10:38	7.0	7.00	7.04	OK
	4.0	10:45	4.01	4.13	4.00	OK
	10.0	10:50	10.01	10.21	10.10	OK
notes:						
Oxidation Reduction Potential						
notes:						
Dissolved Oxygen						
notes:						

Calibration Notes: Self check OK

3/7/13

Rico Water Sampling Form: *Calibration Information*

Name of instrument:

Perfom calibrations in order listed below. Check off if calibration is successful:

- [ ] Electrical Conductivity
- [x] pH
- NA [ ] Dissolved Oxygen
- NA [ ] ORP

Calibration Notes:

Users manual recommends conductivity be calibrated only once per month; calibrated yesterday. pH calibration successful

3/7/13

Rico Water Sampling Form: *Calibration Information*

Name of instrument: Hanna 9828 Multimeter

Perfom calibrations in order listed below. Check off if calibration is successful:

- [X] Electrical Conductivity
- [ ] pH
- [X] Dissolved Oxygen
- [X] ORP

Calibration Notes:

pH will not calibrate. Need manufacturer assistance

Rico Water Sampling Form: *Calibration Information* 3/6/13

Name of instrument: Hanna 9828 multimeter

Perfom calibrations in order listed below. Check off if calibration is successful:

- [X] Electrical Conductivity
- [ ] pH
- [X] Dissolved Oxygen
- [X] ORP

Calibration Notes:

Replaced pH probe with new unit. Continued flashing "14.00" for pH reading and would not calibrate. Manufacturer's assistance needed

3/6/13

Rico Water Sampling Form: *Calibration Information*

Name of instrument: Extech ExStik EC500 (two meters)

Perfom calibrations in order listed below. Check off if calibration is successful:

- [X] Electrical Conductivity
- [X] pH
- NA [ ] Dissolved Oxygen
- NA [ ] ORP

Calibration Notes:

Probe only measures pH, EC, and Temperature. All calibrations successful

Rico Water Sampling: Sampling Event Main Checklist

Check off each item as their corresponding forms are completed. An item is **NOT** to be checked off until its cooresponding form is completed in full. If a water sample cannot be completed, its sampling form **must** still be completed, noting reasons for problems, and it still must be checked off on this list.

Surface Water Samples

Grab Samples

- [x] DR-1
- [x] DR-2
- [x] DR-3 3/13 sample
- [x] DR-4 3/13 sample
- [x] DR-5 3/13 sample
- [x] DR-6 3/13 sample
- [x] DR-7
- [x] DR-4-SW
- [x] DR-G

Composite Samples

- [x] DR-1 COMPOSITE
- [x] DR-2 COMPOSITE
- [x] DR-7 COMPOSITE
- [x] DR-4-SW COMPOSITE

Groundwater Samples

- [x] GW-1 3-12-13
- [x] GW-3 3-7-13 / 3-13-13
- [x] GW-4 3-14
- [x] GW-5 3-14
- [x] GW-6 Full ice 3-13
- [x] GW-7 3-7-13
- [x] EB-1 3-7-13
- [x] EB-2 3-7-13
- [x] MW-101 3-13
- [x] MW-102 3-13
- [x] MW-103 3-13
- [x] MW-104 3-13
- [x] MW-202 3-13 DRY
- [ ] ~~MW-203~~ does not exist
- [x] MW-204 purged dry 3-13 sample 3-14
- [x] P13-102 3-12
- [x] P13-103 3-12
- [x] MW-1 DEEP 3-12
- [x] MW-1 SHALLOW 3-12
- [x] MW-2 DEEP 3-13
- [x] MW-2 SHALLOW Dry 3-13
- [x] MW-3 DEEP 3-13

Groundwater Samples (cont.)

- [x] MW-3 SHALLOW Dry 3-13
- [x] MW-4 DEEP 3-12
- [x] MW-4 SHALLOW 3-7-13
- [x] MW-5 DEEP 3-13
- [x] MW-5 SHALLOW 3-13
- [x] MW-6 DEEP 3-12
- [x] MW-6 SHALLOW 3-12

Other Samples

- [x] AT-2 3-13

Quality Control Samples

Blind Duplicates

- [x] DR-8 MW-6 SHALLOW 3-12
- [x] DR-9
- [x] DR-10 MW-5 SHALLOW 3-13
- [x] DR-11

Field Blanks

- [x] FB 3-13

Flowrate Measurements

- [x] DR-1
- [x] DR-2
- [x] DR-7
- [x] DR-4-SW
- [x] DR-G
- [x] DR-1A
- [x] DR-2A
- [x] DR-3A

Additional Tasks

- [x] Pond inspection completed
- [x] Pond water levels measured (too much ice)

Rico Water Sampling Form: *Calibration Record*

Instrument Model:	HANNA HI 9828	**Date:**	3-12-13
~~Rental~~ details:		**Technician:**	J GISSEMAN

Perfom calibrations in order listed below.

Parameter		Time	Calibration Standard	Initial Reading	Final Reading	Calibration Successful?
Electrical Conductivity		10:41	5.00 mS/cm	4497	OK	OK
notes:						
pH	7.0	10:~~09~~ 22	7.01	~~7.32~~ 6.98	~~[illegible]~~ 7.03	Y
	4.0	10:28	4.01	3.89	4.00	Y
	10.0	10:31	10.01	10.00	10.00	Y
notes:						
Oxidation Reduction Potential		10:57	100 %	93.9 %	OK	OK
notes:						
Dissolved Oxygen						
notes:						

Calibration Notes: Self test OK

Rico Water Sampling Form: *Station Information*

Sampling completed at this location ☑
(Do not check box until **ALL** items have been completed)

☒ Surface Water ☐ Groundwater ☐ Other

Sample Location: **DR-1**

Field Sample ID (as shown on bottle label): DR-1_20130321

Date of Sample Collection: 3-21-13

Time of Sample Collection: 1443

Sampler's Identity: JGISSEMAN M DEFRIEZ

Picture taken of cross section? ☒ Yes

By whom? J GISSEMAN

*Email photo to mdefriez@andersoneng.com

FIELD PARAMETERS / MEASUREMENTS HANNA

pH	EC, µS/cm	DO, ppm	Temp, °C	ORP, mV	TIME
8.65	382	9.21	4.57	-92.1	1523

SAMPLE BOTTLE INFORMATION - Check off each bottle when completed

	Field Sample ID on Bottle	Analysis	Bottle size/Type/Preservative
✓	DR-1_201303 21	Total Metals, Hardness, Silica	250 mL / HDPE / HNO3 (RED)
✓	DR-1_201303 21	Dissolved Metals (Field Filtered)	250 mL / HDPE / HNO3 (RED)
✓	DR-1_201303 21	Potentially Dissolved Metals	250 mL / HDPE / HNO3 (RED)
✓	DR-1_201303 21	Alkalinity, TSS, TDS, Chloride, Sulfate	500 mL / HDPE / None
✓	DR-1_201303 21	Salinity	250 mL / HDPE / None
✓	DR-1_201303 21	Cyanide	250 mL / HDPE / NaOH (GREEN)
✓	DR-1_201303 21	Sulfide	250 mL / HDPE / NaOH + Zn Acetate (BLACK)
✓	DR-1_201303 21	Total Organic Carbon, Nitrate	250 mL / Amber Glass / H2SO4 (YELLOW)

Notes:

Rico Water Sampling Form: *Station Information*

Sampling completed at this location ☑
(Do not check box until **ALL** items have been completed)

☒ Surface Water ☐ Groundwater ☐ Other

Sample Location: **DR-2**

Field Sample ID (as shown on bottle label): DR-2_20130321

Date of Sample Collection: 3-21-13

Time of Sample Collection: 14:05

Sampler's Identity: J GISSEMAN M DEFRIEZ

Picture taken of cross section? ☒ Yes

By whom? J GISSEMAN

*Email photo to mdefriez@andersoneng.com

FIELD PARAMETERS / MEASUREMENTS HANNA

pH	EC, µS/cm	DO, ppm	Temp, °C	ORP, mV	TIME
8.39	452	7.64	6.37	-93.2	15:19

SAMPLE BOTTLE INFORMATION - Check off each bottle when completed

	Field Sample ID on Bottle	Analysis	Bottle size/Type/Preservative
✓	DR-2_20130321	Total Metals, Hardness, Silica	250 mL / HDPE / HNO3 (RED)
✓	DR-2_201303 21	Dissolved Metals (Field Filtered)	250 mL / HDPE / HNO3 (RED)
✓	DR-2_201303 21	Potentially Dissolved Metals	250 mL / HDPE / HNO3 (RED)
✓	DR-2_201303 21	Alkalinity, TSS, TDS, Chloride, Sulfate	500 mL / HDPE / None
✓	DR-2_201303 21	Salinity	250 mL / HDPE / None
✓	DR-2_201303 21	Cyanide	250 mL / HDPE / NaOH (GREEN)
✓	DR-2_201303 21	Sulfide	250 mL / HDPE / NaOH + Zn Acetate (BLACK)
✓	DR-2_201303 21	Total Organic Carbon, Nitrate	250 mL / Amber Glass / H2SO4 (YELLOW)

Notes:

NO ICE PRESENT

Rico Water Sampling Form: *Station Information*

Sampling completed at this location [✓]
(Do not check box until **ALL** items have been completed)

[X] Surface Water [ ] Groundwater [ ] Other

Sample Location: **DR-3**

Field Sample ID (as shown on bottle label): DR-3_20130313

Date of Sample Collection: 3-13-13

Time of Sample Collection: ~~1627~~ 1621

Sampler's Identity: TB

FIELD PARAMETERS / MEASUREMENTS

pH	EC, µS/cm	DO, ppm	Temp, °C	ORP, mV	Manual Flume Water Depth Measurement, ft
7.20	1405	1.95	16.47	29.9	0.52' @ 9:45am 3-7-13

Data downloaded from transducer? [✓] Yes [ ] No

Has transducer been cleaned and recalibrated? [✓] Yes [ ] No (required monthly)

SAMPLE BOTTLE INFORMATION - Check off each bottle when completed

	Field Sample ID on Bottle	Analysis	Bottle size/Type/Preservative
✓	DR-3_201303 13	Total Metals, Hardness, Silica	250 mL / HDPE / HNO3 (RED)
✓	DR-3_201303 13	Dissolved Metals (Field Filtered)	250 mL / HDPE / HNO3 (RED)
✓	DR-3_201303 13	Potentially Dissolved Metals	250 mL / HDPE / HNO3 (RED)
✓	DR-3_201303 13	Alkalinity, TSS, TDS, Chloride, Sulfate	500 mL / HDPE / None
✓	DR-3_201303 13	Salinity	250 mL / HDPE / None
✓	DR-3_201303 13	Cyanide	250 mL / HDPE / NaOH (GREEN)
✓	DR-3_201303 13	Sulfide	250 mL / HDPE / NaOH + Zn Acetate (BLACK)
✓	DR-3_201303 13	Total Organic Carbon, Nitrate	250 mL / Amber Glass / H2SO4 (YELLOW)

Notes:

Rico Water Sampling Form: *Station Information*

Sampling completed at this location ☑
(Do not check box until **ALL** items have been completed)

☒ Surface Water ☐ Groundwater ☐ Other

Sample Location: **DR-4**

Field Sample ID (as shown on bottle label): DR-4_20130313

Date of Sample Collection: 3-13-13

Time of Sample Collection: 4:04

Sampler's Identity: TB

FIELD PARAMETERS / MEASUREMENTS

pH	EC, µS/cm	DO, ppm	Temp, °C	ORP, mV
8.11	1440	2.16	14.50	29.5

Discharge Pipe Flowrates			
Upper Pipe		Lower Pipe	
Depth	Velocity	Depth	Velocity

See Notes

SAMPLE BOTTLE INFORMATION - Check off each bottle when completed

	Field Sample ID on Bottle	Analysis	Bottle size/Type/Preservative
✓	DR-4_201303 13	Total Metals, Hardness, Silica	250 mL / HDPE / HNO3 (RED)
✓	DR-4_201303 13	Dissolved Metals (Field Filtered)	250 mL / HDPE / HNO3 (RED)
✓	DR-4_201303 13	Potentially Dissolved Metals	250 mL / HDPE / HNO3 (RED)
✓	DR-4_201303 13	Alkalinity, TSS, TDS, Chloride, Sulfate	500 mL / HDPE / None
✓	DR-4_201303 13	Salinity	250 mL / HDPE / None
✓	DR-4_201303 13	Cyanide	250 mL / HDPE / NaOH (GREEN)
✓	DR-4_201303 13	Sulfide	250 mL / HDPE / NaOH + Zn Acetate (BLACK)
✓	DR-4_201303 13	Total Organic Carbon, Nitrate	250 mL / Amber Glass / H2SO4 (YELLOW)

Notes:

UPPER PIPE : 3.75 gal / 1.22 sec @ ~~80~~ 50% FLOW CAPTURED

LOWER PIPE : 2.75 gal / 1 min CAPTURED 100% FLOW

Rico Water Sampling Form: *Station Information*

☒ Surface Water ☐ Groundwater ☐ Other

Sampling completed at this location ☒
(Do not check box until **ALL** items have been completed)

Sample Location: **DR-5**

Field Sample ID (as shown on bottle label): DR-5-20130313

Date of Sample Collection: 3-13-13

Time of Sample Collection: 1601

Sampler's Identity: TB

MDEFRIEZ
3-21-13 JGISSEMAN

Benchmark Elevation: 5.07

Spillway Water Elevation: 7.76

☐ East to West

☒ West to East

Velocity (ft/sec)		Depth (ft)	
0.11	0.20	0.25	0.35
0.25	0.12	0.32	0.28
0.26	6	0.42	6

FIELD PARAMETERS / MEASUREMENTS

pH	EC, µS/cm	DO, ppm	Temp, °C	ORP, mV
7.82	1349	2.62	11.68	31.9

Picture taken of cross section? ☒ Yes

By whom? JGISSEMAN

*Email photo to mdefriez@andersoneng.com

SAMPLE BOTTLE INFORMATION - Check off each bottle when completed

	Field Sample ID on Bottle	Analysis	Bottle size/Type/Preservative
✓	DR-5_201303 13	Total Metals, Hardness, Silica	250 mL / HDPE / HNO3 (RED)
✓	DR-5_201303 13	Dissolved Metals (Field Filtered)	250 mL / HDPE / HNO3 (RED)
✓	DR-5_201303 13	Potentially Dissolved Metals	250 mL / HDPE / HNO3 (RED)
✓	DR-5_201303 13	Alkalinity, TSS, TDS, Chloride, Sulfate	500 mL / HDPE / None
✓	DR-5_201303 13	Salinity	250 mL / HDPE / None
✓	DR-5_201303 13	Cyanide	250 mL / HDPE / NaOH (GREEN)
✓	DR-5_201303 13	Sulfide	250 mL / HDPE / NaOH + Zn Acetate (BLACK)
✓	DR-5_201303 13	Total Organic Carbon, Nitrate	250 mL / Amber Glass / H2SO4 (YELLOW)

Notes:

Rico Water Sampling Form: *Station Information*

Sampling completed at this location ☑
(Do not check box until **ALL** items have been completed)

☒ Surface Water ☐ Groundwater ☐ Other

Sample Location: **DR-6**

Field Sample ID (as shown on bottle label): DR-6-20130313

Date of Sample Collection: 3-13-13

Time of Sample Collection: 1557

Sampler's Identity: TB

FIELD PARAMETERS / MEASUREMENTS

pH	EC, µS/cm	DO, ppm	Temp, °C	ORP, mV	Manual Flume Water Depth Measurement, ft
7.39	1369	2.41	11.15	33.7	0.41'

Data downloaded from transducer? ☒ Yes ☐ No

Has transducer been cleaned and recalibrated? ☐ Yes ☒ No (Only required every 6 months: Feb and Aug)

SAMPLE BOTTLE INFORMATION - Check off each bottle when completed

	Field Sample ID on Bottle	Analysis	Bottle size/Type/Preservative
✓	DR-6_201303 13	Total Metals, Hardness, Silica	250 mL / HDPE / HNO3 (RED)
✓	DR-6_201303 13	Dissolved Metals (Field Filtered)	250 mL / HDPE / HNO3 (RED)
✓	DR-6_201303 13	Potentially Dissolved Metals	250 mL / HDPE / HNO3 (RED)
✓	DR-6_201303 13	Alkalinity, TSS, TDS, Chloride, Sulfate	500 mL / HDPE / None
✓	DR-6_201303 13	Salinity	250 mL / HDPE / None
✓	DR-6_201303 13	Cyanide	250 mL / HDPE / NaOH (GREEN)
✓	DR-6_201303 13	Sulfide	250 mL / HDPE / NaOH + Zn Acetate (BLACK)
✓	DR-6_201303 13	Total Organic Carbon, Nitrate	250 mL / Amber Glass / H2SO4 (YELLOW)

Notes:

Rico Water Sampling Form: *Station Information*

Sampling completed at this location ☒
(Do not check box until **ALL** items have been completed)

☒ Surface Water ☐ Groundwater ☐ Other

Sample Location: **DR-7**

Field Sample ID (as shown on bottle label): DR-7_ 20130321

Date of Sample Collection: 3-21-13

Time of Sample Collection: 12:06

Sampler's Identity: J GISSEMAN M DEFRIEZ

Picture taken of cross section? ☒ Yes

By whom? J GISSEMAN

*Email photo to mdefriez@andersoneng.com

FIELD PARAMETERS / MEASUREMENTS HANNA

pH	EC, µS/cm	DO, ppm	Temp, °C	ORP, mV
7.81	705	6.17	4.18	-77.6

measured from sampling ~~jug~~ container

SAMPLE BOTTLE INFORMATION - Check off each bottle when completed

	Field Sample ID on Bottle	Analysis	Bottle size/Type/Preservative
X	DR-7_201303 21	Total Metals, Hardness, Silica	250 mL / HDPE / HNO3 (RED)
X	DR-7_201303 21	Dissolved Metals (Field Filtered)	250 mL / HDPE / HNO3 (RED)
X	DR-7_201303 21	Potentially Dissolved Metals	250 mL / HDPE / HNO3 (RED)
X	DR-7_201303 21	Alkalinity, TSS, TDS, Chloride, Sulfate	500 mL / HDPE / None
X	DR-7_201303 21	Salinity	250 mL / HDPE / None
X	DR-7_201303 21	Cyanide	250 mL / HDPE / NaOH (GREEN)
X	DR-7_201303 21	Sulfide	250 mL / HDPE / NaOH + Zn Acetate (BLACK)
X	DR-7_201303 21	Total Organic Carbon, Nitrate	250 mL / Amber Glass / H2SO4 (YELLOW)

Notes:

GRAB SAMPLE COLLECTED FROM EAST SIDE OF CROSS SECTION

Rico Water Sampling Form: *Station Information*

Sampling completed at this location [X]
(Do not check box until **ALL** items have been completed)

[X] Surface Water [ ] Groundwater [ ] Other

Sample Location: **DR-4-SW**

Field Sample ID (as shown on bottle label): DR-4-SW-20130321

Date of Sample Collection: 3-21-13

Time of Sample Collection: 10:02

Sampler's Identity: J GISSEMAN M DEFRIEZ

Picture taken of cross section? [X] Yes

By whom? J GISSEMAN

*Email photo to mdefriez@andersoneng.com

FIELD PARAMETERS / MEASUREMENTS HANNA

pH	EC, µS/cm	DO, ppm	Temp, °C	ORP, mV	TIME
7.80	658	6.90	2.52	-81.5	1020

~~MEASUREMENTS TAKEN IN SITU~~

SAMPLE BOTTLE INFORMATION - Check off each bottle when completed

	Field Sample ID on Bottle	Analysis	Bottle size/Type/Preservative
X	DR-4-SW_201303~~13~~21	Total Metals, Hardness, Silica	250 mL / HDPE / HNO3 (RED)
X	DR-4-SW_201303 ~~13~~ 21	Dissolved Metals (Field Filtered)	250 mL / HDPE / HNO3 (RED)
X	DR-4-SW_201303 ~~13~~ 21	Potentially Dissolved Metals	250 mL / HDPE / HNO3 (RED)
X	DR-4-SW_201303 21	Alkalinity, TSS, TDS, Chloride, Sulfate	500 mL / HDPE / None
X	DR-4-SW_201303 21	Salinity	250 mL / HDPE / None
X	DR-4-SW_201303 21	Cyanide	250 mL / HDPE / NaOH (GREEN)
X	DR-4-SW_201303 21	Sulfide	250 mL / HDPE / NaOH + Zn Acetate (BLACK)
X	DR-4-SW_201303 21	Total Organic Carbon, Nitrate	250 mL / Amber Glass / H2SO4 (YELLOW)

Notes:

CROSS SECTION 30% COVERED WITH ICE

SAMPLE COLLECTED FROM EAST BANK NEXT TO ICE SHELF

Rico Water Sampling Form: *Station Information*

Sampling completed at this location ☒
(Do not check box until **ALL** items have been completed)

☒ Surface Water ☐ Groundwater ☐ Other

Sample Location: **DR-G**

Field Sample ID (as shown on bottle label): DR-G_20130321

Date of Sample Collection: 3-21-13

Time of Sample Collection: 0915

Sampler's Identity: J GISSEMAN M DEFRIEZ

Picture taken of cross section? ☒ Yes

By whom? J GISSEMAN

*Email photo to mdefriez@andersoneng.com

FIELD PARAMETERS / MEASUREMENTS HANNA

pH	EC, µS/cm	DO, ppm	Temp, °C	ORP, mV
8.56	581	11.61	0.40	-95.5

measurements taken in-situ

SAMPLE BOTTLE INFORMATION - Check off each bottle when completed

	Field Sample ID on Bottle	Analysis	Bottle size/Type/Preservative
X	DR-G_20130321	Total Metals, Hardness, Silica	250 mL / HDPE / HNO3 (RED)
X	DR-G_20130321	Dissolved Metals (Field Filtered)	250 mL / HDPE / HNO3 (RED)
X	DR-G_20130321	Potentially Dissolved Metals	250 mL / HDPE / HNO3 (RED)
X	DR-G_20130321	Alkalinity, TSS, TDS, Chloride, Sulfate	500 mL / HDPE / None
X	DR-G_20130321	Salinity	250 mL / HDPE / None
X	DR-G_20130321	Cyanide	250 mL / HDPE / NaOH (GREEN)
X	DR-G_20130321	Sulfide	250 mL / HDPE / NaOH + Zn Acetate (BLACK)
X	DR-G_20130321	Total Organic Carbon, Nitrate	250 mL / Amber Glass / H2SO4 (YELLOW)

Notes:

50% ICE COVER AT CROSS SECTION

SAMPLE COLLECTED FROM E SIDE OF RIVER NEXT TO ICE COVER

Rico Water Sampling Form: *Station Information*

☐ Surface Water ☒ Groundwater ☐ Other

Sampling completed at this location ☑
(Do not check box until **ALL** items have been completed)

Sample Location: **DR-8**

Field Sample ID (as shown on bottle label): DR-8_20130312

Date of Sample Collection: 3-12-13

Time of Sample Collection: 13:13

Sampler's Identity: J GISSEMAN

***Duplicate sample of:** MW-6-SHALLOW

FIELD PARAMETERS / MEASUREMENTS HANNA

pH	EC, µS/cm	DO, ppm	Temp, °C	ORP, mV
6.75	2410	0.91	12.09	28.4

SAMPLE BOTTLE INFORMATION - Check off each bottle when completed

	Field Sample ID on Bottle	Analysis	Bottle size/Type/Preservative
✓	DR-8_201303 12	Total Metals, Hardness, Silica	250 mL / HDPE / HNO3 (RED)
✓	DR-8_201303 12	Dissolved Metals (Field Filtered)	250 mL / HDPE / HNO3 (RED)
✓	DR-8_201303 12	Potentially Dissolved Metals	250 mL / HDPE / HNO3 (RED)
✓	DR-8_201303 12	Alkalinity, TSS, TDS, Chloride, Sulfate	500 mL / HDPE / None
✓	DR-8_201303 12	Salinity	250 mL / HDPE / None
✓	DR-8_201303 12	Cyanide	250 mL / HDPE / NaOH (GREEN)
✓	DR-8_201303 12	Sulfide	250 mL / HDPE / NaOH + Zn Acetate (BLACK)
✓	DR-8_201303 12	Total Organic Carbon, Nitrate	250 mL / Amber Glass / H2SO4 (YELLOW)

Notes:

*This sample is a Blind Duplicate Sample. Collect one blind duplicate sample for every 10 samples collected.

Rico Water Sampling Form: *Station Information*

☐ Surface Water ☑ Groundwater ☐ Other

Sampling completed at this location ☑
(Do not check box until **ALL** items have been completed)

Sample Location: **DR-9**
Field Sample ID (as shown on bottle label):
Date of Sample Collection: 3-13-13
Time of Sample Collection: 2:46
Sampler's Identity: TB
***Duplicate sample of:** MW-104

FIELD PARAMETERS / MEASUREMENTS

pH	EC, µS/cm	DO, ppm	Temp, °C	ORP, mV
8.83	1514	2.05	4.72	32.5

SAMPLE BOTTLE INFORMATION - Check off each bottle when completed

	Field Sample ID on Bottle	Analysis	Bottle size/Type/Preservative
✓	DR-8_201303 13	Total Metals, Hardness, Silica	250 mL / HDPE / HNO3 (RED)
✓	DR-8_201303 13	Dissolved Metals (Field Filtered)	250 mL / HDPE / HNO3 (RED)
✓	DR-8_201303 13	Potentially Dissolved Metals	250 mL / HDPE / HNO3 (RED)
✓	DR-8_201303 13	Alkalinity, TSS, TDS, Chloride, Sulfate	500 mL / HDPE / None
✓	DR-8_201303 13	Salinity	250 mL / HDPE / None
✓	DR-8_201303 13	Cyanide	250 mL / HDPE / NaOH (GREEN)
✓	DR-8_201303 13	Sulfide	250 mL / HDPE / NaOH + Zn Acetate (BLACK)
✓	DR-8_201303 13	Total Organic Carbon, Nitrate	250 mL / Amber Glass / H2SO4 (YELLOW)

Notes:

*This sample is a Blind Duplicate Sample. Collect one blind duplicate sample for every 10 samples collected.

Rico Water Sampling Form: *Station Information*

Sampling completed at this location ☑
(Do not check box until **ALL** items have been completed)

☐ Surface Water ☒ Groundwater ☐ Other

Sample Location: **DR-10**

Field Sample ID (as shown on bottle label): DR-10_20130313

Date of Sample Collection: 3-13-13

Time of Sample Collection: 1255

Sampler's Identity: J GISSEMAN

***Duplicate sample of:** MW-5 SHALLOW

FIELD PARAMETERS / MEASUREMENTS HANNA

	pH	EC, µS/cm	DO, ppm	Temp, °C	ORP, mV
1333	5.04	3901	0.32	10.49	47.4

SAMPLE BOTTLE INFORMATION - Check off each bottle when completed

	Field Sample ID on Bottle	Analysis	Bottle size/Type/Preservative
✓	DR-8_201303 13	Total Metals, Hardness, Silica	250 mL / HDPE / HNO3 (RED)
✓	DR-8_201303 13	Dissolved Metals (Field Filtered)	250 mL / HDPE / HNO3 (RED)
✓	DR-8_201303 13	Potentially Dissolved Metals	250 mL / HDPE / HNO3 (RED)
✓	DR-8_201303 13	Alkalinity, TSS, TDS, Chloride, Sulfate	500 mL / HDPE / None
✓	DR-8_201303 13	Salinity	250 mL / HDPE / None
✓	DR-8_201303 13	Cyanide	250 mL / HDPE / NaOH (GREEN)
✓	DR-8_201303 13	Sulfide	250 mL / HDPE / NaOH + Zn Acetate (BLACK)
✓	DR-8_201303 13	Total Organic Carbon, Nitrate	250 mL / Amber Glass / H2SO4 (YELLOW)

Notes: ↖ DR-10

*This sample is a Blind Duplicate Sample. Collect one blind duplicate sample for every 10 samples collected.

USED NEW BAILER AFTER SAMPLING MW-5 SHALLOW WITH DEDICATED BAILER

Rico Water Sampling Form: *Station Information*

Sampling completed at this location ☑
(Do not check box until **ALL** items have been completed)

☒ Surface Water ☐ Groundwater ☐ Other

Sample Location: **DR-11**

Field Sample ID (as shown on bottle label): DR-11_20130321

Date of Sample Collection: 3-21-13

Time of Sample Collection: 14:06

Sampler's Identity: JGISSEMAN M DEFRIEZ

***Duplicate sample of:** DR-2

FIELD PARAMETERS / MEASUREMENTS

pH	EC, µS/cm	DO, ppm	Temp, °C	ORP, mV	TIME
8.30	454	8.63	6.09	-88.9	15:21

SAMPLE BOTTLE INFORMATION - Check off each bottle when completed

	Field Sample ID on Bottle	Analysis	Bottle size/Type/Preservative
✓	DR-8"_201303 21	Total Metals, Hardness, Silica	250 mL / HDPE / HNO3 (RED)
✓	DR-8"_201303 21	Dissolved Metals (Field Filtered)	250 mL / HDPE / HNO3 (RED)
✓	DR-8"_201303 21	Potentially Dissolved Metals	250 mL / HDPE / HNO3 (RED)
✓	DR-8"_201303 21	Alkalinity, TSS, TDS, Chloride, Sulfate	500 mL / HDPE / None
✓	DR-8"_201303 21	Salinity	250 mL / HDPE / None
✓	DR-8"_201303 21	Cyanide	250 mL / HDPE / NaOH (GREEN)
✓	DR-8"_201303 21	Sulfide	250 mL / HDPE / NaOH + Zn Acetate (BLACK)
✓	DR-8"_201303 21	Total Organic Carbon, Nitrate	250 mL / Amber Glass / H2SO4 (YELLOW)

Notes:

*This sample is a Blind Duplicate Sample. Collect one blind duplicate sample for every 10 samples collected.

Rico Water Sampling Form: *Station Information*

☐ Surface Water ☐ Groundwater ☒ Other

Sampling completed at this location ☑
(Do not check box until **ALL** items have been completed)

Sample Location: **FB**

Field Sample ID (as shown on bottle label):

Date of Sample Collection: 3-13-13

Time of Sample Collection: 3:32

Sampler's Identity: JB

FIELD PARAMETERS / MEASUREMENTS

pH	EC, µS/cm	DO, ppm	Temp, °C	ORP, mV
7.75	5	4.42	11.62	21.3

SAMPLE BOTTLE INFORMATION - Check off each bottle when completed

	Field Sample ID on Bottle	Analysis	Bottle size/Type/Preservative
✓	FB_201303 13	Total Metals, Hardness, Silica	250 mL / HDPE / HNO3 (RED)
✓	FB_201303 13	Dissolved Metals (Field Filtered)	250 mL / HDPE / HNO3 (RED)
✓	FB_201303 13	Potentially Dissolved Metals	250 mL / HDPE / HNO3 (RED)
✓	FB_201303 13	Alkalinity, TSS, TDS, Chloride, Sulfate	500 mL / HDPE / None
✓	FB_201303 13	Salinity	250 mL / HDPE / None
✓	FB_201303 13	Cyanide	250 mL / HDPE / NaOH (GREEN)
✓	FB_201303 13	Sulfide	250 mL / HDPE / NaOH + Zn Acetate (BLACK)
✓	FB_201303 13	Total Organic Carbon, Nitrate	250 mL / Amber Glass / H2SO4 (YELLOW)

Notes:

*Sample is a Field Blank. Run distilled water through all standard sampling procedures

Rico Water Sampling Form: *Station Information*

Sampling completed at this location ☑
(Do not check box until **ALL** items have been completed)

☒ Surface Water ☐ Groundwater ☐ Other

Sample Location: **DR-1 COMPOSITE**

Field Sample ID (as shown on bottle label): DR-1_COMPOSITE_201303 21

Date of Sample Collection: 3-21-13

Time of Sample Collection: 1445

Sampler's Identity: JGISSEMAN M DEFRIEZ

Collected:
☒ East to West
☐ West to East

FIELD PARAMETERS / MEASUREMENTS

Compartment Number	Compartment Width, ft	pH	EC, µS/cm	DO, ppm	Temp, °C	ORP, mV
1	~~5~~ 5	8.57	384	10.54	3.53	-93.9
2	5	8.52	384	10.60	3.52	-92.7
3	5	8.50	384	10.56	3.51	-93.1
4	~~5~~ 5	8.50	384	10.07	3.46	-92.9
Total Composite	Total Width*: ~~22~~ 20	8.62	381	8.80	4.57	-86.9

TIME 15:25

*Width here must match width on corresponding flow measurement sheet from Stream Flow Measurements Form

SAMPLE BOTTLE INFORMATION - Check off each bottle when completed

	Field Sample ID on Bottle	Analysis	Bottle size/Type/Preservative
✓	DR-1 COMPOSITE_201303 21	Total Metals, Hardness, Silica	250 mL / HDPE / HNO3 (RED)
✓	DR-1 COMPOSITE_201303 21	Dissolved Metals (Field Filtered)	250 mL / HDPE / HNO3 (RED)
✓	DR-1 COMPOSITE_201303 21	Potentially Dissolved Metals	250 mL / HDPE / HNO3 (RED)
✓	DR-1 COMPOSITE_201303 21	Alkalinity, TSS, TDS, Chloride, Sulfate	500 mL / HDPE / None
✓	DR-1 COMPOSITE_201303 21	Salinity	250 mL / HDPE / None
✓	DR-1 COMPOSITE_201303 21	Cyanide	250 mL / HDPE / NaOH (GREEN)
✓	DR-1 COMPOSITE_201303 21	Sulfide	250 mL / HDPE / NaOH + Zn Acetate (BLACK)
✓	DR-1 COMPOSITE_201303 21	Total Organic Carbon, Nitrate	250 mL / Amber Glass / H2SO4 (YELLOW)

Notes:

ICE CLEARED ALMOST TO STREAM EDGES. ICE BRIDGED UPSTREAM OF ~~ABOVE~~ CROSS SECTION 3-5 FT. ICE BRIDGE ~2 INCHES ABOVE WATER SURFACE.

Rico Water Sampling Form: *Station Information*

Sampling completed at this location ☒
(Do not check box until **ALL** items have been completed)

☒ Surface Water ☐ Groundwater ☐ Other

Sample Location: **DR-2 COMPOSITE**

Field Sample ID (as shown on bottle label): DR-2 COMPOSITE -20130321

Date of Sample Collection: 3-21-13

Time of Sample Collection: 13:57

Sampler's Identity: JGISSEMAN MDEFRIEZ

Collected:
☒ East to West
☐ West to East

FIELD PARAMETERS / MEASUREMENTS

Compartment Number	Compartment Width, ft	pH	EC, µS/cm	DO, ppm	Temp, °C	ORP, mV
1	7	8.11	457	10.85	4.55	-100.8
2	7	8.05	458	11.00	4.51	-95.0
3	7	7.90	494	10.68	4.70	-88.5
4	7	7.47	587	9.34	5.23	-79.2
Total Composite	Total Width*: 28	8.35	486	7.05	6.50	-91.7

TIME 15:18

*Width here must match width on corresponding flow measurement sheet from Stream Flow Measurements Form

SAMPLE BOTTLE INFORMATION - Check off each bottle when completed

	Field Sample ID on Bottle	Analysis	Bottle size/Type/Preservative
✓	DR-2 COMPOSITE_201303 21	Total Metals, Hardness, Silica	250 mL / HDPE / HNO3 (RED)
✓	DR-2 COMPOSITE_201303 21	Dissolved Metals (Field Filtered)	250 mL / HDPE / HNO3 (RED)
✓	DR-2 COMPOSITE_201303 21	Potentially Dissolved Metals	250 mL / HDPE / HNO3 (RED)
✓	DR-2 COMPOSITE_201303 21	Alkalinity, TSS, TDS, Chloride, Sulfate	500 mL / HDPE / None
✓	DR-2 COMPOSITE_201303 21	Salinity	250 mL / HDPE / None
✓	DR-2 COMPOSITE_201303 21	Cyanide	250 mL / HDPE / NaOH (GREEN)
✓	DR-2 COMPOSITE_201303 21	Sulfide	250 mL / HDPE / NaOH + Zn Acetate (BLACK)
✓	DR-2 COMPOSITE_201303 21	Total Organic Carbon, Nitrate	250 mL / Amber Glass / H2SO4 (YELLOW)

Notes:

NO ICE PRESENT

Rico Water Sampling Form: *Station Information*

Sampling completed at this location [X]
(Do not check box until **ALL** items have been completed)

[X] Surface Water [ ] Groundwater [ ] Other

Sample Location: **DR-7 COMPOSITE**

Field Sample ID (as shown on bottle label): DR-7 COMPOSITE-20130321

Date of Sample Collection: 3-21-13

Time of Sample Collection: 12:04

Sampler's Identity: J GISSEMAN M DEFRIEZ

Collected:
[X] East to West
[ ] West to East

FIELD PARAMETERS / MEASUREMENTS HANNA

Compartment Number	Compartment Width, ft	pH	EC, µS/cm	DO, ppm	Temp, °C	ORP, mV
1	7	7.34	716	9.46	3.49	-79.6
2	6	7.31	689	9.60	3.32	-82.5
3	6	7.36	643	9.75	3.17	-83.6
4	6	7.37	614	9.82	3.11	-84.3
5	6	7.37	609	9.45	3.14	-85.0
6	6	7.33	608	9.66	3.27	-76.3
7	7	7.23	637	8.86	3.59	-78.6
Total Composite	Total Width*: 44	7.50	649	5.20	4.46	-79.7

*Width here must match width on corresponding flow measurement sheet from Stream Flow Measurements Form

SAMPLE BOTTLE INFORMATION - Check off each bottle when completed

	Field Sample ID on Bottle	Analysis	Bottle size/Type/Preservative
X	DR-7 COMPOSITE_20130321	Total Metals, Hardness, Silica	250 mL / HDPE / HNO3 (RED)
X	DR-7 COMPOSITE_20130321	Dissolved Metals (Field Filtered)	250 mL / HDPE / HNO3 (RED)
X	DR-7 COMPOSITE_20130321	Potentially Dissolved Metals	250 mL / HDPE / HNO3 (RED)
X	DR-7 COMPOSITE_20130321	Alkalinity, TSS, TDS, Chloride, Sulfate	500 mL / HDPE / None
X	DR-7 COMPOSITE_20130321	Salinity	250 mL / HDPE / None
X	DR-7 COMPOSITE_20130321	Cyanide	250 mL / HDPE / NaOH (GREEN)
X	DR-7 COMPOSITE_20130321	Sulfide	250 mL / HDPE / NaOH + Zn Acetate (BLACK)
X	DR-7 COMPOSITE_20130321	Total Organic Carbon, Nitrate	250 mL / Amber Glass / H2SO4 (YELLOW)

Notes:

Rico Water Sampling Form: *Station Information*

Sampling completed at this location [X]
(Do not check box until **ALL** items have been completed)

[X] Surface Water [ ] Groundwater [ ] Other

Sample Location: **DR-4-SW COMPOSITE**

Field Sample ID (as shown on bottle label): DR-4-SW COMPOSITE_20130321

Date of Sample Collection: 3-21-13

Time of Sample Collection: 10:00

Sampler's Identity: J GISSEMAN / M DEFRIES

Collected:
[X] East to West
[ ] West to East

FIELD PARAMETERS / MEASUREMENTS

Compartment Number	Compartment Width, ft	pH	EC, µS/cm	DO, ppm	Temp, °C	ORP, mV
1	6	7.76	668	10.63	1.23	-55.6
2	6	7.63	668	10.56	1.25	-70.8
3	6	7.60	669	10.35	1.27	-73.1
4	6	7.58	669	10.43	1.27	-72.9
Total Composite	Total Width*: 24	7.69	660	7.25	2.55	-81.8

TIME 10:23

*Width here must match width on corresponding flow measurement sheet from Stream Flow Measurements Form

SAMPLE BOTTLE INFORMATION - Check off each bottle when completed

	Field Sample ID on Bottle	Analysis	Bottle size/Type/Preservative
X	DR-4-SW COMPOSITE_20130321	Total Metals, Hardness, Silica	250 mL / HDPE / HNO3 (RED)
X	DR-4-SW COMPOSITE_20130321	Dissolved Metals (Field Filtered)	250 mL / HDPE / HNO3 (RED)
X	DR-4-SW COMPOSITE_20130321	Potentially Dissolved Metals	250 mL / HDPE / HNO3 (RED)
X	DR-4-SW COMPOSITE_20130321	Alkalinity, TSS, TDS, Chloride, Sulfate	500 mL / HDPE / None
X	DR-4-SW COMPOSITE_20130321	Salinity	250 mL / HDPE / None
X	DR-4-SW COMPOSITE_20130321	Cyanide	250 mL / HDPE / NaOH (GREEN)
X	DR-4-SW COMPOSITE_20130321	Sulfide	250 mL / HDPE / NaOH + Zn Acetate (BLACK)
X	DR-4-SW COMPOSITE_20130321	Total Organic Carbon, Nitrate	250 mL / Amber Glass / H2SO4 (YELLOW)

Notes:

CROSS SECTION 30% COVERED WITH ICE

Rico Water Sampling Form: *Station Information*

☐ Surface Water ☒ Groundwater ☐ Other

Sample Location: **GW-1**

Date of Sample Collection: 3-12-13

Time of Sample Collection: 12:45

Sampler's Identity: TB

Sampling completed at this location ☑
(Do not check box until **ALL** items have been completed)

FIELD PARAMETERS / MEASUREMENTS

Measured Depth to Water: 2.29 ft 2.89' DTW @ SAMPLE

Depth to Well Bottom: 9.51 ft

EXSTIK #2

# of Purge Volumes	Time	Cummulative Volume (gal)	pH	EC, µS/cm	DO, ppm	Temp, °C	ORP, mV
1	1226	1.25	688	~~237 mS/cm~~	—	8.5	—
2	1231	1.25	765	~~360~~ 319	—	5.0	—
3	1235	1.25	721	322	—	4.3	—
Total	1241	1	722	314	—	4.8	—
	1245	HANNA	764	361	5.05	6.01	37.4

Well purged dry? ☐ Yes ☑ No

If Yes, did well recover to 80% within 24 hours?** ☐ Yes ☐ No

SAMPLE BOTTLE INFORMATION - Check off each bottle when completed

Field Sample ID on Bottle	Analysis	Bottle size/Type/Preservative
GW-1_201303 12	Total Metals, Hardness, Silica	250 mL / HDPE / HNO3 (RED)
GW-1_201303 12	Dissolved Metals (Field Filtered)	250 mL / HDPE / HNO3 (RED)
GW-1_201303 12	Potentially Dissolved Metals	250 mL / HDPE / HNO3 (RED)
GW-1_201303 12	Alkalinity, TSS, TDS, Chloride, Sulfate	500 mL / HDPE / None
GW-1_201303 12	Salinity	250 mL / HDPE / None
GW-1_201303 12	Cyanide	250 mL / HDPE / NaOH (GREEN)
GW-1_201303 12	Sulfide	250 mL / HDPE / NaOH + Zn Acetate (BLACK)
GW-1_201303 12	Total Organic Carbon, Nitrate	250 mL / Amber Glass / H2SO4 (YELLOW)

Notes:

* If conditions significantly change, purge volume can be calculated as follows:

One purge volume = 0.174305 x (Measured Depth to Water - Depth to Well Bottom)

** If "No", well is declared dry for the sampling event.

Measured Depth to Water (ft)	Quantity (gal) to Purge X Volumes* 1	3
0.00	1.70	5.10
0.25	1.66	4.97
0.50	1.61	4.84
0.75	1.57	4.71
1.00	1.53	4.58
1.25	1.48	4.44
1.50	1.44	4.31
1.75	1.39	4.18
2.00	1.35	4.05
2.25	1.31	3.92
2.50	1.26	3.79
2.75	1.22	3.66
3.00	1.18	3.53
3.25	1.13	3.40
3.50	1.09	3.27
3.75	1.05	3.14
4.00	1.00	3.01
4.25	0.96	2.88
4.50	0.92	2.75
4.75	0.87	2.61
5.00	0.83	2.48
5.25	0.78	2.35
5.50	0.74	2.22
5.75	0.70	2.09
6.00	0.65	1.96
6.25	0.61	1.83
6.50	0.57	1.70
6.75	0.52	1.57
7.00	0.48	1.44
7.25	0.44	1.31
7.50	0.39	1.18
7.75	0.35	1.05
8.00	0.31	0.92
8.25	0.26	0.78
8.50	0.22	0.65
8.75	0.17	0.52
9.00	0.13	0.39
9.25	0.09	0.26
9.50	0.04	0.13

Rico Water Sampling Form: *Station Information*

☐ Surface Water ☒ Groundwater ☐ Other

Sampling completed at this location ☑
(Do not check box until **ALL** items have been completed)

Sample Location: **GW-3**

Field Sample ID (as shown on bottle label): GW-3-20130307

Date of Sample Collection: 3-6-13 purge. Sampled 3-7-13 gw

Time of Sample Collection: 11.51

Sampler's Identity: TB TB

FIELD PARAMETERS / MEASUREMENTS

Measured Depth to Water: 13.04 ft 13.03

Depth to Well Bottom: 15.1 ft

# of Purge Volumes	Time	Cummulative Volume (gal)	pH	EC, µS/cm	DO, ppm	Temp, °C	ORP, mV
1			7.55			9.1	
2							
3							
Total			7.66	677	442	11.26	29.4

Well purged dry? ☒ Yes ☐ No

If Yes, did well recover to 80% within 24 hours?** ☑ Yes ☐ No

SAMPLE BOTTLE INFORMATION

Check if Collected	Analysis	Bottle size/Type	Preservative	Seal Color
✓	Total Metals, Hardness, Silica	250 mL HDPE	HNO_3	RED
✓	Dissolved Metals (Field Filtered)	250 mL HDPE	HNO_3	RED
✓	Potentially Dissolved Metals	250 mL HDPE	HNO_3	RED
	Alkalinity, TSS, TDS, Chloride, Sulfate	500 mL HDPE	None	None
	Salinity	250 mL HDPE	None	None
✓	Cyanide	250 mL HDPE	NaOH	GREEN
✓	Sulfide	250 mL HDPE	NaOH + Zn Acetate	BLACK
	Total Organic Carbon, Nitrate	250 mL Amber Glass	H_2SO_4	YELLOW

Measured Depth to Water (ft)	Quantity (gal) to Purge X Volumes* 1	3
5.75	1.66	4.99
6.00	1.62	4.86
6.25	1.58	4.73
6.50	1.53	4.60
6.75	1.49	4.47
7.00	1.45	4.34
7.25	1.40	4.21
7.50	1.36	4.08
7.75	1.32	3.95
8.00	1.27	3.82
8.25	1.23	3.69
8.50	1.19	3.56
8.75	1.14	3.43
9.00	1.10	3.29
9.25	1.05	3.16
9.50	1.01	3.03
9.75	0.97	2.90
10.00	0.92	2.77
10.25	0.88	2.64
10.50	0.84	2.51
10.75	0.79	2.38
11.00	0.75	2.25
11.25	0.71	2.12
11.50	0.66	1.99
11.75	0.62	1.86
12.00	0.58	1.73
12.25	0.53	1.59
12.50	0.49	1.46
12.75	0.44	1.33
13.00	0.40	1.20
13.25	0.36	1.07
13.50	0.31	0.94
13.75	0.27	0.81
14.00	0.23	0.68
14.25	0.18	0.55
14.50	0.14	0.42
14.75	0.10	0.29
15.00	0.05	0.16
15.25	0.01	0.03

Notes:

* If conditions significantly change, purge volume can be calculated as follows:

One purge volume = 0.174305 x (Measured Depth to Water - Depth to Well Bottom)

** If "No", well is declared dry for the sampling event.

Purg Dry

Rico Water Sampling Form: *Station Information*

☐ Surface Water ☒ Groundwater ☐ Other

Sampling completed at this location ☑
(Do not check box until **ALL** items have been completed)

Sample Location: **GW-3**
Date of Sample Collection: 3-13-13
Time of Sample Collection: ~~1865~~ 308
Sampler's Identity: TB

FIELD PARAMETERS / MEASUREMENTS

Measured Depth to Water: _____ ft
Depth to Well Bottom: _____ ft

# of Purge Volumes	Time	Cummulative Volume (gal)	pH	EC, µS/cm	DO, ppm	Temp, °C	ORP, mV
1							
2							
3							
Total	308	.3	8.22	758	1.95	4.44	32.3

Well purged dry? ☑ Yes ☐ No
If Yes, did well recover to 80% within 24 hours?** ☑ Yes ☐ No

SAMPLE BOTTLE INFORMATION - Check off each bottle when completed

	Field Sample ID on Bottle	Analysis	Bottle size/Type/Preservative
☐	GW-3_201303	Total Metals, Hardness, Silica	250 mL / HDPE / HNO3 (RED)
☐	GW-3_201303	Dissolved Metals (Field Filtered)	250 mL / HDPE / HNO3 (RED)
☐	GW-3_201303	Potentially Dissolved Metals	250 mL / HDPE / HNO3 (RED)
☑	GW-3_201303	Alkalinity, TSS, TDS, Chloride, Sulfate	500 mL / HDPE / None
☑	GW-3_201303	Salinity	250 mL / HDPE / None
☐	GW-3_201303	Cyanide	250 mL / HDPE / NaOH (GREEN)
☐	GW-3_201303	Sulfide	250 mL / HDPE / NaOH + Zn Acetate (BLACK)
☑	GW-3_201303	Total Organic Carbon, Nitrate	250 mL / Amber Glass / H2SO4 (YELLOW)

Notes:

* If conditions significantly change, purge volume can be calculated as follows:
One purge volume = 0.174305 x (Measured Depth to Water - Depth to Well Bottom)

** If "No", well is declared dry for the sampling event.

Measured Depth to Water (ft)	Quantity (gal) to Purge X Volumes* 1	3
5.75	1.66	4.99
6.00	1.62	4.86
6.25	1.58	4.73
6.50	1.53	4.60
6.75	1.49	4.47
7.00	1.45	4.34
7.25	1.40	4.21
7.50	1.36	4.08
7.75	1.32	3.95
8.00	1.27	3.82
8.25	1.23	3.69
8.50	1.19	3.56
8.75	1.14	3.43
9.00	1.10	3.29
9.25	1.05	3.16
9.50	1.01	3.03
9.75	0.97	2.90
10.00	0.92	2.77
10.25	0.88	2.64
10.50	0.84	2.51
10.75	0.79	2.38
11.00	0.75	2.25
11.25	0.71	2.12
11.50	0.66	1.99
11.75	0.62	1.86
12.00	0.58	1.73
12.25	0.53	1.59
12.50	0.49	1.46
12.75	0.44	1.33
13.00	0.40	1.20
13.25	0.36	1.07
13.50	0.31	0.94
13.75	0.27	0.81
14.00	0.23	0.68
14.25	0.18	0.55
14.50	0.14	0.42
14.75	0.10	0.29
15.00	0.05	0.16
15.25	0.01	0.03

Rico Water Sampling Form: *Station Information*

☐ Surface Water ☒ Groundwater ☐ Other

Sampling completed at this location ☑
(Do not check box until **ALL** items have been completed)

Sample Location: **GW-4**

Date of Sample Collection: 3-14-13

Time of Sample Collection: 1009

Sampler's Identity: TB

FIELD PARAMETERS / MEASUREMENTS

Measured Depth to Water: 10.89 ft

Depth to Well Bottom: 14.99 ft

Exch #2

# of Purge Volumes	Time	Cummulative Volume (gal)	pH	EC, µS/cm	DO, ppm	Temp, °C	ORP, mV
1	959	1.0	7.21	550	0	2.86	-26.8
2	1001	2.0	7.20	584	0	3.25	-27.0
3	1004	3.0	7.18	619	0	3.48	-27.1
Total	1009	4.25	7.18	625	0	3.65	-27.4

Hanna Meter - Total

Well purged dry? ☐ Yes ☑ No

If Yes, did well recover to 80% within 24 hours?** ☐ Yes ☐ No

SAMPLE BOTTLE INFORMATION - Check off each bottle when completed

	Field Sample ID on Bottle	Analysis	Bottle size/Type/Preservative
✓	GW-4_201303 14	Total Metals, Hardness, Silica	250 mL / HDPE / HNO3 (RED)
✓	GW-4_201303 14	Dissolved Metals (Field Filtered)	250 mL / HDPE / HNO3 (RED)
✓	GW-4_201303 14	Potentially Dissolved Metals	250 mL / HDPE / HNO3 (RED)
✓	GW-4_201303 14	Alkalinity, TSS, TDS, Chloride, Sulfate	500 mL / HDPE / None
✓	GW-4_201303 14	Salinity	250 mL / HDPE / None
✓	GW-4_201303 14	Cyanide	250 mL / HDPE / NaOH (GREEN)
✓	GW-4_201303 14	Sulfide	250 mL / HDPE / NaOH + Zn Acetate (BLACK)
✓	GW-4_201303 14	Total Organic Carbon, Nitrate	250 mL / Amber Glass / H2SO4 (YELLOW)

Notes:

* If conditions significantly change, purge volume can be calculated as follows:

One purge volume = 0.174305 x (Measured Depth to Water - Depth to Well Bottom)

** If "No", well is declared dry for the sampling event.

Measured Depth to Water (ft)	Quantity (gal) to Purge X Volumes* 1	3
5.50	1.68	5.05
5.75	1.64	4.92
6.00	1.59	4.78
6.25	1.55	4.65
6.50	1.51	4.52
6.75	1.46	4.39
7.00	1.42	4.26
7.25	1.38	4.13
7.50	1.33	4.00
7.75	1.29	3.87
8.00	1.25	3.74
8.25	1.20	3.61
8.50	1.16	3.48
8.75	1.12	3.35
9.00	1.07	3.22
9.25	1.03	3.09
9.50	0.98	2.95
9.75	0.94	2.82
10.00	0.90	2.69
10.25	0.85	2.56
10.50	0.81	2.43
10.75	0.77	2.30
11.00	0.72	2.17
11.25	0.68	2.04
11.50	0.64	1.91
11.75	0.59	1.78
12.00	0.55	1.65
12.25	0.51	1.52
12.50	0.46	1.39
12.75	0.42	1.25
13.00	0.37	1.12
13.25	0.33	0.99
13.50	0.29	0.86
13.75	0.24	0.73
14.00	0.20	0.60
14.25	0.16	0.47
14.50	0.11	0.34
14.75	0.07	0.21
15.00	0.03	0.08

Rico Water Sampling Form: *Station Information*

☐ Surface Water ☒ Groundwater ☐ Other

Sampling completed at this location ☑
(Do not check box until **ALL** items have been completed)

Sample Location: **GW-5**

Date of Sample Collection: 3-14-13

Time of Sample Collection: 0935

Sampler's Identity: Jeff Roehrig / BR

FIELD PARAMETERS / MEASUREMENTS

Measured Depth to Water: 22.45 ft

Depth to Well Bottom: 24.34 ft 22.97 ft depth at sampling

EK stick #2

# of Purge Volumes	Time	Cummulative Volume (gal)	pH	EC, µS/cm	DO, ppm	Temp, °C	ORP, mV
1	0920	0.35	7.07	1474 µS	—	7.5	—
2	0925	0.70	7.28	1490 µS	—	8.2	—
3	0930	1.05	7.17	1556 µS	—	7.4	—
Total	0935	1.25	7.17	1985 µS/cm	0.57	7.98	-25.3

Gitanna

Well purged dry? ☐ Yes ☑ No

If Yes, did well recover to 80% within 24 hours?** N/A ☐ Yes ☐ No

SAMPLE BOTTLE INFORMATION - Check off each bottle when completed

	Field Sample ID on Bottle	Analysis	Bottle size/Type/Preservative
✓	GW-5_201303 14	Total Metals, Hardness, Silica	250 mL / HDPE / HNO3 (RED)
✓	GW-5_201303 14	Dissolved Metals (Field Filtered)	250 mL / HDPE / HNO3 (RED)
✓	GW-5_201303 14	Potentially Dissolved Metals	250 mL / HDPE / HNO3 (RED)
✓	GW-5_201303 14	Alkalinity, TSS, TDS, Chloride, Sulfate	500 mL / HDPE / None
✓	GW-5_201303 14	Salinity	250 mL / HDPE / None
✓	GW-5_201303 14	Cyanide	250 mL / HDPE / NaOH (GREEN)
✓	GW-5_201303 14	Sulfide	250 mL / HDPE / NaOH + Zn Acetate (BLACK)
✓	GW-5_201303 14	Total Organic Carbon, Nitrate	250 mL / Amber Glass / H2SO4 (YELLOW)

Notes:

* If conditions significantly change, purge volume can be calculated as follows:

One purge volume = 0.174305 x (Measured Depth to Water - Depth to Well Bottom)

** If "No", well is declared dry for the sampling event.

Measured Depth to Water (ft)	Quantity (gal) to Purge X Volumes* 1	3
15.00	1.66	4.97
15.25	1.61	4.84
15.50	1.57	4.71
15.75	1.53	4.58
16.00	1.48	4.44
16.25	1.44	4.31
16.50	1.39	4.18
16.75	1.35	4.05
17.00	1.31	3.92
17.25	1.26	3.79
17.50	1.22	3.66
17.75	1.18	3.53
18.00	1.13	3.40
18.25	1.09	3.27
18.50	1.05	3.14
18.75	1.00	3.01
19.00	0.96	2.88
19.25	0.92	2.75
19.50	0.87	2.61
19.75	0.83	2.48
20.00	0.78	2.35
20.25	0.74	2.22
20.50	0.70	2.09
20.75	0.65	1.96
21.00	0.61	1.83
21.25	0.57	1.70
21.50	0.52	1.57
21.75	0.48	1.44
22.00	0.44	1.31
22.25	0.39	1.18
22.50	0.35	1.05
22.75	0.31	0.92
23.00	0.26	0.78
23.25	0.22	0.65
23.50	0.17	0.52
23.75	0.13	0.39
24.00	0.09	0.26
24.25	0.04	0.13
24.50	0.00	0.00

Rico Water Sampling Form: *Station Information*

☐ Surface Water ☒ Groundwater ☐ Other

Sampling completed at this location ☑
(Do not check box until **ALL** items have been completed)

Sample Location: **GW-6**

Date of Sample Collection: 3-13-13

Time of Sample Collection: 1315

Sampler's Identity: J GISSEMAN

COULDN'T SAMPLE

COULD NOT SAMPLE
Dry or Iced over

FIELD PARAMETERS / MEASUREMENTS

Measured Depth to Water: ____ ft

Depth to Well Bottom: ____ ft

# of Purge Volumes	Time	Cummulative Volume (gal)	pH	EC, µS/cm			, mV
1							
2							
3							
Total							

Well purged dry? ☐ Yes ☐ No

If Yes, did well recover to 80% within 24 hours?** ☐ Yes ☐ No

SAMPLE BOTTLE INFORMATION - Check off each bottle when completed

	Field Sample ID on Bottle	Analysis	Bottle size/Type/Preservative
	GW-6_201303 13	Total Metals, Hardness, Silica	250 mL / HDPE / HNO3 (RED)
	GW-6_201303 13	Dissolved Metals (Field Filtered)	250 mL / HDPE / HNO3 (RED)
	GW-6_201303 13	Potentially Dissolved Metals	250 mL / HDPE / HNO3 (RED)
	GW-6_201303 13	Alkalinity, TSS, TDS, Chloride, Sulfate	500 mL / HDPE / None
	GW-6_201303 13	Salinity	250 mL / HDPE / None
	GW-6_201303 13	Cyanide	250 mL / HDPE / NaOH (GREEN)
	GW-6_201303 13	Sulfide	250 mL / HDPE / NaOH + Zn Acetate (BLACK)
	GW-6_201303 13	Total Organic Carbon, Nitrate	250 mL / Amber Glass / H2SO4 (YELLOW)

Notes:

* If conditions significantly change, purge volume can be calculated as follows:

One purge volume = 0.174305 x (Measured Depth to Water - Depth to Well Bottom)

** If "No", well is declared dry for the sampling event.

COULD NOT SAMPLE WELL DUG OUT 24" SNOW TO FIND DEPRESSION FILLED WITH ICE - PVC WELL DOES NOT HAVE PROTECTIVE COMPLETION ~ CAN NOT REMOVE ICE WITHOUT POSSIBLY DAMAGING WELL

NEEDS TO BE BUILT ABOVE GROUND COMPLETION

Measured Depth to Water (ft)	Quantity (gal) to Purge X Volumes* 1	3
17.25	1.68	5.03
17.50	1.63	4.89
17.75	1.59	4.76
18.00	1.54	4.63
18.25	1.50	4.50
18.50	1.46	4.37
18.75	1.41	4.24
19.00	1.37	4.11
19.25	1.33	3.98
19.50	1.28	3.85
19.75	1.24	3.72
20.00	1.20	3.59
20.25	1.15	3.46
20.50	1.11	3.33
20.75	1.07	3.20
21.00	1.02	3.06
21.25	0.98	2.93
21.50	0.93	2.80
21.75	0.89	2.67
22.00	0.85	2.54
22.25	0.80	2.41
22.50	0.76	2.28
22.75	0.72	2.15
23.00	0.67	2.02
23.25	0.63	1.89
23.50	0.59	1.76
23.75	0.54	1.63
24.00	0.50	1.50
24.25	0.45	1.36
24.50	0.41	1.23
24.75	0.37	1.10
25.00	0.32	0.97
25.25	0.28	0.84
25.50	0.24	0.71
25.75	0.19	0.58
26.00	0.15	0.45
26.25	0.11	0.32
26.50	0.06	0.19
26.75	0.02	0.06

Rico Water Sampling Form: *Station Information*

☐ Surface Water ☒ Groundwater ☐ Other

Sampling completed at this location ☑
(Do not check box until **ALL** items have been completed)

Sample Location: **GW-7**

Field Sample ID (as shown on bottle label): GW-7_201303-7

Date of Sample Collection: 3.6.13

Time of Sample Collection: 12.06 PM

Sampler's Identity: TB. AB.

3.7.13 1230 Sampled

924 PPM

FIELD PARAMETERS / MEASUREMENTS

Measured Depth to Water: 23.51 ft

Depth to Well Bottom: 25.15 ft

23.47' DTW @ Sample

5636

# of Purge Volumes	Time	Cummulative Volume (gal)	pH	EC, µS/cm	DO, ppm	Temp, °C	ORP, mV
1	1206	.3	6.70	1265		13.5	
2							
3							
Total	1230	.	6.59	2908	2.36	12.50	30.2

3-7-13

Well purged dry? ☒ Yes ☐ No

If Yes, did well recover to 80% within 24 hours?** ☒ Yes ☐ No

SAMPLE BOTTLE INFORMATION

Check if Collected	Analysis	Bottle size/Type	Preservative	Seal Color
✓	Total Metals, Hardness, Silica	250 mL HDPE	HNO_3	RED
✓	Dissolved Metals (Field Filtered)	250 mL HDPE	HNO_3	RED
✓	Potentially Dissolved Metals	250 mL HDPE	HNO_3	RED
✓	Alkalinity, TSS, TDS, Chloride, Sulfate	500 mL HDPE	None	None
✓	Salinity	250 mL HDPE	None	None
✓	Cyanide	250 mL HDPE	NaOH	GREEN
✓	Sulfide	250 mL HDPE	NaOH + Zn Acetate	BLACK
✓	Total Organic Carbon, Nitrate	250 mL Amber Glass	H_2SO_4	YELLOW

Notes:

* If conditions significantly change, purge volume can be calculated as follows:

One purge volume = 0.174305 x (Measured Depth to Water - Depth to Well Bottom)

** If "No", well is declared dry for the sampling event.

purg

Measured Depth to Water (ft)	Quantity (gal) to Purge X Volumes* 1	3
15.25	1.76	5.28
15.50	1.72	5.15
15.75	1.67	5.01
16.00	1.63	4.88
16.25	1.58	4.75
16.50	1.54	4.62
16.75	1.50	4.49
17.00	1.45	4.36
17.25	1.41	4.23
17.50	1.37	4.10
17.75	1.32	3.97
18.00	1.28	3.84
18.25	1.24	3.71
18.50	1.19	3.58
18.75	1.15	3.45
19.00	1.11	3.32
19.25	1.06	3.18
19.50	1.02	3.05
19.75	0.97	2.92
20.00	0.93	2.79
20.25	0.89	2.66
20.50	0.84	2.53
20.75	0.80	2.40
21.00	0.76	2.27
21.25	0.71	2.14
21.50	0.67	2.01
21.75	0.63	1.88
22.00	0.58	1.75
22.25	0.54	1.62
22.50	0.50	1.49
22.75	0.45	1.35
23.00	0.41	1.22
23.25	0.36	1.09
23.50	0.32	0.96
23.75	0.28	0.83
24.00	0.23	0.70
24.25	0.19	0.57
24.50	0.15	0.44
24.75	0.10	0.31

Rico Water Sampling Form: *Station Information*

☐ Surface Water ☒ Groundwater ☐ Other

Sampling completed at this location ☑
(Do not check box until **ALL** items have been completed)

Sample Location: **EB-1**

Field Sample ID (as shown on bottle label): EB1_20130306

Date of Sample Collection: 3-6-13

Time of Sample Collection: 12.12 pm

Sampler's Identity: GB GB

5-7-13 10-15 Sampled

1.40 ppm

FIELD PARAMETERS / MEASUREMENTS

Measured Depth to Water: 23.14 ft 23.17' DTW@Sample

Depth to Well Bottom: 35.21 ft

1.02

# of Purge Volumes	Time	Cummulative Volume (gal)	pH	EC, µS/cm	DO, ppm	Temp, °C	ORP, mV
1			7.15	19.50		10.3	
2							
3							
Total			7.21	1988	1.44	9.40	31.3

Well purged dry? ☒ Yes ☐ No

If Yes, did well recover to 80% within 24 hours?** ☒ Yes ☐ No

SAMPLE BOTTLE INFORMATION

Check if Collected	Analysis	Bottle size/Type	Preservative	Seal Color
☒	Total Metals, Hardness, Silica	250 mL HDPE	HNO_3	RED
☒	Dissolved Metals (Field Filtered)	250 mL HDPE	HNO_3	RED
☒	Potentially Dissolved Metals	250 mL HDPE	HNO_3	RED
☒	Alkalinity, TSS, TDS, Chloride, Sulfate	500 mL HDPE	None	None
☒	Salinity	250 mL HDPE	None	None
☒	Cyanide	250 mL HDPE	NaOH	GREEN
☒	Sulfide	250 mL HDPE	NaOH + Zn Acetate	BLACK
☒	Total Organic Carbon, Nitrate	250 mL Amber Glass	H_2SO_4	YELLOW

Notes:

* If conditions significantly change, purge volume can be calculated as follows:

One purge volume = 0.174305 x (Measured Depth to Water - Depth to Well Bottom)

** If "No", well is declared dry for the sampling event.

Need wieghted Bailer. Pipe bent.

Measured Depth to Water (ft)	Quantity (gal) to Purge X Volumes* 1	3
19.00	2.85	8.55
19.25	2.81	8.42
19.50	2.76	8.29
19.75	2.72	8.16
20.00	2.68	8.03
20.25	2.63	7.90
20.50	2.59	7.77
20.75	2.54	7.63
21.00	2.50	7.50
21.25	2.46	7.37
21.50	2.41	7.24
21.75	2.37	7.11
22.00	2.33	6.98
22.25	2.28	6.85
22.50	2.24	6.72
22.75	2.20	6.59
23.00	2.15	6.46
23.25	2.11	6.33
23.50	2.07	6.20
23.75	2.02	6.07
24.00	1.98	5.94
24.25	1.93	5.80
24.50	1.89	5.67
24.75	1.85	5.54
25.00	1.80	5.41
25.25	1.76	5.28
25.50	1.72	5.15
25.75	1.67	5.02
26.00	1.63	4.89
26.25	1.59	4.76
26.50	1.54	4.63
26.75	1.50	4.50
27.00	1.46	4.37
27.25	1.41	4.24
27.50	1.37	4.10
27.75	1.32	3.97
28.00	1.28	3.84
28.25	1.24	3.71
28.50	1.19	3.58

X

Rico Water Sampling Form: *Station Information*

☐ Surface Water ☒ Groundwater ☐ Other

Sampling completed at this location ☑
(Do not check box until **ALL** items have been completed)

Sample Location: **EB-2**

Field Sample ID (as shown on bottle label): EB-2-20130307

Date of Sample Collection: 3-6-13

Time of Sample Collection: ~~EB~~ ~~EB~~ 12:33 PM

Sampler's Identity: TD ~~SB~~

3-7-13 Sampled 11 00

FIELD PARAMETERS / MEASUREMENTS

Measured Depth to Water: 17.39 ft 17.36' DTW @ SAMPLE

Depth to Well Bottom: 26.47 ft

# of Purge Volumes	Time	Cummulative Volume (gal)	pH	EC, µS/cm	DO, ppm	Temp, °C	ORP, mV
1	12:33		6.24	4.33		10.6	
2							
3							
Total	11:00 3-7-13		6.25	2.988	0.37	8.95	28.3

*2.98 ppm

2.27

Well purged dry? ☑ Yes ☐ No

If Yes, did well recover to 80% within 24 hours?** ☑ Yes ☐ No

SAMPLE BOTTLE INFORMATION

Check if Collected	Analysis	Bottle size/Type	Preservative	Seal Color
☑	Total Metals, Hardness, Silica	250 mL HDPE	HNO_3	RED
☑	Dissolved Metals (Field Filtered)	250 mL HDPE	HNO_3	RED
☑	Potentially Dissolved Metals	250 mL HDPE	HNO_3	RED
☑	Alkalinity, TSS, TDS, Chloride, Sulfate	500 mL HDPE	None	None
☑	Salinity	250 mL HDPE	None	None
☑	Cyanide	250 mL HDPE	NaOH	GREEN
☑	Sulfide	250 mL HDPE	NaOH + Zn Acetate	BLACK
☑	Total Organic Carbon, Nitrate	250 mL Amber Glass	H_2SO_4	YELLOW

Measured Depth to Water (ft)	Quantity (gal) to Purge X Volumes* 1	3
14.00	2.18	6.54
14.25	2.14	6.41
14.50	2.09	6.27
14.75	2.05	6.14
15.00	2.00	6.01
15.25	1.96	5.88
15.50	1.92	5.75
15.75	1.87	5.62
16.00	1.83	5.49
16.25	1.79	5.36
16.50	1.74	5.23
16.75	1.70	5.10
17.00	1.66	4.97
17.25	1.61	4.84
17.50	1.57	4.71
17.75	1.53	4.58
18.00	1.48	4.44
18.25	1.44	4.31
18.50	1.39	4.18
18.75	1.35	4.05
19.00	1.31	3.92
19.25	1.26	3.79
19.50	1.22	3.66
19.75	1.18	3.53
20.00	1.13	3.40
20.25	1.09	3.27
20.50	1.05	3.14
20.75	1.00	3.01
21.00	0.96	2.88
21.25	0.92	2.75
21.50	0.87	2.61
21.75	0.83	2.48
22.00	0.78	2.35
22.25	0.74	2.22
22.50	0.70	2.09
22.75	0.65	1.96
23.00	0.61	1.83
23.25	0.57	1.70
23.50	0.52	1.57

Notes:

* If conditions significantly change, purge volume can be calculated as follows:

One purge volume = 0.174305 x (Measured Depth to Water - Depth to Well Bottom)

** If "No", well is declared dry for the sampling event.

Dry Well

Rico Water Sampling Form: *Station Information*

☐ Surface Water ☒ Groundwater ☐ Other

Sampling completed at this location ☑
(Do not check box until **ALL** items have been completed)

Sample Location: **MW-1 DEEP**
Date of Sample Collection: 3-12-13
Time of Sample Collection: 1530
Sampler's Identity: J ROEHRIG

FIELD PARAMETERS / MEASUREMENTS

Measured Depth to Water: 9.32 ft
Depth to Well Bottom: 25.14 ft

EXSTIK II #1

# of Purge Volumes	Time	Cummulative Volume (gal)	pH	EC, µS/cm	DO, ppm	Temp, °C	ORP, mV
1	1459	2.5	7.64	1155 µS	—	5.8	—
2	1514	6.0	7.44	1146 µS	—	5.2	—
3	1521	8.75	7.32	1165 µS	—	5.9	—
Total	1530	9.25	8.60	1395 µS/cm	3.17	4.82	38.3

HANNA

Well purged dry? ☐ Yes ☒ No
If Yes, did well recover to 80% within 24 hours?** ☐ Yes ☐ No

SAMPLE BOTTLE INFORMATION - Check off each bottle when completed

	Field Sample ID on Bottle	Analysis	Bottle size/Type/Preservative
✓	MW-1 DEEP_201303 12	Total Metals, Hardness, Silica	250 mL / HDPE / HNO3 (RED)
✓	MW-1 DEEP_201303 12	Dissolved Metals (Field Filtered)	250 mL / HDPE / HNO3 (RED)
✓	MW-1 DEEP_201303 12	Potentially Dissolved Metals	250 mL / HDPE / HNO3 (RED)
✓	MW-1 DEEP_201303 12	Alkalinity, TSS, TDS, Chloride, Sulfate	500 mL / HDPE / None
✓	MW-1 DEEP_201303 12	Salinity	250 mL / HDPE / None
✓	MW-1 DEEP_201303 12	Cyanide	250 mL / HDPE / NaOH (GREEN)
✓	MW-1 DEEP_201303 12	Sulfide	250 mL / HDPE / NaOH + Zn Acetate (BLACK)
✓	MW-1 DEEP_201303 12	Total Organic Carbon, Nitrate	250 mL / Amber Glass / H2SO4 (YELLOW)

Notes:

* If conditions significantly change, purge volume can be calculated as follows:
One purge volume = 0.174305 x (Measured Depth to Water - Depth to Well Bottom)

** If "No", well is declared dry for the sampling event.

Need weighted bailer - as regular bailer doesn't sink very quickly

Measured Depth to Water (ft)	Quantity (gal) to Purge X Volumes* 1	3
6.00	3.32	9.97
6.25	3.28	9.84
6.50	3.24	9.71
6.75	3.19	9.58
7.00	3.15	9.45
7.25	3.11	9.32
7.50	3.06	9.19
7.75	3.02	9.06
8.00	2.98	8.93
8.25	2.93	8.80
8.50	2.89	8.66
8.75	2.84	8.53
9.00	2.80	8.40
9.25	2.76	8.27
9.50	2.71	8.14
9.75	2.67	8.01
10.00	2.63	7.88
10.25	2.58	7.75
10.50	2.54	7.62
10.75	2.50	7.49
11.00	2.45	7.36
11.25	2.41	7.23
11.50	2.37	7.10
11.75	2.32	6.97
12.00	2.28	6.83
12.25	2.23	6.70
12.50	2.19	6.57
12.75	2.15	6.44
13.00	2.10	6.31
13.25	2.06	6.18
13.50	2.02	6.05
13.75	1.97	5.92
14.00	1.93	5.79
14.25	1.89	5.66
14.50	1.84	5.53
14.75	1.80	5.40
15.00	1.76	5.27
15.25	1.71	5.14
15.50	1.67	5.00

Rico Water Sampling Form: *Station Information*

☐ Surface Water ☒ Groundwater ☐ Other

Sampling completed at this location ☑
(Do not check box until **ALL** items have been completed)

Sample Location: **MW-1 SHALLOW**
Date of Sample Collection: 3-12-13
Time of Sample Collection: 1514
Sampler's Identity: J GISSEMAN

FIELD PARAMETERS / MEASUREMENTS

Measured Depth to Water: 6.98 ft
Depth to Well Bottom: 10.37 ft

EXTECH EXSTIK II #1

# of Purge Volumes	Time	Cummulative Volume (gal)	pH	EC, µS/cm	DO, ppm	Temp, °C	ORP, mV
1	1452	0.95	7.48	1158 µS	–	9.1	–
2	1457	2.0	7.44	1194 µS	–	6.4	–
3	1303	2.7	7.26	1184 µS	–	5.3	–
Total	1550	3.6	9.02	1364 µS/cm	3.24	7.24 HANNA	37.5

Well purged dry? ☐ Yes ☒ No
If Yes, did well recover to 80% within 24 hours?** ☐ Yes ☐ No

SAMPLE BOTTLE INFORMATION - Check off each bottle when completed

	Field Sample ID on Bottle	Analysis	Bottle size/Type/Preservative
✓	MW-1 SHALLOW_201303 /2	Total Metals, Hardness, Silica	250 mL / HDPE / HNO3 (RED)
✓	MW-1 SHALLOW_201303 /2	Dissolved Metals (Field Filtered)	250 mL / HDPE / HNO3 (RED)
✓	MW-1 SHALLOW_201303 /2	Potentially Dissolved Metals	250 mL / HDPE / HNO3 (RED)
✓	MW-1 SHALLOW_201303 /2	Alkalinity, TSS, TDS, Chloride, Sulfate	500 mL / HDPE / None
✓	MW-1 SHALLOW_201303 /2	Salinity	250 mL / HDPE / None
✓	MW-1 SHALLOW_201303 /2	Cyanide	250 mL / HDPE / NaOH (GREEN)
✓	MW-1 SHALLOW_201303 /2	Sulfide	250 mL / HDPE / NaOH + Zn Acetate (BLACK)
✓	MW-1 SHALLOW_201303 /2	Total Organic Carbon, Nitrate	250 mL / Amber Glass / H2SO4 (YELLOW)

Notes:

* If conditions significantly change, purge volume can be calculated as follows:

One purge volume = 0.174305 x (Measured Depth to Water - Depth to Well Bottom)

** If "No", well is declared dry for the sampling event.

Measured Depth to Water (ft)	Quantity (gal) to Purge X Volumes* 1	3
0.75	1.66	4.99
1.00	1.62	4.86
1.25	1.58	4.73
1.50	1.53	4.60
1.75	1.49	4.47
2.00	1.44	4.33
2.25	1.40	4.20
2.50	1.36	4.07
2.75	1.31	3.94
3.00	1.27	3.81
3.25	1.23	3.68
3.50	1.18	3.55
3.75	1.14	3.42
4.00	1.10	3.29
4.25	1.05	3.16
4.50	1.01	3.03
4.75	0.97	2.90
5.00	0.92	2.77
5.25	0.88	2.64
5.50	0.83	2.50
5.75	0.79	2.37
6.00	0.75	2.24
6.25	0.70	2.11
6.50	0.66	1.98
6.75	0.62	1.85
7.00	0.57	1.72
7.25	0.53	1.59
7.50	0.49	1.46
7.75	0.44	1.33
8.00	0.40	1.20
8.25	0.36	1.07
8.50	0.31	0.94
8.75	0.27	0.81
9.00	0.22	0.67
9.25	0.18	0.54
9.50	0.14	0.41
9.75	0.09	0.28
10.00	0.05	0.15
10.25	0.01	0.02

Rico Water Sampling Form: *Station Information*

☐ Surface Water ☒ Groundwater ☐ Other

Sampling completed at this location ☑
(Do not check box until **ALL** items have been completed)

Sample Location: **MW-2 DEEP**

Date of Sample Collection: 3-13-13

Time of Sample Collection: 1510

Sampler's Identity: J ROEHRIG

FIELD PARAMETERS / MEASUREMENTS

Measured Depth to Water: 10.11 ft 10.32' at sampling

Depth to Well Bottom: 23.08 ft

EXSTIK #2

# of Purge Volumes	Time	Cummulative Volume (gal)	pH	EC, µS/cm	DO, ppm	Temp, °C	ORP, mV
1	1445	2.5	6.96	1124	—	11.4	—
2	1455	5.0	7.19	1127 µS	—	9.3	—
3	1503	7.5	7.23	1101 µS	—	9.3	—
Total	1555	8.5	8.01	1387 µS/cm	1.31	11.53	31.1

HANNA

Well purged dry? ☐ Yes ☒ No

If Yes, did well recover to 80% within 24 hours?** ☐ Yes ☐ No

SAMPLE BOTTLE INFORMATION - Check off each bottle when completed

	Field Sample ID on Bottle	Analysis	Bottle size/Type/Preservative
✓	MW-2 DEEP_201303 13	Total Metals, Hardness, Silica	250 mL / HDPE / HNO3 (RED)
✓	MW-2 DEEP_201303 13	Dissolved Metals (Field Filtered)	250 mL / HDPE / HNO3 (RED)
✓	MW-2 DEEP_201303 13	Potentially Dissolved Metals	250 mL / HDPE / HNO3 (RED)
✓	MW-2 DEEP_201303 13	Alkalinity, TSS, TDS, Chloride, Sulfate	500 mL / HDPE / None
✓	MW-2 DEEP_201303 13	Salinity	250 mL / HDPE / None
✓	MW-2 DEEP_201303 13	Cyanide	250 mL / HDPE / NaOH (GREEN)
✓	MW-2 DEEP_201303 13	Sulfide	250 mL / HDPE / NaOH + Zn Acetate (BLACK)
✓	MW-2 DEEP_201303 13	Total Organic Carbon, Nitrate	250 mL / Amber Glass / H2SO4 (YELLOW)

Notes:

* If conditions significantly change, purge volume can be calculated as follows:

One purge volume = 0.174305 x (Measured Depth to Water - Depth to Well Bottom)

** If "No", well is declared dry for the sampling event.

Measured Depth to Water (ft)	Quantity (gal) to Purge X Volumes* 1	3
6.00	2.97	8.92
6.25	2.93	8.78
6.50	2.88	8.65
6.75	2.84	8.52
7.00	2.80	8.39
7.25	2.75	8.26
7.50	2.71	8.13
7.75	2.67	8.00
8.00	2.62	7.87
8.25	2.58	7.74
8.50	2.54	7.61
8.75	2.49	7.48
9.00	2.45	7.35
9.25	2.41	7.22
9.50	2.36	7.09
9.75	2.32	6.95
10.00	2.27	6.82
10.25	2.23	6.69
10.50	2.19	6.56
10.75	2.14	6.43
11.00	2.10	6.30
11.25	2.06	6.17
11.50	2.01	6.04
11.75	1.97	5.91
12.00	1.93	5.78
12.25	1.88	5.65
12.50	1.84	5.52
12.75	1.80	5.39
13.00	1.75	5.26
13.25	1.71	5.12
13.50	1.66	4.99
13.75	1.62	4.86
14.00	1.58	4.73
14.25	1.53	4.60
14.50	1.49	4.47
14.75	1.45	4.34
15.00	1.40	4.21
15.25	1.36	4.08
15.50	1.32	3.95

Rico Water Sampling Form: *Station Information*

☐ Surface Water ☒ Groundwater ☐ Other

Sampling completed at this location ☑
(Do not check box until **ALL** items have been completed)

Sample Location: **MW-2 SHALLOW**
Date of Sample Collection: 3-13-13
Time of Sample Collection: 1442
Sampler's Identity: J GISSEMAN

Measured Depth to Water (ft)	Quantity (gal) to Purge X Volumes*	
	1	3

FIELD PARAMETERS / MEASUREMENTS

Measured Depth to Water: DRY ft
Depth to Well Bottom: 10.37 ft

# of Purge Volumes	Time	Cummulative Volume (gal)	pH	EC, µS/cm	DO, ppm	Temp, °C	ORP, mV
1							
2							
3							
Total							

Well purged dry? ☐ Yes ☐ No
If Yes, did well recover to 80% within 24 hours?** ☐ Yes ☐ No

SAMPLE BOTTLE INFORMATION - Check off each bottle when completed

	Field Sample ID on Bottle	Analysis	Bottle size/Type/Preservative
	MW-2 SHALLOW_201303 13	Total Metals, Hardness, Silica	250 mL / HDPE / HNO3 (RED)
	MW-2 SHALLOW_201303 13	Dissolved Metals (Field Filtered)	250 mL / HDPE / HNO3 (RED)
	MW-2 SHALLOW_201303 13	Potentially Dissolved Metals	250 mL / HDPE / HNO3 (RED)
	MW-2 SHALLOW_201303 13	Alkalinity, TSS, TDS, Chloride, Sulfate	500 mL / HDPE / None
	MW-2 SHALLOW_201303 13	Salinity	250 mL / HDPE / None
	MW-2 SHALLOW_201303 13	Cyanide	250 mL / HDPE / NaOH (GREEN)
	MW-2 SHALLOW_201303 13	Sulfide	250 mL / HDPE / NaOH + Zn Acetate (BLACK)
	MW-2 SHALLOW_201303 13	Total Organic Carbon, Nitrate	250 mL / Amber Glass / H2SO4 (YELLOW)

Notes:

* If conditions significantly change, purge volume can be calculated as follows:

One purge volume = 0.174305 x (Measured Depth to Water - Depth to Well Bottom)

** If "No", well is declared dry for the sampling event.

Well DRY

Rico Water Sampling Form: *Station Information*

☐ Surface Water ☒ Groundwater ☐ Other

Sampling completed at this location ☑
(Do not check box until **ALL** items have been completed)

Sample Location: **MW-3 DEEP**
Date of Sample Collection: 03-13-13
Time of Sample Collection: 1550
Sampler's Identity: J ROEHRIG

FIELD PARAMETERS / MEASUREMENTS

Measured Depth to Water: 9.93 ft DTW @ SAMPLE: 10.00
Depth to Well Bottom: 23.27 ft
EXSTIK #2

# of Purge Volumes	Time	Cummulative Volume (gal)	pH	EC, µS/cm	DO, ppm	Temp, °C	ORP, mV
1	1525	2.5	7.10	1140	—	12.3	—
2	1532	5.0	6.99	1134	—	11.6	—
3	1542	8.0	7.20	1165 µS	—	11.5	—
Total	1557	9.0	7.63	1416 µS/cm	0.00	10.11	22.9

HANNA

Well purged dry? ☐ Yes ☒ No
If Yes, did well recover to 80% within 24 hours?** ☐ Yes ☐ No

SAMPLE BOTTLE INFORMATION - Check off each bottle when completed

	Field Sample ID on Bottle	Analysis	Bottle size/Type/Preservative
✓	MW-3 DEEP_201303 13	Total Metals, Hardness, Silica	250 mL / HDPE / HNO3 (RED)
✓	MW-3 DEEP_201303 13	Dissolved Metals (Field Filtered)	250 mL / HDPE / HNO3 (RED)
✓	MW-3 DEEP_201303 13	Potentially Dissolved Metals	250 mL / HDPE / HNO3 (RED)
✓	MW-3 DEEP_201303 13	Alkalinity, TSS, TDS, Chloride, Sulfate	500 mL / HDPE / None
✓	MW-3 DEEP_201303 13	Salinity	250 mL / HDPE / None
✓	MW-3 DEEP_201303 13	Cyanide	250 mL / HDPE / NaOH (GREEN)
✓	MW-3 DEEP_201303 13	Sulfide	250 mL / HDPE / NaOH + Zn Acetate (BLACK)
✓	MW-3 DEEP_201303 13	Total Organic Carbon, Nitrate	250 mL / Amber Glass / H2SO4 (YELLOW)

Notes:

* If conditions significantly change, purge volume can be calculated as follows:

One purge volume = 0.174305 x (Measured Depth to Water - Depth to Well Bottom)

** If "No", well is declared dry for the sampling event.

Measured Depth to Water (ft)	Quantity (gal) to Purge X Volumes* 1	3
6.00	3.01	9.04
6.25	2.97	8.91
6.50	2.93	8.78
6.75	2.88	8.65
7.00	2.84	8.52
7.25	2.80	8.39
7.50	2.75	8.26
7.75	2.71	8.13
8.00	2.67	8.00
8.25	2.62	7.86
8.50	2.58	7.73
8.75	2.53	7.60
9.00	2.49	7.47
9.25	2.45	7.34
9.50	2.40	7.21
9.75	2.36	7.08
10.00	2.32	6.95
10.25	2.27	6.82
10.50	2.23	6.69
10.75	2.19	6.56
11.00	2.14	6.43
11.25	2.10	6.30
11.50	2.06	6.17
11.75	2.01	6.03
12.00	1.97	5.90
12.25	1.92	5.77
12.50	1.88	5.64
12.75	1.84	5.51
13.00	1.79	5.38
13.25	1.75	5.25
13.50	1.71	5.12
13.75	1.66	4.99
14.00	1.62	4.86
14.25	1.58	4.73
14.50	1.53	4.60
14.75	1.49	4.47
15.00	1.44	4.33
15.25	1.40	4.20
15.50	1.36	4.07

Rico Water Sampling Form: *Station Information*

☐ Surface Water ☒ Groundwater ☐ Other

Sampling completed at this location ☑
(Do not check box until **ALL** items have been completed)

Sample Location: **MW-3 SHALLOW**
Date of Sample Collection: 3-13-13
Time of Sample Collection: 1520
Sampler's Identity: J GISSEMAN

NO SAMPLE

Measured Depth to Water (ft)	Quantity (gal) to Purge X Volumes*	
	1	3

FIELD PARAMETERS / MEASUREMENTS

Measured Depth to Water: DRY ft
Depth to Well Bottom: 9.34 ft

# of Purge Volumes	Time	Cummulative Volume (gal)	pH	EC, µS/cm	DO, ppm	Temp, °C	ORP, mV
1							
2							
3							
Total							

Well purged dry? ☐ Yes ☐ No
If Yes, did well recover to 80% within 24 hours?** ☐ Yes ☐ No

SAMPLE BOTTLE INFORMATION - Check off each bottle when completed

	Field Sample ID on Bottle	Analysis	Bottle size/Type/Preservative
☐	MW-3 SHALLOW_201303 12	Total Metals, Hardness, Silica	250 mL / HDPE / HNO3 (RED)
☐	MW-3 SHALLOW_201303 12	Dissolved Metals (Field Filtered)	250 mL / HDPE / HNO3 (RED)
☐	MW-3 SHALLOW_201303 12	Potentially Dissolved Metals	250 mL / HDPE / HNO3 (RED)
☐	MW-3 SHALLOW_201303 12	Alkalinity, TSS, TDS, Chloride, Sulfate	500 mL / HDPE / None
☐	MW-3 SHALLOW_201303 12	Salinity	250 mL / HDPE / None
☐	MW-3 SHALLOW_201303 12	Cyanide	250 mL / HDPE / NaOH (GREEN)
☐	MW-3 SHALLOW_201303 12	Sulfide	250 mL / HDPE / NaOH + Zn Acetate (BLACK)
☐	MW-3 SHALLOW_201303 12	Total Organic Carbon, Nitrate	250 mL / Amber Glass / H2SO4 (YELLOW)

Notes:

* If conditions significantly change, purge volume can be calculated as follows:

One purge volume = 0.174305 x (Measured Depth to Water - Depth to Well Bottom)

** If "No", well is declared dry for the sampling event.

Well DRY

Rico Water Sampling Form: *Station Information*

☐ Surface Water ☒ Groundwater ☐ Other

Sampling completed at this location ☑
(Do not check box until **ALL** items have been completed)

Sample Location: **MW-4 DEEP**
Date of Sample Collection: 3/12/13
Time of Sample Collection: 1425
Sampler's Identity: TB

FIELD PARAMETERS / MEASUREMENTS

Measured Depth to Water: 17.11 ft 17.14' DTW @ sampling
Depth to Well Bottom: 31.02 ft
EKSTIK #2

# of Purge Volumes	Time	Cummulative Volume (gal)	pH	EC, µS/cm	DO, ppm	Temp, °C	ORP, mV
1	1:50	2.5	6.69	1302		11.5	
2	1:55	2.5	6.73	1333		10.8	
3	202	2.5	6.78	1312		11.9	
Total	1425	7.0	7.12	16.14	0.60	11.27	35.6

HANNA

Well purged dry? ☐ Yes ☒ No
If Yes, did well recover to 80% within 24 hours?** ☐ Yes ☐ No

SAMPLE BOTTLE INFORMATION - Check off each bottle when completed

	Field Sample ID on Bottle	Analysis	Bottle size/Type/Preservative
✓	MW-4 DEEP_201303 12	Total Metals, Hardness, Silica	250 mL / HDPE / HNO3 (RED)
✓	MW-4 DEEP_201303 12	Dissolved Metals (Field Filtered)	250 mL / HDPE / HNO3 (RED)
✓	MW-4 DEEP_201303 12	Potentially Dissolved Metals	250 mL / HDPE / HNO3 (RED)
✓	MW-4 DEEP_201303 12	Alkalinity, TSS, TDS, Chloride, Sulfate	500 mL / HDPE / None
✓	MW-4 DEEP_201303 12	Salinity	250 mL / HDPE / None
✓	MW-4 DEEP_201303 12	Cyanide	250 mL / HDPE / NaOH (GREEN)
✓	MW-4 DEEP_201303 12	Sulfide	250 mL / HDPE / NaOH + Zn Acetate (BLACK)
✓	MW-4 DEEP_201303 12	Total Organic Carbon, Nitrate	250 mL / Amber Glass / H2SO4 (YELLOW)

Notes:

* If conditions significantly change, purge volume can be calculated as follows:

One purge volume = 0.174305 x (Measured Depth to Water - Depth to Well Bottom)

** If "No", well is declared dry for the sampling event.

Measured Depth to Water (ft)	Quantity (gal) to Purge X Volumes* 1	3
13.00	3.18	9.54
13.25	3.14	9.41
13.50	3.09	9.28
13.75	3.05	9.15
14.00	3.01	9.02
14.25	2.96	8.88
14.50	2.92	8.75
14.75	2.87	8.62
15.00	2.83	8.49
15.25	2.79	8.36
15.50	2.74	8.23
15.75	2.70	8.10
16.00	2.66	7.97
16.25	2.61	7.84
16.50	2.57	7.71
16.75	2.53	7.58
17.00	2.48	7.45
17.25	2.44	7.32
17.50	2.39	7.18
17.75	2.35	7.05
18.00	2.31	6.92
18.25	2.26	6.79
18.50	2.22	6.66
18.75	2.18	6.53
19.00	2.13	6.40
19.25	2.09	6.27
19.50	2.05	6.14
19.75	2.00	6.01
20.00	1.96	5.88
20.25	1.92	5.75
20.50	1.87	5.62
20.75	1.83	5.49
21.00	1.78	5.35
21.25	1.74	5.22
21.50	1.70	5.09
21.75	1.65	4.96
22.00	1.61	4.83
22.25	1.57	4.70
22.50	1.52	4.57

Rico Water Sampling Form: *Station Information*

☐ Surface Water ☒ Groundwater ☐ Other

Sampling completed at this location ☑
(Do not check box until **ALL** items have been completed)

Sample Location: **MW-4 SHALLOW**

Field Sample ID (as shown on bottle label): MW-4 SHALLOW-20130307

Date of Sample Collection: 3·6·13

Time of Sample Collection: 13:02

Sampler's Identity: TB TB

Sampled 3-7-13 1230

FIELD PARAMETERS / MEASUREMENTS

Measured Depth to Water: 17.19 ft 17.17' DTW@SAMPLE

Depth to Well Bottom: 18.19 ft

937 ppm

Solid

# of Purge Volumes	Time	Cummulative Volume (gal)	pH	EC, µS/cm	DO, ppm	Temp, °C	ORP, mV
1	13.02	.20	6.47	1383		10.0	
2							
3							
Total	1230	.1 gal	6.55	2632	2.72	10.51	31.2

Well purged dry? ☑ Yes ☐ No

If Yes, did well recover to 80% within 24 hours?** ☑ Yes ☐ No

SAMPLE BOTTLE INFORMATION

Check if Collected	Analysis	Bottle size/Type	Preservative	Seal Color
✓	Total Metals, Hardness, Silica	250 mL HDPE	HNO_3	RED
✓	Dissolved Metals (Field Filtered)	250 mL HDPE	HNO_3	RED
✓	Potentially Dissolved Metals	250 mL HDPE	HNO_3	RED
✓	Alkalinity, TSS, TDS, Chloride, Sulfate	500 mL HDPE	None	None
✓	Salinity	250 mL HDPE	None	None
✓	Cyanide	250 mL HDPE	NaOH	GREEN
✓	Sulfide	250 mL HDPE	NaOH + Zn Acetate	BLACK
✓	Total Organic Carbon, Nitrate	250 mL Amber Glass	H_2SO_4	YELLOW

Notes:

* If conditions significantly change, purge volume can be calculated as follows:

One purge volume = 0.174305 x (Measured Depth to Water - Depth to Well Bottom)

** If "No", well is declared dry for the sampling event.

Purg Dry

Measured Depth to Water (ft)	Quantity (gal) to Purge X Volumes* 1	3
8.75	1.68	5.04
9.00	1.64	4.91
9.25	1.59	4.78
9.50	1.55	4.65
9.75	1.51	4.52
10.00	1.46	4.39
10.25	1.42	4.26
10.50	1.38	4.13
10.75	1.33	4.00
11.00	1.29	3.86
11.25	1.24	3.73
11.50	1.20	3.60
11.75	1.16	3.47
12.00	1.11	3.34
12.25	1.07	3.21
12.50	1.03	3.08
12.75	0.98	2.95
13.00	0.94	2.82
13.25	0.90	2.69
13.50	0.85	2.56
13.75	0.81	2.43
14.00	0.77	2.30
14.25	0.72	2.16
14.50	0.68	2.03
14.75	0.63	1.90
15.00	0.59	1.77
15.25	0.55	1.64
15.50	0.50	1.51
15.75	0.46	1.38
16.00	0.42	1.25
16.25	0.37	1.12
16.50	0.33	0.99
16.75	0.29	0.86
17.00	0.24	0.73
17.25	0.20	0.60
17.50	0.16	0.47
17.75	0.11	0.33
18.00	0.07	0.20
18.25	0.02	0.07

Rico Water Sampling Form: *Station Information*

☐ Surface Water ☒ Groundwater ☐ Other

Sampling completed at this location ☑
(Do not check box until **ALL** items have been completed)

Sample Location: **MW-5 DEEP**
Date of Sample Collection: 3-13-13
Time of Sample Collection: 1307
Sampler's Identity: J ROEHRIG

FIELD PARAMETERS / MEASUREMENTS

Measured Depth to Water: 17.84 ft ATW@ Sampling 17.83'
Depth to Well Bottom: 34.18 ft

EXSTIK # 2

# of Purge Volumes	Time	Cummulative Volume (gal)	pH	EC, µS/cm	DO, ppm	Temp, °C	ORP, mV
1	1227	3.0	6.69	1774	—	10.3	—
2	1243	6.0	6.68	1644µS	—	10.3	—
3	1255	9.0	6.85	1465	—	13.4	—
Total	1333	10.0	6.82	2029	0.58	11.42	12.2

HANNA

Well purged dry? ☐ Yes ☐ No
If Yes, did well recover to 80% within 24 hours?** ☐ Yes ☐ No

SAMPLE BOTTLE INFORMATION - Check off each bottle when completed

	Field Sample ID on Bottle	Analysis	Bottle size/Type/Preservative
✓	MW-5 DEEP_201303 13	Total Metals, Hardness, Silica	250 mL / HDPE / HNO3 (RED)
✓	MW-5 DEEP_201303 13	Dissolved Metals (Field Filtered)	250 mL / HDPE / HNO3 (RED)
✓	MW-5 DEEP_201303 13	Potentially Dissolved Metals	250 mL / HDPE / HNO3 (RED)
✓	MW-5 DEEP_201303 13	Alkalinity, TSS, TDS, Chloride, Sulfate	500 mL / HDPE / None
✓	MW-5 DEEP_201303 13	Salinity	250 mL / HDPE / None
✓	MW-5 DEEP_201303 13	Cyanide	250 mL / HDPE / NaOH (GREEN)
✓	MW-5 DEEP_201303 13	Sulfide	250 mL / HDPE / NaOH + Zn Acetate (BLACK)
✓	MW-5 DEEP_201303 13	Total Organic Carbon, Nitrate	250 mL / Amber Glass / H2SO4 (YELLOW)

Notes:

* If conditions significantly change, purge volume can be calculated as follows:

One purge volume = 0.174305 x (Measured Depth to Water - Depth to Well Bottom)

** If "No", well is declared dry for the sampling event.

well needs weighted bailer

Measured Depth to Water (ft)	Quantity (gal) to Purge X Volumes* 1	3
14.00	3.52	10.56
14.25	3.48	10.43
14.50	3.43	10.30
14.75	3.39	10.17
15.00	3.35	10.04
15.25	3.30	9.91
15.50	3.26	9.78
15.75	3.22	9.65
16.00	3.17	9.52
16.25	3.13	9.39
16.50	3.09	9.26
16.75	3.04	9.12
17.00	3.00	8.99
17.25	2.95	8.86
17.50	2.91	8.73
17.75	2.87	8.60
18.00	2.82	8.47
18.25	2.78	8.34
18.50	2.74	8.21
18.75	2.69	8.08
19.00	2.65	7.95
19.25	2.61	7.82
19.50	2.56	7.69
19.75	2.52	7.56
20.00	2.48	7.43
20.25	2.43	7.29
20.50	2.39	7.16
20.75	2.34	7.03
21.00	2.30	6.90
21.25	2.26	6.77
21.50	2.21	6.64
21.75	2.17	6.51
22.00	2.13	6.38
22.25	2.08	6.25
22.50	2.04	6.12
22.75	2.00	5.99
23.00	1.95	5.86
23.25	1.91	5.73
23.50	1.87	5.60

Rico Water Sampling Form: *Station Information*

☐ Surface Water ☒ Groundwater ☐ Other

Sampling completed at this location ✓
(Do not check box until **ALL** items have been completed)

Sample Location: **MW-5 SHALLOW**
Date of Sample Collection: 3-13-13
Time of Sample Collection: 1243
Sampler's Identity: J GISSEMAN

FIELD PARAMETERS / MEASUREMENTS

Measured Depth to Water: ~~17.84~~ 17.3 ft 17.87' DTW @ sampling
Depth to Well Bottom: 21.11 ft

Exstik #2

# of Purge Volumes	Time	Cummulative Volume (gal)	pH	EC, µS/cm	DO, ppm	Temp, °C	ORP, mV
1	1215	0.8	4.71	3.47 mS	—	11.8	—
2	1220	1.7	4.83	3.42	—	11.0	—
3	1229	2.7	4.92	3.32	—	10.2	—
Total	1330	3.7	5.13	3902 µS/cm	0.35	10.43	57.3

HANNA

Well purged dry? ☐ Yes ☒ No
If Yes, did well recover to 80% within 24 hours?** ☐ Yes ☐ No

SAMPLE BOTTLE INFORMATION - Check off each bottle when completed

	Field Sample ID on Bottle	Analysis	Bottle size/Type/Preservative
✓	MW-5 SHALLOW_201303 13	Total Metals, Hardness, Silica	250 mL / HDPE / HNO3 (RED)
✓	MW-5 SHALLOW_201303 13	Dissolved Metals (Field Filtered)	250 mL / HDPE / HNO3 (RED)
✓	MW-5 SHALLOW_201303 13	Potentially Dissolved Metals	250 mL / HDPE / HNO3 (RED)
✓	MW-5 SHALLOW_201303 13	Alkalinity, TSS, TDS, Chloride, Sulfate	500 mL / HDPE / None
✓	MW-5 SHALLOW_201303 13	Salinity	250 mL / HDPE / None
✓	MW-5 SHALLOW_201303 13	Cyanide	250 mL / HDPE / NaOH (GREEN)
✓	MW-5 SHALLOW_201303 13	Sulfide	250 mL / HDPE / NaOH + Zn Acetate (BLACK)
✓	MW-5 SHALLOW_201303 13	Total Organic Carbon, Nitrate	250 mL / Amber Glass / H2SO4 (YELLOW)

Notes:

* If conditions significantly change, purge volume can be calculated as follows:

One purge volume = 0.174305 x (Measured Depth to Water - Depth to Well Bottom)

** If "No", well is declared dry for the sampling event.

Measured Depth to Water (ft)	Quantity (gal) to Purge X Volumes* 1	3
11.50	1.66	4.98
11.75	1.62	4.85
12.00	1.57	4.72
12.25	1.53	4.59
12.50	1.49	4.46
12.75	1.44	4.32
13.00	1.40	4.19
13.25	1.35	4.06
13.50	1.31	3.93
13.75	1.27	3.80
14.00	1.22	3.67
14.25	1.18	3.54
14.50	1.14	3.41
14.75	1.09	3.28
15.00	1.05	3.15
15.25	1.01	3.02
15.50	0.96	2.89
15.75	0.92	2.76
16.00	0.88	2.63
16.25	0.83	2.49
16.50	0.79	2.36
16.75	0.74	2.23
17.00	0.70	2.10
17.25	0.66	1.97
17.50	0.61	1.84
17.75	0.57	1.71
18.00	0.53	1.58
18.25	0.48	1.45
18.50	0.44	1.32
18.75	0.40	1.19
19.00	0.35	1.06
19.25	0.31	0.93
19.50	0.26	0.79
19.75	0.22	0.66
20.00	0.18	0.53
20.25	0.13	0.40
20.50	0.09	0.27
20.75	0.05	0.14
21.00	0.00	0.01

Rico Water Sampling Form: *Station Information*

☐ Surface Water ☒ Groundwater ☐ Other

Sampling completed at this location ☑
(Do not check box until **ALL** items have been completed)

Sample Location: **MW-6 DEEP**
Date of Sample Collection: 3-12-13
Time of Sample Collection: 1320
Sampler's Identity: J ROEHRIG

FIELD PARAMETERS / MEASUREMENTS

Measured Depth to Water: 23.54 ft
Depth to Well Bottom: 40.30 ft
Extech #1

23.68 ft - final DOW

# of Purge Volumes	Time	Cummulative Volume (gal)	pH	EC, µS/cm	DO, ppm	Temp, °C	ORP, mV
1	1249	2.9	6.68	1436 µS	—	13.0	—
2	105	5.9	6.74	1384 µS	—	12.8	—
3	115	9.0	6.64	1373 µS	—	13.22	—
Total	1320	9.25	6.69	1697 µS/cm	0.22	11.49	30.9

HANNA

Well purged dry? ☐ Yes ☒ No
If Yes, did well recover to 80% within 24 hours?** ☐ Yes ☐ No

SAMPLE BOTTLE INFORMATION - Check off each bottle when completed

	Field Sample ID on Bottle	Analysis	Bottle size/Type/Preservative
✓	MW-6 DEEP_201303 12	Total Metals, Hardness, Silica	250 mL / HDPE / HNO3 (RED)
✓	MW-6 DEEP_201303 12	Dissolved Metals (Field Filtered)	250 mL / HDPE / HNO3 (RED)
✓	MW-6 DEEP_201303 12	Potentially Dissolved Metals	250 mL / HDPE / HNO3 (RED)
✓	MW-6 DEEP_201303 12	Alkalinity, TSS, TDS, Chloride, Sulfate	500 mL / HDPE / None
✓	MW-6 DEEP_201303 12	Salinity	250 mL / HDPE / None
✓	MW-6 DEEP_201303 12	Cyanide	250 mL / HDPE / NaOH (GREEN)
✓	MW-6 DEEP_201303 12	Sulfide	250 mL / HDPE / NaOH + Zn Acetate (BLACK)
	MW-6 DEEP_201303 12	Total Organic Carbon, Nitrate	250 mL / Amber Glass / H2SO4 (YELLOW)

Notes:

* If conditions significantly change, purge volume can be calculated as follows:

One purge volume = 0.174305 x (Measured Depth to Water - Depth to Well Bottom)

** If "No", well is declared dry for the sampling event.

Measured Depth to Water (ft)	Quantity (gal) to Purge X Volumes* 1	3
19.00	3.71	11.14
19.25	3.67	11.01
19.50	3.63	10.88
19.75	3.58	10.75
20.00	3.54	10.62
20.25	3.49	10.48
20.50	3.45	10.35
20.75	3.41	10.22
21.00	3.36	10.09
21.25	3.32	9.96
21.50	3.28	9.83
21.75	3.23	9.70
22.00	3.19	9.57
22.25	3.15	9.44
22.50	3.10	9.31
22.75	3.06	9.18
23.00	3.02	9.05
23.25	2.97	8.92
23.50	2.93	8.78
23.75	2.88	8.65
24.00	2.84	8.52
24.25	2.80	8.39
24.50	2.75	8.26
24.75	2.71	8.13
25.00	2.67	8.00
25.25	2.62	7.87
25.50	2.58	7.74
25.75	2.54	7.61
26.00	2.49	7.48
26.25	2.45	7.35
26.50	2.41	7.22
26.75	2.36	7.09
27.00	2.32	6.95
27.25	2.27	6.82
27.50	2.23	6.69
27.75	2.19	6.56
28.00	2.14	6.43
28.25	2.10	6.30
28.50	2.06	6.17

Rico Water Sampling Form: *Station Information*

☐ Surface Water ☒ Groundwater ☐ Other

Sampling completed at this location ☑
(Do not check box until **ALL** items have been completed)

Sample Location: **MW-6 SHALLOW**
Date of Sample Collection: 3-12-13
Time of Sample Collection: 1307
Sampler's Identity: J GISSEMAN

FIELD PARAMETERS / MEASUREMENTS

Measured Depth to Water: 23.72 ft
Depth to Well Bottom: 27.30 ft

DTW@ sampling 24.02'

EXSTIK #1

# of Purge Volumes	Time	Cummulative Volume (gal)	pH	EC, µS/cm	DO, ppm	Temp, °C	ORP, mV
1	1236	0.7	6.66	1952µS	—	13.0	—
2	1243	1.4	6.64	2 mS	—	12.5	—
3	1252	2.0	6.64	1873µS	—	12.4	—
Total	1307	2.8	7.42	2408µS/cm	0.84	12.6	27.6

HANNA

Well purged dry? ☐ Yes ☒ No
If Yes, did well recover to 80% within 24 hours?** ☐ Yes ☐ No

SAMPLE BOTTLE INFORMATION - Check off each bottle when completed

	Field Sample ID on Bottle	Analysis	Bottle size/Type/Preservative
✓	MW-6 SHALLOW_201303 12	Total Metals, Hardness, Silica	250 mL / HDPE / HNO3 (RED)
✓	MW-6 SHALLOW_201303 12	Dissolved Metals (Field Filtered)	250 mL / HDPE / HNO3 (RED)
✓	MW-6 SHALLOW_201303 12	Potentially Dissolved Metals	250 mL / HDPE / HNO3 (RED)
✓	MW-6 SHALLOW_201303 12	Alkalinity, TSS, TDS, Chloride, Sulfate	500 mL / HDPE / None
✓	MW-6 SHALLOW_201303 12	Salinity	250 mL / HDPE / None
✓	MW-6 SHALLOW_201303 12	Cyanide	250 mL / HDPE / NaOH (GREEN)
✓	MW-6 SHALLOW_201303 12	Sulfide	250 mL / HDPE / NaOH + Zn Acetate (BLACK)
✓	MW-6 SHALLOW_201303 12	Total Organic Carbon, Nitrate	250 mL / Amber Glass / H2SO4 (YELLOW)

Notes:

* If conditions significantly change, purge volume can be calculated as follows:

One purge volume = 0.174305 x (Measured Depth to Water - Depth to Well Bottom)

** If "No", well is declared dry for the sampling event.

Measured Depth to Water (ft)	Quantity (gal) to Purge X Volumes* 1	3
17.50	1.70	5.09
17.75	1.65	4.96
18.00	1.61	4.83
18.25	1.57	4.70
18.50	1.52	4.57
18.75	1.48	4.44
19.00	1.44	4.31
19.25	1.39	4.18
19.50	1.35	4.05
19.75	1.31	3.92
20.00	1.26	3.79
20.25	1.22	3.66
20.50	1.17	3.52
20.75	1.13	3.39
21.00	1.09	3.26
21.25	1.04	3.13
21.50	1.00	3.00
21.75	0.96	2.87
22.00	0.91	2.74
22.25	0.87	2.61
22.50	0.83	2.48
22.75	0.78	2.35
23.00	0.74	2.22
23.25	0.70	2.09
23.50	0.65	1.96
23.75	0.61	1.82
24.00	0.56	1.69
24.25	0.52	1.56
24.50	0.48	1.43
24.75	0.43	1.30
25.00	0.39	1.17
25.25	0.35	1.04
25.50	0.30	0.91
25.75	0.26	0.78
26.00	0.22	0.65
26.25	0.17	0.52
26.50	0.13	0.39
26.75	0.09	0.26
27.00	0.04	0.13

Rico Water Sampling Form: *Station Information*

☐ Surface Water ☒ Groundwater ☐ Other

Sampling completed at this location ☑
(Do not check box until **ALL** items have been completed)

Sample Location: **MW-101**
Date of Sample Collection: 3/13/13
Time of Sample Collection: 1242
Sampler's Identity: TB

FIELD PARAMETERS / MEASUREMENTS

Measured Depth to Water: 28.28 ft 28.29' DTW @ Sample
Depth to Well Bottom: 37.50 ft

EXSTIK #1

# of Purge Volumes	Time	Cummulative Volume (gal)	pH	EC, µS/cm	DO, ppm	Temp, °C	ORP, mV
1	1216	1.75	6.48	1482	–	15.0	–
2	1226	3.0	6.63	1436	–	16.3	–
3	1232	4.75	6.63	1392	–	14.9	–
Total	1242	5.75	7.63	1791	0.73	11.74	23.7

HANNA

Well purged dry? ☐ Yes ☑ No
If Yes, did well recover to 80% within 24 hours?** ☐ Yes ☐ No

SAMPLE BOTTLE INFORMATION - Check off each bottle when completed

	Field Sample ID on Bottle	Analysis	Bottle size/Type/Preservative
✓	MW-101_201303 13	Total Metals, Hardness, Silica	250 mL / HDPE / HNO3 (RED)
✓	MW-101_201303 13	Dissolved Metals (Field Filtered)	250 mL / HDPE / HNO3 (RED)
✓	MW-101_201303 13	Potentially Dissolved Metals	250 mL / HDPE / HNO3 (RED)
✓	MW-101_201303 13	Alkalinity, TSS, TDS, Chloride, Sulfate	500 mL / HDPE / None
✓	MW-101_201303 13	Salinity	250 mL / HDPE / None
✓	MW-101_201303 13	Cyanide	250 mL / HDPE / NaOH (GREEN)
✓	MW-101_201303 13	Sulfide	250 mL / HDPE / NaOH + Zn Acetate (BLACK)
✓	MW-101_201303 13	Total Organic Carbon, Nitrate	250 mL / Amber Glass / H2SO4 (YELLOW)

Notes:

* If conditions significantly change, purge volume can be calculated as follows:
One purge volume = 0.174305 x (Measured Depth to Water - Depth to Well Bottom)

** If "No", well is declared dry for the sampling event.

Measured Depth to Water (ft)	Quantity (gal) to Purge X Volumes* 1	3
23.00	2.55	7.64
23.25	2.50	7.51
23.50	2.46	7.38
23.75	2.42	7.25
24.00	2.37	7.12
24.25	2.33	6.98
24.50	2.28	6.85
24.75	2.24	6.72
25.00	2.20	6.59
25.25	2.15	6.46
25.50	2.11	6.33
25.75	2.07	6.20
26.00	2.02	6.07
26.25	1.98	5.94
26.50	1.94	5.81
26.75	1.89	5.68
27.00	1.85	5.55
27.25	1.81	5.42
27.50	1.76	5.29
27.75	1.72	5.15
28.00	1.67	5.02
28.25	1.63	4.89
28.50	1.59	4.76
28.75	1.54	4.63
29.00	1.50	4.50
29.25	1.46	4.37
29.50	1.41	4.24
29.75	1.37	4.11
30.00	1.33	3.98
30.25	1.28	3.85
30.50	1.24	3.72
30.75	1.20	3.59
31.00	1.15	3.45
31.25	1.11	3.32
31.50	1.06	3.19
31.75	1.02	3.06
32.00	0.98	2.93
32.25	0.93	2.80
32.50	0.89	2.67

Rico Water Sampling Form: *Station Information*

☐ Surface Water ☒ Groundwater ☐ Other

Sampling completed at this location ☑
(Do not check box until **ALL** items have been completed)

Sample Location: **MW-102**

Date of Sample Collection: 3-13-13

Time of Sample Collection: 1137

Sampler's Identity: TB

FIELD PARAMETERS / MEASUREMENTS

Measured Depth to Water: 24 81 ft

Depth to Well Bottom: 31 05 ft

DTW @ sampling 27 65 and Rising

Ex stik #1

#1

# of Purge Volumes	Time	Cummulative Volume (gal)	pH	EC, µS/cm	DO, ppm	Temp, °C	ORP, mV
1	1114	1.25	6.86	1099	—	12.7	—
2	1124	3 00	6.91	1051	—	12.9	—
3	1132	4 25	6.74	1059	—	12.6	—
Total	1137	5 25	7.63	1305	2.23	11.83	35.5

HANNA

Well purged dry? ☐ Yes ☒ No

If Yes, did well recover to 80% within 24 hours?** ☐ Yes ☐ No

SAMPLE BOTTLE INFORMATION - Check off each bottle when completed

	Field Sample ID on Bottle	Analysis	Bottle size/Type/Preservative
✓	MW-102_201303 13	Total Metals, Hardness, Silica	250 mL / HDPE / HNO3 (RED)
✓	MW-102_201303 13	Dissolved Metals (Field Filtered)	250 mL / HDPE / HNO3 (RED)
✓	MW-102_201303 13	Potentially Dissolved Metals	250 mL / HDPE / HNO3 (RED)
✓	MW-102_201303 13	Alkalinity, TSS, TDS, Chloride, Sulfate	500 mL / HDPE / None
✓	MW-102_201303 13	Salinity	250 mL / HDPE / None
✓	MW-102_201303 13	Cyanide	250 mL / HDPE / NaOH (GREEN)
✓	MW-102_201303 13	Sulfide	250 mL / HDPE / NaOH + Zn Acetate (BLACK)
✓	MW-102_201303 13	Total Organic Carbon, Nitrate	250 mL / Amber Glass / H2SO4 (YELLOW)

Notes:

* If conditions significantly [illegible] purge volume can be calculated as follows:

One purge volume = [illegible] (Measured Depth to Water - Depth to Well Bottom)

** If "No", well is declared [illegible] sampling event.

Lots of sand in Bail

Measured Depth to Water (ft)	Quantity (gal) to Purge X Volumes* 1	3
21.50	1.66	4.99
21.75	1.62	4.86
22.00	1.58	4.73
22.25	1.53	4.60
22.50	1.49	4.47
22.75	1.45	4.34
23.00	1.40	4.21
23.25	1.36	4.08
23.50	1.31	3.94
23.75	1.27	3.81
24.00	1.23	3.68
24.25	1.18	3.55
24.50	1.14	3.42
24.75	1.10	3.29
25.00	1.05	3.16
25.25	1.01	3.03
25.50	0.97	2.90
25.75	0.92	2.77
26.00	0.88	2.64
26.25	0.84	2.51
26.50	0.79	2.38
26.75	0.75	2.25
27.00	0.70	2.11
27.25	0.66	1.98
27.50	0.62	1.85
27.75	0.57	1.72
28.00	0.53	1.59
28.25	0.49	1.46
28.50	0.44	1.33
28.75	0.40	1.20
29.00	0.36	1.07
29.25	0.31	0.94
29.50	0.27	0.81
29.75	0.23	0.68
30.00	0.18	0.55
30.25	0.14	0.42
30.50	0.09	0.28
30.75	0.05	0.15
31.00	0.01	0.02

Rico Water Sampling Form: *Station Information*

☐ Surface Water ☒ Groundwater ☐ Other

Sampling completed at this location ☑
(Do not check box until **ALL** items have been completed)

Sample Location: **MW-103**
Date of Sample Collection: 3-13-13
Time of Sample Collection: 1:54
Sampler's Identity: TB

FIELD PARAMETERS / MEASUREMENTS

Measured Depth to Water: 6.99 ft 7.00' DTW @ SAMPLE
Depth to Well Bottom: 19.63 ft

EXSTIK #2

# of Purge Volumes	Time	Cummulative Volume (gal)	pH	EC, µS/cm	DO, ppm	Temp, °C	ORP, mV
1	1:35	2.5	6.54	1443		12.2	
2	1:41	5.0	6.82	1426		8.4	
3	1:48	7.75	6.27	1477		7.0	
Total	1:54	8.75	8.15	1761	0.21	7.14	32.0

#1

HANNA

Well purged dry? ☐ Yes ☑ No
If Yes, did well recover to 80% within 24 hours?** ☐ Yes ☐ No

SAMPLE BOTTLE INFORMATION - Check off each bottle when completed

	Field Sample ID on Bottle	Analysis	Bottle size/Type/Preservative
✓	MW-103_201303 13	Total Metals, Hardness, Silica	250 mL / HDPE / HNO3 (RED)
✓	MW-103_201303 13	Dissolved Metals (Field Filtered)	250 mL / HDPE / HNO3 (RED)
✓	MW-103_201303 13	Potentially Dissolved Metals	250 mL / HDPE / HNO3 (RED)
✓	MW-103_201303 13	Alkalinity, TSS, TDS, Chloride, Sulfate	500 mL / HDPE / None
✓	MW-103_201303 13	Salinity	250 mL / HDPE / None
✓	MW-103_201303 13	Cyanide	250 mL / HDPE / NaOH (GREEN)
✓	MW-103_201303 13	Sulfide	250 mL / HDPE / NaOH + Zn Acetate (BLACK)
✓	MW-103_201303 13	Total Organic Carbon, Nitrate	250 mL / Amber Glass / H2SO4 (YELLOW)

Notes:

* If conditions significantly change, purge volume can be calculated as follows:

One purge volume = 0.174305 x (Measured Depth to Water - Depth to Well Bottom)

** If "No", well is declared dry for the sampling event.

Measured Depth to Water (ft)	Quantity (gal) to Purge X Volumes* 1	3
3.00	2.94	8.82
3.25	2.90	8.69
3.50	2.85	8.55
3.75	2.81	8.42
4.00	2.76	8.29
4.25	2.72	8.16
4.50	2.68	8.03
4.75	2.63	7.90
5.00	2.59	7.77
5.25	2.55	7.64
5.50	2.50	7.51
5.75	2.46	7.38
6.00	2.42	7.25
6.25	2.37	7.12
6.50	2.33	6.99
6.75	2.28	6.85
7.00	2.24	6.72
7.25	2.20	6.59
7.50	2.15	6.46
7.75	2.11	6.33
8.00	2.07	6.20
8.25	2.02	6.07
8.50	1.98	5.94
8.75	1.94	5.81
9.00	1.89	5.68
9.25	1.85	5.55
9.50	1.81	5.42
9.75	1.76	5.29
10.00	1.72	5.16
10.25	1.67	5.02
10.50	1.63	4.89
10.75	1.59	4.76
11.00	1.54	4.63
11.25	1.50	4.50
11.50	1.46	4.37
11.75	1.41	4.24
12.00	1.37	4.11
12.25	1.33	3.98
12.50	1.28	3.85

Rico Water Sampling Form: *Station Information*

☐ Surface Water ☒ Groundwater ☐ Other

Sampling completed at this location ☑
(Do not check box until **ALL** items have been completed)

Sample Location: **MW-104**
Date of Sample Collection: 3/13/13
Time of Sample Collection: 245
Sampler's Identity: TB

FIELD PARAMETERS / MEASUREMENTS

Measured Depth to Water: 4.37 ft 4.39' DTW @ sample
Depth to Well Bottom: 17.68 ft

EXSTIK #1

# of Purge Volumes	Time	Cummulative Volume (gal)	pH	EC, µS/cm	DO, ppm	Temp, °C	ORP, mV
1	2:24	2.5	723	1209	—	8.0	—
2	2 30	5.25	736	1248	—	7.5	—
3	2 36	7.75	742	1257	—	7.7	—
Total	2:45	8.75	9.40	1503	2.49	5.63	31.1

#1

HANNA

Well purged dry? ☐ Yes ☑ No
If Yes, did well recover to 80% within 24 hours?** ☐ Yes ☐ No

SAMPLE BOTTLE INFORMATION - Check off each bottle when completed

	Field Sample ID on Bottle	Analysis	Bottle size/Type/Preservative
✓	MW-104_201303 13	Total Metals, Hardness, Silica	250 mL / HDPE / HNO3 (RED)
✓	MW-104_201303 13	Dissolved Metals (Field Filtered)	250 mL / HDPE / HNO3 (RED)
✓	MW-104_201303 13	Potentially Dissolved Metals	250 mL / HDPE / HNO3 (RED)
✓	MW-104_201303 13	Alkalinity, TSS, TDS, Chloride, Sulfate	500 mL / HDPE / None
✓	MW-104_201303 13	Salinity	250 mL / HDPE / None
✓	MW-104_201303 13	Cyanide	250 mL / HDPE / NaOH (GREEN)
✓	MW-104_201303 13	Sulfide	250 mL / HDPE / NaOH + Zn Acetate (BLACK)
✓	MW-104_201303 13	Total Organic Carbon, Nitrate	250 mL / Amber Glass / H2SO4 (YELLOW)

Notes:

* If conditions significantly change, purge volume can be calculated as follows:

One purge volume = 0.174305 x (Measured Depth to Water - Depth to Well Bottom)

** If "No", well is declared dry for the sampling event.

Measured Depth to Water (ft)	Quantity (gal) to Purge X Volumes* 1	3
0.00	3.11	9.34
0.25	3.07	9.21
0.50	3.03	9.08
0.75	2.98	8.95
1.00	2.94	8.82
1.25	2.89	8.68
1.50	2.85	8.55
1.75	2.81	8.42
2.00	2.76	8.29
2.25	2.72	8.16
2.50	2.68	8.03
2.75	2.63	7.90
3.00	2.59	7.77
3.25	2.55	7.64
3.50	2.50	7.51
3.75	2.46	7.38
4.00	2.42	7.25
4.25	2.37	7.12
4.50	2.33	6.99
4.75	2.28	6.85
5.00	2.24	6.72
5.25	2.20	6.59
5.50	2.15	6.46
5.75	2.11	6.33
6.00	2.07	6.20
6.25	2.02	6.07
6.50	1.98	5.94
6.75	1.94	5.81
7.00	1.89	5.68
7.25	1.85	5.55
7.50	1.81	5.42
7.75	1.76	5.29
8.00	1.72	5.15
8.25	1.67	5.02
8.50	1.63	4.89
8.75	1.59	4.76
9.00	1.54	4.63
9.25	1.50	4.50
9.50	1.46	4.37

Rico Water Sampling Form: *Station Information*

☐ Surface Water ☒ Groundwater ☐ Other

Sampling completed at this location ☑
(Do not check box until **ALL** items have been completed)

Sample Location: **MW-202**
Date of Sample Collection: 3-13-13
Time of Sample Collection: 1130 WELL DRY
Sampler's Identity: J GISSEMAN

Measured Depth to Water (ft)	Quantity (gal) to Purge X Volumes*	
	1	3

FIELD PARAMETERS / MEASUREMENTS

Measured Depth to Water: ft
Depth to Well Bottom: 35.20 ft DRY

# of Purge Volumes	Time	Cummulative Volume (gal)	pH	EC, µS/cm	DO, ppm	Temp, °C	ORP, mV
1							
2							
3							
Total							

Well purged dry? ☐ Yes ☐ No
If Yes, did well recover to 80% within 24 hours?** ☐ Yes ☐ No

SAMPLE BOTTLE INFORMATION - Check off each bottle when completed

	Field Sample ID on Bottle	Analysis	Bottle size/Type/Preservative
	MW-202_201303	Total Metals, Hardness, Silica	250 mL / HDPE / HNO3 (RED)
	MW-202_201303	Dissolved Metals (Field Filtered)	250 mL / HDPE / HNO3 (RED)
	MW-202_201303	Potentially Dissolved Metals	250 mL / HDPE / HNO3 (RED)
	MW-202_201303	Alkalinity, TSS, TDS, Chloride, Sulfate	500 mL / HDPE / None
	MW-202_201303	Salinity	250 mL / HDPE / None
	MW-202_201303	Cyanide	250 mL / HDPE / NaOH (GREEN)
	MW-202_201303	Sulfide	250 mL / HDPE / NaOH + Zn Acetate (BLACK)
	MW-202_201303	Total Organic Carbon, Nitrate	250 mL / Amber Glass / H2SO4 (YELLOW)

Notes:

* If conditions significantly change, purge volume can be calculated as follows:

One purge volume = 0.174305 x (Measured Depth to Water - Depth to Well Bottom)

** If "No", well is declared dry for the sampling event.

Rico Water Sampling Form: *Station Information*

☐ Surface Water ☒ Groundwater ☐ Other

Sampling completed at this location ☒
(Do not check box until **ALL** items have been completed)

Sample Location: **MW-204**
Date of Sample Collection: 3-14-13
Time of Sample Collection: 0910
Sampler's Identity: Jeff Roehrig

FIELD PARAMETERS / MEASUREMENTS

Measured Depth to Water: 15.41 ft 15.32 ft depth at sampling
Depth to Well Bottom: 28.86 ft
Ex Stik II #2 3-13-13

# of Purge Volumes	Time	Cummulative Volume (gal)	pH	EC, µS/cm	DO, ppm	Temp, °C	ORP, mV
1	1033	2.5	6.56	1137µS	—	11.6	—
2	1050	4.75	6.78	1144µS	—	12.1	—
3	1105	7.00	6.91	1052µS	—	13.0	—
Total	9:11 3-14-13	8.00	6.75	1425	0.00	12.38	-21.4

Well purged dry? ☒ Yes ☐ No on 3-13-13 by JRoehrig
If Yes, did well recover to 80% within 24 hours?** ☒ Yes ☐ No 3/14/13 15.32 ft depth at sampling

SAMPLE BOTTLE INFORMATION - Check off each bottle when completed

	Field Sample ID on Bottle	Analysis	Bottle size/Type/Preservative
✓	MW-204_201303 14	Total Metals, Hardness, Silica	250 mL / HDPE / HNO3 (RED)
✓	MW-204_201303 14	Dissolved Metals (Field Filtered)	250 mL / HDPE / HNO3 (RED)
✓	MW-204_201303 14	Potentially Dissolved Metals	250 mL / HDPE / HNO3 (RED)
✓	MW-204_201303 14	Alkalinity, TSS, TDS, Chloride, Sulfate	500 mL / HDPE / None
✓	MW-204_201303 14	Salinity	250 mL / HDPE / None
✓	MW-204_201303 14	Cyanide	250 mL / HDPE / NaOH (GREEN)
✓	MW-204_201303 14	Sulfide	250 mL / HDPE / NaOH + Zn Acetate (BLACK)
✓	MW-204_201303 14	Total Organic Carbon, Nitrate	250 mL / Amber Glass / H2SO4 (YELLOW)

Notes:

* If conditions significantly change, purge volume can be calculated as follows:

One purge volume = 0.174305 x (Measured Depth to Water - Depth to Well Bottom)

** If "No", well is declared dry for the sampling event.

3-14-13 Measured depth to water 15.32 prior to sampling
Collected sample, closed well, placed sample into coolers, on ice.

Measured Depth to Water (ft)	Quantity (gal) to Purge X Volumes* 1	3
11.00	3.09	9.26
11.25	3.04	9.13
11.50	3.00	9.00
11.75	2.96	8.87
12.00	2.91	8.73
12.25	2.87	8.60
12.50	2.82	8.47
12.75	2.78	8.34
13.00	2.74	8.21
13.25	2.69	8.08
13.50	2.65	7.95
13.75	2.61	7.82
14.00	2.56	7.69
14.25	2.52	7.56
14.50	2.48	7.43
14.75	2.43	7.30
15.00	2.39	7.17
15.25	2.35	7.04
15.50	2.30	6.90
15.75	2.26	6.77
16.00	2.21	6.64
16.25	2.17	6.51
16.50	2.13	6.38
16.75	2.08	6.25
17.00	2.04	6.12
17.25	2.00	5.99
17.50	1.95	5.86
17.75	1.91	5.73
18.00	1.87	5.60
18.25	1.82	5.47
18.50	1.78	5.34
18.75	1.74	5.21
19.00	1.69	5.07
19.25	1.65	4.94
19.50	1.60	4.81
19.75	1.56	4.68
20.00	1.52	4.55
20.25	1.47	4.42
20.50	1.43	4.29

Rico Water Sampling Form: *Station Information*

☐ Surface Water ☒ Groundwater ☐ Other

Sampling completed at this location ☒
(Do not check box until **ALL** items have been completed)

Sample Location: **P13-102**
Date of Sample Collection: 3-12-13
Time of Sample Collection: 1525
Sampler's Identity: TB

FIELD PARAMETERS / MEASUREMENTS

Measured Depth to Water: 10.75 ft (old 10.78 DTW @ Sampling)
Depth to Well Bottom: 35.28 ft
Exstik #2

# of Purge Volumes	Time	Cummulative Volume (gal)	pH	EC, µS/cm	DO, ppm	Temp, °C	ORP, mV
1	3:02	4.5	6.66	1638	–	10.6	–
2	3:11	4.5 = 9.0	6.82	1716	–	8.5	–
3	3:18	4.5 = 13.5	6.70	1670	–	9.3	–
Total	1554	14.5	7.55	2075µS/cm HANNA	0.39	8.36	35.7

Well purged dry? ☐ Yes ☒ No
If Yes, did well recover to 80% within 24 hours?** ☐ Yes ☐ No

SAMPLE BOTTLE INFORMATION - Check off each bottle when completed

	Field Sample ID on Bottle	Analysis	Bottle size/Type/Preservative
✓	P13-102_201303 12	Total Metals, Hardness, Silica	250 mL / HDPE / HNO3 (RED)
✓	P13-102_201303 12	Dissolved Metals (Field Filtered)	250 mL / HDPE / HNO3 (RED)
✓	P13-102_201303 12	Potentially Dissolved Metals	250 mL / HDPE / HNO3 (RED)
✓	P13-102_201303 12	Alkalinity, TSS, TDS, Chloride, Sulfate	500 mL / HDPE / None
✓	P13-102_201303 12	Salinity	250 mL / HDPE / None
✓	P13-102_201303 12	Cyanide	250 mL / HDPE / NaOH (GREEN)
✓	P13-102_201303 12	Sulfide	250 mL / HDPE / NaOH + Zn Acetate (BLACK)
✓	P13-102_201303 12	Total Organic Carbon, Nitrate	250 mL / Amber Glass / H2SO4 (YELLOW)

Notes:

* If conditions significantly change, purge volume can be calculated as follows:

One purge volume = 0.174305 x (Measured Depth to Water - Depth to Well Bottom)

** If "No", well is declared dry for the sampling event.

Measured Depth to Water (ft)	Quantity (gal) to Purge X Volumes* 1	3
6.00	5.13	15.38
6.25	5.08	15.25
6.50	5.04	15.12
6.75	5.00	14.99
7.00	4.95	14.86
7.25	4.91	14.73
7.50	4.87	14.60
7.75	4.82	14.47
8.00	4.78	14.33
8.25	4.73	14.20
8.50	4.69	14.07
8.75	4.65	13.94
9.00	4.60	13.81
9.25	4.56	13.68
9.50	4.52	13.55
9.75	4.47	13.42
10.00	4.43	13.29
10.25	4.39	13.16
10.50	4.34	13.03
10.75	4.30	12.90
11.00	4.26	12.77
11.25	4.21	12.64
11.50	4.17	12.50
11.75	4.12	12.37
12.00	4.08	12.24
12.25	4.04	12.11
12.50	3.99	11.98
12.75	3.95	11.85
13.00	3.91	11.72
13.25	3.86	11.59
13.50	3.82	11.46
13.75	3.78	11.33
14.00	3.73	11.20
14.25	3.69	11.07
14.50	3.65	10.94
14.75	3.60	10.80
15.00	3.56	10.67
15.25	3.51	10.54
15.50	3.47	10.41

Rico Water Sampling Form: *Station Information*

☐ Surface Water ☒ Groundwater ☐ Other

Sampling completed at this location ☑
(Do not check box until **ALL** items have been completed)

Sample Location: **P13-103**
Date of Sample Collection: 3-12-13
Time of Sample Collection: 1546
Sampler's Identity: TB

FIELD PARAMETERS / MEASUREMENTS

Measured Depth to Water: 11 07 ft 11 09' DTW @ Sampling.
Depth to Well Bottom: 21 19 ft

# of Purge Volumes	Time	Cummulative Volume (gal)	pH	EC, µS/cm	DO, ppm	Temp, °C	ORP, mV
1	3:34	1.75	7.33	1321	—	9.4	—
2	3:39	3.50	7.17	1340	—	7.3	—
3	3:43	4.25	7.18	1345	—	7.9	—
Total	3:46	5.25	7.54	1656 µS/cm	0.00	7.87	23.8

1958 HANNA

Well purged dry? ☐ Yes ☒ No
If Yes, did well recover to 80% within 24 hours?** ☐ Yes ☐ No

SAMPLE BOTTLE INFORMATION - Check off each bottle when completed

	Field Sample ID on Bottle	Analysis	Bottle size/Type/Preservative
✓	P13-103_201303 12	Total Metals, Hardness, Silica	250 mL / HDPE / HNO3 (RED)
✓	P13-103_201303 12	Dissolved Metals (Field Filtered)	250 mL / HDPE / HNO3 (RED)
✓	P13-103_201303 12	Potentially Dissolved Metals	250 mL / HDPE / HNO3 (RED)
✓	P13-103_201303 12	Alkalinity, TSS, TDS, Chloride, Sulfate	500 mL / HDPE / None
✓	P13-103_201303 12	Salinity	250 mL / HDPE / None
✓	P13-103_201303 12	Cyanide	250 mL / HDPE / NaOH (GREEN)
✓	P13-103_201303 12	Sulfide	250 mL / HDPE / NaOH + Zn Acetate (BLACK)
✓	P13-103_201303 12	Total Organic Carbon, Nitrate	250 mL / Amber Glass / H2SO4 (YELLOW)

Notes:

* If conditions significantly change, purge volume can be calculated as follows:

One purge volume = 0.174305 x (Measured Depth to Water - Depth to Well Bottom)

** If "No", well is declared dry for the sampling event.

Measured Depth to Water (ft)	Quantity (gal) to Purge X Volumes* 1	3
6.00	2.50	7.50
6.25	2.45	7.36
6.50	2.41	7.23
6.75	2.37	7.10
7.00	2.32	6.97
7.25	2.28	6.84
7.50	2.24	6.71
7.75	2.19	6.58
8.00	2.15	6.45
8.25	2.11	6.32
8.50	2.06	6.19
8.75	2.02	6.06
9.00	1.98	5.93
9.25	1.93	5.80
9.50	1.89	5.67
9.75	1.84	5.53
10.00	1.80	5.40
10.25	1.76	5.27
10.50	1.71	5.14
10.75	1.67	5.01
11.00	1.63	4.88
11.25	1.58	4.75
11.50	1.54	4.62
11.75	1.50	4.49
12.00	1.45	4.36
12.25	1.41	4.23
12.50	1.37	4.10
12.75	1.32	3.97
13.00	1.28	3.84
13.25	1.23	3.70
13.50	1.19	3.57
13.75	1.15	3.44
14.00	1.10	3.31
14.25	1.06	3.18
14.50	1.02	3.05
14.75	0.97	2.92
15.00	0.93	2.79
15.25	0.89	2.66
15.50	0.84	2.53

Rico Water Sampling Form: *Station Information*

☐ Surface Water ☐ Groundwater ☒ Other

Sampling completed at this location ☒
(Do not check box until **ALL** items have been completed)

Sample Location: **AT-2**

Field Sample ID (as shown on bottle label): AT-2_20130313

Date of Sample Collection: 3-13-13

Time of Sample Collection: 1100

Sampler's Identity: J GISSEMAN

FIELD PARAMETERS / MEASUREMENTS

	pH	EC, µS/cm	DO, ppm	Temp, °C	ORP, mV	Depth along angle from casing invert (ft)
11:16	8.11	1089 µS/cm	1.11	15.66	31.2	11.74

Data downloaded from transducer? ☐ Yes ☒ No

Has transducer been cleaned and recalibrated? ☐ Yes ☒ No (required monthly)

SAMPLE BOTTLE INFORMATION - Check off each bottle when completed

	Field Sample ID on Bottle	Analysis	Bottle size/Type/Preservative
✓	AT-2_201303 13	Total Metals, Hardness, Silica	250 mL / HDPE / HNO3 (RED)
✓	AT-2_201303 13	Dissolved Metals (Field Filtered)	250 mL / HDPE / HNO3 (RED)
✓	AT-2_201303 13	Potentially Dissolved Metals	250 mL / HDPE / HNO3 (RED)
✓	AT-2_201303 13	Alkalinity, TSS, TDS, Chloride, Sulfate	500 mL / HDPE / None
✓	AT-2_201303 13	Salinity	250 mL / HDPE / None
✓	AT-2_201303 13	Cyanide	250 mL / HDPE / NaOH (GREEN)
✓	AT-2_201303 13	Sulfide	250 mL / HDPE / NaOH + Zn Acetate (BLACK)
✓	AT-2_201303 13	Total Organic Carbon, Nitrate	250 mL / Amber Glass / H2SO4 (YELLOW)

Notes: Cannot safely access area due to avalanche hazard

Rico Water Sampling Form: *Stream Flow Measurements*

	A	B	C	D	E	F	G	H	I	J	K	L
2	3-21-13				3-21-13				3-21-13	J GISSEMAN	M DEFRIEZ	
3	Location:		DR-1		Location:		DR-2		Location:		DR-7	
4	Benchmark Elevation: ~~5.80'~~ 5.81'				Benchmark Elevation: 4.71'				Benchmark Elevation: 5.39'			
5	River Water Elevation: 9.15				River Water Elevation: 11.20'				River Water Elevation: 9.67'			
6	☒ East to West ICE CLEARED				☒ East to West				☒ East to West 46			
7	☐ West to East SEE DR-1 COMP LOG SHEET				☐ West to East				☐ West to East			
8	Velocity (ft/sec)		Depth (ft)		Velocity (ft/sec)		Depth (ft)		Velocity (ft/sec)		Depth (ft)	
9	0.14		0.62		0.44		0.4		0	1.11	0.20	0.50
10	0.45		0.85		0.30		0.68		0	1.42	0.25	0.52
11	0.54		0.60		0.24		0.40		0.15	0.65	0.41	0.62
12	1.43		0.85		0.46		0.52		0.32	0.30	0.40	0.23
13	1.94		0.95		0.21		0.82		0.23	0	0.40	0
14	2.34		1.11		0.21		1.17		0.25	0.31	0.35	0.25
15	1.83		1.35		0.14		1.35		0.52	0.22	0.51	0.10
16	1.38		1.30		0.81		1.20		0.64	0.15	0.25	0.65
17	1.22		1.20		1.10		1.25		0.47	0.11	0.62	0.52
18	0.30		1.12		0.67		1.23		1.52		0.50	
19	0		0.92		1.33		1.28		0.58		0.65	
20	0.10		1.02		1.25		0.55		0.41		0.60	
21	0.57		0.92		1.01		0.98		1.26		0.75	
22	0.87		1.15		0.92		0.98		1.21		0.65	
23	0.29		1.00		0.77		1.19		0.81		0.55	
24	0.18		0.88		0.34		1.25		1.08		0.75	
25	0.28		1.12		0.32		1.39		1.76		0.45	
26	0.10		0.42		1.11		1.33		1.35		0.42	
27	0.17		0.20		0.34		1.12		0.66		0.70	
28	0.13		0.12		0.17		1.11		1.74		0.50	
29					0.34		0.98		1.49		0.51	
30					0.18		0.55		1.97		0.65	
31					0.10		0.81		1.72		0.65	
32					0.19		0.25		0.68		0.58	
33					0.05		0.42		0.28		0.50	
34					0.02		0.42		0.71		0.25	
35					0.02		0.15		0.05		0.15	
36					0		0		0.45		0.25	
37									0.12		0.15	
38									0		0	
39									0		0	
40									0.93		0.25	
41									1.39		0.65	
42									0.39		0.42	
43									0.76		0.55	

44 NOTE: Each velocity reading must have a corresponding depth reading with matching cell number. Each cell
45 represents a 1-foot subsection. Measurements are to be taken every foot.

Rico Water Sampling Form: *Stream Flow Measurements*

DATE: 3-21-13 JG + MD

Location:	DR-4-SW	Location:	DR-G	Location:	
Benchmark Elevation:		Benchmark Elevation:		Benchmark Elevation:	
River Water Elevation:		River Water Elevation:		River Water Elevation:	
☐ East to West		☐ East to West		☐ East to West	
☐ West to East		☐ West to East		☐ West to East	
Velocity (ft/sec)	Depth (ft)	Velocity (ft/sec)	Depth (ft)	Velocity (ft/sec)	Depth (ft)
30% ICE COVER		50% ICE COVER			
NO FLOW MONITORING		NO FLOW MONITORING			

NOTE: Each velocity reading must have a corresponding depth reading with matching cell number. Each cell represents a 1-foot subsection. Measurements are to be taken every foot.

Rico Water Sampling Form: *Stream Flow Measurements*

Location:	DR-1A	Location:	DR-2A	Location:	DR-3A
Benchmark Elevation:		Benchmark Elevation:		Benchmark Elevation:	
River Water Elevation:		River Water Elevation:		River Water Elevation:	
☐ East to West		☐ East to West		☐ East to West	
☐ West to East		☐ West to East		☐ West to East	

Velocity (ft/sec)	Depth (ft)	Velocity (ft/sec)	Depth (ft)	Velocity (ft/sec)	Depth (ft)
Ice cover preventing flow readings					

NOTE: Each velocity reading must have a corresponding depth reading with matching cell number. Each cell represents a 1-foot subsection. Measurements are to be taken every foot.

Appendix I

North Flume OTT PLS Data with Flowrates

OTT PLS Data at North Flume, March 2013

Date, Time	Depth Reading (ft)	Flowrate (cfs)	Flowrate (gpm)
3/1/2013 0:00	0.51	1.11	497.8
3/1/2013 0:10	0.51	1.11	497.8
3/1/2013 1:50	0.51	1.11	497.8
3/1/2013 1:50	0.51	1.11	497.8
3/1/2013 1:50	0.51	1.11	497.8
3/1/2013 1:50	0.51	1.11	497.8
3/1/2013 1:50	0.51	1.11	497.8
3/1/2013 1:50	0.51	1.11	497.8
3/1/2013 1:50	0.51	1.11	497.8
3/1/2013 1:50	0.51	1.11	497.8
3/1/2013 1:50	0.51	1.11	497.8
3/1/2013 1:50	0.51	1.11	497.8
3/1/2013 2:00	0.51	1.11	497.8
3/1/2013 2:10	0.51	1.11	497.8
3/1/2013 2:20	0.51	1.11	497.8
3/1/2013 2:30	0.51	1.11	497.8
3/1/2013 2:40	0.51	1.11	497.8
3/1/2013 2:50	0.51	1.11	497.8
3/1/2013 3:00	0.51	1.11	497.8
3/1/2013 3:10	0.51	1.11	497.8
3/1/2013 3:20	0.51	1.11	497.8
3/1/2013 3:30	0.51	1.11	497.8
3/1/2013 3:40	0.51	1.11	497.8
3/1/2013 3:50	0.51	1.11	497.8
3/1/2013 4:00	0.51	1.11	497.8
3/1/2013 4:10	0.51	1.11	497.8
3/1/2013 6:50	0.51	1.11	497.8
3/1/2013 6:50	0.51	1.11	497.8
3/1/2013 6:50	0.51	1.11	497.8
3/1/2013 6:50	0.51	1.11	497.8
3/1/2013 6:50	0.51	1.11	497.8
3/1/2013 6:50	0.51	1.11	497.8
3/1/2013 6:50	0.51	1.11	497.8
3/1/2013 6:51	0.51	1.11	497.8
3/1/2013 6:51	0.51	1.11	497.8
3/1/2013 6:51	0.52	1.14	512.6
3/1/2013 6:52	0.51	1.11	497.8
3/1/2013 6:52	0.52	1.14	512.6
3/1/2013 6:52	0.51	1.11	497.8
3/1/2013 6:53	0.51	1.11	497.8
3/1/2013 6:53	0.51	1.11	497.8
3/1/2013 6:53	0.51	1.11	497.8

3/1/2013 7:00	0.51	1.11	497.8
3/1/2013 7:10	0.51	1.11	497.8
3/1/2013 7:20	0.51	1.11	497.8
3/1/2013 7:30	0.51	1.11	497.8
3/1/2013 7:40	0.51	1.11	497.8
3/1/2013 7:50	0.51	1.11	497.8
3/1/2013 8:00	0.51	1.11	497.8
3/1/2013 8:10	0.51	1.11	497.8
3/1/2013 8:20	0.51	1.11	497.8
3/1/2013 8:30	0.51	1.11	497.8
3/1/2013 8:40	0.51	1.11	497.8
3/1/2013 8:50	0.51	1.11	497.8
3/1/2013 9:00	0.51	1.11	497.8
3/1/2013 9:10	0.51	1.11	497.8
3/1/2013 9:20	0.51	1.11	497.8
3/1/2013 9:30	0.51	1.11	497.8
3/1/2013 9:40	0.51	1.11	497.8
3/1/2013 9:50	0.51	1.11	497.8
3/1/2013 10:00	0.51	1.11	497.8
3/1/2013 10:10	0.51	1.11	497.8
3/1/2013 10:20	0.51	1.11	497.8
3/1/2013 10:30	0.51	1.11	497.8
3/1/2013 10:40	0.51	1.11	497.8
3/1/2013 10:50	0.51	1.11	497.8
3/1/2013 11:00	0.51	1.11	497.8
3/1/2013 11:10	0.51	1.11	497.8
3/1/2013 11:20	0.52	1.14	512.6
3/1/2013 11:30	0.51	1.11	497.8
3/1/2013 11:40	0.51	1.11	497.8
3/1/2013 11:50	0.51	1.11	497.8
3/1/2013 12:00	0.51	1.11	497.8
3/1/2013 12:10	0.52	1.14	512.6
3/1/2013 12:20	0.51	1.11	497.8
3/1/2013 12:30	0.52	1.14	512.6
3/1/2013 12:40	0.52	1.14	512.6
3/1/2013 12:50	0.51	1.11	497.8
3/1/2013 13:00	0.51	1.11	497.8
3/1/2013 13:10	0.51	1.11	497.8
3/1/2013 13:20	0.51	1.11	497.8
3/1/2013 13:30	0.52	1.14	512.6
3/1/2013 13:40	0.51	1.11	497.8
3/1/2013 13:50	0.51	1.11	497.8
3/1/2013 14:00	0.51	1.11	497.8
3/1/2013 14:10	0.51	1.11	497.8
3/1/2013 14:20	0.51	1.11	497.8
3/1/2013 14:30	0.52	1.14	512.6
3/1/2013 14:40	0.51	1.11	497.8

3/1/2013 14:50	0.51	1.11	497.8
3/1/2013 15:00	0.51	1.11	497.8
3/1/2013 15:10	0.51	1.11	497.8
3/1/2013 15:20	0.51	1.11	497.8
3/1/2013 15:30	0.51	1.11	497.8
3/1/2013 15:40	0.51	1.11	497.8
3/1/2013 15:50	0.51	1.11	497.8
3/1/2013 16:00	0.51	1.11	497.8
3/1/2013 16:10	0.51	1.11	497.8
3/1/2013 16:20	0.51	1.11	497.8
3/1/2013 16:30	0.51	1.11	497.8
3/1/2013 16:40	0.51	1.11	497.8
3/1/2013 16:50	0.51	1.11	497.8
3/1/2013 17:00	0.51	1.11	497.8
3/1/2013 17:10	0.51	1.11	497.8
3/1/2013 17:20	0.51	1.11	497.8
3/1/2013 17:30	0.51	1.11	497.8
3/1/2013 17:40	0.51	1.11	497.8
3/1/2013 17:50	0.51	1.11	497.8
3/1/2013 18:00	0.51	1.11	497.8
3/1/2013 18:10	0.51	1.11	497.8
3/1/2013 18:20	0.51	1.11	497.8
3/1/2013 18:30	0.51	1.11	497.8
3/1/2013 18:40	0.51	1.11	497.8
3/1/2013 18:50	0.51	1.11	497.8
3/1/2013 19:00	0.51	1.11	497.8
3/1/2013 19:10	0.51	1.11	497.8
3/1/2013 19:20	0.51	1.11	497.8
3/1/2013 19:30	0.51	1.11	497.8
3/1/2013 19:40	0.51	1.11	497.8
3/1/2013 19:50	0.51	1.11	497.8
3/1/2013 20:00	0.51	1.11	497.8
3/1/2013 20:10	0.51	1.11	497.8
3/1/2013 20:20	0.51	1.11	497.8
3/1/2013 20:30	0.51	1.11	497.8
3/1/2013 20:40	0.51	1.11	497.8
3/1/2013 20:50	0.51	1.11	497.8
3/1/2013 21:00	0.51	1.11	497.8
3/1/2013 21:10	0.51	1.11	497.8
3/1/2013 21:20	0.51	1.11	497.8
3/1/2013 21:30	0.51	1.11	497.8
3/1/2013 21:40	0.51	1.11	497.8
3/1/2013 21:50	0.51	1.11	497.8
3/1/2013 22:00	0.51	1.11	497.8
3/1/2013 22:10	0.51	1.11	497.8
3/1/2013 22:20	0.51	1.11	497.8
3/1/2013 22:30	0.51	1.11	497.8

3/1/2013 22:40	0.51	1.11	497.8
3/1/2013 22:50	0.51	1.11	497.8
3/1/2013 23:00	0.51	1.11	497.8
3/1/2013 23:10	0.51	1.11	497.8
3/1/2013 23:20	0.51	1.11	497.8
3/1/2013 23:30	0.51	1.11	497.8
3/1/2013 23:40	0.51	1.11	497.8
3/1/2013 23:50	0.51	1.11	497.8
3/2/2013 0:00	0.51	1.11	497.8
3/2/2013 0:10	0.51	1.11	497.8
3/2/2013 0:20	0.51	1.11	497.8
3/2/2013 0:30	0.51	1.11	497.8
3/2/2013 0:40	0.51	1.11	497.8
3/2/2013 0:50	0.51	1.11	497.8
3/2/2013 1:00	0.51	1.11	497.8
3/2/2013 1:10	0.51	1.11	497.8
3/2/2013 1:20	0.51	1.11	497.8
3/2/2013 1:30	0.51	1.11	497.8
3/2/2013 1:40	0.51	1.11	497.8
3/2/2013 1:50	0.51	1.11	497.8
3/2/2013 2:00	0.51	1.11	497.8
3/2/2013 2:10	0.51	1.11	497.8
3/2/2013 2:20	0.51	1.11	497.8
3/2/2013 2:30	0.51	1.11	497.8
3/2/2013 2:40	0.51	1.11	497.8
3/2/2013 2:50	0.51	1.11	497.8
3/2/2013 3:00	0.51	1.11	497.8
3/2/2013 3:10	0.51	1.11	497.8
3/2/2013 3:20	0.51	1.11	497.8
3/2/2013 3:30	0.51	1.11	497.8
3/2/2013 3:40	0.51	1.11	497.8
3/2/2013 3:50	0.51	1.11	497.8
3/2/2013 4:00	0.51	1.11	497.8
3/2/2013 4:10	0.51	1.11	497.8
3/2/2013 4:20	0.51	1.11	497.8
3/2/2013 4:30	0.51	1.11	497.8
3/2/2013 4:40	0.51	1.11	497.8
3/2/2013 4:50	0.51	1.11	497.8
3/2/2013 5:00	0.51	1.11	497.8
3/2/2013 5:10	0.51	1.11	497.8
3/2/2013 5:20	0.51	1.11	497.8
3/2/2013 5:30	0.51	1.11	497.8
3/2/2013 5:40	0.51	1.11	497.8
3/2/2013 5:50	0.51	1.11	497.8
3/2/2013 6:00	0.51	1.11	497.8
3/2/2013 6:10	0.51	1.11	497.8
3/2/2013 6:20	0.51	1.11	497.8

3/2/2013 6:30	0.51	1.11	497.8
3/2/2013 6:40	0.51	1.11	497.8
3/2/2013 6:50	0.51	1.11	497.8
3/2/2013 7:00	0.51	1.11	497.8
3/2/2013 7:10	0.51	1.11	497.8
3/2/2013 7:20	0.51	1.11	497.8
3/2/2013 7:30	0.51	1.11	497.8
3/2/2013 7:40	0.51	1.11	497.8
3/2/2013 7:50	0.51	1.11	497.8
3/2/2013 8:00	0.51	1.11	497.8
3/2/2013 8:10	0.51	1.11	497.8
3/2/2013 8:20	0.51	1.11	497.8
3/2/2013 8:30	0.51	1.11	497.8
3/2/2013 8:40	0.51	1.11	497.8
3/2/2013 8:50	0.51	1.11	497.8
3/2/2013 9:00	0.51	1.11	497.8
3/2/2013 9:10	0.51	1.11	497.8
3/2/2013 9:20	0.51	1.11	497.8
3/2/2013 9:30	0.51	1.11	497.8
3/2/2013 9:40	0.51	1.11	497.8
3/2/2013 9:50	0.51	1.11	497.8
3/2/2013 10:00	0.51	1.11	497.8
3/2/2013 10:10	0.51	1.11	497.8
3/2/2013 10:20	0.51	1.11	497.8
3/2/2013 10:30	0.52	1.14	512.6
3/2/2013 10:40	0.51	1.11	497.8
3/2/2013 10:50	0.51	1.11	497.8
3/2/2013 11:00	0.51	1.11	497.8
3/2/2013 11:10	0.51	1.11	497.8
3/2/2013 11:20	0.52	1.14	512.6
3/2/2013 11:30	0.51	1.11	497.8
3/2/2013 11:40	0.51	1.11	497.8
3/2/2013 11:50	0.52	1.14	512.6
3/2/2013 12:00	0.51	1.11	497.8
3/2/2013 12:10	0.52	1.14	512.6
3/2/2013 12:20	0.51	1.11	497.8
3/2/2013 12:30	0.52	1.14	512.6
3/2/2013 12:40	0.51	1.11	497.8
3/2/2013 12:50	0.51	1.11	497.8
3/2/2013 13:00	0.51	1.11	497.8
3/2/2013 13:10	0.52	1.14	512.6
3/2/2013 13:20	0.51	1.11	497.8
3/2/2013 13:30	0.51	1.11	497.8
3/2/2013 13:40	0.52	1.14	512.6
3/2/2013 13:50	0.51	1.11	497.8
3/2/2013 14:00	0.51	1.11	497.8
3/2/2013 14:10	0.51	1.11	497.8

3/2/2013 14:20	0.52	1.14	512.6
3/2/2013 14:30	0.51	1.11	497.8
3/2/2013 14:40	0.52	1.14	512.6
3/2/2013 14:50	0.51	1.11	497.8
3/2/2013 15:00	0.51	1.11	497.8
3/2/2013 15:10	0.52	1.14	512.6
3/2/2013 15:20	0.51	1.11	497.8
3/2/2013 15:30	0.52	1.14	512.6
3/2/2013 15:40	0.51	1.11	497.8
3/2/2013 15:50	0.52	1.14	512.6
3/2/2013 16:00	0.52	1.14	512.6
3/2/2013 16:10	0.52	1.14	512.6
3/2/2013 16:20	0.51	1.11	497.8
3/2/2013 16:30	0.52	1.14	512.6
3/2/2013 16:40	0.52	1.14	512.6
3/2/2013 16:50	0.52	1.14	512.6
3/2/2013 17:00	0.52	1.14	512.6
3/2/2013 17:10	0.52	1.14	512.6
3/2/2013 17:20	0.52	1.14	512.6
3/2/2013 17:30	0.52	1.14	512.6
3/2/2013 17:40	0.51	1.11	497.8
3/2/2013 17:50	0.52	1.14	512.6
3/2/2013 18:00	0.52	1.14	512.6
3/2/2013 18:10	0.52	1.14	512.6
3/2/2013 18:20	0.52	1.14	512.6
3/2/2013 18:30	0.52	1.14	512.6
3/2/2013 18:40	0.51	1.11	497.8
3/2/2013 18:50	0.52	1.14	512.6
3/2/2013 19:00	0.51	1.11	497.8
3/2/2013 19:10	0.51	1.11	497.8
3/2/2013 19:20	0.52	1.14	512.6
3/2/2013 19:30	0.52	1.14	512.6
3/2/2013 19:40	0.51	1.11	497.8
3/2/2013 19:50	0.52	1.14	512.6
3/2/2013 20:00	0.51	1.11	497.8
3/2/2013 20:10	0.52	1.14	512.6
3/2/2013 20:20	0.52	1.14	512.6
3/2/2013 20:30	0.52	1.14	512.6
3/2/2013 20:40	0.51	1.11	497.8
3/2/2013 20:50	0.52	1.14	512.6
3/2/2013 21:00	0.51	1.11	497.8
3/2/2013 21:10	0.51	1.11	497.8
3/2/2013 21:20	0.51	1.11	497.8
3/2/2013 21:30	0.51	1.11	497.8
3/2/2013 21:40	0.51	1.11	497.8
3/2/2013 21:50	0.51	1.11	497.8
3/2/2013 22:00	0.51	1.11	497.8

3/2/2013 22:10	0.51	1.11	497.8
3/2/2013 22:20	0.51	1.11	497.8
3/2/2013 22:30	0.51	1.11	497.8
3/2/2013 22:40	0.51	1.11	497.8
3/2/2013 22:50	0.51	1.11	497.8
3/2/2013 23:00	0.51	1.11	497.8
3/2/2013 23:10	0.51	1.11	497.8
3/2/2013 23:20	0.52	1.14	512.6
3/2/2013 23:30	0.51	1.11	497.8
3/2/2013 23:40	0.51	1.11	497.8
3/2/2013 23:50	0.51	1.11	497.8
3/3/2013 0:00	0.51	1.11	497.8
3/3/2013 0:10	0.51	1.11	497.8
3/3/2013 0:20	0.51	1.11	497.8
3/3/2013 0:30	0.51	1.11	497.8
3/3/2013 0:40	0.51	1.11	497.8
3/3/2013 0:50	0.51	1.11	497.8
3/3/2013 1:00	0.51	1.11	497.8
3/3/2013 1:10	0.51	1.11	497.8
3/3/2013 1:20	0.51	1.11	497.8
3/3/2013 1:30	0.52	1.14	512.6
3/3/2013 1:40	0.51	1.11	497.8
3/3/2013 1:50	0.51	1.11	497.8
3/3/2013 2:00	0.51	1.11	497.8
3/3/2013 2:10	0.51	1.11	497.8
3/3/2013 2:20	0.51	1.11	497.8
3/3/2013 2:30	0.51	1.11	497.8
3/3/2013 2:40	0.51	1.11	497.8
3/3/2013 2:50	0.52	1.14	512.6
3/3/2013 3:00	0.51	1.11	497.8
3/3/2013 7:50	0.51	1.11	497.8
3/3/2013 7:50	0.52	1.14	512.6
3/3/2013 7:50	0.51	1.11	497.8
3/3/2013 7:50	0.51	1.11	497.8
3/3/2013 7:50	0.51	1.11	497.8
3/3/2013 7:50	0.51	1.11	497.8
3/3/2013 7:51	0.51	1.11	497.8
3/3/2013 7:51	0.52	1.14	512.6
3/3/2013 7:52	0.51	1.11	497.8
3/3/2013 7:52	0.51	1.11	497.8
3/3/2013 7:53	0.51	1.11	497.8
3/3/2013 7:53	0.51	1.11	497.8
3/3/2013 7:54	0.52	1.14	512.6
3/3/2013 7:54	0.51	1.11	497.8
3/3/2013 7:55	0.51	1.11	497.8
3/3/2013 7:55	0.52	1.14	512.6
3/3/2013 7:56	0.51	1.11	497.8

3/3/2013 7:56	0.51	1.11	497.8
3/3/2013 7:57	0.51	1.11	497.8
3/3/2013 7:57	0.52	1.14	512.6
3/3/2013 7:57	0.51	1.11	497.8
3/3/2013 7:58	0.51	1.11	497.8
3/3/2013 7:58	0.52	1.14	512.6
3/3/2013 7:59	0.51	1.11	497.8
3/3/2013 8:00	0.51	1.11	497.8
3/3/2013 8:10	0.52	1.14	512.6
3/3/2013 8:10	0.52	1.14	512.6
3/3/2013 8:10	0.52	1.14	512.6
3/3/2013 8:10	0.52	1.14	512.6
3/3/2013 8:10	0.51	1.11	497.8
3/3/2013 8:10	0.51	1.11	497.8
3/3/2013 8:20	0.51	1.11	497.8
3/3/2013 8:30	0.51	1.11	497.8
3/3/2013 8:40	0.52	1.14	512.6
3/3/2013 8:50	0.51	1.11	497.8
3/3/2013 9:00	0.52	1.14	512.6
3/3/2013 9:10	0.51	1.11	497.8
3/3/2013 9:20	0.52	1.14	512.6
3/3/2013 9:30	0.52	1.14	512.6
3/3/2013 9:40	0.52	1.14	512.6
3/3/2013 9:50	0.51	1.11	497.8
3/3/2013 10:00	0.51	1.11	497.8
3/3/2013 10:10	0.51	1.11	497.8
3/3/2013 10:20	0.52	1.14	512.6
3/3/2013 10:30	0.51	1.11	497.8
3/3/2013 10:40	0.51	1.11	497.8
3/3/2013 10:50	0.51	1.11	497.8
3/3/2013 11:00	0.51	1.11	497.8
3/3/2013 11:10	0.51	1.11	497.8
3/3/2013 11:20	0.51	1.11	497.8
3/3/2013 11:30	0.51	1.11	497.8
3/3/2013 11:40	0.51	1.11	497.8
3/3/2013 11:50	0.51	1.11	497.8
3/3/2013 12:00	0.51	1.11	497.8
3/3/2013 12:10	0.51	1.11	497.8
3/3/2013 12:20	0.51	1.11	497.8
3/3/2013 12:30	0.51	1.11	497.8
3/3/2013 12:40	0.51	1.11	497.8
3/3/2013 12:50	0.51	1.11	497.8
3/3/2013 13:00	0.51	1.11	497.8
3/3/2013 13:10	0.51	1.11	497.8
3/3/2013 13:20	0.51	1.11	497.8
3/3/2013 13:30	0.51	1.11	497.8
3/3/2013 13:40	0.51	1.11	497.8

3/3/2013 13:50	0.51	1.11	497.8
3/3/2013 14:00	0.51	1.11	497.8
3/3/2013 14:10	0.51	1.11	497.8
3/3/2013 14:20	0.51	1.11	497.8
3/3/2013 14:30	0.51	1.11	497.8
3/3/2013 14:40	0.51	1.11	497.8
3/3/2013 14:50	0.51	1.11	497.8
3/3/2013 15:00	0.51	1.11	497.8
3/3/2013 15:10	0.51	1.11	497.8
3/3/2013 15:20	0.51	1.11	497.8
3/3/2013 15:30	0.51	1.11	497.8
3/3/2013 15:40	0.51	1.11	497.8
3/3/2013 15:50	0.51	1.11	497.8
3/3/2013 16:00	0.51	1.11	497.8
3/3/2013 16:10	0.51	1.11	497.8
3/3/2013 16:20	0.51	1.11	497.8
3/3/2013 16:30	0.51	1.11	497.8
3/3/2013 16:40	0.51	1.11	497.8
3/3/2013 16:50	0.51	1.11	497.8
3/3/2013 17:00	0.51	1.11	497.8
3/3/2013 17:10	0.51	1.11	497.8
3/3/2013 17:20	0.51	1.11	497.8
3/3/2013 17:30	0.51	1.11	497.8
3/3/2013 17:40	0.51	1.11	497.8
3/3/2013 17:50	0.51	1.11	497.8
3/3/2013 18:00	0.51	1.11	497.8
3/3/2013 18:10	0.51	1.11	497.8
3/3/2013 18:20	0.51	1.11	497.8
3/3/2013 18:30	0.51	1.11	497.8
3/3/2013 18:40	0.51	1.11	497.8
3/3/2013 18:50	0.51	1.11	497.8
3/3/2013 19:00	0.51	1.11	497.8
3/3/2013 19:10	0.51	1.11	497.8
3/3/2013 19:20	0.51	1.11	497.8
3/3/2013 19:30	0.51	1.11	497.8
3/3/2013 19:40	0.51	1.11	497.8
3/3/2013 19:50	0.51	1.11	497.8
3/3/2013 20:00	0.51	1.11	497.8
3/3/2013 20:10	0.51	1.11	497.8
3/3/2013 20:20	0.51	1.11	497.8
3/3/2013 20:30	0.51	1.11	497.8
3/3/2013 20:40	0.52	1.14	512.6
3/3/2013 20:50	0.51	1.11	497.8
3/3/2013 21:00	0.51	1.11	497.8
3/3/2013 21:10	0.51	1.11	497.8
3/3/2013 21:20	0.51	1.11	497.8
3/3/2013 21:30	0.51	1.11	497.8

3/3/2013 21:40	0.51	1.11	497.8
3/3/2013 21:50	0.51	1.11	497.8
3/3/2013 22:00	0.51	1.11	497.8
3/3/2013 22:10	0.51	1.11	497.8
3/3/2013 22:20	0.51	1.11	497.8
3/3/2013 22:30	0.51	1.11	497.8
3/3/2013 22:40	0.51	1.11	497.8
3/3/2013 22:50	0.51	1.11	497.8
3/3/2013 23:00	0.51	1.11	497.8
3/3/2013 23:10	0.51	1.11	497.8
3/3/2013 23:20	0.51	1.11	497.8
3/3/2013 23:30	0.51	1.11	497.8
3/3/2013 23:40	0.51	1.11	497.8
3/3/2013 23:50	0.51	1.11	497.8
3/4/2013 0:00	0.51	1.11	497.8
3/4/2013 0:10	0.51	1.11	497.8
3/4/2013 0:20	0.51	1.11	497.8
3/4/2013 0:30	0.51	1.11	497.8
3/4/2013 0:40	0.51	1.11	497.8
3/4/2013 0:50	0.51	1.11	497.8
3/4/2013 1:00	0.51	1.11	497.8
3/4/2013 1:10	0.52	1.14	512.6
3/4/2013 1:20	0.51	1.11	497.8
3/4/2013 1:30	0.51	1.11	497.8
3/4/2013 1:40	0.51	1.11	497.8
3/4/2013 1:50	0.51	1.11	497.8
3/4/2013 2:00	0.51	1.11	497.8
3/4/2013 2:10	0.51	1.11	497.8
3/4/2013 2:20	0.51	1.11	497.8
3/4/2013 2:30	0.51	1.11	497.8
3/4/2013 2:40	0.51	1.11	497.8
3/4/2013 2:50	0.51	1.11	497.8
3/4/2013 3:00	0.51	1.11	497.8
3/4/2013 3:10	0.51	1.11	497.8
3/4/2013 3:20	0.51	1.11	497.8
3/4/2013 3:30	0.51	1.11	497.8
3/4/2013 3:40	0.51	1.11	497.8
3/4/2013 3:50	0.51	1.11	497.8
3/4/2013 4:00	0.51	1.11	497.8
3/4/2013 4:10	0.51	1.11	497.8
3/4/2013 4:20	0.51	1.11	497.8
3/4/2013 4:30	0.51	1.11	497.8
3/4/2013 4:40	0.51	1.11	497.8
3/4/2013 4:50	0.51	1.11	497.8
3/4/2013 5:00	0.51	1.11	497.8
3/4/2013 5:10	0.51	1.11	497.8
3/4/2013 5:20	0.51	1.11	497.8

3/4/2013 5:30	0.51	1.11	497.8
3/4/2013 5:40	0.51	1.11	497.8
3/4/2013 5:50	0.51	1.11	497.8
3/4/2013 6:00	0.51	1.11	497.8
3/4/2013 6:10	0.51	1.11	497.8
3/4/2013 6:20	0.51	1.11	497.8
3/4/2013 6:30	0.51	1.11	497.8
3/4/2013 6:40	0.51	1.11	497.8
3/4/2013 6:50	0.51	1.11	497.8
3/4/2013 7:00	0.51	1.11	497.8
3/4/2013 7:10	0.51	1.11	497.8
3/4/2013 7:20	0.51	1.11	497.8
3/4/2013 7:30	0.51	1.11	497.8
3/4/2013 7:40	0.51	1.11	497.8
3/4/2013 7:50	0.51	1.11	497.8
3/4/2013 8:00	0.51	1.11	497.8
3/4/2013 8:10	0.51	1.11	497.8
3/4/2013 8:20	0.51	1.11	497.8
3/4/2013 8:30	0.51	1.11	497.8
3/4/2013 8:40	0.51	1.11	497.8
3/4/2013 8:50	0.51	1.11	497.8
3/4/2013 9:00	0.51	1.11	497.8
3/4/2013 9:10	0.51	1.11	497.8
3/4/2013 9:20	0.51	1.11	497.8
3/4/2013 9:30	0.51	1.11	497.8
3/4/2013 9:40	0.51	1.11	497.8
3/4/2013 9:50	0.51	1.11	497.8
3/4/2013 10:00	0.51	1.11	497.8
3/4/2013 10:10	0.51	1.11	497.8
3/4/2013 10:20	0.51	1.11	497.8
3/4/2013 10:30	0.51	1.11	497.8
3/4/2013 10:40	0.51	1.11	497.8
3/4/2013 10:50	0.51	1.11	497.8
3/4/2013 11:00	0.51	1.11	497.8
3/4/2013 11:10	0.51	1.11	497.8
3/4/2013 11:20	0.51	1.11	497.8
3/4/2013 11:30	0.51	1.11	497.8
3/4/2013 11:40	0.51	1.11	497.8
3/4/2013 11:50	0.51	1.11	497.8
3/4/2013 12:00	0.51	1.11	497.8
3/4/2013 12:10	0.51	1.11	497.8
3/4/2013 12:20	0.51	1.11	497.8
3/4/2013 12:30	0.51	1.11	497.8
3/4/2013 12:40	0.51	1.11	497.8
3/4/2013 12:50	0.51	1.11	497.8
3/4/2013 13:00	0.51	1.11	497.8
3/4/2013 13:10	0.51	1.11	497.8

3/4/2013 13:20	0.51	1.11	497.8
3/4/2013 13:30	0.51	1.11	497.8
3/4/2013 13:40	0.51	1.11	497.8
3/4/2013 13:50	0.51	1.11	497.8
3/4/2013 14:00	0.51	1.11	497.8
3/4/2013 14:10	0.51	1.11	497.8
3/4/2013 14:20	0.51	1.11	497.8
3/4/2013 14:30	0.51	1.11	497.8
3/4/2013 14:40	0.51	1.11	497.8
3/4/2013 14:50	0.51	1.11	497.8
3/4/2013 15:00	0.51	1.11	497.8
3/4/2013 15:10	0.51	1.11	497.8
3/4/2013 15:20	0.52	1.14	512.6
3/4/2013 15:30	0.51	1.11	497.8
3/4/2013 15:40	0.51	1.11	497.8
3/4/2013 15:50	0.51	1.11	497.8
3/4/2013 16:00	0.51	1.11	497.8
3/4/2013 16:10	0.51	1.11	497.8
3/4/2013 16:20	0.51	1.11	497.8
3/4/2013 16:30	0.52	1.14	512.6
3/4/2013 16:40	0.52	1.14	512.6
3/4/2013 16:50	0.51	1.11	497.8
3/4/2013 17:00	0.51	1.11	497.8
3/4/2013 17:10	0.52	1.14	512.6
3/4/2013 17:20	0.51	1.11	497.8
3/4/2013 17:30	0.51	1.11	497.8
3/4/2013 17:40	0.51	1.11	497.8
3/4/2013 17:50	0.51	1.11	497.8
3/4/2013 18:00	0.51	1.11	497.8
3/4/2013 18:10	0.52	1.14	512.6
3/4/2013 18:20	0.51	1.11	497.8
3/4/2013 18:30	0.51	1.11	497.8
3/4/2013 18:40	0.51	1.11	497.8
3/4/2013 18:50	0.51	1.11	497.8
3/4/2013 19:00	0.51	1.11	497.8
3/4/2013 19:10	0.51	1.11	497.8
3/4/2013 19:20	0.51	1.11	497.8
3/4/2013 19:30	0.51	1.11	497.8
3/4/2013 19:40	0.52	1.14	512.6
3/4/2013 19:50	0.51	1.11	497.8
3/4/2013 20:00	0.51	1.11	497.8
3/4/2013 20:10	0.51	1.11	497.8
3/4/2013 20:20	0.51	1.11	497.8
3/4/2013 20:30	0.51	1.11	497.8
3/5/2013 11:58	0.51	1.11	497.8
3/5/2013 11:59	0.51	1.11	497.8
3/5/2013 11:59	0.51	1.11	497.8

3/5/2013 12:00	0.52	1.14	512.6
3/5/2013 12:00	0.51	1.11	497.8
3/5/2013 12:00	0.51	1.11	497.8
3/5/2013 12:10	0.52	1.14	512.6
3/5/2013 12:10	0.51	1.11	497.8
3/5/2013 12:10	0.51	1.11	497.8
3/5/2013 12:10	0.51	1.11	497.8
3/5/2013 12:10	0.51	1.11	497.8
3/5/2013 12:10	0.51	1.11	497.8
3/5/2013 12:10	0.51	1.11	497.8
3/5/2013 12:10	0.51	1.11	497.8
3/5/2013 12:10	0.51	1.11	497.8
3/5/2013 12:10	0.52	1.14	512.6
3/5/2013 12:10	0.51	1.11	497.8
3/5/2013 12:10	0.51	1.11	497.8
3/5/2013 12:10	0.51	1.11	497.8
3/5/2013 12:10	0.51	1.11	497.8
3/5/2013 12:10	0.51	1.11	497.8
3/5/2013 12:10	0.51	1.11	497.8
3/5/2013 12:10	0.51	1.11	497.8
3/5/2013 12:10	0.51	1.11	497.8
3/5/2013 12:10	0.51	1.11	497.8
3/5/2013 12:10	0.51	1.11	497.8
3/5/2013 12:10	0.51	1.11	497.8
3/5/2013 12:10	0.51	1.11	497.8
3/5/2013 12:20	0.51	1.11	497.8
3/5/2013 12:20	0.51	1.11	497.8
3/5/2013 12:20	0.52	1.14	512.6
3/5/2013 12:20	0.51	1.11	497.8
3/5/2013 12:20	0.51	1.11	497.8
3/5/2013 12:20	0.51	1.11	497.8
3/5/2013 12:20	0.51	1.11	497.8
3/5/2013 12:20	0.51	1.11	497.8
3/5/2013 12:20	0.51	1.11	497.8
3/5/2013 12:20	0.51	1.11	497.8
3/5/2013 12:20	0.51	1.11	497.8
3/5/2013 12:20	0.51	1.11	497.8
3/5/2013 12:20	0.51	1.11	497.8
3/5/2013 12:20	0.51	1.11	497.8
3/5/2013 12:20	0.51	1.11	497.8
3/5/2013 12:20	0.51	1.11	497.8
3/5/2013 12:20	0.51	1.11	497.8
3/5/2013 12:20	0.51	1.11	497.8

3/5/2013 12:20	0.51	1.11	497.8
3/5/2013 12:20	0.51	1.11	497.8
3/5/2013 12:20	0.52	1.14	512.6
3/5/2013 12:20	0.52	1.14	512.6
3/5/2013 12:20	0.51	1.11	497.8
3/5/2013 12:20	0.51	1.11	497.8
3/5/2013 12:20	0.51	1.11	497.8
3/5/2013 12:30	0.51	1.11	497.8
3/5/2013 12:30	0.51	1.11	497.8
3/5/2013 12:30	0.51	1.11	497.8
3/5/2013 12:30	0.51	1.11	497.8
3/5/2013 12:30	0.52	1.14	512.6
3/5/2013 12:30	0.51	1.11	497.8
3/5/2013 12:30	0.51	1.11	497.8
3/5/2013 12:30	0.51	1.11	497.8
3/5/2013 12:30	0.51	1.11	497.8
3/5/2013 12:30	0.51	1.11	497.8
3/5/2013 12:30	0.51	1.11	497.8
3/5/2013 12:30	0.52	1.14	512.6
3/5/2013 12:30	0.51	1.11	497.8
3/5/2013 12:30	0.51	1.11	497.8
3/5/2013 12:30	0.52	1.14	512.6
3/5/2013 12:30	0.51	1.11	497.8
3/5/2013 12:30	0.51	1.11	497.8
3/5/2013 12:30	0.51	1.11	497.8
3/5/2013 12:30	0.51	1.11	497.8
3/5/2013 12:30	0.52	1.14	512.6
3/5/2013 12:30	0.52	1.14	512.6
3/5/2013 12:30	0.51	1.11	497.8
3/5/2013 12:30	0.51	1.11	497.8
3/5/2013 12:30	0.51	1.11	497.8
3/5/2013 12:30	0.51	1.11	497.8
3/5/2013 12:30	0.51	1.11	497.8
3/5/2013 12:30	0.51	1.11	497.8
3/5/2013 12:30	0.51	1.11	497.8
3/5/2013 12:30	0.52	1.14	512.6
3/5/2013 12:30	0.51	1.11	497.8
3/5/2013 12:30	0.51	1.11	497.8
3/5/2013 12:30	0.51	1.11	497.8
3/5/2013 12:30	0.51	1.11	497.8
3/5/2013 12:30	0.51	1.11	497.8
3/5/2013 12:30	0.51	1.11	497.8
3/5/2013 12:30	0.51	1.11	497.8
3/5/2013 12:30	0.51	1.11	497.8
3/5/2013 12:30	0.52	1.14	512.6
3/5/2013 12:30	0.52	1.14	512.6
3/5/2013 12:40	0.51	1.11	497.8

3/5/2013 12:50	0.52	1.14	512.6
3/5/2013 13:00	0.51	1.11	497.8
3/5/2013 13:10	0.51	1.11	497.8
3/5/2013 13:20	0.52	1.14	512.6
3/5/2013 13:30	0.51	1.11	497.8
3/5/2013 13:40	0.51	1.11	497.8
3/5/2013 13:50	0.51	1.11	497.8
3/5/2013 14:00	0.52	1.14	512.6
3/5/2013 14:10	0.51	1.11	497.8
3/5/2013 14:20	0.51	1.11	497.8
3/5/2013 14:30	0.51	1.11	497.8
3/5/2013 14:40	0.51	1.11	497.8
3/5/2013 14:50	0.51	1.11	497.8
3/5/2013 15:00	0.51	1.11	497.8
3/5/2013 15:10	0.51	1.11	497.8
3/5/2013 15:20	0.51	1.11	497.8
3/5/2013 15:30	0.51	1.11	497.8
3/5/2013 15:40	0.51	1.11	497.8
3/5/2013 15:50	0.51	1.11	497.8
3/5/2013 16:00	0.51	1.11	497.8
3/5/2013 16:10	0.51	1.11	497.8
3/5/2013 16:20	0.52	1.14	512.6
3/5/2013 16:30	0.51	1.11	497.8
3/5/2013 16:40	0.51	1.11	497.8
3/5/2013 16:50	0.51	1.11	497.8
3/5/2013 17:00	0.51	1.11	497.8
3/5/2013 17:10	0.51	1.11	497.8
3/5/2013 17:20	0.51	1.11	497.8
3/5/2013 17:30	0.51	1.11	497.8
3/5/2013 17:40	0.51	1.11	497.8
3/5/2013 17:50	0.51	1.11	497.8
3/5/2013 18:00	0.52	1.14	512.6
3/5/2013 18:10	0.51	1.11	497.8
3/5/2013 18:20	0.51	1.11	497.8
3/5/2013 18:30	0.51	1.11	497.8
3/5/2013 18:40	0.51	1.11	497.8
3/5/2013 18:50	0.52	1.14	512.6
3/5/2013 19:00	0.51	1.11	497.8
3/5/2013 19:10	0.51	1.11	497.8
3/5/2013 19:20	0.51	1.11	497.8
3/5/2013 19:30	0.51	1.11	497.8
3/5/2013 19:40	0.51	1.11	497.8
3/5/2013 19:50	0.52	1.14	512.6
3/5/2013 20:00	0.52	1.14	512.6
3/5/2013 20:10	0.51	1.11	497.8
3/5/2013 20:20	0.51	1.11	497.8
3/5/2013 20:30	0.51	1.11	497.8

3/5/2013 20:40	0.51	1.11	497.8
3/5/2013 20:50	0.51	1.11	497.8
3/5/2013 21:00	0.51	1.11	497.8
3/5/2013 21:10	0.51	1.11	497.8
3/5/2013 21:20	0.51	1.11	497.8
3/5/2013 21:30	0.51	1.11	497.8
3/5/2013 21:40	0.51	1.11	497.8
3/5/2013 21:50	0.51	1.11	497.8
3/5/2013 22:00	0.51	1.11	497.8
3/5/2013 22:10	0.51	1.11	497.8
3/5/2013 22:20	0.51	1.11	497.8
3/5/2013 22:30	0.51	1.11	497.8
3/5/2013 22:40	0.51	1.11	497.8
3/5/2013 22:50	0.52	1.14	512.6
3/5/2013 23:00	0.51	1.11	497.8
3/5/2013 23:10	0.51	1.11	497.8
3/5/2013 23:20	0.51	1.11	497.8
3/5/2013 23:30	0.51	1.11	497.8
3/5/2013 23:40	0.51	1.11	497.8
3/5/2013 23:50	0.51	1.11	497.8
3/6/2013 0:00	0.51	1.11	497.8
3/6/2013 0:10	0.51	1.11	497.8
3/6/2013 0:20	0.52	1.14	512.6
3/6/2013 0:30	0.51	1.11	497.8
3/6/2013 0:40	0.51	1.11	497.8
3/6/2013 0:50	0.51	1.11	497.8
3/6/2013 1:00	0.51	1.11	497.8
3/6/2013 1:10	0.51	1.11	497.8
3/6/2013 1:20	0.51	1.11	497.8
3/6/2013 1:30	0.51	1.11	497.8
3/6/2013 1:40	0.51	1.11	497.8
3/6/2013 1:50	0.51	1.11	497.8
3/6/2013 2:00	0.51	1.11	497.8
3/6/2013 2:10	0.51	1.11	497.8
3/6/2013 2:20	0.51	1.11	497.8
3/6/2013 2:30	0.51	1.11	497.8
3/6/2013 2:40	0.51	1.11	497.8
3/6/2013 2:50	0.51	1.11	497.8
3/6/2013 3:00	0.51	1.11	497.8
3/6/2013 3:10	0.51	1.11	497.8
3/6/2013 3:20	0.51	1.11	497.8
3/6/2013 3:30	0.51	1.11	497.8
3/6/2013 3:40	0.51	1.11	497.8
3/6/2013 3:50	0.51	1.11	497.8
3/6/2013 4:00	0.51	1.11	497.8
3/6/2013 4:10	0.52	1.14	512.6
3/6/2013 4:20	0.52	1.14	512.6

3/6/2013 4:30	0.51	1.11	497.8
3/6/2013 4:40	0.52	1.14	512.6
3/6/2013 4:50	0.51	1.11	497.8
3/6/2013 5:00	0.51	1.11	497.8
3/6/2013 5:10	0.51	1.11	497.8
3/6/2013 5:20	0.51	1.11	497.8
3/6/2013 5:30	0.51	1.11	497.8
3/6/2013 5:40	0.51	1.11	497.8
3/6/2013 5:50	0.51	1.11	497.8
3/6/2013 6:00	0.51	1.11	497.8
3/6/2013 6:10	0.51	1.11	497.8
3/6/2013 6:20	0.52	1.14	512.6
3/6/2013 6:30	0.51	1.11	497.8
3/6/2013 6:40	0.51	1.11	497.8
3/6/2013 6:50	0.51	1.11	497.8
3/6/2013 7:00	0.51	1.11	497.8
3/6/2013 7:10	0.51	1.11	497.8
3/6/2013 7:20	0.52	1.14	512.6
3/6/2013 7:30	0.51	1.11	497.8
3/6/2013 7:40	0.51	1.11	497.8
3/6/2013 7:50	0.51	1.11	497.8
3/6/2013 8:00	0.51	1.11	497.8
3/6/2013 8:10	0.51	1.11	497.8
3/6/2013 8:20	0.51	1.11	497.8
3/6/2013 8:30	0.51	1.11	497.8
3/6/2013 8:40	0.51	1.11	497.8
3/6/2013 8:50	0.51	1.11	497.8
3/6/2013 9:00	0.51	1.11	497.8
3/6/2013 9:10	0.51	1.11	497.8
3/6/2013 9:20	0.51	1.11	497.8
3/6/2013 9:30	0.51	1.11	497.8
3/6/2013 9:40	0.51	1.11	497.8
3/6/2013 9:50	0.51	1.11	497.8
3/6/2013 10:00	0.51	1.11	497.8
3/6/2013 10:10	0.51	1.11	497.8
3/6/2013 10:20	0.51	1.11	497.8
3/6/2013 10:30	0.51	1.11	497.8
3/6/2013 10:40	0.51	1.11	497.8
3/6/2013 10:50	0.51	1.11	497.8
3/6/2013 11:00	0.51	1.11	497.8
3/6/2013 11:10	0.51	1.11	497.8
3/6/2013 11:20	0.51	1.11	497.8
3/6/2013 11:30	0.52	1.14	512.6
3/6/2013 11:40	0.51	1.11	497.8
3/6/2013 11:50	0.51	1.11	497.8
3/6/2013 12:00	0.51	1.11	497.8
3/6/2013 12:10	0.51	1.11	497.8

3/6/2013 12:20	0.51	1.11	497.8
3/6/2013 12:30	0.51	1.11	497.8
3/6/2013 12:40	0.51	1.11	497.8
3/6/2013 12:50	0.51	1.11	497.8
3/6/2013 13:00	0.51	1.11	497.8
3/6/2013 13:10	0.51	1.11	497.8
3/6/2013 13:20	0.51	1.11	497.8
3/6/2013 13:30	0.52	1.14	512.6
3/6/2013 13:40	0.52	1.14	512.6
3/6/2013 13:50	0.51	1.11	497.8
3/6/2013 14:00	0.51	1.11	497.8
3/6/2013 14:10	0.51	1.11	497.8
3/6/2013 14:20	0.51	1.11	497.8
3/6/2013 14:30	0.51	1.11	497.8
3/6/2013 14:40	0.51	1.11	497.8
3/6/2013 14:50	0.51	1.11	497.8
3/6/2013 15:00	0.51	1.11	497.8
3/6/2013 15:10	0.51	1.11	497.8
3/6/2013 15:20	0.51	1.11	497.8
3/6/2013 15:30	0.51	1.11	497.8
3/6/2013 15:40	0.51	1.11	497.8
3/6/2013 15:50	0.51	1.11	497.8
3/6/2013 16:00	0.51	1.11	497.8
3/6/2013 16:10	0.51	1.11	497.8
3/6/2013 16:20	0.51	1.11	497.8
3/6/2013 16:30	0.51	1.11	497.8
3/6/2013 16:40	0.51	1.11	497.8
3/6/2013 16:50	0.51	1.11	497.8
3/6/2013 17:00	0.51	1.11	497.8
3/6/2013 17:10	0.51	1.11	497.8
3/6/2013 17:20	0.51	1.11	497.8
3/6/2013 17:30	0.51	1.11	497.8
3/6/2013 17:40	0.51	1.11	497.8
3/6/2013 17:50	0.51	1.11	497.8
3/6/2013 18:00	0.51	1.11	497.8
3/6/2013 18:10	0.51	1.11	497.8
3/6/2013 18:20	0.51	1.11	497.8
3/6/2013 18:30	0.51	1.11	497.8
3/6/2013 18:40	0.51	1.11	497.8
3/6/2013 18:50	0.51	1.11	497.8
3/6/2013 19:00	0.51	1.11	497.8
3/6/2013 19:10	0.51	1.11	497.8
3/6/2013 19:20	0.51	1.11	497.8
3/6/2013 19:30	0.51	1.11	497.8
3/6/2013 19:40	0.51	1.11	497.8
3/6/2013 19:50	0.52	1.14	512.6
3/6/2013 20:00	0.51	1.11	497.8

3/6/2013 20:10	0.51	1.11	497.8
3/6/2013 20:20	0.51	1.11	497.8
3/6/2013 20:30	0.51	1.11	497.8
3/6/2013 20:40	0.51	1.11	497.8
3/6/2013 20:50	0.51	1.11	497.8
3/6/2013 21:00	0.51	1.11	497.8
3/6/2013 21:10	0.51	1.11	497.8
3/6/2013 21:20	0.51	1.11	497.8
3/6/2013 21:30	0.51	1.11	497.8
3/6/2013 21:40	0.51	1.11	497.8
3/6/2013 21:50	0.51	1.11	497.8
3/6/2013 22:00	0.51	1.11	497.8
3/6/2013 22:10	0.51	1.11	497.8
3/6/2013 22:20	0.51	1.11	497.8
3/6/2013 22:30	0.51	1.11	497.8
3/6/2013 22:40	0.51	1.11	497.8
3/6/2013 22:50	0.51	1.11	497.8
3/6/2013 23:00	0.51	1.11	497.8
3/6/2013 23:10	0.51	1.11	497.8
3/6/2013 23:20	0.51	1.11	497.8
3/6/2013 23:30	0.51	1.11	497.8
3/6/2013 23:40	0.51	1.11	497.8
3/6/2013 23:50	0.51	1.11	497.8
3/7/2013 0:00	0.51	1.11	497.8
3/7/2013 0:10	0.51	1.11	497.8
3/7/2013 0:20	0.51	1.11	497.8
3/7/2013 0:30	0.51	1.11	497.8
3/7/2013 0:40	0.51	1.11	497.8
3/7/2013 0:50	0.51	1.11	497.8
3/7/2013 1:00	0.51	1.11	497.8
3/7/2013 1:10	0.51	1.11	497.8
3/7/2013 1:20	0.51	1.11	497.8
3/7/2013 1:30	0.51	1.11	497.8
3/7/2013 1:40	0.51	1.11	497.8
3/7/2013 1:50	0.51	1.11	497.8
3/7/2013 2:00	0.51	1.11	497.8
3/7/2013 2:10	0.51	1.11	497.8
3/7/2013 2:20	0.51	1.11	497.8
3/7/2013 2:30	0.51	1.11	497.8
3/7/2013 2:40	0.51	1.11	497.8
3/7/2013 2:50	0.51	1.11	497.8
3/7/2013 3:00	0.51	1.11	497.8
3/7/2013 3:10	0.51	1.11	497.8
3/7/2013 3:20	0.51	1.11	497.8
3/7/2013 3:30	0.51	1.11	497.8
3/7/2013 3:40	0.51	1.11	497.8
3/7/2013 3:50	0.51	1.11	497.8

3/7/2013 4:00	0.51	1.11	497.8
3/7/2013 4:10	0.51	1.11	497.8
3/7/2013 4:20	0.51	1.11	497.8
3/7/2013 4:30	0.51	1.11	497.8
3/7/2013 4:40	0.51	1.11	497.8
3/7/2013 4:50	0.51	1.11	497.8
3/7/2013 5:00	0.51	1.11	497.8
3/7/2013 5:10	0.51	1.11	497.8
3/7/2013 5:20	0.51	1.11	497.8
3/7/2013 5:30	0.51	1.11	497.8
3/7/2013 5:40	0.51	1.11	497.8
3/7/2013 5:50	0.51	1.11	497.8
3/7/2013 6:00	0.51	1.11	497.8
3/7/2013 6:10	0.51	1.11	497.8
3/7/2013 6:20	0.51	1.11	497.8
3/7/2013 6:30	0.51	1.11	497.8
3/7/2013 6:40	0.51	1.11	497.8
3/7/2013 6:50	0.51	1.11	497.8
3/7/2013 7:00	0.51	1.11	497.8
3/7/2013 7:10	0.51	1.11	497.8
3/7/2013 7:20	0.52	1.14	512.6
3/7/2013 7:30	0.51	1.11	497.8
3/7/2013 7:40	0.51	1.11	497.8
3/7/2013 7:50	0.51	1.11	497.8
3/7/2013 8:00	0.51	1.11	497.8
3/7/2013 8:10	0.52	1.14	512.6
3/7/2013 8:20	0.51	1.11	497.8
3/7/2013 8:30	0.51	1.11	497.8
3/7/2013 8:40	0.51	1.11	497.8
3/7/2013 8:50	0.51	1.11	497.8
3/7/2013 9:00	0.51	1.11	497.8
3/7/2013 9:10	0.38	0.71	319.2
3/7/2013 9:40	0.52	1.14	512.6
3/7/2013 10:53	0.53	1.18	527.6
3/7/2013 10:54	0.52	1.14	512.6
3/7/2013 11:00	0.52	1.14	512.6
3/7/2013 11:10	0.52	1.14	512.6
3/7/2013 11:20	0.52	1.14	512.6
3/7/2013 11:30	0.52	1.14	512.6
3/7/2013 11:40	0.52	1.14	512.6
3/7/2013 11:50	0.52	1.14	512.6
3/7/2013 12:00	0.52	1.14	512.6
3/7/2013 12:10	0.53	1.18	527.6
3/7/2013 12:20	0.52	1.14	512.6
3/7/2013 12:30	0.52	1.14	512.6
3/7/2013 12:40	0.52	1.14	512.6
3/7/2013 12:50	0.53	1.18	527.6

3/7/2013 13:00	0.53	1.18	527.6
3/7/2013 13:10	0.52	1.14	512.6
3/7/2013 13:20	0.52	1.14	512.6
3/7/2013 13:30	0.53	1.18	527.6
3/7/2013 13:40	0.52	1.14	512.6
3/7/2013 13:50	0.52	1.14	512.6
3/7/2013 14:00	0.52	1.14	512.6
3/7/2013 14:10	0.52	1.14	512.6
3/7/2013 14:20	0.52	1.14	512.6
3/7/2013 14:30	0.52	1.14	512.6
3/7/2013 14:40	0.53	1.18	527.6
3/7/2013 14:50	0.52	1.14	512.6
3/7/2013 15:00	0.52	1.14	512.6
3/7/2013 15:10	0.52	1.14	512.6
3/7/2013 15:20	0.52	1.14	512.6
3/7/2013 15:30	0.52	1.14	512.6
3/7/2013 15:40	0.52	1.14	512.6
3/7/2013 15:50	0.53	1.18	527.6
3/7/2013 16:00	0.52	1.14	512.6
3/7/2013 16:10	0.53	1.18	527.6
3/7/2013 16:20	0.52	1.14	512.6
3/7/2013 16:30	0.52	1.14	512.6
3/7/2013 16:40	0.53	1.18	527.6
3/7/2013 16:50	0.53	1.18	527.6
3/7/2013 17:00	0.52	1.14	512.6
3/7/2013 17:10	0.53	1.18	527.6
3/7/2013 17:20	0.52	1.14	512.6
3/7/2013 17:30	0.52	1.14	512.6
3/7/2013 17:40	0.52	1.14	512.6
3/7/2013 17:50	0.53	1.18	527.6
3/7/2013 18:00	0.52	1.14	512.6
3/7/2013 18:10	0.52	1.14	512.6
3/7/2013 18:20	0.52	1.14	512.6
3/7/2013 18:30	0.52	1.14	512.6
3/7/2013 18:40	0.52	1.14	512.6
3/7/2013 18:50	0.52	1.14	512.6
3/7/2013 19:00	0.52	1.14	512.6
3/7/2013 19:10	0.52	1.14	512.6
3/7/2013 19:20	0.52	1.14	512.6
3/7/2013 19:30	0.52	1.14	512.6
3/7/2013 19:40	0.52	1.14	512.6
3/7/2013 19:50	0.52	1.14	512.6
3/7/2013 20:00	0.52	1.14	512.6
3/7/2013 20:10	0.52	1.14	512.6
3/7/2013 20:20	0.52	1.14	512.6
3/7/2013 20:30	0.52	1.14	512.6
3/7/2013 20:40	0.52	1.14	512.6

3/7/2013 20:50	0.52	1.14	512.6
3/7/2013 21:00	0.52	1.14	512.6
3/7/2013 21:10	0.52	1.14	512.6
3/7/2013 21:20	0.52	1.14	512.6
3/7/2013 21:30	0.52	1.14	512.6
3/7/2013 21:40	0.52	1.14	512.6
3/7/2013 21:50	0.52	1.14	512.6
3/7/2013 22:00	0.52	1.14	512.6
3/7/2013 22:10	0.52	1.14	512.6
3/7/2013 22:20	0.52	1.14	512.6
3/7/2013 22:30	0.52	1.14	512.6
3/7/2013 22:40	0.52	1.14	512.6
3/7/2013 22:50	0.53	1.18	527.6
3/7/2013 23:00	0.52	1.14	512.6
3/7/2013 23:10	0.52	1.14	512.6
3/7/2013 23:20	0.52	1.14	512.6
3/7/2013 23:30	0.52	1.14	512.6
3/7/2013 23:40	0.52	1.14	512.6
3/7/2013 23:50	0.52	1.14	512.6
3/8/2013 0:00	0.52	1.14	512.6
3/8/2013 0:10	0.52	1.14	512.6
3/8/2013 0:20	0.52	1.14	512.6
3/8/2013 0:30	0.52	1.14	512.6
3/8/2013 0:40	0.52	1.14	512.6
3/8/2013 0:50	0.52	1.14	512.6
3/8/2013 1:00	0.52	1.14	512.6
3/8/2013 1:10	0.52	1.14	512.6
3/8/2013 1:20	0.52	1.14	512.6
3/8/2013 1:30	0.52	1.14	512.6
3/8/2013 1:40	0.52	1.14	512.6
3/8/2013 1:50	0.52	1.14	512.6
3/8/2013 2:00	0.52	1.14	512.6
3/8/2013 2:10	0.52	1.14	512.6
3/8/2013 2:20	0.52	1.14	512.6
3/8/2013 2:30	0.52	1.14	512.6
3/8/2013 2:40	0.52	1.14	512.6
3/8/2013 2:50	0.52	1.14	512.6
3/8/2013 3:00	0.52	1.14	512.6
3/8/2013 3:10	0.52	1.14	512.6
3/8/2013 3:20	0.52	1.14	512.6
3/8/2013 3:30	0.52	1.14	512.6
3/8/2013 3:40	0.52	1.14	512.6
3/8/2013 3:50	0.52	1.14	512.6
3/8/2013 4:00	0.52	1.14	512.6
3/8/2013 4:10	0.52	1.14	512.6
3/8/2013 4:20	0.52	1.14	512.6
3/8/2013 4:30	0.52	1.14	512.6

3/8/2013 4:40	0.52	1.14	512.6
3/8/2013 4:50	0.52	1.14	512.6
3/8/2013 5:00	0.52	1.14	512.6
3/8/2013 5:10	0.52	1.14	512.6
3/8/2013 5:20	0.52	1.14	512.6
3/8/2013 5:30	0.52	1.14	512.6
3/8/2013 5:40	0.52	1.14	512.6
3/8/2013 5:50	0.52	1.14	512.6
3/8/2013 6:00	0.52	1.14	512.6
3/8/2013 6:10	0.52	1.14	512.6
3/8/2013 6:20	0.52	1.14	512.6
3/8/2013 6:30	0.52	1.14	512.6
3/8/2013 6:40	0.52	1.14	512.6
3/8/2013 6:50	0.52	1.14	512.6
3/8/2013 7:00	0.52	1.14	512.6
3/8/2013 7:10	0.52	1.14	512.6
3/8/2013 7:20	0.52	1.14	512.6
3/8/2013 7:30	0.52	1.14	512.6
3/8/2013 7:40	0.52	1.14	512.6
3/8/2013 7:50	0.52	1.14	512.6
3/8/2013 8:00	0.52	1.14	512.6
3/8/2013 8:10	0.52	1.14	512.6
3/8/2013 8:20	0.52	1.14	512.6
3/8/2013 8:30	0.52	1.14	512.6
3/8/2013 8:40	0.52	1.14	512.6
3/8/2013 8:50	0.52	1.14	512.6
3/8/2013 9:00	0.52	1.14	512.6
3/8/2013 9:10	0.52	1.14	512.6
3/8/2013 9:20	0.52	1.14	512.6
3/8/2013 9:30	0.52	1.14	512.6
3/8/2013 9:40	0.52	1.14	512.6
3/8/2013 9:50	0.52	1.14	512.6
3/8/2013 10:00	0.52	1.14	512.6
3/8/2013 10:10	0.52	1.14	512.6
3/8/2013 10:20	0.52	1.14	512.6
3/8/2013 10:30	0.52	1.14	512.6
3/8/2013 10:40	0.52	1.14	512.6
3/8/2013 10:50	0.52	1.14	512.6
3/8/2013 11:00	0.52	1.14	512.6
3/8/2013 11:10	0.52	1.14	512.6
3/8/2013 11:20	0.52	1.14	512.6
3/8/2013 11:30	0.52	1.14	512.6
3/8/2013 11:40	0.52	1.14	512.6
3/8/2013 11:50	0.52	1.14	512.6
3/8/2013 12:00	0.52	1.14	512.6
3/8/2013 12:10	0.52	1.14	512.6
3/8/2013 12:20	0.52	1.14	512.6

3/8/2013 12:30	0.52	1.14	512.6
3/8/2013 12:40	0.52	1.14	512.6
3/8/2013 12:50	0.52	1.14	512.6
3/8/2013 13:00	0.52	1.14	512.6
3/8/2013 13:10	0.52	1.14	512.6
3/8/2013 13:20	0.52	1.14	512.6
3/8/2013 13:30	0.52	1.14	512.6
3/8/2013 13:40	0.52	1.14	512.6
3/8/2013 13:50	0.52	1.14	512.6
3/8/2013 14:00	0.52	1.14	512.6
3/8/2013 14:10	0.52	1.14	512.6
3/8/2013 14:20	0.52	1.14	512.6
3/8/2013 14:30	0.52	1.14	512.6
3/8/2013 14:40	0.52	1.14	512.6
3/8/2013 14:50	0.52	1.14	512.6
3/8/2013 15:00	0.52	1.14	512.6
3/8/2013 15:10	0.52	1.14	512.6
3/8/2013 15:20	0.52	1.14	512.6
3/8/2013 15:30	0.52	1.14	512.6
3/8/2013 15:40	0.52	1.14	512.6
3/8/2013 15:50	0.52	1.14	512.6
3/8/2013 16:00	0.52	1.14	512.6
3/8/2013 16:10	0.52	1.14	512.6
3/8/2013 16:20	0.52	1.14	512.6
3/8/2013 16:30	0.52	1.14	512.6
3/8/2013 16:40	0.52	1.14	512.6
3/8/2013 16:50	0.52	1.14	512.6
3/8/2013 17:00	0.52	1.14	512.6
3/8/2013 17:10	0.52	1.14	512.6
3/8/2013 17:20	0.52	1.14	512.6
3/8/2013 17:30	0.52	1.14	512.6
3/8/2013 17:40	0.52	1.14	512.6
3/8/2013 17:50	0.52	1.14	512.6
3/8/2013 18:00	0.52	1.14	512.6
3/8/2013 18:10	0.52	1.14	512.6
3/8/2013 18:20	0.52	1.14	512.6
3/8/2013 18:30	0.52	1.14	512.6
3/8/2013 18:40	0.52	1.14	512.6
3/8/2013 18:50	0.52	1.14	512.6
3/8/2013 19:00	0.52	1.14	512.6
3/8/2013 19:10	0.52	1.14	512.6
3/8/2013 19:20	0.52	1.14	512.6
3/8/2013 19:30	0.52	1.14	512.6
3/8/2013 19:40	0.52	1.14	512.6
3/8/2013 19:50	0.52	1.14	512.6
3/8/2013 20:00	0.52	1.14	512.6
3/8/2013 20:10	0.52	1.14	512.6

3/8/2013 20:20	0.52	1.14	512.6
3/8/2013 20:30	0.52	1.14	512.6
3/8/2013 20:40	0.52	1.14	512.6
3/8/2013 20:50	0.52	1.14	512.6
3/8/2013 21:00	0.52	1.14	512.6
3/8/2013 21:10	0.52	1.14	512.6
3/8/2013 21:20	0.52	1.14	512.6
3/8/2013 21:30	0.52	1.14	512.6
3/8/2013 21:40	0.52	1.14	512.6
3/8/2013 21:50	0.52	1.14	512.6
3/8/2013 22:00	0.52	1.14	512.6
3/8/2013 22:10	0.52	1.14	512.6
3/8/2013 22:20	0.52	1.14	512.6
3/8/2013 22:30	0.52	1.14	512.6
3/8/2013 22:40	0.52	1.14	512.6
3/8/2013 22:50	0.52	1.14	512.6
3/8/2013 23:00	0.52	1.14	512.6
3/8/2013 23:10	0.52	1.14	512.6
3/8/2013 23:20	0.52	1.14	512.6
3/8/2013 23:30	0.52	1.14	512.6
3/8/2013 23:40	0.52	1.14	512.6
3/8/2013 23:50	0.52	1.14	512.6
3/9/2013 0:00	0.52	1.14	512.6
3/9/2013 0:10	0.52	1.14	512.6
3/9/2013 0:20	0.52	1.14	512.6
3/9/2013 0:30	0.52	1.14	512.6
3/9/2013 0:40	0.52	1.14	512.6
3/9/2013 0:50	0.52	1.14	512.6
3/9/2013 1:00	0.52	1.14	512.6
3/9/2013 1:10	0.52	1.14	512.6
3/9/2013 1:20	0.52	1.14	512.6
3/9/2013 1:30	0.52	1.14	512.6
3/9/2013 1:40	0.52	1.14	512.6
3/9/2013 8:40	0.52	1.14	512.6
3/9/2013 8:40	0.52	1.14	512.6
3/9/2013 8:40	0.52	1.14	512.6
3/9/2013 8:40	0.52	1.14	512.6
3/9/2013 8:40	0.52	1.14	512.6
3/9/2013 8:40	0.52	1.14	512.6
3/9/2013 8:40	0.52	1.14	512.6
3/9/2013 8:50	0.52	1.14	512.6
3/9/2013 8:50	0.52	1.14	512.6
3/9/2013 8:50	0.52	1.14	512.6
3/9/2013 8:50	0.52	1.14	512.6
3/9/2013 8:50	0.52	1.14	512.6
3/9/2013 8:50	0.52	1.14	512.6
3/9/2013 8:50	0.52	1.14	512.6

3/9/2013 8:50	0.52	1.14	512.6
3/9/2013 8:50	0.52	1.14	512.6
3/9/2013 8:51	0.52	1.14	512.6
3/9/2013 8:52	0.52	1.14	512.6
3/9/2013 8:53	0.52	1.14	512.6
3/9/2013 8:54	0.52	1.14	512.6
3/9/2013 8:55	0.52	1.14	512.6
3/9/2013 8:55	0.52	1.14	512.6
3/9/2013 8:56	0.52	1.14	512.6
3/9/2013 8:57	0.52	1.14	512.6
3/9/2013 8:58	0.52	1.14	512.6
3/9/2013 8:59	0.52	1.14	512.6
3/9/2013 9:00	0.52	1.14	512.6
3/9/2013 9:10	0.52	1.14	512.6
3/9/2013 9:10	0.52	1.14	512.6
3/9/2013 9:10	0.52	1.14	512.6
3/9/2013 9:10	0.52	1.14	512.6
3/9/2013 9:10	0.52	1.14	512.6
3/9/2013 9:10	0.52	1.14	512.6
3/9/2013 9:10	0.52	1.14	512.6
3/9/2013 9:10	0.52	1.14	512.6
3/9/2013 9:10	0.52	1.14	512.6
3/9/2013 9:10	0.52	1.14	512.6
3/9/2013 9:10	0.52	1.14	512.6
3/9/2013 9:10	0.52	1.14	512.6
3/9/2013 9:10	0.52	1.14	512.6
3/9/2013 9:10	0.52	1.14	512.6
3/9/2013 9:10	0.52	1.14	512.6
3/9/2013 9:10	0.52	1.14	512.6
3/9/2013 9:10	0.52	1.14	512.6
3/9/2013 9:10	0.52	1.14	512.6
3/9/2013 9:20	0.52	1.14	512.6
3/9/2013 9:30	0.52	1.14	512.6
3/9/2013 9:40	0.52	1.14	512.6
3/9/2013 9:50	0.52	1.14	512.6
3/9/2013 10:00	0.52	1.14	512.6
3/9/2013 10:10	0.52	1.14	512.6
3/9/2013 10:20	0.52	1.14	512.6
3/9/2013 10:30	0.52	1.14	512.6
3/9/2013 10:40	0.52	1.14	512.6
3/9/2013 10:50	0.52	1.14	512.6
3/9/2013 11:00	0.52	1.14	512.6
3/9/2013 11:10	0.52	1.14	512.6
3/9/2013 11:20	0.52	1.14	512.6
3/9/2013 11:30	0.52	1.14	512.6
3/9/2013 11:40	0.52	1.14	512.6
3/9/2013 11:50	0.52	1.14	512.6

3/9/2013 12:00	0.52	1.14	512.6
3/9/2013 12:10	0.52	1.14	512.6
3/9/2013 12:20	0.52	1.14	512.6
3/9/2013 12:30	0.52	1.14	512.6
3/9/2013 12:40	0.52	1.14	512.6
3/9/2013 12:50	0.52	1.14	512.6
3/9/2013 13:00	0.52	1.14	512.6
3/9/2013 13:10	0.52	1.14	512.6
3/9/2013 13:20	0.52	1.14	512.6
3/9/2013 13:30	0.52	1.14	512.6
3/9/2013 13:40	0.52	1.14	512.6
3/9/2013 13:50	0.52	1.14	512.6
3/9/2013 14:00	0.52	1.14	512.6
3/9/2013 14:10	0.52	1.14	512.6
3/9/2013 14:20	0.52	1.14	512.6
3/9/2013 14:30	0.52	1.14	512.6
3/9/2013 14:40	0.52	1.14	512.6
3/9/2013 14:50	0.52	1.14	512.6
3/9/2013 15:00	0.52	1.14	512.6
3/9/2013 15:10	0.52	1.14	512.6
3/9/2013 15:20	0.52	1.14	512.6
3/9/2013 15:30	0.52	1.14	512.6
3/9/2013 15:40	0.52	1.14	512.6
3/9/2013 15:50	0.52	1.14	512.6
3/9/2013 16:00	0.52	1.14	512.6
3/9/2013 16:10	0.52	1.14	512.6
3/9/2013 16:20	0.52	1.14	512.6
3/9/2013 16:30	0.52	1.14	512.6
3/9/2013 16:40	0.52	1.14	512.6
3/9/2013 16:50	0.52	1.14	512.6
3/9/2013 17:00	0.52	1.14	512.6
3/9/2013 17:10	0.52	1.14	512.6
3/9/2013 17:20	0.52	1.14	512.6
3/9/2013 17:30	0.52	1.14	512.6
3/9/2013 17:40	0.52	1.14	512.6
3/9/2013 17:50	0.52	1.14	512.6
3/9/2013 18:00	0.52	1.14	512.6
3/9/2013 18:10	0.52	1.14	512.6
3/9/2013 18:20	0.52	1.14	512.6
3/9/2013 18:30	0.52	1.14	512.6
3/9/2013 18:40	0.52	1.14	512.6
3/9/2013 18:50	0.52	1.14	512.6
3/9/2013 19:00	0.52	1.14	512.6
3/9/2013 19:10	0.52	1.14	512.6
3/9/2013 19:20	0.52	1.14	512.6
3/9/2013 19:30	0.52	1.14	512.6
3/9/2013 19:40	0.52	1.14	512.6

3/9/2013 19:50	0.52	1.14	512.6
3/9/2013 20:00	0.52	1.14	512.6
3/9/2013 20:10	0.52	1.14	512.6
3/9/2013 20:20	0.52	1.14	512.6
3/9/2013 20:30	0.52	1.14	512.6
3/9/2013 20:40	0.52	1.14	512.6
3/9/2013 20:50	0.52	1.14	512.6
3/9/2013 21:00	0.52	1.14	512.6
3/9/2013 21:10	0.52	1.14	512.6
3/9/2013 21:20	0.52	1.14	512.6
3/9/2013 21:30	0.52	1.14	512.6
3/9/2013 21:40	0.52	1.14	512.6
3/9/2013 21:50	0.52	1.14	512.6
3/9/2013 22:00	0.52	1.14	512.6
3/9/2013 22:10	0.52	1.14	512.6
3/9/2013 22:20	0.52	1.14	512.6
3/9/2013 22:30	0.52	1.14	512.6
3/9/2013 22:40	0.52	1.14	512.6
3/9/2013 22:50	0.52	1.14	512.6
3/9/2013 23:00	0.52	1.14	512.6
3/9/2013 23:10	0.52	1.14	512.6
3/9/2013 23:20	0.52	1.14	512.6
3/9/2013 23:30	0.52	1.14	512.6
3/9/2013 23:40	0.52	1.14	512.6
3/9/2013 23:50	0.52	1.14	512.6
3/10/2013 0:00	0.52	1.14	512.6
3/10/2013 0:10	0.52	1.14	512.6
3/10/2013 0:20	0.52	1.14	512.6
3/10/2013 0:30	0.52	1.14	512.6
3/10/2013 0:40	0.52	1.14	512.6
3/10/2013 0:50	0.52	1.14	512.6
3/10/2013 1:00	0.52	1.14	512.6
3/10/2013 1:10	0.52	1.14	512.6
3/10/2013 1:20	0.52	1.14	512.6
3/10/2013 1:30	0.52	1.14	512.6
3/10/2013 1:40	0.52	1.14	512.6
3/10/2013 1:50	0.52	1.14	512.6
3/10/2013 2:00	0.52	1.14	512.6
3/10/2013 2:10	0.52	1.14	512.6
3/10/2013 2:20	0.52	1.14	512.6
3/10/2013 2:30	0.52	1.14	512.6
3/10/2013 2:40	0.52	1.14	512.6
3/10/2013 2:50	0.52	1.14	512.6
3/10/2013 3:00	0.52	1.14	512.6
3/10/2013 3:10	0.52	1.14	512.6
3/10/2013 3:20	0.52	1.14	512.6
3/10/2013 3:30	0.52	1.14	512.6

3/10/2013 3:40	0.52	1.14	512.6
3/10/2013 3:50	0.52	1.14	512.6
3/10/2013 4:00	0.52	1.14	512.6
3/10/2013 4:10	0.52	1.14	512.6
3/10/2013 4:20	0.52	1.14	512.6
3/10/2013 4:30	0.52	1.14	512.6
3/10/2013 4:40	0.52	1.14	512.6
3/10/2013 4:50	0.52	1.14	512.6
3/10/2013 5:00	0.52	1.14	512.6
3/10/2013 5:10	0.52	1.14	512.6
3/10/2013 5:20	0.52	1.14	512.6
3/10/2013 5:30	0.52	1.14	512.6
3/10/2013 5:40	0.51	1.11	497.8
3/10/2013 5:50	0.52	1.14	512.6
3/10/2013 6:00	0.52	1.14	512.6
3/10/2013 6:10	0.52	1.14	512.6
3/10/2013 6:20	0.52	1.14	512.6
3/10/2013 6:30	0.52	1.14	512.6
3/10/2013 6:40	0.52	1.14	512.6
3/10/2013 6:50	0.51	1.11	497.8
3/10/2013 7:00	0.52	1.14	512.6
3/10/2013 7:10	0.52	1.14	512.6
3/10/2013 7:20	0.52	1.14	512.6
3/10/2013 7:30	0.52	1.14	512.6
3/10/2013 7:40	0.52	1.14	512.6
3/10/2013 7:50	0.52	1.14	512.6
3/10/2013 8:00	0.51	1.11	497.8
3/10/2013 8:10	0.52	1.14	512.6
3/10/2013 8:20	0.52	1.14	512.6
3/10/2013 8:30	0.51	1.11	497.8
3/10/2013 8:40	0.52	1.14	512.6
3/10/2013 8:50	0.52	1.14	512.6
3/10/2013 9:00	0.52	1.14	512.6
3/10/2013 9:10	0.52	1.14	512.6
3/10/2013 9:20	0.52	1.14	512.6
3/10/2013 9:30	0.52	1.14	512.6
3/10/2013 9:40	0.52	1.14	512.6
3/10/2013 9:50	0.52	1.14	512.6
3/10/2013 10:00	0.52	1.14	512.6
3/10/2013 10:10	0.52	1.14	512.6
3/10/2013 10:20	0.52	1.14	512.6
3/10/2013 10:30	0.52	1.14	512.6
3/10/2013 10:40	0.52	1.14	512.6
3/10/2013 10:50	0.52	1.14	512.6
3/10/2013 11:00	0.52	1.14	512.6
3/10/2013 11:10	0.52	1.14	512.6
3/10/2013 11:20	0.52	1.14	512.6

3/10/2013 11:30	0.52	1.14	512.6
3/10/2013 11:40	0.52	1.14	512.6
3/10/2013 11:50	0.52	1.14	512.6
3/10/2013 12:00	0.52	1.14	512.6
3/10/2013 12:10	0.52	1.14	512.6
3/10/2013 12:20	0.52	1.14	512.6
3/10/2013 12:30	0.52	1.14	512.6
3/10/2013 12:40	0.52	1.14	512.6
3/10/2013 12:50	0.52	1.14	512.6
3/10/2013 13:00	0.52	1.14	512.6
3/10/2013 13:10	0.52	1.14	512.6
3/10/2013 13:20	0.52	1.14	512.6
3/10/2013 13:30	0.52	1.14	512.6
3/10/2013 13:40	0.52	1.14	512.6
3/10/2013 13:50	0.52	1.14	512.6
3/10/2013 14:00	0.52	1.14	512.6
3/10/2013 14:10	0.52	1.14	512.6
3/10/2013 14:20	0.52	1.14	512.6
3/10/2013 14:30	0.52	1.14	512.6
3/10/2013 14:40	0.52	1.14	512.6
3/10/2013 14:50	0.52	1.14	512.6
3/10/2013 15:00	0.52	1.14	512.6
3/10/2013 15:10	0.52	1.14	512.6
3/10/2013 15:20	0.52	1.14	512.6
3/10/2013 15:30	0.52	1.14	512.6
3/10/2013 15:40	0.52	1.14	512.6
3/10/2013 15:50	0.52	1.14	512.6
3/10/2013 16:00	0.52	1.14	512.6
3/10/2013 16:10	0.52	1.14	512.6
3/10/2013 16:20	0.52	1.14	512.6
3/10/2013 16:30	0.52	1.14	512.6
3/10/2013 16:40	0.52	1.14	512.6
3/10/2013 16:50	0.52	1.14	512.6
3/10/2013 17:00	0.52	1.14	512.6
3/10/2013 17:10	0.52	1.14	512.6
3/10/2013 17:20	0.52	1.14	512.6
3/10/2013 17:30	0.52	1.14	512.6
3/10/2013 17:40	0.52	1.14	512.6
3/10/2013 17:50	0.52	1.14	512.6
3/10/2013 18:00	0.52	1.14	512.6
3/10/2013 18:10	0.52	1.14	512.6
3/10/2013 18:20	0.52	1.14	512.6
3/10/2013 18:30	0.52	1.14	512.6
3/10/2013 18:40	0.52	1.14	512.6
3/10/2013 18:50	0.52	1.14	512.6
3/10/2013 19:00	0.52	1.14	512.6
3/10/2013 19:10	0.52	1.14	512.6

3/10/2013 19:20	0.52	1.14	512.6
3/10/2013 19:30	0.52	1.14	512.6
3/10/2013 19:40	0.52	1.14	512.6
3/10/2013 19:50	0.52	1.14	512.6
3/10/2013 20:00	0.52	1.14	512.6
3/10/2013 20:10	0.52	1.14	512.6
3/10/2013 20:20	0.52	1.14	512.6
3/10/2013 20:30	0.52	1.14	512.6
3/10/2013 20:40	0.51	1.11	497.8
3/10/2013 20:50	0.51	1.11	497.8
3/10/2013 21:00	0.52	1.14	512.6
3/10/2013 21:10	0.52	1.14	512.6
3/10/2013 21:20	0.51	1.11	497.8
3/10/2013 21:30	0.52	1.14	512.6
3/10/2013 21:40	0.52	1.14	512.6
3/10/2013 21:50	0.52	1.14	512.6
3/10/2013 22:00	0.52	1.14	512.6
3/10/2013 22:10	0.52	1.14	512.6
3/10/2013 22:20	0.52	1.14	512.6
3/10/2013 22:30	0.52	1.14	512.6
3/10/2013 22:40	0.52	1.14	512.6
3/10/2013 22:50	0.52	1.14	512.6
3/10/2013 23:00	0.52	1.14	512.6
3/10/2013 23:10	0.52	1.14	512.6
3/10/2013 23:20	0.52	1.14	512.6
3/10/2013 23:30	0.52	1.14	512.6
3/10/2013 23:40	0.52	1.14	512.6
3/10/2013 23:50	0.52	1.14	512.6
3/11/2013 0:00	0.52	1.14	512.6
3/11/2013 0:10	0.52	1.14	512.6
3/11/2013 0:20	0.52	1.14	512.6
3/11/2013 0:30	0.52	1.14	512.6
3/11/2013 0:40	0.52	1.14	512.6
3/11/2013 0:50	0.52	1.14	512.6
3/11/2013 1:00	0.52	1.14	512.6
3/11/2013 1:10	0.52	1.14	512.6
3/11/2013 1:20	0.52	1.14	512.6
3/11/2013 1:30	0.52	1.14	512.6
3/11/2013 1:40	0.52	1.14	512.6
3/11/2013 1:50	0.52	1.14	512.6
3/11/2013 2:00	0.52	1.14	512.6
3/11/2013 2:10	0.52	1.14	512.6
3/11/2013 2:20	0.52	1.14	512.6
3/11/2013 2:30	0.52	1.14	512.6
3/11/2013 2:40	0.52	1.14	512.6
3/11/2013 2:50	0.52	1.14	512.6
3/11/2013 3:00	0.52	1.14	512.6

3/11/2013 3:10	0.52	1.14	512.6
3/11/2013 3:20	0.52	1.14	512.6
3/11/2013 3:30	0.52	1.14	512.6
3/11/2013 3:40	0.52	1.14	512.6
3/11/2013 3:50	0.52	1.14	512.6
3/11/2013 4:00	0.52	1.14	512.6
3/11/2013 4:10	0.52	1.14	512.6
3/11/2013 4:20	0.52	1.14	512.6
3/11/2013 4:30	0.52	1.14	512.6
3/11/2013 4:40	0.52	1.14	512.6
3/11/2013 4:50	0.52	1.14	512.6
3/11/2013 5:00	0.52	1.14	512.6
3/11/2013 5:10	0.52	1.14	512.6
3/11/2013 5:20	0.52	1.14	512.6
3/11/2013 5:30	0.52	1.14	512.6
3/11/2013 5:40	0.52	1.14	512.6
3/11/2013 5:50	0.52	1.14	512.6
3/11/2013 6:00	0.52	1.14	512.6
3/11/2013 6:10	0.52	1.14	512.6
3/11/2013 6:20	0.52	1.14	512.6
3/11/2013 6:30	0.52	1.14	512.6
3/11/2013 6:40	0.52	1.14	512.6
3/11/2013 6:50	0.52	1.14	512.6
3/11/2013 7:00	0.52	1.14	512.6
3/11/2013 7:10	0.52	1.14	512.6
3/11/2013 7:20	0.52	1.14	512.6
3/11/2013 7:30	0.52	1.14	512.6
3/11/2013 7:40	0.52	1.14	512.6
3/11/2013 7:50	0.52	1.14	512.6
3/11/2013 8:00	0.52	1.14	512.6
3/11/2013 8:10	0.52	1.14	512.6
3/11/2013 8:20	0.52	1.14	512.6
3/11/2013 8:30	0.52	1.14	512.6
3/11/2013 8:40	0.52	1.14	512.6
3/11/2013 8:50	0.52	1.14	512.6
3/11/2013 9:00	0.52	1.14	512.6
3/11/2013 9:10	0.52	1.14	512.6
3/11/2013 9:20	0.52	1.14	512.6
3/11/2013 9:30	0.52	1.14	512.6
3/11/2013 9:40	0.52	1.14	512.6
3/11/2013 9:50	0.52	1.14	512.6
3/11/2013 10:00	0.52	1.14	512.6
3/11/2013 10:10	0.52	1.14	512.6
3/11/2013 10:20	0.52	1.14	512.6
3/11/2013 10:30	0.52	1.14	512.6
3/11/2013 10:40	0.52	1.14	512.6
3/11/2013 10:50	0.52	1.14	512.6

3/11/2013 11:00	0.52	1.14	512.6
3/11/2013 11:10	0.52	1.14	512.6
3/11/2013 11:20	0.52	1.14	512.6
3/11/2013 11:30	0.52	1.14	512.6
3/11/2013 11:40	0.52	1.14	512.6
3/11/2013 11:50	0.52	1.14	512.6
3/11/2013 12:00	0.52	1.14	512.6
3/11/2013 12:10	0.52	1.14	512.6
3/11/2013 12:20	0.52	1.14	512.6
3/11/2013 12:30	0.52	1.14	512.6
3/11/2013 12:40	0.51	1.11	497.8
3/11/2013 12:50	0.52	1.14	512.6
3/11/2013 13:00	0.52	1.14	512.6
3/11/2013 13:10	0.52	1.14	512.6
3/11/2013 13:20	0.52	1.14	512.6
3/11/2013 13:30	0.52	1.14	512.6
3/11/2013 13:40	0.52	1.14	512.6
3/11/2013 13:50	0.52	1.14	512.6
3/11/2013 14:00	0.52	1.14	512.6
3/11/2013 14:10	0.52	1.14	512.6
3/11/2013 14:20	0.52	1.14	512.6
3/11/2013 14:30	0.52	1.14	512.6
3/11/2013 14:40	0.52	1.14	512.6
3/11/2013 14:50	0.52	1.14	512.6
3/11/2013 15:00	0.52	1.14	512.6
3/11/2013 15:10	0.52	1.14	512.6
3/11/2013 15:20	0.52	1.14	512.6
3/11/2013 15:30	0.52	1.14	512.6
3/11/2013 15:40	0.52	1.14	512.6
3/11/2013 15:50	0.52	1.14	512.6
3/11/2013 16:00	0.52	1.14	512.6
3/11/2013 16:10	0.52	1.14	512.6
3/11/2013 16:20	0.52	1.14	512.6
3/11/2013 16:30	0.52	1.14	512.6
3/11/2013 16:40	0.52	1.14	512.6
3/11/2013 16:50	0.52	1.14	512.6
3/11/2013 17:00	0.52	1.14	512.6
3/11/2013 17:10	0.52	1.14	512.6
3/11/2013 17:20	0.52	1.14	512.6
3/11/2013 17:30	0.52	1.14	512.6
3/11/2013 17:40	0.52	1.14	512.6
3/11/2013 17:50	0.52	1.14	512.6
3/11/2013 18:00	0.52	1.14	512.6
3/11/2013 18:10	0.52	1.14	512.6
3/11/2013 18:20	0.52	1.14	512.6
3/11/2013 18:30	0.52	1.14	512.6
3/11/2013 18:40	0.52	1.14	512.6

3/11/2013 18:50	0.52	1.14	512.6
3/11/2013 19:00	0.52	1.14	512.6
3/11/2013 19:10	0.52	1.14	512.6
3/11/2013 19:20	0.52	1.14	512.6
3/11/2013 19:30	0.52	1.14	512.6
3/11/2013 19:40	0.52	1.14	512.6
3/11/2013 19:50	0.52	1.14	512.6
3/11/2013 20:00	0.52	1.14	512.6
3/11/2013 20:10	0.52	1.14	512.6
3/11/2013 20:20	0.52	1.14	512.6
3/11/2013 20:30	0.52	1.14	512.6
3/11/2013 20:40	0.52	1.14	512.6
3/11/2013 20:50	0.52	1.14	512.6
3/11/2013 21:00	0.52	1.14	512.6
3/11/2013 21:10	0.52	1.14	512.6
3/11/2013 21:20	0.52	1.14	512.6
3/11/2013 21:30	0.52	1.14	512.6
3/11/2013 21:40	0.52	1.14	512.6
3/11/2013 21:50	0.52	1.14	512.6
3/11/2013 22:00	0.52	1.14	512.6
3/11/2013 22:10	0.52	1.14	512.6
3/11/2013 22:20	0.52	1.14	512.6
3/11/2013 22:30	0.52	1.14	512.6
3/11/2013 22:40	0.52	1.14	512.6
3/11/2013 22:50	0.52	1.14	512.6
3/11/2013 23:00	0.52	1.14	512.6
3/11/2013 23:10	0.52	1.14	512.6
3/11/2013 23:20	0.52	1.14	512.6
3/11/2013 23:30	0.52	1.14	512.6
3/11/2013 23:40	0.52	1.14	512.6
3/11/2013 23:50	0.52	1.14	512.6
3/12/2013 0:00	0.52	1.14	512.6
3/12/2013 0:10	0.52	1.14	512.6
3/12/2013 0:20	0.52	1.14	512.6
3/12/2013 0:30	0.51	1.11	497.8
3/12/2013 0:40	0.52	1.14	512.6
3/12/2013 0:50	0.51	1.11	497.8
3/12/2013 1:00	0.51	1.11	497.8
3/12/2013 1:10	0.52	1.14	512.6
3/12/2013 1:20	0.51	1.11	497.8
3/12/2013 1:30	0.52	1.14	512.6
3/12/2013 1:40	0.52	1.14	512.6
3/12/2013 1:50	0.52	1.14	512.6
3/12/2013 2:00	0.52	1.14	512.6
3/12/2013 2:10	0.52	1.14	512.6
3/12/2013 2:20	0.52	1.14	512.6
3/12/2013 2:30	0.52	1.14	512.6

3/12/2013 2:40	0.52	1.14	512.6
3/12/2013 2:50	0.52	1.14	512.6
3/12/2013 3:00	0.52	1.14	512.6
3/12/2013 3:10	0.52	1.14	512.6
3/12/2013 3:20	0.52	1.14	512.6
3/12/2013 3:30	0.52	1.14	512.6
3/12/2013 3:40	0.52	1.14	512.6
3/12/2013 3:50	0.52	1.14	512.6
3/12/2013 4:00	0.52	1.14	512.6
3/12/2013 4:10	0.52	1.14	512.6
3/12/2013 4:20	0.52	1.14	512.6
3/12/2013 4:30	0.52	1.14	512.6
3/12/2013 4:40	0.52	1.14	512.6
3/12/2013 4:50	0.52	1.14	512.6
3/12/2013 5:00	0.52	1.14	512.6
3/12/2013 5:10	0.52	1.14	512.6
3/12/2013 5:20	0.52	1.14	512.6
3/12/2013 5:30	0.52	1.14	512.6
3/12/2013 5:40	0.52	1.14	512.6
3/12/2013 5:50	0.52	1.14	512.6
3/12/2013 6:00	0.52	1.14	512.6
3/12/2013 6:10	0.52	1.14	512.6
3/12/2013 6:20	0.52	1.14	512.6
3/12/2013 6:30	0.52	1.14	512.6
3/12/2013 6:40	0.52	1.14	512.6
3/12/2013 6:50	0.52	1.14	512.6
3/12/2013 7:00	0.52	1.14	512.6
3/12/2013 7:10	0.52	1.14	512.6
3/12/2013 7:20	0.52	1.14	512.6
3/12/2013 7:30	0.52	1.14	512.6
3/12/2013 7:40	0.52	1.14	512.6
3/12/2013 7:50	0.52	1.14	512.6
3/12/2013 8:00	0.52	1.14	512.6
3/12/2013 8:10	0.52	1.14	512.6
3/12/2013 8:20	0.52	1.14	512.6
3/12/2013 8:30	0.52	1.14	512.6
3/12/2013 8:40	0.52	1.14	512.6
3/12/2013 8:50	0.52	1.14	512.6
3/12/2013 9:00	0.52	1.14	512.6
3/12/2013 9:10	0.52	1.14	512.6
3/12/2013 9:20	0.52	1.14	512.6
3/12/2013 9:30	0.52	1.14	512.6
3/12/2013 9:40	0.52	1.14	512.6
3/12/2013 9:50	0.52	1.14	512.6
3/12/2013 10:00	0.52	1.14	512.6
3/12/2013 10:10	0.52	1.14	512.6
3/12/2013 10:20	0.52	1.14	512.6

3/12/2013 10:30	0.52	1.14	512.6
3/12/2013 10:40	0.52	1.14	512.6
3/12/2013 10:50	0.52	1.14	512.6
3/12/2013 11:00	0.52	1.14	512.6
3/12/2013 11:10	0.52	1.14	512.6
3/12/2013 11:20	0.52	1.14	512.6
3/12/2013 11:30	0.52	1.14	512.6
3/12/2013 11:40	0.52	1.14	512.6
3/12/2013 11:50	0.52	1.14	512.6
3/12/2013 12:00	0.52	1.14	512.6
3/12/2013 12:10	0.52	1.14	512.6
3/12/2013 12:20	0.52	1.14	512.6
3/12/2013 12:30	0.52	1.14	512.6
3/12/2013 12:40	0.52	1.14	512.6
3/12/2013 12:50	0.52	1.14	512.6
3/12/2013 13:00	0.52	1.14	512.6
3/12/2013 13:10	0.52	1.14	512.6
3/12/2013 13:20	0.52	1.14	512.6
3/12/2013 13:30	0.52	1.14	512.6
3/12/2013 13:40	0.52	1.14	512.6
3/12/2013 13:50	0.52	1.14	512.6
3/12/2013 14:00	0.52	1.14	512.6
3/12/2013 14:10	0.52	1.14	512.6
3/12/2013 14:20	0.52	1.14	512.6
3/12/2013 14:30	0.51	1.11	497.8
3/12/2013 14:40	0.51	1.11	497.8
3/12/2013 14:50	0.51	1.11	497.8
3/12/2013 15:00	0.51	1.11	497.8
3/12/2013 15:10	0.51	1.11	497.8
3/12/2013 15:20	0.51	1.11	497.8
3/12/2013 15:30	0.51	1.11	497.8
3/12/2013 15:40	0.51	1.11	497.8
3/12/2013 15:50	0.51	1.11	497.8
3/12/2013 16:00	0.51	1.11	497.8
3/12/2013 16:10	0.51	1.11	497.8
3/12/2013 16:20	0.51	1.11	497.8
3/12/2013 16:30	0.51	1.11	497.8
3/12/2013 16:40	0.51	1.11	497.8
3/12/2013 16:50	0.51	1.11	497.8
3/12/2013 17:00	0.51	1.11	497.8
3/12/2013 17:10	0.51	1.11	497.8
3/12/2013 17:20	0.51	1.11	497.8
3/12/2013 17:30	0.51	1.11	497.8
3/12/2013 17:40	0.51	1.11	497.8
3/12/2013 17:50	0.51	1.11	497.8
3/12/2013 18:00	0.51	1.11	497.8
3/12/2013 18:10	0.51	1.11	497.8

3/12/2013 18:20	0.51	1.11	497.8
3/12/2013 18:30	0.51	1.11	497.8
3/12/2013 18:40	0.51	1.11	497.8
3/12/2013 18:50	0.51	1.11	497.8
3/12/2013 19:00	0.51	1.11	497.8
3/12/2013 19:10	0.51	1.11	497.8
3/12/2013 19:20	0.51	1.11	497.8
3/12/2013 19:30	0.51	1.11	497.8
3/12/2013 19:40	0.51	1.11	497.8
3/12/2013 19:50	0.51	1.11	497.8
3/12/2013 20:00	0.51	1.11	497.8
3/12/2013 20:10	0.51	1.11	497.8
3/12/2013 20:20	0.51	1.11	497.8
3/12/2013 20:30	0.51	1.11	497.8
3/12/2013 20:40	0.51	1.11	497.8
3/12/2013 20:50	0.51	1.11	497.8
3/12/2013 21:00	0.51	1.11	497.8
3/12/2013 21:10	0.51	1.11	497.8
3/12/2013 21:20	0.51	1.11	497.8
3/12/2013 21:30	0.51	1.11	497.8
3/12/2013 21:40	0.51	1.11	497.8
3/12/2013 21:50	0.51	1.11	497.8
3/12/2013 22:00	0.51	1.11	497.8
3/12/2013 22:10	0.51	1.11	497.8
3/12/2013 22:20	0.51	1.11	497.8
3/12/2013 22:30	0.51	1.11	497.8
3/12/2013 22:40	0.51	1.11	497.8
3/12/2013 22:50	0.51	1.11	497.8
3/12/2013 23:00	0.51	1.11	497.8
3/12/2013 23:10	0.51	1.11	497.8
3/12/2013 23:20	0.51	1.11	497.8
3/12/2013 23:30	0.51	1.11	497.8
3/12/2013 23:40	0.51	1.11	497.8
3/12/2013 23:50	0.51	1.11	497.8
3/13/2013 0:00	0.51	1.11	497.8
3/13/2013 0:10	0.51	1.11	497.8
3/13/2013 0:20	0.51	1.11	497.8
3/13/2013 0:30	0.51	1.11	497.8
3/13/2013 0:40	0.51	1.11	497.8
3/13/2013 0:50	0.51	1.11	497.8
3/13/2013 1:00	0.51	1.11	497.8
3/13/2013 1:10	0.51	1.11	497.8
3/13/2013 1:20	0.51	1.11	497.8
3/13/2013 1:30	0.51	1.11	497.8
3/13/2013 1:40	0.51	1.11	497.8
3/13/2013 1:50	0.51	1.11	497.8
3/13/2013 2:00	0.51	1.11	497.8

3/13/2013 2:10	0.51	1.11	497.8
3/13/2013 2:20	0.51	1.11	497.8
3/13/2013 2:30	0.51	1.11	497.8
3/13/2013 2:40	0.51	1.11	497.8
3/13/2013 2:50	0.51	1.11	497.8
3/13/2013 3:00	0.51	1.11	497.8
3/13/2013 3:10	0.51	1.11	497.8
3/13/2013 3:20	0.51	1.11	497.8
3/13/2013 3:30	0.51	1.11	497.8
3/13/2013 3:40	0.51	1.11	497.8
3/13/2013 3:50	0.51	1.11	497.8
3/13/2013 4:00	0.51	1.11	497.8
3/13/2013 4:10	0.51	1.11	497.8
3/13/2013 4:20	0.51	1.11	497.8
3/13/2013 4:30	0.51	1.11	497.8
3/13/2013 4:40	0.51	1.11	497.8
3/13/2013 4:50	0.51	1.11	497.8
3/13/2013 5:00	0.51	1.11	497.8
3/13/2013 5:10	0.51	1.11	497.8
3/13/2013 5:20	0.51	1.11	497.8
3/13/2013 5:30	0.51	1.11	497.8
3/13/2013 5:40	0.51	1.11	497.8
3/13/2013 5:50	0.51	1.11	497.8
3/13/2013 6:00	0.51	1.11	497.8
3/13/2013 6:10	0.51	1.11	497.8
3/13/2013 6:20	0.51	1.11	497.8
3/13/2013 6:30	0.51	1.11	497.8
3/13/2013 6:40	0.51	1.11	497.8
3/13/2013 6:50	0.51	1.11	497.8
3/13/2013 7:00	0.51	1.11	497.8
3/13/2013 7:10	0.51	1.11	497.8
3/13/2013 7:20	0.51	1.11	497.8
3/13/2013 7:30	0.51	1.11	497.8
3/13/2013 7:40	0.51	1.11	497.8
3/13/2013 7:50	0.51	1.11	497.8
3/13/2013 8:00	0.51	1.11	497.8
3/13/2013 8:10	0.51	1.11	497.8
3/13/2013 8:20	0.51	1.11	497.8
3/13/2013 8:30	0.51	1.11	497.8
3/13/2013 8:40	0.51	1.11	497.8
3/13/2013 8:50	0.51	1.11	497.8
3/13/2013 9:00	0.51	1.11	497.8
3/13/2013 9:10	0.51	1.11	497.8
3/13/2013 9:20	0.51	1.11	497.8
3/13/2013 9:30	0.51	1.11	497.8
3/13/2013 9:40	0.51	1.11	497.8
3/13/2013 9:50	0.51	1.11	497.8

3/13/2013 10:00	0.51	1.11	497.8
3/13/2013 10:10	0.51	1.11	497.8
3/13/2013 10:20	0.51	1.11	497.8
3/13/2013 10:30	0.51	1.11	497.8
3/13/2013 10:40	0.51	1.11	497.8
3/13/2013 10:50	0.51	1.11	497.8
3/13/2013 11:00	0.51	1.11	497.8
3/13/2013 11:10	0.51	1.11	497.8
3/13/2013 11:20	0.51	1.11	497.8
3/13/2013 11:30	0.51	1.11	497.8
3/13/2013 11:40	0.51	1.11	497.8
3/13/2013 11:50	0.51	1.11	497.8
3/13/2013 12:00	0.51	1.11	497.8
3/13/2013 12:10	0.51	1.11	497.8
3/13/2013 12:20	0.51	1.11	497.8
3/13/2013 12:30	0.51	1.11	497.8
3/13/2013 12:40	0.51	1.11	497.8
3/13/2013 12:50	0.51	1.11	497.8
3/13/2013 13:00	0.51	1.11	497.8
3/13/2013 13:10	0.51	1.11	497.8
3/13/2013 13:20	0.51	1.11	497.8
3/13/2013 13:30	0.51	1.11	497.8
3/13/2013 13:40	0.51	1.11	497.8
3/13/2013 13:50	0.51	1.11	497.8
3/13/2013 14:00	0.51	1.11	497.8
3/13/2013 14:10	0.51	1.11	497.8
3/13/2013 14:20	0.51	1.11	497.8
3/13/2013 14:30	0.51	1.11	497.8
3/13/2013 14:40	0.51	1.11	497.8
3/13/2013 14:50	0.51	1.11	497.8
3/13/2013 15:00	0.51	1.11	497.8
3/13/2013 15:10	0.51	1.11	497.8
3/13/2013 15:20	0.51	1.11	497.8
3/13/2013 15:30	0.5	1.08	483.2
3/13/2013 15:40	0.51	1.11	497.8
3/13/2013 15:50	0.51	1.11	497.8
3/13/2013 16:00	0.51	1.11	497.8
3/13/2013 16:10	0.51	1.11	497.8
3/13/2013 16:20	0.51	1.11	497.8
3/13/2013 16:30	0.51	1.11	497.8
3/13/2013 16:40	0.51	1.11	497.8
3/13/2013 16:50	0.51	1.11	497.8
3/13/2013 17:00	0.51	1.11	497.8
3/13/2013 17:10	0.51	1.11	497.8
3/13/2013 17:20	0.5	1.08	483.2
3/13/2013 17:30	0.51	1.11	497.8
3/13/2013 17:40	0.5	1.08	483.2

3/13/2013 17:50	0.51	1.11	497.8
3/13/2013 18:00	0.51	1.11	497.8
3/13/2013 18:10	0.51	1.11	497.8
3/13/2013 18:20	0.5	1.08	483.2
3/13/2013 18:30	0.51	1.11	497.8
3/13/2013 18:40	0.51	1.11	497.8
3/13/2013 18:50	0.5	1.08	483.2
3/13/2013 19:00	0.51	1.11	497.8
3/13/2013 19:10	0.51	1.11	497.8
3/13/2013 19:20	0.51	1.11	497.8
3/13/2013 19:30	0.51	1.11	497.8
3/13/2013 19:40	0.51	1.11	497.8
3/13/2013 19:50	0.51	1.11	497.8
3/13/2013 20:00	0.51	1.11	497.8
3/13/2013 20:10	0.51	1.11	497.8
3/13/2013 20:20	0.51	1.11	497.8
3/13/2013 20:30	0.51	1.11	497.8
3/13/2013 20:40	0.51	1.11	497.8
3/13/2013 20:50	0.51	1.11	497.8
3/13/2013 21:00	0.51	1.11	497.8
3/13/2013 21:10	0.51	1.11	497.8
3/13/2013 21:20	0.5	1.08	483.2
3/13/2013 21:30	0.51	1.11	497.8
3/13/2013 21:40	0.51	1.11	497.8
3/13/2013 21:50	0.51	1.11	497.8
3/13/2013 22:00	0.51	1.11	497.8
3/13/2013 22:10	0.5	1.08	483.2
3/13/2013 22:20	0.5	1.08	483.2
3/13/2013 22:30	0.5	1.08	483.2
3/13/2013 22:40	0.51	1.11	497.8
3/13/2013 22:50	0.5	1.08	483.2
3/13/2013 23:00	0.5	1.08	483.2
3/13/2013 23:10	0.5	1.08	483.2
3/13/2013 23:20	0.5	1.08	483.2
3/13/2013 23:30	0.5	1.08	483.2
3/13/2013 23:40	0.51	1.11	497.8
3/13/2013 23:50	0.51	1.11	497.8
3/14/2013 0:00	0.5	1.08	483.2
3/14/2013 0:10	0.5	1.08	483.2
3/14/2013 0:20	0.5	1.08	483.2
3/14/2013 0:30	0.5	1.08	483.2
3/14/2013 0:40	0.51	1.11	497.8
3/14/2013 0:50	0.51	1.11	497.8
3/14/2013 1:00	0.5	1.08	483.2
3/14/2013 1:10	0.5	1.08	483.2
3/14/2013 1:20	0.5	1.08	483.2
3/14/2013 1:30	0.5	1.08	483.2

3/14/2013 1:40	0.5	1.08	483.2
3/14/2013 1:50	0.51	1.11	497.8
3/14/2013 2:00	0.51	1.11	497.8
3/14/2013 2:10	0.51	1.11	497.8
3/14/2013 2:20	0.51	1.11	497.8
3/14/2013 2:30	0.51	1.11	497.8
3/14/2013 2:40	0.51	1.11	497.8
3/14/2013 2:50	0.51	1.11	497.8
3/14/2013 3:00	0.51	1.11	497.8
3/14/2013 3:10	0.51	1.11	497.8
3/14/2013 3:20	0.51	1.11	497.8
3/14/2013 3:30	0.51	1.11	497.8
3/14/2013 3:40	0.51	1.11	497.8
3/14/2013 3:50	0.51	1.11	497.8
3/14/2013 4:00	0.51	1.11	497.8
3/14/2013 4:10	0.51	1.11	497.8
3/14/2013 4:20	0.51	1.11	497.8
3/14/2013 4:30	0.5	1.08	483.2
3/14/2013 4:40	0.51	1.11	497.8
3/14/2013 4:50	0.5	1.08	483.2
3/14/2013 5:00	0.51	1.11	497.8
3/14/2013 5:10	0.51	1.11	497.8
3/14/2013 5:20	0.5	1.08	483.2
3/14/2013 5:30	0.51	1.11	497.8
3/14/2013 5:40	0.51	1.11	497.8
3/14/2013 5:50	0.51	1.11	497.8
3/14/2013 6:00	0.5	1.08	483.2
3/14/2013 6:10	0.5	1.08	483.2
3/14/2013 6:20	0.51	1.11	497.8
3/14/2013 6:30	0.5	1.08	483.2
3/14/2013 6:40	0.51	1.11	497.8
3/14/2013 6:50	0.5	1.08	483.2
3/14/2013 7:00	0.5	1.08	483.2
3/14/2013 7:10	0.51	1.11	497.8
3/14/2013 7:20	0.51	1.11	497.8
3/14/2013 7:30	0.51	1.11	497.8
3/14/2013 7:40	0.51	1.11	497.8
3/14/2013 7:50	0.51	1.11	497.8
3/14/2013 8:00	0.5	1.08	483.2
3/14/2013 8:10	0.51	1.11	497.8
3/14/2013 8:20	0.5	1.08	483.2
3/14/2013 8:30	0.51	1.11	497.8
3/14/2013 8:40	0.51	1.11	497.8
3/14/2013 8:50	0.51	1.11	497.8
3/14/2013 9:00	0.51	1.11	497.8
3/14/2013 9:10	0.51	1.11	497.8
3/14/2013 9:20	0.51	1.11	497.8

3/14/2013 9:30	0.51	1.11	497.8
3/14/2013 9:40	0.51	1.11	497.8
3/14/2013 9:50	0.51	1.11	497.8
3/14/2013 10:00	0.5	1.08	483.2
3/14/2013 10:10	0.51	1.11	497.8
3/14/2013 10:20	0.51	1.11	497.8
3/14/2013 10:30	0.51	1.11	497.8
3/14/2013 10:40	0.51	1.11	497.8
3/14/2013 10:50	0.5	1.08	483.2
3/14/2013 11:00	0.51	1.11	497.8
3/14/2013 11:10	0.51	1.11	497.8
3/14/2013 11:20	0.51	1.11	497.8
3/14/2013 11:30	0.51	1.11	497.8
3/14/2013 11:40	0.51	1.11	497.8
3/14/2013 11:50	0.51	1.11	497.8
3/14/2013 12:00	0.51	1.11	497.8
3/14/2013 12:10	0.51	1.11	497.8
3/14/2013 12:20	0.51	1.11	497.8
3/14/2013 12:30	0.51	1.11	497.8
3/14/2013 12:40	0.51	1.11	497.8
3/14/2013 12:50	0.51	1.11	497.8
3/14/2013 13:00	0.51	1.11	497.8
3/14/2013 13:10	0.51	1.11	497.8
3/14/2013 13:20	0.51	1.11	497.8
3/14/2013 13:30	0.51	1.11	497.8
3/14/2013 13:40	0.5	1.08	483.2
3/14/2013 13:50	0.51	1.11	497.8
3/14/2013 14:00	0.51	1.11	497.8
3/14/2013 14:10	0.51	1.11	497.8
3/14/2013 14:20	0.51	1.11	497.8
3/14/2013 14:30	0.51	1.11	497.8
3/14/2013 14:40	0.51	1.11	497.8
3/14/2013 14:50	0.51	1.11	497.8
3/14/2013 15:00	0.51	1.11	497.8
3/14/2013 15:10	0.51	1.11	497.8
3/14/2013 15:20	0.51	1.11	497.8
3/14/2013 15:30	0.5	1.08	483.2
3/14/2013 15:40	0.51	1.11	497.8
3/14/2013 15:50	0.51	1.11	497.8
3/14/2013 16:00	0.51	1.11	497.8
3/14/2013 16:10	0.51	1.11	497.8
3/14/2013 16:20	0.51	1.11	497.8
3/14/2013 16:30	0.51	1.11	497.8
3/14/2013 16:40	0.51	1.11	497.8
3/14/2013 16:50	0.51	1.11	497.8
3/14/2013 17:00	0.51	1.11	497.8
3/14/2013 17:10	0.51	1.11	497.8

3/14/2013 17:20	0.51	1.11	497.8
3/14/2013 17:30	0.51	1.11	497.8
3/14/2013 17:40	0.51	1.11	497.8
3/14/2013 17:50	0.51	1.11	497.8
3/14/2013 18:00	0.51	1.11	497.8
3/14/2013 18:10	0.51	1.11	497.8
3/14/2013 18:20	0.51	1.11	497.8
3/14/2013 18:30	0.51	1.11	497.8
3/14/2013 18:40	0.51	1.11	497.8
3/14/2013 18:50	0.51	1.11	497.8
3/14/2013 19:00	0.51	1.11	497.8
3/14/2013 19:10	0.51	1.11	497.8
3/14/2013 19:20	0.51	1.11	497.8
3/14/2013 19:30	0.51	1.11	497.8
3/14/2013 19:40	0.51	1.11	497.8
3/14/2013 19:50	0.51	1.11	497.8
3/14/2013 20:00	0.51	1.11	497.8
3/14/2013 20:10	0.5	1.08	483.2
3/14/2013 20:20	0.51	1.11	497.8
3/14/2013 20:30	0.51	1.11	497.8
3/14/2013 20:40	0.51	1.11	497.8
3/14/2013 20:50	0.51	1.11	497.8
3/14/2013 21:00	0.51	1.11	497.8
3/14/2013 21:10	0.51	1.11	497.8
3/14/2013 21:20	0.51	1.11	497.8
3/14/2013 21:30	0.51	1.11	497.8
3/14/2013 21:40	0.51	1.11	497.8
3/14/2013 21:50	0.51	1.11	497.8
3/14/2013 22:00	0.51	1.11	497.8
3/14/2013 22:10	0.51	1.11	497.8
3/14/2013 22:20	0.51	1.11	497.8
3/14/2013 22:30	0.51	1.11	497.8
3/14/2013 22:40	0.51	1.11	497.8
3/14/2013 22:50	0.5	1.08	483.2
3/14/2013 23:00	0.51	1.11	497.8
3/14/2013 23:10	0.51	1.11	497.8
3/14/2013 23:20	0.51	1.11	497.8
3/14/2013 23:30	0.51	1.11	497.8
3/14/2013 23:40	0.5	1.08	483.2
3/14/2013 23:50	0.51	1.11	497.8
3/15/2013 0:00	0.51	1.11	497.8
3/15/2013 0:10	0.51	1.11	497.8
3/15/2013 0:20	0.51	1.11	497.8
3/15/2013 0:30	0.51	1.11	497.8
3/15/2013 0:40	0.51	1.11	497.8
3/15/2013 0:50	0.51	1.11	497.8
3/15/2013 1:00	0.51	1.11	497.8

3/15/2013 1:10	0.51	1.11	497.8
3/15/2013 1:20	0.51	1.11	497.8
3/15/2013 1:30	0.51	1.11	497.8
3/15/2013 1:40	0.51	1.11	497.8
3/15/2013 1:50	0.51	1.11	497.8
3/15/2013 2:00	0.51	1.11	497.8
3/15/2013 2:10	0.51	1.11	497.8
3/15/2013 2:20	0.5	1.08	483.2
3/15/2013 2:30	0.51	1.11	497.8
3/15/2013 2:40	0.51	1.11	497.8
3/15/2013 2:50	0.51	1.11	497.8
3/15/2013 3:00	0.51	1.11	497.8
3/15/2013 3:10	0.51	1.11	497.8
3/15/2013 3:20	0.5	1.08	483.2
3/15/2013 3:30	0.51	1.11	497.8
3/15/2013 3:40	0.51	1.11	497.8
3/15/2013 3:50	0.51	1.11	497.8
3/15/2013 4:00	0.51	1.11	497.8
3/15/2013 4:10	0.51	1.11	497.8
3/15/2013 4:20	0.5	1.08	483.2
3/15/2013 4:30	0.51	1.11	497.8
3/15/2013 4:40	0.5	1.08	483.2
3/15/2013 4:50	0.51	1.11	497.8
3/15/2013 5:00	0.51	1.11	497.8
3/15/2013 5:10	0.51	1.11	497.8
3/15/2013 5:20	0.5	1.08	483.2
3/15/2013 5:30	0.51	1.11	497.8
3/15/2013 5:40	0.51	1.11	497.8
3/15/2013 5:50	0.5	1.08	483.2
3/15/2013 6:00	0.51	1.11	497.8
3/15/2013 6:10	0.51	1.11	497.8
3/15/2013 6:20	0.51	1.11	497.8
3/15/2013 6:30	0.51	1.11	497.8
3/15/2013 6:40	0.51	1.11	497.8
3/15/2013 6:50	0.51	1.11	497.8
3/15/2013 7:00	0.51	1.11	497.8
3/15/2013 7:10	0.51	1.11	497.8
3/15/2013 7:20	0.51	1.11	497.8
3/15/2013 7:30	0.51	1.11	497.8
3/15/2013 7:40	0.51	1.11	497.8
3/15/2013 7:50	0.51	1.11	497.8
3/15/2013 8:00	0.5	1.08	483.2
3/15/2013 8:10	0.51	1.11	497.8
3/15/2013 8:20	0.51	1.11	497.8
3/15/2013 8:30	0.51	1.11	497.8
3/15/2013 8:40	0.51	1.11	497.8
3/15/2013 8:50	0.51	1.11	497.8

3/15/2013 9:00	0.51	1.11	497.8
3/15/2013 9:10	0.51	1.11	497.8
3/15/2013 9:20	0.51	1.11	497.8
3/15/2013 9:30	0.51	1.11	497.8
3/15/2013 9:40	0.51	1.11	497.8
3/15/2013 9:50	0.51	1.11	497.8
3/15/2013 10:00	0.51	1.11	497.8
3/15/2013 10:10	0.51	1.11	497.8
3/15/2013 10:20	0.51	1.11	497.8
3/15/2013 10:30	0.51	1.11	497.8
3/15/2013 10:40	0.51	1.11	497.8
3/15/2013 10:50	0.51	1.11	497.8
3/15/2013 11:00	0.51	1.11	497.8
3/15/2013 11:10	0.51	1.11	497.8
3/15/2013 11:20	0.51	1.11	497.8
3/15/2013 11:30	0.51	1.11	497.8
3/15/2013 11:40	0.51	1.11	497.8
3/15/2013 11:50	0.51	1.11	497.8
3/15/2013 12:00	0.51	1.11	497.8
3/15/2013 12:10	0.5	1.08	483.2
3/15/2013 12:20	0.51	1.11	497.8
3/15/2013 12:30	0.51	1.11	497.8
3/15/2013 12:40	0.5	1.08	483.2
3/15/2013 12:50	0.5	1.08	483.2
3/15/2013 13:00	0.51	1.11	497.8
3/15/2013 13:10	0.51	1.11	497.8
3/15/2013 13:20	0.51	1.11	497.8
3/15/2013 13:30	0.51	1.11	497.8
3/15/2013 13:40	0.5	1.08	483.2
3/15/2013 13:50	0.5	1.08	483.2
3/15/2013 14:00	0.51	1.11	497.8
3/15/2013 14:10	0.51	1.11	497.8
3/15/2013 14:20	0.51	1.11	497.8
3/15/2013 14:30	0.51	1.11	497.8
3/15/2013 14:40	0.51	1.11	497.8
3/15/2013 14:50	0.5	1.08	483.2
3/15/2013 15:00	0.51	1.11	497.8
3/15/2013 15:10	0.51	1.11	497.8
3/15/2013 15:20	0.51	1.11	497.8
3/15/2013 15:30	0.51	1.11	497.8
3/15/2013 15:40	0.51	1.11	497.8
3/15/2013 15:50	0.51	1.11	497.8
3/15/2013 16:00	0.51	1.11	497.8
3/15/2013 16:10	0.51	1.11	497.8
3/15/2013 16:20	0.51	1.11	497.8
3/15/2013 16:30	0.51	1.11	497.8
3/15/2013 16:40	0.51	1.11	497.8

3/15/2013 16:50	0.51	1.11	497.8
3/15/2013 17:00	0.51	1.11	497.8
3/15/2013 17:10	0.51	1.11	497.8
3/15/2013 17:20	0.51	1.11	497.8
3/15/2013 17:30	0.51	1.11	497.8
3/15/2013 17:40	0.51	1.11	497.8
3/15/2013 17:50	0.51	1.11	497.8
3/15/2013 18:00	0.51	1.11	497.8
3/15/2013 18:10	0.51	1.11	497.8
3/15/2013 18:20	0.51	1.11	497.8
3/15/2013 18:30	0.51	1.11	497.8
3/15/2013 18:40	0.5	1.08	483.2
3/15/2013 18:50	0.5	1.08	483.2
3/15/2013 19:00	0.51	1.11	497.8
3/15/2013 19:10	0.51	1.11	497.8
3/15/2013 19:20	0.5	1.08	483.2
3/15/2013 19:30	0.5	1.08	483.2
3/15/2013 19:40	0.51	1.11	497.8
3/15/2013 19:50	0.51	1.11	497.8
3/15/2013 20:00	0.51	1.11	497.8
3/15/2013 20:10	0.51	1.11	497.8
3/15/2013 20:20	0.5	1.08	483.2
3/15/2013 20:30	0.51	1.11	497.8
3/15/2013 20:40	0.51	1.11	497.8
3/15/2013 20:50	0.51	1.11	497.8
3/15/2013 21:00	0.51	1.11	497.8
3/15/2013 21:10	0.5	1.08	483.2
3/15/2013 21:20	0.5	1.08	483.2
3/15/2013 21:30	0.5	1.08	483.2
3/15/2013 21:40	0.5	1.08	483.2
3/15/2013 21:50	0.51	1.11	497.8
3/15/2013 22:00	0.5	1.08	483.2
3/15/2013 22:10	0.5	1.08	483.2
3/15/2013 22:20	0.5	1.08	483.2
3/15/2013 22:30	0.5	1.08	483.2
3/15/2013 22:40	0.51	1.11	497.8
3/15/2013 22:50	0.51	1.11	497.8
3/15/2013 23:00	0.51	1.11	497.8
3/15/2013 23:10	0.5	1.08	483.2
3/15/2013 23:20	0.51	1.11	497.8
3/15/2013 23:30	0.51	1.11	497.8
3/15/2013 23:40	0.5	1.08	483.2
3/15/2013 23:50	0.5	1.08	483.2
3/16/2013 0:00	0.51	1.11	497.8
3/16/2013 0:10	0.5	1.08	483.2
3/16/2013 0:20	0.51	1.11	497.8
3/16/2013 0:30	0.51	1.11	497.8

3/16/2013 0:40	0.5	1.08	483.2
3/16/2013 0:50	0.51	1.11	497.8
3/16/2013 1:00	0.51	1.11	497.8
3/16/2013 1:10	0.5	1.08	483.2
3/16/2013 1:20	0.5	1.08	483.2
3/16/2013 1:30	0.5	1.08	483.2
3/16/2013 1:40	0.5	1.08	483.2
3/16/2013 1:50	0.51	1.11	497.8
3/16/2013 2:00	0.5	1.08	483.2
3/16/2013 2:10	0.5	1.08	483.2
3/16/2013 2:20	0.5	1.08	483.2
3/16/2013 2:30	0.5	1.08	483.2
3/16/2013 2:40	0.51	1.11	497.8
3/16/2013 2:50	0.5	1.08	483.2
3/16/2013 3:00	0.51	1.11	497.8
3/16/2013 3:10	0.5	1.08	483.2
3/16/2013 3:20	0.51	1.11	497.8
3/16/2013 3:30	0.5	1.08	483.2
3/16/2013 3:40	0.51	1.11	497.8
3/16/2013 3:50	0.5	1.08	483.2
3/16/2013 4:00	0.51	1.11	497.8
3/16/2013 4:10	0.51	1.11	497.8
3/16/2013 4:20	0.51	1.11	497.8
3/16/2013 4:30	0.51	1.11	497.8
3/16/2013 4:40	0.51	1.11	497.8
3/16/2013 4:50	0.5	1.08	483.2
3/16/2013 5:00	0.5	1.08	483.2
3/16/2013 5:10	0.51	1.11	497.8
3/16/2013 5:20	0.5	1.08	483.2
3/16/2013 5:30	0.51	1.11	497.8
3/16/2013 5:40	0.5	1.08	483.2
3/16/2013 5:50	0.5	1.08	483.2
3/16/2013 6:00	0.5	1.08	483.2
3/16/2013 6:10	0.51	1.11	497.8
3/16/2013 6:20	0.51	1.11	497.8
3/16/2013 6:30	0.51	1.11	497.8
3/16/2013 6:40	0.51	1.11	497.8
3/16/2013 6:50	0.51	1.11	497.8
3/16/2013 7:00	0.51	1.11	497.8
3/16/2013 7:10	0.51	1.11	497.8
3/16/2013 7:20	0.51	1.11	497.8
3/16/2013 7:30	0.5	1.08	483.2
3/16/2013 7:40	0.51	1.11	497.8
3/16/2013 7:50	0.51	1.11	497.8
3/16/2013 8:00	0.5	1.08	483.2
3/16/2013 8:10	0.51	1.11	497.8
3/16/2013 8:20	0.5	1.08	483.2

3/16/2013 8:30	0.51	1.11	497.8
3/16/2013 8:40	0.51	1.11	497.8
3/16/2013 8:50	0.51	1.11	497.8
3/16/2013 9:00	0.5	1.08	483.2
3/16/2013 9:10	0.51	1.11	497.8
3/16/2013 9:20	0.5	1.08	483.2
3/16/2013 9:30	0.51	1.11	497.8
3/16/2013 9:40	0.5	1.08	483.2
3/16/2013 9:50	0.51	1.11	497.8
3/16/2013 10:00	0.51	1.11	497.8
3/16/2013 10:10	0.51	1.11	497.8
3/16/2013 10:20	0.51	1.11	497.8
3/16/2013 10:30	0.5	1.08	483.2
3/16/2013 10:40	0.5	1.08	483.2
3/16/2013 10:50	0.51	1.11	497.8
3/16/2013 11:00	0.51	1.11	497.8
3/16/2013 11:10	0.51	1.11	497.8
3/16/2013 11:20	0.51	1.11	497.8
3/16/2013 11:30	0.51	1.11	497.8
3/16/2013 11:40	0.5	1.08	483.2
3/16/2013 11:50	0.5	1.08	483.2
3/16/2013 12:00	0.51	1.11	497.8
3/16/2013 12:10	0.51	1.11	497.8
3/16/2013 12:20	0.5	1.08	483.2
3/16/2013 12:30	0.5	1.08	483.2
3/16/2013 12:40	0.5	1.08	483.2
3/16/2013 12:50	0.51	1.11	497.8
3/16/2013 13:00	0.5	1.08	483.2
3/16/2013 13:10	0.51	1.11	497.8
3/16/2013 13:20	0.5	1.08	483.2
3/16/2013 13:30	0.5	1.08	483.2
3/16/2013 13:40	0.51	1.11	497.8
3/16/2013 13:50	0.5	1.08	483.2
3/16/2013 14:00	0.51	1.11	497.8
3/16/2013 14:10	0.51	1.11	497.8
3/16/2013 14:20	0.51	1.11	497.8
3/16/2013 14:30	0.51	1.11	497.8
3/16/2013 14:40	0.5	1.08	483.2
3/16/2013 14:50	0.51	1.11	497.8
3/16/2013 15:00	0.51	1.11	497.8
3/16/2013 15:10	0.51	1.11	497.8
3/16/2013 15:20	0.5	1.08	483.2
3/16/2013 15:30	0.5	1.08	483.2
3/16/2013 15:40	0.51	1.11	497.8
3/16/2013 15:50	0.51	1.11	497.8
3/16/2013 16:00	0.5	1.08	483.2
3/16/2013 16:10	0.51	1.11	497.8

3/16/2013 16:20	0.51	1.11	497.8
3/16/2013 16:30	0.51	1.11	497.8
3/16/2013 16:40	0.51	1.11	497.8
3/16/2013 16:50	0.51	1.11	497.8
3/16/2013 17:00	0.51	1.11	497.8
3/16/2013 17:10	0.51	1.11	497.8
3/16/2013 17:20	0.51	1.11	497.8
3/16/2013 17:30	0.51	1.11	497.8
3/16/2013 17:40	0.51	1.11	497.8
3/16/2013 17:50	0.5	1.08	483.2
3/16/2013 18:00	0.51	1.11	497.8
3/16/2013 18:10	0.51	1.11	497.8
3/16/2013 18:20	0.51	1.11	497.8
3/16/2013 18:30	0.51	1.11	497.8
3/16/2013 18:40	0.51	1.11	497.8
3/16/2013 18:50	0.5	1.08	483.2
3/16/2013 19:00	0.51	1.11	497.8
3/16/2013 19:10	0.51	1.11	497.8
3/16/2013 19:20	0.51	1.11	497.8
3/16/2013 19:30	0.51	1.11	497.8
3/16/2013 19:40	0.51	1.11	497.8
3/16/2013 19:50	0.51	1.11	497.8
3/16/2013 20:00	0.51	1.11	497.8
3/16/2013 20:10	0.5	1.08	483.2
3/16/2013 20:20	0.51	1.11	497.8
3/16/2013 20:30	0.51	1.11	497.8
3/16/2013 20:40	0.51	1.11	497.8
3/16/2013 20:50	0.51	1.11	497.8
3/16/2013 21:00	0.51	1.11	497.8
3/16/2013 21:10	0.51	1.11	497.8
3/16/2013 21:20	0.51	1.11	497.8
3/16/2013 21:30	0.5	1.08	483.2
3/16/2013 21:40	0.51	1.11	497.8
3/16/2013 21:50	0.51	1.11	497.8
3/16/2013 22:00	0.51	1.11	497.8
3/16/2013 22:10	0.51	1.11	497.8
3/16/2013 22:20	0.51	1.11	497.8
3/16/2013 22:30	0.51	1.11	497.8
3/16/2013 22:40	0.5	1.08	483.2
3/16/2013 22:50	0.5	1.08	483.2
3/16/2013 23:00	0.51	1.11	497.8
3/16/2013 23:10	0.51	1.11	497.8
3/16/2013 23:20	0.51	1.11	497.8
3/16/2013 23:30	0.5	1.08	483.2
3/16/2013 23:40	0.51	1.11	497.8
3/16/2013 23:50	0.5	1.08	483.2
3/17/2013 0:00	0.51	1.11	497.8

3/17/2013 0:10	0.51	1.11	497.8
3/17/2013 0:20	0.51	1.11	497.8
3/17/2013 0:30	0.51	1.11	497.8
3/17/2013 0:40	0.51	1.11	497.8
3/17/2013 0:50	0.51	1.11	497.8
3/17/2013 1:00	0.51	1.11	497.8
3/17/2013 1:10	0.51	1.11	497.8
3/17/2013 1:20	0.51	1.11	497.8
3/17/2013 1:30	0.51	1.11	497.8
3/17/2013 1:40	0.51	1.11	497.8
3/17/2013 1:50	0.51	1.11	497.8
3/17/2013 2:00	0.51	1.11	497.8
3/17/2013 2:10	0.51	1.11	497.8
3/17/2013 2:20	0.51	1.11	497.8
3/17/2013 2:30	0.51	1.11	497.8
3/17/2013 2:40	0.51	1.11	497.8
3/17/2013 2:50	0.51	1.11	497.8
3/17/2013 3:00	0.51	1.11	497.8
3/17/2013 3:10	0.5	1.08	483.2
3/17/2013 3:20	0.51	1.11	497.8
3/17/2013 3:30	0.51	1.11	497.8
3/17/2013 3:40	0.5	1.08	483.2
3/17/2013 3:50	0.51	1.11	497.8
3/17/2013 4:00	0.51	1.11	497.8
3/17/2013 4:10	0.51	1.11	497.8
3/17/2013 4:20	0.51	1.11	497.8
3/17/2013 4:30	0.5	1.08	483.2
3/17/2013 4:40	0.51	1.11	497.8
3/17/2013 4:50	0.51	1.11	497.8
3/17/2013 5:00	0.51	1.11	497.8
3/17/2013 5:10	0.5	1.08	483.2
3/17/2013 5:20	0.51	1.11	497.8
3/17/2013 5:30	0.51	1.11	497.8
3/17/2013 5:40	0.51	1.11	497.8
3/17/2013 5:50	0.51	1.11	497.8
3/17/2013 6:00	0.51	1.11	497.8
3/17/2013 6:10	0.51	1.11	497.8
3/17/2013 6:20	0.51	1.11	497.8
3/17/2013 6:30	0.5	1.08	483.2
3/17/2013 6:40	0.51	1.11	497.8
3/17/2013 6:50	0.51	1.11	497.8
3/17/2013 7:00	0.51	1.11	497.8
3/17/2013 7:10	0.51	1.11	497.8
3/17/2013 7:20	0.51	1.11	497.8
3/17/2013 7:30	0.51	1.11	497.8
3/17/2013 7:40	0.51	1.11	497.8
3/17/2013 7:50	0.51	1.11	497.8

3/17/2013 8:00	0.51	1.11	497.8
3/17/2013 8:10	0.51	1.11	497.8
3/17/2013 8:20	0.51	1.11	497.8
3/17/2013 8:30	0.51	1.11	497.8
3/17/2013 8:40	0.51	1.11	497.8
3/17/2013 8:50	0.51	1.11	497.8
3/17/2013 9:00	0.51	1.11	497.8
3/17/2013 9:10	0.51	1.11	497.8
3/17/2013 9:20	0.51	1.11	497.8
3/17/2013 9:30	0.5	1.08	483.2
3/17/2013 9:40	0.51	1.11	497.8
3/17/2013 9:50	0.51	1.11	497.8
3/17/2013 10:00	0.5	1.08	483.2
3/17/2013 10:10	0.51	1.11	497.8
3/17/2013 10:20	0.51	1.11	497.8
3/17/2013 10:30	0.5	1.08	483.2
3/17/2013 10:40	0.51	1.11	497.8
3/17/2013 10:50	0.51	1.11	497.8
3/17/2013 11:00	0.51	1.11	497.8
3/17/2013 11:10	0.51	1.11	497.8
3/17/2013 11:20	0.51	1.11	497.8
3/17/2013 11:30	0.51	1.11	497.8
3/17/2013 11:40	0.5	1.08	483.2
3/17/2013 11:50	0.5	1.08	483.2
3/17/2013 12:00	0.51	1.11	497.8
3/17/2013 12:10	0.51	1.11	497.8
3/17/2013 12:20	0.5	1.08	483.2
3/17/2013 12:30	0.51	1.11	497.8
3/17/2013 12:40	0.5	1.08	483.2
3/17/2013 12:50	0.5	1.08	483.2
3/17/2013 13:00	0.5	1.08	483.2
3/17/2013 13:10	0.5	1.08	483.2
3/17/2013 13:20	0.5	1.08	483.2
3/17/2013 13:30	0.5	1.08	483.2
3/17/2013 13:40	0.5	1.08	483.2
3/17/2013 13:50	0.5	1.08	483.2
3/17/2013 14:00	0.5	1.08	483.2
3/17/2013 14:10	0.5	1.08	483.2
3/17/2013 14:20	0.51	1.11	497.8
3/17/2013 14:30	0.5	1.08	483.2
3/17/2013 14:40	0.5	1.08	483.2
3/17/2013 14:50	0.5	1.08	483.2
3/17/2013 15:00	0.5	1.08	483.2
3/17/2013 15:10	0.5	1.08	483.2
3/17/2013 15:20	0.5	1.08	483.2
3/17/2013 15:30	0.5	1.08	483.2
3/17/2013 15:40	0.5	1.08	483.2

3/17/2013 15:50	0.5	1.08	483.2
3/17/2013 16:00	0.51	1.11	497.8
3/17/2013 16:10	0.51	1.11	497.8
3/17/2013 16:20	0.51	1.11	497.8
3/17/2013 16:30	0.51	1.11	497.8
3/17/2013 16:40	0.51	1.11	497.8
3/17/2013 16:50	0.51	1.11	497.8
3/17/2013 17:00	0.51	1.11	497.8
3/17/2013 17:10	0.51	1.11	497.8
3/17/2013 17:20	0.5	1.08	483.2
3/17/2013 17:30	0.5	1.08	483.2
3/17/2013 17:40	0.51	1.11	497.8
3/17/2013 17:50	0.51	1.11	497.8
3/17/2013 18:00	0.51	1.11	497.8
3/17/2013 18:10	0.5	1.08	483.2
3/17/2013 18:20	0.51	1.11	497.8
3/17/2013 18:30	0.51	1.11	497.8
3/17/2013 18:40	0.51	1.11	497.8
3/17/2013 18:50	0.5	1.08	483.2
3/17/2013 19:00	0.5	1.08	483.2
3/17/2013 19:10	0.5	1.08	483.2
3/17/2013 19:20	0.51	1.11	497.8
3/17/2013 19:30	0.5	1.08	483.2
3/17/2013 19:40	0.5	1.08	483.2
3/17/2013 19:50	0.5	1.08	483.2
3/17/2013 20:00	0.5	1.08	483.2
3/17/2013 20:10	0.51	1.11	497.8
3/17/2013 20:20	0.51	1.11	497.8
3/17/2013 20:30	0.51	1.11	497.8
3/17/2013 20:40	0.51	1.11	497.8
3/17/2013 20:50	0.51	1.11	497.8
3/17/2013 21:00	0.5	1.08	483.2
3/17/2013 21:10	0.5	1.08	483.2
3/17/2013 21:20	0.5	1.08	483.2
3/17/2013 21:30	0.5	1.08	483.2
3/17/2013 21:40	0.51	1.11	497.8
3/17/2013 21:50	0.51	1.11	497.8
3/17/2013 22:00	0.5	1.08	483.2
3/17/2013 22:10	0.51	1.11	497.8
3/17/2013 22:20	0.5	1.08	483.2
3/17/2013 22:30	0.5	1.08	483.2
3/17/2013 22:40	0.51	1.11	497.8
3/17/2013 22:50	0.51	1.11	497.8
3/17/2013 23:00	0.51	1.11	497.8
3/17/2013 23:10	0.5	1.08	483.2
3/17/2013 23:20	0.51	1.11	497.8
3/17/2013 23:30	0.5	1.08	483.2

3/17/2013 23:40	0.51	1.11	497.8
3/17/2013 23:50	0.5	1.08	483.2
3/18/2013 0:00	0.5	1.08	483.2
3/18/2013 0:10	0.5	1.08	483.2
3/18/2013 0:20	0.51	1.11	497.8
3/18/2013 0:30	0.5	1.08	483.2
3/18/2013 0:40	0.51	1.11	497.8
3/18/2013 0:50	0.51	1.11	497.8
3/18/2013 1:00	0.5	1.08	483.2
3/18/2013 1:10	0.5	1.08	483.2
3/18/2013 1:20	0.51	1.11	497.8
3/18/2013 1:30	0.5	1.08	483.2
3/18/2013 1:40	0.51	1.11	497.8
3/18/2013 1:50	0.5	1.08	483.2
3/18/2013 2:00	0.5	1.08	483.2
3/18/2013 2:10	0.5	1.08	483.2
3/18/2013 2:20	0.5	1.08	483.2
3/18/2013 2:30	0.5	1.08	483.2
3/18/2013 2:40	0.5	1.08	483.2
3/18/2013 2:50	0.5	1.08	483.2
3/18/2013 3:00	0.51	1.11	497.8
3/18/2013 3:10	0.5	1.08	483.2
3/18/2013 3:20	0.51	1.11	497.8
3/18/2013 3:30	0.5	1.08	483.2
3/18/2013 3:40	0.51	1.11	497.8
3/18/2013 3:50	0.51	1.11	497.8
3/18/2013 4:00	0.51	1.11	497.8
3/18/2013 4:10	0.51	1.11	497.8
3/18/2013 4:20	0.51	1.11	497.8
3/18/2013 4:30	0.51	1.11	497.8
3/18/2013 4:40	0.51	1.11	497.8
3/18/2013 4:50	0.51	1.11	497.8
3/18/2013 5:00	0.5	1.08	483.2
3/18/2013 5:10	0.51	1.11	497.8
3/18/2013 5:20	0.51	1.11	497.8
3/18/2013 5:30	0.5	1.08	483.2
3/18/2013 5:40	0.5	1.08	483.2
3/18/2013 5:50	0.5	1.08	483.2
3/18/2013 6:00	0.51	1.11	497.8
3/18/2013 6:10	0.5	1.08	483.2
3/18/2013 6:20	0.51	1.11	497.8
3/18/2013 6:30	0.5	1.08	483.2
3/18/2013 6:40	0.5	1.08	483.2
3/18/2013 6:50	0.51	1.11	497.8
3/18/2013 7:00	0.5	1.08	483.2
3/18/2013 7:10	0.51	1.11	497.8
3/18/2013 7:20	0.5	1.08	483.2

3/18/2013 7:30	0.51	1.11	497.8
3/18/2013 7:40	0.5	1.08	483.2
3/18/2013 7:50	0.5	1.08	483.2
3/18/2013 8:00	0.51	1.11	497.8
3/18/2013 8:10	0.5	1.08	483.2
3/18/2013 8:20	0.5	1.08	483.2
3/18/2013 8:30	0.5	1.08	483.2
3/18/2013 8:40	0.5	1.08	483.2
3/18/2013 8:50	0.51	1.11	497.8
3/18/2013 9:00	0.5	1.08	483.2
3/18/2013 9:10	0.51	1.11	497.8
3/18/2013 9:20	0.5	1.08	483.2
3/18/2013 9:30	0.5	1.08	483.2
3/18/2013 9:40	0.51	1.11	497.8
3/18/2013 9:50	0.5	1.08	483.2
3/18/2013 10:00	0.5	1.08	483.2
3/18/2013 10:10	0.5	1.08	483.2
3/18/2013 10:20	0.5	1.08	483.2
3/18/2013 10:30	0.51	1.11	497.8
3/18/2013 10:40	0.5	1.08	483.2
3/18/2013 10:50	0.51	1.11	497.8
3/18/2013 11:00	0.5	1.08	483.2
3/18/2013 11:10	0.51	1.11	497.8
3/18/2013 11:20	0.5	1.08	483.2
3/18/2013 11:30	0.5	1.08	483.2
3/18/2013 11:40	0.5	1.08	483.2
3/18/2013 11:50	0.51	1.11	497.8
3/18/2013 12:00	0.51	1.11	497.8
3/18/2013 12:10	0.51	1.11	497.8
3/18/2013 12:20	0.51	1.11	497.8
3/18/2013 12:30	0.51	1.11	497.8
3/18/2013 12:40	0.5	1.08	483.2
3/18/2013 12:50	0.5	1.08	483.2
3/18/2013 13:00	0.5	1.08	483.2
3/18/2013 13:10	0.5	1.08	483.2
3/18/2013 13:20	0.5	1.08	483.2
3/18/2013 13:30	0.51	1.11	497.8
3/18/2013 13:40	0.51	1.11	497.8
3/18/2013 13:50	0.51	1.11	497.8
3/18/2013 14:00	0.5	1.08	483.2
3/18/2013 14:10	0.5	1.08	483.2
3/18/2013 14:20	0.5	1.08	483.2
3/18/2013 14:30	0.51	1.11	497.8
3/18/2013 14:40	0.51	1.11	497.8
3/18/2013 14:50	0.5	1.08	483.2
3/18/2013 15:00	0.51	1.11	497.8
3/18/2013 15:10	0.51	1.11	497.8

3/18/2013 15:20	0.51	1.11	497.8
3/18/2013 15:30	0.51	1.11	497.8
3/18/2013 15:40	0.51	1.11	497.8
3/18/2013 15:50	0.51	1.11	497.8
3/18/2013 16:00	0.51	1.11	497.8
3/18/2013 16:10	0.5	1.08	483.2
3/18/2013 16:20	0.5	1.08	483.2
3/18/2013 16:30	0.5	1.08	483.2
3/18/2013 16:40	0.51	1.11	497.8
3/18/2013 16:50	0.51	1.11	497.8
3/18/2013 17:00	0.51	1.11	497.8
3/18/2013 17:10	0.51	1.11	497.8
3/18/2013 17:20	0.5	1.08	483.2
3/18/2013 17:30	0.51	1.11	497.8
3/18/2013 17:40	0.51	1.11	497.8
3/18/2013 17:50	0.51	1.11	497.8
3/18/2013 18:00	0.51	1.11	497.8
3/18/2013 18:10	0.51	1.11	497.8
3/18/2013 18:20	0.5	1.08	483.2
3/18/2013 18:30	0.51	1.11	497.8
3/18/2013 18:40	0.5	1.08	483.2
3/18/2013 18:50	0.51	1.11	497.8
3/18/2013 19:00	0.51	1.11	497.8
3/18/2013 19:10	0.51	1.11	497.8
3/18/2013 19:20	0.51	1.11	497.8
3/18/2013 19:30	0.51	1.11	497.8
3/18/2013 19:40	0.51	1.11	497.8
3/18/2013 19:50	0.5	1.08	483.2
3/18/2013 20:00	0.5	1.08	483.2
3/18/2013 20:10	0.5	1.08	483.2
3/18/2013 20:20	0.5	1.08	483.2
3/18/2013 20:30	0.5	1.08	483.2
3/18/2013 20:40	0.5	1.08	483.2
3/18/2013 20:50	0.5	1.08	483.2
3/18/2013 21:00	0.5	1.08	483.2
3/18/2013 21:10	0.51	1.11	497.8
3/18/2013 21:20	0.5	1.08	483.2
3/18/2013 21:30	0.5	1.08	483.2
3/18/2013 21:40	0.5	1.08	483.2
3/18/2013 21:50	0.5	1.08	483.2
3/18/2013 22:00	0.5	1.08	483.2
3/18/2013 22:10	0.5	1.08	483.2
3/18/2013 22:20	0.5	1.08	483.2
3/18/2013 22:30	0.5	1.08	483.2
3/18/2013 22:40	0.5	1.08	483.2
3/18/2013 22:50	0.51	1.11	497.8
3/18/2013 23:00	0.51	1.11	497.8

3/18/2013 23:10	0.51	1.11	497.8
3/18/2013 23:20	0.51	1.11	497.8
3/18/2013 23:30	0.5	1.08	483.2
3/18/2013 23:40	0.51	1.11	497.8
3/18/2013 23:50	0.51	1.11	497.8
3/19/2013 0:00	0.51	1.11	497.8
3/19/2013 0:10	0.5	1.08	483.2
3/19/2013 0:20	0.51	1.11	497.8
3/19/2013 0:30	0.5	1.08	483.2
3/19/2013 0:40	0.5	1.08	483.2
3/19/2013 0:50	0.5	1.08	483.2
3/19/2013 1:00	0.5	1.08	483.2
3/19/2013 1:10	0.5	1.08	483.2
3/19/2013 1:20	0.51	1.11	497.8
3/19/2013 1:30	0.51	1.11	497.8
3/19/2013 1:40	0.51	1.11	497.8
3/19/2013 1:50	0.51	1.11	497.8
3/19/2013 2:00	0.51	1.11	497.8
3/19/2013 2:10	0.51	1.11	497.8
3/19/2013 2:20	0.51	1.11	497.8
3/19/2013 2:30	0.51	1.11	497.8
3/19/2013 2:40	0.51	1.11	497.8
3/19/2013 2:50	0.51	1.11	497.8
3/19/2013 3:00	0.5	1.08	483.2
3/19/2013 3:10	0.51	1.11	497.8
3/19/2013 3:20	0.51	1.11	497.8
3/19/2013 3:30	0.51	1.11	497.8
3/19/2013 3:40	0.51	1.11	497.8
3/19/2013 3:50	0.51	1.11	497.8
3/19/2013 4:00	0.51	1.11	497.8
3/19/2013 4:10	0.51	1.11	497.8
3/19/2013 4:20	0.51	1.11	497.8
3/19/2013 4:30	0.51	1.11	497.8
3/19/2013 4:40	0.51	1.11	497.8
3/19/2013 4:50	0.51	1.11	497.8
3/19/2013 5:00	0.51	1.11	497.8
3/19/2013 5:10	0.51	1.11	497.8
3/19/2013 5:20	0.51	1.11	497.8
3/19/2013 5:30	0.51	1.11	497.8
3/19/2013 5:40	0.51	1.11	497.8
3/19/2013 5:50	0.51	1.11	497.8
3/19/2013 6:00	0.51	1.11	497.8
3/19/2013 6:10	0.51	1.11	497.8
3/19/2013 6:20	0.51	1.11	497.8
3/19/2013 6:30	0.51	1.11	497.8
3/19/2013 6:40	0.51	1.11	497.8
3/19/2013 6:50	0.51	1.11	497.8

3/19/2013 7:00	0.51	1.11	497.8
3/19/2013 7:10	0.51	1.11	497.8
3/19/2013 7:20	0.51	1.11	497.8
3/19/2013 7:30	0.51	1.11	497.8
3/19/2013 7:40	0.51	1.11	497.8
3/19/2013 7:50	0.5	1.08	483.2
3/19/2013 8:00	0.51	1.11	497.8
3/19/2013 8:10	0.51	1.11	497.8
3/19/2013 8:20	0.51	1.11	497.8
3/19/2013 8:30	0.51	1.11	497.8
3/19/2013 8:40	0.51	1.11	497.8
3/19/2013 8:50	0.5	1.08	483.2
3/19/2013 9:00	0.51	1.11	497.8
3/19/2013 9:10	0.51	1.11	497.8
3/19/2013 9:20	0.51	1.11	497.8
3/19/2013 9:30	0.51	1.11	497.8
3/19/2013 9:40	0.5	1.08	483.2
3/19/2013 9:50	0.51	1.11	497.8
3/19/2013 10:00	0.51	1.11	497.8
3/19/2013 10:10	0.51	1.11	497.8
3/19/2013 10:20	0.51	1.11	497.8
3/19/2013 10:30	0.5	1.08	483.2
3/19/2013 10:40	0.5	1.08	483.2
3/19/2013 10:50	0.51	1.11	497.8
3/19/2013 11:00	0.5	1.08	483.2
3/19/2013 11:10	0.5	1.08	483.2
3/19/2013 11:20	0.51	1.11	497.8
3/19/2013 11:30	0.51	1.11	497.8
3/19/2013 11:40	0.51	1.11	497.8
3/19/2013 11:50	0.51	1.11	497.8
3/19/2013 12:00	0.51	1.11	497.8
3/19/2013 12:10	0.5	1.08	483.2
3/19/2013 12:20	0.51	1.11	497.8
3/19/2013 12:30	0.51	1.11	497.8
3/19/2013 12:40	0.51	1.11	497.8
3/19/2013 12:50	0.51	1.11	497.8
3/19/2013 13:00	0.51	1.11	497.8
3/19/2013 13:10	0.51	1.11	497.8
3/19/2013 13:20	0.51	1.11	497.8
3/19/2013 13:30	0.51	1.11	497.8
3/19/2013 13:40	0.51	1.11	497.8
3/19/2013 13:50	0.51	1.11	497.8
3/19/2013 14:00	0.5	1.08	483.2
3/19/2013 14:10	0.51	1.11	497.8
3/19/2013 14:20	0.51	1.11	497.8
3/19/2013 14:30	0.51	1.11	497.8
3/19/2013 14:40	0.51	1.11	497.8

3/19/2013 14:50	0.5	1.08	483.2
3/19/2013 15:00	0.51	1.11	497.8
3/19/2013 15:10	0.51	1.11	497.8
3/19/2013 15:20	0.5	1.08	483.2
3/19/2013 15:30	0.51	1.11	497.8
3/19/2013 15:40	0.51	1.11	497.8
3/19/2013 15:50	0.5	1.08	483.2
3/19/2013 16:00	0.51	1.11	497.8
3/19/2013 16:10	0.51	1.11	497.8
3/19/2013 16:20	0.5	1.08	483.2
3/19/2013 16:30	0.5	1.08	483.2
3/19/2013 16:40	0.51	1.11	497.8
3/19/2013 16:50	0.51	1.11	497.8
3/19/2013 17:00	0.51	1.11	497.8
3/19/2013 17:10	0.51	1.11	497.8
3/19/2013 17:20	0.5	1.08	483.2
3/19/2013 17:30	0.5	1.08	483.2
3/19/2013 17:40	0.51	1.11	497.8
3/19/2013 17:50	0.51	1.11	497.8
3/19/2013 18:00	0.5	1.08	483.2
3/19/2013 18:10	0.5	1.08	483.2
3/19/2013 18:20	0.5	1.08	483.2
3/19/2013 18:30	0.5	1.08	483.2
3/19/2013 18:40	0.51	1.11	497.8
3/19/2013 18:50	0.5	1.08	483.2
3/19/2013 19:00	0.51	1.11	497.8
3/19/2013 19:10	0.5	1.08	483.2
3/19/2013 19:20	0.5	1.08	483.2
3/19/2013 19:30	0.5	1.08	483.2
3/19/2013 19:40	0.51	1.11	497.8
3/19/2013 19:50	0.51	1.11	497.8
3/19/2013 20:00	0.51	1.11	497.8
3/19/2013 20:10	0.51	1.11	497.8
3/19/2013 20:20	0.51	1.11	497.8
3/19/2013 20:30	0.51	1.11	497.8
3/19/2013 20:40	0.51	1.11	497.8
3/19/2013 20:50	0.51	1.11	497.8
3/19/2013 21:00	0.51	1.11	497.8
3/19/2013 21:10	0.51	1.11	497.8
3/19/2013 21:20	0.51	1.11	497.8
3/19/2013 21:30	0.51	1.11	497.8
3/19/2013 21:40	0.5	1.08	483.2
3/19/2013 21:50	0.51	1.11	497.8
3/19/2013 22:00	0.5	1.08	483.2
3/19/2013 22:10	0.51	1.11	497.8
3/19/2013 22:20	0.5	1.08	483.2
3/19/2013 22:30	0.51	1.11	497.8

3/19/2013 22:40	0.51	1.11	497.8
3/19/2013 22:50	0.51	1.11	497.8
3/19/2013 23:00	0.5	1.08	483.2
3/19/2013 23:10	0.5	1.08	483.2
3/19/2013 23:20	0.51	1.11	497.8
3/19/2013 23:30	0.51	1.11	497.8
3/19/2013 23:40	0.51	1.11	497.8
3/19/2013 23:50	0.51	1.11	497.8
3/20/2013 0:00	0.5	1.08	483.2
3/20/2013 0:10	0.51	1.11	497.8
3/20/2013 0:20	0.51	1.11	497.8
3/20/2013 0:30	0.51	1.11	497.8
3/20/2013 0:40	0.51	1.11	497.8
3/20/2013 0:50	0.51	1.11	497.8
3/20/2013 1:00	0.51	1.11	497.8
3/20/2013 1:10	0.51	1.11	497.8
3/20/2013 1:20	0.5	1.08	483.2
3/20/2013 1:30	0.5	1.08	483.2
3/20/2013 1:40	0.5	1.08	483.2
3/20/2013 1:50	0.51	1.11	497.8
3/20/2013 2:00	0.51	1.11	497.8
3/20/2013 2:10	0.51	1.11	497.8
3/20/2013 2:20	0.5	1.08	483.2
3/20/2013 2:30	0.5	1.08	483.2
3/20/2013 2:40	0.51	1.11	497.8
3/20/2013 2:50	0.5	1.08	483.2
3/20/2013 3:00	0.51	1.11	497.8
3/20/2013 3:10	0.51	1.11	497.8
3/20/2013 3:20	0.51	1.11	497.8
3/20/2013 3:30	0.51	1.11	497.8
3/20/2013 3:40	0.51	1.11	497.8
3/20/2013 3:50	0.5	1.08	483.2
3/20/2013 4:00	0.5	1.08	483.2
3/20/2013 4:10	0.5	1.08	483.2
3/20/2013 4:20	0.51	1.11	497.8
3/20/2013 4:30	0.51	1.11	497.8
3/20/2013 4:40	0.51	1.11	497.8
3/20/2013 4:50	0.51	1.11	497.8
3/20/2013 5:00	0.51	1.11	497.8
3/20/2013 5:10	0.51	1.11	497.8
3/20/2013 5:20	0.51	1.11	497.8
3/20/2013 5:30	0.51	1.11	497.8
3/20/2013 5:40	0.51	1.11	497.8
3/20/2013 5:50	0.51	1.11	497.8
3/20/2013 6:00	0.51	1.11	497.8
3/20/2013 6:10	0.51	1.11	497.8
3/20/2013 6:20	0.51	1.11	497.8

3/20/2013 6:30	0.5	1.08	483.2
3/20/2013 6:40	0.51	1.11	497.8
3/20/2013 6:50	0.51	1.11	497.8
3/20/2013 7:00	0.51	1.11	497.8
3/20/2013 7:10	0.51	1.11	497.8
3/20/2013 7:20	0.51	1.11	497.8
3/20/2013 7:30	0.51	1.11	497.8
3/20/2013 7:40	0.51	1.11	497.8
3/20/2013 7:50	0.51	1.11	497.8
3/20/2013 8:00	0.51	1.11	497.8
3/20/2013 8:10	0.51	1.11	497.8
3/20/2013 8:20	0.5	1.08	483.2
3/20/2013 8:30	0.51	1.11	497.8
3/20/2013 8:40	0.51	1.11	497.8
3/20/2013 8:50	0.51	1.11	497.8
3/20/2013 9:00	0.5	1.08	483.2
3/20/2013 9:10	0.51	1.11	497.8
3/20/2013 9:20	0.51	1.11	497.8
3/20/2013 9:30	0.51	1.11	497.8
3/20/2013 9:40	0.51	1.11	497.8
3/20/2013 9:50	0.51	1.11	497.8
3/20/2013 10:00	0.51	1.11	497.8
3/20/2013 10:10	0.51	1.11	497.8
3/20/2013 10:20	0.51	1.11	497.8
3/20/2013 10:30	0.51	1.11	497.8
3/20/2013 10:40	0.51	1.11	497.8
3/20/2013 10:50	0.51	1.11	497.8
3/20/2013 11:00	0.51	1.11	497.8
3/20/2013 11:10	0.51	1.11	497.8
3/20/2013 11:20	0.51	1.11	497.8
3/20/2013 11:30	0.51	1.11	497.8
3/20/2013 11:40	0.51	1.11	497.8
3/20/2013 11:50	0.5	1.08	483.2
3/20/2013 12:00	0.51	1.11	497.8
3/20/2013 12:10	0.51	1.11	497.8
3/20/2013 12:20	0.51	1.11	497.8
3/20/2013 12:30	0.5	1.08	483.2
3/20/2013 12:40	0.51	1.11	497.8
3/20/2013 12:50	0.51	1.11	497.8
3/20/2013 13:00	0.5	1.08	483.2
3/20/2013 13:10	0.51	1.11	497.8
3/20/2013 13:20	0.51	1.11	497.8
3/20/2013 13:30	0.51	1.11	497.8
3/20/2013 13:40	0.51	1.11	497.8
3/20/2013 13:50	0.51	1.11	497.8
3/20/2013 14:00	0.51	1.11	497.8
3/20/2013 14:10	0.51	1.11	497.8

3/20/2013 14:20	0.51	1.11	497.8
3/20/2013 14:30	0.51	1.11	497.8
3/20/2013 14:40	0.51	1.11	497.8
3/20/2013 14:50	0.51	1.11	497.8
3/20/2013 15:00	0.51	1.11	497.8
3/20/2013 15:10	0.51	1.11	497.8
3/20/2013 15:20	0.51	1.11	497.8
3/20/2013 15:30	0.51	1.11	497.8
3/20/2013 15:40	0.51	1.11	497.8
3/20/2013 15:50	0.51	1.11	497.8
3/20/2013 16:00	0.51	1.11	497.8
3/20/2013 16:10	0.51	1.11	497.8
3/20/2013 16:20	0.51	1.11	497.8
3/20/2013 16:30	0.51	1.11	497.8
3/20/2013 16:40	0.51	1.11	497.8
3/20/2013 16:50	0.5	1.08	483.2
3/20/2013 17:00	0.51	1.11	497.8
3/20/2013 17:10	0.5	1.08	483.2
3/20/2013 17:20	0.5	1.08	483.2
3/20/2013 17:30	0.51	1.11	497.8
3/20/2013 17:40	0.51	1.11	497.8
3/20/2013 17:50	0.51	1.11	497.8
3/20/2013 18:00	0.51	1.11	497.8
3/20/2013 18:10	0.51	1.11	497.8
3/20/2013 18:20	0.51	1.11	497.8
3/20/2013 18:30	0.51	1.11	497.8
3/20/2013 18:40	0.5	1.08	483.2
3/20/2013 18:50	0.51	1.11	497.8
3/20/2013 19:00	0.51	1.11	497.8
3/20/2013 19:10	0.51	1.11	497.8
3/20/2013 19:20	0.5	1.08	483.2
3/20/2013 19:30	0.51	1.11	497.8
3/20/2013 19:40	0.51	1.11	497.8
3/20/2013 19:50	0.51	1.11	497.8
3/20/2013 20:00	0.51	1.11	497.8
3/20/2013 20:10	0.5	1.08	483.2
3/20/2013 20:20	0.51	1.11	497.8
3/20/2013 20:30	0.5	1.08	483.2
3/20/2013 20:40	0.51	1.11	497.8
3/20/2013 20:50	0.51	1.11	497.8
3/20/2013 21:00	0.51	1.11	497.8
3/20/2013 21:10	0.51	1.11	497.8
3/20/2013 21:20	0.51	1.11	497.8
3/20/2013 21:30	0.51	1.11	497.8
3/20/2013 21:40	0.51	1.11	497.8
3/20/2013 21:50	0.51	1.11	497.8
3/20/2013 22:00	0.51	1.11	497.8

3/20/2013 22:10	0.51	1.11	497.8
3/20/2013 22:20	0.51	1.11	497.8
3/20/2013 22:30	0.5	1.08	483.2
3/20/2013 22:40	0.51	1.11	497.8
3/20/2013 22:50	0.51	1.11	497.8
3/20/2013 23:00	0.51	1.11	497.8
3/20/2013 23:10	0.5	1.08	483.2
3/20/2013 23:20	0.51	1.11	497.8
3/20/2013 23:30	0.51	1.11	497.8
3/20/2013 23:40	0.51	1.11	497.8
3/20/2013 23:50	0.5	1.08	483.2
3/21/2013 0:00	0.5	1.08	483.2
3/21/2013 0:10	0.51	1.11	497.8
3/21/2013 0:20	0.51	1.11	497.8
3/21/2013 0:30	0.51	1.11	497.8
3/21/2013 0:40	0.5	1.08	483.2
3/21/2013 0:50	0.51	1.11	497.8
3/21/2013 1:00	0.5	1.08	483.2
3/21/2013 1:10	0.51	1.11	497.8
3/21/2013 1:20	0.51	1.11	497.8
3/21/2013 1:30	0.51	1.11	497.8
3/21/2013 1:40	0.5	1.08	483.2
3/21/2013 1:50	0.51	1.11	497.8
3/21/2013 2:00	0.51	1.11	497.8
3/21/2013 2:10	0.51	1.11	497.8
3/21/2013 2:20	0.51	1.11	497.8
3/21/2013 2:30	0.5	1.08	483.2
3/21/2013 2:40	0.51	1.11	497.8
3/21/2013 2:50	0.51	1.11	497.8
3/21/2013 3:00	0.51	1.11	497.8
3/21/2013 3:10	0.51	1.11	497.8
3/21/2013 3:20	0.51	1.11	497.8
3/21/2013 3:30	0.51	1.11	497.8
3/21/2013 3:40	0.51	1.11	497.8
3/21/2013 3:50	0.51	1.11	497.8
3/21/2013 4:00	0.51	1.11	497.8
3/21/2013 4:10	0.51	1.11	497.8
3/21/2013 4:20	0.51	1.11	497.8
3/21/2013 4:30	0.51	1.11	497.8
3/21/2013 4:40	0.51	1.11	497.8
3/21/2013 4:50	0.51	1.11	497.8
3/21/2013 5:00	0.51	1.11	497.8
3/21/2013 5:10	0.51	1.11	497.8
3/21/2013 5:20	0.5	1.08	483.2
3/21/2013 5:30	0.5	1.08	483.2
3/21/2013 5:40	0.51	1.11	497.8
3/21/2013 5:50	0.5	1.08	483.2

3/21/2013 6:00	0.51	1.11	497.8
3/21/2013 6:10	0.51	1.11	497.8
3/21/2013 6:20	0.51	1.11	497.8
3/21/2013 6:30	0.51	1.11	497.8
3/21/2013 6:40	0.51	1.11	497.8
3/21/2013 6:50	0.51	1.11	497.8
3/21/2013 7:00	0.51	1.11	497.8
3/21/2013 7:10	0.5	1.08	483.2
3/21/2013 7:20	0.5	1.08	483.2
3/21/2013 7:30	0.5	1.08	483.2
3/21/2013 7:40	0.51	1.11	497.8
3/21/2013 7:50	0.5	1.08	483.2
3/21/2013 8:00	0.51	1.11	497.8
3/21/2013 8:10	0.51	1.11	497.8
3/21/2013 8:20	0.51	1.11	497.8
3/21/2013 8:30	0.51	1.11	497.8
3/21/2013 8:40	0.5	1.08	483.2
3/21/2013 8:50	0.51	1.11	497.8
3/21/2013 9:00	0.5	1.08	483.2
3/21/2013 9:10	0.51	1.11	497.8
3/21/2013 9:20	0.51	1.11	497.8
3/21/2013 9:30	0.51	1.11	497.8
3/21/2013 9:40	0.5	1.08	483.2
3/21/2013 9:50	0.51	1.11	497.8
3/21/2013 10:00	0.51	1.11	497.8
3/21/2013 10:10	0.51	1.11	497.8
3/21/2013 10:20	0.51	1.11	497.8
3/21/2013 10:30	0.51	1.11	497.8
3/21/2013 10:40	0.5	1.08	483.2
3/21/2013 10:50	0.51	1.11	497.8
3/21/2013 11:00	0.51	1.11	497.8
3/21/2013 11:10	0.51	1.11	497.8
3/21/2013 11:20	0.5	1.08	483.2
3/21/2013 11:30	0.5	1.08	483.2
3/21/2013 11:40	0.5	1.08	483.2
3/21/2013 11:50	0.5	1.08	483.2
3/21/2013 12:00	0.51	1.11	497.8
3/21/2013 12:10	0.51	1.11	497.8
3/21/2013 12:20	0.51	1.11	497.8
3/21/2013 12:30	0.51	1.11	497.8
3/21/2013 12:40	0.51	1.11	497.8
3/21/2013 12:50	0.51	1.11	497.8
3/21/2013 13:00	0.5	1.08	483.2
3/21/2013 13:10	0.51	1.11	497.8
3/21/2013 13:20	0.5	1.08	483.2
3/21/2013 13:30	0.5	1.08	483.2
3/21/2013 13:40	0.51	1.11	497.8

3/21/2013 13:50	0.51	1.11	497.8
3/21/2013 14:00	0.51	1.11	497.8
3/21/2013 14:10	0.51	1.11	497.8
3/21/2013 14:20	0.51	1.11	497.8
3/21/2013 14:30	0.51	1.11	497.8
3/21/2013 14:40	0.51	1.11	497.8
3/21/2013 14:50	0.51	1.11	497.8
3/21/2013 15:00	0.5	1.08	483.2
3/21/2013 15:10	0.51	1.11	497.8
3/21/2013 15:20	0.5	1.08	483.2
3/21/2013 15:30	0.5	1.08	483.2
3/21/2013 15:40	0.51	1.11	497.8
3/21/2013 15:50	0.51	1.11	497.8
3/21/2013 16:00	0.5	1.08	483.2
3/21/2013 16:10	0.51	1.11	497.8
3/21/2013 16:20	0.5	1.08	483.2
3/21/2013 16:30	0.5	1.08	483.2
3/21/2013 16:40	0.5	1.08	483.2
3/21/2013 16:50	0.5	1.08	483.2
3/21/2013 17:00	0.5	1.08	483.2
3/21/2013 17:10	0.5	1.08	483.2
3/21/2013 17:20	0.51	1.11	497.8
3/21/2013 17:30	0.51	1.11	497.8
3/21/2013 17:40	0.51	1.11	497.8
3/21/2013 17:50	0.5	1.08	483.2
3/21/2013 18:00	0.51	1.11	497.8
3/21/2013 18:10	0.51	1.11	497.8
3/21/2013 18:20	0.51	1.11	497.8
3/21/2013 18:30	0.51	1.11	497.8
3/21/2013 18:40	0.5	1.08	483.2
3/21/2013 18:50	0.51	1.11	497.8
3/21/2013 19:00	0.51	1.11	497.8
3/21/2013 19:10	0.51	1.11	497.8
3/21/2013 19:20	0.5	1.08	483.2
3/21/2013 19:30	0.51	1.11	497.8
3/21/2013 19:40	0.5	1.08	483.2
3/21/2013 19:50	0.5	1.08	483.2
3/21/2013 20:00	0.51	1.11	497.8
3/21/2013 20:10	0.51	1.11	497.8
3/21/2013 20:20	0.51	1.11	497.8
3/21/2013 20:30	0.51	1.11	497.8
3/21/2013 20:40	0.5	1.08	483.2
3/21/2013 20:50	0.5	1.08	483.2
3/21/2013 21:00	0.51	1.11	497.8
3/21/2013 21:10	0.5	1.08	483.2
3/21/2013 21:20	0.5	1.08	483.2
3/21/2013 21:30	0.5	1.08	483.2

3/21/2013 21:40	0.5	1.08	483.2
3/21/2013 21:50	0.5	1.08	483.2
3/21/2013 22:00	0.51	1.11	497.8
3/21/2013 22:10	0.51	1.11	497.8
3/21/2013 22:20	0.51	1.11	497.8
3/21/2013 22:30	0.5	1.08	483.2
3/21/2013 22:40	0.51	1.11	497.8
3/21/2013 22:50	0.5	1.08	483.2
3/21/2013 23:00	0.5	1.08	483.2
3/21/2013 23:10	0.5	1.08	483.2
3/21/2013 23:20	0.5	1.08	483.2
3/21/2013 23:30	0.5	1.08	483.2
3/21/2013 23:40	0.5	1.08	483.2
3/21/2013 23:50	0.5	1.08	483.2
3/22/2013 0:00	0.5	1.08	483.2
3/22/2013 0:10	0.5	1.08	483.2
3/22/2013 0:20	0.5	1.08	483.2
3/22/2013 0:30	0.5	1.08	483.2
3/22/2013 0:40	0.51	1.11	497.8
3/22/2013 0:50	0.51	1.11	497.8
3/22/2013 1:00	0.51	1.11	497.8
3/22/2013 1:10	0.51	1.11	497.8
3/22/2013 1:20	0.5	1.08	483.2
3/22/2013 1:30	0.5	1.08	483.2
3/22/2013 1:40	0.51	1.11	497.8
3/22/2013 1:50	0.5	1.08	483.2
3/22/2013 2:00	0.5	1.08	483.2
3/22/2013 2:10	0.5	1.08	483.2
3/22/2013 2:20	0.51	1.11	497.8
3/22/2013 2:30	0.5	1.08	483.2
3/22/2013 2:40	0.51	1.11	497.8
3/22/2013 2:50	0.5	1.08	483.2
3/22/2013 3:00	0.5	1.08	483.2
3/22/2013 3:10	0.5	1.08	483.2
3/22/2013 3:20	0.5	1.08	483.2
3/22/2013 3:30	0.5	1.08	483.2
3/22/2013 3:40	0.51	1.11	497.8
3/22/2013 3:50	0.5	1.08	483.2
3/22/2013 4:00	0.51	1.11	497.8
3/22/2013 4:10	0.51	1.11	497.8
3/22/2013 4:20	0.5	1.08	483.2
3/22/2013 4:30	0.51	1.11	497.8
3/22/2013 4:40	0.5	1.08	483.2
3/22/2013 4:50	0.51	1.11	497.8
3/22/2013 5:00	0.5	1.08	483.2
3/22/2013 5:10	0.5	1.08	483.2
3/22/2013 5:20	0.5	1.08	483.2

3/22/2013 5:30	0.51	1.11	497.8
3/22/2013 5:40	0.5	1.08	483.2
3/22/2013 5:50	0.51	1.11	497.8
3/22/2013 6:00	0.51	1.11	497.8
3/22/2013 6:10	0.51	1.11	497.8
3/22/2013 6:20	0.5	1.08	483.2
3/22/2013 6:30	0.51	1.11	497.8
3/22/2013 6:40	0.51	1.11	497.8
3/22/2013 6:50	0.51	1.11	497.8
3/22/2013 7:00	0.5	1.08	483.2
3/22/2013 7:10	0.5	1.08	483.2
3/22/2013 7:20	0.51	1.11	497.8
3/22/2013 7:30	0.51	1.11	497.8
3/22/2013 7:40	0.5	1.08	483.2
3/22/2013 7:50	0.51	1.11	497.8
3/22/2013 8:00	0.51	1.11	497.8
3/22/2013 8:10	0.5	1.08	483.2
3/22/2013 8:20	0.51	1.11	497.8
3/22/2013 8:30	0.51	1.11	497.8
3/22/2013 8:40	0.51	1.11	497.8
3/22/2013 8:50	0.51	1.11	497.8
3/22/2013 9:00	0.51	1.11	497.8
3/22/2013 9:10	0.5	1.08	483.2
3/22/2013 9:20	0.51	1.11	497.8
3/22/2013 9:30	0.5	1.08	483.2
3/22/2013 9:40	0.51	1.11	497.8
3/22/2013 9:50	0.51	1.11	497.8
3/22/2013 10:00	0.51	1.11	497.8
3/22/2013 10:10	0.5	1.08	483.2
3/22/2013 10:20	0.51	1.11	497.8
3/22/2013 10:30	0.51	1.11	497.8
3/22/2013 10:40	0.51	1.11	497.8
3/22/2013 10:50	0.51	1.11	497.8
3/22/2013 11:00	0.51	1.11	497.8
3/22/2013 11:10	0.5	1.08	483.2
3/22/2013 11:20	0.51	1.11	497.8
3/22/2013 11:30	0.51	1.11	497.8
3/22/2013 11:40	0.51	1.11	497.8
3/22/2013 11:50	0.51	1.11	497.8
3/22/2013 12:00	0.51	1.11	497.8
3/22/2013 12:10	0.51	1.11	497.8
3/22/2013 12:20	0.51	1.11	497.8
3/22/2013 12:30	0.51	1.11	497.8
3/22/2013 12:40	0.51	1.11	497.8
3/22/2013 12:50	0.5	1.08	483.2
3/22/2013 13:00	0.51	1.11	497.8
3/22/2013 13:10	0.51	1.11	497.8

3/22/2013 13:20	0.51	1.11	497.8
3/22/2013 13:30	0.51	1.11	497.8
3/22/2013 13:40	0.51	1.11	497.8
3/22/2013 13:50	0.51	1.11	497.8
3/22/2013 14:00	0.51	1.11	497.8
3/22/2013 14:10	0.51	1.11	497.8
3/22/2013 14:20	0.51	1.11	497.8
3/22/2013 14:30	0.5	1.08	483.2
3/22/2013 14:40	0.51	1.11	497.8
3/22/2013 14:50	0.51	1.11	497.8
3/22/2013 15:00	0.51	1.11	497.8
3/22/2013 15:10	0.5	1.08	483.2
3/22/2013 15:20	0.51	1.11	497.8
3/22/2013 15:30	0.5	1.08	483.2
3/22/2013 15:40	0.5	1.08	483.2
3/22/2013 15:50	0.51	1.11	497.8
3/22/2013 16:00	0.51	1.11	497.8
3/22/2013 16:10	0.51	1.11	497.8
3/22/2013 16:20	0.51	1.11	497.8
3/22/2013 16:30	0.5	1.08	483.2
3/22/2013 16:40	0.51	1.11	497.8
3/22/2013 16:50	0.51	1.11	497.8
3/22/2013 17:00	0.5	1.08	483.2
3/22/2013 17:10	0.5	1.08	483.2
3/22/2013 17:20	0.51	1.11	497.8
3/22/2013 17:30	0.51	1.11	497.8
3/22/2013 17:40	0.51	1.11	497.8
3/22/2013 17:50	0.51	1.11	497.8
3/22/2013 18:00	0.51	1.11	497.8
3/22/2013 18:10	0.51	1.11	497.8
3/22/2013 18:20	0.5	1.08	483.2
3/22/2013 18:30	0.51	1.11	497.8
3/22/2013 18:40	0.51	1.11	497.8
3/22/2013 18:50	0.51	1.11	497.8
3/22/2013 19:00	0.51	1.11	497.8
3/22/2013 19:10	0.51	1.11	497.8
3/22/2013 19:20	0.5	1.08	483.2
3/22/2013 19:30	0.51	1.11	497.8
3/22/2013 19:40	0.51	1.11	497.8
3/22/2013 19:50	0.51	1.11	497.8
3/22/2013 20:00	0.5	1.08	483.2
3/22/2013 20:10	0.5	1.08	483.2
3/22/2013 20:20	0.5	1.08	483.2
3/22/2013 20:30	0.5	1.08	483.2
3/22/2013 20:40	0.51	1.11	497.8
3/22/2013 20:50	0.5	1.08	483.2
3/22/2013 21:00	0.51	1.11	497.8

3/22/2013 21:10	0.5	1.08	483.2
3/22/2013 21:20	0.5	1.08	483.2
3/22/2013 21:30	0.51	1.11	497.8
3/22/2013 21:40	0.5	1.08	483.2
3/22/2013 21:50	0.5	1.08	483.2
3/22/2013 22:00	0.5	1.08	483.2
3/22/2013 22:10	0.51	1.11	497.8
3/22/2013 22:20	0.5	1.08	483.2
3/22/2013 22:30	0.5	1.08	483.2
3/22/2013 22:40	0.51	1.11	497.8
3/22/2013 22:50	0.51	1.11	497.8
3/22/2013 23:00	0.51	1.11	497.8
3/22/2013 23:10	0.51	1.11	497.8
3/22/2013 23:20	0.5	1.08	483.2
3/22/2013 23:30	0.5	1.08	483.2
3/22/2013 23:40	0.51	1.11	497.8
3/22/2013 23:50	0.51	1.11	497.8
3/23/2013 0:00	0.5	1.08	483.2
3/23/2013 0:10	0.5	1.08	483.2
3/23/2013 0:20	0.5	1.08	483.2
3/23/2013 0:30	0.51	1.11	497.8
3/23/2013 0:40	0.51	1.11	497.8
3/23/2013 0:50	0.51	1.11	497.8
3/23/2013 1:00	0.51	1.11	497.8
3/23/2013 1:10	0.5	1.08	483.2
3/23/2013 1:20	0.51	1.11	497.8
3/23/2013 1:30	0.5	1.08	483.2
3/23/2013 1:40	0.51	1.11	497.8
3/23/2013 1:50	0.5	1.08	483.2
3/23/2013 2:00	0.5	1.08	483.2
3/23/2013 2:10	0.5	1.08	483.2
3/23/2013 2:20	0.51	1.11	497.8
3/23/2013 2:30	0.51	1.11	497.8
3/23/2013 2:40	0.51	1.11	497.8
3/23/2013 2:50	0.5	1.08	483.2
3/23/2013 3:00	0.51	1.11	497.8
3/23/2013 3:10	0.51	1.11	497.8
3/23/2013 3:20	0.5	1.08	483.2
3/23/2013 3:30	0.51	1.11	497.8
3/23/2013 3:40	0.51	1.11	497.8
3/23/2013 3:50	0.5	1.08	483.2
3/23/2013 4:00	0.5	1.08	483.2
3/23/2013 4:10	0.51	1.11	497.8
3/23/2013 4:20	0.51	1.11	497.8
3/23/2013 4:30	0.5	1.08	483.2
3/23/2013 4:40	0.5	1.08	483.2
3/23/2013 4:50	0.5	1.08	483.2

3/23/2013 5:00	0.51	1.11	497.8
3/23/2013 5:10	0.51	1.11	497.8
3/23/2013 5:20	0.51	1.11	497.8
3/23/2013 5:30	0.51	1.11	497.8
3/23/2013 5:40	0.5	1.08	483.2
3/23/2013 5:50	0.51	1.11	497.8
3/23/2013 6:00	0.51	1.11	497.8
3/23/2013 6:10	0.5	1.08	483.2
3/23/2013 6:20	0.5	1.08	483.2
3/23/2013 6:30	0.51	1.11	497.8
3/23/2013 6:40	0.51	1.11	497.8
3/23/2013 6:50	0.51	1.11	497.8
3/23/2013 7:00	0.51	1.11	497.8
3/23/2013 7:10	0.5	1.08	483.2
3/23/2013 7:20	0.5	1.08	483.2
3/23/2013 7:30	0.5	1.08	483.2
3/23/2013 7:40	0.51	1.11	497.8
3/23/2013 7:50	0.51	1.11	497.8
3/23/2013 8:00	0.51	1.11	497.8
3/23/2013 8:10	0.5	1.08	483.2
3/23/2013 8:20	0.5	1.08	483.2
3/23/2013 8:30	0.5	1.08	483.2
3/23/2013 8:40	0.5	1.08	483.2
3/23/2013 8:50	0.51	1.11	497.8
3/23/2013 9:00	0.5	1.08	483.2
3/23/2013 9:10	0.51	1.11	497.8
3/23/2013 9:20	0.5	1.08	483.2
3/23/2013 9:30	0.5	1.08	483.2
3/23/2013 9:40	0.51	1.11	497.8
3/23/2013 9:50	0.5	1.08	483.2
3/23/2013 10:00	0.51	1.11	497.8
3/23/2013 10:10	0.5	1.08	483.2
3/23/2013 10:20	0.51	1.11	497.8
3/23/2013 10:30	0.51	1.11	497.8
3/23/2013 10:40	0.5	1.08	483.2
3/23/2013 10:50	0.5	1.08	483.2
3/23/2013 11:00	0.5	1.08	483.2
3/23/2013 11:10	0.5	1.08	483.2
3/23/2013 11:20	0.51	1.11	497.8
3/23/2013 11:30	0.51	1.11	497.8
3/23/2013 11:40	0.51	1.11	497.8
3/23/2013 11:50	0.51	1.11	497.8
3/23/2013 12:00	0.51	1.11	497.8
3/23/2013 12:10	0.51	1.11	497.8
3/23/2013 12:20	0.51	1.11	497.8
3/23/2013 12:30	0.5	1.08	483.2
3/23/2013 12:40	0.5	1.08	483.2

3/23/2013 12:50	0.51	1.11	497.8
3/23/2013 13:00	0.51	1.11	497.8
3/23/2013 13:10	0.5	1.08	483.2
3/23/2013 13:20	0.5	1.08	483.2
3/23/2013 13:30	0.51	1.11	497.8
3/23/2013 13:40	0.51	1.11	497.8
3/23/2013 13:50	0.51	1.11	497.8
3/23/2013 14:00	0.51	1.11	497.8
3/23/2013 14:10	0.51	1.11	497.8
3/23/2013 14:20	0.51	1.11	497.8
3/23/2013 14:30	0.5	1.08	483.2
3/23/2013 14:40	0.51	1.11	497.8
3/23/2013 14:50	0.51	1.11	497.8
3/23/2013 15:00	0.51	1.11	497.8
3/23/2013 15:10	0.51	1.11	497.8
3/23/2013 15:20	0.5	1.08	483.2
3/23/2013 15:30	0.51	1.11	497.8
3/23/2013 15:40	0.51	1.11	497.8
3/23/2013 15:50	0.5	1.08	483.2
3/23/2013 16:00	0.5	1.08	483.2
3/23/2013 16:10	0.51	1.11	497.8
3/23/2013 16:20	0.5	1.08	483.2
3/23/2013 16:30	0.51	1.11	497.8
3/23/2013 16:40	0.5	1.08	483.2
3/23/2013 16:50	0.51	1.11	497.8
3/23/2013 17:00	0.5	1.08	483.2
3/23/2013 17:10	0.51	1.11	497.8
3/23/2013 17:20	0.51	1.11	497.8
3/23/2013 17:30	0.5	1.08	483.2
3/23/2013 17:40	0.5	1.08	483.2
3/23/2013 17:50	0.51	1.11	497.8
3/23/2013 18:00	0.51	1.11	497.8
3/23/2013 18:10	0.51	1.11	497.8
3/23/2013 18:20	0.5	1.08	483.2
3/23/2013 18:30	0.51	1.11	497.8
3/23/2013 18:40	0.51	1.11	497.8
3/23/2013 18:50	0.51	1.11	497.8
3/23/2013 19:00	0.51	1.11	497.8
3/23/2013 19:10	0.5	1.08	483.2
3/23/2013 19:20	0.51	1.11	497.8
3/23/2013 19:30	0.51	1.11	497.8
3/23/2013 19:40	0.51	1.11	497.8
3/23/2013 19:50	0.51	1.11	497.8
3/23/2013 20:00	0.5	1.08	483.2
3/23/2013 20:10	0.51	1.11	497.8
3/23/2013 20:20	0.51	1.11	497.8
3/23/2013 20:30	0.51	1.11	497.8

3/23/2013 20:40	0.51	1.11	497.8
3/23/2013 20:50	0.51	1.11	497.8
3/23/2013 21:00	0.51	1.11	497.8
3/23/2013 21:10	0.51	1.11	497.8
3/23/2013 21:20	0.5	1.08	483.2
3/23/2013 21:30	0.5	1.08	483.2
3/23/2013 21:40	0.5	1.08	483.2
3/23/2013 21:50	0.5	1.08	483.2
3/23/2013 22:00	0.51	1.11	497.8
3/23/2013 22:10	0.5	1.08	483.2
3/23/2013 22:20	0.51	1.11	497.8
3/23/2013 22:30	0.5	1.08	483.2
3/23/2013 22:40	0.5	1.08	483.2
3/23/2013 22:50	0.5	1.08	483.2
3/23/2013 23:00	0.51	1.11	497.8
3/23/2013 23:10	0.5	1.08	483.2
3/23/2013 23:20	0.5	1.08	483.2
3/23/2013 23:30	0.51	1.11	497.8
3/23/2013 23:40	0.51	1.11	497.8
3/23/2013 23:50	0.5	1.08	483.2
3/24/2013 0:00	0.51	1.11	497.8
3/24/2013 0:10	0.5	1.08	483.2
3/24/2013 0:20	0.51	1.11	497.8
3/24/2013 0:30	0.5	1.08	483.2
3/24/2013 0:40	0.5	1.08	483.2
3/24/2013 0:50	0.51	1.11	497.8
3/24/2013 1:00	0.51	1.11	497.8
3/24/2013 1:10	0.51	1.11	497.8
3/24/2013 1:20	0.51	1.11	497.8
3/24/2013 1:30	0.5	1.08	483.2
3/24/2013 1:40	0.51	1.11	497.8
3/24/2013 1:50	0.51	1.11	497.8
3/24/2013 2:00	0.5	1.08	483.2
3/24/2013 2:10	0.5	1.08	483.2
3/24/2013 2:20	0.5	1.08	483.2
3/24/2013 2:30	0.5	1.08	483.2
3/24/2013 2:40	0.51	1.11	497.8
3/24/2013 2:50	0.51	1.11	497.8
3/24/2013 3:00	0.51	1.11	497.8
3/24/2013 3:10	0.51	1.11	497.8
3/24/2013 3:20	0.51	1.11	497.8
3/24/2013 3:30	0.51	1.11	497.8
3/24/2013 3:40	0.5	1.08	483.2
3/24/2013 3:50	0.51	1.11	497.8
3/24/2013 4:00	0.51	1.11	497.8
3/24/2013 4:10	0.5	1.08	483.2
3/24/2013 4:20	0.51	1.11	497.8

3/24/2013 4:30	0.51	1.11	497.8
3/24/2013 4:40	0.51	1.11	497.8
3/24/2013 4:50	0.51	1.11	497.8
3/24/2013 5:00	0.51	1.11	497.8
3/24/2013 5:10	0.51	1.11	497.8
3/24/2013 5:20	0.51	1.11	497.8
3/24/2013 5:30	0.51	1.11	497.8
3/24/2013 5:40	0.51	1.11	497.8
3/24/2013 5:50	0.51	1.11	497.8
3/24/2013 6:00	0.51	1.11	497.8
3/24/2013 6:10	0.51	1.11	497.8
3/24/2013 6:20	0.51	1.11	497.8
3/24/2013 6:30	0.51	1.11	497.8
3/24/2013 6:40	0.51	1.11	497.8
3/24/2013 6:50	0.51	1.11	497.8
3/24/2013 7:00	0.51	1.11	497.8
3/24/2013 7:10	0.51	1.11	497.8
3/24/2013 7:20	0.51	1.11	497.8
3/24/2013 7:30	0.51	1.11	497.8
3/24/2013 7:40	0.51	1.11	497.8
3/24/2013 7:50	0.51	1.11	497.8
3/24/2013 8:00	0.51	1.11	497.8
3/24/2013 8:10	0.51	1.11	497.8
3/24/2013 8:20	0.51	1.11	497.8
3/24/2013 8:30	0.51	1.11	497.8
3/24/2013 8:40	0.51	1.11	497.8
3/24/2013 8:50	0.51	1.11	497.8
3/24/2013 9:00	0.51	1.11	497.8
3/24/2013 9:10	0.51	1.11	497.8
3/24/2013 9:20	0.51	1.11	497.8
3/24/2013 9:30	0.51	1.11	497.8
3/24/2013 9:40	0.51	1.11	497.8
3/24/2013 9:50	0.51	1.11	497.8
3/24/2013 10:00	0.51	1.11	497.8
3/24/2013 10:10	0.51	1.11	497.8
3/24/2013 10:20	0.51	1.11	497.8
3/24/2013 10:30	0.51	1.11	497.8
3/24/2013 10:40	0.51	1.11	497.8
3/24/2013 10:50	0.51	1.11	497.8
3/24/2013 11:00	0.51	1.11	497.8
3/24/2013 11:10	0.51	1.11	497.8
3/24/2013 11:20	0.51	1.11	497.8
3/24/2013 11:30	0.51	1.11	497.8
3/24/2013 11:40	0.51	1.11	497.8
3/24/2013 11:50	0.51	1.11	497.8
3/24/2013 12:00	0.51	1.11	497.8
3/24/2013 12:10	0.51	1.11	497.8

3/24/2013 12:20	0.51	1.11	497.8
3/24/2013 12:30	0.51	1.11	497.8
3/24/2013 12:40	0.51	1.11	497.8
3/24/2013 12:50	0.51	1.11	497.8
3/24/2013 13:00	0.51	1.11	497.8
3/24/2013 13:10	0.51	1.11	497.8
3/24/2013 13:20	0.51	1.11	497.8
3/24/2013 13:30	0.51	1.11	497.8
3/24/2013 13:40	0.51	1.11	497.8
3/24/2013 13:50	0.51	1.11	497.8
3/24/2013 14:00	0.51	1.11	497.8
3/24/2013 14:10	0.51	1.11	497.8
3/24/2013 14:20	0.51	1.11	497.8
3/24/2013 14:30	0.51	1.11	497.8
3/24/2013 14:40	0.51	1.11	497.8
3/24/2013 14:50	0.51	1.11	497.8
3/24/2013 15:00	0.51	1.11	497.8
3/24/2013 15:10	0.51	1.11	497.8
3/24/2013 15:20	0.51	1.11	497.8
3/24/2013 15:30	0.51	1.11	497.8
3/24/2013 15:40	0.51	1.11	497.8
3/24/2013 15:50	0.51	1.11	497.8
3/24/2013 16:00	0.51	1.11	497.8
3/24/2013 16:10	0.51	1.11	497.8
3/24/2013 16:20	0.51	1.11	497.8
3/24/2013 16:30	0.51	1.11	497.8
3/24/2013 16:40	0.51	1.11	497.8
3/24/2013 16:50	0.51	1.11	497.8
3/24/2013 17:00	0.51	1.11	497.8
3/24/2013 17:10	0.51	1.11	497.8
3/24/2013 17:20	0.51	1.11	497.8
3/24/2013 17:30	0.51	1.11	497.8
3/24/2013 17:40	0.51	1.11	497.8
3/24/2013 17:50	0.51	1.11	497.8
3/24/2013 18:00	0.5	1.08	483.2
3/24/2013 18:10	0.51	1.11	497.8
3/24/2013 18:20	0.51	1.11	497.8
3/24/2013 18:30	0.51	1.11	497.8
3/24/2013 18:40	0.51	1.11	497.8
3/24/2013 18:50	0.51	1.11	497.8
3/24/2013 19:00	0.51	1.11	497.8
3/24/2013 19:10	0.51	1.11	497.8
3/24/2013 19:20	0.51	1.11	497.8
3/24/2013 19:30	0.51	1.11	497.8
3/24/2013 19:40	0.51	1.11	497.8
3/24/2013 19:50	0.51	1.11	497.8
3/24/2013 20:00	0.51	1.11	497.8

3/24/2013 20:10	0.51	1.11	497.8
3/24/2013 20:20	0.51	1.11	497.8
3/24/2013 20:30	0.51	1.11	497.8
3/24/2013 20:40	0.51	1.11	497.8
3/24/2013 20:50	0.51	1.11	497.8
3/24/2013 21:00	0.51	1.11	497.8
3/24/2013 21:10	0.51	1.11	497.8
3/24/2013 21:20	0.51	1.11	497.8
3/24/2013 21:30	0.5	1.08	483.2
3/24/2013 21:40	0.51	1.11	497.8
3/24/2013 21:50	0.5	1.08	483.2
3/24/2013 22:00	0.5	1.08	483.2
3/24/2013 22:10	0.5	1.08	483.2
3/24/2013 22:20	0.51	1.11	497.8
3/24/2013 22:30	0.51	1.11	497.8
3/24/2013 22:40	0.51	1.11	497.8
3/24/2013 22:50	0.51	1.11	497.8
3/24/2013 23:00	0.51	1.11	497.8
3/24/2013 23:10	0.51	1.11	497.8
3/24/2013 23:20	0.51	1.11	497.8
3/24/2013 23:30	0.51	1.11	497.8
3/24/2013 23:40	0.51	1.11	497.8
3/24/2013 23:50	0.51	1.11	497.8
3/25/2013 0:00	0.51	1.11	497.8
3/25/2013 0:10	0.51	1.11	497.8
3/25/2013 0:20	0.51	1.11	497.8
3/25/2013 0:30	0.51	1.11	497.8
3/25/2013 0:40	0.51	1.11	497.8
3/25/2013 0:50	0.51	1.11	497.8
3/25/2013 1:00	0.51	1.11	497.8
3/25/2013 1:10	0.51	1.11	497.8
3/25/2013 1:20	0.51	1.11	497.8
3/25/2013 1:30	0.51	1.11	497.8
3/25/2013 1:40	0.51	1.11	497.8
3/25/2013 1:50	0.5	1.08	483.2
3/25/2013 2:00	0.51	1.11	497.8
3/25/2013 2:10	0.5	1.08	483.2
3/25/2013 2:20	0.51	1.11	497.8
3/25/2013 2:30	0.51	1.11	497.8
3/25/2013 2:40	0.51	1.11	497.8
3/25/2013 2:50	0.51	1.11	497.8
3/25/2013 3:00	0.51	1.11	497.8
3/25/2013 3:10	0.51	1.11	497.8
3/25/2013 3:20	0.51	1.11	497.8
3/25/2013 3:30	0.51	1.11	497.8
3/25/2013 3:40	0.51	1.11	497.8
3/25/2013 3:50	0.51	1.11	497.8

3/25/2013 4:00	0.51	1.11	497.8
3/25/2013 4:10	0.51	1.11	497.8
3/25/2013 4:20	0.51	1.11	497.8
3/25/2013 4:30	0.51	1.11	497.8
3/25/2013 4:40	0.51	1.11	497.8
3/25/2013 4:50	0.51	1.11	497.8
3/25/2013 5:00	0.51	1.11	497.8
3/25/2013 5:10	0.51	1.11	497.8
3/25/2013 5:20	0.51	1.11	497.8
3/25/2013 5:30	0.5	1.08	483.2
3/25/2013 5:40	0.51	1.11	497.8
3/25/2013 5:50	0.51	1.11	497.8
3/25/2013 6:00	0.51	1.11	497.8
3/25/2013 6:10	0.5	1.08	483.2
3/25/2013 6:20	0.51	1.11	497.8
3/25/2013 6:30	0.51	1.11	497.8
3/25/2013 6:40	0.51	1.11	497.8
3/25/2013 6:50	0.51	1.11	497.8
3/25/2013 7:00	0.51	1.11	497.8
3/25/2013 7:10	0.51	1.11	497.8
3/25/2013 7:20	0.51	1.11	497.8
3/25/2013 7:30	0.51	1.11	497.8
3/25/2013 7:40	0.51	1.11	497.8
3/25/2013 7:50	0.51	1.11	497.8
3/25/2013 8:00	0.51	1.11	497.8
3/25/2013 8:10	0.51	1.11	497.8
3/25/2013 8:20	0.51	1.11	497.8
3/25/2013 8:30	0.51	1.11	497.8
3/25/2013 8:40	0.51	1.11	497.8
3/25/2013 8:50	0.51	1.11	497.8
3/25/2013 9:00	0.51	1.11	497.8
3/25/2013 9:10	0.51	1.11	497.8
3/25/2013 9:20	0.51	1.11	497.8
3/25/2013 9:30	0.51	1.11	497.8
3/25/2013 9:40	0.51	1.11	497.8
3/25/2013 9:50	0.51	1.11	497.8
3/25/2013 10:00	0.51	1.11	497.8
3/25/2013 10:10	0.51	1.11	497.8
3/25/2013 10:20	0.51	1.11	497.8
3/25/2013 10:30	0.51	1.11	497.8
3/25/2013 10:40	0.51	1.11	497.8
3/25/2013 10:50	0.51	1.11	497.8
3/25/2013 11:00	0.51	1.11	497.8
3/25/2013 11:10	0.51	1.11	497.8
3/25/2013 11:20	0.51	1.11	497.8
3/25/2013 11:30	0.51	1.11	497.8
3/25/2013 11:40	0.51	1.11	497.8

3/25/2013 11:50	0.51	1.11	497.8
3/25/2013 12:00	0.51	1.11	497.8
3/25/2013 12:10	0.51	1.11	497.8
3/25/2013 12:20	0.51	1.11	497.8
3/25/2013 12:30	0.51	1.11	497.8
3/25/2013 12:40	0.51	1.11	497.8
3/25/2013 12:50	0.51	1.11	497.8
3/25/2013 13:00	0.51	1.11	497.8
3/25/2013 13:10	0.51	1.11	497.8
3/25/2013 13:20	0.51	1.11	497.8
3/25/2013 13:30	0.51	1.11	497.8
3/25/2013 13:40	0.51	1.11	497.8
3/25/2013 13:50	0.51	1.11	497.8
3/25/2013 14:00	0.51	1.11	497.8
3/25/2013 14:10	0.51	1.11	497.8
3/25/2013 14:20	0.51	1.11	497.8
3/25/2013 14:30	0.51	1.11	497.8
3/25/2013 14:40	0.51	1.11	497.8
3/25/2013 14:50	0.51	1.11	497.8
3/25/2013 15:00	0.51	1.11	497.8
3/25/2013 15:10	0.51	1.11	497.8
3/25/2013 15:20	0.51	1.11	497.8
3/25/2013 15:30	0.51	1.11	497.8
3/25/2013 15:40	0.51	1.11	497.8
3/25/2013 15:50	0.51	1.11	497.8
3/25/2013 16:00	0.51	1.11	497.8
3/25/2013 16:10	0.51	1.11	497.8
3/25/2013 16:20	0.51	1.11	497.8
3/25/2013 16:30	0.51	1.11	497.8
3/25/2013 16:40	0.51	1.11	497.8
3/25/2013 16:50	0.51	1.11	497.8
3/25/2013 17:00	0.51	1.11	497.8
3/25/2013 17:10	0.51	1.11	497.8
3/25/2013 17:20	0.51	1.11	497.8
3/25/2013 17:30	0.51	1.11	497.8
3/25/2013 17:40	0.51	1.11	497.8
3/25/2013 17:50	0.51	1.11	497.8
3/25/2013 18:00	0.51	1.11	497.8
3/25/2013 18:10	0.51	1.11	497.8
3/25/2013 18:20	0.51	1.11	497.8
3/25/2013 18:30	0.51	1.11	497.8
3/25/2013 18:40	0.51	1.11	497.8
3/25/2013 18:50	0.51	1.11	497.8
3/25/2013 19:00	0.51	1.11	497.8
3/25/2013 19:10	0.51	1.11	497.8
3/25/2013 19:20	0.51	1.11	497.8
3/25/2013 19:30	0.51	1.11	497.8

3/25/2013 19:40	0.51	1.11	497.8
3/25/2013 19:50	0.51	1.11	497.8
3/25/2013 20:00	0.51	1.11	497.8
3/25/2013 20:10	0.51	1.11	497.8
3/25/2013 20:20	0.51	1.11	497.8
3/25/2013 20:30	0.51	1.11	497.8
3/25/2013 20:40	0.51	1.11	497.8
3/25/2013 20:50	0.51	1.11	497.8
3/25/2013 21:00	0.51	1.11	497.8
3/25/2013 21:10	0.51	1.11	497.8
3/25/2013 21:20	0.51	1.11	497.8
3/25/2013 21:30	0.51	1.11	497.8
3/25/2013 21:40	0.51	1.11	497.8
3/25/2013 21:50	0.51	1.11	497.8
3/25/2013 22:00	0.51	1.11	497.8
3/25/2013 22:10	0.51	1.11	497.8
3/25/2013 22:20	0.51	1.11	497.8
3/25/2013 22:30	0.51	1.11	497.8
3/25/2013 22:40	0.51	1.11	497.8
3/25/2013 22:50	0.51	1.11	497.8
3/25/2013 23:00	0.51	1.11	497.8
3/25/2013 23:10	0.51	1.11	497.8
3/25/2013 23:20	0.51	1.11	497.8
3/25/2013 23:30	0.51	1.11	497.8
3/25/2013 23:40	0.51	1.11	497.8
3/25/2013 23:50	0.51	1.11	497.8
3/26/2013 0:00	0.51	1.11	497.8
3/26/2013 0:10	0.51	1.11	497.8
3/26/2013 0:20	0.51	1.11	497.8
3/26/2013 0:30	0.51	1.11	497.8
3/26/2013 0:40	0.51	1.11	497.8
3/26/2013 0:50	0.51	1.11	497.8
3/26/2013 1:00	0.51	1.11	497.8
3/26/2013 1:10	0.51	1.11	497.8
3/26/2013 1:20	0.51	1.11	497.8
3/26/2013 1:30	0.51	1.11	497.8
3/26/2013 1:40	0.51	1.11	497.8
3/26/2013 1:50	0.51	1.11	497.8
3/26/2013 2:00	0.51	1.11	497.8
3/26/2013 2:10	0.51	1.11	497.8
3/26/2013 2:20	0.51	1.11	497.8
3/26/2013 2:30	0.51	1.11	497.8
3/26/2013 2:40	0.51	1.11	497.8
3/26/2013 2:50	0.51	1.11	497.8
3/26/2013 3:00	0.51	1.11	497.8
3/26/2013 3:10	0.51	1.11	497.8
3/26/2013 3:20	0.51	1.11	497.8

3/26/2013 3:30	0.51	1.11	497.8
3/26/2013 3:40	0.51	1.11	497.8
3/26/2013 3:50	0.51	1.11	497.8
3/26/2013 4:00	0.51	1.11	497.8
3/26/2013 4:10	0.51	1.11	497.8
3/26/2013 4:20	0.51	1.11	497.8
3/26/2013 4:30	0.51	1.11	497.8
3/26/2013 4:40	0.51	1.11	497.8
3/26/2013 4:50	0.51	1.11	497.8
3/26/2013 5:00	0.51	1.11	497.8
3/26/2013 5:10	0.51	1.11	497.8
3/26/2013 5:20	0.51	1.11	497.8
3/26/2013 5:30	0.51	1.11	497.8
3/26/2013 5:40	0.51	1.11	497.8
3/26/2013 5:50	0.51	1.11	497.8
3/26/2013 6:00	0.51	1.11	497.8
3/26/2013 6:10	0.51	1.11	497.8
3/26/2013 6:20	0.51	1.11	497.8
3/26/2013 6:30	0.51	1.11	497.8
3/26/2013 6:40	0.51	1.11	497.8
3/26/2013 6:50	0.51	1.11	497.8
3/26/2013 7:00	0.51	1.11	497.8
3/26/2013 7:10	0.51	1.11	497.8
3/26/2013 7:20	0.51	1.11	497.8
3/26/2013 7:30	0.51	1.11	497.8
3/26/2013 7:40	0.51	1.11	497.8
3/26/2013 7:50	0.51	1.11	497.8
3/26/2013 8:00	0.51	1.11	497.8
3/26/2013 8:10	0.51	1.11	497.8
3/26/2013 8:20	0.51	1.11	497.8
3/26/2013 8:30	0.51	1.11	497.8
3/26/2013 8:40	0.51	1.11	497.8
3/26/2013 8:50	0.51	1.11	497.8
3/26/2013 9:00	0.51	1.11	497.8
3/26/2013 9:10	0.51	1.11	497.8
3/26/2013 9:20	0.51	1.11	497.8
3/26/2013 9:30	0.51	1.11	497.8
3/26/2013 9:40	0.51	1.11	497.8
3/26/2013 9:50	0.51	1.11	497.8
3/26/2013 10:00	0.51	1.11	497.8
3/26/2013 10:10	0.51	1.11	497.8
3/26/2013 10:20	0.51	1.11	497.8
3/26/2013 10:30	0.51	1.11	497.8
3/26/2013 10:40	0.51	1.11	497.8
3/26/2013 10:50	0.51	1.11	497.8
3/26/2013 11:00	0.52	1.14	512.6
3/26/2013 11:10	0.52	1.14	512.6

3/26/2013 11:20	0.51	1.11	497.8
3/26/2013 11:30	0.52	1.14	512.6
3/26/2013 11:40	0.51	1.11	497.8
3/26/2013 11:50	0.52	1.14	512.6
3/26/2013 12:00	0.52	1.14	512.6
3/26/2013 12:10	0.52	1.14	512.6
3/26/2013 12:20	0.52	1.14	512.6
3/26/2013 12:30	0.52	1.14	512.6
3/26/2013 12:40	0.52	1.14	512.6
3/26/2013 12:50	0.52	1.14	512.6
3/26/2013 13:00	0.52	1.14	512.6
3/26/2013 13:10	0.52	1.14	512.6
3/26/2013 13:20	0.52	1.14	512.6
3/26/2013 13:30	0.52	1.14	512.6
3/26/2013 13:40	0.52	1.14	512.6
3/26/2013 13:50	0.52	1.14	512.6
3/26/2013 14:00	0.52	1.14	512.6
3/26/2013 14:10	0.52	1.14	512.6
3/26/2013 14:20	0.52	1.14	512.6
3/26/2013 14:30	0.52	1.14	512.6
3/26/2013 14:40	0.52	1.14	512.6
3/26/2013 14:50	0.52	1.14	512.6
3/26/2013 15:00	0.52	1.14	512.6
3/26/2013 15:10	0.52	1.14	512.6
3/26/2013 15:20	0.52	1.14	512.6
3/26/2013 15:30	0.52	1.14	512.6
3/26/2013 15:40	0.52	1.14	512.6
3/26/2013 15:50	0.52	1.14	512.6
3/26/2013 16:00	0.52	1.14	512.6
3/26/2013 16:10	0.52	1.14	512.6
3/26/2013 16:20	0.52	1.14	512.6
3/26/2013 16:30	0.52	1.14	512.6
3/26/2013 16:40	0.52	1.14	512.6
3/26/2013 16:50	0.52	1.14	512.6
3/26/2013 17:00	0.52	1.14	512.6
3/26/2013 17:10	0.52	1.14	512.6
3/26/2013 17:20	0.52	1.14	512.6
3/26/2013 17:30	0.52	1.14	512.6
3/26/2013 17:40	0.52	1.14	512.6
3/26/2013 17:50	0.52	1.14	512.6
3/26/2013 18:00	0.52	1.14	512.6
3/26/2013 18:10	0.52	1.14	512.6
3/26/2013 18:20	0.52	1.14	512.6
3/26/2013 18:30	0.52	1.14	512.6
3/26/2013 18:40	0.52	1.14	512.6
3/26/2013 18:50	0.52	1.14	512.6
3/26/2013 19:00	0.52	1.14	512.6

3/26/2013 19:10	0.52	1.14	512.6
3/26/2013 19:20	0.52	1.14	512.6
3/26/2013 19:30	0.52	1.14	512.6
3/26/2013 19:40	0.52	1.14	512.6
3/26/2013 19:50	0.52	1.14	512.6
3/26/2013 20:00	0.52	1.14	512.6
3/26/2013 20:10	0.52	1.14	512.6
3/26/2013 20:20	0.52	1.14	512.6
3/26/2013 20:30	0.52	1.14	512.6
3/26/2013 20:40	0.52	1.14	512.6
3/26/2013 20:50	0.52	1.14	512.6
3/26/2013 21:00	0.52	1.14	512.6
3/26/2013 21:10	0.52	1.14	512.6
3/26/2013 21:20	0.52	1.14	512.6
3/26/2013 21:30	0.52	1.14	512.6
3/26/2013 21:40	0.52	1.14	512.6
3/26/2013 21:50	0.52	1.14	512.6
3/26/2013 22:00	0.52	1.14	512.6
3/26/2013 22:10	0.52	1.14	512.6
3/26/2013 22:20	0.52	1.14	512.6
3/26/2013 22:30	0.52	1.14	512.6
3/26/2013 22:40	0.52	1.14	512.6
3/26/2013 22:50	0.52	1.14	512.6
3/26/2013 23:00	0.52	1.14	512.6
3/26/2013 23:10	0.52	1.14	512.6
3/26/2013 23:20	0.52	1.14	512.6
3/26/2013 23:30	0.52	1.14	512.6
3/26/2013 23:40	0.52	1.14	512.6
3/26/2013 23:50	0.52	1.14	512.6
3/27/2013 0:00	0.52	1.14	512.6
3/27/2013 0:10	0.52	1.14	512.6
3/27/2013 0:20	0.52	1.14	512.6
3/27/2013 0:30	0.52	1.14	512.6
3/27/2013 0:40	0.52	1.14	512.6
3/27/2013 0:50	0.52	1.14	512.6
3/27/2013 1:00	0.52	1.14	512.6
3/27/2013 1:10	0.52	1.14	512.6
3/27/2013 1:20	0.52	1.14	512.6
3/27/2013 1:30	0.52	1.14	512.6
3/27/2013 1:40	0.52	1.14	512.6
3/27/2013 1:50	0.52	1.14	512.6
3/27/2013 2:00	0.52	1.14	512.6
3/27/2013 2:10	0.52	1.14	512.6
3/27/2013 2:20	0.52	1.14	512.6
3/27/2013 2:30	0.52	1.14	512.6
3/27/2013 2:40	0.52	1.14	512.6
3/27/2013 2:50	0.52	1.14	512.6

3/27/2013 3:00	0.52	1.14	512.6
3/27/2013 3:10	0.52	1.14	512.6
3/27/2013 3:20	0.52	1.14	512.6
3/27/2013 3:30	0.52	1.14	512.6
3/27/2013 3:40	0.52	1.14	512.6
3/27/2013 3:50	0.52	1.14	512.6
3/27/2013 4:00	0.52	1.14	512.6
3/27/2013 4:10	0.52	1.14	512.6
3/27/2013 4:20	0.52	1.14	512.6
3/27/2013 4:30	0.52	1.14	512.6
3/27/2013 4:40	0.52	1.14	512.6
3/27/2013 4:50	0.52	1.14	512.6
3/27/2013 5:00	0.52	1.14	512.6
3/27/2013 5:10	0.52	1.14	512.6
3/27/2013 5:20	0.52	1.14	512.6
3/27/2013 5:30	0.52	1.14	512.6
3/27/2013 5:40	0.52	1.14	512.6
3/27/2013 5:50	0.52	1.14	512.6
3/27/2013 6:00	0.52	1.14	512.6
3/27/2013 6:10	0.52	1.14	512.6
3/27/2013 6:20	0.52	1.14	512.6
3/27/2013 6:30	0.52	1.14	512.6
3/27/2013 6:40	0.52	1.14	512.6
3/27/2013 6:50	0.52	1.14	512.6
3/27/2013 7:00	0.52	1.14	512.6
3/27/2013 7:10	0.52	1.14	512.6
3/27/2013 7:20	0.52	1.14	512.6
3/27/2013 7:30	0.52	1.14	512.6
3/27/2013 7:40	0.52	1.14	512.6
3/27/2013 7:50	0.52	1.14	512.6
3/27/2013 8:00	0.52	1.14	512.6
3/27/2013 8:10	0.52	1.14	512.6
3/27/2013 8:20	0.52	1.14	512.6
3/27/2013 8:30	0.52	1.14	512.6
3/27/2013 8:40	0.52	1.14	512.6
3/27/2013 8:50	0.52	1.14	512.6
3/27/2013 9:00	0.52	1.14	512.6
3/27/2013 9:10	0.52	1.14	512.6
3/27/2013 9:20	0.52	1.14	512.6
3/27/2013 9:30	0.52	1.14	512.6
3/27/2013 9:40	0.52	1.14	512.6
3/27/2013 9:50	0.52	1.14	512.6
3/27/2013 10:00	0.52	1.14	512.6
3/27/2013 10:10	0.52	1.14	512.6
3/27/2013 10:20	0.52	1.14	512.6
3/27/2013 10:30	0.51	1.11	497.8
3/27/2013 10:40	0.51	1.11	497.8

3/27/2013 10:50	0.51	1.11	497.8
3/27/2013 11:00	0.51	1.11	497.8
3/27/2013 11:10	0.51	1.11	497.8
3/27/2013 11:20	0.51	1.11	497.8
3/27/2013 11:30	0.51	1.11	497.8
3/27/2013 11:40	0.51	1.11	497.8
3/27/2013 11:50	0.51	1.11	497.8
3/27/2013 12:00	0.51	1.11	497.8
3/27/2013 12:10	0.51	1.11	497.8
3/27/2013 12:20	0.51	1.11	497.8
3/27/2013 12:30	0.51	1.11	497.8
3/27/2013 12:40	0.51	1.11	497.8
3/27/2013 12:50	0.51	1.11	497.8
3/27/2013 13:00	0.51	1.11	497.8
3/27/2013 13:10	0.51	1.11	497.8
3/27/2013 13:20	0.51	1.11	497.8
3/27/2013 13:30	0.51	1.11	497.8
3/27/2013 13:40	0.51	1.11	497.8
3/27/2013 13:50	0.51	1.11	497.8
3/27/2013 14:00	0.51	1.11	497.8
3/27/2013 14:10	0.51	1.11	497.8
3/27/2013 14:20	0.51	1.11	497.8
3/27/2013 14:30	0.51	1.11	497.8
3/27/2013 14:40	0.51	1.11	497.8
3/27/2013 14:50	0.51	1.11	497.8
3/27/2013 15:00	0.51	1.11	497.8
3/27/2013 15:10	0.51	1.11	497.8
3/27/2013 15:20	0.51	1.11	497.8
3/27/2013 15:30	0.51	1.11	497.8
3/27/2013 15:40	0.51	1.11	497.8
3/27/2013 15:50	0.51	1.11	497.8
3/27/2013 16:00	0.51	1.11	497.8
3/27/2013 16:10	0.51	1.11	497.8
3/27/2013 16:20	0.51	1.11	497.8
3/27/2013 16:30	0.51	1.11	497.8
3/27/2013 16:40	0.51	1.11	497.8
3/27/2013 16:50	0.51	1.11	497.8
3/27/2013 17:00	0.51	1.11	497.8
3/27/2013 17:10	0.51	1.11	497.8
3/27/2013 17:20	0.51	1.11	497.8
3/27/2013 17:30	0.51	1.11	497.8
3/27/2013 17:40	0.51	1.11	497.8
3/27/2013 17:50	0.51	1.11	497.8
3/27/2013 18:00	0.51	1.11	497.8
3/27/2013 18:10	0.51	1.11	497.8
3/27/2013 18:20	0.51	1.11	497.8
3/27/2013 18:30	0.51	1.11	497.8

3/27/2013 18:40	0.51	1.11	497.8
3/27/2013 18:50	0.51	1.11	497.8
3/27/2013 19:00	0.51	1.11	497.8
3/27/2013 19:10	0.51	1.11	497.8
3/27/2013 19:20	0.51	1.11	497.8
3/27/2013 19:30	0.51	1.11	497.8
3/27/2013 19:40	0.51	1.11	497.8
3/27/2013 19:50	0.51	1.11	497.8
3/27/2013 20:00	0.51	1.11	497.8
3/27/2013 20:10	0.51	1.11	497.8
3/27/2013 20:20	0.51	1.11	497.8
3/27/2013 20:30	0.51	1.11	497.8
3/27/2013 20:40	0.51	1.11	497.8
3/27/2013 20:50	0.51	1.11	497.8
3/27/2013 21:00	0.51	1.11	497.8
3/27/2013 21:10	0.51	1.11	497.8
3/27/2013 21:20	0.51	1.11	497.8
3/27/2013 21:30	0.51	1.11	497.8
3/27/2013 21:40	0.51	1.11	497.8
3/27/2013 21:50	0.51	1.11	497.8
3/27/2013 22:00	0.51	1.11	497.8
3/27/2013 22:10	0.51	1.11	497.8
3/27/2013 22:20	0.51	1.11	497.8
3/27/2013 22:30	0.51	1.11	497.8
3/27/2013 22:40	0.51	1.11	497.8
3/27/2013 22:50	0.51	1.11	497.8
3/27/2013 23:00	0.51	1.11	497.8
3/27/2013 23:10	0.51	1.11	497.8
3/27/2013 23:20	0.51	1.11	497.8
3/27/2013 23:30	0.51	1.11	497.8
3/27/2013 23:40	0.51	1.11	497.8
3/27/2013 23:50	0.51	1.11	497.8
3/28/2013 0:00	0.51	1.11	497.8
3/28/2013 0:10	0.51	1.11	497.8
3/28/2013 0:20	0.51	1.11	497.8
3/28/2013 0:30	0.51	1.11	497.8
3/28/2013 0:40	0.51	1.11	497.8
3/28/2013 0:50	0.51	1.11	497.8
3/28/2013 1:00	0.51	1.11	497.8
3/28/2013 1:10	0.51	1.11	497.8
3/28/2013 1:20	0.51	1.11	497.8
3/28/2013 1:30	0.51	1.11	497.8
3/28/2013 1:40	0.51	1.11	497.8
3/28/2013 1:50	0.51	1.11	497.8
3/28/2013 2:00	0.51	1.11	497.8
3/28/2013 2:10	0.51	1.11	497.8
3/28/2013 2:20	0.51	1.11	497.8

3/28/2013 2:30	0.51	1.11	497.8
3/28/2013 2:40	0.51	1.11	497.8
3/28/2013 2:50	0.51	1.11	497.8
3/28/2013 3:00	0.51	1.11	497.8
3/28/2013 3:10	0.51	1.11	497.8
3/28/2013 3:20	0.51	1.11	497.8
3/28/2013 3:30	0.51	1.11	497.8
3/28/2013 3:40	0.51	1.11	497.8
3/28/2013 3:50	0.51	1.11	497.8
3/28/2013 4:00	0.51	1.11	497.8
3/28/2013 4:10	0.51	1.11	497.8
3/28/2013 4:20	0.51	1.11	497.8
3/28/2013 4:30	0.51	1.11	497.8
3/28/2013 4:40	0.51	1.11	497.8
3/28/2013 4:50	0.51	1.11	497.8
3/28/2013 5:00	0.51	1.11	497.8
3/28/2013 5:10	0.51	1.11	497.8
3/28/2013 5:20	0.51	1.11	497.8
3/28/2013 5:30	0.51	1.11	497.8
3/28/2013 5:40	0.51	1.11	497.8
3/28/2013 5:50	0.51	1.11	497.8
3/28/2013 6:00	0.51	1.11	497.8
3/28/2013 6:10	0.51	1.11	497.8
3/28/2013 6:20	0.51	1.11	497.8
3/28/2013 6:30	0.51	1.11	497.8
3/28/2013 6:40	0.51	1.11	497.8
3/28/2013 6:50	0.51	1.11	497.8
3/28/2013 7:00	0.51	1.11	497.8
3/28/2013 7:10	0.51	1.11	497.8
3/28/2013 7:20	0.51	1.11	497.8
3/28/2013 7:30	0.51	1.11	497.8
3/28/2013 7:40	0.51	1.11	497.8
3/28/2013 7:50	0.51	1.11	497.8
3/28/2013 8:00	0.51	1.11	497.8
3/28/2013 8:10	0.51	1.11	497.8
3/28/2013 8:20	0.51	1.11	497.8
3/28/2013 8:30	0.51	1.11	497.8
3/28/2013 8:40	0.51	1.11	497.8
3/28/2013 8:50	0.51	1.11	497.8
3/28/2013 9:00	0.51	1.11	497.8
3/28/2013 9:10	0.51	1.11	497.8
3/28/2013 9:20	0.51	1.11	497.8
3/28/2013 9:30	0.51	1.11	497.8
3/28/2013 9:40	0.51	1.11	497.8
3/28/2013 9:50	0.51	1.11	497.8
3/28/2013 10:00	0.51	1.11	497.8
3/28/2013 10:10	0.51	1.11	497.8

3/28/2013 10:20	0.51	1.11	497.8
3/28/2013 10:30	0.51	1.11	497.8
3/28/2013 10:40	0.51	1.11	497.8
3/28/2013 10:50	0.51	1.11	497.8
3/28/2013 11:00	0.51	1.11	497.8
3/28/2013 11:10	0.51	1.11	497.8
3/28/2013 11:20	0.51	1.11	497.8
3/28/2013 11:30	0.51	1.11	497.8
3/28/2013 11:40	0.51	1.11	497.8
3/28/2013 11:50	0.51	1.11	497.8
3/28/2013 12:00	0.51	1.11	497.8
3/28/2013 12:10	0.51	1.11	497.8
3/28/2013 12:20	0.51	1.11	497.8
3/28/2013 12:30	0.51	1.11	497.8
3/28/2013 12:40	0.51	1.11	497.8
3/28/2013 12:50	0.51	1.11	497.8
3/28/2013 13:00	0.51	1.11	497.8
3/28/2013 13:10	0.51	1.11	497.8
3/28/2013 13:20	0.51	1.11	497.8
3/28/2013 13:30	0.51	1.11	497.8
3/28/2013 13:40	0.51	1.11	497.8
3/28/2013 13:50	0.51	1.11	497.8
3/28/2013 14:00	0.51	1.11	497.8
3/28/2013 14:10	0.51	1.11	497.8
3/28/2013 14:20	0.51	1.11	497.8
3/28/2013 14:30	0.51	1.11	497.8
3/28/2013 14:40	0.51	1.11	497.8
3/28/2013 14:50	0.51	1.11	497.8
3/28/2013 15:00	0.51	1.11	497.8
3/28/2013 15:10	0.51	1.11	497.8
3/28/2013 15:20	0.51	1.11	497.8
3/28/2013 15:30	0.51	1.11	497.8
3/28/2013 15:40	0.51	1.11	497.8
3/28/2013 15:50	0.51	1.11	497.8
3/28/2013 16:00	0.51	1.11	497.8
3/28/2013 16:10	0.51	1.11	497.8
3/28/2013 16:20	0.51	1.11	497.8
3/28/2013 16:30	0.51	1.11	497.8
3/28/2013 16:40	0.51	1.11	497.8
3/28/2013 16:50	0.51	1.11	497.8
3/28/2013 17:00	0.51	1.11	497.8
3/28/2013 17:10	0.51	1.11	497.8
3/28/2013 17:20	0.51	1.11	497.8
3/28/2013 17:30	0.51	1.11	497.8
3/28/2013 17:40	0.51	1.11	497.8
3/28/2013 17:50	0.51	1.11	497.8
3/28/2013 18:00	0.51	1.11	497.8

3/28/2013 18:10	0.51	1.11	497.8
3/28/2013 18:20	0.51	1.11	497.8
3/28/2013 18:30	0.51	1.11	497.8
3/28/2013 18:40	0.51	1.11	497.8
3/28/2013 18:50	0.51	1.11	497.8
3/28/2013 19:00	0.51	1.11	497.8
3/28/2013 19:10	0.51	1.11	497.8
3/28/2013 19:20	0.51	1.11	497.8
3/28/2013 19:30	0.51	1.11	497.8
3/28/2013 19:40	0.51	1.11	497.8
3/28/2013 19:50	0.51	1.11	497.8
3/28/2013 20:00	0.51	1.11	497.8
3/28/2013 20:10	0.51	1.11	497.8
3/28/2013 20:20	0.51	1.11	497.8
3/28/2013 20:30	0.51	1.11	497.8
3/28/2013 20:40	0.51	1.11	497.8
3/28/2013 20:50	0.51	1.11	497.8
3/28/2013 21:00	0.51	1.11	497.8
3/28/2013 21:10	0.51	1.11	497.8
3/28/2013 21:20	0.51	1.11	497.8
3/28/2013 21:30	0.51	1.11	497.8
3/28/2013 21:40	0.51	1.11	497.8
3/28/2013 21:50	0.51	1.11	497.8
3/28/2013 22:00	0.51	1.11	497.8
3/28/2013 22:10	0.51	1.11	497.8
3/28/2013 22:20	0.51	1.11	497.8
3/28/2013 22:30	0.51	1.11	497.8
3/28/2013 22:40	0.51	1.11	497.8
3/28/2013 22:50	0.5	1.08	483.2
3/28/2013 23:00	0.51	1.11	497.8
3/28/2013 23:10	0.51	1.11	497.8
3/28/2013 23:20	0.5	1.08	483.2
3/28/2013 23:30	0.51	1.11	497.8
3/28/2013 23:40	0.51	1.11	497.8
3/28/2013 23:50	0.51	1.11	497.8
3/29/2013 0:00	0.51	1.11	497.8
3/29/2013 0:10	0.51	1.11	497.8
3/29/2013 0:20	0.51	1.11	497.8
3/29/2013 0:30	0.51	1.11	497.8
3/29/2013 0:40	0.51	1.11	497.8
3/29/2013 0:50	0.51	1.11	497.8
3/29/2013 1:00	0.51	1.11	497.8
3/29/2013 1:10	0.51	1.11	497.8
3/29/2013 1:20	0.51	1.11	497.8
3/29/2013 1:30	0.51	1.11	497.8
3/29/2013 1:40	0.51	1.11	497.8
3/29/2013 1:50	0.51	1.11	497.8

3/29/2013 2:00	0.51	1.11	497.8
3/29/2013 2:10	0.51	1.11	497.8
3/29/2013 2:20	0.51	1.11	497.8
3/29/2013 2:30	0.51	1.11	497.8
3/29/2013 2:40	0.51	1.11	497.8
3/29/2013 2:50	0.51	1.11	497.8
3/29/2013 3:00	0.51	1.11	497.8
3/29/2013 3:10	0.51	1.11	497.8
3/29/2013 3:20	0.51	1.11	497.8
3/29/2013 3:30	0.51	1.11	497.8
3/29/2013 3:40	0.51	1.11	497.8
3/29/2013 3:50	0.51	1.11	497.8
3/29/2013 4:00	0.51	1.11	497.8
3/29/2013 4:10	0.51	1.11	497.8
3/29/2013 4:20	0.51	1.11	497.8
3/29/2013 4:30	0.51	1.11	497.8
3/29/2013 4:40	0.5	1.08	483.2
3/29/2013 4:50	0.51	1.11	497.8
3/29/2013 5:00	0.51	1.11	497.8
3/29/2013 5:10	0.51	1.11	497.8
3/29/2013 5:20	0.51	1.11	497.8
3/29/2013 5:30	0.51	1.11	497.8
3/29/2013 5:40	0.51	1.11	497.8
3/29/2013 5:50	0.51	1.11	497.8
3/29/2013 6:00	0.51	1.11	497.8
3/29/2013 6:10	0.51	1.11	497.8
3/29/2013 6:20	0.51	1.11	497.8
3/29/2013 6:30	0.51	1.11	497.8
3/29/2013 6:40	0.51	1.11	497.8
3/29/2013 6:50	0.51	1.11	497.8
3/29/2013 7:00	0.51	1.11	497.8
3/29/2013 7:10	0.51	1.11	497.8
3/29/2013 7:20	0.51	1.11	497.8
3/29/2013 7:30	0.51	1.11	497.8
3/29/2013 7:40	0.51	1.11	497.8
3/29/2013 7:50	0.51	1.11	497.8
3/29/2013 8:00	0.51	1.11	497.8
3/29/2013 8:10	0.51	1.11	497.8
3/29/2013 8:20	0.51	1.11	497.8
3/29/2013 8:30	0.51	1.11	497.8
3/29/2013 8:40	0.51	1.11	497.8
3/29/2013 8:50	0.51	1.11	497.8
3/29/2013 9:00	0.51	1.11	497.8
3/29/2013 9:10	0.51	1.11	497.8
3/29/2013 9:20	0.5	1.08	483.2
3/29/2013 9:30	0.5	1.08	483.2
3/29/2013 9:40	0.51	1.11	497.8

3/29/2013 9:50	0.51	1.11	497.8
3/29/2013 10:00	0.51	1.11	497.8
3/29/2013 10:10	0.51	1.11	497.8
3/29/2013 10:20	0.51	1.11	497.8
3/29/2013 10:30	0.51	1.11	497.8
3/29/2013 10:40	0.51	1.11	497.8
3/29/2013 10:50	0.51	1.11	497.8
3/29/2013 11:00	0.51	1.11	497.8
3/29/2013 11:10	0.51	1.11	497.8
3/29/2013 11:20	0.51	1.11	497.8
3/29/2013 11:30	0.51	1.11	497.8
3/29/2013 11:40	0.51	1.11	497.8
3/29/2013 11:50	0.51	1.11	497.8
3/29/2013 12:00	0.51	1.11	497.8
3/29/2013 12:10	0.51	1.11	497.8
3/29/2013 12:20	0.51	1.11	497.8
3/29/2013 12:30	0.51	1.11	497.8
3/29/2013 12:40	0.51	1.11	497.8
3/29/2013 12:50	0.51	1.11	497.8
3/29/2013 13:00	0.51	1.11	497.8
3/29/2013 13:10	0.51	1.11	497.8
3/29/2013 13:20	0.51	1.11	497.8
3/29/2013 13:30	0.51	1.11	497.8
3/29/2013 13:40	0.51	1.11	497.8
3/29/2013 13:50	0.51	1.11	497.8
3/29/2013 14:00	0.51	1.11	497.8
3/29/2013 14:10	0.51	1.11	497.8
3/29/2013 14:20	0.51	1.11	497.8
3/29/2013 14:30	0.51	1.11	497.8
3/29/2013 14:40	0.51	1.11	497.8
3/29/2013 14:50	0.51	1.11	497.8
3/29/2013 15:00	0.51	1.11	497.8
3/29/2013 15:10	0.51	1.11	497.8
3/29/2013 15:20	0.51	1.11	497.8
3/29/2013 15:30	0.51	1.11	497.8
3/29/2013 15:40	0.51	1.11	497.8
3/29/2013 15:50	0.51	1.11	497.8
3/29/2013 16:00	0.51	1.11	497.8
3/29/2013 16:10	0.51	1.11	497.8
3/29/2013 16:20	0.51	1.11	497.8
3/29/2013 16:30	0.51	1.11	497.8
3/29/2013 16:40	0.51	1.11	497.8
3/29/2013 16:50	0.51	1.11	497.8
3/29/2013 17:00	0.51	1.11	497.8
3/29/2013 17:10	0.51	1.11	497.8
3/29/2013 17:20	0.51	1.11	497.8
3/29/2013 17:30	0.51	1.11	497.8

3/29/2013 17:40	0.51	1.11	497.8
3/29/2013 17:50	0.51	1.11	497.8
3/29/2013 18:00	0.51	1.11	497.8
3/29/2013 18:10	0.51	1.11	497.8
3/29/2013 18:20	0.51	1.11	497.8
3/29/2013 18:30	0.51	1.11	497.8
3/29/2013 18:40	0.51	1.11	497.8
3/29/2013 18:50	0.51	1.11	497.8
3/29/2013 19:00	0.51	1.11	497.8
3/29/2013 19:10	0.51	1.11	497.8
3/29/2013 19:20	0.51	1.11	497.8
3/29/2013 19:30	0.51	1.11	497.8
3/29/2013 19:40	0.51	1.11	497.8
3/29/2013 19:50	0.51	1.11	497.8
3/29/2013 20:00	0.51	1.11	497.8
3/29/2013 20:10	0.51	1.11	497.8
3/29/2013 20:20	0.51	1.11	497.8
3/29/2013 20:30	0.51	1.11	497.8
3/29/2013 20:40	0.51	1.11	497.8
3/29/2013 20:50	0.51	1.11	497.8
3/29/2013 21:00	0.51	1.11	497.8
3/29/2013 21:10	0.51	1.11	497.8
3/29/2013 21:20	0.51	1.11	497.8
3/29/2013 21:30	0.51	1.11	497.8
3/29/2013 21:40	0.51	1.11	497.8
3/29/2013 21:50	0.51	1.11	497.8
3/29/2013 22:00	0.51	1.11	497.8
3/29/2013 22:10	0.51	1.11	497.8
3/29/2013 22:20	0.51	1.11	497.8
3/29/2013 22:30	0.51	1.11	497.8
3/29/2013 22:40	0.51	1.11	497.8
3/29/2013 22:50	0.51	1.11	497.8
3/29/2013 23:00	0.51	1.11	497.8
3/29/2013 23:10	0.51	1.11	497.8
3/29/2013 23:20	0.51	1.11	497.8
3/29/2013 23:30	0.51	1.11	497.8
3/29/2013 23:40	0.51	1.11	497.8
3/29/2013 23:50	0.51	1.11	497.8
3/30/2013 0:00	0.51	1.11	497.8
3/30/2013 0:10	0.51	1.11	497.8
3/30/2013 0:20	0.51	1.11	497.8
3/30/2013 0:30	0.51	1.11	497.8
3/30/2013 0:40	0.51	1.11	497.8
3/30/2013 0:50	0.51	1.11	497.8
3/30/2013 1:00	0.51	1.11	497.8
3/30/2013 1:10	0.51	1.11	497.8
3/30/2013 1:20	0.51	1.11	497.8

3/30/2013 1:30	0.51	1.11	497.8
3/30/2013 1:40	0.51	1.11	497.8
3/30/2013 1:50	0.51	1.11	497.8
3/30/2013 2:00	0.51	1.11	497.8
3/30/2013 2:10	0.51	1.11	497.8
3/30/2013 2:20	0.51	1.11	497.8
3/30/2013 2:30	0.51	1.11	497.8
3/30/2013 2:40	0.51	1.11	497.8
3/30/2013 2:50	0.51	1.11	497.8
3/30/2013 3:00	0.51	1.11	497.8
3/30/2013 3:10	0.51	1.11	497.8
3/30/2013 3:20	0.51	1.11	497.8
3/30/2013 3:30	0.51	1.11	497.8
3/30/2013 3:40	0.51	1.11	497.8
3/30/2013 3:50	0.51	1.11	497.8
3/30/2013 4:00	0.51	1.11	497.8
3/30/2013 4:10	0.51	1.11	497.8
3/30/2013 4:20	0.51	1.11	497.8
3/30/2013 4:30	0.51	1.11	497.8
3/30/2013 4:40	0.51	1.11	497.8
3/30/2013 4:50	0.51	1.11	497.8
3/30/2013 5:00	0.51	1.11	497.8
3/30/2013 5:10	0.51	1.11	497.8
3/30/2013 5:20	0.51	1.11	497.8
3/30/2013 5:30	0.51	1.11	497.8
3/30/2013 5:40	0.51	1.11	497.8
3/30/2013 5:50	0.51	1.11	497.8
3/30/2013 6:00	0.51	1.11	497.8
3/30/2013 6:10	0.51	1.11	497.8
3/30/2013 6:20	0.51	1.11	497.8
3/30/2013 6:30	0.51	1.11	497.8
3/30/2013 6:40	0.51	1.11	497.8
3/30/2013 6:50	0.51	1.11	497.8
3/30/2013 7:00	0.51	1.11	497.8
3/30/2013 7:10	0.51	1.11	497.8
3/30/2013 7:20	0.51	1.11	497.8
3/30/2013 7:30	0.51	1.11	497.8
3/30/2013 7:40	0.51	1.11	497.8
3/30/2013 7:50	0.51	1.11	497.8
3/30/2013 8:00	0.51	1.11	497.8
3/30/2013 8:10	0.51	1.11	497.8
3/30/2013 8:20	0.51	1.11	497.8
3/30/2013 8:30	0.51	1.11	497.8
3/30/2013 8:40	0.51	1.11	497.8
3/30/2013 8:50	0.51	1.11	497.8
3/30/2013 9:00	0.51	1.11	497.8
3/30/2013 9:10	0.51	1.11	497.8

3/30/2013 9:20	0.51	1.11	497.8
3/30/2013 9:30	0.51	1.11	497.8
3/30/2013 9:40	0.51	1.11	497.8
3/30/2013 9:50	0.51	1.11	497.8
3/30/2013 10:00	0.51	1.11	497.8
3/30/2013 10:10	0.51	1.11	497.8
3/30/2013 10:20	0.51	1.11	497.8
3/30/2013 10:30	0.51	1.11	497.8
3/30/2013 10:40	0.51	1.11	497.8
3/30/2013 10:50	0.51	1.11	497.8
3/30/2013 11:00	0.51	1.11	497.8
3/30/2013 11:10	0.51	1.11	497.8
3/30/2013 11:20	0.51	1.11	497.8
3/30/2013 11:30	0.51	1.11	497.8
3/30/2013 11:40	0.51	1.11	497.8
3/30/2013 11:50	0.51	1.11	497.8
3/30/2013 12:00	0.51	1.11	497.8
3/30/2013 12:10	0.51	1.11	497.8
3/30/2013 12:20	0.51	1.11	497.8
3/30/2013 12:30	0.51	1.11	497.8
3/30/2013 12:40	0.51	1.11	497.8
3/30/2013 12:50	0.51	1.11	497.8
3/30/2013 13:00	0.51	1.11	497.8
3/30/2013 13:10	0.51	1.11	497.8
3/30/2013 13:20	0.51	1.11	497.8
3/30/2013 13:30	0.51	1.11	497.8
3/30/2013 13:40	0.51	1.11	497.8
3/30/2013 13:50	0.51	1.11	497.8
3/30/2013 14:00	0.51	1.11	497.8
3/30/2013 14:10	0.51	1.11	497.8
3/30/2013 14:20	0.51	1.11	497.8
3/30/2013 14:30	0.51	1.11	497.8
3/30/2013 14:40	0.51	1.11	497.8
3/30/2013 14:50	0.51	1.11	497.8
3/30/2013 15:00	0.51	1.11	497.8
3/30/2013 15:10	0.51	1.11	497.8
3/30/2013 15:20	0.51	1.11	497.8
3/30/2013 15:30	0.51	1.11	497.8
3/30/2013 15:40	0.51	1.11	497.8
3/30/2013 15:50	0.51	1.11	497.8
3/30/2013 16:00	0.51	1.11	497.8
3/30/2013 16:10	0.51	1.11	497.8
3/30/2013 16:20	0.51	1.11	497.8
3/30/2013 16:30	0.51	1.11	497.8
3/30/2013 16:40	0.51	1.11	497.8
3/30/2013 16:50	0.51	1.11	497.8
3/30/2013 17:00	0.51	1.11	497.8

3/30/2013 17:10	0.51	1.11	497.8
3/30/2013 17:20	0.51	1.11	497.8
3/30/2013 17:30	0.51	1.11	497.8
3/30/2013 17:40	0.51	1.11	497.8
3/30/2013 17:50	0.51	1.11	497.8
3/30/2013 18:00	0.51	1.11	497.8
3/30/2013 18:10	0.51	1.11	497.8
3/30/2013 18:20	0.51	1.11	497.8
3/30/2013 18:30	0.51	1.11	497.8
3/30/2013 18:40	0.51	1.11	497.8
3/30/2013 18:50	0.51	1.11	497.8
3/30/2013 19:00	0.51	1.11	497.8
3/30/2013 19:10	0.51	1.11	497.8
3/30/2013 19:20	0.51	1.11	497.8
3/30/2013 19:30	0.51	1.11	497.8
3/30/2013 19:40	0.51	1.11	497.8
3/30/2013 19:50	0.51	1.11	497.8
3/30/2013 20:00	0.51	1.11	497.8
3/30/2013 20:10	0.51	1.11	497.8
3/30/2013 20:20	0.51	1.11	497.8
3/30/2013 20:30	0.51	1.11	497.8
3/30/2013 20:40	0.51	1.11	497.8
3/30/2013 20:50	0.51	1.11	497.8
3/30/2013 21:00	0.51	1.11	497.8
3/30/2013 21:10	0.51	1.11	497.8
3/30/2013 21:20	0.51	1.11	497.8
3/30/2013 21:30	0.51	1.11	497.8
3/30/2013 21:40	0.51	1.11	497.8
3/30/2013 21:50	0.51	1.11	497.8
3/30/2013 22:00	0.51	1.11	497.8
3/30/2013 22:10	0.51	1.11	497.8
3/30/2013 22:20	0.51	1.11	497.8
3/30/2013 22:30	0.51	1.11	497.8
3/30/2013 22:40	0.51	1.11	497.8
3/30/2013 22:50	0.51	1.11	497.8
3/30/2013 23:00	0.51	1.11	497.8
3/30/2013 23:10	0.51	1.11	497.8
3/30/2013 23:20	0.51	1.11	497.8
3/30/2013 23:30	0.51	1.11	497.8
3/30/2013 23:40	0.51	1.11	497.8
3/30/2013 23:50	0.51	1.11	497.8
3/31/2013 0:00	0.51	1.11	497.8
3/31/2013 0:10	0.51	1.11	497.8
3/31/2013 0:20	0.51	1.11	497.8
3/31/2013 0:30	0.51	1.11	497.8
3/31/2013 0:40	0.51	1.11	497.8
3/31/2013 0:50	0.51	1.11	497.8

3/31/2013 1:00	0.51	1.11	497.8
3/31/2013 1:10	0.51	1.11	497.8
3/31/2013 1:20	0.51	1.11	497.8
3/31/2013 1:30	0.51	1.11	497.8
3/31/2013 1:40	0.51	1.11	497.8
3/31/2013 1:50	0.51	1.11	497.8
3/31/2013 2:00	0.51	1.11	497.8
3/31/2013 2:10	0.51	1.11	497.8
3/31/2013 2:20	0.51	1.11	497.8
3/31/2013 2:30	0.51	1.11	497.8
3/31/2013 2:40	0.51	1.11	497.8
3/31/2013 2:50	0.51	1.11	497.8
3/31/2013 3:00	0.51	1.11	497.8
3/31/2013 3:10	0.51	1.11	497.8
3/31/2013 3:20	0.51	1.11	497.8
3/31/2013 3:30	0.51	1.11	497.8
3/31/2013 3:40	0.51	1.11	497.8
3/31/2013 3:50	0.51	1.11	497.8
3/31/2013 4:00	0.51	1.11	497.8
3/31/2013 4:10	0.51	1.11	497.8
3/31/2013 4:20	0.51	1.11	497.8
3/31/2013 4:30	0.51	1.11	497.8
3/31/2013 4:40	0.51	1.11	497.8
3/31/2013 4:50	0.51	1.11	497.8
3/31/2013 5:00	0.51	1.11	497.8
3/31/2013 5:10	0.51	1.11	497.8
3/31/2013 5:20	0.51	1.11	497.8
3/31/2013 5:30	0.51	1.11	497.8
3/31/2013 5:40	0.51	1.11	497.8
3/31/2013 5:50	0.51	1.11	497.8
3/31/2013 6:00	0.51	1.11	497.8
3/31/2013 6:10	0.51	1.11	497.8
3/31/2013 6:20	0.51	1.11	497.8
3/31/2013 6:30	0.51	1.11	497.8
3/31/2013 6:40	0.51	1.11	497.8
3/31/2013 6:50	0.51	1.11	497.8
3/31/2013 7:00	0.51	1.11	497.8
3/31/2013 7:10	0.51	1.11	497.8
3/31/2013 7:20	0.51	1.11	497.8
3/31/2013 7:30	0.51	1.11	497.8
3/31/2013 7:40	0.51	1.11	497.8
3/31/2013 7:50	0.51	1.11	497.8
3/31/2013 8:00	0.51	1.11	497.8
3/31/2013 8:10	0.51	1.11	497.8
3/31/2013 8:20	0.51	1.11	497.8
3/31/2013 8:30	0.51	1.11	497.8
3/31/2013 8:40	0.51	1.11	497.8

3/31/2013 8:50	0.51	1.11	497.8
3/31/2013 9:00	0.51	1.11	497.8
3/31/2013 9:10	0.51	1.11	497.8
3/31/2013 9:20	0.51	1.11	497.8
3/31/2013 9:30	0.51	1.11	497.8
3/31/2013 9:40	0.51	1.11	497.8
3/31/2013 9:50	0.51	1.11	497.8
3/31/2013 10:00	0.51	1.11	497.8
3/31/2013 10:10	0.51	1.11	497.8
3/31/2013 10:20	0.51	1.11	497.8
3/31/2013 10:30	0.51	1.11	497.8
3/31/2013 10:40	0.51	1.11	497.8
3/31/2013 10:50	0.51	1.11	497.8
3/31/2013 11:00	0.51	1.11	497.8
3/31/2013 11:10	0.51	1.11	497.8
3/31/2013 11:20	0.51	1.11	497.8
3/31/2013 11:30	0.51	1.11	497.8
3/31/2013 11:40	0.51	1.11	497.8
3/31/2013 11:50	0.51	1.11	497.8
3/31/2013 12:00	0.51	1.11	497.8
3/31/2013 12:10	0.51	1.11	497.8
3/31/2013 12:20	0.51	1.11	497.8
3/31/2013 12:30	0.51	1.11	497.8
3/31/2013 12:40	0.51	1.11	497.8
3/31/2013 12:50	0.51	1.11	497.8
3/31/2013 13:00	0.51	1.11	497.8
3/31/2013 13:10	0.51	1.11	497.8
3/31/2013 13:20	0.51	1.11	497.8
3/31/2013 13:30	0.51	1.11	497.8
3/31/2013 13:40	0.51	1.11	497.8
3/31/2013 13:50	0.51	1.11	497.8
3/31/2013 14:00	0.51	1.11	497.8
3/31/2013 14:10	0.51	1.11	497.8
3/31/2013 14:20	0.51	1.11	497.8
3/31/2013 14:30	0.51	1.11	497.8
3/31/2013 14:40	0.51	1.11	497.8
3/31/2013 14:50	0.51	1.11	497.8
3/31/2013 15:00	0.51	1.11	497.8
3/31/2013 15:10	0.51	1.11	497.8
3/31/2013 15:20	0.51	1.11	497.8
3/31/2013 15:30	0.51	1.11	497.8
3/31/2013 15:40	0.51	1.11	497.8
3/31/2013 15:50	0.51	1.11	497.8
3/31/2013 16:00	0.51	1.11	497.8
3/31/2013 16:10	0.51	1.11	497.8
3/31/2013 16:20	0.51	1.11	497.8
3/31/2013 16:30	0.51	1.11	497.8

3/31/2013 16:40	0.51	1.11	497.8
3/31/2013 16:50	0.51	1.11	497.8
3/31/2013 17:00	0.51	1.11	497.8
3/31/2013 17:10	0.51	1.11	497.8
3/31/2013 17:20	0.51	1.11	497.8
3/31/2013 17:30	0.51	1.11	497.8
3/31/2013 17:40	0.51	1.11	497.8
3/31/2013 17:50	0.51	1.11	497.8
3/31/2013 18:00	0.51	1.11	497.8
3/31/2013 18:10	0.51	1.11	497.8
3/31/2013 18:20	0.51	1.11	497.8
3/31/2013 18:30	0.51	1.11	497.8
3/31/2013 18:40	0.51	1.11	497.8
3/31/2013 18:50	0.51	1.11	497.8
3/31/2013 19:00	0.51	1.11	497.8
3/31/2013 19:10	0.51	1.11	497.8
3/31/2013 19:20	0.51	1.11	497.8
3/31/2013 19:30	0.51	1.11	497.8
3/31/2013 19:40	0.51	1.11	497.8
3/31/2013 19:50	0.51	1.11	497.8
3/31/2013 20:00	0.51	1.11	497.8
3/31/2013 20:10	0.51	1.11	497.8
3/31/2013 20:20	0.51	1.11	497.8
3/31/2013 20:30	0.51	1.11	497.8
3/31/2013 20:40	0.51	1.11	497.8
3/31/2013 20:50	0.51	1.11	497.8
3/31/2013 21:00	0.51	1.11	497.8
3/31/2013 21:10	0.51	1.11	497.8
3/31/2013 21:20	0.51	1.11	497.8
3/31/2013 21:30	0.51	1.11	497.8
3/31/2013 21:40	0.51	1.11	497.8
3/31/2013 21:50	0.51	1.11	497.8
3/31/2013 22:00	0.51	1.11	497.8
3/31/2013 22:10	0.51	1.11	497.8
3/31/2013 22:20	0.51	1.11	497.8
3/31/2013 22:30	0.51	1.11	497.8
3/31/2013 22:40	0.51	1.11	497.8
3/31/2013 22:50	0.51	1.11	497.8
3/31/2013 23:00	0.51	1.11	497.8
3/31/2013 23:10	0.51	1.11	497.8
3/31/2013 23:20	0.51	1.11	497.8
3/31/2013 23:30	0.51	1.11	497.8
3/31/2013 23:40	0.51	1.11	497.8
3/31/2013 23:50	0.51	1.11	497.8

Appendix J

North Flume Ultrasonic Sensor Data with Flowrates

Ultrasonic Sensor Data at North Flume, March 2013

Date, Time	Depth of Flow (ft)	Depth of Flow (in)	Flowrate (cfs)	Flowrate (gpm)
3/1/2013 12:00:00 AM	0.510	6.12	1.11	497.8
3/1/2013 12:15:00 AM	0.510	6.12	1.11	497.8
3/1/2013 1:46:14 AM	0.510	6.12	1.11	497.8
3/1/2013 1:46:39 AM	0.510	6.12	1.11	497.8
3/1/2013 1:47:02 AM	0.510	6.12	1.11	497.8
3/1/2013 1:47:25 AM	0.510	6.12	1.11	497.8
3/1/2013 1:47:49 AM	0.510	6.12	1.11	497.8
3/1/2013 1:48:12 AM	0.510	6.12	1.11	497.8
3/1/2013 2:00:00 AM	0.510	6.12	1.11	497.8
3/1/2013 2:15:00 AM	0.510	6.12	1.11	497.8
3/1/2013 2:30:00 AM	0.510	6.12	1.11	497.8
3/1/2013 2:45:00 AM	0.510	6.12	1.11	497.8
3/1/2013 3:00:00 AM	0.510	6.12	1.11	497.8
3/1/2013 3:15:00 AM	0.510	6.12	1.11	497.8
3/1/2013 3:30:00 AM	0.510	6.12	1.11	497.8
3/1/2013 3:45:00 AM	0.510	6.12	1.11	497.8
3/1/2013 4:00:00 AM	0.510	6.12	1.11	497.8
3/1/2013 6:48:24 AM	0.510	6.12	1.11	497.8
3/1/2013 6:48:49 AM	0.510	6.12	1.11	497.8
3/1/2013 6:49:14 AM	0.510	6.12	1.11	497.8
3/1/2013 6:49:37 AM	0.510	6.12	1.11	497.8
3/1/2013 6:50:00 AM	0.510	6.12	1.11	497.8
3/1/2013 6:50:24 AM	0.510	6.12	1.11	497.8
3/1/2013 6:50:47 AM	0.500	6.00	1.08	483.2
3/1/2013 6:51:10 AM	0.510	6.12	1.11	497.8
3/1/2013 6:51:34 AM	0.510	6.12	1.11	497.8
3/1/2013 6:51:57 AM	0.510	6.12	1.11	497.8
3/1/2013 6:52:20 AM	0.510	6.12	1.11	497.8
3/1/2013 7:00:00 AM	0.510	6.12	1.11	497.8
3/1/2013 7:15:00 AM	0.510	6.12	1.11	497.8
3/1/2013 7:30:00 AM	0.510	6.12	1.11	497.8
3/1/2013 7:45:00 AM	0.510	6.12	1.11	497.8
3/1/2013 8:00:00 AM	0.510	6.12	1.11	497.8
3/1/2013 8:15:00 AM	0.510	6.12	1.11	497.8
3/1/2013 8:30:00 AM	0.510	6.12	1.11	497.8
3/1/2013 8:45:00 AM	0.510	6.12	1.11	497.8
3/1/2013 9:00:00 AM	0.510	6.12	1.11	497.8
3/1/2013 9:15:00 AM	0.510	6.12	1.11	497.8
3/1/2013 9:30:00 AM	0.510	6.12	1.11	497.8
3/1/2013 9:45:00 AM	0.510	6.12	1.11	497.8
3/1/2013 10:00:00 AM	0.510	6.12	1.11	497.8
3/1/2013 10:15:00 AM	0.510	6.12	1.11	497.8
3/1/2013 10:30:00 AM	0.510	6.12	1.11	497.8

3/1/2013 10:45:00 AM	0.510	6.12	1.11	497.8
3/1/2013 11:00:00 AM	0.500	6.00	1.08	483.2
3/1/2013 11:15:00 AM	0.500	6.00	1.08	483.2
3/1/2013 11:30:00 AM	0.500	6.00	1.08	483.2
3/1/2013 11:45:00 AM	0.500	6.00	1.08	483.2
3/1/2013 12:00:00 PM	0.510	6.12	1.11	497.8
3/1/2013 12:15:00 PM	0.510	6.12	1.11	497.8
3/1/2013 12:30:00 PM	0.510	6.12	1.11	497.8
3/1/2013 12:45:00 PM	0.510	6.12	1.11	497.8
3/1/2013 1:00:00 PM	0.510	6.12	1.11	497.8
3/1/2013 1:15:00 PM	0.510	6.12	1.11	497.8
3/1/2013 1:30:00 PM	0.510	6.12	1.11	497.8
3/1/2013 1:45:00 PM	0.510	6.12	1.11	497.8
3/1/2013 2:00:00 PM	0.510	6.12	1.11	497.8
3/1/2013 2:15:00 PM	0.510	6.12	1.11	497.8
3/1/2013 2:30:00 PM	0.510	6.12	1.11	497.8
3/1/2013 2:45:00 PM	0.510	6.12	1.11	497.8
3/1/2013 3:00:00 PM	0.510	6.12	1.11	497.8
3/1/2013 3:15:00 PM	0.510	6.12	1.11	497.8
3/1/2013 3:30:00 PM	0.510	6.12	1.11	497.8
3/1/2013 3:45:00 PM	0.510	6.12	1.11	497.8
3/1/2013 4:00:00 PM	0.500	6.00	1.08	483.2
3/1/2013 4:15:00 PM	0.510	6.12	1.11	497.8
3/1/2013 4:30:00 PM	0.510	6.12	1.11	497.8
3/1/2013 4:45:00 PM	0.510	6.12	1.11	497.8
3/1/2013 5:00:00 PM	0.510	6.12	1.11	497.8
3/1/2013 5:15:00 PM	0.510	6.12	1.11	497.8
3/1/2013 5:30:00 PM	0.510	6.12	1.11	497.8
3/1/2013 5:45:00 PM	0.510	6.12	1.11	497.8
3/1/2013 6:00:00 PM	0.510	6.12	1.11	497.8
3/1/2013 6:15:00 PM	0.510	6.12	1.11	497.8
3/1/2013 6:30:00 PM	0.510	6.12	1.11	497.8
3/1/2013 6:45:00 PM	0.510	6.12	1.11	497.8
3/1/2013 7:00:00 PM	0.500	6.00	1.08	483.2
3/1/2013 7:15:00 PM	0.510	6.12	1.11	497.8
3/1/2013 7:30:00 PM	0.510	6.12	1.11	497.8
3/1/2013 7:45:00 PM	0.510	6.12	1.11	497.8
3/1/2013 8:00:00 PM	0.510	6.12	1.11	497.8
3/1/2013 8:15:00 PM	0.510	6.12	1.11	497.8
3/1/2013 8:30:00 PM	0.510	6.12	1.11	497.8
3/1/2013 8:45:00 PM	0.510	6.12	1.11	497.8
3/1/2013 9:00:00 PM	0.510	6.12	1.11	497.8
3/1/2013 9:15:00 PM	0.510	6.12	1.11	497.8
3/1/2013 9:30:00 PM	0.510	6.12	1.11	497.8
3/1/2013 9:45:00 PM	0.510	6.12	1.11	497.8
3/1/2013 10:00:00 PM	0.510	6.12	1.11	497.8
3/1/2013 10:15:00 PM	0.510	6.12	1.11	497.8

3/1/2013 10:30:00 PM	0.510	6.12	1.11	497.8
3/1/2013 10:45:00 PM	0.510	6.12	1.11	497.8
3/1/2013 11:00:00 PM	0.510	6.12	1.11	497.8
3/1/2013 11:15:00 PM	0.510	6.12	1.11	497.8
3/1/2013 11:30:00 PM	0.510	6.12	1.11	497.8
3/1/2013 11:45:00 PM	0.510	6.12	1.11	497.8
3/2/2013 12:00:00 AM	0.510	6.12	1.11	497.8
3/2/2013 12:15:00 AM	0.510	6.12	1.11	497.8
3/2/2013 12:30:00 AM	0.510	6.12	1.11	497.8
3/2/2013 12:45:00 AM	0.510	6.12	1.11	497.8
3/2/2013 1:00:00 AM	0.510	6.12	1.11	497.8
3/2/2013 1:15:00 AM	0.510	6.12	1.11	497.8
3/2/2013 1:30:00 AM	0.510	6.12	1.11	497.8
3/2/2013 1:45:00 AM	0.510	6.12	1.11	497.8
3/2/2013 2:00:00 AM	0.510	6.12	1.11	497.8
3/2/2013 2:15:00 AM	0.510	6.12	1.11	497.8
3/2/2013 2:30:00 AM	0.510	6.12	1.11	497.8
3/2/2013 2:45:00 AM	0.510	6.12	1.11	497.8
3/2/2013 3:00:00 AM	0.510	6.12	1.11	497.8
3/2/2013 3:15:00 AM	0.510	6.12	1.11	497.8
3/2/2013 3:30:00 AM	0.510	6.12	1.11	497.8
3/2/2013 3:45:00 AM	0.510	6.12	1.11	497.8
3/2/2013 4:00:00 AM	0.510	6.12	1.11	497.8
3/2/2013 4:15:00 AM	0.510	6.12	1.11	497.8
3/2/2013 4:30:00 AM	0.510	6.12	1.11	497.8
3/2/2013 4:45:00 AM	0.510	6.12	1.11	497.8
3/2/2013 5:00:00 AM	0.510	6.12	1.11	497.8
3/2/2013 5:15:00 AM	0.510	6.12	1.11	497.8
3/2/2013 5:30:00 AM	0.510	6.12	1.11	497.8
3/2/2013 5:45:00 AM	0.510	6.12	1.11	497.8
3/2/2013 6:00:00 AM	0.510	6.12	1.11	497.8
3/2/2013 6:15:00 AM	0.510	6.12	1.11	497.8
3/2/2013 6:30:00 AM	0.510	6.12	1.11	497.8
3/2/2013 6:45:00 AM	0.510	6.12	1.11	497.8
3/2/2013 7:00:00 AM	0.510	6.12	1.11	497.8
3/2/2013 7:15:00 AM	0.500	6.00	1.08	483.2
3/2/2013 7:30:00 AM	0.510	6.12	1.11	497.8
3/2/2013 7:45:00 AM	0.510	6.12	1.11	497.8
3/2/2013 8:00:00 AM	0.510	6.12	1.11	497.8
3/2/2013 8:15:00 AM	0.510	6.12	1.11	497.8
3/2/2013 8:30:00 AM	0.510	6.12	1.11	497.8
3/2/2013 8:45:00 AM	0.510	6.12	1.11	497.8
3/2/2013 9:00:00 AM	0.510	6.12	1.11	497.8
3/2/2013 9:15:00 AM	0.510	6.12	1.11	497.8
3/2/2013 9:30:00 AM	0.510	6.12	1.11	497.8
3/2/2013 9:45:00 AM	0.510	6.12	1.11	497.8
3/2/2013 10:00:00 AM	0.510	6.12	1.11	497.8

3/2/2013 10:15:00 AM	0.510	6.12	1.11	497.8
3/2/2013 10:30:00 AM	0.510	6.12	1.11	497.8
3/2/2013 10:45:00 AM	0.500	6.00	1.08	483.2
3/2/2013 11:00:00 AM	0.510	6.12	1.11	497.8
3/2/2013 11:15:00 AM	0.510	6.12	1.11	497.8
3/2/2013 11:30:00 AM	0.510	6.12	1.11	497.8
3/2/2013 11:45:00 AM	0.500	6.00	1.08	483.2
3/2/2013 12:00:00 PM	0.510	6.12	1.11	497.8
3/2/2013 12:15:00 PM	0.510	6.12	1.11	497.8
3/2/2013 12:30:00 PM	0.500	6.00	1.08	483.2
3/2/2013 12:45:00 PM	0.500	6.00	1.08	483.2
3/2/2013 1:00:00 PM	0.510	6.12	1.11	497.8
3/2/2013 1:15:00 PM	0.500	6.00	1.08	483.2
3/2/2013 1:30:00 PM	0.510	6.12	1.11	497.8
3/2/2013 1:45:00 PM	0.510	6.12	1.11	497.8
3/2/2013 2:00:00 PM	0.500	6.00	1.08	483.2
3/2/2013 2:15:00 PM	0.510	6.12	1.11	497.8
3/2/2013 2:30:00 PM	0.510	6.12	1.11	497.8
3/2/2013 2:45:00 PM	0.510	6.12	1.11	497.8
3/2/2013 3:00:00 PM	0.510	6.12	1.11	497.8
3/2/2013 3:15:00 PM	0.510	6.12	1.11	497.8
3/2/2013 3:30:00 PM	0.510	6.12	1.11	497.8
3/2/2013 3:45:00 PM	0.510	6.12	1.11	497.8
3/2/2013 4:00:00 PM	0.510	6.12	1.11	497.8
3/2/2013 4:15:00 PM	0.510	6.12	1.11	497.8
3/2/2013 4:30:00 PM	0.510	6.12	1.11	497.8
3/2/2013 4:45:00 PM	0.510	6.12	1.11	497.8
3/2/2013 5:00:00 PM	0.510	6.12	1.11	497.8
3/2/2013 5:15:00 PM	0.510	6.12	1.11	497.8
3/2/2013 5:30:00 PM	0.510	6.12	1.11	497.8
3/2/2013 5:45:00 PM	0.510	6.12	1.11	497.8
3/2/2013 6:00:00 PM	0.510	6.12	1.11	497.8
3/2/2013 6:15:00 PM	0.510	6.12	1.11	497.8
3/2/2013 6:30:00 PM	0.510	6.12	1.11	497.8
3/2/2013 6:45:00 PM	0.510	6.12	1.11	497.8
3/2/2013 7:00:00 PM	0.510	6.12	1.11	497.8
3/2/2013 7:15:00 PM	0.510	6.12	1.11	497.8
3/2/2013 7:30:00 PM	0.510	6.12	1.11	497.8
3/2/2013 7:45:00 PM	0.510	6.12	1.11	497.8
3/2/2013 8:00:00 PM	0.510	6.12	1.11	497.8
3/2/2013 8:15:00 PM	0.510	6.12	1.11	497.8
3/2/2013 8:30:00 PM	0.510	6.12	1.11	497.8
3/2/2013 8:45:00 PM	0.510	6.12	1.11	497.8
3/2/2013 9:00:00 PM	0.510	6.12	1.11	497.8
3/2/2013 9:15:00 PM	0.510	6.12	1.11	497.8
3/2/2013 9:30:00 PM	0.510	6.12	1.11	497.8
3/2/2013 9:45:00 PM	0.500	6.00	1.08	483.2

3/2/2013 10:00:00 PM	0.510	6.12	1.11	497.8
3/2/2013 10:15:00 PM	0.500	6.00	1.08	483.2
3/2/2013 10:30:00 PM	0.510	6.12	1.11	497.8
3/2/2013 10:45:00 PM	0.510	6.12	1.11	497.8
3/2/2013 11:00:00 PM	0.510	6.12	1.11	497.8
3/2/2013 11:15:00 PM	0.510	6.12	1.11	497.8
3/2/2013 11:30:00 PM	0.510	6.12	1.11	497.8
3/2/2013 11:45:00 PM	0.510	6.12	1.11	497.8
3/3/2013 12:00:00 AM	0.510	6.12	1.11	497.8
3/3/2013 12:15:00 AM	0.510	6.12	1.11	497.8
3/3/2013 12:30:00 AM	0.510	6.12	1.11	497.8
3/3/2013 12:45:00 AM	0.510	6.12	1.11	497.8
3/3/2013 1:00:00 AM	0.510	6.12	1.11	497.8
3/3/2013 1:15:00 AM	0.510	6.12	1.11	497.8
3/3/2013 1:30:00 AM	0.510	6.12	1.11	497.8
3/3/2013 1:45:00 AM	0.510	6.12	1.11	497.8
3/3/2013 2:00:00 AM	0.510	6.12	1.11	497.8
3/3/2013 2:15:00 AM	0.510	6.12	1.11	497.8
3/3/2013 2:30:00 AM	0.510	6.12	1.11	497.8
3/3/2013 2:45:00 AM	0.510	6.12	1.11	497.8
3/3/2013 3:00:00 AM	0.510	6.12	1.11	497.8
3/3/2013 7:48:19 AM	0.510	6.12	1.11	497.8
3/3/2013 7:48:59 AM	0.510	6.12	1.11	497.8
3/3/2013 7:49:30 AM	0.510	6.12	1.11	497.8
3/3/2013 7:50:00 AM	0.510	6.12	1.11	497.8
3/3/2013 7:50:30 AM	0.510	6.12	1.11	497.8
3/3/2013 7:50:59 AM	0.510	6.12	1.11	497.8
3/3/2013 7:51:27 AM	0.510	6.12	1.11	497.8
3/3/2013 7:51:55 AM	0.510	6.12	1.11	497.8
3/3/2013 7:52:23 AM	0.510	6.12	1.11	497.8
3/3/2013 7:52:51 AM	0.510	6.12	1.11	497.8
3/3/2013 7:53:19 AM	0.510	6.12	1.11	497.8
3/3/2013 7:53:47 AM	0.510	6.12	1.11	497.8
3/3/2013 7:54:15 AM	0.510	6.12	1.11	497.8
3/3/2013 7:54:43 AM	0.510	6.12	1.11	497.8
3/3/2013 7:55:11 AM	0.510	6.12	1.11	497.8
3/3/2013 7:55:39 AM	0.510	6.12	1.11	497.8
3/3/2013 7:56:07 AM	0.510	6.12	1.11	497.8
3/3/2013 7:56:36 AM	0.510	6.12	1.11	497.8
3/3/2013 7:57:04 AM	0.510	6.12	1.11	497.8
3/3/2013 8:00:44 AM	0.510	6.12	1.11	497.8
3/3/2013 8:15:00 AM	0.510	6.12	1.11	497.8
3/3/2013 8:30:00 AM	0.510	6.12	1.11	497.8
3/3/2013 8:45:00 AM	0.510	6.12	1.11	497.8
3/3/2013 9:00:00 AM	0.510	6.12	1.11	497.8
3/3/2013 9:15:00 AM	0.510	6.12	1.11	497.8
3/3/2013 9:30:00 AM	0.510	6.12	1.11	497.8

3/3/2013 9:45:00 AM	0.510	6.12	1.11	497.8
3/3/2013 10:00:00 AM	0.510	6.12	1.11	497.8
3/3/2013 10:15:00 AM	0.510	6.12	1.11	497.8
3/3/2013 10:30:00 AM	0.510	6.12	1.11	497.8
3/3/2013 10:45:00 AM	0.510	6.12	1.11	497.8
3/3/2013 11:00:00 AM	0.510	6.12	1.11	497.8
3/3/2013 11:15:00 AM	0.510	6.12	1.11	497.8
3/3/2013 11:30:00 AM	0.510	6.12	1.11	497.8
3/3/2013 11:45:00 AM	0.500	6.00	1.08	483.2
3/3/2013 12:00:00 PM	0.510	6.12	1.11	497.8
3/3/2013 12:15:00 PM	0.510	6.12	1.11	497.8
3/3/2013 12:30:00 PM	0.510	6.12	1.11	497.8
3/3/2013 12:45:00 PM	0.510	6.12	1.11	497.8
3/3/2013 1:00:00 PM	0.510	6.12	1.11	497.8
3/3/2013 1:15:00 PM	0.500	6.00	1.08	483.2
3/3/2013 1:30:00 PM	0.510	6.12	1.11	497.8
3/3/2013 1:45:00 PM	0.510	6.12	1.11	497.8
3/3/2013 2:00:00 PM	0.510	6.12	1.11	497.8
3/3/2013 2:15:00 PM	0.510	6.12	1.11	497.8
3/3/2013 2:30:00 PM	0.510	6.12	1.11	497.8
3/3/2013 2:45:00 PM	0.510	6.12	1.11	497.8
3/3/2013 3:00:00 PM	0.500	6.00	1.08	483.2
3/3/2013 3:15:00 PM	0.510	6.12	1.11	497.8
3/3/2013 3:30:00 PM	0.500	6.00	1.08	483.2
3/3/2013 3:45:00 PM	0.500	6.00	1.08	483.2
3/3/2013 4:00:00 PM	0.510	6.12	1.11	497.8
3/3/2013 4:15:00 PM	0.510	6.12	1.11	497.8
3/3/2013 4:30:00 PM	0.510	6.12	1.11	497.8
3/3/2013 4:45:00 PM	0.500	6.00	1.08	483.2
3/3/2013 5:00:00 PM	0.500	6.00	1.08	483.2
3/3/2013 5:15:00 PM	0.510	6.12	1.11	497.8
3/3/2013 5:30:00 PM	0.510	6.12	1.11	497.8
3/3/2013 5:45:00 PM	0.510	6.12	1.11	497.8
3/3/2013 6:00:00 PM	0.510	6.12	1.11	497.8
3/3/2013 6:15:00 PM	0.510	6.12	1.11	497.8
3/3/2013 6:30:00 PM	0.500	6.00	1.08	483.2
3/3/2013 6:45:00 PM	0.500	6.00	1.08	483.2
3/3/2013 7:00:00 PM	0.510	6.12	1.11	497.8
3/3/2013 7:15:00 PM	0.510	6.12	1.11	497.8
3/3/2013 7:30:00 PM	0.510	6.12	1.11	497.8
3/3/2013 7:45:00 PM	0.510	6.12	1.11	497.8
3/3/2013 8:00:00 PM	0.510	6.12	1.11	497.8
3/3/2013 8:15:00 PM	0.510	6.12	1.11	497.8
3/3/2013 8:30:00 PM	0.510	6.12	1.11	497.8
3/3/2013 8:45:00 PM	0.510	6.12	1.11	497.8
3/3/2013 9:00:00 PM	0.500	6.00	1.08	483.2
3/3/2013 9:15:00 PM	0.510	6.12	1.11	497.8

3/3/2013 9:30:00 PM	0.510	6.12	1.11	497.8
3/3/2013 9:45:00 PM	0.510	6.12	1.11	497.8
3/3/2013 10:00:00 PM	0.510	6.12	1.11	497.8
3/3/2013 10:15:00 PM	0.510	6.12	1.11	497.8
3/3/2013 10:30:00 PM	0.510	6.12	1.11	497.8
3/3/2013 10:45:00 PM	0.510	6.12	1.11	497.8
3/3/2013 11:00:00 PM	0.510	6.12	1.11	497.8
3/3/2013 11:15:00 PM	0.510	6.12	1.11	497.8
3/3/2013 11:30:00 PM	0.510	6.12	1.11	497.8
3/3/2013 11:45:00 PM	0.510	6.12	1.11	497.8
3/4/2013 12:00:00 AM	0.510	6.12	1.11	497.8
3/4/2013 12:15:00 AM	0.510	6.12	1.11	497.8
3/4/2013 12:30:00 AM	0.510	6.12	1.11	497.8
3/4/2013 12:45:00 AM	0.510	6.12	1.11	497.8
3/4/2013 1:00:00 AM	0.510	6.12	1.11	497.8
3/4/2013 1:15:00 AM	0.510	6.12	1.11	497.8
3/4/2013 1:30:00 AM	0.510	6.12	1.11	497.8
3/4/2013 1:45:00 AM	0.500	6.00	1.08	483.2
3/4/2013 2:00:00 AM	0.510	6.12	1.11	497.8
3/4/2013 2:15:00 AM	0.510	6.12	1.11	497.8
3/4/2013 2:30:00 AM	0.510	6.12	1.11	497.8
3/4/2013 2:45:00 AM	0.510	6.12	1.11	497.8
3/4/2013 3:00:00 AM	0.510	6.12	1.11	497.8
3/4/2013 3:15:00 AM	0.510	6.12	1.11	497.8
3/4/2013 3:30:00 AM	0.510	6.12	1.11	497.8
3/4/2013 3:45:00 AM	0.510	6.12	1.11	497.8
3/4/2013 4:00:00 AM	0.510	6.12	1.11	497.8
3/4/2013 4:15:00 AM	0.510	6.12	1.11	497.8
3/4/2013 4:30:00 AM	0.510	6.12	1.11	497.8
3/4/2013 4:45:00 AM	0.510	6.12	1.11	497.8
3/4/2013 5:00:00 AM	0.510	6.12	1.11	497.8
3/4/2013 5:15:00 AM	0.510	6.12	1.11	497.8
3/4/2013 5:30:00 AM	0.510	6.12	1.11	497.8
3/4/2013 5:45:00 AM	0.510	6.12	1.11	497.8
3/4/2013 6:00:00 AM	0.510	6.12	1.11	497.8
3/4/2013 6:15:00 AM	0.510	6.12	1.11	497.8
3/4/2013 6:30:00 AM	0.510	6.12	1.11	497.8
3/4/2013 6:45:00 AM	0.510	6.12	1.11	497.8
3/4/2013 7:00:00 AM	0.510	6.12	1.11	497.8
3/4/2013 7:15:00 AM	0.510	6.12	1.11	497.8
3/4/2013 7:30:00 AM	0.510	6.12	1.11	497.8
3/4/2013 7:45:00 AM	0.510	6.12	1.11	497.8
3/4/2013 8:00:00 AM	0.510	6.12	1.11	497.8
3/4/2013 8:15:00 AM	0.510	6.12	1.11	497.8
3/4/2013 8:30:00 AM	0.510	6.12	1.11	497.8
3/4/2013 8:45:00 AM	0.510	6.12	1.11	497.8
3/4/2013 9:00:00 AM	0.510	6.12	1.11	497.8

3/4/2013 9:15:00 AM	0.510	6.12	1.11	497.8
3/4/2013 9:30:00 AM	0.510	6.12	1.11	497.8
3/4/2013 9:45:00 AM	0.510	6.12	1.11	497.8
3/4/2013 10:00:00 AM	0.510	6.12	1.11	497.8
3/4/2013 10:15:00 AM	0.510	6.12	1.11	497.8
3/4/2013 10:30:00 AM	0.510	6.12	1.11	497.8
3/4/2013 10:45:00 AM	0.500	6.00	1.08	483.2
3/4/2013 11:00:00 AM	0.510	6.12	1.11	497.8
3/4/2013 11:15:00 AM	0.500	6.00	1.08	483.2
3/4/2013 11:30:00 AM	0.510	6.12	1.11	497.8
3/4/2013 11:45:00 AM	0.510	6.12	1.11	497.8
3/4/2013 12:00:00 PM	0.510	6.12	1.11	497.8
3/4/2013 12:15:00 PM	0.510	6.12	1.11	497.8
3/4/2013 12:30:00 PM	0.510	6.12	1.11	497.8
3/4/2013 12:45:00 PM	0.510	6.12	1.11	497.8
3/4/2013 1:00:00 PM	0.510	6.12	1.11	497.8
3/4/2013 1:15:00 PM	0.510	6.12	1.11	497.8
3/4/2013 1:30:00 PM	0.510	6.12	1.11	497.8
3/4/2013 1:45:00 PM	0.510	6.12	1.11	497.8
3/4/2013 2:00:00 PM	0.510	6.12	1.11	497.8
3/4/2013 2:15:00 PM	0.510	6.12	1.11	497.8
3/4/2013 2:30:00 PM	0.510	6.12	1.11	497.8
3/4/2013 2:45:00 PM	0.510	6.12	1.11	497.8
3/4/2013 3:00:00 PM	0.510	6.12	1.11	497.8
3/4/2013 3:15:00 PM	0.510	6.12	1.11	497.8
3/4/2013 3:30:00 PM	0.510	6.12	1.11	497.8
3/4/2013 3:45:00 PM	0.510	6.12	1.11	497.8
3/4/2013 4:00:00 PM	0.510	6.12	1.11	497.8
3/4/2013 4:15:00 PM	0.510	6.12	1.11	497.8
3/4/2013 4:30:00 PM	0.510	6.12	1.11	497.8
3/4/2013 4:45:00 PM	0.510	6.12	1.11	497.8
3/4/2013 5:00:00 PM	0.510	6.12	1.11	497.8
3/4/2013 5:15:00 PM	0.510	6.12	1.11	497.8
3/4/2013 5:30:00 PM	0.510	6.12	1.11	497.8
3/4/2013 5:45:00 PM	0.510	6.12	1.11	497.8
3/4/2013 6:00:00 PM	0.510	6.12	1.11	497.8
3/4/2013 6:15:00 PM	0.510	6.12	1.11	497.8
3/4/2013 6:30:00 PM	0.510	6.12	1.11	497.8
3/4/2013 6:45:00 PM	0.510	6.12	1.11	497.8
3/4/2013 7:00:00 PM	0.510	6.12	1.11	497.8
3/4/2013 7:15:00 PM	0.510	6.12	1.11	497.8
3/4/2013 7:30:00 PM	0.510	6.12	1.11	497.8
3/4/2013 7:45:00 PM	0.510	6.12	1.11	497.8
3/4/2013 8:00:00 PM	0.510	6.12	1.11	497.8
3/4/2013 8:15:00 PM	0.510	6.12	1.11	497.8
3/4/2013 8:30:00 PM	0.510	6.12	1.11	497.8
3/5/2013 11:58:51 AM	0.510	6.12	1.11	497.8

3/5/2013 11:59:15 AM	0.510	6.12	1.11	497.8
3/5/2013 11:59:39 AM	0.510	6.12	1.11	497.8
3/5/2013 12:00:03 PM	0.510	6.12	1.11	497.8
3/5/2013 12:00:27 PM	0.510	6.12	1.11	497.8
3/5/2013 12:00:52 PM	0.510	6.12	1.11	497.8
3/5/2013 12:01:16 PM	0.500	6.00	1.08	483.2
3/5/2013 12:01:40 PM	0.510	6.12	1.11	497.8
3/5/2013 12:02:04 PM	0.510	6.12	1.11	497.8
3/5/2013 12:02:28 PM	0.510	6.12	1.11	497.8
3/5/2013 12:02:53 PM	0.510	6.12	1.11	497.8
3/5/2013 12:03:17 PM	0.510	6.12	1.11	497.8
3/5/2013 12:03:41 PM	0.510	6.12	1.11	497.8
3/5/2013 12:04:05 PM	0.510	6.12	1.11	497.8
3/5/2013 12:04:29 PM	0.510	6.12	1.11	497.8
3/5/2013 12:04:53 PM	0.510	6.12	1.11	497.8
3/5/2013 12:05:17 PM	0.510	6.12	1.11	497.8
3/5/2013 12:05:41 PM	0.510	6.12	1.11	497.8
3/5/2013 12:06:04 PM	0.510	6.12	1.11	497.8
3/5/2013 12:06:28 PM	0.510	6.12	1.11	497.8
3/5/2013 12:06:51 PM	0.500	6.00	1.08	483.2
3/5/2013 12:07:15 PM	0.510	6.12	1.11	497.8
3/5/2013 12:07:38 PM	0.500	6.00	1.08	483.2
3/5/2013 12:08:01 PM	0.510	6.12	1.11	497.8
3/5/2013 12:08:25 PM	0.510	6.12	1.11	497.8
3/5/2013 12:08:48 PM	0.510	6.12	1.11	497.8
3/5/2013 12:09:12 PM	0.510	6.12	1.11	497.8
3/5/2013 12:09:35 PM	0.510	6.12	1.11	497.8
3/5/2013 12:09:59 PM	0.510	6.12	1.11	497.8
3/5/2013 12:10:22 PM	0.510	6.12	1.11	497.8
3/5/2013 12:10:46 PM	0.500	6.00	1.08	483.2
3/5/2013 12:11:09 PM	0.500	6.00	1.08	483.2
3/5/2013 12:11:32 PM	0.510	6.12	1.11	497.8
3/5/2013 12:11:56 PM	0.510	6.12	1.11	497.8
3/5/2013 12:12:19 PM	0.510	6.12	1.11	497.8
3/5/2013 12:12:43 PM	0.510	6.12	1.11	497.8
3/5/2013 12:13:06 PM	0.510	6.12	1.11	497.8
3/5/2013 12:13:30 PM	0.510	6.12	1.11	497.8
3/5/2013 12:13:53 PM	0.510	6.12	1.11	497.8
3/5/2013 12:14:16 PM	0.510	6.12	1.11	497.8
3/5/2013 12:14:40 PM	0.510	6.12	1.11	497.8
3/5/2013 12:15:03 PM	0.510	6.12	1.11	497.8
3/5/2013 12:15:27 PM	0.510	6.12	1.11	497.8
3/5/2013 12:15:50 PM	0.510	6.12	1.11	497.8
3/5/2013 12:16:14 PM	0.500	6.00	1.08	483.2
3/5/2013 12:16:37 PM	0.510	6.12	1.11	497.8
3/5/2013 12:17:00 PM	0.510	6.12	1.11	497.8
3/5/2013 12:17:24 PM	0.510	6.12	1.11	497.8

3/5/2013 12:17:47 PM	0.510	6.12	1.11	497.8
3/5/2013 12:18:11 PM	0.510	6.12	1.11	497.8
3/5/2013 12:18:34 PM	0.510	6.12	1.11	497.8
3/5/2013 12:18:58 PM	0.510	6.12	1.11	497.8
3/5/2013 12:19:21 PM	0.500	6.00	1.08	483.2
3/5/2013 12:19:45 PM	0.510	6.12	1.11	497.8
3/5/2013 12:20:08 PM	0.510	6.12	1.11	497.8
3/5/2013 12:20:31 PM	0.500	6.00	1.08	483.2
3/5/2013 12:20:55 PM	0.510	6.12	1.11	497.8
3/5/2013 12:21:18 PM	0.510	6.12	1.11	497.8
3/5/2013 12:21:42 PM	0.510	6.12	1.11	497.8
3/5/2013 12:22:05 PM	0.510	6.12	1.11	497.8
3/5/2013 12:22:29 PM	0.500	6.00	1.08	483.2
3/5/2013 12:22:52 PM	0.510	6.12	1.11	497.8
3/5/2013 12:23:15 PM	0.510	6.12	1.11	497.8
3/5/2013 12:30:03 PM	0.510	6.12	1.11	497.8
3/5/2013 12:45:00 PM	0.510	6.12	1.11	497.8
3/5/2013 1:00:00 PM	0.500	6.00	1.08	483.2
3/5/2013 1:15:00 PM	0.500	6.00	1.08	483.2
3/5/2013 1:30:00 PM	0.500	6.00	1.08	483.2
3/5/2013 1:45:00 PM	0.510	6.12	1.11	497.8
3/5/2013 2:00:00 PM	0.510	6.12	1.11	497.8
3/5/2013 2:15:00 PM	0.510	6.12	1.11	497.8
3/5/2013 2:30:00 PM	0.500	6.00	1.08	483.2
3/5/2013 2:45:00 PM	0.510	6.12	1.11	497.8
3/5/2013 3:00:00 PM	0.510	6.12	1.11	497.8
3/5/2013 3:15:00 PM	0.510	6.12	1.11	497.8
3/5/2013 3:30:00 PM	0.510	6.12	1.11	497.8
3/5/2013 3:45:00 PM	0.510	6.12	1.11	497.8
3/5/2013 4:00:00 PM	0.510	6.12	1.11	497.8
3/5/2013 4:15:00 PM	0.510	6.12	1.11	497.8
3/5/2013 4:30:00 PM	0.510	6.12	1.11	497.8
3/5/2013 4:45:00 PM	0.510	6.12	1.11	497.8
3/5/2013 5:00:00 PM	0.500	6.00	1.08	483.2
3/5/2013 5:15:00 PM	0.510	6.12	1.11	497.8
3/5/2013 5:30:00 PM	0.510	6.12	1.11	497.8
3/5/2013 5:45:00 PM	0.510	6.12	1.11	497.8
3/5/2013 6:00:00 PM	0.510	6.12	1.11	497.8
3/5/2013 6:15:00 PM	0.510	6.12	1.11	497.8
3/5/2013 6:30:00 PM	0.510	6.12	1.11	497.8
3/5/2013 6:45:00 PM	0.510	6.12	1.11	497.8
3/5/2013 7:00:00 PM	0.510	6.12	1.11	497.8
3/5/2013 7:15:00 PM	0.510	6.12	1.11	497.8
3/5/2013 7:30:00 PM	0.510	6.12	1.11	497.8
3/5/2013 7:45:00 PM	0.510	6.12	1.11	497.8
3/5/2013 8:00:00 PM	0.510	6.12	1.11	497.8
3/5/2013 8:15:00 PM	0.510	6.12	1.11	497.8

3/5/2013 8:30:00 PM	0.510	6.12	1.11	497.8
3/5/2013 8:45:00 PM	0.510	6.12	1.11	497.8
3/5/2013 9:00:00 PM	0.510	6.12	1.11	497.8
3/5/2013 9:15:00 PM	0.510	6.12	1.11	497.8
3/5/2013 9:30:00 PM	0.510	6.12	1.11	497.8
3/5/2013 9:45:00 PM	0.510	6.12	1.11	497.8
3/5/2013 10:00:00 PM	0.510	6.12	1.11	497.8
3/5/2013 10:15:00 PM	0.510	6.12	1.11	497.8
3/5/2013 10:30:00 PM	0.510	6.12	1.11	497.8
3/5/2013 10:45:00 PM	0.510	6.12	1.11	497.8
3/5/2013 11:00:00 PM	0.510	6.12	1.11	497.8
3/5/2013 11:15:00 PM	0.510	6.12	1.11	497.8
3/5/2013 11:30:00 PM	0.510	6.12	1.11	497.8
3/5/2013 11:45:00 PM	0.510	6.12	1.11	497.8
3/6/2013 12:00:00 AM	0.510	6.12	1.11	497.8
3/6/2013 12:15:00 AM	0.510	6.12	1.11	497.8
3/6/2013 12:30:00 AM	0.510	6.12	1.11	497.8
3/6/2013 12:45:00 AM	0.510	6.12	1.11	497.8
3/6/2013 1:00:00 AM	0.510	6.12	1.11	497.8
3/6/2013 1:15:00 AM	0.510	6.12	1.11	497.8
3/6/2013 1:30:00 AM	0.510	6.12	1.11	497.8
3/6/2013 1:45:00 AM	0.510	6.12	1.11	497.8
3/6/2013 2:00:00 AM	0.510	6.12	1.11	497.8
3/6/2013 2:15:00 AM	0.510	6.12	1.11	497.8
3/6/2013 2:30:00 AM	0.510	6.12	1.11	497.8
3/6/2013 2:45:00 AM	0.510	6.12	1.11	497.8
3/6/2013 3:00:00 AM	0.510	6.12	1.11	497.8
3/6/2013 3:15:00 AM	0.510	6.12	1.11	497.8
3/6/2013 3:30:00 AM	0.510	6.12	1.11	497.8
3/6/2013 3:45:00 AM	0.510	6.12	1.11	497.8
3/6/2013 4:00:00 AM	0.510	6.12	1.11	497.8
3/6/2013 4:15:00 AM	0.510	6.12	1.11	497.8
3/6/2013 4:30:00 AM	0.510	6.12	1.11	497.8
3/6/2013 4:45:00 AM	0.510	6.12	1.11	497.8
3/6/2013 5:00:00 AM	0.510	6.12	1.11	497.8
3/6/2013 5:15:00 AM	0.510	6.12	1.11	497.8
3/6/2013 5:30:00 AM	0.510	6.12	1.11	497.8
3/6/2013 5:45:00 AM	0.510	6.12	1.11	497.8
3/6/2013 6:00:00 AM	0.510	6.12	1.11	497.8
3/6/2013 6:15:00 AM	0.510	6.12	1.11	497.8
3/6/2013 6:30:00 AM	0.510	6.12	1.11	497.8
3/6/2013 6:45:00 AM	0.510	6.12	1.11	497.8
3/6/2013 7:00:00 AM	0.510	6.12	1.11	497.8
3/6/2013 7:15:00 AM	0.510	6.12	1.11	497.8
3/6/2013 7:30:00 AM	0.510	6.12	1.11	497.8
3/6/2013 7:45:00 AM	0.510	6.12	1.11	497.8
3/6/2013 8:00:00 AM	0.510	6.12	1.11	497.8

3/6/2013 8:15:00 AM	0.510	6.12	1.11	497.8
3/6/2013 8:30:00 AM	0.510	6.12	1.11	497.8
3/6/2013 8:45:00 AM	0.510	6.12	1.11	497.8
3/6/2013 9:00:00 AM	0.510	6.12	1.11	497.8
3/6/2013 9:15:00 AM	0.510	6.12	1.11	497.8
3/6/2013 9:30:00 AM	0.510	6.12	1.11	497.8
3/6/2013 9:45:00 AM	0.510	6.12	1.11	497.8
3/6/2013 10:00:00 AM	0.510	6.12	1.11	497.8
3/6/2013 10:15:00 AM	0.510	6.12	1.11	497.8
3/6/2013 10:30:00 AM	0.510	6.12	1.11	497.8
3/6/2013 10:45:00 AM	0.510	6.12	1.11	497.8
3/6/2013 11:00:00 AM	0.510	6.12	1.11	497.8
3/6/2013 11:15:00 AM	0.510	6.12	1.11	497.8
3/6/2013 11:30:00 AM	0.510	6.12	1.11	497.8
3/6/2013 11:45:00 AM	0.510	6.12	1.11	497.8
3/6/2013 12:00:00 PM	0.510	6.12	1.11	497.8
3/6/2013 12:15:00 PM	0.510	6.12	1.11	497.8
3/6/2013 12:30:00 PM	0.510	6.12	1.11	497.8
3/6/2013 12:45:00 PM	0.510	6.12	1.11	497.8
3/6/2013 1:00:00 PM	0.510	6.12	1.11	497.8
3/6/2013 1:15:00 PM	0.510	6.12	1.11	497.8
3/6/2013 1:30:00 PM	0.510	6.12	1.11	497.8
3/6/2013 1:45:00 PM	0.500	6.00	1.08	483.2
3/6/2013 2:00:00 PM	0.510	6.12	1.11	497.8
3/6/2013 2:15:00 PM	0.510	6.12	1.11	497.8
3/6/2013 2:30:00 PM	0.510	6.12	1.11	497.8
3/6/2013 2:45:00 PM	0.510	6.12	1.11	497.8
3/6/2013 3:00:00 PM	0.510	6.12	1.11	497.8
3/6/2013 3:15:00 PM	0.500	6.00	1.08	483.2
3/6/2013 3:30:00 PM	0.510	6.12	1.11	497.8
3/6/2013 3:45:00 PM	0.510	6.12	1.11	497.8
3/6/2013 4:00:00 PM	0.500	6.00	1.08	483.2
3/6/2013 4:15:00 PM	0.510	6.12	1.11	497.8
3/6/2013 4:30:00 PM	0.510	6.12	1.11	497.8
3/6/2013 4:45:00 PM	0.510	6.12	1.11	497.8
3/6/2013 5:00:00 PM	0.510	6.12	1.11	497.8
3/6/2013 5:15:00 PM	0.510	6.12	1.11	497.8
3/6/2013 5:30:00 PM	0.510	6.12	1.11	497.8
3/6/2013 5:45:00 PM	0.510	6.12	1.11	497.8
3/6/2013 6:00:00 PM	0.510	6.12	1.11	497.8
3/6/2013 6:15:00 PM	0.510	6.12	1.11	497.8
3/6/2013 6:30:00 PM	0.510	6.12	1.11	497.8
3/6/2013 6:45:00 PM	0.510	6.12	1.11	497.8
3/6/2013 7:00:00 PM	0.500	6.00	1.08	483.2
3/6/2013 7:15:00 PM	0.510	6.12	1.11	497.8
3/6/2013 7:30:00 PM	0.510	6.12	1.11	497.8
3/6/2013 7:45:00 PM	0.510	6.12	1.11	497.8

3/6/2013 8:00:00 PM	0.510	6.12	1.11	497.8
3/6/2013 8:15:00 PM	0.510	6.12	1.11	497.8
3/6/2013 8:30:00 PM	0.510	6.12	1.11	497.8
3/6/2013 8:45:00 PM	0.510	6.12	1.11	497.8
3/6/2013 9:00:00 PM	0.510	6.12	1.11	497.8
3/6/2013 9:15:00 PM	0.500	6.00	1.08	483.2
3/6/2013 9:30:00 PM	0.510	6.12	1.11	497.8
3/6/2013 9:45:00 PM	0.510	6.12	1.11	497.8
3/6/2013 10:00:00 PM	0.510	6.12	1.11	497.8
3/6/2013 10:15:00 PM	0.510	6.12	1.11	497.8
3/6/2013 10:30:00 PM	0.510	6.12	1.11	497.8
3/6/2013 10:45:00 PM	0.500	6.00	1.08	483.2
3/6/2013 11:00:00 PM	0.510	6.12	1.11	497.8
3/6/2013 11:15:00 PM	0.500	6.00	1.08	483.2
3/6/2013 11:30:00 PM	0.510	6.12	1.11	497.8
3/6/2013 11:45:00 PM	0.510	6.12	1.11	497.8
3/7/2013 12:00:00 AM	0.510	6.12	1.11	497.8
3/7/2013 12:15:00 AM	0.510	6.12	1.11	497.8
3/7/2013 12:30:00 AM	0.500	6.00	1.08	483.2
3/7/2013 12:45:00 AM	0.500	6.00	1.08	483.2
3/7/2013 1:00:00 AM	0.510	6.12	1.11	497.8
3/7/2013 1:15:00 AM	0.510	6.12	1.11	497.8
3/7/2013 1:30:00 AM	0.510	6.12	1.11	497.8
3/7/2013 1:45:00 AM	0.510	6.12	1.11	497.8
3/7/2013 2:00:00 AM	0.510	6.12	1.11	497.8
3/7/2013 2:15:00 AM	0.510	6.12	1.11	497.8
3/7/2013 2:30:00 AM	0.510	6.12	1.11	497.8
3/7/2013 2:45:00 AM	0.510	6.12	1.11	497.8
3/7/2013 3:00:00 AM	0.510	6.12	1.11	497.8
3/7/2013 3:15:00 AM	0.510	6.12	1.11	497.8
3/7/2013 3:30:00 AM	0.510	6.12	1.11	497.8
3/7/2013 3:45:00 AM	0.510	6.12	1.11	497.8
3/7/2013 4:00:00 AM	0.510	6.12	1.11	497.8
3/7/2013 4:15:00 AM	0.510	6.12	1.11	497.8
3/7/2013 4:30:00 AM	0.510	6.12	1.11	497.8
3/7/2013 4:45:00 AM	0.510	6.12	1.11	497.8
3/7/2013 5:00:00 AM	0.510	6.12	1.11	497.8
3/7/2013 5:15:00 AM	0.510	6.12	1.11	497.8
3/7/2013 5:30:00 AM	0.510	6.12	1.11	497.8
3/7/2013 5:45:00 AM	0.510	6.12	1.11	497.8
3/7/2013 6:00:00 AM	0.510	6.12	1.11	497.8
3/7/2013 6:15:00 AM	0.510	6.12	1.11	497.8
3/7/2013 6:30:00 AM	0.510	6.12	1.11	497.8
3/7/2013 6:45:00 AM	0.510	6.12	1.11	497.8
3/7/2013 7:00:00 AM	0.510	6.12	1.11	497.8
3/7/2013 7:15:00 AM	0.510	6.12	1.11	497.8
3/7/2013 7:30:00 AM	0.510	6.12	1.11	497.8

3/7/2013 7:45:00 AM	0.510	6.12	1.11	497.8
3/7/2013 8:00:00 AM	0.510	6.12	1.11	497.8
3/7/2013 8:15:00 AM	0.510	6.12	1.11	497.8
3/7/2013 8:30:00 AM	0.510	6.12	1.11	497.8
3/7/2013 8:45:00 AM	0.510	6.12	1.11	497.8
3/7/2013 9:00:00 AM	0.510	6.12	1.11	497.8
3/7/2013 9:15:00 AM	0.510	6.12	1.11	497.8
3/7/2013 9:30:00 AM	0.500	6.00	1.08	483.2
3/7/2013 9:45:00 AM	0.510	6.12	1.11	497.8
3/7/2013 11:00:00 AM	0.510	6.12	1.11	497.8
3/7/2013 11:15:00 AM	0.510	6.12	1.11	497.8
3/7/2013 11:30:00 AM	0.510	6.12	1.11	497.8
3/7/2013 11:45:00 AM	0.510	6.12	1.11	497.8
3/7/2013 12:00:00 PM	0.510	6.12	1.11	497.8
3/7/2013 12:15:00 PM	0.510	6.12	1.11	497.8
3/7/2013 12:30:00 PM	0.510	6.12	1.11	497.8
3/7/2013 12:45:00 PM	0.510	6.12	1.11	497.8
3/7/2013 1:00:00 PM	0.510	6.12	1.11	497.8
3/7/2013 1:15:00 PM	0.510	6.12	1.11	497.8
3/7/2013 1:30:00 PM	0.510	6.12	1.11	497.8
3/7/2013 1:45:00 PM	0.510	6.12	1.11	497.8
3/7/2013 2:00:00 PM	0.510	6.12	1.11	497.8
3/7/2013 2:15:00 PM	0.510	6.12	1.11	497.8
3/7/2013 2:30:00 PM	0.510	6.12	1.11	497.8
3/7/2013 2:45:00 PM	0.510	6.12	1.11	497.8
3/7/2013 3:00:00 PM	0.510	6.12	1.11	497.8
3/7/2013 3:15:00 PM	0.510	6.12	1.11	497.8
3/7/2013 3:30:00 PM	0.510	6.12	1.11	497.8
3/7/2013 3:45:00 PM	0.510	6.12	1.11	497.8
3/7/2013 4:00:00 PM	0.510	6.12	1.11	497.8
3/7/2013 4:15:00 PM	0.510	6.12	1.11	497.8
3/7/2013 4:30:00 PM	0.510	6.12	1.11	497.8
3/7/2013 4:45:00 PM	0.510	6.12	1.11	497.8
3/7/2013 5:00:00 PM	0.510	6.12	1.11	497.8
3/7/2013 5:15:00 PM	0.510	6.12	1.11	497.8
3/7/2013 5:30:00 PM	0.510	6.12	1.11	497.8
3/7/2013 5:45:00 PM	0.510	6.12	1.11	497.8
3/7/2013 6:00:00 PM	0.510	6.12	1.11	497.8
3/7/2013 6:15:00 PM	0.510	6.12	1.11	497.8
3/7/2013 6:30:00 PM	0.510	6.12	1.11	497.8
3/7/2013 6:45:00 PM	0.510	6.12	1.11	497.8
3/7/2013 7:00:00 PM	0.510	6.12	1.11	497.8
3/7/2013 7:15:00 PM	0.510	6.12	1.11	497.8
3/7/2013 7:30:00 PM	0.510	6.12	1.11	497.8
3/7/2013 7:45:00 PM	0.510	6.12	1.11	497.8
3/7/2013 8:00:00 PM	0.510	6.12	1.11	497.8
3/7/2013 8:15:00 PM	0.510	6.12	1.11	497.8

3/7/2013 8:30:00 PM	0.510	6.12	1.11	497.8
3/7/2013 8:45:00 PM	0.510	6.12	1.11	497.8
3/7/2013 9:00:00 PM	0.510	6.12	1.11	497.8
3/7/2013 9:15:00 PM	0.510	6.12	1.11	497.8
3/7/2013 9:30:00 PM	0.510	6.12	1.11	497.8
3/7/2013 9:45:00 PM	0.510	6.12	1.11	497.8
3/7/2013 10:00:00 PM	0.500	6.00	1.08	483.2
3/7/2013 10:15:00 PM	0.510	6.12	1.11	497.8
3/7/2013 10:30:00 PM	0.510	6.12	1.11	497.8
3/7/2013 10:45:00 PM	0.510	6.12	1.11	497.8
3/7/2013 11:00:00 PM	0.510	6.12	1.11	497.8
3/7/2013 11:15:00 PM	0.500	6.00	1.08	483.2
3/7/2013 11:30:00 PM	0.510	6.12	1.11	497.8
3/7/2013 11:45:00 PM	0.510	6.12	1.11	497.8
3/8/2013 12:00:00 AM	0.510	6.12	1.11	497.8
3/8/2013 12:15:00 AM	0.510	6.12	1.11	497.8
3/8/2013 12:30:00 AM	0.500	6.00	1.08	483.2
3/8/2013 12:45:00 AM	0.510	6.12	1.11	497.8
3/8/2013 1:00:00 AM	0.510	6.12	1.11	497.8
3/8/2013 1:15:00 AM	0.510	6.12	1.11	497.8
3/8/2013 1:30:00 AM	0.510	6.12	1.11	497.8
3/8/2013 1:45:00 AM	0.510	6.12	1.11	497.8
3/8/2013 2:00:00 AM	0.510	6.12	1.11	497.8
3/8/2013 2:15:00 AM	0.510	6.12	1.11	497.8
3/8/2013 2:30:00 AM	0.510	6.12	1.11	497.8
3/8/2013 2:45:00 AM	0.510	6.12	1.11	497.8
3/8/2013 3:00:00 AM	0.510	6.12	1.11	497.8
3/8/2013 3:15:00 AM	0.510	6.12	1.11	497.8
3/8/2013 3:30:00 AM	0.510	6.12	1.11	497.8
3/8/2013 3:45:00 AM	0.510	6.12	1.11	497.8
3/8/2013 4:00:00 AM	0.510	6.12	1.11	497.8
3/8/2013 4:15:00 AM	0.510	6.12	1.11	497.8
3/8/2013 4:30:00 AM	0.510	6.12	1.11	497.8
3/8/2013 4:45:00 AM	0.510	6.12	1.11	497.8
3/8/2013 5:00:00 AM	0.510	6.12	1.11	497.8
3/8/2013 5:15:00 AM	0.510	6.12	1.11	497.8
3/8/2013 5:30:00 AM	0.510	6.12	1.11	497.8
3/8/2013 5:45:00 AM	0.510	6.12	1.11	497.8
3/8/2013 6:00:00 AM	0.510	6.12	1.11	497.8
3/8/2013 6:15:00 AM	0.510	6.12	1.11	497.8
3/8/2013 6:30:00 AM	0.510	6.12	1.11	497.8
3/8/2013 6:45:00 AM	0.510	6.12	1.11	497.8
3/8/2013 7:00:00 AM	0.510	6.12	1.11	497.8
3/8/2013 7:15:00 AM	0.510	6.12	1.11	497.8
3/8/2013 7:30:00 AM	0.500	6.00	1.08	483.2
3/8/2013 7:45:00 AM	0.510	6.12	1.11	497.8
3/8/2013 8:00:00 AM	0.510	6.12	1.11	497.8

3/8/2013 8:15:00 AM	0.510	6.12	1.11	497.8
3/8/2013 8:30:00 AM	0.510	6.12	1.11	497.8
3/8/2013 8:45:00 AM	0.510	6.12	1.11	497.8
3/8/2013 9:00:00 AM	0.510	6.12	1.11	497.8
3/8/2013 9:15:00 AM	0.510	6.12	1.11	497.8
3/8/2013 9:30:00 AM	0.510	6.12	1.11	497.8
3/8/2013 9:45:00 AM	0.510	6.12	1.11	497.8
3/8/2013 10:00:00 AM	0.510	6.12	1.11	497.8
3/8/2013 10:15:00 AM	0.510	6.12	1.11	497.8
3/8/2013 10:30:00 AM	0.500	6.00	1.08	483.2
3/8/2013 10:45:00 AM	0.510	6.12	1.11	497.8
3/8/2013 11:00:00 AM	0.510	6.12	1.11	497.8
3/8/2013 11:15:00 AM	0.510	6.12	1.11	497.8
3/8/2013 11:30:00 AM	0.510	6.12	1.11	497.8
3/8/2013 11:45:00 AM	0.510	6.12	1.11	497.8
3/8/2013 12:00:00 PM	0.510	6.12	1.11	497.8
3/8/2013 12:15:00 PM	0.510	6.12	1.11	497.8
3/8/2013 12:30:00 PM	0.510	6.12	1.11	497.8
3/8/2013 12:45:00 PM	0.510	6.12	1.11	497.8
3/8/2013 1:00:00 PM	0.510	6.12	1.11	497.8
3/8/2013 1:15:00 PM	0.500	6.00	1.08	483.2
3/8/2013 1:30:00 PM	0.510	6.12	1.11	497.8
3/8/2013 1:45:00 PM	0.510	6.12	1.11	497.8
3/8/2013 2:00:00 PM	0.510	6.12	1.11	497.8
3/8/2013 2:15:00 PM	0.510	6.12	1.11	497.8
3/8/2013 2:30:00 PM	0.510	6.12	1.11	497.8
3/8/2013 2:45:00 PM	0.510	6.12	1.11	497.8
3/8/2013 3:00:00 PM	0.510	6.12	1.11	497.8
3/8/2013 3:15:00 PM	0.510	6.12	1.11	497.8
3/8/2013 3:30:00 PM	0.500	6.00	1.08	483.2
3/8/2013 3:45:00 PM	0.510	6.12	1.11	497.8
3/8/2013 4:00:00 PM	0.510	6.12	1.11	497.8
3/8/2013 4:15:00 PM	0.510	6.12	1.11	497.8
3/8/2013 4:30:00 PM	0.510	6.12	1.11	497.8
3/8/2013 4:45:00 PM	0.510	6.12	1.11	497.8
3/8/2013 5:00:00 PM	0.510	6.12	1.11	497.8
3/8/2013 5:15:00 PM	0.510	6.12	1.11	497.8
3/8/2013 5:30:00 PM	0.500	6.00	1.08	483.2
3/8/2013 5:45:00 PM	0.510	6.12	1.11	497.8
3/8/2013 6:00:00 PM	0.510	6.12	1.11	497.8
3/8/2013 6:15:00 PM	0.510	6.12	1.11	497.8
3/8/2013 6:30:00 PM	0.510	6.12	1.11	497.8
3/8/2013 6:45:00 PM	0.510	6.12	1.11	497.8
3/8/2013 7:00:00 PM	0.510	6.12	1.11	497.8
3/8/2013 7:15:00 PM	0.510	6.12	1.11	497.8
3/8/2013 7:30:00 PM	0.510	6.12	1.11	497.8
3/8/2013 7:45:00 PM	0.510	6.12	1.11	497.8

3/8/2013 8:00:00 PM	0.510	6.12	1.11	497.8
3/8/2013 8:15:00 PM	0.510	6.12	1.11	497.8
3/8/2013 8:30:00 PM	0.510	6.12	1.11	497.8
3/8/2013 8:45:00 PM	0.510	6.12	1.11	497.8
3/8/2013 9:00:00 PM	0.510	6.12	1.11	497.8
3/8/2013 9:15:00 PM	0.510	6.12	1.11	497.8
3/8/2013 9:30:00 PM	0.510	6.12	1.11	497.8
3/8/2013 9:45:00 PM	0.510	6.12	1.11	497.8
3/8/2013 10:00:00 PM	0.510	6.12	1.11	497.8
3/8/2013 10:15:00 PM	0.510	6.12	1.11	497.8
3/8/2013 10:30:00 PM	0.510	6.12	1.11	497.8
3/8/2013 10:45:00 PM	0.510	6.12	1.11	497.8
3/8/2013 11:00:00 PM	0.510	6.12	1.11	497.8
3/8/2013 11:15:00 PM	0.510	6.12	1.11	497.8
3/8/2013 11:30:00 PM	0.510	6.12	1.11	497.8
3/8/2013 11:45:00 PM	0.510	6.12	1.11	497.8
3/9/2013 12:00:00 AM	0.510	6.12	1.11	497.8
3/9/2013 12:15:00 AM	0.510	6.12	1.11	497.8
3/9/2013 12:30:00 AM	0.510	6.12	1.11	497.8
3/9/2013 12:45:00 AM	0.510	6.12	1.11	497.8
3/9/2013 1:00:00 AM	0.510	6.12	1.11	497.8
3/9/2013 1:15:00 AM	0.510	6.12	1.11	497.8
3/9/2013 1:30:00 AM	0.510	6.12	1.11	497.8
3/9/2013 8:34:25 AM	0.510	6.12	1.11	497.8
3/9/2013 8:35:51 AM	0.510	6.12	1.11	497.8
3/9/2013 8:37:06 AM	0.510	6.12	1.11	497.8
3/9/2013 8:38:03 AM	0.510	6.12	1.11	497.8
3/9/2013 8:39:02 AM	0.510	6.12	1.11	497.8
3/9/2013 8:40:01 AM	0.510	6.12	1.11	497.8
3/9/2013 8:40:58 AM	0.510	6.12	1.11	497.8
3/9/2013 8:41:57 AM	0.510	6.12	1.11	497.8
3/9/2013 8:42:52 AM	0.510	6.12	1.11	497.8
3/9/2013 8:43:37 AM	0.500	6.00	1.08	483.2
3/9/2013 8:44:31 AM	0.510	6.12	1.11	497.8
3/9/2013 8:45:20 AM	0.510	6.12	1.11	497.8
3/9/2013 8:46:18 AM	0.510	6.12	1.11	497.8
3/9/2013 8:47:26 AM	0.510	6.12	1.11	497.8
3/9/2013 8:48:53 AM	0.510	6.12	1.11	497.8
3/9/2013 8:50:10 AM	0.510	6.12	1.11	497.8
3/9/2013 8:51:08 AM	0.510	6.12	1.11	497.8
3/9/2013 8:52:06 AM	0.510	6.12	1.11	497.8
3/9/2013 8:53:02 AM	0.510	6.12	1.11	497.8
3/9/2013 8:54:00 AM	0.510	6.12	1.11	497.8
3/9/2013 8:55:00 AM	0.510	6.12	1.11	497.8
3/9/2013 8:55:57 AM	0.510	6.12	1.11	497.8
3/9/2013 8:56:56 AM	0.510	6.12	1.11	497.8
3/9/2013 8:57:54 AM	0.510	6.12	1.11	497.8

3/9/2013 8:58:52 AM	0.510	6.12	1.11	497.8
3/9/2013 8:59:50 AM	0.510	6.12	1.11	497.8
3/9/2013 9:00:45 AM	0.510	6.12	1.11	497.8
3/9/2013 9:01:44 AM	0.510	6.12	1.11	497.8
3/9/2013 9:02:28 AM	0.510	6.12	1.11	497.8
3/9/2013 9:03:14 AM	0.510	6.12	1.11	497.8
3/9/2013 9:15:00 AM	0.510	6.12	1.11	497.8
3/9/2013 9:30:00 AM	0.510	6.12	1.11	497.8
3/9/2013 9:45:00 AM	0.510	6.12	1.11	497.8
3/9/2013 10:00:00 AM	0.510	6.12	1.11	497.8
3/9/2013 10:15:00 AM	0.510	6.12	1.11	497.8
3/9/2013 10:30:00 AM	0.510	6.12	1.11	497.8
3/9/2013 10:45:00 AM	0.510	6.12	1.11	497.8
3/9/2013 11:00:00 AM	0.500	6.00	1.08	483.2
3/9/2013 11:15:00 AM	0.510	6.12	1.11	497.8
3/9/2013 11:30:00 AM	0.500	6.00	1.08	483.2
3/9/2013 11:45:00 AM	0.510	6.12	1.11	497.8
3/9/2013 12:00:00 PM	0.510	6.12	1.11	497.8
3/9/2013 12:15:00 PM	0.510	6.12	1.11	497.8
3/9/2013 12:30:00 PM	0.510	6.12	1.11	497.8
3/9/2013 12:45:00 PM	0.510	6.12	1.11	497.8
3/9/2013 1:00:00 PM	0.510	6.12	1.11	497.8
3/9/2013 1:15:00 PM	0.510	6.12	1.11	497.8
3/9/2013 1:30:00 PM	0.510	6.12	1.11	497.8
3/9/2013 1:45:00 PM	0.510	6.12	1.11	497.8
3/9/2013 2:00:00 PM	0.510	6.12	1.11	497.8
3/9/2013 2:15:00 PM	0.510	6.12	1.11	497.8
3/9/2013 2:30:00 PM	0.500	6.00	1.08	483.2
3/9/2013 2:45:00 PM	0.510	6.12	1.11	497.8
3/9/2013 3:00:00 PM	0.510	6.12	1.11	497.8
3/9/2013 3:15:00 PM	0.510	6.12	1.11	497.8
3/9/2013 3:30:00 PM	0.510	6.12	1.11	497.8
3/9/2013 3:45:00 PM	0.510	6.12	1.11	497.8
3/9/2013 4:00:00 PM	0.510	6.12	1.11	497.8
3/9/2013 4:15:00 PM	0.510	6.12	1.11	497.8
3/9/2013 4:30:00 PM	0.500	6.00	1.08	483.2
3/9/2013 4:45:00 PM	0.510	6.12	1.11	497.8
3/9/2013 5:00:00 PM	0.510	6.12	1.11	497.8
3/9/2013 5:15:00 PM	0.510	6.12	1.11	497.8
3/9/2013 5:30:00 PM	0.510	6.12	1.11	497.8
3/9/2013 5:45:00 PM	0.510	6.12	1.11	497.8
3/9/2013 6:00:00 PM	0.510	6.12	1.11	497.8
3/9/2013 6:15:00 PM	0.510	6.12	1.11	497.8
3/9/2013 6:30:00 PM	0.510	6.12	1.11	497.8
3/9/2013 6:45:00 PM	0.510	6.12	1.11	497.8
3/9/2013 7:00:00 PM	0.510	6.12	1.11	497.8
3/9/2013 7:15:00 PM	0.510	6.12	1.11	497.8

3/9/2013 7:30:00 PM	0.510	6.12	1.11	497.8
3/9/2013 7:45:00 PM	0.510	6.12	1.11	497.8
3/9/2013 8:00:00 PM	0.510	6.12	1.11	497.8
3/9/2013 8:15:00 PM	0.510	6.12	1.11	497.8
3/9/2013 8:30:00 PM	0.510	6.12	1.11	497.8
3/9/2013 8:45:00 PM	0.510	6.12	1.11	497.8
3/9/2013 9:00:00 PM	0.510	6.12	1.11	497.8
3/9/2013 9:15:00 PM	0.510	6.12	1.11	497.8
3/9/2013 9:30:00 PM	0.510	6.12	1.11	497.8
3/9/2013 9:45:00 PM	0.510	6.12	1.11	497.8
3/9/2013 10:00:00 PM	0.510	6.12	1.11	497.8
3/9/2013 10:15:00 PM	0.510	6.12	1.11	497.8
3/9/2013 10:30:00 PM	0.510	6.12	1.11	497.8
3/9/2013 10:45:00 PM	0.510	6.12	1.11	497.8
3/9/2013 11:00:00 PM	0.510	6.12	1.11	497.8
3/9/2013 11:15:00 PM	0.500	6.00	1.08	483.2
3/9/2013 11:30:00 PM	0.510	6.12	1.11	497.8
3/9/2013 11:45:00 PM	0.510	6.12	1.11	497.8
3/10/2013 12:00:00 AM	0.510	6.12	1.11	497.8
3/10/2013 12:15:00 AM	0.510	6.12	1.11	497.8
3/10/2013 12:30:00 AM	0.510	6.12	1.11	497.8
3/10/2013 12:45:00 AM	0.510	6.12	1.11	497.8
3/10/2013 1:00:00 AM	0.510	6.12	1.11	497.8
3/10/2013 1:15:00 AM	0.510	6.12	1.11	497.8
3/10/2013 1:30:00 AM	0.510	6.12	1.11	497.8
3/10/2013 1:45:00 AM	0.510	6.12	1.11	497.8
3/10/2013 2:00:00 AM	0.510	6.12	1.11	497.8
3/10/2013 2:15:00 AM	0.510	6.12	1.11	497.8
3/10/2013 2:30:00 AM	0.510	6.12	1.11	497.8
3/10/2013 2:45:00 AM	0.510	6.12	1.11	497.8
3/10/2013 3:00:00 AM	0.510	6.12	1.11	497.8
3/10/2013 3:15:00 AM	0.510	6.12	1.11	497.8
3/10/2013 3:30:00 AM	0.510	6.12	1.11	497.8
3/10/2013 3:45:00 AM	0.510	6.12	1.11	497.8
3/10/2013 4:00:00 AM	0.510	6.12	1.11	497.8
3/10/2013 4:15:00 AM	0.510	6.12	1.11	497.8
3/10/2013 4:30:00 AM	0.500	6.00	1.08	483.2
3/10/2013 4:45:00 AM	0.510	6.12	1.11	497.8
3/10/2013 5:00:00 AM	0.510	6.12	1.11	497.8
3/10/2013 5:15:00 AM	0.510	6.12	1.11	497.8
3/10/2013 5:30:00 AM	0.510	6.12	1.11	497.8
3/10/2013 5:45:00 AM	0.510	6.12	1.11	497.8
3/10/2013 6:00:00 AM	0.510	6.12	1.11	497.8
3/10/2013 6:15:00 AM	0.510	6.12	1.11	497.8
3/10/2013 6:30:00 AM	0.510	6.12	1.11	497.8
3/10/2013 6:45:00 AM	0.510	6.12	1.11	497.8
3/10/2013 7:00:00 AM	0.510	6.12	1.11	497.8

3/10/2013 7:15:00 AM	0.510	6.12	1.11	497.8
3/10/2013 7:30:00 AM	0.510	6.12	1.11	497.8
3/10/2013 7:45:00 AM	0.510	6.12	1.11	497.8
3/10/2013 8:00:00 AM	0.510	6.12	1.11	497.8
3/10/2013 8:15:00 AM	0.510	6.12	1.11	497.8
3/10/2013 8:30:00 AM	0.510	6.12	1.11	497.8
3/10/2013 8:45:00 AM	0.510	6.12	1.11	497.8
3/10/2013 9:00:00 AM	0.510	6.12	1.11	497.8
3/10/2013 9:15:00 AM	0.510	6.12	1.11	497.8
3/10/2013 9:30:00 AM	0.510	6.12	1.11	497.8
3/10/2013 9:45:00 AM	0.510	6.12	1.11	497.8
3/10/2013 10:00:00 AM	0.510	6.12	1.11	497.8
3/10/2013 10:15:00 AM	0.510	6.12	1.11	497.8
3/10/2013 10:30:00 AM	0.510	6.12	1.11	497.8
3/10/2013 10:45:00 AM	0.510	6.12	1.11	497.8
3/10/2013 11:00:00 AM	0.510	6.12	1.11	497.8
3/10/2013 11:15:00 AM	0.510	6.12	1.11	497.8
3/10/2013 11:30:00 AM	0.500	6.00	1.08	483.2
3/10/2013 11:45:00 AM	0.510	6.12	1.11	497.8
3/10/2013 12:00:00 PM	0.510	6.12	1.11	497.8
3/10/2013 12:15:00 PM	0.510	6.12	1.11	497.8
3/10/2013 12:30:00 PM	0.510	6.12	1.11	497.8
3/10/2013 12:45:00 PM	0.510	6.12	1.11	497.8
3/10/2013 1:00:00 PM	0.510	6.12	1.11	497.8
3/10/2013 1:15:00 PM	0.510	6.12	1.11	497.8
3/10/2013 1:30:00 PM	0.510	6.12	1.11	497.8
3/10/2013 1:45:00 PM	0.510	6.12	1.11	497.8
3/10/2013 2:00:00 PM	0.510	6.12	1.11	497.8
3/10/2013 2:15:00 PM	0.510	6.12	1.11	497.8
3/10/2013 2:30:00 PM	0.510	6.12	1.11	497.8
3/10/2013 2:45:00 PM	0.510	6.12	1.11	497.8
3/10/2013 3:00:00 PM	0.510	6.12	1.11	497.8
3/10/2013 3:15:00 PM	0.510	6.12	1.11	497.8
3/10/2013 3:30:00 PM	0.510	6.12	1.11	497.8
3/10/2013 3:45:00 PM	0.510	6.12	1.11	497.8
3/10/2013 4:00:00 PM	0.510	6.12	1.11	497.8
3/10/2013 4:15:00 PM	0.510	6.12	1.11	497.8
3/10/2013 4:30:00 PM	0.510	6.12	1.11	497.8
3/10/2013 4:45:00 PM	0.510	6.12	1.11	497.8
3/10/2013 5:00:00 PM	0.510	6.12	1.11	497.8
3/10/2013 5:15:00 PM	0.510	6.12	1.11	497.8
3/10/2013 5:30:00 PM	0.500	6.00	1.08	483.2
3/10/2013 5:45:00 PM	0.510	6.12	1.11	497.8
3/10/2013 6:00:00 PM	0.510	6.12	1.11	497.8
3/10/2013 6:15:00 PM	0.510	6.12	1.11	497.8
3/10/2013 6:30:00 PM	0.510	6.12	1.11	497.8
3/10/2013 6:45:00 PM	0.500	6.00	1.08	483.2

3/10/2013 7:00:00 PM	0.510	6.12	1.11	497.8
3/10/2013 7:15:00 PM	0.510	6.12	1.11	497.8
3/10/2013 7:30:00 PM	0.510	6.12	1.11	497.8
3/10/2013 7:45:00 PM	0.510	6.12	1.11	497.8
3/10/2013 8:00:00 PM	0.510	6.12	1.11	497.8
3/10/2013 8:15:00 PM	0.510	6.12	1.11	497.8
3/10/2013 8:30:00 PM	0.510	6.12	1.11	497.8
3/10/2013 8:45:00 PM	0.510	6.12	1.11	497.8
3/10/2013 9:00:00 PM	0.500	6.00	1.08	483.2
3/10/2013 9:15:00 PM	0.510	6.12	1.11	497.8
3/10/2013 9:30:00 PM	0.510	6.12	1.11	497.8
3/10/2013 9:45:00 PM	0.510	6.12	1.11	497.8
3/10/2013 10:00:00 PM	0.510	6.12	1.11	497.8
3/10/2013 10:15:00 PM	0.510	6.12	1.11	497.8
3/10/2013 10:30:00 PM	0.510	6.12	1.11	497.8
3/10/2013 10:45:00 PM	0.510	6.12	1.11	497.8
3/10/2013 11:00:00 PM	0.510	6.12	1.11	497.8
3/10/2013 11:15:00 PM	0.510	6.12	1.11	497.8
3/10/2013 11:30:00 PM	0.510	6.12	1.11	497.8
3/10/2013 11:45:00 PM	0.510	6.12	1.11	497.8
3/11/2013 12:00:00 AM	0.510	6.12	1.11	497.8
3/11/2013 12:15:00 AM	0.510	6.12	1.11	497.8
3/11/2013 12:30:00 AM	0.510	6.12	1.11	497.8
3/11/2013 12:45:00 AM	0.510	6.12	1.11	497.8
3/11/2013 1:00:00 AM	0.510	6.12	1.11	497.8
3/11/2013 1:15:00 AM	0.510	6.12	1.11	497.8
3/11/2013 1:30:00 AM	0.510	6.12	1.11	497.8
3/11/2013 1:45:00 AM	0.510	6.12	1.11	497.8
3/11/2013 2:00:00 AM	0.510	6.12	1.11	497.8
3/11/2013 2:15:00 AM	0.510	6.12	1.11	497.8
3/11/2013 2:30:00 AM	0.510	6.12	1.11	497.8
3/11/2013 2:45:00 AM	0.510	6.12	1.11	497.8
3/11/2013 3:00:00 AM	0.510	6.12	1.11	497.8
3/11/2013 3:15:00 AM	0.510	6.12	1.11	497.8
3/11/2013 3:30:00 AM	0.510	6.12	1.11	497.8
3/11/2013 3:45:00 AM	0.510	6.12	1.11	497.8
3/11/2013 4:00:00 AM	0.510	6.12	1.11	497.8
3/11/2013 4:15:00 AM	0.510	6.12	1.11	497.8
3/11/2013 4:30:00 AM	0.510	6.12	1.11	497.8
3/11/2013 4:45:00 AM	0.510	6.12	1.11	497.8
3/11/2013 5:00:00 AM	0.510	6.12	1.11	497.8
3/11/2013 5:15:00 AM	0.510	6.12	1.11	497.8
3/11/2013 5:30:00 AM	0.510	6.12	1.11	497.8
3/11/2013 5:45:00 AM	0.510	6.12	1.11	497.8
3/11/2013 6:00:00 AM	0.510	6.12	1.11	497.8
3/11/2013 6:15:00 AM	0.510	6.12	1.11	497.8
3/11/2013 6:30:00 AM	0.510	6.12	1.11	497.8

3/11/2013 6:45:00 AM	0.510	6.12	1.11	497.8
3/11/2013 7:00:00 AM	0.510	6.12	1.11	497.8
3/11/2013 7:15:00 AM	0.510	6.12	1.11	497.8
3/11/2013 7:30:00 AM	0.510	6.12	1.11	497.8
3/11/2013 7:45:00 AM	0.510	6.12	1.11	497.8
3/11/2013 8:00:00 AM	0.510	6.12	1.11	497.8
3/11/2013 8:15:00 AM	0.510	6.12	1.11	497.8
3/11/2013 8:30:00 AM	0.510	6.12	1.11	497.8
3/11/2013 8:45:00 AM	0.510	6.12	1.11	497.8
3/11/2013 9:00:00 AM	0.510	6.12	1.11	497.8
3/11/2013 9:15:00 AM	0.500	6.00	1.08	483.2
3/11/2013 9:30:00 AM	0.510	6.12	1.11	497.8
3/11/2013 9:45:00 AM	0.510	6.12	1.11	497.8
3/11/2013 10:00:00 AM	0.510	6.12	1.11	497.8
3/11/2013 10:15:00 AM	0.510	6.12	1.11	497.8
3/11/2013 10:30:00 AM	0.510	6.12	1.11	497.8
3/11/2013 10:45:00 AM	0.510	6.12	1.11	497.8
3/11/2013 11:00:00 AM	0.510	6.12	1.11	497.8
3/11/2013 11:15:00 AM	0.510	6.12	1.11	497.8
3/11/2013 11:30:00 AM	0.510	6.12	1.11	497.8
3/11/2013 11:45:00 AM	0.510	6.12	1.11	497.8
3/11/2013 12:00:00 PM	0.510	6.12	1.11	497.8
3/11/2013 12:15:00 PM	0.510	6.12	1.11	497.8
3/11/2013 12:30:00 PM	0.510	6.12	1.11	497.8
3/11/2013 12:45:00 PM	0.510	6.12	1.11	497.8
3/11/2013 1:00:00 PM	0.500	6.00	1.08	483.2
3/11/2013 1:15:00 PM	0.510	6.12	1.11	497.8
3/11/2013 1:30:00 PM	0.510	6.12	1.11	497.8
3/11/2013 1:45:00 PM	0.510	6.12	1.11	497.8
3/11/2013 2:00:00 PM	0.510	6.12	1.11	497.8
3/11/2013 2:15:00 PM	0.510	6.12	1.11	497.8
3/11/2013 2:30:00 PM	0.510	6.12	1.11	497.8
3/11/2013 2:45:00 PM	0.510	6.12	1.11	497.8
3/11/2013 3:00:00 PM	0.510	6.12	1.11	497.8
3/11/2013 3:15:00 PM	0.510	6.12	1.11	497.8
3/11/2013 3:30:00 PM	0.510	6.12	1.11	497.8
3/11/2013 3:45:00 PM	0.510	6.12	1.11	497.8
3/11/2013 4:00:00 PM	0.510	6.12	1.11	497.8
3/11/2013 4:15:00 PM	0.510	6.12	1.11	497.8
3/11/2013 4:30:00 PM	0.510	6.12	1.11	497.8
3/11/2013 4:45:00 PM	0.500	6.00	1.08	483.2
3/11/2013 5:00:00 PM	0.500	6.00	1.08	483.2
3/11/2013 5:15:00 PM	0.510	6.12	1.11	497.8
3/11/2013 5:30:00 PM	0.510	6.12	1.11	497.8
3/11/2013 5:45:00 PM	0.510	6.12	1.11	497.8
3/11/2013 6:00:00 PM	0.510	6.12	1.11	497.8
3/11/2013 6:15:00 PM	0.510	6.12	1.11	497.8

3/11/2013 6:30:00 PM	0.500	6.00	1.08	483.2
3/11/2013 6:45:00 PM	0.500	6.00	1.08	483.2
3/11/2013 7:00:00 PM	0.510	6.12	1.11	497.8
3/11/2013 7:15:00 PM	0.510	6.12	1.11	497.8
3/11/2013 7:30:00 PM	0.510	6.12	1.11	497.8
3/11/2013 7:45:00 PM	0.510	6.12	1.11	497.8
3/11/2013 8:00:00 PM	0.510	6.12	1.11	497.8
3/11/2013 8:15:00 PM	0.510	6.12	1.11	497.8
3/11/2013 8:30:00 PM	0.510	6.12	1.11	497.8
3/11/2013 8:45:00 PM	0.510	6.12	1.11	497.8
3/11/2013 9:00:00 PM	0.510	6.12	1.11	497.8
3/11/2013 9:15:00 PM	0.500	6.00	1.08	483.2
3/11/2013 9:30:00 PM	0.510	6.12	1.11	497.8
3/11/2013 9:45:00 PM	0.510	6.12	1.11	497.8
3/11/2013 10:00:00 PM	0.510	6.12	1.11	497.8
3/11/2013 10:15:00 PM	0.500	6.00	1.08	483.2
3/11/2013 10:30:00 PM	0.510	6.12	1.11	497.8
3/11/2013 10:45:00 PM	0.500	6.00	1.08	483.2
3/11/2013 11:00:00 PM	0.510	6.12	1.11	497.8
3/11/2013 11:15:00 PM	0.510	6.12	1.11	497.8
3/11/2013 11:30:00 PM	0.510	6.12	1.11	497.8
3/11/2013 11:45:00 PM	0.510	6.12	1.11	497.8
3/12/2013 12:00:00 AM	0.510	6.12	1.11	497.8
3/12/2013 12:15:00 AM	0.510	6.12	1.11	497.8
3/12/2013 12:30:00 AM	0.510	6.12	1.11	497.8
3/12/2013 12:45:00 AM	0.510	6.12	1.11	497.8
3/12/2013 1:00:00 AM	0.510	6.12	1.11	497.8
3/12/2013 1:15:00 AM	0.510	6.12	1.11	497.8
3/12/2013 1:30:00 AM	0.510	6.12	1.11	497.8
3/12/2013 1:45:00 AM	0.510	6.12	1.11	497.8
3/12/2013 2:00:00 AM	0.510	6.12	1.11	497.8
3/12/2013 2:15:00 AM	0.510	6.12	1.11	497.8
3/12/2013 2:30:00 AM	0.510	6.12	1.11	497.8
3/12/2013 2:45:00 AM	0.510	6.12	1.11	497.8
3/12/2013 3:00:00 AM	0.510	6.12	1.11	497.8
3/12/2013 3:15:00 AM	0.510	6.12	1.11	497.8
3/12/2013 3:30:00 AM	0.510	6.12	1.11	497.8
3/12/2013 3:45:00 AM	0.510	6.12	1.11	497.8
3/12/2013 4:00:00 AM	0.510	6.12	1.11	497.8
3/12/2013 4:15:00 AM	0.510	6.12	1.11	497.8
3/12/2013 4:30:00 AM	0.510	6.12	1.11	497.8
3/12/2013 4:45:00 AM	0.510	6.12	1.11	497.8
3/12/2013 5:00:00 AM	0.510	6.12	1.11	497.8
3/12/2013 5:15:00 AM	0.510	6.12	1.11	497.8
3/12/2013 5:30:00 AM	0.510	6.12	1.11	497.8
3/12/2013 5:45:00 AM	0.510	6.12	1.11	497.8
3/12/2013 6:00:00 AM	0.510	6.12	1.11	497.8

3/12/2013 6:15:00 AM	0.510	6.12	1.11	497.8
3/12/2013 6:30:00 AM	0.510	6.12	1.11	497.8
3/12/2013 6:45:00 AM	0.510	6.12	1.11	497.8
3/12/2013 7:00:00 AM	0.510	6.12	1.11	497.8
3/12/2013 7:15:00 AM	0.510	6.12	1.11	497.8
3/12/2013 7:30:00 AM	0.510	6.12	1.11	497.8
3/12/2013 7:45:00 AM	0.510	6.12	1.11	497.8
3/12/2013 8:00:00 AM	0.510	6.12	1.11	497.8
3/12/2013 8:15:00 AM	0.510	6.12	1.11	497.8
3/12/2013 8:30:00 AM	0.510	6.12	1.11	497.8
3/12/2013 8:45:00 AM	0.510	6.12	1.11	497.8
3/12/2013 9:00:00 AM	0.510	6.12	1.11	497.8
3/12/2013 9:15:00 AM	0.510	6.12	1.11	497.8
3/12/2013 9:30:00 AM	0.510	6.12	1.11	497.8
3/12/2013 9:45:00 AM	0.500	6.00	1.08	483.2
3/12/2013 10:00:00 AM	0.510	6.12	1.11	497.8
3/12/2013 10:15:00 AM	0.510	6.12	1.11	497.8
3/12/2013 10:30:00 AM	0.510	6.12	1.11	497.8
3/12/2013 10:45:00 AM	0.510	6.12	1.11	497.8
3/12/2013 11:00:00 AM	0.510	6.12	1.11	497.8
3/12/2013 11:15:00 AM	0.510	6.12	1.11	497.8
3/12/2013 11:30:00 AM	0.510	6.12	1.11	497.8
3/12/2013 11:45:00 AM	0.500	6.00	1.08	483.2
3/12/2013 12:00:00 PM	0.510	6.12	1.11	497.8
3/12/2013 12:15:00 PM	0.510	6.12	1.11	497.8
3/12/2013 12:30:00 PM	0.510	6.12	1.11	497.8
3/12/2013 12:45:00 PM	0.510	6.12	1.11	497.8
3/12/2013 1:00:00 PM	0.510	6.12	1.11	497.8
3/12/2013 1:15:00 PM	0.510	6.12	1.11	497.8
3/12/2013 1:30:00 PM	0.510	6.12	1.11	497.8
3/12/2013 1:45:00 PM	0.510	6.12	1.11	497.8
3/12/2013 2:00:00 PM	0.510	6.12	1.11	497.8
3/12/2013 2:15:00 PM	0.510	6.12	1.11	497.8
3/12/2013 2:30:00 PM	0.510	6.12	1.11	497.8
3/12/2013 2:45:00 PM	0.510	6.12	1.11	497.8
3/12/2013 3:00:00 PM	0.510	6.12	1.11	497.8
3/12/2013 3:15:00 PM	0.510	6.12	1.11	497.8
3/12/2013 3:30:00 PM	0.510	6.12	1.11	497.8
3/12/2013 3:45:00 PM	0.510	6.12	1.11	497.8
3/12/2013 4:00:00 PM	0.510	6.12	1.11	497.8
3/12/2013 4:15:00 PM	0.510	6.12	1.11	497.8
3/12/2013 4:30:00 PM	0.510	6.12	1.11	497.8
3/12/2013 4:45:00 PM	0.510	6.12	1.11	497.8
3/12/2013 5:00:00 PM	0.510	6.12	1.11	497.8
3/12/2013 5:15:00 PM	0.510	6.12	1.11	497.8
3/12/2013 5:30:00 PM	0.510	6.12	1.11	497.8
3/12/2013 5:45:00 PM	0.510	6.12	1.11	497.8

3/12/2013 6:00:00 PM	0.500	6.00	1.08	483.2
3/12/2013 6:15:00 PM	0.510	6.12	1.11	497.8
3/12/2013 6:30:00 PM	0.510	6.12	1.11	497.8
3/12/2013 6:45:00 PM	0.500	6.00	1.08	483.2
3/12/2013 7:00:00 PM	0.510	6.12	1.11	497.8
3/12/2013 7:15:00 PM	0.510	6.12	1.11	497.8
3/12/2013 7:30:00 PM	0.510	6.12	1.11	497.8
3/12/2013 7:45:00 PM	0.510	6.12	1.11	497.8
3/12/2013 8:00:00 PM	0.510	6.12	1.11	497.8
3/12/2013 8:15:00 PM	0.510	6.12	1.11	497.8
3/12/2013 8:30:00 PM	0.510	6.12	1.11	497.8
3/12/2013 8:45:00 PM	0.510	6.12	1.11	497.8
3/12/2013 9:00:00 PM	0.510	6.12	1.11	497.8
3/12/2013 9:15:00 PM	0.510	6.12	1.11	497.8
3/12/2013 9:30:00 PM	0.510	6.12	1.11	497.8
3/12/2013 9:45:00 PM	0.500	6.00	1.08	483.2
3/12/2013 10:00:00 PM	0.510	6.12	1.11	497.8
3/12/2013 10:15:00 PM	0.510	6.12	1.11	497.8
3/12/2013 10:30:00 PM	0.510	6.12	1.11	497.8
3/12/2013 10:45:00 PM	0.500	6.00	1.08	483.2
3/12/2013 11:00:00 PM	0.500	6.00	1.08	483.2
3/12/2013 11:15:00 PM	0.510	6.12	1.11	497.8
3/12/2013 11:30:00 PM	0.510	6.12	1.11	497.8
3/12/2013 11:45:00 PM	0.510	6.12	1.11	497.8
3/13/2013 12:00:00 AM	0.510	6.12	1.11	497.8
3/13/2013 12:15:00 AM	0.510	6.12	1.11	497.8
3/13/2013 12:30:00 AM	0.510	6.12	1.11	497.8
3/13/2013 12:45:00 AM	0.510	6.12	1.11	497.8
3/13/2013 1:00:00 AM	0.510	6.12	1.11	497.8
3/13/2013 1:15:00 AM	0.510	6.12	1.11	497.8
3/13/2013 1:30:00 AM	0.510	6.12	1.11	497.8
3/13/2013 1:45:00 AM	0.510	6.12	1.11	497.8
3/13/2013 2:00:00 AM	0.510	6.12	1.11	497.8
3/13/2013 2:15:00 AM	0.510	6.12	1.11	497.8
3/13/2013 2:30:00 AM	0.510	6.12	1.11	497.8
3/13/2013 2:45:00 AM	0.510	6.12	1.11	497.8
3/13/2013 3:00:00 AM	0.510	6.12	1.11	497.8
3/13/2013 3:15:00 AM	0.510	6.12	1.11	497.8
3/13/2013 3:30:00 AM	0.510	6.12	1.11	497.8
3/13/2013 3:45:00 AM	0.510	6.12	1.11	497.8
3/13/2013 4:00:00 AM	0.510	6.12	1.11	497.8
3/13/2013 4:15:00 AM	0.510	6.12	1.11	497.8
3/13/2013 4:30:00 AM	0.510	6.12	1.11	497.8
3/13/2013 4:45:00 AM	0.510	6.12	1.11	497.8
3/13/2013 5:00:00 AM	0.510	6.12	1.11	497.8
3/13/2013 5:15:00 AM	0.510	6.12	1.11	497.8
3/13/2013 5:30:00 AM	0.510	6.12	1.11	497.8

3/13/2013 5:45:00 AM	0.510	6.12	1.11	497.8
3/13/2013 6:00:00 AM	0.510	6.12	1.11	497.8
3/13/2013 6:15:00 AM	0.510	6.12	1.11	497.8
3/13/2013 6:30:00 AM	0.510	6.12	1.11	497.8
3/13/2013 6:45:00 AM	0.510	6.12	1.11	497.8
3/13/2013 7:00:00 AM	0.510	6.12	1.11	497.8
3/13/2013 7:15:00 AM	0.510	6.12	1.11	497.8
3/13/2013 7:30:00 AM	0.510	6.12	1.11	497.8
3/13/2013 7:45:00 AM	0.510	6.12	1.11	497.8
3/13/2013 8:00:00 AM	0.510	6.12	1.11	497.8
3/13/2013 8:15:00 AM	0.510	6.12	1.11	497.8
3/13/2013 8:30:00 AM	0.510	6.12	1.11	497.8
3/13/2013 8:45:00 AM	0.510	6.12	1.11	497.8
3/13/2013 9:00:00 AM	0.510	6.12	1.11	497.8
3/13/2013 9:15:00 AM	0.500	6.00	1.08	483.2
3/13/2013 9:30:00 AM	0.510	6.12	1.11	497.8
3/13/2013 9:45:00 AM	0.510	6.12	1.11	497.8
3/13/2013 10:00:00 AM	0.500	6.00	1.08	483.2
3/13/2013 10:15:00 AM	0.510	6.12	1.11	497.8
3/13/2013 10:30:00 AM	0.510	6.12	1.11	497.8
3/13/2013 10:45:00 AM	0.510	6.12	1.11	497.8
3/13/2013 11:00:00 AM	0.510	6.12	1.11	497.8
3/13/2013 11:15:00 AM	0.510	6.12	1.11	497.8
3/13/2013 11:30:00 AM	0.500	6.00	1.08	483.2
3/13/2013 11:45:00 AM	0.510	6.12	1.11	497.8
3/13/2013 12:00:00 PM	0.510	6.12	1.11	497.8
3/13/2013 12:15:00 PM	0.510	6.12	1.11	497.8
3/13/2013 12:30:00 PM	0.510	6.12	1.11	497.8
3/13/2013 12:45:00 PM	0.510	6.12	1.11	497.8
3/13/2013 1:00:00 PM	0.510	6.12	1.11	497.8
3/13/2013 1:15:00 PM	0.510	6.12	1.11	497.8
3/13/2013 1:30:00 PM	0.510	6.12	1.11	497.8
3/13/2013 1:45:00 PM	0.510	6.12	1.11	497.8
3/13/2013 2:00:00 PM	0.510	6.12	1.11	497.8
3/13/2013 2:15:00 PM	0.510	6.12	1.11	497.8
3/13/2013 2:30:00 PM	0.510	6.12	1.11	497.8
3/13/2013 2:45:00 PM	0.510	6.12	1.11	497.8
3/13/2013 3:00:00 PM	0.510	6.12	1.11	497.8
3/13/2013 3:15:00 PM	0.510	6.12	1.11	497.8
3/13/2013 3:30:00 PM	0.510	6.12	1.11	497.8
3/13/2013 3:45:00 PM	0.500	6.00	1.08	483.2
3/13/2013 4:00:00 PM	0.510	6.12	1.11	497.8
3/13/2013 4:15:00 PM	0.510	6.12	1.11	497.8
3/13/2013 4:30:00 PM	0.510	6.12	1.11	497.8
3/13/2013 4:45:00 PM	0.510	6.12	1.11	497.8
3/13/2013 5:00:00 PM	0.510	6.12	1.11	497.8
3/13/2013 5:15:00 PM	0.510	6.12	1.11	497.8

3/13/2013 5:30:00 PM	0.510	6.12	1.11	497.8
3/13/2013 5:45:00 PM	0.510	6.12	1.11	497.8
3/13/2013 6:00:00 PM	0.510	6.12	1.11	497.8
3/13/2013 6:15:00 PM	0.510	6.12	1.11	497.8
3/13/2013 6:30:00 PM	0.510	6.12	1.11	497.8
3/13/2013 6:45:00 PM	0.510	6.12	1.11	497.8
3/13/2013 7:00:00 PM	0.510	6.12	1.11	497.8
3/13/2013 7:15:00 PM	0.510	6.12	1.11	497.8
3/13/2013 7:30:00 PM	0.510	6.12	1.11	497.8
3/13/2013 7:45:00 PM	0.510	6.12	1.11	497.8
3/13/2013 8:00:00 PM	0.510	6.12	1.11	497.8
3/13/2013 8:15:00 PM	0.510	6.12	1.11	497.8
3/13/2013 8:30:00 PM	0.510	6.12	1.11	497.8
3/13/2013 8:45:00 PM	0.510	6.12	1.11	497.8
3/13/2013 9:00:00 PM	0.510	6.12	1.11	497.8
3/13/2013 9:15:00 PM	0.510	6.12	1.11	497.8
3/13/2013 9:30:00 PM	0.510	6.12	1.11	497.8
3/13/2013 9:45:00 PM	0.510	6.12	1.11	497.8
3/13/2013 10:00:00 PM	0.510	6.12	1.11	497.8
3/13/2013 10:15:00 PM	0.510	6.12	1.11	497.8
3/13/2013 10:30:00 PM	0.510	6.12	1.11	497.8
3/13/2013 10:45:00 PM	0.510	6.12	1.11	497.8
3/13/2013 11:00:00 PM	0.510	6.12	1.11	497.8
3/13/2013 11:15:00 PM	0.510	6.12	1.11	497.8
3/13/2013 11:30:00 PM	0.510	6.12	1.11	497.8
3/13/2013 11:45:00 PM	0.510	6.12	1.11	497.8
3/14/2013 12:00:00 AM	0.510	6.12	1.11	497.8
3/14/2013 12:15:00 AM	0.510	6.12	1.11	497.8
3/14/2013 12:30:00 AM	0.510	6.12	1.11	497.8
3/14/2013 12:45:00 AM	0.510	6.12	1.11	497.8
3/14/2013 1:00:00 AM	0.510	6.12	1.11	497.8
3/14/2013 1:15:00 AM	0.510	6.12	1.11	497.8
3/14/2013 1:30:00 AM	0.510	6.12	1.11	497.8
3/14/2013 1:45:00 AM	0.510	6.12	1.11	497.8
3/14/2013 2:00:00 AM	0.510	6.12	1.11	497.8
3/14/2013 2:15:00 AM	0.510	6.12	1.11	497.8
3/14/2013 2:30:00 AM	0.510	6.12	1.11	497.8
3/14/2013 2:45:00 AM	0.510	6.12	1.11	497.8
3/14/2013 3:00:00 AM	0.510	6.12	1.11	497.8
3/14/2013 3:15:00 AM	0.510	6.12	1.11	497.8
3/14/2013 3:30:00 AM	0.500	6.00	1.08	483.2
3/14/2013 3:45:00 AM	0.510	6.12	1.11	497.8
3/14/2013 4:00:00 AM	0.510	6.12	1.11	497.8
3/14/2013 4:15:00 AM	0.510	6.12	1.11	497.8
3/14/2013 4:30:00 AM	0.510	6.12	1.11	497.8
3/14/2013 4:45:00 AM	0.510	6.12	1.11	497.8
3/14/2013 5:00:00 AM	0.510	6.12	1.11	497.8

3/14/2013 5:15:00 AM	0.510	6.12	1.11	497.8
3/14/2013 5:30:00 AM	0.510	6.12	1.11	497.8
3/14/2013 5:45:00 AM	0.510	6.12	1.11	497.8
3/14/2013 6:00:00 AM	0.510	6.12	1.11	497.8
3/14/2013 6:15:00 AM	0.510	6.12	1.11	497.8
3/14/2013 6:30:00 AM	0.510	6.12	1.11	497.8
3/14/2013 6:45:00 AM	0.510	6.12	1.11	497.8
3/14/2013 7:00:00 AM	0.510	6.12	1.11	497.8
3/14/2013 7:15:00 AM	0.510	6.12	1.11	497.8
3/14/2013 7:30:00 AM	0.510	6.12	1.11	497.8
3/14/2013 7:45:00 AM	0.510	6.12	1.11	497.8
3/14/2013 8:00:00 AM	0.510	6.12	1.11	497.8
3/14/2013 8:15:00 AM	0.510	6.12	1.11	497.8
3/14/2013 8:30:00 AM	0.510	6.12	1.11	497.8
3/14/2013 8:45:00 AM	0.510	6.12	1.11	497.8
3/14/2013 9:00:00 AM	0.510	6.12	1.11	497.8
3/14/2013 9:15:00 AM	0.510	6.12	1.11	497.8
3/14/2013 9:30:00 AM	0.510	6.12	1.11	497.8
3/14/2013 9:45:00 AM	0.510	6.12	1.11	497.8
3/14/2013 10:00:00 AM	0.510	6.12	1.11	497.8
3/14/2013 10:15:00 AM	0.510	6.12	1.11	497.8
3/14/2013 10:30:00 AM	0.510	6.12	1.11	497.8
3/14/2013 10:45:00 AM	0.510	6.12	1.11	497.8
3/14/2013 11:00:00 AM	0.510	6.12	1.11	497.8
3/14/2013 11:15:00 AM	0.510	6.12	1.11	497.8
3/14/2013 11:30:00 AM	0.510	6.12	1.11	497.8
3/14/2013 11:45:00 AM	0.510	6.12	1.11	497.8
3/14/2013 12:00:00 PM	0.510	6.12	1.11	497.8
3/14/2013 12:15:00 PM	0.510	6.12	1.11	497.8
3/14/2013 12:30:00 PM	0.510	6.12	1.11	497.8
3/14/2013 12:45:00 PM	0.510	6.12	1.11	497.8
3/14/2013 1:00:00 PM	0.510	6.12	1.11	497.8
3/14/2013 1:15:00 PM	0.510	6.12	1.11	497.8
3/14/2013 1:30:00 PM	0.510	6.12	1.11	497.8
3/14/2013 1:45:00 PM	0.510	6.12	1.11	497.8
3/14/2013 2:00:00 PM	0.510	6.12	1.11	497.8
3/14/2013 2:15:00 PM	0.510	6.12	1.11	497.8
3/14/2013 2:30:00 PM	0.510	6.12	1.11	497.8
3/14/2013 2:45:00 PM	0.510	6.12	1.11	497.8
3/14/2013 3:00:00 PM	0.510	6.12	1.11	497.8
3/14/2013 3:15:00 PM	0.510	6.12	1.11	497.8
3/14/2013 3:30:00 PM	0.510	6.12	1.11	497.8
3/14/2013 3:45:00 PM	0.510	6.12	1.11	497.8
3/14/2013 4:00:00 PM	0.510	6.12	1.11	497.8
3/14/2013 4:15:00 PM	0.510	6.12	1.11	497.8
3/14/2013 4:30:00 PM	0.510	6.12	1.11	497.8
3/14/2013 4:45:00 PM	0.510	6.12	1.11	497.8

3/14/2013 5:00:00 PM	0.510	6.12	1.11	497.8
3/14/2013 5:15:00 PM	0.510	6.12	1.11	497.8
3/14/2013 5:30:00 PM	0.510	6.12	1.11	497.8
3/14/2013 5:45:00 PM	0.510	6.12	1.11	497.8
3/14/2013 6:00:00 PM	0.510	6.12	1.11	497.8
3/14/2013 6:15:00 PM	0.510	6.12	1.11	497.8
3/14/2013 6:30:00 PM	0.510	6.12	1.11	497.8
3/14/2013 6:45:00 PM	0.510	6.12	1.11	497.8
3/14/2013 7:00:00 PM	0.510	6.12	1.11	497.8
3/14/2013 7:15:00 PM	0.500	6.00	1.08	483.2
3/14/2013 7:30:00 PM	0.500	6.00	1.08	483.2
3/14/2013 7:45:00 PM	0.510	6.12	1.11	497.8
3/14/2013 8:00:00 PM	0.510	6.12	1.11	497.8
3/14/2013 8:15:00 PM	0.510	6.12	1.11	497.8
3/14/2013 8:30:00 PM	0.510	6.12	1.11	497.8
3/14/2013 8:45:00 PM	0.510	6.12	1.11	497.8
3/14/2013 9:00:00 PM	0.500	6.00	1.08	483.2
3/14/2013 9:15:00 PM	0.510	6.12	1.11	497.8
3/14/2013 9:30:00 PM	0.510	6.12	1.11	497.8
3/14/2013 9:45:00 PM	0.510	6.12	1.11	497.8
3/14/2013 10:00:00 PM	0.510	6.12	1.11	497.8
3/14/2013 10:15:00 PM	0.510	6.12	1.11	497.8
3/14/2013 10:30:00 PM	0.510	6.12	1.11	497.8
3/14/2013 10:45:00 PM	0.510	6.12	1.11	497.8
3/14/2013 11:00:00 PM	0.510	6.12	1.11	497.8
3/14/2013 11:15:00 PM	0.510	6.12	1.11	497.8
3/14/2013 11:30:00 PM	0.510	6.12	1.11	497.8
3/14/2013 11:45:00 PM	0.510	6.12	1.11	497.8
3/15/2013 12:00:00 AM	0.510	6.12	1.11	497.8
3/15/2013 12:15:00 AM	0.510	6.12	1.11	497.8
3/15/2013 12:30:00 AM	0.510	6.12	1.11	497.8
3/15/2013 12:45:00 AM	0.510	6.12	1.11	497.8
3/15/2013 1:00:00 AM	0.510	6.12	1.11	497.8
3/15/2013 1:15:00 AM	0.510	6.12	1.11	497.8
3/15/2013 1:30:00 AM	0.510	6.12	1.11	497.8
3/15/2013 1:45:00 AM	0.510	6.12	1.11	497.8
3/15/2013 2:00:00 AM	0.510	6.12	1.11	497.8
3/15/2013 2:15:00 AM	0.510	6.12	1.11	497.8
3/15/2013 2:30:00 AM	0.510	6.12	1.11	497.8
3/15/2013 2:45:00 AM	0.510	6.12	1.11	497.8
3/15/2013 3:00:00 AM	0.510	6.12	1.11	497.8
3/15/2013 3:15:00 AM	0.510	6.12	1.11	497.8
3/15/2013 3:30:00 AM	0.510	6.12	1.11	497.8
3/15/2013 3:45:00 AM	0.510	6.12	1.11	497.8
3/15/2013 4:00:00 AM	0.510	6.12	1.11	497.8
3/15/2013 4:15:00 AM	0.510	6.12	1.11	497.8
3/15/2013 4:30:00 AM	0.510	6.12	1.11	497.8

3/15/2013 4:45:00 AM	0.500	6.00	1.08	483.2
3/15/2013 5:00:00 AM	0.510	6.12	1.11	497.8
3/15/2013 5:15:00 AM	0.510	6.12	1.11	497.8
3/15/2013 5:30:00 AM	0.510	6.12	1.11	497.8
3/15/2013 5:45:00 AM	0.510	6.12	1.11	497.8
3/15/2013 6:00:00 AM	0.510	6.12	1.11	497.8
3/15/2013 6:15:00 AM	0.510	6.12	1.11	497.8
3/15/2013 6:30:00 AM	0.510	6.12	1.11	497.8
3/15/2013 6:45:00 AM	0.510	6.12	1.11	497.8
3/15/2013 7:00:00 AM	0.510	6.12	1.11	497.8
3/15/2013 7:15:00 AM	0.510	6.12	1.11	497.8
3/15/2013 7:30:00 AM	0.510	6.12	1.11	497.8
3/15/2013 7:45:00 AM	0.510	6.12	1.11	497.8
3/15/2013 8:00:00 AM	0.510	6.12	1.11	497.8
3/15/2013 8:15:00 AM	0.510	6.12	1.11	497.8
3/15/2013 8:30:00 AM	0.510	6.12	1.11	497.8
3/15/2013 8:45:00 AM	0.500	6.00	1.08	483.2
3/15/2013 9:00:00 AM	0.510	6.12	1.11	497.8
3/15/2013 9:15:00 AM	0.510	6.12	1.11	497.8
3/15/2013 9:30:00 AM	0.510	6.12	1.11	497.8
3/15/2013 9:45:00 AM	0.500	6.00	1.08	483.2
3/15/2013 10:00:00 AM	0.510	6.12	1.11	497.8
3/15/2013 10:15:00 AM	0.510	6.12	1.11	497.8
3/15/2013 10:30:00 AM	0.510	6.12	1.11	497.8
3/15/2013 10:45:00 AM	0.510	6.12	1.11	497.8
3/15/2013 11:00:00 AM	0.510	6.12	1.11	497.8
3/15/2013 11:15:00 AM	0.510	6.12	1.11	497.8
3/15/2013 11:30:00 AM	0.510	6.12	1.11	497.8
3/15/2013 11:45:00 AM	0.510	6.12	1.11	497.8
3/15/2013 12:00:00 PM	0.510	6.12	1.11	497.8
3/15/2013 12:15:00 PM	0.510	6.12	1.11	497.8
3/15/2013 12:30:00 PM	0.510	6.12	1.11	497.8
3/15/2013 12:45:00 PM	0.510	6.12	1.11	497.8
3/15/2013 1:00:00 PM	0.510	6.12	1.11	497.8
3/15/2013 1:15:00 PM	0.510	6.12	1.11	497.8
3/15/2013 1:30:00 PM	0.510	6.12	1.11	497.8
3/15/2013 1:45:00 PM	0.510	6.12	1.11	497.8
3/15/2013 2:00:00 PM	0.510	6.12	1.11	497.8
3/15/2013 2:15:00 PM	0.510	6.12	1.11	497.8
3/15/2013 2:30:00 PM	0.500	6.00	1.08	483.2
3/15/2013 2:45:00 PM	0.510	6.12	1.11	497.8
3/15/2013 3:00:00 PM	0.510	6.12	1.11	497.8
3/15/2013 3:15:00 PM	0.510	6.12	1.11	497.8
3/15/2013 3:30:00 PM	0.510	6.12	1.11	497.8
3/15/2013 3:45:00 PM	0.510	6.12	1.11	497.8
3/15/2013 4:00:00 PM	0.510	6.12	1.11	497.8
3/15/2013 4:15:00 PM	0.500	6.00	1.08	483.2

3/15/2013 4:30:00 PM	0.510	6.12	1.11	497.8
3/15/2013 4:45:00 PM	0.510	6.12	1.11	497.8
3/15/2013 5:00:00 PM	0.510	6.12	1.11	497.8
3/15/2013 5:15:00 PM	0.510	6.12	1.11	497.8
3/15/2013 5:30:00 PM	0.510	6.12	1.11	497.8
3/15/2013 5:45:00 PM	0.510	6.12	1.11	497.8
3/15/2013 6:00:00 PM	0.510	6.12	1.11	497.8
3/15/2013 6:15:00 PM	0.510	6.12	1.11	497.8
3/15/2013 6:30:00 PM	0.510	6.12	1.11	497.8
3/15/2013 6:45:00 PM	0.510	6.12	1.11	497.8
3/15/2013 7:00:00 PM	0.500	6.00	1.08	483.2
3/15/2013 7:15:00 PM	0.510	6.12	1.11	497.8
3/15/2013 7:30:00 PM	0.510	6.12	1.11	497.8
3/15/2013 7:45:00 PM	0.510	6.12	1.11	497.8
3/15/2013 8:00:00 PM	0.510	6.12	1.11	497.8
3/15/2013 8:15:00 PM	0.510	6.12	1.11	497.8
3/15/2013 8:30:00 PM	0.510	6.12	1.11	497.8
3/15/2013 8:45:00 PM	0.510	6.12	1.11	497.8
3/15/2013 9:00:00 PM	0.510	6.12	1.11	497.8
3/15/2013 9:15:00 PM	0.500	6.00	1.08	483.2
3/15/2013 9:30:00 PM	0.510	6.12	1.11	497.8
3/15/2013 9:45:00 PM	0.500	6.00	1.08	483.2
3/15/2013 10:00:00 PM	0.510	6.12	1.11	497.8
3/15/2013 10:15:00 PM	0.500	6.00	1.08	483.2
3/15/2013 10:30:00 PM	0.510	6.12	1.11	497.8
3/15/2013 10:45:00 PM	0.510	6.12	1.11	497.8
3/15/2013 11:00:00 PM	0.500	6.00	1.08	483.2
3/15/2013 11:15:00 PM	0.510	6.12	1.11	497.8
3/15/2013 11:30:00 PM	0.500	6.00	1.08	483.2
3/15/2013 11:45:00 PM	0.510	6.12	1.11	497.8
3/16/2013 12:00:00 AM	0.510	6.12	1.11	497.8
3/16/2013 12:15:00 AM	0.510	6.12	1.11	497.8
3/16/2013 12:30:00 AM	0.510	6.12	1.11	497.8
3/16/2013 12:45:00 AM	0.510	6.12	1.11	497.8
3/16/2013 1:00:00 AM	0.510	6.12	1.11	497.8
3/16/2013 1:15:00 AM	0.510	6.12	1.11	497.8
3/16/2013 1:30:00 AM	0.510	6.12	1.11	497.8
3/16/2013 1:45:00 AM	0.510	6.12	1.11	497.8
3/16/2013 2:00:00 AM	0.510	6.12	1.11	497.8
3/16/2013 2:15:00 AM	0.510	6.12	1.11	497.8
3/16/2013 2:30:00 AM	0.510	6.12	1.11	497.8
3/16/2013 2:45:00 AM	0.510	6.12	1.11	497.8
3/16/2013 3:00:00 AM	0.510	6.12	1.11	497.8
3/16/2013 3:15:00 AM	0.510	6.12	1.11	497.8
3/16/2013 3:30:00 AM	0.510	6.12	1.11	497.8
3/16/2013 3:45:00 AM	0.500	6	1.08	483.2
3/16/2013 4:00:00 AM	0.510	6.12	1.11	497.8

3/16/2013 4:15:00 AM	0.510	6.12	1.11	497.8
3/16/2013 4:30:00 AM	0.510	6.12	1.11	497.8
3/16/2013 4:45:00 AM	0.510	6.12	1.11	497.8
3/16/2013 5:00:00 AM	0.510	6.12	1.11	497.8
3/16/2013 5:15:00 AM	0.510	6.12	1.11	497.8
3/16/2013 5:30:00 AM	0.510	6.12	1.11	497.8
3/16/2013 5:45:00 AM	0.510	6.12	1.11	497.8
3/16/2013 6:00:00 AM	0.510	6.12	1.11	497.8
3/16/2013 6:15:00 AM	0.510	6.12	1.11	497.8
3/16/2013 6:30:00 AM	0.510	6.12	1.11	497.8
3/16/2013 6:45:00 AM	0.510	6.12	1.11	497.8
3/16/2013 7:00:00 AM	0.500	6	1.08	483.2
3/16/2013 7:15:00 AM	0.510	6.12	1.11	497.8
3/16/2013 7:30:00 AM	0.510	6.12	1.11	497.8
3/16/2013 7:45:00 AM	0.510	6.12	1.11	497.8
3/16/2013 8:00:00 AM	0.510	6.12	1.11	497.8
3/16/2013 8:15:00 AM	0.510	6.12	1.11	497.8
3/16/2013 8:30:00 AM	0.510	6.12	1.11	497.8
3/16/2013 8:45:00 AM	0.510	6.12	1.11	497.8
3/16/2013 9:00:00 AM	0.510	6.12	1.11	497.8
3/16/2013 9:15:00 AM	0.510	6.12	1.11	497.8
3/16/2013 9:30:00 AM	0.510	6.12	1.11	497.8
3/16/2013 9:45:00 AM	0.510	6.12	1.11	497.8
3/16/2013 10:00:00 AM	0.510	6.12	1.11	497.8
3/16/2013 10:15:00 AM	0.510	6.12	1.11	497.8
3/16/2013 10:30:00 AM	0.510	6.12	1.11	497.8
3/16/2013 10:45:00 AM	0.510	6.12	1.11	497.8
3/16/2013 11:00:00 AM	0.510	6.12	1.11	497.8
3/16/2013 11:15:00 AM	0.510	6.12	1.11	497.8
3/16/2013 11:30:00 AM	0.510	6.12	1.11	497.8
3/16/2013 11:45:00 AM	0.510	6.12	1.11	497.8
3/16/2013 12:00:00 PM	0.510	6.12	1.11	497.8
3/16/2013 12:15:00 PM	0.510	6.12	1.11	497.8
3/16/2013 12:30:00 PM	0.510	6.12	1.11	497.8
3/16/2013 12:45:00 PM	0.510	6.12	1.11	497.8
3/16/2013 1:00:00 PM	0.510	6.12	1.11	497.8
3/16/2013 1:15:00 PM	0.510	6.12	1.11	497.8
3/16/2013 1:30:00 PM	0.510	6.12	1.11	497.8
3/16/2013 1:45:00 PM	0.510	6.12	1.11	497.8
3/16/2013 2:00:00 PM	0.510	6.12	1.11	497.8
3/16/2013 2:15:00 PM	0.500	6	1.08	483.2
3/16/2013 2:30:00 PM	0.510	6.12	1.11	497.8
3/16/2013 2:45:00 PM	0.510	6.12	1.11	497.8
3/16/2013 3:00:00 PM	0.510	6.12	1.11	497.8
3/16/2013 3:15:00 PM	0.510	6.12	1.11	497.8
3/16/2013 3:30:00 PM	0.510	6.12	1.11	497.8
3/16/2013 3:45:00 PM	0.510	6.12	1.11	497.8

3/16/2013 4:00:00 PM	0.510	6.12	1.11	497.8
3/16/2013 4:15:00 PM	0.500	6	1.08	483.2
3/16/2013 4:30:00 PM	0.510	6.12	1.11	497.8
3/16/2013 4:45:00 PM	0.510	6.12	1.11	497.8
3/16/2013 5:00:00 PM	0.510	6.12	1.11	497.8
3/16/2013 5:15:00 PM	0.510	6.12	1.11	497.8
3/16/2013 5:30:00 PM	0.500	6	1.08	483.2
3/16/2013 5:45:00 PM	0.510	6.12	1.11	497.8
3/16/2013 6:00:00 PM	0.510	6.12	1.11	497.8
3/16/2013 6:15:00 PM	0.510	6.12	1.11	497.8
3/16/2013 6:30:00 PM	0.510	6.12	1.11	497.8
3/16/2013 6:45:00 PM	0.510	6.12	1.11	497.8
3/16/2013 7:00:00 PM	0.510	6.12	1.11	497.8
3/16/2013 7:15:00 PM	0.510	6.12	1.11	497.8
3/16/2013 7:30:00 PM	0.510	6.12	1.11	497.8
3/16/2013 7:45:00 PM	0.510	6.12	1.11	497.8
3/16/2013 8:00:00 PM	0.510	6.12	1.11	497.8
3/16/2013 8:15:00 PM	0.510	6.12	1.11	497.8
3/16/2013 8:30:00 PM	0.510	6.12	1.11	497.8
3/16/2013 8:45:00 PM	0.500	6	1.08	483.2
3/16/2013 9:00:00 PM	0.510	6.12	1.11	497.8
3/16/2013 9:15:00 PM	0.510	6.12	1.11	497.8
3/16/2013 9:30:00 PM	0.510	6.12	1.11	497.8
3/16/2013 9:45:00 PM	0.510	6.12	1.11	497.8
3/16/2013 10:00:00 PM	0.510	6.12	1.11	497.8
3/16/2013 10:15:00 PM	0.510	6.12	1.11	497.8
3/16/2013 10:30:00 PM	0.510	6.12	1.11	497.8
3/16/2013 10:45:00 PM	0.510	6.12	1.11	497.8
3/16/2013 11:00:00 PM	0.510	6.12	1.11	497.8
3/16/2013 11:15:00 PM	0.510	6.12	1.11	497.8
3/16/2013 11:30:00 PM	0.510	6.12	1.11	497.8
3/16/2013 11:45:00 PM	0.510	6.12	1.11	497.8
3/17/2013 12:00:00 AM	0.510	6.12	1.11	497.8
3/17/2013 12:15:00 AM	0.500	6	1.08	483.2
3/17/2013 12:30:00 AM	0.510	6.12	1.11	497.8
3/17/2013 12:45:00 AM	0.510	6.12	1.11	497.8
3/17/2013 1:00:00 AM	0.510	6.12	1.11	497.8
3/17/2013 1:15:00 AM	0.510	6.12	1.11	497.8
3/17/2013 1:30:00 AM	0.510	6.12	1.11	497.8
3/17/2013 1:45:00 AM	0.510	6.12	1.11	497.8
3/17/2013 2:00:00 AM	0.510	6.12	1.11	497.8
3/17/2013 2:15:00 AM	0.510	6.12	1.11	497.8
3/17/2013 2:30:00 AM	0.510	6.12	1.11	497.8
3/17/2013 2:45:00 AM	0.510	6.12	1.11	497.8
3/17/2013 3:00:00 AM	0.500	6	1.08	483.2
3/17/2013 3:15:00 AM	0.510	6.12	1.11	497.8
3/17/2013 3:30:00 AM	0.510	6.12	1.11	497.8

3/17/2013 3:45:00 AM	0.510	6.12	1.11	497.8
3/17/2013 4:00:00 AM	0.510	6.12	1.11	497.8
3/17/2013 4:15:00 AM	0.510	6.12	1.11	497.8
3/17/2013 4:30:00 AM	0.510	6.12	1.11	497.8
3/17/2013 4:45:00 AM	0.510	6.12	1.11	497.8
3/17/2013 5:00:00 AM	0.510	6.12	1.11	497.8
3/17/2013 5:15:00 AM	0.510	6.12	1.11	497.8
3/17/2013 5:30:00 AM	0.510	6.12	1.11	497.8
3/17/2013 5:45:00 AM	0.510	6.12	1.11	497.8
3/17/2013 6:00:00 AM	0.510	6.12	1.11	497.8
3/17/2013 6:15:00 AM	0.510	6.12	1.11	497.8
3/17/2013 6:30:00 AM	0.510	6.12	1.11	497.8
3/17/2013 6:45:00 AM	0.510	6.12	1.11	497.8
3/17/2013 7:00:00 AM	0.510	6.12	1.11	497.8
3/17/2013 7:15:00 AM	0.510	6.12	1.11	497.8
3/17/2013 7:30:00 AM	0.510	6.12	1.11	497.8
3/17/2013 7:45:00 AM	0.510	6.12	1.11	497.8
3/17/2013 8:00:00 AM	0.510	6.12	1.11	497.8
3/17/2013 8:15:00 AM	0.510	6.12	1.11	497.8
3/17/2013 8:30:00 AM	0.510	6.12	1.11	497.8
3/17/2013 8:45:00 AM	0.510	6.12	1.11	497.8
3/17/2013 9:00:00 AM	0.510	6.12	1.11	497.8
3/17/2013 9:15:00 AM	0.510	6.12	1.11	497.8
3/17/2013 9:30:00 AM	0.510	6.12	1.11	497.8
3/17/2013 9:45:00 AM	0.510	6.12	1.11	497.8
3/17/2013 10:00:00 AM	0.500	6	1.08	483.2
3/17/2013 10:15:00 AM	0.500	6	1.08	483.2
3/17/2013 10:30:00 AM	0.510	6.12	1.11	497.8
3/17/2013 10:45:00 AM	0.510	6.12	1.11	497.8
3/17/2013 11:00:00 AM	0.500	6	1.08	483.2
3/17/2013 11:15:00 AM	0.510	6.12	1.11	497.8
3/17/2013 11:30:00 AM	0.510	6.12	1.11	497.8
3/17/2013 11:45:00 AM	0.510	6.12	1.11	497.8
3/17/2013 12:00:00 PM	0.510	6.12	1.11	497.8
3/17/2013 12:15:00 PM	0.510	6.12	1.11	497.8
3/17/2013 12:30:00 PM	0.510	6.12	1.11	497.8
3/17/2013 12:45:00 PM	0.510	6.12	1.11	497.8
3/17/2013 1:00:00 PM	0.510	6.12	1.11	497.8
3/17/2013 1:15:00 PM	0.510	6.12	1.11	497.8
3/17/2013 1:30:00 PM	0.510	6.12	1.11	497.8
3/17/2013 1:45:00 PM	0.510	6.12	1.11	497.8
3/17/2013 2:00:00 PM	0.510	6.12	1.11	497.8
3/17/2013 2:15:00 PM	0.510	6.12	1.11	497.8
3/17/2013 2:30:00 PM	0.510	6.12	1.11	497.8
3/17/2013 2:45:00 PM	0.510	6.12	1.11	497.8
3/17/2013 3:00:00 PM	0.510	6.12	1.11	497.8
3/17/2013 3:15:00 PM	0.510	6.12	1.11	497.8

3/17/2013 3:30:00 PM	0.510	6.12	1.11	497.8
3/17/2013 3:45:00 PM	0.500	6	1.08	483.2
3/17/2013 4:00:00 PM	0.510	6.12	1.11	497.8
3/17/2013 4:15:00 PM	0.510	6.12	1.11	497.8
3/17/2013 4:30:00 PM	0.510	6.12	1.11	497.8
3/17/2013 4:45:00 PM	0.510	6.12	1.11	497.8
3/17/2013 5:00:00 PM	0.500	6	1.08	483.2
3/17/2013 5:15:00 PM	0.510	6.12	1.11	497.8
3/17/2013 5:30:00 PM	0.510	6.12	1.11	497.8
3/17/2013 5:45:00 PM	0.510	6.12	1.11	497.8
3/17/2013 6:00:00 PM	0.510	6.12	1.11	497.8
3/17/2013 6:15:00 PM	0.510	6.12	1.11	497.8
3/17/2013 6:30:00 PM	0.510	6.12	1.11	497.8
3/17/2013 6:45:00 PM	0.500	6	1.08	483.2
3/17/2013 7:00:00 PM	0.510	6.12	1.11	497.8
3/17/2013 7:15:00 PM	0.510	6.12	1.11	497.8
3/17/2013 7:30:00 PM	0.510	6.12	1.11	497.8
3/17/2013 7:45:00 PM	0.500	6	1.08	483.2
3/17/2013 8:00:00 PM	0.510	6.12	1.11	497.8
3/17/2013 8:15:00 PM	0.500	6	1.08	483.2
3/17/2013 8:30:00 PM	0.510	6.12	1.11	497.8
3/17/2013 8:45:00 PM	0.510	6.12	1.11	497.8
3/17/2013 9:00:00 PM	0.510	6.12	1.11	497.8
3/17/2013 9:15:00 PM	0.510	6.12	1.11	497.8
3/17/2013 9:30:00 PM	0.510	6.12	1.11	497.8
3/17/2013 9:45:00 PM	0.510	6.12	1.11	497.8
3/17/2013 10:00:00 PM	0.510	6.12	1.11	497.8
3/17/2013 10:15:00 PM	0.510	6.12	1.11	497.8
3/17/2013 10:30:00 PM	0.510	6.12	1.11	497.8
3/17/2013 10:45:00 PM	0.510	6.12	1.11	497.8
3/17/2013 11:00:00 PM	0.510	6.12	1.11	497.8
3/17/2013 11:15:00 PM	0.510	6.12	1.11	497.8
3/17/2013 11:30:00 PM	0.510	6.12	1.11	497.8
3/17/2013 11:45:00 PM	0.510	6.12	1.11	497.8
3/18/2013 12:00:00 AM	0.510	6.12	1.11	497.8
3/18/2013 12:15:00 AM	0.510	6.12	1.11	497.8
3/18/2013 12:30:00 AM	0.510	6.12	1.11	497.8
3/18/2013 12:45:00 AM	0.510	6.12	1.11	497.8
3/18/2013 1:00:00 AM	0.510	6.12	1.11	497.8
3/18/2013 1:15:00 AM	0.510	6.12	1.11	497.8
3/18/2013 1:30:00 AM	0.510	6.12	1.11	497.8
3/18/2013 1:45:00 AM	0.500	6	1.08	483.2
3/18/2013 2:00:00 AM	0.510	6.12	1.11	497.8
3/18/2013 2:15:00 AM	0.510	6.12	1.11	497.8
3/18/2013 2:30:00 AM	0.510	6.12	1.11	497.8
3/18/2013 2:45:00 AM	0.510	6.12	1.11	497.8
3/18/2013 3:00:00 AM	0.510	6.12	1.11	497.8

3/18/2013 3:15:00 AM	0.510	6.12	1.11	497.8
3/18/2013 3:30:00 AM	0.500	6	1.08	483.2
3/18/2013 3:45:00 AM	0.500	6	1.08	483.2
3/18/2013 4:00:00 AM	0.510	6.12	1.11	497.8
3/18/2013 4:15:00 AM	0.510	6.12	1.11	497.8
3/18/2013 4:30:00 AM	0.510	6.12	1.11	497.8
3/18/2013 4:45:00 AM	0.510	6.12	1.11	497.8
3/18/2013 5:00:00 AM	0.510	6.12	1.11	497.8
3/18/2013 5:15:00 AM	0.510	6.12	1.11	497.8
3/18/2013 5:30:00 AM	0.510	6.12	1.11	497.8
3/18/2013 5:45:00 AM	0.510	6.12	1.11	497.8
3/18/2013 6:00:00 AM	0.510	6.12	1.11	497.8
3/18/2013 6:15:00 AM	0.510	6.12	1.11	497.8
3/18/2013 6:30:00 AM	0.510	6.12	1.11	497.8
3/18/2013 6:45:00 AM	0.510	6.12	1.11	497.8
3/18/2013 7:00:00 AM	0.510	6.12	1.11	497.8
3/18/2013 7:15:00 AM	0.510	6.12	1.11	497.8
3/18/2013 7:30:00 AM	0.510	6.12	1.11	497.8
3/18/2013 7:45:00 AM	0.510	6.12	1.11	497.8
3/18/2013 8:00:00 AM	0.510	6.12	1.11	497.8
3/18/2013 8:15:00 AM	0.500	6	1.08	483.2
3/18/2013 8:30:00 AM	0.510	6.12	1.11	497.8
3/18/2013 8:45:00 AM	0.510	6.12	1.11	497.8
3/18/2013 9:00:00 AM	0.510	6.12	1.11	497.8
3/18/2013 9:15:00 AM	0.510	6.12	1.11	497.8
3/18/2013 9:30:00 AM	0.510	6.12	1.11	497.8
3/18/2013 9:45:00 AM	0.510	6.12	1.11	497.8
3/18/2013 10:00:00 AM	0.510	6.12	1.11	497.8
3/18/2013 10:15:00 AM	0.510	6.12	1.11	497.8
3/18/2013 10:30:00 AM	0.500	6	1.08	483.2
3/18/2013 10:45:00 AM	0.500	6	1.08	483.2
3/18/2013 11:00:00 AM	0.510	6.12	1.11	497.8
3/18/2013 11:15:00 AM	0.500	6	1.08	483.2
3/18/2013 11:30:00 AM	0.510	6.12	1.11	497.8
3/18/2013 11:45:00 AM	0.510	6.12	1.11	497.8
3/18/2013 12:00:00 PM	0.510	6.12	1.11	497.8
3/18/2013 12:15:00 PM	0.500	6	1.08	483.2
3/18/2013 12:30:00 PM	0.510	6.12	1.11	497.8
3/18/2013 12:45:00 PM	0.510	6.12	1.11	497.8
3/18/2013 1:00:00 PM	0.510	6.12	1.11	497.8
3/18/2013 1:15:00 PM	0.510	6.12	1.11	497.8
3/18/2013 1:30:00 PM	0.510	6.12	1.11	497.8
3/18/2013 1:45:00 PM	0.510	6.12	1.11	497.8
3/18/2013 2:00:00 PM	0.510	6.12	1.11	497.8
3/18/2013 2:15:00 PM	0.510	6.12	1.11	497.8
3/18/2013 2:30:00 PM	0.510	6.12	1.11	497.8
3/18/2013 2:45:00 PM	0.510	6.12	1.11	497.8

3/18/2013 3:00:00 PM	0.510	6.12	1.11	497.8
3/18/2013 3:15:00 PM	0.510	6.12	1.11	497.8
3/18/2013 3:30:00 PM	0.510	6.12	1.11	497.8
3/18/2013 3:45:00 PM	0.510	6.12	1.11	497.8
3/18/2013 4:00:00 PM	0.500	6	1.08	483.2
3/18/2013 4:15:00 PM	0.510	6.12	1.11	497.8
3/18/2013 4:30:00 PM	0.510	6.12	1.11	497.8
3/18/2013 4:45:00 PM	0.510	6.12	1.11	497.8
3/18/2013 5:00:00 PM	0.510	6.12	1.11	497.8
3/18/2013 5:15:00 PM	0.510	6.12	1.11	497.8
3/18/2013 5:30:00 PM	0.510	6.12	1.11	497.8
3/18/2013 5:45:00 PM	0.510	6.12	1.11	497.8
3/18/2013 6:00:00 PM	0.500	6	1.08	483.2
3/18/2013 6:15:00 PM	0.510	6.12	1.11	497.8
3/18/2013 6:30:00 PM	0.510	6.12	1.11	497.8
3/18/2013 6:45:00 PM	0.510	6.12	1.11	497.8
3/18/2013 7:00:00 PM	0.510	6.12	1.11	497.8
3/18/2013 7:15:00 PM	0.510	6.12	1.11	497.8
3/18/2013 7:30:00 PM	0.510	6.12	1.11	497.8
3/18/2013 7:45:00 PM	0.510	6.12	1.11	497.8
3/18/2013 8:00:00 PM	0.510	6.12	1.11	497.8
3/18/2013 8:15:00 PM	0.510	6.12	1.11	497.8
3/18/2013 8:30:00 PM	0.510	6.12	1.11	497.8
3/18/2013 8:45:00 PM	0.510	6.12	1.11	497.8
3/18/2013 9:00:00 PM	0.510	6.12	1.11	497.8
3/18/2013 9:15:00 PM	0.510	6.12	1.11	497.8
3/18/2013 9:30:00 PM	0.510	6.12	1.11	497.8
3/18/2013 9:45:00 PM	0.510	6.12	1.11	497.8
3/18/2013 10:00:00 PM	0.510	6.12	1.11	497.8
3/18/2013 10:15:00 PM	0.500	6	1.08	483.2
3/18/2013 10:30:00 PM	0.510	6.12	1.11	497.8
3/18/2013 10:45:00 PM	0.510	6.12	1.11	497.8
3/18/2013 11:00:00 PM	0.510	6.12	1.11	497.8
3/18/2013 11:15:00 PM	0.510	6.12	1.11	497.8
3/18/2013 11:30:00 PM	0.510	6.12	1.11	497.8
3/18/2013 11:45:00 PM	0.510	6.12	1.11	497.8
3/19/2013 12:00:00 AM	0.510	6.12	1.11	497.8
3/19/2013 12:15:00 AM	0.510	6.12	1.11	497.8
3/19/2013 12:30:00 AM	0.510	6.12	1.11	497.8
3/19/2013 12:45:00 AM	0.510	6.12	1.11	497.8
3/19/2013 1:00:00 AM	0.510	6.12	1.11	497.8
3/19/2013 1:15:00 AM	0.510	6.12	1.11	497.8
3/19/2013 1:30:00 AM	0.510	6.12	1.11	497.8
3/19/2013 1:45:00 AM	0.510	6.12	1.11	497.8
3/19/2013 2:00:00 AM	0.510	6.12	1.11	497.8
3/19/2013 2:15:00 AM	0.510	6.12	1.11	497.8
3/19/2013 2:30:00 AM	0.510	6.12	1.11	497.8

3/19/2013 2:45:00 AM	0.510	6.12	1.11	497.8
3/19/2013 3:00:00 AM	0.510	6.12	1.11	497.8
3/19/2013 3:15:00 AM	0.510	6.12	1.11	497.8
3/19/2013 3:30:00 AM	0.510	6.12	1.11	497.8
3/19/2013 3:45:00 AM	0.510	6.12	1.11	497.8
3/19/2013 4:00:00 AM	0.510	6.12	1.11	497.8
3/19/2013 4:15:00 AM	0.510	6.12	1.11	497.8
3/19/2013 4:30:00 AM	0.510	6.12	1.11	497.8
3/19/2013 4:45:00 AM	0.510	6.12	1.11	497.8
3/19/2013 5:00:00 AM	0.510	6.12	1.11	497.8
3/19/2013 5:15:00 AM	0.510	6.12	1.11	497.8
3/19/2013 5:30:00 AM	0.510	6.12	1.11	497.8
3/19/2013 5:45:00 AM	0.510	6.12	1.11	497.8
3/19/2013 6:00:00 AM	0.500	6	1.08	483.2
3/19/2013 6:15:00 AM	0.510	6.12	1.11	497.8
3/19/2013 6:30:00 AM	0.510	6.12	1.11	497.8
3/19/2013 6:45:00 AM	0.510	6.12	1.11	497.8
3/19/2013 7:00:00 AM	0.510	6.12	1.11	497.8
3/19/2013 7:15:00 AM	0.510	6.12	1.11	497.8
3/19/2013 7:30:00 AM	0.510	6.12	1.11	497.8
3/19/2013 7:45:00 AM	0.510	6.12	1.11	497.8
3/19/2013 8:00:00 AM	0.500	6	1.08	483.2
3/19/2013 8:15:00 AM	0.510	6.12	1.11	497.8
3/19/2013 8:30:00 AM	0.510	6.12	1.11	497.8
3/19/2013 8:45:00 AM	0.510	6.12	1.11	497.8
3/19/2013 9:00:00 AM	0.510	6.12	1.11	497.8
3/19/2013 9:15:00 AM	0.510	6.12	1.11	497.8
3/19/2013 9:30:00 AM	0.500	6	1.08	483.2
3/19/2013 9:45:00 AM	0.510	6.12	1.11	497.8
3/19/2013 10:00:00 AM	0.510	6.12	1.11	497.8
3/19/2013 10:15:00 AM	0.510	6.12	1.11	497.8
3/19/2013 10:30:00 AM	0.500	6	1.08	483.2
3/19/2013 10:45:00 AM	0.500	6	1.08	483.2
3/19/2013 11:00:00 AM	0.510	6.12	1.11	497.8
3/19/2013 11:15:00 AM	0.510	6.12	1.11	497.8
3/19/2013 11:30:00 AM	0.510	6.12	1.11	497.8
3/19/2013 11:45:00 AM	0.510	6.12	1.11	497.8
3/19/2013 12:00:00 PM	0.500	6	1.08	483.2
3/19/2013 12:15:00 PM	0.510	6.12	1.11	497.8
3/19/2013 12:30:00 PM	0.510	6.12	1.11	497.8
3/19/2013 12:45:00 PM	0.510	6.12	1.11	497.8
3/19/2013 1:00:00 PM	0.510	6.12	1.11	497.8
3/19/2013 1:15:00 PM	0.510	6.12	1.11	497.8
3/19/2013 1:30:00 PM	0.510	6.12	1.11	497.8
3/19/2013 1:45:00 PM	0.510	6.12	1.11	497.8
3/19/2013 2:00:00 PM	0.510	6.12	1.11	497.8
3/19/2013 2:15:00 PM	0.510	6.12	1.11	497.8

3/19/2013 2:30:00 PM	0.510	6.12	1.11	497.8
3/19/2013 2:45:00 PM	0.510	6.12	1.11	497.8
3/19/2013 3:00:00 PM	0.510	6.12	1.11	497.8
3/19/2013 3:15:00 PM	0.510	6.12	1.11	497.8
3/19/2013 3:30:00 PM	0.510	6.12	1.11	497.8
3/19/2013 3:45:00 PM	0.510	6.12	1.11	497.8
3/19/2013 4:00:00 PM	0.510	6.12	1.11	497.8
3/19/2013 4:15:00 PM	0.510	6.12	1.11	497.8
3/19/2013 4:30:00 PM	0.510	6.12	1.11	497.8
3/19/2013 4:45:00 PM	0.500	6	1.08	483.2
3/19/2013 5:00:00 PM	0.510	6.12	1.11	497.8
3/19/2013 5:15:00 PM	0.510	6.12	1.11	497.8
3/19/2013 5:30:00 PM	0.510	6.12	1.11	497.8
3/19/2013 5:45:00 PM	0.510	6.12	1.11	497.8
3/19/2013 6:00:00 PM	0.510	6.12	1.11	497.8
3/19/2013 6:15:00 PM	0.510	6.12	1.11	497.8
3/19/2013 6:30:00 PM	0.510	6.12	1.11	497.8
3/19/2013 6:45:00 PM	0.510	6.12	1.11	497.8
3/19/2013 7:00:00 PM	0.510	6.12	1.11	497.8
3/19/2013 7:15:00 PM	0.510	6.12	1.11	497.8
3/19/2013 7:30:00 PM	0.510	6.12	1.11	497.8
3/19/2013 7:45:00 PM	0.510	6.12	1.11	497.8
3/19/2013 8:00:00 PM	0.510	6.12	1.11	497.8
3/19/2013 8:15:00 PM	0.510	6.12	1.11	497.8
3/19/2013 8:30:00 PM	0.510	6.12	1.11	497.8
3/19/2013 8:45:00 PM	0.510	6.12	1.11	497.8
3/19/2013 9:00:00 PM	0.510	6.12	1.11	497.8
3/19/2013 9:15:00 PM	0.510	6.12	1.11	497.8
3/19/2013 9:30:00 PM	0.500	6	1.08	483.2
3/19/2013 9:45:00 PM	0.510	6.12	1.11	497.8
3/19/2013 10:00:00 PM	0.510	6.12	1.11	497.8
3/19/2013 10:15:00 PM	0.510	6.12	1.11	497.8
3/19/2013 10:30:00 PM	0.510	6.12	1.11	497.8
3/19/2013 10:45:00 PM	0.510	6.12	1.11	497.8
3/19/2013 11:00:00 PM	0.510	6.12	1.11	497.8
3/19/2013 11:15:00 PM	0.510	6.12	1.11	497.8
3/19/2013 11:30:00 PM	0.510	6.12	1.11	497.8
3/19/2013 11:45:00 PM	0.510	6.12	1.11	497.8
3/20/2013 12:00:00 AM	0.510	6.12	1.11	497.8
3/20/2013 12:15:00 AM	0.510	6.12	1.11	497.8
3/20/2013 12:30:00 AM	0.510	6.12	1.11	497.8
3/20/2013 12:45:00 AM	0.510	6.12	1.11	497.8
3/20/2013 1:00:00 AM	0.510	6.12	1.11	497.8
3/20/2013 1:15:00 AM	0.510	6.12	1.11	497.8
3/20/2013 1:30:00 AM	0.510	6.12	1.11	497.8
3/20/2013 1:45:00 AM	0.510	6.12	1.11	497.8
3/20/2013 2:00:00 AM	0.510	6.12	1.11	497.8

3/20/2013 2:15:00 AM	0.510	6.12	1.11	497.8
3/20/2013 2:30:00 AM	0.510	6.12	1.11	497.8
3/20/2013 2:45:00 AM	0.510	6.12	1.11	497.8
3/20/2013 3:00:00 AM	0.510	6.12	1.11	497.8
3/20/2013 3:15:00 AM	0.510	6.12	1.11	497.8
3/20/2013 3:30:00 AM	0.510	6.12	1.11	497.8
3/20/2013 3:45:00 AM	0.510	6.12	1.11	497.8
3/20/2013 4:00:00 AM	0.510	6.12	1.11	497.8
3/20/2013 4:15:00 AM	0.510	6.12	1.11	497.8
3/20/2013 4:30:00 AM	0.510	6.12	1.11	497.8
3/20/2013 4:45:00 AM	0.510	6.12	1.11	497.8
3/20/2013 5:00:00 AM	0.510	6.12	1.11	497.8
3/20/2013 5:15:00 AM	0.510	6.12	1.11	497.8
3/20/2013 5:30:00 AM	0.510	6.12	1.11	497.8
3/20/2013 5:45:00 AM	0.510	6.12	1.11	497.8
3/20/2013 6:00:00 AM	0.510	6.12	1.11	497.8
3/20/2013 6:15:00 AM	0.510	6.12	1.11	497.8
3/20/2013 6:30:00 AM	0.500	6	1.08	483.2
3/20/2013 6:45:00 AM	0.510	6.12	1.11	497.8
3/20/2013 7:00:00 AM	0.510	6.12	1.11	497.8
3/20/2013 7:15:00 AM	0.510	6.12	1.11	497.8
3/20/2013 7:30:00 AM	0.510	6.12	1.11	497.8
3/20/2013 7:45:00 AM	0.510	6.12	1.11	497.8
3/20/2013 8:00:00 AM	0.510	6.12	1.11	497.8
3/20/2013 8:15:00 AM	0.510	6.12	1.11	497.8
3/20/2013 8:30:00 AM	0.510	6.12	1.11	497.8
3/20/2013 8:45:00 AM	0.510	6.12	1.11	497.8
3/20/2013 9:00:00 AM	0.510	6.12	1.11	497.8
3/20/2013 9:15:00 AM	0.510	6.12	1.11	497.8
3/20/2013 9:30:00 AM	0.510	6.12	1.11	497.8
3/20/2013 9:45:00 AM	0.510	6.12	1.11	497.8
3/20/2013 10:00:00 AM	0.510	6.12	1.11	497.8
3/20/2013 10:15:00 AM	0.510	6.12	1.11	497.8
3/20/2013 10:30:00 AM	0.510	6.12	1.11	497.8
3/20/2013 10:45:00 AM	0.510	6.12	1.11	497.8
3/20/2013 11:00:00 AM	0.500	6	1.08	483.2
3/20/2013 11:15:00 AM	0.510	6.12	1.11	497.8
3/20/2013 11:30:00 AM	0.510	6.12	1.11	497.8
3/20/2013 11:45:00 AM	0.510	6.12	1.11	497.8
3/20/2013 12:00:00 PM	0.510	6.12	1.11	497.8
3/20/2013 12:15:00 PM	0.510	6.12	1.11	497.8
3/20/2013 12:30:00 PM	0.510	6.12	1.11	497.8
3/20/2013 12:45:00 PM	0.510	6.12	1.11	497.8
3/20/2013 1:00:00 PM	0.510	6.12	1.11	497.8
3/20/2013 1:15:00 PM	0.510	6.12	1.11	497.8
3/20/2013 1:30:00 PM	0.510	6.12	1.11	497.8
3/20/2013 1:45:00 PM	0.510	6.12	1.11	497.8

3/20/2013 2:00:00 PM	0.510	6.12	1.11	497.8
3/20/2013 2:15:00 PM	0.500	6	1.08	483.2
3/20/2013 2:30:00 PM	0.510	6.12	1.11	497.8
3/20/2013 2:45:00 PM	0.510	6.12	1.11	497.8
3/20/2013 3:00:00 PM	0.510	6.12	1.11	497.8
3/20/2013 3:15:00 PM	0.510	6.12	1.11	497.8
3/20/2013 3:30:00 PM	0.510	6.12	1.11	497.8
3/20/2013 3:45:00 PM	0.510	6.12	1.11	497.8
3/20/2013 4:00:00 PM	0.510	6.12	1.11	497.8
3/20/2013 4:15:00 PM	0.510	6.12	1.11	497.8
3/20/2013 4:30:00 PM	0.510	6.12	1.11	497.8
3/20/2013 4:45:00 PM	0.510	6.12	1.11	497.8
3/20/2013 5:00:00 PM	0.510	6.12	1.11	497.8
3/20/2013 5:15:00 PM	0.510	6.12	1.11	497.8
3/20/2013 5:30:00 PM	0.510	6.12	1.11	497.8
3/20/2013 5:45:00 PM	0.510	6.12	1.11	497.8
3/20/2013 6:00:00 PM	0.510	6.12	1.11	497.8
3/20/2013 6:15:00 PM	0.510	6.12	1.11	497.8
3/20/2013 6:30:00 PM	0.510	6.12	1.11	497.8
3/20/2013 6:45:00 PM	0.510	6.12	1.11	497.8
3/20/2013 7:00:00 PM	0.510	6.12	1.11	497.8
3/20/2013 7:15:00 PM	0.510	6.12	1.11	497.8
3/20/2013 7:30:00 PM	0.510	6.12	1.11	497.8
3/20/2013 7:45:00 PM	0.510	6.12	1.11	497.8
3/20/2013 8:00:00 PM	0.510	6.12	1.11	497.8
3/20/2013 8:15:00 PM	0.510	6.12	1.11	497.8
3/20/2013 8:30:00 PM	0.510	6.12	1.11	497.8
3/20/2013 8:45:00 PM	0.510	6.12	1.11	497.8
3/20/2013 9:00:00 PM	0.510	6.12	1.11	497.8
3/20/2013 9:15:00 PM	0.510	6.12	1.11	497.8
3/20/2013 9:30:00 PM	0.510	6.12	1.11	497.8
3/20/2013 9:45:00 PM	0.500	6	1.08	483.2
3/20/2013 10:00:00 PM	0.510	6.12	1.11	497.8
3/20/2013 10:15:00 PM	0.510	6.12	1.11	497.8
3/20/2013 10:30:00 PM	0.510	6.12	1.11	497.8
3/20/2013 10:45:00 PM	0.510	6.12	1.11	497.8
3/20/2013 11:00:00 PM	0.510	6.12	1.11	497.8
3/20/2013 11:15:00 PM	0.510	6.12	1.11	497.8
3/20/2013 11:30:00 PM	0.510	6.12	1.11	497.8
3/20/2013 11:45:00 PM	0.510	6.12	1.11	497.8
3/21/2013 12:00:00 AM	0.510	6.12	1.11	497.8
3/21/2013 12:15:00 AM	0.510	6.12	1.11	497.8
3/21/2013 12:30:00 AM	0.510	6.12	1.11	497.8
3/21/2013 12:45:00 AM	0.510	6.12	1.11	497.8
3/21/2013 1:00:00 AM	0.510	6.12	1.11	497.8
3/21/2013 1:15:00 AM	0.510	6.12	1.11	497.8
3/21/2013 1:30:00 AM	0.510	6.12	1.11	497.8

3/21/2013 1:45:00 AM	0.510	6.12	1.11	497.8
3/21/2013 2:00:00 AM	0.510	6.12	1.11	497.8
3/21/2013 2:15:00 AM	0.510	6.12	1.11	497.8
3/21/2013 2:30:00 AM	0.510	6.12	1.11	497.8
3/21/2013 2:45:00 AM	0.510	6.12	1.11	497.8
3/21/2013 3:00:00 AM	0.510	6.12	1.11	497.8
3/21/2013 3:15:00 AM	0.510	6.12	1.11	497.8
3/21/2013 3:30:00 AM	0.500	6	1.08	483.2
3/21/2013 3:45:00 AM	0.510	6.12	1.11	497.8
3/21/2013 4:00:00 AM	0.500	6	1.08	483.2
3/21/2013 4:15:00 AM	0.500	6	1.08	483.2
3/21/2013 4:30:00 AM	0.510	6.12	1.11	497.8
3/21/2013 4:45:00 AM	0.510	6.12	1.11	497.8
3/21/2013 5:00:00 AM	0.510	6.12	1.11	497.8
3/21/2013 5:15:00 AM	0.510	6.12	1.11	497.8
3/21/2013 5:30:00 AM	0.510	6.12	1.11	497.8
3/21/2013 5:45:00 AM	0.510	6.12	1.11	497.8
3/21/2013 6:00:00 AM	0.510	6.12	1.11	497.8
3/21/2013 6:15:00 AM	0.510	6.12	1.11	497.8
3/21/2013 6:30:00 AM	0.510	6.12	1.11	497.8
3/21/2013 6:45:00 AM	0.510	6.12	1.11	497.8
3/21/2013 7:00:00 AM	0.510	6.12	1.11	497.8
3/21/2013 7:15:00 AM	0.510	6.12	1.11	497.8
3/21/2013 7:30:00 AM	0.510	6.12	1.11	497.8
3/21/2013 7:45:00 AM	0.510	6.12	1.11	497.8
3/21/2013 8:00:00 AM	0.510	6.12	1.11	497.8
3/21/2013 8:15:00 AM	0.510	6.12	1.11	497.8
3/21/2013 8:30:00 AM	0.510	6.12	1.11	497.8
3/21/2013 8:45:00 AM	0.510	6.12	1.11	497.8
3/21/2013 9:00:00 AM	0.510	6.12	1.11	497.8
3/21/2013 9:15:00 AM	0.510	6.12	1.11	497.8
3/21/2013 9:30:00 AM	0.510	6.12	1.11	497.8
3/21/2013 9:45:00 AM	0.510	6.12	1.11	497.8
3/21/2013 10:00:00 AM	0.510	6.12	1.11	497.8
3/21/2013 10:15:00 AM	0.500	6	1.08	483.2
3/21/2013 10:30:00 AM	0.510	6.12	1.11	497.8
3/21/2013 10:45:00 AM	0.510	6.12	1.11	497.8
3/21/2013 11:00:00 AM	0.510	6.12	1.11	497.8
3/21/2013 11:15:00 AM	0.510	6.12	1.11	497.8
3/21/2013 11:30:00 AM	0.510	6.12	1.11	497.8
3/21/2013 11:45:00 AM	0.500	6	1.08	483.2
3/21/2013 12:00:00 PM	0.500	6	1.08	483.2
3/21/2013 12:15:00 PM	0.510	6.12	1.11	497.8
3/21/2013 12:30:00 PM	0.510	6.12	1.11	497.8
3/21/2013 12:45:00 PM	0.510	6.12	1.11	497.8
3/21/2013 1:00:00 PM	0.510	6.12	1.11	497.8
3/21/2013 1:15:00 PM	0.510	6.12	1.11	497.8

3/21/2013 1:30:00 PM	0.510	6.12	1.11	497.8
3/21/2013 1:45:00 PM	0.510	6.12	1.11	497.8
3/21/2013 2:00:00 PM	0.510	6.12	1.11	497.8
3/21/2013 2:15:00 PM	0.500	6	1.08	483.2
3/21/2013 2:30:00 PM	0.510	6.12	1.11	497.8
3/21/2013 2:45:00 PM	0.510	6.12	1.11	497.8
3/21/2013 3:00:00 PM	0.510	6.12	1.11	497.8
3/21/2013 3:15:00 PM	0.510	6.12	1.11	497.8
3/21/2013 3:30:00 PM	0.500	6	1.08	483.2
3/21/2013 3:45:00 PM	0.500	6	1.08	483.2
3/21/2013 4:00:00 PM	0.500	6	1.08	483.2
3/21/2013 4:15:00 PM	0.510	6.12	1.11	497.8
3/21/2013 4:30:00 PM	0.510	6.12	1.11	497.8
3/21/2013 4:45:00 PM	0.510	6.12	1.11	497.8
3/21/2013 5:00:00 PM	0.510	6.12	1.11	497.8
3/21/2013 5:15:00 PM	0.510	6.12	1.11	497.8
3/21/2013 5:30:00 PM	0.510	6.12	1.11	497.8
3/21/2013 5:45:00 PM	0.510	6.12	1.11	497.8
3/21/2013 6:00:00 PM	0.510	6.12	1.11	497.8
3/21/2013 6:15:00 PM	0.500	6	1.08	483.2
3/21/2013 6:30:00 PM	0.510	6.12	1.11	497.8
3/21/2013 6:45:00 PM	0.500	6	1.08	483.2
3/21/2013 7:00:00 PM	0.510	6.12	1.11	497.8
3/21/2013 7:15:00 PM	0.510	6.12	1.11	497.8
3/21/2013 7:30:00 PM	0.510	6.12	1.11	497.8
3/21/2013 7:45:00 PM	0.510	6.12	1.11	497.8
3/21/2013 8:00:00 PM	0.510	6.12	1.11	497.8
3/21/2013 8:15:00 PM	0.510	6.12	1.11	497.8
3/21/2013 8:30:00 PM	0.510	6.12	1.11	497.8
3/21/2013 8:45:00 PM	0.510	6.12	1.11	497.8
3/21/2013 9:00:00 PM	0.510	6.12	1.11	497.8
3/21/2013 9:15:00 PM	0.510	6.12	1.11	497.8
3/21/2013 9:30:00 PM	0.510	6.12	1.11	497.8
3/21/2013 9:45:00 PM	0.510	6.12	1.11	497.8
3/21/2013 10:00:00 PM	0.510	6.12	1.11	497.8
3/21/2013 10:15:00 PM	0.510	6.12	1.11	497.8
3/21/2013 10:30:00 PM	0.510	6.12	1.11	497.8
3/21/2013 10:45:00 PM	0.510	6.12	1.11	497.8
3/21/2013 11:00:00 PM	0.510	6.12	1.11	497.8
3/21/2013 11:15:00 PM	0.510	6.12	1.11	497.8
3/21/2013 11:30:00 PM	0.510	6.12	1.11	497.8
3/21/2013 11:45:00 PM	0.510	6.12	1.11	497.8
3/22/2013 12:00:00 AM	0.510	6.12	1.11	497.8
3/22/2013 12:15:00 AM	0.510	6.12	1.11	497.8
3/22/2013 12:30:00 AM	0.510	6.12	1.11	497.8
3/22/2013 12:45:00 AM	0.510	6.12	1.11	497.8
3/22/2013 1:00:00 AM	0.510	6.12	1.11	497.8

3/22/2013 1:15:00 AM	0.510	6.12	1.11	497.8
3/22/2013 1:30:00 AM	0.500	6	1.08	483.2
3/22/2013 1:45:00 AM	0.510	6.12	1.11	497.8
3/22/2013 2:00:00 AM	0.510	6.12	1.11	497.8
3/22/2013 2:15:00 AM	0.510	6.12	1.11	497.8
3/22/2013 2:30:00 AM	0.510	6.12	1.11	497.8
3/22/2013 2:45:00 AM	0.510	6.12	1.11	497.8
3/22/2013 3:00:00 AM	0.510	6.12	1.11	497.8
3/22/2013 3:15:00 AM	0.510	6.12	1.11	497.8
3/22/2013 3:30:00 AM	0.510	6.12	1.11	497.8
3/22/2013 3:45:00 AM	0.510	6.12	1.11	497.8
3/22/2013 4:00:00 AM	0.510	6.12	1.11	497.8
3/22/2013 4:15:00 AM	0.510	6.12	1.11	497.8
3/22/2013 4:30:00 AM	0.510	6.12	1.11	497.8
3/22/2013 4:45:00 AM	0.510	6.12	1.11	497.8
3/22/2013 5:00:00 AM	0.510	6.12	1.11	497.8
3/22/2013 5:15:00 AM	0.510	6.12	1.11	497.8
3/22/2013 5:30:00 AM	0.510	6.12	1.11	497.8
3/22/2013 5:45:00 AM	0.510	6.12	1.11	497.8
3/22/2013 6:00:00 AM	0.510	6.12	1.11	497.8
3/22/2013 6:15:00 AM	0.510	6.12	1.11	497.8
3/22/2013 6:30:00 AM	0.510	6.12	1.11	497.8
3/22/2013 6:45:00 AM	0.510	6.12	1.11	497.8
3/22/2013 7:00:00 AM	0.510	6.12	1.11	497.8
3/22/2013 7:15:00 AM	0.510	6.12	1.11	497.8
3/22/2013 7:30:00 AM	0.510	6.12	1.11	497.8
3/22/2013 7:45:00 AM	0.510	6.12	1.11	497.8
3/22/2013 8:00:00 AM	0.510	6.12	1.11	497.8
3/22/2013 8:15:00 AM	0.510	6.12	1.11	497.8
3/22/2013 8:30:00 AM	0.510	6.12	1.11	497.8
3/22/2013 8:45:00 AM	0.510	6.12	1.11	497.8
3/22/2013 9:00:00 AM	0.510	6.12	1.11	497.8
3/22/2013 9:15:00 AM	0.510	6.12	1.11	497.8
3/22/2013 9:30:00 AM	0.510	6.12	1.11	497.8
3/22/2013 9:45:00 AM	0.500	6	1.08	483.2
3/22/2013 10:00:00 AM	0.510	6.12	1.11	497.8
3/22/2013 10:15:00 AM	0.510	6.12	1.11	497.8
3/22/2013 10:30:00 AM	0.510	6.12	1.11	497.8
3/22/2013 10:45:00 AM	0.510	6.12	1.11	497.8
3/22/2013 11:00:00 AM	0.510	6.12	1.11	497.8
3/22/2013 11:15:00 AM	0.510	6.12	1.11	497.8
3/22/2013 11:30:00 AM	0.510	6.12	1.11	497.8
3/22/2013 11:45:00 AM	0.510	6.12	1.11	497.8
3/22/2013 12:00:00 PM	0.510	6.12	1.11	497.8
3/22/2013 12:15:00 PM	0.510	6.12	1.11	497.8
3/22/2013 12:30:00 PM	0.510	6.12	1.11	497.8
3/22/2013 12:45:00 PM	0.510	6.12	1.11	497.8

3/22/2013 1:00:00 PM	0.510	6.12	1.11	497.8
3/22/2013 1:15:00 PM	0.500	6	1.08	483.2
3/22/2013 1:30:00 PM	0.510	6.12	1.11	497.8
3/22/2013 1:45:00 PM	0.510	6.12	1.11	497.8
3/22/2013 2:00:00 PM	0.510	6.12	1.11	497.8
3/22/2013 2:15:00 PM	0.510	6.12	1.11	497.8
3/22/2013 2:30:00 PM	0.510	6.12	1.11	497.8
3/22/2013 2:45:00 PM	0.510	6.12	1.11	497.8
3/22/2013 3:00:00 PM	0.500	6	1.08	483.2
3/22/2013 3:15:00 PM	0.510	6.12	1.11	497.8
3/22/2013 3:30:00 PM	0.510	6.12	1.11	497.8
3/22/2013 3:45:00 PM	0.510	6.12	1.11	497.8
3/22/2013 4:00:00 PM	0.510	6.12	1.11	497.8
3/22/2013 4:15:00 PM	0.510	6.12	1.11	497.8
3/22/2013 4:30:00 PM	0.510	6.12	1.11	497.8
3/22/2013 4:45:00 PM	0.510	6.12	1.11	497.8
3/22/2013 5:00:00 PM	0.510	6.12	1.11	497.8
3/22/2013 5:15:00 PM	0.510	6.12	1.11	497.8
3/22/2013 5:30:00 PM	0.510	6.12	1.11	497.8
3/22/2013 5:45:00 PM	0.510	6.12	1.11	497.8
3/22/2013 6:00:00 PM	0.510	6.12	1.11	497.8
3/22/2013 6:15:00 PM	0.500	6	1.08	483.2
3/22/2013 6:30:00 PM	0.500	6	1.08	483.2
3/22/2013 6:45:00 PM	0.510	6.12	1.11	497.8
3/22/2013 7:00:00 PM	0.510	6.12	1.11	497.8
3/22/2013 7:15:00 PM	0.510	6.12	1.11	497.8
3/22/2013 7:30:00 PM	0.510	6.12	1.11	497.8
3/22/2013 7:45:00 PM	0.510	6.12	1.11	497.8
3/22/2013 8:00:00 PM	0.510	6.12	1.11	497.8
3/22/2013 8:15:00 PM	0.510	6.12	1.11	497.8
3/22/2013 8:30:00 PM	0.510	6.12	1.11	497.8
3/22/2013 8:45:00 PM	0.510	6.12	1.11	497.8
3/22/2013 9:00:00 PM	0.510	6.12	1.11	497.8
3/22/2013 9:15:00 PM	0.510	6.12	1.11	497.8
3/22/2013 9:30:00 PM	0.510	6.12	1.11	497.8
3/22/2013 9:45:00 PM	0.510	6.12	1.11	497.8
3/22/2013 10:00:00 PM	0.510	6.12	1.11	497.8
3/22/2013 10:15:00 PM	0.510	6.12	1.11	497.8
3/22/2013 10:30:00 PM	0.510	6.12	1.11	497.8
3/22/2013 10:45:00 PM	0.510	6.12	1.11	497.8
3/22/2013 11:00:00 PM	0.510	6.12	1.11	497.8
3/22/2013 11:15:00 PM	0.510	6.12	1.11	497.8
3/22/2013 11:30:00 PM	0.510	6.12	1.11	497.8
3/22/2013 11:45:00 PM	0.510	6.12	1.11	497.8
3/23/2013 12:00:00 AM	0.510	6.12	1.11	497.8
3/23/2013 12:15:00 AM	0.510	6.12	1.11	497.8
3/23/2013 12:30:00 AM	0.510	6.12	1.11	497.8

3/23/2013 12:45:00 AM	0.510	6.12	1.11	497.8
3/23/2013 1:00:00 AM	0.510	6.12	1.11	497.8
3/23/2013 1:15:00 AM	0.510	6.12	1.11	497.8
3/23/2013 1:30:00 AM	0.510	6.12	1.11	497.8
3/23/2013 1:45:00 AM	0.510	6.12	1.11	497.8
3/23/2013 2:00:00 AM	0.510	6.12	1.11	497.8
3/23/2013 2:15:00 AM	0.510	6.12	1.11	497.8
3/23/2013 2:30:00 AM	0.510	6.12	1.11	497.8
3/23/2013 2:45:00 AM	0.510	6.12	1.11	497.8
3/23/2013 3:00:00 AM	0.510	6.12	1.11	497.8
3/23/2013 3:15:00 AM	0.510	6.12	1.11	497.8
3/23/2013 3:30:00 AM	0.510	6.12	1.11	497.8
3/23/2013 3:45:00 AM	0.510	6.12	1.11	497.8
3/23/2013 4:00:00 AM	0.510	6.12	1.11	497.8
3/23/2013 4:15:00 AM	0.510	6.12	1.11	497.8
3/23/2013 4:30:00 AM	0.510	6.12	1.11	497.8
3/23/2013 4:45:00 AM	0.510	6.12	1.11	497.8
3/23/2013 5:00:00 AM	0.510	6.12	1.11	497.8
3/23/2013 5:15:00 AM	0.510	6.12	1.11	497.8
3/23/2013 5:30:00 AM	0.510	6.12	1.11	497.8
3/23/2013 5:45:00 AM	0.510	6.12	1.11	497.8
3/23/2013 6:00:00 AM	0.510	6.12	1.11	497.8
3/23/2013 6:15:00 AM	0.510	6.12	1.11	497.8
3/23/2013 6:30:00 AM	0.510	6.12	1.11	497.8
3/23/2013 6:45:00 AM	0.500	6	1.08	483.2
3/23/2013 7:00:00 AM	0.510	6.12	1.11	497.8
3/23/2013 7:15:00 AM	0.510	6.12	1.11	497.8
3/23/2013 7:30:00 AM	0.510	6.12	1.11	497.8
3/23/2013 7:45:00 AM	0.510	6.12	1.11	497.8
3/23/2013 8:00:00 AM	0.510	6.12	1.11	497.8
3/23/2013 8:15:00 AM	0.510	6.12	1.11	497.8
3/23/2013 8:30:00 AM	0.510	6.12	1.11	497.8
3/23/2013 8:45:00 AM	0.510	6.12	1.11	497.8
3/23/2013 9:00:00 AM	0.510	6.12	1.11	497.8
3/23/2013 9:15:00 AM	0.510	6.12	1.11	497.8
3/23/2013 9:30:00 AM	0.510	6.12	1.11	497.8
3/23/2013 9:45:00 AM	0.510	6.12	1.11	497.8
3/23/2013 10:00:00 AM	0.510	6.12	1.11	497.8
3/23/2013 10:15:00 AM	0.510	6.12	1.11	497.8
3/23/2013 10:30:00 AM	0.510	6.12	1.11	497.8
3/23/2013 10:45:00 AM	0.510	6.12	1.11	497.8
3/23/2013 11:00:00 AM	0.510	6.12	1.11	497.8
3/23/2013 11:15:00 AM	0.510	6.12	1.11	497.8
3/23/2013 11:30:00 AM	0.510	6.12	1.11	497.8
3/23/2013 11:45:00 AM	0.510	6.12	1.11	497.8
3/23/2013 12:00:00 PM	0.500	6	1.08	483.2
3/23/2013 12:15:00 PM	0.510	6.12	1.11	497.8

3/23/2013 12:30:00 PM	0.510	6.12	1.11	497.8
3/23/2013 12:45:00 PM	0.500	6	1.08	483.2
3/23/2013 1:00:00 PM	0.510	6.12	1.11	497.8
3/23/2013 1:15:00 PM	0.500	6	1.08	483.2
3/23/2013 1:30:00 PM	0.510	6.12	1.11	497.8
3/23/2013 1:45:00 PM	0.510	6.12	1.11	497.8
3/23/2013 2:00:00 PM	0.510	6.12	1.11	497.8
3/23/2013 2:15:00 PM	0.510	6.12	1.11	497.8
3/23/2013 2:30:00 PM	0.510	6.12	1.11	497.8
3/23/2013 2:45:00 PM	0.510	6.12	1.11	497.8
3/23/2013 3:00:00 PM	0.500	6	1.08	483.2
3/23/2013 3:15:00 PM	0.510	6.12	1.11	497.8
3/23/2013 3:30:00 PM	0.510	6.12	1.11	497.8
3/23/2013 3:45:00 PM	0.510	6.12	1.11	497.8
3/23/2013 4:00:00 PM	0.510	6.12	1.11	497.8
3/23/2013 4:15:00 PM	0.510	6.12	1.11	497.8
3/23/2013 4:30:00 PM	0.510	6.12	1.11	497.8
3/23/2013 4:45:00 PM	0.510	6.12	1.11	497.8
3/23/2013 5:00:00 PM	0.510	6.12	1.11	497.8
3/23/2013 5:15:00 PM	0.510	6.12	1.11	497.8
3/23/2013 5:30:00 PM	0.510	6.12	1.11	497.8
3/23/2013 5:45:00 PM	0.510	6.12	1.11	497.8
3/23/2013 6:00:00 PM	0.510	6.12	1.11	497.8
3/23/2013 6:15:00 PM	0.510	6.12	1.11	497.8
3/23/2013 6:30:00 PM	0.510	6.12	1.11	497.8
3/23/2013 6:45:00 PM	0.510	6.12	1.11	497.8
3/23/2013 7:00:00 PM	0.510	6.12	1.11	497.8
3/23/2013 7:15:00 PM	0.510	6.12	1.11	497.8
3/23/2013 7:30:00 PM	0.510	6.12	1.11	497.8
3/23/2013 7:45:00 PM	0.510	6.12	1.11	497.8
3/23/2013 8:00:00 PM	0.510	6.12	1.11	497.8
3/23/2013 8:15:00 PM	0.510	6.12	1.11	497.8
3/23/2013 8:30:00 PM	0.510	6.12	1.11	497.8
3/23/2013 8:45:00 PM	0.510	6.12	1.11	497.8
3/23/2013 9:00:00 PM	0.510	6.12	1.11	497.8
3/23/2013 9:15:00 PM	0.510	6.12	1.11	497.8
3/23/2013 9:30:00 PM	0.510	6.12	1.11	497.8
3/23/2013 9:45:00 PM	0.510	6.12	1.11	497.8
3/23/2013 10:00:00 PM	0.510	6.12	1.11	497.8
3/23/2013 10:15:00 PM	0.510	6.12	1.11	497.8
3/23/2013 10:30:00 PM	0.510	6.12	1.11	497.8
3/23/2013 10:45:00 PM	0.510	6.12	1.11	497.8
3/23/2013 11:00:00 PM	0.510	6.12	1.11	497.8
3/23/2013 11:15:00 PM	0.510	6.12	1.11	497.8
3/23/2013 11:30:00 PM	0.510	6.12	1.11	497.8
3/23/2013 11:45:00 PM	0.510	6.12	1.11	497.8
3/24/2013 12:00:00 AM	0.510	6.12	1.11	497.8

3/24/2013 12:15:00 AM	0.510	6.12	1.11	497.8
3/24/2013 12:30:00 AM	0.510	6.12	1.11	497.8
3/24/2013 12:45:00 AM	0.510	6.12	1.11	497.8
3/24/2013 1:00:00 AM	0.510	6.12	1.11	497.8
3/24/2013 1:15:00 AM	0.510	6.12	1.11	497.8
3/24/2013 1:30:00 AM	0.510	6.12	1.11	497.8
3/24/2013 1:45:00 AM	0.510	6.12	1.11	497.8
3/24/2013 2:00:00 AM	0.510	6.12	1.11	497.8
3/24/2013 2:15:00 AM	0.510	6.12	1.11	497.8
3/24/2013 2:30:00 AM	0.510	6.12	1.11	497.8
3/24/2013 2:45:00 AM	0.510	6.12	1.11	497.8
3/24/2013 3:00:00 AM	0.510	6.12	1.11	497.8
3/24/2013 3:15:00 AM	0.510	6.12	1.11	497.8
3/24/2013 3:30:00 AM	0.510	6.12	1.11	497.8
3/24/2013 3:45:00 AM	0.510	6.12	1.11	497.8
3/24/2013 4:00:00 AM	0.510	6.12	1.11	497.8
3/24/2013 4:15:00 AM	0.510	6.12	1.11	497.8
3/24/2013 4:30:00 AM	0.510	6.12	1.11	497.8
3/24/2013 4:45:00 AM	0.510	6.12	1.11	497.8
3/24/2013 5:00:00 AM	0.510	6.12	1.11	497.8
3/24/2013 5:15:00 AM	0.510	6.12	1.11	497.8
3/24/2013 5:30:00 AM	0.510	6.12	1.11	497.8
3/24/2013 5:45:00 AM	0.510	6.12	1.11	497.8
3/24/2013 6:00:00 AM	0.510	6.12	1.11	497.8
3/24/2013 6:15:00 AM	0.510	6.12	1.11	497.8
3/24/2013 6:30:00 AM	0.510	6.12	1.11	497.8
3/24/2013 6:45:00 AM	0.510	6.12	1.11	497.8
3/24/2013 7:00:00 AM	0.510	6.12	1.11	497.8
3/24/2013 7:15:00 AM	0.510	6.12	1.11	497.8
3/24/2013 7:30:00 AM	0.510	6.12	1.11	497.8
3/24/2013 7:45:00 AM	0.510	6.12	1.11	497.8
3/24/2013 8:00:00 AM	0.510	6.12	1.11	497.8
3/24/2013 8:15:00 AM	0.510	6.12	1.11	497.8
3/24/2013 8:30:00 AM	0.510	6.12	1.11	497.8
3/24/2013 8:45:00 AM	0.510	6.12	1.11	497.8
3/24/2013 9:00:00 AM	0.500	6	1.08	483.2
3/24/2013 9:15:00 AM	0.510	6.12	1.11	497.8
3/24/2013 9:30:00 AM	0.510	6.12	1.11	497.8
3/24/2013 9:45:00 AM	0.510	6.12	1.11	497.8
3/24/2013 10:00:00 AM	0.500	6	1.08	483.2
3/24/2013 10:15:00 AM	0.510	6.12	1.11	497.8
3/24/2013 10:30:00 AM	0.500	6	1.08	483.2
3/24/2013 10:45:00 AM	0.510	6.12	1.11	497.8
3/24/2013 11:00:00 AM	0.510	6.12	1.11	497.8
3/24/2013 11:15:00 AM	0.500	6	1.08	483.2
3/24/2013 11:30:00 AM	0.500	6	1.08	483.2
3/24/2013 11:45:00 AM	0.500	6	1.08	483.2

3/24/2013 12:00:00 PM	0.510	6.12	1.11	497.8
3/24/2013 12:15:00 PM	0.510	6.12	1.11	497.8
3/24/2013 12:30:00 PM	0.510	6.12	1.11	497.8
3/24/2013 12:45:00 PM	0.510	6.12	1.11	497.8
3/24/2013 1:00:00 PM	0.510	6.12	1.11	497.8
3/24/2013 1:15:00 PM	0.510	6.12	1.11	497.8
3/24/2013 1:30:00 PM	0.510	6.12	1.11	497.8
3/24/2013 1:45:00 PM	0.510	6.12	1.11	497.8
3/24/2013 2:00:00 PM	0.510	6.12	1.11	497.8
3/24/2013 2:15:00 PM	0.510	6.12	1.11	497.8
3/24/2013 2:30:00 PM	0.500	6	1.08	483.2
3/24/2013 2:45:00 PM	0.510	6.12	1.11	497.8
3/24/2013 3:00:00 PM	0.510	6.12	1.11	497.8
3/24/2013 3:15:00 PM	0.510	6.12	1.11	497.8
3/24/2013 3:30:00 PM	0.500	6	1.08	483.2
3/24/2013 3:45:00 PM	0.510	6.12	1.11	497.8
3/24/2013 4:00:00 PM	0.510	6.12	1.11	497.8
3/24/2013 4:15:00 PM	0.510	6.12	1.11	497.8
3/24/2013 4:30:00 PM	0.510	6.12	1.11	497.8
3/24/2013 4:45:00 PM	0.510	6.12	1.11	497.8
3/24/2013 5:00:00 PM	0.510	6.12	1.11	497.8
3/24/2013 5:15:00 PM	0.510	6.12	1.11	497.8
3/24/2013 5:30:00 PM	0.510	6.12	1.11	497.8
3/24/2013 5:45:00 PM	0.510	6.12	1.11	497.8
3/24/2013 6:00:00 PM	0.500	6	1.08	483.2
3/24/2013 6:15:00 PM	0.510	6.12	1.11	497.8
3/24/2013 6:30:00 PM	0.510	6.12	1.11	497.8
3/24/2013 6:45:00 PM	0.510	6.12	1.11	497.8
3/24/2013 7:00:00 PM	0.510	6.12	1.11	497.8
3/24/2013 7:15:00 PM	0.510	6.12	1.11	497.8
3/24/2013 7:30:00 PM	0.510	6.12	1.11	497.8
3/24/2013 7:45:00 PM	0.510	6.12	1.11	497.8
3/24/2013 8:00:00 PM	0.510	6.12	1.11	497.8
3/24/2013 8:15:00 PM	0.510	6.12	1.11	497.8
3/24/2013 8:30:00 PM	0.510	6.12	1.11	497.8
3/24/2013 8:45:00 PM	0.510	6.12	1.11	497.8
3/24/2013 9:00:00 PM	0.510	6.12	1.11	497.8
3/24/2013 9:15:00 PM	0.510	6.12	1.11	497.8
3/24/2013 9:30:00 PM	0.510	6.12	1.11	497.8
3/24/2013 9:45:00 PM	0.510	6.12	1.11	497.8
3/24/2013 10:00:00 PM	0.510	6.12	1.11	497.8
3/24/2013 10:15:00 PM	0.510	6.12	1.11	497.8
3/24/2013 10:30:00 PM	0.500	6	1.08	483.2
3/24/2013 10:45:00 PM	0.510	6.12	1.11	497.8
3/24/2013 11:00:00 PM	0.510	6.12	1.11	497.8
3/24/2013 11:15:00 PM	0.510	6.12	1.11	497.8
3/24/2013 11:30:00 PM	0.510	6.12	1.11	497.8

3/24/2013 11:45:00 PM	0.510	6.12	1.11	497.8
3/25/2013 12:00:00 AM	0.510	6.12	1.11	497.8
3/25/2013 12:15:00 AM	0.510	6.12	1.11	497.8
3/25/2013 12:30:00 AM	0.510	6.12	1.11	497.8
3/25/2013 12:45:00 AM	0.510	6.12	1.11	497.8
3/25/2013 1:00:00 AM	0.510	6.12	1.11	497.8
3/25/2013 1:15:00 AM	0.510	6.12	1.11	497.8
3/25/2013 1:30:00 AM	0.510	6.12	1.11	497.8
3/25/2013 1:45:00 AM	0.510	6.12	1.11	497.8
3/25/2013 2:00:00 AM	0.510	6.12	1.11	497.8
3/25/2013 2:15:00 AM	0.510	6.12	1.11	497.8
3/25/2013 2:30:00 AM	0.510	6.12	1.11	497.8
3/25/2013 2:45:00 AM	0.510	6.12	1.11	497.8
3/25/2013 3:00:00 AM	0.510	6.12	1.11	497.8
3/25/2013 3:15:00 AM	0.510	6.12	1.11	497.8
3/25/2013 3:30:00 AM	0.510	6.12	1.11	497.8
3/25/2013 3:45:00 AM	0.510	6.12	1.11	497.8
3/25/2013 4:00:00 AM	0.510	6.12	1.11	497.8
3/25/2013 4:15:00 AM	0.510	6.12	1.11	497.8
3/25/2013 4:30:00 AM	0.510	6.12	1.11	497.8
3/25/2013 4:45:00 AM	0.510	6.12	1.11	497.8
3/25/2013 5:00:00 AM	0.510	6.12	1.11	497.8
3/25/2013 5:15:00 AM	0.510	6.12	1.11	497.8
3/25/2013 5:30:00 AM	0.510	6.12	1.11	497.8
3/25/2013 5:45:00 AM	0.510	6.12	1.11	497.8
3/25/2013 6:00:00 AM	0.510	6.12	1.11	497.8
3/25/2013 6:15:00 AM	0.510	6.12	1.11	497.8
3/25/2013 6:30:00 AM	0.510	6.12	1.11	497.8
3/25/2013 6:45:00 AM	0.510	6.12	1.11	497.8
3/25/2013 7:00:00 AM	0.510	6.12	1.11	497.8
3/25/2013 7:15:00 AM	0.510	6.12	1.11	497.8
3/25/2013 7:30:00 AM	0.510	6.12	1.11	497.8
3/25/2013 7:45:00 AM	0.510	6.12	1.11	497.8
3/25/2013 8:00:00 AM	0.510	6.12	1.11	497.8
3/25/2013 8:15:00 AM	0.510	6.12	1.11	497.8
3/25/2013 8:30:00 AM	0.510	6.12	1.11	497.8
3/25/2013 8:45:00 AM	0.510	6.12	1.11	497.8
3/25/2013 9:00:00 AM	0.510	6.12	1.11	497.8
3/25/2013 9:15:00 AM	0.510	6.12	1.11	497.8
3/25/2013 9:30:00 AM	0.510	6.12	1.11	497.8
3/25/2013 9:45:00 AM	0.510	6.12	1.11	497.8
3/25/2013 10:00:00 AM	0.510	6.12	1.11	497.8
3/25/2013 10:15:00 AM	0.510	6.12	1.11	497.8
3/25/2013 10:30:00 AM	0.510	6.12	1.11	497.8
3/25/2013 10:45:00 AM	0.500	6	1.08	483.2
3/25/2013 11:00:00 AM	0.510	6.12	1.11	497.8
3/25/2013 11:15:00 AM	0.500	6	1.08	483.2

3/25/2013 11:30:00 AM	0.510	6.12	1.11	497.8
3/25/2013 11:45:00 AM	0.510	6.12	1.11	497.8
3/25/2013 12:00:00 PM	0.510	6.12	1.11	497.8
3/25/2013 12:15:00 PM	0.510	6.12	1.11	497.8
3/25/2013 12:30:00 PM	0.510	6.12	1.11	497.8
3/25/2013 12:45:00 PM	0.510	6.12	1.11	497.8
3/25/2013 1:00:00 PM	0.510	6.12	1.11	497.8
3/25/2013 1:15:00 PM	0.510	6.12	1.11	497.8
3/25/2013 1:30:00 PM	0.510	6.12	1.11	497.8
3/25/2013 1:45:00 PM	0.510	6.12	1.11	497.8
3/25/2013 2:00:00 PM	0.510	6.12	1.11	497.8
3/25/2013 2:15:00 PM	0.510	6.12	1.11	497.8
3/25/2013 2:30:00 PM	0.500	6	1.08	483.2
3/25/2013 2:45:00 PM	0.500	6	1.08	483.2
3/25/2013 3:00:00 PM	0.510	6.12	1.11	497.8
3/25/2013 3:15:00 PM	0.510	6.12	1.11	497.8
3/25/2013 3:30:00 PM	0.510	6.12	1.11	497.8
3/25/2013 3:45:00 PM	0.510	6.12	1.11	497.8
3/25/2013 4:00:00 PM	0.510	6.12	1.11	497.8
3/25/2013 4:15:00 PM	0.510	6.12	1.11	497.8
3/25/2013 4:30:00 PM	0.510	6.12	1.11	497.8
3/25/2013 4:45:00 PM	0.510	6.12	1.11	497.8
3/25/2013 5:00:00 PM	0.510	6.12	1.11	497.8
3/25/2013 5:15:00 PM	0.500	6	1.08	483.2
3/25/2013 5:30:00 PM	0.510	6.12	1.11	497.8
3/25/2013 5:45:00 PM	0.500	6	1.08	483.2
3/25/2013 6:00:00 PM	0.500	6	1.08	483.2
3/25/2013 6:15:00 PM	0.510	6.12	1.11	497.8
3/25/2013 6:30:00 PM	0.500	6	1.08	483.2
3/25/2013 6:45:00 PM	0.510	6.12	1.11	497.8
3/25/2013 7:00:00 PM	0.510	6.12	1.11	497.8
3/25/2013 7:15:00 PM	0.510	6.12	1.11	497.8
3/25/2013 7:30:00 PM	0.510	6.12	1.11	497.8
3/25/2013 7:45:00 PM	0.510	6.12	1.11	497.8
3/25/2013 8:00:00 PM	0.510	6.12	1.11	497.8
3/25/2013 8:15:00 PM	0.510	6.12	1.11	497.8
3/25/2013 8:30:00 PM	0.510	6.12	1.11	497.8
3/25/2013 8:45:00 PM	0.500	6	1.08	483.2
3/25/2013 9:00:00 PM	0.500	6	1.08	483.2
3/25/2013 9:15:00 PM	0.500	6	1.08	483.2
3/25/2013 9:30:00 PM	0.500	6	1.08	483.2
3/25/2013 9:45:00 PM	0.510	6.12	1.11	497.8
3/25/2013 10:00:00 PM	0.510	6.12	1.11	497.8
3/25/2013 10:15:00 PM	0.510	6.12	1.11	497.8
3/25/2013 10:30:00 PM	0.510	6.12	1.11	497.8
3/25/2013 10:45:00 PM	0.510	6.12	1.11	497.8
3/25/2013 11:00:00 PM	0.500	6	1.08	483.2

3/25/2013 11:15:00 PM	0.510	6.12	1.11	497.8
3/25/2013 11:30:00 PM	0.510	6.12	1.11	497.8
3/25/2013 11:45:00 PM	0.510	6.12	1.11	497.8
3/26/2013 12:00:00 AM	0.510	6.12	1.11	497.8
3/26/2013 12:15:00 AM	0.510	6.12	1.11	497.8
3/26/2013 12:30:00 AM	0.510	6.12	1.11	497.8
3/26/2013 12:45:00 AM	0.510	6.12	1.11	497.8
3/26/2013 1:00:00 AM	0.510	6.12	1.11	497.8
3/26/2013 1:15:00 AM	0.510	6.12	1.11	497.8
3/26/2013 1:30:00 AM	0.510	6.12	1.11	497.8
3/26/2013 1:45:00 AM	0.510	6.12	1.11	497.8
3/26/2013 2:00:00 AM	0.510	6.12	1.11	497.8
3/26/2013 2:15:00 AM	0.510	6.12	1.11	497.8
3/26/2013 2:30:00 AM	0.510	6.12	1.11	497.8
3/26/2013 2:45:00 AM	0.510	6.12	1.11	497.8
3/26/2013 3:00:00 AM	0.510	6.12	1.11	497.8
3/26/2013 3:15:00 AM	0.510	6.12	1.11	497.8
3/26/2013 3:30:00 AM	0.510	6.12	1.11	497.8
3/26/2013 3:45:00 AM	0.510	6.12	1.11	497.8
3/26/2013 4:00:00 AM	0.510	6.12	1.11	497.8
3/26/2013 4:15:00 AM	0.510	6.12	1.11	497.8
3/26/2013 4:30:00 AM	0.510	6.12	1.11	497.8
3/26/2013 4:45:00 AM	0.510	6.12	1.11	497.8
3/26/2013 5:00:00 AM	0.510	6.12	1.11	497.8
3/26/2013 5:15:00 AM	0.510	6.12	1.11	497.8
3/26/2013 5:30:00 AM	0.510	6.12	1.11	497.8
3/26/2013 5:45:00 AM	0.510	6.12	1.11	497.8
3/26/2013 6:00:00 AM	0.510	6.12	1.11	497.8
3/26/2013 6:15:00 AM	0.510	6.12	1.11	497.8
3/26/2013 6:30:00 AM	0.510	6.12	1.11	497.8
3/26/2013 6:45:00 AM	0.510	6.12	1.11	497.8
3/26/2013 7:00:00 AM	0.510	6.12	1.11	497.8
3/26/2013 7:15:00 AM	0.510	6.12	1.11	497.8
3/26/2013 7:30:00 AM	0.510	6.12	1.11	497.8
3/26/2013 7:45:00 AM	0.510	6.12	1.11	497.8
3/26/2013 8:00:00 AM	0.510	6.12	1.11	497.8
3/26/2013 8:15:00 AM	0.510	6.12	1.11	497.8
3/26/2013 8:30:00 AM	0.510	6.12	1.11	497.8
3/26/2013 8:45:00 AM	0.510	6.12	1.11	497.8
3/26/2013 9:00:00 AM	0.510	6.12	1.11	497.8
3/26/2013 9:15:00 AM	0.510	6.12	1.11	497.8
3/26/2013 9:30:00 AM	0.510	6.12	1.11	497.8
3/26/2013 9:45:00 AM	0.510	6.12	1.11	497.8
3/26/2013 10:00:00 AM	0.510	6.12	1.11	497.8
3/26/2013 10:15:00 AM	0.510	6.12	1.11	497.8
3/26/2013 10:30:00 AM	0.510	6.12	1.11	497.8
3/26/2013 10:45:00 AM	0.510	6.12	1.11	497.8

3/26/2013 11:00:00 AM	0.510	6.12	1.11	497.8
3/26/2013 11:15:00 AM	0.510	6.12	1.11	497.8
3/26/2013 11:30:00 AM	0.510	6.12	1.11	497.8
3/26/2013 11:45:00 AM	0.510	6.12	1.11	497.8
3/26/2013 12:00:00 PM	0.510	6.12	1.11	497.8
3/26/2013 12:15:00 PM	0.500	6	1.08	483.2
3/26/2013 12:30:00 PM	0.510	6.12	1.11	497.8
3/26/2013 12:45:00 PM	0.510	6.12	1.11	497.8
3/26/2013 1:00:00 PM	0.510	6.12	1.11	497.8
3/26/2013 1:15:00 PM	0.510	6.12	1.11	497.8
3/26/2013 1:30:00 PM	0.510	6.12	1.11	497.8
3/26/2013 1:45:00 PM	0.510	6.12	1.11	497.8
3/26/2013 2:00:00 PM	0.510	6.12	1.11	497.8
3/26/2013 2:15:00 PM	0.510	6.12	1.11	497.8
3/26/2013 2:30:00 PM	0.510	6.12	1.11	497.8
3/26/2013 2:45:00 PM	0.510	6.12	1.11	497.8
3/26/2013 3:00:00 PM	0.510	6.12	1.11	497.8
3/26/2013 3:15:00 PM	0.510	6.12	1.11	497.8
3/26/2013 3:30:00 PM	0.500	6	1.08	483.2
3/26/2013 3:45:00 PM	0.510	6.12	1.11	497.8
3/26/2013 4:00:00 PM	0.510	6.12	1.11	497.8
3/26/2013 4:15:00 PM	0.510	6.12	1.11	497.8
3/26/2013 4:30:00 PM	0.510	6.12	1.11	497.8
3/26/2013 4:45:00 PM	0.510	6.12	1.11	497.8
3/26/2013 5:00:00 PM	0.500	6	1.08	483.2
3/26/2013 5:15:00 PM	0.510	6.12	1.11	497.8
3/26/2013 5:30:00 PM	0.500	6	1.08	483.2
3/26/2013 5:45:00 PM	0.510	6.12	1.11	497.8
3/26/2013 6:00:00 PM	0.510	6.12	1.11	497.8
3/26/2013 6:15:00 PM	0.500	6	1.08	483.2
3/26/2013 6:30:00 PM	0.500	6	1.08	483.2
3/26/2013 6:45:00 PM	0.510	6.12	1.11	497.8
3/26/2013 7:00:00 PM	0.510	6.12	1.11	497.8
3/26/2013 7:15:00 PM	0.510	6.12	1.11	497.8
3/26/2013 7:30:00 PM	0.510	6.12	1.11	497.8
3/26/2013 7:45:00 PM	0.510	6.12	1.11	497.8
3/26/2013 8:00:00 PM	0.510	6.12	1.11	497.8
3/26/2013 8:15:00 PM	0.510	6.12	1.11	497.8
3/26/2013 8:30:00 PM	0.510	6.12	1.11	497.8
3/26/2013 8:45:00 PM	0.510	6.12	1.11	497.8
3/26/2013 9:00:00 PM	0.510	6.12	1.11	497.8
3/26/2013 9:15:00 PM	0.510	6.12	1.11	497.8
3/26/2013 9:30:00 PM	0.510	6.12	1.11	497.8
3/26/2013 9:45:00 PM	0.510	6.12	1.11	497.8
3/26/2013 10:00:00 PM	0.510	6.12	1.11	497.8
3/26/2013 10:15:00 PM	0.510	6.12	1.11	497.8
3/26/2013 10:30:00 PM	0.510	6.12	1.11	497.8

3/26/2013 10:45:00 PM	0.500	6	1.08	483.2
3/26/2013 11:00:00 PM	0.510	6.12	1.11	497.8
3/26/2013 11:15:00 PM	0.500	6	1.08	483.2
3/26/2013 11:30:00 PM	0.510	6.12	1.11	497.8
3/26/2013 11:45:00 PM	0.500	6	1.08	483.2
3/27/2013 12:00:00 AM	0.510	6.12	1.11	497.8
3/27/2013 12:15:00 AM	0.510	6.12	1.11	497.8
3/27/2013 12:30:00 AM	0.510	6.12	1.11	497.8
3/27/2013 12:45:00 AM	0.510	6.12	1.11	497.8
3/27/2013 1:00:00 AM	0.500	6	1.08	483.2
3/27/2013 1:15:00 AM	0.510	6.12	1.11	497.8
3/27/2013 1:30:00 AM	0.510	6.12	1.11	497.8
3/27/2013 1:45:00 AM	0.510	6.12	1.11	497.8
3/27/2013 2:00:00 AM	0.510	6.12	1.11	497.8
3/27/2013 2:15:00 AM	0.510	6.12	1.11	497.8
3/27/2013 2:30:00 AM	0.510	6.12	1.11	497.8
3/27/2013 2:45:00 AM	0.510	6.12	1.11	497.8
3/27/2013 3:00:00 AM	0.510	6.12	1.11	497.8
3/27/2013 3:15:00 AM	0.510	6.12	1.11	497.8
3/27/2013 3:30:00 AM	0.510	6.12	1.11	497.8
3/27/2013 3:45:00 AM	0.510	6.12	1.11	497.8
3/27/2013 4:00:00 AM	0.510	6.12	1.11	497.8
3/27/2013 4:15:00 AM	0.510	6.12	1.11	497.8
3/27/2013 4:30:00 AM	0.510	6.12	1.11	497.8
3/27/2013 4:45:00 AM	0.510	6.12	1.11	497.8
3/27/2013 5:00:00 AM	0.510	6.12	1.11	497.8
3/27/2013 5:15:00 AM	0.510	6.12	1.11	497.8
3/27/2013 5:30:00 AM	0.510	6.12	1.11	497.8
3/27/2013 5:45:00 AM	0.510	6.12	1.11	497.8
3/27/2013 6:00:00 AM	0.510	6.12	1.11	497.8
3/27/2013 6:15:00 AM	0.500	6	1.08	483.2
3/27/2013 6:30:00 AM	0.510	6.12	1.11	497.8
3/27/2013 6:45:00 AM	0.510	6.12	1.11	497.8
3/27/2013 7:00:00 AM	0.510	6.12	1.11	497.8
3/27/2013 7:15:00 AM	0.510	6.12	1.11	497.8
3/27/2013 7:30:00 AM	0.510	6.12	1.11	497.8
3/27/2013 7:45:00 AM	0.500	6	1.08	483.2
3/27/2013 8:00:00 AM	0.510	6.12	1.11	497.8
3/27/2013 8:15:00 AM	0.500	6	1.08	483.2
3/27/2013 8:30:00 AM	0.510	6.12	1.11	497.8
3/27/2013 8:45:00 AM	0.510	6.12	1.11	497.8
3/27/2013 9:00:00 AM	0.510	6.12	1.11	497.8
3/27/2013 9:15:00 AM	0.510	6.12	1.11	497.8
3/27/2013 9:30:00 AM	0.510	6.12	1.11	497.8
3/27/2013 9:45:00 AM	0.510	6.12	1.11	497.8
3/27/2013 10:00:00 AM	0.510	6.12	1.11	497.8
3/27/2013 10:15:00 AM	0.510	6.12	1.11	497.8

3/27/2013 10:30:00 AM	0.510	6.12	1.11	497.8
3/27/2013 10:45:00 AM	0.510	6.12	1.11	497.8
3/27/2013 11:00:00 AM	0.510	6.12	1.11	497.8
3/27/2013 11:15:00 AM	0.510	6.12	1.11	497.8
3/27/2013 11:30:00 AM	0.510	6.12	1.11	497.8
3/27/2013 11:45:00 AM	0.510	6.12	1.11	497.8
3/27/2013 12:00:00 PM	0.510	6.12	1.11	497.8
3/27/2013 12:15:00 PM	0.510	6.12	1.11	497.8
3/27/2013 12:30:00 PM	0.510	6.12	1.11	497.8
3/27/2013 12:45:00 PM	0.510	6.12	1.11	497.8
3/27/2013 1:00:00 PM	0.510	6.12	1.11	497.8
3/27/2013 1:15:00 PM	0.510	6.12	1.11	497.8
3/27/2013 1:30:00 PM	0.510	6.12	1.11	497.8
3/27/2013 1:45:00 PM	0.500	6	1.08	483.2
3/27/2013 2:00:00 PM	0.510	6.12	1.11	497.8
3/27/2013 2:15:00 PM	0.510	6.12	1.11	497.8
3/27/2013 2:30:00 PM	0.510	6.12	1.11	497.8
3/27/2013 2:45:00 PM	0.510	6.12	1.11	497.8
3/27/2013 3:00:00 PM	0.510	6.12	1.11	497.8
3/27/2013 3:15:00 PM	0.510	6.12	1.11	497.8
3/27/2013 3:30:00 PM	0.510	6.12	1.11	497.8
3/27/2013 3:45:00 PM	0.510	6.12	1.11	497.8
3/27/2013 4:00:00 PM	0.500	6	1.08	483.2
3/27/2013 4:15:00 PM	0.500	6	1.08	483.2
3/27/2013 4:30:00 PM	0.510	6.12	1.11	497.8
3/27/2013 4:45:00 PM	0.510	6.12	1.11	497.8
3/27/2013 5:00:00 PM	0.510	6.12	1.11	497.8
3/27/2013 5:15:00 PM	0.510	6.12	1.11	497.8
3/27/2013 5:30:00 PM	0.510	6.12	1.11	497.8
3/27/2013 5:45:00 PM	0.510	6.12	1.11	497.8
3/27/2013 6:00:00 PM	0.510	6.12	1.11	497.8
3/27/2013 6:15:00 PM	0.510	6.12	1.11	497.8
3/27/2013 6:30:00 PM	0.510	6.12	1.11	497.8
3/27/2013 6:45:00 PM	0.510	6.12	1.11	497.8
3/27/2013 7:00:00 PM	0.500	6	1.08	483.2
3/27/2013 7:15:00 PM	0.500	6	1.08	483.2
3/27/2013 7:30:00 PM	0.510	6.12	1.11	497.8
3/27/2013 7:45:00 PM	0.510	6.12	1.11	497.8
3/27/2013 8:00:00 PM	0.510	6.12	1.11	497.8
3/27/2013 8:15:00 PM	0.510	6.12	1.11	497.8
3/27/2013 8:30:00 PM	0.510	6.12	1.11	497.8
3/27/2013 8:45:00 PM	0.510	6.12	1.11	497.8
3/27/2013 9:00:00 PM	0.510	6.12	1.11	497.8
3/27/2013 9:15:00 PM	0.510	6.12	1.11	497.8
3/27/2013 9:30:00 PM	0.510	6.12	1.11	497.8
3/27/2013 9:45:00 PM	0.510	6.12	1.11	497.8
3/27/2013 10:00:00 PM	0.510	6.12	1.11	497.8

3/27/2013 10:15:00 PM	0.510	6.12	1.11	497.8
3/27/2013 10:30:00 PM	0.510	6.12	1.11	497.8
3/27/2013 10:45:00 PM	0.510	6.12	1.11	497.8
3/27/2013 11:00:00 PM	0.510	6.12	1.11	497.8
3/27/2013 11:15:00 PM	0.510	6.12	1.11	497.8
3/27/2013 11:30:00 PM	0.510	6.12	1.11	497.8
3/27/2013 11:45:00 PM	0.510	6.12	1.11	497.8
3/28/2013 12:00:00 AM	0.510	6.12	1.11	497.8
3/28/2013 12:15:00 AM	0.510	6.12	1.11	497.8
3/28/2013 12:30:00 AM	0.510	6.12	1.11	497.8
3/28/2013 12:45:00 AM	0.510	6.12	1.11	497.8
3/28/2013 1:00:00 AM	0.510	6.12	1.11	497.8
3/28/2013 1:15:00 AM	0.510	6.12	1.11	497.8
3/28/2013 1:30:00 AM	0.510	6.12	1.11	497.8
3/28/2013 1:45:00 AM	0.510	6.12	1.11	497.8
3/28/2013 2:00:00 AM	0.510	6.12	1.11	497.8
3/28/2013 2:15:00 AM	0.510	6.12	1.11	497.8
3/28/2013 2:30:00 AM	0.510	6.12	1.11	497.8
3/28/2013 2:45:00 AM	0.510	6.12	1.11	497.8
3/28/2013 3:00:00 AM	0.510	6.12	1.11	497.8
3/28/2013 3:15:00 AM	0.510	6.12	1.11	497.8
3/28/2013 3:30:00 AM	0.510	6.12	1.11	497.8
3/28/2013 3:45:00 AM	0.510	6.12	1.11	497.8
3/28/2013 4:00:00 AM	0.510	6.12	1.11	497.8
3/28/2013 4:15:00 AM	0.510	6.12	1.11	497.8
3/28/2013 4:30:00 AM	0.510	6.12	1.11	497.8
3/28/2013 4:45:00 AM	0.510	6.12	1.11	497.8
3/28/2013 5:00:00 AM	0.500	6	1.08	483.2
3/28/2013 5:15:00 AM	0.510	6.12	1.11	497.8
3/28/2013 5:30:00 AM	0.510	6.12	1.11	497.8
3/28/2013 5:45:00 AM	0.510	6.12	1.11	497.8
3/28/2013 6:00:00 AM	0.510	6.12	1.11	497.8
3/28/2013 6:15:00 AM	0.510	6.12	1.11	497.8
3/28/2013 6:30:00 AM	0.510	6.12	1.11	497.8
3/28/2013 6:45:00 AM	0.510	6.12	1.11	497.8
3/28/2013 7:00:00 AM	0.510	6.12	1.11	497.8
3/28/2013 7:15:00 AM	0.510	6.12	1.11	497.8
3/28/2013 7:30:00 AM	0.510	6.12	1.11	497.8
3/28/2013 7:45:00 AM	0.510	6.12	1.11	497.8
3/28/2013 8:00:00 AM	0.510	6.12	1.11	497.8
3/28/2013 8:15:00 AM	0.510	6.12	1.11	497.8
3/28/2013 8:30:00 AM	0.510	6.12	1.11	497.8
3/28/2013 8:45:00 AM	0.510	6.12	1.11	497.8
3/28/2013 9:00:00 AM	0.510	6.12	1.11	497.8
3/28/2013 9:15:00 AM	0.510	6.12	1.11	497.8
3/28/2013 9:30:00 AM	0.510	6.12	1.11	497.8
3/28/2013 9:45:00 AM	0.510	6.12	1.11	497.8

3/28/2013 10:00:00 AM	0.510	6.12	1.11	497.8
3/28/2013 10:15:00 AM	0.510	6.12	1.11	497.8
3/28/2013 10:30:00 AM	0.510	6.12	1.11	497.8
3/28/2013 10:45:00 AM	0.510	6.12	1.11	497.8
3/28/2013 11:00:00 AM	0.510	6.12	1.11	497.8
3/28/2013 11:15:00 AM	0.510	6.12	1.11	497.8
3/28/2013 11:30:00 AM	0.510	6.12	1.11	497.8
3/28/2013 11:45:00 AM	0.510	6.12	1.11	497.8
3/28/2013 12:00:00 PM	0.510	6.12	1.11	497.8
3/28/2013 12:15:00 PM	0.510	6.12	1.11	497.8
3/28/2013 12:30:00 PM	0.510	6.12	1.11	497.8
3/28/2013 12:45:00 PM	0.500	6	1.08	483.2
3/28/2013 1:00:00 PM	0.510	6.12	1.11	497.8
3/28/2013 1:15:00 PM	0.510	6.12	1.11	497.8
3/28/2013 1:30:00 PM	0.510	6.12	1.11	497.8
3/28/2013 1:45:00 PM	0.510	6.12	1.11	497.8
3/28/2013 2:00:00 PM	0.510	6.12	1.11	497.8
3/28/2013 2:15:00 PM	0.510	6.12	1.11	497.8
3/28/2013 2:30:00 PM	0.510	6.12	1.11	497.8
3/28/2013 2:45:00 PM	0.510	6.12	1.11	497.8
3/28/2013 3:00:00 PM	0.510	6.12	1.11	497.8
3/28/2013 3:15:00 PM	0.510	6.12	1.11	497.8
3/28/2013 3:30:00 PM	0.510	6.12	1.11	497.8
3/28/2013 3:45:00 PM	0.510	6.12	1.11	497.8
3/28/2013 4:00:00 PM	0.510	6.12	1.11	497.8
3/28/2013 4:15:00 PM	0.510	6.12	1.11	497.8
3/28/2013 4:30:00 PM	0.510	6.12	1.11	497.8
3/28/2013 4:45:00 PM	0.510	6.12	1.11	497.8
3/28/2013 5:00:00 PM	0.510	6.12	1.11	497.8
3/28/2013 5:15:00 PM	0.510	6.12	1.11	497.8
3/28/2013 5:30:00 PM	0.510	6.12	1.11	497.8
3/28/2013 5:45:00 PM	0.510	6.12	1.11	497.8
3/28/2013 6:00:00 PM	0.510	6.12	1.11	497.8
3/28/2013 6:15:00 PM	0.500	6	1.08	483.2
3/28/2013 6:30:00 PM	0.510	6.12	1.11	497.8
3/28/2013 6:45:00 PM	0.510	6.12	1.11	497.8
3/28/2013 7:00:00 PM	0.510	6.12	1.11	497.8
3/28/2013 7:15:00 PM	0.510	6.12	1.11	497.8
3/28/2013 7:30:00 PM	0.500	6	1.08	483.2
3/28/2013 7:45:00 PM	0.510	6.12	1.11	497.8
3/28/2013 8:00:00 PM	0.510	6.12	1.11	497.8
3/28/2013 8:15:00 PM	0.510	6.12	1.11	497.8
3/28/2013 8:30:00 PM	0.510	6.12	1.11	497.8
3/28/2013 8:45:00 PM	0.510	6.12	1.11	497.8
3/28/2013 9:00:00 PM	0.510	6.12	1.11	497.8
3/28/2013 9:15:00 PM	0.510	6.12	1.11	497.8
3/28/2013 9:30:00 PM	0.510	6.12	1.11	497.8

3/28/2013 9:45:00 PM	0.510	6.12	1.11	497.8
3/28/2013 10:00:00 PM	0.510	6.12	1.11	497.8
3/28/2013 10:15:00 PM	0.510	6.12	1.11	497.8
3/28/2013 10:30:00 PM	0.510	6.12	1.11	497.8
3/28/2013 10:45:00 PM	0.510	6.12	1.11	497.8
3/28/2013 11:00:00 PM	0.510	6.12	1.11	497.8
3/28/2013 11:15:00 PM	0.510	6.12	1.11	497.8
3/28/2013 11:30:00 PM	0.510	6.12	1.11	497.8
3/28/2013 11:45:00 PM	0.510	6.12	1.11	497.8
3/29/2013 12:00:00 AM	0.510	6.12	1.11	497.8
3/29/2013 12:15:00 AM	0.510	6.12	1.11	497.8
3/29/2013 12:30:00 AM	0.510	6.12	1.11	497.8
3/29/2013 12:45:00 AM	0.510	6.12	1.11	497.8
3/29/2013 1:00:00 AM	0.510	6.12	1.11	497.8
3/29/2013 1:15:00 AM	0.510	6.12	1.11	497.8
3/29/2013 1:30:00 AM	0.500	6	1.08	483.2
3/29/2013 1:45:00 AM	0.510	6.12	1.11	497.8
3/29/2013 2:00:00 AM	0.510	6.12	1.11	497.8
3/29/2013 2:15:00 AM	0.510	6.12	1.11	497.8
3/29/2013 2:30:00 AM	0.510	6.12	1.11	497.8
3/29/2013 2:45:00 AM	0.510	6.12	1.11	497.8
3/29/2013 3:00:00 AM	0.510	6.12	1.11	497.8
3/29/2013 3:15:00 AM	0.510	6.12	1.11	497.8
3/29/2013 3:30:00 AM	0.510	6.12	1.11	497.8
3/29/2013 3:45:00 AM	0.510	6.12	1.11	497.8
3/29/2013 4:00:00 AM	0.510	6.12	1.11	497.8
3/29/2013 4:15:00 AM	0.510	6.12	1.11	497.8
3/29/2013 4:30:00 AM	0.510	6.12	1.11	497.8
3/29/2013 4:45:00 AM	0.510	6.12	1.11	497.8
3/29/2013 5:00:00 AM	0.510	6.12	1.11	497.8
3/29/2013 5:15:00 AM	0.510	6.12	1.11	497.8
3/29/2013 5:30:00 AM	0.510	6.12	1.11	497.8
3/29/2013 5:45:00 AM	0.510	6.12	1.11	497.8
3/29/2013 6:00:00 AM	0.510	6.12	1.11	497.8
3/29/2013 6:15:00 AM	0.510	6.12	1.11	497.8
3/29/2013 6:30:00 AM	0.510	6.12	1.11	497.8
3/29/2013 6:45:00 AM	0.510	6.12	1.11	497.8
3/29/2013 7:00:00 AM	0.510	6.12	1.11	497.8
3/29/2013 7:15:00 AM	0.510	6.12	1.11	497.8
3/29/2013 7:30:00 AM	0.510	6.12	1.11	497.8
3/29/2013 7:45:00 AM	0.510	6.12	1.11	497.8
3/29/2013 8:00:00 AM	0.510	6.12	1.11	497.8
3/29/2013 8:15:00 AM	0.510	6.12	1.11	497.8
3/29/2013 8:30:00 AM	0.510	6.12	1.11	497.8
3/29/2013 8:45:00 AM	0.510	6.12	1.11	497.8
3/29/2013 9:00:00 AM	0.510	6.12	1.11	497.8
3/29/2013 9:15:00 AM	0.500	6	1.08	483.2

3/29/2013 9:30:00 AM	0.510	6.12	1.11	497.8
3/29/2013 9:45:00 AM	0.510	6.12	1.11	497.8
3/29/2013 10:00:00 AM	0.510	6.12	1.11	497.8
3/29/2013 10:15:00 AM	0.510	6.12	1.11	497.8
3/29/2013 10:30:00 AM	0.510	6.12	1.11	497.8
3/29/2013 10:45:00 AM	0.510	6.12	1.11	497.8
3/29/2013 11:00:00 AM	0.510	6.12	1.11	497.8
3/29/2013 11:15:00 AM	0.500	6	1.08	483.2
3/29/2013 11:30:00 AM	0.510	6.12	1.11	497.8
3/29/2013 11:45:00 AM	0.510	6.12	1.11	497.8
3/29/2013 12:00:00 PM	0.510	6.12	1.11	497.8
3/29/2013 12:15:00 PM	0.510	6.12	1.11	497.8
3/29/2013 12:30:00 PM	0.510	6.12	1.11	497.8
3/29/2013 12:45:00 PM	0.510	6.12	1.11	497.8
3/29/2013 1:00:00 PM	0.500	6	1.08	483.2
3/29/2013 1:15:00 PM	0.500	6	1.08	483.2
3/29/2013 1:30:00 PM	0.510	6.12	1.11	497.8
3/29/2013 1:45:00 PM	0.510	6.12	1.11	497.8
3/29/2013 2:00:00 PM	0.510	6.12	1.11	497.8
3/29/2013 2:15:00 PM	0.510	6.12	1.11	497.8
3/29/2013 2:30:00 PM	0.510	6.12	1.11	497.8
3/29/2013 2:45:00 PM	0.510	6.12	1.11	497.8
3/29/2013 3:00:00 PM	0.510	6.12	1.11	497.8
3/29/2013 3:15:00 PM	0.510	6.12	1.11	497.8
3/29/2013 3:30:00 PM	0.500	6	1.08	483.2
3/29/2013 3:45:00 PM	0.510	6.12	1.11	497.8
3/29/2013 4:00:00 PM	0.500	6	1.08	483.2
3/29/2013 4:15:00 PM	0.510	6.12	1.11	497.8
3/29/2013 4:30:00 PM	0.510	6.12	1.11	497.8
3/29/2013 4:45:00 PM	0.510	6.12	1.11	497.8
3/29/2013 5:00:00 PM	0.510	6.12	1.11	497.8
3/29/2013 5:15:00 PM	0.510	6.12	1.11	497.8
3/29/2013 5:30:00 PM	0.510	6.12	1.11	497.8
3/29/2013 5:45:00 PM	0.510	6.12	1.11	497.8
3/29/2013 6:00:00 PM	0.510	6.12	1.11	497.8
3/29/2013 6:15:00 PM	0.510	6.12	1.11	497.8
3/29/2013 6:30:00 PM	0.510	6.12	1.11	497.8
3/29/2013 6:45:00 PM	0.510	6.12	1.11	497.8
3/29/2013 7:00:00 PM	0.510	6.12	1.11	497.8
3/29/2013 7:15:00 PM	0.510	6.12	1.11	497.8
3/29/2013 7:30:00 PM	0.500	6	1.08	483.2
3/29/2013 7:45:00 PM	0.510	6.12	1.11	497.8
3/29/2013 8:00:00 PM	0.510	6.12	1.11	497.8
3/29/2013 8:15:00 PM	0.510	6.12	1.11	497.8
3/29/2013 8:30:00 PM	0.510	6.12	1.11	497.8
3/29/2013 8:45:00 PM	0.510	6.12	1.11	497.8
3/29/2013 9:00:00 PM	0.510	6.12	1.11	497.8

3/29/2013 9:15:00 PM	0.510	6.12	1.11	497.8
3/29/2013 9:30:00 PM	0.510	6.12	1.11	497.8
3/29/2013 9:45:00 PM	0.510	6.12	1.11	497.8
3/29/2013 10:00:00 PM	0.510	6.12	1.11	497.8
3/29/2013 10:15:00 PM	0.510	6.12	1.11	497.8
3/29/2013 10:30:00 PM	0.510	6.12	1.11	497.8
3/29/2013 10:45:00 PM	0.510	6.12	1.11	497.8
3/29/2013 11:00:00 PM	0.510	6.12	1.11	497.8
3/29/2013 11:15:00 PM	0.510	6.12	1.11	497.8
3/29/2013 11:30:00 PM	0.510	6.12	1.11	497.8
3/29/2013 11:45:00 PM	0.510	6.12	1.11	497.8
3/30/2013 12:00:00 AM	0.510	6.12	1.11	497.8
3/30/2013 12:15:00 AM	0.510	6.12	1.11	497.8
3/30/2013 12:30:00 AM	0.510	6.12	1.11	497.8
3/30/2013 12:45:00 AM	0.510	6.12	1.11	497.8
3/30/2013 1:00:00 AM	0.510	6.12	1.11	497.8
3/30/2013 1:15:00 AM	0.510	6.12	1.11	497.8
3/30/2013 1:30:00 AM	0.510	6.12	1.11	497.8
3/30/2013 1:45:00 AM	0.510	6.12	1.11	497.8
3/30/2013 2:00:00 AM	0.510	6.12	1.11	497.8
3/30/2013 2:15:00 AM	0.510	6.12	1.11	497.8
3/30/2013 2:30:00 AM	0.510	6.12	1.11	497.8
3/30/2013 2:45:00 AM	0.510	6.12	1.11	497.8
3/30/2013 3:00:00 AM	0.510	6.12	1.11	497.8
3/30/2013 3:15:00 AM	0.510	6.12	1.11	497.8
3/30/2013 3:30:00 AM	0.510	6.12	1.11	497.8
3/30/2013 3:45:00 AM	0.510	6.12	1.11	497.8
3/30/2013 4:00:00 AM	0.510	6.12	1.11	497.8
3/30/2013 4:15:00 AM	0.510	6.12	1.11	497.8
3/30/2013 4:30:00 AM	0.510	6.12	1.11	497.8
3/30/2013 4:45:00 AM	0.510	6.12	1.11	497.8
3/30/2013 5:00:00 AM	0.510	6.12	1.11	497.8
3/30/2013 5:15:00 AM	0.510	6.12	1.11	497.8
3/30/2013 5:30:00 AM	0.500	6	1.08	483.2
3/30/2013 5:45:00 AM	0.510	6.12	1.11	497.8
3/30/2013 6:00:00 AM	0.510	6.12	1.11	497.8
3/30/2013 6:15:00 AM	0.510	6.12	1.11	497.8
3/30/2013 6:30:00 AM	0.510	6.12	1.11	497.8
3/30/2013 6:45:00 AM	0.510	6.12	1.11	497.8
3/30/2013 7:00:00 AM	0.510	6.12	1.11	497.8
3/30/2013 7:15:00 AM	0.510	6.12	1.11	497.8
3/30/2013 7:30:00 AM	0.510	6.12	1.11	497.8
3/30/2013 7:45:00 AM	0.510	6.12	1.11	497.8
3/30/2013 8:00:00 AM	0.510	6.12	1.11	497.8
3/30/2013 8:15:00 AM	0.500	6	1.08	483.2
3/30/2013 8:30:00 AM	0.510	6.12	1.11	497.8
3/30/2013 8:45:00 AM	0.500	6	1.08	483.2

3/30/2013 9:00:00 AM	0.510	6.12	1.11	497.8
3/30/2013 9:15:00 AM	0.500	6	1.08	483.2
3/30/2013 9:30:00 AM	0.510	6.12	1.11	497.8
3/30/2013 9:45:00 AM	0.500	6	1.08	483.2
3/30/2013 10:00:00 AM	0.510	6.12	1.11	497.8
3/30/2013 10:15:00 AM	0.500	6	1.08	483.2
3/30/2013 10:30:00 AM	0.510	6.12	1.11	497.8
3/30/2013 10:45:00 AM	0.510	6.12	1.11	497.8
3/30/2013 11:00:00 AM	0.510	6.12	1.11	497.8
3/30/2013 11:15:00 AM	0.510	6.12	1.11	497.8
3/30/2013 11:30:00 AM	0.510	6.12	1.11	497.8
3/30/2013 11:45:00 AM	0.510	6.12	1.11	497.8
3/30/2013 12:00:00 PM	0.510	6.12	1.11	497.8
3/30/2013 12:15:00 PM	0.510	6.12	1.11	497.8
3/30/2013 12:30:00 PM	0.510	6.12	1.11	497.8
3/30/2013 12:45:00 PM	0.510	6.12	1.11	497.8
3/30/2013 1:00:00 PM	0.510	6.12	1.11	497.8
3/30/2013 1:15:00 PM	0.510	6.12	1.11	497.8
3/30/2013 1:30:00 PM	0.500	6	1.08	483.2
3/30/2013 1:45:00 PM	0.510	6.12	1.11	497.8
3/30/2013 2:00:00 PM	0.510	6.12	1.11	497.8
3/30/2013 2:15:00 PM	0.500	6	1.08	483.2
3/30/2013 2:30:00 PM	0.510	6.12	1.11	497.8
3/30/2013 2:45:00 PM	0.510	6.12	1.11	497.8
3/30/2013 3:00:00 PM	0.510	6.12	1.11	497.8
3/30/2013 3:15:00 PM	0.510	6.12	1.11	497.8
3/30/2013 3:30:00 PM	0.510	6.12	1.11	497.8
3/30/2013 3:45:00 PM	0.510	6.12	1.11	497.8
3/30/2013 4:00:00 PM	0.510	6.12	1.11	497.8
3/30/2013 4:15:00 PM	0.510	6.12	1.11	497.8
3/30/2013 4:30:00 PM	0.510	6.12	1.11	497.8
3/30/2013 4:45:00 PM	0.510	6.12	1.11	497.8
3/30/2013 5:00:00 PM	0.510	6.12	1.11	497.8
3/30/2013 5:15:00 PM	0.500	6	1.08	483.2
3/30/2013 5:30:00 PM	0.510	6.12	1.11	497.8
3/30/2013 5:45:00 PM	0.510	6.12	1.11	497.8
3/30/2013 6:00:00 PM	0.510	6.12	1.11	497.8
3/30/2013 6:15:00 PM	0.510	6.12	1.11	497.8
3/30/2013 6:30:00 PM	0.510	6.12	1.11	497.8
3/30/2013 6:45:00 PM	0.510	6.12	1.11	497.8
3/30/2013 7:00:00 PM	0.510	6.12	1.11	497.8
3/30/2013 7:15:00 PM	0.510	6.12	1.11	497.8
3/30/2013 7:30:00 PM	0.510	6.12	1.11	497.8
3/30/2013 7:45:00 PM	0.510	6.12	1.11	497.8
3/30/2013 8:00:00 PM	0.510	6.12	1.11	497.8
3/30/2013 8:15:00 PM	0.510	6.12	1.11	497.8
3/30/2013 8:30:00 PM	0.510	6.12	1.11	497.8

3/30/2013 8:45:00 PM	0.510	6.12	1.11	497.8
3/30/2013 9:00:00 PM	0.510	6.12	1.11	497.8
3/30/2013 9:15:00 PM	0.510	6.12	1.11	497.8
3/30/2013 9:30:00 PM	0.500	6	1.08	483.2
3/30/2013 9:45:00 PM	0.510	6.12	1.11	497.8
3/30/2013 10:00:00 PM	0.510	6.12	1.11	497.8
3/30/2013 10:15:00 PM	0.510	6.12	1.11	497.8
3/30/2013 10:30:00 PM	0.510	6.12	1.11	497.8
3/30/2013 10:45:00 PM	0.510	6.12	1.11	497.8
3/30/2013 11:00:00 PM	0.510	6.12	1.11	497.8
3/30/2013 11:15:00 PM	0.510	6.12	1.11	497.8
3/30/2013 11:30:00 PM	0.510	6.12	1.11	497.8
3/30/2013 11:45:00 PM	0.510	6.12	1.11	497.8
3/31/2013 12:00:00 AM	0.510	6.12	1.11	497.8
3/31/2013 12:15:00 AM	0.510	6.12	1.11	497.8
3/31/2013 12:30:00 AM	0.510	6.12	1.11	497.8
3/31/2013 12:45:00 AM	0.500	6	1.08	483.2
3/31/2013 1:00:00 AM	0.510	6.12	1.11	497.8
3/31/2013 1:15:00 AM	0.510	6.12	1.11	497.8
3/31/2013 1:30:00 AM	0.510	6.12	1.11	497.8
3/31/2013 1:45:00 AM	0.510	6.12	1.11	497.8
3/31/2013 2:00:00 AM	0.510	6.12	1.11	497.8
3/31/2013 2:15:00 AM	0.510	6.12	1.11	497.8
3/31/2013 2:30:00 AM	0.510	6.12	1.11	497.8
3/31/2013 2:45:00 AM	0.510	6.12	1.11	497.8
3/31/2013 3:00:00 AM	0.510	6.12	1.11	497.8
3/31/2013 3:15:00 AM	0.510	6.12	1.11	497.8
3/31/2013 3:30:00 AM	0.500	6	1.08	483.2
3/31/2013 3:45:00 AM	0.510	6.12	1.11	497.8
3/31/2013 4:00:00 AM	0.510	6.12	1.11	497.8
3/31/2013 4:15:00 AM	0.500	6	1.08	483.2
3/31/2013 4:30:00 AM	0.510	6.12	1.11	497.8
3/31/2013 4:45:00 AM	0.510	6.12	1.11	497.8
3/31/2013 5:00:00 AM	0.510	6.12	1.11	497.8
3/31/2013 5:15:00 AM	0.510	6.12	1.11	497.8
3/31/2013 5:30:00 AM	0.510	6.12	1.11	497.8
3/31/2013 5:45:00 AM	0.510	6.12	1.11	497.8
3/31/2013 6:00:00 AM	0.510	6.12	1.11	497.8
3/31/2013 6:15:00 AM	0.510	6.12	1.11	497.8
3/31/2013 6:30:00 AM	0.510	6.12	1.11	497.8
3/31/2013 6:45:00 AM	0.510	6.12	1.11	497.8
3/31/2013 7:00:00 AM	0.510	6.12	1.11	497.8
3/31/2013 7:15:00 AM	0.510	6.12	1.11	497.8
3/31/2013 7:30:00 AM	0.510	6.12	1.11	497.8
3/31/2013 7:45:00 AM	0.510	6.12	1.11	497.8
3/31/2013 8:00:00 AM	0.510	6.12	1.11	497.8
3/31/2013 8:15:00 AM	0.510	6.12	1.11	497.8

3/31/2013 8:30:00 AM	0.510	6.12	1.11	497.8
3/31/2013 8:45:00 AM	0.510	6.12	1.11	497.8
3/31/2013 9:00:00 AM	0.510	6.12	1.11	497.8
3/31/2013 9:15:00 AM	0.510	6.12	1.11	497.8
3/31/2013 9:30:00 AM	0.510	6.12	1.11	497.8
3/31/2013 9:45:00 AM	0.510	6.12	1.11	497.8
3/31/2013 10:00:00 AM	0.510	6.12	1.11	497.8
3/31/2013 10:15:00 AM	0.500	6	1.08	483.2
3/31/2013 10:30:00 AM	0.510	6.12	1.11	497.8
3/31/2013 10:45:00 AM	0.510	6.12	1.11	497.8
3/31/2013 11:00:00 AM	0.510	6.12	1.11	497.8
3/31/2013 11:15:00 AM	0.510	6.12	1.11	497.8
3/31/2013 11:30:00 AM	0.510	6.12	1.11	497.8
3/31/2013 11:45:00 AM	0.510	6.12	1.11	497.8
3/31/2013 12:00:00 PM	0.510	6.12	1.11	497.8
3/31/2013 12:15:00 PM	0.510	6.12	1.11	497.8
3/31/2013 12:30:00 PM	0.510	6.12	1.11	497.8
3/31/2013 12:45:00 PM	0.510	6.12	1.11	497.8
3/31/2013 1:00:00 PM	0.510	6.12	1.11	497.8
3/31/2013 1:15:00 PM	0.510	6.12	1.11	497.8
3/31/2013 1:30:00 PM	0.510	6.12	1.11	497.8
3/31/2013 1:45:00 PM	0.510	6.12	1.11	497.8
3/31/2013 2:00:00 PM	0.510	6.12	1.11	497.8
3/31/2013 2:15:00 PM	0.510	6.12	1.11	497.8
3/31/2013 2:30:00 PM	0.510	6.12	1.11	497.8
3/31/2013 2:45:00 PM	0.510	6.12	1.11	497.8
3/31/2013 3:00:00 PM	0.510	6.12	1.11	497.8
3/31/2013 3:15:00 PM	0.510	6.12	1.11	497.8
3/31/2013 3:30:00 PM	0.510	6.12	1.11	497.8
3/31/2013 3:45:00 PM	0.510	6.12	1.11	497.8
3/31/2013 4:00:00 PM	0.500	6	1.08	483.2
3/31/2013 4:15:00 PM	0.510	6.12	1.11	497.8
3/31/2013 4:30:00 PM	0.510	6.12	1.11	497.8
3/31/2013 4:45:00 PM	0.510	6.12	1.11	497.8
3/31/2013 5:00:00 PM	0.510	6.12	1.11	497.8
3/31/2013 5:15:00 PM	0.510	6.12	1.11	497.8
3/31/2013 5:30:00 PM	0.510	6.12	1.11	497.8
3/31/2013 5:45:00 PM	0.500	6	1.08	483.2
3/31/2013 6:00:00 PM	0.510	6.12	1.11	497.8
3/31/2013 6:15:00 PM	0.510	6.12	1.11	497.8
3/31/2013 6:30:00 PM	0.510	6.12	1.11	497.8
3/31/2013 6:45:00 PM	0.510	6.12	1.11	497.8
3/31/2013 7:00:00 PM	0.510	6.12	1.11	497.8
3/31/2013 7:15:00 PM	0.510	6.12	1.11	497.8
3/31/2013 7:30:00 PM	0.510	6.12	1.11	497.8
3/31/2013 7:45:00 PM	0.510	6.12	1.11	497.8
3/31/2013 8:00:00 PM	0.510	6.12	1.11	497.8

3/31/2013 8:15:00 PM	0.510	6.12	1.11	497.8
3/31/2013 8:30:00 PM	0.510	6.12	1.11	497.8
3/31/2013 8:45:00 PM	0.510	6.12	1.11	497.8
3/31/2013 9:00:00 PM	0.510	6.12	1.11	497.8
3/31/2013 9:15:00 PM	0.510	6.12	1.11	497.8
3/31/2013 9:30:00 PM	0.510	6.12	1.11	497.8
3/31/2013 9:45:00 PM	0.510	6.12	1.11	497.8
3/31/2013 10:00:00 PM	0.510	6.12	1.11	497.8
3/31/2013 10:15:00 PM	0.510	6.12	1.11	497.8
3/31/2013 10:30:00 PM	0.510	6.12	1.11	497.8
3/31/2013 10:45:00 PM	0.510	6.12	1.11	497.8
3/31/2013 11:00:00 PM	0.510	6.12	1.11	497.8
3/31/2013 11:15:00 PM	0.510	6.12	1.11	497.8
3/31/2013 11:30:00 PM	0.510	6.12	1.11	497.8
3/31/2013 11:45:00 PM	0.510	6.12	1.11	497.8

Appendix K

South Flume Orpheus Mini Data with Flowrates

OTT Opheus Mini Data at South Flume, March 2013

Date	Time	Depth from top of flume to water (ft)	Depth of Flume Total (ft)	Depth of Flow (ft)	Flowrate (cfs)	Flowrate (gpm)
3/1/2013	12:00:00 AM	2.07	2.5	0.43	0.86	384.7
3/1/2013	1:00:00 AM	2.08	2.5	0.42	0.83	371.3
3/1/2013	2:00:00 AM	2.08	2.5	0.42	0.83	371.3
3/1/2013	3:00:00 AM	2.08	2.5	0.42	0.83	371.3
3/1/2013	4:00:00 AM	2.08	2.5	0.42	0.83	371.3
3/1/2013	5:00:00 AM	2.08	2.5	0.42	0.83	371.3
3/1/2013	6:00:00 AM	2.08	2.5	0.42	0.83	371.3
3/1/2013	7:00:00 AM	2.08	2.5	0.42	0.83	371.3
3/1/2013	8:00:00 AM	2.08	2.5	0.42	0.83	371.3
3/1/2013	9:00:00 AM	2.08	2.5	0.42	0.83	371.3
3/1/2013	10:00:00 AM	2.08	2.5	0.42	0.83	371.3
3/1/2013	11:00:00 AM	2.08	2.5	0.42	0.83	371.3
3/1/2013	12:00:00 PM	2.08	2.5	0.42	0.83	371.3
3/1/2013	1:00:00 PM	2.08	2.5	0.42	0.83	371.3
3/1/2013	2:00:00 PM	2.08	2.5	0.42	0.83	371.3
3/1/2013	3:00:00 PM	2.08	2.5	0.42	0.83	371.3
3/1/2013	4:00:00 PM	2.08	2.5	0.42	0.83	371.3
3/1/2013	5:00:00 PM	2.08	2.5	0.42	0.83	371.3
3/1/2013	6:00:00 PM	2.08	2.5	0.42	0.83	371.3
3/1/2013	7:00:00 PM	2.07	2.5	0.43	0.86	384.7
3/1/2013	8:00:00 PM	2.07	2.5	0.43	0.86	384.7
3/1/2013	9:00:00 PM	2.08	2.5	0.42	0.83	371.3
3/1/2013	10:00:00 PM	2.07	2.5	0.43	0.86	384.7
3/1/2013	11:00:00 PM	2.07	2.5	0.43	0.86	384.7
3/2/2013	12:00:00 AM	2.07	2.5	0.43	0.86	384.7
3/2/2013	1:00:00 AM	2.07	2.5	0.43	0.86	384.7
3/2/2013	2:00:00 AM	2.07	2.5	0.43	0.86	384.7
3/2/2013	3:00:00 AM	2.07	2.5	0.43	0.86	384.7
3/2/2013	4:00:00 AM	2.07	2.5	0.43	0.86	384.7
3/2/2013	5:00:00 AM	2.07	2.5	0.43	0.86	384.7
3/2/2013	6:00:00 AM	2.08	2.5	0.42	0.83	371.3
3/2/2013	7:00:00 AM	2.08	2.5	0.42	0.83	371.3
3/2/2013	8:00:00 AM	2.08	2.5	0.42	0.83	371.3
3/2/2013	9:00:00 AM	2.08	2.5	0.42	0.83	371.3
3/2/2013	10:00:00 AM	2.09	2.5	0.41	0.80	358.0
3/2/2013	11:00:00 AM	2.09	2.5	0.41	0.80	358.0
3/2/2013	12:00:00 PM	2.09	2.5	0.41	0.80	358.0
3/2/2013	1:00:00 PM	2.09	2.5	0.41	0.80	358.0
3/2/2013	2:00:00 PM	2.09	2.5	0.41	0.80	358.0
3/2/2013	3:00:00 PM	2.08	2.5	0.42	0.83	371.3
3/2/2013	4:00:00 PM	2.08	2.5	0.42	0.83	371.3
3/2/2013	5:00:00 PM	2.08	2.5	0.42	0.83	371.3
3/2/2013	6:00:00 PM	2.08	2.5	0.42	0.83	371.3

3/2/2013	7:00:00 PM	2.07	2.5	0.43	0.86	384.7
3/2/2013	8:00:00 PM	2.07	2.5	0.43	0.86	384.7
3/2/2013	9:00:00 PM	2.07	2.5	0.43	0.86	384.7
3/2/2013	10:00:00 PM	2.07	2.5	0.43	0.86	384.7
3/2/2013	11:00:00 PM	2.07	2.5	0.43	0.86	384.7
3/3/2013	12:00:00 AM	2.07	2.5	0.43	0.86	384.7
3/3/2013	1:00:00 AM	2.08	2.5	0.42	0.83	371.3
3/3/2013	2:00:00 AM	2.07	2.5	0.43	0.86	384.7
3/3/2013	3:00:00 AM	2.07	2.5	0.43	0.86	384.7
3/3/2013	4:00:00 AM	2.08	2.5	0.42	0.83	371.3
3/3/2013	5:00:00 AM	2.07	2.5	0.43	0.86	384.7
3/3/2013	6:00:00 AM	2.07	2.5	0.43	0.86	384.7
3/3/2013	7:00:00 AM	2.08	2.5	0.42	0.83	371.3
3/3/2013	8:00:00 AM	2.07	2.5	0.43	0.86	384.7
3/3/2013	9:00:00 AM	2.08	2.5	0.42	0.83	371.3
3/3/2013	10:00:00 AM	2.08	2.5	0.42	0.83	371.3
3/3/2013	11:00:00 AM	2.08	2.5	0.42	0.83	371.3
3/3/2013	12:00:00 PM	2.08	2.5	0.42	0.83	371.3
3/3/2013	1:00:00 PM	2.09	2.5	0.41	0.80	358.0
3/3/2013	2:00:00 PM	2.08	2.5	0.42	0.83	371.3
3/3/2013	3:00:00 PM	2.08	2.5	0.42	0.83	371.3
3/3/2013	4:00:00 PM	2.08	2.5	0.42	0.83	371.3
3/3/2013	5:00:00 PM	2.08	2.5	0.42	0.83	371.3
3/3/2013	6:00:00 PM	2.08	2.5	0.42	0.83	371.3
3/3/2013	7:00:00 PM	2.08	2.5	0.42	0.83	371.3
3/3/2013	8:00:00 PM	2.08	2.5	0.42	0.83	371.3
3/3/2013	9:00:00 PM	2.08	2.5	0.42	0.83	371.3
3/3/2013	10:00:00 PM	2.08	2.5	0.42	0.83	371.3
3/3/2013	11:00:00 PM	2.07	2.5	0.43	0.86	384.7
3/4/2013	12:00:00 AM	2.07	2.5	0.43	0.86	384.7
3/4/2013	1:00:00 AM	2.07	2.5	0.43	0.86	384.7
3/4/2013	2:00:00 AM	2.06	2.5	0.44	0.89	398.3
3/4/2013	3:00:00 AM	2.05	2.5	0.45	0.92	412.1
3/4/2013	4:00:00 AM	2.05	2.5	0.45	0.92	412.1
3/4/2013	5:00:00 AM	2.05	2.5	0.45	0.92	412.1
3/4/2013	6:00:00 AM	2.04	2.5	0.46	0.95	426.0
3/4/2013	7:00:00 AM	2.04	2.5	0.46	0.95	426.0
3/4/2013	8:00:00 AM	2.04	2.5	0.46	0.95	426.0
3/4/2013	9:00:00 AM	2.04	2.5	0.46	0.95	426.0
3/4/2013	10:00:00 AM	2.03	2.5	0.47	0.98	440.0
3/4/2013	11:00:00 AM	2.03	2.5	0.47	0.98	440.0
3/4/2013	12:00:00 PM	2.04	2.5	0.46	0.95	426.0
3/4/2013	1:00:00 PM	2.05	2.5	0.45	0.92	412.1
3/4/2013	2:00:00 PM	2.04	2.5	0.46	0.95	426.0
3/4/2013	3:00:00 PM	2.05	2.5	0.45	0.92	412.1
3/4/2013	4:00:00 PM	2.05	2.5	0.45	0.92	412.1
3/4/2013	5:00:00 PM	2.06	2.5	0.44	0.89	398.3

3/4/2013	6:00:00 PM	2.06	2.5	0.44	0.89	398.3
3/4/2013	7:00:00 PM	2.06	2.5	0.44	0.89	398.3
3/4/2013	8:00:00 PM	2.07	2.5	0.43	0.86	384.7
3/4/2013	9:00:00 PM	2.07	2.5	0.43	0.86	384.7
3/4/2013	10:00:00 PM	2.07	2.5	0.43	0.86	384.7
3/4/2013	11:00:00 PM	2.07	2.5	0.43	0.86	384.7
3/5/2013	12:00:00 AM	2.08	2.5	0.42	0.83	371.3
3/5/2013	1:00:00 AM	2.08	2.5	0.42	0.83	371.3
3/5/2013	2:00:00 AM	2.08	2.5	0.42	0.83	371.3
3/5/2013	3:00:00 AM	2.08	2.5	0.42	0.83	371.3
3/5/2013	4:00:00 AM	2.08	2.5	0.42	0.83	371.3
3/5/2013	5:00:00 AM	2.08	2.5	0.42	0.83	371.3
3/5/2013	6:00:00 AM	2.08	2.5	0.42	0.83	371.3
3/5/2013	7:00:00 AM	2.08	2.5	0.42	0.83	371.3
3/5/2013	8:00:00 AM	2.09	2.5	0.41	0.80	358.0
3/5/2013	9:00:00 AM	2.08	2.5	0.42	0.83	371.3
3/5/2013	10:00:00 AM	2.09	2.5	0.41	0.80	358.0
3/5/2013	11:00:00 AM	2.09	2.5	0.41	0.80	358.0
3/5/2013	12:00:00 PM	2.09	2.5	0.41	0.80	358.0
3/5/2013	1:00:00 PM	2.09	2.5	0.41	0.80	358.0
3/5/2013	2:00:00 PM	2.09	2.5	0.41	0.80	358.0
3/5/2013	3:00:00 PM	2.09	2.5	0.41	0.80	358.0
3/5/2013	4:00:00 PM	2.09	2.5	0.41	0.80	358.0
3/5/2013	5:00:00 PM	2.09	2.5	0.41	0.80	358.0
3/5/2013	6:00:00 PM	2.09	2.5	0.41	0.80	358.0
3/5/2013	7:00:00 PM	2.09	2.5	0.41	0.80	358.0
3/5/2013	8:00:00 PM	2.09	2.5	0.41	0.80	358.0
3/5/2013	9:00:00 PM	2.09	2.5	0.41	0.80	358.0
3/5/2013	10:00:00 PM	2.09	2.5	0.41	0.80	358.0
3/5/2013	11:00:00 PM	2.08	2.5	0.42	0.83	371.3
3/6/2013	12:00:00 AM	2.09	2.5	0.41	0.80	358.0
3/6/2013	1:00:00 AM	2.09	2.5	0.41	0.80	358.0
3/6/2013	2:00:00 AM	2.08	2.5	0.42	0.83	371.3
3/6/2013	3:00:00 AM	2.09	2.5	0.41	0.80	358.0
3/6/2013	4:00:00 AM	2.08	2.5	0.42	0.83	371.3
3/6/2013	5:00:00 AM	2.09	2.5	0.41	0.80	358.0
3/6/2013	6:00:00 AM	2.09	2.5	0.41	0.80	358.0
3/6/2013	7:00:00 AM	2.09	2.5	0.41	0.80	358.0
3/6/2013	8:00:00 AM	2.09	2.5	0.41	0.80	358.0
3/6/2013	9:00:00 AM	2.09	2.5	0.41	0.80	358.0
3/6/2013	10:00:00 AM	2.09	2.5	0.41	0.80	358.0
3/6/2013	11:00:00 AM	2.09	2.5	0.41	0.80	358.0
3/6/2013	12:00:00 PM	2.09	2.5	0.41	0.80	358.0
3/6/2013	1:00:00 PM	2.09	2.5	0.41	0.80	358.0
3/6/2013	2:00:00 PM	2.09	2.5	0.41	0.80	358.0
3/6/2013	3:00:00 PM	2.09	2.5	0.41	0.80	358.0
3/6/2013	4:00:00 PM	2.09	2.5	0.41	0.80	358.0

3/6/2013	5:00:00 PM	2.09	2.5	0.41	0.80	358.0
3/6/2013	6:00:00 PM	2.09	2.5	0.41	0.80	358.0
3/6/2013	7:00:00 PM	2.09	2.5	0.41	0.80	358.0
3/6/2013	8:00:00 PM	2.09	2.5	0.41	0.80	358.0
3/6/2013	9:00:00 PM	2.08	2.5	0.42	0.83	371.3
3/6/2013	10:00:00 PM	2.09	2.5	0.41	0.80	358.0
3/6/2013	11:00:00 PM	2.08	2.5	0.42	0.83	371.3
3/7/2013	12:00:00 AM	2.08	2.5	0.42	0.83	371.3
3/7/2013	1:00:00 AM	2.08	2.5	0.42	0.83	371.3
3/7/2013	2:00:00 AM	2.08	2.5	0.42	0.83	371.3
3/7/2013	3:00:00 AM	2.09	2.5	0.41	0.80	358.0
3/7/2013	4:00:00 AM	2.08	2.5	0.42	0.83	371.3
3/7/2013	5:00:00 AM	2.08	2.5	0.42	0.83	371.3
3/7/2013	6:00:00 AM	2.08	2.5	0.42	0.83	371.3
3/7/2013	7:00:00 AM	2.08	2.5	0.42	0.83	371.3
3/7/2013	8:00:00 AM	2.08	2.5	0.42	0.83	371.3
3/7/2013	9:00:00 AM	2.08	2.5	0.42	0.83	371.3
3/7/2013	10:00:00 AM	2.09	2.5	0.41	0.80	358.0
3/7/2013	11:00:00 AM	2.08	2.5	0.42	0.83	371.3
3/7/2013	12:00:00 PM	2.08	2.5	0.42	0.83	371.3
3/7/2013	1:00:00 PM	2.09	2.5	0.41	0.80	358.0
3/7/2013	2:00:00 PM	2.09	2.5	0.41	0.80	358.0
3/7/2013	3:00:00 PM	2.09	2.5	0.41	0.80	358.0
3/7/2013	4:00:00 PM	2.09	2.5	0.41	0.80	358.0
3/7/2013	5:00:00 PM	2.09	2.5	0.41	0.80	358.0
3/7/2013	6:00:00 PM	2.08	2.5	0.42	0.83	371.3
3/7/2013	7:00:00 PM	2.08	2.5	0.42	0.83	371.3
3/7/2013	8:00:00 PM	2.08	2.5	0.42	0.83	371.3
3/7/2013	9:00:00 PM	2.08	2.5	0.42	0.83	371.3
3/7/2013	10:00:00 PM	2.08	2.5	0.42	0.83	371.3
3/7/2013	11:00:00 PM	2.09	2.5	0.41	0.80	358.0
3/8/2013	12:00:00 AM	2.08	2.5	0.42	0.83	371.3
3/8/2013	1:00:00 AM	2.08	2.5	0.42	0.83	371.3
3/8/2013	2:00:00 AM	2.08	2.5	0.42	0.83	371.3
3/8/2013	3:00:00 AM	2.08	2.5	0.42	0.83	371.3
3/8/2013	4:00:00 AM	2.08	2.5	0.42	0.83	371.3
3/8/2013	5:00:00 AM	2.08	2.5	0.42	0.83	371.3
3/8/2013	6:00:00 AM	2.08	2.5	0.42	0.83	371.3
3/8/2013	7:00:00 AM	2.08	2.5	0.42	0.83	371.3
3/8/2013	8:00:00 AM	2.08	2.5	0.42	0.83	371.3
3/8/2013	9:00:00 AM	2.09	2.5	0.41	0.80	358.0
3/8/2013	10:00:00 AM	2.09	2.5	0.41	0.80	358.0
3/8/2013	11:00:00 AM	2.09	2.5	0.41	0.80	358.0
3/8/2013	12:00:00 PM	2.09	2.5	0.41	0.80	358.0
3/8/2013	1:00:00 PM	2.09	2.5	0.41	0.80	358.0
3/8/2013	2:00:00 PM	2.08	2.5	0.42	0.83	371.3
3/8/2013	3:00:00 PM	2.08	2.5	0.42	0.83	371.3

3/8/2013	4:00:00 PM	2.08	2.5	0.42	0.83	371.3
3/8/2013	5:00:00 PM	2.07	2.5	0.43	0.86	384.7
3/8/2013	6:00:00 PM	2.06	2.5	0.44	0.89	398.3
3/8/2013	7:00:00 PM	2.05	2.5	0.45	0.92	412.1
3/8/2013	8:00:00 PM	2.05	2.5	0.45	0.92	412.1
3/8/2013	9:00:00 PM	2.05	2.5	0.45	0.92	412.1
3/8/2013	10:00:00 PM	2.05	2.5	0.45	0.92	412.1
3/8/2013	11:00:00 PM	2.04	2.5	0.46	0.95	426.0
3/9/2013	12:00:00 AM	2.03	2.5	0.47	0.98	440.0
3/9/2013	1:00:00 AM	2.03	2.5	0.47	0.98	440.0
3/9/2013	2:00:00 AM	2.04	2.5	0.46	0.95	426.0
3/9/2013	3:00:00 AM	2.04	2.5	0.46	0.95	426.0
3/9/2013	4:00:00 AM	2.03	2.5	0.47	0.98	440.0
3/9/2013	5:00:00 AM	2.01	2.5	0.49	1.04	468.6
3/9/2013	6:00:00 AM	2.02	2.5	0.48	1.01	454.3
3/9/2013	7:00:00 AM	2.02	2.5	0.48	1.01	454.3
3/9/2013	8:00:00 AM	2.02	2.5	0.48	1.01	454.3
3/9/2013	9:00:00 AM	2.03	2.5	0.47	0.98	440.0
3/9/2013	10:00:00 AM	2.04	2.5	0.46	0.95	426.0
3/9/2013	11:00:00 AM	2.04	2.5	0.46	0.95	426.0
3/9/2013	12:00:00 PM	2.05	2.5	0.45	0.92	412.1
3/9/2013	1:00:00 PM	2.05	2.5	0.45	0.92	412.1
3/9/2013	2:00:00 PM	2.06	2.5	0.44	0.89	398.3
3/9/2013	3:00:00 PM	2.06	2.5	0.44	0.89	398.3
3/9/2013	4:00:00 PM	2.06	2.5	0.44	0.89	398.3
3/9/2013	5:00:00 PM	2.07	2.5	0.43	0.86	384.7
3/9/2013	6:00:00 PM	2.07	2.5	0.43	0.86	384.7
3/9/2013	7:00:00 PM	2.07	2.5	0.43	0.86	384.7
3/9/2013	8:00:00 PM	2.08	2.5	0.42	0.83	371.3
3/9/2013	9:00:00 PM	2.08	2.5	0.42	0.83	371.3
3/9/2013	10:00:00 PM	2.08	2.5	0.42	0.83	371.3
3/9/2013	11:00:00 PM	2.08	2.5	0.42	0.83	371.3
3/10/2013	12:00:00 AM	2.08	2.5	0.42	0.83	371.3
3/10/2013	1:00:00 AM	2.09	2.5	0.41	0.80	358.0
3/10/2013	2:00:00 AM	2.09	2.5	0.41	0.80	358.0
3/10/2013	3:00:00 AM	2.09	2.5	0.41	0.80	358.0
3/10/2013	4:00:00 AM	2.09	2.5	0.41	0.80	358.0
3/10/2013	5:00:00 AM	2.09	2.5	0.41	0.80	358.0
3/10/2013	6:00:00 AM	2.09	2.5	0.41	0.80	358.0
3/10/2013	7:00:00 AM	2.09	2.5	0.41	0.80	358.0
3/10/2013	8:00:00 AM	2.09	2.5	0.41	0.80	358.0
3/10/2013	9:00:00 AM	2.09	2.5	0.41	0.80	358.0
3/10/2013	10:00:00 AM	2.09	2.5	0.41	0.80	358.0
3/10/2013	11:00:00 AM	2.1	2.5	0.40	0.77	344.9
3/10/2013	12:00:00 PM	2.1	2.5	0.40	0.77	344.9
3/10/2013	1:00:00 PM	2.1	2.5	0.40	0.77	344.9
3/10/2013	2:00:00 PM	2.1	2.5	0.40	0.77	344.9

3/10/2013	3:00:00 PM	2.1	2.5	0.40	0.77	344.9
3/10/2013	4:00:00 PM	2.09	2.5	0.41	0.80	358.0
3/10/2013	5:00:00 PM	2.09	2.5	0.41	0.80	358.0
3/10/2013	6:00:00 PM	2.09	2.5	0.41	0.80	358.0
3/10/2013	7:00:00 PM	2.09	2.5	0.41	0.80	358.0
3/10/2013	8:00:00 PM	2.09	2.5	0.41	0.80	358.0
3/10/2013	9:00:00 PM	2.1	2.5	0.40	0.77	344.9
3/10/2013	10:00:00 PM	2.09	2.5	0.41	0.80	358.0
3/10/2013	11:00:00 PM	2.09	2.5	0.41	0.80	358.0
3/11/2013	12:00:00 AM	2.09	2.5	0.41	0.80	358.0
3/11/2013	1:00:00 AM	2.1	2.5	0.40	0.77	344.9
3/11/2013	2:00:00 AM	2.1	2.5	0.40	0.77	344.9
3/11/2013	3:00:00 AM	2.1	2.5	0.40	0.77	344.9
3/11/2013	4:00:00 AM	2.1	2.5	0.40	0.77	344.9
3/11/2013	5:00:00 AM	2.1	2.5	0.40	0.77	344.9
3/11/2013	6:00:00 AM	2.1	2.5	0.40	0.77	344.9
3/11/2013	7:00:00 AM	2.09	2.5	0.41	0.80	358.0
3/11/2013	8:00:00 AM	2.1	2.5	0.40	0.77	344.9
3/11/2013	9:00:00 AM	2.09	2.5	0.41	0.80	358.0
3/11/2013	10:00:00 AM	2.1	2.5	0.40	0.77	344.9
3/11/2013	11:00:00 AM	2.09	2.5	0.41	0.80	358.0
3/11/2013	12:00:00 PM	2.1	2.5	0.40	0.77	344.9
3/11/2013	1:00:00 PM	2.1	2.5	0.40	0.77	344.9
3/11/2013	2:00:00 PM	2.1	2.5	0.40	0.77	344.9
3/11/2013	3:00:00 PM	2.1	2.5	0.40	0.77	344.9
3/11/2013	4:00:00 PM	2.09	2.5	0.41	0.80	358.0
3/11/2013	5:00:00 PM	2.09	2.5	0.41	0.80	358.0
3/11/2013	6:00:00 PM	2.1	2.5	0.40	0.77	344.9
3/11/2013	7:00:00 PM	2.1	2.5	0.40	0.77	344.9
3/11/2013	8:00:00 PM	2.09	2.5	0.41	0.80	358.0
3/11/2013	9:00:00 PM	2.09	2.5	0.41	0.80	358.0
3/11/2013	10:00:00 PM	2.09	2.5	0.41	0.80	358.0
3/11/2013	11:00:00 PM	2.1	2.5	0.40	0.77	344.9
3/12/2013	12:00:00 AM	2.09	2.5	0.41	0.80	358.0
3/12/2013	1:00:00 AM	2.1	2.5	0.40	0.77	344.9
3/12/2013	2:00:00 AM	2.09	2.5	0.41	0.80	358.0
3/12/2013	3:00:00 AM	2.09	2.5	0.41	0.80	358.0
3/12/2013	4:00:00 AM	2.1	2.5	0.40	0.77	344.9
3/12/2013	5:00:00 AM	2.1	2.5	0.40	0.77	344.9
3/12/2013	6:00:00 AM	2.1	2.5	0.40	0.77	344.9
3/12/2013	7:00:00 AM	2.1	2.5	0.40	0.77	344.9
3/12/2013	8:00:00 AM	2.1	2.5	0.40	0.77	344.9
3/12/2013	9:00:00 AM	2.1	2.5	0.40	0.77	344.9
3/12/2013	10:00:00 AM	2.1	2.5	0.40	0.77	344.9
3/12/2013	11:00:00 AM	2.1	2.5	0.40	0.77	344.9
3/12/2013	12:00:00 PM	2.1	2.5	0.40	0.77	344.9
3/12/2013	1:00:00 PM	2.1	2.5	0.40	0.77	344.9

3/12/2013	2:00:00 PM	2.1	2.5	0.40	0.77	344.9
3/12/2013	3:00:00 PM	2.09	2.5	0.41	0.80	358.0
3/12/2013	4:00:00 PM	2.1	2.5	0.40	0.77	344.9
3/12/2013	5:00:00 PM	2.09	2.5	0.41	0.80	358.0
3/12/2013	6:00:00 PM	2.09	2.5	0.41	0.80	358.0
3/12/2013	7:00:00 PM	2.09	2.5	0.41	0.80	358.0
3/12/2013	8:00:00 PM	2.09	2.5	0.41	0.80	358.0
3/12/2013	9:00:00 PM	2.1	2.5	0.40	0.77	344.9
3/12/2013	10:00:00 PM	2.09	2.5	0.41	0.80	358.0
3/12/2013	11:00:00 PM	2.09	2.5	0.41	0.80	358.0
3/13/2013	12:00:00 AM	2.09	2.5	0.41	0.80	358.0
3/13/2013	1:00:00 AM	2.09	2.5	0.41	0.80	358.0
3/13/2013	2:00:00 AM	2.1	2.5	0.40	0.77	344.9
3/13/2013	3:00:00 AM	2.09	2.5	0.41	0.80	358.0
3/13/2013	4:00:00 AM	2.1	2.5	0.40	0.77	344.9
3/13/2013	5:00:00 AM	2.09	2.5	0.41	0.80	358.0
3/13/2013	6:00:00 AM	2.1	2.5	0.40	0.77	344.9
3/13/2013	7:00:00 AM	2.1	2.5	0.40	0.77	344.9
3/13/2013	8:00:00 AM	2.1	2.5	0.40	0.77	344.9
3/13/2013	9:00:00 AM	2.1	2.5	0.40	0.77	344.9
3/13/2013	10:00:00 AM	2.1	2.5	0.40	0.77	344.9
3/13/2013	11:00:00 AM	2.1	2.5	0.40	0.77	344.9
3/13/2013	12:00:00 PM	2.11	2.5	0.39	0.74	332.0
3/13/2013	1:00:00 PM	2.1	2.5	0.40	0.77	344.9
3/13/2013	2:00:00 PM	2.1	2.5	0.40	0.77	344.9
3/13/2013	3:00:00 PM	2.1	2.5	0.40	0.77	344.9
3/13/2013	4:00:00 PM	2.09	2.5	0.41	0.80	358.0
3/13/2013	5:00:00 PM	2.09	2.5	0.41	0.80	358.0
3/13/2013	6:00:00 PM	2.09	2.5	0.41	0.80	358.0
3/13/2013	7:00:00 PM	2.09	2.5	0.41	0.80	358.0
3/13/2013	8:00:00 PM	2.09	2.5	0.41	0.80	358.0
3/13/2013	9:00:00 PM	2.09	2.5	0.41	0.80	358.0
3/13/2013	10:00:00 PM	2.09	2.5	0.41	0.80	358.0
3/13/2013	11:00:00 PM	2.09	2.5	0.41	0.80	358.0
3/14/2013	12:00:00 AM	2.09	2.5	0.41	0.80	358.0
3/14/2013	1:00:00 AM	2.09	2.5	0.41	0.80	358.0
3/14/2013	2:00:00 AM	2.09	2.5	0.41	0.80	358.0
3/14/2013	3:00:00 AM	2.1	2.5	0.40	0.77	344.9
3/14/2013	4:00:00 AM	2.1	2.5	0.40	0.77	344.9
3/14/2013	5:00:00 AM	2.1	2.5	0.40	0.77	344.9
3/14/2013	6:00:00 AM	2.1	2.5	0.40	0.77	344.9
3/14/2013	7:00:00 AM	2.1	2.5	0.40	0.77	344.9
3/14/2013	8:00:00 AM	2.1	2.5	0.40	0.77	344.9
3/14/2013	9:00:00 AM	2.1	2.5	0.40	0.77	344.9
3/14/2013	10:00:00 AM	2.1	2.5	0.40	0.77	344.9
3/14/2013	11:00:00 AM	2.1	2.5	0.40	0.77	344.9
3/14/2013	12:00:00 PM	2.1	2.5	0.40	0.77	344.9

3/14/2013	1:00:00 PM	2.1	2.5	0.40	0.77	344.9
3/14/2013	2:00:00 PM	2.1	2.5	0.40	0.77	344.9
3/14/2013	3:00:00 PM	2.09	2.5	0.41	0.80	358.0
3/14/2013	4:00:00 PM	2.09	2.5	0.41	0.80	358.0
3/14/2013	5:00:00 PM	2.08	2.5	0.42	0.83	371.3
3/14/2013	6:00:00 PM	2.08	2.5	0.42	0.83	371.3
3/14/2013	7:00:00 PM	2.08	2.5	0.42	0.83	371.3
3/14/2013	8:00:00 PM	2.08	2.5	0.42	0.83	371.3
3/14/2013	9:00:00 PM	2.08	2.5	0.42	0.83	371.3
3/14/2013	10:00:00 PM	2.08	2.5	0.42	0.83	371.3
3/14/2013	11:00:00 PM	2.08	2.5	0.42	0.83	371.3
3/15/2013	12:00:00 AM	2.08	2.5	0.42	0.83	371.3
3/15/2013	1:00:00 AM	2.09	2.5	0.41	0.80	358.0
3/15/2013	2:00:00 AM	2.09	2.5	0.41	0.80	358.0
3/15/2013	3:00:00 AM	2.09	2.5	0.41	0.80	358.0
3/15/2013	4:00:00 AM	2.09	2.5	0.41	0.80	358.0
3/15/2013	5:00:00 AM	2.1	2.5	0.40	0.77	344.9
3/15/2013	6:00:00 AM	2.09	2.5	0.41	0.80	358.0
3/15/2013	7:00:00 AM	2.09	2.5	0.41	0.80	358.0
3/15/2013	8:00:00 AM	2.09	2.5	0.41	0.80	358.0
3/15/2013	9:00:00 AM	2.09	2.5	0.41	0.80	358.0
3/15/2013	10:00:00 AM	2.1	2.5	0.40	0.77	344.9
3/15/2013	11:00:00 AM	2.09	2.5	0.41	0.80	358.0
3/15/2013	12:00:00 PM	2.09	2.5	0.41	0.80	358.0
3/15/2013	1:00:00 PM	2.1	2.5	0.40	0.77	344.9
3/15/2013	2:00:00 PM	2.09	2.5	0.41	0.80	358.0
3/15/2013	3:00:00 PM	2.08	2.5	0.42	0.83	371.3
3/15/2013	4:00:00 PM	2.08	2.5	0.42	0.83	371.3
3/15/2013	5:00:00 PM	2.08	2.5	0.42	0.83	371.3
3/15/2013	6:00:00 PM	2.08	2.5	0.42	0.83	371.3
3/15/2013	7:00:00 PM	2.08	2.5	0.42	0.83	371.3
3/15/2013	8:00:00 PM	2.08	2.5	0.42	0.83	371.3
3/15/2013	9:00:00 PM	2.08	2.5	0.42	0.83	371.3
3/15/2013	10:00:00 PM	2.09	2.5	0.41	0.80	358.0
3/15/2013	11:00:00 PM	2.09	2.5	0.41	0.80	358.0
3/16/2013	12:00:00 AM	2.09	2.5	0.41	0.80	358.0
3/16/2013	1:00:00 AM	2.09	2.5	0.41	0.80	358.0
3/16/2013	2:00:00 AM	2.09	2.5	0.41	0.80	358.0
3/16/2013	3:00:00 AM	2.09	2.5	0.41	0.80	358.0
3/16/2013	4:00:00 AM	2.09	2.5	0.41	0.80	358.0
3/16/2013	5:00:00 AM	2.09	2.5	0.41	0.80	358.0
3/16/2013	6:00:00 AM	2.09	2.5	0.41	0.80	358.0
3/16/2013	7:00:00 AM	2.09	2.5	0.41	0.80	358.0
3/16/2013	8:00:00 AM	2.09	2.5	0.41	0.80	358.0
3/16/2013	9:00:00 AM	2.09	2.5	0.41	0.80	358.0
3/16/2013	10:00:00 AM	2.09	2.5	0.41	0.80	358.0
3/16/2013	11:00:00 AM	2.09	2.5	0.41	0.80	358.0

3/16/2013	12:00:00 PM	2.09	2.5	0.41	0.80	358.0
3/16/2013	1:00:00 PM	2.09	2.5	0.41	0.80	358.0
3/16/2013	2:00:00 PM	2.09	2.5	0.41	0.80	358.0
3/16/2013	3:00:00 PM	2.09	2.5	0.41	0.80	358.0
3/16/2013	4:00:00 PM	2.08	2.5	0.42	0.83	371.3
3/16/2013	5:00:00 PM	2.09	2.5	0.41	0.80	358.0
3/16/2013	6:00:00 PM	2.08	2.5	0.42	0.83	371.3
3/16/2013	7:00:00 PM	2.08	2.5	0.42	0.83	371.3
3/16/2013	8:00:00 PM	2.08	2.5	0.42	0.83	371.3
3/16/2013	9:00:00 PM	2.08	2.5	0.42	0.83	371.3
3/16/2013	10:00:00 PM	2.09	2.5	0.41	0.80	358.0
3/16/2013	11:00:00 PM	2.08	2.5	0.42	0.83	371.3
3/17/2013	12:00:00 AM	2.08	2.5	0.42	0.83	371.3
3/17/2013	1:00:00 AM	2.09	2.5	0.41	0.80	358.0
3/17/2013	2:00:00 AM	2.09	2.5	0.41	0.80	358.0
3/17/2013	3:00:00 AM	2.09	2.5	0.41	0.80	358.0
3/17/2013	4:00:00 AM	2.09	2.5	0.41	0.80	358.0
3/17/2013	5:00:00 AM	2.09	2.5	0.41	0.80	358.0
3/17/2013	6:00:00 AM	2.09	2.5	0.41	0.80	358.0
3/17/2013	7:00:00 AM	2.09	2.5	0.41	0.80	358.0
3/17/2013	8:00:00 AM	2.1	2.5	0.40	0.77	344.9
3/17/2013	9:00:00 AM	2.09	2.5	0.41	0.80	358.0
3/17/2013	10:00:00 AM	2.09	2.5	0.41	0.80	358.0
3/17/2013	11:00:00 AM	2.09	2.5	0.41	0.80	358.0
3/17/2013	12:00:00 PM	2.08	2.5	0.42	0.83	371.3
3/17/2013	1:00:00 PM	2.09	2.5	0.41	0.80	358.0
3/17/2013	2:00:00 PM	2.1	2.5	0.40	0.77	344.9
3/17/2013	3:00:00 PM	2.09	2.5	0.41	0.80	358.0
3/17/2013	4:00:00 PM	2.09	2.5	0.41	0.80	358.0
3/17/2013	5:00:00 PM	2.1	2.5	0.40	0.77	344.9
3/17/2013	6:00:00 PM	2.09	2.5	0.41	0.80	358.0
3/17/2013	7:00:00 PM	2.1	2.5	0.40	0.77	344.9
3/17/2013	8:00:00 PM	2.09	2.5	0.41	0.80	358.0
3/17/2013	9:00:00 PM	2.09	2.5	0.41	0.80	358.0
3/17/2013	10:00:00 PM	2.09	2.5	0.41	0.80	358.0
3/17/2013	11:00:00 PM	2.1	2.5	0.40	0.77	344.9
3/18/2013	12:00:00 AM	2.1	2.5	0.40	0.77	344.9
3/18/2013	1:00:00 AM	2.09	2.5	0.41	0.80	358.0
3/18/2013	2:00:00 AM	2.1	2.5	0.40	0.77	344.9
3/18/2013	3:00:00 AM	2.1	2.5	0.40	0.77	344.9
3/18/2013	4:00:00 AM	2.09	2.5	0.41	0.80	358.0
3/18/2013	5:00:00 AM	2.1	2.5	0.40	0.77	344.9
3/18/2013	6:00:00 AM	2.1	2.5	0.40	0.77	344.9
3/18/2013	7:00:00 AM	2.09	2.5	0.41	0.80	358.0
3/18/2013	8:00:00 AM	2.1	2.5	0.40	0.77	344.9
3/18/2013	9:00:00 AM	2.1	2.5	0.40	0.77	344.9
3/18/2013	10:00:00 AM	2.1	2.5	0.40	0.77	344.9

3/18/2013	11:00:00 AM	2.1	2.5	0.40	0.77	344.9
3/18/2013	12:00:00 PM	2.1	2.5	0.40	0.77	344.9
3/18/2013	1:00:00 PM	2.1	2.5	0.40	0.77	344.9
3/18/2013	2:00:00 PM	2.1	2.5	0.40	0.77	344.9
3/18/2013	3:00:00 PM	2.1	2.5	0.40	0.77	344.9
3/18/2013	4:00:00 PM	2.1	2.5	0.40	0.77	344.9
3/18/2013	5:00:00 PM	2.1	2.5	0.40	0.77	344.9
3/18/2013	6:00:00 PM	2.1	2.5	0.40	0.77	344.9
3/18/2013	7:00:00 PM	2.1	2.5	0.40	0.77	344.9
3/18/2013	8:00:00 PM	2.1	2.5	0.40	0.77	344.9
3/18/2013	9:00:00 PM	2.1	2.5	0.40	0.77	344.9
3/18/2013	10:00:00 PM	2.1	2.5	0.40	0.77	344.9
3/18/2013	11:00:00 PM	2.1	2.5	0.40	0.77	344.9
3/19/2013	12:00:00 AM	2.1	2.5	0.40	0.77	344.9
3/19/2013	1:00:00 AM	2.1	2.5	0.40	0.77	344.9
3/19/2013	2:00:00 AM	2.1	2.5	0.40	0.77	344.9
3/19/2013	3:00:00 AM	2.1	2.5	0.40	0.77	344.9
3/19/2013	4:00:00 AM	2.1	2.5	0.40	0.77	344.9
3/19/2013	5:00:00 AM	2.1	2.5	0.40	0.77	344.9
3/19/2013	6:00:00 AM	2.1	2.5	0.40	0.77	344.9
3/19/2013	7:00:00 AM	2.1	2.5	0.40	0.77	344.9
3/19/2013	8:00:00 AM	2.1	2.5	0.40	0.77	344.9
3/19/2013	9:00:00 AM	2.1	2.5	0.40	0.77	344.9
3/19/2013	10:00:00 AM	2.09	2.5	0.41	0.80	358.0
3/19/2013	11:00:00 AM	2.09	2.5	0.41	0.80	358.0
3/19/2013	12:00:00 PM	2.08	2.5	0.42	0.83	371.3
3/19/2013	1:00:00 PM	2.09	2.5	0.41	0.80	358.0
3/19/2013	2:00:00 PM	2.09	2.5	0.41	0.80	358.0
3/19/2013	3:00:00 PM	2.09	2.5	0.41	0.80	358.0
3/19/2013	4:00:00 PM	2.09	2.5	0.41	0.80	358.0
3/19/2013	5:00:00 PM	2.09	2.5	0.41	0.80	358.0
3/19/2013	6:00:00 PM	2.08	2.5	0.42	0.83	371.3
3/19/2013	7:00:00 PM	2.08	2.5	0.42	0.83	371.3
3/19/2013	8:00:00 PM	2.08	2.5	0.42	0.83	371.3
3/19/2013	9:00:00 PM	2.08	2.5	0.42	0.83	371.3
3/19/2013	10:00:00 PM	2.08	2.5	0.42	0.83	371.3
3/19/2013	11:00:00 PM	2.08	2.5	0.42	0.83	371.3
3/20/2013	12:00:00 AM	2.08	2.5	0.42	0.83	371.3
3/20/2013	1:00:00 AM	2.09	2.5	0.41	0.80	358.0
3/20/2013	2:00:00 AM	2.08	2.5	0.42	0.83	371.3
3/20/2013	3:00:00 AM	2.08	2.5	0.42	0.83	371.3
3/20/2013	4:00:00 AM	2.09	2.5	0.41	0.80	358.0
3/20/2013	5:00:00 AM	2.08	2.5	0.42	0.83	371.3
3/20/2013	6:00:00 AM	2.08	2.5	0.42	0.83	371.3
3/20/2013	7:00:00 AM	2.09	2.5	0.41	0.80	358.0
3/20/2013	8:00:00 AM	2.08	2.5	0.42	0.83	371.3
3/20/2013	9:00:00 AM	2.09	2.5	0.41	0.80	358.0

3/20/2013	10:00:00 AM	2.09	2.5	0.41	0.80	358.0
3/20/2013	11:00:00 AM	2.08	2.5	0.42	0.83	371.3
3/20/2013	12:00:00 PM	2.09	2.5	0.41	0.80	358.0
3/20/2013	1:00:00 PM	2.08	2.5	0.42	0.83	371.3
3/20/2013	2:00:00 PM	2.08	2.5	0.42	0.83	371.3
3/20/2013	3:00:00 PM	2.08	2.5	0.42	0.83	371.3
3/20/2013	4:00:00 PM	2.08	2.5	0.42	0.83	371.3
3/20/2013	5:00:00 PM	2.08	2.5	0.42	0.83	371.3
3/20/2013	6:00:00 PM	2.08	2.5	0.42	0.83	371.3
3/20/2013	7:00:00 PM	2.08	2.5	0.42	0.83	371.3
3/20/2013	8:00:00 PM	2.08	2.5	0.42	0.83	371.3
3/20/2013	9:00:00 PM	2.08	2.5	0.42	0.83	371.3
3/20/2013	10:00:00 PM	2.08	2.5	0.42	0.83	371.3
3/20/2013	11:00:00 PM	2.08	2.5	0.42	0.83	371.3
3/21/2013	12:00:00 AM	2.07	2.5	0.43	0.86	384.7
3/21/2013	1:00:00 AM	2.07	2.5	0.43	0.86	384.7
3/21/2013	2:00:00 AM	2.07	2.5	0.43	0.86	384.7
3/21/2013	3:00:00 AM	2.07	2.5	0.43	0.86	384.7
3/21/2013	4:00:00 AM	2.07	2.5	0.43	0.86	384.7
3/21/2013	5:00:00 AM	2.06	2.5	0.44	0.89	398.3
3/21/2013	6:00:00 AM	2.06	2.5	0.44	0.89	398.3
3/21/2013	7:00:00 AM	2.06	2.5	0.44	0.89	398.3
3/21/2013	8:00:00 AM	2.06	2.5	0.44	0.89	398.3
3/21/2013	9:00:00 AM	2.06	2.5	0.44	0.89	398.3
3/21/2013	10:00:00 AM	2.06	2.5	0.44	0.89	398.3
3/21/2013	11:00:00 AM	2.06	2.5	0.44	0.89	398.3
3/21/2013	12:00:00 PM	2.07	2.5	0.43	0.86	384.7
3/21/2013	1:00:00 PM	2.08	2.5	0.42	0.83	371.3
3/21/2013	2:00:00 PM	2.07	2.5	0.43	0.86	384.7
3/21/2013	3:00:00 PM	2.08	2.5	0.42	0.83	371.3
3/21/2013	4:00:00 PM	2.08	2.5	0.42	0.83	371.3
3/21/2013	5:00:00 PM	2.08	2.5	0.42	0.83	371.3
3/21/2013	6:00:00 PM	2.07	2.5	0.43	0.86	384.7
3/21/2013	7:00:00 PM	2.08	2.5	0.42	0.83	371.3
3/21/2013	8:00:00 PM	2.08	2.5	0.42	0.83	371.3
3/21/2013	9:00:00 PM	2.08	2.5	0.42	0.83	371.3
3/21/2013	10:00:00 PM	2.08	2.5	0.42	0.83	371.3
3/21/2013	11:00:00 PM	2.08	2.5	0.42	0.83	371.3
3/22/2013	12:00:00 AM	2.08	2.5	0.42	0.83	371.3
3/22/2013	1:00:00 AM	2.09	2.5	0.41	0.80	358.0
3/22/2013	2:00:00 AM	2.08	2.5	0.42	0.83	371.3
3/22/2013	3:00:00 AM	2.09	2.5	0.41	0.80	358.0
3/22/2013	4:00:00 AM	2.09	2.5	0.41	0.80	358.0
3/22/2013	5:00:00 AM	2.09	2.5	0.41	0.80	358.0
3/22/2013	6:00:00 AM	2.09	2.5	0.41	0.80	358.0
3/22/2013	7:00:00 AM	2.09	2.5	0.41	0.80	358.0
3/22/2013	8:00:00 AM	2.09	2.5	0.41	0.80	358.0

3/22/2013	9:00:00 AM	2.09	2.5	0.41	0.80	358.0
3/22/2013	10:00:00 AM	2.09	2.5	0.41	0.80	358.0
3/22/2013	11:00:00 AM	2.09	2.5	0.41	0.80	358.0
3/22/2013	12:00:00 PM	2.09	2.5	0.41	0.80	358.0
3/22/2013	1:00:00 PM	2.08	2.5	0.42	0.83	371.3
3/22/2013	2:00:00 PM	2.08	2.5	0.42	0.83	371.3
3/22/2013	3:00:00 PM	2.09	2.5	0.41	0.80	358.0
3/22/2013	4:00:00 PM	2.08	2.5	0.42	0.83	371.3
3/22/2013	5:00:00 PM	2.09	2.5	0.41	0.80	358.0
3/22/2013	6:00:00 PM	2.09	2.5	0.41	0.80	358.0
3/22/2013	7:00:00 PM	2.09	2.5	0.41	0.80	358.0
3/22/2013	8:00:00 PM	2.09	2.5	0.41	0.80	358.0
3/22/2013	9:00:00 PM	2.09	2.5	0.41	0.80	358.0
3/22/2013	10:00:00 PM	2.09	2.5	0.41	0.80	358.0
3/22/2013	11:00:00 PM	2.09	2.5	0.41	0.80	358.0
3/23/2013	12:00:00 AM	2.09	2.5	0.41	0.80	358.0
3/23/2013	1:00:00 AM	2.09	2.5	0.41	0.80	358.0
3/23/2013	2:00:00 AM	2.09	2.5	0.41	0.80	358.0
3/23/2013	3:00:00 AM	2.09	2.5	0.41	0.80	358.0
3/23/2013	4:00:00 AM	2.09	2.5	0.41	0.80	358.0
3/23/2013	5:00:00 AM	2.09	2.5	0.41	0.80	358.0
3/23/2013	6:00:00 AM	2.09	2.5	0.41	0.80	358.0
3/23/2013	7:00:00 AM	2.09	2.5	0.41	0.80	358.0
3/23/2013	8:00:00 AM	2.09	2.5	0.41	0.80	358.0
3/23/2013	9:00:00 AM	2.09	2.5	0.41	0.80	358.0
3/23/2013	10:00:00 AM	2.09	2.5	0.41	0.80	358.0
3/23/2013	11:00:00 AM	2.09	2.5	0.41	0.80	358.0
3/23/2013	12:00:00 PM	2.09	2.5	0.41	0.80	358.0
3/23/2013	1:00:00 PM	2.10	2.5	0.40	0.77	344.9
3/23/2013	2:00:00 PM	2.10	2.5	0.40	0.77	344.9
3/23/2013	3:00:00 PM	2.10	2.5	0.40	0.77	344.9
3/23/2013	4:00:00 PM	2.09	2.5	0.41	0.80	358.0
3/23/2013	5:00:00 PM	2.09	2.5	0.41	0.80	358.0
3/23/2013	6:00:00 PM	2.09	2.5	0.41	0.80	358.0
3/23/2013	7:00:00 PM	2.09	2.5	0.41	0.80	358.0
3/23/2013	8:00:00 PM	2.09	2.5	0.41	0.80	358.0
3/23/2013	9:00:00 PM	2.09	2.5	0.41	0.80	358.0
3/23/2013	10:00:00 PM	2.09	2.5	0.41	0.80	358.0
3/23/2013	11:00:00 PM	2.10	2.5	0.40	0.77	344.9
3/24/2013	12:00:00 AM	2.08	2.5	0.42	0.83	371.3
3/24/2013	1:00:00 AM	2.09	2.5	0.41	0.80	358.0
3/24/2013	2:00:00 AM	2.10	2.5	0.40	0.77	344.9
3/24/2013	3:00:00 AM	2.11	2.5	0.39	0.74	332.0
3/24/2013	4:00:00 AM	2.13	2.5	0.37	0.68	306.6
3/24/2013	5:00:00 AM	2.14	2.5	0.36	0.66	294.1
3/24/2013	6:00:00 AM	2.15	2.5	0.35	0.63	281.9
3/24/2013	7:00:00 AM	2.16	2.5	0.34	0.60	269.8

3/24/2013	8:00:00 AM	2.14	2.5	0.36	0.66	294.1
3/24/2013	9:00:00 AM	2.11	2.5	0.39	0.74	332.0
3/24/2013	10:00:00 AM	2.08	2.5	0.42	0.83	371.3
3/24/2013	11:00:00 AM	2.07	2.5	0.43	0.86	384.7
3/24/2013	12:00:00 PM	2.06	2.5	0.44	0.89	398.3
3/24/2013	1:00:00 PM	2.06	2.5	0.44	0.89	398.3
3/24/2013	2:00:00 PM	2.06	2.5	0.44	0.89	398.3
3/24/2013	3:00:00 PM	2.07	2.5	0.43	0.86	384.7
3/24/2013	4:00:00 PM	2.07	2.5	0.43	0.86	384.7
3/24/2013	5:00:00 PM	2.07	2.5	0.43	0.86	384.7
3/24/2013	6:00:00 PM	2.08	2.5	0.42	0.83	371.3
3/24/2013	7:00:00 PM	2.08	2.5	0.42	0.83	371.3
3/24/2013	8:00:00 PM	2.08	2.5	0.42	0.83	371.3
3/24/2013	9:00:00 PM	2.09	2.5	0.41	0.80	358.0
3/24/2013	10:00:00 PM	2.09	2.5	0.41	0.80	358.0
3/24/2013	11:00:00 PM	2.09	2.5	0.41	0.80	358.0
3/25/2013	12:00:00 AM	2.09	2.5	0.41	0.80	358.0
3/25/2013	1:00:00 AM	2.09	2.5	0.41	0.80	358.0
3/25/2013	2:00:00 AM	2.09	2.5	0.41	0.80	358.0
3/25/2013	3:00:00 AM	2.09	2.5	0.41	0.80	358.0
3/25/2013	4:00:00 AM	2.09	2.5	0.41	0.80	358.0
3/25/2013	5:00:00 AM	2.09	2.5	0.41	0.80	358.0
3/25/2013	6:00:00 AM	2.09	2.5	0.41	0.80	358.0
3/25/2013	7:00:00 AM	2.10	2.5	0.40	0.77	344.9
3/25/2013	8:00:00 AM	2.11	2.5	0.39	0.74	332.0
3/25/2013	9:00:00 AM	2.12	2.5	0.38	0.71	319.2
3/25/2013	10:00:00 AM	2.12	2.5	0.38	0.71	319.2
3/25/2013	11:00:00 AM	2.12	2.5	0.38	0.71	319.2
3/25/2013	12:00:00 PM	2.11	2.5	0.39	0.74	332.0
3/25/2013	1:00:00 PM	2.10	2.5	0.40	0.77	344.9
3/25/2013	2:00:00 PM	2.09	2.5	0.41	0.80	358.0
3/25/2013	3:00:00 PM	2.08	2.5	0.42	0.83	371.3
3/25/2013	4:00:00 PM	2.08	2.5	0.42	0.83	371.3
3/25/2013	5:00:00 PM	2.08	2.5	0.42	0.83	371.3
3/25/2013	6:00:00 PM	2.08	2.5	0.42	0.83	371.3
3/25/2013	7:00:00 PM	2.08	2.5	0.42	0.83	371.3
3/25/2013	8:00:00 PM	2.08	2.5	0.42	0.83	371.3
3/25/2013	9:00:00 PM	2.08	2.5	0.42	0.83	371.3
3/25/2013	10:00:00 PM	2.09	2.5	0.41	0.80	358.0
3/25/2013	11:00:00 PM	2.09	2.5	0.41	0.80	358.0
3/26/2013	12:00:00 AM	2.08	2.5	0.42	0.83	371.3
3/26/2013	1:00:00 AM	2.09	2.5	0.41	0.80	358.0
3/26/2013	2:00:00 AM	2.09	2.5	0.41	0.80	358.0
3/26/2013	3:00:00 AM	2.09	2.5	0.41	0.80	358.0
3/26/2013	4:00:00 AM	2.09	2.5	0.41	0.80	358.0
3/26/2013	5:00:00 AM	2.09	2.5	0.41	0.80	358.0
3/26/2013	6:00:00 AM	2.09	2.5	0.41	0.80	358.0

3/26/2013	7:00:00 AM	2.09	2.5	0.41	0.80	358.0
3/26/2013	8:00:00 AM	2.09	2.5	0.41	0.80	358.0
3/26/2013	9:00:00 AM	2.09	2.5	0.41	0.80	358.0
3/26/2013	10:00:00 AM	2.09	2.5	0.41	0.80	358.0
3/26/2013	11:00:00 AM	2.09	2.5	0.41	0.80	358.0
3/26/2013	12:00:00 PM	2.09	2.5	0.41	0.80	358.0
3/26/2013	1:00:00 PM	2.09	2.5	0.41	0.80	358.0
3/26/2013	2:00:00 PM	2.08	2.5	0.42	0.83	371.3
3/26/2013	3:00:00 PM	2.09	2.5	0.41	0.80	358.0
3/26/2013	4:00:00 PM	2.09	2.5	0.41	0.80	358.0
3/26/2013	5:00:00 PM	2.08	2.5	0.42	0.83	371.3
3/26/2013	6:00:00 PM	2.09	2.5	0.41	0.80	358.0
3/26/2013	7:00:00 PM	2.09	2.5	0.41	0.80	358.0
3/26/2013	8:00:00 PM	2.09	2.5	0.41	0.80	358.0
3/26/2013	9:00:00 PM	2.09	2.5	0.41	0.80	358.0
3/26/2013	10:00:00 PM	2.09	2.5	0.41	0.80	358.0
3/26/2013	11:00:00 PM	2.09	2.5	0.41	0.80	358.0
3/27/2013	12:00:00 AM	2.09	2.5	0.41	0.80	358.0
3/27/2013	1:00:00 AM	2.09	2.5	0.41	0.80	358.0
3/27/2013	2:00:00 AM	2.09	2.5	0.41	0.80	358.0
3/27/2013	3:00:00 AM	2.09	2.5	0.41	0.80	358.0
3/27/2013	4:00:00 AM	2.09	2.5	0.41	0.80	358.0
3/27/2013	5:00:00 AM	2.09	2.5	0.41	0.80	358.0
3/27/2013	6:00:00 AM	2.09	2.5	0.41	0.80	358.0
3/27/2013	7:00:00 AM	2.09	2.5	0.41	0.80	358.0
3/27/2013	8:00:00 AM	2.09	2.5	0.41	0.80	358.0
3/27/2013	9:00:00 AM	2.09	2.5	0.41	0.80	358.0
3/27/2013	10:00:00 AM	2.09	2.5	0.41	0.80	358.0
3/27/2013	11:00:00 AM	2.09	2.5	0.41	0.80	358.0
3/27/2013	12:00:00 PM	2.09	2.5	0.41	0.80	358.0
3/27/2013	1:00:00 PM	2.09	2.5	0.41	0.80	358.0
3/27/2013	2:00:00 PM	2.09	2.5	0.41	0.80	358.0
3/27/2013	3:00:00 PM	2.08	2.5	0.42	0.83	371.3
3/27/2013	4:00:00 PM	2.08	2.5	0.42	0.83	371.3
3/27/2013	5:00:00 PM	2.08	2.5	0.42	0.83	371.3
3/27/2013	6:00:00 PM	2.08	2.5	0.42	0.83	371.3
3/27/2013	7:00:00 PM	2.08	2.5	0.42	0.83	371.3
3/27/2013	8:00:00 PM	2.08	2.5	0.42	0.83	371.3
3/27/2013	9:00:00 PM	2.08	2.5	0.42	0.83	371.3
3/27/2013	10:00:00 PM	2.08	2.5	0.42	0.83	371.3
3/27/2013	11:00:00 PM	2.08	2.5	0.42	0.83	371.3
3/28/2013	12:00:00 AM	2.08	2.5	0.42	0.83	371.3
3/28/2013	1:00:00 AM	2.08	2.5	0.42	0.83	371.3
3/28/2013	2:00:00 AM	2.08	2.5	0.42	0.83	371.3
3/28/2013	3:00:00 AM	2.08	2.5	0.42	0.83	371.3
3/28/2013	4:00:00 AM	2.08	2.5	0.42	0.83	371.3
3/28/2013	5:00:00 AM	2.08	2.5	0.42	0.83	371.3

3/28/2013	6:00:00 AM	2.08	2.5	0.42	0.83	371.3
3/28/2013	7:00:00 AM	2.08	2.5	0.42	0.83	371.3
3/28/2013	8:00:00 AM	2.09	2.5	0.41	0.80	358.0
3/28/2013	9:00:00 AM	2.09	2.5	0.41	0.80	358.0
3/28/2013	10:00:00 AM	2.08	2.5	0.42	0.83	371.3
3/28/2013	11:00:00 AM	2.09	2.5	0.41	0.80	358.0
3/28/2013	12:00:00 PM	2.09	2.5	0.41	0.80	358.0
3/28/2013	1:00:00 PM	2.08	2.5	0.42	0.83	371.3
3/28/2013	2:00:00 PM	2.08	2.5	0.42	0.83	371.3
3/28/2013	3:00:00 PM	2.08	2.5	0.42	0.83	371.3
3/28/2013	4:00:00 PM	2.08	2.5	0.42	0.83	371.3
3/28/2013	5:00:00 PM	2.07	2.5	0.43	0.86	384.7
3/28/2013	6:00:00 PM	2.07	2.5	0.43	0.86	384.7
3/28/2013	7:00:00 PM	2.07	2.5	0.43	0.86	384.7
3/28/2013	8:00:00 PM	2.07	2.5	0.43	0.86	384.7
3/28/2013	9:00:00 PM	2.07	2.5	0.43	0.86	384.7
3/28/2013	10:00:00 PM	2.07	2.5	0.43	0.86	384.7
3/28/2013	11:00:00 PM	2.07	2.5	0.43	0.86	384.7
3/29/2013	12:00:00 AM	2.07	2.5	0.43	0.86	384.7
3/29/2013	1:00:00 AM	2.07	2.5	0.43	0.86	384.7
3/29/2013	2:00:00 AM	2.08	2.5	0.42	0.83	371.3
3/29/2013	3:00:00 AM	2.08	2.5	0.42	0.83	371.3
3/29/2013	4:00:00 AM	2.08	2.5	0.42	0.83	371.3
3/29/2013	5:00:00 AM	2.08	2.5	0.42	0.83	371.3
3/29/2013	6:00:00 AM	2.08	2.5	0.42	0.83	371.3
3/29/2013	7:00:00 AM	2.08	2.5	0.42	0.83	371.3
3/29/2013	8:00:00 AM	2.08	2.5	0.42	0.83	371.3
3/29/2013	9:00:00 AM	2.08	2.5	0.42	0.83	371.3
3/29/2013	10:00:00 AM	2.08	2.5	0.42	0.83	371.3
3/29/2013	11:00:00 AM	2.08	2.5	0.42	0.83	371.3
3/29/2013	12:00:00 PM	2.08	2.5	0.42	0.83	371.3
3/29/2013	1:00:00 PM	2.08	2.5	0.42	0.83	371.3
3/29/2013	2:00:00 PM	2.08	2.5	0.42	0.83	371.3
3/29/2013	3:00:00 PM	2.08	2.5	0.42	0.83	371.3
3/29/2013	4:00:00 PM	2.07	2.5	0.43	0.86	384.7
3/29/2013	5:00:00 PM	2.07	2.5	0.43	0.86	384.7
3/29/2013	6:00:00 PM	2.07	2.5	0.43	0.86	384.7
3/29/2013	7:00:00 PM	2.07	2.5	0.43	0.86	384.7
3/29/2013	8:00:00 PM	2.07	2.5	0.43	0.86	384.7
3/29/2013	9:00:00 PM	2.07	2.5	0.43	0.86	384.7
3/29/2013	10:00:00 PM	2.07	2.5	0.43	0.86	384.7
3/29/2013	11:00:00 PM	2.07	2.5	0.43	0.86	384.7
3/30/2013	12:00:00 AM	2.07	2.5	0.43	0.86	384.7
3/30/2013	1:00:00 AM	2.07	2.5	0.43	0.86	384.7
3/30/2013	2:00:00 AM	2.07	2.5	0.43	0.86	384.7
3/30/2013	3:00:00 AM	2.07	2.5	0.43	0.86	384.7
3/30/2013	4:00:00 AM	2.08	2.5	0.42	0.83	371.3

3/30/2013	5:00:00 AM	2.07	2.5	0.43	0.86	384.7
3/30/2013	6:00:00 AM	2.08	2.5	0.42	0.83	371.3
3/30/2013	7:00:00 AM	2.08	2.5	0.42	0.83	371.3
3/30/2013	8:00:00 AM	2.08	2.5	0.42	0.83	371.3
3/30/2013	9:00:00 AM	2.08	2.5	0.42	0.83	371.3
3/30/2013	10:00:00 AM	2.08	2.5	0.42	0.83	371.3
3/30/2013	11:00:00 AM	2.08	2.5	0.42	0.83	371.3
3/30/2013	12:00:00 PM	2.08	2.5	0.42	0.83	371.3
3/30/2013	1:00:00 PM	2.08	2.5	0.42	0.83	371.3
3/30/2013	2:00:00 PM	2.08	2.5	0.42	0.83	371.3
3/30/2013	3:00:00 PM	2.07	2.5	0.43	0.86	384.7
3/30/2013	4:00:00 PM	2.07	2.5	0.43	0.86	384.7
3/30/2013	5:00:00 PM	2.07	2.5	0.43	0.86	384.7
3/30/2013	6:00:00 PM	2.07	2.5	0.43	0.86	384.7
3/30/2013	7:00:00 PM	2.07	2.5	0.43	0.86	384.7
3/30/2013	8:00:00 PM	2.07	2.5	0.43	0.86	384.7
3/30/2013	9:00:00 PM	2.07	2.5	0.43	0.86	384.7
3/30/2013	10:00:00 PM	2.07	2.5	0.43	0.86	384.7
3/30/2013	11:00:00 PM	2.07	2.5	0.43	0.86	384.7
3/31/2013	12:00:00 AM	2.07	2.5	0.43	0.86	384.7
3/31/2013	1:00:00 AM	2.07	2.5	0.43	0.86	384.7
3/31/2013	2:00:00 AM	2.07	2.5	0.43	0.86	384.7
3/31/2013	3:00:00 AM	2.07	2.5	0.43	0.86	384.7
3/31/2013	4:00:00 AM	2.07	2.5	0.43	0.86	384.7
3/31/2013	5:00:00 AM	2.07	2.5	0.43	0.86	384.7
3/31/2013	6:00:00 AM	2.07	2.5	0.43	0.86	384.7
3/31/2013	7:00:00 AM	2.07	2.5	0.43	0.86	384.7
3/31/2013	8:00:00 AM	2.07	2.5	0.43	0.86	384.7
3/31/2013	9:00:00 AM	2.07	2.5	0.43	0.86	384.7
3/31/2013	10:00:00 AM	2.07	2.5	0.43	0.86	384.7
3/31/2013	11:00:00 AM	2.07	2.5	0.43	0.86	384.7
3/31/2013	12:00:00 PM	2.07	2.5	0.43	0.86	384.7
3/31/2013	1:00:00 PM	2.07	2.5	0.43	0.86	384.7
3/31/2013	2:00:00 PM	2.07	2.5	0.43	0.86	384.7
3/31/2013	3:00:00 PM	2.06	2.5	0.44	0.89	398.3
3/31/2013	4:00:00 PM	2.06	2.5	0.44	0.89	398.3
3/31/2013	5:00:00 PM	2.06	2.5	0.44	0.89	398.3
3/31/2013	6:00:00 PM	2.06	2.5	0.44	0.89	398.3
3/31/2013	7:00:00 PM	2.06	2.5	0.44	0.89	398.3
3/31/2013	8:00:00 PM	2.06	2.5	0.44	0.89	398.3
3/31/2013	9:00:00 PM	2.06	2.5	0.44	0.89	398.3
3/31/2013	10:00:00 PM	2.06	2.5	0.44	0.89	398.3
3/31/2013	11:00:00 PM	2.06	2.5	0.44	0.89	398.3

Appendix L

Technical Standard Operating Procedure – Collection of Cross-Channel Surface Water Samples

TABLE OF CONTENTS

1.0 PURPOSE ..... Page 2

2.0 SCOPE ..... Page 2

3.0 REQUIREMENTS ..... Page 2

3.1 Health and Safety ..... Page 2

4.0 REFERENCES ..... Page 2

5.0 DEFINITIONS ..... Page 3

6.0 RESPONSIBILITIES ..... Page 3

7.0 EQUIPMENT ..... Page 3

8.0 PROCEDURE ..... Page 3

8.1 General Procedures for Collection of Cross-Channel Water Samples ..... Page 3

8.2 Collection of Independent Samples in each Compartment ..... Page 4

8.3 Collection of a Composite Sample ..... Page 5

8.4 Dividing a Sample to Individual Analyte Bottles ..... Page 6

9.0 DOCUMENTATION/VERIFICATION ..... Page 6

Figure 1 ..... Page 7

1.0 PURPOSE

This standard operating procedure (SOP) describes the requirements and process for collecting surface water samples from multiple locations across the channel of a wadeable stream. Collecting multiple samples along a transect perpendicular to the stream flow will provide information on the homogeneity of water chemistry across the channel (if samples are analyzed independently) or will provide a representative sample of stream water chemistry (if individual samples are composited before analysis). This procedure can be used wherever it is possible to wade completely across the channel. Where the water is too deep for wading, these procedures maybe modified to be used from a stable boat. Samples collected using this method may be analyzed on-site or transported to a laboratory. Proper preservation techniques may vary depending on the target analytes. Site-specific deviations from this SOP must be approved by the AECI Project Manager or the Client Project Manager prior to initiation of the sampling activity.

2.0 SCOPE

Surface water sampling is applicable to most study sites with surface drainages directly on the site or that are located hydraulically downgradient from such drainages.

3.0 REQUIREMENTS

Factors that may affect the ability to collect cross-channel samples include channel width, water depth, water velocity, channel bed stability and composition of the substrata. For successful completion of this procedure, a site must be safely accessible by sampling personnel access to the entire width of the stream channel must be possible. Ultra clean methods shall be followed for sampling activities.

3.1 Health and Safety

Stream substrata, or bed material, can be highly variable, even within a small stream section, and may pose a risk to those working in the stream. Large rocks with significant algal growth can be slick and those pose a fall risk. Rocks and sand can shift when weight is applied to them. Sharp rocks, sticks and artificial debris (broken bottles, metals, barbed wire) can puncture boots and skin. Before wading into a new area of the stream, examine the area visually, if possible, and use one foot to gently probe and stream bottom for suitable footing. If necessary, use a wading staff for stability.

PPE: Waders, nitrile or similar gloves.

Operational or safety issues associated with this procedure shall be reported to the on-site supervisor, AECI Project Manager, SH&E Coordinator, or their designees for resolution. Employees and contractors are required to stop work when they believe work conditions are unsafe.

4.0 REFERENCES

USGS. 1999. *National Field Manual for the Collection of Water-Quality Data, Chapter A4. Collection of Water Samples*.

USEPA. *Water: Monitoring and Assessment*. Chapter 5 Water Quality Conditions. (website)

USEPA. 1999. Rapid *Bioassessment Protocols for use in Wadeable Streams and Rivers*. EPA 841-B-99-002.

USEPA. 1996. *Sampling Ambient Water for Trace Metals at EPA Water Quality Criteria Levels.* EPA Method 1669. Office of Water, Engineering and Analysis Division, Washington, DC.
USGS. 1985. *Study and Interpretation of the Chemical Characteristics of Natural Water*. USGS Water Supply Paper 2254.

5.0 DEFINITIONS

Environmental Sample – Low concentration sample typically collected offsite and not requiring DOT hazardous waste labeling as a high hazard sample.

Clean Hands – All operations involving contact with the sample bottle and transfer of the sample from the sample collection device to the sample bottle are handled by the individual designated as "clean hands."

Dirty Hands – All operations involving preparation of the sampler (except the sample container itself), operation of any machinery and all other activities that do not involve direct contact with the sample, shall be performed by the individual designated as "dirty hands."

6.0 RESPONSIBILITIES

Project Manager

The Project Manager (PM) is responsible for the selection of the appropriate methodology, technique and field procedure for conducting the sampling.

Field Project Leader

The Field Project Leader (FPL) may be an AECI employee or contractor who is responsible for overseeing the sampling activities. The FPL is also responsible for making on-site decisions as to slight shifts in the cross-channel sampling location in order to ensure a safe working environment and that representative samples will be collected. The FPL provides oversight for all work performed and verification that the activity satisfies the requirements of this SOP and the Project Plan.

7.0 EQUIPMENT

1. Sampling bottles (certified clean and pre-treated with preservatives, if necessary)
2. Large (~2 L to 5 gallon) mixing bottles (e.g., a clean cubitainer)
3. Decontamination equipment and supplies
4. Nitrile gloves
5. Shoulder-length gloves
6. Peristaltic sump, clean tubing and 0.45 µm inline filters, or
7. 60 cc syringes and 0.45 µm syringe filters
8. Labels
9. Sharpies® or other indelible markers
10. 100-foot tape measure or rope with accurately-marked intervals
11. ≥ 3 foot rebar or wooden stakes
12. Orange plastic flagging
13. Hammer

8.0 PROCEDURE

8.1 General Procedures for Collection of Cross-Channel Water Samples

- Determine whether the multiple samples collected across the channel will be composited into a single sample, or analyzed independently. If the latter, then sufficient volume must be collected at each site for all analyses.
- Acquire the necessary number and type of sample containers for all samples. A "sample" (composite or multiple individual samples) will consist of five (5) bottles, including two 250-mL acidified (to ≤ 2 pH with nitric acid) high density polyethylene (HDPE) bottles (one non-filtered for total metals and hardness analysis, and one filtered (0.45 µm) for dissolved metals analysis), one 250-mL HPDE bottle with NaOH (for cyanide analysis), one 250-mL HDPE bottle (unpreserved) for salinity, and one 500-mL HDPE bottle (unpreserved) for the remaining inorganic analyses.
- Upon arrival at the site, one member of the sampling shall be designated as "dirty hands" and a second member shall be designated as "clean hands."
- The cross-channel samples shall follow the general USGS procedure of equal-width-increment (EWI) sampling. Each stream section to be sampled will be of approximately equal width.
- If samples are to be collected at multiple transects, begin work at the furthest downstream location.
- Select the sampling transect location. One person shall stand at the edge of one bank of the stream holding the tape or rope and a second person shall carry the end of the tape or rope across the stream. As much as possible, minimize disturbance of the stream bottom and limit the area of travel to a narrow corridor. Samples shall always be collected upstream of the disturbed area.
- With the tape or rope as taut as possible, secure the tape/rope to stakes on each bank.
- Determine the number of sampling compartments (sections). See Figure 1 of this SOP and follow this general guidance:
    - Small stream (≤25 ft in width): 4-6 compartments
    - Intermediate stream (>25 – 50 ft in width): 6-12 compartments
    - Large stream (>50 ft in width): ≥ 12 compartments
- Stream features should also be used in determining the number of compartments. IT may be appropriate to place different features (pools, runs, ripples, eddies) into separate compartments. A seemingly homogenous reach (e.g., a consistent run) will probably require fewer compartments.
- Using the hammer, drive a stake into the stream bed marking the center of the compartment. Tie an orange flag at the top of each stake to make them more visible.

8.2 Collection of Independent Samples in each Compartment

- One of the unpreserved sample bottles may be used to collect water from the stream at each staked location, or a separate container may be used. As 1500 mL are needed for all analyses, a 2 L collection bottle would be adequate for collecting the individual compartment samples (new bottle for each compartment).
- Don clean gloves. Nitrile gloves are acceptable, however, for deeper water wear clean, shoulder-length gloves.
- Approach the location from the downstream side. Once in position, wait approximately 30 seconds (or longer if needed) for any disturbed fine sediment to be carried downstream.

- At the midpoint of the compartment, where the stake is located, rinse the bottle three times with stream water. Just upstream of the stake, place the sampling bottle into the water, gently lowering it through the water column. The mouth of the bottle should be facing generally upstream, but the bottle should be angled upward at ~20-45° to allow air to escape as the bottle fills. Do not touch the bottom of the stream, as that may disturb sediment. Raise the bottle slowly back up through the water column. The bottle should be full when it is lifted from the water.
- Securely replace the bottle cap and hand the filled bottle to another staff member (or place it on a rock or other location where it will not be carried downstream). Each bottle should be appropriately marked with the correct compartment number.
- Go to the next compartment, again approaching from the downstream side, and repeat the collection process.
- Divide the sample into the appropriate preserved and unpreserved bottles (see Section 8.4 of this SOP).

8.3 Collection of a Composite Sample

- Before collecting samples for analysis, determine in which compartment a sample bottle will fill the fastest when lowered and raised through the water column (e.g., 1 minute, 30 seconds, etc.). This will be the Transit time. Use this same Transit time at all compartments, even if a bottle is not completely filled when brought back to the surface.
- As 1500 mL are needed for all analyses, a 1 L collection bottle should be adequate for collecting the individual compartment samples, which will be mixed as a composite sample before being subdivided for analyses. Use a new bottle for each compartment.
- Don clean gloves. Nitrile gloves are acceptable, however, for deeper water wear clean, shoulder-length gloves.
- Approach the location from the downstream side. Once in position, wait approximately 30 seconds (or longer if needed) for any disturbed fine sediment to be carried downstream.
- At the midpoint of the compartment, where the stake is located, rinse the bottle three times with stream water. Just upstream of the stake, gently lower and raise the sampling bottle into the water within the pre-determined Transit time. The mouth of the bottle should be facing generally upstream, but the bottle should be angled upward at ~20-45° to allow air to escape as the bottle fills. Do not touch the bottom of the stream, as that may disturb sediment. The bottle may not be completely full when it is lifted from the water.
- Securely replace the bottle cap and hand the filled bottle to another staff member (or place it on a rock or other location where it will not be carried downstream). Each bottle should be appropriately marked with the correct compartment number.
- Go to the next compartment, again approaching from the downstream side, and repeat the collection process.

- When all compartment samples have been collected, mix each by vigorously inverting them no less than three times, and immediately emptying them into the large mixing bottle. Make sure the mixing bottle is large enough to contain the water collected.
- Cap the mixing bottle and homogenize the composite sample by vigorously and repeatedly swirling and inverting the bottle for no less than one minute.
- Divide the sample into the appropriate preserved and unpreserved bottles (see Section 8.4 of this SOP). Some sample may remain in the mixing bottle.

8.4 Dividing a Sample to Individual Analyte Bottles

- Fill all containers, <u>except</u> the one for dissolved metals, with the raw water sample, either the individual compartment samples, or the composite.
- <u>Do not</u> overfill the bottles that already contain preservative.
- For the dissolved metals sample, filter 250 mL of the raw water sample using a 1) peristaltic pump equipped with new, disposable tubing and a new, 0.45 µm filter, or 2) new, 60 cc syringe and 0.45 µm filter syringes.
- If using a pump, tubing and filter, place the intake tube into the raw sample and the outlet tube into the 250 mL sample bottle with preservative. Activate the pump and filter enough water to fill the sample bottle, without overfilling.
- If using a syringe and syringe filters, draw approximately 60 cc of the raw water sample into the syringe <u>before</u> the filter is attached. Attach the filter and depress the plunger while holding the syringe filter outlet over the preserved sample bottle. It may be necessary to stop and replace the filter if the raw water contains a high level of solids.
- Make sure all sample bottles are securely capped and labeled.

9.0 DOCUMENTATION/VERIFICATION

A record of field activities, including the number and type of samples collected, shall be recorded on field data sheets or in a field log. The log shall be reviewed by the FPL to verify the accuracy of the data.
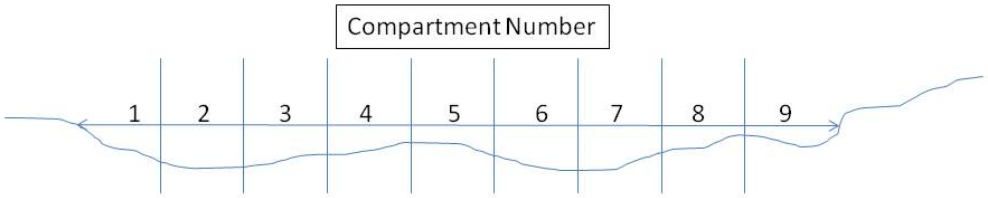
Figure 1. Example of the general placement of the cross-channel sampling compartments for the equal-width-increment (EWI) sampling procedure.