1290075

Rico Surface Water Sampling
Supplemental Surface Water Quality Monitoring
Rico, Colorado
Data Summary Report

Prepared for:
Atlantic Richfield Company
4 Centerpointe Drive
La Palma, CA 90623

Prepared by:

ANDERSON
ENGINEERING COMPANY INC.

977 West 2100 South
Salt Lake City, UT 84119
(801) 972-6222

February 2013

Table of Contents

1.0 Introduction 3
2.0 Field Sampling 3
2.1 Sampling Frequency 3
2.2 Water Quality and Flow Measurement Sampling Locations 3
2.3 Sampling Station Conditions and Desctiptions 5
2.4 Simultaneous Operations 6
3.0 Sampling and Analysis Parameters and Methods 6
4.0 Flow Measurement Methods 9
5.0 Analytical Results 9
6.0 Quality Control 9
6.1 Field QC 9
6.2 Laboratory QC 10

List of Figures

Figure 1 Northern St. Louis Ponds Sampling Locations
Figure 2 Southern St. Louis Ponds Sampling Locations
Figure 3 Sampling Locations South of Rico
Figure 4 Dolores River Cross Section at Sampling Station DR-1
Figure 5 Dolores River Cross Section at Sampling Station DR-2
Figure 6 Pond 8 Embankment Cross Section at Sampling Station DR-5
Figure 7 Dolores River Cross Section at Sampling Station DR-7
Figure 8 Dolores River Cross Section at Sampling Station DR-4-SW
Figure 9 Dolores River Cross Section at Sampling Station DR-G

List of Tables

Table 1 Sampling Location Descriptions
Table 2 Analytical Procedures Summary
Table 3A Surface Water Location Sampling Field Data and Station Information Summary, February 2013
Table 3B Groundwater Well Sampling Field Data and Station Information Summary, February 2013
Table 3C Quality Control Samples Field Data and Station Information Summary, February 2013
Table 3D DR-1 Cross Section Composite Sampling Field Data and Flow Information Summary, February 2013
Table 3E DR-2 Cross Section Composite Sampling Field Data and Flow Information Summary, February 2013
Table 3F DR-7 Cross Section Composite Sampling Field Data and Flow Information Summary, February 2013
Table 3G DR-4-SW Cross Section Composite Sampling Field Data and Flow Information Summary, February 2013
Table 4A Surface Water Sampling Analytical Sampling Results Summary, February 2013
Table 4B Groundwater Analytical Sampling Results Summary, February 2013
Table 4C Quality Control Samples Analytical Sampling Results Summary, February 2013
Table 4D Dolores River Composite Sampling Analytical Sampling Results Summary, February 2013
Table 5A Relative Percent Difference (RPD) of Lab Analysis between DR-3 and Duplicate Sample DR-8
Table 5B Relative Percent Difference (RPD) of Lab Analysis between MW-6 SHALLOW and Duplicate Sample DR-9

Table 5C Relative Percent Difference (RPD) of Lab Analysis between P13-103 and Duplicate Sample DR-10
Table 5D Relative Percent Difference (RPD) of Lab Analysis between DR-4 and Duplicate Sample DR-11

List of Appendices

Appendix A Sampling Location Maps
Appendix B Data Tables
Appendix C Project Narrative and Laboratory Analytical Reports
Appendix D Laboratory QC Results
Appendix E Flow Cross Sections
Appendix F Chain of Custody Records
Appendix G Field Photos
Appendix H Field Log Book Records
Appendix I North Flume OTT PLS Transducer Data with Flowrates
Appendix J North Flume Ultrasonic Sensor Data with Flowrates
Appendix K South Flume OTT Orpheus Mini Data with Flowrates
Appendix L Technical Standard Operating Procedure – Collection of Cross Channel Surface Water Samples

1.0 Introduction

In accordance with the Rico Sampling and Analysis Plan for Supplemental Surface Water Quality Monitoring at Rico, CO prepared by AECOM, dated November 2010, the surface water sampling event was completed on February 8th – 20th, 2013. Sampling was completed by Anderson Engineering Co. Inc., by technicians who are familiar with the Rico sites and the BP Control of Work Management System. Surface water samples were collected from prescribed locations within the St. Louis settling pond system and at the system discharge (DR-6) to the Dolores River (collectively referred to as the St. Louis pond system), and previously sampled locations along the Dolores River above, at and below the St. Louis pond system. Figures 1, 2, and 3 in Appendix A illustrate the locations of the various points sampled monthly. Sample results have been summarized and laboratory analytical results are attached with quality control documentation.

2.0 Field Sampling

2.1 Sampling Frequency

The sampling period represented by this sampling event is for the month of February of 2013. Sampling will be performed on a monthly basis through at least the end of 2013.

2.2 Water Quality and Flow Measurement Sampling Locations

Surface water and groundwater samples were collected from the locations described on Table 1 and shown on Figures 1, 2, and 3 in Appendix A. In the fall of 2011, twelve (12) new monitoring wells were drilled in the vicinity of the recently constructed interim drying facility. Beginning November 2011, those wells were sampled and will continue to be sampled monthly along with the other sampling locations mentioned. In the fall of 2012, eight (8) new monitoring wells were drilled throughout the St. Louis Ponds site. Beginning November 2012, those wells were sampled and will continue to be sampled monthly along with the other sampling locations mentioned. Additionally, eight (8) historic groundwater wells are sampled on a monthly basis.

The Dolores River was sampled above the St. Louis pond system, and below the adit outfalls downstream of the reclaimed Silver Swan Mine area. The river was also sampled at the USGS gaging station downstream of the Silver Swan site.

TABLE 1 - Sample Location Descriptions

SITE ID	SITE LOCATION / DESCRIPTION
Surface Water Locations	
DR-1	Cross-section on the Dolores River approximately 1000 feet North of Pond 18.
DR-2	Cross-section on the Dolores River approximately 150 feet North of the system outfall.
DR-3	St. Louis Tunnel discharge at adit entrance. Sampling location is at the parshll flume located approximately 50 ft west of the cinder block structure at the former adit entrance.

DR-4	Discharge of Pond 15. The sampling location is at the outlet of the upper discharge pipe located on the midpoint of the Pond 15 south embankment.
DR-5	Discharge of Pond 8. The sampling location is at the inlet of the discharge spillway located at the southwest corner of Pond 8.
DR-6	St. Louis settling ponds system outfall to the Dolores River (previous permit Outfall 002). Sample location is at installed 9" parshall flume.
DR-7	Dolores River below St. Louis settling ponds system outfall. Sampling/flow measurement location is located just off the entrance road to the St. Louis ponds site where the Dolores River is adjacent to the entrance road. The site is located approximately 75 feet downstream of a large bend in the river that first brings the Dolores adjacent to the entrance road.
DR-4-SW	Dolores River below Silver Swan. Sampling/flow measurement location is on the Dolores River below the Silver Swan site just downstream of a bend in the river and below a cemetery on the east bank.
DR-G	Located approximately 3.5 miles downstream of the Silver Swan site, at the USGS gauging station #09165000 immediately downstream of the bridge at this location.
Groundwater Locations	
GW-1	Well is located on the north end of the site, approximately 1000 feet north of the northern edge of Pond 18 and about 75 feet northeast of DR-1
GW-3	Located approximately 200 feet north of the northern edge of pond 18, and approximately 60 feet west of the main access road.
GW-4	Located on the western flood dike of Pond 18, approximately midway along the dike.
GW-5	Located on the northern edge of the former Pond 17 area, or on the northern dike of the newly constructed drying cell 1.
GW-6	Located on the middle of the former Pond 17 area, or on the western edge of the south dike of the newly constructed drying cell 1.
GW-7	Located on the eastern edge of the access road directly across from the former Pond 17, or directly across from the newly constructed drying cell 2.
EB-1	Located on the northern edge of the former Pond 17 area, or on the northern dike of the newly constructed drying cell 1. It is within ten feet of GW-5.
EB-2	Located on the southern portion of the former Pond 16 area, or on the western edge of the south dike of the newly constructed drying cell 3.
MW-1 Shallow MW-1 Deep	Both wells are located about 4 feet apart on the western embankment of Pond 13 at the division between Pond 11 and Pond 12.
MW-2 Shallow MW-2 Deep	Both wells are located about 4 feet apart on the western flood embankment of Pond 12, about mid-way along the pond.
MW-3 Shallow MW-3 Deep	Both wells are located about 4 feet apart on the western flood embankment of Pond 15, on the southern half of the embankment.
MW-4 Shallow MW-4 Deep	Both wells are located about 4 feet apart on the southern embankment of Pond 13, approximately 60 west of the main east access road.
MW-5 Shallow	Both wells are located about 4 feet apart on the western dike of drying cell 3 (refer to Figure 2).

MW-5 Deep	
MW-6 Shallow MW-6 Deep	Both wells are located about 4 feet apart on northern embankment of Pond 13, approximately 75 feet west of the main east access road
MW-101	Well is located approximately 200 feet south of the lime plant building in the large open clearing within the St. Louis Road loop.
MW-102	Well is located approximately 150 feet southeast of well GW-7 at the point that the access road splits in two directions.
MW-103	Well is located at the southwest corner of Pond 7 on the flood control dike adjacent to the Dolores River.
MW-104	Well is located approximately midway along the west flood control dike of Pond 9.
MW-202	Well is located approximately 25 feet southeast of the cinder block structure at the former adit entrance.
MW-204	Well is located approximately 200 feet east of the cinder block structure at the former adit entrance, adjacent to the collapsed tunnel.
P13-102	Well is located at approximately the southeast end of the newly constructed dike at the southwest corner of Pond 13.
P13-103	Well is located approximately midway along the newly constructed dike at the south corner of Pond 13.
AT-2	Angle borehole casing is located approximately 220 feet east of the cinder block structure at the former adit entrance, adjacent to the collapsed tunnel.

2.3 Sampling Station Conditions and Desctiptions

The sampling requirements and stations are described in detail below, as well as the conditions at each station for this sampling period. Samples collected were collected per protocols identified in the Sampling and Analysis Plan (SAP). Flow measurements were collected per protocols identified in the SAP.

DR-1. Sampling location partially accessible. Grab sample collected from east bank of river. Composite sample could not be collected. Flow measurements could not be collected. .

DR-2. Sampling location fully accessible. Grab sample collected from east bank of river and composite sample collected from stream cross section. Flow measurements were collected by flowmeter.

DR-3. Flow measurement collected monthly by an installed 9” flume and water level measurement devices at the sampling location. Due to winter storm activity in February, equipment at north flume suffered several power failures and data could not be obtained during a few time periods for this month. Manual measurement collected on 2-8-13 at 8:00 AM.

DR-4. Sample location partially accessible. Sample collected from upper drain pipe inlet in Pond 15. Snow conditions onsite prevented safe access to collect flow measurements in lower pipe. Flow in lower pipe estimated by visual inspection.

DR-5. Sampling location partially accessible. Sample collected at spillway. Flow measurements collected by flowmeter at spillway. Due to the shallow water and multiple paths, accurate flow measurements could not be determined for this

sampling location and period. Flows estimated at spillway to be 65% of total flow.

DR-6. Flow measurement by an installed 9" flume and water level measurement devices at the sampling location. Manual measurement collected on 2-18-13 at 2:59 PM.

DR-7. Sampling location fully accessible. Grab sample collected from east bank of river and composite sample collected from stream cross section. Flow measurements were collected by flowmeter.

DR-4-SW. Sampling location partially accessible. Grab sample collected from east bank of river. Composite sample could not be collected. Flow measurements could not be collected.

DR-G. Sampling location partially accessible. Grab sample collected from east bank of river. Flow measurements could not be collected.

Monitoring Wells. All monitoring wells were sampled by use of a bailer, and field measurements were taken at the time of sampling, per protocols identified in the SAP. Depth measurements were also taken at this time. For the February 2013 sampling period, MW-2 Shallow, MW-3 Shallow, and MW-202 were dry. GW-6 well inaccessible due to ice formation and could not be sampled.

2.4 Simultaneous Operations

During the month of February 2013, other projects were occurring simultaneously at the St. Louis Ponds site.

- Operation of the pilot scale wetland test was occurring during the sampling period. Detrimental effects from this operation are little to none.

3.0 Sampling and Analysis Parameters and Methods

All samples were collected as grab or composite samples. Samples were collected from well-mixed locations, which are representative of conditions within the flow stream. Groundwater samples are purged according to protocols identified in the SAP. Lab-certified plastic bottles were used to collect sample water for analyses. Clean hands, dirty hands procedures were followed throughout the sampling. For quality control purposes, one duplicate sample was collected for every 10 samples collected and one field blank was included with the water samples being submitted to the laboratory for analysis. Composite river samples were collected in accordance with the technical standard operating procedure found in Appendix L.

Lab-certified plastic bottles were used to collect all water samples. Sample water was first collected in clean plastic jugs and field parameters were measured at the time of sample collection. Sample water was then placed in the sampling bottles soon thereafter per protocols identified in the SAP. The following sample bottles were used for collection and analysis (all samples collected without filtration unless otherwise indicated):

- One (1) 500mL HDPE bottle, unpreserved, for alkalinity, Total Dissolved Solids (TDS), Total Suspended Solids (TSS), chloride and sulfate analysis
- One (1) 250mL HDPE bottle, unpreserved, for salinity analysis

- One (1) 250mL HDPE bottle, preserved with HNO_3, for total metals, silica, and water hardness analysis
- One (1) 250mL HDPE bottle, preserved with HNO_3, for dissolved metals analysis. This sample is filtered in the field through a 0.45µm filter.
- One (1) 250mL HDPE bottle, preserved with HNO_3, for potentially dissolved metals analysis
- One (1) 250 mL HDPE bottle, preserved with NaOH and Zn Acetate, for sulfide analysis.
- One (1) 250 mL HDPE bottle, preserved with NaOH, for cyanide analysis
- One (1) 250 mL amber glass bottle, preserved with H_2SO_4, for Total Organic Carbon (TOC) and nitrate analysis

Field parameters were measured at the time of sample collection. Field measurement data for pH, temperature, electrical conductivity, dissolved oxygen, and Oxydation-Reduction Potential were recorded using a Hanna Instruments HI 9828 Multiparameter Meter and a rental YSI Multiparameter Meter, and results were logged in the field log book. Results of field measurements for all samples collected on site can be found in Tables 3A – 3G in Appendix B. Weather parameters including temperature and precipitation were obtained and documented in the Daily Toolbox Meeting Record. During February 2013, some values for electrical conductivity were measured as specific conductivity due to an incorrect parameter setup on a rental YSI meter. Such values have been noted in applicable tables.

All sample bottles were labeled to identify sample number, date and time of collection, type of analysis, and appropriate preservative. In addition, sample analysis/chain of custody forms were completed and processed at the time of sample collection. Original chain of custody forms are signed, dated, and placed in the sample container prior to sealing the container for shipment.

Water samples were kept in cooled containers and sent to the analytical laboratory. Samples were submitted to Pace Analytical Laboratories in Lenexa, Kansas for analysis by analytical procedures listed on Table 2. Analysis was performed according to methods specified in 40 CFR, Part 136 or other methods approved by the EPA. Laboratory methods and reporting limits for all parameters are presented in Table 2. Laboratory results and supporting documentation including quality assurance results are contained in the Appendix C and Appendix D of this report. Results are summarized in Tables 4A – 4D in Appendix B of this report.

TABLE 2 - Analytical Procedures Summary

PARAMETER	DETECTION LIMIT (MDL)	REPORTING LIMIT (RL)	METHOD
FIELD PARAMETERS			
Dissolved Oxygen (ppm)	+/- 1.5% of reading	+/- 1.5% of reading	SM 4500-OG
Electrical Conductivity (mS/cm)	+/- 1% of reading	+/- 1% of reading	EPA 120.1
Temperature (°C)	+/- 0.15° C	+/- 0.15° C	Standard Method 2550
ORP (Oxidation Reduction Potential, mV)	+/- 1.0 mV	+/- 1.0 mV	Ag/AgCl Probe
pH (Standard pH Units)	+/- 0.02 pH	+/- 0.02 pH	EPA 150.2
NON-METALS			
Alkalinity (mg/L as $CaCO_3$)	20 mg/L	20 mg/L	SM 2320B
Chloride (mg/L)	1.0 mg/L	1.0 mg/L	EPA 300.0
Cyanide (μg/L as CN)	0.0021 mg/L	0.005 mg/L	SM 4500-CN-E
Hardness (mg/L as $CaCO_3$)	0.036 mg/L	0.071 mg/L	SM 2340B
Nitrogen, NO2 plus NO3 (mg/L)	0.022 mg/L	0.1 mg/L	EPA 353.2
Salinity (mg/L as dissolved solids)	6 mg/L	6 mg/L	SM 2510B (calculated)
Silica	0.027 mg/L	0.054 mg/L	EPA 200.8
Sulfate (mg/L as SO4)	0.15 mg/L	1.0 mg/L	EPA 300.0
Sulfides (mg/L)	0.018 mg/L	0.05 mg/L	4500-S-2 D
Total Dissolved Solids (mg/L as TDS)	5.0 mg/L	5.0 mg/L	SM 2540C
Total Organic Carbon (mg/L)	0.072 mg/L	0.5 mg/L	SM 5310C
Total Suspended Solids (mg/L as TSS)	5.0 mg/L	5.0 mg/L	SM 2540D
TOTAL, DISSOLVED, AND POTENTIALLY DISSOLVED METALS*			
Aluminum (μg/L as Al)	2.00 μg/L, 6.35 μg/L	4 μg/L, 50 μg/L	EPA 200.8, EPA 200.8
Antimony (μg/L as Sb)	0.100 μg/L, 0.03 μg/L	0.5 μg/L, 1 μg/L	EPA 200.8, EPA 200.8
Arsenic (μg/L as As)	0.138 μg/L, 0.05 μg/L	0.5 μg/L, 1 μg/L	EPA 200.8, EPA 200.8
Barium (μg/L as Ba)	0.150 μg/L, 0.08 μg/L	0.3 μg/L, 1 μg/L	EPA 200.8, EPA 200.8
Beryllium (μg/L as Be)	0.092 μg/L, 0.05 μg/L	0.2 μg/L, 0.5 μg/L	EPA 200.8, EPA 200.8
Cadmium (μg/L as Cd)	0.028 μg/L, 0.05 μg/L	0.08 μg/L, 0.5 μg/L	EPA 200.8, EPA 200.8
Calcium (μg/L as Ca)	10.000 μg/L, 10.35 μg/L	20 μg/L, 100 μg/L	EPA 200.8, EPA 200.7
Chromium (ug/l as Cr)	0.094 μg/L, 0.07 μg/L	0.5 μg/L, 1 μg/L	EPA 200.8, EPA 200.8
Cobalt (ug/l as Co)	0.250 μg/L, 0.08 μg/L	0.5 μg/L, 1 μg/L	EPA 200.8, EPA 200.8
Copper (μg/L as Cu)	0.184 μg/L, 0.12 μg/L	0.5 μg/L, 1 μg/L	EPA 200.8, EPA 200.8
Iron (μg/L as Fe)	10.00 μg/L, 2.95 μg/L	50 μg/L, 50 μg/L	EPA 200.8, EPA 200.8
Lead (μg/L as Pb)	0.018 μg/L, 0.03 μg/L	0.1 μg/L, 1 μg/L	EPA 200.8, EPA 200.8
Magnesium (μg/L as Mg)	2.31 μg/L, 6.48 μg/L	5 μg/L, 50 μg/L	EPA 200.8, EPA 200.7
Manganese (μg/L as Mn)	0.250 μg/L, 0.14 μg/L	0.5 μg/L, 1 μg/L	EPA 200.8, EPA 200.8
Mercury (μg/L as Hg)	0.1 μg/L, 0.053 μg/L	0.2 μg/L, 1 μg/L	EPA 245.1, EPA 245.1
Molybdenum (μg/L as Mo)	0.069 μg/L, 0.12 μg/L	0.5 μg/L, 1 μg/L	EPA 200.8, EPA 200.8
Nickel (μg/L as Ni)	0.151 μg/L, 0.07 μg/L	0.5 μg/L, 1 μg/L	EPA 200.8, EPA 200.8
Potassium (μg/L as K)	5.24 μg/L, 44.38 μg/L	20 μg/L, 500 μg/L	EPA 200.8, EPA 200.7
Selenium (ug/l as Se)	0.094 μg/L, 0.14 μg/L	0.5 μg/L, 1 μg/L	EPA 200.8, EPA 200.8
Silver (ug/L as Ag)	0.040 μg/L, 0.01 μg/L	0.5 μg/L, 0.5 μg/L	EPA 200.8, EPA 200.8
Sodium (μg/L as Na)	10.40 μg/L, 21.68 μg/L	50 μg/L, 500 μg/L	EPA 200.8, EPA 200.7
Thallium (μg/L as Tl)	0.019 μg/L, 0.02 μg/L	0.1 μg/L, 1 μg/L	EPA 200.8, EPA 200.8
Vanadium (μg/L as V)	0.037 μg/L, 0.11 μg/L	0.1 μg/L, 1 μg/L	EPA 200.8, EPA 200.8
Zinc (μg/L as Zn)	1.00 μg/L, 1.04 μg/L	5 μg/L, 10 μg/L	EPA 200.8, EPA 200.8

*Limits and methods for metals displayed in following format: Total and Dissolved Metals, Potentially Dissolved Metals

4.0 Flow Measurement Methods

Flow velocity measurements were taken at the river sampling locations where accessible. Flow measurements were not collected at areas where ice and snow buildup or high, fast flows prohibited safe access. The flow measurements obtained this sampling period are described in Section 2.3. For this sampling period, flowrates were not measured for river and pond sampling locations DR-1, DR-4-SW, and DR-G due to excessive ice buildup and unsafe access conditions. Flow measurements were collected at DR-2, DR-3, DR-4, DR-5, DR-6, and DR-7. Refer to Figures 4 through 9 in Appendix E for Dolores River cross sections. The flowrates are presented on Tables 3A, 3E, and 3F in Appendix B.

The St. Louis tunnel flow (DR-3) and St. Louis pond discharge (DR-6) currently have Parshall flumes installed. Flow measurements can be determined at these flumes when the depth of flow is known at a particular point. In order to continuously monitor and measure the depth of flow, depth measurement devices were installed on May 11th, 2011 and May 12th, 2011 at both the north and south flumes. An STI Ultrasonic IRU-5180 automated water level detector was installed at the north Parshall flume. In order to obtain further flow data, an OTT PLS submersible pressure transducer was installed at the north flume in December 2011. In January 2012, it was decided that the OTT PLS would be used exclusively at the north flume to report flow data, and that the ultrasonic meter would remain only as a backup flow measurement system. This was due in large part to the stability and uniformity observed in the data from the OTT PLS, as opposed to the ultrasonic meter, which exhibited greater instability and variability in the readings that the OTT PLS. The south flume has a submersible pressure transducer called the OTT Orpheus Mini. It records deviations from a pre-programmed depth of air space from the top edge of the flume down to the water level. Knowing then the total depth of the flume, the depth of flow can be determined. The post processed data for the OTT PLS, the STI Ultrasonic IRU-5180, and the OTT Orpheus Mini are given in Appendix I, J, and K, respectively.

During the month of February 2013, snow storms on-site caused snow to build up on the solar panel that charges the battery powering the flow equipment at DR-3. As a result, the battery lost power multiple times throughout the month, specifically during February 1st – 6th, 10th – 13th, and sporadically during the 13th – 16th and the 19th – 27th. Usable data was not recorded during these time intervals.

5.0 Analytical Results

The results of the laboratory analysis are summarized on Tables 4A – 4D in Appendix B. The data is organized by sample location. The Pace Lab reports for all results are contained in Appendix C.

6.0 Quality Control

In addition to the standard laboratory Quality Control (QC), field QC samples for this sampling event included one field duplicate for every 10 samples collected and a Field Blank (FB).

6.1 Field QC

A field duplicate water sample was obtained for every 10 samples collected. Field duplicate samples are assigned the Sample IDs DR-8, DR-9, DR-10, DR-

11, and so forth for as many samples as are collected. During the February 2013 sampling period these duplicate samples were collected at stations DR-3 (DR-8), MW-6 SHALLOW (DR-9), P13-103 (DR-10), and DR-4 (DR-11). During sample collection, the duplicate sample bottles were filled simultaneously from the discharge stream or source of water. The duplicate sample was submitted to the analytical laboratory as “blind duplicate” samples.

Tables 5A – 5D in Appendix B compare the analytical results for all parameters from all duplicate sample collected and present the Relative Percent Difference (RPD). The RPD for aqueous samples should be +/- 20%. The trends in the results indicate that duplicate samples of groundwater wells had a high number of parameters outside of the +/- 20% range. Consideration is being given to collecting duplicate samples from surface water locations only.

A Field Blank (FB) was collected by processing and analyzing a bottle of distilled water in the field in the same manner as any other sample. The FB was analyzed for the same constituents as the other samples. The FB had concentrations below the reporting limit for all metals except for a small number of total, dissolved, and potentially dissolved metals. The pH was slightly above neutral, the Electrical Conductivity (EC) was very low, it showed a non-detectable level of alkalinity, and a non-detectable level of TDS.

6.2 Laboratory QC

The laboratory control sample (LCS), method blank, matrix spike, and matrix spike duplicate sample results were all within the established limits of concentration, percent recovery, and relative percent difference, with several minor exceptions. Please refer to the Laboratory QC Results in Appendix D for exceptions and for a full QC report.

Appendix A

Sampling Location Maps

General Notes

SCALE IN FEET
0 175 350

No.	Revision/Issue	Date

BP

ANDERSON
ENGINEERING COMPANY, INC.
977 WEST 2100 SOUTH
SALT LAKE CITY, UTAH 84119
(801) 972-6222

RICO WATER SAMPLING

NORTHERN ST. LOUIS PONDS
SAMPLING LOCATIONS

RICO,
COLORADO

DRAWN BY:	MAD
ENGINEER:	MAD
APPROVED:	MAD

Project	Sheet
Date 22-Oct-12	1
Scale 1" = 350'	

1

NORTHERN ST. LOUIS PONDS SAMPLING LOCATIONS

SCALE - 1" = 350'

THESE PLANS AND SPECIFICATIONS ARE THE PROPERTY OF ANDERSON ENGINEERING COMPANY, INC., 977 WEST 2100 SOUTH, SALT LAKE CITY, UTAH, 84119 AND SHALL NOT BE COPIED, REDUCED, OR REPRODUCED WITHOUT THEIR WRITTEN PERMISSION.

E:\AutoCAD drawing\Rico 2012 sampling location map.dwg

2 SOUTHERN ST. LOUIS PONDS SAMPLING LOCATIONS

SCALE - 1" = 350'

THESE PLANS AND SPECIFICATIONS ARE THE PROPERTY OF ANDERSON ENGINEERING COMPANY, INC., 977 WEST 2100 SOUTH, SALT LAKE CITY, UTAH, 84119 AND SHALL NOT BE COPIED, REDUCED, OR REPRODUCED WITHOUT THEIR WRITTEN PERMISSION.

General Notes

SCALE IN FEET
0 175 350

No.	Revision/Issue	Date

BP

ANDERSON
ENGINEERING COMPANY, INC.
977 WEST 2100 SOUTH
SALT LAKE CITY, UTAH 84119
(801) 972-6222

RICO WATER SAMPLING

SOUTHERN ST. LOUIS PONDS
SAMPLING LOCATIONS

RICO,
COLORADO

DRAWN BY:	MAD
ENGINEER:	MAD
APPROVED:	MAD

Project	Sheet
Date 22-Oct-12	2
Scale 1" = 350'	

C:\Users\AEC2-MD\Documents\AECO\Rico Water Sampling\Monthly Sampling Data\December 2012\Appendices\Appendix A - Sampling Location Maps\Rico Map\2012 sampling locations map2.dwg

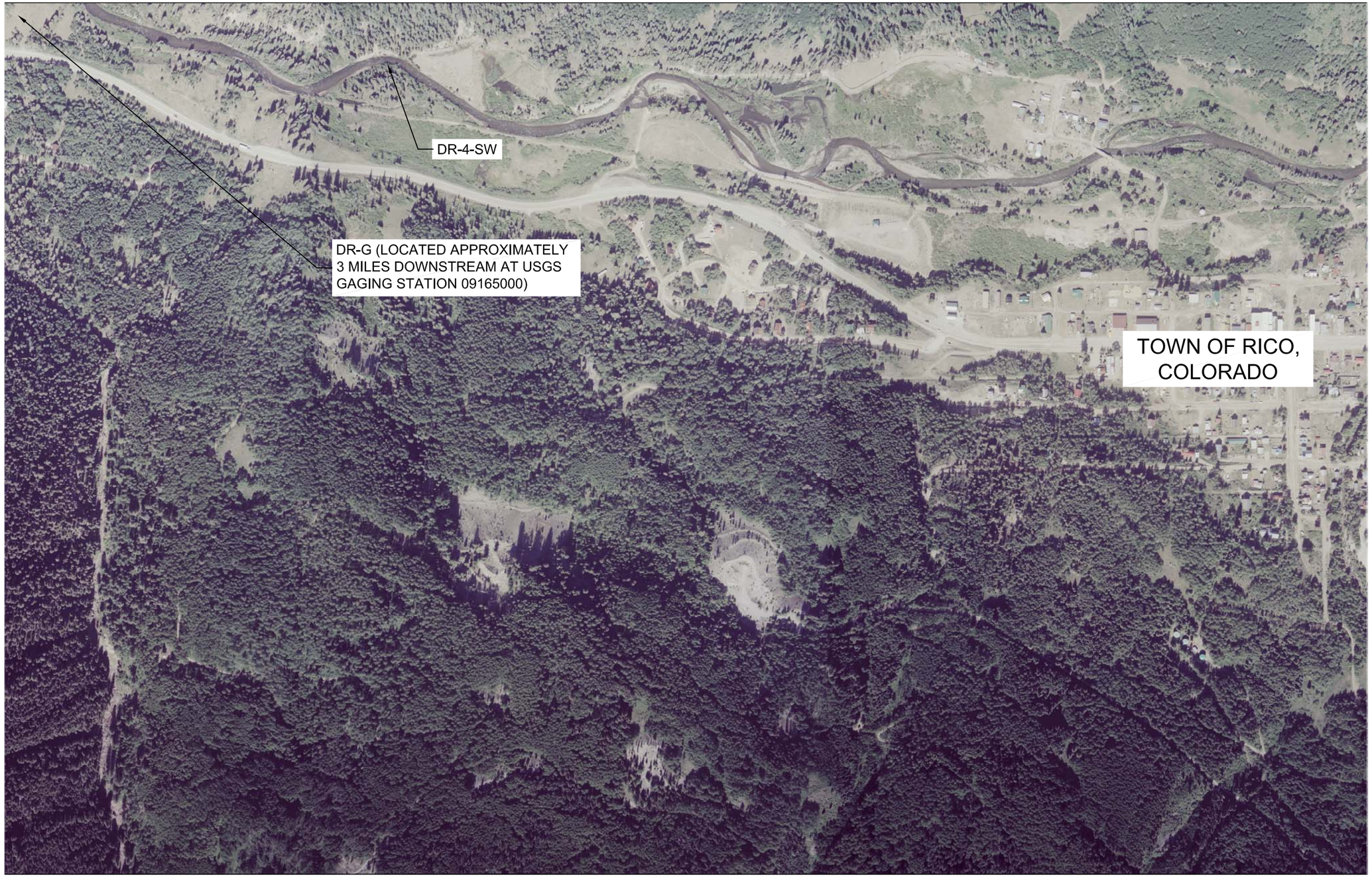

3 **SAMPLING LOCATIONS SOUTH OF RICO, CO**

SCALE - 1" = 500'

THESE PLANS AND SPECIFICATIONS ARE THE PROPERTY OF ANDERSON ENGINEERING COMPANY, INC., 977 WEST 2100 SOUTH, SALT LAKE CITY, UTAH, 84119 AND SHALL NOT BE COPIED, REDUCED, OR REPRODUCED WITHOUT THEIR WRITTEN PERMISSION.

General Notes

SCALE IN FEET
0 250 500

No.	Revision/Issue	Date

BP / ARCO

ANDERSON
ENGINEERING COMPANY, INC.
977 WEST 2100 SOUTH
SALT LAKE CITY, UTAH 84119
(801) 972-6222

RICO SURFACE WATER SAMOPLING

SAMPLING LOCATIONS SOUTH OF RICO, CO

RICO, COLORADO

DRAWN BY:	MAD
ENGINEER:	MAD
APPROVED:	CES

Project	Sheet 3
Date 5-Apr-12	
Scale 1" = 500'	

C:\Users\AECI-MD\Documents\RICO\Rico Water Sampling\Monthly Sampling Data\November 2012\Appendices\Appendix A - Sampling Location Maps\Locations south of Rico.dwg

Appendix B

Data Tables

TABLE 3A - Surface Water Location Sampling Field Data and Station Information Summary, February 2013

			Field Measurements							GPS Location (Colorado State Plane NAD83)		Flow Data				Comments
Sample Location	Date of Sample Collection	Field Technicians	pH	Temp (°C)	EC (mS/cm)	Dissolved Oxygen (ppm)	Oxydation Reduction Potential (ORP, mV)	Well Casing Elevation (ft)	Well Water Elevation (ft)	Northing	Easting	Stream Cross section area (ft^2)	Flowrate cfs / gpm			
DR-1	2/18/2013	J Gisseman / T Barbee	8.25	2.00	0.349*	13.87	103.4	NA	NA	1389970.4600	2267573.6490	CNO	CNO		CNO	Cross section on the Dolores River above St. Louis settling pond system (approximately 800 ft north of the northern edge of Pond 18). Flow measurement could not be obtained due to excessive ice buildup and unsafe access conditions.
DR-2	2/18/2013	T Barbee	6.11	3.41	0.437*	9.25	205.5	NA	NA	1386660.9610	2267971.4630	24.30	6.03		2705	Cross section on the Dolores River, approximately 150 ft north of system outfall. Flow measurement by flowmeter
DR-3	2/8/2013	J Roehrig	7.05	14.52	1.393	2.19	57.6	NA	NA	1388963.0808	2268004.6974	NA	Ultrasonic	1.11	497.28	St Louis adit discharge. Flow measurement by installed Parshall Flume. Due to winter storm activity in February, equipment at north flume suffered several power failures and data could not be obtained during some portions of the month. Manual measurement collected on 2-8-13 at 8:00 AM.
													Transducer	1.10	492.80	
													Manual	1.26	566.43	
DR-4	2/18/2013	J Gisseman / T Barbee	8.01	9.38	1.287*	7.29	100.9	NA	NA	1388153.6284	2267799.1579	NA	1.06		476	Pond 15 discharge. Flow measurements by flowmeter at discharge pipes. Lower pipe velocity could not be obtained due to unsafe access conditions. Flow in lower pipe estimated as 10% of overall flow
DR-5	2/18/2013	J Gisseman / T Barbee	7.48	2.28	1.324*	10.91	106.1	NA	NA	1387273.4503	2268024.8524	NA	0.99		444	Pond 8 discharge. Flow measurements by flowmeter at spillway. Due to multiple leaks, flow at spillway is approximately 65% of total discharge from pond 8 to pond 7. Remainder of flow estimated.
DR-6	2/18/2013	T Barbee	7.08	1.38	1.376*	11.16	11.1	NA	NA	1386431.4984	2267964.5711	NA	Transducer	0.95	426	Outfall to Dolores River. Flow measurement by installed Parshall Flume. Water level by OTT Orpheus Mini submersible pressure transducer. Manual flow measurement collected on 2-18-13 at 2:59 PM.
													Manual	0.90	406	
DR-7	2/18/2013	J Gisseman / T Barbee	5.72	4.08	0.678*	9.24	246.9	NA	NA	1385880.1050	2267983.4510	14.88	9.11		4089	Cross section on the Dolores River, approximately 500 ft below St. Louis settling pond system outfall. Flow measurement could not be obtained due to excessive ice buildup and unsafe access conditions.
DR-4-SW	2/20/2013	T Thacker / J Gisseman	4.12	0.02	0.656*	10.45	355.9	NA	NA	1379176.1190	2266285.0850	CNO	CNO		CNO	Cross section on the Dolores River approximately 100 below the Silver Swan site. Flow measurement could not be obtained due to excessive ice buildup and unsafe access conditions.
DR-G	2/20/2013	J Gisseman / T Barbee	8.05	0.04	0.609*	12.25	246.0	NA	NA	1364029.7850	2258752.9060	CNO	CNO		CNO	Cross section on the Dolores River at USGS gauging station #09165000, approximately 3.5 miles downstream of the Silver Swan site. Flow measurement could not be obtained due to excessive ice buildup and unsafe access conditions.

*Value is specific conductivity, not electrical conductivity

ANDERSON
ENGINEERING COMPANY INC.

TABLE 3B - Groundwater Well Sampling Field Data and Station Information Summary, February 2013

			Field Measurements							GPS Location (Colorado State Plane NAD83)		Flow Data			Comments
Sample Location	Date of Sample Collection	Field Technicians	pH	Temp (°C)	EC (mS/cm)	Dissolved Oxygen (ppm)	Oxydation Reduction Potential (ORP, mV)	Well Casing Elevation (ft)	Well Water Elevation (ft)	Northing	Easting	Stream Cross section area (ft^2)	Flowrate cfs / gpm		
GW-1	2/6/2013	B Loomis	8.07	5.85	0.330	3.31	-	8840.13	8838.05	1390006.0210	2267642.6870	NA	NA	NA	Located on the north end of the site, approximately a quarter mile north of the northern edge of Pond 18.
GW-3	2/7/13, 2/8/2013	J Roehrig	7.68	9.62	0.705	3.49	65.0	8836.68	8823.71	1389221.9930	2267708.3940	NA	NA	NA	Located approximately 200 feet north of the northern edge of pond 18, and approximately 60 feet west of the main access road. Sample collected over two days.
GW-4	2/14/2013	J Gisseman / J Frietas	7.51	3.35	0.861	0.94	72.0	8826.79	8815.83	1388790.0720	2267553.5420	NA	NA	NA	Located on the western flood dike of Pond 18, approximately midway along the dike.
GW-5	2/7/2013	J Roehrig	7.27	9.01	2.273	1.00	75.5	8839.52	8817.00	1388802.0650	2267911.8020	NA	NA	NA	Located on the northern edge of the former Pond 17 area, or on the northern dike of the newly constructed drying cell 1.
GW-6	2/14/2013	WELL FROZEN IN ICE								1388589.3950	2267922.5090	NA	NA	NA	Located on the middle of the former Pond 17 area, or on the western edge of the south dike of the newly constructed drying cell 1. Well frozen in 6 inches of ice; could not access.
GW-7	2/15/2013	T Barbee	6.09	8.51	1.640*	32.6	172.6	8840.00	8816.59	1388611.4370	2268158.0170	NA	NA	NA	GW-7 Located on the eastern edge of the access road directly across from the former Pond 17, or directly across from the newly constructed drying cell 2. Well was inaccessible due to snow and ice formation and could not be sampled.
EB-1	2/8/2013	J Roehrig	7.75	9.43	2.173	0.37	51.4	8839.86	8816.89	1388792.4420	2267916.9080	NA	NA	NA	Located on the northern edge of the former Pond 17 area, or on the northern dike of the newly constructed drying cell 1. It is within ten feet of GW-5.
EB-2	2/14/2013	T Barbee	5.58	7.95	4.583	20.70	79.1	8829.84	8812.59	1388306.1480	2267920.2500	NA	NA	NA	Located on the southern portion of the former Pond 16 area, or on the western edge of the south dike of the newly constructed drying cell 3.
MW-1 SHALLOW	2/14/2013	J Gisseman / J Frietas	7.71	0.59	1.520	4.83	72.1	8810.87	8804.22	1387826.7470	2267944.5160	NA	NA	NA	Both wells are located about 4 feet apart on the western embankment of Pond 13 at the division between Pond 11 and Pond 12.
MW-1 DEEP	2/14/2013	J Gisseman / J Frietas	7.74	0.28	1.552	4.49	75.1	8810.85	8801.10	1387829.4070	2267940.5680	NA	NA	NA	
MW-2 SHALLOW	2/13/2013	DRY WELL						8810.23	-	1387829.7580	2267759.0810	NA	NA	NA	Both wells are located about 4 feet apart on the western flood embankment of Pond 12, about mid-way along the pond. MW-2 SHALLOW was dry
MW-2 DEEP	2/13/2013	J Gisseman / J Frietas	7.34	7.74	1.483	5.31	110.2	8810.21	8800.02	1387836.0950	2267756.0910	NA	NA	NA	
MW-3 SHALLOW	2/13/2013	DRY WELL						8819.57	-	1388308.0910	2267603.5420	NA	NA	NA	Both wells are located about 4 feet apart on the western flood embankment of Pond 15, on the southern half of the embankment. MW-3 SHALLOW was dry.
MW-3 DEEP	2/13/2013	J Gisseman	7.60	8.77	1.516	1.92	102.9	8819.72	8809.68	1388313.2060	2267601.6050	NA	NA	NA	
MW-4 SHALLOW	2/15/2013	J Gisseman / J Frietas	6.74	7.40	1.599	5.60	14.3	8816.83	8799.61	1387836.9670	2268221.9370	NA	NA	NA	Both wells are located about 4 feet apart on the southern embankment of Pond 13, approximately 60 west of the main east access road. pH value higher than expected, possibly due to slight degredation of pH probe. Replacement probe already on order.
MW-4 DEEP	2/14/2013	J Gisseman / J Frietas	6.63	7.06	1.741	2.28	82.5	8816.77	8799.61	1387839.1320	2268224.8950	NA	NA	NA	
MW-5 SHALLOW	2/7/2013	J Roehrig	4.85	11.06	3.651	0.41	78.5	8830.95	8813.83	1388369.7050	2267814.3980	NA	NA	NA	Both wells are located about 4 feet apart on the western dike of drying cell 3 (refer to Figure 2). pH value higher than expected, possibly due to slight degredation of pH probe. Replacement probe already on order.
MW-5 DEEP	2/7/2013	J Roehrig	6.80	13.56	1.789	0.56	44.0	8830.73	8812.94	1388374.5740	2267813.8150	NA	NA	NA	
MW-6 SHALLOW	2/14/2013	J Gisseman / J Frietas	6.28	9.58	2.602	0.00	60.7	8830.58	8806.75	1388166.1000	2268148.1000	NA	NA	NA	Both wells are located about 4 feet apart on northern embankment of Pond 13, approximately 75 feet west of the main east access road. MW-6 Deep was frozen at the time of depth measurement, but not at the time of sample collection.
MW-6 DEEP	2/14/2013	J Gisseman / J Frietas	6.41	9.94	1.875	1.62	59.0	8830.11	8806.51	1388165.5290	2268153.3270	NA	NA	NA	
MW-101	2/6/2013	J Roehrig	7.80	10.52	1.746	0.16	46.2	8845.417	8817.02	1388742.4460	2268096.7400	NA	NA	NA	Located east of Drying Cells 1 / 2 boundary dike, inside the St Louis Access road loop, south of the St. Louis lab bldg.
MW-102	2/7/2013	J Roehrig	6.79	12.49	1.200	1.2	56.7	8841.30	8816.67	1388482.8360	2268230.4920	NA	NA	NA	Located east of Drying Cell 4, in the St Louis Access road at the south end of the road loop.
MW-103	2/14/2013	T Barbee	6.30	4.82	1.875*	18.9	78.0	8797.799	8790.81	1387371.9920	2268003.3380	NA	NA	NA	Located on the western flood embankment of Pond 9, approximately 175 feet south of the north west corner of Pond 9.
MW-104	2/14/2013	T Barbee	6.68	3.10	1.610*	44.5	136.9	8785.60	8781.26	1390006.0210	2267642.6870	NA	NA	NA	Located on the western flood embankment between Ponds 6 and 7.
MW-202	2/8/2013	DRY WELL						8859.206	-	1388999.6490	2268195.9780	NA	NA	NA	Located approximately 30 feet south of the remnant portal structure of the St. Louis Adit discharge. Well was dry and could not be sampled.
MW-204	2/7/2013	J Roehrig	6.75	13.78	1.349	0.52	58.3	8865.95	8851.28	1389122.4820	2268373.7870	NA	NA	NA	Located west of collapsed St. Louis adit base, approximately 30 feet west of AT-2.
P13-102	2/15/2013	J Gisseman	6.78	7.35	2.167	2.66	43.1	8810.643	8799.85	1387785.4540	2268076.6470	NA	NA	NA	Located on Pond 13 dike near southeast corner of pond. pH value higher than expected, possibly due to slight degredation of pH probe. Replacement probe already on order.
P13-103	2/15/2013	T Barbee	6.93	5.92	1.759	15.50	5.2	8811.46	8800.36	1387856.4350	2267994.0830	NA	NA	NA	Located on Pond 13 causeway just north of the dike.
AT-2	2/8/2013	J Roehrig	7.73	12.43	1.047	0.47	53.3	8866.206	8859.86	1389125.5680	2268405.5140	NA	NA	NA	Angle borehole casing is located approximately 220 feet east of the cinder block structure at the former adit entrance, adjacent to the collapsed tunnel.

*Value is specific conductivity, not electrical conductivity

ANDERSON
ENGINEERING COMPANY INC.

TABLE 3C - Quality Control Samples Field Data and Station Information Summary, February 2013

			Field Measurements							GPS Location (Colorado State Plane NAD83)		Flow Data			Comments
Sample Location	Date of Sample Collection	Field Technicians	pH	Temp (°C)	EC (mS/cm)	Dissolved Oxygen (ppm)	Oxydation Reduction Potential (ORP, mV)	Well Casing Elevation (ft)	Well Water Elevation (ft)	Northing	Easting	Stream Cross section area (ft^2)	Flowrate cfs / gpm		
Duplicate Samples															
DR-8	2/8/2013	J Roehrig	7.61	13.05	1.339	2.45	60.4	NA	NA	NA	NA	NA	NA	NA	Duplicate of DR-3.
DR-9	2/14/2013	J Gisseman	-	-	-	-	-	NA	NA	NA	NA	NA	NA	NA	Duplicate of MW-6 SHALLOW. Field technician did not collect field parameters for duplicate sample. See MW-6 SHALLOW for field parameters.
DR-10	2/15/2013	T Barbee	6.87	6.71	1.747*	18.60	5.1	NA	NA	NA	NA	NA	NA	NA	Duplicate of P13-103
DR-11	2/18/2013	T Barbee	7.83	9.45	1.275*	7.48	110.0	NA	NA	NA	NA	NA	NA	NA	Duplicate of DR-4
Field Blanks															
FB	2/18/2013	J Gisseman / T Barbee	8.00	8.34	0.003*	8.73	73.0	NA	NA	NA	NA	NA	NA	NA	Field blank

*Value is specific conductivity, not electrical conductivity

ANDERSON
ENGINEERING COMPANY INC.

Table 3D - DR-1 Cross Section Composite Sampling Field Data and Flow Information Summary, February 2013

			Field Measurements					GPS Location (Colorado State Plane NAD83)		Flow Data				Comments
Sample Location	Date of Sample Collection	Field Technicians	pH	Temp (°C)	EC (mS/cm)	Dissolved Oxygen (ppm)	Oxydation Reduction Potential (ORP, mV)	Northing	Easting	Compartment Geometry		Average Flowrate		
										Width (ft)	Area (ft^2)	cfs	gpm	
COULD NOT OBTAIN FLOW MEASUREMENTS DUE TO EXCESSIVE ICE BUILDUP ON RIVER PREVENTING SAFE ACCESS														

ANDERSON
ENGINEERING COMPANY INC.

Table 3E - DR-2 Cross Section Composite Sampling Field Data and Flow Information Summary, February 2013

			Field Measurements					GPS Location (Colorado State Plane NAD83)		Flow Data				Comments
Sample Location	Date of Sample Collection	Field Technicians	pH	Temp (°C)	EC (mS/cm)	Dissolved Oxygen (ppm)	Oxydation Reduction Potential (ORP, mV)	Northing**	Easting**	Compartment Geometry		Average Flowrate		
										Width (ft)	Area (ft^2)	cfs	gpm	
COMPARTMENT 1	2/18/2013	J Gisseman / T Barbee	4.87	3.35	0.448*	10.24	277.4	1386654.1093	2267944.2692	6	1.79	0.35	802	
COMPARTMENT 2	2/18/2013	J Gisseman / T Barbee	4.80	3.18	0.430*	9.77	280.7	1386652.6466	2267938.4502	6	6.36	1.79	2856	
COMPARTMENT 3	2/18/2013	J Gisseman / T Barbee	4.79	3.15	0.433*	9.69	277.0	1386651.1839	2267932.6313	6	4.93	1.28	2214	
COMPARTMENT 4	2/18/2013	J Gisseman / T Barbee	4.94	3.23	0.455*	9.56	263.8	1386649.6693	2267926.8642	6	6.35	2.40	2850	
COMPARTMENT 5	2/18/2013	J Gisseman / T Barbee	4.67	3.72	0.507*	8.40	250.0	1386648.2585	2267920.9933	6	4.86	0.22	2182	
COMPOSITE	2/18/2013	J Gisseman / T Barbee	5.77	3.40	0.453*	9.70	218.9	-	-	30	24.3	6.03	10904	

*Value is specific conductivity, not electrical conductivity

**Northing and easting values are estimates based on surveyed benchmark on east bank of river at this location

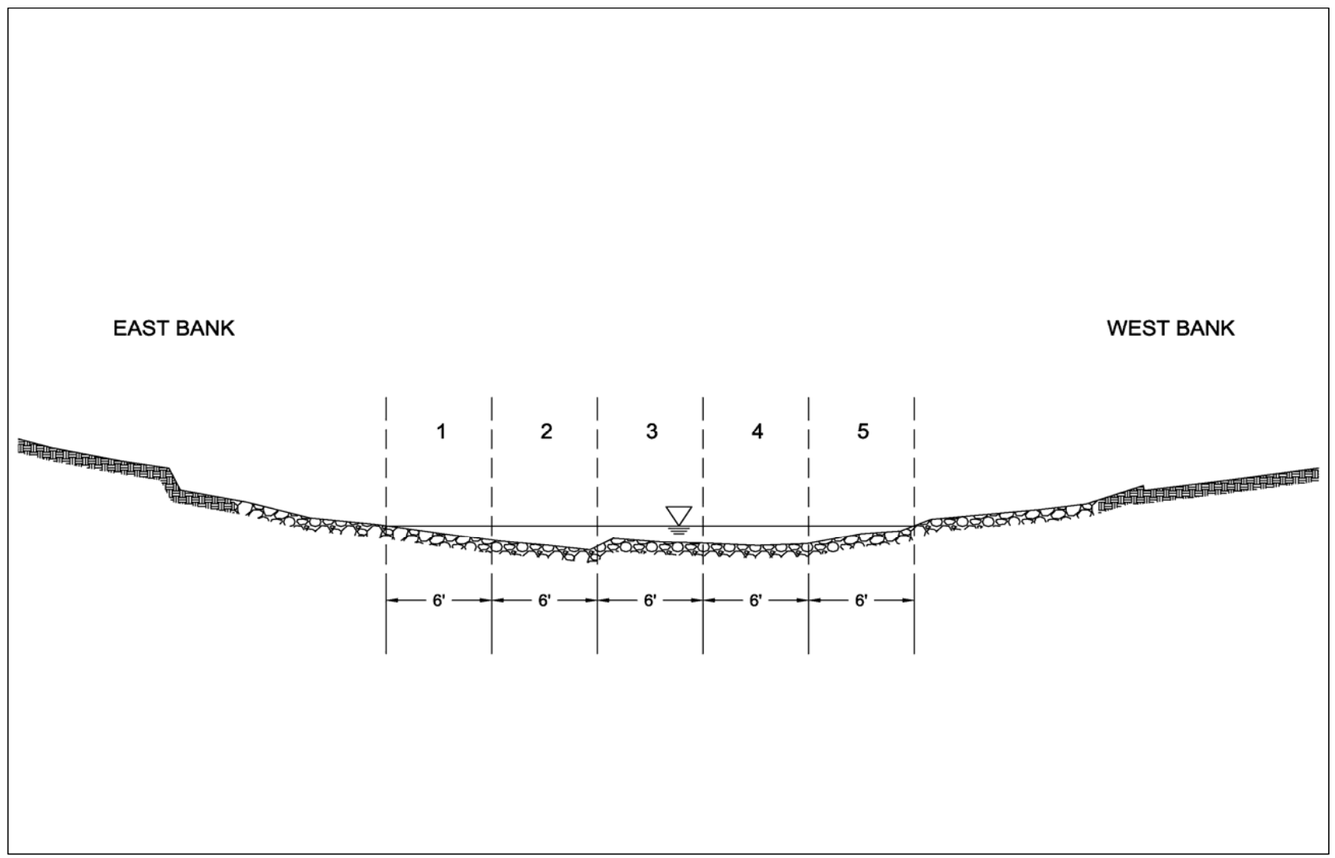

Table 3F - DR-7 Cross Section Composite Sampling Field Data and Flow Information Summary, February 2013

			Field Measurements					GPS Location (Colorado State Plane NAD83)		Flow Data				Comments
Sample Location	Date of Sample Collection	Field Technicians	pH	Temp (°C)	EC (mS/cm)	Dissolved Oxygen (ppm)	Oxydation Reduction Potential (ORP, mV)	Northing**	Easting**	Compartment Geometry		Average Flowrate		
										Width (ft)	Area (ft^2)	cfs	gpm	
COMPARTMENT 1	2/18/2013	J Gisseman / T Barbee	3.61	3.42	0.662	10.25	394.7	1385879.0935	2267954.6556	6	2.11	0.29	947	
COMPARTMENT 2	2/18/2013	J Gisseman / T Barbee	3.64	3.33	0.650	10.02	390.9	1385877.3106	2267948.9267	6	1.48	1.22	665	
COMPARTMENT 3	2/18/2013	J Gisseman / T Barbee	3.79	3.04	0.606	9.96	379.2	1385875.5276	2267943.1977	6	0.68	0.14	307	
COMPARTMENT 4	2/18/2013	J Gisseman / T Barbee	4.45	3.05	0.581	9.97	342.1	1385873.7447	2267937.4687	6	3.31	2.24	1484	
COMPARTMENT 5	2/18/2013	J Gisseman / T Barbee	4.66	3.12	0.582	9.94	325.6	1385871.9617	2267931.7398	6	3.59	2.37	1612	
COMPARTMENT 6	2/18/2013	J Gisseman / T Barbee	4.90	3.18	0.581	9.86	308.6	1385870.1787	2267926.0108	6	2.62	2.26	1177	
COMPARTMENT 7	2/18/2013	J Gisseman / T Barbee	4.95	3.74	0.603	9.86	301.0	1385868.3958	2267920.2818	6	1.08	0.58	486	
COMPOSITE	2/18/2013	J Gisseman / T Barbee	7.07	4.01	0.613*	9.00	193.4	-	-	42	14.88	9.11	6677	

*Value is specific conductivity, not electrical conductivity

**Northing and easting values are estimates based on surveyed benchmark on east bank of river at this location

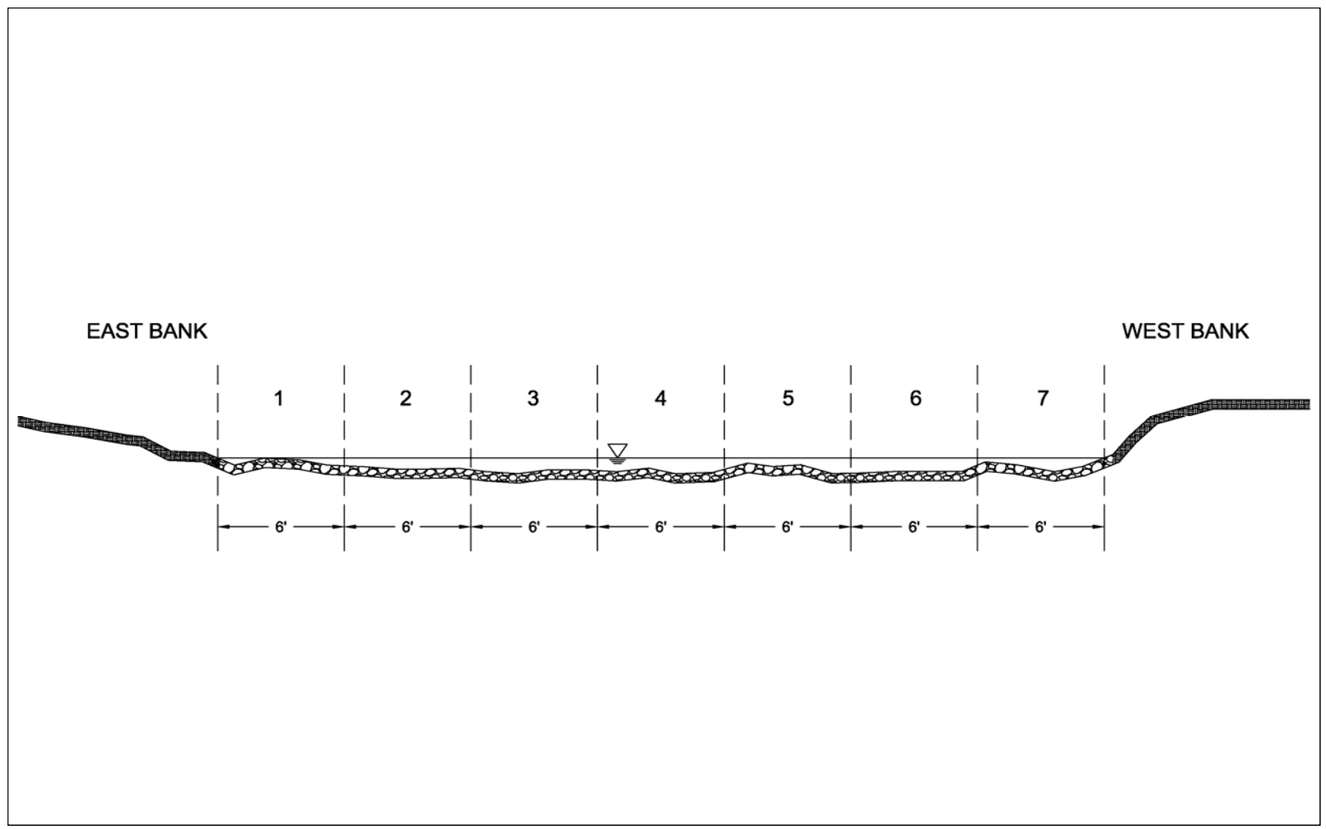

Table 3G - DR-4-SW Cross Section Composite Sampling Field Data and Flow Information Summary, February 2013

			Field Measurements					GPS Location (Colorado State Plane NAD83)		Flow Data				Comments
Sample Location	Date of Sample Collection	Field Technicians	pH	Temp (°C)	EC (mS/cm)	Dissolved Oxygen (ppm)	Oxydation Reduction Potential (ORP, mV)	Northing	Easting	Compartment Geometry		Average Flowrate		
										Width (ft)	Area (ft^2)	cfs	gpm	
COULD NOT OBTAIN FLOW MEASUREMENTS DUE TO EXCESSIVE ICE BUILDUP ON RIVER PREVENTING SAFE ACCESS														

ANDERSON
ENGINEERING COMPANY INC.

TABLE 4A - Surface Water Analytical Sampling Results Summary, February 2013

			Metals (µg/L)																								Non-Metals (mg/L, unless otherwise indicated)														
Field Sample ID	Date Collected	Fraction	Aluminum	Antimony	Arsenic	Barium	Beryllium	Cadmium	Calcium	Chromium	Cobalt	Copper	Iron	Lead	Magnesium	Manganese	Mercury	Molybdenum	Nickel	Potassium	Selenium	Silver	Sodium	Thallium	Vanadium	Zinc	Alkalinity, Bicarbonate (CaCO3)	Alkalinity, Carbonate (CaCO3)	Alkalinity, Total as CaCO3	Chloride	Cyanide	Hardness (µg/L as CaCO3)	Nitrogen, NO2 plus NO3	Salinity, as dissolved solids	Salinity, as sea water (PSU)	Silica (µg/L)	Sulfate	Sulfide	TDS	TOC	TSS
DR-1	2/18/13	Total	9.3	<0.50	<0.50	77.0	<0.20	<0.080	54400	<0.50	<0.50	<0.50	<50.0	<0.10	7720	10.9	<0.20	1.0	<0.50	750	0.53	<0.50	3540	<0.10	0.14	<5.0	106	<20.0	106	1.7	0.0073	168000	0.21	208	0.16	5900	57.6	<0.050	196	0.59	<5.0
		Dissolved	<4.0	<0.50	<0.50	74.4	<0.20	<0.080	61000	<0.50	<0.50	0.61	<50.0	<0.10	7810	9.3	<0.20	1.0	<0.50	722	0.54	<0.50	3600	<0.10	<0.10	<5.0																
		Potentially Dissolved	<50.0	0.051J	<1.0	69.2	<0.50	<0.50	52500	0.57J	<1.0	<1.0	26.3J	1.1	7040	9.8	<0.20	1.0	<1.0	688	0.61J	<0.50	3530	<1.0	<1.0	3.8J																
DR-2	2/18/13	Total	77.3	<0.50	<0.50	74.5	<0.20	<0.080	74100	<0.50	<0.50	0.62	260	0.32	9140	304	<0.20	1.4	<0.50	1190	0.60	<0.50	4080	<0.10	0.30	11.5	118	<20.0	118	1.7	<0.0050	223000	0.18	299	0.23	7570	95.9	<0.050	262	0.63	<5.0
		Dissolved	<4.0	<0.50	<0.50	69.3	<0.20	<0.080	78900	<0.50	<0.50	<0.50	<50.0	<0.10	9200	258	<0.20	1.4	<0.50	1150	0.60	<0.50	4140	<0.10	<0.10	<5.0																
		Potentially Dissolved	9.1J	0.054J	0.24J	64.5	<0.50	<0.50	71200	0.93J	0.084J	<1.0	90.6	1.2	8640	243	<0.20	1.2	<1.0	1130	0.52J	<0.50	4210	<1.0	<1.0	11.6																
DR-3	2/8/13	Total	1010	<0.50	2.2	20.2	1.0	14.9	245000	<0.50	2.5	188	11400	20.3	18900	1680	<0.20	17.9	3.6	7890	<0.50	<0.50	10800	<0.10	0.25	3170	102	<20.0	102	<1.0	<0.0050	689000	<0.10	830	0.65	20100	693	<0.050	1030	0.13J	38.0
		Dissolved	762	<0.50	1.6	20.5	0.80	14.0	270000	<0.50	2.9	148	9120	14.6	19000	1840	<0.20	17.7	6.6	8200	<0.50	<0.50	11500	<0.10	0.20	3140																
		Potentially Dissolved	1020	0.35J	2.3	20.9	1.1	14.8	253000	1.1	2.5	195	11800	22.4	19200	1730	<0.20	19.0	2.3	8790	<1.0	<0.50	12600	0.071J	<1.0	2910																
DR-4	2/18/13	Total	257	<0.50	0.58	20.4	0.40	11.2	260000	<0.50	2.6	55.2	3180	5.2	19500	1670	<0.20	17.6	3.8	7730	<0.50	<0.50	12200	<0.10	0.11	2300	101	<20.0	101	<1.0	<0.0050	729000	0.10	795	0.62	16700	643	<0.050	1050	<0.50	9.0
		Dissolved	41.9	<0.50	<0.50	21.1	<0.20	9.9	287000	<0.50	2.6	7.1	454	0.45	20400	1710	<0.20	18.0	4.6	8580	<0.50	<0.50	13100	<0.10	<0.10	1950																
		Potentially Dissolved	251	0.22J	0.61J	19.0	0.28J	10.7	246000	0.68J	2.3	48.7	3010	6.2	18600	1580	<0.20	15.4	2.5	7770	<1.0	<0.50	11800	0.068J	<1.0	2000																
DR-5	2/18/13	Total	135	<0.50	<0.50	20.0	0.23	8.6	263000	<0.50	2.2	31.2	2140	3.0	19800	1600	<0.20	15.8	3.3	7580	<0.50	<0.50	11700	<0.10	<0.10	1870	116	<20.0	116	<1.0	0.0096	739000	0.10	<6.4	<0.014	16500	625	0.16	1070	<0.50	8.0
		Dissolved	6.5	<0.50	<0.50	20.1	<0.20	<0.080	285000	<0.50	2.7	1.6	199	<0.10	21200	1640	<0.20	16.8	6.6	8640	<0.50	<0.50	13000	<0.10	<0.10	1380																
		Potentially Dissolved	138	0.19J	0.40J	18.8	0.18J	7.8	249000	0.76J	2.0	26.5	2000	3.7	19000	1510	<0.20	14.4	2.1	7840	<1.0	<0.50	11900	0.062J	<1.0	1590																
DR-6	2/18/13	Total	76.9	<0.50	<0.50	20.7	0.22	5.7	279000	<0.50	2.2	18.6	1370	1.7	21600	1650	<0.20	15.3	3.2	8440	<0.50	<0.50	13700	<0.10	<0.10	1780	141	<20.0	141	<1.0	0.010	785000	0.10	860	0.67	19600	646	0.077	1110	<0.50	5.0
		Dissolved	8.9	<0.50	<0.50	20.6	<0.20	<0.080	301000	<0.50	2.2	0.69	247	<0.10	24600	1680	<0.20	15.6	4.1	9270	<0.50	<0.50	15500	<0.10	<0.10	1520																
		Potentially Dissolved	80.1	0.21J	0.45J	19.8	0.16J	5.6	269000	0.58J	2.3	16.7	1350	30.7	22200	1580	<0.20	14.1	3.8	8800	<1.0	<0.50	14600	0.12J	<1.0	1620																
DR-7	2/18/13	Total	12.9	<0.50	1.1	63.2	<0.20	0.52	115000	<0.50	<0.50	1.6	312	0.16	13800	432	<0.20	2.8	0.54	3020	<0.50	<0.50	8250	<0.10	<0.10	186	160	<20.0	161	1.7	<0.0050	344000	0.16	511	0.39	13600	183	<0.050	449	0.55	<5.0
		Dissolved	101	<0.50	0.79	63.1	<0.20	<0.080	126000	0.50	<0.50	0.82	116	<0.10	15000	444	<0.20	2.9	0.85	3380	<0.50	<0.50	8690	<0.10	<0.10	176																
		Potentially Dissolved	14.4J	0.083J	1.1	59.8	0.11J	0.56	114000	0.70J	0.41J	2.6	321	14.4	13700	411	<0.20	2.7	0.43J	3170	0.43J	<0.50	8480	0.047J	<1.0	208																
DR-4-SW	2/20/13	Total	15.5	<0.50	<0.50	67.1	<0.20	0.75	107000	<0.50	<0.50	1.2	176	0.30	13300	434	<0.20	2.3	0.73	2540	<0.50	<0.50	6900	<0.10	<0.10	248	156	<20.0	156	2.0	<0.0050	322000	<0.10	407	0.31	12100	172	<0.050	430	0.58	<5.0
		Dissolved	12.7	<0.50	<0.50	67.1	<0.20	0.46	122000	<0.50	0.55	1.5	79.1	<0.10	13700	444	<0.20	2.3	4.5	2700	0.51	<0.50	7230	<0.10	<0.10	249																
		Potentially Dissolved	14.9J	0.079J	0.48J	62.0	<0.50	0.75	101000	0.50J	0.39J	1.1	173	0.87J	12900	402	<0.20	2.2	<1.0	2510	0.45J	0.64	7120	0.091J	<1.0	229																
DR-G	2/20/13	Total	9.6	<0.50	<0.50	85.8	<0.20	0.40	105000	<0.50	<0.50	1.8	59.8	0.13	12800	119	<0.20	1.9	<0.50	2190	<0.50	<0.50	6390	<0.10	0.11	129	164	<20.0	164	2.0	<0.0050	314000	<0.10	396	0.30	11000	141	<0.050	408	0.59	<5.0
		Dissolved	12.9	<0.50	<0.50	84.8	<0.20	0.30	112000	<0.50	<0.50	2.3	<50.0	<0.10	12900	118	<0.20	1.9	3.2	2130	<0.50	<0.50	6560	<0.10	<0.10	125																
		Potentially Dissolved	7.8J	0.058J	0.32J	79.2	<0.50	0.40J	94500	0.50J	0.10J	0.86J	66.9	0.44J	12600	113	<0.20	1.9	<1.0	2130	0.44J	<0.50	6440	0.029J	<1.0	125																

ANDERSON
ENGINEERING COMPANY INC.

TABLE 4B - Groundwater Analytical Sampling Results Summary, February 2013

			Metals (µg/L)																								Non-Metals (mg/L, unless otherwise indicated)														
Field Sample ID	Date Collected	Fraction	Aluminum	Antimony	Arsenic	Barium	Beryllium	Cadmium	Calcium	Chromium	Cobalt	Copper	Iron	Lead	Magnesium	Manganese	Mercury	Molybdenum	Nickel	Potassium	Selenium	Silver	Sodium	Thallium	Vanadium	Zinc	Alkalinity, Bicarbonate (CaCO3)	Alkalinity, Carbonate (CaCO3)	Alkalinity, Total as CaCO3	Chloride	Cyanide	Hardness (µg/L as CaCO3)	Nitrogen, NO2 plus NO3	Salinity, as dissolved solids	Salinity, as seawater (PSU)	Silica (µg/L)	Sulfate	Sulfide	TDS	TOC	TSS
GW-1	2/6/13	Total	650	<0.50	1.4	102	<0.20	0.50	61200	0.81	1.3	12.4	1140	8.7	6710	286	<0.20	<0.50	2.8	649	0.60	<0.50	2370	<0.10	1.7	33.8	107	<20.0	107	1.3	<0.0050	180000	<0.10	260	0.20	8330	66.8	<0.050	184	0.81	199
		Dissolved	285	<0.50	61.4	<0.20	<0.080	60700	<0.50	0.77	2.5	405	1.3	7130	46.0	<0.20	1.3	2.9	686	0.57	<0.50	<0.20	2720	<0.10	0.69	13.8															
		Potentially Dissolved	729	0.14J	1.7	109	0.18J	0.46J	57600	1.2	1.8	10.8	1360	11.7	7810	392	<0.20	0.23J	2.9	754	0.92J	0.22J	2900	<1.0	1.7	36.0															
GW-3	2/8/13	Total	3820	<0.50	7.5	77.2	0.58	4.7	126000	5.5	6.1	112	7180	96.7	15400	1610	<0.20	<0.50	8.3	2650	3.3	0.65	2480	<0.10	5.0	704	190	<20.0	190	1.2	<0.0050	379000	<0.10	482	0.37	21000	192	<0.050	475	1.1	480
		Dissolved	2300	<0.50	3.1	54.9	<0.20	0.61	134000	3.1	2.3	15.3	3630	26.4	15900	394	<0.20	1.0	4.6	2760	2.8	<0.50	2740	<0.10	4.8	106															
		Potentially Dissolved	3670	0.26J	7.4	92.0	0.52	4.1	129000	6.3	7.6	104	8100	115	15600	2060	<0.20	0.29J	8.7	2900	3.9	1.1	3020	0.028J	5.6	606															
GW-4	2/14/13	Total	51300	0.71	30.4	826	2.6	19.5	147000	75.8	26.4	204	83600	154	45900	1760	<0.20	24.3	57.3	8960	5.1	3.5	6260	0.91	104	1570	127	<20.0	127	1.3	0.0053	557000	0.13	454	0.34	118000	235	<0.050	503	1.4	1390
		Dissolved	5.7	<0.50	1.4	26.2	<0.20	0.081	133000	<0.50	0.86	0.74	534	<0.10	13200	486	<0.20	10.6	2.0	2320	<0.50	<0.50	5290	<0.10	0.33	17.2															
		Potentially Dissolved	10400	0.34J	7.2	118	2.2	29.0	144000	23.2	14.8	171	27200	207	18400	1640	<0.20	4.1	24.4	3600	5.5	<0.50	5530	0.42J	31.4	1750															
GW-5	2/7/13	Total	2500	0.50	152	11.9	0.32	22.2	513000	1.9	7.2	129	15600	2640	40600	5550	<0.20	8.1	10.4	3880	<0.50	<0.50	5850	0.18	4.0	11200	170	<20.0	174	1.2	<0.0050	1450000	<0.10	1610	1.3	38600	1300	1.3	1880	0.60	186
		Dissolved	5.6	<0.50	62.4	11.8	<0.20	<0.080	477000	<0.50	4.3	<0.50	6640	0.50	41900	5290	<0.20	10.2	3.8	3830	<0.50	<0.50	6520	<0.10	<0.10	3620															
		Potentially Dissolved	2580	0.64J	143	12.3	0.41J	28.6	447000	3.0	7.4	241	16700	3800	37600	5500	<0.20	8.6	8.2	4080	0.96J	<0.50	6940	0.31J	4.2	10500															
GW-6	NA	Total	WELL FROZEN - COULD NOT ACCESS																																						
		Dissolved																																							
		Potentially Dissolved																																							
GW-7	2/15/13	Total	3310	<0.50	4.2	20.7	0.40	3.3	287000	5.0	1.6	47.6	7010	153	29500	73.4	<0.20	2.2	5.1	3100	3.1	<0.50	7620	0.17	3.9	331	251	<20.0	251	<1.0	<0.0050	837000	0.49	878	0.68	20800	532	<0.050	1110	1.1	982
		Dissolved	77.1	<0.50	<0.50	11.0	<0.20	2.8	305000	<0.50	0.67	5.1	<50.0	3.2	27900	23.4	<0.20	1.2	3.2	2670	1.2	<0.50	7890	<0.10	<0.10	157															
		Potentially Dissolved	3860	0.16J	3.0	15.7	0.62	2.9	253000	5.0	1.7	88.0	8320	313	25400	52.1	<0.20	0.70J	4.3	2850	3.3	0.48J	7700	0.19J	1.9	355															
EB-1	2/8/13	Total	357	<0.50	12.1	14.0	0.26	1.2	479000	0.65	5.9	23.0	6540	224	31100	4930	<0.20	14.0	5.8	5810	<0.50	<0.50	6780	<0.10	0.56	1880	177	<20.0	177	1.1	<0.0050	1320000	<0.10	1340	1.1	27300	1350	0.10	1880	0.85	46.0
		Dissolved	12.1	<0.50	3.9	12.4	<0.20	0.16	531000	<0.50	6.3	0.97	3550	<0.10	32900	5370	<0.20	14.4	6.5	6150	<0.50	<0.50	7670	<0.10	<0.10	1620															
		Potentially Dissolved	422	0.18J	12.3	16.0	0.21J	1.4	467000	1.2	5.8	28.1	7180	285	28900	4980	<0.20	14.5	2.6	6680	<1.0	0.074J	8460	<1.0	0.66J	1720															
EB-2	2/15/13	Total	25900	1.5	472	42.3	7.6	9.8	346000	3.1	102	148	775000	1100	171000	42000	<0.20	5.6	154	17800	4.6	4.5	6360	0.18	3.6	89600	<20.0	<20.0	<20.0	3.5	<0.0050	1570000	<0.10	2390	2.0	58500	3210	<0.050	4720	<0.50	326
		Dissolved	21400	<2.5	384	9.8	9.0	3.1	376000	<2.5	111	12.3	772000	110	176000	40000	<0.20	3.3	172	16800	3.4	<2.5	6790	<0.50	<0.50	89000															
		Potentially Dissolved	19600	0.50J	397	11.9	6.7	4.3	325000	1.3	102	45.4	732000	554	167000	39200	<0.20	3.0	145	16100	4.8	0.099J	6530	0.16J	0.73J	87800															
MW-1 SHALLOW	2/14/13	Total	27500	0.90	46.9	416	2.0	2.9	248000	34.6	15.4	168	48500	435	36400	1710	<0.20	16.2	27.8	9650	18.6	3.6	10800	0.81	44.8	641	81.1	<20.0	81.1	<1.0	<0.0050	769000	<0.10	792	0.62	99800	559	<0.050	1020	0.86	384
		Dissolved	5680	<0.50	9.2	88.3	0.45	0.82	256000	6.9	3.2	35.2	9000	94.2	24400	283	<0.20	7.8	8.9	6520	8.9	<0.50	12200	0.22	9.6	174															
		Potentially Dissolved	4640	0.24J	5.2	49.1	1.0	2.7	221000	7.0	7.6	73.2	8250	274	21700	1270	<0.20	2.3	7.1	5680	9.3	2.0	11000	0.18J	8.2	380															
MW-1 DEEP	2/14/13	Total	18900	0.86	40.1	290	1.4	19.7	245000	29.5	10.5	337	34300	622	30000	3850	<0.20	19.7	21.6	16200	16.4	3.0	11900	0.54	35.7	2680	90.4	<20.0	90.4	<1.0	<0.0050	735000	<0.10	849	0.66	77400	562	<0.050	1030	0.58	804
		Dissolved	<4.0	<0.50	<0.50	16.7	<0.20	2.0	252000	<0.50	<0.50	2.2	<50.0	<0.10	19800	6.2	<0.20	8.7	1.5	13400	9.2	<0.50	12400	<0.10	<0.10	435															
		Potentially Dissolved	4430	0.33J	11.6	47.4	0.80	18.8	220000	11.3	4.9	263	9560	428	20700	2640	<0.20	2.6	7.5	12500	12.0	1.3	11100	0.18J	9.7	2300															
MW-2 SHALLOW	NA	Total	DRY WELL																																						
		Dissolved																																							
		Potentially Dissolved																																							
MW-2 DEEP	2/13/13	Total	19800	1.1	52.6	273	1.9	10.1	251000	22.1	9.6	130	51600	193	26900	1270	<0.20	26.7	17.7	6640	5.9	2.4	10900	0.76	44.7	567	80.8	<20.0	80.8	<1.0	<0.0050	738000	0.13	776	0.60	83200	617	<0.050	1020	0.80	752
		Dissolved	<4.0	<0.50	<0.50	10.7	<0.20	0.84	252000	<0.50	0.54	1.6	<50.0	<0.10	19900	1.6	<0.20	8.1	1.5	1730	1.2	<0.50	10600	<0.10	<0.10	20.5															
		Potentially Dissolved	3680	0.29J	5.4	44.2	0.90	8.7	230000	8.1	3.4	48.6	11100	152	21700	818	<0.20	3.7	3.5	2240	4.2	1.6	10700	0.17J	10.1	275															
MW-3 SHALLOW	NA	Total	DRY WELL																																						
		Dissolved																																							
		Potentially Dissolved																																							
MW-3 DEEP	2/13/13	Total	13400	0.68	14.7	224	1.0	10.0	239000	13.9	6.6	108	23000	158	27700	1780	0.30	12.7	11.3	6980	3.4	1.0	12400	0.49	29.1	493	83.6	<20.0	83.6	<1.0	<0.0050	712000	0.11	941	0.74	60600	622	<0.050	1040	2.2	1460
		Dissolved	73.7	<0.50	0.78	21.7	<0.20	0.43	249000	<0.50	1.1	2.4	1010	1.4	24400	1570	<0.20	8.4	0.85	4030	<0.50	<0.50	12300	<0.10	0.35	39.3															
		Potentially Dissolved	3020	0.26J	3.9	46.0	0.45J	8.1	226000	4.5	3.5	61.8	7700	137	24700	1660	<0.20	3.5	3.5	4220	1.4	0.070J	11500	0.30J	9.0	319															
MW-4 SHALLOW	2/15/13	Total	6620	<0.50	4.6	88.2	0.57	1.9	286000	7.0	2.9	31.7	7220	35.6	32500	276	<0.20	2.5	5.3	4270	27.0	<0.50	8430	0.16	8.7	243	274	<20.0	274	1.1	<0.0050	848000	0.44	849	0.66	39500	523	<0.050	1090	0.67	378
		Dissolved	3580	<0.50	2.7	62.3	0.41	1.8	301000	4.3	2.1	21.8	4140	25.1	31400	219	<0.20	1.9	6.5	3570	26.3	<0.50	8330	0.10	4.7	209															
		Potentially Dissolved	2090	0.12J	2.2	51.3	0.42J	1.8	254000	4.3	2.5	24.6	3260	42.6	28000	271	<0.20	1.0	2.5	2990	25.4	0.15J	8280	0.084J	3.0	210															
MW-4 DEEP	2/14/13	Total	65300	0.85	154	977	5.1	21.1	308000	68.7	82.3	853	153000	770	59800	14700	<0.20	50.3	70.8	9690	49.6	13.2	6610	<2.0	112	2850	315	<20.0	315	<1.0	<0.0050	1020000	0.13	1290	1.0	158000	404	<0.050	1130	1.8	1480
		Dissolved	422	<0.50	0.78	20.0	<0.20	2.1	309000	0.84	0.96	10.2	668	4.0	33100	67.2	<0.20	2.5	2.7	3460	36.2	<0.50	7230	<0.10	0.81	305															
		Potentially Dissolved	4880	0.23J	6.1	59.0	0.90	4.8	272000	6.9	6.3	119	11600	126	32300	899	<0.20	1.0	5.3	3680	39.0	2.0	7680	0.022J	8.8	627															
MW-5 SHALLOW	2/7/13	Total	17000	0.63	264	7.2	4.5	120	405000	<0.50	69.6	257	458000	2400	131000	27000	<0.20	1.4	132	2520	3.1	0.58	12200	0.32	3.9	128000	<20.0	<20.0	<20.0	1.5	<0.0050	1550000	<0.10	2600	2.1	53600	3220	0.051	4180	0.41J	430
		Dissolved	19800	1.4	239	32.8	5.7	120	492000	<0.50	72.8	198	545000	2570	148000	29900	<0.20	2.1	132	2860	2.0	8.3	24300	<2.0	4.5	132000															
		Potentially Dissolved	17500	0.82J	309	7.4	4.9	142	389000	8.5	81.9	518	497000	2620	120000	27400	<0.20	1.9	150	2560	8.7	0.12J	22900	0.37J	5.7	132000															
MW-5 DEEP	2/7/13	Total	3040	<0.50	199	15.5	2.0	2.7	295000	1.1	8.6	51.5	63400	871	47200	8900	<0.20	2.6	9.2	6900	0.78	<0.50	6370	0.19	4.7	7850	105	<20.0	105	1.0	<0.0050	931000	<0.10	1080	0.85	31100	1030	<0.050	1490	0.67	426
		Dissolved	1150	<0.50	154	18.9	1.4	0.59	339000	<0.50	7.9	10.9	65900	68.6	50600	9740	<0.20	12.3	7.4	7440	<0.50	<0.50	7360	<0.10	1.3	7390															
		Potentially Dissolved	2830	0.20J	191	15.6	2.1	2.5	299000	3.3	8.5	55.4	64100	975	48200	9110	<0.20	3.7	7.0	7600	1.5	<0.50	7670	0.20J	4.2	7320															
MW-6 SHALLOW	2/14/13	Total	13800	<0.50	69.3	114	1.6	6.7	408000	11.0	9.0	50.7	69100	80.2	61600	8580	<0.20	7.4	12.8	15600	1.7	<0.50	4130	0.35	16.4	1580	90.8	<20.0	90.8	1.2	<0.0050	1270000	<0.10	1280	1.0	72900	990	<0.050	1850	1.5	3410
		Dissolved	744	<0.50	41.8	16.7	0.92	0.19	435000	<0.50	4.6	4.4	56900	0.35	59400	8530	<0.20	5.1	4.2	13400	<0.50	<0.50	4250	<0.10	0.12	680															
		Potentially Dissolved	9220	0.28J	80.0	34.9	1.5	16.5	386000	9.6	11.1	72.3	65100	196	58800	8790	<0.20	3.0	14.2	13400	2.5	<0.50	4570	0.38J	11.1	2600															
MW-6 DEEP	2/14/13	Total	9460	0.66	49.0	94.0	1.1	3.4	293000	9.2	6.7	48.4	30500	76.3	44700	7430	<0.20	10.4	10.6	8580	2.0	<0.50	4860	0.16	18.2	1360	155	<20.0	155	1.1	<0.0050	915000	<0.10	988	0.78	52500	621	<0.050	1270	1.6	1320
		Dissolved	502	<0.50	17.9	16.5	0.58	0.12	298000	0.62	3.4	2.9	19500	2.4	39700	7010	<0.20	6.2	4.6	6530	0.68	<0.50	4880	<0.10	0.53	325															
		Potentially Dissolved	8100	0.18J	90.8	41.1	1.6	14.7	262000	11.1	10.7	131	35600	248	39800	7350	<0.20	2.9	17.8	6800	4.6	<0.50	4880	0.12J	23.9	4690															
MW-101	2/6/13	Total	1610	<0.50	2.4	26.3	0.48	2.9	294000	2.4	9.9	20.2	27800	314	36000	4290	<0.20	0.84	7.8	5770	1.9	<0.50	12600	0.13	2.9	447	287	<20.0	287	1.1	<0.0050	883000	0.33	991	0.78	18000	699	<0.050	1210	1.4	468
		Dissolved	634	<0.50	0.91	20.6	0.21	0.49	337000	0.71	9.8	5.3	27500	30.8	38200	4690	<0.20	2.6	9.0	5970	2.0	<0.50	15800	<0.10	0.94	245															
		Potentially Dissolved	1220	0.13J	1.7	26.8	0.42J	1.8	305000	2.9	9.0	14.6	27000	203	33500	4310	<0.20	0.86J	5.2	6300	2.0	0.066J	14700	0.12J	2.2	333															
MW-102	2/7/13	Total	5740	<0.50	7.4	58.9	1.4	3.1	212000	7.8	11.3	44.8	7120	76.6	22300	1220	<0.20	0.88	10.4	2420	3.2	<0.50	5790	<0.10	7.0	572	49.9	<20.0	49.9	<1.0	0.0051	621000	0.40	818	0.64	23700	499	<0.050	899	0.92	554
		Dissolved	12500	0.66	16.1	93.4	1.1	2.1	249000	16.8	19.2	48.1	18900	77.1	32200	2280	<0.20	7.8	18.9	3920	2.7	<0.50	6850	<0.10	20.8	512															
		Potentially Dissolved	5120	0.15J	4.0	57.9	1.6	3.3	230000	8.0	12.7	47.1	6780	107	23600	1380	<0.20	0.22J	9.9	2530	5.3	0.40J	7080	<1.0	5.3	561															
MW-103	2/14/13	Total	6590	0.54	31.1	99.9	1.6	2.1	321000	8.0	6.9	24.8	24200	22.2	34500	9560	<0.20	12.6	7.6	5130	0.83	<0.50	15200	0.41	13.0	334	338	<20.0	338	1.1	<0.0050	944000	<0.10	957	0.75	56100	566	<0.050	1270	1.3	234
		Dissolved	24.4	<0.50	2.9	28.7	0.30	0.19	327000	<0.50	4.2	1.4	7790	0.11	32000	8780	<0.20	7.4	4.8	3850	<0.50	<0.50	15300	<0.10	<0.10	173															
		Potentially Dissolved	1240	0.16J	10.5	42.6	0.96	2.0	296000	3.3	5.1	11.3	13500	17.3	31400	8890	<0.20	4.3	3.0	4050	0.58J	<0.50	14300	0.32J	3.7	276															
MW-104	2/14/13	Total	4710	<0.50	5.2	137	0.33	3.9	256000	7.7	3.8	28.1	7600	35.5	26000	1570	<0.20	15.2	6.6	15100	1.7	<0.50	15400	0.12	10	1110	126	<20.0	126	<1.0	<0.0050	747000	<0.10	893	0.70	30900	606	<0.050	1120	0.61	244
		Dissolved	10.0	<0.50	<0.50	17.3	<0.20	2.1	276000	<0.50	<0.50	2.4	<50.0	0.16	25000	33.2	<0.20	8.9	3.8	14300	1.4	<0.50	15200	<0.10	<0.10	763															
		Potentially Dissolved	1130	0.18J	1.6	46.2	0.14J	3.3	237000	3.4	1.6	13.5	2650	23.9	23200	755	<0.20	3.5	2.0	13200	1.7	0.21J	14000	<1.0	2.6	927															
MW-202	NA	Total	DRY WELL																																						
		Dissolved																																							
		Potentially Dissolved																																							
MW-204	2/7/13	Total	3780	<0.50	2.5	59.5	0.93	9.2	248000	12.6	10.4	25.8	7910	56.3	21700	1580	<0.20	2.1	13.2	2300	0.65	<0.50	9850	0.10	7.3	120	119	<20.0	119	<1.0	<0.0050	709000	<0.10	900	0.70	85300	666	<0.050	1010	0.50	310
		Dissolved	10100	<0.50	2.9	105	0.46	3.4	265000	19.2	6.8	15.5	13000	23.2	29900	1570	<0.20	4.7	13.6	3560	<0.50	<0.50	11200	<0.10	16.3	94.0															
		Potentially Dissolved	4220	0.15J	1.7	63.7	1.0	9.0	250000	15.2	10.4	26.7	9060	69.9	23500	1620	<0.20	2.5	12.7	2610	1.6	<0.50	11700	0.14J	8.6	126															
P13-102	2/15/13	Total	2180	<0.50	4.7	53.2	0.46	0.22	352000	4.2	13.4	10.1	5570	11.1	51800	26300	<0.20	5.1	7.4	5910	<0.50	<0.50	15100	0.12	4.9	106	158	<20.0	158	1.4	<0.0050	1090000	<0.10	1200	0.95	31000	976	<0.050	1630	<0.50	107
		Dissolved	1080	<0.50	2.7	36.3	0.30	0.18	370000	2.4	13.4	7.0	3500	6.3	51200	25500	<0.20	4.6	10.2	5840	<0.50	<0.50	15300	<0.10	2.6	95.7															
		Potentially Dissolved	449	0.13J	1.7	28.8	0.27J	0.22J	329000	2.8	12.4	4.7	2670	9.3	49000	25300	<0.20	2.7	4.6	5690	<1.0	<0.50	14500	0.098J	1.7	86.1															
P13-103	2/15/13	Total	5550	1.1	68.3	97.6	0.36	3.2	295000	7.4	5.2	226	48700	679	33600	2820	<0.20	11.4	7.7	5820	4.8	7.6	9950	0.42	8.4	610	140	<20.0	140	1.0	<0.0050	876000	<0.10	895	0.70	48600	717	<0.050	1250	0.85	1460
		Dissolved	7.3	<0.50	44.9	19.5	<0.20	0.088	306000	<0.50	1.8	1.1	13100	0.80	32300	2700	<0.20	7.8	2.5	4380	<0.50	<0.50	10500	<0.10	<0.10	140															
		Potentially Dissolved	1880	0.50J	74.4	36.9	0.42J	3.6	274000	5.4	3.3	186	23200	1050	31500	2880	<0.20	4.4	4.3	4800	1.7	0.32J	10500	0.46J	4.2	659															
AT-2	2/8/13	Total	1040	<0.50	1.0	82.0	0.43	1.9	164000	2.2	2.4	66.1	40200	50.7	14100	1400	<0.20	2.6	4.7	6900	<0.50	<0.50	9890	<0.10	1.5	592	<20.0	<20.0	<20.0	1.8	<0.0050	469000	<0.10	614	0.47	4090	549	<0.050	760	1.7	296
		Dissolved	7.2	<0.50	<0.50	73.1	<0.20	<0.080	183000	<0.50	<0.50	0.61	<50.0	<0.10	14400	468	<0.20	6.6	0.87	7100	<0.50	<0.50	11100	<0.10	<0.10	<5.0															
		Potentially Dissolved	920	0.15J	0.92J	83.8	0.40J	2.2	178000	3.4	2.0	76.7	40000	50.3	13700	1420	<0.20	2.9	3.3	7870	0.36J	<0.50	12000	0.027J	1.1	500															

ANDERSON
ENGINEERING COMPANY INC.

TABLE 4C - Quality Control Samples Analytical Sampling Results Summary, February 2013

			Metals (µg/L)																								Non-Metals (mg/L, unless otherwise indicated)													
Field Sample ID	Date Collected	Fraction	Aluminum	Antimony	Arsenic	Barium	Beryllium	Cadmium	Calcium	Chromium	Cobalt	Copper	Iron	Lead	Magnesium	Manganese	Mercury	Molybdenum	Nickel	Potassium	Selenium	Silver	Sodium	Thallium	Vanadium	Zinc	Alkalinity, Bicarbonate (CaCO3)	Alkalinity, Carbonate (CaCO3)	Alkalinity, Total as CaCO3	Chloride	Cyanide	Hardness (µg/L as CaCO3)	Nitrogen, NO2 plus NO3	Salinity, as dissolved solids	Salinity, as sea water (PSU)	Silica (µg/L)	Sulfate	Sulfide	TDS	TOC	TSS
DR-8 DUPLICATE OF DR-3	2/8/13	Total	995	<0.50	2.1	20.0	1.1	14.7	246000	0.76	2.5	188	11300	19.9	18800	1700	<0.20	18.1	3.8	7850	<0.50	<0.50	10700	<0.10	0.23	3200	104	<20.0	104	<1.0	<0.0050	693000	<0.10	818	0.64	20400	692	<0.050	1020	0.42J	35.0
		Dissolved	693	<0.50	1.6	21.4	0.67	14.0	263000	1.2	2.7	136	8250	12.5	19700	1780	<0.20	17.5	4.3	7960	<0.50	<0.50	11800	<0.10	0.19	3040															
		Potentially Dissolved	930	0.36J	2.1	20.1	1.1	14.2	255000	0.96J	2.4	179	10800	20.8	19100	1670	<0.20	18.6	2.1	8880	<1.0	<0.50	12700	0.065J	<1.0	2810															
DR-9 DUPLICATE OF MW-6 SHALLOW	2/14/13	Total	60600	1.0	214	468	4.1	52.7	415000	55.2	34.6	320	137000	607	79900	9090	<0.20	17.0	65.7	20100	11.3	2.7	4060	1.1	75.0	7610	80.5	<20.0	80.5	1.5	<0.0050	1370000	0.13	1290	1.0	147000	1180	<0.050	1850	1.7	584
		Dissolved	1430	<0.50	42.5	22.5	0.97	0.55	428000	0.74	4.8	5.9	56500	5.5	57500	8370	<0.20	5.1	5.3	13200	<0.50	<0.50	4080	<0.10	1.0	729															
		Potentially Dissolved	19800	0.22J	128	31.0	2.7	58.7	376000	15.7	26.4	219	77900	543	55700	8610	<0.20	3.1	37.2	13000	7.9	<0.50	4200	0.64J	24.2	8150															
DR-10 DUPLICATE OF P13-103	2/15/13	Total	12200	1.6	102	223	0.89	9.4	299000	19.3	12.0	709	108000	2200	35600	3050	<0.20	16.4	19.5	7450	13.9	20.5	10500	1.1	18.6	1680	139	<20.0	139	1.0	0.0080	893000	0.12	962	0.75	73000	698	<0.050	1250	0.72	500
		Dissolved	4550	1.0	65.1	92.8	0.32	3.1	313000	6.7	5.7	220	45600	671	34400	2890	<0.20	10	9.3	5630	4.5	6.9	10100	0.42	7.1	613															
		Potentially Dissolved	2300	0.51J	79.6	33.6	0.54	5.4	274000	6.7	4.1	262	26100	1560	31300	2930	<0.20	4.7	5.6	4830	1.8	0.28J	10400	0.63J	5.5	923															
DR-11 DUPLICATE OF DR-4	2/18/13	Total	256	<0.50	0.60	20.9	0.36	11.6	270000	<0.50	2.5	55.1	3260	5.5	19200	1720	<0.20	17.8	3.8	8040	<0.50	<0.50	12300	<0.10	0.10	2440	99.0	<20.0	99.0	<1.0	<0.0050	752000	0.11	790	0.61	17300	644	<0.050	1050	<0.50	6.0
		Dissolved	11.9	<0.50	<0.50	20.0	<0.20	9.4	279000	<0.50	2.6	2.4	<50.0	<0.10	20000	1670	<0.20	16.6	4.8	8410	<0.50	<0.50	13400	<0.10	<0.10	1860															
		Potentially Dissolved	255	0.26J	0.55J	19.8	0.31J	10.6	260000	0.81J	2.3	48.1	3020	6.1	19000	1620	<0.20	15.6	2.4	8300	<1.0	<0.50	12600	0.069J	<1.0	2020															
FB	2/18/13	Total	7.5	<0.50	<0.50	<0.30	<0.20	<0.080	69.1	<0.50	<0.50	<0.50	<50.0	<0.10	23.4	<0.50	<0.20	<0.50	<0.50	<20.0	<0.50	<0.50	343	<0.10	<0.10	<5.0	<20.0	<20.0	<20.0	<1.0	0.010	269	<0.10	<6.4	<0.014	<53.5	<1.0	<0.050	<5.0	<0.50	<5.0
		Dissolved	<4.0	<0.50	<0.50	<0.30	<0.20	<0.080	46.3	<0.50	<0.50	0.52	<50.0	<0.10	14.0	<0.50	<0.20	<0.50	<0.50	27.3	<0.50	<0.50	365	<0.10	<0.10	<5.0															
		Potentially Dissolved	<50.0	<1.0	<1.0	0.32J	<0.50	<0.50	156	0.93J	<1.0	<1.0	9.4J	0.31J	15.4J	0.95J	<0.20	<1.0	0.43J	<500	<1.0	<0.50	497J	<1.0	<1.0	3.5J															

ANDERSON
ENGINEERING COMPANY INC.

TABLE 4D - Dolores River Composite Sampling Analytical Sampling Results Summary, February 2013

			Metals (µg/L)																							Non-Metals (mg/L, unless otherwise indicated)													
Field Sample ID	Date Collected	Fraction	Aluminum	Antimony	Arsenic	Barium	Beryllium	Cadmium	Calcium	Chromium	Cobalt	Copper	Iron	Lead	Magnesium	Manganese	Mercury	Molybdenum	Nickel	Potassium	Selenium	Silver	Sodium	Thallium	Vanadium	Zinc	Alkalinity, Bicarbonate (CaCO3)	Alkalinity, Carbonate (CaCO3)	Alkalinity, Total as CaCO3	Chloride	Cyanide	Hardness (µg/L as CaCO3)	Nitrogen, NO2 plus NO3	Salinity, as dissolved solids	Salinity, as sea water (PSU)	Silica (µg/L)	Sulfate	Sulfide	TDS	TOC	TSS
DR-1 COMP	NA	Total	COULD NOT OBTAIN SAMPLE DUE TO EXCESSIVE ICE BUILDUP IN STREAM																																				
		Dissolved																																					
		Potentially Dissolved																																					
DR-2 COMP	2/18/13	Total	16.8	<0.50	<0.50	71.2	<0.20	<0.080	76800	<0.50	<0.50	<0.50	96.7	<0.10	9470	257	<0.20	1.4	<0.50	1220	0.53	<0.50	4460	<0.10	0.13	7.6	<20.0	<20.0	<20.0	1.7	0.0054	231000	0.10	321	0.24	8310	98.7	<0.050	277	0.57	<5.0
		Dissolved	<4.0	<0.50	<0.50	66.6	<0.20	<0.080	78500	<0.50	<0.50	1.3	<50.0	<0.10	9330	241	<0.20	1.3	<0.50	1300	0.53	<0.50	4380	<0.10	<0.10	<5.0															
		Potentially Dissolved	9.6J	0.067J	0.20J	65.5	<0.50	<0.50	76500	0.62J	0.16J	2.3	92.5	9.4	9190	239	<0.20	1.3	0.62J	1320	0.53J	<0.50	4720	0.040J	<1.0	28.8															
DR-7 COMP	2/18/13	Total	12.1	<0.50	0.67	65.5	<0.20	0.48	107000	<0.50	<0.50	1.5	285	0.16	12600	426	<0.20	2.6	0.58	2530	<0.50	<0.50	6950	<0.10	0.10	168	146	<20.0	146	2.0	<0.0050	320000	<0.10	388	0.29	11400	163	<0.050	402	0.55	<5.0
		Dissolved	10.2	<0.50	<0.50	65.7	<0.20	<0.080	114000	<0.50	<0.50	2.0	90.6	<0.10	12800	412	<0.20	2.7	0.72	2600	0.55	<0.50	6950	<0.10	0.11	150															
		Potentially Dissolved	10.6J	0.066J	0.62J	58.4	0.066J	0.42J	100000	0.78J	0.31J	2.0	257	0.78J	11400	373	<0.20	2.4	<1.0	2440	0.44J	<0.50	6680	0.029J	0.35J	152															
DR-4-SW COMP	NA	Total	COULD NOT OBTAIN SAMPLE DUE TO EXCESSIVE ICE BUILDUP IN STREAM																																				
		Dissolved																																					
		Potentially Dissolved																																					

ANDERSON
ENGINEERING COMPANY INC.

Table 5A - Relative Percent Difference (RPD) of Lab Analysis Between DR-3 and DR-8

Analyte	Total Metals / Non Metals			Dissolved Metals			Potentially Dissolved Metals		
	DR-3 (µg/L)	DR-8 (µg/L)	RPD (%)	DR-3 (µg/L)	DR-8 (µg/L)	RPD (%)	DR-3 (µg/L)	DR-8 (µg/L)	RPD (%)
Aluminum	1010	995	-1.50	762	693	-9.48	1020	930	-9.23
Antimony	<0.50	<0.50	-	<0.50	<0.50	-	0.35J	0.36J	-
Arsenic	2.2	2.1	-4.65	1.6	1.6	0.00	2.3	2.1	-9.09
Barium	20.2	20.0	-1.00	20.5	21.4	4.30	20.9	20.1	-3.90
Beryllium	1.0	1.1	9.52	0.80	0.67	-17.69	1.1	1.1	0.00
Cadmium	14.9	14.7	-1.35	14.0	14.0	0.00	14.8	14.2	-4.14
Calcium	245000	246000	0.41	270000	263000	-2.63	253000	255000	0.79
Chromium	<0.50	0.76	-	<0.50	1.2	-	1.1	0.96J	-
Cobalt	2.5	2.5	0.00	2.9	2.7	-7.14	2.5	2.4	-4.08
Copper	188	188	0.00	148	136	-8.45	195	179	-8.56
Iron	11400	11300	-0.88	9120	8250	-10.02	11800	10800	-8.85
Lead	20.3	19.9	-1.99	14.6	12.5	-15.50	22.4	20.8	-7.41
Magnesium	18900	18800	-0.53	19000	19700	3.62	19200	19100	-0.52
Manganese	1680	1700	1.18	1840	1780	-3.31	1730	1670	-3.53
Mercury	<0.20	<0.20	-	<0.20	<0.20	-	<0.20	<0.20	-
Molybdenum	17.9	18.1	1.11	17.7	17.5	-1.14	19.0	18.6	-2.13
Nickel	3.6	3.8	5.41	6.6	4.3	-42.20	2.3	2.1	-9.09
Potassium	7890	7850	-0.51	8200	7960	-2.97	8790	8880	1.02
Selenium	<0.50	<0.50	-	<0.50	<0.50	-	<1.0	<1.0	-
Silver	<0.50	<0.50	-	<0.50	<0.50	-	<0.50	<0.50	-
Sodium	10800	10700	-0.93	11500	11800	2.58	12600	12700	0.79
Thallium	<0.10	<0.10	-	<0.10	<0.10	-	0.071J	0.065J	-
Vanadium	0.25	0.23	-8.33	0.20	0.19	-5.13	<1.0	<1.0	-
Zinc	3170	3200	0.94	3140	3040	-3.24	2910	2810	-3.50
Alkalinity, Bicarbonate (CaCO3, mg/L)	102	104	1.94	-	-	-	-	-	-
Alkalinity, Carbonate (CaCO3, mg/L)	<20.0	<20.0	-	-	-	-	-	-	-
Alkalinity, Total as CaCO3 (mg/L)	102	104	1.94	-	-	-	-	-	-
Chloride (mg/L)	<1.0	<1.0	-	-	-	-	-	-	-
Cyanide	<0.0050	<0.0050	-	-	-	-	-	-	-
Hardness	689000	693000	0.58	-	-	-	-	-	-
Nitrogen, NO2 plus NO3 (mg/L)	<0.10	<0.10	-	-	-	-	-	-	-
Salinity, as dissolved solids (mg/L)	830	818	-1.46	-	-	-	-	-	-
Salinity, as sea water (PSU)	0.65	0.64	-1.55	-	-	-	-	-	-
Silica	20100	20400	1.48	-	-	-	-	-	-
Sulfate (mg/L)	693	692	-0.14	-	-	-	-	-	-
Sulfide (mg/L)	<0.050	<0.050	-	-	-	-	-	-	-
TDS (mg/L)	1030	1020	-0.98	-	-	-	-	-	-
TOC (mg/L)	0.13J	0.42J	-	-	-	-	-	-	-
TSS (mg/L)	38.0	35.0	-8.22	-	-	-	-	-	-

Table 5B - Relative Percent Difference (RPD) of Lab Analysis Between MW-6 SHALLOW and DR-9

Analyte	Total Metals / Non Metals			Dissolved Metals			Potentially Dissolved Metals		
	MW-4 DEEP (µg/L)	DR-9 (µg/L)	RPD (%)	MW-4 DEEP (µg/L)	DR-9 (µg/L)	RPD (%)	MW-4 DEEP (µg/L)	DR-9 (µg/L)	RPD (%)
Aluminum	13800	60600	125.81	744	1430	63.11	9220	19800	72.92
Antimony	<0.50	1.0	-	<0.50	<0.50	-	0.28J	0.22J	-
Arsenic	69.3	214	102.15	41.8	42.5	1.66	80.0	128	46.15
Barium	114	468	121.65	16.7	22.5	29.59	34.9	31.0	-11.84
Beryllium	1.6	4.1	87.72	0.92	0.97	5.29	1.5	2.7	57.14
Cadmium	6.7	52.7	154.88	0.19	0.55	97.30	16.5	58.7	112.23
Calcium	408000	415000	1.70	435000	428000	-1.62	386000	376000	-2.62
Chromium	11.0	55.2	133.53	<0.50	0.74	-	9.6	15.7	48.22
Cobalt	9.0	34.6	117.43	4.6	4.8	4.26	11.1	26.4	81.60
Copper	50.7	320	145.29	4.4	5.9	29.13	72.3	219	100.72
Iron	69100	137000	65.89	56900	56500	-0.71	65100	77900	17.90
Lead	80.2	607	153.32	0.35	5.5	176.07	196	543	93.91
Magnesium	61600	79900	25.87	59400	57500	-3.25	58800	55700	-5.41
Manganese	8580	9090	5.77	8530	8370	-1.89	8790	8610	-2.07
Mercury	<0.20	<0.20	-	<0.20	<0.20	-	<0.20	<0.20	-
Molybdenum	7.4	17.0	78.69	5.1	5.1	0.00	3.0	3.1	3.28
Nickel	12.8	65.7	134.78	4.2	5.3	23.16	14.2	37.2	89.49
Potassium	15600	20100	25.21	13400	13200	-1.50	13400	13000	-3.03
Selenium	1.7	11.3	147.69	<0.50	<0.50	-	2.5	7.9	103.85
Silver	<0.50	2.7	-	<0.50	<0.50	-	<0.50	<0.50	-
Sodium	4130	4060	-1.71	4250	4080	-4.08	4570	4200	-8.44
Thallium	0.35	1.1	103.45	<0.10	<0.10	-	0.38J	0.64J	-
Vanadium	16.4	75.0	128.23	0.12	1.0	157.14	11.1	24.2	74.22
Zinc	1580	7610	131.23	680	729	6.96	2600	8150	103.26
Alkalinity, Bicarbonate (CaCO3, mg/L)	90.8	80.5	-12.03	-	-	-	-	-	-
Alkalinity, Carbonate (CaCO3, mg/L)	<20.0	<20.0	-	-	-	-	-	-	-
Alkalinity, Total as CaCO3 (mg/L)	90.8	80.5	-12.03	-	-	-	-	-	-
Chloride (mg/L)	1.2	1.5	22.22	-	-	-	-	-	-
Cyanide	<0.0050	<0.0050	-	-	-	-	-	-	-
Hardness	1270000	1370000	7.58	-	-	-	-	-	-
Nitrogen, NO2 plus NO3 (mg/L)	<0.10	0.13	-	-	-	-	-	-	-
Salinity, as dissolved solids (mg/L)	1280	1290	0.78	-	-	-	-	-	-
Salinity, as sea water (PSU)	1.0	1.0	0.00	-	-	-	-	-	-
Silica	72900	147000	67.39	-	-	-	-	-	-
Sulfate (mg/L)	990	1180	17.51	-	-	-	-	-	-
Sulfide (mg/L)	<0.050	<0.050	-	-	-	-	-	-	-
TDS (mg/L)	1850	1850	0.00	-	-	-	-	-	-
TOC (mg/L)	1.5	1.7	12.50	-	-	-	-	-	-
TSS (mg/L)	3410	584	-141.51	-	-	-	-	-	-

Table 5C - Relative Percent Difference (RPD) of Lab Analysis Between P13-103 and DR-10

Analyte	Total Metals / Non Metals			Dissolved Metals			Potentially Dissolved Metals		
	MW-6 DEEP (µg/L)	DR-10 (µg/L)	RPD (%)	MW-6 DEEP (µg/L)	DR-10 (µg/L)	RPD (%)	MW-6 DEEP (µg/L)	DR-10 (µg/L)	RPD (%)
Aluminum	5550	12200	74.93	7.3	4550	199.36	1880	2300	20.10
Antimony	1.1	1.6	37.04	<0.50	1.0	-	0.50J	0.51J	-
Arsenic	68.3	102	39.58	44.9	65.1	36.73	74.4	79.6	6.75
Barium	97.6	223	78.23	19.5	92.8	130.54	36.9	33.6	-9.36
Beryllium	0.36	0.89	84.80	<0.20	0.32	-	0.42J	0.54	-
Cadmium	3.2	9.4	98.41	0.088	3.1	188.96	3.6	5.4	40.00
Calcium	295000	299000	1.35	306000	313000	2.26	274000	274000	0.00
Chromium	7.4	19.3	89.14	<0.50	6.7	-	5.4	6.7	21.49
Cobalt	5.2	12.0	79.07	1.8	5.7	104.00	3.3	4.1	21.62
Copper	226	709	103.32	1.1	220	198.01	186	262	33.93
Iron	48700	108000	75.69	13100	45600	110.73	23200	26100	11.76
Lead	679	2200	105.66	0.80	671	199.52	1050	1560	39.08
Magnesium	33600	35600	5.78	32300	34400	6.30	31500	31300	-0.64
Manganese	2820	3050	7.84	2700	2890	6.80	2880	2930	1.72
Mercury	<0.20	<0.20	-	<0.20	<0.20	-	<0.20	<0.20	-
Molybdenum	11.4	16.4	35.97	7.8	10	24.72	4.4	4.7	6.59
Nickel	7.7	19.5	86.76	2.5	9.3	115.25	4.3	5.6	26.26
Potassium	5820	7450	24.57	4380	5630	24.98	4800	4830	0.62
Selenium	4.8	13.9	97.33	<0.50	4.5	-	1.7	1.8	5.71
Silver	7.6	20.5	91.81	<0.50	6.9	-	0.32J	0.28J	-
Sodium	9950	10500	5.38	10500	10100	-3.88	10500	10400	-0.96
Thallium	0.42	1.1	89.47	<0.10	0.42	-	0.46J	0.63J	-
Vanadium	8.4	18.6	75.56	<0.10	7.1	-	4.2	5.5	26.80
Zinc	610	1680	93.45	140	613	125.63	659	923	33.38
Alkalinity, Bicarbonate (CaCO3, mg/L)	140	139	-0.72	-	-	-	-	-	-
Alkalinity, Carbonate (CaCO3, mg/L)	<20.0	<20.0	-	-	-	-	-	-	-
Alkalinity, Total as CaCO3 (mg/L)	140	139	-0.72	-	-	-	-	-	-
Chloride (mg/L)	1.0	1.0	0.00	-	-	-	-	-	-
Cyanide	<0.0050	0.0080	-	-	-	-	-	-	-
Hardness	876000	893000	1.92	-	-	-	-	-	-
Nitrogen, NO2 plus NO3 (mg/L)	<0.10	0.12	-	-	-	-	-	-	-
Salinity, as dissolved solids (mg/L)	895	962	7.22	-	-	-	-	-	-
Salinity, as sea water (PSU)	0.70	0.75	6.90	-	-	-	-	-	-
Silica	48600	73000	40.13	-	-	-	-	-	-
Sulfate (mg/L)	717	698	-2.69	-	-	-	-	-	-
Sulfide (mg/L)	<0.050	<0.050	-	-	-	-	-	-	-
TDS (mg/L)	1250	1250	0.00	-	-	-	-	-	-
TOC (mg/L)	0.85	0.72	-16.56	-	-	-	-	-	-
TSS (mg/L)	1460	500	-97.96	-	-	-	-	-	-

Table 5D - Relative Percent Difference (RPD) of Lab Analysis Between DR-4 and DR-11

Analyte	Total Metals / Non Metals			Dissolved Metals			Potentially Dissolved Metals		
	MW-104 (µg/L)	DR-11 (µg/L)	RPD (%)	MW-104 (µg/L)	DR-11 (µg/L)	RPD (%)	MW-104 (µg/L)	DR-11 (µg/L)	RPD (%)
Aluminum	257	256	-0.39	41.9	11.9	-111.52	251	255	1.58
Antimony	<0.50	<0.50	-	<0.50	<0.50	-	0.22J	0.26J	-
Arsenic	0.58	0.60	3.39	<0.50	<0.50	-	0.61J	0.55J	-
Barium	20.4	20.9	2.42	21.1	20.0	-5.35	19.0	19.8	4.12
Beryllium	0.40	0.36	-10.53	<0.20	<0.20	-	0.28J	0.31J	-
Cadmium	11.2	11.6	3.51	9.9	9.4	-5.18	10.7	10.6	-0.94
Calcium	260000	270000	3.77	287000	279000	-2.83	246000	260000	5.53
Chromium	<0.50	<0.50	-	<0.50	<0.50	-	0.68J	0.81J	-
Cobalt	2.6	2.5	-3.92	2.6	2.6	0.00	2.3	2.3	0.00
Copper	55.2	55.1	-0.18	7.1	2.4	-98.95	48.7	48.1	-1.24
Iron	3180	3260	2.48	454	<50.0	-	3010	3020	0.33
Lead	5.2	5.5	5.61	0.45	<0.10	-	6.2	6.1	-1.63
Magnesium	19500	19200	-1.55	20400	20000	-1.98	18600	19000	2.13
Manganese	1670	1720	2.95	1710	1670	-2.37	1580	1620	2.50
Mercury	<0.20	<0.20	-	<0.20	<0.20	-	<0.20	<0.20	-
Molybdenum	17.6	17.8	1.13	18.0	16.6	-8.09	15.4	15.6	1.29
Nickel	3.8	3.8	0.00	4.6	4.8	4.26	2.5	2.4	-4.08
Potassium	7730	8040	3.93	8580	8410	-2.00	7770	8300	6.60
Selenium	<0.50	<0.50	-	<0.50	<0.50	-	<1.0	<1.0	-
Silver	<0.50	<0.50	-	<0.50	<0.50	-	<0.50	<0.50	-
Sodium	12200	12300	0.82	13100	13400	2.26	11800	12600	6.56
Thallium	<0.10	<0.10	-	<0.10	<0.10	-	0.068J	0.069J	-
Vanadium	0.11	0.10	-9.52	<0.10	<0.10	-	<1.0	<1.0	-
Zinc	2300	2440	5.91	1950	1860	-4.72	2000	2020	1.00
Alkalinity, Bicarbonate (CaCO3, mg/L)	101	99.0	-2.00	-	-	-	-	-	-
Alkalinity, Carbonate (CaCO3, mg/L)	<20.0	<20.0	-	-	-	-	-	-	-
Alkalinity, Total as CaCO3 (mg/L)	101	99.0	-2.00	-	-	-	-	-	-
Chloride (mg/L)	<1.0	<1.0	-	-	-	-	-	-	-
Cyanide	<0.0050	<0.0050	-	-	-	-	-	-	-
Hardness	729000	752000	3.11	-	-	-	-	-	-
Nitrogen, NO2 plus NO3 (mg/L)	0.10	0.11	9.52	-	-	-	-	-	-
Salinity, as dissolved solids (mg/L)	795	790	-0.63	-	-	-	-	-	-
Salinity, as sea water (PSU)	0.62	0.61	-1.63	-	-	-	-	-	-
Silica	16700	17300	3.53	-	-	-	-	-	-
Sulfate (mg/L)	643	644	0.16	-	-	-	-	-	-
Sulfide (mg/L)	<0.050	<0.050	-	-	-	-	-	-	-
TDS (mg/L)	1050	1050	0.00	-	-	-	-	-	-
TOC (mg/L)	<0.50	<0.50	-	-	-	-	-	-	-
TSS (mg/L)	9.0	6.0	-40.00	-	-	-	-	-	-

Appendix C

Project Narrative and Laboratory Analytical Reports

Pace Analytical Services, Inc.
9608 Loiret Blvd.
Lenexa, KS 66219
(913)599-5665

March 08, 2013

Mark DeFriez
Anderson Engineering Company I
977 W 2100 S.
Salt Lake City, UT 84119

RE: Project: FEBRUARY 2013 RICO WATER SAMPL
Pace Project No.: 60138490

Dear Mark DeFriez:
Enclosed are the analytical results for sample(s) received by the laboratory on February 09, 2013. The results relate only to the within this report conform to the most current version of the TNI standards, BP LaMP Technical Requirements Revision 10.1, and any applicable Quality Assurance Project Plan (QAPP), or Work Plan unless otherwise narrated in the body of this report.

If you have any questions concerning this report, please feel free to contact me.

Sincerely,

Heather M. Wilson

Heather Wilson

heather.wilson@pacelabs.com
Project Manager

Enclosures

This report shall not be reproduced, except in full,
without the written consent of Pace Analytical Services, Inc..

Pace Analytical Services, Inc.
9608 Loiret Blvd.
Lenexa, KS 66219
(913)599-5665

CERTIFICATIONS

Project: FEBRUARY 2013 RICO WATER SAMPL
Pace Project No.: 60138490

Minnesota Certification IDs
1700 Elm Street SE Suite 200, Minneapolis, MN 55414
A2LA Certification #: 2926.01
Alaska Certification #: UST-078
Alaska Certification #MN00064
Arizona Certification #: AZ-0014
Arkansas Certification #: 88-0680
California Certification #: 01155CA
Colorado Certification #Pace
Connecticut Certification #: PH-0256
EPA Region 8 Certification #: Pace
Florida/NELAP Certification #: E87605
Georgia Certification #: 959
Hawaii Certification #Pace
Idaho Certification #: MN00064
Illinois Certification #: 200011
Kansas Certification #: E-10167
Louisiana Certification #: 03086
Louisiana Certification #: LA080009
Maine Certification #: 2007029
Maryland Certification #: 322
Michigan DEQ Certification #: 9909
Minnesota Certification #: 027-053-137
Mississippi Certification #: Pace
Montana Certification #: MT CERT0092
Nevada Certification #: MN_00064
Nebraska Certification #: Pace
New Jersey Certification #: MN-002
New York Certification #: 11647
North Carolina Certification #: 530
North Dakota Certification #: R-036
North Dakota Certification #: R-036A
Ohio VAP Certification #: CL101
Oklahoma Certification #: 9507
Oregon Certification #: MN200001
Oregon Certification #: MN300001
Pennsylvania Certification #: 68-00563
Puerto Rico Certification
Tennessee Certification #: 02818
Texas Certification #: T104704192
Utah Certification #: MN00064
Virginia/DCLS Certification #: 002521
Virginia/VELAP Certification #: 460163
Washington Certification #: C754
West Virginia Certification #: 382
Wisconsin Certification #: 999407970

Montana Certification IDs
602 South 25th Street, Billings, MT 59101
EPA Region 8 Certification #: 8TMS-Q
Idaho Certification #: MT00012
Montana Certification #: MT CERT0040
NVLAP Certification #: 101292-0
Minnesota Dept of Health Certification #: 030-999-442
Washington Department of Ecology #: C993

Green Bay Certification IDs
1241 Bellevue Street, Green Bay, WI 54302
Florida/NELAP Certification #: E87948
Illinois Certification #: 200050
Kentucky Certification #: 82
Louisiana Certification #: 04168
Minnesota Certification #: 055-999-334
New York Certification #: 11888
North Dakota Certification #: R-150
South Carolina Certification #: 83006001
US Dept of Agriculture #: S-76505
Wisconsin Certification #: 405132750

Kansas Certification IDs
9608 Loiret Boulevard, Lenexa, KS 66219
A2LA Certification #: 2456.01
Arkansas Certification #: 12-019-0
Illinois Certification #: 002885
Iowa Certification #: 118
Kansas/NELAP Certification #: E-10116
Louisiana Certification #: 03055
Nevada Certification #: KS000212008A
Oklahoma Certification #: 9205/9935
Texas Certification #: T104704407-12-3
Utah Certification #: KS000212012-2
Illinois Certification #: 003097

This report shall not be reproduced, except in full,
without the written consent of Pace Analytical Services, Inc..

Pace Analytical Services, Inc.
9608 Loiret Blvd.
Lenexa, KS 66219
(913)599-5665

SAMPLE SUMMARY

Project: FEBRUARY 2013 RICO WATER SAMPL
Pace Project No.: 60138490

Lab ID	Sample ID	Matrix	Date Collected	Date Received
60138490001	**GW-5_20130207**	Water	02/07/13 11:00	02/09/13 09:40
60138490002	**MW-204_20130207**	Water	02/07/13 13:30	02/09/13 09:40
60138490003	**MW-5 SHALLOW_20130207**	Water	02/07/13 12:30	02/09/13 09:40
60138490004	**MW-5 DEEP_20130207**	Water	02/07/13 12:15	02/09/13 09:40
60138490005	**GW-1_20130206**	Water	02/06/13 15:30	02/09/13 09:40
60138490006	**MW-101_20130206**	Water	02/06/13 15:45	02/09/13 09:40
60138490007	**MW-102_20130207**	Water	02/07/13 16:15	02/09/13 09:40
60138490008	**GW-3_20130208**	Water	02/08/13 09:30	02/09/13 09:40
60138490009	**DR-3_20130208**	Water	02/08/13 08:00	02/09/13 09:40
60138490010	**DR-8_20130208**	Water	02/08/13 08:05	02/09/13 09:40
60138490011	**EB-1_20130208**	Water	02/08/13 09:45	02/09/13 09:40
60138490012	**AT-2_20130208**	Water	02/08/13 09:00	02/09/13 09:40

This report shall not be reproduced, except in full,
without the written consent of Pace Analytical Services, Inc..

Pace Analytical Services, Inc.
9608 Loiret Blvd.
Lenexa, KS 66219
(913)599-5665

SAMPLE ANALYTE COUNT

Project: FEBRUARY 2013 RICO WATER SAMPL
Pace Project No.: 60138490

Lab ID	Sample ID	Method	Analysts	Analytes Reported	Laboratory
60138490001	**GW-5_20130207**	EPA 200.7	JGP	4	PASI-K
		EPA 200.8	AS2	25	PASI-M
		EPA 200.8	AS2	23	PASI-M
		EPA 200.8	JGP	19	PASI-K
		EPA 245.1	TEM	1	PASI-M
		EPA 245.1	TEM	1	PASI-M
		EPA 245.1	TJT	1	PASI-K
		SM 2510B	WT1	1	
		Calculated	WT1	2	
		SM 2320B	DJR	3	PASI-K
		SM 2540C	NDL	1	PASI-K
		SM 2540D	NDL	1	PASI-K
		SM 4500-S-2 D	AJM	1	PASI-K
		EPA 300.0	AJM	2	PASI-K
		EPA 353.2	NDL	1	PASI-K
		SM 4500-CN-E	OL	1	PASI-K
		SM 5310C	TJJ	1	PASI-G
60138490002	**MW-204_20130207**	EPA 200.7	JGP	4	PASI-K
		EPA 200.8	AS2	25	PASI-M
		EPA 200.8	AS2	23	PASI-M
		EPA 200.8	JGP	19	PASI-K
		EPA 245.1	TEM	1	PASI-M
		EPA 245.1	TEM	1	PASI-M
		EPA 245.1	TJT	1	PASI-K
		SM 2510B	WT1	1	
		Calculated	WT1	2	
		SM 2320B	DJR	3	PASI-K
		SM 2540C	NDL	1	PASI-K
		SM 2540D	NDL	1	PASI-K
		SM 4500-S-2 D	AJM	1	PASI-K
		EPA 300.0	AJM	2	PASI-K
		EPA 353.2	NDL	1	PASI-K
		SM 4500-CN-E	OL	1	PASI-K
		SM 5310C	TJJ	1	PASI-G
60138490003	**MW-5 SHALLOW_20130207**	EPA 200.7	JGP	4	PASI-K
		EPA 200.8	AS2	25	PASI-M
		EPA 200.8	AS2	23	PASI-M

This report shall not be reproduced, except in full,
without the written consent of Pace Analytical Services, Inc..

Pace Analytical Services, Inc.
9608 Loiret Blvd.
Lenexa, KS 66219
(913)599-5665

SAMPLE ANALYTE COUNT

Project: FEBRUARY 2013 RICO WATER SAMPL
Pace Project No.: 60138490

Lab ID	Sample ID	Method	Analysts	Analytes Reported	Laboratory
		EPA 200.8	JGP	19	PASI-K
		EPA 245.1	TEM	1	PASI-M
		EPA 245.1	TEM	1	PASI-M
		EPA 245.1	TJT	1	PASI-K
		SM 2510B	WT1	1	
		Calculated	WT1	2	
		SM 2320B	DJR	3	PASI-K
		SM 2540C	NDL	1	PASI-K
		SM 2540D	NDL	1	PASI-K
		SM 4500-S-2 D	AJM	1	PASI-K
		EPA 300.0	AJM	2	PASI-K
		EPA 353.2	NDL	1	PASI-K
		SM 4500-CN-E	OL	1	PASI-K
		SM 5310C	TJJ	1	PASI-G
60138490004	**MW-5 DEEP_20130207**	EPA 200.7	JGP	4	PASI-K
		EPA 200.8	AS2	25	PASI-M
		EPA 200.8	AS2	23	PASI-M
		EPA 200.8	JGP	19	PASI-K
		EPA 245.1	TEM	1	PASI-M
		EPA 245.1	TEM	1	PASI-M
		EPA 245.1	TJT	1	PASI-K
		SM 2510B	WT1	1	
		Calculated	WT1	2	
		SM 2320B	DJR	3	PASI-K
		SM 2540C	NDL	1	PASI-K
		SM 2540D	NDL	1	PASI-K
		SM 4500-S-2 D	AJM	1	PASI-K
		EPA 300.0	AJM	2	PASI-K
		EPA 353.2	NDL	1	PASI-K
		SM 4500-CN-E	OL	1	PASI-K
		SM 5310C	TJJ	1	PASI-G
60138490005	**GW-1_20130206**	EPA 200.7	JGP	4	PASI-K
		EPA 200.8	AS2	25	PASI-M
		EPA 200.8	AS2	23	PASI-M
		EPA 200.8	JGP	19	PASI-K
		EPA 245.1	TEM	1	PASI-M
		EPA 245.1	TEM	1	PASI-M

This report shall not be reproduced, except in full,
without the written consent of Pace Analytical Services, Inc..

Pace Analytical Services, Inc.
9608 Loiret Blvd.
Lenexa, KS 66219
(913)599-5665

SAMPLE ANALYTE COUNT

Project: FEBRUARY 2013 RICO WATER SAMPL
Pace Project No.: 60138490

Lab ID	Sample ID	Method	Analysts	Analytes Reported	Laboratory
		EPA 245.1	TJT	1	PASI-K
		SM 2510B	WT1	1	
		Calculated	WT1	2	
		SM 2320B	DJR	3	PASI-K
		SM 2540C	NDL	1	PASI-K
		SM 2540D	NDL	1	PASI-K
		SM 4500-S-2 D	AJM	1	PASI-K
		EPA 300.0	AJM	2	PASI-K
		EPA 353.2	NDL	1	PASI-K
		SM 4500-CN-E	OL	1	PASI-K
		SM 5310C	TJJ	1	PASI-G
60138490006	**MW-101_20130206**	EPA 200.7	JGP	4	PASI-K
		EPA 200.8	AS2	25	PASI-M
		EPA 200.8	AS2	23	PASI-M
		EPA 200.8	JGP	19	PASI-K
		EPA 245.1	TEM	1	PASI-M
		EPA 245.1	TEM	1	PASI-M
		EPA 245.1	TJT	1	PASI-K
		SM 2510B	WT1	1	
		Calculated	WT1	2	
		SM 2320B	DJR	3	PASI-K
		SM 2540C	NDL	1	PASI-K
		SM 2540D	NDL	1	PASI-K
		SM 4500-S-2 D	AJM	1	PASI-K
		EPA 300.0	AJM	2	PASI-K
		EPA 353.2	NDL	1	PASI-K
		SM 4500-CN-E	OL	1	PASI-K
		SM 5310C	TJJ	1	PASI-G
60138490007	**MW-102_20130207**	EPA 200.7	JGP	4	PASI-K
		EPA 200.8	AS2	25	PASI-M
		EPA 200.8	AS2	23	PASI-M
		EPA 200.8	JGP	19	PASI-K
		EPA 245.1	TEM	1	PASI-M
		EPA 245.1	TEM	1	PASI-M
		EPA 245.1	TJT	1	PASI-K
		SM 2510B	WT1	1	
		Calculated	WT1	2	

This report shall not be reproduced, except in full,
without the written consent of Pace Analytical Services, Inc..

Pace Analytical Services, Inc.
9608 Loiret Blvd.
Lenexa, KS 66219
(913)599-5665

SAMPLE ANALYTE COUNT

Project: FEBRUARY 2013 RICO WATER SAMPL
Pace Project No.: 60138490

Lab ID	Sample ID	Method	Analysts	Analytes Reported	Laboratory
		SM 2320B	DJR	3	PASI-K
		SM 2540C	NDL	1	PASI-K
		SM 2540D	NDL	1	PASI-K
		SM 4500-S-2 D	AJM	1	PASI-K
		EPA 300.0	AJM	2	PASI-K
		EPA 353.2	NDL	1	PASI-K
		SM 4500-CN-E	OL	1	PASI-K
		SM 5310C	TJJ	1	PASI-G
60138490008	**GW-3_20130208**	EPA 200.7	JGP	4	PASI-K
		EPA 200.8	AS2	25	PASI-M
		EPA 200.8	AS2	23	PASI-M
		EPA 200.8	JGP	19	PASI-K
		EPA 245.1	TEM	1	PASI-M
		EPA 245.1	TEM	1	PASI-M
		EPA 245.1	TJT	1	PASI-K
		SM 2510B	WT1	1	
		Calculated	WT1	2	
		SM 2320B	DJR	3	PASI-K
		SM 2540C	NDL	1	PASI-K
		SM 2540D	NDL	1	PASI-K
		SM 4500-S-2 D	AJM	1	PASI-K
		EPA 300.0	AJM	2	PASI-K
		EPA 353.2	NDL	1	PASI-K
		SM 4500-CN-E	OL	1	PASI-K
		SM 5310C	TJJ	1	PASI-G
60138490009	**DR-3_20130208**	EPA 200.7	JGP	4	PASI-K
		EPA 200.8	AS2	25	PASI-M
		EPA 200.8	AS2	23	PASI-M
		EPA 200.8	JGP	19	PASI-K
		EPA 245.1	TEM	1	PASI-M
		EPA 245.1	TEM	1	PASI-M
		EPA 245.1	TJT	1	PASI-K
		SM 2510B	WT1	1	
		Calculated	WT1	2	
		SM 2320B	DJR	3	PASI-K
		SM 2540C	NDL	1	PASI-K
		SM 2540D	NDL	1	PASI-K

This report shall not be reproduced, except in full,
without the written consent of Pace Analytical Services, Inc..

Pace Analytical Services, Inc.
9608 Loiret Blvd.
Lenexa, KS 66219
(913)599-5665

SAMPLE ANALYTE COUNT

Project: FEBRUARY 2013 RICO WATER SAMPL
Pace Project No.: 60138490

Lab ID	Sample ID	Method	Analysts	Analytes Reported	Laboratory
		SM 4500-S-2 D	AJM	1	PASI-K
		EPA 300.0	AJM	2	PASI-K
		EPA 353.2	NDL	1	PASI-K
		SM 4500-CN-E	OL	1	PASI-K
		SM 5310C	TJJ	1	PASI-G
60138490010	**DR-8_20130208**	EPA 200.7	JGP	4	PASI-K
		EPA 200.8	AS2	25	PASI-M
		EPA 200.8	AS2	23	PASI-M
		EPA 200.8	JGP	19	PASI-K
		EPA 245.1	TEM	1	PASI-M
		EPA 245.1	TEM	1	PASI-M
		EPA 245.1	TJT	1	PASI-K
		SM 2510B	WT1	1	
		Calculated	WT1	2	
		SM 2320B	DJR	3	PASI-K
		SM 2540C	NDL	1	PASI-K
		SM 2540D	NDL	1	PASI-K
		SM 4500-S-2 D	AJM	1	PASI-K
		EPA 300.0	AJM	2	PASI-K
		EPA 353.2	NDL	1	PASI-K
		SM 4500-CN-E	OL	1	PASI-K
		SM 5310C	TJJ	1	PASI-G
60138490011	**EB-1_20130208**	EPA 200.7	JGP	4	PASI-K
		EPA 200.8	AS2	25	PASI-M
		EPA 200.8	AS2	23	PASI-M
		EPA 200.8	JGP	19	PASI-K
		EPA 245.1	TEM	1	PASI-M
		EPA 245.1	TEM	1	PASI-M
		EPA 245.1	TJT	1	PASI-K
		SM 2510B	WT1	1	
		Calculated	WT1	2	
		SM 2320B	DJR	3	PASI-K
		SM 2540C	NDL	1	PASI-K
		SM 2540D	NDL	1	PASI-K
		SM 4500-S-2 D	AJM	1	PASI-K
		EPA 300.0	AJM	2	PASI-K
		EPA 353.2	NDL	1	PASI-K

This report shall not be reproduced, except in full,
without the written consent of Pace Analytical Services, Inc..

Pace Analytical Services, Inc.
9608 Loiret Blvd.
Lenexa, KS 66219
(913)599-5665

SAMPLE ANALYTE COUNT

Project: FEBRUARY 2013 RICO WATER SAMPL
Pace Project No.: 60138490

Lab ID	Sample ID	Method	Analysts	Analytes Reported	Laboratory
		SM 4500-CN-E	OL	1	PASI-K
		SM 5310C	TJJ	1	PASI-G
60138490012	**AT-2_20130208**	EPA 200.7	JGP	4	PASI-K
		EPA 200.8	AS2	25	PASI-M
		EPA 200.8	AS2	23	PASI-M
		EPA 200.8	JGP	19	PASI-K
		EPA 245.1	TEM	1	PASI-M
		EPA 245.1	TEM	1	PASI-M
		EPA 245.1	TJT	1	PASI-K
		SM 2510B	WT1	1	
		Calculated	WT1	2	
		SM 2320B	DJR	3	PASI-K
		SM 2540C	NDL	1	PASI-K
		SM 2540D	NDL	1	PASI-K
		SM 4500-S-2 D	AJM	1	PASI-K
		EPA 300.0	AJM	2	PASI-K
		EPA 353.2	NDL	1	PASI-K
		SM 4500-CN-E	OL	1	PASI-K
		SM 5310C	TJJ	1	PASI-G

This report shall not be reproduced, except in full,
without the written consent of Pace Analytical Services, Inc..

Pace Analytical Services, Inc.
9608 Loiret Blvd.
Lenexa, KS 66219
(913)599-5665

PROJECT NARRATIVE

Project: FEBRUARY 2013 RICO WATER SAMPL
Pace Project No.: 60138490

Method: **EPA 200.7**
Description: 200.7 Potentially Diss. Metals
Client: BP Anderson Engineering Company Inc.
Date: March 08, 2013

General Information:
12 samples were analyzed for EPA 200.7. All samples were received in acceptable condition with any exceptions noted below.

Hold Time:
The samples were analyzed within the method required hold times with any exceptions noted below.

Sample Preparation:
The samples were prepared in accordance with EPA 200.7 with any exceptions noted below.

Initial Calibrations (including MS Tune as applicable):
All criteria were within method requirements with any exceptions noted below.

Continuing Calibration:
All criteria were within method requirements with any exceptions noted below.

Method Blank:
All analytes were below the report limit in the method blank with any exceptions noted below.

Laboratory Control Spike:
All laboratory control spike compounds were within QC limits with any exceptions noted below.

Matrix Spikes:
All percent recoveries and relative percent differences (RPDs) were within acceptance criteria with any exceptions noted below.

QC Batch: MPRP/21569

A matrix spike and matrix spike duplicate (MS/MSD) were performed on the following sample(s): 60138490001,60138490010

M1: Matrix spike recovery exceeded QC limits. Batch accepted based on laboratory control sample (LCS) recovery.

- MS (Lab ID: 1142317)
  - Calcium, Dissolved
- MS (Lab ID: 1142319)
  - Calcium, Dissolved
- MSD (Lab ID: 1142318)
  - Calcium, Dissolved

Additional Comments:

This report shall not be reproduced, except in full,
without the written consent of Pace Analytical Services, Inc..

Pace Analytical Services, Inc.
9608 Loiret Blvd.
Lenexa, KS 66219
(913)599-5665

PROJECT NARRATIVE

Project: FEBRUARY 2013 RICO WATER SAMPL
Pace Project No.: 60138490

Method: **EPA 200.8**
Description: 200.8 MET ICPMS
Client: BP Anderson Engineering Company Inc.
Date: March 08, 2013

General Information:
12 samples were analyzed for EPA 200.8. All samples were received in acceptable condition with any exceptions noted below.

Hold Time:
The samples were analyzed within the method required hold times with any exceptions noted below.

Sample Preparation:
The samples were prepared in accordance with EPA 200.8 with any exceptions noted below.

Initial Calibrations (including MS Tune as applicable):
All criteria were within method requirements with any exceptions noted below.

Continuing Calibration:
All criteria were within method requirements with any exceptions noted below.

Internal Standards:
All internal standards were within QC limits with any exceptions noted below.

Method Blank:
All analytes were below the report limit in the method blank with any exceptions noted below.

Laboratory Control Spike:
All laboratory control spike compounds were within QC limits with any exceptions noted below.

Matrix Spikes:
All percent recoveries and relative percent differences (RPDs) were within acceptance criteria with any exceptions noted below.

Additional Comments:

Analyte Comments:

QC Batch: MPRP/37603

E: Analyte concentration exceeded the calibration range. The reported result is estimated.

- MS (Lab ID: 1377018)
  - Calcium
  - Manganese
  - Zinc
- MSD (Lab ID: 1377019)
  - Calcium
  - Manganese
  - Zinc

This report shall not be reproduced, except in full,
without the written consent of Pace Analytical Services, Inc..

Pace Analytical Services, Inc.
9608 Loiret Blvd.
Lenexa, KS 66219
(913)599-5665

PROJECT NARRATIVE

Project: FEBRUARY 2013 RICO WATER SAMPL
Pace Project No.: 60138490

Method: **EPA 200.8**
Description: 200.8 MET ICPMS, Dissolved
Client: BP Anderson Engineering Company Inc.
Date: March 08, 2013

General Information:
12 samples were analyzed for EPA 200.8. All samples were received in acceptable condition with any exceptions noted below.

Hold Time:
The samples were analyzed within the method required hold times with any exceptions noted below.

Sample Preparation:
The samples were prepared in accordance with EPA 200.8 with any exceptions noted below.

Initial Calibrations (including MS Tune as applicable):
All criteria were within method requirements with any exceptions noted below.

Continuing Calibration:
All criteria were within method requirements with any exceptions noted below.

Internal Standards:
All internal standards were within QC limits with any exceptions noted below.

Method Blank:
All analytes were below the report limit in the method blank with any exceptions noted below.

Laboratory Control Spike:
All laboratory control spike compounds were within QC limits with any exceptions noted below.

Matrix Spikes:
All percent recoveries and relative percent differences (RPDs) were within acceptance criteria with any exceptions noted below.

Additional Comments:

Analyte Comments:

QC Batch: MPRP/37695

D3: Sample was diluted due to the presence of high levels of non-target analytes or other matrix interference.

- MW-5 SHALLOW_20130207 (Lab ID: 60138490003)
  - Thallium, Dissolved

E: Analyte concentration exceeded the calibration range. The reported result is estimated.

- MS (Lab ID: 1380372)
  - Calcium, Dissolved
  - Iron, Dissolved
  - Manganese, Dissolved
  - Zinc, Dissolved
- MSD (Lab ID: 1380373)
  - Calcium, Dissolved
  - Iron, Dissolved

This report shall not be reproduced, except in full,
without the written consent of Pace Analytical Services, Inc..

Pace Analytical Services, Inc.
9608 Loiret Blvd.
Lenexa, KS 66219
(913)599-5665

PROJECT NARRATIVE

Project: FEBRUARY 2013 RICO WATER SAMPL
Pace Project No.: 60138490

Method: **EPA 200.8**
Description: 200.8 MET ICPMS, Dissolved
Client: BP Anderson Engineering Company Inc.
Date: March 08, 2013

Analyte Comments:

QC Batch: MPRP/37695

E: Analyte concentration exceeded the calibration range. The reported result is estimated.

- MSD (Lab ID: 1380373)
  - Manganese, Dissolved
  - Zinc, Dissolved

This report shall not be reproduced, except in full,
without the written consent of Pace Analytical Services, Inc..

Pace Analytical Services, Inc.
9608 Loiret Blvd.
Lenexa, KS 66219
(913)599-5665

PROJECT NARRATIVE

Project: FEBRUARY 2013 RICO WATER SAMPL
Pace Project No.: 60138490

Method: **EPA 200.8**
Description: 200.8 Potentially Diss. Metals
Client: BP Anderson Engineering Company Inc.
Date: March 08, 2013

General Information:
12 samples were analyzed for EPA 200.8. All samples were received in acceptable condition with any exceptions noted below.

Hold Time:
The samples were analyzed within the method required hold times with any exceptions noted below.

Sample Preparation:
The samples were prepared in accordance with EPA 200.8 with any exceptions noted below.

Initial Calibrations (including MS Tune as applicable):
All criteria were within method requirements with any exceptions noted below.

Continuing Calibration:
All criteria were within method requirements with any exceptions noted below.

Internal Standards:
All internal standards were within QC limits with any exceptions noted below.

Method Blank:
All analytes were below the report limit in the method blank with any exceptions noted below.

Laboratory Control Spike:
All laboratory control spike compounds were within QC limits with any exceptions noted below.

Matrix Spikes:
All percent recoveries and relative percent differences (RPDs) were within acceptance criteria with any exceptions noted below.

QC Batch: MPRP/21574

A matrix spike and matrix spike duplicate (MS/MSD) were performed on the following sample(s): 60138242001,60138490005

M1: Matrix spike recovery exceeded QC limits. Batch accepted based on laboratory control sample (LCS) recovery.

- MS (Lab ID: 1142466)
  - Manganese, Dissolved
- MSD (Lab ID: 1142465)
  - Copper, Dissolved
  - Zinc, Dissolved

Additional Comments:

Analyte Comments:

QC Batch: MPRP/21574

B: Analyte was detected in the associated method blank.

- AT-2_20130208 (Lab ID: 60138490012)
  - Antimony, Dissolved

This report shall not be reproduced, except in full,
without the written consent of Pace Analytical Services, Inc..

Pace Analytical Services, Inc.
9608 Loiret Blvd.
Lenexa, KS 66219
(913)599-5665

PROJECT NARRATIVE

Project: FEBRUARY 2013 RICO WATER SAMPL
Pace Project No.: 60138490

Method: **EPA 200.8**
Description: 200.8 Potentially Diss. Metals
Client: BP Anderson Engineering Company Inc.
Date: March 08, 2013

Analyte Comments:

QC Batch: MPRP/21574

B: Analyte was detected in the associated method blank.

- DR-3_20130208 (Lab ID: 60138490009)
  - Chromium, Dissolved
  - Antimony, Dissolved
- DR-8_20130208 (Lab ID: 60138490010)
  - Chromium, Dissolved
  - Antimony, Dissolved
- EB-1_20130208 (Lab ID: 60138490011)
  - Chromium, Dissolved
  - Antimony, Dissolved
- GW-1_20130206 (Lab ID: 60138490005)
  - Chromium, Dissolved
  - Antimony, Dissolved
- GW-3_20130208 (Lab ID: 60138490008)
  - Antimony, Dissolved
- MW-101_20130206 (Lab ID: 60138490006)
  - Antimony, Dissolved
- MW-102_20130207 (Lab ID: 60138490007)
  - Antimony, Dissolved
- MW-204_20130207 (Lab ID: 60138490002)
  - Antimony, Dissolved
- MW-5 DEEP_20130207 (Lab ID: 60138490004)
  - Antimony, Dissolved

This report shall not be reproduced, except in full,
without the written consent of Pace Analytical Services, Inc..

Pace Analytical Services, Inc.
9608 Loiret Blvd.
Lenexa, KS 66219
(913)599-5665

PROJECT NARRATIVE

Project: FEBRUARY 2013 RICO WATER SAMPL
Pace Project No.: 60138490

Method: **EPA 245.1**
Description: 245.1 Mercury
Client: BP Anderson Engineering Company Inc.
Date: March 08, 2013

General Information:
12 samples were analyzed for EPA 245.1. All samples were received in acceptable condition with any exceptions noted below.

Hold Time:
The samples were analyzed within the method required hold times with any exceptions noted below.

Sample Preparation:
The samples were prepared in accordance with EPA 245.1 with any exceptions noted below.

Initial Calibrations (including MS Tune as applicable):
All criteria were within method requirements with any exceptions noted below.

Continuing Calibration:
All criteria were within method requirements with any exceptions noted below.

Method Blank:
All analytes were below the report limit in the method blank with any exceptions noted below.

Laboratory Control Spike:
All laboratory control spike compounds were within QC limits with any exceptions noted below.

Matrix Spikes:
All percent recoveries and relative percent differences (RPDs) were within acceptance criteria with any exceptions noted below.

Additional Comments:

This report shall not be reproduced, except in full,
without the written consent of Pace Analytical Services, Inc..

Pace Analytical Services, Inc.
9608 Loiret Blvd.
Lenexa, KS 66219
(913)599-5665

PROJECT NARRATIVE

Project: FEBRUARY 2013 RICO WATER SAMPL
Pace Project No.: 60138490

Method: **EPA 245.1**
Description: 245.1 Mercury, Dissolved
Client: BP Anderson Engineering Company Inc.
Date: March 08, 2013

General Information:
12 samples were analyzed for EPA 245.1. All samples were received in acceptable condition with any exceptions noted below.

Hold Time:
The samples were analyzed within the method required hold times with any exceptions noted below.

Sample Preparation:
The samples were prepared in accordance with EPA 245.1 with any exceptions noted below.

Initial Calibrations (including MS Tune as applicable):
All criteria were within method requirements with any exceptions noted below.

Continuing Calibration:
All criteria were within method requirements with any exceptions noted below.

Method Blank:
All analytes were below the report limit in the method blank with any exceptions noted below.

Laboratory Control Spike:
All laboratory control spike compounds were within QC limits with any exceptions noted below.

Matrix Spikes:
All percent recoveries and relative percent differences (RPDs) were within acceptance criteria with any exceptions noted below.

QC Batch: MERP/8045

A matrix spike and matrix spike duplicate (MS/MSD) were performed on the following sample(s): 60138490002,60138490012

M1: Matrix spike recovery exceeded QC limits. Batch accepted based on laboratory control sample (LCS) recovery.

- MSD (Lab ID: 1378526)
  - Mercury, Dissolved

R1: RPD value was outside control limits.

- MSD (Lab ID: 1378526)
  - Mercury, Dissolved

Additional Comments:

This report shall not be reproduced, except in full,
without the written consent of Pace Analytical Services, Inc..

Pace Analytical Services, Inc.
9608 Loiret Blvd.
Lenexa, KS 66219
(913)599-5665

PROJECT NARRATIVE

Project: FEBRUARY 2013 RICO WATER SAMPL
Pace Project No.: 60138490

Method: **EPA 245.1**
Description: 245.1 Potentially Diss Mercury
Client: BP Anderson Engineering Company Inc.
Date: March 08, 2013

General Information:
12 samples were analyzed for EPA 245.1. All samples were received in acceptable condition with any exceptions noted below.

Hold Time:
The samples were analyzed within the method required hold times with any exceptions noted below.

Sample Preparation:
The samples were prepared in accordance with EPA 245.1 with any exceptions noted below.

Initial Calibrations (including MS Tune as applicable):
All criteria were within method requirements with any exceptions noted below.

Continuing Calibration:
All criteria were within method requirements with any exceptions noted below.

Method Blank:
All analytes were below the report limit in the method blank with any exceptions noted below.

Laboratory Control Spike:
All laboratory control spike compounds were within QC limits with any exceptions noted below.

Matrix Spikes:
All percent recoveries and relative percent differences (RPDs) were within acceptance criteria with any exceptions noted below.

Additional Comments:

This report shall not be reproduced, except in full,
without the written consent of Pace Analytical Services, Inc..

Pace Analytical Services, Inc.
9608 Loiret Blvd.
Lenexa, KS 66219
(913)599-5665

PROJECT NARRATIVE

Project: FEBRUARY 2013 RICO WATER SAMPL
Pace Project No.: 60138490

Method: **SM 2510B**
Description: 2510B Specific Conductance
Client: BP Anderson Engineering Company Inc.
Date: March 08, 2013

General Information:
12 samples were analyzed for SM 2510B. All samples were received in acceptable condition with any exceptions noted below.

Hold Time:
The samples were analyzed within the method required hold times with any exceptions noted below.

Initial Calibrations (including MS Tune as applicable):
All criteria were within method requirements with any exceptions noted below.

Continuing Calibration:
All criteria were within method requirements with any exceptions noted below.

Internal Standards:
All internal standards were within QC limits with any exceptions noted below.

Surrogates:
All surrogates were within QC limits with any exceptions noted below.

Method Blank:
All analytes were below the report limit in the method blank with any exceptions noted below.

Laboratory Control Spike:
All laboratory control spike compounds were within QC limits with any exceptions noted below.

Matrix Spikes:
All percent recoveries and relative percent differences (RPDs) were within acceptance criteria with any exceptions noted below.

Duplicate Sample:
All duplicate sample results were within method acceptance criteria with any exceptions noted below.

Additional Comments:

This report shall not be reproduced, except in full,
without the written consent of Pace Analytical Services, Inc..

Pace Analytical Services, Inc.
9608 Loiret Blvd.
Lenexa, KS 66219
(913)599-5665

PROJECT NARRATIVE

Project: FEBRUARY 2013 RICO WATER SAMPL
Pace Project No.: 60138490

Method: **Calculated**
Description: Salinity
Client: BP Anderson Engineering Company Inc.
Date: March 08, 2013

General Information:
12 samples were analyzed for Calculated. All samples were received in acceptable condition with any exceptions noted below.

Hold Time:
The samples were analyzed within the method required hold times with any exceptions noted below.

Initial Calibrations (including MS Tune as applicable):
All criteria were within method requirements with any exceptions noted below.

Continuing Calibration:
All criteria were within method requirements with any exceptions noted below.

Internal Standards:
All internal standards were within QC limits with any exceptions noted below.

Surrogates:
All surrogates were within QC limits with any exceptions noted below.

Method Blank:
All analytes were below the report limit in the method blank with any exceptions noted below.

Laboratory Control Spike:
All laboratory control spike compounds were within QC limits with any exceptions noted below.

Matrix Spikes:
All percent recoveries and relative percent differences (RPDs) were within acceptance criteria with any exceptions noted below.

Additional Comments:

This report shall not be reproduced, except in full,
without the written consent of Pace Analytical Services, Inc..

Pace Analytical Services, Inc.
9608 Loiret Blvd.
Lenexa, KS 66219
(913)599-5665

PROJECT NARRATIVE

Project: FEBRUARY 2013 RICO WATER SAMPL
Pace Project No.: 60138490

Method: **SM 2320B**
Description: 2320B Alkalinity
Client: BP Anderson Engineering Company Inc.
Date: March 08, 2013

General Information:
12 samples were analyzed for SM 2320B. All samples were received in acceptable condition with any exceptions noted below.

Hold Time:
The samples were analyzed within the method required hold times with any exceptions noted below.

Method Blank:
All analytes were below the report limit in the method blank with any exceptions noted below.

Laboratory Control Spike:
All laboratory control spike compounds were within QC limits with any exceptions noted below.

Matrix Spikes:
All percent recoveries and relative percent differences (RPDs) were within acceptance criteria with any exceptions noted below.

Duplicate Sample:
All duplicate sample results were within method acceptance criteria with any exceptions noted below.

QC Batch: WET/39820

D6: The relative percent difference (RPD) between the sample and sample duplicate exceeded laboratory control limits.

- DUP (Lab ID: 1142609)
  - Alkalinity, Total as CaCO3
  - Alkalinity,Bicarbonate (CaCO3)

Additional Comments:

This report shall not be reproduced, except in full,
without the written consent of Pace Analytical Services, Inc..

Pace Analytical Services, Inc.
9608 Loiret Blvd.
Lenexa, KS 66219
(913)599-5665

PROJECT NARRATIVE

Project: FEBRUARY 2013 RICO WATER SAMPL
Pace Project No.: 60138490

Method: **SM 2540C**
Description: 2540C Total Dissolved Solids
Client: BP Anderson Engineering Company Inc.
Date: March 08, 2013

General Information:
12 samples were analyzed for SM 2540C. All samples were received in acceptable condition with any exceptions noted below.

Hold Time:
The samples were analyzed within the method required hold times with any exceptions noted below.

Method Blank:
All analytes were below the report limit in the method blank with any exceptions noted below.

Laboratory Control Spike:
All laboratory control spike compounds were within QC limits with any exceptions noted below.

Matrix Spikes:
All percent recoveries and relative percent differences (RPDs) were within acceptance criteria with any exceptions noted below.

Duplicate Sample:
All duplicate sample results were within method acceptance criteria with any exceptions noted below.

QC Batch: WET/39719

D6: The relative percent difference (RPD) between the sample and sample duplicate exceeded laboratory control limits.

- DUP (Lab ID: 1140096)
  - Total Dissolved Solids

Additional Comments:

This report shall not be reproduced, except in full,
without the written consent of Pace Analytical Services, Inc..

Pace Analytical Services, Inc.
9608 Loiret Blvd.
Lenexa, KS 66219
(913)599-5665

PROJECT NARRATIVE

Project: FEBRUARY 2013 RICO WATER SAMPL
Pace Project No.: 60138490

Method: **SM 2540D**
Description: 2540D Total Suspended Solids
Client: BP Anderson Engineering Company Inc.
Date: March 08, 2013

General Information:
12 samples were analyzed for SM 2540D. All samples were received in acceptable condition with any exceptions noted below.

Hold Time:
The samples were analyzed within the method required hold times with any exceptions noted below.

Method Blank:
All analytes were below the report limit in the method blank with any exceptions noted below.

Laboratory Control Spike:
All laboratory control spike compounds were within QC limits with any exceptions noted below.

Matrix Spikes:
All percent recoveries and relative percent differences (RPDs) were within acceptance criteria with any exceptions noted below.

Duplicate Sample:
All duplicate sample results were within method acceptance criteria with any exceptions noted below.

Additional Comments:

This report shall not be reproduced, except in full,
without the written consent of Pace Analytical Services, Inc..

Pace Analytical Services, Inc.
9608 Loiret Blvd.
Lenexa, KS 66219
(913)599-5665

PROJECT NARRATIVE

Project: FEBRUARY 2013 RICO WATER SAMPL
Pace Project No.: 60138490

Method: **SM 4500-S-2 D**
Description: 4500S2D Sulfide, Total
Client: BP Anderson Engineering Company Inc.
Date: March 08, 2013

General Information:
12 samples were analyzed for SM 4500-S-2 D. All samples were received in acceptable condition with any exceptions noted below.

Hold Time:
The samples were analyzed within the method required hold times with any exceptions noted below.

Method Blank:
All analytes were below the report limit in the method blank with any exceptions noted below.

Laboratory Control Spike:
All laboratory control spike compounds were within QC limits with any exceptions noted below.

Matrix Spikes:
All percent recoveries and relative percent differences (RPDs) were within acceptance criteria with any exceptions noted below.

QC Batch: WET/39670

A matrix spike and matrix spike duplicate (MS/MSD) were performed on the following sample(s): 60138490001

M1: Matrix spike recovery exceeded QC limits. Batch accepted based on laboratory control sample (LCS) recovery.

- MS (Lab ID: 1138777)
  - Sulfide, Total

Additional Comments:

This report shall not be reproduced, except in full,
without the written consent of Pace Analytical Services, Inc..

Pace Analytical Services, Inc.
9608 Loiret Blvd.
Lenexa, KS 66219
(913)599-5665

PROJECT NARRATIVE

Project: FEBRUARY 2013 RICO WATER SAMPL
Pace Project No.: 60138490

Method: **EPA 300.0**
Description: 300.0 IC Anions 28 Days
Client: BP Anderson Engineering Company Inc.
Date: March 08, 2013

General Information:
12 samples were analyzed for EPA 300.0. All samples were received in acceptable condition with any exceptions noted below.

Hold Time:
The samples were analyzed within the method required hold times with any exceptions noted below.

Initial Calibrations (including MS Tune as applicable):
All criteria were within method requirements with any exceptions noted below.

Continuing Calibration:
All criteria were within method requirements with any exceptions noted below.

Method Blank:
All analytes were below the report limit in the method blank with any exceptions noted below.

Laboratory Control Spike:
All laboratory control spike compounds were within QC limits with any exceptions noted below.

Matrix Spikes:
All percent recoveries and relative percent differences (RPDs) were within acceptance criteria with any exceptions noted below.

Additional Comments:

This report shall not be reproduced, except in full,
without the written consent of Pace Analytical Services, Inc..

Pace Analytical Services, Inc.
9608 Loiret Blvd.
Lenexa, KS 66219
(913)599-5665

PROJECT NARRATIVE

Project: FEBRUARY 2013 RICO WATER SAMPL
Pace Project No.: 60138490

Method: **EPA 353.2**
Description: 353.2 Nitrogen, NO2/NO3 pres.
Client: BP Anderson Engineering Company Inc.
Date: March 08, 2013

General Information:
12 samples were analyzed for EPA 353.2. All samples were received in acceptable condition with any exceptions noted below.

Hold Time:
The samples were analyzed within the method required hold times with any exceptions noted below.

Initial Calibrations (including MS Tune as applicable):
All criteria were within method requirements with any exceptions noted below.

Continuing Calibration:
All criteria were within method requirements with any exceptions noted below.

Method Blank:
All analytes were below the report limit in the method blank with any exceptions noted below.

Laboratory Control Spike:
All laboratory control spike compounds were within QC limits with any exceptions noted below.

Matrix Spikes:
All percent recoveries and relative percent differences (RPDs) were within acceptance criteria with any exceptions noted below.

Duplicate Sample:
All duplicate sample results were within method acceptance criteria with any exceptions noted below.

Additional Comments:

This report shall not be reproduced, except in full,
without the written consent of Pace Analytical Services, Inc..

Pace Analytical Services, Inc.
9608 Loiret Blvd.
Lenexa, KS 66219
(913)599-5665

PROJECT NARRATIVE

Project: FEBRUARY 2013 RICO WATER SAMPL
Pace Project No.: 60138490

Method: **SM 4500-CN-E**
Description: 4500CNE Cyanide, Total
Client: BP Anderson Engineering Company Inc.
Date: March 08, 2013

General Information:
12 samples were analyzed for SM 4500-CN-E. All samples were received in acceptable condition with any exceptions noted below.

Hold Time:
The samples were analyzed within the method required hold times with any exceptions noted below.

Initial Calibrations (including MS Tune as applicable):
All criteria were within method requirements with any exceptions noted below.

Continuing Calibration:
All criteria were within method requirements with any exceptions noted below.

Method Blank:
All analytes were below the report limit in the method blank with any exceptions noted below.

Laboratory Control Spike:
All laboratory control spike compounds were within QC limits with any exceptions noted below.

Matrix Spikes:
All percent recoveries and relative percent differences (RPDs) were within acceptance criteria with any exceptions noted below.

Duplicate Sample:
All duplicate sample results were within method acceptance criteria with any exceptions noted below.

Additional Comments:

This report shall not be reproduced, except in full,
without the written consent of Pace Analytical Services, Inc..

Pace Analytical Services, Inc.
9608 Loiret Blvd.
Lenexa, KS 66219
(913)599-5665

PROJECT NARRATIVE

Project: FEBRUARY 2013 RICO WATER SAMPL
Pace Project No.: 60138490

Method: **SM 5310C**
Description: 5310C TOC
Client: BP Anderson Engineering Company Inc.
Date: March 08, 2013

General Information:
12 samples were analyzed for SM 5310C. All samples were received in acceptable condition with any exceptions noted below.

Hold Time:
The samples were analyzed within the method required hold times with any exceptions noted below.

Initial Calibrations (including MS Tune as applicable):
All criteria were within method requirements with any exceptions noted below.

Continuing Calibration:
All criteria were within method requirements with any exceptions noted below.

Method Blank:
All analytes were below the report limit in the method blank with any exceptions noted below.

Laboratory Control Spike:
All laboratory control spike compounds were within QC limits with any exceptions noted below.

Matrix Spikes:
All percent recoveries and relative percent differences (RPDs) were within acceptance criteria with any exceptions noted below.

Additional Comments:

This data package has been reviewed for quality and completeness and is approved for release.

This report shall not be reproduced, except in full,
without the written consent of Pace Analytical Services, Inc..

Pace Analytical Services, Inc.
9608 Loiret Blvd.
Lenexa, KS 66219
(913)599-5665

ANALYTICAL RESULTS

Project: FEBRUARY 2013 RICO WATER SAMPL
Pace Project No.: 60138490

Sample: GW-5_20130207 **Lab ID: 60138490001** Collected: 02/07/13 11:00 Received: 02/09/13 09:40 Matrix: Water

Parameters	Results	Units	Report Limit	DF	Prepared	Analyzed	CAS No.	Qual
200.7 Potentially Diss. Metals	Analytical Method: EPA 200.7 Preparation Method: EPA 200.7							
Calcium, Dissolved	**447000**	ug/L	100	1	02/18/13 14:45	02/20/13 16:57	7440-70-2	M1
Magnesium, Dissolved	**37600**	ug/L	50.0	1	02/18/13 14:45	02/20/13 16:57	7439-95-4	
Potassium, Dissolved	**4080**	ug/L	500	1	02/18/13 14:45	02/20/13 16:57	7440-09-7	
Sodium, Dissolved	**6940**	ug/L	500	1	02/18/13 14:45	02/20/13 16:57	7440-23-5	
200.8 MET ICPMS	Analytical Method: EPA 200.8 Preparation Method: EPA 200.8							
Aluminum	**2500**	ug/L	4.0	1	02/14/13 10:13	02/16/13 20:28	7429-90-5	M6
Antimony	**0.50**	ug/L	0.50	1	02/14/13 10:13	02/16/13 20:28	7440-36-0	
Arsenic	**152**	ug/L	0.50	1	02/14/13 10:13	02/16/13 20:28	7440-38-2	
Barium	**11.9**	ug/L	0.30	1	02/14/13 10:13	02/16/13 20:28	7440-39-3	
Beryllium	**0.32**	ug/L	0.20	1	02/14/13 10:13	02/17/13 13:27	7440-41-7	
Cadmium	**22.2**	ug/L	0.080	1	02/14/13 10:13	02/16/13 20:28	7440-43-9	
Calcium	**513000**	ug/L	500	25	02/14/13 10:13	02/21/13 10:51	7440-70-2	M6
Chromium	**1.9**	ug/L	0.50	1	02/14/13 10:13	02/16/13 20:28	7440-47-3	
Cobalt	**7.2**	ug/L	0.50	1	02/14/13 10:13	02/16/13 20:28	7440-48-4	
Copper	**129**	ug/L	0.50	1	02/14/13 10:13	02/16/13 20:28	7440-50-8	
Iron	**15600**	ug/L	50.0	1	02/14/13 10:13	02/16/13 20:28	7439-89-6	M6
Lead	**2640**	ug/L	2.0	20	02/14/13 10:13	02/16/13 20:33	7439-92-1	M6
Magnesium	**40600**	ug/L	100	20	02/14/13 10:13	02/16/13 20:33	7439-95-4	M6
Manganese	**5550**	ug/L	10.0	20	02/14/13 10:13	02/16/13 20:33	7439-96-5	M6
Molybdenum	**8.1**	ug/L	0.50	1	02/14/13 10:13	02/16/13 20:28	7439-98-7	
Nickel	**10.4**	ug/L	0.50	1	02/14/13 10:13	02/16/13 20:28	7440-02-0	
Potassium	**3880**	ug/L	20.0	1	02/14/13 10:13	02/16/13 20:28	7440-09-7	
Selenium	ND	ug/L	0.50	1	02/14/13 10:13	02/16/13 20:28	7782-49-2	
Silica	**38600**	ug/L	1070	20	02/14/13 10:13	02/16/13 20:33	7631-86-9	M6
Silver	ND	ug/L	0.50	1	02/14/13 10:13	02/17/13 13:27	7440-22-4	
Sodium	**5850**	ug/L	50.0	1	02/14/13 10:13	02/16/13 20:28	7440-23-5	
Thallium	**0.18**	ug/L	0.10	1	02/14/13 10:13	02/16/13 20:28	7440-28-0	
Total Hardness by 2340B	**1450000**	ug/L	1780	25	02/14/13 10:13	02/21/13 10:51		M6
Vanadium	**4.0**	ug/L	0.10	1	02/14/13 10:13	02/16/13 20:28	7440-62-2	
Zinc	**11200**	ug/L	250	50	02/14/13 10:13	02/21/13 12:29	7440-66-6	M6
200.8 MET ICPMS, Dissolved	Analytical Method: EPA 200.8 Preparation Method: EPA 200.8							
Aluminum, Dissolved	**5.6**	ug/L	4.0	1	02/20/13 15:24	02/22/13 00:03	7429-90-5	
Antimony, Dissolved	ND	ug/L	0.50	1	02/20/13 15:24	02/22/13 00:03	7440-36-0	
Arsenic, Dissolved	**62.4**	ug/L	0.50	1	02/20/13 15:24	02/22/13 00:03	7440-38-2	
Barium, Dissolved	**11.8**	ug/L	0.30	1	02/20/13 15:24	02/22/13 00:03	7440-39-3	
Beryllium, Dissolved	ND	ug/L	0.20	1	02/20/13 15:24	02/23/13 12:26	7440-41-7	
Cadmium, Dissolved	ND	ug/L	0.080	1	02/20/13 15:24	02/22/13 00:03	7440-43-9	
Calcium, Dissolved	**477000**	ug/L	1000	50	02/20/13 15:24	02/23/13 12:31	7440-70-2	
Chromium, Dissolved	ND	ug/L	0.50	1	02/20/13 15:24	02/22/13 00:03	7440-47-3	
Cobalt, Dissolved	**4.3**	ug/L	0.50	1	02/20/13 15:24	02/22/13 00:03	7440-48-4	
Copper, Dissolved	ND	ug/L	0.50	1	02/20/13 15:24	02/22/13 00:03	7440-50-8	
Iron, Dissolved	**6640**	ug/L	50.0	1	02/20/13 15:24	02/22/13 00:03	7439-89-6	
Lead, Dissolved	**0.50**	ug/L	0.10	1	02/20/13 15:24	02/23/13 12:26	7439-92-1	
Magnesium, Dissolved	**41900**	ug/L	100	20	02/20/13 15:24	02/22/13 00:09	7439-95-4	

This report shall not be reproduced, except in full,
without the written consent of Pace Analytical Services, Inc..

Pace Analytical Services, Inc.
9608 Loiret Blvd.
Lenexa, KS 66219
(913)599-5665

ANALYTICAL RESULTS

Project: FEBRUARY 2013 RICO WATER SAMPL
Pace Project No.: 60138490

Sample: GW-5_20130207 **Lab ID: 60138490001** Collected: 02/07/13 11:00 Received: 02/09/13 09:40 Matrix: Water

Parameters	Results	Units	Report Limit	DF	Prepared	Analyzed	CAS No.	Qual
200.8 MET ICPMS, Dissolved	Analytical Method: EPA 200.8 Preparation Method: EPA 200.8							
Manganese, Dissolved	**5290**	ug/L	10.0	20	02/20/13 15:24	02/22/13 00:09	7439-96-5	
Molybdenum, Dissolved	**10.2**	ug/L	0.50	1	02/20/13 15:24	02/22/13 00:03	7439-98-7	
Nickel, Dissolved	**3.8**	ug/L	0.50	1	02/20/13 15:24	02/22/13 00:03	7440-02-0	
Potassium, Dissolved	**3830**	ug/L	20.0	1	02/20/13 15:24	02/23/13 12:26	7440-09-7	
Selenium, Dissolved	ND	ug/L	0.50	1	02/20/13 15:24	02/22/13 00:03	7782-49-2	
Silver, Dissolved	ND	ug/L	0.50	1	02/20/13 15:24	02/22/13 00:03	7440-22-4	
Sodium, Dissolved	**6520**	ug/L	50.0	1	02/20/13 15:24	02/22/13 00:03	7440-23-5	
Thallium, Dissolved	ND	ug/L	0.10	1	02/20/13 15:24	02/22/13 00:03	7440-28-0	
Vanadium, Dissolved	ND	ug/L	0.10	1	02/20/13 15:24	02/22/13 00:03	7440-62-2	
Zinc, Dissolved	**3620**	ug/L	100	20	02/20/13 15:24	02/22/13 00:09	7440-66-6	
200.8 Potentially Diss. Metals	Analytical Method: EPA 200.8 Preparation Method: EPA 200.8							
Aluminum, Dissolved	**2580**	ug/L	50.0	1	02/19/13 09:45	02/23/13 17:02	7429-90-5	
Antimony, Dissolved	**0.64J**	ug/L	1.0	1	02/19/13 09:45	02/23/13 17:02	7440-36-0	
Arsenic, Dissolved	**143**	ug/L	1.0	1	02/19/13 09:45	02/23/13 17:02	7440-38-2	
Barium, Dissolved	**12.3**	ug/L	1.0	1	02/19/13 09:45	02/23/13 17:02	7440-39-3	
Beryllium, Dissolved	**0.41J**	ug/L	0.50	1	02/19/13 09:45	02/23/13 17:02	7440-41-7	
Cadmium, Dissolved	**28.6**	ug/L	0.50	1	02/19/13 09:45	02/23/13 17:02	7440-43-9	
Chromium, Dissolved	**3.0**	ug/L	1.0	1	02/19/13 09:45	02/23/13 17:02	7440-47-3	
Cobalt, Dissolved	**7.4**	ug/L	1.0	1	02/19/13 09:45	02/23/13 17:02	7440-48-4	
Copper, Dissolved	**241**	ug/L	1.0	1	02/19/13 09:45	02/23/13 17:02	7440-50-8	
Iron, Dissolved	**16700**	ug/L	50.0	1	02/19/13 09:45	02/23/13 17:02	7439-89-6	
Lead, Dissolved	**3800**	ug/L	100	100	02/19/13 09:45	02/25/13 15:09	7439-92-1	
Manganese, Dissolved	**5500**	ug/L	100	100	02/19/13 09:45	02/25/13 15:09	7439-96-5	
Molybdenum, Dissolved	**8.6**	ug/L	1.0	1	02/19/13 09:45	02/23/13 17:02	7439-98-7	
Nickel, Dissolved	**8.2**	ug/L	1.0	1	02/19/13 09:45	02/23/13 17:02	7440-02-0	
Selenium, Dissolved	**0.96J**	ug/L	1.0	1	02/19/13 09:45	02/25/13 14:52	7782-49-2	
Silver, Dissolved	ND	ug/L	0.50	1	02/19/13 09:45	02/23/13 17:02	7440-22-4	
Thallium, Dissolved	**0.31J**	ug/L	1.0	1	02/19/13 09:45	02/23/13 17:02	7440-28-0	
Vanadium, Dissolved	**4.2**	ug/L	1.0	1	02/19/13 09:45	02/23/13 17:02	7440-62-2	
Zinc, Dissolved	**10500**	ug/L	10.0	1	02/19/13 09:45	02/23/13 17:02	7440-66-6	
245.1 Mercury	Analytical Method: EPA 245.1 Preparation Method: EPA 245.1							
Mercury	ND	ug/L	0.20	1	02/15/13 11:24	02/19/13 12:20	7439-97-6	
245.1 Mercury, Dissolved	Analytical Method: EPA 245.1 Preparation Method: EPA 245.1							
Mercury, Dissolved	ND	ug/L	0.20	1	02/15/13 11:18	02/19/13 13:11	7439-97-6	
245.1 Potentially Diss Mercury	Analytical Method: EPA 245.1 Preparation Method: EPA 245.1							
Mercury, Dissolved	ND	ug/L	0.20	1	02/13/13 10:10	02/13/13 14:18	7439-97-6	
2510B Specific Conductance	Analytical Method: SM 2510B							
Specific Conductance	**2510**	umhos/cm	10.0	1		02/13/13 12:45		
Salinity	Analytical Method: Calculated							
Salinity (as dissolved solids)	**1610**	mg/L	6.4	1		02/13/13 15:22		

This report shall not be reproduced, except in full,
without the written consent of Pace Analytical Services, Inc..

Pace Analytical Services, Inc.
9608 Loiret Blvd.
Lenexa, KS 66219
(913)599-5665

ANALYTICAL RESULTS

Project: FEBRUARY 2013 RICO WATER SAMPL
Pace Project No.: 60138490

Sample: GW-5_20130207 **Lab ID: 60138490001** Collected: 02/07/13 11:00 Received: 02/09/13 09:40 Matrix: Water

Parameters	Results	Units	Report Limit	DF	Prepared	Analyzed	CAS No.	Qual
Salinity	Analytical Method: Calculated							
Salinity (as seawater)	**1.3**	PSU	0.014	1		02/13/13 15:22		
2320B Alkalinity	Analytical Method: SM 2320B							
Alkalinity,Bicarbonate (CaCO3)	**170**	mg/L	20.0	1		02/19/13 12:04		
Alkalinity, Carbonate (CaCO3)	ND	mg/L	20.0	1		02/19/13 12:04		
Alkalinity, Total as CaCO3	**174**	mg/L	20.0	1		02/19/13 12:04		
2540C Total Dissolved Solids	Analytical Method: SM 2540C							
Total Dissolved Solids	**1880**	mg/L	5.0	1		02/12/13 16:20		
2540D Total Suspended Solids	Analytical Method: SM 2540D							
Total Suspended Solids	**186**	mg/L	5.0	1		02/13/13 14:43		
4500S2D Sulfide, Total	Analytical Method: SM 4500-S-2 D							
Sulfide, Total	**1.3**	mg/L	0.050	1		02/11/13 16:20	18496-25-8	M1
300.0 IC Anions 28 Days	Analytical Method: EPA 300.0							
Chloride	**1.2**	mg/L	1.0	1		02/12/13 14:39	16887-00-6	
Sulfate	**1300**	mg/L	100	100		02/12/13 14:56	14808-79-8	
353.2 Nitrogen, NO2/NO3 pres.	Analytical Method: EPA 353.2							
Nitrogen, NO2 plus NO3	ND	mg/L	0.10	1		02/19/13 16:47		
4500CNE Cyanide, Total	Analytical Method: SM 4500-CN-E							
Cyanide	ND	mg/L	0.0050	1		02/13/13 11:46	57-12-5	
5310C TOC	Analytical Method: SM 5310C							
Total Organic Carbon	**0.60**	mg/L	0.50	1		02/13/13 14:35	7440-44-0	

This report shall not be reproduced, except in full,
without the written consent of Pace Analytical Services, Inc..

Pace Analytical Services, Inc.
9608 Loiret Blvd.
Lenexa, KS 66219
(913)599-5665

ANALYTICAL RESULTS

Project: FEBRUARY 2013 RICO WATER SAMPL
Pace Project No.: 60138490

Sample: MW-204_20130207 **Lab ID: 60138490002** Collected: 02/07/13 13:30 Received: 02/09/13 09:40 Matrix: Water

Parameters	Results	Units	Report Limit	DF	Prepared	Analyzed	CAS No.	Qual
200.7 Potentially Diss. Metals	Analytical Method: EPA 200.7 Preparation Method: EPA 200.7							
Calcium, Dissolved	**250000**	ug/L	100	1	02/18/13 14:45	02/20/13 17:04	7440-70-2	
Magnesium, Dissolved	**23500**	ug/L	50.0	1	02/18/13 14:45	02/20/13 17:04	7439-95-4	
Potassium, Dissolved	**2610**	ug/L	500	1	02/18/13 14:45	02/20/13 17:04	7440-09-7	
Sodium, Dissolved	**11700**	ug/L	500	1	02/18/13 14:45	02/20/13 17:04	7440-23-5	
200.8 MET ICPMS	Analytical Method: EPA 200.8 Preparation Method: EPA 200.8							
Aluminum	**3780**	ug/L	4.0	1	02/14/13 10:13	02/16/13 20:52	7429-90-5	
Antimony	ND	ug/L	0.50	1	02/14/13 10:13	02/16/13 20:52	7440-36-0	
Arsenic	**2.5**	ug/L	0.50	1	02/14/13 10:13	02/16/13 20:52	7440-38-2	
Barium	**59.5**	ug/L	0.30	1	02/14/13 10:13	02/16/13 20:52	7440-39-3	
Beryllium	**0.93**	ug/L	0.20	1	02/14/13 10:13	02/17/13 13:51	7440-41-7	
Cadmium	**9.2**	ug/L	0.080	1	02/14/13 10:13	02/16/13 20:52	7440-43-9	
Calcium	**248000**	ug/L	400	20	02/14/13 10:13	02/16/13 20:57	7440-70-2	
Chromium	**12.6**	ug/L	0.50	1	02/14/13 10:13	02/16/13 20:52	7440-47-3	
Cobalt	**10.4**	ug/L	0.50	1	02/14/13 10:13	02/16/13 20:52	7440-48-4	
Copper	**25.8**	ug/L	0.50	1	02/14/13 10:13	02/16/13 20:52	7440-50-8	
Iron	**7910**	ug/L	50.0	1	02/14/13 10:13	02/16/13 20:52	7439-89-6	
Lead	**56.3**	ug/L	0.10	1	02/14/13 10:13	02/16/13 20:52	7439-92-1	
Magnesium	**21700**	ug/L	5.0	1	02/14/13 10:13	02/16/13 20:52	7439-95-4	
Manganese	**1580**	ug/L	10.0	20	02/14/13 10:13	02/16/13 20:57	7439-96-5	
Molybdenum	**2.1**	ug/L	0.50	1	02/14/13 10:13	02/16/13 20:52	7439-98-7	
Nickel	**13.2**	ug/L	0.50	1	02/14/13 10:13	02/16/13 20:52	7440-02-0	
Potassium	**2300**	ug/L	20.0	1	02/14/13 10:13	02/16/13 20:52	7440-09-7	
Selenium	**0.65**	ug/L	0.50	1	02/14/13 10:13	02/16/13 20:52	7782-49-2	
Silica	**85300**	ug/L	1070	20	02/14/13 10:13	02/21/13 11:11	7631-86-9	
Silver	ND	ug/L	0.50	1	02/14/13 10:13	02/17/13 13:51	7440-22-4	
Sodium	**9850**	ug/L	50.0	1	02/14/13 10:13	02/16/13 20:52	7440-23-5	
Thallium	**0.10**	ug/L	0.10	1	02/14/13 10:13	02/16/13 20:52	7440-28-0	
Total Hardness by 2340B	**709000**	ug/L	1420	20	02/14/13 10:13	02/16/13 20:57		
Vanadium	**7.3**	ug/L	0.10	1	02/14/13 10:13	02/16/13 20:52	7440-62-2	
Zinc	**120**	ug/L	5.0	1	02/14/13 10:13	02/16/13 20:52	7440-66-6	
200.8 MET ICPMS, Dissolved	Analytical Method: EPA 200.8 Preparation Method: EPA 200.8							
Aluminum, Dissolved	**10100**	ug/L	4.0	1	02/20/13 15:24	02/22/13 00:14	7429-90-5	
Antimony, Dissolved	ND	ug/L	0.50	1	02/20/13 15:24	02/22/13 00:14	7440-36-0	
Arsenic, Dissolved	**2.9**	ug/L	0.50	1	02/20/13 15:24	02/22/13 00:14	7440-38-2	
Barium, Dissolved	**105**	ug/L	0.30	1	02/20/13 15:24	02/22/13 00:14	7440-39-3	
Beryllium, Dissolved	**0.46**	ug/L	0.20	1	02/20/13 15:24	02/23/13 12:37	7440-41-7	
Cadmium, Dissolved	**3.4**	ug/L	0.080	1	02/20/13 15:24	02/22/13 00:14	7440-43-9	
Calcium, Dissolved	**265000**	ug/L	400	20	02/20/13 15:24	02/22/13 00:20	7440-70-2	
Chromium, Dissolved	**19.2**	ug/L	0.50	1	02/20/13 15:24	02/22/13 00:14	7440-47-3	
Cobalt, Dissolved	**6.8**	ug/L	0.50	1	02/20/13 15:24	02/22/13 00:14	7440-48-4	
Copper, Dissolved	**15.5**	ug/L	0.50	1	02/20/13 15:24	02/22/13 00:14	7440-50-8	
Iron, Dissolved	**13000**	ug/L	50.0	1	02/20/13 15:24	02/22/13 00:14	7439-89-6	
Lead, Dissolved	**23.2**	ug/L	0.10	1	02/20/13 15:24	02/23/13 12:37	7439-92-1	
Magnesium, Dissolved	**29900**	ug/L	100	20	02/20/13 15:24	02/22/13 00:20	7439-95-4	

This report shall not be reproduced, except in full,
without the written consent of Pace Analytical Services, Inc..

Pace Analytical Services, Inc.
9608 Loiret Blvd.
Lenexa, KS 66219
(913)599-5665

ANALYTICAL RESULTS

Project: FEBRUARY 2013 RICO WATER SAMPL
Pace Project No.: 60138490

Sample: MW-204_20130207 **Lab ID: 60138490002** Collected: 02/07/13 13:30 Received: 02/09/13 09:40 Matrix: Water

Parameters	Results	Units	Report Limit	DF	Prepared	Analyzed	CAS No.	Qual
200.8 MET ICPMS, Dissolved	Analytical Method: EPA 200.8 Preparation Method: EPA 200.8							
Manganese, Dissolved	**1570**	ug/L	10.0	20	02/20/13 15:24	02/22/13 00:20	7439-96-5	
Molybdenum, Dissolved	**4.7**	ug/L	0.50	1	02/20/13 15:24	02/22/13 00:14	7439-98-7	
Nickel, Dissolved	**13.6**	ug/L	0.50	1	02/20/13 15:24	02/22/13 00:14	7440-02-0	
Potassium, Dissolved	**3560**	ug/L	20.0	1	02/20/13 15:24	02/23/13 12:37	7440-09-7	
Selenium, Dissolved	ND	ug/L	0.50	1	02/20/13 15:24	02/22/13 00:14	7782-49-2	
Silver, Dissolved	ND	ug/L	0.50	1	02/20/13 15:24	02/22/13 00:14	7440-22-4	
Sodium, Dissolved	**11200**	ug/L	50.0	1	02/20/13 15:24	02/22/13 00:14	7440-23-5	
Thallium, Dissolved	ND	ug/L	0.10	1	02/20/13 15:24	02/23/13 12:37	7440-28-0	
Vanadium, Dissolved	**16.3**	ug/L	0.10	1	02/20/13 15:24	02/22/13 00:14	7440-62-2	
Zinc, Dissolved	**94.0**	ug/L	5.0	1	02/20/13 15:24	02/22/13 00:14	7440-66-6	
200.8 Potentially Diss. Metals	Analytical Method: EPA 200.8 Preparation Method: EPA 200.8							
Aluminum, Dissolved	**4220**	ug/L	50.0	1	02/19/13 09:45	02/23/13 17:06	7429-90-5	
Antimony, Dissolved	**0.15J**	ug/L	1.0	1	02/19/13 09:45	02/23/13 17:06	7440-36-0	B
Arsenic, Dissolved	**1.7**	ug/L	1.0	1	02/19/13 09:45	02/23/13 17:06	7440-38-2	
Barium, Dissolved	**63.7**	ug/L	1.0	1	02/19/13 09:45	02/23/13 17:06	7440-39-3	
Beryllium, Dissolved	**1.0**	ug/L	0.50	1	02/19/13 09:45	02/23/13 17:06	7440-41-7	
Cadmium, Dissolved	**9.0**	ug/L	0.50	1	02/19/13 09:45	02/23/13 17:06	7440-43-9	
Chromium, Dissolved	**15.2**	ug/L	1.0	1	02/19/13 09:45	02/23/13 17:06	7440-47-3	
Cobalt, Dissolved	**10.4**	ug/L	1.0	1	02/19/13 09:45	02/23/13 17:06	7440-48-4	
Copper, Dissolved	**26.7**	ug/L	1.0	1	02/19/13 09:45	02/23/13 17:06	7440-50-8	
Iron, Dissolved	**9060**	ug/L	50.0	1	02/19/13 09:45	02/23/13 17:06	7439-89-6	
Lead, Dissolved	**69.9**	ug/L	1.0	1	02/19/13 09:45	02/23/13 17:06	7439-92-1	
Manganese, Dissolved	**1620**	ug/L	1.0	1	02/19/13 09:45	02/23/13 17:06	7439-96-5	
Molybdenum, Dissolved	**2.5**	ug/L	1.0	1	02/19/13 09:45	02/23/13 17:06	7439-98-7	
Nickel, Dissolved	**12.7**	ug/L	1.0	1	02/19/13 09:45	02/23/13 17:06	7440-02-0	
Selenium, Dissolved	**1.6**	ug/L	1.0	1	02/19/13 09:45	02/25/13 15:21	7782-49-2	
Silver, Dissolved	ND	ug/L	0.50	1	02/19/13 09:45	02/23/13 17:06	7440-22-4	
Thallium, Dissolved	**0.14J**	ug/L	1.0	1	02/19/13 09:45	02/23/13 17:06	7440-28-0	
Vanadium, Dissolved	**8.6**	ug/L	1.0	1	02/19/13 09:45	02/23/13 17:06	7440-62-2	
Zinc, Dissolved	**126**	ug/L	10.0	1	02/19/13 09:45	02/23/13 17:06	7440-66-6	
245.1 Mercury	Analytical Method: EPA 245.1 Preparation Method: EPA 245.1							
Mercury	ND	ug/L	0.20	1	02/15/13 11:24	02/19/13 12:22	7439-97-6	
245.1 Mercury, Dissolved	Analytical Method: EPA 245.1 Preparation Method: EPA 245.1							
Mercury, Dissolved	ND	ug/L	0.20	1	02/15/13 11:18	02/19/13 13:14	7439-97-6	M1,R1
245.1 Potentially Diss Mercury	Analytical Method: EPA 245.1 Preparation Method: EPA 245.1							
Mercury, Dissolved	ND	ug/L	0.20	1	02/13/13 10:10	02/13/13 14:20	7439-97-6	
2510B Specific Conductance	Analytical Method: SM 2510B							
Specific Conductance	**1410**	umhos/cm	10.0	1		02/13/13 12:48		
Salinity	Analytical Method: Calculated							
Salinity (as dissolved solids)	**900**	mg/L	6.4	1		02/13/13 15:22		

This report shall not be reproduced, except in full,
without the written consent of Pace Analytical Services, Inc..

Pace Analytical Services, Inc.
9608 Loiret Blvd.
Lenexa, KS 66219
(913)599-5665

ANALYTICAL RESULTS

Project: FEBRUARY 2013 RICO WATER SAMPL
Pace Project No.: 60138490

Sample: MW-204_20130207 **Lab ID: 60138490002** Collected: 02/07/13 13:30 Received: 02/09/13 09:40 Matrix: Water

Parameters	Results	Units	Report Limit	DF	Prepared	Analyzed	CAS No.	Qual
Salinity	Analytical Method: Calculated							
Salinity (as seawater)	**0.70**	PSU	0.014	1		02/13/13 15:22		
2320B Alkalinity	Analytical Method: SM 2320B							
Alkalinity,Bicarbonate (CaCO3)	**119**	mg/L	20.0	1		02/19/13 12:12		
Alkalinity, Carbonate (CaCO3)	ND	mg/L	20.0	1		02/19/13 12:12		
Alkalinity, Total as CaCO3	**119**	mg/L	20.0	1		02/19/13 12:12		
2540C Total Dissolved Solids	Analytical Method: SM 2540C							
Total Dissolved Solids	**1010**	mg/L	5.0	1		02/12/13 16:20		
2540D Total Suspended Solids	Analytical Method: SM 2540D							
Total Suspended Solids	**310**	mg/L	5.0	1		02/13/13 14:43		
4500S2D Sulfide, Total	Analytical Method: SM 4500-S-2 D							
Sulfide, Total	ND	mg/L	0.050	1		02/11/13 16:21	18496-25-8	
300.0 IC Anions 28 Days	Analytical Method: EPA 300.0							
Chloride	ND	mg/L	1.0	1		02/12/13 15:14	16887-00-6	
Sulfate	**666**	mg/L	50.0	50		02/12/13 15:32	14808-79-8	
353.2 Nitrogen, NO2/NO3 pres.	Analytical Method: EPA 353.2							
Nitrogen, NO2 plus NO3	ND	mg/L	0.10	1		02/19/13 16:48		
4500CNE Cyanide, Total	Analytical Method: SM 4500-CN-E							
Cyanide	ND	mg/L	0.0050	1		02/13/13 11:49	57-12-5	
5310C TOC	Analytical Method: SM 5310C							
Total Organic Carbon	**0.50**	mg/L	0.50	1		02/13/13 14:53	7440-44-0	

This report shall not be reproduced, except in full,
without the written consent of Pace Analytical Services, Inc..

Pace Analytical Services, Inc.
9608 Loiret Blvd.
Lenexa, KS 66219
(913)599-5665

ANALYTICAL RESULTS

Project: FEBRUARY 2013 RICO WATER SAMPL
Pace Project No.: 60138490

Sample: MW-5 SHALLOW_20130207 **Lab ID: 60138490003** Collected: 02/07/13 12:30 Received: 02/09/13 09:40 Matrix: Water

Parameters	Results	Units	Report Limit	DF	Prepared	Analyzed	CAS No.	Qual
200.7 Potentially Diss. Metals	Analytical Method: EPA 200.7 Preparation Method: EPA 200.7							
Calcium, Dissolved	**389000**	ug/L	100	1	02/18/13 14:45	02/20/13 17:06	7440-70-2	
Magnesium, Dissolved	**120000**	ug/L	50.0	1	02/18/13 14:45	02/20/13 17:06	7439-95-4	
Potassium, Dissolved	**2560**	ug/L	500	1	02/18/13 14:45	02/20/13 17:06	7440-09-7	
Sodium, Dissolved	**22900**	ug/L	500	1	02/18/13 14:45	02/20/13 17:06	7440-23-5	
200.8 MET ICPMS	Analytical Method: EPA 200.8 Preparation Method: EPA 200.8							
Aluminum	**17000**	ug/L	4.0	1	02/14/13 10:13	02/16/13 21:20	7429-90-5	
Antimony	**0.63**	ug/L	0.50	1	02/14/13 10:13	02/16/13 21:20	7440-36-0	
Arsenic	**264**	ug/L	0.50	1	02/14/13 10:13	02/16/13 21:20	7440-38-2	
Barium	**7.2**	ug/L	0.30	1	02/14/13 10:13	02/16/13 21:20	7440-39-3	
Beryllium	**4.5**	ug/L	0.20	1	02/14/13 10:13	02/17/13 14:19	7440-41-7	
Cadmium	**120**	ug/L	0.080	1	02/14/13 10:13	02/16/13 21:20	7440-43-9	
Calcium	**405000**	ug/L	400	20	02/14/13 10:13	02/16/13 21:26	7440-70-2	
Chromium	ND	ug/L	0.50	1	02/14/13 10:13	02/16/13 21:20	7440-47-3	
Cobalt	**69.6**	ug/L	0.50	1	02/14/13 10:13	02/16/13 21:20	7440-48-4	
Copper	**257**	ug/L	0.50	1	02/14/13 10:13	02/16/13 21:20	7440-50-8	
Iron	**458000**	ug/L	2500	50	02/14/13 10:13	02/16/13 21:32	7439-89-6	
Lead	**2400**	ug/L	2.0	20	02/14/13 10:13	02/16/13 21:26	7439-92-1	
Magnesium	**131000**	ug/L	100	20	02/14/13 10:13	02/16/13 21:26	7439-95-4	
Manganese	**27000**	ug/L	250	500	02/14/13 10:13	02/21/13 13:24	7439-96-5	
Molybdenum	**1.4**	ug/L	0.50	1	02/14/13 10:13	02/16/13 21:20	7439-98-7	
Nickel	**132**	ug/L	0.50	1	02/14/13 10:13	02/16/13 21:20	7440-02-0	
Potassium	**2520**	ug/L	20.0	1	02/14/13 10:13	02/16/13 21:20	7440-09-7	
Selenium	**3.1**	ug/L	0.50	1	02/14/13 10:13	02/16/13 21:20	7782-49-2	
Silica	**53600**	ug/L	1070	20	02/14/13 10:13	02/16/13 21:26	7631-86-9	
Silver	**0.58**	ug/L	0.50	1	02/14/13 10:13	02/17/13 14:19	7440-22-4	
Sodium	**21200**	ug/L	50.0	1	02/14/13 10:13	02/16/13 21:20	7440-23-5	
Thallium	**0.32**	ug/L	0.10	1	02/14/13 10:13	02/16/13 21:20	7440-28-0	
Total Hardness by 2340B	**1550000**	ug/L	1420	20	02/14/13 10:13	02/16/13 21:26		
Vanadium	**3.9**	ug/L	0.10	1	02/14/13 10:13	02/16/13 21:20	7440-62-2	
Zinc	**128000**	ug/L	2500	500	02/14/13 10:13	02/21/13 13:24	7440-66-6	
200.8 MET ICPMS, Dissolved	Analytical Method: EPA 200.8 Preparation Method: EPA 200.8							
Aluminum, Dissolved	**19800**	ug/L	4.0	1	02/20/13 15:24	02/22/13 00:25	7429-90-5	M6
Antimony, Dissolved	**1.4**	ug/L	0.50	1	02/20/13 15:24	02/22/13 00:25	7440-36-0	
Arsenic, Dissolved	**239**	ug/L	0.50	1	02/20/13 15:24	02/22/13 00:25	7440-38-2	M6
Barium, Dissolved	**32.8**	ug/L	0.30	1	02/20/13 15:24	02/22/13 00:25	7440-39-3	
Beryllium, Dissolved	**5.7**	ug/L	4.0	20	02/20/13 15:24	02/23/13 12:42	7440-41-7	
Cadmium, Dissolved	**120**	ug/L	0.080	1	02/20/13 15:24	02/22/13 00:25	7440-43-9	
Calcium, Dissolved	**492000**	ug/L	2000	100	02/20/13 15:24	02/22/13 00:37	7440-70-2	M6
Chromium, Dissolved	ND	ug/L	0.50	1	02/20/13 15:24	02/22/13 00:25	7440-47-3	
Cobalt, Dissolved	**72.8**	ug/L	0.50	1	02/20/13 15:24	02/22/13 00:25	7440-48-4	
Copper, Dissolved	**198**	ug/L	0.50	1	02/20/13 15:24	02/22/13 00:25	7440-50-8	M6
Iron, Dissolved	**545000**	ug/L	5000	100	02/20/13 15:24	02/22/13 00:37	7439-89-6	M6
Lead, Dissolved	**2570**	ug/L	2.0	20	02/20/13 15:24	02/23/13 12:42	7439-92-1	M6
Magnesium, Dissolved	**148000**	ug/L	100	20	02/20/13 15:24	02/22/13 00:31	7439-95-4	M6

This report shall not be reproduced, except in full,
without the written consent of Pace Analytical Services, Inc..

Pace Analytical Services, Inc.
9608 Loiret Blvd.
Lenexa, KS 66219
(913)599-5665

ANALYTICAL RESULTS

Project: FEBRUARY 2013 RICO WATER SAMPL
Pace Project No.: 60138490

Sample: MW-5 SHALLOW_20130207 **Lab ID: 60138490003** Collected: 02/07/13 12:30 Received: 02/09/13 09:40 Matrix: Water

Parameters	Results	Units	Report Limit	DF	Prepared	Analyzed	CAS No.	Qual
200.8 MET ICPMS, Dissolved	Analytical Method: EPA 200.8 Preparation Method: EPA 200.8							
Manganese, Dissolved	**29900**	ug/L	50.0	100	02/20/13 15:24	02/22/13 00:37	7439-96-5	M6
Molybdenum, Dissolved	**2.1**	ug/L	0.50	1	02/20/13 15:24	02/22/13 00:25	7439-98-7	
Nickel, Dissolved	**132**	ug/L	0.50	1	02/20/13 15:24	02/22/13 00:25	7440-02-0	M6
Potassium, Dissolved	**2860**	ug/L	20.0	1	02/20/13 15:24	02/22/13 00:25	7440-09-7	M6
Selenium, Dissolved	**2.0**	ug/L	0.50	1	02/20/13 15:24	02/22/13 00:25	7782-49-2	
Silver, Dissolved	**8.3**	ug/L	0.50	1	02/20/13 15:24	02/22/13 00:25	7440-22-4	
Sodium, Dissolved	**24300**	ug/L	1000	20	02/20/13 15:24	02/22/13 00:31	7440-23-5	
Thallium, Dissolved	ND	ug/L	2.0	20	02/20/13 15:24	02/23/13 12:42	7440-28-0	D3
Vanadium, Dissolved	**4.5**	ug/L	0.10	1	02/20/13 15:24	02/22/13 00:25	7440-62-2	
Zinc, Dissolved	**132000**	ug/L	2500	500	02/20/13 15:24	02/22/13 00:42	7440-66-6	M6
200.8 Potentially Diss. Metals	Analytical Method: EPA 200.8 Preparation Method: EPA 200.8							
Aluminum, Dissolved	**17500**	ug/L	50.0	1	02/19/13 09:45	02/23/13 17:10	7429-90-5	
Antimony, Dissolved	**0.82J**	ug/L	1.0	1	02/19/13 09:45	02/23/13 17:10	7440-36-0	
Arsenic, Dissolved	**309**	ug/L	1.0	1	02/19/13 09:45	02/23/13 17:10	7440-38-2	
Barium, Dissolved	**7.4**	ug/L	1.0	1	02/19/13 09:45	02/23/13 17:10	7440-39-3	
Beryllium, Dissolved	**4.9**	ug/L	0.50	1	02/19/13 09:45	02/23/13 17:10	7440-41-7	
Cadmium, Dissolved	**142**	ug/L	0.50	1	02/19/13 09:45	02/23/13 17:10	7440-43-9	
Chromium, Dissolved	**8.5**	ug/L	1.0	1	02/19/13 09:45	02/23/13 17:10	7440-47-3	
Cobalt, Dissolved	**81.9**	ug/L	1.0	1	02/19/13 09:45	02/23/13 17:10	7440-48-4	
Copper, Dissolved	**518**	ug/L	1.0	1	02/19/13 09:45	02/23/13 17:10	7440-50-8	
Iron, Dissolved	**497000**	ug/L	5000	100	02/19/13 09:45	02/25/13 15:38	7439-89-6	
Lead, Dissolved	**2620**	ug/L	2.0	2	02/19/13 09:45	02/25/13 15:30	7439-92-1	
Manganese, Dissolved	**27400**	ug/L	100	100	02/19/13 09:45	02/25/13 15:38	7439-96-5	
Molybdenum, Dissolved	**1.9**	ug/L	1.0	1	02/19/13 09:45	02/23/13 17:10	7439-98-7	
Nickel, Dissolved	**150**	ug/L	1.0	1	02/19/13 09:45	02/23/13 17:10	7440-02-0	
Selenium, Dissolved	**8.7**	ug/L	1.0	1	02/19/13 09:45	02/25/13 15:26	7782-49-2	
Silver, Dissolved	**0.12J**	ug/L	0.50	1	02/19/13 09:45	02/23/13 17:10	7440-22-4	
Thallium, Dissolved	**0.37J**	ug/L	2.0	2	02/19/13 09:45	02/25/13 15:30	7440-28-0	
Vanadium, Dissolved	**5.7**	ug/L	1.0	1	02/19/13 09:45	02/23/13 17:10	7440-62-2	
Zinc, Dissolved	**132000**	ug/L	1000	100	02/19/13 09:45	02/25/13 15:38	7440-66-6	
245.1 Mercury	Analytical Method: EPA 245.1 Preparation Method: EPA 245.1							
Mercury	ND	ug/L	0.20	1	02/15/13 11:24	02/19/13 12:30	7439-97-6	
245.1 Mercury, Dissolved	Analytical Method: EPA 245.1 Preparation Method: EPA 245.1							
Mercury, Dissolved	ND	ug/L	0.20	1	02/15/13 11:18	02/19/13 13:21	7439-97-6	
245.1 Potentially Diss Mercury	Analytical Method: EPA 245.1 Preparation Method: EPA 245.1							
Mercury, Dissolved	ND	ug/L	0.20	1	02/13/13 10:10	02/13/13 14:23	7439-97-6	
2510B Specific Conductance	Analytical Method: SM 2510B							
Specific Conductance	**4060**	umhos/cm	10.0	1		02/13/13 12:49		

This report shall not be reproduced, except in full,
without the written consent of Pace Analytical Services, Inc..

Pace Analytical Services, Inc.
9608 Loiret Blvd.
Lenexa, KS 66219
(913)599-5665

ANALYTICAL RESULTS

Project: FEBRUARY 2013 RICO WATER SAMPL
Pace Project No.: 60138490

Sample: MW-5 SHALLOW_20130207 **Lab ID: 60138490003** Collected: 02/07/13 12:30 Received: 02/09/13 09:40 Matrix: Water

Parameters	Results	Units	Report Limit	DF	Prepared	Analyzed	CAS No.	Qual
Salinity	Analytical Method: Calculated							
Salinity (as dissolved solids)	**2600**	mg/L	6.4	1		02/13/13 15:22		
Salinity (as seawater)	**2.1**	PSU	0.014	1		02/13/13 15:22		
2320B Alkalinity	Analytical Method: SM 2320B							
Alkalinity,Bicarbonate (CaCO3)	ND	mg/L	20.0	1		02/19/13 12:22		
Alkalinity, Carbonate (CaCO3)	ND	mg/L	20.0	1		02/19/13 12:22		
Alkalinity, Total as CaCO3	ND	mg/L	20.0	1		02/19/13 12:22		
2540C Total Dissolved Solids	Analytical Method: SM 2540C							
Total Dissolved Solids	**4180**	mg/L	5.0	1		02/12/13 16:21		
2540D Total Suspended Solids	Analytical Method: SM 2540D							
Total Suspended Solids	**430**	mg/L	5.0	1		02/13/13 14:43		
4500S2D Sulfide, Total	Analytical Method: SM 4500-S-2 D							
Sulfide, Total	**0.051**	mg/L	0.050	1		02/11/13 16:21	18496-25-8	
300.0 IC Anions 28 Days	Analytical Method: EPA 300.0							
Chloride	**1.5**	mg/L	1.0	1		02/16/13 19:59	16887-00-6	
Sulfate	**3220**	mg/L	500	500		02/17/13 14:43	14808-79-8	
353.2 Nitrogen, NO2/NO3 pres.	Analytical Method: EPA 353.2							
Nitrogen, NO2 plus NO3	ND	mg/L	0.10	1		02/19/13 16:49		
4500CNE Cyanide, Total	Analytical Method: SM 4500-CN-E							
Cyanide	ND	mg/L	0.0050	1		02/13/13 11:50	57-12-5	
5310C TOC	Analytical Method: SM 5310C							
Total Organic Carbon	**0.41J**	mg/L	0.50	1		02/13/13 15:11	7440-44-0	

This report shall not be reproduced, except in full,
without the written consent of Pace Analytical Services, Inc..

Pace Analytical Services, Inc.
9608 Loiret Blvd.
Lenexa, KS 66219
(913)599-5665

ANALYTICAL RESULTS

Project: FEBRUARY 2013 RICO WATER SAMPL
Pace Project No.: 60138490

Sample: MW-5 DEEP_20130207 **Lab ID: 60138490004** Collected: 02/07/13 12:15 Received: 02/09/13 09:40 Matrix: Water

Parameters	Results	Units	Report Limit	DF	Prepared	Analyzed	CAS No.	Qual
200.7 Potentially Diss. Metals	Analytical Method: EPA 200.7 Preparation Method: EPA 200.7							
Calcium, Dissolved	**299000**	ug/L	100	1	02/18/13 14:45	02/20/13 17:12	7440-70-2	
Magnesium, Dissolved	**48200**	ug/L	50.0	1	02/18/13 14:45	02/20/13 17:12	7439-95-4	
Potassium, Dissolved	**7600**	ug/L	500	1	02/18/13 14:45	02/20/13 17:12	7440-09-7	
Sodium, Dissolved	**7670**	ug/L	500	1	02/18/13 14:45	02/20/13 17:12	7440-23-5	
200.8 MET ICPMS	Analytical Method: EPA 200.8 Preparation Method: EPA 200.8							
Aluminum	**3040**	ug/L	4.0	1	02/14/13 10:13	02/16/13 21:37	7429-90-5	
Antimony	ND	ug/L	0.50	1	02/14/13 10:13	02/16/13 21:37	7440-36-0	
Arsenic	**199**	ug/L	0.50	1	02/14/13 10:13	02/16/13 21:37	7440-38-2	
Barium	**15.5**	ug/L	0.30	1	02/14/13 10:13	02/16/13 21:37	7440-39-3	
Beryllium	**2.0**	ug/L	0.20	1	02/14/13 10:13	02/17/13 14:42	7440-41-7	
Cadmium	**2.7**	ug/L	0.080	1	02/14/13 10:13	02/16/13 21:37	7440-43-9	
Calcium	**295000**	ug/L	400	20	02/14/13 10:13	02/16/13 21:42	7440-70-2	
Chromium	**1.1**	ug/L	0.50	1	02/14/13 10:13	02/16/13 21:37	7440-47-3	
Cobalt	**8.6**	ug/L	0.50	1	02/14/13 10:13	02/16/13 21:37	7440-48-4	
Copper	**51.5**	ug/L	0.50	1	02/14/13 10:13	02/16/13 21:37	7440-50-8	
Iron	**63400**	ug/L	1000	20	02/14/13 10:13	02/16/13 21:42	7439-89-6	
Lead	**871**	ug/L	2.0	20	02/14/13 10:13	02/21/13 11:57	7439-92-1	
Magnesium	**47200**	ug/L	100	20	02/14/13 10:13	02/16/13 21:42	7439-95-4	
Manganese	**8900**	ug/L	10.0	20	02/14/13 10:13	02/16/13 21:42	7439-96-5	
Molybdenum	**2.6**	ug/L	0.50	1	02/14/13 10:13	02/16/13 21:37	7439-98-7	
Nickel	**9.2**	ug/L	0.50	1	02/14/13 10:13	02/16/13 21:37	7440-02-0	
Potassium	**6900**	ug/L	20.0	1	02/14/13 10:13	02/16/13 21:37	7440-09-7	
Selenium	**0.78**	ug/L	0.50	1	02/14/13 10:13	02/16/13 21:37	7782-49-2	
Silica	**31100**	ug/L	1070	20	02/14/13 10:13	02/21/13 11:57	7631-86-9	
Silver	ND	ug/L	0.50	1	02/14/13 10:13	02/17/13 14:42	7440-22-4	
Sodium	**6370**	ug/L	50.0	1	02/14/13 10:13	02/16/13 21:37	7440-23-5	
Thallium	**0.19**	ug/L	0.10	1	02/14/13 10:13	02/16/13 21:37	7440-28-0	
Total Hardness by 2340B	**931000**	ug/L	1420	20	02/14/13 10:13	02/16/13 21:42		
Vanadium	**4.7**	ug/L	0.10	1	02/14/13 10:13	02/16/13 21:37	7440-62-2	
Zinc	**7850**	ug/L	100	20	02/14/13 10:13	02/21/13 11:57	7440-66-6	
200.8 MET ICPMS, Dissolved	Analytical Method: EPA 200.8 Preparation Method: EPA 200.8							
Aluminum, Dissolved	**1150**	ug/L	4.0	1	02/20/13 15:24	02/22/13 01:18	7429-90-5	
Antimony, Dissolved	ND	ug/L	0.50	1	02/20/13 15:24	02/22/13 01:18	7440-36-0	
Arsenic, Dissolved	**154**	ug/L	0.50	1	02/20/13 15:24	02/22/13 01:18	7440-38-2	
Barium, Dissolved	**18.9**	ug/L	0.30	1	02/20/13 15:24	02/22/13 01:18	7440-39-3	
Beryllium, Dissolved	**1.4**	ug/L	0.20	1	02/20/13 15:24	02/23/13 13:01	7440-41-7	
Cadmium, Dissolved	**0.59**	ug/L	0.080	1	02/20/13 15:24	02/22/13 01:18	7440-43-9	
Calcium, Dissolved	**339000**	ug/L	400	20	02/20/13 15:24	02/22/13 01:24	7440-70-2	
Chromium, Dissolved	ND	ug/L	0.50	1	02/20/13 15:24	02/22/13 01:18	7440-47-3	
Cobalt, Dissolved	**7.9**	ug/L	0.50	1	02/20/13 15:24	02/22/13 01:18	7440-48-4	
Copper, Dissolved	**10.9**	ug/L	0.50	1	02/20/13 15:24	02/22/13 01:18	7440-50-8	
Iron, Dissolved	**65900**	ug/L	1000	20	02/20/13 15:24	02/22/13 01:24	7439-89-6	
Lead, Dissolved	**68.6**	ug/L	0.10	1	02/20/13 15:24	02/23/13 13:01	7439-92-1	
Magnesium, Dissolved	**50600**	ug/L	100	20	02/20/13 15:24	02/22/13 01:24	7439-95-4	

This report shall not be reproduced, except in full,
without the written consent of Pace Analytical Services, Inc..

Pace Analytical Services, Inc.
9608 Loiret Blvd.
Lenexa, KS 66219
(913)599-5665

ANALYTICAL RESULTS

Project: FEBRUARY 2013 RICO WATER SAMPL
Pace Project No.: 60138490

Sample: MW-5 DEEP_20130207 **Lab ID: 60138490004** Collected: 02/07/13 12:15 Received: 02/09/13 09:40 Matrix: Water

Parameters	Results	Units	Report Limit	DF	Prepared	Analyzed	CAS No.	Qual
200.8 MET ICPMS, Dissolved	Analytical Method: EPA 200.8 Preparation Method: EPA 200.8							
Manganese, Dissolved	**9740**	ug/L	12.5	25	02/20/13 15:24	02/23/13 13:51	7439-96-5	
Molybdenum, Dissolved	**12.3**	ug/L	0.50	1	02/20/13 15:24	02/22/13 01:18	7439-98-7	
Nickel, Dissolved	**7.4**	ug/L	0.50	1	02/20/13 15:24	02/22/13 01:18	7440-02-0	
Potassium, Dissolved	**7440**	ug/L	20.0	1	02/20/13 15:24	02/23/13 13:01	7440-09-7	
Selenium, Dissolved	ND	ug/L	0.50	1	02/20/13 15:24	02/22/13 01:18	7782-49-2	
Silver, Dissolved	ND	ug/L	0.50	1	02/20/13 15:24	02/22/13 01:18	7440-22-4	
Sodium, Dissolved	**7360**	ug/L	50.0	1	02/20/13 15:24	02/22/13 01:18	7440-23-5	
Thallium, Dissolved	ND	ug/L	0.10	1	02/20/13 15:24	02/23/13 13:01	7440-28-0	
Vanadium, Dissolved	**1.3**	ug/L	0.10	1	02/20/13 15:24	02/22/13 01:18	7440-62-2	
Zinc, Dissolved	**7390**	ug/L	100	20	02/20/13 15:24	02/22/13 01:24	7440-66-6	
200.8 Potentially Diss. Metals	Analytical Method: EPA 200.8 Preparation Method: EPA 200.8							
Aluminum, Dissolved	**2830**	ug/L	50.0	1	02/19/13 09:45	02/23/13 17:14	7429-90-5	
Antimony, Dissolved	**0.20J**	ug/L	1.0	1	02/19/13 09:45	02/23/13 17:14	7440-36-0	B
Arsenic, Dissolved	**191**	ug/L	1.0	1	02/19/13 09:45	02/23/13 17:14	7440-38-2	
Barium, Dissolved	**15.6**	ug/L	1.0	1	02/19/13 09:45	02/23/13 17:14	7440-39-3	
Beryllium, Dissolved	**2.1**	ug/L	0.50	1	02/19/13 09:45	02/23/13 17:14	7440-41-7	
Cadmium, Dissolved	**2.5**	ug/L	0.50	1	02/19/13 09:45	02/23/13 17:14	7440-43-9	
Chromium, Dissolved	**3.3**	ug/L	1.0	1	02/19/13 09:45	02/23/13 17:14	7440-47-3	
Cobalt, Dissolved	**8.5**	ug/L	1.0	1	02/19/13 09:45	02/23/13 17:14	7440-48-4	
Copper, Dissolved	**55.4**	ug/L	1.0	1	02/19/13 09:45	02/23/13 17:14	7440-50-8	
Iron, Dissolved	**64100**	ug/L	50.0	1	02/19/13 09:45	02/23/13 17:14	7439-89-6	
Lead, Dissolved	**975**	ug/L	1.0	1	02/19/13 09:45	02/23/13 17:14	7439-92-1	
Manganese, Dissolved	**9110**	ug/L	100	100	02/19/13 09:45	02/27/13 19:01	7439-96-5	
Molybdenum, Dissolved	**3.7**	ug/L	1.0	1	02/19/13 09:45	02/23/13 17:14	7439-98-7	
Nickel, Dissolved	**7.0**	ug/L	1.0	1	02/19/13 09:45	02/23/13 17:14	7440-02-0	
Selenium, Dissolved	**1.5**	ug/L	1.0	1	02/19/13 09:45	02/25/13 15:42	7782-49-2	
Silver, Dissolved	ND	ug/L	0.50	1	02/19/13 09:45	02/23/13 17:14	7440-22-4	
Thallium, Dissolved	**0.20J**	ug/L	1.0	1	02/19/13 09:45	02/23/13 17:14	7440-28-0	
Vanadium, Dissolved	**4.2**	ug/L	1.0	1	02/19/13 09:45	02/23/13 17:14	7440-62-2	
Zinc, Dissolved	**7320**	ug/L	10.0	1	02/19/13 09:45	02/23/13 17:14	7440-66-6	
245.1 Mercury	Analytical Method: EPA 245.1 Preparation Method: EPA 245.1							
Mercury	ND	ug/L	0.20	1	02/15/13 11:24	02/19/13 12:32	7439-97-6	
245.1 Mercury, Dissolved	Analytical Method: EPA 245.1 Preparation Method: EPA 245.1							
Mercury, Dissolved	ND	ug/L	0.20	1	02/15/13 11:18	02/19/13 13:24	7439-97-6	
245.1 Potentially Diss Mercury	Analytical Method: EPA 245.1 Preparation Method: EPA 245.1							
Mercury, Dissolved	ND	ug/L	0.20	1	02/13/13 10:10	02/13/13 14:29	7439-97-6	
2510B Specific Conductance	Analytical Method: SM 2510B							
Specific Conductance	**1690**	umhos/cm	10.0	1		02/13/13 12:53		
Salinity	Analytical Method: Calculated							
Salinity (as dissolved solids)	**1080**	mg/L	6.4	1		02/13/13 15:22		

REPORT OF LABORATORY ANALYSIS

This report shall not be reproduced, except in full,
without the written consent of Pace Analytical Services, Inc..

Pace Analytical Services, Inc.
9608 Loiret Blvd.
Lenexa, KS 66219
(913)599-5665

ANALYTICAL RESULTS

Project: FEBRUARY 2013 RICO WATER SAMPL
Pace Project No.: 60138490

Sample: MW-5 DEEP_20130207 **Lab ID: 60138490004** Collected: 02/07/13 12:15 Received: 02/09/13 09:40 Matrix: Water

Parameters	Results	Units	Report Limit	DF	Prepared	Analyzed	CAS No.	Qual
Salinity	Analytical Method: Calculated							
Salinity (as seawater)	**0.85**	PSU	0.014	1		02/13/13 15:22		
2320B Alkalinity	Analytical Method: SM 2320B							
Alkalinity,Bicarbonate (CaCO3)	**105**	mg/L	20.0	1		02/19/13 12:26		
Alkalinity, Carbonate (CaCO3)	ND	mg/L	20.0	1		02/19/13 12:26		
Alkalinity, Total as CaCO3	**105**	mg/L	20.0	1		02/19/13 12:26		
2540C Total Dissolved Solids	Analytical Method: SM 2540C							
Total Dissolved Solids	**1490**	mg/L	5.0	1		02/12/13 16:21		
2540D Total Suspended Solids	Analytical Method: SM 2540D							
Total Suspended Solids	**426**	mg/L	5.0	1		02/13/13 14:44		
4500S2D Sulfide, Total	Analytical Method: SM 4500-S-2 D							
Sulfide, Total	ND	mg/L	0.050	1		02/11/13 16:21	18496-25-8	
300.0 IC Anions 28 Days	Analytical Method: EPA 300.0							
Chloride	**1.0**	mg/L	1.0	1		02/12/13 16:25	16887-00-6	
Sulfate	**1030**	mg/L	100	100		02/12/13 16:43	14808-79-8	
353.2 Nitrogen, NO2/NO3 pres.	Analytical Method: EPA 353.2							
Nitrogen, NO2 plus NO3	ND	mg/L	0.10	1		02/25/13 10:37		
4500CNE Cyanide, Total	Analytical Method: SM 4500-CN-E							
Cyanide	ND	mg/L	0.0050	1		02/13/13 11:52	57-12-5	
5310C TOC	Analytical Method: SM 5310C							
Total Organic Carbon	**0.67**	mg/L	0.50	1		02/13/13 15:29	7440-44-0	

This report shall not be reproduced, except in full,
without the written consent of Pace Analytical Services, Inc..

Pace Analytical Services, Inc.
9608 Loiret Blvd.
Lenexa, KS 66219
(913)599-5665

ANALYTICAL RESULTS

Project: FEBRUARY 2013 RICO WATER SAMPL
Pace Project No.: 60138490

Sample: GW-1_20130206 **Lab ID: 60138490005** Collected: 02/06/13 15:30 Received: 02/09/13 09:40 Matrix: Water

Parameters	Results	Units	Report Limit	DF	Prepared	Analyzed	CAS No.	Qual
200.7 Potentially Diss. Metals	Analytical Method: EPA 200.7 Preparation Method: EPA 200.7							
Calcium, Dissolved	**57600**	ug/L	100	1	02/18/13 14:45	02/20/13 17:14	7440-70-2	
Magnesium, Dissolved	**7810**	ug/L	50.0	1	02/18/13 14:45	02/20/13 17:14	7439-95-4	
Potassium, Dissolved	**754**	ug/L	500	1	02/18/13 14:45	02/20/13 17:14	7440-09-7	
Sodium, Dissolved	**2900**	ug/L	500	1	02/18/13 14:45	02/20/13 17:14	7440-23-5	
200.8 MET ICPMS	Analytical Method: EPA 200.8 Preparation Method: EPA 200.8							
Aluminum	**650**	ug/L	4.0	1	02/14/13 10:13	02/16/13 21:48	7429-90-5	
Antimony	ND	ug/L	0.50	1	02/14/13 10:13	02/16/13 21:48	7440-36-0	
Arsenic	**1.4**	ug/L	0.50	1	02/14/13 10:13	02/16/13 21:48	7440-38-2	
Barium	**102**	ug/L	0.30	1	02/14/13 10:13	02/16/13 21:48	7440-39-3	
Beryllium	ND	ug/L	0.20	1	02/14/13 10:13	02/17/13 14:52	7440-41-7	
Cadmium	**0.50**	ug/L	0.080	1	02/14/13 10:13	02/16/13 21:48	7440-43-9	
Calcium	**61200**	ug/L	400	20	02/14/13 10:13	02/21/13 12:02	7440-70-2	
Chromium	**0.81**	ug/L	0.50	1	02/14/13 10:13	02/16/13 21:48	7440-47-3	
Cobalt	**1.3**	ug/L	0.50	1	02/14/13 10:13	02/16/13 21:48	7440-48-4	
Copper	**12.4**	ug/L	0.50	1	02/14/13 10:13	02/16/13 21:48	7440-50-8	
Iron	**1140**	ug/L	50.0	1	02/14/13 10:13	02/16/13 21:48	7439-89-6	
Lead	**8.7**	ug/L	0.10	1	02/14/13 10:13	02/16/13 21:48	7439-92-1	
Magnesium	**6710**	ug/L	5.0	1	02/14/13 10:13	02/16/13 21:48	7439-95-4	
Manganese	**286**	ug/L	0.50	1	02/14/13 10:13	02/16/13 21:48	7439-96-5	
Molybdenum	ND	ug/L	0.50	1	02/14/13 10:13	02/16/13 21:48	7439-98-7	
Nickel	**2.8**	ug/L	0.50	1	02/14/13 10:13	02/16/13 21:48	7440-02-0	
Potassium	**649**	ug/L	20.0	1	02/14/13 10:13	02/16/13 21:48	7440-09-7	
Selenium	**0.60**	ug/L	0.50	1	02/14/13 10:13	02/16/13 21:48	7782-49-2	
Silica	**8330**	ug/L	1070	20	02/14/13 10:13	02/21/13 12:02	7631-86-9	
Silver	ND	ug/L	0.50	1	02/14/13 10:13	02/17/13 14:52	7440-22-4	
Sodium	**2370**	ug/L	50.0	1	02/14/13 10:13	02/16/13 21:48	7440-23-5	
Thallium	ND	ug/L	0.10	1	02/14/13 10:13	02/16/13 21:48	7440-28-0	
Total Hardness by 2340B	**180000**	ug/L	1420	20	02/14/13 10:13	02/21/13 12:02		
Vanadium	**1.7**	ug/L	0.10	1	02/14/13 10:13	02/16/13 21:48	7440-62-2	
Zinc	**33.8**	ug/L	5.0	1	02/14/13 10:13	02/16/13 21:48	7440-66-6	
200.8 MET ICPMS, Dissolved	Analytical Method: EPA 200.8 Preparation Method: EPA 200.8							
Aluminum, Dissolved	**285**	ug/L	4.0	1	02/20/13 15:24	02/22/13 01:29	7429-90-5	
Antimony, Dissolved	ND	ug/L	0.50	1	02/20/13 15:24	02/22/13 01:29	7440-36-0	
Arsenic, Dissolved	ND	ug/L	0.50	1	02/20/13 15:24	02/22/13 01:29	7440-38-2	
Barium, Dissolved	**61.4**	ug/L	0.30	1	02/20/13 15:24	02/22/13 01:29	7440-39-3	
Beryllium, Dissolved	ND	ug/L	0.20	1	02/20/13 15:24	02/22/13 01:29	7440-41-7	
Cadmium, Dissolved	ND	ug/L	0.080	1	02/20/13 15:24	02/22/13 01:29	7440-43-9	
Calcium, Dissolved	**60700**	ug/L	400	20	02/20/13 15:24	02/22/13 01:34	7440-70-2	
Chromium, Dissolved	ND	ug/L	0.50	1	02/20/13 15:24	02/22/13 01:29	7440-47-3	
Cobalt, Dissolved	**0.77**	ug/L	0.50	1	02/20/13 15:24	02/22/13 01:29	7440-48-4	
Copper, Dissolved	**2.5**	ug/L	0.50	1	02/20/13 15:24	02/22/13 01:29	7440-50-8	
Iron, Dissolved	**405**	ug/L	50.0	1	02/20/13 15:24	02/22/13 01:29	7439-89-6	
Lead, Dissolved	**1.3**	ug/L	0.10	1	02/20/13 15:24	02/23/13 13:24	7439-92-1	
Magnesium, Dissolved	**7130**	ug/L	5.0	1	02/20/13 15:24	02/22/13 01:29	7439-95-4	

This report shall not be reproduced, except in full,
without the written consent of Pace Analytical Services, Inc..

Pace Analytical Services, Inc.
9608 Loiret Blvd.
Lenexa, KS 66219
(913)599-5665

ANALYTICAL RESULTS

Project: FEBRUARY 2013 RICO WATER SAMPL
Pace Project No.: 60138490

Sample: GW-1_20130206 **Lab ID: 60138490005** Collected: 02/06/13 15:30 Received: 02/09/13 09:40 Matrix: Water

Parameters	Results	Units	Report Limit	DF	Prepared	Analyzed	CAS No.	Qual
200.8 MET ICPMS, Dissolved	Analytical Method: EPA 200.8 Preparation Method: EPA 200.8							
Manganese, Dissolved	**46.0**	ug/L	0.50	1	02/20/13 15:24	02/22/13 01:29	7439-96-5	
Molybdenum, Dissolved	**1.3**	ug/L	0.50	1	02/20/13 15:24	02/22/13 01:29	7439-98-7	
Nickel, Dissolved	**2.9**	ug/L	0.50	1	02/20/13 15:24	02/22/13 01:29	7440-02-0	
Potassium, Dissolved	**686**	ug/L	20.0	1	02/20/13 15:24	02/23/13 13:24	7440-09-7	
Selenium, Dissolved	**0.57**	ug/L	0.50	1	02/20/13 15:24	02/22/13 01:29	7782-49-2	
Silver, Dissolved	ND	ug/L	0.50	1	02/20/13 15:24	02/22/13 01:29	7440-22-4	
Sodium, Dissolved	**2720**	ug/L	50.0	1	02/20/13 15:24	02/22/13 01:29	7440-23-5	
Thallium, Dissolved	ND	ug/L	0.10	1	02/20/13 15:24	02/22/13 01:29	7440-28-0	
Vanadium, Dissolved	**0.69**	ug/L	0.10	1	02/20/13 15:24	02/22/13 01:29	7440-62-2	
Zinc, Dissolved	**13.8**	ug/L	5.0	1	02/20/13 15:24	02/22/13 01:29	7440-66-6	
200.8 Potentially Diss. Metals	Analytical Method: EPA 200.8 Preparation Method: EPA 200.8							
Aluminum, Dissolved	**729**	ug/L	50.0	1	02/19/13 09:45	02/23/13 17:18	7429-90-5	
Antimony, Dissolved	**0.14J**	ug/L	1.0	1	02/19/13 09:45	02/23/13 17:18	7440-36-0	B
Arsenic, Dissolved	**1.7**	ug/L	1.0	1	02/19/13 09:45	02/23/13 17:18	7440-38-2	
Barium, Dissolved	**109**	ug/L	1.0	1	02/19/13 09:45	02/23/13 17:18	7440-39-3	
Beryllium, Dissolved	**0.18J**	ug/L	0.50	1	02/19/13 09:45	02/23/13 17:18	7440-41-7	
Cadmium, Dissolved	**0.46J**	ug/L	0.50	1	02/19/13 09:45	02/23/13 17:18	7440-43-9	
Chromium, Dissolved	**1.2**	ug/L	1.0	1	02/19/13 09:45	02/23/13 17:18	7440-47-3	B
Cobalt, Dissolved	**1.8**	ug/L	1.0	1	02/19/13 09:45	02/23/13 17:18	7440-48-4	
Copper, Dissolved	**10.8**	ug/L	1.0	1	02/19/13 09:45	02/23/13 17:18	7440-50-8	
Iron, Dissolved	**1360**	ug/L	50.0	1	02/19/13 09:45	02/23/13 17:18	7439-89-6	
Lead, Dissolved	**11.7**	ug/L	1.0	1	02/19/13 09:45	02/23/13 17:18	7439-92-1	
Manganese, Dissolved	**392**	ug/L	1.0	1	02/19/13 09:45	02/23/13 17:18	7439-96-5	M1
Molybdenum, Dissolved	**0.23J**	ug/L	1.0	1	02/19/13 09:45	02/23/13 17:18	7439-98-7	
Nickel, Dissolved	**2.9**	ug/L	1.0	1	02/19/13 09:45	02/23/13 17:18	7440-02-0	
Selenium, Dissolved	**0.92J**	ug/L	1.0	1	02/19/13 09:45	02/25/13 15:46	7782-49-2	
Silver, Dissolved	**0.22J**	ug/L	0.50	1	02/19/13 09:45	02/23/13 17:18	7440-22-4	
Thallium, Dissolved	ND	ug/L	1.0	1	02/19/13 09:45	02/23/13 17:18	7440-28-0	
Vanadium, Dissolved	**1.7**	ug/L	1.0	1	02/19/13 09:45	02/23/13 17:18	7440-62-2	
Zinc, Dissolved	**36.0**	ug/L	10.0	1	02/19/13 09:45	02/23/13 17:18	7440-66-6	
245.1 Mercury	Analytical Method: EPA 245.1 Preparation Method: EPA 245.1							
Mercury	ND	ug/L	0.20	1	02/15/13 11:24	02/19/13 12:34	7439-97-6	
245.1 Mercury, Dissolved	Analytical Method: EPA 245.1 Preparation Method: EPA 245.1							
Mercury, Dissolved	ND	ug/L	0.20	1	02/15/13 11:18	02/19/13 13:31	7439-97-6	
245.1 Potentially Diss Mercury	Analytical Method: EPA 245.1 Preparation Method: EPA 245.1							
Mercury, Dissolved	ND	ug/L	0.20	1	02/13/13 10:10	02/13/13 14:32	7439-97-6	
2510B Specific Conductance	Analytical Method: SM 2510B							
Specific Conductance	**406**	umhos/cm	10.0	1		02/13/13 12:56		
Salinity	Analytical Method: Calculated							
Salinity (as dissolved solids)	**260**	mg/L	6.4	1		02/13/13 15:22		

This report shall not be reproduced, except in full,
without the written consent of Pace Analytical Services, Inc..

Pace Analytical Services, Inc.
9608 Loiret Blvd.
Lenexa, KS 66219
(913)599-5665

ANALYTICAL RESULTS

Project: FEBRUARY 2013 RICO WATER SAMPL
Pace Project No.: 60138490

Sample: GW-1_20130206 **Lab ID: 60138490005** Collected: 02/06/13 15:30 Received: 02/09/13 09:40 Matrix: Water

Parameters	Results	Units	Report Limit	DF	Prepared	Analyzed	CAS No.	Qual
Salinity	Analytical Method: Calculated							
Salinity (as seawater)	**0.20**	PSU	0.014	1		02/13/13 15:22		
2320B Alkalinity	Analytical Method: SM 2320B							
Alkalinity,Bicarbonate (CaCO3)	**107**	mg/L	20.0	1		02/19/13 11:17		
Alkalinity, Carbonate (CaCO3)	ND	mg/L	20.0	1		02/19/13 11:17		
Alkalinity, Total as CaCO3	**107**	mg/L	20.0	1		02/19/13 11:17		
2540C Total Dissolved Solids	Analytical Method: SM 2540C							
Total Dissolved Solids	**184**	mg/L	5.0	1		02/12/13 16:19		
2540D Total Suspended Solids	Analytical Method: SM 2540D							
Total Suspended Solids	**199**	mg/L	5.0	1		02/13/13 08:58		
4500S2D Sulfide, Total	Analytical Method: SM 4500-S-2 D							
Sulfide, Total	ND	mg/L	0.050	1		02/11/13 16:21	18496-25-8	
300.0 IC Anions 28 Days	Analytical Method: EPA 300.0							
Chloride	**1.3**	mg/L	1.0	1		02/12/13 18:11	16887-00-6	
Sulfate	**66.8**	mg/L	5.0	5		02/12/13 18:29	14808-79-8	
353.2 Nitrogen, NO2/NO3 pres.	Analytical Method: EPA 353.2							
Nitrogen, NO2 plus NO3	ND	mg/L	0.10	1		02/25/13 10:39		
4500CNE Cyanide, Total	Analytical Method: SM 4500-CN-E							
Cyanide	ND	mg/L	0.0050	1		02/13/13 11:33	57-12-5	
5310C TOC	Analytical Method: SM 5310C							
Total Organic Carbon	**0.81**	mg/L	0.50	1		02/13/13 15:47	7440-44-0	

This report shall not be reproduced, except in full,
without the written consent of Pace Analytical Services, Inc..

Pace Analytical Services, Inc.
9608 Loiret Blvd.
Lenexa, KS 66219
(913)599-5665

ANALYTICAL RESULTS

Project: FEBRUARY 2013 RICO WATER SAMPL
Pace Project No.: 60138490

Sample: MW-101_20130206 **Lab ID: 60138490006** Collected: 02/06/13 15:45 Received: 02/09/13 09:40 Matrix: Water

Parameters	Results	Units	Report Limit	DF	Prepared	Analyzed	CAS No.	Qual
200.7 Potentially Diss. Metals	Analytical Method: EPA 200.7 Preparation Method: EPA 200.7							
Calcium, Dissolved	**305000**	ug/L	100	1	02/18/13 14:45	02/20/13 17:16	7440-70-2	
Magnesium, Dissolved	**33500**	ug/L	50.0	1	02/18/13 14:45	02/20/13 17:16	7439-95-4	
Potassium, Dissolved	**6300**	ug/L	500	1	02/18/13 14:45	02/20/13 17:16	7440-09-7	
Sodium, Dissolved	**14700**	ug/L	500	1	02/18/13 14:45	02/20/13 17:16	7440-23-5	
200.8 MET ICPMS	Analytical Method: EPA 200.8 Preparation Method: EPA 200.8							
Aluminum	**1610**	ug/L	4.0	1	02/14/13 10:13	02/16/13 21:58	7429-90-5	
Antimony	ND	ug/L	0.50	1	02/14/13 10:13	02/16/13 21:58	7440-36-0	
Arsenic	**2.4**	ug/L	0.50	1	02/14/13 10:13	02/16/13 21:58	7440-38-2	
Barium	**26.3**	ug/L	0.30	1	02/14/13 10:13	02/16/13 21:58	7440-39-3	
Beryllium	**0.48**	ug/L	0.20	1	02/14/13 10:13	02/17/13 15:03	7440-41-7	
Cadmium	**2.9**	ug/L	0.080	1	02/14/13 10:13	02/16/13 21:58	7440-43-9	
Calcium	**294000**	ug/L	400	20	02/14/13 10:13	02/16/13 22:04	7440-70-2	
Chromium	**2.4**	ug/L	0.50	1	02/14/13 10:13	02/16/13 21:58	7440-47-3	
Cobalt	**9.9**	ug/L	0.50	1	02/14/13 10:13	02/16/13 21:58	7440-48-4	
Copper	**20.2**	ug/L	0.50	1	02/14/13 10:13	02/16/13 21:58	7440-50-8	
Iron	**27800**	ug/L	1000	20	02/14/13 10:13	02/16/13 22:04	7439-89-6	
Lead	**314**	ug/L	0.10	1	02/14/13 10:13	02/16/13 21:58	7439-92-1	
Magnesium	**36000**	ug/L	100	20	02/14/13 10:13	02/16/13 22:04	7439-95-4	
Manganese	**4290**	ug/L	10.0	20	02/14/13 10:13	02/16/13 22:04	7439-96-5	
Molybdenum	**0.84**	ug/L	0.50	1	02/14/13 10:13	02/16/13 21:58	7439-98-7	
Nickel	**7.8**	ug/L	0.50	1	02/14/13 10:13	02/16/13 21:58	7440-02-0	
Potassium	**5770**	ug/L	20.0	1	02/14/13 10:13	02/16/13 21:58	7440-09-7	
Selenium	**1.9**	ug/L	0.50	1	02/14/13 10:13	02/16/13 21:58	7782-49-2	
Silica	**18000**	ug/L	1070	20	02/14/13 10:13	02/21/13 12:07	7631-86-9	
Silver	ND	ug/L	0.50	1	02/14/13 10:13	02/17/13 15:03	7440-22-4	
Sodium	**12600**	ug/L	50.0	1	02/14/13 10:13	02/16/13 21:58	7440-23-5	
Thallium	**0.13**	ug/L	0.10	1	02/14/13 10:13	02/16/13 21:58	7440-28-0	
Total Hardness by 2340B	**883000**	ug/L	1420	20	02/14/13 10:13	02/16/13 22:04		
Vanadium	**2.9**	ug/L	0.10	1	02/14/13 10:13	02/16/13 21:58	7440-62-2	
Zinc	**447**	ug/L	5.0	1	02/14/13 10:13	02/16/13 21:58	7440-66-6	
200.8 MET ICPMS, Dissolved	Analytical Method: EPA 200.8 Preparation Method: EPA 200.8							
Aluminum, Dissolved	**634**	ug/L	4.0	1	02/20/13 15:24	02/22/13 01:40	7429-90-5	
Antimony, Dissolved	ND	ug/L	0.50	1	02/20/13 15:24	02/22/13 01:40	7440-36-0	
Arsenic, Dissolved	**0.91**	ug/L	0.50	1	02/20/13 15:24	02/22/13 01:40	7440-38-2	
Barium, Dissolved	**20.6**	ug/L	0.30	1	02/20/13 15:24	02/22/13 01:40	7440-39-3	
Beryllium, Dissolved	**0.21**	ug/L	0.20	1	02/20/13 15:24	02/23/13 13:34	7440-41-7	
Cadmium, Dissolved	**0.49**	ug/L	0.080	1	02/20/13 15:24	02/22/13 01:40	7440-43-9	
Calcium, Dissolved	**337000**	ug/L	400	20	02/20/13 15:24	02/22/13 01:45	7440-70-2	
Chromium, Dissolved	**0.71**	ug/L	0.50	1	02/20/13 15:24	02/22/13 01:40	7440-47-3	
Cobalt, Dissolved	**9.8**	ug/L	0.50	1	02/20/13 15:24	02/22/13 01:40	7440-48-4	
Copper, Dissolved	**5.3**	ug/L	0.50	1	02/20/13 15:24	02/22/13 01:40	7440-50-8	
Iron, Dissolved	**27500**	ug/L	1000	20	02/20/13 15:24	02/22/13 01:45	7439-89-6	
Lead, Dissolved	**30.8**	ug/L	0.10	1	02/20/13 15:24	02/23/13 13:34	7439-92-1	
Magnesium, Dissolved	**38200**	ug/L	100	20	02/20/13 15:24	02/22/13 01:45	7439-95-4	

This report shall not be reproduced, except in full,
without the written consent of Pace Analytical Services, Inc..

Pace Analytical Services, Inc.
9608 Loiret Blvd.
Lenexa, KS 66219
(913)599-5665

ANALYTICAL RESULTS

Project: FEBRUARY 2013 RICO WATER SAMPL
Pace Project No.: 60138490

Sample: MW-101_20130206 **Lab ID: 60138490006** Collected: 02/06/13 15:45 Received: 02/09/13 09:40 Matrix: Water

Parameters	Results	Units	Report Limit	DF	Prepared	Analyzed	CAS No.	Qual
200.8 MET ICPMS, Dissolved	Analytical Method: EPA 200.8 Preparation Method: EPA 200.8							
Manganese, Dissolved	**4690**	ug/L	10.0	20	02/20/13 15:24	02/22/13 01:45	7439-96-5	
Molybdenum, Dissolved	**2.6**	ug/L	0.50	1	02/20/13 15:24	02/22/13 01:40	7439-98-7	
Nickel, Dissolved	**9.0**	ug/L	0.50	1	02/20/13 15:24	02/22/13 01:40	7440-02-0	
Potassium, Dissolved	**5970**	ug/L	20.0	1	02/20/13 15:24	02/23/13 13:34	7440-09-7	
Selenium, Dissolved	**2.0**	ug/L	0.50	1	02/20/13 15:24	02/22/13 01:40	7782-49-2	
Silver, Dissolved	ND	ug/L	0.50	1	02/20/13 15:24	02/22/13 01:40	7440-22-4	
Sodium, Dissolved	**15800**	ug/L	50.0	1	02/20/13 15:24	02/22/13 01:40	7440-23-5	
Thallium, Dissolved	ND	ug/L	0.10	1	02/20/13 15:24	02/22/13 01:40	7440-28-0	
Vanadium, Dissolved	**0.94**	ug/L	0.10	1	02/20/13 15:24	02/22/13 01:40	7440-62-2	
Zinc, Dissolved	**245**	ug/L	5.0	1	02/20/13 15:24	02/22/13 01:40	7440-66-6	
200.8 Potentially Diss. Metals	Analytical Method: EPA 200.8 Preparation Method: EPA 200.8							
Aluminum, Dissolved	**1220**	ug/L	50.0	1	02/19/13 09:45	02/23/13 17:39	7429-90-5	
Antimony, Dissolved	**0.13J**	ug/L	1.0	1	02/19/13 09:45	02/23/13 17:39	7440-36-0	B
Arsenic, Dissolved	**1.7**	ug/L	1.0	1	02/19/13 09:45	02/23/13 17:39	7440-38-2	
Barium, Dissolved	**26.8**	ug/L	1.0	1	02/19/13 09:45	02/23/13 17:39	7440-39-3	
Beryllium, Dissolved	**0.42J**	ug/L	0.50	1	02/19/13 09:45	02/23/13 17:39	7440-41-7	
Cadmium, Dissolved	**1.8**	ug/L	0.50	1	02/19/13 09:45	02/23/13 17:39	7440-43-9	
Chromium, Dissolved	**2.9**	ug/L	1.0	1	02/19/13 09:45	02/23/13 17:39	7440-47-3	
Cobalt, Dissolved	**9.0**	ug/L	1.0	1	02/19/13 09:45	02/23/13 17:39	7440-48-4	
Copper, Dissolved	**14.6**	ug/L	1.0	1	02/19/13 09:45	02/23/13 17:39	7440-50-8	
Iron, Dissolved	**27000**	ug/L	50.0	1	02/19/13 09:45	02/23/13 17:39	7439-89-6	
Lead, Dissolved	**203**	ug/L	1.0	1	02/19/13 09:45	02/23/13 17:39	7439-92-1	
Manganese, Dissolved	**4310**	ug/L	100	100	02/19/13 09:45	02/25/13 15:59	7439-96-5	
Molybdenum, Dissolved	**0.86J**	ug/L	1.0	1	02/19/13 09:45	02/23/13 17:39	7439-98-7	
Nickel, Dissolved	**5.2**	ug/L	1.0	1	02/19/13 09:45	02/23/13 17:39	7440-02-0	
Selenium, Dissolved	**2.0**	ug/L	1.0	1	02/19/13 09:45	02/25/13 16:11	7782-49-2	
Silver, Dissolved	**0.066J**	ug/L	0.50	1	02/19/13 09:45	02/23/13 17:39	7440-22-4	
Thallium, Dissolved	**0.12J**	ug/L	1.0	1	02/19/13 09:45	02/23/13 17:39	7440-28-0	
Vanadium, Dissolved	**2.2**	ug/L	1.0	1	02/19/13 09:45	02/23/13 17:39	7440-62-2	
Zinc, Dissolved	**333**	ug/L	10.0	1	02/19/13 09:45	02/23/13 17:39	7440-66-6	
245.1 Mercury	Analytical Method: EPA 245.1 Preparation Method: EPA 245.1							
Mercury	ND	ug/L	0.20	1	02/15/13 11:24	02/19/13 12:42	7439-97-6	
245.1 Mercury, Dissolved	Analytical Method: EPA 245.1 Preparation Method: EPA 245.1							
Mercury, Dissolved	ND	ug/L	0.20	1	02/15/13 11:18	02/19/13 13:34	7439-97-6	
245.1 Potentially Diss Mercury	Analytical Method: EPA 245.1 Preparation Method: EPA 245.1							
Mercury, Dissolved	ND	ug/L	0.20	1	02/13/13 10:10	02/13/13 14:34	7439-97-6	
2510B Specific Conductance	Analytical Method: SM 2510B							
Specific Conductance	**1550**	umhos/cm	10.0	1		02/13/13 12:59		
Salinity	Analytical Method: Calculated							
Salinity (as dissolved solids)	**991**	mg/L	6.4	1		02/13/13 15:22		

This report shall not be reproduced, except in full,
without the written consent of Pace Analytical Services, Inc..

Pace Analytical Services, Inc.
9608 Loiret Blvd.
Lenexa, KS 66219
(913)599-5665

ANALYTICAL RESULTS

Project: FEBRUARY 2013 RICO WATER SAMPL
Pace Project No.: 60138490

Sample: MW-101_20130206 **Lab ID: 60138490006** Collected: 02/06/13 15:45 Received: 02/09/13 09:40 Matrix: Water

Parameters	Results	Units	Report Limit	DF	Prepared	Analyzed	CAS No.	Qual
Salinity	Analytical Method: Calculated							
Salinity (as seawater)	**0.78**	PSU	0.014	1		02/13/13 15:22		
2320B Alkalinity	Analytical Method: SM 2320B							
Alkalinity,Bicarbonate (CaCO3)	**287**	mg/L	20.0	1		02/19/13 11:33		
Alkalinity, Carbonate (CaCO3)	ND	mg/L	20.0	1		02/19/13 11:33		
Alkalinity, Total as CaCO3	**287**	mg/L	20.0	1		02/19/13 11:33		
2540C Total Dissolved Solids	Analytical Method: SM 2540C							
Total Dissolved Solids	**1210**	mg/L	5.0	1		02/12/13 16:19		
2540D Total Suspended Solids	Analytical Method: SM 2540D							
Total Suspended Solids	**468**	mg/L	5.0	1		02/13/13 08:58		
4500S2D Sulfide, Total	Analytical Method: SM 4500-S-2 D							
Sulfide, Total	ND	mg/L	0.050	1		02/11/13 16:21	18496-25-8	
300.0 IC Anions 28 Days	Analytical Method: EPA 300.0							
Chloride	**1.1**	mg/L	1.0	1		02/12/13 18:46	16887-00-6	
Sulfate	**699**	mg/L	50.0	50		02/12/13 19:04	14808-79-8	
353.2 Nitrogen, NO2/NO3 pres.	Analytical Method: EPA 353.2							
Nitrogen, NO2 plus NO3	**0.33**	mg/L	0.10	1		02/25/13 10:40		
4500CNE Cyanide, Total	Analytical Method: SM 4500-CN-E							
Cyanide	ND	mg/L	0.0050	1		02/13/13 11:37	57-12-5	
5310C TOC	Analytical Method: SM 5310C							
Total Organic Carbon	**1.4**	mg/L	0.50	1		02/13/13 16:05	7440-44-0	

This report shall not be reproduced, except in full,
without the written consent of Pace Analytical Services, Inc..

Pace Analytical Services, Inc.
9608 Loiret Blvd.
Lenexa, KS 66219
(913)599-5665

ANALYTICAL RESULTS

Project: FEBRUARY 2013 RICO WATER SAMPL
Pace Project No.: 60138490

Sample: MW-102_20130207 **Lab ID: 60138490007** Collected: 02/07/13 16:15 Received: 02/09/13 09:40 Matrix: Water

Parameters	Results	Units	Report Limit	DF	Prepared	Analyzed	CAS No.	Qual
200.7 Potentially Diss. Metals	Analytical Method: EPA 200.7 Preparation Method: EPA 200.7							
Calcium, Dissolved	**230000**	ug/L	100	1	02/18/13 14:45	02/20/13 17:18	7440-70-2	
Magnesium, Dissolved	**23600**	ug/L	50.0	1	02/18/13 14:45	02/20/13 17:18	7439-95-4	
Potassium, Dissolved	**2530**	ug/L	500	1	02/18/13 14:45	02/20/13 17:18	7440-09-7	
Sodium, Dissolved	**7080**	ug/L	500	1	02/18/13 14:45	02/20/13 17:18	7440-23-5	
200.8 MET ICPMS	Analytical Method: EPA 200.8 Preparation Method: EPA 200.8							
Aluminum	**5740**	ug/L	4.0	1	02/14/13 10:13	02/16/13 22:27	7429-90-5	
Antimony	ND	ug/L	0.50	1	02/14/13 10:13	02/16/13 22:27	7440-36-0	
Arsenic	**7.4**	ug/L	0.50	1	02/14/13 10:13	02/16/13 22:27	7440-38-2	
Barium	**58.9**	ug/L	0.30	1	02/14/13 10:13	02/16/13 22:27	7440-39-3	
Beryllium	**1.4**	ug/L	0.20	1	02/14/13 10:13	02/17/13 15:31	7440-41-7	
Cadmium	**3.1**	ug/L	0.080	1	02/14/13 10:13	02/16/13 22:27	7440-43-9	
Calcium	**212000**	ug/L	400	20	02/14/13 10:13	02/16/13 22:32	7440-70-2	
Chromium	**7.8**	ug/L	0.50	1	02/14/13 10:13	02/16/13 22:27	7440-47-3	
Cobalt	**11.3**	ug/L	0.50	1	02/14/13 10:13	02/16/13 22:27	7440-48-4	
Copper	**44.8**	ug/L	0.50	1	02/14/13 10:13	02/16/13 22:27	7440-50-8	
Iron	**7120**	ug/L	50.0	1	02/14/13 10:13	02/16/13 22:27	7439-89-6	
Lead	**76.6**	ug/L	0.10	1	02/14/13 10:13	02/16/13 22:27	7439-92-1	
Magnesium	**22300**	ug/L	5.0	1	02/14/13 10:13	02/16/13 22:27	7439-95-4	
Manganese	**1220**	ug/L	10.0	20	02/14/13 10:13	02/16/13 22:32	7439-96-5	
Molybdenum	**0.88**	ug/L	0.50	1	02/14/13 10:13	02/16/13 22:27	7439-98-7	
Nickel	**10.4**	ug/L	0.50	1	02/14/13 10:13	02/16/13 22:27	7440-02-0	
Potassium	**2420**	ug/L	20.0	1	02/14/13 10:13	02/16/13 22:27	7440-09-7	
Selenium	**3.2**	ug/L	0.50	1	02/14/13 10:13	02/16/13 22:27	7782-49-2	
Silica	**23700**	ug/L	1070	20	02/14/13 10:13	02/21/13 12:13	7631-86-9	
Silver	ND	ug/L	0.50	1	02/14/13 10:13	02/17/13 15:31	7440-22-4	
Sodium	**5790**	ug/L	50.0	1	02/14/13 10:13	02/16/13 22:27	7440-23-5	
Thallium	ND	ug/L	0.10	1	02/14/13 10:13	02/16/13 22:27	7440-28-0	
Total Hardness by 2340B	**621000**	ug/L	1420	20	02/14/13 10:13	02/16/13 22:32		
Vanadium	**7.0**	ug/L	0.10	1	02/14/13 10:13	02/16/13 22:27	7440-62-2	
Zinc	**572**	ug/L	100	20	02/14/13 10:13	02/16/13 22:32	7440-66-6	
200.8 MET ICPMS, Dissolved	Analytical Method: EPA 200.8 Preparation Method: EPA 200.8							
Aluminum, Dissolved	**12500**	ug/L	4.0	1	02/20/13 15:24	02/22/13 01:51	7429-90-5	
Antimony, Dissolved	**0.66**	ug/L	0.50	1	02/20/13 15:24	02/22/13 01:51	7440-36-0	
Arsenic, Dissolved	**16.1**	ug/L	0.50	1	02/20/13 15:24	02/22/13 01:51	7440-38-2	
Barium, Dissolved	**93.4**	ug/L	0.30	1	02/20/13 15:24	02/22/13 01:51	7440-39-3	
Beryllium, Dissolved	**1.1**	ug/L	0.20	1	02/20/13 15:24	02/23/13 13:56	7440-41-7	
Cadmium, Dissolved	**2.1**	ug/L	0.080	1	02/20/13 15:24	02/22/13 01:51	7440-43-9	
Calcium, Dissolved	**249000**	ug/L	400	20	02/20/13 15:24	02/22/13 01:56	7440-70-2	
Chromium, Dissolved	**16.8**	ug/L	0.50	1	02/20/13 15:24	02/22/13 01:51	7440-47-3	
Cobalt, Dissolved	**19.2**	ug/L	0.50	1	02/20/13 15:24	02/22/13 01:51	7440-48-4	
Copper, Dissolved	**48.1**	ug/L	0.50	1	02/20/13 15:24	02/22/13 01:51	7440-50-8	
Iron, Dissolved	**18900**	ug/L	50.0	1	02/20/13 15:24	02/22/13 01:51	7439-89-6	
Lead, Dissolved	**77.1**	ug/L	0.10	1	02/20/13 15:24	02/23/13 13:56	7439-92-1	
Magnesium, Dissolved	**32200**	ug/L	100	20	02/20/13 15:24	02/22/13 01:56	7439-95-4	

This report shall not be reproduced, except in full,
without the written consent of Pace Analytical Services, Inc..

Pace Analytical Services, Inc.
9608 Loiret Blvd.
Lenexa, KS 66219
(913)599-5665

ANALYTICAL RESULTS

Project: FEBRUARY 2013 RICO WATER SAMPL
Pace Project No.: 60138490

Sample: MW-102_20130207 **Lab ID: 60138490007** Collected: 02/07/13 16:15 Received: 02/09/13 09:40 Matrix: Water

Parameters	Results	Units	Report Limit	DF	Prepared	Analyzed	CAS No.	Qual
200.8 MET ICPMS, Dissolved	Analytical Method: EPA 200.8 Preparation Method: EPA 200.8							
Manganese, Dissolved	**2280**	ug/L	10.0	20	02/20/13 15:24	02/22/13 01:56	7439-96-5	
Molybdenum, Dissolved	**7.8**	ug/L	0.50	1	02/20/13 15:24	02/22/13 01:51	7439-98-7	
Nickel, Dissolved	**18.9**	ug/L	0.50	1	02/20/13 15:24	02/22/13 01:51	7440-02-0	
Potassium, Dissolved	**3920**	ug/L	20.0	1	02/20/13 15:24	02/23/13 13:56	7440-09-7	
Selenium, Dissolved	**2.7**	ug/L	0.50	1	02/20/13 15:24	02/22/13 01:51	7782-49-2	
Silver, Dissolved	ND	ug/L	0.50	1	02/20/13 15:24	02/22/13 01:51	7440-22-4	
Sodium, Dissolved	**6850**	ug/L	50.0	1	02/20/13 15:24	02/22/13 01:51	7440-23-5	
Thallium, Dissolved	ND	ug/L	0.10	1	02/20/13 15:24	02/23/13 13:56	7440-28-0	
Vanadium, Dissolved	**20.8**	ug/L	0.10	1	02/20/13 15:24	02/22/13 01:51	7440-62-2	
Zinc, Dissolved	**512**	ug/L	100	20	02/20/13 15:24	02/22/13 01:56	7440-66-6	
200.8 Potentially Diss. Metals	Analytical Method: EPA 200.8 Preparation Method: EPA 200.8							
Aluminum, Dissolved	**5120**	ug/L	50.0	1	02/19/13 09:45	02/23/13 17:43	7429-90-5	
Antimony, Dissolved	**0.15J**	ug/L	1.0	1	02/19/13 09:45	02/23/13 17:43	7440-36-0	B
Arsenic, Dissolved	**4.0**	ug/L	1.0	1	02/19/13 09:45	02/23/13 17:43	7440-38-2	
Barium, Dissolved	**57.9**	ug/L	1.0	1	02/19/13 09:45	02/23/13 17:43	7440-39-3	
Beryllium, Dissolved	**1.6**	ug/L	0.50	1	02/19/13 09:45	02/23/13 17:43	7440-41-7	
Cadmium, Dissolved	**3.3**	ug/L	0.50	1	02/19/13 09:45	02/23/13 17:43	7440-43-9	
Chromium, Dissolved	**8.0**	ug/L	1.0	1	02/19/13 09:45	02/23/13 17:43	7440-47-3	
Cobalt, Dissolved	**12.7**	ug/L	1.0	1	02/19/13 09:45	02/23/13 17:43	7440-48-4	
Copper, Dissolved	**47.1**	ug/L	1.0	1	02/19/13 09:45	02/23/13 17:43	7440-50-8	
Iron, Dissolved	**6780**	ug/L	50.0	1	02/19/13 09:45	02/23/13 17:43	7439-89-6	
Lead, Dissolved	**107**	ug/L	1.0	1	02/19/13 09:45	02/23/13 17:43	7439-92-1	
Manganese, Dissolved	**1380**	ug/L	1.0	1	02/19/13 09:45	02/23/13 17:43	7439-96-5	
Molybdenum, Dissolved	**0.22J**	ug/L	1.0	1	02/19/13 09:45	02/23/13 17:43	7439-98-7	
Nickel, Dissolved	**9.9**	ug/L	1.0	1	02/19/13 09:45	02/23/13 17:43	7440-02-0	
Selenium, Dissolved	**5.3**	ug/L	1.0	1	02/19/13 09:45	02/25/13 16:15	7782-49-2	
Silver, Dissolved	**0.40J**	ug/L	0.50	1	02/19/13 09:45	02/23/13 17:43	7440-22-4	
Thallium, Dissolved	ND	ug/L	1.0	1	02/19/13 09:45	02/23/13 17:43	7440-28-0	
Vanadium, Dissolved	**5.3**	ug/L	1.0	1	02/19/13 09:45	02/23/13 17:43	7440-62-2	
Zinc, Dissolved	**561**	ug/L	10.0	1	02/19/13 09:45	02/23/13 17:43	7440-66-6	
245.1 Mercury	Analytical Method: EPA 245.1 Preparation Method: EPA 245.1							
Mercury	ND	ug/L	0.20	1	02/15/13 11:24	02/19/13 12:44	7439-97-6	
245.1 Mercury, Dissolved	Analytical Method: EPA 245.1 Preparation Method: EPA 245.1							
Mercury, Dissolved	ND	ug/L	0.20	1	02/15/13 11:18	02/19/13 13:36	7439-97-6	
245.1 Potentially Diss Mercury	Analytical Method: EPA 245.1 Preparation Method: EPA 245.1							
Mercury, Dissolved	ND	ug/L	0.20	1	02/13/13 10:10	02/13/13 14:41	7439-97-6	
2510B Specific Conductance	Analytical Method: SM 2510B							
Specific Conductance	**1280**	umhos/cm	10.0	1		02/13/13 13:02		
Salinity	Analytical Method: Calculated							
Salinity (as dissolved solids)	**818**	mg/L	6.4	1		02/13/13 15:22		

This report shall not be reproduced, except in full,
without the written consent of Pace Analytical Services, Inc..

Pace Analytical Services, Inc.
9608 Loiret Blvd.
Lenexa, KS 66219
(913)599-5665

ANALYTICAL RESULTS

Project: FEBRUARY 2013 RICO WATER SAMPL
Pace Project No.: 60138490

Sample: MW-102_20130207 **Lab ID: 60138490007** Collected: 02/07/13 16:15 Received: 02/09/13 09:40 Matrix: Water

Parameters	Results	Units	Report Limit	DF	Prepared	Analyzed	CAS No.	Qual
Salinity	Analytical Method: Calculated							
Salinity (as seawater)	**0.64**	PSU	0.014	1		02/13/13 15:22		
2320B Alkalinity	Analytical Method: SM 2320B							
Alkalinity,Bicarbonate (CaCO3)	**49.9**	mg/L	20.0	1		02/19/13 12:31		
Alkalinity, Carbonate (CaCO3)	ND	mg/L	20.0	1		02/19/13 12:31		
Alkalinity, Total as CaCO3	**49.9**	mg/L	20.0	1		02/19/13 12:31		
2540C Total Dissolved Solids	Analytical Method: SM 2540C							
Total Dissolved Solids	**899**	mg/L	5.0	1		02/12/13 16:21		
2540D Total Suspended Solids	Analytical Method: SM 2540D							
Total Suspended Solids	**554**	mg/L	5.0	1		02/14/13 11:04		
4500S2D Sulfide, Total	Analytical Method: SM 4500-S-2 D							
Sulfide, Total	ND	mg/L	0.050	1		02/11/13 16:21	18496-25-8	
300.0 IC Anions 28 Days	Analytical Method: EPA 300.0							
Chloride	ND	mg/L	1.0	1		02/12/13 19:22	16887-00-6	
Sulfate	**499**	mg/L	50.0	50		02/12/13 19:40	14808-79-8	
353.2 Nitrogen, NO2/NO3 pres.	Analytical Method: EPA 353.2							
Nitrogen, NO2 plus NO3	**0.40**	mg/L	0.10	1		02/25/13 10:42		
4500CNE Cyanide, Total	Analytical Method: SM 4500-CN-E							
Cyanide	**0.0051**	mg/L	0.0050	1		02/13/13 11:53	57-12-5	
5310C TOC	Analytical Method: SM 5310C							
Total Organic Carbon	**0.92**	mg/L	0.50	1		02/13/13 16:24	7440-44-0	

This report shall not be reproduced, except in full,
without the written consent of Pace Analytical Services, Inc..

Pace Analytical Services, Inc.
9608 Loiret Blvd.
Lenexa, KS 66219
(913)599-5665

ANALYTICAL RESULTS

Project: FEBRUARY 2013 RICO WATER SAMPL
Pace Project No.: 60138490

Sample: GW-3_20130208 **Lab ID: 60138490008** Collected: 02/08/13 09:30 Received: 02/09/13 09:40 Matrix: Water

Parameters	Results	Units	Report Limit	DF	Prepared	Analyzed	CAS No.	Qual
200.7 Potentially Diss. Metals	Analytical Method: EPA 200.7 Preparation Method: EPA 200.7							
Calcium, Dissolved	**129000**	ug/L	100	1	02/18/13 14:45	02/20/13 17:19	7440-70-2	
Magnesium, Dissolved	**15600**	ug/L	50.0	1	02/18/13 14:45	02/20/13 17:19	7439-95-4	
Potassium, Dissolved	**2900**	ug/L	500	1	02/18/13 14:45	02/20/13 17:19	7440-09-7	
Sodium, Dissolved	**3020**	ug/L	500	1	02/18/13 14:45	02/20/13 17:19	7440-23-5	
200.8 MET ICPMS	Analytical Method: EPA 200.8 Preparation Method: EPA 200.8							
Aluminum	**3820**	ug/L	4.0	1	02/14/13 10:13	02/16/13 22:37	7429-90-5	
Antimony	ND	ug/L	0.50	1	02/14/13 10:13	02/16/13 22:37	7440-36-0	
Arsenic	**7.5**	ug/L	0.50	1	02/14/13 10:13	02/16/13 22:37	7440-38-2	
Barium	**77.2**	ug/L	0.30	1	02/14/13 10:13	02/16/13 22:37	7440-39-3	
Beryllium	**0.58**	ug/L	0.20	1	02/14/13 10:13	02/17/13 15:42	7440-41-7	
Cadmium	**4.7**	ug/L	0.080	1	02/14/13 10:13	02/16/13 22:37	7440-43-9	
Calcium	**126000**	ug/L	400	20	02/14/13 10:13	02/16/13 22:43	7440-70-2	
Chromium	**5.5**	ug/L	0.50	1	02/14/13 10:13	02/16/13 22:37	7440-47-3	
Cobalt	**6.1**	ug/L	0.50	1	02/14/13 10:13	02/16/13 22:37	7440-48-4	
Copper	**112**	ug/L	0.50	1	02/14/13 10:13	02/16/13 22:37	7440-50-8	
Iron	**7180**	ug/L	50.0	1	02/14/13 10:13	02/16/13 22:37	7439-89-6	
Lead	**96.7**	ug/L	0.10	1	02/14/13 10:13	02/16/13 22:37	7439-92-1	
Magnesium	**15400**	ug/L	5.0	1	02/14/13 10:13	02/16/13 22:37	7439-95-4	
Manganese	**1610**	ug/L	10.0	20	02/14/13 10:13	02/16/13 22:43	7439-96-5	
Molybdenum	ND	ug/L	0.50	1	02/14/13 10:13	02/16/13 22:37	7439-98-7	
Nickel	**8.3**	ug/L	0.50	1	02/14/13 10:13	02/16/13 22:37	7440-02-0	
Potassium	**2650**	ug/L	20.0	1	02/14/13 10:13	02/16/13 22:37	7440-09-7	
Selenium	**3.3**	ug/L	0.50	1	02/14/13 10:13	02/16/13 22:37	7782-49-2	
Silica	**21000**	ug/L	1070	20	02/14/13 10:13	02/21/13 12:23	7631-86-9	
Silver	**0.65**	ug/L	0.50	1	02/14/13 10:13	02/17/13 15:42	7440-22-4	
Sodium	**2480**	ug/L	50.0	1	02/14/13 10:13	02/16/13 22:37	7440-23-5	
Thallium	ND	ug/L	0.10	1	02/14/13 10:13	02/16/13 22:37	7440-28-0	
Total Hardness by 2340B	**379000**	ug/L	1420	20	02/14/13 10:13	02/16/13 22:43		
Vanadium	**5.0**	ug/L	0.10	1	02/14/13 10:13	02/16/13 22:37	7440-62-2	
Zinc	**704**	ug/L	100	20	02/14/13 10:13	02/16/13 22:43	7440-66-6	
200.8 MET ICPMS, Dissolved	Analytical Method: EPA 200.8 Preparation Method: EPA 200.8							
Aluminum, Dissolved	**2300**	ug/L	4.0	1	02/20/13 15:24	02/22/13 02:19	7429-90-5	
Antimony, Dissolved	ND	ug/L	0.50	1	02/20/13 15:24	02/22/13 02:19	7440-36-0	
Arsenic, Dissolved	**3.1**	ug/L	0.50	1	02/20/13 15:24	02/22/13 02:19	7440-38-2	
Barium, Dissolved	**54.9**	ug/L	0.30	1	02/20/13 15:24	02/22/13 02:19	7440-39-3	
Beryllium, Dissolved	ND	ug/L	0.20	1	02/20/13 15:24	02/23/13 14:01	7440-41-7	
Cadmium, Dissolved	**0.61**	ug/L	0.080	1	02/20/13 15:24	02/22/13 02:19	7440-43-9	
Calcium, Dissolved	**134000**	ug/L	400	20	02/20/13 15:24	02/22/13 02:25	7440-70-2	
Chromium, Dissolved	**3.1**	ug/L	0.50	1	02/20/13 15:24	02/22/13 02:19	7440-47-3	
Cobalt, Dissolved	**2.3**	ug/L	0.50	1	02/20/13 15:24	02/22/13 02:19	7440-48-4	
Copper, Dissolved	**15.3**	ug/L	0.50	1	02/20/13 15:24	02/22/13 02:19	7440-50-8	
Iron, Dissolved	**3630**	ug/L	50.0	1	02/20/13 15:24	02/22/13 02:19	7439-89-6	
Lead, Dissolved	**26.4**	ug/L	0.10	1	02/20/13 15:24	02/23/13 14:01	7439-92-1	
Magnesium, Dissolved	**15900**	ug/L	5.0	1	02/20/13 15:24	02/22/13 02:19	7439-95-4	

This report shall not be reproduced, except in full,
without the written consent of Pace Analytical Services, Inc..

Pace Analytical Services, Inc.
9608 Loiret Blvd.
Lenexa, KS 66219
(913)599-5665

ANALYTICAL RESULTS

Project: FEBRUARY 2013 RICO WATER SAMPL
Pace Project No.: 60138490

Sample: GW-3_20130208 **Lab ID: 60138490008** Collected: 02/08/13 09:30 Received: 02/09/13 09:40 Matrix: Water

Parameters	Results	Units	Report Limit	DF	Prepared	Analyzed	CAS No.	Qual
200.8 MET ICPMS, Dissolved	Analytical Method: EPA 200.8 Preparation Method: EPA 200.8							
Manganese, Dissolved	**394**	ug/L	0.50	1	02/20/13 15:24	02/22/13 02:19	7439-96-5	
Molybdenum, Dissolved	**1.0**	ug/L	0.50	1	02/20/13 15:24	02/22/13 02:19	7439-98-7	
Nickel, Dissolved	**4.6**	ug/L	0.50	1	02/20/13 15:24	02/22/13 02:19	7440-02-0	
Potassium, Dissolved	**2760**	ug/L	20.0	1	02/20/13 15:24	02/23/13 14:01	7440-09-7	
Selenium, Dissolved	**2.8**	ug/L	0.50	1	02/20/13 15:24	02/22/13 02:19	7782-49-2	
Silver, Dissolved	ND	ug/L	0.50	1	02/20/13 15:24	02/22/13 02:19	7440-22-4	
Sodium, Dissolved	**2740**	ug/L	50.0	1	02/20/13 15:24	02/22/13 02:19	7440-23-5	
Thallium, Dissolved	ND	ug/L	0.10	1	02/20/13 15:24	02/23/13 14:01	7440-28-0	
Vanadium, Dissolved	**4.8**	ug/L	0.10	1	02/20/13 15:24	02/22/13 02:19	7440-62-2	
Zinc, Dissolved	**106**	ug/L	5.0	1	02/20/13 15:24	02/22/13 02:19	7440-66-6	
200.8 Potentially Diss. Metals	Analytical Method: EPA 200.8 Preparation Method: EPA 200.8							
Aluminum, Dissolved	**3670**	ug/L	50.0	1	02/19/13 09:45	02/23/13 17:47	7429-90-5	
Antimony, Dissolved	**0.26J**	ug/L	1.0	1	02/19/13 09:45	02/23/13 17:47	7440-36-0	B
Arsenic, Dissolved	**7.4**	ug/L	1.0	1	02/19/13 09:45	02/23/13 17:47	7440-38-2	
Barium, Dissolved	**92.0**	ug/L	1.0	1	02/19/13 09:45	02/23/13 17:47	7440-39-3	
Beryllium, Dissolved	**0.52**	ug/L	0.50	1	02/19/13 09:45	02/23/13 17:47	7440-41-7	
Cadmium, Dissolved	**4.1**	ug/L	0.50	1	02/19/13 09:45	02/23/13 17:47	7440-43-9	
Chromium, Dissolved	**6.3**	ug/L	1.0	1	02/19/13 09:45	02/23/13 17:47	7440-47-3	
Cobalt, Dissolved	**7.6**	ug/L	1.0	1	02/19/13 09:45	02/23/13 17:47	7440-48-4	
Copper, Dissolved	**104**	ug/L	1.0	1	02/19/13 09:45	02/23/13 17:47	7440-50-8	
Iron, Dissolved	**8100**	ug/L	50.0	1	02/19/13 09:45	02/23/13 17:47	7439-89-6	
Lead, Dissolved	**115**	ug/L	1.0	1	02/19/13 09:45	02/23/13 17:47	7439-92-1	
Manganese, Dissolved	**2060**	ug/L	1.0	1	02/19/13 09:45	02/23/13 17:47	7439-96-5	
Molybdenum, Dissolved	**0.29J**	ug/L	1.0	1	02/19/13 09:45	02/23/13 17:47	7439-98-7	
Nickel, Dissolved	**8.7**	ug/L	1.0	1	02/19/13 09:45	02/23/13 17:47	7440-02-0	
Selenium, Dissolved	**3.9**	ug/L	1.0	1	02/19/13 09:45	02/25/13 16:19	7782-49-2	
Silver, Dissolved	**1.1**	ug/L	0.50	1	02/19/13 09:45	02/23/13 17:47	7440-22-4	
Thallium, Dissolved	**0.028J**	ug/L	1.0	1	02/19/13 09:45	02/23/13 17:47	7440-28-0	
Vanadium, Dissolved	**5.6**	ug/L	1.0	1	02/19/13 09:45	02/23/13 17:47	7440-62-2	
Zinc, Dissolved	**606**	ug/L	10.0	1	02/19/13 09:45	02/23/13 17:47	7440-66-6	
245.1 Mercury	Analytical Method: EPA 245.1 Preparation Method: EPA 245.1							
Mercury	ND	ug/L	0.20	1	02/15/13 11:24	02/19/13 12:47	7439-97-6	
245.1 Mercury, Dissolved	Analytical Method: EPA 245.1 Preparation Method: EPA 245.1							
Mercury, Dissolved	ND	ug/L	0.20	1	02/15/13 11:18	02/19/13 13:38	7439-97-6	
245.1 Potentially Diss Mercury	Analytical Method: EPA 245.1 Preparation Method: EPA 245.1							
Mercury, Dissolved	ND	ug/L	0.20	1	02/13/13 10:10	02/13/13 14:43	7439-97-6	
2510B Specific Conductance	Analytical Method: SM 2510B							
Specific Conductance	**753**	umhos/cm	10.0	1		02/13/13 13:12		
Salinity	Analytical Method: Calculated							
Salinity (as dissolved solids)	**482**	mg/L	6.4	1		02/13/13 15:22		

This report shall not be reproduced, except in full,
without the written consent of Pace Analytical Services, Inc..

Pace Analytical Services, Inc.
9608 Loiret Blvd.
Lenexa, KS 66219
(913)599-5665

ANALYTICAL RESULTS

Project: FEBRUARY 2013 RICO WATER SAMPL
Pace Project No.: 60138490

Sample: GW-3_20130208 **Lab ID: 60138490008** Collected: 02/08/13 09:30 Received: 02/09/13 09:40 Matrix: Water

Parameters	Results	Units	Report Limit	DF	Prepared	Analyzed	CAS No.	Qual
Salinity	Analytical Method: Calculated							
Salinity (as seawater)	**0.37**	PSU	0.014	1		02/13/13 15:22		
2320B Alkalinity	Analytical Method: SM 2320B							
Alkalinity,Bicarbonate (CaCO3)	**190**	mg/L	20.0	1		02/19/13 12:36		
Alkalinity, Carbonate (CaCO3)	ND	mg/L	20.0	1		02/19/13 12:36		
Alkalinity, Total as CaCO3	**190**	mg/L	20.0	1		02/19/13 12:36		
2540C Total Dissolved Solids	Analytical Method: SM 2540C							
Total Dissolved Solids	**475**	mg/L	5.0	1		02/13/13 14:28		
2540D Total Suspended Solids	Analytical Method: SM 2540D							
Total Suspended Solids	**480**	mg/L	5.0	1		02/14/13 11:07		
4500S2D Sulfide, Total	Analytical Method: SM 4500-S-2 D							
Sulfide, Total	ND	mg/L	0.050	1		02/11/13 16:21	18496-25-8	
300.0 IC Anions 28 Days	Analytical Method: EPA 300.0							
Chloride	**1.2**	mg/L	1.0	1		02/12/13 19:57	16887-00-6	
Sulfate	**192**	mg/L	20.0	20		02/12/13 20:15	14808-79-8	
353.2 Nitrogen, NO2/NO3 pres.	Analytical Method: EPA 353.2							
Nitrogen, NO2 plus NO3	ND	mg/L	0.10	1		02/25/13 10:44		
4500CNE Cyanide, Total	Analytical Method: SM 4500-CN-E							
Cyanide	ND	mg/L	0.0050	1		02/13/13 11:54	57-12-5	
5310C TOC	Analytical Method: SM 5310C							
Total Organic Carbon	**1.1**	mg/L	0.50	1		02/13/13 16:42	7440-44-0	

This report shall not be reproduced, except in full,
without the written consent of Pace Analytical Services, Inc..

Pace Analytical Services, Inc.
9608 Loiret Blvd.
Lenexa, KS 66219
(913)599-5665

ANALYTICAL RESULTS

Project: FEBRUARY 2013 RICO WATER SAMPL
Pace Project No.: 60138490

Sample: DR-3_20130208 **Lab ID: 60138490009** Collected: 02/08/13 08:00 Received: 02/09/13 09:40 Matrix: Water

Parameters	Results	Units	Report Limit	DF	Prepared	Analyzed	CAS No.	Qual
200.7 Potentially Diss. Metals	Analytical Method: EPA 200.7 Preparation Method: EPA 200.7							
Calcium, Dissolved	**253000**	ug/L	100	1	02/18/13 14:45	02/20/13 17:21	7440-70-2	
Magnesium, Dissolved	**19200**	ug/L	50.0	1	02/18/13 14:45	02/20/13 17:21	7439-95-4	
Potassium, Dissolved	**8790**	ug/L	500	1	02/18/13 14:45	02/20/13 17:21	7440-09-7	
Sodium, Dissolved	**12600**	ug/L	500	1	02/18/13 14:45	02/20/13 17:21	7440-23-5	
200.8 MET ICPMS	Analytical Method: EPA 200.8 Preparation Method: EPA 200.8							
Aluminum	**1010**	ug/L	4.0	1	02/14/13 10:13	02/16/13 22:48	7429-90-5	
Antimony	ND	ug/L	0.50	1	02/14/13 10:13	02/16/13 22:48	7440-36-0	
Arsenic	**2.2**	ug/L	0.50	1	02/14/13 10:13	02/16/13 22:48	7440-38-2	
Barium	**20.2**	ug/L	0.30	1	02/14/13 10:13	02/16/13 22:48	7440-39-3	
Beryllium	**1.0**	ug/L	0.20	1	02/14/13 10:13	02/17/13 15:53	7440-41-7	
Cadmium	**14.9**	ug/L	0.080	1	02/14/13 10:13	02/16/13 22:48	7440-43-9	
Calcium	**245000**	ug/L	400	20	02/14/13 10:13	02/16/13 22:54	7440-70-2	
Chromium	ND	ug/L	0.50	1	02/14/13 10:13	02/16/13 22:48	7440-47-3	
Cobalt	**2.5**	ug/L	0.50	1	02/14/13 10:13	02/16/13 22:48	7440-48-4	
Copper	**188**	ug/L	0.50	1	02/14/13 10:13	02/16/13 22:48	7440-50-8	
Iron	**11400**	ug/L	50.0	1	02/14/13 10:13	02/16/13 22:48	7439-89-6	
Lead	**20.3**	ug/L	0.10	1	02/14/13 10:13	02/16/13 22:48	7439-92-1	
Magnesium	**18900**	ug/L	5.0	1	02/14/13 10:13	02/16/13 22:48	7439-95-4	
Manganese	**1680**	ug/L	10.0	20	02/14/13 10:13	02/16/13 22:54	7439-96-5	
Molybdenum	**17.9**	ug/L	0.50	1	02/14/13 10:13	02/16/13 22:48	7439-98-7	
Nickel	**3.6**	ug/L	0.50	1	02/14/13 10:13	02/16/13 22:48	7440-02-0	
Potassium	**7890**	ug/L	20.0	1	02/14/13 10:13	02/16/13 22:48	7440-09-7	
Selenium	ND	ug/L	0.50	1	02/14/13 10:13	02/16/13 22:48	7782-49-2	
Silica	**20100**	ug/L	1070	20	02/14/13 10:13	02/21/13 12:34	7631-86-9	
Silver	ND	ug/L	0.50	1	02/14/13 10:13	02/17/13 15:53	7440-22-4	
Sodium	**10800**	ug/L	50.0	1	02/14/13 10:13	02/16/13 22:48	7440-23-5	
Thallium	ND	ug/L	0.10	1	02/14/13 10:13	02/16/13 22:48	7440-28-0	
Total Hardness by 2340B	**689000**	ug/L	1420	20	02/14/13 10:13	02/16/13 22:54		
Vanadium	**0.25**	ug/L	0.10	1	02/14/13 10:13	02/16/13 22:48	7440-62-2	
Zinc	**3170**	ug/L	100	20	02/14/13 10:13	02/16/13 22:54	7440-66-6	
200.8 MET ICPMS, Dissolved	Analytical Method: EPA 200.8 Preparation Method: EPA 200.8							
Aluminum, Dissolved	**762**	ug/L	4.0	1	02/20/13 15:24	02/22/13 02:30	7429-90-5	
Antimony, Dissolved	ND	ug/L	0.50	1	02/20/13 15:24	02/22/13 02:30	7440-36-0	
Arsenic, Dissolved	**1.6**	ug/L	0.50	1	02/20/13 15:24	02/22/13 02:30	7440-38-2	
Barium, Dissolved	**20.5**	ug/L	0.30	1	02/20/13 15:24	02/22/13 02:30	7440-39-3	
Beryllium, Dissolved	**0.80**	ug/L	0.20	1	02/20/13 15:24	02/23/13 14:07	7440-41-7	
Cadmium, Dissolved	**14.0**	ug/L	0.080	1	02/20/13 15:24	02/22/13 02:30	7440-43-9	
Calcium, Dissolved	**270000**	ug/L	400	20	02/20/13 15:24	02/22/13 02:35	7440-70-2	
Chromium, Dissolved	ND	ug/L	0.50	1	02/20/13 15:24	02/22/13 02:30	7440-47-3	
Cobalt, Dissolved	**2.9**	ug/L	0.50	1	02/20/13 15:24	02/22/13 02:30	7440-48-4	
Copper, Dissolved	**148**	ug/L	0.50	1	02/20/13 15:24	02/22/13 02:30	7440-50-8	
Iron, Dissolved	**9120**	ug/L	50.0	1	02/20/13 15:24	02/22/13 02:30	7439-89-6	
Lead, Dissolved	**14.6**	ug/L	0.10	1	02/20/13 15:24	02/23/13 14:07	7439-92-1	
Magnesium, Dissolved	**19000**	ug/L	5.0	1	02/20/13 15:24	02/22/13 02:30	7439-95-4	

This report shall not be reproduced, except in full,
without the written consent of Pace Analytical Services, Inc..

Pace Analytical Services, Inc.
9608 Loiret Blvd.
Lenexa, KS 66219
(913)599-5665

ANALYTICAL RESULTS

Project: FEBRUARY 2013 RICO WATER SAMPL
Pace Project No.: 60138490

Sample: DR-3_20130208 **Lab ID: 60138490009** Collected: 02/08/13 08:00 Received: 02/09/13 09:40 Matrix: Water

Parameters	Results	Units	Report Limit	DF	Prepared	Analyzed	CAS No.	Qual
200.8 MET ICPMS, Dissolved	Analytical Method: EPA 200.8 Preparation Method: EPA 200.8							
Manganese, Dissolved	**1840**	ug/L	10.0	20	02/20/13 15:24	02/22/13 02:35	7439-96-5	
Molybdenum, Dissolved	**17.7**	ug/L	0.50	1	02/20/13 15:24	02/22/13 02:30	7439-98-7	
Nickel, Dissolved	**6.6**	ug/L	0.50	1	02/20/13 15:24	02/22/13 02:30	7440-02-0	
Potassium, Dissolved	**8200**	ug/L	20.0	1	02/20/13 15:24	02/23/13 14:07	7440-09-7	
Selenium, Dissolved	ND	ug/L	0.50	1	02/20/13 15:24	02/22/13 02:30	7782-49-2	
Silver, Dissolved	ND	ug/L	0.50	1	02/20/13 15:24	02/22/13 02:30	7440-22-4	
Sodium, Dissolved	**11500**	ug/L	50.0	1	02/20/13 15:24	02/22/13 02:30	7440-23-5	
Thallium, Dissolved	ND	ug/L	0.10	1	02/20/13 15:24	02/23/13 14:07	7440-28-0	
Vanadium, Dissolved	**0.20**	ug/L	0.10	1	02/20/13 15:24	02/22/13 02:30	7440-62-2	
Zinc, Dissolved	**3140**	ug/L	100	20	02/20/13 15:24	02/22/13 02:35	7440-66-6	
200.8 Potentially Diss. Metals	Analytical Method: EPA 200.8 Preparation Method: EPA 200.8							
Aluminum, Dissolved	**1020**	ug/L	50.0	1	02/19/13 09:45	02/23/13 17:51	7429-90-5	
Antimony, Dissolved	**0.35J**	ug/L	1.0	1	02/19/13 09:45	02/23/13 17:51	7440-36-0	B
Arsenic, Dissolved	**2.3**	ug/L	1.0	1	02/19/13 09:45	02/23/13 17:51	7440-38-2	
Barium, Dissolved	**20.9**	ug/L	1.0	1	02/19/13 09:45	02/23/13 17:51	7440-39-3	
Beryllium, Dissolved	**1.1**	ug/L	0.50	1	02/19/13 09:45	02/23/13 17:51	7440-41-7	
Cadmium, Dissolved	**14.8**	ug/L	0.50	1	02/19/13 09:45	02/23/13 17:51	7440-43-9	
Chromium, Dissolved	**1.1**	ug/L	1.0	1	02/19/13 09:45	02/23/13 17:51	7440-47-3	B
Cobalt, Dissolved	**2.5**	ug/L	1.0	1	02/19/13 09:45	02/23/13 17:51	7440-48-4	
Copper, Dissolved	**195**	ug/L	1.0	1	02/19/13 09:45	02/23/13 17:51	7440-50-8	
Iron, Dissolved	**11800**	ug/L	50.0	1	02/19/13 09:45	02/23/13 17:51	7439-89-6	
Lead, Dissolved	**22.4**	ug/L	1.0	1	02/19/13 09:45	02/23/13 17:51	7439-92-1	
Manganese, Dissolved	**1730**	ug/L	1.0	1	02/19/13 09:45	02/23/13 17:51	7439-96-5	
Molybdenum, Dissolved	**19.0**	ug/L	1.0	1	02/19/13 09:45	02/23/13 17:51	7439-98-7	
Nickel, Dissolved	**2.3**	ug/L	1.0	1	02/19/13 09:45	02/23/13 17:51	7440-02-0	
Selenium, Dissolved	ND	ug/L	1.0	1	02/19/13 09:45	02/25/13 16:24	7782-49-2	
Silver, Dissolved	ND	ug/L	0.50	1	02/19/13 09:45	02/23/13 17:51	7440-22-4	
Thallium, Dissolved	**0.071J**	ug/L	1.0	1	02/19/13 09:45	02/23/13 17:51	7440-28-0	
Vanadium, Dissolved	ND	ug/L	1.0	1	02/19/13 09:45	02/23/13 17:51	7440-62-2	
Zinc, Dissolved	**2910**	ug/L	10.0	1	02/19/13 09:45	02/23/13 17:51	7440-66-6	
245.1 Mercury	Analytical Method: EPA 245.1 Preparation Method: EPA 245.1							
Mercury	ND	ug/L	0.20	1	02/15/13 11:24	02/19/13 12:49	7439-97-6	
245.1 Mercury, Dissolved	Analytical Method: EPA 245.1 Preparation Method: EPA 245.1							
Mercury, Dissolved	ND	ug/L	0.20	1	02/15/13 11:18	02/19/13 13:46	7439-97-6	
245.1 Potentially Diss Mercury	Analytical Method: EPA 245.1 Preparation Method: EPA 245.1							
Mercury, Dissolved	ND	ug/L	0.20	1	02/13/13 10:10	02/13/13 14:48	7439-97-6	
2510B Specific Conductance	Analytical Method: SM 2510B							
Specific Conductance	**1300**	umhos/cm	10.0	1		02/13/13 13:14		
Salinity	Analytical Method: Calculated							
Salinity (as dissolved solids)	**830**	mg/L	6.4	1		02/13/13 15:22		

This report shall not be reproduced, except in full,
without the written consent of Pace Analytical Services, Inc..

Pace Analytical Services, Inc.
9608 Loiret Blvd.
Lenexa, KS 66219
(913)599-5665

ANALYTICAL RESULTS

Project: FEBRUARY 2013 RICO WATER SAMPL
Pace Project No.: 60138490

Sample: DR-3_20130208 **Lab ID: 60138490009** Collected: 02/08/13 08:00 Received: 02/09/13 09:40 Matrix: Water

Parameters	Results	Units	Report Limit	DF	Prepared	Analyzed	CAS No.	Qual
Salinity	Analytical Method: Calculated							
Salinity (as seawater)	**0.65**	PSU	0.014	1		02/13/13 15:22		
2320B Alkalinity	Analytical Method: SM 2320B							
Alkalinity,Bicarbonate (CaCO3)	**102**	mg/L	20.0	1		02/19/13 12:40		
Alkalinity, Carbonate (CaCO3)	ND	mg/L	20.0	1		02/19/13 12:40		
Alkalinity, Total as CaCO3	**102**	mg/L	20.0	1		02/19/13 12:40		
2540C Total Dissolved Solids	Analytical Method: SM 2540C							
Total Dissolved Solids	**1030**	mg/L	5.0	1		02/13/13 14:29		
2540D Total Suspended Solids	Analytical Method: SM 2540D							
Total Suspended Solids	**38.0**	mg/L	5.0	1		02/14/13 11:07		
4500S2D Sulfide, Total	Analytical Method: SM 4500-S-2 D							
Sulfide, Total	ND	mg/L	0.050	1		02/11/13 16:21	18496-25-8	
300.0 IC Anions 28 Days	Analytical Method: EPA 300.0							
Chloride	ND	mg/L	1.0	1		02/12/13 22:19	16887-00-6	
Sulfate	**693**	mg/L	50.0	50		02/12/13 22:36	14808-79-8	
353.2 Nitrogen, NO2/NO3 pres.	Analytical Method: EPA 353.2							
Nitrogen, NO2 plus NO3	ND	mg/L	0.10	1		02/25/13 10:45		
4500CNE Cyanide, Total	Analytical Method: SM 4500-CN-E							
Cyanide	ND	mg/L	0.0050	1		02/13/13 11:55	57-12-5	
5310C TOC	Analytical Method: SM 5310C							
Total Organic Carbon	**0.13J**	mg/L	0.50	1		02/13/13 17:00	7440-44-0	

This report shall not be reproduced, except in full,
without the written consent of Pace Analytical Services, Inc..

Pace Analytical Services, Inc.
9608 Loiret Blvd.
Lenexa, KS 66219
(913)599-5665

ANALYTICAL RESULTS

Project: FEBRUARY 2013 RICO WATER SAMPL
Pace Project No.: 60138490

Sample: DR-8_20130208 **Lab ID: 60138490010** Collected: 02/08/13 08:05 Received: 02/09/13 09:40 Matrix: Water

Parameters	Results	Units	Report Limit	DF	Prepared	Analyzed	CAS No.	Qual
200.7 Potentially Diss. Metals	Analytical Method: EPA 200.7 Preparation Method: EPA 200.7							
Calcium, Dissolved	**255000**	ug/L	100	1	02/18/13 14:45	02/20/13 17:23	7440-70-2	M1
Magnesium, Dissolved	**19100**	ug/L	50.0	1	02/18/13 14:45	02/20/13 17:23	7439-95-4	
Potassium, Dissolved	**8880**	ug/L	500	1	02/18/13 14:45	02/20/13 17:23	7440-09-7	
Sodium, Dissolved	**12700**	ug/L	500	1	02/18/13 14:45	02/20/13 17:23	7440-23-5	
200.8 MET ICPMS	Analytical Method: EPA 200.8 Preparation Method: EPA 200.8							
Aluminum	**995**	ug/L	4.0	1	02/14/13 10:13	02/16/13 22:59	7429-90-5	
Antimony	ND	ug/L	0.50	1	02/14/13 10:13	02/16/13 22:59	7440-36-0	
Arsenic	**2.1**	ug/L	0.50	1	02/14/13 10:13	02/16/13 22:59	7440-38-2	
Barium	**20.0**	ug/L	0.30	1	02/14/13 10:13	02/16/13 22:59	7440-39-3	
Beryllium	**1.1**	ug/L	0.20	1	02/14/13 10:13	02/17/13 16:04	7440-41-7	
Cadmium	**14.7**	ug/L	0.080	1	02/14/13 10:13	02/16/13 22:59	7440-43-9	
Calcium	**246000**	ug/L	400	20	02/14/13 10:13	02/16/13 23:05	7440-70-2	
Chromium	**0.76**	ug/L	0.50	1	02/14/13 10:13	02/16/13 22:59	7440-47-3	
Cobalt	**2.5**	ug/L	0.50	1	02/14/13 10:13	02/16/13 22:59	7440-48-4	
Copper	**188**	ug/L	0.50	1	02/14/13 10:13	02/16/13 22:59	7440-50-8	
Iron	**11300**	ug/L	50.0	1	02/14/13 10:13	02/16/13 22:59	7439-89-6	
Lead	**19.9**	ug/L	0.10	1	02/14/13 10:13	02/16/13 22:59	7439-92-1	
Magnesium	**18800**	ug/L	5.0	1	02/14/13 10:13	02/16/13 22:59	7439-95-4	
Manganese	**1700**	ug/L	10.0	20	02/14/13 10:13	02/16/13 23:05	7439-96-5	
Molybdenum	**18.1**	ug/L	0.50	1	02/14/13 10:13	02/16/13 22:59	7439-98-7	
Nickel	**3.8**	ug/L	0.50	1	02/14/13 10:13	02/16/13 22:59	7440-02-0	
Potassium	**7850**	ug/L	20.0	1	02/14/13 10:13	02/16/13 22:59	7440-09-7	
Selenium	ND	ug/L	0.50	1	02/14/13 10:13	02/16/13 22:59	7782-49-2	
Silica	**20400**	ug/L	1070	20	02/14/13 10:13	02/21/13 13:14	7631-86-9	
Silver	ND	ug/L	0.50	1	02/14/13 10:13	02/17/13 16:04	7440-22-4	
Sodium	**10700**	ug/L	50.0	1	02/14/13 10:13	02/16/13 22:59	7440-23-5	
Thallium	ND	ug/L	0.10	1	02/14/13 10:13	02/16/13 22:59	7440-28-0	
Total Hardness by 2340B	**693000**	ug/L	1420	20	02/14/13 10:13	02/16/13 23:05		
Vanadium	**0.23**	ug/L	0.10	1	02/14/13 10:13	02/16/13 22:59	7440-62-2	
Zinc	**3200**	ug/L	100	20	02/14/13 10:13	02/16/13 23:05	7440-66-6	
200.8 MET ICPMS, Dissolved	Analytical Method: EPA 200.8 Preparation Method: EPA 200.8							
Aluminum, Dissolved	**693**	ug/L	4.0	1	02/20/13 15:24	02/22/13 02:41	7429-90-5	
Antimony, Dissolved	ND	ug/L	0.50	1	02/20/13 15:24	02/22/13 02:41	7440-36-0	
Arsenic, Dissolved	**1.6**	ug/L	0.50	1	02/20/13 15:24	02/22/13 02:41	7440-38-2	
Barium, Dissolved	**21.4**	ug/L	0.30	1	02/20/13 15:24	02/22/13 02:41	7440-39-3	
Beryllium, Dissolved	**0.67**	ug/L	0.20	1	02/20/13 15:24	02/23/13 14:12	7440-41-7	
Cadmium, Dissolved	**14.0**	ug/L	0.080	1	02/20/13 15:24	02/22/13 02:41	7440-43-9	
Calcium, Dissolved	**263000**	ug/L	400	20	02/20/13 15:24	02/22/13 02:46	7440-70-2	
Chromium, Dissolved	**1.2**	ug/L	0.50	1	02/20/13 15:24	02/22/13 02:41	7440-47-3	
Cobalt, Dissolved	**2.7**	ug/L	0.50	1	02/20/13 15:24	02/22/13 02:41	7440-48-4	
Copper, Dissolved	**136**	ug/L	0.50	1	02/20/13 15:24	02/22/13 02:41	7440-50-8	
Iron, Dissolved	**8250**	ug/L	50.0	1	02/20/13 15:24	02/22/13 02:41	7439-89-6	
Lead, Dissolved	**12.5**	ug/L	0.10	1	02/20/13 15:24	02/23/13 14:12	7439-92-1	
Magnesium, Dissolved	**19700**	ug/L	5.0	1	02/20/13 15:24	02/22/13 02:41	7439-95-4	

This report shall not be reproduced, except in full,
without the written consent of Pace Analytical Services, Inc..

Pace Analytical Services, Inc.
9608 Loiret Blvd.
Lenexa, KS 66219
(913)599-5665

ANALYTICAL RESULTS

Project: FEBRUARY 2013 RICO WATER SAMPL
Pace Project No.: 60138490

Sample: DR-8_20130208 **Lab ID: 60138490010** Collected: 02/08/13 08:05 Received: 02/09/13 09:40 Matrix: Water

Parameters	Results	Units	Report Limit	DF	Prepared	Analyzed	CAS No.	Qual
200.8 MET ICPMS, Dissolved	Analytical Method: EPA 200.8 Preparation Method: EPA 200.8							
Manganese, Dissolved	**1780**	ug/L	10.0	20	02/20/13 15:24	02/22/13 02:46	7439-96-5	
Molybdenum, Dissolved	**17.5**	ug/L	0.50	1	02/20/13 15:24	02/22/13 02:41	7439-98-7	
Nickel, Dissolved	**4.3**	ug/L	0.50	1	02/20/13 15:24	02/22/13 02:41	7440-02-0	
Potassium, Dissolved	**7960**	ug/L	20.0	1	02/20/13 15:24	02/23/13 14:12	7440-09-7	
Selenium, Dissolved	ND	ug/L	0.50	1	02/20/13 15:24	02/22/13 02:41	7782-49-2	
Silver, Dissolved	ND	ug/L	0.50	1	02/20/13 15:24	02/22/13 02:41	7440-22-4	
Sodium, Dissolved	**11800**	ug/L	50.0	1	02/20/13 15:24	02/22/13 02:41	7440-23-5	
Thallium, Dissolved	ND	ug/L	0.10	1	02/20/13 15:24	02/23/13 14:12	7440-28-0	
Vanadium, Dissolved	**0.19**	ug/L	0.10	1	02/20/13 15:24	02/22/13 02:41	7440-62-2	
Zinc, Dissolved	**3040**	ug/L	100	20	02/20/13 15:24	02/22/13 02:46	7440-66-6	
200.8 Potentially Diss. Metals	Analytical Method: EPA 200.8 Preparation Method: EPA 200.8							
Aluminum, Dissolved	**930**	ug/L	50.0	1	02/19/13 09:45	02/23/13 17:56	7429-90-5	
Antimony, Dissolved	**0.36J**	ug/L	1.0	1	02/19/13 09:45	02/23/13 17:56	7440-36-0	B
Arsenic, Dissolved	**2.1**	ug/L	1.0	1	02/19/13 09:45	02/23/13 17:56	7440-38-2	
Barium, Dissolved	**20.1**	ug/L	1.0	1	02/19/13 09:45	02/23/13 17:56	7440-39-3	
Beryllium, Dissolved	**1.1**	ug/L	0.50	1	02/19/13 09:45	02/23/13 17:56	7440-41-7	
Cadmium, Dissolved	**14.2**	ug/L	0.50	1	02/19/13 09:45	02/23/13 17:56	7440-43-9	
Chromium, Dissolved	**0.96J**	ug/L	1.0	1	02/19/13 09:45	02/23/13 17:56	7440-47-3	B
Cobalt, Dissolved	**2.4**	ug/L	1.0	1	02/19/13 09:45	02/23/13 17:56	7440-48-4	
Copper, Dissolved	**179**	ug/L	1.0	1	02/19/13 09:45	02/23/13 17:56	7440-50-8	
Iron, Dissolved	**10800**	ug/L	50.0	1	02/19/13 09:45	02/23/13 17:56	7439-89-6	
Lead, Dissolved	**20.8**	ug/L	1.0	1	02/19/13 09:45	02/23/13 17:56	7439-92-1	
Manganese, Dissolved	**1670**	ug/L	1.0	1	02/19/13 09:45	02/23/13 17:56	7439-96-5	
Molybdenum, Dissolved	**18.6**	ug/L	1.0	1	02/19/13 09:45	02/23/13 17:56	7439-98-7	
Nickel, Dissolved	**2.1**	ug/L	1.0	1	02/19/13 09:45	02/23/13 17:56	7440-02-0	
Selenium, Dissolved	ND	ug/L	1.0	1	02/19/13 09:45	02/25/13 16:28	7782-49-2	
Silver, Dissolved	ND	ug/L	0.50	1	02/19/13 09:45	02/23/13 17:56	7440-22-4	
Thallium, Dissolved	**0.065J**	ug/L	1.0	1	02/19/13 09:45	02/23/13 17:56	7440-28-0	
Vanadium, Dissolved	ND	ug/L	1.0	1	02/19/13 09:45	02/23/13 17:56	7440-62-2	
Zinc, Dissolved	**2810**	ug/L	10.0	1	02/19/13 09:45	02/23/13 17:56	7440-66-6	
245.1 Mercury	Analytical Method: EPA 245.1 Preparation Method: EPA 245.1							
Mercury	ND	ug/L	0.20	1	02/15/13 11:24	02/19/13 12:52	7439-97-6	
245.1 Mercury, Dissolved	Analytical Method: EPA 245.1 Preparation Method: EPA 245.1							
Mercury, Dissolved	ND	ug/L	0.20	1	02/15/13 11:18	02/19/13 13:48	7439-97-6	
245.1 Potentially Diss Mercury	Analytical Method: EPA 245.1 Preparation Method: EPA 245.1							
Mercury, Dissolved	ND	ug/L	0.20	1	02/13/13 10:10	02/13/13 14:52	7439-97-6	
2510B Specific Conductance	Analytical Method: SM 2510B							
Specific Conductance	**1280**	umhos/cm	10.0	1		02/13/13 13:17		
Salinity	Analytical Method: Calculated							
Salinity (as dissolved solids)	**818**	mg/L	6.4	1		02/13/13 15:22		

This report shall not be reproduced, except in full,
without the written consent of Pace Analytical Services, Inc..

Pace Analytical Services, Inc.
9608 Loiret Blvd.
Lenexa, KS 66219
(913)599-5665

ANALYTICAL RESULTS

Project: FEBRUARY 2013 RICO WATER SAMPL
Pace Project No.: 60138490

Sample: DR-8_20130208 **Lab ID: 60138490010** Collected: 02/08/13 08:05 Received: 02/09/13 09:40 Matrix: Water

Parameters	Results	Units	Report Limit	DF	Prepared	Analyzed	CAS No.	Qual
Salinity	Analytical Method: Calculated							
Salinity (as seawater)	**0.64**	PSU	0.014	1		02/13/13 15:22		
2320B Alkalinity	Analytical Method: SM 2320B							
Alkalinity,Bicarbonate (CaCO3)	**104**	mg/L	20.0	1		02/19/13 12:46		
Alkalinity, Carbonate (CaCO3)	ND	mg/L	20.0	1		02/19/13 12:46		
Alkalinity, Total as CaCO3	**104**	mg/L	20.0	1		02/19/13 12:46		
2540C Total Dissolved Solids	Analytical Method: SM 2540C							
Total Dissolved Solids	**1020**	mg/L	5.0	1		02/13/13 14:29		
2540D Total Suspended Solids	Analytical Method: SM 2540D							
Total Suspended Solids	**35.0**	mg/L	5.0	1		02/14/13 11:07		
4500S2D Sulfide, Total	Analytical Method: SM 4500-S-2 D							
Sulfide, Total	ND	mg/L	0.050	1		02/11/13 16:22	18496-25-8	
300.0 IC Anions 28 Days	Analytical Method: EPA 300.0							
Chloride	ND	mg/L	1.0	1		02/12/13 22:54	16887-00-6	
Sulfate	**692**	mg/L	50.0	50		02/12/13 23:12	14808-79-8	
353.2 Nitrogen, NO2/NO3 pres.	Analytical Method: EPA 353.2							
Nitrogen, NO2 plus NO3	ND	mg/L	0.10	1		02/25/13 10:46		
4500CNE Cyanide, Total	Analytical Method: SM 4500-CN-E							
Cyanide	ND	mg/L	0.0050	1		02/13/13 11:58	57-12-5	
5310C TOC	Analytical Method: SM 5310C							
Total Organic Carbon	**0.42J**	mg/L	0.50	1		02/13/13 17:18	7440-44-0	

This report shall not be reproduced, except in full,
without the written consent of Pace Analytical Services, Inc..

Pace Analytical Services, Inc.
9608 Loiret Blvd.
Lenexa, KS 66219
(913)599-5665

ANALYTICAL RESULTS

Project: FEBRUARY 2013 RICO WATER SAMPL
Pace Project No.: 60138490

Sample: EB-1_20130208 **Lab ID: 60138490011** Collected: 02/08/13 09:45 Received: 02/09/13 09:40 Matrix: Water

Parameters	Results	Units	Report Limit	DF	Prepared	Analyzed	CAS No.	Qual
200.7 Potentially Diss. Metals	Analytical Method: EPA 200.7 Preparation Method: EPA 200.7							
Calcium, Dissolved	**467000**	ug/L	100	1	02/18/13 14:45	02/20/13 17:27	7440-70-2	
Magnesium, Dissolved	**28900**	ug/L	50.0	1	02/18/13 14:45	02/20/13 17:27	7439-95-4	
Potassium, Dissolved	**6680**	ug/L	500	1	02/18/13 14:45	02/20/13 17:27	7440-09-7	
Sodium, Dissolved	**8460**	ug/L	500	1	02/18/13 14:45	02/20/13 17:27	7440-23-5	
200.8 MET ICPMS	Analytical Method: EPA 200.8 Preparation Method: EPA 200.8							
Aluminum	**357**	ug/L	4.0	1	02/14/13 10:13	02/16/13 23:10	7429-90-5	
Antimony	ND	ug/L	0.50	1	02/14/13 10:13	02/16/13 23:10	7440-36-0	
Arsenic	**12.1**	ug/L	0.50	1	02/14/13 10:13	02/16/13 23:10	7440-38-2	
Barium	**14.0**	ug/L	0.30	1	02/14/13 10:13	02/16/13 23:10	7440-39-3	
Beryllium	**0.26**	ug/L	0.20	1	02/14/13 10:13	02/17/13 16:32	7440-41-7	
Cadmium	**1.2**	ug/L	0.080	1	02/14/13 10:13	02/16/13 23:10	7440-43-9	
Calcium	**479000**	ug/L	1000	50	02/14/13 10:13	02/17/13 16:43	7440-70-2	
Chromium	**0.65**	ug/L	0.50	1	02/14/13 10:13	02/16/13 23:10	7440-47-3	
Cobalt	**5.9**	ug/L	0.50	1	02/14/13 10:13	02/16/13 23:10	7440-48-4	
Copper	**23.0**	ug/L	0.50	1	02/14/13 10:13	02/16/13 23:10	7440-50-8	
Iron	**6540**	ug/L	50.0	1	02/14/13 10:13	02/16/13 23:10	7439-89-6	
Lead	**224**	ug/L	0.10	1	02/14/13 10:13	02/16/13 23:10	7439-92-1	
Magnesium	**31100**	ug/L	100	20	02/14/13 10:13	02/16/13 23:16	7439-95-4	
Manganese	**4930**	ug/L	10.0	20	02/14/13 10:13	02/16/13 23:16	7439-96-5	
Molybdenum	**14.0**	ug/L	0.50	1	02/14/13 10:13	02/16/13 23:10	7439-98-7	
Nickel	**5.8**	ug/L	0.50	1	02/14/13 10:13	02/16/13 23:10	7440-02-0	
Potassium	**5810**	ug/L	20.0	1	02/14/13 10:13	02/16/13 23:10	7440-09-7	
Selenium	ND	ug/L	0.50	1	02/14/13 10:13	02/16/13 23:10	7782-49-2	
Silica	**27300**	ug/L	1070	20	02/14/13 10:13	02/21/13 13:19	7631-86-9	
Silver	ND	ug/L	0.50	1	02/14/13 10:13	02/17/13 16:32	7440-22-4	
Sodium	**6780**	ug/L	50.0	1	02/14/13 10:13	02/16/13 23:10	7440-23-5	
Thallium	ND	ug/L	0.10	1	02/14/13 10:13	02/16/13 23:10	7440-28-0	
Total Hardness by 2340B	**1320000**	ug/L	3550	50	02/14/13 10:13	02/17/13 16:43		
Vanadium	**0.56**	ug/L	0.10	1	02/14/13 10:13	02/16/13 23:10	7440-62-2	
Zinc	**1880**	ug/L	100	20	02/14/13 10:13	02/16/13 23:16	7440-66-6	
200.8 MET ICPMS, Dissolved	Analytical Method: EPA 200.8 Preparation Method: EPA 200.8							
Aluminum, Dissolved	**12.1**	ug/L	4.0	1	02/20/13 15:24	02/22/13 02:52	7429-90-5	
Antimony, Dissolved	ND	ug/L	0.50	1	02/20/13 15:24	02/22/13 02:52	7440-36-0	
Arsenic, Dissolved	**3.9**	ug/L	0.50	1	02/20/13 15:24	02/22/13 02:52	7440-38-2	
Barium, Dissolved	**12.4**	ug/L	0.30	1	02/20/13 15:24	02/22/13 02:52	7440-39-3	
Beryllium, Dissolved	ND	ug/L	0.20	1	02/20/13 15:24	02/23/13 13:45	7440-41-7	
Cadmium, Dissolved	**0.16**	ug/L	0.080	1	02/20/13 15:24	02/22/13 02:52	7440-43-9	
Calcium, Dissolved	**531000**	ug/L	1000	50	02/20/13 15:24	02/22/13 03:02	7440-70-2	
Chromium, Dissolved	ND	ug/L	0.50	1	02/20/13 15:24	02/22/13 02:52	7440-47-3	
Cobalt, Dissolved	**6.3**	ug/L	0.50	1	02/20/13 15:24	02/22/13 02:52	7440-48-4	
Copper, Dissolved	**0.97**	ug/L	0.50	1	02/20/13 15:24	02/22/13 02:52	7440-50-8	
Iron, Dissolved	**3550**	ug/L	50.0	1	02/20/13 15:24	02/22/13 02:52	7439-89-6	
Lead, Dissolved	ND	ug/L	0.10	1	02/20/13 15:24	02/22/13 02:52	7439-92-1	
Magnesium, Dissolved	**32900**	ug/L	100	20	02/20/13 15:24	02/22/13 02:57	7439-95-4	

This report shall not be reproduced, except in full,
without the written consent of Pace Analytical Services, Inc..

Pace Analytical Services, Inc.
9608 Loiret Blvd.
Lenexa, KS 66219
(913)599-5665

ANALYTICAL RESULTS

Project: FEBRUARY 2013 RICO WATER SAMPL
Pace Project No.: 60138490

Sample: EB-1_20130208 **Lab ID: 60138490011** Collected: 02/08/13 09:45 Received: 02/09/13 09:40 Matrix: Water

Parameters	Results	Units	Report Limit	DF	Prepared	Analyzed	CAS No.	Qual
200.8 MET ICPMS, Dissolved	Analytical Method: EPA 200.8 Preparation Method: EPA 200.8							
Manganese, Dissolved	**5370**	ug/L	10.0	20	02/20/13 15:24	02/22/13 02:57	7439-96-5	
Molybdenum, Dissolved	**14.4**	ug/L	0.50	1	02/20/13 15:24	02/22/13 02:52	7439-98-7	
Nickel, Dissolved	**6.5**	ug/L	0.50	1	02/20/13 15:24	02/22/13 02:52	7440-02-0	
Potassium, Dissolved	**6150**	ug/L	20.0	1	02/20/13 15:24	02/23/13 13:45	7440-09-7	
Selenium, Dissolved	ND	ug/L	0.50	1	02/20/13 15:24	02/22/13 02:52	7782-49-2	
Silver, Dissolved	ND	ug/L	0.50	1	02/20/13 15:24	02/22/13 02:52	7440-22-4	
Sodium, Dissolved	**7670**	ug/L	50.0	1	02/20/13 15:24	02/22/13 02:52	7440-23-5	
Thallium, Dissolved	ND	ug/L	0.10	1	02/20/13 15:24	02/22/13 02:52	7440-28-0	
Vanadium, Dissolved	ND	ug/L	0.10	1	02/20/13 15:24	02/22/13 02:52	7440-62-2	
Zinc, Dissolved	**1620**	ug/L	100	20	02/20/13 15:24	02/22/13 02:57	7440-66-6	
200.8 Potentially Diss. Metals	Analytical Method: EPA 200.8 Preparation Method: EPA 200.8							
Aluminum, Dissolved	**422**	ug/L	50.0	1	02/19/13 09:45	02/23/13 18:00	7429-90-5	
Antimony, Dissolved	**0.18J**	ug/L	1.0	1	02/19/13 09:45	02/23/13 18:00	7440-36-0	B
Arsenic, Dissolved	**12.3**	ug/L	1.0	1	02/19/13 09:45	02/23/13 18:00	7440-38-2	
Barium, Dissolved	**16.0**	ug/L	1.0	1	02/19/13 09:45	02/23/13 18:00	7440-39-3	
Beryllium, Dissolved	**0.21J**	ug/L	0.50	1	02/19/13 09:45	02/23/13 18:00	7440-41-7	
Cadmium, Dissolved	**1.4**	ug/L	0.50	1	02/19/13 09:45	02/23/13 18:00	7440-43-9	
Chromium, Dissolved	**1.2**	ug/L	1.0	1	02/19/13 09:45	02/23/13 18:00	7440-47-3	B
Cobalt, Dissolved	**5.8**	ug/L	1.0	1	02/19/13 09:45	02/23/13 18:00	7440-48-4	
Copper, Dissolved	**28.1**	ug/L	1.0	1	02/19/13 09:45	02/23/13 18:00	7440-50-8	
Iron, Dissolved	**7180**	ug/L	50.0	1	02/19/13 09:45	02/23/13 18:00	7439-89-6	
Lead, Dissolved	**285**	ug/L	1.0	1	02/19/13 09:45	02/23/13 18:00	7439-92-1	
Manganese, Dissolved	**4980**	ug/L	100	100	02/19/13 09:45	02/25/13 16:36	7439-96-5	
Molybdenum, Dissolved	**14.5**	ug/L	1.0	1	02/19/13 09:45	02/23/13 18:00	7439-98-7	
Nickel, Dissolved	**2.6**	ug/L	1.0	1	02/19/13 09:45	02/23/13 18:00	7440-02-0	
Selenium, Dissolved	ND	ug/L	1.0	1	02/19/13 09:45	02/25/13 16:32	7782-49-2	
Silver, Dissolved	**0.074J**	ug/L	0.50	1	02/19/13 09:45	02/23/13 18:00	7440-22-4	
Thallium, Dissolved	ND	ug/L	1.0	1	02/19/13 09:45	02/23/13 18:00	7440-28-0	
Vanadium, Dissolved	**0.66J**	ug/L	1.0	1	02/19/13 09:45	02/23/13 18:00	7440-62-2	
Zinc, Dissolved	**1720**	ug/L	10.0	1	02/19/13 09:45	02/23/13 18:00	7440-66-6	
245.1 Mercury	Analytical Method: EPA 245.1 Preparation Method: EPA 245.1							
Mercury	ND	ug/L	0.20	1	02/15/13 11:24	02/19/13 12:54	7439-97-6	
245.1 Mercury, Dissolved	Analytical Method: EPA 245.1 Preparation Method: EPA 245.1							
Mercury, Dissolved	ND	ug/L	0.20	1	02/15/13 11:18	02/19/13 13:51	7439-97-6	
245.1 Potentially Diss Mercury	Analytical Method: EPA 245.1 Preparation Method: EPA 245.1							
Mercury, Dissolved	ND	ug/L	0.20	1	02/13/13 10:10	02/13/13 14:54	7439-97-6	
2510B Specific Conductance	Analytical Method: SM 2510B							
Specific Conductance	**2090**	umhos/cm	10.0	1		02/13/13 13:19		
Salinity	Analytical Method: Calculated							
Salinity (as dissolved solids)	**1340**	mg/L	6.4	1		02/13/13 15:22		

This report shall not be reproduced, except in full,
without the written consent of Pace Analytical Services, Inc..

Pace Analytical Services, Inc.
9608 Loiret Blvd.
Lenexa, KS 66219
(913)599-5665

ANALYTICAL RESULTS

Project: FEBRUARY 2013 RICO WATER SAMPL
Pace Project No.: 60138490

Sample: EB-1_20130208 **Lab ID: 60138490011** Collected: 02/08/13 09:45 Received: 02/09/13 09:40 Matrix: Water

Parameters	Results	Units	Report Limit	DF	Prepared	Analyzed	CAS No.	Qual
Salinity	Analytical Method: Calculated							
Salinity (as seawater)	**1.1**	PSU	0.014	1		02/13/13 15:22		
2320B Alkalinity	Analytical Method: SM 2320B							
Alkalinity,Bicarbonate (CaCO3)	**177**	mg/L	20.0	1		02/19/13 12:49		
Alkalinity, Carbonate (CaCO3)	ND	mg/L	20.0	1		02/19/13 12:49		
Alkalinity, Total as CaCO3	**177**	mg/L	20.0	1		02/19/13 12:49		
2540C Total Dissolved Solids	Analytical Method: SM 2540C							
Total Dissolved Solids	**1880**	mg/L	5.0	1		02/13/13 14:29		
2540D Total Suspended Solids	Analytical Method: SM 2540D							
Total Suspended Solids	**46.0**	mg/L	5.0	1		02/14/13 11:08		
4500S2D Sulfide, Total	Analytical Method: SM 4500-S-2 D							
Sulfide, Total	**0.10**	mg/L	0.050	1		02/11/13 16:22	18496-25-8	
300.0 IC Anions 28 Days	Analytical Method: EPA 300.0							
Chloride	**1.1**	mg/L	1.0	1		02/12/13 23:30	16887-00-6	
Sulfate	**1350**	mg/L	100	100		02/12/13 23:47	14808-79-8	
353.2 Nitrogen, NO2/NO3 pres.	Analytical Method: EPA 353.2							
Nitrogen, NO2 plus NO3	ND	mg/L	0.10	1		02/25/13 10:47		
4500CNE Cyanide, Total	Analytical Method: SM 4500-CN-E							
Cyanide	ND	mg/L	0.0050	1		02/13/13 12:02	57-12-5	
5310C TOC	Analytical Method: SM 5310C							
Total Organic Carbon	**0.85**	mg/L	0.50	1		02/13/13 17:54	7440-44-0	

This report shall not be reproduced, except in full,
without the written consent of Pace Analytical Services, Inc..

Pace Analytical Services, Inc.
9608 Loiret Blvd.
Lenexa, KS 66219
(913)599-5665

ANALYTICAL RESULTS

Project: FEBRUARY 2013 RICO WATER SAMPL
Pace Project No.: 60138490

Sample: AT-2_20130208 **Lab ID: 60138490012** Collected: 02/08/13 09:00 Received: 02/09/13 09:40 Matrix: Water

Parameters	Results	Units	Report Limit	DF	Prepared	Analyzed	CAS No.	Qual
200.7 Potentially Diss. Metals	Analytical Method: EPA 200.7 Preparation Method: EPA 200.7							
Calcium, Dissolved	**178000**	ug/L	100	1	02/18/13 14:45	02/20/13 17:29	7440-70-2	
Magnesium, Dissolved	**13700**	ug/L	50.0	1	02/18/13 14:45	02/20/13 17:29	7439-95-4	
Potassium, Dissolved	**7870**	ug/L	500	1	02/18/13 14:45	02/20/13 17:29	7440-09-7	
Sodium, Dissolved	**12000**	ug/L	500	1	02/18/13 14:45	02/20/13 17:29	7440-23-5	
200.8 MET ICPMS	Analytical Method: EPA 200.8 Preparation Method: EPA 200.8							
Aluminum	**1040**	ug/L	4.0	1	02/14/13 10:13	02/16/13 23:39	7429-90-5	
Antimony	ND	ug/L	0.50	1	02/14/13 10:13	02/16/13 23:39	7440-36-0	
Arsenic	**1.0**	ug/L	0.50	1	02/14/13 10:13	02/16/13 23:39	7440-38-2	
Barium	**82.0**	ug/L	0.30	1	02/14/13 10:13	02/16/13 23:39	7440-39-3	
Beryllium	**0.43**	ug/L	0.20	1	02/14/13 10:13	02/17/13 16:48	7440-41-7	
Cadmium	**1.9**	ug/L	0.080	1	02/14/13 10:13	02/16/13 23:39	7440-43-9	
Calcium	**164000**	ug/L	400	20	02/14/13 10:13	02/16/13 23:44	7440-70-2	
Chromium	**2.2**	ug/L	0.50	1	02/14/13 10:13	02/16/13 23:39	7440-47-3	
Cobalt	**2.4**	ug/L	0.50	1	02/14/13 10:13	02/16/13 23:39	7440-48-4	
Copper	**66.1**	ug/L	0.50	1	02/14/13 10:13	02/16/13 23:39	7440-50-8	
Iron	**40200**	ug/L	1000	20	02/14/13 10:13	02/16/13 23:44	7439-89-6	
Lead	**50.7**	ug/L	0.10	1	02/14/13 10:13	02/16/13 23:39	7439-92-1	
Magnesium	**14100**	ug/L	5.0	1	02/14/13 10:13	02/16/13 23:39	7439-95-4	
Manganese	**1400**	ug/L	10.0	20	02/14/13 10:13	02/16/13 23:44	7439-96-5	
Molybdenum	**2.6**	ug/L	0.50	1	02/14/13 10:13	02/16/13 23:39	7439-98-7	
Nickel	**4.7**	ug/L	0.50	1	02/14/13 10:13	02/16/13 23:39	7440-02-0	
Potassium	**6900**	ug/L	20.0	1	02/14/13 10:13	02/16/13 23:39	7440-09-7	
Selenium	ND	ug/L	0.50	1	02/14/13 10:13	02/16/13 23:39	7782-49-2	
Silica	**4090**	ug/L	53.5	1	02/14/13 10:13	02/21/13 11:17	7631-86-9	
Silver	ND	ug/L	0.50	1	02/14/13 10:13	02/17/13 16:48	7440-22-4	
Sodium	**9890**	ug/L	50.0	1	02/14/13 10:13	02/16/13 23:39	7440-23-5	
Thallium	ND	ug/L	0.10	1	02/14/13 10:13	02/16/13 23:39	7440-28-0	
Total Hardness by 2340B	**469000**	ug/L	1420	20	02/14/13 10:13	02/16/13 23:44		
Vanadium	**1.5**	ug/L	0.10	1	02/14/13 10:13	02/16/13 23:39	7440-62-2	
Zinc	**592**	ug/L	100	20	02/14/13 10:13	02/16/13 23:44	7440-66-6	
200.8 MET ICPMS, Dissolved	Analytical Method: EPA 200.8 Preparation Method: EPA 200.8							
Aluminum, Dissolved	**7.2**	ug/L	4.0	1	02/20/13 15:24	02/22/13 03:25	7429-90-5	
Antimony, Dissolved	ND	ug/L	0.50	1	02/20/13 15:24	02/22/13 03:25	7440-36-0	
Arsenic, Dissolved	ND	ug/L	0.50	1	02/20/13 15:24	02/22/13 03:25	7440-38-2	
Barium, Dissolved	**73.1**	ug/L	0.30	1	02/20/13 15:24	02/22/13 03:25	7440-39-3	
Beryllium, Dissolved	ND	ug/L	0.20	1	02/20/13 15:24	02/22/13 03:25	7440-41-7	
Cadmium, Dissolved	ND	ug/L	0.080	1	02/20/13 15:24	02/22/13 03:25	7440-43-9	
Calcium, Dissolved	**183000**	ug/L	400	20	02/20/13 15:24	02/22/13 03:31	7440-70-2	
Chromium, Dissolved	ND	ug/L	0.50	1	02/20/13 15:24	02/22/13 03:25	7440-47-3	
Cobalt, Dissolved	ND	ug/L	0.50	1	02/20/13 15:24	02/22/13 03:25	7440-48-4	
Copper, Dissolved	**0.61**	ug/L	0.50	1	02/20/13 15:24	02/22/13 03:25	7440-50-8	
Iron, Dissolved	ND	ug/L	50.0	1	02/20/13 15:24	02/22/13 03:25	7439-89-6	
Lead, Dissolved	ND	ug/L	0.10	1	02/20/13 15:24	02/23/13 13:29	7439-92-1	
Magnesium, Dissolved	**14400**	ug/L	5.0	1	02/20/13 15:24	02/22/13 03:25	7439-95-4	

This report shall not be reproduced, except in full,
without the written consent of Pace Analytical Services, Inc..

Pace Analytical Services, Inc.
9608 Loiret Blvd.
Lenexa, KS 66219
(913)599-5665

ANALYTICAL RESULTS

Project: FEBRUARY 2013 RICO WATER SAMPL
Pace Project No.: 60138490

Sample: AT-2_20130208 **Lab ID: 60138490012** Collected: 02/08/13 09:00 Received: 02/09/13 09:40 Matrix: Water

Parameters	Results	Units	Report Limit	DF	Prepared	Analyzed	CAS No.	Qual
200.8 MET ICPMS, Dissolved	Analytical Method: EPA 200.8 Preparation Method: EPA 200.8							
Manganese, Dissolved	**468**	ug/L	10.0	20	02/20/13 15:24	02/22/13 03:31	7439-96-5	
Molybdenum, Dissolved	**6.6**	ug/L	0.50	1	02/20/13 15:24	02/22/13 03:25	7439-98-7	
Nickel, Dissolved	**0.87**	ug/L	0.50	1	02/20/13 15:24	02/22/13 03:25	7440-02-0	
Potassium, Dissolved	**7100**	ug/L	20.0	1	02/20/13 15:24	02/23/13 13:29	7440-09-7	
Selenium, Dissolved	ND	ug/L	0.50	1	02/20/13 15:24	02/22/13 03:25	7782-49-2	
Silver, Dissolved	ND	ug/L	0.50	1	02/20/13 15:24	02/22/13 03:25	7440-22-4	
Sodium, Dissolved	**11100**	ug/L	50.0	1	02/20/13 15:24	02/22/13 03:25	7440-23-5	
Thallium, Dissolved	ND	ug/L	0.10	1	02/20/13 15:24	02/22/13 03:25	7440-28-0	
Vanadium, Dissolved	ND	ug/L	0.10	1	02/20/13 15:24	02/22/13 03:25	7440-62-2	
Zinc, Dissolved	ND	ug/L	5.0	1	02/20/13 15:24	02/22/13 03:25	7440-66-6	
200.8 Potentially Diss. Metals	Analytical Method: EPA 200.8 Preparation Method: EPA 200.8							
Aluminum, Dissolved	**920**	ug/L	50.0	1	02/19/13 09:45	02/23/13 18:04	7429-90-5	
Antimony, Dissolved	**0.15J**	ug/L	1.0	1	02/19/13 09:45	02/23/13 18:04	7440-36-0	B
Arsenic, Dissolved	**0.92J**	ug/L	1.0	1	02/19/13 09:45	02/23/13 18:04	7440-38-2	
Barium, Dissolved	**83.8**	ug/L	1.0	1	02/19/13 09:45	02/23/13 18:04	7440-39-3	
Beryllium, Dissolved	**0.40J**	ug/L	0.50	1	02/19/13 09:45	02/23/13 18:04	7440-41-7	
Cadmium, Dissolved	**2.2**	ug/L	0.50	1	02/19/13 09:45	02/23/13 18:04	7440-43-9	
Chromium, Dissolved	**3.4**	ug/L	1.0	1	02/19/13 09:45	02/23/13 18:04	7440-47-3	
Cobalt, Dissolved	**2.0**	ug/L	1.0	1	02/19/13 09:45	02/23/13 18:04	7440-48-4	
Copper, Dissolved	**76.7**	ug/L	1.0	1	02/19/13 09:45	02/23/13 18:04	7440-50-8	
Iron, Dissolved	**40000**	ug/L	50.0	1	02/19/13 09:45	02/23/13 18:04	7439-89-6	
Lead, Dissolved	**50.3**	ug/L	1.0	1	02/19/13 09:45	02/23/13 18:04	7439-92-1	
Manganese, Dissolved	**1420**	ug/L	1.0	1	02/19/13 09:45	02/23/13 18:04	7439-96-5	
Molybdenum, Dissolved	**2.9**	ug/L	1.0	1	02/19/13 09:45	02/23/13 18:04	7439-98-7	
Nickel, Dissolved	**3.3**	ug/L	1.0	1	02/19/13 09:45	02/23/13 18:04	7440-02-0	
Selenium, Dissolved	**0.36J**	ug/L	1.0	1	02/19/13 09:45	02/25/13 16:40	7782-49-2	
Silver, Dissolved	ND	ug/L	0.50	1	02/19/13 09:45	02/23/13 18:04	7440-22-4	
Thallium, Dissolved	**0.027J**	ug/L	1.0	1	02/19/13 09:45	02/23/13 18:04	7440-28-0	
Vanadium, Dissolved	**1.1**	ug/L	1.0	1	02/19/13 09:45	02/23/13 18:04	7440-62-2	
Zinc, Dissolved	**500**	ug/L	10.0	1	02/19/13 09:45	02/23/13 18:04	7440-66-6	
245.1 Mercury	Analytical Method: EPA 245.1 Preparation Method: EPA 245.1							
Mercury	ND	ug/L	0.20	1	02/15/13 11:24	02/19/13 12:57	7439-97-6	
245.1 Mercury, Dissolved	Analytical Method: EPA 245.1 Preparation Method: EPA 245.1							
Mercury, Dissolved	ND	ug/L	0.20	1	02/15/13 11:18	02/19/13 13:53	7439-97-6	
245.1 Potentially Diss Mercury	Analytical Method: EPA 245.1 Preparation Method: EPA 245.1							
Mercury, Dissolved	ND	ug/L	0.20	1	02/13/13 10:10	02/13/13 14:57	7439-97-6	
2510B Specific Conductance	Analytical Method: SM 2510B							
Specific Conductance	**959**	umhos/cm	10.0	1		02/13/13 13:21		
Salinity	Analytical Method: Calculated							
Salinity (as dissolved solids)	**614**	mg/L	6.4	1		02/13/13 15:22		

This report shall not be reproduced, except in full,
without the written consent of Pace Analytical Services, Inc..

Pace Analytical Services, Inc.
9608 Loiret Blvd.
Lenexa, KS 66219
(913)599-5665

ANALYTICAL RESULTS

Project: FEBRUARY 2013 RICO WATER SAMPL
Pace Project No.: 60138490

Sample: AT-2_20130208 **Lab ID: 60138490012** Collected: 02/08/13 09:00 Received: 02/09/13 09:40 Matrix: Water

Parameters	Results	Units	Report Limit	DF	Prepared	Analyzed	CAS No.	Qual
Salinity	Analytical Method: Calculated							
Salinity (as seawater)	**0.47**	PSU	0.014	1		02/13/13 15:22		
2320B Alkalinity	Analytical Method: SM 2320B							
Alkalinity,Bicarbonate (CaCO3)	ND	mg/L	20.0	1		02/19/13 12:54		
Alkalinity, Carbonate (CaCO3)	ND	mg/L	20.0	1		02/19/13 12:54		
Alkalinity, Total as CaCO3	ND	mg/L	20.0	1		02/19/13 12:54		
2540C Total Dissolved Solids	Analytical Method: SM 2540C							
Total Dissolved Solids	**760**	mg/L	5.0	1		02/13/13 14:29		
2540D Total Suspended Solids	Analytical Method: SM 2540D							
Total Suspended Solids	**296**	mg/L	5.0	1		02/14/13 11:08		
4500S2D Sulfide, Total	Analytical Method: SM 4500-S-2 D							
Sulfide, Total	ND	mg/L	0.050	1		02/11/13 16:22	18496-25-8	
300.0 IC Anions 28 Days	Analytical Method: EPA 300.0							
Chloride	**1.8**	mg/L	1.0	1		02/13/13 00:05	16887-00-6	
Sulfate	**549**	mg/L	50.0	50		02/13/13 00:23	14808-79-8	
353.2 Nitrogen, NO2/NO3 pres.	Analytical Method: EPA 353.2							
Nitrogen, NO2 plus NO3	ND	mg/L	0.10	1		02/25/13 10:48		
4500CNE Cyanide, Total	Analytical Method: SM 4500-CN-E							
Cyanide	ND	mg/L	0.0050	1		02/13/13 12:05	57-12-5	
5310C TOC	Analytical Method: SM 5310C							
Total Organic Carbon	**1.7**	mg/L	0.50	1		02/13/13 18:12	7440-44-0	

This report shall not be reproduced, except in full,
without the written consent of Pace Analytical Services, Inc..

Pace Analytical Services, Inc.
9608 Loiret Blvd.
Lenexa, KS 66219
(913)599-5665

March 15, 2013

Mark DeFriez
Anderson Engineering Company I
977 W 2100 S.
Salt Lake City, UT 84119

RE: Project: February 2013 Rico Water Sampl
Pace Project No.: 60138913

Dear Mark DeFriez:
Enclosed are the analytical results for sample(s) received by the laboratory on February 16, 2013. The results relate only to the within this report conform to the most current version of the TNI standards, BP LaMP Technical Requirements Revision 10.1, and any applicable Quality Assurance Project Plan (QAPP), or Work Plan unless otherwise narrated in the body of this report.

If you have any questions concerning this report, please feel free to contact me.

Sincerely,

Heather M. Wilson

Heather Wilson

heather.wilson@pacelabs.com
Project Manager

Enclosures

This report shall not be reproduced, except in full,
without the written consent of Pace Analytical Services, Inc..

Pace Analytical Services, Inc.
9608 Loiret Blvd.
Lenexa, KS 66219
(913)599-5665

CERTIFICATIONS

Project: February 2013 Rico Water Sampl
Pace Project No.: 60138913

Minnesota Certification IDs
1700 Elm Street SE Suite 200, Minneapolis, MN 55414
A2LA Certification #: 2926.01
Alaska Certification #: UST-078
Alaska Certification #MN00064
Arizona Certification #: AZ-0014
Arkansas Certification #: 88-0680
California Certification #: 01155CA
Colorado Certification #Pace
Connecticut Certification #: PH-0256
EPA Region 8 Certification #: Pace
Florida/NELAP Certification #: E87605
Georgia Certification #: 959
Hawaii Certification #Pace
Idaho Certification #: MN00064
Illinois Certification #: 200011
Kansas Certification #: E-10167
Louisiana Certification #: 03086
Louisiana Certification #: LA080009
Maine Certification #: 2007029
Maryland Certification #: 322
Michigan DEQ Certification #: 9909
Minnesota Certification #: 027-053-137
Mississippi Certification #: Pace
Montana Certification #: MT CERT0092
Nebraska Certification #: Pace
Nevada Certification #: MN_00064
New Jersey Certification #: MN-002
New York Certification #: 11647
North Carolina Certification #: 530
North Dakota Certification #: R-036
North Dakota Certification #: R-036A
Ohio VAP Certification #: CL101
Oklahoma Certification #: 9507
Oregon Certification #: MN200001
Oregon Certification #: MN300001
Pennsylvania Certification #: 68-00563
Puerto Rico Certification
Tennessee Certification #: 02818
Texas Certification #: T104704192
Utah Certification #: MN00064
Virginia/DCLS Certification #: 002521
Virginia/VELAP Certification #: 460163
Washington Certification #: C754
West Virginia Certification #: 382
Wisconsin Certification #: 999407970

Montana Certification IDs
602 South 25th Street, Billings, MT 59101
EPA Region 8 Certification #: 8TMS-Q
Idaho Certification #: MT00012
Montana Certification #: MT CERT0040
NVLAP Certification #: 101292-0
Minnesota Dept of Health Certification #: 030-999-442
Washington Department of Ecology #: C993

Green Bay Certification IDs
1241 Bellevue Street, Green Bay, WI 54302
Florida/NELAP Certification #: E87948
Illinois Certification #: 200050
Kentucky Certification #: 82
Louisiana Certification #: 04168
Minnesota Certification #: 055-999-334
New York Certification #: 11888
North Dakota Certification #: R-150
South Carolina Certification #: 83006001
US Dept of Agriculture #: S-76505
Wisconsin Certification #: 405132750

Kansas Certification IDs
9608 Loiret Boulevard, Lenexa, KS 66219
A2LA Certification #: 2456.01
Arkansas Certification #: 12-019-0
Illinois Certification #: 002885
Iowa Certification #: 118
Kansas/NELAP Certification #: E-10116
Louisiana Certification #: 03055
Nevada Certification #: KS000212008A
Oklahoma Certification #: 9205/9935
Texas Certification #: T104704407-12-3
Utah Certification #: KS000212012-2
Illinois Certification #: 003097

This report shall not be reproduced, except in full,
without the written consent of Pace Analytical Services, Inc..

Pace Analytical Services, Inc.
9608 Loiret Blvd.
Lenexa, KS 66219
(913)599-5665

SAMPLE SUMMARY

Project: February 2013 Rico Water Sampl
Pace Project No.: 60138913

Lab ID	Sample ID	Matrix	Date Collected	Date Received
60138913001	**MW-3 DEEP_20130213**	Water	02/13/13 15:00	02/16/13 09:00
60138913002	**MW-2 DEEP_20130213**	Water	02/13/13 15:46	02/16/13 09:00
60138913003	**GW-4_20130214**	Water	02/14/13 12:47	02/16/13 09:00
60138913004	**MW-4 DEEP_02130214**	Water	02/14/13 11:48	02/16/13 09:00
60138913005	**MW-6 SHALLOW_20130214**	Water	02/14/13 15:20	02/16/13 09:00
60138913006	**MW-6 DEEP_20130214**	Water	02/14/13 15:25	02/16/13 09:00
60138913007	**DR-9_20130214**	Water	02/14/13 15:35	02/16/13 09:00
60138913008	**MW-1 DEEP_20130214**	Water	02/14/13 16:20	02/16/13 09:00
60138913009	**MW-1 SHALLOW_20130214**	Water	02/14/13 16:22	02/16/13 09:00
60138913010	**MW-104_20130214**	Water	02/14/13 15:54	02/16/13 09:00
60138913011	**MW-103_20130214**	Water	02/14/13 16:23	02/16/13 09:00
60138913012	**DR-10_20130215**	Water	02/15/13 12:10	02/16/13 09:00
60138913013	**GW-7_20130215**	Water	02/15/13 10:04	02/16/13 09:00
60138913014	**P13-102_20130215**	Water	02/15/13 12:28	02/16/13 09:00
60138913015	**P13-103_20130215**	Water	02/15/13 12:08	02/16/13 09:00
60138913016	**MW-4 SHALLOW_20130215**	Water	02/15/13 10:54	02/16/13 09:00
60138913017	**EB-2_20130215**	Water	02/15/13 10:22	02/16/13 09:00

This report shall not be reproduced, except in full,
without the written consent of Pace Analytical Services, Inc..

Pace Analytical Services, Inc.
9608 Loiret Blvd.
Lenexa, KS 66219
(913)599-5665

SAMPLE ANALYTE COUNT

Project: February 2013 Rico Water Sampl
Pace Project No.: 60138913

Lab ID	Sample ID	Method	Analysts	Analytes Reported	Laboratory
60138913001	**MW-3 DEEP_20130213**	EPA 200.7	TJT	4	PASI-K
		EPA 200.8	TT3	25	PASI-M
		EPA 200.8	TT3	23	PASI-M
		EPA 200.8	JGP	19	PASI-K
		EPA 245.1	WBS	1	PASI-M
		EPA 245.1	WBS	1	PASI-M
		EPA 245.1	NDJ	1	PASI-K
		SM 2510B	WT1	1	
		Calculated	WT1	2	
		SM 2320B	DJR	3	PASI-K
		SM 2540C	NDL	1	PASI-K
		SM 2540D	NDL	1	PASI-K
		SM 4500-S-2 D	AJM	1	PASI-K
		EPA 300.0	AJM	2	PASI-K
		EPA 353.2	AJM	1	PASI-K
		SM 4500-CN-E	OL	1	PASI-K
		SM 5310C	TJJ	1	PASI-G
60138913002	**MW-2 DEEP_20130213**	EPA 200.7	TJT	4	PASI-K
		EPA 200.8	TT3	25	PASI-M
		EPA 200.8	TT3	23	PASI-M
		EPA 200.8	JGP	19	PASI-K
		EPA 245.1	WBS	1	PASI-M
		EPA 245.1	WBS	1	PASI-M
		EPA 245.1	NDJ	1	PASI-K
		SM 2510B	WT1	1	
		Calculated	WT1	2	
		SM 2320B	DJR	3	PASI-K
		SM 2540C	NDL	1	PASI-K
		SM 2540D	NDL	1	PASI-K
		SM 4500-S-2 D	AJM	1	PASI-K
		EPA 300.0	AJM	2	PASI-K
		EPA 353.2	AJM	1	PASI-K
		SM 4500-CN-E	OL	1	PASI-K
		SM 5310C	TJJ	1	PASI-G
60138913003	**GW-4_20130214**	EPA 200.7	TJT	4	PASI-K
		EPA 200.8	TT3	25	PASI-M
		EPA 200.8	TT3	23	PASI-M

This report shall not be reproduced, except in full,
without the written consent of Pace Analytical Services, Inc..

Pace Analytical Services, Inc.
9608 Loiret Blvd.
Lenexa, KS 66219
(913)599-5665

SAMPLE ANALYTE COUNT

Project: February 2013 Rico Water Sampl
Pace Project No.: 60138913

Lab ID	Sample ID	Method	Analysts	Analytes Reported	Laboratory
		EPA 200.8	JGP	19	PASI-K
		EPA 245.1	WBS	1	PASI-M
		EPA 245.1	WBS	1	PASI-M
		EPA 245.1	NDJ	1	PASI-K
		SM 2510B	WT1	1	
		Calculated	WT1	2	
		SM 2320B	DJR	3	PASI-K
		SM 2540C	NDL	1	PASI-K
		SM 2540D	NDL	1	PASI-K
		SM 4500-S-2 D	AJM	1	PASI-K
		EPA 300.0	AJM	2	PASI-K
		EPA 353.2	AJM	1	PASI-K
		SM 4500-CN-E	OL	1	PASI-K
		SM 5310C	TJJ	1	PASI-G
60138913004	**MW-4 DEEP_02130214**	EPA 200.7	TJT	4	PASI-K
		EPA 200.8	TT3	25	PASI-M
		EPA 200.8	TT3	23	PASI-M
		EPA 200.8	JGP	19	PASI-K
		EPA 245.1	WBS	1	PASI-M
		EPA 245.1	WBS	1	PASI-M
		EPA 245.1	NDJ	1	PASI-K
		SM 2510B	WT1	1	
		Calculated	WT1	2	
		SM 2320B	DJR	3	PASI-K
		SM 2540C	NDL	1	PASI-K
		SM 2540D	NDL	1	PASI-K
		SM 4500-S-2 D	AJM	1	PASI-K
		EPA 300.0	AJM	2	PASI-K
		EPA 353.2	AJM	1	PASI-K
		SM 4500-CN-E	OL	1	PASI-K
		SM 5310C	TJJ	1	PASI-G
60138913005	**MW-6 SHALLOW_20130214**	EPA 200.7	TJT	4	PASI-K
		EPA 200.8	TT3	25	PASI-M
		EPA 200.8	TT3	23	PASI-M
		EPA 200.8	JGP	19	PASI-K
		EPA 245.1	WBS	1	PASI-M
		EPA 245.1	WBS	1	PASI-M

This report shall not be reproduced, except in full,
without the written consent of Pace Analytical Services, Inc..

Pace Analytical Services, Inc.
9608 Loiret Blvd.
Lenexa, KS 66219
(913)599-5665

SAMPLE ANALYTE COUNT

Project: February 2013 Rico Water Sampl
Pace Project No.: 60138913

Lab ID	Sample ID	Method	Analysts	Analytes Reported	Laboratory
		EPA 245.1	NDJ	1	PASI-K
		SM 2510B	WT1	1	
		Calculated	WT1	2	
		SM 2320B	DJR	3	PASI-K
		SM 2540C	NDL	1	PASI-K
		SM 2540D	NDL	1	PASI-K
		SM 4500-S-2 D	AJM	1	PASI-K
		EPA 300.0	AJM	2	PASI-K
		EPA 353.2	AJM	1	PASI-K
		SM 4500-CN-E	OL	1	PASI-K
		SM 5310C	TJJ	1	PASI-G
60138913006	**MW-6 DEEP_20130214**	EPA 200.7	TJT	4	PASI-K
		EPA 200.8	TT3	25	PASI-M
		EPA 200.8	TT3	23	PASI-M
		EPA 200.8	JGP	19	PASI-K
		EPA 245.1	WBS	1	PASI-M
		EPA 245.1	WBS	1	PASI-M
		EPA 245.1	NDJ	1	PASI-K
		SM 2510B	WT1	1	
		Calculated	WT1	2	
		SM 2320B	DJR	3	PASI-K
		SM 2540C	NDL	1	PASI-K
		SM 2540D	NDL	1	PASI-K
		SM 4500-S-2 D	AJM	1	PASI-K
		EPA 300.0	AJM	2	PASI-K
		EPA 353.2	AJM	1	PASI-K
		SM 4500-CN-E	OL	1	PASI-K
		SM 5310C	TJJ	1	PASI-G
60138913007	**DR-9_20130214**	EPA 200.7	TJT	4	PASI-K
		EPA 200.8	TT3	25	PASI-M
		EPA 200.8	TT3	23	PASI-M
		EPA 200.8	JGP	19	PASI-K
		EPA 245.1	WBS	1	PASI-M
		EPA 245.1	WBS	1	PASI-M
		EPA 245.1	NDJ	1	PASI-K
		SM 2510B	WT1	1	
		Calculated	WT1	2	

This report shall not be reproduced, except in full,
without the written consent of Pace Analytical Services, Inc..

Pace Analytical Services, Inc.
9608 Loiret Blvd.
Lenexa, KS 66219
(913)599-5665

SAMPLE ANALYTE COUNT

Project: February 2013 Rico Water Sampl
Pace Project No.: 60138913

Lab ID	Sample ID	Method	Analysts	Analytes Reported	Laboratory
		SM 2320B	DJR	3	PASI-K
		SM 2540C	NDL	1	PASI-K
		SM 2540D	NDL	1	PASI-K
		SM 4500-S-2 D	AJM	1	PASI-K
		EPA 300.0	AJM	2	PASI-K
		EPA 353.2	AJM	1	PASI-K
		SM 4500-CN-E	OL	1	PASI-K
		SM 5310C	TJJ	1	PASI-G
60138913008	**MW-1 DEEP_20130214**	EPA 200.7	TJT	4	PASI-K
		EPA 200.8	TT3	25	PASI-M
		EPA 200.8	TT3	23	PASI-M
		EPA 200.8	JGP	19	PASI-K
		EPA 245.1	WBS	1	PASI-M
		EPA 245.1	WBS	1	PASI-M
		EPA 245.1	NDJ	1	PASI-K
		SM 2510B	WT1	1	
		Calculated	WT1	2	
		SM 2320B	DJR	3	PASI-K
		SM 2540C	NDL	1	PASI-K
		SM 2540D	NDL	1	PASI-K
		SM 4500-S-2 D	AJM	1	PASI-K
		EPA 300.0	AJM	2	PASI-K
		EPA 353.2	AJM	1	PASI-K
		SM 4500-CN-E	OL	1	PASI-K
		SM 5310C	TJJ	1	PASI-G
60138913009	**MW-1 SHALLOW_20130214**	EPA 200.7	TJT	4	PASI-K
		EPA 200.8	TT3	25	PASI-M
		EPA 200.8	TT3	23	PASI-M
		EPA 200.8	JGP	19	PASI-K
		EPA 245.1	WBS	1	PASI-M
		EPA 245.1	WBS	1	PASI-M
		EPA 245.1	NDJ	1	PASI-K
		SM 2510B	WT1	1	
		Calculated	WT1	2	
		SM 2320B	DJR	3	PASI-K
		SM 2540C	NDL	1	PASI-K
		SM 2540D	NDL	1	PASI-K

This report shall not be reproduced, except in full,
without the written consent of Pace Analytical Services, Inc..

Pace Analytical Services, Inc.
9608 Loiret Blvd.
Lenexa, KS 66219
(913)599-5665

SAMPLE ANALYTE COUNT

Project: February 2013 Rico Water Sampl
Pace Project No.: 60138913

Lab ID	Sample ID	Method	Analysts	Analytes Reported	Laboratory
		SM 4500-S-2 D	AJM	1	PASI-K
		EPA 300.0	AJM	2	PASI-K
		EPA 353.2	AJM	1	PASI-K
		SM 4500-CN-E	OL	1	PASI-K
		SM 5310C	TJJ	1	PASI-G
60138913010	**MW-104_20130214**	EPA 200.7	TJT	4	PASI-K
		EPA 200.8	TT3	25	PASI-M
		EPA 200.8	TT3	23	PASI-M
		EPA 200.8	JGP	19	PASI-K
		EPA 245.1	WBS	1	PASI-M
		EPA 245.1	WBS	1	PASI-M
		EPA 245.1	NDJ	1	PASI-K
		SM 2510B	WT1	1	
		Calculated	WT1	2	
		SM 2320B	DJR	3	PASI-K
		SM 2540C	NDL	1	PASI-K
		SM 2540D	NDL	1	PASI-K
		SM 4500-S-2 D	AJM	1	PASI-K
		EPA 300.0	AJM	2	PASI-K
		EPA 353.2	AJM	1	PASI-K
		SM 4500-CN-E	OL	1	PASI-K
		SM 5310C	TJJ	1	PASI-G
60138913011	**MW-103_20130214**	EPA 200.7	TJT	4	PASI-K
		EPA 200.8	TT3	25	PASI-M
		EPA 200.8	TT3	23	PASI-M
		EPA 200.8	JGP	19	PASI-K
		EPA 245.1	WBS	1	PASI-M
		EPA 245.1	WBS	1	PASI-M
		EPA 245.1	NDJ	1	PASI-K
		SM 2510B	WT1	1	
		Calculated	WT1	2	
		SM 2320B	DJR	3	PASI-K
		SM 2540C	NDL	1	PASI-K
		SM 2540D	NDL	1	PASI-K
		SM 4500-S-2 D	AJM	1	PASI-K
		EPA 300.0	AJM	2	PASI-K
		EPA 353.2	AJM	1	PASI-K

This report shall not be reproduced, except in full,
without the written consent of Pace Analytical Services, Inc..

Pace Analytical Services, Inc.
9608 Loiret Blvd.
Lenexa, KS 66219
(913)599-5665

SAMPLE ANALYTE COUNT

Project: February 2013 Rico Water Sampl
Pace Project No.: 60138913

Lab ID	Sample ID	Method	Analysts	Analytes Reported	Laboratory
		SM 4500-CN-E	OL	1	PASI-K
		SM 5310C	TJJ	1	PASI-G
60138913012	**DR-10_20130215**	EPA 200.7	TJT	4	PASI-K
		EPA 200.8	TT3	25	PASI-M
		EPA 200.8	TT3	23	PASI-M
		EPA 200.8	JGP	19	PASI-K
		EPA 245.1	WBS	1	PASI-M
		EPA 245.1	WBS	1	PASI-M
		EPA 245.1	NDJ	1	PASI-K
		SM 2510B	WT1	1	
		Calculated	WT1	2	
		SM 2320B	DJR	3	PASI-K
		SM 2540C	NDL	1	PASI-K
		SM 2540D	NDL	1	PASI-K
		SM 4500-S-2 D	AJM	1	PASI-K
		EPA 300.0	AJM	2	PASI-K
		EPA 353.2	AJM	1	PASI-K
		SM 4500-CN-E	OL	1	PASI-K
		SM 5310C	TJJ	1	PASI-G
60138913013	**GW-7_20130215**	EPA 200.7	TJT	4	PASI-K
		EPA 200.8	TT3	25	PASI-M
		EPA 200.8	TT3	23	PASI-M
		EPA 200.8	JGP	19	PASI-K
		EPA 245.1	WBS	1	PASI-M
		EPA 245.1	WBS	1	PASI-M
		EPA 245.1	NDJ	1	PASI-K
		SM 2510B	WT1	1	
		Calculated	WT1	2	
		SM 2320B	DJR	3	PASI-K
		SM 2540C	NDL	1	PASI-K
		SM 2540D	NDL	1	PASI-K
		SM 4500-S-2 D	AJM	1	PASI-K
		EPA 300.0	AJM	2	PASI-K
		EPA 353.2	AJM	1	PASI-K
		SM 4500-CN-E	OL	1	PASI-K
		SM 5310C	TJJ	1	PASI-G
60138913014	**P13-102_20130215**	EPA 200.7	TJT	4	PASI-K

This report shall not be reproduced, except in full,
without the written consent of Pace Analytical Services, Inc..

Pace Analytical Services, Inc.
9608 Loiret Blvd.
Lenexa, KS 66219
(913)599-5665

SAMPLE ANALYTE COUNT

Project: February 2013 Rico Water Sampl
Pace Project No.: 60138913

Lab ID	Sample ID	Method	Analysts	Analytes Reported	Laboratory
		EPA 200.8	TT3	25	PASI-M
		EPA 200.8	TT3	23	PASI-M
		EPA 200.8	JGP	19	PASI-K
		EPA 245.1	WBS	1	PASI-M
		EPA 245.1	WBS	1	PASI-M
		EPA 245.1	NDJ	1	PASI-K
		SM 2510B	WT1	1	
		Calculated	WT1	2	
		SM 2320B	DJR	3	PASI-K
		SM 2540C	NDL	1	PASI-K
		SM 2540D	NDL	1	PASI-K
		SM 4500-S-2 D	AJM	1	PASI-K
		EPA 300.0	AJM	2	PASI-K
		EPA 353.2	AJM	1	PASI-K
		SM 4500-CN-E	OL	1	PASI-K
		SM 5310C	TJJ	1	PASI-G
60138913015	**P13-103_20130215**	EPA 200.7	TJT	4	PASI-K
		EPA 200.8	TT3	25	PASI-M
		EPA 200.8	TT3	23	PASI-M
		EPA 200.8	JGP	19	PASI-K
		EPA 245.1	WBS	1	PASI-M
		EPA 245.1	WBS	1	PASI-M
		EPA 245.1	NDJ	1	PASI-K
		SM 2510B	WT1	1	
		Calculated	WT1	2	
		SM 2320B	DJR	3	PASI-K
		SM 2540C	NDL	1	PASI-K
		SM 2540D	NDL	1	PASI-K
		SM 4500-S-2 D	AJM	1	PASI-K
		EPA 300.0	AJM	2	PASI-K
		EPA 353.2	AJM	1	PASI-K
		SM 4500-CN-E	OL	1	PASI-K
		SM 5310C	TJJ	1	PASI-G
60138913016	**MW-4 SHALLOW_20130215**	EPA 200.7	TJT	4	PASI-K
		EPA 200.8	TT3	25	PASI-M
		EPA 200.8	TT3	23	PASI-M
		EPA 200.8	JGP	19	PASI-K

This report shall not be reproduced, except in full,
without the written consent of Pace Analytical Services, Inc..

Pace Analytical Services, Inc.
9608 Loiret Blvd.
Lenexa, KS 66219
(913)599-5665

SAMPLE ANALYTE COUNT

Project: February 2013 Rico Water Sampl
Pace Project No.: 60138913

Lab ID	Sample ID	Method	Analysts	Analytes Reported	Laboratory
		EPA 245.1	WBS	1	PASI-M
		EPA 245.1	WBS	1	PASI-M
		EPA 245.1	NDJ	1	PASI-K
		SM 2510B	WT1	1	
		Calculated	WT1	2	
		SM 2320B	DJR	3	PASI-K
		SM 2540C	NDL	1	PASI-K
		SM 2540D	NDL	1	PASI-K
		SM 4500-S-2 D	AJM	1	PASI-K
		EPA 300.0	AJM	2	PASI-K
		EPA 353.2	AJM	1	PASI-K
		SM 4500-CN-E	OL	1	PASI-K
		SM 5310C	TJJ	1	PASI-G
60138913017	**EB-2_20130215**	EPA 200.7	TJT	4	PASI-K
		EPA 200.8	TT3	25	PASI-M
		EPA 200.8	TT3	23	PASI-M
		EPA 200.8	JGP	19	PASI-K
		EPA 245.1	WBS	1	PASI-M
		EPA 245.1	WBS	1	PASI-M
		EPA 245.1	NDJ	1	PASI-K
		SM 2510B	WT1	1	
		Calculated	WT1	2	
		SM 2320B	DJR	3	PASI-K
		SM 2540C	NDL	1	PASI-K
		SM 2540D	NDL	1	PASI-K
		SM 4500-S-2 D	AJM	1	PASI-K
		EPA 300.0	AJM	2	PASI-K
		EPA 353.2	AJM	1	PASI-K
		SM 4500-CN-E	OL	1	PASI-K
		SM 5310C	TJJ	1	PASI-G

This report shall not be reproduced, except in full,
without the written consent of Pace Analytical Services, Inc..

Pace Analytical Services, Inc.
9608 Loiret Blvd.
Lenexa, KS 66219
(913)599-5665

PROJECT NARRATIVE

Project: February 2013 Rico Water Sampl
Pace Project No.: 60138913

Method: **EPA 200.7**
Description: 200.7 Potentially Diss. Metals
Client: BP Anderson Engineering Company Inc.
Date: March 15, 2013

General Information:
17 samples were analyzed for EPA 200.7. All samples were received in acceptable condition with any exceptions noted below.

Hold Time:
The samples were analyzed within the method required hold times with any exceptions noted below.

Sample Preparation:
The samples were prepared in accordance with EPA 200.7 with any exceptions noted below.

Initial Calibrations (including MS Tune as applicable):
All criteria were within method requirements with any exceptions noted below.

Continuing Calibration:
All criteria were within method requirements with any exceptions noted below.

Method Blank:
All analytes were below the report limit in the method blank with any exceptions noted below.

Laboratory Control Spike:
All laboratory control spike compounds were within QC limits with any exceptions noted below.

Matrix Spikes:
All percent recoveries and relative percent differences (RPDs) were within acceptance criteria with any exceptions noted below.

QC Batch: MPRP/21610

A matrix spike and matrix spike duplicate (MS/MSD) were performed on the following sample(s): 60138913001,60138913010

M1: Matrix spike recovery exceeded QC limits. Batch accepted based on laboratory control sample (LCS) recovery.

- MS (Lab ID: 1143264)
  - Calcium, Dissolved

Additional Comments:

Analyte Comments:

QC Batch: MPRP/21610

- EB-2_20130215 (Lab ID: 60138913017)
  - Sodium, Dissolved

This report shall not be reproduced, except in full,
without the written consent of Pace Analytical Services, Inc..

Pace Analytical Services, Inc.
9608 Loiret Blvd.
Lenexa, KS 66219
(913)599-5665

PROJECT NARRATIVE

Project: February 2013 Rico Water Sampl
Pace Project No.: 60138913

Method: **EPA 200.8**
Description: 200.8 MET ICPMS
Client: BP Anderson Engineering Company Inc.
Date: March 15, 2013

General Information:
17 samples were analyzed for EPA 200.8. All samples were received in acceptable condition with any exceptions noted below.

Hold Time:
The samples were analyzed within the method required hold times with any exceptions noted below.

Sample Preparation:
The samples were prepared in accordance with EPA 200.8 with any exceptions noted below.

Initial Calibrations (including MS Tune as applicable):
All criteria were within method requirements with any exceptions noted below.

Continuing Calibration:
All criteria were within method requirements with any exceptions noted below.

Internal Standards:
All internal standards were within QC limits with any exceptions noted below.

Method Blank:
All analytes were below the report limit in the method blank with any exceptions noted below.

Laboratory Control Spike:
All laboratory control spike compounds were within QC limits with any exceptions noted below.

Matrix Spikes:
All percent recoveries and relative percent differences (RPDs) were within acceptance criteria with any exceptions noted below.

QC Batch: MPRP/37682

A matrix spike and matrix spike duplicate (MS/MSD) were performed on the following sample(s): 60138913001

M1: Matrix spike recovery exceeded QC limits. Batch accepted based on laboratory control sample (LCS) recovery.

- MS (Lab ID: 1379977)
  - Aluminum
  - Barium
  - Calcium
  - Iron
  - Magnesium
  - Manganese
  - Potassium
  - Silica
  - Sodium
  - Total Hardness by 2340B
- MSD (Lab ID: 1379978)
  - Aluminum
  - Calcium

This report shall not be reproduced, except in full,
without the written consent of Pace Analytical Services, Inc..

Pace Analytical Services, Inc.
9608 Loiret Blvd.
Lenexa, KS 66219
(913)599-5665

PROJECT NARRATIVE

Project: February 2013 Rico Water Sampl
Pace Project No.: 60138913

Method: **EPA 200.8**
Description: 200.8 MET ICPMS
Client: BP Anderson Engineering Company Inc.
Date: March 15, 2013

QC Batch: MPRP/37682

A matrix spike and matrix spike duplicate (MS/MSD) were performed on the following sample(s): 60138913001

M1: Matrix spike recovery exceeded QC limits. Batch accepted based on laboratory control sample (LCS) recovery.

- Iron
- Magnesium
- Potassium
- Silica
- Sodium
- Total Hardness by 2340B

Additional Comments:

Analyte Comments:

QC Batch: MPRP/37682

D3: Sample was diluted due to the presence of high levels of non-target analytes or other matrix interference.

- MW-4 DEEP_02130214 (Lab ID: 60138913004)
  - Thallium

E: Analyte concentration exceeded the calibration range. The reported result is estimated.

- MS (Lab ID: 1379977)
  - Calcium
- MSD (Lab ID: 1379978)
  - Calcium

This report shall not be reproduced, except in full,
without the written consent of Pace Analytical Services, Inc..

Pace Analytical Services, Inc.
9608 Loiret Blvd.
Lenexa, KS 66219
(913)599-5665

PROJECT NARRATIVE

Project: February 2013 Rico Water Sampl
Pace Project No.: 60138913

Method: **EPA 200.8**
Description: 200.8 MET ICPMS, Dissolved
Client: BP Anderson Engineering Company Inc.
Date: March 15, 2013

General Information:
17 samples were analyzed for EPA 200.8. All samples were received in acceptable condition with any exceptions noted below.

Hold Time:
The samples were analyzed within the method required hold times with any exceptions noted below.

Sample Preparation:
The samples were prepared in accordance with EPA 200.8 with any exceptions noted below.

Initial Calibrations (including MS Tune as applicable):
All criteria were within method requirements with any exceptions noted below.

Continuing Calibration:
All criteria were within method requirements with any exceptions noted below.

Internal Standards:
All internal standards were within QC limits with any exceptions noted below.

Method Blank:
All analytes were below the report limit in the method blank with any exceptions noted below.

Laboratory Control Spike:
All laboratory control spike compounds were within QC limits with any exceptions noted below.

Matrix Spikes:
All percent recoveries and relative percent differences (RPDs) were within acceptance criteria with any exceptions noted below.

QC Batch: MPRP/37684

A matrix spike and matrix spike duplicate (MS/MSD) were performed on the following sample(s): 60138913001

M1: Matrix spike recovery exceeded QC limits. Batch accepted based on laboratory control sample (LCS) recovery.

- MS (Lab ID: 1379985)
  - Aluminum, Dissolved
  - Calcium, Dissolved
  - Sodium, Dissolved
- MSD (Lab ID: 1379986)
  - Aluminum, Dissolved
  - Magnesium, Dissolved
  - Sodium, Dissolved

R1: RPD value was outside control limits.

- MSD (Lab ID: 1379986)
  - Aluminum, Dissolved

Additional Comments:

This report shall not be reproduced, except in full,
without the written consent of Pace Analytical Services, Inc..

Pace Analytical Services, Inc.
9608 Loiret Blvd.
Lenexa, KS 66219
(913)599-5665

PROJECT NARRATIVE

Project: February 2013 Rico Water Sampl
Pace Project No.: 60138913

Method: **EPA 200.8**
Description: 200.8 MET ICPMS, Dissolved
Client: BP Anderson Engineering Company Inc.
Date: March 15, 2013

Analyte Comments:

QC Batch: MPRP/37684

D3: Sample was diluted due to the presence of high levels of non-target analytes or other matrix interference.

- EB-2_20130215 (Lab ID: 60138913017)
  - Silver, Dissolved
  - Chromium, Dissolved
  - Antimony, Dissolved
  - Thallium, Dissolved
  - Vanadium, Dissolved

E: Analyte concentration exceeded the calibration range. The reported result is estimated.

- MS (Lab ID: 1379985)
  - Calcium, Dissolved
- MSD (Lab ID: 1379986)
  - Calcium, Dissolved

This report shall not be reproduced, except in full,
without the written consent of Pace Analytical Services, Inc..

Pace Analytical Services, Inc.
9608 Loiret Blvd.
Lenexa, KS 66219
(913)599-5665

PROJECT NARRATIVE

Project: February 2013 Rico Water Sampl
Pace Project No.: 60138913

Method: **EPA 200.8**
Description: 200.8 Potentially Diss. Metals
Client: BP Anderson Engineering Company Inc.
Date: March 15, 2013

General Information:
17 samples were analyzed for EPA 200.8. All samples were received in acceptable condition with any exceptions noted below.

Hold Time:
The samples were analyzed within the method required hold times with any exceptions noted below.

Sample Preparation:
The samples were prepared in accordance with EPA 200.8 with any exceptions noted below.

Initial Calibrations (including MS Tune as applicable):
All criteria were within method requirements with any exceptions noted below.

Continuing Calibration:
All criteria were within method requirements with any exceptions noted below.

Internal Standards:
All internal standards were within QC limits with any exceptions noted below.

Method Blank:
All analytes were below the report limit in the method blank with any exceptions noted below.

Laboratory Control Spike:
All laboratory control spike compounds were within QC limits with any exceptions noted below.

Matrix Spikes:
All percent recoveries and relative percent differences (RPDs) were within acceptance criteria with any exceptions noted below.

QC Batch: MPRP/21611

A matrix spike and matrix spike duplicate (MS/MSD) were performed on the following sample(s): 60138913002,60138913011

M1: Matrix spike recovery exceeded QC limits. Batch accepted based on laboratory control sample (LCS) recovery.

- MS (Lab ID: 1143267)
  - Iron, Dissolved
  - Manganese, Dissolved
- MSD (Lab ID: 1143268)
  - Iron, Dissolved
  - Manganese, Dissolved

Additional Comments:

This report shall not be reproduced, except in full,
without the written consent of Pace Analytical Services, Inc..

Pace Analytical Services, Inc.
9608 Loiret Blvd.
Lenexa, KS 66219
(913)599-5665

PROJECT NARRATIVE

Project: February 2013 Rico Water Sampl
Pace Project No.: 60138913

Method: **EPA 200.8**
Description: 200.8 Potentially Diss. Metals
Client: BP Anderson Engineering Company Inc.
Date: March 15, 2013

Analyte Comments:

QC Batch: MPRP/21611

B: Analyte was detected in the associated method blank.

- EB-2_20130215 (Lab ID: 60138913017)
  - Chromium, Dissolved
- MW-103_20130214 (Lab ID: 60138913011)
  - Chromium, Dissolved
- MW-104_20130214 (Lab ID: 60138913010)
  - Chromium, Dissolved
- P13-102_20130215 (Lab ID: 60138913014)
  - Chromium, Dissolved

This report shall not be reproduced, except in full,
without the written consent of Pace Analytical Services, Inc..

Pace Analytical Services, Inc.
9608 Loiret Blvd.
Lenexa, KS 66219
(913)599-5665

PROJECT NARRATIVE

Project: February 2013 Rico Water Sampl
Pace Project No.: 60138913

Method: **EPA 245.1**
Description: 245.1 Mercury
Client: BP Anderson Engineering Company Inc.
Date: March 15, 2013

General Information:
17 samples were analyzed for EPA 245.1. All samples were received in acceptable condition with any exceptions noted below.

Hold Time:
The samples were analyzed within the method required hold times with any exceptions noted below.

Sample Preparation:
The samples were prepared in accordance with EPA 245.1 with any exceptions noted below.

Initial Calibrations (including MS Tune as applicable):
All criteria were within method requirements with any exceptions noted below.

Continuing Calibration:
All criteria were within method requirements with any exceptions noted below.

Method Blank:
All analytes were below the report limit in the method blank with any exceptions noted below.

Laboratory Control Spike:
All laboratory control spike compounds were within QC limits with any exceptions noted below.

Matrix Spikes:
All percent recoveries and relative percent differences (RPDs) were within acceptance criteria with any exceptions noted below.

Additional Comments:

This report shall not be reproduced, except in full,
without the written consent of Pace Analytical Services, Inc..

Pace Analytical Services, Inc.
9608 Loiret Blvd.
Lenexa, KS 66219
(913)599-5665

PROJECT NARRATIVE

Project: February 2013 Rico Water Sampl
Pace Project No.: 60138913

Method: **EPA 245.1**
Description: 245.1 Mercury, Dissolved
Client: BP Anderson Engineering Company Inc.
Date: March 15, 2013

General Information:
17 samples were analyzed for EPA 245.1. All samples were received in acceptable condition with any exceptions noted below.

Hold Time:
The samples were analyzed within the method required hold times with any exceptions noted below.

Sample Preparation:
The samples were prepared in accordance with EPA 245.1 with any exceptions noted below.

Initial Calibrations (including MS Tune as applicable):
All criteria were within method requirements with any exceptions noted below.

Continuing Calibration:
All criteria were within method requirements with any exceptions noted below.

Method Blank:
All analytes were below the report limit in the method blank with any exceptions noted below.

Laboratory Control Spike:
All laboratory control spike compounds were within QC limits with any exceptions noted below.

Matrix Spikes:
All percent recoveries and relative percent differences (RPDs) were within acceptance criteria with any exceptions noted below.

Additional Comments:

This report shall not be reproduced, except in full,
without the written consent of Pace Analytical Services, Inc..

Pace Analytical Services, Inc.
9608 Loiret Blvd.
Lenexa, KS 66219
(913)599-5665

PROJECT NARRATIVE

Project: February 2013 Rico Water Sampl
Pace Project No.: 60138913

Method: **EPA 245.1**
Description: 245.1 Potentially Diss Mercury
Client: BP Anderson Engineering Company Inc.
Date: March 15, 2013

General Information:
17 samples were analyzed for EPA 245.1. All samples were received in acceptable condition with any exceptions noted below.

Hold Time:
The samples were analyzed within the method required hold times with any exceptions noted below.

Sample Preparation:
The samples were prepared in accordance with EPA 245.1 with any exceptions noted below.

Initial Calibrations (including MS Tune as applicable):
All criteria were within method requirements with any exceptions noted below.

Continuing Calibration:
All criteria were within method requirements with any exceptions noted below.

Method Blank:
All analytes were below the report limit in the method blank with any exceptions noted below.

Laboratory Control Spike:
All laboratory control spike compounds were within QC limits with any exceptions noted below.

Matrix Spikes:
All percent recoveries and relative percent differences (RPDs) were within acceptance criteria with any exceptions noted below.

Additional Comments:

This report shall not be reproduced, except in full,
without the written consent of Pace Analytical Services, Inc..

Pace Analytical Services, Inc.
9608 Loiret Blvd.
Lenexa, KS 66219
(913)599-5665

PROJECT NARRATIVE

Project: February 2013 Rico Water Sampl
Pace Project No.: 60138913

Method: **SM 2510B**
Description: 2510B Specific Conductance
Client: BP Anderson Engineering Company Inc.
Date: March 15, 2013

General Information:
17 samples were analyzed for SM 2510B. All samples were received in acceptable condition with any exceptions noted below.

Hold Time:
The samples were analyzed within the method required hold times with any exceptions noted below.

Initial Calibrations (including MS Tune as applicable):
All criteria were within method requirements with any exceptions noted below.

Continuing Calibration:
All criteria were within method requirements with any exceptions noted below.

Internal Standards:
All internal standards were within QC limits with any exceptions noted below.

Surrogates:
All surrogates were within QC limits with any exceptions noted below.

Method Blank:
All analytes were below the report limit in the method blank with any exceptions noted below.

Laboratory Control Spike:
All laboratory control spike compounds were within QC limits with any exceptions noted below.

Matrix Spikes:
All percent recoveries and relative percent differences (RPDs) were within acceptance criteria with any exceptions noted below.

Duplicate Sample:
All duplicate sample results were within method acceptance criteria with any exceptions noted below.

Additional Comments:

This report shall not be reproduced, except in full,
without the written consent of Pace Analytical Services, Inc..

Pace Analytical Services, Inc.
9608 Loiret Blvd.
Lenexa, KS 66219
(913)599-5665

PROJECT NARRATIVE

Project: February 2013 Rico Water Sampl
Pace Project No.: 60138913

Method: **Calculated**
Description: Salinity
Client: BP Anderson Engineering Company Inc.
Date: March 15, 2013

General Information:
17 samples were analyzed for Calculated. All samples were received in acceptable condition with any exceptions noted below.

Hold Time:
The samples were analyzed within the method required hold times with any exceptions noted below.

Initial Calibrations (including MS Tune as applicable):
All criteria were within method requirements with any exceptions noted below.

Continuing Calibration:
All criteria were within method requirements with any exceptions noted below.

Internal Standards:
All internal standards were within QC limits with any exceptions noted below.

Surrogates:
All surrogates were within QC limits with any exceptions noted below.

Method Blank:
All analytes were below the report limit in the method blank with any exceptions noted below.

Laboratory Control Spike:
All laboratory control spike compounds were within QC limits with any exceptions noted below.

Matrix Spikes:
All percent recoveries and relative percent differences (RPDs) were within acceptance criteria with any exceptions noted below.

Additional Comments:

This report shall not be reproduced, except in full,
without the written consent of Pace Analytical Services, Inc..

Pace Analytical Services, Inc.
9608 Loiret Blvd.
Lenexa, KS 66219
(913)599-5665

PROJECT NARRATIVE

Project: February 2013 Rico Water Sampl
Pace Project No.: 60138913

Method: **SM 2320B**
Description: 2320B Alkalinity
Client: BP Anderson Engineering Company Inc.
Date: March 15, 2013

General Information:
17 samples were analyzed for SM 2320B. All samples were received in acceptable condition with any exceptions noted below.

Hold Time:
The samples were analyzed within the method required hold times with any exceptions noted below.

Method Blank:
All analytes were below the report limit in the method blank with any exceptions noted below.

Laboratory Control Spike:
All laboratory control spike compounds were within QC limits with any exceptions noted below.

Matrix Spikes:
All percent recoveries and relative percent differences (RPDs) were within acceptance criteria with any exceptions noted below.

Duplicate Sample:
All duplicate sample results were within method acceptance criteria with any exceptions noted below.

Additional Comments:

This report shall not be reproduced, except in full,
without the written consent of Pace Analytical Services, Inc..

Pace Analytical Services, Inc.
9608 Loiret Blvd.
Lenexa, KS 66219
(913)599-5665

PROJECT NARRATIVE

Project: February 2013 Rico Water Sampl
Pace Project No.: 60138913

Method: **SM 2540C**
Description: 2540C Total Dissolved Solids
Client: BP Anderson Engineering Company Inc.
Date: March 15, 2013

General Information:
17 samples were analyzed for SM 2540C. All samples were received in acceptable condition with any exceptions noted below.

Hold Time:
The samples were analyzed within the method required hold times with any exceptions noted below.

Method Blank:
All analytes were below the report limit in the method blank with any exceptions noted below.

Laboratory Control Spike:
All laboratory control spike compounds were within QC limits with any exceptions noted below.

Matrix Spikes:
All percent recoveries and relative percent differences (RPDs) were within acceptance criteria with any exceptions noted below.

Duplicate Sample:
All duplicate sample results were within method acceptance criteria with any exceptions noted below.

Additional Comments:

This report shall not be reproduced, except in full,
without the written consent of Pace Analytical Services, Inc..

Pace Analytical Services, Inc.
9608 Loiret Blvd.
Lenexa, KS 66219
(913)599-5665

PROJECT NARRATIVE

Project: February 2013 Rico Water Sampl
Pace Project No.: 60138913

Method: **SM 2540D**
Description: 2540D Total Suspended Solids
Client: BP Anderson Engineering Company Inc.
Date: March 15, 2013

General Information:
17 samples were analyzed for SM 2540D. All samples were received in acceptable condition with any exceptions noted below.

Hold Time:
The samples were analyzed within the method required hold times with any exceptions noted below.

Method Blank:
All analytes were below the report limit in the method blank with any exceptions noted below.

Laboratory Control Spike:
All laboratory control spike compounds were within QC limits with any exceptions noted below.

Matrix Spikes:
All percent recoveries and relative percent differences (RPDs) were within acceptance criteria with any exceptions noted below.

Duplicate Sample:
All duplicate sample results were within method acceptance criteria with any exceptions noted below.

Additional Comments:

This report shall not be reproduced, except in full,
without the written consent of Pace Analytical Services, Inc..

Pace Analytical Services, Inc.
9608 Loiret Blvd.
Lenexa, KS 66219
(913)599-5665

PROJECT NARRATIVE

Project: February 2013 Rico Water Sampl
Pace Project No.: 60138913

Method: **SM 4500-S-2 D**
Description: 4500S2D Sulfide, Total
Client: BP Anderson Engineering Company Inc.
Date: March 15, 2013

General Information:
17 samples were analyzed for SM 4500-S-2 D. All samples were received in acceptable condition with any exceptions noted below.

Hold Time:
The samples were analyzed within the method required hold times with any exceptions noted below.

Method Blank:
All analytes were below the report limit in the method blank with any exceptions noted below.

Laboratory Control Spike:
All laboratory control spike compounds were within QC limits with any exceptions noted below.

Matrix Spikes:
All percent recoveries and relative percent differences (RPDs) were within acceptance criteria with any exceptions noted below.

QC Batch: WET/39813

A matrix spike and matrix spike duplicate (MS/MSD) were performed on the following sample(s): 60138913007

M1: Matrix spike recovery exceeded QC limits. Batch accepted based on laboratory control sample (LCS) recovery.

- MS (Lab ID: 1142510)
  - Sulfide, Total

Additional Comments:

This report shall not be reproduced, except in full,
without the written consent of Pace Analytical Services, Inc..

Pace Analytical Services, Inc.
9608 Loiret Blvd.
Lenexa, KS 66219
(913)599-5665

PROJECT NARRATIVE

Project: February 2013 Rico Water Sampl
Pace Project No.: 60138913

Method: **EPA 300.0**
Description: 300.0 IC Anions 28 Days
Client: BP Anderson Engineering Company Inc.
Date: March 15, 2013

General Information:
17 samples were analyzed for EPA 300.0. All samples were received in acceptable condition with any exceptions noted below.

Hold Time:
The samples were analyzed within the method required hold times with any exceptions noted below.

Initial Calibrations (including MS Tune as applicable):
All criteria were within method requirements with any exceptions noted below.

Continuing Calibration:
All criteria were within method requirements with any exceptions noted below.

Method Blank:
All analytes were below the report limit in the method blank with any exceptions noted below.

Laboratory Control Spike:
All laboratory control spike compounds were within QC limits with any exceptions noted below.

Matrix Spikes:
All percent recoveries and relative percent differences (RPDs) were within acceptance criteria with any exceptions noted below.

QC Batch: WETA/23595

A matrix spike and matrix spike duplicate (MS/MSD) were performed on the following sample(s): 60138913001,60138913003

R1: RPD value was outside control limits.

- MSD (Lab ID: 1142556)
  - Sulfate

Additional Comments:

This report shall not be reproduced, except in full,
without the written consent of Pace Analytical Services, Inc..

Pace Analytical Services, Inc.
9608 Loiret Blvd.
Lenexa, KS 66219
(913)599-5665

PROJECT NARRATIVE

Project: February 2013 Rico Water Sampl
Pace Project No.: 60138913

Method: **EPA 353.2**
Description: 353.2 Nitrogen, NO2/NO3 pres.
Client: BP Anderson Engineering Company Inc.
Date: March 15, 2013

General Information:
17 samples were analyzed for EPA 353.2. All samples were received in acceptable condition with any exceptions noted below.

Hold Time:
The samples were analyzed within the method required hold times with any exceptions noted below.

Initial Calibrations (including MS Tune as applicable):
All criteria were within method requirements with any exceptions noted below.

Continuing Calibration:
All criteria were within method requirements with any exceptions noted below.

Method Blank:
All analytes were below the report limit in the method blank with any exceptions noted below.

Laboratory Control Spike:
All laboratory control spike compounds were within QC limits with any exceptions noted below.

Matrix Spikes:
All percent recoveries and relative percent differences (RPDs) were within acceptance criteria with any exceptions noted below.

Duplicate Sample:
All duplicate sample results were within method acceptance criteria with any exceptions noted below.

Additional Comments:

This report shall not be reproduced, except in full,
without the written consent of Pace Analytical Services, Inc..

Pace Analytical Services, Inc.
9608 Loiret Blvd.
Lenexa, KS 66219
(913)599-5665

PROJECT NARRATIVE

Project: February 2013 Rico Water Sampl
Pace Project No.: 60138913

Method: **SM 4500-CN-E**
Description: 4500CNE Cyanide, Total
Client: BP Anderson Engineering Company Inc.
Date: March 15, 2013

General Information:
17 samples were analyzed for SM 4500-CN-E. All samples were received in acceptable condition with any exceptions noted below.

Hold Time:
The samples were analyzed within the method required hold times with any exceptions noted below.

Initial Calibrations (including MS Tune as applicable):
All criteria were within method requirements with any exceptions noted below.

Continuing Calibration:
All criteria were within method requirements with any exceptions noted below.

Method Blank:
All analytes were below the report limit in the method blank with any exceptions noted below.

Laboratory Control Spike:
All laboratory control spike compounds were within QC limits with any exceptions noted below.

Matrix Spikes:
All percent recoveries and relative percent differences (RPDs) were within acceptance criteria with any exceptions noted below.

Duplicate Sample:
All duplicate sample results were within method acceptance criteria with any exceptions noted below.

Additional Comments:

This report shall not be reproduced, except in full,
without the written consent of Pace Analytical Services, Inc..

Pace Analytical Services, Inc.
9608 Loiret Blvd.
Lenexa, KS 66219
(913)599-5665

PROJECT NARRATIVE

Project: February 2013 Rico Water Sampl
Pace Project No.: 60138913

Method: **SM 5310C**
Description: 5310C TOC
Client: BP Anderson Engineering Company Inc.
Date: March 15, 2013

General Information:
17 samples were analyzed for SM 5310C. All samples were received in acceptable condition with any exceptions noted below.

Hold Time:
The samples were analyzed within the method required hold times with any exceptions noted below.

Initial Calibrations (including MS Tune as applicable):
All criteria were within method requirements with any exceptions noted below.

Continuing Calibration:
All criteria were within method requirements with any exceptions noted below.

Method Blank:
All analytes were below the report limit in the method blank with any exceptions noted below.

Laboratory Control Spike:
All laboratory control spike compounds were within QC limits with any exceptions noted below.

Matrix Spikes:
All percent recoveries and relative percent differences (RPDs) were within acceptance criteria with any exceptions noted below.

Additional Comments:

This data package has been reviewed for quality and completeness and is approved for release.

This report shall not be reproduced, except in full,
without the written consent of Pace Analytical Services, Inc..

Pace Analytical Services, Inc.
9608 Loiret Blvd.
Lenexa, KS 66219
(913)599-5665

ANALYTICAL RESULTS

Project: February 2013 Rico Water Sampl
Pace Project No.: 60138913

Sample: MW-3 DEEP_20130213 **Lab ID: 60138913001** Collected: 02/13/13 15:00 Received: 02/16/13 09:00 Matrix: Water

Parameters	Results	Units	Report Limit	DF	Prepared	Analyzed	CAS No.	Qual
200.7 Potentially Diss. Metals	Analytical Method: EPA 200.7 Preparation Method: EPA 200.7							
Calcium, Dissolved	**226000**	ug/L	100	1	02/20/13 14:45	02/28/13 14:10	7440-70-2	
Magnesium, Dissolved	**24700**	ug/L	50.0	1	02/20/13 14:45	02/28/13 14:10	7439-95-4	
Potassium, Dissolved	**4220**	ug/L	500	1	02/20/13 14:45	02/28/13 14:10	7440-09-7	
Sodium, Dissolved	**11500**	ug/L	500	1	02/20/13 14:45	02/28/13 14:10	7440-23-5	
200.8 MET ICPMS	Analytical Method: EPA 200.8 Preparation Method: EPA 200.8							
Aluminum	**13400**	ug/L	4.0	1	02/22/13 10:28	02/23/13 23:18	7429-90-5	M1
Antimony	**0.68**	ug/L	0.50	1	02/22/13 10:28	02/23/13 23:18	7440-36-0	
Arsenic	**14.7**	ug/L	0.50	1	02/22/13 10:28	02/23/13 23:18	7440-38-2	
Barium	**224**	ug/L	0.30	1	02/22/13 10:28	02/23/13 23:18	7440-39-3	M1
Beryllium	**1.0**	ug/L	0.20	1	02/22/13 10:28	02/23/13 23:18	7440-41-7	
Cadmium	**10.0**	ug/L	0.080	1	02/22/13 10:28	02/23/13 23:18	7440-43-9	
Calcium	**239000**	ug/L	400	20	02/22/13 10:28	02/23/13 23:29	7440-70-2	M1
Chromium	**13.9**	ug/L	0.50	1	02/22/13 10:28	02/23/13 23:18	7440-47-3	
Cobalt	**6.6**	ug/L	0.50	1	02/22/13 10:28	02/23/13 23:18	7440-48-4	
Copper	**108**	ug/L	0.50	1	02/22/13 10:28	02/23/13 23:18	7440-50-8	
Iron	**23000**	ug/L	250	5	02/22/13 10:28	02/23/13 23:24	7439-89-6	M1
Lead	**158**	ug/L	0.10	1	02/22/13 10:28	02/23/13 23:18	7439-92-1	
Magnesium	**27700**	ug/L	25.0	5	02/22/13 10:28	02/23/13 23:24	7439-95-4	M1
Manganese	**1780**	ug/L	2.5	5	02/22/13 10:28	02/23/13 23:24	7439-96-5	M1
Molybdenum	**12.7**	ug/L	0.50	1	02/22/13 10:28	02/23/13 23:18	7439-98-7	
Nickel	**11.3**	ug/L	0.50	1	02/22/13 10:28	02/23/13 23:18	7440-02-0	
Potassium	**6980**	ug/L	20.0	1	02/22/13 10:28	02/23/13 23:18	7440-09-7	M1
Selenium	**3.4**	ug/L	0.50	1	02/22/13 10:28	02/23/13 23:18	7782-49-2	
Silica	**60600**	ug/L	1070	20	02/22/13 10:28	02/23/13 23:29	7631-86-9	M1
Silver	**1.0**	ug/L	0.50	1	02/22/13 10:28	02/24/13 10:08	7440-22-4	
Sodium	**12400**	ug/L	50.0	1	02/22/13 10:28	02/23/13 23:18	7440-23-5	M1
Thallium	**0.49**	ug/L	0.10	1	02/22/13 10:28	02/23/13 23:18	7440-28-0	
Total Hardness by 2340B	**712000**	ug/L	1420	20	02/22/13 10:28	02/23/13 23:29		M1
Vanadium	**29.1**	ug/L	0.10	1	02/22/13 10:28	02/23/13 23:18	7440-62-2	
Zinc	**493**	ug/L	25.0	5	02/22/13 10:28	02/23/13 23:24	7440-66-6	
200.8 MET ICPMS, Dissolved	Analytical Method: EPA 200.8 Preparation Method: EPA 200.8							
Aluminum, Dissolved	**73.7**	ug/L	4.0	1	02/21/13 12:53	02/23/13 11:15	7429-90-5	M1,R1
Antimony, Dissolved	ND	ug/L	0.50	1	02/21/13 12:53	02/23/13 11:15	7440-36-0	
Arsenic, Dissolved	**0.78**	ug/L	0.50	1	02/21/13 12:53	02/23/13 11:15	7440-38-2	
Barium, Dissolved	**21.7**	ug/L	0.30	1	02/21/13 12:53	02/23/13 11:15	7440-39-3	
Beryllium, Dissolved	ND	ug/L	0.20	1	02/21/13 12:53	02/23/13 11:15	7440-41-7	
Cadmium, Dissolved	**0.43**	ug/L	0.080	1	02/21/13 12:53	02/23/13 11:15	7440-43-9	
Calcium, Dissolved	**249000**	ug/L	400	20	02/21/13 12:53	02/23/13 11:24	7440-70-2	M1
Chromium, Dissolved	ND	ug/L	0.50	1	02/21/13 12:53	02/23/13 11:15	7440-47-3	
Cobalt, Dissolved	**1.1**	ug/L	0.50	1	02/21/13 12:53	02/23/13 11:15	7440-48-4	
Copper, Dissolved	**2.4**	ug/L	0.50	1	02/21/13 12:53	02/23/13 11:15	7440-50-8	
Iron, Dissolved	**1010**	ug/L	50.0	1	02/21/13 12:53	02/23/13 11:15	7439-89-6	
Lead, Dissolved	**1.4**	ug/L	0.10	1	02/21/13 12:53	02/23/13 11:15	7439-92-1	
Magnesium, Dissolved	**24400**	ug/L	25.0	5	02/21/13 12:53	02/23/13 11:20	7439-95-4	M1

This report shall not be reproduced, except in full,
without the written consent of Pace Analytical Services, Inc..

Pace Analytical Services, Inc.
9608 Loiret Blvd.
Lenexa, KS 66219
(913)599-5665

ANALYTICAL RESULTS

Project: February 2013 Rico Water Sampl
Pace Project No.: 60138913

Sample: MW-3 DEEP_20130213 **Lab ID: 60138913001** Collected: 02/13/13 15:00 Received: 02/16/13 09:00 Matrix: Water

Parameters	Results	Units	Report Limit	DF	Prepared	Analyzed	CAS No.	Qual
200.8 MET ICPMS, Dissolved	Analytical Method: EPA 200.8 Preparation Method: EPA 200.8							
Manganese, Dissolved	**1570**	ug/L	2.5	5	02/21/13 12:53	02/23/13 11:20	7439-96-5	
Molybdenum, Dissolved	**8.4**	ug/L	0.50	1	02/21/13 12:53	02/23/13 11:15	7439-98-7	
Nickel, Dissolved	**0.85**	ug/L	0.50	1	02/21/13 12:53	02/23/13 11:15	7440-02-0	
Potassium, Dissolved	**4030**	ug/L	20.0	1	02/21/13 12:53	02/23/13 11:15	7440-09-7	
Selenium, Dissolved	ND	ug/L	0.50	1	02/21/13 12:53	02/23/13 11:15	7782-49-2	
Silver, Dissolved	ND	ug/L	0.50	1	02/21/13 12:53	02/23/13 11:15	7440-22-4	
Sodium, Dissolved	**12300**	ug/L	50.0	1	02/21/13 12:53	02/23/13 11:15	7440-23-5	M1
Thallium, Dissolved	ND	ug/L	0.10	1	02/21/13 12:53	02/23/13 11:15	7440-28-0	
Vanadium, Dissolved	**0.35**	ug/L	0.10	1	02/21/13 12:53	02/23/13 11:15	7440-62-2	
Zinc, Dissolved	**39.3**	ug/L	5.0	1	02/21/13 12:53	02/23/13 11:15	7440-66-6	
200.8 Potentially Diss. Metals	Analytical Method: EPA 200.8 Preparation Method: EPA 200.8							
Aluminum, Dissolved	**3020**	ug/L	50.0	1	02/20/13 14:45	03/04/13 10:40	7429-90-5	
Antimony, Dissolved	**0.26J**	ug/L	1.0	1	02/20/13 14:45	03/04/13 10:40	7440-36-0	
Arsenic, Dissolved	**3.9**	ug/L	1.0	1	02/20/13 14:45	03/04/13 10:40	7440-38-2	
Barium, Dissolved	**46.0**	ug/L	1.0	1	02/20/13 14:45	03/04/13 10:40	7440-39-3	
Beryllium, Dissolved	**0.45J**	ug/L	0.50	1	02/20/13 14:45	03/04/13 10:40	7440-41-7	
Cadmium, Dissolved	**8.1**	ug/L	0.50	1	02/20/13 14:45	03/04/13 10:40	7440-43-9	
Chromium, Dissolved	**4.5**	ug/L	1.0	1	02/20/13 14:45	03/04/13 10:40	7440-47-3	
Cobalt, Dissolved	**3.5**	ug/L	1.0	1	02/20/13 14:45	03/04/13 10:40	7440-48-4	
Copper, Dissolved	**61.8**	ug/L	1.0	1	02/20/13 14:45	03/04/13 10:40	7440-50-8	
Iron, Dissolved	**7700**	ug/L	50.0	1	02/20/13 14:45	03/04/13 10:40	7439-89-6	
Lead, Dissolved	**137**	ug/L	1.0	1	02/20/13 14:45	03/04/13 10:40	7439-92-1	
Manganese, Dissolved	**1660**	ug/L	1.0	1	02/20/13 14:45	03/04/13 10:40	7439-96-5	
Molybdenum, Dissolved	**3.5**	ug/L	1.0	1	02/20/13 14:45	03/04/13 10:40	7439-98-7	
Nickel, Dissolved	**3.5**	ug/L	1.0	1	02/20/13 14:45	03/04/13 10:40	7440-02-0	
Selenium, Dissolved	**1.4**	ug/L	1.0	1	02/20/13 14:45	03/04/13 10:40	7782-49-2	
Silver, Dissolved	**0.070J**	ug/L	0.50	1	02/20/13 14:45	03/04/13 10:40	7440-22-4	
Thallium, Dissolved	**0.30J**	ug/L	1.0	1	02/20/13 14:45	03/04/13 10:40	7440-28-0	
Vanadium, Dissolved	**9.0**	ug/L	1.0	1	02/20/13 14:45	03/04/13 10:40	7440-62-2	
Zinc, Dissolved	**319**	ug/L	10.0	1	02/20/13 14:45	03/04/13 10:40	7440-66-6	
245.1 Mercury	Analytical Method: EPA 245.1 Preparation Method: EPA 245.1							
Mercury	**0.30**	ug/L	0.20	1	02/21/13 14:42	02/27/13 15:47	7439-97-6	
245.1 Mercury, Dissolved	Analytical Method: EPA 245.1 Preparation Method: EPA 245.1							
Mercury, Dissolved	ND	ug/L	0.20	1	02/21/13 14:43	02/27/13 16:59	7439-97-6	
245.1 Potentially Diss Mercury	Analytical Method: EPA 245.1 Preparation Method: EPA 245.1							
Mercury, Dissolved	ND	ug/L	0.20	1	02/25/13 12:30	02/27/13 10:59	7439-97-6	
2510B Specific Conductance	Analytical Method: SM 2510B							
Specific Conductance	**1470**	umhos/cm	10.0	1		02/25/13 11:49		
Salinity	Analytical Method: Calculated							
Salinity (as dissolved solids)	**941**	mg/L	6.4	1		02/25/13 16:50		

This report shall not be reproduced, except in full,
without the written consent of Pace Analytical Services, Inc..

Pace Analytical Services, Inc.
9608 Loiret Blvd.
Lenexa, KS 66219
(913)599-5665

ANALYTICAL RESULTS

Project: February 2013 Rico Water Sampl
Pace Project No.: 60138913

Sample: MW-3 DEEP_20130213 **Lab ID: 60138913001** Collected: 02/13/13 15:00 Received: 02/16/13 09:00 Matrix: Water

Parameters	Results	Units	Report Limit	DF	Prepared	Analyzed	CAS No.	Qual
Salinity	Analytical Method: Calculated							
Salinity (as seawater)	**0.74**	PSU	0.014	1		02/25/13 16:50		
2320B Alkalinity	Analytical Method: SM 2320B							
Alkalinity,Bicarbonate (CaCO3)	**83.6**	mg/L	20.0	1		02/27/13 11:02		
Alkalinity, Carbonate (CaCO3)	ND	mg/L	20.0	1		02/27/13 11:02		
Alkalinity, Total as CaCO3	**83.6**	mg/L	20.0	1		02/27/13 11:02		
2540C Total Dissolved Solids	Analytical Method: SM 2540C							
Total Dissolved Solids	**1040**	mg/L	5.0	1		02/19/13 14:26		
2540D Total Suspended Solids	Analytical Method: SM 2540D							
Total Suspended Solids	**1460**	mg/L	5.0	1		02/19/13 09:12		
4500S2D Sulfide, Total	Analytical Method: SM 4500-S-2 D							
Sulfide, Total	ND	mg/L	0.050	1		02/19/13 13:45	18496-25-8	
300.0 IC Anions 28 Days	Analytical Method: EPA 300.0							
Chloride	ND	mg/L	1.0	1		02/19/13 17:06	16887-00-6	
Sulfate	**622**	mg/L	50.0	50		02/19/13 17:23	14808-79-8	
353.2 Nitrogen, NO2/NO3 pres.	Analytical Method: EPA 353.2							
Nitrogen, NO2 plus NO3	**0.11**	mg/L	0.10	1		02/27/13 14:42		
4500CNE Cyanide, Total	Analytical Method: SM 4500-CN-E							
Cyanide	ND	mg/L	0.0050	1		02/20/13 13:27	57-12-5	
5310C TOC	Analytical Method: SM 5310C							
Total Organic Carbon	**2.2**	mg/L	0.50	1		02/20/13 14:41	7440-44-0	

This report shall not be reproduced, except in full,
without the written consent of Pace Analytical Services, Inc..

Pace Analytical Services, Inc.
9608 Loiret Blvd.
Lenexa, KS 66219
(913)599-5665

ANALYTICAL RESULTS

Project: February 2013 Rico Water Sampl
Pace Project No.: 60138913

Sample: MW-2 DEEP_20130213 **Lab ID: 60138913002** Collected: 02/13/13 15:46 Received: 02/16/13 09:00 Matrix: Water

Parameters	Results	Units	Report Limit	DF	Prepared	Analyzed	CAS No.	Qual
200.7 Potentially Diss. Metals	Analytical Method: EPA 200.7 Preparation Method: EPA 200.7							
Calcium, Dissolved	**230000**	ug/L	100	1	02/20/13 14:45	02/28/13 14:19	7440-70-2	
Magnesium, Dissolved	**21700**	ug/L	50.0	1	02/20/13 14:45	02/28/13 14:19	7439-95-4	
Potassium, Dissolved	**2240**	ug/L	500	1	02/20/13 14:45	02/28/13 14:19	7440-09-7	
Sodium, Dissolved	**10700**	ug/L	500	1	02/20/13 14:45	02/28/13 14:19	7440-23-5	
200.8 MET ICPMS	Analytical Method: EPA 200.8 Preparation Method: EPA 200.8							
Aluminum	**19800**	ug/L	4.0	1	02/22/13 10:28	02/23/13 23:45	7429-90-5	
Antimony	**1.1**	ug/L	0.50	1	02/22/13 10:28	02/23/13 23:45	7440-36-0	
Arsenic	**52.6**	ug/L	0.50	1	02/22/13 10:28	02/23/13 23:45	7440-38-2	
Barium	**273**	ug/L	0.30	1	02/22/13 10:28	02/23/13 23:45	7440-39-3	
Beryllium	**1.9**	ug/L	0.20	1	02/22/13 10:28	02/23/13 23:45	7440-41-7	
Cadmium	**10.1**	ug/L	0.080	1	02/22/13 10:28	02/23/13 23:45	7440-43-9	
Calcium	**251000**	ug/L	400	20	02/22/13 10:28	02/23/13 23:51	7440-70-2	
Chromium	**22.1**	ug/L	0.50	1	02/22/13 10:28	02/23/13 23:45	7440-47-3	
Cobalt	**9.6**	ug/L	0.50	1	02/22/13 10:28	02/23/13 23:45	7440-48-4	
Copper	**130**	ug/L	0.50	1	02/22/13 10:28	02/23/13 23:45	7440-50-8	
Iron	**51600**	ug/L	1000	20	02/22/13 10:28	02/23/13 23:51	7439-89-6	
Lead	**193**	ug/L	0.10	1	02/22/13 10:28	02/23/13 23:45	7439-92-1	
Magnesium	**26900**	ug/L	100	20	02/22/13 10:28	02/23/13 23:51	7439-95-4	
Manganese	**1270**	ug/L	10.0	20	02/22/13 10:28	02/23/13 23:51	7439-96-5	
Molybdenum	**26.7**	ug/L	0.50	1	02/22/13 10:28	02/23/13 23:45	7439-98-7	
Nickel	**17.7**	ug/L	0.50	1	02/22/13 10:28	02/23/13 23:45	7440-02-0	
Potassium	**6640**	ug/L	20.0	1	02/22/13 10:28	02/23/13 23:45	7440-09-7	
Selenium	**5.9**	ug/L	0.50	1	02/22/13 10:28	02/23/13 23:45	7782-49-2	
Silica	**83200**	ug/L	1070	20	02/22/13 10:28	02/23/13 23:51	7631-86-9	
Silver	**2.4**	ug/L	0.50	1	02/22/13 10:28	02/24/13 10:26	7440-22-4	
Sodium	**10900**	ug/L	50.0	1	02/22/13 10:28	02/23/13 23:45	7440-23-5	
Thallium	**0.76**	ug/L	0.10	1	02/22/13 10:28	02/23/13 23:45	7440-28-0	
Total Hardness by 2340B	**738000**	ug/L	1420	20	02/22/13 10:28	02/23/13 23:51		
Vanadium	**44.7**	ug/L	0.10	1	02/22/13 10:28	02/23/13 23:45	7440-62-2	
Zinc	**567**	ug/L	100	20	02/22/13 10:28	02/23/13 23:51	7440-66-6	
200.8 MET ICPMS, Dissolved	Analytical Method: EPA 200.8 Preparation Method: EPA 200.8							
Aluminum, Dissolved	ND	ug/L	4.0	1	02/21/13 12:53	02/23/13 11:41	7429-90-5	
Antimony, Dissolved	ND	ug/L	0.50	1	02/21/13 12:53	02/23/13 11:41	7440-36-0	
Arsenic, Dissolved	ND	ug/L	0.50	1	02/21/13 12:53	02/23/13 11:41	7440-38-2	
Barium, Dissolved	**10.7**	ug/L	0.30	1	02/21/13 12:53	02/23/13 11:41	7440-39-3	
Beryllium, Dissolved	ND	ug/L	0.20	1	02/21/13 12:53	02/23/13 11:41	7440-41-7	
Cadmium, Dissolved	**0.84**	ug/L	0.080	1	02/21/13 12:53	02/23/13 11:41	7440-43-9	
Calcium, Dissolved	**252000**	ug/L	400	20	02/21/13 12:53	02/23/13 11:45	7440-70-2	
Chromium, Dissolved	ND	ug/L	0.50	1	02/21/13 12:53	02/23/13 11:41	7440-47-3	
Cobalt, Dissolved	**0.54**	ug/L	0.50	1	02/21/13 12:53	02/23/13 11:41	7440-48-4	
Copper, Dissolved	**1.6**	ug/L	0.50	1	02/21/13 12:53	02/23/13 11:41	7440-50-8	
Iron, Dissolved	ND	ug/L	50.0	1	02/21/13 12:53	02/23/13 11:41	7439-89-6	
Lead, Dissolved	ND	ug/L	0.10	1	02/21/13 12:53	02/23/13 11:41	7439-92-1	
Magnesium, Dissolved	**19900**	ug/L	5.0	1	02/21/13 12:53	02/23/13 11:41	7439-95-4	

This report shall not be reproduced, except in full,
without the written consent of Pace Analytical Services, Inc..

Pace Analytical Services, Inc.
9608 Loiret Blvd.
Lenexa, KS 66219
(913)599-5665

ANALYTICAL RESULTS

Project: February 2013 Rico Water Sampl
Pace Project No.: 60138913

Sample: MW-2 DEEP_20130213 **Lab ID: 60138913002** Collected: 02/13/13 15:46 Received: 02/16/13 09:00 Matrix: Water

Parameters	Results	Units	Report Limit	DF	Prepared	Analyzed	CAS No.	Qual
200.8 MET ICPMS, Dissolved	Analytical Method: EPA 200.8 Preparation Method: EPA 200.8							
Manganese, Dissolved	**1.6**	ug/L	0.50	1	02/21/13 12:53	02/23/13 11:41	7439-96-5	
Molybdenum, Dissolved	**8.1**	ug/L	0.50	1	02/21/13 12:53	02/23/13 11:41	7439-98-7	
Nickel, Dissolved	**1.5**	ug/L	0.50	1	02/21/13 12:53	02/23/13 11:41	7440-02-0	
Potassium, Dissolved	**1730**	ug/L	20.0	1	02/21/13 12:53	02/23/13 11:41	7440-09-7	
Selenium, Dissolved	**1.2**	ug/L	0.50	1	02/21/13 12:53	02/23/13 11:41	7782-49-2	
Silver, Dissolved	ND	ug/L	0.50	1	02/21/13 12:53	02/23/13 11:41	7440-22-4	
Sodium, Dissolved	**10600**	ug/L	50.0	1	02/21/13 12:53	02/23/13 11:41	7440-23-5	
Thallium, Dissolved	ND	ug/L	0.10	1	02/21/13 12:53	02/23/13 11:41	7440-28-0	
Vanadium, Dissolved	ND	ug/L	0.10	1	02/21/13 12:53	02/23/13 11:41	7440-62-2	
Zinc, Dissolved	**20.5**	ug/L	5.0	1	02/21/13 12:53	02/23/13 11:41	7440-66-6	
200.8 Potentially Diss. Metals	Analytical Method: EPA 200.8 Preparation Method: EPA 200.8							
Aluminum, Dissolved	**3680**	ug/L	50.0	1	02/20/13 14:45	03/04/13 10:44	7429-90-5	
Antimony, Dissolved	**0.29J**	ug/L	1.0	1	02/20/13 14:45	03/04/13 10:44	7440-36-0	
Arsenic, Dissolved	**5.4**	ug/L	1.0	1	02/20/13 14:45	03/04/13 10:44	7440-38-2	
Barium, Dissolved	**44.2**	ug/L	1.0	1	02/20/13 14:45	03/04/13 10:44	7440-39-3	
Beryllium, Dissolved	**0.90**	ug/L	0.50	1	02/20/13 14:45	03/04/13 10:44	7440-41-7	
Cadmium, Dissolved	**8.7**	ug/L	0.50	1	02/20/13 14:45	03/04/13 10:44	7440-43-9	
Chromium, Dissolved	**8.1**	ug/L	1.0	1	02/20/13 14:45	03/04/13 10:44	7440-47-3	
Cobalt, Dissolved	**3.4**	ug/L	1.0	1	02/20/13 14:45	03/04/13 10:44	7440-48-4	
Copper, Dissolved	**48.6**	ug/L	1.0	1	02/20/13 14:45	03/04/13 10:44	7440-50-8	
Iron, Dissolved	**11100**	ug/L	50.0	1	02/20/13 14:45	03/04/13 10:44	7439-89-6	M1
Lead, Dissolved	**152**	ug/L	1.0	1	02/20/13 14:45	03/04/13 10:44	7439-92-1	
Manganese, Dissolved	**818**	ug/L	1.0	1	02/20/13 14:45	03/04/13 10:44	7439-96-5	M1
Molybdenum, Dissolved	**3.7**	ug/L	1.0	1	02/20/13 14:45	03/04/13 10:44	7439-98-7	
Nickel, Dissolved	**3.5**	ug/L	1.0	1	02/20/13 14:45	03/04/13 10:44	7440-02-0	
Selenium, Dissolved	**4.2**	ug/L	1.0	1	02/20/13 14:45	03/04/13 10:44	7782-49-2	
Silver, Dissolved	**1.6**	ug/L	0.50	1	02/20/13 14:45	03/04/13 10:44	7440-22-4	
Thallium, Dissolved	**0.17J**	ug/L	1.0	1	02/20/13 14:45	03/04/13 10:44	7440-28-0	
Vanadium, Dissolved	**10.1**	ug/L	1.0	1	02/20/13 14:45	03/04/13 10:44	7440-62-2	
Zinc, Dissolved	**275**	ug/L	10.0	1	02/20/13 14:45	03/04/13 10:44	7440-66-6	
245.1 Mercury	Analytical Method: EPA 245.1 Preparation Method: EPA 245.1							
Mercury	ND	ug/L	0.20	1	02/21/13 14:42	02/27/13 15:54	7439-97-6	
245.1 Mercury, Dissolved	Analytical Method: EPA 245.1 Preparation Method: EPA 245.1							
Mercury, Dissolved	ND	ug/L	0.20	1	02/21/13 14:46	02/27/13 17:02	7439-97-6	
245.1 Potentially Diss Mercury	Analytical Method: EPA 245.1 Preparation Method: EPA 245.1							
Mercury, Dissolved	ND	ug/L	0.20	1	02/25/13 12:30	02/27/13 11:06	7439-97-6	
2510B Specific Conductance	Analytical Method: SM 2510B							
Specific Conductance	**1210**	umhos/cm	10.0	1		02/25/13 11:51		
Salinity	Analytical Method: Calculated							
Salinity (as dissolved solids)	**776**	mg/L	6.4	1		02/25/13 16:50		

This report shall not be reproduced, except in full,
without the written consent of Pace Analytical Services, Inc..

Pace Analytical Services, Inc.
9608 Loiret Blvd.
Lenexa, KS 66219
(913)599-5665

ANALYTICAL RESULTS

Project: February 2013 Rico Water Sampl
Pace Project No.: 60138913

Sample: MW-2 DEEP_20130213 **Lab ID: 60138913002** Collected: 02/13/13 15:46 Received: 02/16/13 09:00 Matrix: Water

Parameters	Results	Units	Report Limit	DF	Prepared	Analyzed	CAS No.	Qual
Salinity	Analytical Method: Calculated							
Salinity (as seawater)	**0.60**	PSU	0.014	1		02/25/13 16:50		
2320B Alkalinity	Analytical Method: SM 2320B							
Alkalinity,Bicarbonate (CaCO3)	**80.8**	mg/L	20.0	1		02/27/13 11:10		
Alkalinity, Carbonate (CaCO3)	ND	mg/L	20.0	1		02/27/13 11:10		
Alkalinity, Total as CaCO3	**80.8**	mg/L	20.0	1		02/27/13 11:10		
2540C Total Dissolved Solids	Analytical Method: SM 2540C							
Total Dissolved Solids	**1020**	mg/L	5.0	1		02/19/13 14:26		
2540D Total Suspended Solids	Analytical Method: SM 2540D							
Total Suspended Solids	**752**	mg/L	5.0	1		02/19/13 09:12		
4500S2D Sulfide, Total	Analytical Method: SM 4500-S-2 D							
Sulfide, Total	ND	mg/L	0.050	1		02/19/13 13:45	18496-25-8	
300.0 IC Anions 28 Days	Analytical Method: EPA 300.0							
Chloride	ND	mg/L	1.0	1		02/19/13 18:16	16887-00-6	
Sulfate	**617**	mg/L	50.0	50		02/19/13 18:34	14808-79-8	
353.2 Nitrogen, NO2/NO3 pres.	Analytical Method: EPA 353.2							
Nitrogen, NO2 plus NO3	**0.13**	mg/L	0.10	1		02/27/13 14:03		
4500CNE Cyanide, Total	Analytical Method: SM 4500-CN-E							
Cyanide	ND	mg/L	0.0050	1		02/20/13 13:31	57-12-5	
5310C TOC	Analytical Method: SM 5310C							
Total Organic Carbon	**0.80**	mg/L	0.50	1		02/20/13 15:36	7440-44-0	

This report shall not be reproduced, except in full,
without the written consent of Pace Analytical Services, Inc..

Pace Analytical Services, Inc.
9608 Loiret Blvd.
Lenexa, KS 66219
(913)599-5665

ANALYTICAL RESULTS

Project: February 2013 Rico Water Sampl
Pace Project No.: 60138913

Sample: GW-4_20130214 **Lab ID: 60138913003** Collected: 02/14/13 12:47 Received: 02/16/13 09:00 Matrix: Water

Parameters	Results	Units	Report Limit	DF	Prepared	Analyzed	CAS No.	Qual
200.7 Potentially Diss. Metals	Analytical Method: EPA 200.7 Preparation Method: EPA 200.7							
Calcium, Dissolved	**144000**	ug/L	100	1	02/20/13 14:45	02/28/13 14:21	7440-70-2	
Magnesium, Dissolved	**18400**	ug/L	50.0	1	02/20/13 14:45	02/28/13 14:21	7439-95-4	
Potassium, Dissolved	**3600**	ug/L	500	1	02/20/13 14:45	02/28/13 14:21	7440-09-7	
Sodium, Dissolved	**5530**	ug/L	500	1	02/20/13 14:45	02/28/13 14:21	7440-23-5	
200.8 MET ICPMS	Analytical Method: EPA 200.8 Preparation Method: EPA 200.8							
Aluminum	**51300**	ug/L	80.0	20	02/22/13 10:28	02/24/13 00:17	7429-90-5	
Antimony	**0.71**	ug/L	0.50	1	02/22/13 10:28	02/24/13 00:11	7440-36-0	
Arsenic	**30.4**	ug/L	0.50	1	02/22/13 10:28	02/24/13 00:11	7440-38-2	
Barium	**826**	ug/L	6.0	20	02/22/13 10:28	02/24/13 00:17	7440-39-3	
Beryllium	**2.6**	ug/L	0.20	1	02/22/13 10:28	02/24/13 00:11	7440-41-7	
Cadmium	**19.5**	ug/L	0.080	1	02/22/13 10:28	02/24/13 00:11	7440-43-9	
Calcium	**147000**	ug/L	400	20	02/22/13 10:28	02/24/13 00:17	7440-70-2	
Chromium	**75.8**	ug/L	0.50	1	02/22/13 10:28	02/24/13 00:11	7440-47-3	
Cobalt	**26.4**	ug/L	0.50	1	02/22/13 10:28	02/24/13 00:11	7440-48-4	
Copper	**204**	ug/L	0.50	1	02/22/13 10:28	02/24/13 00:11	7440-50-8	
Iron	**83600**	ug/L	1000	20	02/22/13 10:28	02/24/13 00:17	7439-89-6	
Lead	**154**	ug/L	0.10	1	02/22/13 10:28	02/24/13 00:11	7439-92-1	
Magnesium	**45900**	ug/L	100	20	02/22/13 10:28	02/24/13 00:17	7439-95-4	
Manganese	**1760**	ug/L	10.0	20	02/22/13 10:28	02/24/13 00:17	7439-96-5	
Molybdenum	**24.3**	ug/L	0.50	1	02/22/13 10:28	02/24/13 00:11	7439-98-7	
Nickel	**57.3**	ug/L	0.50	1	02/22/13 10:28	02/24/13 00:11	7440-02-0	
Potassium	**8960**	ug/L	20.0	1	02/22/13 10:28	02/24/13 00:11	7440-09-7	
Selenium	**5.1**	ug/L	0.50	1	02/22/13 10:28	02/24/13 00:11	7782-49-2	
Silica	**118000**	ug/L	2680	50	02/22/13 10:28	02/24/13 10:38	7631-86-9	
Silver	**3.5**	ug/L	0.50	1	02/22/13 10:28	02/24/13 10:32	7440-22-4	
Sodium	**6260**	ug/L	50.0	1	02/22/13 10:28	02/24/13 00:11	7440-23-5	
Thallium	**0.91**	ug/L	0.10	1	02/22/13 10:28	02/24/13 00:11	7440-28-0	
Total Hardness by 2340B	**557000**	ug/L	1420	20	02/22/13 10:28	02/24/13 00:17		
Vanadium	**104**	ug/L	0.10	1	02/22/13 10:28	02/24/13 00:11	7440-62-2	
Zinc	**1570**	ug/L	100	20	02/22/13 10:28	02/24/13 00:17	7440-66-6	
200.8 MET ICPMS, Dissolved	Analytical Method: EPA 200.8 Preparation Method: EPA 200.8							
Aluminum, Dissolved	**5.7**	ug/L	4.0	1	02/21/13 12:53	02/23/13 12:05	7429-90-5	
Antimony, Dissolved	ND	ug/L	0.50	1	02/21/13 12:53	02/23/13 12:05	7440-36-0	
Arsenic, Dissolved	**1.4**	ug/L	0.50	1	02/21/13 12:53	02/23/13 12:05	7440-38-2	
Barium, Dissolved	**26.2**	ug/L	0.30	1	02/21/13 12:53	02/23/13 12:05	7440-39-3	
Beryllium, Dissolved	ND	ug/L	0.20	1	02/21/13 12:53	02/23/13 12:05	7440-41-7	
Cadmium, Dissolved	**0.081**	ug/L	0.080	1	02/21/13 12:53	02/23/13 12:05	7440-43-9	
Calcium, Dissolved	**133000**	ug/L	400	20	02/21/13 12:53	02/23/13 12:10	7440-70-2	
Chromium, Dissolved	ND	ug/L	0.50	1	02/21/13 12:53	02/23/13 12:05	7440-47-3	
Cobalt, Dissolved	**0.86**	ug/L	0.50	1	02/21/13 12:53	02/23/13 12:05	7440-48-4	
Copper, Dissolved	**0.74**	ug/L	0.50	1	02/21/13 12:53	02/23/13 12:05	7440-50-8	
Iron, Dissolved	**534**	ug/L	50.0	1	02/21/13 12:53	02/23/13 12:05	7439-89-6	
Lead, Dissolved	ND	ug/L	0.10	1	02/21/13 12:53	02/23/13 12:05	7439-92-1	
Magnesium, Dissolved	**13200**	ug/L	5.0	1	02/21/13 12:53	02/23/13 12:05	7439-95-4	

This report shall not be reproduced, except in full,
without the written consent of Pace Analytical Services, Inc..

Pace Analytical Services, Inc.
9608 Loiret Blvd.
Lenexa, KS 66219
(913)599-5665

ANALYTICAL RESULTS

Project: February 2013 Rico Water Sampl
Pace Project No.: 60138913

Sample: GW-4_20130214 **Lab ID: 60138913003** Collected: 02/14/13 12:47 Received: 02/16/13 09:00 Matrix: Water

Parameters	Results	Units	Report Limit	DF	Prepared	Analyzed	CAS No.	Qual
200.8 MET ICPMS, Dissolved	Analytical Method: EPA 200.8 Preparation Method: EPA 200.8							
Manganese, Dissolved	**486**	ug/L	10.0	20	02/21/13 12:53	02/23/13 12:10	7439-96-5	
Molybdenum, Dissolved	**10.6**	ug/L	0.50	1	02/21/13 12:53	02/23/13 12:05	7439-98-7	
Nickel, Dissolved	**2.0**	ug/L	0.50	1	02/21/13 12:53	02/23/13 12:05	7440-02-0	
Potassium, Dissolved	**2320**	ug/L	20.0	1	02/21/13 12:53	02/23/13 12:05	7440-09-7	
Selenium, Dissolved	ND	ug/L	0.50	1	02/21/13 12:53	02/23/13 12:05	7782-49-2	
Silver, Dissolved	ND	ug/L	0.50	1	02/21/13 12:53	02/23/13 12:05	7440-22-4	
Sodium, Dissolved	**5290**	ug/L	50.0	1	02/21/13 12:53	02/23/13 12:05	7440-23-5	
Thallium, Dissolved	ND	ug/L	0.10	1	02/21/13 12:53	02/23/13 12:05	7440-28-0	
Vanadium, Dissolved	**0.33**	ug/L	0.10	1	02/21/13 12:53	02/23/13 12:05	7440-62-2	
Zinc, Dissolved	**17.2**	ug/L	5.0	1	02/21/13 12:53	02/23/13 12:05	7440-66-6	
200.8 Potentially Diss. Metals	Analytical Method: EPA 200.8 Preparation Method: EPA 200.8							
Aluminum, Dissolved	**10400**	ug/L	50.0	1	02/20/13 14:45	03/04/13 11:09	7429-90-5	
Antimony, Dissolved	**0.34J**	ug/L	1.0	1	02/20/13 14:45	03/04/13 11:09	7440-36-0	
Arsenic, Dissolved	**7.2**	ug/L	1.0	1	02/20/13 14:45	03/04/13 11:09	7440-38-2	
Barium, Dissolved	**118**	ug/L	1.0	1	02/20/13 14:45	03/04/13 11:09	7440-39-3	
Beryllium, Dissolved	**2.2**	ug/L	0.50	1	02/20/13 14:45	03/04/13 11:09	7440-41-7	
Cadmium, Dissolved	**29.0**	ug/L	0.50	1	02/20/13 14:45	03/04/13 11:09	7440-43-9	
Chromium, Dissolved	**23.2**	ug/L	1.0	1	02/20/13 14:45	03/04/13 11:09	7440-47-3	
Cobalt, Dissolved	**14.8**	ug/L	1.0	1	02/20/13 14:45	03/04/13 11:09	7440-48-4	
Copper, Dissolved	**171**	ug/L	1.0	1	02/20/13 14:45	03/04/13 11:09	7440-50-8	
Iron, Dissolved	**27200**	ug/L	50.0	1	02/20/13 14:45	03/04/13 11:09	7439-89-6	
Lead, Dissolved	**207**	ug/L	1.0	1	02/20/13 14:45	03/04/13 11:09	7439-92-1	
Manganese, Dissolved	**1640**	ug/L	1.0	1	02/20/13 14:45	03/04/13 11:09	7439-96-5	
Molybdenum, Dissolved	**4.1**	ug/L	1.0	1	02/20/13 14:45	03/04/13 11:09	7439-98-7	
Nickel, Dissolved	**24.4**	ug/L	1.0	1	02/20/13 14:45	03/04/13 11:09	7440-02-0	
Selenium, Dissolved	**5.5**	ug/L	1.0	1	02/20/13 14:45	03/04/13 11:09	7782-49-2	
Silver, Dissolved	ND	ug/L	0.50	1	02/20/13 14:45	03/04/13 11:09	7440-22-4	
Thallium, Dissolved	**0.42J**	ug/L	1.0	1	02/20/13 14:45	03/04/13 11:09	7440-28-0	
Vanadium, Dissolved	**31.4**	ug/L	1.0	1	02/20/13 14:45	03/04/13 11:09	7440-62-2	
Zinc, Dissolved	**1750**	ug/L	10.0	1	02/20/13 14:45	03/04/13 11:09	7440-66-6	
245.1 Mercury	Analytical Method: EPA 245.1 Preparation Method: EPA 245.1							
Mercury	ND	ug/L	0.20	1	02/21/13 14:42	02/27/13 15:57	7439-97-6	
245.1 Mercury, Dissolved	Analytical Method: EPA 245.1 Preparation Method: EPA 245.1							
Mercury, Dissolved	ND	ug/L	0.20	1	02/21/13 14:46	02/27/13 17:09	7439-97-6	
245.1 Potentially Diss Mercury	Analytical Method: EPA 245.1 Preparation Method: EPA 245.1							
Mercury, Dissolved	ND	ug/L	0.20	1	02/25/13 12:30	02/27/13 11:08	7439-97-6	
2510B Specific Conductance	Analytical Method: SM 2510B							
Specific Conductance	**709**	umhos/cm	10.0	1		02/25/13 11:52		
Salinity	Analytical Method: Calculated							
Salinity (as dissolved solids)	**454**	mg/L	6.4	1		02/25/13 16:50		

This report shall not be reproduced, except in full,
without the written consent of Pace Analytical Services, Inc..

Pace Analytical Services, Inc.
9608 Loiret Blvd.
Lenexa, KS 66219
(913)599-5665

ANALYTICAL RESULTS

Project: February 2013 Rico Water Sampl
Pace Project No.: 60138913

Sample: GW-4_20130214 **Lab ID: 60138913003** Collected: 02/14/13 12:47 Received: 02/16/13 09:00 Matrix: Water

Parameters	Results	Units	Report Limit	DF	Prepared	Analyzed	CAS No.	Qual
Salinity	Analytical Method: Calculated							
Salinity (as seawater)	**0.34**	PSU	0.014	1		02/25/13 16:50		
2320B Alkalinity	Analytical Method: SM 2320B							
Alkalinity,Bicarbonate (CaCO3)	**127**	mg/L	20.0	1		02/27/13 15:20		
Alkalinity, Carbonate (CaCO3)	ND	mg/L	20.0	1		02/27/13 15:20		
Alkalinity, Total as CaCO3	**127**	mg/L	20.0	1		02/27/13 15:20		
2540C Total Dissolved Solids	Analytical Method: SM 2540C							
Total Dissolved Solids	**503**	mg/L	5.0	1		02/19/13 14:27		
2540D Total Suspended Solids	Analytical Method: SM 2540D							
Total Suspended Solids	**1390**	mg/L	5.0	1		02/19/13 09:19		
4500S2D Sulfide, Total	Analytical Method: SM 4500-S-2 D							
Sulfide, Total	ND	mg/L	0.050	1		02/19/13 13:45	18496-25-8	
300.0 IC Anions 28 Days	Analytical Method: EPA 300.0							
Chloride	**1.3**	mg/L	1.0	1		02/19/13 18:52	16887-00-6	
Sulfate	**235**	mg/L	50.0	50		02/19/13 19:09	14808-79-8	M6,R1
353.2 Nitrogen, NO2/NO3 pres.	Analytical Method: EPA 353.2							
Nitrogen, NO2 plus NO3	**0.13**	mg/L	0.10	1		02/27/13 14:05		
4500CNE Cyanide, Total	Analytical Method: SM 4500-CN-E							
Cyanide	**0.0053**	mg/L	0.0050	1		02/20/13 13:31	57-12-5	
5310C TOC	Analytical Method: SM 5310C							
Total Organic Carbon	**1.4**	mg/L	0.50	1		02/20/13 16:30	7440-44-0	

This report shall not be reproduced, except in full,
without the written consent of Pace Analytical Services, Inc..

Pace Analytical Services, Inc.
9608 Loiret Blvd.
Lenexa, KS 66219
(913)599-5665

ANALYTICAL RESULTS

Project: February 2013 Rico Water Sampl
Pace Project No.: 60138913

Sample: MW-4 DEEP_02130214 **Lab ID: 60138913004** Collected: 02/14/13 11:48 Received: 02/16/13 09:00 Matrix: Water

Parameters	Results	Units	Report Limit	DF	Prepared	Analyzed	CAS No.	Qual
200.7 Potentially Diss. Metals	Analytical Method: EPA 200.7 Preparation Method: EPA 200.7							
Calcium, Dissolved	**272000**	ug/L	100	1	02/20/13 14:45	02/28/13 14:23	7440-70-2	
Magnesium, Dissolved	**32300**	ug/L	50.0	1	02/20/13 14:45	02/28/13 14:23	7439-95-4	
Potassium, Dissolved	**3680**	ug/L	500	1	02/20/13 14:45	02/28/13 14:23	7440-09-7	
Sodium, Dissolved	**7680**	ug/L	500	1	02/20/13 14:45	02/28/13 14:23	7440-23-5	
200.8 MET ICPMS	Analytical Method: EPA 200.8 Preparation Method: EPA 200.8							
Aluminum	**65300**	ug/L	80.0	20	02/22/13 10:28	02/24/13 00:28	7429-90-5	
Antimony	**0.85**	ug/L	0.50	1	02/22/13 10:28	02/24/13 00:22	7440-36-0	
Arsenic	**154**	ug/L	0.50	1	02/22/13 10:28	02/24/13 00:22	7440-38-2	
Barium	**977**	ug/L	6.0	20	02/22/13 10:28	02/24/13 00:28	7440-39-3	
Beryllium	**5.1**	ug/L	0.20	1	02/22/13 10:28	02/24/13 00:22	7440-41-7	
Cadmium	**21.1**	ug/L	0.080	1	02/22/13 10:28	02/24/13 00:22	7440-43-9	
Calcium	**308000**	ug/L	400	20	02/22/13 10:28	02/24/13 00:28	7440-70-2	
Chromium	**68.7**	ug/L	0.50	1	02/22/13 10:28	02/24/13 00:22	7440-47-3	
Cobalt	**82.3**	ug/L	0.50	1	02/22/13 10:28	02/24/13 00:22	7440-48-4	
Copper	**853**	ug/L	10.0	20	02/22/13 10:28	02/24/13 00:28	7440-50-8	
Iron	**153000**	ug/L	1000	20	02/22/13 10:28	02/24/13 00:28	7439-89-6	
Lead	**770**	ug/L	2.0	20	02/22/13 10:28	02/24/13 00:28	7439-92-1	
Magnesium	**59800**	ug/L	100	20	02/22/13 10:28	02/24/13 00:28	7439-95-4	
Manganese	**14700**	ug/L	25.0	50	02/22/13 10:28	02/24/13 10:49	7439-96-5	
Molybdenum	**50.3**	ug/L	0.50	1	02/22/13 10:28	02/24/13 00:22	7439-98-7	
Nickel	**70.8**	ug/L	0.50	1	02/22/13 10:28	02/24/13 00:22	7440-02-0	
Potassium	**9690**	ug/L	20.0	1	02/22/13 10:28	02/24/13 00:22	7440-09-7	
Selenium	**49.6**	ug/L	0.50	1	02/22/13 10:28	02/24/13 00:22	7782-49-2	
Silica	**158000**	ug/L	2680	50	02/22/13 10:28	02/24/13 10:49	7631-86-9	
Silver	**13.2**	ug/L	0.50	1	02/22/13 10:28	02/24/13 10:43	7440-22-4	
Sodium	**6610**	ug/L	50.0	1	02/22/13 10:28	02/24/13 00:22	7440-23-5	
Thallium	ND	ug/L	2.0	20	02/22/13 10:28	02/24/13 00:28	7440-28-0	D3
Total Hardness by 2340B	**1020000**	ug/L	1420	20	02/22/13 10:28	02/24/13 00:28		
Vanadium	**112**	ug/L	0.10	1	02/22/13 10:28	02/24/13 00:22	7440-62-2	
Zinc	**2850**	ug/L	100	20	02/22/13 10:28	02/24/13 00:28	7440-66-6	
200.8 MET ICPMS, Dissolved	Analytical Method: EPA 200.8 Preparation Method: EPA 200.8							
Aluminum, Dissolved	**422**	ug/L	4.0	1	02/21/13 12:53	02/23/13 12:14	7429-90-5	
Antimony, Dissolved	ND	ug/L	0.50	1	02/21/13 12:53	02/23/13 12:14	7440-36-0	
Arsenic, Dissolved	**0.78**	ug/L	0.50	1	02/21/13 12:53	02/23/13 12:14	7440-38-2	
Barium, Dissolved	**20.0**	ug/L	0.30	1	02/21/13 12:53	02/23/13 12:14	7440-39-3	
Beryllium, Dissolved	ND	ug/L	0.20	1	02/21/13 12:53	02/23/13 12:14	7440-41-7	
Cadmium, Dissolved	**2.1**	ug/L	0.080	1	02/21/13 12:53	02/23/13 12:14	7440-43-9	
Calcium, Dissolved	**309000**	ug/L	400	20	02/21/13 12:53	02/23/13 12:19	7440-70-2	
Chromium, Dissolved	**0.84**	ug/L	0.50	1	02/21/13 12:53	02/23/13 12:14	7440-47-3	
Cobalt, Dissolved	**0.96**	ug/L	0.50	1	02/21/13 12:53	02/23/13 12:14	7440-48-4	
Copper, Dissolved	**10.2**	ug/L	0.50	1	02/21/13 12:53	02/23/13 12:14	7440-50-8	
Iron, Dissolved	**668**	ug/L	50.0	1	02/21/13 12:53	02/23/13 12:14	7439-89-6	
Lead, Dissolved	**4.0**	ug/L	0.10	1	02/21/13 12:53	02/23/13 12:14	7439-92-1	
Magnesium, Dissolved	**33100**	ug/L	100	20	02/21/13 12:53	02/23/13 12:19	7439-95-4	

This report shall not be reproduced, except in full,
without the written consent of Pace Analytical Services, Inc..

Pace Analytical Services, Inc.
9608 Loiret Blvd.
Lenexa, KS 66219
(913)599-5665

ANALYTICAL RESULTS

Project: February 2013 Rico Water Sampl
Pace Project No.: 60138913

Sample: MW-4 DEEP_02130214 **Lab ID: 60138913004** Collected: 02/14/13 11:48 Received: 02/16/13 09:00 Matrix: Water

Parameters	Results	Units	Report Limit	DF	Prepared	Analyzed	CAS No.	Qual
200.8 MET ICPMS, Dissolved	Analytical Method: EPA 200.8 Preparation Method: EPA 200.8							
Manganese, Dissolved	**67.2**	ug/L	0.50	1	02/21/13 12:53	02/23/13 12:14	7439-96-5	
Molybdenum, Dissolved	**2.5**	ug/L	0.50	1	02/21/13 12:53	02/23/13 12:14	7439-98-7	
Nickel, Dissolved	**2.7**	ug/L	0.50	1	02/21/13 12:53	02/23/13 12:14	7440-02-0	
Potassium, Dissolved	**3460**	ug/L	20.0	1	02/21/13 12:53	02/23/13 12:14	7440-09-7	
Selenium, Dissolved	**36.2**	ug/L	0.50	1	02/21/13 12:53	02/23/13 12:14	7782-49-2	
Silver, Dissolved	ND	ug/L	0.50	1	02/21/13 12:53	02/23/13 12:14	7440-22-4	
Sodium, Dissolved	**7230**	ug/L	50.0	1	02/21/13 12:53	02/23/13 12:14	7440-23-5	
Thallium, Dissolved	ND	ug/L	0.10	1	02/21/13 12:53	02/23/13 12:14	7440-28-0	
Vanadium, Dissolved	**0.81**	ug/L	0.10	1	02/21/13 12:53	02/23/13 12:14	7440-62-2	
Zinc, Dissolved	**305**	ug/L	5.0	1	02/21/13 12:53	02/23/13 12:14	7440-66-6	
200.8 Potentially Diss. Metals	Analytical Method: EPA 200.8 Preparation Method: EPA 200.8							
Aluminum, Dissolved	**4880**	ug/L	50.0	1	02/20/13 14:45	03/04/13 11:13	7429-90-5	
Antimony, Dissolved	**0.23J**	ug/L	1.0	1	02/20/13 14:45	03/04/13 11:13	7440-36-0	
Arsenic, Dissolved	**6.1**	ug/L	1.0	1	02/20/13 14:45	03/04/13 11:13	7440-38-2	
Barium, Dissolved	**59.0**	ug/L	1.0	1	02/20/13 14:45	03/04/13 11:13	7440-39-3	
Beryllium, Dissolved	**0.90**	ug/L	0.50	1	02/20/13 14:45	03/04/13 11:13	7440-41-7	
Cadmium, Dissolved	**4.8**	ug/L	0.50	1	02/20/13 14:45	03/04/13 11:13	7440-43-9	
Chromium, Dissolved	**6.9**	ug/L	1.0	1	02/20/13 14:45	03/04/13 11:13	7440-47-3	
Cobalt, Dissolved	**6.3**	ug/L	1.0	1	02/20/13 14:45	03/04/13 11:13	7440-48-4	
Copper, Dissolved	**119**	ug/L	1.0	1	02/20/13 14:45	03/04/13 11:13	7440-50-8	
Iron, Dissolved	**11600**	ug/L	50.0	1	02/20/13 14:45	03/04/13 11:13	7439-89-6	
Lead, Dissolved	**126**	ug/L	1.0	1	02/20/13 14:45	03/04/13 11:13	7439-92-1	
Manganese, Dissolved	**899**	ug/L	1.0	1	02/20/13 14:45	03/04/13 11:13	7439-96-5	
Molybdenum, Dissolved	**1.0**	ug/L	1.0	1	02/20/13 14:45	03/04/13 11:13	7439-98-7	
Nickel, Dissolved	**5.3**	ug/L	1.0	1	02/20/13 14:45	03/04/13 11:13	7440-02-0	
Selenium, Dissolved	**39.0**	ug/L	1.0	1	02/20/13 14:45	03/04/13 11:13	7782-49-2	
Silver, Dissolved	**2.0**	ug/L	0.50	1	02/20/13 14:45	03/04/13 11:13	7440-22-4	
Thallium, Dissolved	**0.022J**	ug/L	1.0	1	02/20/13 14:45	03/04/13 11:13	7440-28-0	
Vanadium, Dissolved	**8.8**	ug/L	1.0	1	02/20/13 14:45	03/04/13 11:13	7440-62-2	
Zinc, Dissolved	**627**	ug/L	10.0	1	02/20/13 14:45	03/04/13 11:13	7440-66-6	
245.1 Mercury	Analytical Method: EPA 245.1 Preparation Method: EPA 245.1							
Mercury	ND	ug/L	0.20	1	02/21/13 14:42	02/27/13 16:04	7439-97-6	
245.1 Mercury, Dissolved	Analytical Method: EPA 245.1 Preparation Method: EPA 245.1							
Mercury, Dissolved	ND	ug/L	0.20	1	02/21/13 14:43	02/27/13 17:11	7439-97-6	
245.1 Potentially Diss Mercury	Analytical Method: EPA 245.1 Preparation Method: EPA 245.1							
Mercury, Dissolved	ND	ug/L	0.20	1	02/25/13 12:30	02/27/13 11:15	7439-97-6	
2510B Specific Conductance	Analytical Method: SM 2510B							
Specific Conductance	**2010**	umhos/cm	10.0	1		02/25/13 11:53		
Salinity	Analytical Method: Calculated							
Salinity (as dissolved solids)	**1290**	mg/L	6.4	1		02/25/13 16:50		

This report shall not be reproduced, except in full,
without the written consent of Pace Analytical Services, Inc..

Pace Analytical Services, Inc.
9608 Loiret Blvd.
Lenexa, KS 66219
(913)599-5665

ANALYTICAL RESULTS

Project: February 2013 Rico Water Sampl
Pace Project No.: 60138913

Sample: MW-4 DEEP_02130214 **Lab ID: 60138913004** Collected: 02/14/13 11:48 Received: 02/16/13 09:00 Matrix: Water

Parameters	Results	Units	Report Limit	DF	Prepared	Analyzed	CAS No.	Qual
Salinity	Analytical Method: Calculated							
Salinity (as seawater)	**1.0**	PSU	0.014	1		02/25/13 16:50		
2320B Alkalinity	Analytical Method: SM 2320B							
Alkalinity,Bicarbonate (CaCO3)	**315**	mg/L	20.0	1		02/27/13 15:25		
Alkalinity, Carbonate (CaCO3)	ND	mg/L	20.0	1		02/27/13 15:25		
Alkalinity, Total as CaCO3	**315**	mg/L	20.0	1		02/27/13 15:25		
2540C Total Dissolved Solids	Analytical Method: SM 2540C							
Total Dissolved Solids	**1130**	mg/L	5.0	1		02/19/13 14:27		
2540D Total Suspended Solids	Analytical Method: SM 2540D							
Total Suspended Solids	**1480**	mg/L	5.0	1		02/19/13 09:19		
4500S2D Sulfide, Total	Analytical Method: SM 4500-S-2 D							
Sulfide, Total	ND	mg/L	0.050	1		02/19/13 13:45	18496-25-8	
300.0 IC Anions 28 Days	Analytical Method: EPA 300.0							
Chloride	ND	mg/L	1.0	1		02/21/13 01:23	16887-00-6	
Sulfate	**404**	mg/L	50.0	50		02/19/13 22:03	14808-79-8	
353.2 Nitrogen, NO2/NO3 pres.	Analytical Method: EPA 353.2							
Nitrogen, NO2 plus NO3	**0.13**	mg/L	0.10	1		02/27/13 14:07		
4500CNE Cyanide, Total	Analytical Method: SM 4500-CN-E							
Cyanide	ND	mg/L	0.0050	1		02/20/13 13:34	57-12-5	
5310C TOC	Analytical Method: SM 5310C							
Total Organic Carbon	**1.8**	mg/L	0.50	1		02/20/13 16:48	7440-44-0	

This report shall not be reproduced, except in full,
without the written consent of Pace Analytical Services, Inc..

Pace Analytical Services, Inc.
9608 Loiret Blvd.
Lenexa, KS 66219
(913)599-5665

ANALYTICAL RESULTS

Project: February 2013 Rico Water Sampl
Pace Project No.: 60138913

Sample: MW-6 SHALLOW_20130214 **Lab ID: 60138913005** Collected: 02/14/13 15:20 Received: 02/16/13 09:00 Matrix: Water

Parameters	Results	Units	Report Limit	DF	Prepared	Analyzed	CAS No.	Qual
200.7 Potentially Diss. Metals	Analytical Method: EPA 200.7 Preparation Method: EPA 200.7							
Calcium, Dissolved	**386000**	ug/L	100	1	02/20/13 14:45	02/28/13 14:25	7440-70-2	
Magnesium, Dissolved	**58800**	ug/L	50.0	1	02/20/13 14:45	02/28/13 14:25	7439-95-4	
Potassium, Dissolved	**13400**	ug/L	500	1	02/20/13 14:45	02/28/13 14:25	7440-09-7	
Sodium, Dissolved	**4570**	ug/L	500	1	02/20/13 14:45	02/28/13 14:25	7440-23-5	
200.8 MET ICPMS	Analytical Method: EPA 200.8 Preparation Method: EPA 200.8							
Aluminum	**13800**	ug/L	4.0	1	02/22/13 10:28	02/24/13 00:33	7429-90-5	
Antimony	ND	ug/L	0.50	1	02/22/13 10:28	02/24/13 00:33	7440-36-0	
Arsenic	**69.3**	ug/L	0.50	1	02/22/13 10:28	02/24/13 00:33	7440-38-2	
Barium	**114**	ug/L	0.30	1	02/22/13 10:28	02/24/13 00:33	7440-39-3	
Beryllium	**1.6**	ug/L	0.20	1	02/22/13 10:28	02/24/13 00:33	7440-41-7	
Cadmium	**6.7**	ug/L	0.080	1	02/22/13 10:28	02/24/13 00:33	7440-43-9	
Calcium	**408000**	ug/L	400	20	02/22/13 10:28	02/24/13 00:38	7440-70-2	
Chromium	**11.0**	ug/L	0.50	1	02/22/13 10:28	02/24/13 00:33	7440-47-3	
Cobalt	**9.0**	ug/L	0.50	1	02/22/13 10:28	02/24/13 00:33	7440-48-4	
Copper	**50.7**	ug/L	0.50	1	02/22/13 10:28	02/24/13 00:33	7440-50-8	
Iron	**69100**	ug/L	1000	20	02/22/13 10:28	02/24/13 00:38	7439-89-6	
Lead	**80.2**	ug/L	0.10	1	02/22/13 10:28	02/24/13 00:33	7439-92-1	
Magnesium	**61600**	ug/L	100	20	02/22/13 10:28	02/24/13 00:38	7439-95-4	
Manganese	**8580**	ug/L	10.0	20	02/22/13 10:28	02/24/13 00:38	7439-96-5	
Molybdenum	**7.4**	ug/L	0.50	1	02/22/13 10:28	02/24/13 00:33	7439-98-7	
Nickel	**12.8**	ug/L	0.50	1	02/22/13 10:28	02/24/13 00:33	7440-02-0	
Potassium	**15600**	ug/L	20.0	1	02/22/13 10:28	02/24/13 00:33	7440-09-7	
Selenium	**1.7**	ug/L	0.50	1	02/22/13 10:28	02/24/13 00:33	7782-49-2	
Silica	**72900**	ug/L	1070	20	02/22/13 10:28	02/24/13 00:38	7631-86-9	
Silver	ND	ug/L	0.50	1	02/22/13 10:28	02/24/13 11:09	7440-22-4	
Sodium	**4130**	ug/L	50.0	1	02/22/13 10:28	02/24/13 00:33	7440-23-5	
Thallium	**0.35**	ug/L	0.10	1	02/22/13 10:28	02/24/13 00:33	7440-28-0	
Total Hardness by 2340B	**1270000**	ug/L	1420	20	02/22/13 10:28	02/24/13 00:38		
Vanadium	**16.4**	ug/L	0.10	1	02/22/13 10:28	02/24/13 00:33	7440-62-2	
Zinc	**1580**	ug/L	100	20	02/22/13 10:28	02/24/13 00:38	7440-66-6	
200.8 MET ICPMS, Dissolved	Analytical Method: EPA 200.8 Preparation Method: EPA 200.8							
Aluminum, Dissolved	**744**	ug/L	4.0	1	02/21/13 12:53	02/23/13 12:24	7429-90-5	
Antimony, Dissolved	ND	ug/L	0.50	1	02/21/13 12:53	02/23/13 12:24	7440-36-0	
Arsenic, Dissolved	**41.8**	ug/L	0.50	1	02/21/13 12:53	02/23/13 12:24	7440-38-2	
Barium, Dissolved	**16.7**	ug/L	0.30	1	02/21/13 12:53	02/23/13 12:24	7440-39-3	
Beryllium, Dissolved	**0.92**	ug/L	0.20	1	02/21/13 12:53	02/23/13 12:24	7440-41-7	
Cadmium, Dissolved	**0.19**	ug/L	0.080	1	02/21/13 12:53	02/23/13 12:24	7440-43-9	
Calcium, Dissolved	**435000**	ug/L	400	20	02/21/13 12:53	02/23/13 12:28	7440-70-2	
Chromium, Dissolved	ND	ug/L	0.50	1	02/21/13 12:53	02/23/13 12:24	7440-47-3	
Cobalt, Dissolved	**4.6**	ug/L	0.50	1	02/21/13 12:53	02/23/13 12:24	7440-48-4	
Copper, Dissolved	**4.4**	ug/L	0.50	1	02/21/13 12:53	02/23/13 12:24	7440-50-8	
Iron, Dissolved	**56900**	ug/L	1000	20	02/21/13 12:53	02/23/13 12:28	7439-89-6	
Lead, Dissolved	**0.35**	ug/L	0.10	1	02/21/13 12:53	02/23/13 12:24	7439-92-1	
Magnesium, Dissolved	**59400**	ug/L	100	20	02/21/13 12:53	02/23/13 12:28	7439-95-4	

This report shall not be reproduced, except in full,
without the written consent of Pace Analytical Services, Inc..

Pace Analytical Services, Inc.
9608 Loiret Blvd.
Lenexa, KS 66219
(913)599-5665

ANALYTICAL RESULTS

Project: February 2013 Rico Water Sampl
Pace Project No.: 60138913

Sample: MW-6 SHALLOW_20130214 **Lab ID: 60138913005** Collected: 02/14/13 15:20 Received: 02/16/13 09:00 Matrix: Water

Parameters	Results	Units	Report Limit	DF	Prepared	Analyzed	CAS No.	Qual
200.8 MET ICPMS, Dissolved	Analytical Method: EPA 200.8 Preparation Method: EPA 200.8							
Manganese, Dissolved	**8530**	ug/L	10.0	20	02/21/13 12:53	02/23/13 12:28	7439-96-5	
Molybdenum, Dissolved	**5.1**	ug/L	0.50	1	02/21/13 12:53	02/23/13 12:24	7439-98-7	
Nickel, Dissolved	**4.2**	ug/L	0.50	1	02/21/13 12:53	02/23/13 12:24	7440-02-0	
Potassium, Dissolved	**13400**	ug/L	20.0	1	02/21/13 12:53	02/23/13 12:24	7440-09-7	
Selenium, Dissolved	ND	ug/L	0.50	1	02/21/13 12:53	02/23/13 12:24	7782-49-2	
Silver, Dissolved	ND	ug/L	0.50	1	02/21/13 12:53	02/23/13 12:24	7440-22-4	
Sodium, Dissolved	**4250**	ug/L	50.0	1	02/21/13 12:53	02/23/13 12:24	7440-23-5	
Thallium, Dissolved	ND	ug/L	0.10	1	02/21/13 12:53	02/23/13 12:24	7440-28-0	
Vanadium, Dissolved	**0.12**	ug/L	0.10	1	02/21/13 12:53	02/23/13 12:24	7440-62-2	
Zinc, Dissolved	**680**	ug/L	100	20	02/21/13 12:53	02/23/13 12:28	7440-66-6	
200.8 Potentially Diss. Metals	Analytical Method: EPA 200.8 Preparation Method: EPA 200.8							
Aluminum, Dissolved	**9220**	ug/L	50.0	1	02/20/13 14:45	03/04/13 11:51	7429-90-5	
Antimony, Dissolved	**0.28J**	ug/L	1.0	1	02/20/13 14:45	03/04/13 11:51	7440-36-0	
Arsenic, Dissolved	**80.0**	ug/L	1.0	1	02/20/13 14:45	03/04/13 11:51	7440-38-2	
Barium, Dissolved	**34.9**	ug/L	1.0	1	02/20/13 14:45	03/04/13 11:51	7440-39-3	
Beryllium, Dissolved	**1.5**	ug/L	0.50	1	02/20/13 14:45	03/04/13 11:51	7440-41-7	
Cadmium, Dissolved	**16.5**	ug/L	0.50	1	02/20/13 14:45	03/04/13 11:51	7440-43-9	
Chromium, Dissolved	**9.6**	ug/L	1.0	1	02/20/13 14:45	03/04/13 11:51	7440-47-3	
Cobalt, Dissolved	**11.1**	ug/L	1.0	1	02/20/13 14:45	03/04/13 11:51	7440-48-4	
Copper, Dissolved	**72.3**	ug/L	1.0	1	02/20/13 14:45	03/04/13 11:51	7440-50-8	
Iron, Dissolved	**65100**	ug/L	50.0	1	02/20/13 14:45	03/04/13 11:51	7439-89-6	
Lead, Dissolved	**196**	ug/L	1.0	1	02/20/13 14:45	03/04/13 11:51	7439-92-1	
Manganese, Dissolved	**8790**	ug/L	100	100	02/20/13 14:45	03/04/13 11:55	7439-96-5	
Molybdenum, Dissolved	**3.0**	ug/L	1.0	1	02/20/13 14:45	03/04/13 11:51	7439-98-7	
Nickel, Dissolved	**14.2**	ug/L	1.0	1	02/20/13 14:45	03/04/13 11:51	7440-02-0	
Selenium, Dissolved	**2.5**	ug/L	1.0	1	02/20/13 14:45	03/04/13 11:51	7782-49-2	
Silver, Dissolved	ND	ug/L	0.50	1	02/20/13 14:45	03/04/13 11:51	7440-22-4	
Thallium, Dissolved	**0.38J**	ug/L	1.0	1	02/20/13 14:45	03/04/13 11:51	7440-28-0	
Vanadium, Dissolved	**11.1**	ug/L	1.0	1	02/20/13 14:45	03/04/13 11:51	7440-62-2	
Zinc, Dissolved	**2600**	ug/L	10.0	1	02/20/13 14:45	03/04/13 11:51	7440-66-6	
245.1 Mercury	Analytical Method: EPA 245.1 Preparation Method: EPA 245.1							
Mercury	ND	ug/L	0.20	1	02/21/13 14:42	02/27/13 16:06	7439-97-6	
245.1 Mercury, Dissolved	Analytical Method: EPA 245.1 Preparation Method: EPA 245.1							
Mercury, Dissolved	ND	ug/L	0.20	1	02/21/13 14:43	02/27/13 17:19	7439-97-6	
245.1 Potentially Diss Mercury	Analytical Method: EPA 245.1 Preparation Method: EPA 245.1							
Mercury, Dissolved	ND	ug/L	0.20	1	02/25/13 12:30	02/27/13 11:17	7439-97-6	
2510B Specific Conductance	Analytical Method: SM 2510B							
Specific Conductance	**2010**	umhos/cm	10.0	1		02/25/13 11:56		

This report shall not be reproduced, except in full,
without the written consent of Pace Analytical Services, Inc..

Pace Analytical Services, Inc.
9608 Loiret Blvd.
Lenexa, KS 66219
(913)599-5665

ANALYTICAL RESULTS

Project: February 2013 Rico Water Sampl
Pace Project No.: 60138913

Sample: MW-6 SHALLOW_20130214 **Lab ID: 60138913005** Collected: 02/14/13 15:20 Received: 02/16/13 09:00 Matrix: Water

Parameters	Results	Units	Report Limit	DF	Prepared	Analyzed	CAS No.	Qual
Salinity	Analytical Method: Calculated							
Salinity (as dissolved solids)	**1280**	mg/L	6.4	1		02/25/13 16:50		
Salinity (as seawater)	**1.0**	PSU	0.014	1		02/25/13 16:50		
2320B Alkalinity	Analytical Method: SM 2320B							
Alkalinity,Bicarbonate (CaCO3)	**90.8**	mg/L	20.0	1		02/27/13 15:40		
Alkalinity, Carbonate (CaCO3)	ND	mg/L	20.0	1		02/27/13 15:40		
Alkalinity, Total as CaCO3	**90.8**	mg/L	20.0	1		02/27/13 15:40		
2540C Total Dissolved Solids	Analytical Method: SM 2540C							
Total Dissolved Solids	**1850**	mg/L	5.0	1		02/19/13 14:27		
2540D Total Suspended Solids	Analytical Method: SM 2540D							
Total Suspended Solids	**3410**	mg/L	5.0	1		02/19/13 09:19		
4500S2D Sulfide, Total	Analytical Method: SM 4500-S-2 D							
Sulfide, Total	ND	mg/L	0.050	1		02/19/13 13:46	18496-25-8	
300.0 IC Anions 28 Days	Analytical Method: EPA 300.0							
Chloride	**1.2**	mg/L	1.0	1		02/21/13 01:41	16887-00-6	
Sulfate	**990**	mg/L	100	100		02/19/13 22:39	14808-79-8	
353.2 Nitrogen, NO2/NO3 pres.	Analytical Method: EPA 353.2							
Nitrogen, NO2 plus NO3	ND	mg/L	0.10	1		02/27/13 14:44		
4500CNE Cyanide, Total	Analytical Method: SM 4500-CN-E							
Cyanide	ND	mg/L	0.0050	1		02/20/13 13:34	57-12-5	
5310C TOC	Analytical Method: SM 5310C							
Total Organic Carbon	**1.5**	mg/L	0.50	1		02/20/13 18:02	7440-44-0	

This report shall not be reproduced, except in full,
without the written consent of Pace Analytical Services, Inc..

Pace Analytical Services, Inc.
9608 Loiret Blvd.
Lenexa, KS 66219
(913)599-5665

ANALYTICAL RESULTS

Project: February 2013 Rico Water Sampl
Pace Project No.: 60138913

Sample: MW-6 DEEP_20130214 **Lab ID: 60138913006** Collected: 02/14/13 15:25 Received: 02/16/13 09:00 Matrix: Water

Parameters	Results	Units	Report Limit	DF	Prepared	Analyzed	CAS No.	Qual
200.7 Potentially Diss. Metals	Analytical Method: EPA 200.7 Preparation Method: EPA 200.7							
Calcium, Dissolved	**262000**	ug/L	100	1	02/20/13 14:45	02/28/13 14:32	7440-70-2	
Magnesium, Dissolved	**39800**	ug/L	50.0	1	02/20/13 14:45	02/28/13 14:32	7439-95-4	
Potassium, Dissolved	**6800**	ug/L	500	1	02/20/13 14:45	02/28/13 14:32	7440-09-7	
Sodium, Dissolved	**4880**	ug/L	500	1	02/20/13 14:45	02/28/13 14:32	7440-23-5	
200.8 MET ICPMS	Analytical Method: EPA 200.8 Preparation Method: EPA 200.8							
Aluminum	**9460**	ug/L	4.0	1	02/22/13 10:28	02/24/13 00:43	7429-90-5	
Antimony	**0.66**	ug/L	0.50	1	02/22/13 10:28	02/24/13 00:43	7440-36-0	
Arsenic	**49.0**	ug/L	0.50	1	02/22/13 10:28	02/24/13 00:43	7440-38-2	
Barium	**94.0**	ug/L	0.30	1	02/22/13 10:28	02/24/13 00:43	7440-39-3	
Beryllium	**1.1**	ug/L	0.20	1	02/22/13 10:28	02/24/13 00:43	7440-41-7	
Cadmium	**3.4**	ug/L	0.080	1	02/22/13 10:28	02/24/13 00:43	7440-43-9	
Calcium	**293000**	ug/L	400	20	02/22/13 10:28	02/24/13 00:48	7440-70-2	
Chromium	**9.2**	ug/L	0.50	1	02/22/13 10:28	02/24/13 00:43	7440-47-3	
Cobalt	**6.7**	ug/L	0.50	1	02/22/13 10:28	02/24/13 00:43	7440-48-4	
Copper	**48.4**	ug/L	0.50	1	02/22/13 10:28	02/24/13 00:43	7440-50-8	
Iron	**30500**	ug/L	1000	20	02/22/13 10:28	02/24/13 00:48	7439-89-6	
Lead	**76.3**	ug/L	0.10	1	02/22/13 10:28	02/24/13 00:43	7439-92-1	
Magnesium	**44700**	ug/L	100	20	02/22/13 10:28	02/24/13 00:48	7439-95-4	
Manganese	**7430**	ug/L	10.0	20	02/22/13 10:28	02/24/13 00:48	7439-96-5	
Molybdenum	**10.4**	ug/L	0.50	1	02/22/13 10:28	02/24/13 00:43	7439-98-7	
Nickel	**10.6**	ug/L	0.50	1	02/22/13 10:28	02/24/13 00:43	7440-02-0	
Potassium	**8580**	ug/L	20.0	1	02/22/13 10:28	02/24/13 00:43	7440-09-7	
Selenium	**2.0**	ug/L	0.50	1	02/22/13 10:28	02/24/13 00:43	7782-49-2	
Silica	**52500**	ug/L	1070	20	02/22/13 10:28	02/24/13 00:48	7631-86-9	
Silver	ND	ug/L	0.50	1	02/22/13 10:28	02/24/13 11:14	7440-22-4	
Sodium	**4860**	ug/L	50.0	1	02/22/13 10:28	02/24/13 00:43	7440-23-5	
Thallium	**0.16**	ug/L	0.10	1	02/22/13 10:28	02/24/13 00:43	7440-28-0	
Total Hardness by 2340B	**915000**	ug/L	1420	20	02/22/13 10:28	02/24/13 00:48		
Vanadium	**18.2**	ug/L	0.10	1	02/22/13 10:28	02/24/13 00:43	7440-62-2	
Zinc	**1360**	ug/L	100	20	02/22/13 10:28	02/24/13 00:48	7440-66-6	
200.8 MET ICPMS, Dissolved	Analytical Method: EPA 200.8 Preparation Method: EPA 200.8							
Aluminum, Dissolved	**502**	ug/L	4.0	1	02/21/13 12:53	02/23/13 12:33	7429-90-5	
Antimony, Dissolved	ND	ug/L	0.50	1	02/21/13 12:53	02/23/13 12:33	7440-36-0	
Arsenic, Dissolved	**17.9**	ug/L	0.50	1	02/21/13 12:53	02/23/13 12:33	7440-38-2	
Barium, Dissolved	**16.5**	ug/L	0.30	1	02/21/13 12:53	02/23/13 12:33	7440-39-3	
Beryllium, Dissolved	**0.58**	ug/L	0.20	1	02/21/13 12:53	02/23/13 12:33	7440-41-7	
Cadmium, Dissolved	**0.12**	ug/L	0.080	1	02/21/13 12:53	02/23/13 12:33	7440-43-9	
Calcium, Dissolved	**298000**	ug/L	400	20	02/21/13 12:53	02/23/13 12:38	7440-70-2	
Chromium, Dissolved	**0.62**	ug/L	0.50	1	02/21/13 12:53	02/23/13 12:33	7440-47-3	
Cobalt, Dissolved	**3.4**	ug/L	0.50	1	02/21/13 12:53	02/23/13 12:33	7440-48-4	
Copper, Dissolved	**2.9**	ug/L	0.50	1	02/21/13 12:53	02/23/13 12:33	7440-50-8	
Iron, Dissolved	**19500**	ug/L	50.0	1	02/21/13 12:53	02/23/13 12:33	7439-89-6	
Lead, Dissolved	**2.4**	ug/L	0.10	1	02/21/13 12:53	02/23/13 12:33	7439-92-1	
Magnesium, Dissolved	**39700**	ug/L	100	20	02/21/13 12:53	02/23/13 12:38	7439-95-4	

This report shall not be reproduced, except in full,
without the written consent of Pace Analytical Services, Inc..

Pace Analytical Services, Inc.
9608 Loiret Blvd.
Lenexa, KS 66219
(913)599-5665

ANALYTICAL RESULTS

Project: February 2013 Rico Water Sampl
Pace Project No.: 60138913

Sample: MW-6 DEEP_20130214 **Lab ID: 60138913006** Collected: 02/14/13 15:25 Received: 02/16/13 09:00 Matrix: Water

Parameters	Results	Units	Report Limit	DF	Prepared	Analyzed	CAS No.	Qual
200.8 MET ICPMS, Dissolved	Analytical Method: EPA 200.8 Preparation Method: EPA 200.8							
Manganese, Dissolved	**7010**	ug/L	10.0	20	02/21/13 12:53	02/23/13 12:38	7439-96-5	
Molybdenum, Dissolved	**6.2**	ug/L	0.50	1	02/21/13 12:53	02/23/13 12:33	7439-98-7	
Nickel, Dissolved	**4.6**	ug/L	0.50	1	02/21/13 12:53	02/23/13 12:33	7440-02-0	
Potassium, Dissolved	**6530**	ug/L	20.0	1	02/21/13 12:53	02/23/13 12:33	7440-09-7	
Selenium, Dissolved	**0.68**	ug/L	0.50	1	02/21/13 12:53	02/23/13 12:33	7782-49-2	
Silver, Dissolved	ND	ug/L	0.50	1	02/21/13 12:53	02/23/13 12:33	7440-22-4	
Sodium, Dissolved	**4880**	ug/L	50.0	1	02/21/13 12:53	02/23/13 12:33	7440-23-5	
Thallium, Dissolved	ND	ug/L	0.10	1	02/21/13 12:53	02/23/13 12:33	7440-28-0	
Vanadium, Dissolved	**0.53**	ug/L	0.10	1	02/21/13 12:53	02/23/13 12:33	7440-62-2	
Zinc, Dissolved	**325**	ug/L	5.0	1	02/21/13 12:53	02/23/13 12:33	7440-66-6	
200.8 Potentially Diss. Metals	Analytical Method: EPA 200.8 Preparation Method: EPA 200.8							
Aluminum, Dissolved	**8100**	ug/L	50.0	1	02/20/13 14:45	03/04/13 11:59	7429-90-5	
Antimony, Dissolved	**0.18J**	ug/L	1.0	1	02/20/13 14:45	03/04/13 11:59	7440-36-0	
Arsenic, Dissolved	**90.8**	ug/L	1.0	1	02/20/13 14:45	03/04/13 11:59	7440-38-2	
Barium, Dissolved	**41.1**	ug/L	1.0	1	02/20/13 14:45	03/04/13 11:59	7440-39-3	
Beryllium, Dissolved	**1.6**	ug/L	0.50	1	02/20/13 14:45	03/04/13 11:59	7440-41-7	
Cadmium, Dissolved	**14.7**	ug/L	0.50	1	02/20/13 14:45	03/04/13 11:59	7440-43-9	
Chromium, Dissolved	**11.1**	ug/L	1.0	1	02/20/13 14:45	03/04/13 11:59	7440-47-3	
Cobalt, Dissolved	**10.7**	ug/L	1.0	1	02/20/13 14:45	03/04/13 11:59	7440-48-4	
Copper, Dissolved	**131**	ug/L	1.0	1	02/20/13 14:45	03/04/13 11:59	7440-50-8	
Iron, Dissolved	**35600**	ug/L	50.0	1	02/20/13 14:45	03/04/13 11:59	7439-89-6	
Lead, Dissolved	**248**	ug/L	1.0	1	02/20/13 14:45	03/04/13 11:59	7439-92-1	
Manganese, Dissolved	**7350**	ug/L	100	100	02/20/13 14:45	03/04/13 12:03	7439-96-5	
Molybdenum, Dissolved	**2.9**	ug/L	1.0	1	02/20/13 14:45	03/04/13 11:59	7439-98-7	
Nickel, Dissolved	**17.8**	ug/L	1.0	1	02/20/13 14:45	03/04/13 11:59	7440-02-0	
Selenium, Dissolved	**4.6**	ug/L	1.0	1	02/20/13 14:45	03/04/13 11:59	7782-49-2	
Silver, Dissolved	ND	ug/L	0.50	1	02/20/13 14:45	03/04/13 11:59	7440-22-4	
Thallium, Dissolved	**0.12J**	ug/L	1.0	1	02/20/13 14:45	03/04/13 11:59	7440-28-0	
Vanadium, Dissolved	**23.9**	ug/L	1.0	1	02/20/13 14:45	03/04/13 11:59	7440-62-2	
Zinc, Dissolved	**4690**	ug/L	10.0	1	02/20/13 14:45	03/04/13 11:59	7440-66-6	
245.1 Mercury	Analytical Method: EPA 245.1 Preparation Method: EPA 245.1							
Mercury	ND	ug/L	0.20	1	02/21/13 14:42	02/27/13 16:09	7439-97-6	
245.1 Mercury, Dissolved	Analytical Method: EPA 245.1 Preparation Method: EPA 245.1							
Mercury, Dissolved	ND	ug/L	0.20	1	02/21/13 14:43	02/27/13 17:21	7439-97-6	
245.1 Potentially Diss Mercury	Analytical Method: EPA 245.1 Preparation Method: EPA 245.1							
Mercury, Dissolved	ND	ug/L	0.20	1	02/25/13 12:30	02/27/13 11:19	7439-97-6	
2510B Specific Conductance	Analytical Method: SM 2510B							
Specific Conductance	**1540**	umhos/cm	10.0	1		02/25/13 12:03		
Salinity	Analytical Method: Calculated							
Salinity (as dissolved solids)	**988**	mg/L	6.4	1		02/25/13 16:50		

This report shall not be reproduced, except in full,
without the written consent of Pace Analytical Services, Inc..

Pace Analytical Services, Inc.
9608 Loiret Blvd.
Lenexa, KS 66219
(913)599-5665

ANALYTICAL RESULTS

Project: February 2013 Rico Water Sampl
Pace Project No.: 60138913

Sample: MW-6 DEEP_20130214 **Lab ID: 60138913006** Collected: 02/14/13 15:25 Received: 02/16/13 09:00 Matrix: Water

Parameters	Results	Units	Report Limit	DF	Prepared	Analyzed	CAS No.	Qual
Salinity	Analytical Method: Calculated							
Salinity (as seawater)	**0.78**	PSU	0.014	1		02/25/13 16:50		
2320B Alkalinity	Analytical Method: SM 2320B							
Alkalinity,Bicarbonate (CaCO3)	**155**	mg/L	20.0	1		02/27/13 15:44		
Alkalinity, Carbonate (CaCO3)	ND	mg/L	20.0	1		02/27/13 15:44		
Alkalinity, Total as CaCO3	**155**	mg/L	20.0	1		02/27/13 15:44		
2540C Total Dissolved Solids	Analytical Method: SM 2540C							
Total Dissolved Solids	**1270**	mg/L	5.0	1		02/19/13 14:27		
2540D Total Suspended Solids	Analytical Method: SM 2540D							
Total Suspended Solids	**1320**	mg/L	5.0	1		02/19/13 09:19		
4500S2D Sulfide, Total	Analytical Method: SM 4500-S-2 D							
Sulfide, Total	ND	mg/L	0.050	1		02/19/13 13:46	18496-25-8	
300.0 IC Anions 28 Days	Analytical Method: EPA 300.0							
Chloride	**1.1**	mg/L	1.0	1		02/21/13 01:58	16887-00-6	
Sulfate	**621**	mg/L	50.0	50		02/19/13 23:14	14808-79-8	
353.2 Nitrogen, NO2/NO3 pres.	Analytical Method: EPA 353.2							
Nitrogen, NO2 plus NO3	ND	mg/L	0.10	1		02/27/13 14:09		
4500CNE Cyanide, Total	Analytical Method: SM 4500-CN-E							
Cyanide	ND	mg/L	0.0050	1		02/20/13 13:35	57-12-5	
5310C TOC	Analytical Method: SM 5310C							
Total Organic Carbon	**1.6**	mg/L	0.50	1		02/20/13 18:20	7440-44-0	

This report shall not be reproduced, except in full,
without the written consent of Pace Analytical Services, Inc..

Pace Analytical Services, Inc.
9608 Loiret Blvd.
Lenexa, KS 66219
(913)599-5665

ANALYTICAL RESULTS

Project: February 2013 Rico Water Sampl
Pace Project No.: 60138913

Sample: DR-9_20130214 **Lab ID: 60138913007** Collected: 02/14/13 15:35 Received: 02/16/13 09:00 Matrix: Water

Parameters	Results	Units	Report Limit	DF	Prepared	Analyzed	CAS No.	Qual
200.7 Potentially Diss. Metals	Analytical Method: EPA 200.7 Preparation Method: EPA 200.7							
Calcium, Dissolved	**376000**	ug/L	100	1	02/20/13 14:45	02/28/13 14:40	7440-70-2	
Magnesium, Dissolved	**55700**	ug/L	50.0	1	02/20/13 14:45	02/28/13 14:40	7439-95-4	
Potassium, Dissolved	**13000**	ug/L	500	1	02/20/13 14:45	02/28/13 14:40	7440-09-7	
Sodium, Dissolved	**4200**	ug/L	500	1	02/20/13 14:45	02/28/13 14:40	7440-23-5	
200.8 MET ICPMS	Analytical Method: EPA 200.8 Preparation Method: EPA 200.8							
Aluminum	**60600**	ug/L	80.0	20	02/22/13 10:28	02/24/13 00:58	7429-90-5	
Antimony	**1.0**	ug/L	0.50	1	02/22/13 10:28	02/24/13 00:52	7440-36-0	
Arsenic	**214**	ug/L	0.50	1	02/22/13 10:28	02/24/13 00:52	7440-38-2	
Barium	**468**	ug/L	6.0	20	02/22/13 10:28	02/24/13 00:58	7440-39-3	
Beryllium	**4.1**	ug/L	0.20	1	02/22/13 10:28	02/24/13 00:52	7440-41-7	
Cadmium	**52.7**	ug/L	0.080	1	02/22/13 10:28	02/24/13 00:52	7440-43-9	
Calcium	**415000**	ug/L	400	20	02/22/13 10:28	02/24/13 00:58	7440-70-2	
Chromium	**55.2**	ug/L	0.50	1	02/22/13 10:28	02/24/13 00:52	7440-47-3	
Cobalt	**34.6**	ug/L	0.50	1	02/22/13 10:28	02/24/13 00:52	7440-48-4	
Copper	**320**	ug/L	0.50	1	02/22/13 10:28	02/24/13 00:52	7440-50-8	
Iron	**137000**	ug/L	1000	20	02/22/13 10:28	02/24/13 00:58	7439-89-6	
Lead	**607**	ug/L	2.0	20	02/22/13 10:28	02/24/13 00:58	7439-92-1	
Magnesium	**79900**	ug/L	100	20	02/22/13 10:28	02/24/13 00:58	7439-95-4	
Manganese	**9090**	ug/L	10.0	20	02/22/13 10:28	02/24/13 00:58	7439-96-5	
Molybdenum	**17.0**	ug/L	0.50	1	02/22/13 10:28	02/24/13 00:52	7439-98-7	
Nickel	**65.7**	ug/L	0.50	1	02/22/13 10:28	02/24/13 00:52	7440-02-0	
Potassium	**20100**	ug/L	20.0	1	02/22/13 10:28	02/24/13 00:52	7440-09-7	
Selenium	**11.3**	ug/L	0.50	1	02/22/13 10:28	02/24/13 00:52	7782-49-2	
Silica	**147000**	ug/L	2680	50	02/22/13 10:28	02/24/13 11:25	7631-86-9	
Silver	**2.7**	ug/L	0.50	1	02/22/13 10:28	02/24/13 11:19	7440-22-4	
Sodium	**4060**	ug/L	50.0	1	02/22/13 10:28	02/24/13 00:52	7440-23-5	
Thallium	**1.1**	ug/L	0.10	1	02/22/13 10:28	02/24/13 00:52	7440-28-0	
Total Hardness by 2340B	**1370000**	ug/L	1420	20	02/22/13 10:28	02/24/13 00:58		
Vanadium	**75.0**	ug/L	0.10	1	02/22/13 10:28	02/24/13 00:52	7440-62-2	
Zinc	**7610**	ug/L	100	20	02/22/13 10:28	02/24/13 00:58	7440-66-6	
200.8 MET ICPMS, Dissolved	Analytical Method: EPA 200.8 Preparation Method: EPA 200.8							
Aluminum, Dissolved	**1430**	ug/L	4.0	1	02/21/13 12:53	02/23/13 12:42	7429-90-5	
Antimony, Dissolved	ND	ug/L	0.50	1	02/21/13 12:53	02/23/13 12:42	7440-36-0	
Arsenic, Dissolved	**42.5**	ug/L	0.50	1	02/21/13 12:53	02/23/13 12:42	7440-38-2	
Barium, Dissolved	**22.5**	ug/L	0.30	1	02/21/13 12:53	02/23/13 12:42	7440-39-3	
Beryllium, Dissolved	**0.97**	ug/L	0.20	1	02/21/13 12:53	02/23/13 12:42	7440-41-7	
Cadmium, Dissolved	**0.55**	ug/L	0.080	1	02/21/13 12:53	02/23/13 12:42	7440-43-9	
Calcium, Dissolved	**428000**	ug/L	400	20	02/21/13 12:53	02/23/13 12:47	7440-70-2	
Chromium, Dissolved	**0.74**	ug/L	0.50	1	02/21/13 12:53	02/23/13 12:42	7440-47-3	
Cobalt, Dissolved	**4.8**	ug/L	0.50	1	02/21/13 12:53	02/23/13 12:42	7440-48-4	
Copper, Dissolved	**5.9**	ug/L	0.50	1	02/21/13 12:53	02/23/13 12:42	7440-50-8	
Iron, Dissolved	**56500**	ug/L	1000	20	02/21/13 12:53	02/23/13 12:47	7439-89-6	
Lead, Dissolved	**5.5**	ug/L	0.10	1	02/21/13 12:53	02/23/13 12:42	7439-92-1	
Magnesium, Dissolved	**57500**	ug/L	100	20	02/21/13 12:53	02/23/13 12:47	7439-95-4	

This report shall not be reproduced, except in full,
without the written consent of Pace Analytical Services, Inc..

Pace Analytical Services, Inc.
9608 Loiret Blvd.
Lenexa, KS 66219
(913)599-5665

ANALYTICAL RESULTS

Project: February 2013 Rico Water Sampl
Pace Project No.: 60138913

Sample: DR-9_20130214 **Lab ID: 60138913007** Collected: 02/14/13 15:35 Received: 02/16/13 09:00 Matrix: Water

Parameters	Results	Units	Report Limit	DF	Prepared	Analyzed	CAS No.	Qual
200.8 MET ICPMS, Dissolved	Analytical Method: EPA 200.8 Preparation Method: EPA 200.8							
Manganese, Dissolved	**8370**	ug/L	10.0	20	02/21/13 12:53	02/23/13 12:47	7439-96-5	
Molybdenum, Dissolved	**5.1**	ug/L	0.50	1	02/21/13 12:53	02/23/13 12:42	7439-98-7	
Nickel, Dissolved	**5.3**	ug/L	0.50	1	02/21/13 12:53	02/23/13 12:42	7440-02-0	
Potassium, Dissolved	**13200**	ug/L	20.0	1	02/21/13 12:53	02/23/13 12:42	7440-09-7	
Selenium, Dissolved	ND	ug/L	0.50	1	02/21/13 12:53	02/23/13 12:42	7782-49-2	
Silver, Dissolved	ND	ug/L	0.50	1	02/21/13 12:53	02/23/13 12:42	7440-22-4	
Sodium, Dissolved	**4080**	ug/L	50.0	1	02/21/13 12:53	02/23/13 12:42	7440-23-5	
Thallium, Dissolved	ND	ug/L	0.10	1	02/21/13 12:53	02/23/13 12:42	7440-28-0	
Vanadium, Dissolved	**1.0**	ug/L	0.10	1	02/21/13 12:53	02/23/13 12:42	7440-62-2	
Zinc, Dissolved	**729**	ug/L	100	20	02/21/13 12:53	02/23/13 12:47	7440-66-6	
200.8 Potentially Diss. Metals	Analytical Method: EPA 200.8 Preparation Method: EPA 200.8							
Aluminum, Dissolved	**19800**	ug/L	50.0	1	02/20/13 14:45	03/04/13 12:07	7429-90-5	
Antimony, Dissolved	**0.22J**	ug/L	1.0	1	02/20/13 14:45	03/04/13 12:07	7440-36-0	
Arsenic, Dissolved	**128**	ug/L	1.0	1	02/20/13 14:45	03/04/13 12:07	7440-38-2	
Barium, Dissolved	**31.0**	ug/L	1.0	1	02/20/13 14:45	03/04/13 12:07	7440-39-3	
Beryllium, Dissolved	**2.7**	ug/L	0.50	1	02/20/13 14:45	03/04/13 12:07	7440-41-7	
Cadmium, Dissolved	**58.7**	ug/L	0.50	1	02/20/13 14:45	03/04/13 12:07	7440-43-9	
Chromium, Dissolved	**15.7**	ug/L	1.0	1	02/20/13 14:45	03/04/13 12:07	7440-47-3	
Cobalt, Dissolved	**26.4**	ug/L	1.0	1	02/20/13 14:45	03/04/13 12:07	7440-48-4	
Copper, Dissolved	**219**	ug/L	1.0	1	02/20/13 14:45	03/04/13 12:07	7440-50-8	
Iron, Dissolved	**77900**	ug/L	50.0	1	02/20/13 14:45	03/04/13 12:07	7439-89-6	
Lead, Dissolved	**543**	ug/L	1.0	1	02/20/13 14:45	03/04/13 12:07	7439-92-1	
Manganese, Dissolved	**8610**	ug/L	100	100	02/20/13 14:45	03/04/13 12:12	7439-96-5	
Molybdenum, Dissolved	**3.1**	ug/L	1.0	1	02/20/13 14:45	03/04/13 12:07	7439-98-7	
Nickel, Dissolved	**37.2**	ug/L	1.0	1	02/20/13 14:45	03/04/13 12:07	7440-02-0	
Selenium, Dissolved	**7.9**	ug/L	1.0	1	02/20/13 14:45	03/04/13 12:07	7782-49-2	
Silver, Dissolved	ND	ug/L	0.50	1	02/20/13 14:45	03/04/13 12:07	7440-22-4	
Thallium, Dissolved	**0.64J**	ug/L	1.0	1	02/20/13 14:45	03/04/13 12:07	7440-28-0	
Vanadium, Dissolved	**24.2**	ug/L	1.0	1	02/20/13 14:45	03/04/13 12:07	7440-62-2	
Zinc, Dissolved	**8150**	ug/L	10.0	1	02/20/13 14:45	03/04/13 12:07	7440-66-6	
245.1 Mercury	Analytical Method: EPA 245.1 Preparation Method: EPA 245.1							
Mercury	ND	ug/L	0.20	1	02/21/13 14:42	02/27/13 16:11	7439-97-6	
245.1 Mercury, Dissolved	Analytical Method: EPA 245.1 Preparation Method: EPA 245.1							
Mercury, Dissolved	ND	ug/L	0.20	1	02/21/13 14:43	02/27/13 17:24	7439-97-6	
245.1 Potentially Diss Mercury	Analytical Method: EPA 245.1 Preparation Method: EPA 245.1							
Mercury, Dissolved	ND	ug/L	0.20	1	02/25/13 12:30	02/27/13 11:22	7439-97-6	
2510B Specific Conductance	Analytical Method: SM 2510B							
Specific Conductance	**2010**	umhos/cm	10.0	1		02/25/13 12:05		
Salinity	Analytical Method: Calculated							
Salinity (as dissolved solids)	**1290**	mg/L	6.4	1		02/25/13 16:50		

This report shall not be reproduced, except in full,
without the written consent of Pace Analytical Services, Inc..

Pace Analytical Services, Inc.
9608 Loiret Blvd.
Lenexa, KS 66219
(913)599-5665

ANALYTICAL RESULTS

Project: February 2013 Rico Water Sampl
Pace Project No.: 60138913

Sample: DR-9_20130214 **Lab ID: 60138913007** Collected: 02/14/13 15:35 Received: 02/16/13 09:00 Matrix: Water

Parameters	Results	Units	Report Limit	DF	Prepared	Analyzed	CAS No.	Qual
Salinity	Analytical Method: Calculated							
Salinity (as seawater)	**1.0**	PSU	0.014	1		02/25/13 16:50		
2320B Alkalinity	Analytical Method: SM 2320B							
Alkalinity,Bicarbonate (CaCO3)	**80.5**	mg/L	20.0	1		02/27/13 15:48		
Alkalinity, Carbonate (CaCO3)	ND	mg/L	20.0	1		02/27/13 15:48		
Alkalinity, Total as CaCO3	**80.5**	mg/L	20.0	1		02/27/13 15:48		
2540C Total Dissolved Solids	Analytical Method: SM 2540C							
Total Dissolved Solids	**1850**	mg/L	5.0	1		02/19/13 14:27		
2540D Total Suspended Solids	Analytical Method: SM 2540D							
Total Suspended Solids	**584**	mg/L	5.0	1		02/19/13 09:20		
4500S2D Sulfide, Total	Analytical Method: SM 4500-S-2 D							
Sulfide, Total	ND	mg/L	0.050	1		02/19/13 13:46	18496-25-8	M1
300.0 IC Anions 28 Days	Analytical Method: EPA 300.0							
Chloride	**1.5**	mg/L	1.0	1		02/21/13 03:27	16887-00-6	
Sulfate	**1180**	mg/L	100	100		02/21/13 02:16	14808-79-8	
353.2 Nitrogen, NO2/NO3 pres.	Analytical Method: EPA 353.2							
Nitrogen, NO2 plus NO3	**0.13**	mg/L	0.10	1		02/27/13 14:09		
4500CNE Cyanide, Total	Analytical Method: SM 4500-CN-E							
Cyanide	ND	mg/L	0.0050	1		02/20/13 13:35	57-12-5	
5310C TOC	Analytical Method: SM 5310C							
Total Organic Carbon	**1.7**	mg/L	0.50	1		02/20/13 18:38	7440-44-0	

This report shall not be reproduced, except in full,
without the written consent of Pace Analytical Services, Inc..

Pace Analytical Services, Inc.
9608 Loiret Blvd.
Lenexa, KS 66219
(913)599-5665

ANALYTICAL RESULTS

Project: February 2013 Rico Water Sampl
Pace Project No.: 60138913

Sample: MW-1 DEEP_20130214 **Lab ID: 60138913008** Collected: 02/14/13 16:20 Received: 02/16/13 09:00 Matrix: Water

Parameters	Results	Units	Report Limit	DF	Prepared	Analyzed	CAS No.	Qual
200.7 Potentially Diss. Metals	Analytical Method: EPA 200.7 Preparation Method: EPA 200.7							
Calcium, Dissolved	**220000**	ug/L	100	1	02/20/13 14:45	02/28/13 14:42	7440-70-2	
Magnesium, Dissolved	**20700**	ug/L	50.0	1	02/20/13 14:45	02/28/13 14:42	7439-95-4	
Potassium, Dissolved	**12500**	ug/L	500	1	02/20/13 14:45	02/28/13 14:42	7440-09-7	
Sodium, Dissolved	**11100**	ug/L	500	1	02/20/13 14:45	02/28/13 14:42	7440-23-5	
200.8 MET ICPMS	Analytical Method: EPA 200.8 Preparation Method: EPA 200.8							
Aluminum	**18900**	ug/L	4.0	1	02/22/13 10:28	02/24/13 01:18	7429-90-5	
Antimony	**0.86**	ug/L	0.50	1	02/22/13 10:28	02/24/13 01:18	7440-36-0	
Arsenic	**40.1**	ug/L	0.50	1	02/22/13 10:28	02/24/13 01:18	7440-38-2	
Barium	**290**	ug/L	0.30	1	02/22/13 10:28	02/24/13 01:18	7440-39-3	
Beryllium	**1.4**	ug/L	0.20	1	02/22/13 10:28	02/24/13 01:18	7440-41-7	
Cadmium	**19.7**	ug/L	0.080	1	02/22/13 10:28	02/24/13 01:18	7440-43-9	
Calcium	**245000**	ug/L	400	20	02/22/13 10:28	02/24/13 01:24	7440-70-2	
Chromium	**29.5**	ug/L	0.50	1	02/22/13 10:28	02/24/13 01:18	7440-47-3	
Cobalt	**10.5**	ug/L	0.50	1	02/22/13 10:28	02/24/13 01:18	7440-48-4	
Copper	**337**	ug/L	0.50	1	02/22/13 10:28	02/24/13 01:18	7440-50-8	
Iron	**34300**	ug/L	1000	20	02/22/13 10:28	02/24/13 01:24	7439-89-6	
Lead	**622**	ug/L	2.0	20	02/22/13 10:28	02/24/13 01:24	7439-92-1	
Magnesium	**30000**	ug/L	100	20	02/22/13 10:28	02/24/13 01:24	7439-95-4	
Manganese	**3850**	ug/L	10.0	20	02/22/13 10:28	02/24/13 01:24	7439-96-5	
Molybdenum	**19.7**	ug/L	0.50	1	02/22/13 10:28	02/24/13 01:18	7439-98-7	
Nickel	**21.6**	ug/L	0.50	1	02/22/13 10:28	02/24/13 01:18	7440-02-0	
Potassium	**16200**	ug/L	20.0	1	02/22/13 10:28	02/24/13 01:18	7440-09-7	
Selenium	**16.4**	ug/L	0.50	1	02/22/13 10:28	02/24/13 01:18	7782-49-2	
Silica	**77400**	ug/L	1070	20	02/22/13 10:28	02/24/13 01:24	7631-86-9	
Silver	**3.0**	ug/L	0.50	1	02/22/13 10:28	02/24/13 11:30	7440-22-4	
Sodium	**11900**	ug/L	50.0	1	02/22/13 10:28	02/24/13 01:18	7440-23-5	
Thallium	**0.54**	ug/L	0.10	1	02/22/13 10:28	02/24/13 01:18	7440-28-0	
Total Hardness by 2340B	**735000**	ug/L	1420	20	02/22/13 10:28	02/24/13 01:24		
Vanadium	**35.7**	ug/L	0.10	1	02/22/13 10:28	02/24/13 01:18	7440-62-2	
Zinc	**2680**	ug/L	100	20	02/22/13 10:28	02/24/13 01:24	7440-66-6	
200.8 MET ICPMS, Dissolved	Analytical Method: EPA 200.8 Preparation Method: EPA 200.8							
Aluminum, Dissolved	ND	ug/L	4.0	1	02/21/13 12:53	02/23/13 13:07	7429-90-5	
Antimony, Dissolved	ND	ug/L	0.50	1	02/21/13 12:53	02/23/13 13:07	7440-36-0	
Arsenic, Dissolved	ND	ug/L	0.50	1	02/21/13 12:53	02/23/13 13:07	7440-38-2	
Barium, Dissolved	**16.7**	ug/L	0.30	1	02/21/13 12:53	02/23/13 13:07	7440-39-3	
Beryllium, Dissolved	ND	ug/L	0.20	1	02/21/13 12:53	02/23/13 13:07	7440-41-7	
Cadmium, Dissolved	**2.0**	ug/L	0.080	1	02/21/13 12:53	02/23/13 13:07	7440-43-9	
Calcium, Dissolved	**252000**	ug/L	400	20	02/21/13 12:53	02/23/13 13:11	7440-70-2	
Chromium, Dissolved	ND	ug/L	0.50	1	02/21/13 12:53	02/23/13 13:07	7440-47-3	
Cobalt, Dissolved	ND	ug/L	0.50	1	02/21/13 12:53	02/23/13 13:07	7440-48-4	
Copper, Dissolved	**2.2**	ug/L	0.50	1	02/21/13 12:53	02/23/13 13:07	7440-50-8	
Iron, Dissolved	ND	ug/L	50.0	1	02/21/13 12:53	02/23/13 13:07	7439-89-6	
Lead, Dissolved	ND	ug/L	0.10	1	02/21/13 12:53	02/23/13 13:07	7439-92-1	
Magnesium, Dissolved	**19800**	ug/L	5.0	1	02/21/13 12:53	02/23/13 13:07	7439-95-4	

This report shall not be reproduced, except in full,
without the written consent of Pace Analytical Services, Inc..

Pace Analytical Services, Inc.
9608 Loiret Blvd.
Lenexa, KS 66219
(913)599-5665

ANALYTICAL RESULTS

Project: February 2013 Rico Water Sampl
Pace Project No.: 60138913

Sample: MW-1 DEEP_20130214 **Lab ID: 60138913008** Collected: 02/14/13 16:20 Received: 02/16/13 09:00 Matrix: Water

Parameters	Results	Units	Report Limit	DF	Prepared	Analyzed	CAS No.	Qual
200.8 MET ICPMS, Dissolved	Analytical Method: EPA 200.8 Preparation Method: EPA 200.8							
Manganese, Dissolved	**6.2**	ug/L	0.50	1	02/21/13 12:53	02/23/13 13:07	7439-96-5	
Molybdenum, Dissolved	**8.7**	ug/L	0.50	1	02/21/13 12:53	02/23/13 13:07	7439-98-7	
Nickel, Dissolved	**1.5**	ug/L	0.50	1	02/21/13 12:53	02/23/13 13:07	7440-02-0	
Potassium, Dissolved	**13400**	ug/L	20.0	1	02/21/13 12:53	02/23/13 13:07	7440-09-7	
Selenium, Dissolved	**9.2**	ug/L	0.50	1	02/21/13 12:53	02/23/13 13:07	7782-49-2	
Silver, Dissolved	ND	ug/L	0.50	1	02/21/13 12:53	02/23/13 13:07	7440-22-4	
Sodium, Dissolved	**12400**	ug/L	50.0	1	02/21/13 12:53	02/23/13 13:07	7440-23-5	
Thallium, Dissolved	ND	ug/L	0.10	1	02/21/13 12:53	02/23/13 13:07	7440-28-0	
Vanadium, Dissolved	ND	ug/L	0.10	1	02/21/13 12:53	02/23/13 13:07	7440-62-2	
Zinc, Dissolved	**435**	ug/L	5.0	1	02/21/13 12:53	02/23/13 13:07	7440-66-6	
200.8 Potentially Diss. Metals	Analytical Method: EPA 200.8 Preparation Method: EPA 200.8							
Aluminum, Dissolved	**4430**	ug/L	50.0	1	02/20/13 14:45	03/04/13 12:16	7429-90-5	
Antimony, Dissolved	**0.33J**	ug/L	1.0	1	02/20/13 14:45	03/04/13 12:16	7440-36-0	
Arsenic, Dissolved	**11.6**	ug/L	1.0	1	02/20/13 14:45	03/04/13 12:16	7440-38-2	
Barium, Dissolved	**47.4**	ug/L	1.0	1	02/20/13 14:45	03/04/13 12:16	7440-39-3	
Beryllium, Dissolved	**0.80**	ug/L	0.50	1	02/20/13 14:45	03/04/13 12:16	7440-41-7	
Cadmium, Dissolved	**18.8**	ug/L	0.50	1	02/20/13 14:45	03/04/13 12:16	7440-43-9	
Chromium, Dissolved	**11.3**	ug/L	1.0	1	02/20/13 14:45	03/04/13 12:16	7440-47-3	
Cobalt, Dissolved	**4.9**	ug/L	1.0	1	02/20/13 14:45	03/04/13 12:16	7440-48-4	
Copper, Dissolved	**263**	ug/L	1.0	1	02/20/13 14:45	03/04/13 12:16	7440-50-8	
Iron, Dissolved	**9560**	ug/L	50.0	1	02/20/13 14:45	03/04/13 12:16	7439-89-6	
Lead, Dissolved	**428**	ug/L	1.0	1	02/20/13 14:45	03/04/13 12:16	7439-92-1	
Manganese, Dissolved	**2640**	ug/L	1.0	1	02/20/13 14:45	03/04/13 12:16	7439-96-5	
Molybdenum, Dissolved	**2.6**	ug/L	1.0	1	02/20/13 14:45	03/04/13 12:16	7439-98-7	
Nickel, Dissolved	**7.5**	ug/L	1.0	1	02/20/13 14:45	03/04/13 12:16	7440-02-0	
Selenium, Dissolved	**12.0**	ug/L	1.0	1	02/20/13 14:45	03/04/13 12:16	7782-49-2	
Silver, Dissolved	**1.3**	ug/L	0.50	1	02/20/13 14:45	03/04/13 12:16	7440-22-4	
Thallium, Dissolved	**0.18J**	ug/L	1.0	1	02/20/13 14:45	03/04/13 12:16	7440-28-0	
Vanadium, Dissolved	**9.7**	ug/L	1.0	1	02/20/13 14:45	03/04/13 12:16	7440-62-2	
Zinc, Dissolved	**2300**	ug/L	10.0	1	02/20/13 14:45	03/04/13 12:16	7440-66-6	
245.1 Mercury	Analytical Method: EPA 245.1 Preparation Method: EPA 245.1							
Mercury	ND	ug/L	0.20	1	02/21/13 14:42	02/27/13 16:14	7439-97-6	
245.1 Mercury, Dissolved	Analytical Method: EPA 245.1 Preparation Method: EPA 245.1							
Mercury, Dissolved	ND	ug/L	0.20	1	02/21/13 14:46	02/27/13 17:26	7439-97-6	
245.1 Potentially Diss Mercury	Analytical Method: EPA 245.1 Preparation Method: EPA 245.1							
Mercury, Dissolved	ND	ug/L	0.20	1	02/25/13 12:30	02/27/13 11:24	7439-97-6	
2510B Specific Conductance	Analytical Method: SM 2510B							
Specific Conductance	**1330**	umhos/cm	10.0	1		02/25/13 12:07		
Salinity	Analytical Method: Calculated							
Salinity (as dissolved solids)	**849**	mg/L	6.4	1		02/25/13 16:50		

This report shall not be reproduced, except in full,
without the written consent of Pace Analytical Services, Inc..

Pace Analytical Services, Inc.
9608 Loiret Blvd.
Lenexa, KS 66219
(913)599-5665

ANALYTICAL RESULTS

Project: February 2013 Rico Water Sampl
Pace Project No.: 60138913

Sample: MW-1 DEEP_20130214 **Lab ID: 60138913008** Collected: 02/14/13 16:20 Received: 02/16/13 09:00 Matrix: Water

Parameters	Results	Units	Report Limit	DF	Prepared	Analyzed	CAS No.	Qual
Salinity	Analytical Method: Calculated							
Salinity (as seawater)	**0.66**	PSU	0.014	1		02/25/13 16:50		
2320B Alkalinity	Analytical Method: SM 2320B							
Alkalinity,Bicarbonate (CaCO3)	**90.4**	mg/L	20.0	1		02/27/13 15:52		
Alkalinity, Carbonate (CaCO3)	ND	mg/L	20.0	1		02/27/13 15:52		
Alkalinity, Total as CaCO3	**90.4**	mg/L	20.0	1		02/27/13 15:52		
2540C Total Dissolved Solids	Analytical Method: SM 2540C							
Total Dissolved Solids	**1030**	mg/L	5.0	1		02/19/13 14:27		
2540D Total Suspended Solids	Analytical Method: SM 2540D							
Total Suspended Solids	**804**	mg/L	5.0	1		02/19/13 09:20		
4500S2D Sulfide, Total	Analytical Method: SM 4500-S-2 D							
Sulfide, Total	ND	mg/L	0.050	1		02/19/13 13:46	18496-25-8	
300.0 IC Anions 28 Days	Analytical Method: EPA 300.0							
Chloride	ND	mg/L	1.0	1		02/21/13 03:45	16887-00-6	
Sulfate	**562**	mg/L	50.0	50		02/20/13 01:00	14808-79-8	
353.2 Nitrogen, NO2/NO3 pres.	Analytical Method: EPA 353.2							
Nitrogen, NO2 plus NO3	ND	mg/L	0.10	1		02/27/13 14:10		
4500CNE Cyanide, Total	Analytical Method: SM 4500-CN-E							
Cyanide	ND	mg/L	0.0050	1		02/20/13 13:38	57-12-5	
5310C TOC	Analytical Method: SM 5310C							
Total Organic Carbon	**0.58**	mg/L	0.50	1		02/20/13 18:56	7440-44-0	

This report shall not be reproduced, except in full,
without the written consent of Pace Analytical Services, Inc..

Pace Analytical Services, Inc.
9608 Loiret Blvd.
Lenexa, KS 66219
(913)599-5665

ANALYTICAL RESULTS

Project: February 2013 Rico Water Sampl
Pace Project No.: 60138913

Sample: MW-1 SHALLOW_20130214 **Lab ID: 60138913009** Collected: 02/14/13 16:22 Received: 02/16/13 09:00 Matrix: Water

Parameters	Results	Units	Report Limit	DF	Prepared	Analyzed	CAS No.	Qual
200.7 Potentially Diss. Metals	Analytical Method: EPA 200.7 Preparation Method: EPA 200.7							
Calcium, Dissolved	**221000**	ug/L	100	1	02/20/13 14:45	02/28/13 14:45	7440-70-2	
Magnesium, Dissolved	**21700**	ug/L	50.0	1	02/20/13 14:45	02/28/13 14:45	7439-95-4	
Potassium, Dissolved	**5680**	ug/L	500	1	02/20/13 14:45	02/28/13 14:45	7440-09-7	
Sodium, Dissolved	**11000**	ug/L	500	1	02/20/13 14:45	02/28/13 14:45	7440-23-5	
200.8 MET ICPMS	Analytical Method: EPA 200.8 Preparation Method: EPA 200.8							
Aluminum	**27500**	ug/L	80.0	20	02/22/13 10:28	02/24/13 01:35	7429-90-5	
Antimony	**0.90**	ug/L	0.50	1	02/22/13 10:28	02/24/13 01:29	7440-36-0	
Arsenic	**46.9**	ug/L	0.50	1	02/22/13 10:28	02/24/13 01:29	7440-38-2	
Barium	**416**	ug/L	0.30	1	02/22/13 10:28	02/24/13 01:29	7440-39-3	
Beryllium	**2.0**	ug/L	0.20	1	02/22/13 10:28	02/24/13 01:29	7440-41-7	
Cadmium	**2.9**	ug/L	0.080	1	02/22/13 10:28	02/24/13 01:29	7440-43-9	
Calcium	**248000**	ug/L	400	20	02/22/13 10:28	02/24/13 01:35	7440-70-2	
Chromium	**34.6**	ug/L	0.50	1	02/22/13 10:28	02/24/13 01:29	7440-47-3	
Cobalt	**15.4**	ug/L	0.50	1	02/22/13 10:28	02/24/13 01:29	7440-48-4	
Copper	**168**	ug/L	0.50	1	02/22/13 10:28	02/24/13 01:29	7440-50-8	
Iron	**48500**	ug/L	1000	20	02/22/13 10:28	02/24/13 01:35	7439-89-6	
Lead	**435**	ug/L	0.10	1	02/22/13 10:28	02/24/13 01:29	7439-92-1	
Magnesium	**36400**	ug/L	100	20	02/22/13 10:28	02/24/13 01:35	7439-95-4	
Manganese	**1710**	ug/L	10.0	20	02/22/13 10:28	02/24/13 01:35	7439-96-5	
Molybdenum	**16.2**	ug/L	0.50	1	02/22/13 10:28	02/24/13 01:29	7439-98-7	
Nickel	**27.8**	ug/L	0.50	1	02/22/13 10:28	02/24/13 01:29	7440-02-0	
Potassium	**9650**	ug/L	20.0	1	02/22/13 10:28	02/24/13 01:29	7440-09-7	
Selenium	**18.6**	ug/L	0.50	1	02/22/13 10:28	02/24/13 01:29	7782-49-2	
Silica	**99800**	ug/L	2680	50	02/22/13 10:28	02/24/13 11:42	7631-86-9	
Silver	**3.6**	ug/L	0.50	1	02/22/13 10:28	02/24/13 11:36	7440-22-4	
Sodium	**10800**	ug/L	50.0	1	02/22/13 10:28	02/24/13 01:29	7440-23-5	
Thallium	**0.81**	ug/L	0.10	1	02/22/13 10:28	02/24/13 01:29	7440-28-0	
Total Hardness by 2340B	**769000**	ug/L	1420	20	02/22/13 10:28	02/24/13 01:35		
Vanadium	**44.8**	ug/L	0.10	1	02/22/13 10:28	02/24/13 01:29	7440-62-2	
Zinc	**641**	ug/L	100	20	02/22/13 10:28	02/24/13 01:35	7440-66-6	
200.8 MET ICPMS, Dissolved	Analytical Method: EPA 200.8 Preparation Method: EPA 200.8							
Aluminum, Dissolved	**5680**	ug/L	4.0	1	02/21/13 12:53	02/23/13 13:16	7429-90-5	
Antimony, Dissolved	ND	ug/L	0.50	1	02/21/13 12:53	02/23/13 13:16	7440-36-0	
Arsenic, Dissolved	**9.2**	ug/L	0.50	1	02/21/13 12:53	02/23/13 13:16	7440-38-2	
Barium, Dissolved	**88.3**	ug/L	0.30	1	02/21/13 12:53	02/23/13 13:16	7440-39-3	
Beryllium, Dissolved	**0.45**	ug/L	0.20	1	02/21/13 12:53	02/23/13 13:16	7440-41-7	
Cadmium, Dissolved	**0.82**	ug/L	0.080	1	02/21/13 12:53	02/23/13 13:16	7440-43-9	
Calcium, Dissolved	**256000**	ug/L	400	20	02/21/13 12:53	02/23/13 13:22	7440-70-2	
Chromium, Dissolved	**6.9**	ug/L	0.50	1	02/21/13 12:53	02/23/13 13:16	7440-47-3	
Cobalt, Dissolved	**3.2**	ug/L	0.50	1	02/21/13 12:53	02/23/13 13:16	7440-48-4	
Copper, Dissolved	**35.2**	ug/L	0.50	1	02/21/13 12:53	02/23/13 13:16	7440-50-8	
Iron, Dissolved	**9000**	ug/L	50.0	1	02/21/13 12:53	02/23/13 13:16	7439-89-6	
Lead, Dissolved	**94.2**	ug/L	0.10	1	02/21/13 12:53	02/23/13 13:16	7439-92-1	
Magnesium, Dissolved	**24400**	ug/L	100	20	02/21/13 12:53	02/23/13 13:22	7439-95-4	

This report shall not be reproduced, except in full,
without the written consent of Pace Analytical Services, Inc..

Pace Analytical Services, Inc.
9608 Loiret Blvd.
Lenexa, KS 66219
(913)599-5665

ANALYTICAL RESULTS

Project: February 2013 Rico Water Sampl
Pace Project No.: 60138913

Sample: MW-1 SHALLOW_20130214 **Lab ID: 60138913009** Collected: 02/14/13 16:22 Received: 02/16/13 09:00 Matrix: Water

Parameters	Results	Units	Report Limit	DF	Prepared	Analyzed	CAS No.	Qual
200.8 MET ICPMS, Dissolved	Analytical Method: EPA 200.8 Preparation Method: EPA 200.8							
Manganese, Dissolved	**283**	ug/L	0.50	1	02/21/13 12:53	02/23/13 13:16	7439-96-5	
Molybdenum, Dissolved	**7.8**	ug/L	0.50	1	02/21/13 12:53	02/23/13 13:16	7439-98-7	
Nickel, Dissolved	**8.9**	ug/L	0.50	1	02/21/13 12:53	02/23/13 13:16	7440-02-0	
Potassium, Dissolved	**6520**	ug/L	20.0	1	02/21/13 12:53	02/23/13 13:16	7440-09-7	
Selenium, Dissolved	**8.9**	ug/L	0.50	1	02/21/13 12:53	02/23/13 13:16	7782-49-2	
Silver, Dissolved	ND	ug/L	0.50	1	02/21/13 12:53	02/23/13 13:16	7440-22-4	
Sodium, Dissolved	**12200**	ug/L	50.0	1	02/21/13 12:53	02/23/13 13:16	7440-23-5	
Thallium, Dissolved	**0.22**	ug/L	0.10	1	02/21/13 12:53	02/23/13 13:16	7440-28-0	
Vanadium, Dissolved	**9.6**	ug/L	0.10	1	02/21/13 12:53	02/23/13 13:16	7440-62-2	
Zinc, Dissolved	**174**	ug/L	5.0	1	02/21/13 12:53	02/23/13 13:16	7440-66-6	
200.8 Potentially Diss. Metals	Analytical Method: EPA 200.8 Preparation Method: EPA 200.8							
Aluminum, Dissolved	**4640**	ug/L	50.0	1	02/20/13 14:45	03/04/13 12:20	7429-90-5	
Antimony, Dissolved	**0.24J**	ug/L	1.0	1	02/20/13 14:45	03/04/13 12:20	7440-36-0	
Arsenic, Dissolved	**5.2**	ug/L	1.0	1	02/20/13 14:45	03/04/13 12:20	7440-38-2	
Barium, Dissolved	**49.1**	ug/L	1.0	1	02/20/13 14:45	03/04/13 12:20	7440-39-3	
Beryllium, Dissolved	**1.0**	ug/L	0.50	1	02/20/13 14:45	03/04/13 12:20	7440-41-7	
Cadmium, Dissolved	**2.7**	ug/L	0.50	1	02/20/13 14:45	03/04/13 12:20	7440-43-9	
Chromium, Dissolved	**7.0**	ug/L	1.0	1	02/20/13 14:45	03/04/13 12:20	7440-47-3	
Cobalt, Dissolved	**7.6**	ug/L	1.0	1	02/20/13 14:45	03/04/13 12:20	7440-48-4	
Copper, Dissolved	**73.2**	ug/L	1.0	1	02/20/13 14:45	03/04/13 12:20	7440-50-8	
Iron, Dissolved	**8250**	ug/L	50.0	1	02/20/13 14:45	03/04/13 12:20	7439-89-6	
Lead, Dissolved	**274**	ug/L	1.0	1	02/20/13 14:45	03/04/13 12:20	7439-92-1	
Manganese, Dissolved	**1270**	ug/L	1.0	1	02/20/13 14:45	03/04/13 12:20	7439-96-5	
Molybdenum, Dissolved	**2.3**	ug/L	1.0	1	02/20/13 14:45	03/04/13 12:20	7439-98-7	
Nickel, Dissolved	**7.1**	ug/L	1.0	1	02/20/13 14:45	03/04/13 12:20	7440-02-0	
Selenium, Dissolved	**9.3**	ug/L	1.0	1	02/20/13 14:45	03/04/13 12:20	7782-49-2	
Silver, Dissolved	**2.0**	ug/L	0.50	1	02/20/13 14:45	03/04/13 12:20	7440-22-4	
Thallium, Dissolved	**0.18J**	ug/L	1.0	1	02/20/13 14:45	03/04/13 12:20	7440-28-0	
Vanadium, Dissolved	**8.2**	ug/L	1.0	1	02/20/13 14:45	03/04/13 12:20	7440-62-2	
Zinc, Dissolved	**380**	ug/L	10.0	1	02/20/13 14:45	03/04/13 12:20	7440-66-6	
245.1 Mercury	Analytical Method: EPA 245.1 Preparation Method: EPA 245.1							
Mercury	ND	ug/L	0.20	1	02/21/13 14:42	02/27/13 16:16	7439-97-6	
245.1 Mercury, Dissolved	Analytical Method: EPA 245.1 Preparation Method: EPA 245.1							
Mercury, Dissolved	ND	ug/L	0.20	1	02/21/13 14:43	02/27/13 17:29	7439-97-6	
245.1 Potentially Diss Mercury	Analytical Method: EPA 245.1 Preparation Method: EPA 245.1							
Mercury, Dissolved	ND	ug/L	0.20	1	02/25/13 12:30	02/27/13 11:26	7439-97-6	
2510B Specific Conductance	Analytical Method: SM 2510B							
Specific Conductance	**1240**	umhos/cm	10.0	1		02/25/13 12:08		

This report shall not be reproduced, except in full,
without the written consent of Pace Analytical Services, Inc..

Pace Analytical Services, Inc.
9608 Loiret Blvd.
Lenexa, KS 66219
(913)599-5665

ANALYTICAL RESULTS

Project: February 2013 Rico Water Sampl
Pace Project No.: 60138913

Sample: MW-1 SHALLOW_20130214 **Lab ID: 60138913009** Collected: 02/14/13 16:22 Received: 02/16/13 09:00 Matrix: Water

Parameters	Results	Units	Report Limit	DF	Prepared	Analyzed	CAS No.	Qual
Salinity	Analytical Method: Calculated							
Salinity (as dissolved solids)	**792**	mg/L	6.4	1		02/25/13 16:50		
Salinity (as seawater)	**0.62**	PSU	0.014	1		02/25/13 16:50		
2320B Alkalinity	Analytical Method: SM 2320B							
Alkalinity,Bicarbonate (CaCO3)	**81.1**	mg/L	20.0	1		02/27/13 16:00		
Alkalinity, Carbonate (CaCO3)	ND	mg/L	20.0	1		02/27/13 16:00		
Alkalinity, Total as CaCO3	**81.1**	mg/L	20.0	1		02/27/13 16:00		
2540C Total Dissolved Solids	Analytical Method: SM 2540C							
Total Dissolved Solids	**1020**	mg/L	5.0	1		02/19/13 14:28		
2540D Total Suspended Solids	Analytical Method: SM 2540D							
Total Suspended Solids	**384**	mg/L	5.0	1		02/19/13 09:20		
4500S2D Sulfide, Total	Analytical Method: SM 4500-S-2 D							
Sulfide, Total	ND	mg/L	0.050	1		02/19/13 13:46	18496-25-8	
300.0 IC Anions 28 Days	Analytical Method: EPA 300.0							
Chloride	ND	mg/L	1.0	1		02/21/13 04:02	16887-00-6	
Sulfate	**559**	mg/L	50.0	50		02/20/13 01:36	14808-79-8	
353.2 Nitrogen, NO2/NO3 pres.	Analytical Method: EPA 353.2							
Nitrogen, NO2 plus NO3	ND	mg/L	0.10	1		02/27/13 14:11		
4500CNE Cyanide, Total	Analytical Method: SM 4500-CN-E							
Cyanide	ND	mg/L	0.0050	1		02/20/13 13:38	57-12-5	
5310C TOC	Analytical Method: SM 5310C							
Total Organic Carbon	**0.86**	mg/L	0.50	1		02/20/13 19:14	7440-44-0	

This report shall not be reproduced, except in full,
without the written consent of Pace Analytical Services, Inc..

Pace Analytical Services, Inc.
9608 Loiret Blvd.
Lenexa, KS 66219
(913)599-5665

ANALYTICAL RESULTS

Project: February 2013 Rico Water Sampl
Pace Project No.: 60138913

Sample: MW-104_20130214 **Lab ID: 60138913010** Collected: 02/14/13 15:54 Received: 02/16/13 09:00 Matrix: Water

Parameters	Results	Units	Report Limit	DF	Prepared	Analyzed	CAS No.	Qual
200.7 Potentially Diss. Metals	Analytical Method: EPA 200.7 Preparation Method: EPA 200.7							
Calcium, Dissolved	**237000**	ug/L	100	1	02/20/13 14:45	02/28/13 14:47	7440-70-2	M1
Magnesium, Dissolved	**23200**	ug/L	50.0	1	02/20/13 14:45	02/28/13 14:47	7439-95-4	
Potassium, Dissolved	**13200**	ug/L	500	1	02/20/13 14:45	02/28/13 14:47	7440-09-7	
Sodium, Dissolved	**14000**	ug/L	500	1	02/20/13 14:45	02/28/13 14:47	7440-23-5	
200.8 MET ICPMS	Analytical Method: EPA 200.8 Preparation Method: EPA 200.8							
Aluminum	**4710**	ug/L	4.0	1	02/22/13 10:28	02/24/13 01:39	7429-90-5	
Antimony	ND	ug/L	0.50	1	02/22/13 10:28	02/24/13 01:39	7440-36-0	
Arsenic	**5.2**	ug/L	0.50	1	02/22/13 10:28	02/24/13 01:39	7440-38-2	
Barium	**137**	ug/L	0.30	1	02/22/13 10:28	02/24/13 01:39	7440-39-3	
Beryllium	**0.33**	ug/L	0.20	1	02/22/13 10:28	02/24/13 01:39	7440-41-7	
Cadmium	**3.9**	ug/L	0.080	1	02/22/13 10:28	02/24/13 01:39	7440-43-9	
Calcium	**256000**	ug/L	400	20	02/22/13 10:28	02/24/13 01:44	7440-70-2	
Chromium	**7.7**	ug/L	0.50	1	02/22/13 10:28	02/24/13 01:39	7440-47-3	
Cobalt	**3.8**	ug/L	0.50	1	02/22/13 10:28	02/24/13 01:39	7440-48-4	
Copper	**28.1**	ug/L	0.50	1	02/22/13 10:28	02/24/13 01:39	7440-50-8	
Iron	**7600**	ug/L	50.0	1	02/22/13 10:28	02/24/13 01:39	7439-89-6	
Lead	**35.5**	ug/L	0.10	1	02/22/13 10:28	02/24/13 01:39	7439-92-1	
Magnesium	**26000**	ug/L	100	20	02/22/13 10:28	02/24/13 01:44	7439-95-4	
Manganese	**1570**	ug/L	10.0	20	02/22/13 10:28	02/24/13 01:44	7439-96-5	
Molybdenum	**15.2**	ug/L	0.50	1	02/22/13 10:28	02/24/13 01:39	7439-98-7	
Nickel	**6.6**	ug/L	0.50	1	02/22/13 10:28	02/24/13 01:39	7440-02-0	
Potassium	**15100**	ug/L	20.0	1	02/22/13 10:28	02/24/13 01:39	7440-09-7	
Selenium	**1.7**	ug/L	0.50	1	02/22/13 10:28	02/24/13 01:39	7782-49-2	
Silica	**30900**	ug/L	1070	20	02/22/13 10:28	02/24/13 01:44	7631-86-9	
Silver	ND	ug/L	0.50	1	02/22/13 10:28	02/24/13 11:47	7440-22-4	
Sodium	**15400**	ug/L	50.0	1	02/22/13 10:28	02/24/13 01:39	7440-23-5	
Thallium	**0.12**	ug/L	0.10	1	02/22/13 10:28	02/24/13 01:39	7440-28-0	
Total Hardness by 2340B	**747000**	ug/L	1420	20	02/22/13 10:28	02/24/13 01:44		
Vanadium	**10**	ug/L	0.10	1	02/22/13 10:28	02/24/13 01:39	7440-62-2	
Zinc	**1110**	ug/L	100	20	02/22/13 10:28	02/24/13 01:44	7440-66-6	
200.8 MET ICPMS, Dissolved	Analytical Method: EPA 200.8 Preparation Method: EPA 200.8							
Aluminum, Dissolved	**10.0**	ug/L	4.0	1	02/21/13 12:53	02/23/13 13:26	7429-90-5	
Antimony, Dissolved	ND	ug/L	0.50	1	02/21/13 12:53	02/23/13 13:26	7440-36-0	
Arsenic, Dissolved	ND	ug/L	0.50	1	02/21/13 12:53	02/23/13 13:26	7440-38-2	
Barium, Dissolved	**17.3**	ug/L	0.30	1	02/21/13 12:53	02/23/13 13:26	7440-39-3	
Beryllium, Dissolved	ND	ug/L	0.20	1	02/21/13 12:53	02/23/13 13:26	7440-41-7	
Cadmium, Dissolved	**2.1**	ug/L	0.080	1	02/21/13 12:53	02/23/13 13:26	7440-43-9	
Calcium, Dissolved	**276000**	ug/L	400	20	02/21/13 12:53	02/23/13 13:31	7440-70-2	
Chromium, Dissolved	ND	ug/L	0.50	1	02/21/13 12:53	02/23/13 13:26	7440-47-3	
Cobalt, Dissolved	ND	ug/L	0.50	1	02/21/13 12:53	02/23/13 13:26	7440-48-4	
Copper, Dissolved	**2.4**	ug/L	0.50	1	02/21/13 12:53	02/23/13 13:26	7440-50-8	
Iron, Dissolved	ND	ug/L	50.0	1	02/21/13 12:53	02/23/13 13:26	7439-89-6	
Lead, Dissolved	**0.16**	ug/L	0.10	1	02/21/13 12:53	02/23/13 13:26	7439-92-1	
Magnesium, Dissolved	**25000**	ug/L	100	20	02/21/13 12:53	02/23/13 13:31	7439-95-4	

This report shall not be reproduced, except in full,
without the written consent of Pace Analytical Services, Inc..

Pace Analytical Services, Inc.
9608 Loiret Blvd.
Lenexa, KS 66219
(913)599-5665

ANALYTICAL RESULTS

Project: February 2013 Rico Water Sampl
Pace Project No.: 60138913

Sample: MW-104_20130214 **Lab ID: 60138913010** Collected: 02/14/13 15:54 Received: 02/16/13 09:00 Matrix: Water

Parameters	Results	Units	Report Limit	DF	Prepared	Analyzed	CAS No.	Qual
200.8 MET ICPMS, Dissolved	Analytical Method: EPA 200.8 Preparation Method: EPA 200.8							
Manganese, Dissolved	**33.2**	ug/L	0.50	1	02/21/13 12:53	02/23/13 13:26	7439-96-5	
Molybdenum, Dissolved	**8.9**	ug/L	0.50	1	02/21/13 12:53	02/23/13 13:26	7439-98-7	
Nickel, Dissolved	**3.8**	ug/L	0.50	1	02/21/13 12:53	02/23/13 13:26	7440-02-0	
Potassium, Dissolved	**14300**	ug/L	20.0	1	02/21/13 12:53	02/23/13 13:26	7440-09-7	
Selenium, Dissolved	**1.4**	ug/L	0.50	1	02/21/13 12:53	02/23/13 13:26	7782-49-2	
Silver, Dissolved	ND	ug/L	0.50	1	02/21/13 12:53	02/23/13 13:26	7440-22-4	
Sodium, Dissolved	**15200**	ug/L	50.0	1	02/21/13 12:53	02/23/13 13:26	7440-23-5	
Thallium, Dissolved	ND	ug/L	0.10	1	02/21/13 12:53	02/23/13 13:26	7440-28-0	
Vanadium, Dissolved	ND	ug/L	0.10	1	02/21/13 12:53	02/23/13 13:26	7440-62-2	
Zinc, Dissolved	**763**	ug/L	100	20	02/21/13 12:53	02/23/13 13:31	7440-66-6	
200.8 Potentially Diss. Metals	Analytical Method: EPA 200.8 Preparation Method: EPA 200.8							
Aluminum, Dissolved	**1130**	ug/L	50.0	1	02/20/13 14:45	03/04/13 12:24	7429-90-5	
Antimony, Dissolved	**0.18J**	ug/L	1.0	1	02/20/13 14:45	03/04/13 12:24	7440-36-0	
Arsenic, Dissolved	**1.6**	ug/L	1.0	1	02/20/13 14:45	03/04/13 12:24	7440-38-2	
Barium, Dissolved	**46.2**	ug/L	1.0	1	02/20/13 14:45	03/04/13 12:24	7440-39-3	
Beryllium, Dissolved	**0.14J**	ug/L	0.50	1	02/20/13 14:45	03/04/13 12:24	7440-41-7	
Cadmium, Dissolved	**3.3**	ug/L	0.50	1	02/20/13 14:45	03/04/13 12:24	7440-43-9	
Chromium, Dissolved	**3.4**	ug/L	1.0	1	02/20/13 14:45	03/04/13 12:24	7440-47-3	B
Cobalt, Dissolved	**1.6**	ug/L	1.0	1	02/20/13 14:45	03/04/13 12:24	7440-48-4	
Copper, Dissolved	**13.5**	ug/L	1.0	1	02/20/13 14:45	03/04/13 12:24	7440-50-8	
Iron, Dissolved	**2650**	ug/L	50.0	1	02/20/13 14:45	03/04/13 12:24	7439-89-6	
Lead, Dissolved	**23.9**	ug/L	1.0	1	02/20/13 14:45	03/04/13 12:24	7439-92-1	
Manganese, Dissolved	**755**	ug/L	1.0	1	02/20/13 14:45	03/04/13 12:24	7439-96-5	
Molybdenum, Dissolved	**3.5**	ug/L	1.0	1	02/20/13 14:45	03/04/13 12:24	7439-98-7	
Nickel, Dissolved	**2.0**	ug/L	1.0	1	02/20/13 14:45	03/04/13 12:24	7440-02-0	
Selenium, Dissolved	**1.7**	ug/L	1.0	1	02/20/13 14:45	03/04/13 12:24	7782-49-2	
Silver, Dissolved	**0.21J**	ug/L	0.50	1	02/20/13 14:45	03/04/13 12:24	7440-22-4	
Thallium, Dissolved	ND	ug/L	1.0	1	02/20/13 14:45	03/04/13 12:24	7440-28-0	
Vanadium, Dissolved	**2.6**	ug/L	1.0	1	02/20/13 14:45	03/04/13 12:24	7440-62-2	
Zinc, Dissolved	**927**	ug/L	10.0	1	02/20/13 14:45	03/04/13 12:24	7440-66-6	
245.1 Mercury	Analytical Method: EPA 245.1 Preparation Method: EPA 245.1							
Mercury	ND	ug/L	0.20	1	02/21/13 14:42	02/27/13 16:19	7439-97-6	
245.1 Mercury, Dissolved	Analytical Method: EPA 245.1 Preparation Method: EPA 245.1							
Mercury, Dissolved	ND	ug/L	0.20	1	02/21/13 14:46	02/27/13 17:31	7439-97-6	
245.1 Potentially Diss Mercury	Analytical Method: EPA 245.1 Preparation Method: EPA 245.1							
Mercury, Dissolved	ND	ug/L	0.20	1	02/25/13 12:30	02/27/13 11:28	7439-97-6	
2510B Specific Conductance	Analytical Method: SM 2510B							
Specific Conductance	**1400**	umhos/cm	10.0	1		02/25/13 12:09		
Salinity	Analytical Method: Calculated							
Salinity (as dissolved solids)	**893**	mg/L	6.4	1		02/25/13 16:50		

This report shall not be reproduced, except in full,
without the written consent of Pace Analytical Services, Inc..

Pace Analytical Services, Inc.
9608 Loiret Blvd.
Lenexa, KS 66219
(913)599-5665

ANALYTICAL RESULTS

Project: February 2013 Rico Water Sampl
Pace Project No.: 60138913

Sample: MW-104_20130214 **Lab ID: 60138913010** Collected: 02/14/13 15:54 Received: 02/16/13 09:00 Matrix: Water

Parameters	Results	Units	Report Limit	DF	Prepared	Analyzed	CAS No.	Qual
Salinity	Analytical Method: Calculated							
Salinity (as seawater)	**0.70**	PSU	0.014	1		02/25/13 16:50		
2320B Alkalinity	Analytical Method: SM 2320B							
Alkalinity,Bicarbonate (CaCO3)	**126**	mg/L	20.0	1		02/27/13 16:08		
Alkalinity, Carbonate (CaCO3)	ND	mg/L	20.0	1		02/27/13 16:08		
Alkalinity, Total as CaCO3	**126**	mg/L	20.0	1		02/27/13 16:08		
2540C Total Dissolved Solids	Analytical Method: SM 2540C							
Total Dissolved Solids	**1120**	mg/L	5.0	1		02/19/13 14:28		
2540D Total Suspended Solids	Analytical Method: SM 2540D							
Total Suspended Solids	**244**	mg/L	5.0	1		02/19/13 09:20		
4500S2D Sulfide, Total	Analytical Method: SM 4500-S-2 D							
Sulfide, Total	ND	mg/L	0.050	1		02/19/13 13:46	18496-25-8	
300.0 IC Anions 28 Days	Analytical Method: EPA 300.0							
Chloride	ND	mg/L	1.0	1		02/21/13 04:20	16887-00-6	
Sulfate	**606**	mg/L	50.0	50		02/20/13 02:11	14808-79-8	
353.2 Nitrogen, NO2/NO3 pres.	Analytical Method: EPA 353.2							
Nitrogen, NO2 plus NO3	ND	mg/L	0.10	1		02/27/13 14:14		
4500CNE Cyanide, Total	Analytical Method: SM 4500-CN-E							
Cyanide	ND	mg/L	0.0050	1		02/20/13 13:39	57-12-5	
5310C TOC	Analytical Method: SM 5310C							
Total Organic Carbon	**0.61**	mg/L	0.50	1		02/20/13 19:32	7440-44-0	

This report shall not be reproduced, except in full,
without the written consent of Pace Analytical Services, Inc..

Pace Analytical Services, Inc.
9608 Loiret Blvd.
Lenexa, KS 66219
(913)599-5665

ANALYTICAL RESULTS

Project: February 2013 Rico Water Sampl
Pace Project No.: 60138913

Sample: MW-103_20130214 **Lab ID: 60138913011** Collected: 02/14/13 16:23 Received: 02/16/13 09:00 Matrix: Water

Parameters	Results	Units	Report Limit	DF	Prepared	Analyzed	CAS No.	Qual
200.7 Potentially Diss. Metals	Analytical Method: EPA 200.7 Preparation Method: EPA 200.7							
Calcium, Dissolved	**296000**	ug/L	100	1	02/20/13 14:45	02/28/13 14:51	7440-70-2	
Magnesium, Dissolved	**31400**	ug/L	50.0	1	02/20/13 14:45	02/28/13 14:51	7439-95-4	
Potassium, Dissolved	**4050**	ug/L	500	1	02/20/13 14:45	02/28/13 14:51	7440-09-7	
Sodium, Dissolved	**14300**	ug/L	500	1	02/20/13 14:45	02/28/13 14:51	7440-23-5	
200.8 MET ICPMS	Analytical Method: EPA 200.8 Preparation Method: EPA 200.8							
Aluminum	**6590**	ug/L	4.0	1	02/22/13 10:28	02/24/13 01:49	7429-90-5	
Antimony	**0.54**	ug/L	0.50	1	02/22/13 10:28	02/24/13 01:49	7440-36-0	
Arsenic	**31.1**	ug/L	0.50	1	02/22/13 10:28	02/24/13 01:49	7440-38-2	
Barium	**99.9**	ug/L	0.30	1	02/22/13 10:28	02/24/13 01:49	7440-39-3	
Beryllium	**1.6**	ug/L	0.20	1	02/22/13 10:28	02/24/13 01:49	7440-41-7	
Cadmium	**2.1**	ug/L	0.080	1	02/22/13 10:28	02/24/13 01:49	7440-43-9	
Calcium	**321000**	ug/L	400	20	02/22/13 10:28	02/24/13 01:53	7440-70-2	
Chromium	**8.0**	ug/L	0.50	1	02/22/13 10:28	02/24/13 01:49	7440-47-3	
Cobalt	**6.9**	ug/L	0.50	1	02/22/13 10:28	02/24/13 01:49	7440-48-4	
Copper	**24.8**	ug/L	0.50	1	02/22/13 10:28	02/24/13 01:49	7440-50-8	
Iron	**24200**	ug/L	1000	20	02/22/13 10:28	02/24/13 01:53	7439-89-6	
Lead	**22.2**	ug/L	0.10	1	02/22/13 10:28	02/24/13 01:49	7439-92-1	
Magnesium	**34500**	ug/L	100	20	02/22/13 10:28	02/24/13 01:53	7439-95-4	
Manganese	**9560**	ug/L	50.0	100	02/22/13 10:28	02/24/13 11:56	7439-96-5	
Molybdenum	**12.6**	ug/L	0.50	1	02/22/13 10:28	02/24/13 01:49	7439-98-7	
Nickel	**7.6**	ug/L	0.50	1	02/22/13 10:28	02/24/13 01:49	7440-02-0	
Potassium	**5130**	ug/L	20.0	1	02/22/13 10:28	02/24/13 01:49	7440-09-7	
Selenium	**0.83**	ug/L	0.50	1	02/22/13 10:28	02/24/13 01:49	7782-49-2	
Silica	**56100**	ug/L	1070	20	02/22/13 10:28	02/24/13 01:53	7631-86-9	
Silver	ND	ug/L	0.50	1	02/22/13 10:28	02/24/13 11:52	7440-22-4	
Sodium	**15200**	ug/L	50.0	1	02/22/13 10:28	02/24/13 01:49	7440-23-5	
Thallium	**0.41**	ug/L	0.10	1	02/22/13 10:28	02/24/13 01:49	7440-28-0	
Total Hardness by 2340B	**944000**	ug/L	1420	20	02/22/13 10:28	02/24/13 01:53		
Vanadium	**13.0**	ug/L	0.10	1	02/22/13 10:28	02/24/13 01:49	7440-62-2	
Zinc	**334**	ug/L	5.0	1	02/22/13 10:28	02/24/13 01:49	7440-66-6	
200.8 MET ICPMS, Dissolved	Analytical Method: EPA 200.8 Preparation Method: EPA 200.8							
Aluminum, Dissolved	**24.4**	ug/L	4.0	1	02/21/13 12:53	02/23/13 13:36	7429-90-5	
Antimony, Dissolved	ND	ug/L	0.50	1	02/21/13 12:53	02/23/13 13:36	7440-36-0	
Arsenic, Dissolved	**2.9**	ug/L	0.50	1	02/21/13 12:53	02/23/13 13:36	7440-38-2	
Barium, Dissolved	**28.7**	ug/L	0.30	1	02/21/13 12:53	02/23/13 13:36	7440-39-3	
Beryllium, Dissolved	**0.30**	ug/L	0.20	1	02/21/13 12:53	02/23/13 13:36	7440-41-7	
Cadmium, Dissolved	**0.19**	ug/L	0.080	1	02/21/13 12:53	02/23/13 13:36	7440-43-9	
Calcium, Dissolved	**327000**	ug/L	400	20	02/21/13 12:53	02/23/13 13:41	7440-70-2	
Chromium, Dissolved	ND	ug/L	0.50	1	02/21/13 12:53	02/23/13 13:36	7440-47-3	
Cobalt, Dissolved	**4.2**	ug/L	0.50	1	02/21/13 12:53	02/23/13 13:36	7440-48-4	
Copper, Dissolved	**1.4**	ug/L	0.50	1	02/21/13 12:53	02/23/13 13:36	7440-50-8	
Iron, Dissolved	**7790**	ug/L	50.0	1	02/21/13 12:53	02/23/13 13:36	7439-89-6	
Lead, Dissolved	**0.11**	ug/L	0.10	1	02/21/13 12:53	02/23/13 13:36	7439-92-1	
Magnesium, Dissolved	**32000**	ug/L	100	20	02/21/13 12:53	02/23/13 13:41	7439-95-4	

This report shall not be reproduced, except in full,
without the written consent of Pace Analytical Services, Inc..

Pace Analytical Services, Inc.
9608 Loiret Blvd.
Lenexa, KS 66219
(913)599-5665

ANALYTICAL RESULTS

Project: February 2013 Rico Water Sampl
Pace Project No.: 60138913

Sample: MW-103_20130214 **Lab ID: 60138913011** Collected: 02/14/13 16:23 Received: 02/16/13 09:00 Matrix: Water

Parameters	Results	Units	Report Limit	DF	Prepared	Analyzed	CAS No.	Qual
200.8 MET ICPMS, Dissolved	Analytical Method: EPA 200.8 Preparation Method: EPA 200.8							
Manganese, Dissolved	**8780**	ug/L	10.0	20	02/21/13 12:53	02/23/13 13:41	7439-96-5	
Molybdenum, Dissolved	**7.4**	ug/L	0.50	1	02/21/13 12:53	02/23/13 13:36	7439-98-7	
Nickel, Dissolved	**4.8**	ug/L	0.50	1	02/21/13 12:53	02/23/13 13:36	7440-02-0	
Potassium, Dissolved	**3850**	ug/L	20.0	1	02/21/13 12:53	02/23/13 13:36	7440-09-7	
Selenium, Dissolved	ND	ug/L	0.50	1	02/21/13 12:53	02/23/13 13:36	7782-49-2	
Silver, Dissolved	ND	ug/L	0.50	1	02/21/13 12:53	02/23/13 13:36	7440-22-4	
Sodium, Dissolved	**15300**	ug/L	50.0	1	02/21/13 12:53	02/23/13 13:36	7440-23-5	
Thallium, Dissolved	ND	ug/L	0.10	1	02/21/13 12:53	02/23/13 13:36	7440-28-0	
Vanadium, Dissolved	ND	ug/L	0.10	1	02/21/13 12:53	02/23/13 13:36	7440-62-2	
Zinc, Dissolved	**173**	ug/L	5.0	1	02/21/13 12:53	02/23/13 13:36	7440-66-6	
200.8 Potentially Diss. Metals	Analytical Method: EPA 200.8 Preparation Method: EPA 200.8							
Aluminum, Dissolved	**1240**	ug/L	50.0	1	02/20/13 14:45	03/04/13 16:39	7429-90-5	
Antimony, Dissolved	**0.16J**	ug/L	1.0	1	02/20/13 14:45	03/04/13 16:39	7440-36-0	
Arsenic, Dissolved	**10.5**	ug/L	1.0	1	02/20/13 14:45	03/04/13 16:39	7440-38-2	
Barium, Dissolved	**42.6**	ug/L	1.0	1	02/20/13 14:45	03/04/13 16:39	7440-39-3	
Beryllium, Dissolved	**0.96**	ug/L	0.50	1	02/20/13 14:45	03/04/13 16:39	7440-41-7	
Cadmium, Dissolved	**2.0**	ug/L	0.50	1	02/20/13 14:45	03/04/13 16:39	7440-43-9	
Chromium, Dissolved	**3.3**	ug/L	1.0	1	02/20/13 14:45	03/04/13 16:39	7440-47-3	B
Cobalt, Dissolved	**5.1**	ug/L	1.0	1	02/20/13 14:45	03/04/13 16:39	7440-48-4	
Copper, Dissolved	**11.3**	ug/L	1.0	1	02/20/13 14:45	03/04/13 16:39	7440-50-8	
Iron, Dissolved	**13500**	ug/L	50.0	1	02/20/13 14:45	03/04/13 16:39	7439-89-6	
Lead, Dissolved	**17.3**	ug/L	1.0	1	02/20/13 14:45	03/04/13 16:39	7439-92-1	
Manganese, Dissolved	**8890**	ug/L	100	100	02/20/13 14:45	03/04/13 12:28	7439-96-5	M6
Molybdenum, Dissolved	**4.3**	ug/L	1.0	1	02/20/13 14:45	03/04/13 16:39	7439-98-7	
Nickel, Dissolved	**3.0**	ug/L	1.0	1	02/20/13 14:45	03/04/13 16:39	7440-02-0	
Selenium, Dissolved	**0.58J**	ug/L	1.0	1	02/20/13 14:45	03/04/13 16:39	7782-49-2	
Silver, Dissolved	ND	ug/L	0.50	1	02/20/13 14:45	03/04/13 16:39	7440-22-4	
Thallium, Dissolved	**0.32J**	ug/L	1.0	1	02/20/13 14:45	03/04/13 16:39	7440-28-0	
Vanadium, Dissolved	**3.7**	ug/L	1.0	1	02/20/13 14:45	03/04/13 16:39	7440-62-2	
Zinc, Dissolved	**276**	ug/L	10.0	1	02/20/13 14:45	03/04/13 16:39	7440-66-6	
245.1 Mercury	Analytical Method: EPA 245.1 Preparation Method: EPA 245.1							
Mercury	ND	ug/L	0.20	1	02/21/13 14:42	02/27/13 16:21	7439-97-6	
245.1 Mercury, Dissolved	Analytical Method: EPA 245.1 Preparation Method: EPA 245.1							
Mercury, Dissolved	ND	ug/L	0.20	1	02/21/13 14:46	02/27/13 17:34	7439-97-6	
245.1 Potentially Diss Mercury	Analytical Method: EPA 245.1 Preparation Method: EPA 245.1							
Mercury, Dissolved	ND	ug/L	0.20	1	02/25/13 12:30	02/27/13 11:30	7439-97-6	
2510B Specific Conductance	Analytical Method: SM 2510B							
Specific Conductance	**1500**	umhos/cm	10.0	1		02/25/13 12:11		
Salinity	Analytical Method: Calculated							
Salinity (as dissolved solids)	**957**	mg/L	6.4	1		02/25/13 16:50		

This report shall not be reproduced, except in full,
without the written consent of Pace Analytical Services, Inc..

Pace Analytical Services, Inc.
9608 Loiret Blvd.
Lenexa, KS 66219
(913)599-5665

ANALYTICAL RESULTS

Project: February 2013 Rico Water Sampl
Pace Project No.: 60138913

Sample: MW-103_20130214 **Lab ID: 60138913011** Collected: 02/14/13 16:23 Received: 02/16/13 09:00 Matrix: Water

Parameters	Results	Units	Report Limit	DF	Prepared	Analyzed	CAS No.	Qual
Salinity	Analytical Method: Calculated							
Salinity (as seawater)	**0.75**	PSU	0.014	1		02/25/13 16:50		
2320B Alkalinity	Analytical Method: SM 2320B							
Alkalinity,Bicarbonate (CaCO3)	**338**	mg/L	20.0	1		02/27/13 16:13		
Alkalinity, Carbonate (CaCO3)	ND	mg/L	20.0	1		02/27/13 16:13		
Alkalinity, Total as CaCO3	**338**	mg/L	20.0	1		02/27/13 16:13		
2540C Total Dissolved Solids	Analytical Method: SM 2540C							
Total Dissolved Solids	**1270**	mg/L	5.0	1		02/19/13 14:28		
2540D Total Suspended Solids	Analytical Method: SM 2540D							
Total Suspended Solids	**234**	mg/L	5.0	1		02/19/13 09:20		
4500S2D Sulfide, Total	Analytical Method: SM 4500-S-2 D							
Sulfide, Total	ND	mg/L	0.050	1		02/19/13 13:46	18496-25-8	
300.0 IC Anions 28 Days	Analytical Method: EPA 300.0							
Chloride	**1.1**	mg/L	1.0	1		02/21/13 04:38	16887-00-6	
Sulfate	**566**	mg/L	50.0	50		02/20/13 02:46	14808-79-8	
353.2 Nitrogen, NO2/NO3 pres.	Analytical Method: EPA 353.2							
Nitrogen, NO2 plus NO3	ND	mg/L	0.10	1		02/27/13 14:15		
4500CNE Cyanide, Total	Analytical Method: SM 4500-CN-E							
Cyanide	ND	mg/L	0.0050	1		02/20/13 13:39	57-12-5	
5310C TOC	Analytical Method: SM 5310C							
Total Organic Carbon	**1.3**	mg/L	0.50	1		02/20/13 19:50	7440-44-0	

This report shall not be reproduced, except in full,
without the written consent of Pace Analytical Services, Inc..

Pace Analytical Services, Inc.
9608 Loiret Blvd.
Lenexa, KS 66219
(913)599-5665

ANALYTICAL RESULTS

Project: February 2013 Rico Water Sampl
Pace Project No.: 60138913

Sample: DR-10_20130215 **Lab ID: 60138913012** Collected: 02/15/13 12:10 Received: 02/16/13 09:00 Matrix: Water

Parameters	Results	Units	Report Limit	DF	Prepared	Analyzed	CAS No.	Qual
200.7 Potentially Diss. Metals	Analytical Method: EPA 200.7 Preparation Method: EPA 200.7							
Calcium, Dissolved	**274000**	ug/L	100	1	02/20/13 14:45	02/28/13 14:58	7440-70-2	
Magnesium, Dissolved	**31300**	ug/L	50.0	1	02/20/13 14:45	02/28/13 14:58	7439-95-4	
Potassium, Dissolved	**4830**	ug/L	500	1	02/20/13 14:45	02/28/13 14:58	7440-09-7	
Sodium, Dissolved	**10400**	ug/L	500	1	02/20/13 14:45	02/28/13 14:58	7440-23-5	
200.8 MET ICPMS	Analytical Method: EPA 200.8 Preparation Method: EPA 200.8							
Aluminum	**12200**	ug/L	4.0	1	02/22/13 10:28	02/24/13 01:58	7429-90-5	
Antimony	**1.6**	ug/L	0.50	1	02/22/13 10:28	02/24/13 01:58	7440-36-0	
Arsenic	**102**	ug/L	0.50	1	02/22/13 10:28	02/24/13 01:58	7440-38-2	
Barium	**223**	ug/L	0.30	1	02/22/13 10:28	02/24/13 01:58	7440-39-3	
Beryllium	**0.89**	ug/L	0.20	1	02/22/13 10:28	02/24/13 01:58	7440-41-7	
Cadmium	**9.4**	ug/L	0.080	1	02/22/13 10:28	02/24/13 01:58	7440-43-9	
Calcium	**299000**	ug/L	400	20	02/22/13 10:28	02/24/13 02:04	7440-70-2	
Chromium	**19.3**	ug/L	0.50	1	02/22/13 10:28	02/24/13 01:58	7440-47-3	
Cobalt	**12.0**	ug/L	0.50	1	02/22/13 10:28	02/24/13 01:58	7440-48-4	
Copper	**709**	ug/L	10.0	20	02/22/13 10:28	02/24/13 02:04	7440-50-8	
Iron	**108000**	ug/L	1000	20	02/22/13 10:28	02/24/13 02:04	7439-89-6	
Lead	**2200**	ug/L	2.0	20	02/22/13 10:28	02/24/13 02:04	7439-92-1	
Magnesium	**35600**	ug/L	100	20	02/22/13 10:28	02/24/13 02:04	7439-95-4	
Manganese	**3050**	ug/L	10.0	20	02/22/13 10:28	02/24/13 02:04	7439-96-5	
Molybdenum	**16.4**	ug/L	0.50	1	02/22/13 10:28	02/24/13 01:58	7439-98-7	
Nickel	**19.5**	ug/L	0.50	1	02/22/13 10:28	02/24/13 01:58	7440-02-0	
Potassium	**7450**	ug/L	20.0	1	02/22/13 10:28	02/24/13 01:58	7440-09-7	
Selenium	**13.9**	ug/L	0.50	1	02/22/13 10:28	02/24/13 01:58	7782-49-2	
Silica	**73000**	ug/L	1070	20	02/22/13 10:28	02/24/13 02:04	7631-86-9	
Silver	**20.5**	ug/L	0.50	1	02/22/13 10:28	02/24/13 12:17	7440-22-4	
Sodium	**10500**	ug/L	50.0	1	02/22/13 10:28	02/24/13 01:58	7440-23-5	
Thallium	**1.1**	ug/L	0.10	1	02/22/13 10:28	02/24/13 01:58	7440-28-0	
Total Hardness by 2340B	**893000**	ug/L	1420	20	02/22/13 10:28	02/24/13 02:04		
Vanadium	**18.6**	ug/L	0.10	1	02/22/13 10:28	02/24/13 01:58	7440-62-2	
Zinc	**1680**	ug/L	100	20	02/22/13 10:28	02/24/13 02:04	7440-66-6	
200.8 MET ICPMS, Dissolved	Analytical Method: EPA 200.8 Preparation Method: EPA 200.8							
Aluminum, Dissolved	**4550**	ug/L	4.0	1	02/21/13 12:53	02/23/13 13:45	7429-90-5	
Antimony, Dissolved	**1.0**	ug/L	0.50	1	02/21/13 12:53	02/23/13 13:45	7440-36-0	
Arsenic, Dissolved	**65.1**	ug/L	0.50	1	02/21/13 12:53	02/23/13 13:45	7440-38-2	
Barium, Dissolved	**92.8**	ug/L	0.30	1	02/21/13 12:53	02/23/13 13:45	7440-39-3	
Beryllium, Dissolved	**0.32**	ug/L	0.20	1	02/21/13 12:53	02/23/13 13:45	7440-41-7	
Cadmium, Dissolved	**3.1**	ug/L	0.080	1	02/21/13 12:53	02/23/13 13:45	7440-43-9	
Calcium, Dissolved	**313000**	ug/L	400	20	02/21/13 12:53	02/23/13 13:51	7440-70-2	
Chromium, Dissolved	**6.7**	ug/L	0.50	1	02/21/13 12:53	02/23/13 13:45	7440-47-3	
Cobalt, Dissolved	**5.7**	ug/L	0.50	1	02/21/13 12:53	02/23/13 13:45	7440-48-4	
Copper, Dissolved	**220**	ug/L	0.50	1	02/21/13 12:53	02/23/13 13:45	7440-50-8	
Iron, Dissolved	**45600**	ug/L	1000	20	02/21/13 12:53	02/23/13 13:51	7439-89-6	
Lead, Dissolved	**671**	ug/L	2.0	20	02/21/13 12:53	02/23/13 13:51	7439-92-1	
Magnesium, Dissolved	**34400**	ug/L	100	20	02/21/13 12:53	02/23/13 13:51	7439-95-4	

This report shall not be reproduced, except in full,
without the written consent of Pace Analytical Services, Inc..

Pace Analytical Services, Inc.
9608 Loiret Blvd.
Lenexa, KS 66219
(913)599-5665

ANALYTICAL RESULTS

Project: February 2013 Rico Water Sampl
Pace Project No.: 60138913

Sample: DR-10_20130215 **Lab ID: 60138913012** Collected: 02/15/13 12:10 Received: 02/16/13 09:00 Matrix: Water

Parameters	Results	Units	Report Limit	DF	Prepared	Analyzed	CAS No.	Qual
200.8 MET ICPMS, Dissolved	Analytical Method: EPA 200.8 Preparation Method: EPA 200.8							
Manganese, Dissolved	**2890**	ug/L	10.0	20	02/21/13 12:53	02/23/13 13:51	7439-96-5	
Molybdenum, Dissolved	**10**	ug/L	0.50	1	02/21/13 12:53	02/23/13 13:45	7439-98-7	
Nickel, Dissolved	**9.3**	ug/L	0.50	1	02/21/13 12:53	02/23/13 13:45	7440-02-0	
Potassium, Dissolved	**5630**	ug/L	20.0	1	02/21/13 12:53	02/23/13 13:45	7440-09-7	
Selenium, Dissolved	**4.5**	ug/L	0.50	1	02/21/13 12:53	02/23/13 13:45	7782-49-2	
Silver, Dissolved	**6.9**	ug/L	0.50	1	02/21/13 12:53	02/23/13 13:45	7440-22-4	
Sodium, Dissolved	**10100**	ug/L	50.0	1	02/21/13 12:53	02/23/13 13:45	7440-23-5	
Thallium, Dissolved	**0.42**	ug/L	0.10	1	02/21/13 12:53	02/23/13 13:45	7440-28-0	
Vanadium, Dissolved	**7.1**	ug/L	0.10	1	02/21/13 12:53	02/23/13 13:45	7440-62-2	
Zinc, Dissolved	**613**	ug/L	100	20	02/21/13 12:53	02/23/13 13:51	7440-66-6	
200.8 Potentially Diss. Metals	Analytical Method: EPA 200.8 Preparation Method: EPA 200.8							
Aluminum, Dissolved	**2300**	ug/L	50.0	1	02/20/13 14:45	03/04/13 16:56	7429-90-5	
Antimony, Dissolved	**0.51J**	ug/L	1.0	1	02/20/13 14:45	03/04/13 16:56	7440-36-0	
Arsenic, Dissolved	**79.6**	ug/L	1.0	1	02/20/13 14:45	03/04/13 16:56	7440-38-2	
Barium, Dissolved	**33.6**	ug/L	1.0	1	02/20/13 14:45	03/04/13 16:56	7440-39-3	
Beryllium, Dissolved	**0.54**	ug/L	0.50	1	02/20/13 14:45	03/04/13 16:56	7440-41-7	
Cadmium, Dissolved	**5.4**	ug/L	0.50	1	02/20/13 14:45	03/04/13 16:56	7440-43-9	
Chromium, Dissolved	**6.7**	ug/L	1.0	1	02/20/13 14:45	03/04/13 16:56	7440-47-3	
Cobalt, Dissolved	**4.1**	ug/L	1.0	1	02/20/13 14:45	03/04/13 16:56	7440-48-4	
Copper, Dissolved	**262**	ug/L	1.0	1	02/20/13 14:45	03/04/13 16:56	7440-50-8	
Iron, Dissolved	**26100**	ug/L	50.0	1	02/20/13 14:45	03/04/13 16:56	7439-89-6	
Lead, Dissolved	**1560**	ug/L	1.0	1	02/20/13 14:45	03/04/13 16:56	7439-92-1	
Manganese, Dissolved	**2930**	ug/L	1.0	1	02/20/13 14:45	03/04/13 16:56	7439-96-5	
Molybdenum, Dissolved	**4.7**	ug/L	1.0	1	02/20/13 14:45	03/04/13 16:56	7439-98-7	
Nickel, Dissolved	**5.6**	ug/L	1.0	1	02/20/13 14:45	03/04/13 16:56	7440-02-0	
Selenium, Dissolved	**1.8**	ug/L	1.0	1	02/20/13 14:45	03/04/13 16:56	7782-49-2	
Silver, Dissolved	**0.28J**	ug/L	0.50	1	02/20/13 14:45	03/04/13 16:56	7440-22-4	
Thallium, Dissolved	**0.63J**	ug/L	1.0	1	02/20/13 14:45	03/04/13 16:56	7440-28-0	
Vanadium, Dissolved	**5.5**	ug/L	1.0	1	02/20/13 14:45	03/04/13 16:56	7440-62-2	
Zinc, Dissolved	**923**	ug/L	10.0	1	02/20/13 14:45	03/04/13 16:56	7440-66-6	
245.1 Mercury	Analytical Method: EPA 245.1 Preparation Method: EPA 245.1							
Mercury	ND	ug/L	0.20	1	02/21/13 14:42	02/27/13 16:29	7439-97-6	
245.1 Mercury, Dissolved	Analytical Method: EPA 245.1 Preparation Method: EPA 245.1							
Mercury, Dissolved	ND	ug/L	0.20	1	02/21/13 14:46	02/27/13 17:36	7439-97-6	
245.1 Potentially Diss Mercury	Analytical Method: EPA 245.1 Preparation Method: EPA 245.1							
Mercury, Dissolved	ND	ug/L	0.20	1	02/25/13 12:30	02/27/13 11:33	7439-97-6	
2510B Specific Conductance	Analytical Method: SM 2510B							
Specific Conductance	**1500**	umhos/cm	10.0	1		02/25/13 12:12		
Salinity	Analytical Method: Calculated							
Salinity (as dissolved solids)	**962**	mg/L	6.4	1		02/25/13 16:50		

This report shall not be reproduced, except in full,
without the written consent of Pace Analytical Services, Inc..

Pace Analytical Services, Inc.
9608 Loiret Blvd.
Lenexa, KS 66219
(913)599-5665

ANALYTICAL RESULTS

Project: February 2013 Rico Water Sampl
Pace Project No.: 60138913

Sample: DR-10_20130215 **Lab ID: 60138913012** Collected: 02/15/13 12:10 Received: 02/16/13 09:00 Matrix: Water

Parameters	Results	Units	Report Limit	DF	Prepared	Analyzed	CAS No.	Qual
Salinity	Analytical Method: Calculated							
Salinity (as seawater)	**0.75**	PSU	0.014	1		02/25/13 16:50		
2320B Alkalinity	Analytical Method: SM 2320B							
Alkalinity,Bicarbonate (CaCO3)	**139**	mg/L	20.0	1		02/27/13 14:33		
Alkalinity, Carbonate (CaCO3)	ND	mg/L	20.0	1		02/27/13 14:33		
Alkalinity, Total as CaCO3	**139**	mg/L	20.0	1		02/27/13 14:33		
2540C Total Dissolved Solids	Analytical Method: SM 2540C							
Total Dissolved Solids	**1250**	mg/L	5.0	1		02/19/13 14:28		
2540D Total Suspended Solids	Analytical Method: SM 2540D							
Total Suspended Solids	**500**	mg/L	5.0	1		02/20/13 09:29		
4500S2D Sulfide, Total	Analytical Method: SM 4500-S-2 D							
Sulfide, Total	ND	mg/L	0.050	1		02/19/13 13:46	18496-25-8	
300.0 IC Anions 28 Days	Analytical Method: EPA 300.0							
Chloride	**1.0**	mg/L	1.0	1		02/21/13 04:55	16887-00-6	
Sulfate	**698**	mg/L	50.0	50		02/20/13 03:22	14808-79-8	
353.2 Nitrogen, NO2/NO3 pres.	Analytical Method: EPA 353.2							
Nitrogen, NO2 plus NO3	**0.12**	mg/L	0.10	1		02/27/13 14:16		
4500CNE Cyanide, Total	Analytical Method: SM 4500-CN-E							
Cyanide	**0.0080**	mg/L	0.0050	1		02/20/13 13:43	57-12-5	
5310C TOC	Analytical Method: SM 5310C							
Total Organic Carbon	**0.72**	mg/L	0.50	1		02/20/13 20:08	7440-44-0	

This report shall not be reproduced, except in full,
without the written consent of Pace Analytical Services, Inc..

Pace Analytical Services, Inc.
9608 Loiret Blvd.
Lenexa, KS 66219
(913)599-5665

ANALYTICAL RESULTS

Project: February 2013 Rico Water Sampl
Pace Project No.: 60138913

Sample: GW-7_20130215 **Lab ID: 60138913013** Collected: 02/15/13 10:04 Received: 02/16/13 09:00 Matrix: Water

Parameters	Results	Units	Report Limit	DF	Prepared	Analyzed	CAS No.	Qual
200.7 Potentially Diss. Metals	Analytical Method: EPA 200.7 Preparation Method: EPA 200.7							
Calcium, Dissolved	**253000**	ug/L	100	1	02/20/13 14:45	02/28/13 15:00	7440-70-2	
Magnesium, Dissolved	**25400**	ug/L	50.0	1	02/20/13 14:45	02/28/13 15:00	7439-95-4	
Potassium, Dissolved	**2850**	ug/L	500	1	02/20/13 14:45	02/28/13 15:00	7440-09-7	
Sodium, Dissolved	**7700**	ug/L	500	1	02/20/13 14:45	02/28/13 15:00	7440-23-5	
200.8 MET ICPMS	Analytical Method: EPA 200.8 Preparation Method: EPA 200.8							
Aluminum	**3310**	ug/L	4.0	1	02/22/13 10:28	02/24/13 02:25	7429-90-5	
Antimony	ND	ug/L	0.50	1	02/22/13 10:28	02/24/13 02:25	7440-36-0	
Arsenic	**4.2**	ug/L	0.50	1	02/22/13 10:28	02/24/13 02:25	7440-38-2	
Barium	**20.7**	ug/L	0.30	1	02/22/13 10:28	02/24/13 02:25	7440-39-3	
Beryllium	**0.40**	ug/L	0.20	1	02/22/13 10:28	02/24/13 02:25	7440-41-7	
Cadmium	**3.3**	ug/L	0.080	1	02/22/13 10:28	02/24/13 02:25	7440-43-9	
Calcium	**287000**	ug/L	400	20	02/22/13 10:28	02/24/13 02:30	7440-70-2	
Chromium	**5.0**	ug/L	0.50	1	02/22/13 10:28	02/24/13 02:25	7440-47-3	
Cobalt	**1.6**	ug/L	0.50	1	02/22/13 10:28	02/24/13 02:25	7440-48-4	
Copper	**47.6**	ug/L	0.50	1	02/22/13 10:28	02/24/13 02:25	7440-50-8	
Iron	**7010**	ug/L	50.0	1	02/22/13 10:28	02/24/13 02:25	7439-89-6	
Lead	**153**	ug/L	0.10	1	02/22/13 10:28	02/24/13 02:25	7439-92-1	
Magnesium	**29500**	ug/L	100	20	02/22/13 10:28	02/24/13 02:30	7439-95-4	
Manganese	**73.4**	ug/L	0.50	1	02/22/13 10:28	02/24/13 02:25	7439-96-5	
Molybdenum	**2.2**	ug/L	0.50	1	02/22/13 10:28	02/24/13 02:25	7439-98-7	
Nickel	**5.1**	ug/L	0.50	1	02/22/13 10:28	02/24/13 02:25	7440-02-0	
Potassium	**3100**	ug/L	20.0	1	02/22/13 10:28	02/24/13 02:25	7440-09-7	
Selenium	**3.1**	ug/L	0.50	1	02/22/13 10:28	02/24/13 02:25	7782-49-2	
Silica	**20800**	ug/L	1070	20	02/22/13 10:28	02/24/13 02:30	7631-86-9	
Silver	ND	ug/L	0.50	1	02/22/13 10:28	02/24/13 12:22	7440-22-4	
Sodium	**7620**	ug/L	50.0	1	02/22/13 10:28	02/24/13 02:25	7440-23-5	
Thallium	**0.17**	ug/L	0.10	1	02/22/13 10:28	02/24/13 02:25	7440-28-0	
Total Hardness by 2340B	**837000**	ug/L	1420	20	02/22/13 10:28	02/24/13 02:30		
Vanadium	**3.9**	ug/L	0.10	1	02/22/13 10:28	02/24/13 02:25	7440-62-2	
Zinc	**331**	ug/L	5.0	1	02/22/13 10:28	02/24/13 02:25	7440-66-6	
200.8 MET ICPMS, Dissolved	Analytical Method: EPA 200.8 Preparation Method: EPA 200.8							
Aluminum, Dissolved	**77.1**	ug/L	4.0	1	02/21/13 12:53	02/23/13 14:17	7429-90-5	
Antimony, Dissolved	ND	ug/L	0.50	1	02/21/13 12:53	02/23/13 14:17	7440-36-0	
Arsenic, Dissolved	ND	ug/L	0.50	1	02/21/13 12:53	02/23/13 14:17	7440-38-2	
Barium, Dissolved	**11.0**	ug/L	0.30	1	02/21/13 12:53	02/23/13 14:17	7440-39-3	
Beryllium, Dissolved	ND	ug/L	0.20	1	02/21/13 12:53	02/23/13 14:17	7440-41-7	
Cadmium, Dissolved	**2.8**	ug/L	0.080	1	02/21/13 12:53	02/23/13 14:17	7440-43-9	
Calcium, Dissolved	**305000**	ug/L	400	20	02/21/13 12:53	02/23/13 14:22	7440-70-2	
Chromium, Dissolved	ND	ug/L	0.50	1	02/21/13 12:53	02/23/13 14:17	7440-47-3	
Cobalt, Dissolved	**0.67**	ug/L	0.50	1	02/21/13 12:53	02/23/13 14:17	7440-48-4	
Copper, Dissolved	**5.1**	ug/L	0.50	1	02/21/13 12:53	02/23/13 14:17	7440-50-8	
Iron, Dissolved	ND	ug/L	50.0	1	02/21/13 12:53	02/23/13 14:17	7439-89-6	
Lead, Dissolved	**3.2**	ug/L	0.10	1	02/21/13 12:53	02/23/13 14:17	7439-92-1	
Magnesium, Dissolved	**27900**	ug/L	100	20	02/21/13 12:53	02/23/13 14:22	7439-95-4	

This report shall not be reproduced, except in full,
without the written consent of Pace Analytical Services, Inc..

Pace Analytical Services, Inc.
9608 Loiret Blvd.
Lenexa, KS 66219
(913)599-5665

ANALYTICAL RESULTS

Project: February 2013 Rico Water Sampl
Pace Project No.: 60138913

Sample: GW-7_20130215 **Lab ID: 60138913013** Collected: 02/15/13 10:04 Received: 02/16/13 09:00 Matrix: Water

Parameters	Results	Units	Report Limit	DF	Prepared	Analyzed	CAS No.	Qual
200.8 MET ICPMS, Dissolved	Analytical Method: EPA 200.8 Preparation Method: EPA 200.8							
Manganese, Dissolved	**23.4**	ug/L	0.50	1	02/21/13 12:53	02/23/13 14:17	7439-96-5	
Molybdenum, Dissolved	**1.2**	ug/L	0.50	1	02/21/13 12:53	02/23/13 14:17	7439-98-7	
Nickel, Dissolved	**3.2**	ug/L	0.50	1	02/21/13 12:53	02/23/13 14:17	7440-02-0	
Potassium, Dissolved	**2670**	ug/L	20.0	1	02/21/13 12:53	02/23/13 14:17	7440-09-7	
Selenium, Dissolved	**1.2**	ug/L	0.50	1	02/21/13 12:53	02/23/13 14:17	7782-49-2	
Silver, Dissolved	ND	ug/L	0.50	1	02/21/13 12:53	02/23/13 14:17	7440-22-4	
Sodium, Dissolved	**7890**	ug/L	50.0	1	02/21/13 12:53	02/23/13 14:17	7440-23-5	
Thallium, Dissolved	ND	ug/L	0.10	1	02/21/13 12:53	02/23/13 14:17	7440-28-0	
Vanadium, Dissolved	ND	ug/L	0.10	1	02/21/13 12:53	02/23/13 14:17	7440-62-2	
Zinc, Dissolved	**157**	ug/L	5.0	1	02/21/13 12:53	02/23/13 14:17	7440-66-6	
200.8 Potentially Diss. Metals	Analytical Method: EPA 200.8 Preparation Method: EPA 200.8							
Aluminum, Dissolved	**3860**	ug/L	50.0	1	02/20/13 14:45	03/04/13 17:00	7429-90-5	
Antimony, Dissolved	**0.16J**	ug/L	1.0	1	02/20/13 14:45	03/04/13 17:00	7440-36-0	
Arsenic, Dissolved	**3.0**	ug/L	1.0	1	02/20/13 14:45	03/04/13 17:00	7440-38-2	
Barium, Dissolved	**15.7**	ug/L	1.0	1	02/20/13 14:45	03/04/13 17:00	7440-39-3	
Beryllium, Dissolved	**0.62**	ug/L	0.50	1	02/20/13 14:45	03/04/13 17:00	7440-41-7	
Cadmium, Dissolved	**2.9**	ug/L	0.50	1	02/20/13 14:45	03/04/13 17:00	7440-43-9	
Chromium, Dissolved	**5.0**	ug/L	1.0	1	02/20/13 14:45	03/04/13 17:00	7440-47-3	
Cobalt, Dissolved	**1.7**	ug/L	1.0	1	02/20/13 14:45	03/04/13 17:00	7440-48-4	
Copper, Dissolved	**88.0**	ug/L	1.0	1	02/20/13 14:45	03/04/13 17:00	7440-50-8	
Iron, Dissolved	**8320**	ug/L	50.0	1	02/20/13 14:45	03/04/13 17:00	7439-89-6	
Lead, Dissolved	**313**	ug/L	1.0	1	02/20/13 14:45	03/04/13 17:00	7439-92-1	
Manganese, Dissolved	**52.1**	ug/L	1.0	1	02/20/13 14:45	03/04/13 17:00	7439-96-5	
Molybdenum, Dissolved	**0.70J**	ug/L	1.0	1	02/20/13 14:45	03/04/13 17:00	7439-98-7	
Nickel, Dissolved	**4.3**	ug/L	1.0	1	02/20/13 14:45	03/04/13 17:00	7440-02-0	
Selenium, Dissolved	**3.3**	ug/L	1.0	1	02/20/13 14:45	03/04/13 17:00	7782-49-2	
Silver, Dissolved	**0.48J**	ug/L	0.50	1	02/20/13 14:45	03/04/13 17:00	7440-22-4	
Thallium, Dissolved	**0.19J**	ug/L	1.0	1	02/20/13 14:45	03/04/13 17:00	7440-28-0	
Vanadium, Dissolved	**1.9**	ug/L	1.0	1	02/20/13 14:45	03/04/13 17:00	7440-62-2	
Zinc, Dissolved	**355**	ug/L	10.0	1	02/20/13 14:45	03/04/13 17:00	7440-66-6	
245.1 Mercury	Analytical Method: EPA 245.1 Preparation Method: EPA 245.1							
Mercury	ND	ug/L	0.20	1	02/21/13 14:42	02/27/13 16:31	7439-97-6	
245.1 Mercury, Dissolved	Analytical Method: EPA 245.1 Preparation Method: EPA 245.1							
Mercury, Dissolved	ND	ug/L	0.20	1	02/21/13 14:43	02/27/13 17:43	7439-97-6	
245.1 Potentially Diss Mercury	Analytical Method: EPA 245.1 Preparation Method: EPA 245.1							
Mercury, Dissolved	ND	ug/L	0.20	1	02/25/13 12:30	02/27/13 11:35	7439-97-6	
2510B Specific Conductance	Analytical Method: SM 2510B							
Specific Conductance	**1370**	umhos/cm	10.0	1		02/25/13 12:13		
Salinity	Analytical Method: Calculated							
Salinity (as dissolved solids)	**878**	mg/L	6.4	1		02/25/13 16:50		

This report shall not be reproduced, except in full,
without the written consent of Pace Analytical Services, Inc..

Pace Analytical Services, Inc.
9608 Loiret Blvd.
Lenexa, KS 66219
(913)599-5665

ANALYTICAL RESULTS

Project: February 2013 Rico Water Sampl
Pace Project No.: 60138913

Sample: GW-7_20130215 **Lab ID: 60138913013** Collected: 02/15/13 10:04 Received: 02/16/13 09:00 Matrix: Water

Parameters	Results	Units	Report Limit	DF	Prepared	Analyzed	CAS No.	Qual
Salinity	Analytical Method: Calculated							
Salinity (as seawater)	**0.68**	PSU	0.014	1		02/25/13 16:50		
2320B Alkalinity	Analytical Method: SM 2320B							
Alkalinity,Bicarbonate (CaCO3)	**251**	mg/L	20.0	1		02/27/13 14:37		
Alkalinity, Carbonate (CaCO3)	ND	mg/L	20.0	1		02/27/13 14:37		
Alkalinity, Total as CaCO3	**251**	mg/L	20.0	1		02/27/13 14:37		
2540C Total Dissolved Solids	Analytical Method: SM 2540C							
Total Dissolved Solids	**1110**	mg/L	5.0	1		02/19/13 14:28		
2540D Total Suspended Solids	Analytical Method: SM 2540D							
Total Suspended Solids	**982**	mg/L	5.0	1		02/20/13 09:29		
4500S2D Sulfide, Total	Analytical Method: SM 4500-S-2 D							
Sulfide, Total	ND	mg/L	0.050	1		02/19/13 13:46	18496-25-8	
300.0 IC Anions 28 Days	Analytical Method: EPA 300.0							
Chloride	ND	mg/L	1.0	1		02/20/13 04:15	16887-00-6	
Sulfate	**532**	mg/L	50.0	50		02/20/13 04:33	14808-79-8	
353.2 Nitrogen, NO2/NO3 pres.	Analytical Method: EPA 353.2							
Nitrogen, NO2 plus NO3	**0.49**	mg/L	0.10	1		02/27/13 14:16		
4500CNE Cyanide, Total	Analytical Method: SM 4500-CN-E							
Cyanide	ND	mg/L	0.0050	1		02/20/13 13:43	57-12-5	
5310C TOC	Analytical Method: SM 5310C							
Total Organic Carbon	**1.1**	mg/L	0.50	1		02/20/13 20:27	7440-44-0	

This report shall not be reproduced, except in full,
without the written consent of Pace Analytical Services, Inc..

Pace Analytical Services, Inc.
9608 Loiret Blvd.
Lenexa, KS 66219
(913)599-5665

ANALYTICAL RESULTS

Project: February 2013 Rico Water Sampl
Pace Project No.: 60138913

Sample: P13-102_20130215 **Lab ID: 60138913014** Collected: 02/15/13 12:28 Received: 02/16/13 09:00 Matrix: Water

Parameters	Results	Units	Report Limit	DF	Prepared	Analyzed	CAS No.	Qual
200.7 Potentially Diss. Metals	Analytical Method: EPA 200.7 Preparation Method: EPA 200.7							
Calcium, Dissolved	**329000**	ug/L	100	1	02/20/13 14:45	02/28/13 15:06	7440-70-2	
Magnesium, Dissolved	**49000**	ug/L	50.0	1	02/20/13 14:45	02/28/13 15:06	7439-95-4	
Potassium, Dissolved	**5690**	ug/L	500	1	02/20/13 14:45	02/28/13 15:06	7440-09-7	
Sodium, Dissolved	**14500**	ug/L	500	1	02/20/13 14:45	02/28/13 15:06	7440-23-5	
200.8 MET ICPMS	Analytical Method: EPA 200.8 Preparation Method: EPA 200.8							
Aluminum	**2180**	ug/L	4.0	1	02/22/13 10:28	02/24/13 02:35	7429-90-5	
Antimony	ND	ug/L	0.50	1	02/22/13 10:28	02/24/13 02:35	7440-36-0	
Arsenic	**4.7**	ug/L	0.50	1	02/22/13 10:28	02/24/13 02:35	7440-38-2	
Barium	**53.2**	ug/L	0.30	1	02/22/13 10:28	02/24/13 02:35	7440-39-3	
Beryllium	**0.46**	ug/L	0.20	1	02/22/13 10:28	02/24/13 02:35	7440-41-7	
Cadmium	**0.22**	ug/L	0.080	1	02/22/13 10:28	02/24/13 02:35	7440-43-9	
Calcium	**352000**	ug/L	400	20	02/22/13 10:28	02/24/13 02:39	7440-70-2	
Chromium	**4.2**	ug/L	0.50	1	02/22/13 10:28	02/24/13 02:35	7440-47-3	
Cobalt	**13.4**	ug/L	0.50	1	02/22/13 10:28	02/24/13 02:35	7440-48-4	
Copper	**10.1**	ug/L	0.50	1	02/22/13 10:28	02/24/13 02:35	7440-50-8	
Iron	**5570**	ug/L	50.0	1	02/22/13 10:28	02/24/13 02:35	7439-89-6	
Lead	**11.1**	ug/L	0.10	1	02/22/13 10:28	02/24/13 02:35	7439-92-1	
Magnesium	**51800**	ug/L	100	20	02/22/13 10:28	02/24/13 02:39	7439-95-4	
Manganese	**26300**	ug/L	50.0	100	02/22/13 10:28	02/24/13 12:33	7439-96-5	
Molybdenum	**5.1**	ug/L	0.50	1	02/22/13 10:28	02/24/13 02:35	7439-98-7	
Nickel	**7.4**	ug/L	0.50	1	02/22/13 10:28	02/24/13 02:35	7440-02-0	
Potassium	**5910**	ug/L	20.0	1	02/22/13 10:28	02/24/13 02:35	7440-09-7	
Selenium	ND	ug/L	0.50	1	02/22/13 10:28	02/24/13 02:35	7782-49-2	
Silica	**31000**	ug/L	1070	20	02/22/13 10:28	02/24/13 02:39	7631-86-9	
Silver	ND	ug/L	0.50	1	02/22/13 10:28	02/24/13 12:28	7440-22-4	
Sodium	**15100**	ug/L	50.0	1	02/22/13 10:28	02/24/13 02:35	7440-23-5	
Thallium	**0.12**	ug/L	0.10	1	02/22/13 10:28	02/24/13 02:35	7440-28-0	
Total Hardness by 2340B	**1090000**	ug/L	1420	20	02/22/13 10:28	02/24/13 02:39		
Vanadium	**4.9**	ug/L	0.10	1	02/22/13 10:28	02/24/13 02:35	7440-62-2	
Zinc	**106**	ug/L	5.0	1	02/22/13 10:28	02/24/13 02:35	7440-66-6	
200.8 MET ICPMS, Dissolved	Analytical Method: EPA 200.8 Preparation Method: EPA 200.8							
Aluminum, Dissolved	**1080**	ug/L	4.0	1	02/21/13 12:53	02/23/13 14:27	7429-90-5	
Antimony, Dissolved	ND	ug/L	0.50	1	02/21/13 12:53	02/23/13 14:27	7440-36-0	
Arsenic, Dissolved	**2.7**	ug/L	0.50	1	02/21/13 12:53	02/23/13 14:27	7440-38-2	
Barium, Dissolved	**36.3**	ug/L	0.30	1	02/21/13 12:53	02/23/13 14:27	7440-39-3	
Beryllium, Dissolved	**0.30**	ug/L	0.20	1	02/21/13 12:53	02/23/13 14:27	7440-41-7	
Cadmium, Dissolved	**0.18**	ug/L	0.080	1	02/21/13 12:53	02/23/13 14:27	7440-43-9	
Calcium, Dissolved	**370000**	ug/L	400	20	02/21/13 12:53	02/23/13 14:31	7440-70-2	
Chromium, Dissolved	**2.4**	ug/L	0.50	1	02/21/13 12:53	02/23/13 14:27	7440-47-3	
Cobalt, Dissolved	**13.4**	ug/L	0.50	1	02/21/13 12:53	02/23/13 14:27	7440-48-4	
Copper, Dissolved	**7.0**	ug/L	0.50	1	02/21/13 12:53	02/23/13 14:27	7440-50-8	
Iron, Dissolved	**3500**	ug/L	50.0	1	02/21/13 12:53	02/23/13 14:27	7439-89-6	
Lead, Dissolved	**6.3**	ug/L	0.10	1	02/21/13 12:53	02/23/13 14:27	7439-92-1	
Magnesium, Dissolved	**51200**	ug/L	100	20	02/21/13 12:53	02/23/13 14:31	7439-95-4	

This report shall not be reproduced, except in full,
without the written consent of Pace Analytical Services, Inc..

Pace Analytical Services, Inc.
9608 Loiret Blvd.
Lenexa, KS 66219
(913)599-5665

ANALYTICAL RESULTS

Project: February 2013 Rico Water Sampl
Pace Project No.: 60138913

Sample: P13-102_20130215 **Lab ID: 60138913014** Collected: 02/15/13 12:28 Received: 02/16/13 09:00 Matrix: Water

Parameters	Results	Units	Report Limit	DF	Prepared	Analyzed	CAS No.	Qual
200.8 MET ICPMS, Dissolved	Analytical Method: EPA 200.8 Preparation Method: EPA 200.8							
Manganese, Dissolved	**25500**	ug/L	50.0	100	02/21/13 12:53	02/23/13 14:55	7439-96-5	
Molybdenum, Dissolved	**4.6**	ug/L	0.50	1	02/21/13 12:53	02/23/13 14:27	7439-98-7	
Nickel, Dissolved	**10.2**	ug/L	0.50	1	02/21/13 12:53	02/23/13 14:27	7440-02-0	
Potassium, Dissolved	**5840**	ug/L	20.0	1	02/21/13 12:53	02/23/13 14:27	7440-09-7	
Selenium, Dissolved	ND	ug/L	0.50	1	02/21/13 12:53	02/23/13 14:27	7782-49-2	
Silver, Dissolved	ND	ug/L	0.50	1	02/21/13 12:53	02/23/13 14:27	7440-22-4	
Sodium, Dissolved	**15300**	ug/L	50.0	1	02/21/13 12:53	02/23/13 14:27	7440-23-5	
Thallium, Dissolved	ND	ug/L	0.10	1	02/21/13 12:53	02/23/13 14:27	7440-28-0	
Vanadium, Dissolved	**2.6**	ug/L	0.10	1	02/21/13 12:53	02/23/13 14:27	7440-62-2	
Zinc, Dissolved	**95.7**	ug/L	5.0	1	02/21/13 12:53	02/23/13 14:27	7440-66-6	
200.8 Potentially Diss. Metals	Analytical Method: EPA 200.8 Preparation Method: EPA 200.8							
Aluminum, Dissolved	**449**	ug/L	50.0	1	02/20/13 14:45	03/04/13 17:04	7429-90-5	
Antimony, Dissolved	**0.13J**	ug/L	1.0	1	02/20/13 14:45	03/04/13 17:04	7440-36-0	
Arsenic, Dissolved	**1.7**	ug/L	1.0	1	02/20/13 14:45	03/04/13 17:04	7440-38-2	
Barium, Dissolved	**28.8**	ug/L	1.0	1	02/20/13 14:45	03/04/13 17:04	7440-39-3	
Beryllium, Dissolved	**0.27J**	ug/L	0.50	1	02/20/13 14:45	03/04/13 17:04	7440-41-7	
Cadmium, Dissolved	**0.22J**	ug/L	0.50	1	02/20/13 14:45	03/04/13 17:04	7440-43-9	
Chromium, Dissolved	**2.8**	ug/L	1.0	1	02/20/13 14:45	03/04/13 17:04	7440-47-3	B
Cobalt, Dissolved	**12.4**	ug/L	1.0	1	02/20/13 14:45	03/04/13 17:04	7440-48-4	
Copper, Dissolved	**4.7**	ug/L	1.0	1	02/20/13 14:45	03/04/13 17:04	7440-50-8	
Iron, Dissolved	**2670**	ug/L	50.0	1	02/20/13 14:45	03/04/13 17:04	7439-89-6	
Lead, Dissolved	**9.3**	ug/L	1.0	1	02/20/13 14:45	03/04/13 17:04	7439-92-1	
Manganese, Dissolved	**25300**	ug/L	200	200	02/20/13 14:45	03/04/13 17:12	7439-96-5	
Molybdenum, Dissolved	**2.7**	ug/L	1.0	1	02/20/13 14:45	03/04/13 17:04	7439-98-7	
Nickel, Dissolved	**4.6**	ug/L	1.0	1	02/20/13 14:45	03/04/13 17:04	7440-02-0	
Selenium, Dissolved	ND	ug/L	1.0	1	02/20/13 14:45	03/04/13 17:04	7782-49-2	
Silver, Dissolved	ND	ug/L	0.50	1	02/20/13 14:45	03/04/13 17:04	7440-22-4	
Thallium, Dissolved	**0.098J**	ug/L	1.0	1	02/20/13 14:45	03/04/13 17:04	7440-28-0	
Vanadium, Dissolved	**1.7**	ug/L	1.0	1	02/20/13 14:45	03/04/13 17:04	7440-62-2	
Zinc, Dissolved	**86.1**	ug/L	10.0	1	02/20/13 14:45	03/04/13 17:04	7440-66-6	
245.1 Mercury	Analytical Method: EPA 245.1 Preparation Method: EPA 245.1							
Mercury	ND	ug/L	0.20	1	02/21/13 14:42	02/27/13 16:33	7439-97-6	
245.1 Mercury, Dissolved	Analytical Method: EPA 245.1 Preparation Method: EPA 245.1							
Mercury, Dissolved	ND	ug/L	0.20	1	02/21/13 14:43	02/27/13 17:46	7439-97-6	
245.1 Potentially Diss Mercury	Analytical Method: EPA 245.1 Preparation Method: EPA 245.1							
Mercury, Dissolved	ND	ug/L	0.20	1	02/25/13 12:30	02/27/13 11:42	7439-97-6	
2510B Specific Conductance	Analytical Method: SM 2510B							
Specific Conductance	**1880**	umhos/cm	10.0	1		02/25/13 12:14		
Salinity	Analytical Method: Calculated							
Salinity (as dissolved solids)	**1200**	mg/L	6.4	1		02/25/13 16:50		

This report shall not be reproduced, except in full,
without the written consent of Pace Analytical Services, Inc..

Pace Analytical Services, Inc.
9608 Loiret Blvd.
Lenexa, KS 66219
(913)599-5665

ANALYTICAL RESULTS

Project: February 2013 Rico Water Sampl
Pace Project No.: 60138913

Sample: P13-102_20130215 **Lab ID: 60138913014** Collected: 02/15/13 12:28 Received: 02/16/13 09:00 Matrix: Water

Parameters	Results	Units	Report Limit	DF	Prepared	Analyzed	CAS No.	Qual
Salinity	Analytical Method: Calculated							
Salinity (as seawater)	**0.95**	PSU	0.014	1		02/25/13 16:50		
2320B Alkalinity	Analytical Method: SM 2320B							
Alkalinity,Bicarbonate (CaCO3)	**158**	mg/L	20.0	1		02/27/13 14:43		
Alkalinity, Carbonate (CaCO3)	ND	mg/L	20.0	1		02/27/13 14:43		
Alkalinity, Total as CaCO3	**158**	mg/L	20.0	1		02/27/13 14:43		
2540C Total Dissolved Solids	Analytical Method: SM 2540C							
Total Dissolved Solids	**1630**	mg/L	5.0	1		02/19/13 14:29		
2540D Total Suspended Solids	Analytical Method: SM 2540D							
Total Suspended Solids	**107**	mg/L	5.0	1		02/20/13 09:29		
4500S2D Sulfide, Total	Analytical Method: SM 4500-S-2 D							
Sulfide, Total	ND	mg/L	0.050	1		02/19/13 13:47	18496-25-8	
300.0 IC Anions 28 Days	Analytical Method: EPA 300.0							
Chloride	**1.4**	mg/L	1.0	1		02/20/13 04:50	16887-00-6	
Sulfate	**976**	mg/L	100	100		02/20/13 05:08	14808-79-8	
353.2 Nitrogen, NO2/NO3 pres.	Analytical Method: EPA 353.2							
Nitrogen, NO2 plus NO3	ND	mg/L	0.10	1		02/27/13 14:17		
4500CNE Cyanide, Total	Analytical Method: SM 4500-CN-E							
Cyanide	ND	mg/L	0.0050	1		02/20/13 13:46	57-12-5	
5310C TOC	Analytical Method: SM 5310C							
Total Organic Carbon	ND	mg/L	0.50	1		02/20/13 20:45	7440-44-0	

This report shall not be reproduced, except in full,
without the written consent of Pace Analytical Services, Inc..

Pace Analytical Services, Inc.
9608 Loiret Blvd.
Lenexa, KS 66219
(913)599-5665

ANALYTICAL RESULTS

Project: February 2013 Rico Water Sampl
Pace Project No.: 60138913

Sample: P13-103_20130215 **Lab ID: 60138913015** Collected: 02/15/13 12:08 Received: 02/16/13 09:00 Matrix: Water

Parameters	Results	Units	Report Limit	DF	Prepared	Analyzed	CAS No.	Qual
200.7 Potentially Diss. Metals	Analytical Method: EPA 200.7 Preparation Method: EPA 200.7							
Calcium, Dissolved	**274000**	ug/L	100	1	02/20/13 14:45	02/28/13 15:09	7440-70-2	
Magnesium, Dissolved	**31500**	ug/L	50.0	1	02/20/13 14:45	02/28/13 15:09	7439-95-4	
Potassium, Dissolved	**4800**	ug/L	500	1	02/20/13 14:45	02/28/13 15:09	7440-09-7	
Sodium, Dissolved	**10500**	ug/L	500	1	02/20/13 14:45	02/28/13 15:09	7440-23-5	
200.8 MET ICPMS	Analytical Method: EPA 200.8 Preparation Method: EPA 200.8							
Aluminum	**5550**	ug/L	4.0	1	02/22/13 10:28	02/24/13 02:44	7429-90-5	
Antimony	**1.1**	ug/L	0.50	1	02/22/13 10:28	02/24/13 02:44	7440-36-0	
Arsenic	**68.3**	ug/L	0.50	1	02/22/13 10:28	02/24/13 02:44	7440-38-2	
Barium	**97.6**	ug/L	0.30	1	02/22/13 10:28	02/24/13 02:44	7440-39-3	
Beryllium	**0.36**	ug/L	0.20	1	02/22/13 10:28	02/24/13 02:44	7440-41-7	
Cadmium	**3.2**	ug/L	0.080	1	02/22/13 10:28	02/24/13 02:44	7440-43-9	
Calcium	**295000**	ug/L	400	20	02/22/13 10:28	02/24/13 02:50	7440-70-2	
Chromium	**7.4**	ug/L	0.50	1	02/22/13 10:28	02/24/13 02:44	7440-47-3	
Cobalt	**5.2**	ug/L	0.50	1	02/22/13 10:28	02/24/13 02:44	7440-48-4	
Copper	**226**	ug/L	0.50	1	02/22/13 10:28	02/24/13 02:44	7440-50-8	
Iron	**48700**	ug/L	1000	20	02/22/13 10:28	02/24/13 02:50	7439-89-6	
Lead	**679**	ug/L	2.0	20	02/22/13 10:28	02/24/13 02:50	7439-92-1	
Magnesium	**33600**	ug/L	100	20	02/22/13 10:28	02/24/13 02:50	7439-95-4	
Manganese	**2820**	ug/L	10.0	20	02/22/13 10:28	02/24/13 02:50	7439-96-5	
Molybdenum	**11.4**	ug/L	0.50	1	02/22/13 10:28	02/24/13 02:44	7439-98-7	
Nickel	**7.7**	ug/L	0.50	1	02/22/13 10:28	02/24/13 02:44	7440-02-0	
Potassium	**5820**	ug/L	20.0	1	02/22/13 10:28	02/24/13 02:44	7440-09-7	
Selenium	**4.8**	ug/L	0.50	1	02/22/13 10:28	02/24/13 02:44	7782-49-2	
Silica	**48600**	ug/L	1070	20	02/22/13 10:28	02/24/13 02:50	7631-86-9	
Silver	**7.6**	ug/L	0.50	1	02/22/13 10:28	02/24/13 12:37	7440-22-4	
Sodium	**9950**	ug/L	50.0	1	02/22/13 10:28	02/24/13 02:44	7440-23-5	
Thallium	**0.42**	ug/L	0.10	1	02/22/13 10:28	02/24/13 02:44	7440-28-0	
Total Hardness by 2340B	**876000**	ug/L	1420	20	02/22/13 10:28	02/24/13 02:50		
Vanadium	**8.4**	ug/L	0.10	1	02/22/13 10:28	02/24/13 02:44	7440-62-2	
Zinc	**610**	ug/L	100	20	02/22/13 10:28	02/24/13 02:50	7440-66-6	
200.8 MET ICPMS, Dissolved	Analytical Method: EPA 200.8 Preparation Method: EPA 200.8							
Aluminum, Dissolved	**7.3**	ug/L	4.0	1	02/21/13 12:53	02/23/13 14:36	7429-90-5	
Antimony, Dissolved	ND	ug/L	0.50	1	02/21/13 12:53	02/23/13 14:36	7440-36-0	
Arsenic, Dissolved	**44.9**	ug/L	0.50	1	02/21/13 12:53	02/23/13 14:36	7440-38-2	
Barium, Dissolved	**19.5**	ug/L	0.30	1	02/21/13 12:53	02/23/13 14:36	7440-39-3	
Beryllium, Dissolved	ND	ug/L	0.20	1	02/21/13 12:53	02/23/13 14:36	7440-41-7	
Cadmium, Dissolved	**0.088**	ug/L	0.080	1	02/21/13 12:53	02/23/13 14:36	7440-43-9	
Calcium, Dissolved	**306000**	ug/L	400	20	02/21/13 12:53	02/23/13 14:41	7440-70-2	
Chromium, Dissolved	ND	ug/L	0.50	1	02/21/13 12:53	02/23/13 14:36	7440-47-3	
Cobalt, Dissolved	**1.8**	ug/L	0.50	1	02/21/13 12:53	02/23/13 14:36	7440-48-4	
Copper, Dissolved	**1.1**	ug/L	0.50	1	02/21/13 12:53	02/23/13 14:36	7440-50-8	
Iron, Dissolved	**13100**	ug/L	50.0	1	02/21/13 12:53	02/23/13 14:36	7439-89-6	
Lead, Dissolved	**0.80**	ug/L	0.10	1	02/21/13 12:53	02/23/13 14:36	7439-92-1	
Magnesium, Dissolved	**32300**	ug/L	100	20	02/21/13 12:53	02/23/13 14:41	7439-95-4	

This report shall not be reproduced, except in full,
without the written consent of Pace Analytical Services, Inc..

Pace Analytical Services, Inc.
9608 Loiret Blvd.
Lenexa, KS 66219
(913)599-5665

ANALYTICAL RESULTS

Project: February 2013 Rico Water Sampl
Pace Project No.: 60138913

Sample: P13-103_20130215 **Lab ID: 60138913015** Collected: 02/15/13 12:08 Received: 02/16/13 09:00 Matrix: Water

Parameters	Results	Units	Report Limit	DF	Prepared	Analyzed	CAS No.	Qual
200.8 MET ICPMS, Dissolved	Analytical Method: EPA 200.8 Preparation Method: EPA 200.8							
Manganese, Dissolved	**2700**	ug/L	10.0	20	02/21/13 12:53	02/23/13 14:41	7439-96-5	
Molybdenum, Dissolved	**7.8**	ug/L	0.50	1	02/21/13 12:53	02/23/13 14:36	7439-98-7	
Nickel, Dissolved	**2.5**	ug/L	0.50	1	02/21/13 12:53	02/23/13 14:36	7440-02-0	
Potassium, Dissolved	**4380**	ug/L	20.0	1	02/21/13 12:53	02/23/13 14:36	7440-09-7	
Selenium, Dissolved	ND	ug/L	0.50	1	02/21/13 12:53	02/23/13 14:36	7782-49-2	
Silver, Dissolved	ND	ug/L	0.50	1	02/21/13 12:53	02/23/13 14:36	7440-22-4	
Sodium, Dissolved	**10500**	ug/L	50.0	1	02/21/13 12:53	02/23/13 14:36	7440-23-5	
Thallium, Dissolved	ND	ug/L	0.10	1	02/21/13 12:53	02/23/13 14:36	7440-28-0	
Vanadium, Dissolved	ND	ug/L	0.10	1	02/21/13 12:53	02/23/13 14:36	7440-62-2	
Zinc, Dissolved	**140**	ug/L	5.0	1	02/21/13 12:53	02/23/13 14:36	7440-66-6	
200.8 Potentially Diss. Metals	Analytical Method: EPA 200.8 Preparation Method: EPA 200.8							
Aluminum, Dissolved	**1880**	ug/L	50.0	1	02/20/13 14:45	03/04/13 17:50	7429-90-5	
Antimony, Dissolved	**0.50J**	ug/L	1.0	1	02/20/13 14:45	03/04/13 17:50	7440-36-0	
Arsenic, Dissolved	**74.4**	ug/L	1.0	1	02/20/13 14:45	03/04/13 17:50	7440-38-2	
Barium, Dissolved	**36.9**	ug/L	1.0	1	02/20/13 14:45	03/04/13 17:50	7440-39-3	
Beryllium, Dissolved	**0.42J**	ug/L	0.50	1	02/20/13 14:45	03/05/13 08:20	7440-41-7	
Cadmium, Dissolved	**3.6**	ug/L	0.50	1	02/20/13 14:45	03/04/13 17:50	7440-43-9	
Chromium, Dissolved	**5.4**	ug/L	1.0	1	02/20/13 14:45	03/04/13 17:50	7440-47-3	
Cobalt, Dissolved	**3.3**	ug/L	1.0	1	02/20/13 14:45	03/04/13 17:50	7440-48-4	
Copper, Dissolved	**186**	ug/L	1.0	1	02/20/13 14:45	03/04/13 17:50	7440-50-8	
Iron, Dissolved	**23200**	ug/L	50.0	1	02/20/13 14:45	03/04/13 17:50	7439-89-6	
Lead, Dissolved	**1050**	ug/L	1.0	1	02/20/13 14:45	03/04/13 17:50	7439-92-1	
Manganese, Dissolved	**2880**	ug/L	1.0	1	02/20/13 14:45	03/04/13 17:50	7439-96-5	
Molybdenum, Dissolved	**4.4**	ug/L	1.0	1	02/20/13 14:45	03/04/13 17:50	7439-98-7	
Nickel, Dissolved	**4.3**	ug/L	1.0	1	02/20/13 14:45	03/04/13 17:50	7440-02-0	
Selenium, Dissolved	**1.7**	ug/L	1.0	1	02/20/13 14:45	03/04/13 17:50	7782-49-2	
Silver, Dissolved	**0.32J**	ug/L	0.50	1	02/20/13 14:45	03/04/13 17:50	7440-22-4	
Thallium, Dissolved	**0.46J**	ug/L	1.0	1	02/20/13 14:45	03/04/13 17:50	7440-28-0	
Vanadium, Dissolved	**4.2**	ug/L	1.0	1	02/20/13 14:45	03/04/13 17:50	7440-62-2	
Zinc, Dissolved	**659**	ug/L	10.0	1	02/20/13 14:45	03/04/13 17:50	7440-66-6	
245.1 Mercury	Analytical Method: EPA 245.1 Preparation Method: EPA 245.1							
Mercury	ND	ug/L	0.20	1	02/21/13 14:42	02/27/13 16:36	7439-97-6	
245.1 Mercury, Dissolved	Analytical Method: EPA 245.1 Preparation Method: EPA 245.1							
Mercury, Dissolved	ND	ug/L	0.20	1	02/21/13 14:46	02/27/13 17:48	7439-97-6	
245.1 Potentially Diss Mercury	Analytical Method: EPA 245.1 Preparation Method: EPA 245.1							
Mercury, Dissolved	ND	ug/L	0.20	1	02/25/13 12:30	02/27/13 11:44	7439-97-6	
2510B Specific Conductance	Analytical Method: SM 2510B							
Specific Conductance	**1400**	umhos/cm	10.0	1		02/25/13 12:20		
Salinity	Analytical Method: Calculated							
Salinity (as dissolved solids)	**895**	mg/L	6.4	1		02/25/13 16:50		

This report shall not be reproduced, except in full,
without the written consent of Pace Analytical Services, Inc..

Pace Analytical Services, Inc.
9608 Loiret Blvd.
Lenexa, KS 66219
(913)599-5665

ANALYTICAL RESULTS

Project: February 2013 Rico Water Sampl
Pace Project No.: 60138913

Sample: P13-103_20130215 **Lab ID: 60138913015** Collected: 02/15/13 12:08 Received: 02/16/13 09:00 Matrix: Water

Parameters	Results	Units	Report Limit	DF	Prepared	Analyzed	CAS No.	Qual
Salinity	Analytical Method: Calculated							
Salinity (as seawater)	**0.70**	PSU	0.014	1		02/25/13 16:50		
2320B Alkalinity	Analytical Method: SM 2320B							
Alkalinity,Bicarbonate (CaCO3)	**140**	mg/L	20.0	1		02/27/13 14:47		
Alkalinity, Carbonate (CaCO3)	ND	mg/L	20.0	1		02/27/13 14:47		
Alkalinity, Total as CaCO3	**140**	mg/L	20.0	1		02/27/13 14:47		
2540C Total Dissolved Solids	Analytical Method: SM 2540C							
Total Dissolved Solids	**1250**	mg/L	5.0	1		02/19/13 14:29		
2540D Total Suspended Solids	Analytical Method: SM 2540D							
Total Suspended Solids	**1460**	mg/L	5.0	1		02/20/13 09:29		
4500S2D Sulfide, Total	Analytical Method: SM 4500-S-2 D							
Sulfide, Total	ND	mg/L	0.050	1		02/19/13 13:47	18496-25-8	
300.0 IC Anions 28 Days	Analytical Method: EPA 300.0							
Chloride	**1.0**	mg/L	1.0	1		02/20/13 05:26	16887-00-6	
Sulfate	**717**	mg/L	50.0	50		02/20/13 05:43	14808-79-8	
353.2 Nitrogen, NO2/NO3 pres.	Analytical Method: EPA 353.2							
Nitrogen, NO2 plus NO3	ND	mg/L	0.10	1		02/27/13 14:18		
4500CNE Cyanide, Total	Analytical Method: SM 4500-CN-E							
Cyanide	ND	mg/L	0.0050	1		02/20/13 13:46	57-12-5	
5310C TOC	Analytical Method: SM 5310C							
Total Organic Carbon	**0.85**	mg/L	0.50	1		02/20/13 21:21	7440-44-0	

This report shall not be reproduced, except in full,
without the written consent of Pace Analytical Services, Inc..

Pace Analytical Services, Inc.
9608 Loiret Blvd.
Lenexa, KS 66219
(913)599-5665

ANALYTICAL RESULTS

Project: February 2013 Rico Water Sampl
Pace Project No.: 60138913

Sample: MW-4 SHALLOW_20130215 **Lab ID: 60138913016** Collected: 02/15/13 10:54 Received: 02/16/13 09:00 Matrix: Water

Parameters	Results	Units	Report Limit	DF	Prepared	Analyzed	CAS No.	Qual
200.7 Potentially Diss. Metals	Analytical Method: EPA 200.7 Preparation Method: EPA 200.7							
Calcium, Dissolved	**254000**	ug/L	100	1	02/20/13 14:45	02/28/13 15:11	7440-70-2	
Magnesium, Dissolved	**28000**	ug/L	50.0	1	02/20/13 14:45	02/28/13 15:11	7439-95-4	
Potassium, Dissolved	**2990**	ug/L	500	1	02/20/13 14:45	02/28/13 15:11	7440-09-7	
Sodium, Dissolved	**8280**	ug/L	500	1	02/20/13 14:45	02/28/13 15:11	7440-23-5	
200.8 MET ICPMS	Analytical Method: EPA 200.8 Preparation Method: EPA 200.8							
Aluminum	**6620**	ug/L	4.0	1	02/22/13 10:28	02/24/13 02:55	7429-90-5	
Antimony	ND	ug/L	0.50	1	02/22/13 10:28	02/24/13 02:55	7440-36-0	
Arsenic	**4.6**	ug/L	0.50	1	02/22/13 10:28	02/24/13 02:55	7440-38-2	
Barium	**88.2**	ug/L	0.30	1	02/22/13 10:28	02/24/13 02:55	7440-39-3	
Beryllium	**0.57**	ug/L	0.20	1	02/22/13 10:28	02/24/13 02:55	7440-41-7	
Cadmium	**1.9**	ug/L	0.080	1	02/22/13 10:28	02/24/13 02:55	7440-43-9	
Calcium	**286000**	ug/L	400	20	02/22/13 10:28	02/24/13 03:00	7440-70-2	
Chromium	**7.0**	ug/L	0.50	1	02/22/13 10:28	02/24/13 02:55	7440-47-3	
Cobalt	**2.9**	ug/L	0.50	1	02/22/13 10:28	02/24/13 02:55	7440-48-4	
Copper	**31.7**	ug/L	0.50	1	02/22/13 10:28	02/24/13 02:55	7440-50-8	
Iron	**7220**	ug/L	50.0	1	02/22/13 10:28	02/24/13 02:55	7439-89-6	
Lead	**35.6**	ug/L	0.10	1	02/22/13 10:28	02/24/13 02:55	7439-92-1	
Magnesium	**32500**	ug/L	100	20	02/22/13 10:28	02/24/13 03:00	7439-95-4	
Manganese	**276**	ug/L	0.50	1	02/22/13 10:28	02/24/13 02:55	7439-96-5	
Molybdenum	**2.5**	ug/L	0.50	1	02/22/13 10:28	02/24/13 02:55	7439-98-7	
Nickel	**5.3**	ug/L	0.50	1	02/22/13 10:28	02/24/13 02:55	7440-02-0	
Potassium	**4270**	ug/L	20.0	1	02/22/13 10:28	02/24/13 02:55	7440-09-7	
Selenium	**27.0**	ug/L	0.50	1	02/22/13 10:28	02/24/13 02:55	7782-49-2	
Silica	**39500**	ug/L	1070	20	02/22/13 10:28	02/24/13 03:00	7631-86-9	
Silver	ND	ug/L	0.50	1	02/22/13 10:28	02/24/13 12:44	7440-22-4	
Sodium	**8430**	ug/L	50.0	1	02/22/13 10:28	02/24/13 02:55	7440-23-5	
Thallium	**0.16**	ug/L	0.10	1	02/22/13 10:28	02/24/13 02:55	7440-28-0	
Total Hardness by 2340B	**848000**	ug/L	1420	20	02/22/13 10:28	02/24/13 03:00		
Vanadium	**8.7**	ug/L	0.10	1	02/22/13 10:28	02/24/13 02:55	7440-62-2	
Zinc	**243**	ug/L	5.0	1	02/22/13 10:28	02/24/13 02:55	7440-66-6	
200.8 MET ICPMS, Dissolved	Analytical Method: EPA 200.8 Preparation Method: EPA 200.8							
Aluminum, Dissolved	**3580**	ug/L	4.0	1	02/21/13 12:53	02/23/13 14:45	7429-90-5	
Antimony, Dissolved	ND	ug/L	0.50	1	02/21/13 12:53	02/23/13 14:45	7440-36-0	
Arsenic, Dissolved	**2.7**	ug/L	0.50	1	02/21/13 12:53	02/23/13 14:45	7440-38-2	
Barium, Dissolved	**62.3**	ug/L	0.30	1	02/21/13 12:53	02/23/13 14:45	7440-39-3	
Beryllium, Dissolved	**0.41**	ug/L	0.20	1	02/21/13 12:53	02/23/13 14:45	7440-41-7	
Cadmium, Dissolved	**1.8**	ug/L	0.080	1	02/21/13 12:53	02/23/13 14:45	7440-43-9	
Calcium, Dissolved	**301000**	ug/L	400	20	02/21/13 12:53	02/23/13 14:50	7440-70-2	
Chromium, Dissolved	**4.3**	ug/L	0.50	1	02/21/13 12:53	02/23/13 14:45	7440-47-3	
Cobalt, Dissolved	**2.1**	ug/L	0.50	1	02/21/13 12:53	02/23/13 14:45	7440-48-4	
Copper, Dissolved	**21.6**	ug/L	0.50	1	02/21/13 12:53	02/23/13 14:45	7440-50-8	
Iron, Dissolved	**4140**	ug/L	50.0	1	02/21/13 12:53	02/23/13 14:45	7439-89-6	
Lead, Dissolved	**25.1**	ug/L	0.10	1	02/21/13 12:53	02/23/13 14:45	7439-92-1	
Magnesium, Dissolved	**31400**	ug/L	100	20	02/21/13 12:53	02/23/13 14:50	7439-95-4	

This report shall not be reproduced, except in full,
without the written consent of Pace Analytical Services, Inc..

Pace Analytical Services, Inc.
9608 Loiret Blvd.
Lenexa, KS 66219
(913)599-5665

ANALYTICAL RESULTS

Project: February 2013 Rico Water Sampl
Pace Project No.: 60138913

Sample: MW-4 SHALLOW_20130215 **Lab ID: 60138913016** Collected: 02/15/13 10:54 Received: 02/16/13 09:00 Matrix: Water

Parameters	Results	Units	Report Limit	DF	Prepared	Analyzed	CAS No.	Qual
200.8 MET ICPMS, Dissolved	Analytical Method: EPA 200.8 Preparation Method: EPA 200.8							
Manganese, Dissolved	**219**	ug/L	0.50	1	02/21/13 12:53	02/23/13 14:45	7439-96-5	
Molybdenum, Dissolved	**1.9**	ug/L	0.50	1	02/21/13 12:53	02/23/13 14:45	7439-98-7	
Nickel, Dissolved	**6.5**	ug/L	0.50	1	02/21/13 12:53	02/23/13 14:45	7440-02-0	
Potassium, Dissolved	**3570**	ug/L	20.0	1	02/21/13 12:53	02/23/13 14:45	7440-09-7	
Selenium, Dissolved	**26.3**	ug/L	0.50	1	02/21/13 12:53	02/23/13 14:45	7782-49-2	
Silver, Dissolved	ND	ug/L	0.50	1	02/21/13 12:53	02/23/13 14:45	7440-22-4	
Sodium, Dissolved	**8330**	ug/L	50.0	1	02/21/13 12:53	02/23/13 14:45	7440-23-5	
Thallium, Dissolved	**0.10**	ug/L	0.10	1	02/21/13 12:53	02/23/13 14:45	7440-28-0	
Vanadium, Dissolved	**4.7**	ug/L	0.10	1	02/21/13 12:53	02/23/13 14:45	7440-62-2	
Zinc, Dissolved	**209**	ug/L	5.0	1	02/21/13 12:53	02/23/13 14:45	7440-66-6	
200.8 Potentially Diss. Metals	Analytical Method: EPA 200.8 Preparation Method: EPA 200.8							
Aluminum, Dissolved	**2090**	ug/L	50.0	1	02/20/13 14:45	03/04/13 17:54	7429-90-5	
Antimony, Dissolved	**0.12J**	ug/L	1.0	1	02/20/13 14:45	03/04/13 17:54	7440-36-0	
Arsenic, Dissolved	**2.2**	ug/L	1.0	1	02/20/13 14:45	03/04/13 17:54	7440-38-2	
Barium, Dissolved	**51.3**	ug/L	1.0	1	02/20/13 14:45	03/04/13 17:54	7440-39-3	
Beryllium, Dissolved	**0.42J**	ug/L	0.50	1	02/20/13 14:45	03/05/13 08:22	7440-41-7	
Cadmium, Dissolved	**1.8**	ug/L	0.50	1	02/20/13 14:45	03/04/13 17:54	7440-43-9	
Chromium, Dissolved	**4.3**	ug/L	1.0	1	02/20/13 14:45	03/04/13 17:54	7440-47-3	
Cobalt, Dissolved	**2.5**	ug/L	1.0	1	02/20/13 14:45	03/04/13 17:54	7440-48-4	
Copper, Dissolved	**24.6**	ug/L	1.0	1	02/20/13 14:45	03/04/13 17:54	7440-50-8	
Iron, Dissolved	**3260**	ug/L	50.0	1	02/20/13 14:45	03/04/13 17:54	7439-89-6	
Lead, Dissolved	**42.6**	ug/L	1.0	1	02/20/13 14:45	03/04/13 17:54	7439-92-1	
Manganese, Dissolved	**271**	ug/L	1.0	1	02/20/13 14:45	03/04/13 17:54	7439-96-5	
Molybdenum, Dissolved	**1.0**	ug/L	1.0	1	02/20/13 14:45	03/04/13 17:54	7439-98-7	
Nickel, Dissolved	**2.5**	ug/L	1.0	1	02/20/13 14:45	03/04/13 17:54	7440-02-0	
Selenium, Dissolved	**25.4**	ug/L	1.0	1	02/20/13 14:45	03/04/13 17:54	7782-49-2	
Silver, Dissolved	**0.15J**	ug/L	0.50	1	02/20/13 14:45	03/04/13 17:54	7440-22-4	
Thallium, Dissolved	**0.084J**	ug/L	1.0	1	02/20/13 14:45	03/04/13 17:54	7440-28-0	
Vanadium, Dissolved	**3.0**	ug/L	1.0	1	02/20/13 14:45	03/04/13 17:54	7440-62-2	
Zinc, Dissolved	**210**	ug/L	10.0	1	02/20/13 14:45	03/04/13 17:54	7440-66-6	
245.1 Mercury	Analytical Method: EPA 245.1 Preparation Method: EPA 245.1							
Mercury	ND	ug/L	0.20	1	02/21/13 14:42	02/27/13 16:38	7439-97-6	
245.1 Mercury, Dissolved	Analytical Method: EPA 245.1 Preparation Method: EPA 245.1							
Mercury, Dissolved	ND	ug/L	0.20	1	02/21/13 14:43	02/27/13 17:51	7439-97-6	
245.1 Potentially Diss Mercury	Analytical Method: EPA 245.1 Preparation Method: EPA 245.1							
Mercury, Dissolved	ND	ug/L	0.20	1	02/25/13 12:30	02/27/13 11:46	7439-97-6	
2510B Specific Conductance	Analytical Method: SM 2510B							
Specific Conductance	**1330**	umhos/cm	10.0	1		02/25/13 12:22		

This report shall not be reproduced, except in full,
without the written consent of Pace Analytical Services, Inc..

Pace Analytical Services, Inc.
9608 Loiret Blvd.
Lenexa, KS 66219
(913)599-5665

ANALYTICAL RESULTS

Project: February 2013 Rico Water Sampl
Pace Project No.: 60138913

Sample: MW-4 SHALLOW_20130215 **Lab ID: 60138913016** Collected: 02/15/13 10:54 Received: 02/16/13 09:00 Matrix: Water

Parameters	Results	Units	Report Limit	DF	Prepared	Analyzed	CAS No.	Qual
Salinity	Analytical Method: Calculated							
Salinity (as dissolved solids)	**849**	mg/L	6.4	1		02/25/13 16:50		
Salinity (as seawater)	**0.66**	PSU	0.014	1		02/25/13 16:50		
2320B Alkalinity	Analytical Method: SM 2320B							
Alkalinity,Bicarbonate (CaCO3)	**274**	mg/L	20.0	1		02/27/13 14:52		
Alkalinity, Carbonate (CaCO3)	ND	mg/L	20.0	1		02/27/13 14:52		
Alkalinity, Total as CaCO3	**274**	mg/L	20.0	1		02/27/13 14:52		
2540C Total Dissolved Solids	Analytical Method: SM 2540C							
Total Dissolved Solids	**1090**	mg/L	5.0	1		02/19/13 14:29		
2540D Total Suspended Solids	Analytical Method: SM 2540D							
Total Suspended Solids	**378**	mg/L	5.0	1		02/20/13 09:29		
4500S2D Sulfide, Total	Analytical Method: SM 4500-S-2 D							
Sulfide, Total	ND	mg/L	0.050	1		02/19/13 13:47	18496-25-8	
300.0 IC Anions 28 Days	Analytical Method: EPA 300.0							
Chloride	**1.1**	mg/L	1.0	1		02/20/13 06:01	16887-00-6	
Sulfate	**523**	mg/L	50.0	50		02/20/13 06:19	14808-79-8	
353.2 Nitrogen, NO2/NO3 pres.	Analytical Method: EPA 353.2							
Nitrogen, NO2 plus NO3	**0.44**	mg/L	0.10	1		02/27/13 14:19		
4500CNE Cyanide, Total	Analytical Method: SM 4500-CN-E							
Cyanide	ND	mg/L	0.0050	1		02/20/13 13:47	57-12-5	
5310C TOC	Analytical Method: SM 5310C							
Total Organic Carbon	**0.67**	mg/L	0.50	1		02/20/13 21:39	7440-44-0	

This report shall not be reproduced, except in full,
without the written consent of Pace Analytical Services, Inc..

Pace Analytical Services, Inc.
9608 Loiret Blvd.
Lenexa, KS 66219
(913)599-5665

ANALYTICAL RESULTS

Project: February 2013 Rico Water Sampl
Pace Project No.: 60138913

Sample: EB-2_20130215 **Lab ID: 60138913017** Collected: 02/15/13 10:22 Received: 02/16/13 09:00 Matrix: Water

Parameters	Results	Units	Report Limit	DF	Prepared	Analyzed	CAS No.	Qual
200.7 Potentially Diss. Metals	Analytical Method: EPA 200.7 Preparation Method: EPA 200.7							
Calcium, Dissolved	**325000**	ug/L	1000	10	02/20/13 14:45	02/28/13 15:13	7440-70-2	
Magnesium, Dissolved	**167000**	ug/L	500	10	02/20/13 14:45	02/28/13 15:13	7439-95-4	
Potassium, Dissolved	**16100**	ug/L	5000	10	02/20/13 14:45	02/28/13 15:13	7440-09-7	
Sodium, Dissolved	**6530**	ug/L	5000	10	02/20/13 14:45	02/28/13 15:13	7440-23-5	
200.8 MET ICPMS	Analytical Method: EPA 200.8 Preparation Method: EPA 200.8							
Aluminum	**25900**	ug/L	80.0	20	02/22/13 10:28	02/24/13 03:27	7429-90-5	
Antimony	**1.5**	ug/L	0.50	1	02/22/13 10:28	02/24/13 03:21	7440-36-0	
Arsenic	**472**	ug/L	10.0	20	02/22/13 10:28	02/24/13 03:27	7440-38-2	
Barium	**42.3**	ug/L	0.30	1	02/22/13 10:28	02/24/13 03:21	7440-39-3	
Beryllium	**7.6**	ug/L	0.20	1	02/22/13 10:28	02/24/13 03:21	7440-41-7	
Cadmium	**9.8**	ug/L	0.080	1	02/22/13 10:28	02/24/13 03:21	7440-43-9	
Calcium	**346000**	ug/L	400	20	02/22/13 10:28	02/24/13 03:27	7440-70-2	
Chromium	**3.1**	ug/L	0.50	1	02/22/13 10:28	02/24/13 03:21	7440-47-3	
Cobalt	**102**	ug/L	0.50	1	02/22/13 10:28	02/24/13 03:21	7440-48-4	
Copper	**148**	ug/L	0.50	1	02/22/13 10:28	02/24/13 03:21	7440-50-8	
Iron	**775000**	ug/L	5000	100	02/22/13 10:28	02/24/13 12:55	7439-89-6	
Lead	**1100**	ug/L	2.0	20	02/22/13 10:28	02/24/13 03:27	7439-92-1	
Magnesium	**171000**	ug/L	100	20	02/22/13 10:28	02/24/13 03:27	7439-95-4	
Manganese	**42000**	ug/L	50.0	100	02/22/13 10:28	02/24/13 12:55	7439-96-5	
Molybdenum	**5.6**	ug/L	0.50	1	02/22/13 10:28	02/24/13 03:21	7439-98-7	
Nickel	**154**	ug/L	0.50	1	02/22/13 10:28	02/24/13 03:21	7440-02-0	
Potassium	**17800**	ug/L	20.0	1	02/22/13 10:28	02/24/13 03:21	7440-09-7	
Selenium	**4.6**	ug/L	0.50	1	02/22/13 10:28	02/24/13 03:21	7782-49-2	
Silica	**58500**	ug/L	1070	20	02/22/13 10:28	02/24/13 03:27	7631-86-9	
Silver	**4.5**	ug/L	0.50	1	02/22/13 10:28	02/24/13 12:49	7440-22-4	
Sodium	**6360**	ug/L	50.0	1	02/22/13 10:28	02/24/13 03:21	7440-23-5	
Thallium	**0.18**	ug/L	0.10	1	02/22/13 10:28	02/24/13 03:21	7440-28-0	
Total Hardness by 2340B	**1570000**	ug/L	1420	20	02/22/13 10:28	02/24/13 03:27		
Vanadium	**3.6**	ug/L	0.10	1	02/22/13 10:28	02/24/13 03:21	7440-62-2	
Zinc	**89600**	ug/L	2500	500	02/22/13 10:28	02/24/13 13:00	7440-66-6	
200.8 MET ICPMS, Dissolved	Analytical Method: EPA 200.8 Preparation Method: EPA 200.8							
Aluminum, Dissolved	**21400**	ug/L	20.0	5	02/21/13 12:53	02/23/13 15:15	7429-90-5	
Antimony, Dissolved	ND	ug/L	2.5	5	02/21/13 12:53	02/23/13 15:15	7440-36-0	D3
Arsenic, Dissolved	**384**	ug/L	2.5	5	02/21/13 12:53	02/23/13 15:15	7440-38-2	
Barium, Dissolved	**9.8**	ug/L	1.5	5	02/21/13 12:53	02/23/13 15:15	7440-39-3	
Beryllium, Dissolved	**9.0**	ug/L	1.0	5	02/21/13 12:53	02/23/13 15:15	7440-41-7	
Cadmium, Dissolved	**3.1**	ug/L	0.40	5	02/21/13 12:53	02/23/13 15:15	7440-43-9	
Calcium, Dissolved	**376000**	ug/L	1000	50	02/21/13 12:53	02/23/13 15:20	7440-70-2	
Chromium, Dissolved	ND	ug/L	2.5	5	02/21/13 12:53	02/23/13 15:15	7440-47-3	D3
Cobalt, Dissolved	**111**	ug/L	2.5	5	02/21/13 12:53	02/23/13 15:15	7440-48-4	
Copper, Dissolved	**12.3**	ug/L	2.5	5	02/21/13 12:53	02/23/13 15:15	7440-50-8	
Iron, Dissolved	**772000**	ug/L	2500	50	02/21/13 12:53	02/23/13 15:20	7439-89-6	
Lead, Dissolved	**110**	ug/L	0.50	5	02/21/13 12:53	02/23/13 15:15	7439-92-1	
Magnesium, Dissolved	**176000**	ug/L	250	50	02/21/13 12:53	02/23/13 15:20	7439-95-4	

This report shall not be reproduced, except in full,
without the written consent of Pace Analytical Services, Inc..

Pace Analytical Services, Inc.
9608 Loiret Blvd.
Lenexa, KS 66219
(913)599-5665

ANALYTICAL RESULTS

Project: February 2013 Rico Water Sampl
Pace Project No.: 60138913

Sample: EB-2_20130215 **Lab ID: 60138913017** Collected: 02/15/13 10:22 Received: 02/16/13 09:00 Matrix: Water

Parameters	Results	Units	Report Limit	DF	Prepared	Analyzed	CAS No.	Qual
200.8 MET ICPMS, Dissolved	Analytical Method: EPA 200.8 Preparation Method: EPA 200.8							
Manganese, Dissolved	**40000**	ug/L	250	500	02/21/13 12:53	02/23/13 15:24	7439-96-5	
Molybdenum, Dissolved	**3.3**	ug/L	2.5	5	02/21/13 12:53	02/23/13 15:15	7439-98-7	
Nickel, Dissolved	**172**	ug/L	2.5	5	02/21/13 12:53	02/23/13 15:15	7440-02-0	
Potassium, Dissolved	**16800**	ug/L	100	5	02/21/13 12:53	02/23/13 15:15	7440-09-7	
Selenium, Dissolved	**3.4**	ug/L	2.5	5	02/21/13 12:53	02/23/13 15:15	7782-49-2	
Silver, Dissolved	ND	ug/L	2.5	5	02/21/13 12:53	02/23/13 15:15	7440-22-4	D3
Sodium, Dissolved	**6790**	ug/L	250	5	02/21/13 12:53	02/23/13 15:15	7440-23-5	
Thallium, Dissolved	ND	ug/L	0.50	5	02/21/13 12:53	02/23/13 15:15	7440-28-0	D3
Vanadium, Dissolved	ND	ug/L	0.50	5	02/21/13 12:53	02/23/13 15:15	7440-62-2	D3
Zinc, Dissolved	**89000**	ug/L	2500	500	02/21/13 12:53	02/23/13 15:24	7440-66-6	
200.8 Potentially Diss. Metals	Analytical Method: EPA 200.8 Preparation Method: EPA 200.8							
Aluminum, Dissolved	**19600**	ug/L	50.0	1	02/20/13 14:45	03/04/13 18:02	7429-90-5	
Antimony, Dissolved	**0.50J**	ug/L	1.0	1	02/20/13 14:45	03/04/13 18:02	7440-36-0	
Arsenic, Dissolved	**397**	ug/L	1.0	1	02/20/13 14:45	03/04/13 18:02	7440-38-2	
Barium, Dissolved	**11.9**	ug/L	1.0	1	02/20/13 14:45	03/04/13 18:02	7440-39-3	
Beryllium, Dissolved	**6.7**	ug/L	0.50	1	02/20/13 14:45	03/05/13 08:24	7440-41-7	
Cadmium, Dissolved	**4.3**	ug/L	0.50	1	02/20/13 14:45	03/04/13 18:02	7440-43-9	
Chromium, Dissolved	**1.3**	ug/L	1.0	1	02/20/13 14:45	03/04/13 18:02	7440-47-3	B
Cobalt, Dissolved	**102**	ug/L	1.0	1	02/20/13 14:45	03/04/13 18:02	7440-48-4	
Copper, Dissolved	**45.4**	ug/L	1.0	1	02/20/13 14:45	03/04/13 18:02	7440-50-8	
Iron, Dissolved	**732000**	ug/L	5000	100	02/20/13 14:45	03/04/13 17:58	7439-89-6	
Lead, Dissolved	**554**	ug/L	1.0	1	02/20/13 14:45	03/04/13 18:02	7439-92-1	
Manganese, Dissolved	**39200**	ug/L	100	100	02/20/13 14:45	03/04/13 17:58	7439-96-5	
Molybdenum, Dissolved	**3.0**	ug/L	1.0	1	02/20/13 14:45	03/04/13 18:02	7439-98-7	
Nickel, Dissolved	**145**	ug/L	1.0	1	02/20/13 14:45	03/04/13 18:02	7440-02-0	
Selenium, Dissolved	**4.8**	ug/L	1.0	1	02/20/13 14:45	03/04/13 18:02	7782-49-2	
Silver, Dissolved	**0.099J**	ug/L	0.50	1	02/20/13 14:45	03/04/13 18:02	7440-22-4	
Thallium, Dissolved	**0.16J**	ug/L	1.0	1	02/20/13 14:45	03/04/13 18:02	7440-28-0	
Vanadium, Dissolved	**0.73J**	ug/L	1.0	1	02/20/13 14:45	03/04/13 18:02	7440-62-2	
Zinc, Dissolved	**87800**	ug/L	1000	100	02/20/13 14:45	03/04/13 17:58	7440-66-6	
245.1 Mercury	Analytical Method: EPA 245.1 Preparation Method: EPA 245.1							
Mercury	ND	ug/L	0.20	1	02/21/13 14:42	02/27/13 16:41	7439-97-6	
245.1 Mercury, Dissolved	Analytical Method: EPA 245.1 Preparation Method: EPA 245.1							
Mercury, Dissolved	ND	ug/L	0.20	1	02/21/13 14:43	02/27/13 17:56	7439-97-6	
245.1 Potentially Diss Mercury	Analytical Method: EPA 245.1 Preparation Method: EPA 245.1							
Mercury, Dissolved	ND	ug/L	0.20	1	02/25/13 12:30	02/27/13 11:48	7439-97-6	
2510B Specific Conductance	Analytical Method: SM 2510B							
Specific Conductance	**3740**	umhos/cm	10.0	1		02/25/13 12:25		
Salinity	Analytical Method: Calculated							
Salinity (as dissolved solids)	**2390**	mg/L	6.4	1		02/25/13 16:50		

This report shall not be reproduced, except in full,
without the written consent of Pace Analytical Services, Inc..

Pace Analytical Services, Inc.
9608 Loiret Blvd.
Lenexa, KS 66219
(913)599-5665

ANALYTICAL RESULTS

Project: February 2013 Rico Water Sampl
Pace Project No.: 60138913

Sample: EB-2_20130215 **Lab ID: 60138913017** Collected: 02/15/13 10:22 Received: 02/16/13 09:00 Matrix: Water

Parameters	Results	Units	Report Limit	DF	Prepared	Analyzed	CAS No.	Qual
Salinity	Analytical Method: Calculated							
Salinity (as seawater)	**2.0**	PSU	0.014	1		02/25/13 16:50		
2320B Alkalinity	Analytical Method: SM 2320B							
Alkalinity,Bicarbonate (CaCO3)	ND	mg/L	20.0	1		02/27/13 14:59		
Alkalinity, Carbonate (CaCO3)	ND	mg/L	20.0	1		02/27/13 14:59		
Alkalinity, Total as CaCO3	ND	mg/L	20.0	1		02/27/13 14:59		
2540C Total Dissolved Solids	Analytical Method: SM 2540C							
Total Dissolved Solids	**4720**	mg/L	5.0	1		02/19/13 14:29		
2540D Total Suspended Solids	Analytical Method: SM 2540D							
Total Suspended Solids	**326**	mg/L	5.0	1		02/20/13 09:29		
4500S2D Sulfide, Total	Analytical Method: SM 4500-S-2 D							
Sulfide, Total	ND	mg/L	0.050	1		02/19/13 13:47	18496-25-8	
300.0 IC Anions 28 Days	Analytical Method: EPA 300.0							
Chloride	**3.5**	mg/L	1.0	1		02/20/13 06:37	16887-00-6	
Sulfate	**3210**	mg/L	200	200		02/21/13 05:48	14808-79-8	
353.2 Nitrogen, NO2/NO3 pres.	Analytical Method: EPA 353.2							
Nitrogen, NO2 plus NO3	ND	mg/L	0.10	1		02/27/13 14:47		
4500CNE Cyanide, Total	Analytical Method: SM 4500-CN-E							
Cyanide	ND	mg/L	0.0050	1		02/20/13 13:48	57-12-5	
5310C TOC	Analytical Method: SM 5310C							
Total Organic Carbon	ND	mg/L	0.50	1		02/20/13 21:57	7440-44-0	

This report shall not be reproduced, except in full,
without the written consent of Pace Analytical Services, Inc..

Pace Analytical Services, Inc.
9608 Loiret Blvd.
Lenexa, KS 66219
(913)599-5665

March 22, 2013

Mark DeFriez
Anderson Engineering Company I
977 W 2100 S.
Salt Lake City, UT 84119

RE: Project: February 2013 Rico Water Sampl
Pace Project No.: 60139049

Dear Mark DeFriez:
Enclosed are the analytical results for sample(s) received by the laboratory on February 20, 2013. The results relate only to the within this report conform to the most current version of the TNI standards, BP LaMP Technical Requirements Revision 10.1, and any applicable Quality Assurance Project Plan (QAPP), or Work Plan unless otherwise narrated in the body of this report.

If you have any questions concerning this report, please feel free to contact me.

Sincerely,

Heather M. Wilson

Heather Wilson

heather.wilson@pacelabs.com
Project Manager

Enclosures

This report shall not be reproduced, except in full,
without the written consent of Pace Analytical Services, Inc..

Pace Analytical Services, Inc.
9608 Loiret Blvd.
Lenexa, KS 66219
(913)599-5665

CERTIFICATIONS

Project: February 2013 Rico Water Sampl
Pace Project No.: 60139049

Minnesota Certification IDs
1700 Elm Street SE Suite 200, Minneapolis, MN 55414
A2LA Certification #: 2926.01
Alaska Certification #: UST-078
Alaska Certification #MN00064
Arizona Certification #: AZ-0014
Arkansas Certification #: 88-0680
California Certification #: 01155CA
Colorado Certification #Pace
Connecticut Certification #: PH-0256
EPA Region 8 Certification #: Pace
Florida/NELAP Certification #: E87605
Georgia Certification #: 959
Hawaii Certification #Pace
Idaho Certification #: MN00064
Illinois Certification #: 200011
Kansas Certification #: E-10167
Louisiana Certification #: 03086
Louisiana Certification #: LA080009
Maine Certification #: 2007029
Maryland Certification #: 322
Michigan DEQ Certification #: 9909
Minnesota Certification #: 027-053-137
Mississippi Certification #: Pace
Montana Certification #: MT CERT0092
Nebraska Certification #: Pace
Nevada Certification #: MN_00064
New Jersey Certification #: MN-002
New York Certification #: 11647
North Carolina Certification #: 530
North Dakota Certification #: R-036
North Dakota Certification #: R-036A
Ohio VAP Certification #: CL101
Oklahoma Certification #: 9507
Oregon Certification #: MN200001
Oregon Certification #: MN300001
Pennsylvania Certification #: 68-00563
Puerto Rico Certification
Tennessee Certification #: 02818
Texas Certification #: T104704192
Utah Certification #: MN00064
Virginia/DCLS Certification #: 002521
Virginia/VELAP Certification #: 460163
Washington Certification #: C754
West Virginia Certification #: 382
Wisconsin Certification #: 999407970

Montana Certification IDs
602 South 25th Street, Billings, MT 59101
EPA Region 8 Certification #: 8TMS-Q
Idaho Certification #: MT00012
Montana Certification #: MT CERT0040
NVLAP Certification #: 101292-0
Minnesota Dept of Health Certification #: 030-999-442
Washington Department of Ecology #: C993

Green Bay Certification IDs
1241 Bellevue Street, Green Bay, WI 54302
Florida/NELAP Certification #: E87948
Illinois Certification #: 200050
Kentucky Certification #: 82
Louisiana Certification #: 04168
Minnesota Certification #: 055-999-334
New York Certification #: 11888
North Dakota Certification #: R-150
South Carolina Certification #: 83006001
US Dept of Agriculture #: S-76505
Wisconsin Certification #: 405132750

Kansas Certification IDs
9608 Loiret Boulevard, Lenexa, KS 66219
A2LA Certification #: 2456.01
Arkansas Certification #: 12-019-0
Illinois Certification #: 002885
Iowa Certification #: 118
Kansas/NELAP Certification #: E-10116
Louisiana Certification #: 03055
Nevada Certification #: KS000212008A
Oklahoma Certification #: 9205/9935
Texas Certification #: T104704407-12-3
Utah Certification #: KS000212012-2
Illinois Certification #: 003097

This report shall not be reproduced, except in full,
without the written consent of Pace Analytical Services, Inc..

Pace Analytical Services, Inc.
9608 Loiret Blvd.
Lenexa, KS 66219
(913)599-5665

SAMPLE SUMMARY

Project: February 2013 Rico Water Sampl
Pace Project No.: 60139049

Lab ID	Sample ID	Matrix	Date Collected	Date Received
60139049001	**DR-6_20130218**	Water	02/18/13 14:59	02/20/13 10:30
60139049002	**DR-7_20130218**	Water	02/18/13 12:00	02/20/13 10:30
60139049003	**DR-2 COMPOSITE_20130218**	Water	02/18/13 14:00	02/20/13 10:30
60139049004	**DR-2_20130218**	Water	02/18/13 14:25	02/20/13 10:30
60139049005	**DR-4_20130218**	Water	02/18/13 15:33	02/20/13 10:30
60139049006	**DR-1_20130218**	Water	02/18/13 16:05	02/20/13 10:30
60139049007	**DR-5_20130218**	Water	02/18/13 15:11	02/20/13 10:30
60139049008	**DR-7 COMPOSITE_20130218**	Water	02/18/13 11:55	02/20/13 10:30
60139049009	**FB_20130218**	Water	02/18/13 16:40	02/20/13 10:30
60139049010	**DR-11_20130218**	Water	02/18/13 15:41	02/20/13 10:30

This report shall not be reproduced, except in full,
without the written consent of Pace Analytical Services, Inc..

Pace Analytical Services, Inc.
9608 Loiret Blvd.
Lenexa, KS 66219
(913)599-5665

SAMPLE ANALYTE COUNT

Project: February 2013 Rico Water Sampl
Pace Project No.: 60139049

Lab ID	Sample ID	Method	Analysts	Analytes Reported	Laboratory
60139049001	**DR-6_20130218**	EPA 200.7	SMW	4	PASI-K
		EPA 200.8	TT3	25	PASI-M
		EPA 200.8	TT3	23	PASI-M
		EPA 200.8	JGP	19	PASI-K
		EPA 245.1	WBS	1	PASI-M
		EPA 245.1	WBS	1	PASI-M
		EPA 245.1	TJT	1	PASI-K
		SM 2510B	WT1	1	
		Calculated	WT1	2	
		SM 2320B	DJR	3	PASI-K
		SM 2540C	NDL	1	PASI-K
		SM 2540D	DJR	1	PASI-K
		SM 4500-S-2 D	AJM	1	PASI-K
		EPA 300.0	AJM	2	PASI-K
		EPA 353.2	AJM	1	PASI-K
		SM 4500-CN-E	OL	1	PASI-K
		SM 5310C	TJJ	1	PASI-G
60139049002	**DR-7_20130218**	EPA 200.7	SMW	4	PASI-K
		EPA 200.8	TT3	25	PASI-M
		EPA 200.8	TT3	23	PASI-M
		EPA 200.8	JGP	19	PASI-K
		EPA 245.1	WBS	1	PASI-M
		EPA 245.1	WBS	1	PASI-M
		EPA 245.1	TJT	1	PASI-K
		SM 2510B	WT1	1	
		Calculated	WT1	2	
		SM 2320B	DJR	3	PASI-K
		SM 2540C	NDL	1	PASI-K
		SM 2540D	DJR	1	PASI-K
		SM 4500-S-2 D	AJM	1	PASI-K
		EPA 300.0	AJM	2	PASI-K
		EPA 353.2	AJM	1	PASI-K
		SM 4500-CN-E	OL	1	PASI-K
		SM 5310C	TJJ	1	PASI-G
60139049003	**DR-2 COMPOSITE_20130218**	EPA 200.7	SMW	4	PASI-K
		EPA 200.8	TT3	25	PASI-M
		EPA 200.8	TT3	23	PASI-M

This report shall not be reproduced, except in full,
without the written consent of Pace Analytical Services, Inc..

Pace Analytical Services, Inc.
9608 Loiret Blvd.
Lenexa, KS 66219
(913)599-5665

SAMPLE ANALYTE COUNT

Project: February 2013 Rico Water Sampl
Pace Project No.: 60139049

Lab ID	Sample ID	Method	Analysts	Analytes Reported	Laboratory
		EPA 200.8	JGP	19	PASI-K
		EPA 245.1	WBS	1	PASI-M
		EPA 245.1	WBS	1	PASI-M
		EPA 245.1	TJT	1	PASI-K
		SM 2510B	WT1	1	
		Calculated	WT1	2	
		SM 2320B	DJR	3	PASI-K
		SM 2540C	NDL	1	PASI-K
		SM 2540D	DJR	1	PASI-K
		SM 4500-S-2 D	AJM	1	PASI-K
		EPA 300.0	AJM	2	PASI-K
		EPA 353.2	AJM	1	PASI-K
		SM 4500-CN-E	OL	1	PASI-K
		SM 5310C	TJJ	1	PASI-G
60139049004	**DR-2_20130218**	EPA 200.7	SMW	4	PASI-K
		EPA 200.8	TT3	25	PASI-M
		EPA 200.8	TT3	23	PASI-M
		EPA 200.8	JGP	19	PASI-K
		EPA 245.1	WBS	1	PASI-M
		EPA 245.1	WBS	1	PASI-M
		EPA 245.1	TJT	1	PASI-K
		SM 2510B	WT1	1	
		Calculated	WT1	2	
		SM 2320B	DJR	3	PASI-K
		SM 2540C	NDL	1	PASI-K
		SM 2540D	DJR	1	PASI-K
		SM 4500-S-2 D	AJM	1	PASI-K
		EPA 300.0	AJM	2	PASI-K
		EPA 353.2	AJM	1	PASI-K
		SM 4500-CN-E	OL	1	PASI-K
		SM 5310C	TJJ	1	PASI-G
60139049005	**DR-4_20130218**	EPA 200.7	SMW	4	PASI-K
		EPA 200.8	TT3	25	PASI-M
		EPA 200.8	TT3	23	PASI-M
		EPA 200.8	JGP	19	PASI-K
		EPA 245.1	WBS	1	PASI-M
		EPA 245.1	WBS	1	PASI-M

This report shall not be reproduced, except in full,
without the written consent of Pace Analytical Services, Inc..

Pace Analytical Services, Inc.
9608 Loiret Blvd.
Lenexa, KS 66219
(913)599-5665

SAMPLE ANALYTE COUNT

Project: February 2013 Rico Water Sampl
Pace Project No.: 60139049

Lab ID	Sample ID	Method	Analysts	Analytes Reported	Laboratory
		EPA 245.1	TJT	1	PASI-K
		SM 2510B	WT1	1	
		Calculated	WT1	2	
		SM 2320B	DJR	3	PASI-K
		SM 2540C	NDL	1	PASI-K
		SM 2540D	DJR	1	PASI-K
		SM 4500-S-2 D	AJM	1	PASI-K
		EPA 300.0	AJM	2	PASI-K
		EPA 353.2	AJM	1	PASI-K
		SM 4500-CN-E	OL	1	PASI-K
		SM 5310C	TJJ	1	PASI-G
60139049006	**DR-1_20130218**	EPA 200.7	SMW	4	PASI-K
		EPA 200.8	TT3	25	PASI-M
		EPA 200.8	TT3	23	PASI-M
		EPA 200.8	JGP	19	PASI-K
		EPA 245.1	WBS	1	PASI-M
		EPA 245.1	WBS	1	PASI-M
		EPA 245.1	TJT	1	PASI-K
		SM 2510B	WT1	1	
		Calculated	WT1	2	
		SM 2320B	DJR	3	PASI-K
		SM 2540C	NDL	1	PASI-K
		SM 2540D	DJR	1	PASI-K
		SM 4500-S-2 D	AJM	1	PASI-K
		EPA 300.0	AJM	2	PASI-K
		EPA 353.2	AJM	1	PASI-K
		SM 4500-CN-E	OL	1	PASI-K
		SM 5310C	TJJ	1	PASI-G
60139049007	**DR-5_20130218**	EPA 200.7	SMW	4	PASI-K
		EPA 200.8	TT3	25	PASI-M
		EPA 200.8	TT3	23	PASI-M
		EPA 200.8	JGP	19	PASI-K
		EPA 245.1	WBS	1	PASI-M
		EPA 245.1	WBS	1	PASI-M
		EPA 245.1	TJT	1	PASI-K
		SM 2510B	WT1	1	
		Calculated	WT1	2	

This report shall not be reproduced, except in full,
without the written consent of Pace Analytical Services, Inc..

Pace Analytical Services, Inc.
9608 Loiret Blvd.
Lenexa, KS 66219
(913)599-5665

SAMPLE ANALYTE COUNT

Project: February 2013 Rico Water Sampl
Pace Project No.: 60139049

Lab ID	Sample ID	Method	Analysts	Analytes Reported	Laboratory
		SM 2320B	DJR	3	PASI-K
		SM 2540C	NDL	1	PASI-K
		SM 2540D	DJR	1	PASI-K
		SM 4500-S-2 D	AJM	1	PASI-K
		EPA 300.0	AJM	2	PASI-K
		EPA 353.2	AJM	1	PASI-K
		SM 4500-CN-E	OL	1	PASI-K
		SM 5310C	TJJ	1	PASI-G
60139049008	**DR-7 COMPOSITE_20130218**	EPA 200.7	SMW	4	PASI-K
		EPA 200.8	TT3	25	PASI-M
		EPA 200.8	TT3	23	PASI-M
		EPA 200.8	JGP	19	PASI-K
		EPA 245.1	WBS	1	PASI-M
		EPA 245.1	WBS	1	PASI-M
		EPA 245.1	TJT	1	PASI-K
		SM 2510B	WT1	1	
		Calculated	WT1	2	
		SM 2320B	DJR	3	PASI-K
		SM 2540C	NDL	1	PASI-K
		SM 2540D	DJR	1	PASI-K
		SM 4500-S-2 D	AJM	1	PASI-K
		EPA 300.0	AJM	2	PASI-K
		EPA 353.2	AJM	1	PASI-K
		SM 4500-CN-E	OL	1	PASI-K
		SM 5310C	TJJ	1	PASI-G
60139049009	**FB_20130218**	EPA 200.7	SMW	4	PASI-K
		EPA 200.8	TT3	25	PASI-M
		EPA 200.8	TT3	23	PASI-M
		EPA 200.8	JGP	19	PASI-K
		EPA 245.1	WBS	1	PASI-M
		EPA 245.1	WBS	1	PASI-M
		EPA 245.1	TJT	1	PASI-K
		SM 2510B	WT1	1	
		Calculated	WT1	2	
		SM 2320B	DJR	3	PASI-K
		SM 2540C	NDL	1	PASI-K
		SM 2540D	DJR	1	PASI-K

This report shall not be reproduced, except in full,
without the written consent of Pace Analytical Services, Inc..

Pace Analytical Services, Inc.
9608 Loiret Blvd.
Lenexa, KS 66219
(913)599-5665

SAMPLE ANALYTE COUNT

Project: February 2013 Rico Water Sampl
Pace Project No.: 60139049

Lab ID	Sample ID	Method	Analysts	Analytes Reported	Laboratory
		SM 4500-S-2 D	AJM	1	PASI-K
		EPA 300.0	AJM	2	PASI-K
		EPA 353.2	AJM	1	PASI-K
		SM 4500-CN-E	OL	1	PASI-K
		SM 5310C	TJJ	1	PASI-G
60139049010	**DR-11_20130218**	EPA 200.7	SMW	4	PASI-K
		EPA 200.8	TT3	25	PASI-M
		EPA 200.8	TT3	23	PASI-M
		EPA 200.8	JGP	19	PASI-K
		EPA 245.1	WBS	1	PASI-M
		EPA 245.1	WBS	1	PASI-M
		EPA 245.1	TJT	1	PASI-K
		SM 2510B	WT1	1	
		Calculated	WT1	2	
		SM 2320B	DJR	3	PASI-K
		SM 2540C	NDL	1	PASI-K
		SM 2540D	DJR	1	PASI-K
		SM 4500-S-2 D	AJM	1	PASI-K
		EPA 300.0	AJM	2	PASI-K
		EPA 353.2	AJM	1	PASI-K
		SM 4500-CN-E	OL	1	PASI-K
		SM 5310C	TJJ	1	PASI-G

This report shall not be reproduced, except in full,
without the written consent of Pace Analytical Services, Inc..

Pace Analytical Services, Inc.
9608 Loiret Blvd.
Lenexa, KS 66219
(913)599-5665

PROJECT NARRATIVE

Project: February 2013 Rico Water Sampl
Pace Project No.: 60139049

Method: **EPA 200.7**
Description: 200.7 Potentially Diss. Metals
Client: BP Anderson Engineering Company Inc.
Date: March 22, 2013

General Information:
10 samples were analyzed for EPA 200.7. All samples were received in acceptable condition with any exceptions noted below.

Hold Time:
The samples were analyzed within the method required hold times with any exceptions noted below.

Sample Preparation:
The samples were prepared in accordance with EPA 200.7 with any exceptions noted below.

Initial Calibrations (including MS Tune as applicable):
All criteria were within method requirements with any exceptions noted below.

Continuing Calibration:
All criteria were within method requirements with any exceptions noted below.

Method Blank:
All analytes were below the report limit in the method blank with any exceptions noted below.

Laboratory Control Spike:
All laboratory control spike compounds were within QC limits with any exceptions noted below.

Matrix Spikes:
All percent recoveries and relative percent differences (RPDs) were within acceptance criteria with any exceptions noted below.

QC Batch: MPRP/21639

A matrix spike and matrix spike duplicate (MS/MSD) were performed on the following sample(s): 60139049001

M1: Matrix spike recovery exceeded QC limits. Batch accepted based on laboratory control sample (LCS) recovery.

- MSD (Lab ID: 1143941)
  - Calcium, Dissolved

Additional Comments:

Analyte Comments:

QC Batch: MPRP/21639

B: Analyte was detected in the associated method blank.

- FB_20130218 (Lab ID: 60139049009)
  - Sodium, Dissolved

This report shall not be reproduced, except in full,
without the written consent of Pace Analytical Services, Inc..

Pace Analytical Services, Inc.
9608 Loiret Blvd.
Lenexa, KS 66219
(913)599-5665

PROJECT NARRATIVE

Project: February 2013 Rico Water Sampl
Pace Project No.: 60139049

Method: **EPA 200.8**
Description: 200.8 MET ICPMS
Client: BP Anderson Engineering Company Inc.
Date: March 22, 2013

General Information:
10 samples were analyzed for EPA 200.8. All samples were received in acceptable condition with any exceptions noted below.

Hold Time:
The samples were analyzed within the method required hold times with any exceptions noted below.

Sample Preparation:
The samples were prepared in accordance with EPA 200.8 with any exceptions noted below.

Initial Calibrations (including MS Tune as applicable):
All criteria were within method requirements with any exceptions noted below.

Continuing Calibration:
All criteria were within method requirements with any exceptions noted below.

Internal Standards:
All internal standards were within QC limits with any exceptions noted below.

Method Blank:
All analytes were below the report limit in the method blank with any exceptions noted below.

Laboratory Control Spike:
All laboratory control spike compounds were within QC limits with any exceptions noted below.

Matrix Spikes:
All percent recoveries and relative percent differences (RPDs) were within acceptance criteria with any exceptions noted below.

Additional Comments:

Analyte Comments:

QC Batch: MPRP/37780

E: Analyte concentration exceeded the calibration range. The reported result is estimated.

- MS (Lab ID: 1383252)
  - Calcium
- MSD (Lab ID: 1383253)
  - Calcium

This report shall not be reproduced, except in full,
without the written consent of Pace Analytical Services, Inc..

Pace Analytical Services, Inc.
9608 Loiret Blvd.
Lenexa, KS 66219
(913)599-5665

PROJECT NARRATIVE

Project: February 2013 Rico Water Sampl
Pace Project No.: 60139049

Method: **EPA 200.8**
Description: 200.8 MET ICPMS, Dissolved
Client: BP Anderson Engineering Company Inc.
Date: March 22, 2013

General Information:
10 samples were analyzed for EPA 200.8. All samples were received in acceptable condition with any exceptions noted below.

Hold Time:
The samples were analyzed within the method required hold times with any exceptions noted below.

Sample Preparation:
The samples were prepared in accordance with EPA 200.8 with any exceptions noted below.

Initial Calibrations (including MS Tune as applicable):
All criteria were within method requirements with any exceptions noted below.

Continuing Calibration:
All criteria were within method requirements with any exceptions noted below.

Internal Standards:
All internal standards were within QC limits with any exceptions noted below.

Method Blank:
All analytes were below the report limit in the method blank with any exceptions noted below.

Laboratory Control Spike:
All laboratory control spike compounds were within QC limits with any exceptions noted below.

Matrix Spikes:
All percent recoveries and relative percent differences (RPDs) were within acceptance criteria with any exceptions noted below.

QC Batch: MPRP/37781

A matrix spike and matrix spike duplicate (MS/MSD) were performed on the following sample(s): 60139049001

M1: Matrix spike recovery exceeded QC limits. Batch accepted based on laboratory control sample (LCS) recovery.

- MS (Lab ID: 1383260)
  - Calcium, Dissolved
  - Magnesium, Dissolved
  - Manganese, Dissolved
  - Potassium, Dissolved
  - Sodium, Dissolved
- MSD (Lab ID: 1383261)
  - Calcium, Dissolved
  - Magnesium, Dissolved
  - Manganese, Dissolved
  - Potassium, Dissolved
  - Sodium, Dissolved

Additional Comments:

This report shall not be reproduced, except in full,
without the written consent of Pace Analytical Services, Inc..

Pace Analytical Services, Inc.
9608 Loiret Blvd.
Lenexa, KS 66219
(913)599-5665

PROJECT NARRATIVE

Project: February 2013 Rico Water Sampl
Pace Project No.: 60139049

Method: **EPA 200.8**
Description: 200.8 MET ICPMS, Dissolved
Client: BP Anderson Engineering Company Inc.
Date: March 22, 2013

Analyte Comments:

QC Batch: MPRP/37781

E: Analyte concentration exceeded the calibration range. The reported result is estimated.

- MS (Lab ID: 1383260)
  - Calcium, Dissolved
- MSD (Lab ID: 1383261)
  - Calcium, Dissolved

This report shall not be reproduced, except in full,
without the written consent of Pace Analytical Services, Inc..

Pace Analytical Services, Inc.
9608 Loiret Blvd.
Lenexa, KS 66219
(913)599-5665

PROJECT NARRATIVE

Project: February 2013 Rico Water Sampl
Pace Project No.: 60139049

Method: **EPA 200.8**
Description: 200.8 Potentially Diss. Metals
Client: BP Anderson Engineering Company Inc.
Date: March 22, 2013

General Information:
10 samples were analyzed for EPA 200.8. All samples were received in acceptable condition with any exceptions noted below.

Hold Time:
The samples were analyzed within the method required hold times with any exceptions noted below.

Sample Preparation:
The samples were prepared in accordance with EPA 200.8 with any exceptions noted below.

Initial Calibrations (including MS Tune as applicable):
All criteria were within method requirements with any exceptions noted below.

Continuing Calibration:
All criteria were within method requirements with any exceptions noted below.

Internal Standards:
All internal standards were within QC limits with any exceptions noted below.

Method Blank:
All analytes were below the report limit in the method blank with any exceptions noted below.

Laboratory Control Spike:
All laboratory control spike compounds were within QC limits with any exceptions noted below.

Matrix Spikes:
All percent recoveries and relative percent differences (RPDs) were within acceptance criteria with any exceptions noted below.

Additional Comments:

Analyte Comments:

QC Batch: MPRP/21640

B: Analyte was detected in the associated method blank.

- DR-11_20130218 (Lab ID: 60139049010)
  - Chromium, Dissolved
- DR-1_20130218 (Lab ID: 60139049006)
  - Chromium, Dissolved
- DR-2 COMPOSITE_20130218 (Lab ID: 60139049003)
  - Chromium, Dissolved
- DR-2_20130218 (Lab ID: 60139049004)
  - Chromium, Dissolved
- DR-4_20130218 (Lab ID: 60139049005)
  - Chromium, Dissolved

This report shall not be reproduced, except in full,
without the written consent of Pace Analytical Services, Inc..

Pace Analytical Services, Inc.
9608 Loiret Blvd.
Lenexa, KS 66219
(913)599-5665

PROJECT NARRATIVE

Project: February 2013 Rico Water Sampl
Pace Project No.: 60139049

Method: **EPA 200.8**
Description: 200.8 Potentially Diss. Metals
Client: BP Anderson Engineering Company Inc.
Date: March 22, 2013

Analyte Comments:

QC Batch: MPRP/21640

B: Analyte was detected in the associated method blank.

- DR-5_20130218 (Lab ID: 60139049007)
  - Chromium, Dissolved
- DR-6_20130218 (Lab ID: 60139049001)
  - Chromium, Dissolved
- DR-7 COMPOSITE_20130218 (Lab ID: 60139049008)
  - Chromium, Dissolved
- DR-7_20130218 (Lab ID: 60139049002)
  - Chromium, Dissolved
- FB_20130218 (Lab ID: 60139049009)
  - Barium, Dissolved
  - Chromium, Dissolved
  - Lead, Dissolved

This report shall not be reproduced, except in full,
without the written consent of Pace Analytical Services, Inc..

Pace Analytical Services, Inc.
9608 Loiret Blvd.
Lenexa, KS 66219
(913)599-5665

PROJECT NARRATIVE

Project: February 2013 Rico Water Sampl
Pace Project No.: 60139049

Method: **EPA 245.1**
Description: 245.1 Mercury
Client: BP Anderson Engineering Company Inc.
Date: March 22, 2013

General Information:
10 samples were analyzed for EPA 245.1. All samples were received in acceptable condition with any exceptions noted below.

Hold Time:
The samples were analyzed within the method required hold times with any exceptions noted below.

Sample Preparation:
The samples were prepared in accordance with EPA 245.1 with any exceptions noted below.

Initial Calibrations (including MS Tune as applicable):
All criteria were within method requirements with any exceptions noted below.

Continuing Calibration:
All criteria were within method requirements with any exceptions noted below.

Method Blank:
All analytes were below the report limit in the method blank with any exceptions noted below.

Laboratory Control Spike:
All laboratory control spike compounds were within QC limits with any exceptions noted below.

Matrix Spikes:
All percent recoveries and relative percent differences (RPDs) were within acceptance criteria with any exceptions noted below.

Additional Comments:

This report shall not be reproduced, except in full,
without the written consent of Pace Analytical Services, Inc..

Pace Analytical Services, Inc.
9608 Loiret Blvd.
Lenexa, KS 66219
(913)599-5665

PROJECT NARRATIVE

Project: February 2013 Rico Water Sampl
Pace Project No.: 60139049

Method: **EPA 245.1**
Description: 245.1 Mercury, Dissolved
Client: BP Anderson Engineering Company Inc.
Date: March 22, 2013

General Information:
10 samples were analyzed for EPA 245.1. All samples were received in acceptable condition with any exceptions noted below.

Hold Time:
The samples were analyzed within the method required hold times with any exceptions noted below.

Sample Preparation:
The samples were prepared in accordance with EPA 245.1 with any exceptions noted below.

Initial Calibrations (including MS Tune as applicable):
All criteria were within method requirements with any exceptions noted below.

Continuing Calibration:
All criteria were within method requirements with any exceptions noted below.

Method Blank:
All analytes were below the report limit in the method blank with any exceptions noted below.

Laboratory Control Spike:
All laboratory control spike compounds were within QC limits with any exceptions noted below.

Matrix Spikes:
All percent recoveries and relative percent differences (RPDs) were within acceptance criteria with any exceptions noted below.

Additional Comments:

This report shall not be reproduced, except in full,
without the written consent of Pace Analytical Services, Inc..

Pace Analytical Services, Inc.
9608 Loiret Blvd.
Lenexa, KS 66219
(913)599-5665

PROJECT NARRATIVE

Project: February 2013 Rico Water Sampl
Pace Project No.: 60139049

Method: **EPA 245.1**
Description: 245.1 Potentially Diss Mercury
Client: BP Anderson Engineering Company Inc.
Date: March 22, 2013

General Information:
10 samples were analyzed for EPA 245.1. All samples were received in acceptable condition with any exceptions noted below.

Hold Time:
The samples were analyzed within the method required hold times with any exceptions noted below.

Sample Preparation:
The samples were prepared in accordance with EPA 245.1 with any exceptions noted below.

Initial Calibrations (including MS Tune as applicable):
All criteria were within method requirements with any exceptions noted below.

Continuing Calibration:
All criteria were within method requirements with any exceptions noted below.

Method Blank:
All analytes were below the report limit in the method blank with any exceptions noted below.

Laboratory Control Spike:
All laboratory control spike compounds were within QC limits with any exceptions noted below.

Matrix Spikes:
All percent recoveries and relative percent differences (RPDs) were within acceptance criteria with any exceptions noted below.

Additional Comments:

This report shall not be reproduced, except in full,
without the written consent of Pace Analytical Services, Inc..

Pace Analytical Services, Inc.
9608 Loiret Blvd.
Lenexa, KS 66219
(913)599-5665

PROJECT NARRATIVE

Project: February 2013 Rico Water Sampl
Pace Project No.: 60139049

Method: **SM 2510B**
Description: 2510B Specific Conductance
Client: BP Anderson Engineering Company Inc.
Date: March 22, 2013

General Information:
10 samples were analyzed for SM 2510B. All samples were received in acceptable condition with any exceptions noted below.

Hold Time:
The samples were analyzed within the method required hold times with any exceptions noted below.

Initial Calibrations (including MS Tune as applicable):
All criteria were within method requirements with any exceptions noted below.

Continuing Calibration:
All criteria were within method requirements with any exceptions noted below.

Internal Standards:
All internal standards were within QC limits with any exceptions noted below.

Surrogates:
All surrogates were within QC limits with any exceptions noted below.

Method Blank:
All analytes were below the report limit in the method blank with any exceptions noted below.

Laboratory Control Spike:
All laboratory control spike compounds were within QC limits with any exceptions noted below.

Matrix Spikes:
All percent recoveries and relative percent differences (RPDs) were within acceptance criteria with any exceptions noted below.

Duplicate Sample:
All duplicate sample results were within method acceptance criteria with any exceptions noted below.

Additional Comments:

This report shall not be reproduced, except in full,
without the written consent of Pace Analytical Services, Inc..

Pace Analytical Services, Inc.
9608 Loiret Blvd.
Lenexa, KS 66219
(913)599-5665

PROJECT NARRATIVE

Project: February 2013 Rico Water Sampl
Pace Project No.: 60139049

Method: **Calculated**
Description: Salinity
Client: BP Anderson Engineering Company Inc.
Date: March 22, 2013

General Information:
10 samples were analyzed for Calculated. All samples were received in acceptable condition with any exceptions noted below.

Hold Time:
The samples were analyzed within the method required hold times with any exceptions noted below.

Initial Calibrations (including MS Tune as applicable):
All criteria were within method requirements with any exceptions noted below.

Continuing Calibration:
All criteria were within method requirements with any exceptions noted below.

Internal Standards:
All internal standards were within QC limits with any exceptions noted below.

Surrogates:
All surrogates were within QC limits with any exceptions noted below.

Method Blank:
All analytes were below the report limit in the method blank with any exceptions noted below.

Laboratory Control Spike:
All laboratory control spike compounds were within QC limits with any exceptions noted below.

Matrix Spikes:
All percent recoveries and relative percent differences (RPDs) were within acceptance criteria with any exceptions noted below.

Additional Comments:

This report shall not be reproduced, except in full,
without the written consent of Pace Analytical Services, Inc..

Pace Analytical Services, Inc.
9608 Loiret Blvd.
Lenexa, KS 66219
(913)599-5665

PROJECT NARRATIVE

Project: February 2013 Rico Water Sampl
Pace Project No.: 60139049

Method: **SM 2320B**
Description: 2320B Alkalinity
Client: BP Anderson Engineering Company Inc.
Date: March 22, 2013

General Information:
10 samples were analyzed for SM 2320B. All samples were received in acceptable condition with any exceptions noted below.

Hold Time:
The samples were analyzed within the method required hold times with any exceptions noted below.

Method Blank:
All analytes were below the report limit in the method blank with any exceptions noted below.

Laboratory Control Spike:
All laboratory control spike compounds were within QC limits with any exceptions noted below.

Matrix Spikes:
All percent recoveries and relative percent differences (RPDs) were within acceptance criteria with any exceptions noted below.

Duplicate Sample:
All duplicate sample results were within method acceptance criteria with any exceptions noted below.

Additional Comments:

This report shall not be reproduced, except in full,
without the written consent of Pace Analytical Services, Inc..

Pace Analytical Services, Inc.
9608 Loiret Blvd.
Lenexa, KS 66219
(913)599-5665

PROJECT NARRATIVE

Project: February 2013 Rico Water Sampl
Pace Project No.: 60139049

Method: **SM 2540C**
Description: 2540C Total Dissolved Solids
Client: BP Anderson Engineering Company Inc.
Date: March 22, 2013

General Information:
10 samples were analyzed for SM 2540C. All samples were received in acceptable condition with any exceptions noted below.

Hold Time:
The samples were analyzed within the method required hold times with any exceptions noted below.

Method Blank:
All analytes were below the report limit in the method blank with any exceptions noted below.

Laboratory Control Spike:
All laboratory control spike compounds were within QC limits with any exceptions noted below.

Matrix Spikes:
All percent recoveries and relative percent differences (RPDs) were within acceptance criteria with any exceptions noted below.

Duplicate Sample:
All duplicate sample results were within method acceptance criteria with any exceptions noted below.

Additional Comments:

This report shall not be reproduced, except in full,
without the written consent of Pace Analytical Services, Inc..

Pace Analytical Services, Inc.
9608 Loiret Blvd.
Lenexa, KS 66219
(913)599-5665

PROJECT NARRATIVE

Project: February 2013 Rico Water Sampl
Pace Project No.: 60139049

Method: **SM 2540D**
Description: 2540D Total Suspended Solids
Client: BP Anderson Engineering Company Inc.
Date: March 22, 2013

General Information:
10 samples were analyzed for SM 2540D. All samples were received in acceptable condition with any exceptions noted below.

Hold Time:
The samples were analyzed within the method required hold times with any exceptions noted below.

Method Blank:
All analytes were below the report limit in the method blank with any exceptions noted below.

Laboratory Control Spike:
All laboratory control spike compounds were within QC limits with any exceptions noted below.

Matrix Spikes:
All percent recoveries and relative percent differences (RPDs) were within acceptance criteria with any exceptions noted below.

Duplicate Sample:
All duplicate sample results were within method acceptance criteria with any exceptions noted below.

Additional Comments:

This report shall not be reproduced, except in full,
without the written consent of Pace Analytical Services, Inc..

Pace Analytical Services, Inc.
9608 Loiret Blvd.
Lenexa, KS 66219
(913)599-5665

PROJECT NARRATIVE

Project: February 2013 Rico Water Sampl
Pace Project No.: 60139049

Method: **SM 4500-S-2 D**
Description: 4500S2D Sulfide, Total
Client: BP Anderson Engineering Company Inc.
Date: March 22, 2013

General Information:
10 samples were analyzed for SM 4500-S-2 D. All samples were received in acceptable condition with any exceptions noted below.

Hold Time:
The samples were analyzed within the method required hold times with any exceptions noted below.

Method Blank:
All analytes were below the report limit in the method blank with any exceptions noted below.

Laboratory Control Spike:
All laboratory control spike compounds were within QC limits with any exceptions noted below.

Matrix Spikes:
All percent recoveries and relative percent differences (RPDs) were within acceptance criteria with any exceptions noted below.

Additional Comments:

This report shall not be reproduced, except in full,
without the written consent of Pace Analytical Services, Inc..

Pace Analytical Services, Inc.
9608 Loiret Blvd.
Lenexa, KS 66219
(913)599-5665

PROJECT NARRATIVE

Project: February 2013 Rico Water Sampl
Pace Project No.: 60139049

Method: **EPA 300.0**
Description: 300.0 IC Anions 28 Days
Client: BP Anderson Engineering Company Inc.
Date: March 22, 2013

General Information:
10 samples were analyzed for EPA 300.0. All samples were received in acceptable condition with any exceptions noted below.

Hold Time:
The samples were analyzed within the method required hold times with any exceptions noted below.

Initial Calibrations (including MS Tune as applicable):
All criteria were within method requirements with any exceptions noted below.

Continuing Calibration:
All criteria were within method requirements with any exceptions noted below.

Method Blank:
All analytes were below the report limit in the method blank with any exceptions noted below.

Laboratory Control Spike:
All laboratory control spike compounds were within QC limits with any exceptions noted below.

Matrix Spikes:
All percent recoveries and relative percent differences (RPDs) were within acceptance criteria with any exceptions noted below.

Additional Comments:

This report shall not be reproduced, except in full,
without the written consent of Pace Analytical Services, Inc..

Pace Analytical Services, Inc.
9608 Loiret Blvd.
Lenexa, KS 66219
(913)599-5665

PROJECT NARRATIVE

Project: February 2013 Rico Water Sampl
Pace Project No.: 60139049

Method: **EPA 353.2**
Description: 353.2 Nitrogen, NO2/NO3 pres.
Client: BP Anderson Engineering Company Inc.
Date: March 22, 2013

General Information:
10 samples were analyzed for EPA 353.2. All samples were received in acceptable condition with any exceptions noted below.

Hold Time:
The samples were analyzed within the method required hold times with any exceptions noted below.

Initial Calibrations (including MS Tune as applicable):
All criteria were within method requirements with any exceptions noted below.

Continuing Calibration:
All criteria were within method requirements with any exceptions noted below.

Method Blank:
All analytes were below the report limit in the method blank with any exceptions noted below.

Laboratory Control Spike:
All laboratory control spike compounds were within QC limits with any exceptions noted below.

Matrix Spikes:
All percent recoveries and relative percent differences (RPDs) were within acceptance criteria with any exceptions noted below.

QC Batch: WETA/23663

A matrix spike and matrix spike duplicate (MS/MSD) were performed on the following sample(s): 60139049001,60139049004

M1: Matrix spike recovery exceeded QC limits. Batch accepted based on laboratory control sample (LCS) recovery.

- MS (Lab ID: 1145186)
  - Nitrogen, NO2 plus NO3

Duplicate Sample:
All duplicate sample results were within method acceptance criteria with any exceptions noted below.

Additional Comments:

This report shall not be reproduced, except in full,
without the written consent of Pace Analytical Services, Inc..

Pace Analytical Services, Inc.
9608 Loiret Blvd.
Lenexa, KS 66219
(913)599-5665

PROJECT NARRATIVE

Project: February 2013 Rico Water Sampl
Pace Project No.: 60139049

Method: **SM 4500-CN-E**
Description: 4500CNE Cyanide, Total
Client: BP Anderson Engineering Company Inc.
Date: March 22, 2013

General Information:
10 samples were analyzed for SM 4500-CN-E. All samples were received in acceptable condition with any exceptions noted below.

Hold Time:
The samples were analyzed within the method required hold times with any exceptions noted below.

Initial Calibrations (including MS Tune as applicable):
All criteria were within method requirements with any exceptions noted below.

Continuing Calibration:
All criteria were within method requirements with any exceptions noted below.

Method Blank:
All analytes were below the report limit in the method blank with any exceptions noted below.

Laboratory Control Spike:
All laboratory control spike compounds were within QC limits with any exceptions noted below.

Matrix Spikes:
All percent recoveries and relative percent differences (RPDs) were within acceptance criteria with any exceptions noted below.

Duplicate Sample:
All duplicate sample results were within method acceptance criteria with any exceptions noted below.

Additional Comments:

This report shall not be reproduced, except in full,
without the written consent of Pace Analytical Services, Inc..

Pace Analytical Services, Inc.
9608 Loiret Blvd.
Lenexa, KS 66219
(913)599-5665

PROJECT NARRATIVE

Project: February 2013 Rico Water Sampl
Pace Project No.: 60139049

Method: **SM 5310C**
Description: 5310C TOC
Client: BP Anderson Engineering Company Inc.
Date: March 22, 2013

General Information:
10 samples were analyzed for SM 5310C. All samples were received in acceptable condition with any exceptions noted below.

Hold Time:
The samples were analyzed within the method required hold times with any exceptions noted below.

Initial Calibrations (including MS Tune as applicable):
All criteria were within method requirements with any exceptions noted below.

Continuing Calibration:
All criteria were within method requirements with any exceptions noted below.

Method Blank:
All analytes were below the report limit in the method blank with any exceptions noted below.

Laboratory Control Spike:
All laboratory control spike compounds were within QC limits with any exceptions noted below.

Matrix Spikes:
All percent recoveries and relative percent differences (RPDs) were within acceptance criteria with any exceptions noted below.

Additional Comments:

This data package has been reviewed for quality and completeness and is approved for release.

This report shall not be reproduced, except in full,
without the written consent of Pace Analytical Services, Inc..

Pace Analytical Services, Inc.
9608 Loiret Blvd.
Lenexa, KS 66219
(913)599-5665

ANALYTICAL RESULTS

Project: February 2013 Rico Water Sampl
Pace Project No.: 60139049

Sample: DR-6_20130218 **Lab ID: 60139049001** Collected: 02/18/13 14:59 Received: 02/20/13 10:30 Matrix: Water

Parameters	Results	Units	Report Limit	DF	Prepared	Analyzed	CAS No.	Qual
200.7 Potentially Diss. Metals	Analytical Method: EPA 200.7 Preparation Method: EPA 200.7							
Calcium, Dissolved	**269000**	ug/L	100	1	02/22/13 15:00	03/05/13 10:14	7440-70-2	M1
Magnesium, Dissolved	**22200**	ug/L	50.0	1	02/22/13 15:00	03/05/13 10:14	7439-95-4	
Potassium, Dissolved	**8800**	ug/L	500	1	02/22/13 15:00	03/05/13 10:14	7440-09-7	
Sodium, Dissolved	**14600**	ug/L	500	1	02/22/13 15:00	03/05/13 10:14	7440-23-5	
200.8 MET ICPMS	Analytical Method: EPA 200.8 Preparation Method: EPA 200.8							
Aluminum	**76.9**	ug/L	4.0	1	02/28/13 11:07	03/04/13 11:23	7429-90-5	
Antimony	ND	ug/L	0.50	1	02/28/13 11:07	03/04/13 11:23	7440-36-0	
Arsenic	ND	ug/L	0.50	1	02/28/13 11:07	03/04/13 11:23	7440-38-2	
Barium	**20.7**	ug/L	0.30	1	02/28/13 11:07	03/04/13 11:23	7440-39-3	
Beryllium	**0.22**	ug/L	0.20	1	02/28/13 11:07	03/04/13 11:23	7440-41-7	
Cadmium	**5.7**	ug/L	0.080	1	02/28/13 11:07	03/04/13 11:23	7440-43-9	
Calcium	**279000**	ug/L	400	20	02/28/13 11:07	03/04/13 11:28	7440-70-2	M6
Chromium	ND	ug/L	0.50	1	02/28/13 11:07	03/04/13 11:23	7440-47-3	
Cobalt	**2.2**	ug/L	0.50	1	02/28/13 11:07	03/04/13 11:23	7440-48-4	
Copper	**18.6**	ug/L	0.50	1	02/28/13 11:07	03/04/13 11:23	7440-50-8	
Iron	**1370**	ug/L	50.0	1	02/28/13 11:07	03/04/13 11:23	7439-89-6	
Lead	**1.7**	ug/L	0.10	1	02/28/13 11:07	03/04/13 11:23	7439-92-1	
Magnesium	**21600**	ug/L	5.0	1	02/28/13 11:07	03/04/13 11:23	7439-95-4	M6
Manganese	**1650**	ug/L	10.0	20	02/28/13 11:07	03/04/13 11:28	7439-96-5	M6
Molybdenum	**15.3**	ug/L	0.50	1	02/28/13 11:07	03/04/13 11:23	7439-98-7	
Nickel	**3.2**	ug/L	0.50	1	02/28/13 11:07	03/04/13 11:23	7440-02-0	
Potassium	**8440**	ug/L	20.0	1	02/28/13 11:07	03/03/13 15:55	7440-09-7	
Selenium	ND	ug/L	0.50	1	02/28/13 11:07	03/04/13 11:23	7782-49-2	
Silica	**19600**	ug/L	1070	20	02/28/13 11:07	03/04/13 11:28	7631-86-9	M6
Silver	ND	ug/L	0.50	1	02/28/13 11:07	03/04/13 11:23	7440-22-4	
Sodium	**13700**	ug/L	50.0	1	02/28/13 11:07	03/04/13 11:23	7440-23-5	
Thallium	ND	ug/L	0.10	1	02/28/13 11:07	03/04/13 11:23	7440-28-0	
Total Hardness by 2340B	**785000**	ug/L	1420	20	02/28/13 11:07	03/04/13 11:28		M6
Vanadium	ND	ug/L	0.10	1	02/28/13 11:07	03/04/13 11:23	7440-62-2	
Zinc	**1780**	ug/L	100	20	02/28/13 11:07	03/04/13 11:28	7440-66-6	
200.8 MET ICPMS, Dissolved	Analytical Method: EPA 200.8 Preparation Method: EPA 200.8							
Aluminum, Dissolved	**8.9**	ug/L	4.0	1	02/28/13 14:40	03/05/13 11:01	7429-90-5	
Antimony, Dissolved	ND	ug/L	0.50	1	02/28/13 14:40	03/05/13 11:01	7440-36-0	
Arsenic, Dissolved	ND	ug/L	0.50	1	02/28/13 14:40	03/05/13 11:01	7440-38-2	
Barium, Dissolved	**20.6**	ug/L	0.30	1	02/28/13 14:40	03/05/13 11:01	7440-39-3	
Beryllium, Dissolved	ND	ug/L	0.20	1	02/28/13 14:40	03/05/13 11:01	7440-41-7	
Cadmium, Dissolved	ND	ug/L	0.080	1	02/28/13 14:40	03/05/13 11:01	7440-43-9	
Calcium, Dissolved	**301000**	ug/L	400	20	02/28/13 14:40	03/05/13 11:11	7440-70-2	M1
Chromium, Dissolved	ND	ug/L	0.50	1	02/28/13 14:40	03/05/13 11:01	7440-47-3	
Cobalt, Dissolved	**2.2**	ug/L	0.50	1	02/28/13 14:40	03/05/13 11:01	7440-48-4	
Copper, Dissolved	**0.69**	ug/L	0.50	1	02/28/13 14:40	03/05/13 11:01	7440-50-8	
Iron, Dissolved	**247**	ug/L	50.0	1	02/28/13 14:40	03/05/13 11:01	7439-89-6	
Lead, Dissolved	ND	ug/L	0.10	1	02/28/13 14:40	03/05/13 11:01	7439-92-1	
Magnesium, Dissolved	**24600**	ug/L	25.0	5	02/28/13 14:40	03/05/13 11:06	7439-95-4	M1

This report shall not be reproduced, except in full,
without the written consent of Pace Analytical Services, Inc..

Pace Analytical Services, Inc.
9608 Loiret Blvd.
Lenexa, KS 66219
(913)599-5665

ANALYTICAL RESULTS

Project: February 2013 Rico Water Sampl
Pace Project No.: 60139049

Sample: DR-6_20130218 **Lab ID: 60139049001** Collected: 02/18/13 14:59 Received: 02/20/13 10:30 Matrix: Water

Parameters	Results	Units	Report Limit	DF	Prepared	Analyzed	CAS No.	Qual
200.8 MET ICPMS, Dissolved	Analytical Method: EPA 200.8 Preparation Method: EPA 200.8							
Manganese, Dissolved	**1680**	ug/L	2.5	5	02/28/13 14:40	03/05/13 11:06	7439-96-5	M1
Molybdenum, Dissolved	**15.6**	ug/L	0.50	1	02/28/13 14:40	03/05/13 11:01	7439-98-7	
Nickel, Dissolved	**4.1**	ug/L	0.50	1	02/28/13 14:40	03/05/13 11:01	7440-02-0	
Potassium, Dissolved	**9270**	ug/L	20.0	1	02/28/13 14:40	03/05/13 11:01	7440-09-7	M1
Selenium, Dissolved	ND	ug/L	0.50	1	02/28/13 14:40	03/05/13 11:01	7782-49-2	
Silver, Dissolved	ND	ug/L	0.50	1	02/28/13 14:40	03/05/13 11:01	7440-22-4	
Sodium, Dissolved	**15500**	ug/L	50.0	1	02/28/13 14:40	03/05/13 11:01	7440-23-5	M1
Thallium, Dissolved	ND	ug/L	0.10	1	02/28/13 14:40	03/05/13 11:01	7440-28-0	
Vanadium, Dissolved	ND	ug/L	0.10	1	02/28/13 14:40	03/05/13 11:01	7440-62-2	
Zinc, Dissolved	**1520**	ug/L	25.0	5	02/28/13 14:40	03/05/13 11:06	7440-66-6	
200.8 Potentially Diss. Metals	Analytical Method: EPA 200.8 Preparation Method: EPA 200.8							
Aluminum, Dissolved	**80.1**	ug/L	50.0	1	02/22/13 15:00	03/06/13 10:07	7429-90-5	
Antimony, Dissolved	**0.21J**	ug/L	1.0	1	02/22/13 15:00	03/06/13 10:07	7440-36-0	
Arsenic, Dissolved	**0.45J**	ug/L	1.0	1	02/22/13 15:00	03/06/13 10:07	7440-38-2	
Barium, Dissolved	**19.8**	ug/L	1.0	1	02/22/13 15:00	03/06/13 10:07	7440-39-3	
Beryllium, Dissolved	**0.16J**	ug/L	0.50	1	02/22/13 15:00	03/06/13 10:07	7440-41-7	
Cadmium, Dissolved	**5.6**	ug/L	0.50	1	02/22/13 15:00	03/06/13 10:07	7440-43-9	
Chromium, Dissolved	**0.58J**	ug/L	1.0	1	02/22/13 15:00	03/06/13 10:07	7440-47-3	B
Cobalt, Dissolved	**2.3**	ug/L	1.0	1	02/22/13 15:00	03/06/13 10:07	7440-48-4	
Copper, Dissolved	**16.7**	ug/L	1.0	1	02/22/13 15:00	03/06/13 10:07	7440-50-8	
Iron, Dissolved	**1350**	ug/L	50.0	1	02/22/13 15:00	03/06/13 10:07	7439-89-6	
Lead, Dissolved	**30.7**	ug/L	1.0	1	02/22/13 15:00	03/06/13 10:07	7439-92-1	
Manganese, Dissolved	**1580**	ug/L	1.0	1	02/22/13 15:00	03/06/13 10:07	7439-96-5	
Molybdenum, Dissolved	**14.1**	ug/L	1.0	1	02/22/13 15:00	03/06/13 10:07	7439-98-7	
Nickel, Dissolved	**3.8**	ug/L	1.0	1	02/22/13 15:00	03/06/13 10:07	7440-02-0	
Selenium, Dissolved	ND	ug/L	1.0	1	02/22/13 15:00	03/06/13 10:07	7782-49-2	
Silver, Dissolved	ND	ug/L	0.50	1	02/22/13 15:00	03/06/13 10:07	7440-22-4	
Thallium, Dissolved	**0.12J**	ug/L	1.0	1	02/22/13 15:00	03/06/13 10:07	7440-28-0	
Vanadium, Dissolved	ND	ug/L	1.0	1	02/22/13 15:00	03/06/13 10:07	7440-62-2	
Zinc, Dissolved	**1620**	ug/L	10.0	1	02/22/13 15:00	03/06/13 10:07	7440-66-6	
245.1 Mercury	Analytical Method: EPA 245.1 Preparation Method: EPA 245.1							
Mercury	ND	ug/L	0.20	1	02/28/13 13:48	03/01/13 14:20	7439-97-6	
245.1 Mercury, Dissolved	Analytical Method: EPA 245.1 Preparation Method: EPA 245.1							
Mercury, Dissolved	ND	ug/L	0.20	1	02/28/13 15:23	03/01/13 15:17	7439-97-6	
245.1 Potentially Diss Mercury	Analytical Method: EPA 245.1 Preparation Method: EPA 245.1							
Mercury, Dissolved	ND	ug/L	0.20	1	03/18/13 13:35	03/18/13 15:58	7439-97-6	
2510B Specific Conductance	Analytical Method: SM 2510B							
Specific Conductance	**1340**	umhos/cm	10.0	1		02/25/13 13:12		
Salinity	Analytical Method: Calculated							
Salinity (as dissolved solids)	**860**	mg/L	6.4	1		02/25/13 16:52		

This report shall not be reproduced, except in full,
without the written consent of Pace Analytical Services, Inc..

Pace Analytical Services, Inc.
9608 Loiret Blvd.
Lenexa, KS 66219
(913)599-5665

ANALYTICAL RESULTS

Project: February 2013 Rico Water Sampl
Pace Project No.: 60139049

Sample: DR-6_20130218 **Lab ID: 60139049001** Collected: 02/18/13 14:59 Received: 02/20/13 10:30 Matrix: Water

Parameters	Results	Units	Report Limit	DF	Prepared	Analyzed	CAS No.	Qual
Salinity	Analytical Method: Calculated							
Salinity (as seawater)	**0.67**	PSU	0.014	1		02/25/13 16:52		
2320B Alkalinity	Analytical Method: SM 2320B							
Alkalinity,Bicarbonate (CaCO3)	**141**	mg/L	20.0	1		02/28/13 12:32		
Alkalinity, Carbonate (CaCO3)	ND	mg/L	20.0	1		02/28/13 12:32		
Alkalinity, Total as CaCO3	**141**	mg/L	20.0	1		02/28/13 12:32		
2540C Total Dissolved Solids	Analytical Method: SM 2540C							
Total Dissolved Solids	**1110**	mg/L	5.0	1		02/25/13 09:31		
2540D Total Suspended Solids	Analytical Method: SM 2540D							
Total Suspended Solids	**5.0**	mg/L	5.0	1		02/22/13 12:31		
4500S2D Sulfide, Total	Analytical Method: SM 4500-S-2 D							
Sulfide, Total	**0.077**	mg/L	0.050	1		02/21/13 10:44	18496-25-8	
300.0 IC Anions 28 Days	Analytical Method: EPA 300.0							
Chloride	ND	mg/L	1.0	1		02/25/13 11:54	16887-00-6	
Sulfate	**646**	mg/L	50.0	50		02/25/13 12:12	14808-79-8	
353.2 Nitrogen, NO2/NO3 pres.	Analytical Method: EPA 353.2							
Nitrogen, NO2 plus NO3	**0.10**	mg/L	0.10	1		02/27/13 14:25		
4500CNE Cyanide, Total	Analytical Method: SM 4500-CN-E							
Cyanide	**0.010**	mg/L	0.0050	1		02/25/13 10:47	57-12-5	
5310C TOC	Analytical Method: SM 5310C							
Total Organic Carbon	ND	mg/L	0.50	1		02/27/13 16:05	7440-44-0	

This report shall not be reproduced, except in full,
without the written consent of Pace Analytical Services, Inc..

Pace Analytical Services, Inc.
9608 Loiret Blvd.
Lenexa, KS 66219
(913)599-5665

ANALYTICAL RESULTS

Project: February 2013 Rico Water Sampl
Pace Project No.: 60139049

Sample: DR-7_20130218 **Lab ID: 60139049002** Collected: 02/18/13 12:00 Received: 02/20/13 10:30 Matrix: Water

Parameters	Results	Units	Report Limit	DF	Prepared	Analyzed	CAS No.	Qual
200.7 Potentially Diss. Metals	Analytical Method: EPA 200.7 Preparation Method: EPA 200.7							
Calcium, Dissolved	**114000**	ug/L	100	1	02/22/13 15:00	03/05/13 10:21	7440-70-2	
Magnesium, Dissolved	**13700**	ug/L	50.0	1	02/22/13 15:00	03/05/13 10:21	7439-95-4	
Potassium, Dissolved	**3170**	ug/L	500	1	02/22/13 15:00	03/05/13 10:21	7440-09-7	
Sodium, Dissolved	**8480**	ug/L	500	1	02/22/13 15:00	03/05/13 10:21	7440-23-5	
200.8 MET ICPMS	Analytical Method: EPA 200.8 Preparation Method: EPA 200.8							
Aluminum	**12.9**	ug/L	4.0	1	02/28/13 11:07	03/04/13 11:45	7429-90-5	
Antimony	ND	ug/L	0.50	1	02/28/13 11:07	03/04/13 11:45	7440-36-0	
Arsenic	**1.1**	ug/L	0.50	1	02/28/13 11:07	03/04/13 11:45	7440-38-2	
Barium	**63.2**	ug/L	0.30	1	02/28/13 11:07	03/04/13 11:45	7440-39-3	
Beryllium	ND	ug/L	0.20	1	02/28/13 11:07	03/04/13 11:45	7440-41-7	
Cadmium	**0.52**	ug/L	0.080	1	02/28/13 11:07	03/04/13 11:45	7440-43-9	
Calcium	**115000**	ug/L	400	20	02/28/13 11:07	03/04/13 11:50	7440-70-2	
Chromium	ND	ug/L	0.50	1	02/28/13 11:07	03/04/13 11:45	7440-47-3	
Cobalt	ND	ug/L	0.50	1	02/28/13 11:07	03/04/13 11:45	7440-48-4	
Copper	**1.6**	ug/L	0.50	1	02/28/13 11:07	03/04/13 11:45	7440-50-8	
Iron	**312**	ug/L	50.0	1	02/28/13 11:07	03/04/13 11:45	7439-89-6	
Lead	**0.16**	ug/L	0.10	1	02/28/13 11:07	03/04/13 11:45	7439-92-1	
Magnesium	**13800**	ug/L	5.0	1	02/28/13 11:07	03/04/13 11:45	7439-95-4	
Manganese	**432**	ug/L	0.50	1	02/28/13 11:07	03/04/13 11:45	7439-96-5	
Molybdenum	**2.8**	ug/L	0.50	1	02/28/13 11:07	03/04/13 11:45	7439-98-7	
Nickel	**0.54**	ug/L	0.50	1	02/28/13 11:07	03/04/13 11:45	7440-02-0	
Potassium	**3020**	ug/L	20.0	1	02/28/13 11:07	03/03/13 16:16	7440-09-7	
Selenium	ND	ug/L	0.50	1	02/28/13 11:07	03/04/13 11:45	7782-49-2	
Silica	**13600**	ug/L	1070	20	02/28/13 11:07	03/04/13 11:50	7631-86-9	
Silver	ND	ug/L	0.50	1	02/28/13 11:07	03/04/13 11:45	7440-22-4	
Sodium	**8250**	ug/L	50.0	1	02/28/13 11:07	03/04/13 11:45	7440-23-5	
Thallium	ND	ug/L	0.10	1	02/28/13 11:07	03/04/13 11:45	7440-28-0	
Total Hardness by 2340B	**344000**	ug/L	1420	20	02/28/13 11:07	03/04/13 11:50		
Vanadium	ND	ug/L	0.10	1	02/28/13 11:07	03/04/13 11:45	7440-62-2	
Zinc	**186**	ug/L	5.0	1	02/28/13 11:07	03/04/13 11:45	7440-66-6	
200.8 MET ICPMS, Dissolved	Analytical Method: EPA 200.8 Preparation Method: EPA 200.8							
Aluminum, Dissolved	**101**	ug/L	4.0	1	02/28/13 14:40	03/05/13 11:27	7429-90-5	
Antimony, Dissolved	ND	ug/L	0.50	1	02/28/13 14:40	03/05/13 11:27	7440-36-0	
Arsenic, Dissolved	**0.79**	ug/L	0.50	1	02/28/13 14:40	03/05/13 11:27	7440-38-2	
Barium, Dissolved	**63.1**	ug/L	0.30	1	02/28/13 14:40	03/05/13 11:27	7440-39-3	
Beryllium, Dissolved	ND	ug/L	0.20	1	02/28/13 14:40	03/05/13 11:27	7440-41-7	
Cadmium, Dissolved	ND	ug/L	0.080	1	02/28/13 14:40	03/05/13 11:27	7440-43-9	
Calcium, Dissolved	**126000**	ug/L	400	20	02/28/13 14:40	03/05/13 11:32	7440-70-2	
Chromium, Dissolved	**0.50**	ug/L	0.50	1	02/28/13 14:40	03/05/13 11:27	7440-47-3	
Cobalt, Dissolved	ND	ug/L	0.50	1	02/28/13 14:40	03/05/13 11:27	7440-48-4	
Copper, Dissolved	**0.82**	ug/L	0.50	1	02/28/13 14:40	03/05/13 11:27	7440-50-8	
Iron, Dissolved	**116**	ug/L	50.0	1	02/28/13 14:40	03/05/13 11:27	7439-89-6	
Lead, Dissolved	ND	ug/L	0.10	1	02/28/13 14:40	03/05/13 11:27	7439-92-1	
Magnesium, Dissolved	**15000**	ug/L	5.0	1	02/28/13 14:40	03/05/13 11:27	7439-95-4	

This report shall not be reproduced, except in full,
without the written consent of Pace Analytical Services, Inc..

Pace Analytical Services, Inc.
9608 Loiret Blvd.
Lenexa, KS 66219
(913)599-5665

ANALYTICAL RESULTS

Project: February 2013 Rico Water Sampl
Pace Project No.: 60139049

Sample: DR-7_20130218 **Lab ID: 60139049002** Collected: 02/18/13 12:00 Received: 02/20/13 10:30 Matrix: Water

Parameters	Results	Units	Report Limit	DF	Prepared	Analyzed	CAS No.	Qual
200.8 MET ICPMS, Dissolved	Analytical Method: EPA 200.8 Preparation Method: EPA 200.8							
Manganese, Dissolved	**444**	ug/L	0.50	1	02/28/13 14:40	03/05/13 11:27	7439-96-5	
Molybdenum, Dissolved	**2.9**	ug/L	0.50	1	02/28/13 14:40	03/05/13 11:27	7439-98-7	
Nickel, Dissolved	**0.85**	ug/L	0.50	1	02/28/13 14:40	03/05/13 11:27	7440-02-0	
Potassium, Dissolved	**3380**	ug/L	20.0	1	02/28/13 14:40	03/05/13 11:27	7440-09-7	
Selenium, Dissolved	ND	ug/L	0.50	1	02/28/13 14:40	03/05/13 11:27	7782-49-2	
Silver, Dissolved	ND	ug/L	0.50	1	02/28/13 14:40	03/05/13 11:27	7440-22-4	
Sodium, Dissolved	**8690**	ug/L	50.0	1	02/28/13 14:40	03/05/13 11:27	7440-23-5	
Thallium, Dissolved	ND	ug/L	0.10	1	02/28/13 14:40	03/05/13 11:27	7440-28-0	
Vanadium, Dissolved	ND	ug/L	0.10	1	02/28/13 14:40	03/05/13 11:27	7440-62-2	
Zinc, Dissolved	**176**	ug/L	5.0	1	02/28/13 14:40	03/05/13 11:27	7440-66-6	
200.8 Potentially Diss. Metals	Analytical Method: EPA 200.8 Preparation Method: EPA 200.8							
Aluminum, Dissolved	**14.4J**	ug/L	50.0	1	02/22/13 15:00	03/06/13 10:11	7429-90-5	
Antimony, Dissolved	**0.083J**	ug/L	1.0	1	02/22/13 15:00	03/06/13 10:11	7440-36-0	
Arsenic, Dissolved	**1.1**	ug/L	1.0	1	02/22/13 15:00	03/06/13 10:11	7440-38-2	
Barium, Dissolved	**59.8**	ug/L	1.0	1	02/22/13 15:00	03/06/13 10:11	7440-39-3	
Beryllium, Dissolved	**0.11J**	ug/L	0.50	1	02/22/13 15:00	03/06/13 10:11	7440-41-7	
Cadmium, Dissolved	**0.56**	ug/L	0.50	1	02/22/13 15:00	03/06/13 10:11	7440-43-9	
Chromium, Dissolved	**0.70J**	ug/L	1.0	1	02/22/13 15:00	03/06/13 10:11	7440-47-3	B
Cobalt, Dissolved	**0.41J**	ug/L	1.0	1	02/22/13 15:00	03/06/13 10:11	7440-48-4	
Copper, Dissolved	**2.6**	ug/L	1.0	1	02/22/13 15:00	03/06/13 10:11	7440-50-8	
Iron, Dissolved	**321**	ug/L	50.0	1	02/22/13 15:00	03/06/13 10:11	7439-89-6	
Lead, Dissolved	**14.4**	ug/L	1.0	1	02/22/13 15:00	03/06/13 10:11	7439-92-1	
Manganese, Dissolved	**411**	ug/L	1.0	1	02/22/13 15:00	03/06/13 10:11	7439-96-5	
Molybdenum, Dissolved	**2.7**	ug/L	1.0	1	02/22/13 15:00	03/06/13 10:11	7439-98-7	
Nickel, Dissolved	**0.43J**	ug/L	1.0	1	02/22/13 15:00	03/06/13 10:11	7440-02-0	
Selenium, Dissolved	**0.43J**	ug/L	1.0	1	02/22/13 15:00	03/06/13 10:11	7782-49-2	
Silver, Dissolved	ND	ug/L	0.50	1	02/22/13 15:00	03/06/13 10:11	7440-22-4	
Thallium, Dissolved	**0.047J**	ug/L	1.0	1	02/22/13 15:00	03/06/13 10:11	7440-28-0	
Vanadium, Dissolved	ND	ug/L	1.0	1	02/22/13 15:00	03/06/13 10:11	7440-62-2	
Zinc, Dissolved	**208**	ug/L	10.0	1	02/22/13 15:00	03/06/13 10:11	7440-66-6	
245.1 Mercury	Analytical Method: EPA 245.1 Preparation Method: EPA 245.1							
Mercury	ND	ug/L	0.20	1	02/28/13 13:48	03/01/13 14:22	7439-97-6	
245.1 Mercury, Dissolved	Analytical Method: EPA 245.1 Preparation Method: EPA 245.1							
Mercury, Dissolved	ND	ug/L	0.20	1	02/28/13 15:23	03/01/13 15:19	7439-97-6	
245.1 Potentially Diss Mercury	Analytical Method: EPA 245.1 Preparation Method: EPA 245.1							
Mercury, Dissolved	ND	ug/L	0.20	1	03/18/13 13:35	03/18/13 16:00	7439-97-6	
2510B Specific Conductance	Analytical Method: SM 2510B							
Specific Conductance	**799**	umhos/cm	10.0	1		02/25/13 13:15		
Salinity	Analytical Method: Calculated							
Salinity (as dissolved solids)	**511**	mg/L	6.4	1		02/25/13 16:52		

This report shall not be reproduced, except in full,
without the written consent of Pace Analytical Services, Inc..

Pace Analytical Services, Inc.
9608 Loiret Blvd.
Lenexa, KS 66219
(913)599-5665

ANALYTICAL RESULTS

Project: February 2013 Rico Water Sampl
Pace Project No.: 60139049

Sample: DR-7_20130218 **Lab ID: 60139049002** Collected: 02/18/13 12:00 Received: 02/20/13 10:30 Matrix: Water

Parameters	Results	Units	Report Limit	DF	Prepared	Analyzed	CAS No.	Qual
Salinity	Analytical Method: Calculated							
Salinity (as seawater)	**0.39**	PSU	0.014	1		02/25/13 16:52		
2320B Alkalinity	Analytical Method: SM 2320B							
Alkalinity,Bicarbonate (CaCO3)	**160**	mg/L	20.0	1		02/28/13 12:44		
Alkalinity, Carbonate (CaCO3)	ND	mg/L	20.0	1		02/28/13 12:44		
Alkalinity, Total as CaCO3	**161**	mg/L	20.0	1		02/28/13 12:44		
2540C Total Dissolved Solids	Analytical Method: SM 2540C							
Total Dissolved Solids	**449**	mg/L	5.0	1		02/25/13 09:32		
2540D Total Suspended Solids	Analytical Method: SM 2540D							
Total Suspended Solids	ND	mg/L	5.0	1		02/22/13 12:31		
4500S2D Sulfide, Total	Analytical Method: SM 4500-S-2 D							
Sulfide, Total	ND	mg/L	0.050	1		02/21/13 10:44	18496-25-8	
300.0 IC Anions 28 Days	Analytical Method: EPA 300.0							
Chloride	**1.7**	mg/L	1.0	1		02/25/13 13:58	16887-00-6	
Sulfate	**183**	mg/L	20.0	20		02/25/13 13:05	14808-79-8	
353.2 Nitrogen, NO2/NO3 pres.	Analytical Method: EPA 353.2							
Nitrogen, NO2 plus NO3	**0.16**	mg/L	0.10	1		02/27/13 14:27		
4500CNE Cyanide, Total	Analytical Method: SM 4500-CN-E							
Cyanide	ND	mg/L	0.0050	1		02/25/13 10:49	57-12-5	
5310C TOC	Analytical Method: SM 5310C							
Total Organic Carbon	**0.55**	mg/L	0.50	1		02/27/13 16:59	7440-44-0	

This report shall not be reproduced, except in full,
without the written consent of Pace Analytical Services, Inc..

Pace Analytical Services, Inc.
9608 Loiret Blvd.
Lenexa, KS 66219
(913)599-5665

ANALYTICAL RESULTS

Project: February 2013 Rico Water Sampl
Pace Project No.: 60139049

Sample: DR-2 COMPOSITE_20130218 **Lab ID: 60139049003** Collected: 02/18/13 14:00 Received: 02/20/13 10:30 Matrix: Water

Parameters	Results	Units	Report Limit	DF	Prepared	Analyzed	CAS No.	Qual
200.7 Potentially Diss. Metals	Analytical Method: EPA 200.7 Preparation Method: EPA 200.7							
Calcium, Dissolved	**76500**	ug/L	100	1	02/22/13 15:00	03/05/13 10:23	7440-70-2	
Magnesium, Dissolved	**9190**	ug/L	50.0	1	02/22/13 15:00	03/05/13 10:23	7439-95-4	
Potassium, Dissolved	**1320**	ug/L	500	1	02/22/13 15:00	03/05/13 10:23	7440-09-7	
Sodium, Dissolved	**4720**	ug/L	500	1	02/22/13 15:00	03/05/13 10:23	7440-23-5	
200.8 MET ICPMS	Analytical Method: EPA 200.8 Preparation Method: EPA 200.8							
Aluminum	**16.8**	ug/L	4.0	1	02/28/13 11:07	03/04/13 11:55	7429-90-5	
Antimony	ND	ug/L	0.50	1	02/28/13 11:07	03/04/13 11:55	7440-36-0	
Arsenic	ND	ug/L	0.50	1	02/28/13 11:07	03/04/13 11:55	7440-38-2	
Barium	**71.2**	ug/L	0.30	1	02/28/13 11:07	03/04/13 11:55	7440-39-3	
Beryllium	ND	ug/L	0.20	1	02/28/13 11:07	03/04/13 11:55	7440-41-7	
Cadmium	ND	ug/L	0.080	1	02/28/13 11:07	03/04/13 11:55	7440-43-9	
Calcium	**76800**	ug/L	400	20	02/28/13 11:07	03/04/13 11:59	7440-70-2	
Chromium	ND	ug/L	0.50	1	02/28/13 11:07	03/04/13 11:55	7440-47-3	
Cobalt	ND	ug/L	0.50	1	02/28/13 11:07	03/04/13 11:55	7440-48-4	
Copper	ND	ug/L	0.50	1	02/28/13 11:07	03/04/13 11:55	7440-50-8	
Iron	**96.7**	ug/L	50.0	1	02/28/13 11:07	03/04/13 11:55	7439-89-6	
Lead	ND	ug/L	0.10	1	02/28/13 11:07	03/04/13 11:55	7439-92-1	
Magnesium	**9470**	ug/L	5.0	1	02/28/13 11:07	03/04/13 11:55	7439-95-4	
Manganese	**257**	ug/L	0.50	1	02/28/13 11:07	03/04/13 11:55	7439-96-5	
Molybdenum	**1.4**	ug/L	0.50	1	02/28/13 11:07	03/04/13 11:55	7439-98-7	
Nickel	ND	ug/L	0.50	1	02/28/13 11:07	03/04/13 11:55	7440-02-0	
Potassium	**1220**	ug/L	20.0	1	02/28/13 11:07	03/03/13 16:42	7440-09-7	
Selenium	**0.53**	ug/L	0.50	1	02/28/13 11:07	03/04/13 11:55	7782-49-2	
Silica	**8310**	ug/L	1070	20	02/28/13 11:07	03/04/13 11:59	7631-86-9	
Silver	ND	ug/L	0.50	1	02/28/13 11:07	03/04/13 11:55	7440-22-4	
Sodium	**4460**	ug/L	50.0	1	02/28/13 11:07	03/04/13 11:55	7440-23-5	
Thallium	ND	ug/L	0.10	1	02/28/13 11:07	03/04/13 11:55	7440-28-0	
Total Hardness by 2340B	**231000**	ug/L	1420	20	02/28/13 11:07	03/04/13 11:59		
Vanadium	**0.13**	ug/L	0.10	1	02/28/13 11:07	03/04/13 11:55	7440-62-2	
Zinc	**7.6**	ug/L	5.0	1	02/28/13 11:07	03/04/13 11:55	7440-66-6	
200.8 MET ICPMS, Dissolved	Analytical Method: EPA 200.8 Preparation Method: EPA 200.8							
Aluminum, Dissolved	ND	ug/L	4.0	1	02/28/13 14:40	03/05/13 12:04	7429-90-5	
Antimony, Dissolved	ND	ug/L	0.50	1	02/28/13 14:40	03/05/13 12:04	7440-36-0	
Arsenic, Dissolved	ND	ug/L	0.50	1	02/28/13 14:40	03/05/13 12:04	7440-38-2	
Barium, Dissolved	**66.6**	ug/L	0.30	1	02/28/13 14:40	03/05/13 12:04	7440-39-3	
Beryllium, Dissolved	ND	ug/L	0.20	1	02/28/13 14:40	03/05/13 12:04	7440-41-7	
Cadmium, Dissolved	ND	ug/L	0.080	1	02/28/13 14:40	03/05/13 12:04	7440-43-9	
Calcium, Dissolved	**78500**	ug/L	400	20	02/28/13 14:40	03/05/13 12:09	7440-70-2	
Chromium, Dissolved	ND	ug/L	0.50	1	02/28/13 14:40	03/05/13 12:04	7440-47-3	
Cobalt, Dissolved	ND	ug/L	0.50	1	02/28/13 14:40	03/05/13 12:04	7440-48-4	
Copper, Dissolved	**1.3**	ug/L	0.50	1	02/28/13 14:40	03/05/13 12:04	7440-50-8	
Iron, Dissolved	ND	ug/L	50.0	1	02/28/13 14:40	03/05/13 12:04	7439-89-6	
Lead, Dissolved	ND	ug/L	0.10	1	02/28/13 14:40	03/05/13 12:04	7439-92-1	
Magnesium, Dissolved	**9330**	ug/L	5.0	1	02/28/13 14:40	03/05/13 12:04	7439-95-4	

This report shall not be reproduced, except in full,
without the written consent of Pace Analytical Services, Inc..

Pace Analytical Services, Inc.
9608 Loiret Blvd.
Lenexa, KS 66219
(913)599-5665

ANALYTICAL RESULTS

Project: February 2013 Rico Water Sampl
Pace Project No.: 60139049

Sample: DR-2 COMPOSITE_20130218 **Lab ID: 60139049003** Collected: 02/18/13 14:00 Received: 02/20/13 10:30 Matrix: Water

Parameters	Results	Units	Report Limit	DF	Prepared	Analyzed	CAS No.	Qual
200.8 MET ICPMS, Dissolved	Analytical Method: EPA 200.8 Preparation Method: EPA 200.8							
Manganese, Dissolved	**241**	ug/L	0.50	1	02/28/13 14:40	03/05/13 12:04	7439-96-5	
Molybdenum, Dissolved	**1.3**	ug/L	0.50	1	02/28/13 14:40	03/05/13 12:04	7439-98-7	
Nickel, Dissolved	ND	ug/L	0.50	1	02/28/13 14:40	03/05/13 12:04	7440-02-0	
Potassium, Dissolved	**1300**	ug/L	20.0	1	02/28/13 14:40	03/05/13 12:04	7440-09-7	
Selenium, Dissolved	**0.53**	ug/L	0.50	1	02/28/13 14:40	03/05/13 12:04	7782-49-2	
Silver, Dissolved	ND	ug/L	0.50	1	02/28/13 14:40	03/05/13 12:04	7440-22-4	
Sodium, Dissolved	**4380**	ug/L	50.0	1	02/28/13 14:40	03/05/13 12:04	7440-23-5	
Thallium, Dissolved	ND	ug/L	0.10	1	02/28/13 14:40	03/05/13 12:04	7440-28-0	
Vanadium, Dissolved	ND	ug/L	0.10	1	02/28/13 14:40	03/05/13 12:04	7440-62-2	
Zinc, Dissolved	ND	ug/L	5.0	1	02/28/13 14:40	03/05/13 12:04	7440-66-6	
200.8 Potentially Diss. Metals	Analytical Method: EPA 200.8 Preparation Method: EPA 200.8							
Aluminum, Dissolved	**9.6J**	ug/L	50.0	1	02/22/13 15:00	03/06/13 10:29	7429-90-5	
Antimony, Dissolved	**0.067J**	ug/L	1.0	1	02/22/13 15:00	03/06/13 10:29	7440-36-0	
Arsenic, Dissolved	**0.20J**	ug/L	1.0	1	02/22/13 15:00	03/06/13 10:29	7440-38-2	
Barium, Dissolved	**65.5**	ug/L	1.0	1	02/22/13 15:00	03/06/13 10:29	7440-39-3	
Beryllium, Dissolved	ND	ug/L	0.50	1	02/22/13 15:00	03/06/13 10:29	7440-41-7	
Cadmium, Dissolved	ND	ug/L	0.50	1	02/22/13 15:00	03/06/13 10:29	7440-43-9	
Chromium, Dissolved	**0.62J**	ug/L	1.0	1	02/22/13 15:00	03/06/13 10:29	7440-47-3	B
Cobalt, Dissolved	**0.16J**	ug/L	1.0	1	02/22/13 15:00	03/06/13 10:29	7440-48-4	
Copper, Dissolved	**2.3**	ug/L	1.0	1	02/22/13 15:00	03/06/13 10:29	7440-50-8	
Iron, Dissolved	**92.5**	ug/L	50.0	1	02/22/13 15:00	03/06/13 10:29	7439-89-6	
Lead, Dissolved	**9.4**	ug/L	1.0	1	02/22/13 15:00	03/06/13 10:29	7439-92-1	
Manganese, Dissolved	**239**	ug/L	1.0	1	02/22/13 15:00	03/06/13 10:29	7439-96-5	
Molybdenum, Dissolved	**1.3**	ug/L	1.0	1	02/22/13 15:00	03/06/13 10:29	7439-98-7	
Nickel, Dissolved	**0.62J**	ug/L	1.0	1	02/22/13 15:00	03/06/13 10:29	7440-02-0	
Selenium, Dissolved	**0.53J**	ug/L	1.0	1	02/22/13 15:00	03/06/13 10:29	7782-49-2	
Silver, Dissolved	ND	ug/L	0.50	1	02/22/13 15:00	03/06/13 10:29	7440-22-4	
Thallium, Dissolved	**0.040J**	ug/L	1.0	1	02/22/13 15:00	03/06/13 10:29	7440-28-0	
Vanadium, Dissolved	ND	ug/L	1.0	1	02/22/13 15:00	03/06/13 10:29	7440-62-2	
Zinc, Dissolved	**28.8**	ug/L	10.0	1	02/22/13 15:00	03/06/13 10:29	7440-66-6	
245.1 Mercury	Analytical Method: EPA 245.1 Preparation Method: EPA 245.1							
Mercury	ND	ug/L	0.20	1	02/28/13 13:48	03/01/13 14:34	7439-97-6	
245.1 Mercury, Dissolved	Analytical Method: EPA 245.1 Preparation Method: EPA 245.1							
Mercury, Dissolved	ND	ug/L	0.20	1	02/28/13 15:23	03/01/13 15:32	7439-97-6	
245.1 Potentially Diss Mercury	Analytical Method: EPA 245.1 Preparation Method: EPA 245.1							
Mercury, Dissolved	ND	ug/L	0.20	1	03/18/13 13:35	03/18/13 16:02	7439-97-6	
2510B Specific Conductance	Analytical Method: SM 2510B							
Specific Conductance	**502**	umhos/cm	10.0	1		02/25/13 13:18		

This report shall not be reproduced, except in full,
without the written consent of Pace Analytical Services, Inc..

Pace Analytical Services, Inc.
9608 Loiret Blvd.
Lenexa, KS 66219
(913)599-5665

ANALYTICAL RESULTS

Project: February 2013 Rico Water Sampl
Pace Project No.: 60139049

Sample: DR-2 COMPOSITE_20130218 **Lab ID: 60139049003** Collected: 02/18/13 14:00 Received: 02/20/13 10:30 Matrix: Water

Parameters	Results	Units	Report Limit	DF	Prepared	Analyzed	CAS No.	Qual
Salinity	Analytical Method: Calculated							
Salinity (as dissolved solids)	**321**	mg/L	6.4	1		02/25/13 16:52		
Salinity (as seawater)	**0.24**	PSU	0.014	1		02/25/13 16:52		
2320B Alkalinity	Analytical Method: SM 2320B							
Alkalinity,Bicarbonate (CaCO3)	ND	mg/L	20.0	1		02/28/13 12:51		
Alkalinity, Carbonate (CaCO3)	ND	mg/L	20.0	1		02/28/13 12:51		
Alkalinity, Total as CaCO3	ND	mg/L	20.0	1		02/28/13 12:51		
2540C Total Dissolved Solids	Analytical Method: SM 2540C							
Total Dissolved Solids	**277**	mg/L	5.0	1		02/25/13 09:32		
2540D Total Suspended Solids	Analytical Method: SM 2540D							
Total Suspended Solids	ND	mg/L	5.0	1		02/22/13 12:32		
4500S2D Sulfide, Total	Analytical Method: SM 4500-S-2 D							
Sulfide, Total	ND	mg/L	0.050	1		02/21/13 10:44	18496-25-8	
300.0 IC Anions 28 Days	Analytical Method: EPA 300.0							
Chloride	**1.7**	mg/L	1.0	1		02/25/13 14:16	16887-00-6	
Sulfate	**98.7**	mg/L	10.0	10		02/25/13 14:34	14808-79-8	
353.2 Nitrogen, NO2/NO3 pres.	Analytical Method: EPA 353.2							
Nitrogen, NO2 plus NO3	**0.10**	mg/L	0.10	1		02/27/13 14:28		
4500CNE Cyanide, Total	Analytical Method: SM 4500-CN-E							
Cyanide	**0.0054**	mg/L	0.0050	1		02/25/13 10:49	57-12-5	
5310C TOC	Analytical Method: SM 5310C							
Total Organic Carbon	**0.57**	mg/L	0.50	1		02/27/13 17:17	7440-44-0	

This report shall not be reproduced, except in full,
without the written consent of Pace Analytical Services, Inc..

Pace Analytical Services, Inc.
9608 Loiret Blvd.
Lenexa, KS 66219
(913)599-5665

ANALYTICAL RESULTS

Project: February 2013 Rico Water Sampl
Pace Project No.: 60139049

Sample: DR-2_20130218 **Lab ID: 60139049004** Collected: 02/18/13 14:25 Received: 02/20/13 10:30 Matrix: Water

Parameters	Results	Units	Report Limit	DF	Prepared	Analyzed	CAS No.	Qual
200.7 Potentially Diss. Metals	Analytical Method: EPA 200.7 Preparation Method: EPA 200.7							
Calcium, Dissolved	**71200**	ug/L	100	1	02/22/13 15:00	03/05/13 10:25	7440-70-2	
Magnesium, Dissolved	**8640**	ug/L	50.0	1	02/22/13 15:00	03/05/13 10:25	7439-95-4	
Potassium, Dissolved	**1130**	ug/L	500	1	02/22/13 15:00	03/05/13 10:25	7440-09-7	
Sodium, Dissolved	**4210**	ug/L	500	1	02/22/13 15:00	03/05/13 10:25	7440-23-5	
200.8 MET ICPMS	Analytical Method: EPA 200.8 Preparation Method: EPA 200.8							
Aluminum	**77.3**	ug/L	4.0	1	02/28/13 11:07	03/04/13 12:21	7429-90-5	
Antimony	ND	ug/L	0.50	1	02/28/13 11:07	03/04/13 12:21	7440-36-0	
Arsenic	ND	ug/L	0.50	1	02/28/13 11:07	03/04/13 12:21	7440-38-2	
Barium	**74.5**	ug/L	0.30	1	02/28/13 11:07	03/04/13 12:21	7440-39-3	
Beryllium	ND	ug/L	0.20	1	02/28/13 11:07	03/04/13 12:21	7440-41-7	
Cadmium	ND	ug/L	0.080	1	02/28/13 11:07	03/04/13 12:21	7440-43-9	
Calcium	**74100**	ug/L	400	20	02/28/13 11:07	03/04/13 12:25	7440-70-2	
Chromium	ND	ug/L	0.50	1	02/28/13 11:07	03/04/13 12:21	7440-47-3	
Cobalt	ND	ug/L	0.50	1	02/28/13 11:07	03/04/13 12:21	7440-48-4	
Copper	**0.62**	ug/L	0.50	1	02/28/13 11:07	03/04/13 12:21	7440-50-8	
Iron	**260**	ug/L	50.0	1	02/28/13 11:07	03/04/13 12:21	7439-89-6	
Lead	**0.32**	ug/L	0.10	1	02/28/13 11:07	03/04/13 12:21	7439-92-1	
Magnesium	**9140**	ug/L	5.0	1	02/28/13 11:07	03/04/13 12:21	7439-95-4	
Manganese	**304**	ug/L	0.50	1	02/28/13 11:07	03/04/13 12:21	7439-96-5	
Molybdenum	**1.4**	ug/L	0.50	1	02/28/13 11:07	03/04/13 12:21	7439-98-7	
Nickel	ND	ug/L	0.50	1	02/28/13 11:07	03/04/13 12:21	7440-02-0	
Potassium	**1190**	ug/L	20.0	1	02/28/13 11:07	03/04/13 12:21	7440-09-7	
Selenium	**0.60**	ug/L	0.50	1	02/28/13 11:07	03/04/13 12:21	7782-49-2	
Silica	**7570**	ug/L	1070	20	02/28/13 11:07	03/04/13 12:25	7631-86-9	
Silver	ND	ug/L	0.50	1	02/28/13 11:07	03/04/13 12:21	7440-22-4	
Sodium	**4080**	ug/L	50.0	1	02/28/13 11:07	03/04/13 12:21	7440-23-5	
Thallium	ND	ug/L	0.10	1	02/28/13 11:07	03/04/13 12:21	7440-28-0	
Total Hardness by 2340B	**223000**	ug/L	1420	20	02/28/13 11:07	03/04/13 12:25		
Vanadium	**0.30**	ug/L	0.10	1	02/28/13 11:07	03/04/13 12:21	7440-62-2	
Zinc	**11.5**	ug/L	5.0	1	02/28/13 11:07	03/04/13 12:21	7440-66-6	
200.8 MET ICPMS, Dissolved	Analytical Method: EPA 200.8 Preparation Method: EPA 200.8							
Aluminum, Dissolved	ND	ug/L	4.0	1	02/28/13 14:40	03/05/13 12:14	7429-90-5	
Antimony, Dissolved	ND	ug/L	0.50	1	02/28/13 14:40	03/05/13 12:14	7440-36-0	
Arsenic, Dissolved	ND	ug/L	0.50	1	02/28/13 14:40	03/05/13 12:14	7440-38-2	
Barium, Dissolved	**69.3**	ug/L	0.30	1	02/28/13 14:40	03/05/13 12:14	7440-39-3	
Beryllium, Dissolved	ND	ug/L	0.20	1	02/28/13 14:40	03/05/13 12:14	7440-41-7	
Cadmium, Dissolved	ND	ug/L	0.080	1	02/28/13 14:40	03/05/13 12:14	7440-43-9	
Calcium, Dissolved	**78900**	ug/L	400	20	02/28/13 14:40	03/05/13 12:19	7440-70-2	
Chromium, Dissolved	ND	ug/L	0.50	1	02/28/13 14:40	03/05/13 12:14	7440-47-3	
Cobalt, Dissolved	ND	ug/L	0.50	1	02/28/13 14:40	03/05/13 12:14	7440-48-4	
Copper, Dissolved	ND	ug/L	0.50	1	02/28/13 14:40	03/05/13 12:14	7440-50-8	
Iron, Dissolved	ND	ug/L	50.0	1	02/28/13 14:40	03/05/13 12:14	7439-89-6	
Lead, Dissolved	ND	ug/L	0.10	1	02/28/13 14:40	03/05/13 12:14	7439-92-1	
Magnesium, Dissolved	**9200**	ug/L	5.0	1	02/28/13 14:40	03/05/13 12:14	7439-95-4	

This report shall not be reproduced, except in full,
without the written consent of Pace Analytical Services, Inc..

Pace Analytical Services, Inc.
9608 Loiret Blvd.
Lenexa, KS 66219
(913)599-5665

ANALYTICAL RESULTS

Project: February 2013 Rico Water Sampl
Pace Project No.: 60139049

Sample: DR-2_20130218 **Lab ID: 60139049004** Collected: 02/18/13 14:25 Received: 02/20/13 10:30 Matrix: Water

Parameters	Results	Units	Report Limit	DF	Prepared	Analyzed	CAS No.	Qual
200.8 MET ICPMS, Dissolved	Analytical Method: EPA 200.8 Preparation Method: EPA 200.8							
Manganese, Dissolved	**258**	ug/L	0.50	1	02/28/13 14:40	03/05/13 12:14	7439-96-5	
Molybdenum, Dissolved	**1.4**	ug/L	0.50	1	02/28/13 14:40	03/05/13 12:14	7439-98-7	
Nickel, Dissolved	ND	ug/L	0.50	1	02/28/13 14:40	03/05/13 12:14	7440-02-0	
Potassium, Dissolved	**1150**	ug/L	20.0	1	02/28/13 14:40	03/04/13 15:32	7440-09-7	
Selenium, Dissolved	**0.60**	ug/L	0.50	1	02/28/13 14:40	03/05/13 12:14	7782-49-2	
Silver, Dissolved	ND	ug/L	0.50	1	02/28/13 14:40	03/05/13 12:14	7440-22-4	
Sodium, Dissolved	**4140**	ug/L	50.0	1	02/28/13 14:40	03/05/13 12:14	7440-23-5	
Thallium, Dissolved	ND	ug/L	0.10	1	02/28/13 14:40	03/05/13 12:14	7440-28-0	
Vanadium, Dissolved	ND	ug/L	0.10	1	02/28/13 14:40	03/05/13 12:14	7440-62-2	
Zinc, Dissolved	ND	ug/L	5.0	1	02/28/13 14:40	03/05/13 12:14	7440-66-6	
200.8 Potentially Diss. Metals	Analytical Method: EPA 200.8 Preparation Method: EPA 200.8							
Aluminum, Dissolved	**9.1J**	ug/L	50.0	1	02/22/13 15:00	03/06/13 10:33	7429-90-5	
Antimony, Dissolved	**0.054J**	ug/L	1.0	1	02/22/13 15:00	03/06/13 10:33	7440-36-0	
Arsenic, Dissolved	**0.24J**	ug/L	1.0	1	02/22/13 15:00	03/06/13 10:33	7440-38-2	
Barium, Dissolved	**64.5**	ug/L	1.0	1	02/22/13 15:00	03/06/13 10:33	7440-39-3	
Beryllium, Dissolved	ND	ug/L	0.50	1	02/22/13 15:00	03/06/13 10:33	7440-41-7	
Cadmium, Dissolved	ND	ug/L	0.50	1	02/22/13 15:00	03/06/13 10:33	7440-43-9	
Chromium, Dissolved	**0.93J**	ug/L	1.0	1	02/22/13 15:00	03/06/13 10:33	7440-47-3	B
Cobalt, Dissolved	**0.084J**	ug/L	1.0	1	02/22/13 15:00	03/06/13 10:33	7440-48-4	
Copper, Dissolved	ND	ug/L	1.0	1	02/22/13 15:00	03/06/13 10:33	7440-50-8	
Iron, Dissolved	**90.6**	ug/L	50.0	1	02/22/13 15:00	03/06/13 10:33	7439-89-6	
Lead, Dissolved	**1.2**	ug/L	1.0	1	02/22/13 15:00	03/06/13 10:33	7439-92-1	
Manganese, Dissolved	**243**	ug/L	1.0	1	02/22/13 15:00	03/06/13 10:33	7439-96-5	
Molybdenum, Dissolved	**1.2**	ug/L	1.0	1	02/22/13 15:00	03/06/13 10:33	7439-98-7	
Nickel, Dissolved	ND	ug/L	1.0	1	02/22/13 15:00	03/06/13 10:33	7440-02-0	
Selenium, Dissolved	**0.52J**	ug/L	1.0	1	02/22/13 15:00	03/06/13 10:33	7782-49-2	
Silver, Dissolved	ND	ug/L	0.50	1	02/22/13 15:00	03/06/13 10:33	7440-22-4	
Thallium, Dissolved	ND	ug/L	1.0	1	02/22/13 15:00	03/06/13 10:33	7440-28-0	
Vanadium, Dissolved	ND	ug/L	1.0	1	02/22/13 15:00	03/06/13 10:33	7440-62-2	
Zinc, Dissolved	**11.6**	ug/L	10.0	1	02/22/13 15:00	03/06/13 10:33	7440-66-6	
245.1 Mercury	Analytical Method: EPA 245.1 Preparation Method: EPA 245.1							
Mercury	ND	ug/L	0.20	1	02/28/13 13:48	03/01/13 14:37	7439-97-6	
245.1 Mercury, Dissolved	Analytical Method: EPA 245.1 Preparation Method: EPA 245.1							
Mercury, Dissolved	ND	ug/L	0.20	1	02/28/13 15:23	03/01/13 15:34	7439-97-6	
245.1 Potentially Diss Mercury	Analytical Method: EPA 245.1 Preparation Method: EPA 245.1							
Mercury, Dissolved	ND	ug/L	0.20	1	03/18/13 13:35	03/18/13 16:04	7439-97-6	
2510B Specific Conductance	Analytical Method: SM 2510B							
Specific Conductance	**468**	umhos/cm	10.0	1		02/25/13 13:21		
Salinity	Analytical Method: Calculated							
Salinity (as dissolved solids)	**299**	mg/L	6.4	1		02/25/13 16:52		

REPORT OF LABORATORY ANALYSIS

This report shall not be reproduced, except in full,
without the written consent of Pace Analytical Services, Inc..

Pace Analytical Services, Inc.
9608 Loiret Blvd.
Lenexa, KS 66219
(913)599-5665

ANALYTICAL RESULTS

Project: February 2013 Rico Water Sampl
Pace Project No.: 60139049

Sample: DR-2_20130218 **Lab ID: 60139049004** Collected: 02/18/13 14:25 Received: 02/20/13 10:30 Matrix: Water

Parameters	Results	Units	Report Limit	DF	Prepared	Analyzed	CAS No.	Qual
Salinity	Analytical Method: Calculated							
Salinity (as seawater)	**0.23**	PSU	0.014	1		02/25/13 16:52		
2320B Alkalinity	Analytical Method: SM 2320B							
Alkalinity,Bicarbonate (CaCO3)	**118**	mg/L	20.0	1		02/28/13 12:56		
Alkalinity, Carbonate (CaCO3)	ND	mg/L	20.0	1		02/28/13 12:56		
Alkalinity, Total as CaCO3	**118**	mg/L	20.0	1		02/28/13 12:56		
2540C Total Dissolved Solids	Analytical Method: SM 2540C							
Total Dissolved Solids	**262**	mg/L	5.0	1		02/25/13 09:32		
2540D Total Suspended Solids	Analytical Method: SM 2540D							
Total Suspended Solids	ND	mg/L	5.0	1		02/22/13 12:32		
4500S2D Sulfide, Total	Analytical Method: SM 4500-S-2 D							
Sulfide, Total	ND	mg/L	0.050	1		02/21/13 10:44	18496-25-8	
300.0 IC Anions 28 Days	Analytical Method: EPA 300.0							
Chloride	**1.7**	mg/L	1.0	1		02/25/13 14:51	16887-00-6	
Sulfate	**95.9**	mg/L	10.0	10		02/25/13 15:09	14808-79-8	
353.2 Nitrogen, NO2/NO3 pres.	Analytical Method: EPA 353.2							
Nitrogen, NO2 plus NO3	**0.18**	mg/L	0.10	1		02/27/13 14:29		M1
4500CNE Cyanide, Total	Analytical Method: SM 4500-CN-E							
Cyanide	ND	mg/L	0.0050	1		02/25/13 10:51	57-12-5	
5310C TOC	Analytical Method: SM 5310C							
Total Organic Carbon	**0.63**	mg/L	0.50	1		02/27/13 17:36	7440-44-0	

This report shall not be reproduced, except in full,
without the written consent of Pace Analytical Services, Inc..

Pace Analytical Services, Inc.
9608 Loiret Blvd.
Lenexa, KS 66219
(913)599-5665

ANALYTICAL RESULTS

Project: February 2013 Rico Water Sampl
Pace Project No.: 60139049

Sample: DR-4_20130218 **Lab ID: 60139049005** Collected: 02/18/13 15:33 Received: 02/20/13 10:30 Matrix: Water

Parameters	Results	Units	Report Limit	DF	Prepared	Analyzed	CAS No.	Qual
200.7 Potentially Diss. Metals	Analytical Method: EPA 200.7 Preparation Method: EPA 200.7							
Calcium, Dissolved	**246000**	ug/L	100	1	02/22/13 15:00	03/05/13 10:44	7440-70-2	
Magnesium, Dissolved	**18600**	ug/L	50.0	1	02/22/13 15:00	03/05/13 10:44	7439-95-4	
Potassium, Dissolved	**7770**	ug/L	500	1	02/22/13 15:00	03/05/13 10:44	7440-09-7	
Sodium, Dissolved	**11800**	ug/L	500	1	02/22/13 15:00	03/05/13 10:44	7440-23-5	
200.8 MET ICPMS	Analytical Method: EPA 200.8 Preparation Method: EPA 200.8							
Aluminum	**257**	ug/L	4.0	1	02/28/13 11:07	03/04/13 12:30	7429-90-5	
Antimony	ND	ug/L	0.50	1	02/28/13 11:07	03/04/13 12:30	7440-36-0	
Arsenic	**0.58**	ug/L	0.50	1	02/28/13 11:07	03/04/13 12:30	7440-38-2	
Barium	**20.4**	ug/L	0.30	1	02/28/13 11:07	03/04/13 12:30	7440-39-3	
Beryllium	**0.40**	ug/L	0.20	1	02/28/13 11:07	03/04/13 12:30	7440-41-7	
Cadmium	**11.2**	ug/L	0.080	1	02/28/13 11:07	03/04/13 12:30	7440-43-9	
Calcium	**260000**	ug/L	400	20	02/28/13 11:07	03/04/13 12:35	7440-70-2	
Chromium	ND	ug/L	0.50	1	02/28/13 11:07	03/04/13 12:30	7440-47-3	
Cobalt	**2.6**	ug/L	0.50	1	02/28/13 11:07	03/04/13 12:30	7440-48-4	
Copper	**55.2**	ug/L	0.50	1	02/28/13 11:07	03/04/13 12:30	7440-50-8	
Iron	**3180**	ug/L	50.0	1	02/28/13 11:07	03/04/13 12:30	7439-89-6	
Lead	**5.2**	ug/L	0.10	1	02/28/13 11:07	03/04/13 12:30	7439-92-1	
Magnesium	**19500**	ug/L	5.0	1	02/28/13 11:07	03/04/13 12:30	7439-95-4	
Manganese	**1670**	ug/L	10.0	20	02/28/13 11:07	03/04/13 12:35	7439-96-5	
Molybdenum	**17.6**	ug/L	0.50	1	02/28/13 11:07	03/04/13 12:30	7439-98-7	
Nickel	**3.8**	ug/L	0.50	1	02/28/13 11:07	03/04/13 12:30	7440-02-0	
Potassium	**7730**	ug/L	20.0	1	02/28/13 11:07	03/04/13 12:30	7440-09-7	
Selenium	ND	ug/L	0.50	1	02/28/13 11:07	03/04/13 12:30	7782-49-2	
Silica	**16700**	ug/L	1070	20	02/28/13 11:07	03/04/13 12:35	7631-86-9	
Silver	ND	ug/L	0.50	1	02/28/13 11:07	03/04/13 12:30	7440-22-4	
Sodium	**12200**	ug/L	50.0	1	02/28/13 11:07	03/04/13 12:30	7440-23-5	
Thallium	ND	ug/L	0.10	1	02/28/13 11:07	03/04/13 12:30	7440-28-0	
Total Hardness by 2340B	**729000**	ug/L	1420	20	02/28/13 11:07	03/04/13 12:35		
Vanadium	**0.11**	ug/L	0.10	1	02/28/13 11:07	03/04/13 12:30	7440-62-2	
Zinc	**2300**	ug/L	100	20	02/28/13 11:07	03/04/13 12:35	7440-66-6	
200.8 MET ICPMS, Dissolved	Analytical Method: EPA 200.8 Preparation Method: EPA 200.8							
Aluminum, Dissolved	**41.9**	ug/L	4.0	1	02/28/13 14:40	03/05/13 12:23	7429-90-5	
Antimony, Dissolved	ND	ug/L	0.50	1	02/28/13 14:40	03/05/13 12:23	7440-36-0	
Arsenic, Dissolved	ND	ug/L	0.50	1	02/28/13 14:40	03/05/13 12:23	7440-38-2	
Barium, Dissolved	**21.1**	ug/L	0.30	1	02/28/13 14:40	03/05/13 12:23	7440-39-3	
Beryllium, Dissolved	ND	ug/L	0.20	1	02/28/13 14:40	03/05/13 12:23	7440-41-7	
Cadmium, Dissolved	**9.9**	ug/L	0.080	1	02/28/13 14:40	03/05/13 12:23	7440-43-9	
Calcium, Dissolved	**287000**	ug/L	400	20	02/28/13 14:40	03/05/13 12:28	7440-70-2	
Chromium, Dissolved	ND	ug/L	0.50	1	02/28/13 14:40	03/05/13 12:23	7440-47-3	
Cobalt, Dissolved	**2.6**	ug/L	0.50	1	02/28/13 14:40	03/05/13 12:23	7440-48-4	
Copper, Dissolved	**7.1**	ug/L	0.50	1	02/28/13 14:40	03/05/13 12:23	7440-50-8	
Iron, Dissolved	**454**	ug/L	50.0	1	02/28/13 14:40	03/05/13 12:23	7439-89-6	
Lead, Dissolved	**0.45**	ug/L	0.10	1	02/28/13 14:40	03/05/13 12:23	7439-92-1	
Magnesium, Dissolved	**20400**	ug/L	5.0	1	02/28/13 14:40	03/05/13 12:23	7439-95-4	

This report shall not be reproduced, except in full,
without the written consent of Pace Analytical Services, Inc..

Pace Analytical Services, Inc.
9608 Loiret Blvd.
Lenexa, KS 66219
(913)599-5665

ANALYTICAL RESULTS

Project: February 2013 Rico Water Sampl
Pace Project No.: 60139049

Sample: DR-4_20130218 **Lab ID: 60139049005** Collected: 02/18/13 15:33 Received: 02/20/13 10:30 Matrix: Water

Parameters	Results	Units	Report Limit	DF	Prepared	Analyzed	CAS No.	Qual
200.8 MET ICPMS, Dissolved	Analytical Method: EPA 200.8 Preparation Method: EPA 200.8							
Manganese, Dissolved	**1710**	ug/L	10.0	20	02/28/13 14:40	03/05/13 12:28	7439-96-5	
Molybdenum, Dissolved	**18.0**	ug/L	0.50	1	02/28/13 14:40	03/05/13 12:23	7439-98-7	
Nickel, Dissolved	**4.6**	ug/L	0.50	1	02/28/13 14:40	03/05/13 12:23	7440-02-0	
Potassium, Dissolved	**8580**	ug/L	20.0	1	02/28/13 14:40	03/05/13 12:23	7440-09-7	
Selenium, Dissolved	ND	ug/L	0.50	1	02/28/13 14:40	03/05/13 12:23	7782-49-2	
Silver, Dissolved	ND	ug/L	0.50	1	02/28/13 14:40	03/05/13 12:23	7440-22-4	
Sodium, Dissolved	**13100**	ug/L	50.0	1	02/28/13 14:40	03/05/13 12:23	7440-23-5	
Thallium, Dissolved	ND	ug/L	0.10	1	02/28/13 14:40	03/05/13 12:23	7440-28-0	
Vanadium, Dissolved	ND	ug/L	0.10	1	02/28/13 14:40	03/05/13 12:23	7440-62-2	
Zinc, Dissolved	**1950**	ug/L	100	20	02/28/13 14:40	03/05/13 12:28	7440-66-6	
200.8 Potentially Diss. Metals	Analytical Method: EPA 200.8 Preparation Method: EPA 200.8							
Aluminum, Dissolved	**251**	ug/L	50.0	1	02/22/13 15:00	03/06/13 10:37	7429-90-5	
Antimony, Dissolved	**0.22J**	ug/L	1.0	1	02/22/13 15:00	03/06/13 10:37	7440-36-0	
Arsenic, Dissolved	**0.61J**	ug/L	1.0	1	02/22/13 15:00	03/06/13 10:37	7440-38-2	
Barium, Dissolved	**19.0**	ug/L	1.0	1	02/22/13 15:00	03/06/13 10:37	7440-39-3	
Beryllium, Dissolved	**0.28J**	ug/L	0.50	1	02/22/13 15:00	03/06/13 10:37	7440-41-7	
Cadmium, Dissolved	**10.7**	ug/L	0.50	1	02/22/13 15:00	03/06/13 10:37	7440-43-9	
Chromium, Dissolved	**0.68J**	ug/L	1.0	1	02/22/13 15:00	03/06/13 10:37	7440-47-3	B
Cobalt, Dissolved	**2.3**	ug/L	1.0	1	02/22/13 15:00	03/06/13 10:37	7440-48-4	
Copper, Dissolved	**48.7**	ug/L	1.0	1	02/22/13 15:00	03/06/13 10:37	7440-50-8	
Iron, Dissolved	**3010**	ug/L	50.0	1	02/22/13 15:00	03/06/13 10:37	7439-89-6	
Lead, Dissolved	**6.2**	ug/L	1.0	1	02/22/13 15:00	03/06/13 10:37	7439-92-1	
Manganese, Dissolved	**1580**	ug/L	1.0	1	02/22/13 15:00	03/06/13 10:37	7439-96-5	
Molybdenum, Dissolved	**15.4**	ug/L	1.0	1	02/22/13 15:00	03/06/13 10:37	7439-98-7	
Nickel, Dissolved	**2.5**	ug/L	1.0	1	02/22/13 15:00	03/06/13 10:37	7440-02-0	
Selenium, Dissolved	ND	ug/L	1.0	1	02/22/13 15:00	03/06/13 10:37	7782-49-2	
Silver, Dissolved	ND	ug/L	0.50	1	02/22/13 15:00	03/06/13 10:37	7440-22-4	
Thallium, Dissolved	**0.068J**	ug/L	1.0	1	02/22/13 15:00	03/06/13 10:37	7440-28-0	
Vanadium, Dissolved	ND	ug/L	1.0	1	02/22/13 15:00	03/06/13 10:37	7440-62-2	
Zinc, Dissolved	**2000**	ug/L	10.0	1	02/22/13 15:00	03/06/13 10:37	7440-66-6	
245.1 Mercury	Analytical Method: EPA 245.1 Preparation Method: EPA 245.1							
Mercury	ND	ug/L	0.20	1	02/28/13 13:48	03/01/13 14:39	7439-97-6	
245.1 Mercury, Dissolved	Analytical Method: EPA 245.1 Preparation Method: EPA 245.1							
Mercury, Dissolved	ND	ug/L	0.20	1	02/28/13 15:23	03/01/13 15:36	7439-97-6	
245.1 Potentially Diss Mercury	Analytical Method: EPA 245.1 Preparation Method: EPA 245.1							
Mercury, Dissolved	ND	ug/L	0.20	1	03/18/13 13:35	03/18/13 16:07	7439-97-6	
2510B Specific Conductance	Analytical Method: SM 2510B							
Specific Conductance	**1240**	umhos/cm	10.0	1		02/25/13 13:24		
Salinity	Analytical Method: Calculated							
Salinity (as dissolved solids)	**795**	mg/L	6.4	1		02/25/13 16:52		

This report shall not be reproduced, except in full,
without the written consent of Pace Analytical Services, Inc..

Pace Analytical Services, Inc.
9608 Loiret Blvd.
Lenexa, KS 66219
(913)599-5665

ANALYTICAL RESULTS

Project: February 2013 Rico Water Sampl
Pace Project No.: 60139049

Sample: DR-4_20130218 **Lab ID: 60139049005** Collected: 02/18/13 15:33 Received: 02/20/13 10:30 Matrix: Water

Parameters	Results	Units	Report Limit	DF	Prepared	Analyzed	CAS No.	Qual
Salinity	Analytical Method: Calculated							
Salinity (as seawater)	**0.62**	PSU	0.014	1		02/25/13 16:52		
2320B Alkalinity	Analytical Method: SM 2320B							
Alkalinity,Bicarbonate (CaCO3)	**101**	mg/L	20.0	1		02/28/13 13:00		
Alkalinity, Carbonate (CaCO3)	ND	mg/L	20.0	1		02/28/13 13:00		
Alkalinity, Total as CaCO3	**101**	mg/L	20.0	1		02/28/13 13:00		
2540C Total Dissolved Solids	Analytical Method: SM 2540C							
Total Dissolved Solids	**1050**	mg/L	5.0	1		02/25/13 09:32		
2540D Total Suspended Solids	Analytical Method: SM 2540D							
Total Suspended Solids	**9.0**	mg/L	5.0	1		02/22/13 12:32		
4500S2D Sulfide, Total	Analytical Method: SM 4500-S-2 D							
Sulfide, Total	ND	mg/L	0.050	1		02/21/13 10:44	18496-25-8	
300.0 IC Anions 28 Days	Analytical Method: EPA 300.0							
Chloride	ND	mg/L	1.0	1		02/25/13 15:27	16887-00-6	
Sulfate	**643**	mg/L	50.0	50		02/25/13 15:44	14808-79-8	
353.2 Nitrogen, NO2/NO3 pres.	Analytical Method: EPA 353.2							
Nitrogen, NO2 plus NO3	**0.10**	mg/L	0.10	1		02/27/13 14:30		
4500CNE Cyanide, Total	Analytical Method: SM 4500-CN-E							
Cyanide	ND	mg/L	0.0050	1		02/25/13 10:52	57-12-5	
5310C TOC	Analytical Method: SM 5310C							
Total Organic Carbon	ND	mg/L	0.50	1		02/27/13 17:54	7440-44-0	

This report shall not be reproduced, except in full,
without the written consent of Pace Analytical Services, Inc..

Pace Analytical Services, Inc.
9608 Loiret Blvd.
Lenexa, KS 66219
(913)599-5665

ANALYTICAL RESULTS

Project: February 2013 Rico Water Sampl
Pace Project No.: 60139049

Sample: DR-1_20130218 **Lab ID: 60139049006** Collected: 02/18/13 16:05 Received: 02/20/13 10:30 Matrix: Water

Parameters	Results	Units	Report Limit	DF	Prepared	Analyzed	CAS No.	Qual
200.7 Potentially Diss. Metals	Analytical Method: EPA 200.7 Preparation Method: EPA 200.7							
Calcium, Dissolved	**52500**	ug/L	100	1	02/22/13 15:00	03/05/13 10:46	7440-70-2	
Magnesium, Dissolved	**7040**	ug/L	50.0	1	02/22/13 15:00	03/05/13 10:46	7439-95-4	
Potassium, Dissolved	**688**	ug/L	500	1	02/22/13 15:00	03/05/13 10:46	7440-09-7	
Sodium, Dissolved	**3530**	ug/L	500	1	02/22/13 15:00	03/05/13 10:46	7440-23-5	
200.8 MET ICPMS	Analytical Method: EPA 200.8 Preparation Method: EPA 200.8							
Aluminum	**9.3**	ug/L	4.0	1	02/28/13 11:07	03/04/13 12:39	7429-90-5	
Antimony	ND	ug/L	0.50	1	02/28/13 11:07	03/04/13 12:39	7440-36-0	
Arsenic	ND	ug/L	0.50	1	02/28/13 11:07	03/04/13 12:39	7440-38-2	
Barium	**77.0**	ug/L	0.30	1	02/28/13 11:07	03/04/13 12:39	7440-39-3	
Beryllium	ND	ug/L	0.20	1	02/28/13 11:07	03/04/13 12:39	7440-41-7	
Cadmium	ND	ug/L	0.080	1	02/28/13 11:07	03/04/13 12:39	7440-43-9	
Calcium	**54400**	ug/L	400	20	02/28/13 11:07	03/04/13 12:44	7440-70-2	
Chromium	ND	ug/L	0.50	1	02/28/13 11:07	03/04/13 12:39	7440-47-3	
Cobalt	ND	ug/L	0.50	1	02/28/13 11:07	03/04/13 12:39	7440-48-4	
Copper	ND	ug/L	0.50	1	02/28/13 11:07	03/04/13 12:39	7440-50-8	
Iron	ND	ug/L	50.0	1	02/28/13 11:07	03/04/13 12:39	7439-89-6	
Lead	ND	ug/L	0.10	1	02/28/13 11:07	03/04/13 12:39	7439-92-1	
Magnesium	**7720**	ug/L	5.0	1	02/28/13 11:07	03/04/13 12:39	7439-95-4	
Manganese	**10.9**	ug/L	0.50	1	02/28/13 11:07	03/04/13 12:39	7439-96-5	
Molybdenum	**1.0**	ug/L	0.50	1	02/28/13 11:07	03/04/13 12:39	7439-98-7	
Nickel	ND	ug/L	0.50	1	02/28/13 11:07	03/04/13 12:39	7440-02-0	
Potassium	**750**	ug/L	20.0	1	02/28/13 11:07	03/04/13 12:39	7440-09-7	
Selenium	**0.53**	ug/L	0.50	1	02/28/13 11:07	03/04/13 12:39	7782-49-2	
Silica	**5900**	ug/L	1070	20	02/28/13 11:07	03/04/13 12:44	7631-86-9	
Silver	ND	ug/L	0.50	1	02/28/13 11:07	03/04/13 12:39	7440-22-4	
Sodium	**3540**	ug/L	50.0	1	02/28/13 11:07	03/04/13 12:39	7440-23-5	
Thallium	ND	ug/L	0.10	1	02/28/13 11:07	03/04/13 12:39	7440-28-0	
Total Hardness by 2340B	**168000**	ug/L	1420	20	02/28/13 11:07	03/04/13 12:44		
Vanadium	**0.14**	ug/L	0.10	1	02/28/13 11:07	03/04/13 12:39	7440-62-2	
Zinc	ND	ug/L	5.0	1	02/28/13 11:07	03/04/13 12:39	7440-66-6	
200.8 MET ICPMS, Dissolved	Analytical Method: EPA 200.8 Preparation Method: EPA 200.8							
Aluminum, Dissolved	ND	ug/L	4.0	1	02/28/13 14:40	03/05/13 12:33	7429-90-5	
Antimony, Dissolved	ND	ug/L	0.50	1	02/28/13 14:40	03/05/13 12:33	7440-36-0	
Arsenic, Dissolved	ND	ug/L	0.50	1	02/28/13 14:40	03/05/13 12:33	7440-38-2	
Barium, Dissolved	**74.4**	ug/L	0.30	1	02/28/13 14:40	03/05/13 12:33	7440-39-3	
Beryllium, Dissolved	ND	ug/L	0.20	1	02/28/13 14:40	03/05/13 12:33	7440-41-7	
Cadmium, Dissolved	ND	ug/L	0.080	1	02/28/13 14:40	03/05/13 12:33	7440-43-9	
Calcium, Dissolved	**61000**	ug/L	400	20	02/28/13 14:40	03/05/13 12:38	7440-70-2	
Chromium, Dissolved	ND	ug/L	0.50	1	02/28/13 14:40	03/05/13 12:33	7440-47-3	
Cobalt, Dissolved	ND	ug/L	0.50	1	02/28/13 14:40	03/05/13 12:33	7440-48-4	
Copper, Dissolved	**0.61**	ug/L	0.50	1	02/28/13 14:40	03/05/13 12:33	7440-50-8	
Iron, Dissolved	ND	ug/L	50.0	1	02/28/13 14:40	03/05/13 12:33	7439-89-6	
Lead, Dissolved	ND	ug/L	0.10	1	02/28/13 14:40	03/05/13 12:33	7439-92-1	
Magnesium, Dissolved	**7810**	ug/L	5.0	1	02/28/13 14:40	03/05/13 12:33	7439-95-4	

This report shall not be reproduced, except in full,
without the written consent of Pace Analytical Services, Inc..

Pace Analytical Services, Inc.
9608 Loiret Blvd.
Lenexa, KS 66219
(913)599-5665

ANALYTICAL RESULTS

Project: February 2013 Rico Water Sampl
Pace Project No.: 60139049

Sample: DR-1_20130218 **Lab ID: 60139049006** Collected: 02/18/13 16:05 Received: 02/20/13 10:30 Matrix: Water

Parameters	Results	Units	Report Limit	DF	Prepared	Analyzed	CAS No.	Qual
200.8 MET ICPMS, Dissolved	Analytical Method: EPA 200.8 Preparation Method: EPA 200.8							
Manganese, Dissolved	**9.3**	ug/L	0.50	1	02/28/13 14:40	03/05/13 12:33	7439-96-5	
Molybdenum, Dissolved	**1.0**	ug/L	0.50	1	02/28/13 14:40	03/05/13 12:33	7439-98-7	
Nickel, Dissolved	ND	ug/L	0.50	1	02/28/13 14:40	03/05/13 12:33	7440-02-0	
Potassium, Dissolved	**722**	ug/L	20.0	1	02/28/13 14:40	03/04/13 15:50	7440-09-7	
Selenium, Dissolved	**0.54**	ug/L	0.50	1	02/28/13 14:40	03/05/13 12:33	7782-49-2	
Silver, Dissolved	ND	ug/L	0.50	1	02/28/13 14:40	03/05/13 12:33	7440-22-4	
Sodium, Dissolved	**3600**	ug/L	50.0	1	02/28/13 14:40	03/05/13 12:33	7440-23-5	
Thallium, Dissolved	ND	ug/L	0.10	1	02/28/13 14:40	03/05/13 12:33	7440-28-0	
Vanadium, Dissolved	ND	ug/L	0.10	1	02/28/13 14:40	03/05/13 12:33	7440-62-2	
Zinc, Dissolved	ND	ug/L	5.0	1	02/28/13 14:40	03/05/13 12:33	7440-66-6	
200.8 Potentially Diss. Metals	Analytical Method: EPA 200.8 Preparation Method: EPA 200.8							
Aluminum, Dissolved	ND	ug/L	50.0	1	02/22/13 15:00	03/06/13 10:50	7429-90-5	
Antimony, Dissolved	**0.051J**	ug/L	1.0	1	02/22/13 15:00	03/06/13 10:50	7440-36-0	
Arsenic, Dissolved	ND	ug/L	1.0	1	02/22/13 15:00	03/06/13 10:50	7440-38-2	
Barium, Dissolved	**69.2**	ug/L	1.0	1	02/22/13 15:00	03/06/13 10:50	7440-39-3	
Beryllium, Dissolved	ND	ug/L	0.50	1	02/22/13 15:00	03/06/13 10:50	7440-41-7	
Cadmium, Dissolved	ND	ug/L	0.50	1	02/22/13 15:00	03/06/13 10:50	7440-43-9	
Chromium, Dissolved	**0.57J**	ug/L	1.0	1	02/22/13 15:00	03/06/13 10:50	7440-47-3	B
Cobalt, Dissolved	ND	ug/L	1.0	1	02/22/13 15:00	03/06/13 10:50	7440-48-4	
Copper, Dissolved	ND	ug/L	1.0	1	02/22/13 15:00	03/06/13 10:50	7440-50-8	
Iron, Dissolved	**26.3J**	ug/L	50.0	1	02/22/13 15:00	03/06/13 10:50	7439-89-6	
Lead, Dissolved	**1.1**	ug/L	1.0	1	02/22/13 15:00	03/06/13 10:50	7439-92-1	
Manganese, Dissolved	**9.8**	ug/L	1.0	1	02/22/13 15:00	03/06/13 10:50	7439-96-5	
Molybdenum, Dissolved	**1.0**	ug/L	1.0	1	02/22/13 15:00	03/06/13 10:50	7439-98-7	
Nickel, Dissolved	ND	ug/L	1.0	1	02/22/13 15:00	03/06/13 10:50	7440-02-0	
Selenium, Dissolved	**0.61J**	ug/L	1.0	1	02/22/13 15:00	03/06/13 10:50	7782-49-2	
Silver, Dissolved	ND	ug/L	0.50	1	02/22/13 15:00	03/06/13 10:50	7440-22-4	
Thallium, Dissolved	ND	ug/L	1.0	1	02/22/13 15:00	03/06/13 10:50	7440-28-0	
Vanadium, Dissolved	ND	ug/L	1.0	1	02/22/13 15:00	03/06/13 10:50	7440-62-2	
Zinc, Dissolved	**3.8J**	ug/L	10.0	1	02/22/13 15:00	03/06/13 10:50	7440-66-6	
245.1 Mercury	Analytical Method: EPA 245.1 Preparation Method: EPA 245.1							
Mercury	ND	ug/L	0.20	1	02/28/13 13:48	03/01/13 14:42	7439-97-6	
245.1 Mercury, Dissolved	Analytical Method: EPA 245.1 Preparation Method: EPA 245.1							
Mercury, Dissolved	ND	ug/L	0.20	1	02/28/13 15:23	03/01/13 15:39	7439-97-6	
245.1 Potentially Diss Mercury	Analytical Method: EPA 245.1 Preparation Method: EPA 245.1							
Mercury, Dissolved	ND	ug/L	0.20	1	03/18/13 13:35	03/18/13 16:13	7439-97-6	
2510B Specific Conductance	Analytical Method: SM 2510B							
Specific Conductance	**325**	umhos/cm	10.0	1		02/25/13 13:32		
Salinity	Analytical Method: Calculated							
Salinity (as dissolved solids)	**208**	mg/L	6.4	1		02/25/13 16:52		

This report shall not be reproduced, except in full,
without the written consent of Pace Analytical Services, Inc..

Pace Analytical Services, Inc.
9608 Loiret Blvd.
Lenexa, KS 66219
(913)599-5665

ANALYTICAL RESULTS

Project: February 2013 Rico Water Sampl
Pace Project No.: 60139049

Sample: DR-1_20130218 **Lab ID: 60139049006** Collected: 02/18/13 16:05 Received: 02/20/13 10:30 Matrix: Water

Parameters	Results	Units	Report Limit	DF	Prepared	Analyzed	CAS No.	Qual
Salinity	Analytical Method: Calculated							
Salinity (as seawater)	**0.16**	PSU	0.014	1		02/25/13 16:52		
2320B Alkalinity	Analytical Method: SM 2320B							
Alkalinity,Bicarbonate (CaCO3)	**106**	mg/L	20.0	1		02/28/13 13:05		
Alkalinity, Carbonate (CaCO3)	ND	mg/L	20.0	1		02/28/13 13:05		
Alkalinity, Total as CaCO3	**106**	mg/L	20.0	1		02/28/13 13:05		
2540C Total Dissolved Solids	Analytical Method: SM 2540C							
Total Dissolved Solids	**196**	mg/L	5.0	1		02/25/13 09:32		
2540D Total Suspended Solids	Analytical Method: SM 2540D							
Total Suspended Solids	ND	mg/L	5.0	1		02/22/13 12:32		
4500S2D Sulfide, Total	Analytical Method: SM 4500-S-2 D							
Sulfide, Total	ND	mg/L	0.050	1		02/21/13 10:44	18496-25-8	
300.0 IC Anions 28 Days	Analytical Method: EPA 300.0							
Chloride	**1.7**	mg/L	1.0	1		02/25/13 16:02	16887-00-6	
Sulfate	**57.6**	mg/L	5.0	5		02/25/13 16:20	14808-79-8	
353.2 Nitrogen, NO2/NO3 pres.	Analytical Method: EPA 353.2							
Nitrogen, NO2 plus NO3	**0.21**	mg/L	0.10	1		02/27/13 14:31		
4500CNE Cyanide, Total	Analytical Method: SM 4500-CN-E							
Cyanide	**0.0073**	mg/L	0.0050	1		02/25/13 10:53	57-12-5	
5310C TOC	Analytical Method: SM 5310C							
Total Organic Carbon	**0.59**	mg/L	0.50	1		02/27/13 18:12	7440-44-0	

This report shall not be reproduced, except in full,
without the written consent of Pace Analytical Services, Inc..

Pace Analytical Services, Inc.
9608 Loiret Blvd.
Lenexa, KS 66219
(913)599-5665

ANALYTICAL RESULTS

Project: February 2013 Rico Water Sampl
Pace Project No.: 60139049

Sample: DR-5_20130218 **Lab ID: 60139049007** Collected: 02/18/13 15:11 Received: 02/20/13 10:30 Matrix: Water

Parameters	Results	Units	Report Limit	DF	Prepared	Analyzed	CAS No.	Qual
200.7 Potentially Diss. Metals	Analytical Method: EPA 200.7 Preparation Method: EPA 200.7							
Calcium, Dissolved	**249000**	ug/L	100	1	02/22/13 15:00	03/05/13 10:48	7440-70-2	
Magnesium, Dissolved	**19000**	ug/L	50.0	1	02/22/13 15:00	03/05/13 10:48	7439-95-4	
Potassium, Dissolved	**7840**	ug/L	500	1	02/22/13 15:00	03/05/13 10:48	7440-09-7	
Sodium, Dissolved	**11900**	ug/L	500	1	02/22/13 15:00	03/05/13 10:48	7440-23-5	
200.8 MET ICPMS	Analytical Method: EPA 200.8 Preparation Method: EPA 200.8							
Aluminum	**135**	ug/L	4.0	1	02/28/13 11:07	03/04/13 12:49	7429-90-5	
Antimony	ND	ug/L	0.50	1	02/28/13 11:07	03/04/13 12:49	7440-36-0	
Arsenic	ND	ug/L	0.50	1	02/28/13 11:07	03/04/13 12:49	7440-38-2	
Barium	**20.0**	ug/L	0.30	1	02/28/13 11:07	03/04/13 12:49	7440-39-3	
Beryllium	**0.23**	ug/L	0.20	1	02/28/13 11:07	03/04/13 12:49	7440-41-7	
Cadmium	**8.6**	ug/L	0.080	1	02/28/13 11:07	03/04/13 12:49	7440-43-9	
Calcium	**263000**	ug/L	400	20	02/28/13 11:07	03/04/13 12:54	7440-70-2	
Chromium	ND	ug/L	0.50	1	02/28/13 11:07	03/04/13 12:49	7440-47-3	
Cobalt	**2.2**	ug/L	0.50	1	02/28/13 11:07	03/04/13 12:49	7440-48-4	
Copper	**31.2**	ug/L	0.50	1	02/28/13 11:07	03/04/13 12:49	7440-50-8	
Iron	**2140**	ug/L	50.0	1	02/28/13 11:07	03/04/13 12:49	7439-89-6	
Lead	**3.0**	ug/L	0.10	1	02/28/13 11:07	03/04/13 12:49	7439-92-1	
Magnesium	**19800**	ug/L	5.0	1	02/28/13 11:07	03/04/13 12:49	7439-95-4	
Manganese	**1600**	ug/L	10.0	20	02/28/13 11:07	03/04/13 12:54	7439-96-5	
Molybdenum	**15.8**	ug/L	0.50	1	02/28/13 11:07	03/04/13 12:49	7439-98-7	
Nickel	**3.3**	ug/L	0.50	1	02/28/13 11:07	03/04/13 12:49	7440-02-0	
Potassium	**7580**	ug/L	20.0	1	02/28/13 11:07	03/04/13 12:49	7440-09-7	
Selenium	ND	ug/L	0.50	1	02/28/13 11:07	03/04/13 12:49	7782-49-2	
Silica	**16500**	ug/L	1070	20	02/28/13 11:07	03/04/13 12:54	7631-86-9	
Silver	ND	ug/L	0.50	1	02/28/13 11:07	03/04/13 12:49	7440-22-4	
Sodium	**11700**	ug/L	50.0	1	02/28/13 11:07	03/04/13 12:49	7440-23-5	
Thallium	ND	ug/L	0.10	1	02/28/13 11:07	03/04/13 12:49	7440-28-0	
Total Hardness by 2340B	**739000**	ug/L	1420	20	02/28/13 11:07	03/04/13 12:54		
Vanadium	ND	ug/L	0.10	1	02/28/13 11:07	03/04/13 12:49	7440-62-2	
Zinc	**1870**	ug/L	100	20	02/28/13 11:07	03/04/13 12:54	7440-66-6	
200.8 MET ICPMS, Dissolved	Analytical Method: EPA 200.8 Preparation Method: EPA 200.8							
Aluminum, Dissolved	**6.5**	ug/L	4.0	1	02/28/13 14:40	03/05/13 12:42	7429-90-5	
Antimony, Dissolved	ND	ug/L	0.50	1	02/28/13 14:40	03/05/13 12:42	7440-36-0	
Arsenic, Dissolved	ND	ug/L	0.50	1	02/28/13 14:40	03/05/13 12:42	7440-38-2	
Barium, Dissolved	**20.1**	ug/L	0.30	1	02/28/13 14:40	03/05/13 12:42	7440-39-3	
Beryllium, Dissolved	ND	ug/L	0.20	1	02/28/13 14:40	03/05/13 12:42	7440-41-7	
Cadmium, Dissolved	ND	ug/L	0.080	1	02/28/13 14:40	03/05/13 12:42	7440-43-9	
Calcium, Dissolved	**285000**	ug/L	400	20	02/28/13 14:40	03/05/13 12:48	7440-70-2	
Chromium, Dissolved	ND	ug/L	0.50	1	02/28/13 14:40	03/05/13 12:42	7440-47-3	
Cobalt, Dissolved	**2.7**	ug/L	0.50	1	02/28/13 14:40	03/05/13 12:42	7440-48-4	
Copper, Dissolved	**1.6**	ug/L	0.50	1	02/28/13 14:40	03/05/13 12:42	7440-50-8	
Iron, Dissolved	**199**	ug/L	50.0	1	02/28/13 14:40	03/05/13 12:42	7439-89-6	
Lead, Dissolved	ND	ug/L	0.10	1	02/28/13 14:40	03/05/13 12:42	7439-92-1	
Magnesium, Dissolved	**21200**	ug/L	5.0	1	02/28/13 14:40	03/05/13 12:42	7439-95-4	

This report shall not be reproduced, except in full,
without the written consent of Pace Analytical Services, Inc..

Pace Analytical Services, Inc.
9608 Loiret Blvd.
Lenexa, KS 66219
(913)599-5665

ANALYTICAL RESULTS

Project: February 2013 Rico Water Sampl
Pace Project No.: 60139049

Sample: DR-5_20130218 **Lab ID: 60139049007** Collected: 02/18/13 15:11 Received: 02/20/13 10:30 Matrix: Water

Parameters	Results	Units	Report Limit	DF	Prepared	Analyzed	CAS No.	Qual
200.8 MET ICPMS, Dissolved	Analytical Method: EPA 200.8 Preparation Method: EPA 200.8							
Manganese, Dissolved	**1640**	ug/L	10.0	20	02/28/13 14:40	03/05/13 12:48	7439-96-5	
Molybdenum, Dissolved	**16.8**	ug/L	0.50	1	02/28/13 14:40	03/05/13 12:42	7439-98-7	
Nickel, Dissolved	**6.6**	ug/L	0.50	1	02/28/13 14:40	03/05/13 12:42	7440-02-0	
Potassium, Dissolved	**8640**	ug/L	20.0	1	02/28/13 14:40	03/05/13 12:42	7440-09-7	
Selenium, Dissolved	ND	ug/L	0.50	1	02/28/13 14:40	03/05/13 12:42	7782-49-2	
Silver, Dissolved	ND	ug/L	0.50	1	02/28/13 14:40	03/05/13 12:42	7440-22-4	
Sodium, Dissolved	**13000**	ug/L	50.0	1	02/28/13 14:40	03/05/13 12:42	7440-23-5	
Thallium, Dissolved	ND	ug/L	0.10	1	02/28/13 14:40	03/05/13 12:42	7440-28-0	
Vanadium, Dissolved	ND	ug/L	0.10	1	02/28/13 14:40	03/05/13 12:42	7440-62-2	
Zinc, Dissolved	**1380**	ug/L	100	20	02/28/13 14:40	03/05/13 12:48	7440-66-6	
200.8 Potentially Diss. Metals	Analytical Method: EPA 200.8 Preparation Method: EPA 200.8							
Aluminum, Dissolved	**138**	ug/L	50.0	1	02/22/13 15:00	03/06/13 10:59	7429-90-5	
Antimony, Dissolved	**0.19J**	ug/L	1.0	1	02/22/13 15:00	03/06/13 10:59	7440-36-0	
Arsenic, Dissolved	**0.40J**	ug/L	1.0	1	02/22/13 15:00	03/06/13 10:59	7440-38-2	
Barium, Dissolved	**18.8**	ug/L	1.0	1	02/22/13 15:00	03/06/13 10:59	7440-39-3	
Beryllium, Dissolved	**0.18J**	ug/L	0.50	1	02/22/13 15:00	03/06/13 10:59	7440-41-7	
Cadmium, Dissolved	**7.8**	ug/L	0.50	1	02/22/13 15:00	03/06/13 10:59	7440-43-9	
Chromium, Dissolved	**0.76J**	ug/L	1.0	1	02/22/13 15:00	03/06/13 10:59	7440-47-3	B
Cobalt, Dissolved	**2.0**	ug/L	1.0	1	02/22/13 15:00	03/06/13 10:59	7440-48-4	
Copper, Dissolved	**26.5**	ug/L	1.0	1	02/22/13 15:00	03/06/13 10:59	7440-50-8	
Iron, Dissolved	**2000**	ug/L	50.0	1	02/22/13 15:00	03/06/13 10:59	7439-89-6	
Lead, Dissolved	**3.7**	ug/L	1.0	1	02/22/13 15:00	03/06/13 10:59	7439-92-1	
Manganese, Dissolved	**1510**	ug/L	1.0	1	02/22/13 15:00	03/06/13 10:59	7439-96-5	
Molybdenum, Dissolved	**14.4**	ug/L	1.0	1	02/22/13 15:00	03/06/13 10:59	7439-98-7	
Nickel, Dissolved	**2.1**	ug/L	1.0	1	02/22/13 15:00	03/06/13 10:59	7440-02-0	
Selenium, Dissolved	ND	ug/L	1.0	1	02/22/13 15:00	03/06/13 10:59	7782-49-2	
Silver, Dissolved	ND	ug/L	0.50	1	02/22/13 15:00	03/06/13 10:59	7440-22-4	
Thallium, Dissolved	**0.062J**	ug/L	1.0	1	02/22/13 15:00	03/06/13 10:59	7440-28-0	
Vanadium, Dissolved	ND	ug/L	1.0	1	02/22/13 15:00	03/06/13 10:59	7440-62-2	
Zinc, Dissolved	**1590**	ug/L	10.0	1	02/22/13 15:00	03/06/13 10:59	7440-66-6	
245.1 Mercury	Analytical Method: EPA 245.1 Preparation Method: EPA 245.1							
Mercury	ND	ug/L	0.20	1	02/28/13 13:48	03/01/13 14:44	7439-97-6	
245.1 Mercury, Dissolved	Analytical Method: EPA 245.1 Preparation Method: EPA 245.1							
Mercury, Dissolved	ND	ug/L	0.20	1	02/28/13 15:23	03/01/13 15:41	7439-97-6	
245.1 Potentially Diss Mercury	Analytical Method: EPA 245.1 Preparation Method: EPA 245.1							
Mercury, Dissolved	ND	ug/L	0.20	1	03/18/13 13:35	03/18/13 16:20	7439-97-6	
2510B Specific Conductance	Analytical Method: SM 2510B							
Specific Conductance	**1330**	umhos/cm	10.0	1		02/25/13 13:33		
Salinity	Analytical Method: Calculated							
Salinity (as dissolved solids)	ND	mg/L	6.4	1		02/25/13 16:52		

This report shall not be reproduced, except in full,
without the written consent of Pace Analytical Services, Inc..

Pace Analytical Services, Inc.
9608 Loiret Blvd.
Lenexa, KS 66219
(913)599-5665

ANALYTICAL RESULTS

Project: February 2013 Rico Water Sampl
Pace Project No.: 60139049

Sample: DR-5_20130218 **Lab ID: 60139049007** Collected: 02/18/13 15:11 Received: 02/20/13 10:30 Matrix: Water

Parameters	Results	Units	Report Limit	DF	Prepared	Analyzed	CAS No.	Qual
Salinity	Analytical Method: Calculated							
Salinity (as seawater)	ND	PSU	0.014	1		02/25/13 16:52		
2320B Alkalinity	Analytical Method: SM 2320B							
Alkalinity,Bicarbonate (CaCO3)	**116**	mg/L	20.0	1		02/28/13 13:09		
Alkalinity, Carbonate (CaCO3)	ND	mg/L	20.0	1		02/28/13 13:09		
Alkalinity, Total as CaCO3	**116**	mg/L	20.0	1		02/28/13 13:09		
2540C Total Dissolved Solids	Analytical Method: SM 2540C							
Total Dissolved Solids	**1070**	mg/L	5.0	1		02/25/13 09:33		
2540D Total Suspended Solids	Analytical Method: SM 2540D							
Total Suspended Solids	**8.0**	mg/L	5.0	1		02/22/13 12:32		
4500S2D Sulfide, Total	Analytical Method: SM 4500-S-2 D							
Sulfide, Total	**0.16**	mg/L	0.050	1		02/21/13 10:44	18496-25-8	
300.0 IC Anions 28 Days	Analytical Method: EPA 300.0							
Chloride	ND	mg/L	1.0	1		02/25/13 17:31	16887-00-6	
Sulfate	**625**	mg/L	50.0	50		02/25/13 16:37	14808-79-8	
353.2 Nitrogen, NO2/NO3 pres.	Analytical Method: EPA 353.2							
Nitrogen, NO2 plus NO3	**0.10**	mg/L	0.10	1		02/27/13 14:32		
4500CNE Cyanide, Total	Analytical Method: SM 4500-CN-E							
Cyanide	**0.0096**	mg/L	0.0050	1		02/25/13 10:56	57-12-5	
5310C TOC	Analytical Method: SM 5310C							
Total Organic Carbon	ND	mg/L	0.50	1		02/27/13 18:49	7440-44-0	

This report shall not be reproduced, except in full,
without the written consent of Pace Analytical Services, Inc..

Pace Analytical Services, Inc.
9608 Loiret Blvd.
Lenexa, KS 66219
(913)599-5665

ANALYTICAL RESULTS

Project: February 2013 Rico Water Sampl
Pace Project No.: 60139049

Sample: DR-7 COMPOSITE_20130218 **Lab ID: 60139049008** Collected: 02/18/13 11:55 Received: 02/20/13 10:30 Matrix: Water

Parameters	Results	Units	Report Limit	DF	Prepared	Analyzed	CAS No.	Qual
200.7 Potentially Diss. Metals	Analytical Method: EPA 200.7 Preparation Method: EPA 200.7							
Calcium, Dissolved	**100000**	ug/L	100	1	02/22/13 15:00	03/05/13 10:50	7440-70-2	
Magnesium, Dissolved	**11400**	ug/L	50.0	1	02/22/13 15:00	03/05/13 10:50	7439-95-4	
Potassium, Dissolved	**2440**	ug/L	500	1	02/22/13 15:00	03/05/13 10:50	7440-09-7	
Sodium, Dissolved	**6680**	ug/L	500	1	02/22/13 15:00	03/05/13 10:50	7440-23-5	
200.8 MET ICPMS	Analytical Method: EPA 200.8 Preparation Method: EPA 200.8							
Aluminum	**12.1**	ug/L	4.0	1	02/28/13 11:07	03/04/13 12:59	7429-90-5	
Antimony	ND	ug/L	0.50	1	02/28/13 11:07	03/04/13 12:59	7440-36-0	
Arsenic	**0.67**	ug/L	0.50	1	02/28/13 11:07	03/04/13 12:59	7440-38-2	
Barium	**65.5**	ug/L	0.30	1	02/28/13 11:07	03/04/13 12:59	7440-39-3	
Beryllium	ND	ug/L	0.20	1	02/28/13 11:07	03/04/13 12:59	7440-41-7	
Cadmium	**0.48**	ug/L	0.080	1	02/28/13 11:07	03/04/13 12:59	7440-43-9	
Calcium	**107000**	ug/L	400	20	02/28/13 11:07	03/04/13 13:03	7440-70-2	
Chromium	ND	ug/L	0.50	1	02/28/13 11:07	03/04/13 12:59	7440-47-3	
Cobalt	ND	ug/L	0.50	1	02/28/13 11:07	03/04/13 12:59	7440-48-4	
Copper	**1.5**	ug/L	0.50	1	02/28/13 11:07	03/04/13 12:59	7440-50-8	
Iron	**285**	ug/L	50.0	1	02/28/13 11:07	03/04/13 12:59	7439-89-6	
Lead	**0.16**	ug/L	0.10	1	02/28/13 11:07	03/04/13 12:59	7439-92-1	
Magnesium	**12600**	ug/L	5.0	1	02/28/13 11:07	03/04/13 12:59	7439-95-4	
Manganese	**426**	ug/L	0.50	1	02/28/13 11:07	03/04/13 12:59	7439-96-5	
Molybdenum	**2.6**	ug/L	0.50	1	02/28/13 11:07	03/04/13 12:59	7439-98-7	
Nickel	**0.58**	ug/L	0.50	1	02/28/13 11:07	03/04/13 12:59	7440-02-0	
Potassium	**2530**	ug/L	20.0	1	02/28/13 11:07	03/04/13 12:59	7440-09-7	
Selenium	ND	ug/L	0.50	1	02/28/13 11:07	03/04/13 12:59	7782-49-2	
Silica	**11400**	ug/L	1070	20	02/28/13 11:07	03/04/13 13:03	7631-86-9	
Silver	ND	ug/L	0.50	1	02/28/13 11:07	03/04/13 12:59	7440-22-4	
Sodium	**6950**	ug/L	50.0	1	02/28/13 11:07	03/04/13 12:59	7440-23-5	
Thallium	ND	ug/L	0.10	1	02/28/13 11:07	03/04/13 12:59	7440-28-0	
Total Hardness by 2340B	**320000**	ug/L	1420	20	02/28/13 11:07	03/04/13 13:03		
Vanadium	**0.10**	ug/L	0.10	1	02/28/13 11:07	03/04/13 12:59	7440-62-2	
Zinc	**168**	ug/L	5.0	1	02/28/13 11:07	03/04/13 12:59	7440-66-6	
200.8 MET ICPMS, Dissolved	Analytical Method: EPA 200.8 Preparation Method: EPA 200.8							
Aluminum, Dissolved	**10.2**	ug/L	4.0	1	02/28/13 14:40	03/05/13 13:09	7429-90-5	
Antimony, Dissolved	ND	ug/L	0.50	1	02/28/13 14:40	03/05/13 13:09	7440-36-0	
Arsenic, Dissolved	ND	ug/L	0.50	1	02/28/13 14:40	03/05/13 13:09	7440-38-2	
Barium, Dissolved	**65.7**	ug/L	0.30	1	02/28/13 14:40	03/05/13 13:09	7440-39-3	
Beryllium, Dissolved	ND	ug/L	0.20	1	02/28/13 14:40	03/05/13 13:09	7440-41-7	
Cadmium, Dissolved	ND	ug/L	0.080	1	02/28/13 14:40	03/05/13 13:09	7440-43-9	
Calcium, Dissolved	**114000**	ug/L	400	20	02/28/13 14:40	03/05/13 13:14	7440-70-2	
Chromium, Dissolved	ND	ug/L	0.50	1	02/28/13 14:40	03/05/13 13:09	7440-47-3	
Cobalt, Dissolved	ND	ug/L	0.50	1	02/28/13 14:40	03/05/13 13:09	7440-48-4	
Copper, Dissolved	**2.0**	ug/L	0.50	1	02/28/13 14:40	03/05/13 13:09	7440-50-8	
Iron, Dissolved	**90.6**	ug/L	50.0	1	02/28/13 14:40	03/05/13 13:09	7439-89-6	
Lead, Dissolved	ND	ug/L	0.10	1	02/28/13 14:40	03/05/13 13:09	7439-92-1	
Magnesium, Dissolved	**12800**	ug/L	5.0	1	02/28/13 14:40	03/05/13 13:09	7439-95-4	

This report shall not be reproduced, except in full,
without the written consent of Pace Analytical Services, Inc..

Pace Analytical Services, Inc.
9608 Loiret Blvd.
Lenexa, KS 66219
(913)599-5665

ANALYTICAL RESULTS

Project: February 2013 Rico Water Sampl
Pace Project No.: 60139049

Sample: DR-7 COMPOSITE_20130218 **Lab ID: 60139049008** Collected: 02/18/13 11:55 Received: 02/20/13 10:30 Matrix: Water

Parameters	Results	Units	Report Limit	DF	Prepared	Analyzed	CAS No.	Qual
200.8 MET ICPMS, Dissolved	Analytical Method: EPA 200.8 Preparation Method: EPA 200.8							
Manganese, Dissolved	**412**	ug/L	0.50	1	02/28/13 14:40	03/05/13 13:09	7439-96-5	
Molybdenum, Dissolved	**2.7**	ug/L	0.50	1	02/28/13 14:40	03/05/13 13:09	7439-98-7	
Nickel, Dissolved	**0.72**	ug/L	0.50	1	02/28/13 14:40	03/05/13 13:09	7440-02-0	
Potassium, Dissolved	**2600**	ug/L	20.0	1	02/28/13 14:40	03/05/13 13:09	7440-09-7	
Selenium, Dissolved	**0.55**	ug/L	0.50	1	02/28/13 14:40	03/05/13 13:09	7782-49-2	
Silver, Dissolved	ND	ug/L	0.50	1	02/28/13 14:40	03/05/13 13:09	7440-22-4	
Sodium, Dissolved	**6950**	ug/L	50.0	1	02/28/13 14:40	03/05/13 13:09	7440-23-5	
Thallium, Dissolved	ND	ug/L	0.10	1	02/28/13 14:40	03/05/13 13:09	7440-28-0	
Vanadium, Dissolved	**0.11**	ug/L	0.10	1	02/28/13 14:40	03/05/13 13:09	7440-62-2	
Zinc, Dissolved	**150**	ug/L	5.0	1	02/28/13 14:40	03/05/13 13:09	7440-66-6	
200.8 Potentially Diss. Metals	Analytical Method: EPA 200.8 Preparation Method: EPA 200.8							
Aluminum, Dissolved	**10.6J**	ug/L	50.0	1	02/22/13 15:00	03/06/13 11:03	7429-90-5	
Antimony, Dissolved	**0.066J**	ug/L	1.0	1	02/22/13 15:00	03/06/13 11:03	7440-36-0	
Arsenic, Dissolved	**0.62J**	ug/L	1.0	1	02/22/13 15:00	03/06/13 11:03	7440-38-2	
Barium, Dissolved	**58.4**	ug/L	1.0	1	02/22/13 15:00	03/06/13 11:03	7440-39-3	
Beryllium, Dissolved	**0.066J**	ug/L	0.50	1	02/22/13 15:00	03/06/13 11:03	7440-41-7	
Cadmium, Dissolved	**0.42J**	ug/L	0.50	1	02/22/13 15:00	03/06/13 11:03	7440-43-9	
Chromium, Dissolved	**0.78J**	ug/L	1.0	1	02/22/13 15:00	03/06/13 11:03	7440-47-3	B
Cobalt, Dissolved	**0.31J**	ug/L	1.0	1	02/22/13 15:00	03/06/13 11:03	7440-48-4	
Copper, Dissolved	**2.0**	ug/L	1.0	1	02/22/13 15:00	03/06/13 11:03	7440-50-8	
Iron, Dissolved	**257**	ug/L	50.0	1	02/22/13 15:00	03/06/13 11:03	7439-89-6	
Lead, Dissolved	**0.78J**	ug/L	1.0	1	02/22/13 15:00	03/06/13 11:03	7439-92-1	
Manganese, Dissolved	**373**	ug/L	1.0	1	02/22/13 15:00	03/06/13 11:03	7439-96-5	
Molybdenum, Dissolved	**2.4**	ug/L	1.0	1	02/22/13 15:00	03/06/13 11:03	7439-98-7	
Nickel, Dissolved	ND	ug/L	1.0	1	02/22/13 15:00	03/06/13 11:03	7440-02-0	
Selenium, Dissolved	**0.44J**	ug/L	1.0	1	02/22/13 15:00	03/06/13 11:03	7782-49-2	
Silver, Dissolved	ND	ug/L	0.50	1	02/22/13 15:00	03/06/13 11:03	7440-22-4	
Thallium, Dissolved	**0.029J**	ug/L	1.0	1	02/22/13 15:00	03/06/13 11:03	7440-28-0	
Vanadium, Dissolved	**0.35J**	ug/L	1.0	1	02/22/13 15:00	03/06/13 11:03	7440-62-2	
Zinc, Dissolved	**152**	ug/L	10.0	1	02/22/13 15:00	03/06/13 11:03	7440-66-6	
245.1 Mercury	Analytical Method: EPA 245.1 Preparation Method: EPA 245.1							
Mercury	ND	ug/L	0.20	1	02/28/13 13:48	03/01/13 14:47	7439-97-6	
245.1 Mercury, Dissolved	Analytical Method: EPA 245.1 Preparation Method: EPA 245.1							
Mercury, Dissolved	ND	ug/L	0.20	1	02/28/13 15:23	03/01/13 15:44	7439-97-6	
245.1 Potentially Diss Mercury	Analytical Method: EPA 245.1 Preparation Method: EPA 245.1							
Mercury, Dissolved	ND	ug/L	0.20	1	03/18/13 13:35	03/18/13 16:22	7439-97-6	
2510B Specific Conductance	Analytical Method: SM 2510B							
Specific Conductance	**606**	umhos/cm	10.0	1		02/25/13 13:34		

This report shall not be reproduced, except in full,
without the written consent of Pace Analytical Services, Inc..

Pace Analytical Services, Inc.
9608 Loiret Blvd.
Lenexa, KS 66219
(913)599-5665

ANALYTICAL RESULTS

Project: February 2013 Rico Water Sampl
Pace Project No.: 60139049

Sample: DR-7 COMPOSITE_20130218 **Lab ID: 60139049008** Collected: 02/18/13 11:55 Received: 02/20/13 10:30 Matrix: Water

Parameters	Results	Units	Report Limit	DF	Prepared	Analyzed	CAS No.	Qual
Salinity	Analytical Method: Calculated							
Salinity (as dissolved solids)	**388**	mg/L	6.4	1		02/25/13 16:52		
Salinity (as seawater)	**0.29**	PSU	0.014	1		02/25/13 16:52		
2320B Alkalinity	Analytical Method: SM 2320B							
Alkalinity,Bicarbonate (CaCO3)	**146**	mg/L	20.0	1		02/28/13 13:13		
Alkalinity, Carbonate (CaCO3)	ND	mg/L	20.0	1		02/28/13 13:13		
Alkalinity, Total as CaCO3	**146**	mg/L	20.0	1		02/28/13 13:13		
2540C Total Dissolved Solids	Analytical Method: SM 2540C							
Total Dissolved Solids	**402**	mg/L	5.0	1		02/25/13 09:33		
2540D Total Suspended Solids	Analytical Method: SM 2540D							
Total Suspended Solids	ND	mg/L	5.0	1		02/22/13 12:32		
4500S2D Sulfide, Total	Analytical Method: SM 4500-S-2 D							
Sulfide, Total	ND	mg/L	0.050	1		02/21/13 10:44	18496-25-8	
300.0 IC Anions 28 Days	Analytical Method: EPA 300.0							
Chloride	**2.0**	mg/L	1.0	1		02/25/13 17:48	16887-00-6	
Sulfate	**163**	mg/L	20.0	20		02/25/13 18:06	14808-79-8	
353.2 Nitrogen, NO2/NO3 pres.	Analytical Method: EPA 353.2							
Nitrogen, NO2 plus NO3	ND	mg/L	0.10	1		02/27/13 14:35		
4500CNE Cyanide, Total	Analytical Method: SM 4500-CN-E							
Cyanide	ND	mg/L	0.0050	1		02/25/13 10:57	57-12-5	
5310C TOC	Analytical Method: SM 5310C							
Total Organic Carbon	**0.55**	mg/L	0.50	1		02/27/13 19:07	7440-44-0	

This report shall not be reproduced, except in full,
without the written consent of Pace Analytical Services, Inc..

Pace Analytical Services, Inc.
9608 Loiret Blvd.
Lenexa, KS 66219
(913)599-5665

ANALYTICAL RESULTS

Project: February 2013 Rico Water Sampl
Pace Project No.: 60139049

Sample: FB_20130218 **Lab ID: 60139049009** Collected: 02/18/13 16:40 Received: 02/20/13 10:30 Matrix: Water

Parameters	Results	Units	Report Limit	DF	Prepared	Analyzed	CAS No.	Qual
200.7 Potentially Diss. Metals	Analytical Method: EPA 200.7 Preparation Method: EPA 200.7							
Calcium, Dissolved	**156**	ug/L	100	1	02/22/13 15:00	03/05/13 10:12	7440-70-2	
Magnesium, Dissolved	**15.4J**	ug/L	50.0	1	02/22/13 15:00	03/05/13 10:12	7439-95-4	
Potassium, Dissolved	ND	ug/L	500	1	02/22/13 15:00	03/05/13 10:12	7440-09-7	
Sodium, Dissolved	**497J**	ug/L	500	1	02/22/13 15:00	03/05/13 10:12	7440-23-5	B
200.8 MET ICPMS	Analytical Method: EPA 200.8 Preparation Method: EPA 200.8							
Aluminum	**7.5**	ug/L	4.0	1	02/28/13 11:07	03/04/13 13:24	7429-90-5	
Antimony	ND	ug/L	0.50	1	02/28/13 11:07	03/04/13 13:24	7440-36-0	
Arsenic	ND	ug/L	0.50	1	02/28/13 11:07	03/04/13 13:24	7440-38-2	
Barium	ND	ug/L	0.30	1	02/28/13 11:07	03/04/13 13:24	7440-39-3	
Beryllium	ND	ug/L	0.20	1	02/28/13 11:07	03/04/13 13:24	7440-41-7	
Cadmium	ND	ug/L	0.080	1	02/28/13 11:07	03/04/13 13:24	7440-43-9	
Calcium	**69.1**	ug/L	20.0	1	02/28/13 11:07	03/04/13 13:24	7440-70-2	
Chromium	ND	ug/L	0.50	1	02/28/13 11:07	03/04/13 13:24	7440-47-3	
Cobalt	ND	ug/L	0.50	1	02/28/13 11:07	03/04/13 13:24	7440-48-4	
Copper	ND	ug/L	0.50	1	02/28/13 11:07	03/04/13 13:24	7440-50-8	
Iron	ND	ug/L	50.0	1	02/28/13 11:07	03/04/13 13:24	7439-89-6	
Lead	ND	ug/L	0.10	1	02/28/13 11:07	03/04/13 13:24	7439-92-1	
Magnesium	**23.4**	ug/L	5.0	1	02/28/13 11:07	03/04/13 13:24	7439-95-4	
Manganese	ND	ug/L	0.50	1	02/28/13 11:07	03/04/13 13:24	7439-96-5	
Molybdenum	ND	ug/L	0.50	1	02/28/13 11:07	03/04/13 13:24	7439-98-7	
Nickel	ND	ug/L	0.50	1	02/28/13 11:07	03/04/13 13:24	7440-02-0	
Potassium	ND	ug/L	20.0	1	02/28/13 11:07	03/04/13 13:24	7440-09-7	
Selenium	ND	ug/L	0.50	1	02/28/13 11:07	03/04/13 13:24	7782-49-2	
Silica	ND	ug/L	53.5	1	02/28/13 11:07	03/03/13 17:54	7631-86-9	
Silver	ND	ug/L	0.50	1	02/28/13 11:07	03/04/13 13:24	7440-22-4	
Sodium	**343**	ug/L	50.0	1	02/28/13 11:07	03/04/13 13:24	7440-23-5	
Thallium	ND	ug/L	0.10	1	02/28/13 11:07	03/04/13 13:24	7440-28-0	
Total Hardness by 2340B	**269**	ug/L	71.0	1	02/28/13 11:07	03/04/13 13:24		
Vanadium	ND	ug/L	0.10	1	02/28/13 11:07	03/04/13 13:24	7440-62-2	
Zinc	ND	ug/L	5.0	1	02/28/13 11:07	03/04/13 13:24	7440-66-6	
200.8 MET ICPMS, Dissolved	Analytical Method: EPA 200.8 Preparation Method: EPA 200.8							
Aluminum, Dissolved	ND	ug/L	4.0	1	02/28/13 14:40	03/05/13 19:34	7429-90-5	
Antimony, Dissolved	ND	ug/L	0.50	1	02/28/13 14:40	03/05/13 19:34	7440-36-0	
Arsenic, Dissolved	ND	ug/L	0.50	1	02/28/13 14:40	03/05/13 19:34	7440-38-2	
Barium, Dissolved	ND	ug/L	0.30	1	02/28/13 14:40	03/05/13 19:34	7440-39-3	
Beryllium, Dissolved	ND	ug/L	0.20	1	02/28/13 14:40	03/05/13 19:34	7440-41-7	
Cadmium, Dissolved	ND	ug/L	0.080	1	02/28/13 14:40	03/05/13 19:34	7440-43-9	
Calcium, Dissolved	**46.3**	ug/L	20.0	1	02/28/13 14:40	03/05/13 19:34	7440-70-2	
Chromium, Dissolved	ND	ug/L	0.50	1	02/28/13 14:40	03/05/13 19:34	7440-47-3	
Cobalt, Dissolved	ND	ug/L	0.50	1	02/28/13 14:40	03/05/13 19:34	7440-48-4	
Copper, Dissolved	**0.52**	ug/L	0.50	1	02/28/13 14:40	03/05/13 19:34	7440-50-8	
Iron, Dissolved	ND	ug/L	50.0	1	02/28/13 14:40	03/05/13 19:34	7439-89-6	
Lead, Dissolved	ND	ug/L	0.10	1	02/28/13 14:40	03/05/13 19:34	7439-92-1	
Magnesium, Dissolved	**14.0**	ug/L	5.0	1	02/28/13 14:40	03/06/13 11:00	7439-95-4	

This report shall not be reproduced, except in full,
without the written consent of Pace Analytical Services, Inc..

Pace Analytical Services, Inc.
9608 Loiret Blvd.
Lenexa, KS 66219
(913)599-5665

ANALYTICAL RESULTS

Project: February 2013 Rico Water Sampl
Pace Project No.: 60139049

Sample: FB_20130218 **Lab ID: 60139049009** Collected: 02/18/13 16:40 Received: 02/20/13 10:30 Matrix: Water

Parameters	Results	Units	Report Limit	DF	Prepared	Analyzed	CAS No.	Qual
200.8 MET ICPMS, Dissolved	Analytical Method: EPA 200.8 Preparation Method: EPA 200.8							
Manganese, Dissolved	ND	ug/L	0.50	1	02/28/13 14:40	03/05/13 19:34	7439-96-5	
Molybdenum, Dissolved	ND	ug/L	0.50	1	02/28/13 14:40	03/05/13 19:34	7439-98-7	
Nickel, Dissolved	ND	ug/L	0.50	1	02/28/13 14:40	03/05/13 19:34	7440-02-0	
Potassium, Dissolved	**27.3**	ug/L	20.0	1	02/28/13 14:40	03/06/13 11:00	7440-09-7	
Selenium, Dissolved	ND	ug/L	0.50	1	02/28/13 14:40	03/05/13 19:34	7782-49-2	
Silver, Dissolved	ND	ug/L	0.50	1	02/28/13 14:40	03/05/13 19:34	7440-22-4	
Sodium, Dissolved	**365**	ug/L	50.0	1	02/28/13 14:40	03/05/13 19:34	7440-23-5	
Thallium, Dissolved	ND	ug/L	0.10	1	02/28/13 14:40	03/05/13 19:34	7440-28-0	
Vanadium, Dissolved	ND	ug/L	0.10	1	02/28/13 14:40	03/05/13 19:34	7440-62-2	
Zinc, Dissolved	ND	ug/L	5.0	1	02/28/13 14:40	03/05/13 19:34	7440-66-6	
200.8 Potentially Diss. Metals	Analytical Method: EPA 200.8 Preparation Method: EPA 200.8							
Aluminum, Dissolved	ND	ug/L	50.0	1	02/22/13 15:00	03/06/13 11:24	7429-90-5	
Antimony, Dissolved	ND	ug/L	1.0	1	02/22/13 15:00	03/06/13 11:24	7440-36-0	
Arsenic, Dissolved	ND	ug/L	1.0	1	02/22/13 15:00	03/06/13 11:24	7440-38-2	
Barium, Dissolved	**0.32J**	ug/L	1.0	1	02/22/13 15:00	03/06/13 11:24	7440-39-3	B
Beryllium, Dissolved	ND	ug/L	0.50	1	02/22/13 15:00	03/06/13 11:24	7440-41-7	
Cadmium, Dissolved	ND	ug/L	0.50	1	02/22/13 15:00	03/06/13 11:24	7440-43-9	
Chromium, Dissolved	**0.93J**	ug/L	1.0	1	02/22/13 15:00	03/06/13 11:24	7440-47-3	B
Cobalt, Dissolved	ND	ug/L	1.0	1	02/22/13 15:00	03/06/13 11:24	7440-48-4	
Copper, Dissolved	ND	ug/L	1.0	1	02/22/13 15:00	03/06/13 11:24	7440-50-8	
Iron, Dissolved	**9.4J**	ug/L	50.0	1	02/22/13 15:00	03/06/13 11:24	7439-89-6	
Lead, Dissolved	**0.31J**	ug/L	1.0	1	02/22/13 15:00	03/06/13 11:24	7439-92-1	B
Manganese, Dissolved	**0.95J**	ug/L	1.0	1	02/22/13 15:00	03/06/13 11:24	7439-96-5	
Molybdenum, Dissolved	ND	ug/L	1.0	1	02/22/13 15:00	03/06/13 11:24	7439-98-7	
Nickel, Dissolved	**0.43J**	ug/L	1.0	1	02/22/13 15:00	03/06/13 11:24	7440-02-0	
Selenium, Dissolved	ND	ug/L	1.0	1	02/22/13 15:00	03/06/13 11:24	7782-49-2	
Silver, Dissolved	ND	ug/L	0.50	1	02/22/13 15:00	03/06/13 11:24	7440-22-4	
Thallium, Dissolved	ND	ug/L	1.0	1	02/22/13 15:00	03/06/13 11:24	7440-28-0	
Vanadium, Dissolved	ND	ug/L	1.0	1	02/22/13 15:00	03/06/13 11:24	7440-62-2	
Zinc, Dissolved	**3.5J**	ug/L	10.0	1	02/22/13 15:00	03/06/13 11:24	7440-66-6	
245.1 Mercury	Analytical Method: EPA 245.1 Preparation Method: EPA 245.1							
Mercury	ND	ug/L	0.20	1	02/28/13 13:48	03/01/13 14:54	7439-97-6	
245.1 Mercury, Dissolved	Analytical Method: EPA 245.1 Preparation Method: EPA 245.1							
Mercury, Dissolved	ND	ug/L	0.20	1	02/28/13 15:23	03/01/13 15:51	7439-97-6	
245.1 Potentially Diss Mercury	Analytical Method: EPA 245.1 Preparation Method: EPA 245.1							
Mercury, Dissolved	ND	ug/L	0.20	1	03/18/13 13:35	03/18/13 16:24	7439-97-6	
2510B Specific Conductance	Analytical Method: SM 2510B							
Specific Conductance	ND	umhos/cm	10.0	1		02/25/13 13:35		
Salinity	Analytical Method: Calculated							
Salinity (as dissolved solids)	ND	mg/L	6.4	1		02/25/13 16:52		

This report shall not be reproduced, except in full,
without the written consent of Pace Analytical Services, Inc..

Pace Analytical Services, Inc.
9608 Loiret Blvd.
Lenexa, KS 66219
(913)599-5665

ANALYTICAL RESULTS

Project: February 2013 Rico Water Sampl
Pace Project No.: 60139049

Sample: FB_20130218 **Lab ID: 60139049009** Collected: 02/18/13 16:40 Received: 02/20/13 10:30 Matrix: Water

Parameters	Results	Units	Report Limit	DF	Prepared	Analyzed	CAS No.	Qual
Salinity	Analytical Method: Calculated							
Salinity (as seawater)	ND	PSU	0.014	1		02/25/13 16:52		
2320B Alkalinity	Analytical Method: SM 2320B							
Alkalinity,Bicarbonate (CaCO3)	ND	mg/L	20.0	1		02/28/13 13:25		
Alkalinity, Carbonate (CaCO3)	ND	mg/L	20.0	1		02/28/13 13:25		
Alkalinity, Total as CaCO3	ND	mg/L	20.0	1		02/28/13 13:25		
2540C Total Dissolved Solids	Analytical Method: SM 2540C							
Total Dissolved Solids	ND	mg/L	5.0	1		02/25/13 09:33		
2540D Total Suspended Solids	Analytical Method: SM 2540D							
Total Suspended Solids	ND	mg/L	5.0	1		02/22/13 12:33		
4500S2D Sulfide, Total	Analytical Method: SM 4500-S-2 D							
Sulfide, Total	ND	mg/L	0.050	1		02/21/13 10:45	18496-25-8	
300.0 IC Anions 28 Days	Analytical Method: EPA 300.0							
Chloride	ND	mg/L	1.0	1		02/25/13 18:41	16887-00-6	
Sulfate	ND	mg/L	1.0	1		02/25/13 18:41	14808-79-8	
353.2 Nitrogen, NO2/NO3 pres.	Analytical Method: EPA 353.2							
Nitrogen, NO2 plus NO3	ND	mg/L	0.10	1		02/27/13 14:35		
4500CNE Cyanide, Total	Analytical Method: SM 4500-CN-E							
Cyanide	**0.010**	mg/L	0.0050	1		02/25/13 10:57	57-12-5	
5310C TOC	Analytical Method: SM 5310C							
Total Organic Carbon	ND	mg/L	0.50	1		02/27/13 19:25	7440-44-0	

This report shall not be reproduced, except in full,
without the written consent of Pace Analytical Services, Inc..

Pace Analytical Services, Inc.
9608 Loiret Blvd.
Lenexa, KS 66219
(913)599-5665

ANALYTICAL RESULTS

Project: February 2013 Rico Water Sampl
Pace Project No.: 60139049

Sample: DR-11_20130218 **Lab ID: 60139049010** Collected: 02/18/13 15:41 Received: 02/20/13 10:30 Matrix: Water

Parameters	Results	Units	Report Limit	DF	Prepared	Analyzed	CAS No.	Qual
200.7 Potentially Diss. Metals	Analytical Method: EPA 200.7 Preparation Method: EPA 200.7							
Calcium, Dissolved	**260000**	ug/L	100	1	02/22/13 15:00	03/05/13 10:52	7440-70-2	
Magnesium, Dissolved	**19000**	ug/L	50.0	1	02/22/13 15:00	03/05/13 10:52	7439-95-4	
Potassium, Dissolved	**8300**	ug/L	500	1	02/22/13 15:00	03/05/13 10:52	7440-09-7	
Sodium, Dissolved	**12600**	ug/L	500	1	02/22/13 15:00	03/05/13 10:52	7440-23-5	
200.8 MET ICPMS	Analytical Method: EPA 200.8 Preparation Method: EPA 200.8							
Aluminum	**256**	ug/L	4.0	1	02/28/13 11:07	03/04/13 13:29	7429-90-5	
Antimony	ND	ug/L	0.50	1	02/28/13 11:07	03/04/13 13:29	7440-36-0	
Arsenic	**0.60**	ug/L	0.50	1	02/28/13 11:07	03/04/13 13:29	7440-38-2	
Barium	**20.9**	ug/L	0.30	1	02/28/13 11:07	03/04/13 13:29	7440-39-3	
Beryllium	**0.36**	ug/L	0.20	1	02/28/13 11:07	03/04/13 13:29	7440-41-7	
Cadmium	**11.6**	ug/L	0.080	1	02/28/13 11:07	03/04/13 13:29	7440-43-9	
Calcium	**270000**	ug/L	400	20	02/28/13 11:07	03/04/13 13:34	7440-70-2	
Chromium	ND	ug/L	0.50	1	02/28/13 11:07	03/04/13 13:29	7440-47-3	
Cobalt	**2.5**	ug/L	0.50	1	02/28/13 11:07	03/04/13 13:29	7440-48-4	
Copper	**55.1**	ug/L	0.50	1	02/28/13 11:07	03/04/13 13:29	7440-50-8	
Iron	**3260**	ug/L	50.0	1	02/28/13 11:07	03/04/13 13:29	7439-89-6	
Lead	**5.5**	ug/L	0.10	1	02/28/13 11:07	03/04/13 13:29	7439-92-1	
Magnesium	**19200**	ug/L	5.0	1	02/28/13 11:07	03/04/13 13:29	7439-95-4	
Manganese	**1720**	ug/L	10.0	20	02/28/13 11:07	03/04/13 13:34	7439-96-5	
Molybdenum	**17.8**	ug/L	0.50	1	02/28/13 11:07	03/04/13 13:29	7439-98-7	
Nickel	**3.8**	ug/L	0.50	1	02/28/13 11:07	03/04/13 13:29	7440-02-0	
Potassium	**8040**	ug/L	20.0	1	02/28/13 11:07	03/04/13 13:29	7440-09-7	
Selenium	ND	ug/L	0.50	1	02/28/13 11:07	03/04/13 13:29	7782-49-2	
Silica	**17300**	ug/L	1070	20	02/28/13 11:07	03/04/13 13:34	7631-86-9	
Silver	ND	ug/L	0.50	1	02/28/13 11:07	03/04/13 13:29	7440-22-4	
Sodium	**12300**	ug/L	50.0	1	02/28/13 11:07	03/04/13 13:29	7440-23-5	
Thallium	ND	ug/L	0.10	1	02/28/13 11:07	03/04/13 13:29	7440-28-0	
Total Hardness by 2340B	**752000**	ug/L	1420	20	02/28/13 11:07	03/04/13 13:34		
Vanadium	**0.10**	ug/L	0.10	1	02/28/13 11:07	03/04/13 13:29	7440-62-2	
Zinc	**2440**	ug/L	100	20	02/28/13 11:07	03/04/13 13:34	7440-66-6	
200.8 MET ICPMS, Dissolved	Analytical Method: EPA 200.8 Preparation Method: EPA 200.8							
Aluminum, Dissolved	**11.9**	ug/L	4.0	1	02/28/13 14:40	03/05/13 13:24	7429-90-5	
Antimony, Dissolved	ND	ug/L	0.50	1	02/28/13 14:40	03/05/13 13:24	7440-36-0	
Arsenic, Dissolved	ND	ug/L	0.50	1	02/28/13 14:40	03/05/13 13:24	7440-38-2	
Barium, Dissolved	**20.0**	ug/L	0.30	1	02/28/13 14:40	03/05/13 13:24	7440-39-3	
Beryllium, Dissolved	ND	ug/L	0.20	1	02/28/13 14:40	03/05/13 13:24	7440-41-7	
Cadmium, Dissolved	**9.4**	ug/L	0.080	1	02/28/13 14:40	03/05/13 13:24	7440-43-9	
Calcium, Dissolved	**279000**	ug/L	400	20	02/28/13 14:40	03/05/13 13:29	7440-70-2	
Chromium, Dissolved	ND	ug/L	0.50	1	02/28/13 14:40	03/05/13 13:24	7440-47-3	
Cobalt, Dissolved	**2.6**	ug/L	0.50	1	02/28/13 14:40	03/05/13 13:24	7440-48-4	
Copper, Dissolved	**2.4**	ug/L	0.50	1	02/28/13 14:40	03/05/13 13:24	7440-50-8	
Iron, Dissolved	ND	ug/L	50.0	1	02/28/13 14:40	03/05/13 13:24	7439-89-6	
Lead, Dissolved	ND	ug/L	0.10	1	02/28/13 14:40	03/05/13 13:24	7439-92-1	
Magnesium, Dissolved	**20000**	ug/L	5.0	1	02/28/13 14:40	03/05/13 13:24	7439-95-4	

This report shall not be reproduced, except in full,
without the written consent of Pace Analytical Services, Inc..

Pace Analytical Services, Inc.
9608 Loiret Blvd.
Lenexa, KS 66219
(913)599-5665

ANALYTICAL RESULTS

Project: February 2013 Rico Water Sampl
Pace Project No.: 60139049

Sample: DR-11_20130218 **Lab ID: 60139049010** Collected: 02/18/13 15:41 Received: 02/20/13 10:30 Matrix: Water

Parameters	Results	Units	Report Limit	DF	Prepared	Analyzed	CAS No.	Qual
200.8 MET ICPMS, Dissolved	Analytical Method: EPA 200.8 Preparation Method: EPA 200.8							
Manganese, Dissolved	**1670**	ug/L	10.0	20	02/28/13 14:40	03/05/13 13:29	7439-96-5	
Molybdenum, Dissolved	**16.6**	ug/L	0.50	1	02/28/13 14:40	03/05/13 13:24	7439-98-7	
Nickel, Dissolved	**4.8**	ug/L	0.50	1	02/28/13 14:40	03/05/13 13:24	7440-02-0	
Potassium, Dissolved	**8410**	ug/L	20.0	1	02/28/13 14:40	03/05/13 13:24	7440-09-7	
Selenium, Dissolved	ND	ug/L	0.50	1	02/28/13 14:40	03/05/13 13:24	7782-49-2	
Silver, Dissolved	ND	ug/L	0.50	1	02/28/13 14:40	03/05/13 13:24	7440-22-4	
Sodium, Dissolved	**13400**	ug/L	50.0	1	02/28/13 14:40	03/05/13 13:24	7440-23-5	
Thallium, Dissolved	ND	ug/L	0.10	1	02/28/13 14:40	03/05/13 13:24	7440-28-0	
Vanadium, Dissolved	ND	ug/L	0.10	1	02/28/13 14:40	03/05/13 13:24	7440-62-2	
Zinc, Dissolved	**1860**	ug/L	100	20	02/28/13 14:40	03/05/13 13:29	7440-66-6	
200.8 Potentially Diss. Metals	Analytical Method: EPA 200.8 Preparation Method: EPA 200.8							
Aluminum, Dissolved	**255**	ug/L	50.0	1	02/22/13 15:00	03/06/13 11:11	7429-90-5	
Antimony, Dissolved	**0.26J**	ug/L	1.0	1	02/22/13 15:00	03/06/13 11:11	7440-36-0	
Arsenic, Dissolved	**0.55J**	ug/L	1.0	1	02/22/13 15:00	03/06/13 11:11	7440-38-2	
Barium, Dissolved	**19.8**	ug/L	1.0	1	02/22/13 15:00	03/06/13 11:11	7440-39-3	
Beryllium, Dissolved	**0.31J**	ug/L	0.50	1	02/22/13 15:00	03/06/13 11:11	7440-41-7	
Cadmium, Dissolved	**10.6**	ug/L	0.50	1	02/22/13 15:00	03/06/13 11:11	7440-43-9	
Chromium, Dissolved	**0.81J**	ug/L	1.0	1	02/22/13 15:00	03/06/13 11:11	7440-47-3	B
Cobalt, Dissolved	**2.3**	ug/L	1.0	1	02/22/13 15:00	03/06/13 11:11	7440-48-4	
Copper, Dissolved	**48.1**	ug/L	1.0	1	02/22/13 15:00	03/06/13 11:11	7440-50-8	
Iron, Dissolved	**3020**	ug/L	50.0	1	02/22/13 15:00	03/06/13 11:11	7439-89-6	
Lead, Dissolved	**6.1**	ug/L	1.0	1	02/22/13 15:00	03/06/13 11:11	7439-92-1	
Manganese, Dissolved	**1620**	ug/L	1.0	1	02/22/13 15:00	03/06/13 11:11	7439-96-5	
Molybdenum, Dissolved	**15.6**	ug/L	1.0	1	02/22/13 15:00	03/06/13 11:11	7439-98-7	
Nickel, Dissolved	**2.4**	ug/L	1.0	1	02/22/13 15:00	03/06/13 11:11	7440-02-0	
Selenium, Dissolved	ND	ug/L	1.0	1	02/22/13 15:00	03/06/13 11:11	7782-49-2	
Silver, Dissolved	ND	ug/L	0.50	1	02/22/13 15:00	03/06/13 11:11	7440-22-4	
Thallium, Dissolved	**0.069J**	ug/L	1.0	1	02/22/13 15:00	03/06/13 11:11	7440-28-0	
Vanadium, Dissolved	ND	ug/L	1.0	1	02/22/13 15:00	03/06/13 11:11	7440-62-2	
Zinc, Dissolved	**2020**	ug/L	10.0	1	02/22/13 15:00	03/06/13 11:11	7440-66-6	
245.1 Mercury	Analytical Method: EPA 245.1 Preparation Method: EPA 245.1							
Mercury	ND	ug/L	0.20	1	02/28/13 13:48	03/01/13 14:57	7439-97-6	
245.1 Mercury, Dissolved	Analytical Method: EPA 245.1 Preparation Method: EPA 245.1							
Mercury, Dissolved	ND	ug/L	0.20	1	02/28/13 15:23	03/01/13 15:54	7439-97-6	
245.1 Potentially Diss Mercury	Analytical Method: EPA 245.1 Preparation Method: EPA 245.1							
Mercury, Dissolved	ND	ug/L	0.20	1	03/18/13 13:35	03/18/13 16:27	7439-97-6	
2510B Specific Conductance	Analytical Method: SM 2510B							
Specific Conductance	**1230**	umhos/cm	10.0	1		02/25/13 13:39		
Salinity	Analytical Method: Calculated							
Salinity (as dissolved solids)	**790**	mg/L	6.4	1		02/25/13 16:52		

This report shall not be reproduced, except in full,
without the written consent of Pace Analytical Services, Inc..

Pace Analytical Services, Inc.
9608 Loiret Blvd.
Lenexa, KS 66219
(913)599-5665

ANALYTICAL RESULTS

Project: February 2013 Rico Water Sampl
Pace Project No.: 60139049

Sample: DR-11_20130218 **Lab ID: 60139049010** Collected: 02/18/13 15:41 Received: 02/20/13 10:30 Matrix: Water

Parameters	Results	Units	Report Limit	DF	Prepared	Analyzed	CAS No.	Qual
Salinity	Analytical Method: Calculated							
Salinity (as seawater)	**0.61**	PSU	0.014	1		02/25/13 16:52		
2320B Alkalinity	Analytical Method: SM 2320B							
Alkalinity,Bicarbonate (CaCO3)	**99.0**	mg/L	20.0	1		02/28/13 13:29		
Alkalinity, Carbonate (CaCO3)	ND	mg/L	20.0	1		02/28/13 13:29		
Alkalinity, Total as CaCO3	**99.0**	mg/L	20.0	1		02/28/13 13:29		
2540C Total Dissolved Solids	Analytical Method: SM 2540C							
Total Dissolved Solids	**1050**	mg/L	5.0	1		02/25/13 09:33		
2540D Total Suspended Solids	Analytical Method: SM 2540D							
Total Suspended Solids	**6.0**	mg/L	5.0	1		02/22/13 12:33		
4500S2D Sulfide, Total	Analytical Method: SM 4500-S-2 D							
Sulfide, Total	ND	mg/L	0.050	1		02/21/13 10:45	18496-25-8	
300.0 IC Anions 28 Days	Analytical Method: EPA 300.0							
Chloride	ND	mg/L	1.0	1		02/25/13 18:59	16887-00-6	
Sulfate	**644**	mg/L	50.0	50		02/25/13 19:17	14808-79-8	
353.2 Nitrogen, NO2/NO3 pres.	Analytical Method: EPA 353.2							
Nitrogen, NO2 plus NO3	**0.11**	mg/L	0.10	1		02/27/13 14:36		
4500CNE Cyanide, Total	Analytical Method: SM 4500-CN-E							
Cyanide	ND	mg/L	0.0050	1		02/25/13 11:00	57-12-5	
5310C TOC	Analytical Method: SM 5310C							
Total Organic Carbon	ND	mg/L	0.50	1		02/27/13 19:44	7440-44-0	

This report shall not be reproduced, except in full,
without the written consent of Pace Analytical Services, Inc..

Pace Analytical Services, Inc.
9608 Loiret Blvd.
Lenexa, KS 66219
(913)599-5665

March 13, 2013

Mark DeFriez
Anderson Engineering Company I
977 W 2100 S.
Salt Lake City, UT 84119

RE: Project: FEBRUARY 2013 RICO WATER SAMPL
Pace Project No.: 60139196

Dear Mark DeFriez:
Enclosed are the analytical results for sample(s) received by the laboratory on February 22, 2013. The results relate only to the within this report conform to the most current version of the TNI standards, BP LaMP Technical Requirements Revision 10.1, and any applicable Quality Assurance Project Plan (QAPP), or Work Plan unless otherwise narrated in the body of this report.

If you have any questions concerning this report, please feel free to contact me.

Sincerely,

Heather M. Wilson

Heather Wilson

heather.wilson@pacelabs.com
Project Manager

Enclosures

This report shall not be reproduced, except in full,
without the written consent of Pace Analytical Services, Inc..

Pace Analytical Services, Inc.
9608 Loiret Blvd.
Lenexa, KS 66219
(913)599-5665

CERTIFICATIONS

Project: FEBRUARY 2013 RICO WATER SAMPL
Pace Project No.: 60139196

Minnesota Certification IDs
1700 Elm Street SE Suite 200, Minneapolis, MN 55414
A2LA Certification #: 2926.01
Alaska Certification #: UST-078
Alaska Certification #MN00064
Arizona Certification #: AZ-0014
Arkansas Certification #: 88-0680
California Certification #: 01155CA
Colorado Certification #Pace
Connecticut Certification #: PH-0256
EPA Region 8 Certification #: Pace
Florida/NELAP Certification #: E87605
Georgia Certification #: 959
Hawaii Certification #Pace
Idaho Certification #: MN00064
Illinois Certification #: 200011
Kansas Certification #: E-10167
Louisiana Certification #: 03086
Louisiana Certification #: LA080009
Maine Certification #: 2007029
Maryland Certification #: 322
Michigan DEQ Certification #: 9909
Minnesota Certification #: 027-053-137
Mississippi Certification #: Pace
Montana Certification #: MT CERT0092
Nevada Certification #: MN_00064
Nebraska Certification #: Pace
New Jersey Certification #: MN-002
New York Certification #: 11647
North Carolina Certification #: 530
North Dakota Certification #: R-036
North Dakota Certification #: R-036A
Ohio VAP Certification #: CL101
Oklahoma Certification #: 9507
Oregon Certification #: MN200001
Oregon Certification #: MN300001
Pennsylvania Certification #: 68-00563
Puerto Rico Certification
Tennessee Certification #: 02818
Texas Certification #: T104704192
Utah Certification #: MN00064
Virginia/DCLS Certification #: 002521
Virginia/VELAP Certification #: 460163
Washington Certification #: C754
West Virginia Certification #: 382
Wisconsin Certification #: 999407970

Montana Certification IDs
602 South 25th Street, Billings, MT 59101
EPA Region 8 Certification #: 8TMS-Q
Idaho Certification #: MT00012
Montana Certification #: MT CERT0040
NVLAP Certification #: 101292-0
Minnesota Dept of Health Certification #: 030-999-442
Washington Department of Ecology #: C993

Green Bay Certification IDs
1241 Bellevue Street, Green Bay, WI 54302
Florida/NELAP Certification #: E87948
Illinois Certification #: 200050
Kentucky Certification #: 82
Louisiana Certification #: 04168
Minnesota Certification #: 055-999-334
New York Certification #: 11888
North Dakota Certification #: R-150
South Carolina Certification #: 83006001
US Dept of Agriculture #: S-76505
Wisconsin Certification #: 405132750

Kansas Certification IDs
9608 Loiret Boulevard, Lenexa, KS 66219
A2LA Certification #: 2456.01
Arkansas Certification #: 12-019-0
Illinois Certification #: 002885
Iowa Certification #: 118
Kansas/NELAP Certification #: E-10116
Louisiana Certification #: 03055
Nevada Certification #: KS000212008A
Oklahoma Certification #: 9205/9935
Texas Certification #: T104704407-12-3
Utah Certification #: KS000212012-2
Illinois Certification #: 003097

This report shall not be reproduced, except in full,
without the written consent of Pace Analytical Services, Inc..

Pace Analytical Services, Inc.
9608 Loiret Blvd.
Lenexa, KS 66219
(913)599-5665

SAMPLE SUMMARY

Project: FEBRUARY 2013 RICO WATER SAMPL
Pace Project No.: 60139196

Lab ID	Sample ID	Matrix	Date Collected	Date Received
60139196001	**DR-4-SW_20130220**	Water	02/20/13 12:40	02/22/13 10:30
60139196002	**DR-G_20130220**	Water	02/20/13 13:30	02/22/13 10:30

This report shall not be reproduced, except in full,
without the written consent of Pace Analytical Services, Inc..

Pace Analytical Services, Inc.
9608 Loiret Blvd.
Lenexa, KS 66219
(913)599-5665

SAMPLE ANALYTE COUNT

Project: FEBRUARY 2013 RICO WATER SAMPL
Pace Project No.: 60139196

Lab ID	Sample ID	Method	Analysts	Analytes Reported	Laboratory
60139196001	**DR-4-SW_20130220**	EPA 200.7	TJT	4	PASI-K
		EPA 200.8	TT3	25	PASI-M
		EPA 200.8	TT3	23	PASI-M
		EPA 200.8	JGP	19	PASI-K
		EPA 245.1	WBS	1	PASI-M
		EPA 245.1	WBS	1	PASI-M
		EPA 245.1	NDJ	1	PASI-K
		SM 2510B	WT1	1	
		Calculated	WT1	2	
		SM 2320B	DJR	3	PASI-K
		SM 2540C	NDL	1	PASI-K
		SM 2540D	NDL	1	PASI-K
		SM 4500-S-2 D	AJM	1	PASI-K
		EPA 300.0	AJM	2	PASI-K
		EPA 353.2	AJM	1	PASI-K
		SM 4500-CN-E	OL	1	PASI-K
		SM 5310C	TJJ	1	PASI-G
60139196002	**DR-G_20130220**	EPA 200.7	TJT	4	PASI-K
		EPA 200.8	TT3	25	PASI-M
		EPA 200.8	TT3	23	PASI-M
		EPA 200.8	JGP	19	PASI-K
		EPA 245.1	WBS	1	PASI-M
		EPA 245.1	WBS	1	PASI-M
		EPA 245.1	NDJ	1	PASI-K
		SM 2510B	WT1	1	
		Calculated	WT1	2	
		SM 2320B	DJR	3	PASI-K
		SM 2540C	NDL	1	PASI-K
		SM 2540D	NDL	1	PASI-K
		SM 4500-S-2 D	AJM	1	PASI-K
		EPA 300.0	AJM	2	PASI-K
		EPA 353.2	AJM	1	PASI-K
		SM 4500-CN-E	OL	1	PASI-K
		SM 5310C	TJJ	1	PASI-G

This report shall not be reproduced, except in full,
without the written consent of Pace Analytical Services, Inc..

Pace Analytical Services, Inc.
9608 Loiret Blvd.
Lenexa, KS 66219
(913)599-5665

PROJECT NARRATIVE

Project: FEBRUARY 2013 RICO WATER SAMPL
Pace Project No.: 60139196

Method: **EPA 200.7**
Description: 200.7 Potentially Diss. Metals
Client: BP Anderson Engineering Company Inc.
Date: March 13, 2013

General Information:
2 samples were analyzed for EPA 200.7. All samples were received in acceptable condition with any exceptions noted below.

Hold Time:
The samples were analyzed within the method required hold times with any exceptions noted below.

Sample Preparation:
The samples were prepared in accordance with EPA 200.7 with any exceptions noted below.

Initial Calibrations (including MS Tune as applicable):
All criteria were within method requirements with any exceptions noted below.

Continuing Calibration:
All criteria were within method requirements with any exceptions noted below.

Method Blank:
All analytes were below the report limit in the method blank with any exceptions noted below.

Laboratory Control Spike:
All laboratory control spike compounds were within QC limits with any exceptions noted below.

Matrix Spikes:
All percent recoveries and relative percent differences (RPDs) were within acceptance criteria with any exceptions noted below.

Additional Comments:

This report shall not be reproduced, except in full,
without the written consent of Pace Analytical Services, Inc..

Pace Analytical Services, Inc.
9608 Loiret Blvd.
Lenexa, KS 66219
(913)599-5665

PROJECT NARRATIVE

Project: FEBRUARY 2013 RICO WATER SAMPL
Pace Project No.: 60139196

Method: **EPA 200.8**
Description: 200.8 MET ICPMS
Client: BP Anderson Engineering Company Inc.
Date: March 13, 2013

General Information:
2 samples were analyzed for EPA 200.8. All samples were received in acceptable condition with any exceptions noted below.

Hold Time:
The samples were analyzed within the method required hold times with any exceptions noted below.

Sample Preparation:
The samples were prepared in accordance with EPA 200.8 with any exceptions noted below.

Initial Calibrations (including MS Tune as applicable):
All criteria were within method requirements with any exceptions noted below.

Continuing Calibration:
All criteria were within method requirements with any exceptions noted below.

Internal Standards:
All internal standards were within QC limits with any exceptions noted below.

Method Blank:
All analytes were below the report limit in the method blank with any exceptions noted below.

Laboratory Control Spike:
All laboratory control spike compounds were within QC limits with any exceptions noted below.

Matrix Spikes:
All percent recoveries and relative percent differences (RPDs) were within acceptance criteria with any exceptions noted below.

Additional Comments:

Analyte Comments:

QC Batch: MPRP/37780

E: Analyte concentration exceeded the calibration range. The reported result is estimated.

- MS (Lab ID: 1383252)
  - Calcium
- MSD (Lab ID: 1383253)
  - Calcium

This report shall not be reproduced, except in full,
without the written consent of Pace Analytical Services, Inc..

Pace Analytical Services, Inc.
9608 Loiret Blvd.
Lenexa, KS 66219
(913)599-5665

PROJECT NARRATIVE

Project: FEBRUARY 2013 RICO WATER SAMPL
Pace Project No.: 60139196

Method: **EPA 200.8**
Description: 200.8 MET ICPMS, Dissolved
Client: BP Anderson Engineering Company Inc.
Date: March 13, 2013

General Information:
2 samples were analyzed for EPA 200.8. All samples were received in acceptable condition with any exceptions noted below.

Hold Time:
The samples were analyzed within the method required hold times with any exceptions noted below.

Sample Preparation:
The samples were prepared in accordance with EPA 200.8 with any exceptions noted below.

Initial Calibrations (including MS Tune as applicable):
All criteria were within method requirements with any exceptions noted below.

Continuing Calibration:
All criteria were within method requirements with any exceptions noted below.

Internal Standards:
All internal standards were within QC limits with any exceptions noted below.

Method Blank:
All analytes were below the report limit in the method blank with any exceptions noted below.

Laboratory Control Spike:
All laboratory control spike compounds were within QC limits with any exceptions noted below.

Matrix Spikes:
All percent recoveries and relative percent differences (RPDs) were within acceptance criteria with any exceptions noted below.

QC Batch: MPRP/37781

A matrix spike and matrix spike duplicate (MS/MSD) were performed on the following sample(s): 60139049001

M1: Matrix spike recovery exceeded QC limits. Batch accepted based on laboratory control sample (LCS) recovery.

- MS (Lab ID: 1383260)
  - Calcium, Dissolved
  - Magnesium, Dissolved
  - Manganese, Dissolved
  - Potassium, Dissolved
  - Sodium, Dissolved
- MSD (Lab ID: 1383261)
  - Calcium, Dissolved
  - Magnesium, Dissolved
  - Manganese, Dissolved
  - Potassium, Dissolved
  - Sodium, Dissolved

Additional Comments:

This report shall not be reproduced, except in full,
without the written consent of Pace Analytical Services, Inc..

Pace Analytical Services, Inc.
9608 Loiret Blvd.
Lenexa, KS 66219
(913)599-5665

PROJECT NARRATIVE

Project: FEBRUARY 2013 RICO WATER SAMPL
Pace Project No.: 60139196

Method: **EPA 200.8**
Description: 200.8 MET ICPMS, Dissolved
Client: BP Anderson Engineering Company Inc.
Date: March 13, 2013

Analyte Comments:

QC Batch: MPRP/37781

E: Analyte concentration exceeded the calibration range. The reported result is estimated.

- MS (Lab ID: 1383260)
  - Calcium, Dissolved
- MSD (Lab ID: 1383261)
  - Calcium, Dissolved

This report shall not be reproduced, except in full,
without the written consent of Pace Analytical Services, Inc..

Pace Analytical Services, Inc.
9608 Loiret Blvd.
Lenexa, KS 66219
(913)599-5665

PROJECT NARRATIVE

Project: FEBRUARY 2013 RICO WATER SAMPL
Pace Project No.: 60139196

Method: **EPA 200.8**
Description: 200.8 Potentially Diss. Metals
Client: BP Anderson Engineering Company Inc.
Date: March 13, 2013

General Information:
2 samples were analyzed for EPA 200.8. All samples were received in acceptable condition with any exceptions noted below.

Hold Time:
The samples were analyzed within the method required hold times with any exceptions noted below.

Sample Preparation:
The samples were prepared in accordance with EPA 200.8 with any exceptions noted below.

Initial Calibrations (including MS Tune as applicable):
All criteria were within method requirements with any exceptions noted below.

Continuing Calibration:
All criteria were within method requirements with any exceptions noted below.

Internal Standards:
All internal standards were within QC limits with any exceptions noted below.

Method Blank:
All analytes were below the report limit in the method blank with any exceptions noted below.

Laboratory Control Spike:
All laboratory control spike compounds were within QC limits with any exceptions noted below.

Matrix Spikes:
All percent recoveries and relative percent differences (RPDs) were within acceptance criteria with any exceptions noted below.

Additional Comments:

Analyte Comments:

QC Batch: MPRP/21698

B: Analyte was detected in the associated method blank.

- DR-4-SW_20130220 (Lab ID: 60139196001)
  - Chromium, Dissolved
  - Lead, Dissolved
- DR-G_20130220 (Lab ID: 60139196002)
  - Chromium, Dissolved
  - Iron, Dissolved
  - Lead, Dissolved

This report shall not be reproduced, except in full,
without the written consent of Pace Analytical Services, Inc..

Pace Analytical Services, Inc.
9608 Loiret Blvd.
Lenexa, KS 66219
(913)599-5665

PROJECT NARRATIVE

Project: FEBRUARY 2013 RICO WATER SAMPL
Pace Project No.: 60139196

Method: **EPA 245.1**
Description: 245.1 Mercury
Client: BP Anderson Engineering Company Inc.
Date: March 13, 2013

General Information:
2 samples were analyzed for EPA 245.1. All samples were received in acceptable condition with any exceptions noted below.

Hold Time:
The samples were analyzed within the method required hold times with any exceptions noted below.

Sample Preparation:
The samples were prepared in accordance with EPA 245.1 with any exceptions noted below.

Initial Calibrations (including MS Tune as applicable):
All criteria were within method requirements with any exceptions noted below.

Continuing Calibration:
All criteria were within method requirements with any exceptions noted below.

Method Blank:
All analytes were below the report limit in the method blank with any exceptions noted below.

Laboratory Control Spike:
All laboratory control spike compounds were within QC limits with any exceptions noted below.

Matrix Spikes:
All percent recoveries and relative percent differences (RPDs) were within acceptance criteria with any exceptions noted below.

Additional Comments:

This report shall not be reproduced, except in full,
without the written consent of Pace Analytical Services, Inc..

Pace Analytical Services, Inc.
9608 Loiret Blvd.
Lenexa, KS 66219
(913)599-5665

PROJECT NARRATIVE

Project: FEBRUARY 2013 RICO WATER SAMPL
Pace Project No.: 60139196

Method: **EPA 245.1**
Description: 245.1 Mercury, Dissolved
Client: BP Anderson Engineering Company Inc.
Date: March 13, 2013

General Information:
2 samples were analyzed for EPA 245.1. All samples were received in acceptable condition with any exceptions noted below.

Hold Time:
The samples were analyzed within the method required hold times with any exceptions noted below.

Sample Preparation:
The samples were prepared in accordance with EPA 245.1 with any exceptions noted below.

Initial Calibrations (including MS Tune as applicable):
All criteria were within method requirements with any exceptions noted below.

Continuing Calibration:
All criteria were within method requirements with any exceptions noted below.

Method Blank:
All analytes were below the report limit in the method blank with any exceptions noted below.

Laboratory Control Spike:
All laboratory control spike compounds were within QC limits with any exceptions noted below.

Matrix Spikes:
All percent recoveries and relative percent differences (RPDs) were within acceptance criteria with any exceptions noted below.

Additional Comments:

This report shall not be reproduced, except in full,
without the written consent of Pace Analytical Services, Inc..

Pace Analytical Services, Inc.
9608 Loiret Blvd.
Lenexa, KS 66219
(913)599-5665

PROJECT NARRATIVE

Project: FEBRUARY 2013 RICO WATER SAMPL
Pace Project No.: 60139196

Method: **EPA 245.1**
Description: 245.1 Potentially Diss Mercury
Client: BP Anderson Engineering Company Inc.
Date: March 13, 2013

General Information:
2 samples were analyzed for EPA 245.1. All samples were received in acceptable condition with any exceptions noted below.

Hold Time:
The samples were analyzed within the method required hold times with any exceptions noted below.

Sample Preparation:
The samples were prepared in accordance with EPA 245.1 with any exceptions noted below.

Initial Calibrations (including MS Tune as applicable):
All criteria were within method requirements with any exceptions noted below.

Continuing Calibration:
All criteria were within method requirements with any exceptions noted below.

Method Blank:
All analytes were below the report limit in the method blank with any exceptions noted below.

Laboratory Control Spike:
All laboratory control spike compounds were within QC limits with any exceptions noted below.

Matrix Spikes:
All percent recoveries and relative percent differences (RPDs) were within acceptance criteria with any exceptions noted below.

Additional Comments:

This report shall not be reproduced, except in full,
without the written consent of Pace Analytical Services, Inc..

Pace Analytical Services, Inc.
9608 Loiret Blvd.
Lenexa, KS 66219
(913)599-5665

PROJECT NARRATIVE

Project: FEBRUARY 2013 RICO WATER SAMPL
Pace Project No.: 60139196

Method: **SM 2510B**
Description: 2510B Specific Conductance
Client: BP Anderson Engineering Company Inc.
Date: March 13, 2013

General Information:
2 samples were analyzed for SM 2510B. All samples were received in acceptable condition with any exceptions noted below.

Hold Time:
The samples were analyzed within the method required hold times with any exceptions noted below.

Initial Calibrations (including MS Tune as applicable):
All criteria were within method requirements with any exceptions noted below.

Continuing Calibration:
All criteria were within method requirements with any exceptions noted below.

Internal Standards:
All internal standards were within QC limits with any exceptions noted below.

Surrogates:
All surrogates were within QC limits with any exceptions noted below.

Method Blank:
All analytes were below the report limit in the method blank with any exceptions noted below.

Laboratory Control Spike:
All laboratory control spike compounds were within QC limits with any exceptions noted below.

Matrix Spikes:
All percent recoveries and relative percent differences (RPDs) were within acceptance criteria with any exceptions noted below.

Duplicate Sample:
All duplicate sample results were within method acceptance criteria with any exceptions noted below.

Additional Comments:

This report shall not be reproduced, except in full,
without the written consent of Pace Analytical Services, Inc..

Pace Analytical Services, Inc.
9608 Loiret Blvd.
Lenexa, KS 66219
(913)599-5665

PROJECT NARRATIVE

Project: FEBRUARY 2013 RICO WATER SAMPL
Pace Project No.: 60139196

Method: **Calculated**
Description: Salinity
Client: BP Anderson Engineering Company Inc.
Date: March 13, 2013

General Information:
2 samples were analyzed for Calculated. All samples were received in acceptable condition with any exceptions noted below.

Hold Time:
The samples were analyzed within the method required hold times with any exceptions noted below.

Initial Calibrations (including MS Tune as applicable):
All criteria were within method requirements with any exceptions noted below.

Continuing Calibration:
All criteria were within method requirements with any exceptions noted below.

Internal Standards:
All internal standards were within QC limits with any exceptions noted below.

Surrogates:
All surrogates were within QC limits with any exceptions noted below.

Method Blank:
All analytes were below the report limit in the method blank with any exceptions noted below.

Laboratory Control Spike:
All laboratory control spike compounds were within QC limits with any exceptions noted below.

Matrix Spikes:
All percent recoveries and relative percent differences (RPDs) were within acceptance criteria with any exceptions noted below.

Additional Comments:

This report shall not be reproduced, except in full,
without the written consent of Pace Analytical Services, Inc..

Pace Analytical Services, Inc.
9608 Loiret Blvd.
Lenexa, KS 66219
(913)599-5665

PROJECT NARRATIVE

Project: FEBRUARY 2013 RICO WATER SAMPL
Pace Project No.: 60139196

Method: **SM 2320B**
Description: 2320B Alkalinity
Client: BP Anderson Engineering Company Inc.
Date: March 13, 2013

General Information:
2 samples were analyzed for SM 2320B. All samples were received in acceptable condition with any exceptions noted below.

Hold Time:
The samples were analyzed within the method required hold times with any exceptions noted below.

Method Blank:
All analytes were below the report limit in the method blank with any exceptions noted below.

Laboratory Control Spike:
All laboratory control spike compounds were within QC limits with any exceptions noted below.

Matrix Spikes:
All percent recoveries and relative percent differences (RPDs) were within acceptance criteria with any exceptions noted below.

Duplicate Sample:
All duplicate sample results were within method acceptance criteria with any exceptions noted below.

Additional Comments:

This report shall not be reproduced, except in full,
without the written consent of Pace Analytical Services, Inc..

Pace Analytical Services, Inc.
9608 Loiret Blvd.
Lenexa, KS 66219
(913)599-5665

PROJECT NARRATIVE

Project: FEBRUARY 2013 RICO WATER SAMPL
Pace Project No.: 60139196

Method: **SM 2540C**
Description: 2540C Total Dissolved Solids
Client: BP Anderson Engineering Company Inc.
Date: March 13, 2013

General Information:
2 samples were analyzed for SM 2540C. All samples were received in acceptable condition with any exceptions noted below.

Hold Time:
The samples were analyzed within the method required hold times with any exceptions noted below.

Method Blank:
All analytes were below the report limit in the method blank with any exceptions noted below.

Laboratory Control Spike:
All laboratory control spike compounds were within QC limits with any exceptions noted below.

Matrix Spikes:
All percent recoveries and relative percent differences (RPDs) were within acceptance criteria with any exceptions noted below.

Duplicate Sample:
All duplicate sample results were within method acceptance criteria with any exceptions noted below.

Additional Comments:

This report shall not be reproduced, except in full,
without the written consent of Pace Analytical Services, Inc..

Pace Analytical Services, Inc.
9608 Loiret Blvd.
Lenexa, KS 66219
(913)599-5665

PROJECT NARRATIVE

Project: FEBRUARY 2013 RICO WATER SAMPL
Pace Project No.: 60139196

Method: **SM 2540D**
Description: 2540D Total Suspended Solids
Client: BP Anderson Engineering Company Inc.
Date: March 13, 2013

General Information:
2 samples were analyzed for SM 2540D. All samples were received in acceptable condition with any exceptions noted below.

Hold Time:
The samples were analyzed within the method required hold times with any exceptions noted below.

Method Blank:
All analytes were below the report limit in the method blank with any exceptions noted below.

Laboratory Control Spike:
All laboratory control spike compounds were within QC limits with any exceptions noted below.

Matrix Spikes:
All percent recoveries and relative percent differences (RPDs) were within acceptance criteria with any exceptions noted below.

Duplicate Sample:
All duplicate sample results were within method acceptance criteria with any exceptions noted below.

Additional Comments:

This report shall not be reproduced, except in full,
without the written consent of Pace Analytical Services, Inc..

Pace Analytical Services, Inc.
9608 Loiret Blvd.
Lenexa, KS 66219
(913)599-5665

PROJECT NARRATIVE

Project: FEBRUARY 2013 RICO WATER SAMPL
Pace Project No.: 60139196

Method: **SM 4500-S-2 D**
Description: 4500S2D Sulfide, Total
Client: BP Anderson Engineering Company Inc.
Date: March 13, 2013

General Information:
2 samples were analyzed for SM 4500-S-2 D. All samples were received in acceptable condition with any exceptions noted below.

Hold Time:
The samples were analyzed within the method required hold times with any exceptions noted below.

Method Blank:
All analytes were below the report limit in the method blank with any exceptions noted below.

Laboratory Control Spike:
All laboratory control spike compounds were within QC limits with any exceptions noted below.

Matrix Spikes:
All percent recoveries and relative percent differences (RPDs) were within acceptance criteria with any exceptions noted below.

Additional Comments:

This report shall not be reproduced, except in full,
without the written consent of Pace Analytical Services, Inc..

Pace Analytical Services, Inc.
9608 Loiret Blvd.
Lenexa, KS 66219
(913)599-5665

PROJECT NARRATIVE

Project: FEBRUARY 2013 RICO WATER SAMPL
Pace Project No.: 60139196

Method: **EPA 300.0**
Description: 300.0 IC Anions 28 Days
Client: BP Anderson Engineering Company Inc.
Date: March 13, 2013

General Information:
2 samples were analyzed for EPA 300.0. All samples were received in acceptable condition with any exceptions noted below.

Hold Time:
The samples were analyzed within the method required hold times with any exceptions noted below.

Initial Calibrations (including MS Tune as applicable):
All criteria were within method requirements with any exceptions noted below.

Continuing Calibration:
All criteria were within method requirements with any exceptions noted below.

Method Blank:
All analytes were below the report limit in the method blank with any exceptions noted below.

Laboratory Control Spike:
All laboratory control spike compounds were within QC limits with any exceptions noted below.

Matrix Spikes:
All percent recoveries and relative percent differences (RPDs) were within acceptance criteria with any exceptions noted below.

Additional Comments:

This report shall not be reproduced, except in full,
without the written consent of Pace Analytical Services, Inc..

Pace Analytical Services, Inc.
9608 Loiret Blvd.
Lenexa, KS 66219
(913)599-5665

PROJECT NARRATIVE

Project: FEBRUARY 2013 RICO WATER SAMPL
Pace Project No.: 60139196

Method: **EPA 353.2**
Description: 353.2 Nitrogen, NO2/NO3 pres.
Client: BP Anderson Engineering Company Inc.
Date: March 13, 2013

General Information:
2 samples were analyzed for EPA 353.2. All samples were received in acceptable condition with any exceptions noted below.

Hold Time:
The samples were analyzed within the method required hold times with any exceptions noted below.

Initial Calibrations (including MS Tune as applicable):
All criteria were within method requirements with any exceptions noted below.

Continuing Calibration:
All criteria were within method requirements with any exceptions noted below.

Method Blank:
All analytes were below the report limit in the method blank with any exceptions noted below.

Laboratory Control Spike:
All laboratory control spike compounds were within QC limits with any exceptions noted below.

Matrix Spikes:
All percent recoveries and relative percent differences (RPDs) were within acceptance criteria with any exceptions noted below.

QC Batch: WETA/23663

A matrix spike and matrix spike duplicate (MS/MSD) were performed on the following sample(s): 60139049001,60139049004

M1: Matrix spike recovery exceeded QC limits. Batch accepted based on laboratory control sample (LCS) recovery.

- MS (Lab ID: 1145186)
  - Nitrogen, NO2 plus NO3

Duplicate Sample:
All duplicate sample results were within method acceptance criteria with any exceptions noted below.

Additional Comments:

This report shall not be reproduced, except in full,
without the written consent of Pace Analytical Services, Inc..

Pace Analytical Services, Inc.
9608 Loiret Blvd.
Lenexa, KS 66219
(913)599-5665

PROJECT NARRATIVE

Project: FEBRUARY 2013 RICO WATER SAMPL
Pace Project No.: 60139196

Method: **SM 4500-CN-E**
Description: 4500CNE Cyanide, Total
Client: BP Anderson Engineering Company Inc.
Date: March 13, 2013

General Information:
2 samples were analyzed for SM 4500-CN-E. All samples were received in acceptable condition with any exceptions noted below.

Hold Time:
The samples were analyzed within the method required hold times with any exceptions noted below.

Initial Calibrations (including MS Tune as applicable):
All criteria were within method requirements with any exceptions noted below.

Continuing Calibration:
All criteria were within method requirements with any exceptions noted below.

Method Blank:
All analytes were below the report limit in the method blank with any exceptions noted below.

Laboratory Control Spike:
All laboratory control spike compounds were within QC limits with any exceptions noted below.

Matrix Spikes:
All percent recoveries and relative percent differences (RPDs) were within acceptance criteria with any exceptions noted below.

Duplicate Sample:
All duplicate sample results were within method acceptance criteria with any exceptions noted below.

Additional Comments:

This report shall not be reproduced, except in full,
without the written consent of Pace Analytical Services, Inc..

Pace Analytical Services, Inc.
9608 Loiret Blvd.
Lenexa, KS 66219
(913)599-5665

PROJECT NARRATIVE

Project: FEBRUARY 2013 RICO WATER SAMPL
Pace Project No.: 60139196

Method: **SM 5310C**
Description: 5310C TOC
Client: BP Anderson Engineering Company Inc.
Date: March 13, 2013

General Information:
2 samples were analyzed for SM 5310C. All samples were received in acceptable condition with any exceptions noted below.

Hold Time:
The samples were analyzed within the method required hold times with any exceptions noted below.

Initial Calibrations (including MS Tune as applicable):
All criteria were within method requirements with any exceptions noted below.

Continuing Calibration:
All criteria were within method requirements with any exceptions noted below.

Method Blank:
All analytes were below the report limit in the method blank with any exceptions noted below.

Laboratory Control Spike:
All laboratory control spike compounds were within QC limits with any exceptions noted below.

Matrix Spikes:
All percent recoveries and relative percent differences (RPDs) were within acceptance criteria with any exceptions noted below.

Additional Comments:

This data package has been reviewed for quality and completeness and is approved for release.

This report shall not be reproduced, except in full,
without the written consent of Pace Analytical Services, Inc..

Pace Analytical Services, Inc.
9608 Loiret Blvd.
Lenexa, KS 66219
(913)599-5665

ANALYTICAL RESULTS

Project: FEBRUARY 2013 RICO WATER SAMPL
Pace Project No.: 60139196

Sample: DR-4-SW_20130220 **Lab ID: 60139196001** Collected: 02/20/13 12:40 Received: 02/22/13 10:30 Matrix: Water

Parameters	Results	Units	Report Limit	DF	Prepared	Analyzed	CAS No.	Qual
200.7 Potentially Diss. Metals	Analytical Method: EPA 200.7 Preparation Method: EPA 200.7							
Calcium, Dissolved	**101000**	ug/L	100	1	02/28/13 16:15	03/07/13 11:57	7440-70-2	
Magnesium, Dissolved	**12900**	ug/L	50.0	1	02/28/13 16:15	03/07/13 11:57	7439-95-4	
Potassium, Dissolved	**2510**	ug/L	500	1	02/28/13 16:15	03/07/13 11:57	7440-09-7	
Sodium, Dissolved	**7120**	ug/L	500	1	02/28/13 16:15	03/07/13 11:57	7440-23-5	
200.8 MET ICPMS	Analytical Method: EPA 200.8 Preparation Method: EPA 200.8							
Aluminum	**15.5**	ug/L	4.0	1	02/28/13 11:07	03/04/13 13:38	7429-90-5	
Antimony	ND	ug/L	0.50	1	02/28/13 11:07	03/04/13 13:38	7440-36-0	
Arsenic	ND	ug/L	0.50	1	02/28/13 11:07	03/04/13 13:38	7440-38-2	
Barium	**67.1**	ug/L	0.30	1	02/28/13 11:07	03/04/13 13:38	7440-39-3	
Beryllium	ND	ug/L	0.20	1	02/28/13 11:07	03/04/13 13:38	7440-41-7	
Cadmium	**0.75**	ug/L	0.080	1	02/28/13 11:07	03/04/13 13:38	7440-43-9	
Calcium	**107000**	ug/L	400	20	02/28/13 11:07	03/04/13 13:43	7440-70-2	
Chromium	ND	ug/L	0.50	1	02/28/13 11:07	03/04/13 13:38	7440-47-3	
Cobalt	ND	ug/L	0.50	1	02/28/13 11:07	03/04/13 13:38	7440-48-4	
Copper	**1.2**	ug/L	0.50	1	02/28/13 11:07	03/04/13 13:38	7440-50-8	
Iron	**176**	ug/L	50.0	1	02/28/13 11:07	03/04/13 13:38	7439-89-6	
Lead	**0.30**	ug/L	0.10	1	02/28/13 11:07	03/04/13 13:38	7439-92-1	
Magnesium	**13300**	ug/L	5.0	1	02/28/13 11:07	03/04/13 13:38	7439-95-4	
Manganese	**434**	ug/L	0.50	1	02/28/13 11:07	03/04/13 13:38	7439-96-5	
Molybdenum	**2.3**	ug/L	0.50	1	02/28/13 11:07	03/04/13 13:38	7439-98-7	
Nickel	**0.73**	ug/L	0.50	1	02/28/13 11:07	03/04/13 13:38	7440-02-0	
Potassium	**2540**	ug/L	20.0	1	02/28/13 11:07	03/04/13 13:38	7440-09-7	
Selenium	ND	ug/L	0.50	1	02/28/13 11:07	03/04/13 13:38	7782-49-2	
Silica	**12100**	ug/L	1070	20	02/28/13 11:07	03/04/13 13:43	7631-86-9	M6
Silver	ND	ug/L	0.50	1	02/28/13 11:07	03/04/13 13:38	7440-22-4	
Sodium	**6900**	ug/L	50.0	1	02/28/13 11:07	03/04/13 13:38	7440-23-5	
Thallium	ND	ug/L	0.10	1	02/28/13 11:07	03/04/13 13:38	7440-28-0	
Total Hardness by 2340B	**322000**	ug/L	1420	20	02/28/13 11:07	03/04/13 13:43		
Vanadium	ND	ug/L	0.10	1	02/28/13 11:07	03/04/13 13:38	7440-62-2	
Zinc	**248**	ug/L	5.0	1	02/28/13 11:07	03/04/13 13:38	7440-66-6	
200.8 MET ICPMS, Dissolved	Analytical Method: EPA 200.8 Preparation Method: EPA 200.8							
Aluminum, Dissolved	**12.7**	ug/L	4.0	1	02/28/13 14:40	03/05/13 13:33	7429-90-5	
Antimony, Dissolved	ND	ug/L	0.50	1	02/28/13 14:40	03/05/13 13:33	7440-36-0	
Arsenic, Dissolved	ND	ug/L	0.50	1	02/28/13 14:40	03/05/13 13:33	7440-38-2	
Barium, Dissolved	**67.1**	ug/L	0.30	1	02/28/13 14:40	03/05/13 13:33	7440-39-3	
Beryllium, Dissolved	ND	ug/L	0.20	1	02/28/13 14:40	03/05/13 13:33	7440-41-7	
Cadmium, Dissolved	**0.46**	ug/L	0.080	1	02/28/13 14:40	03/05/13 13:33	7440-43-9	
Calcium, Dissolved	**122000**	ug/L	400	20	02/28/13 14:40	03/05/13 13:38	7440-70-2	
Chromium, Dissolved	ND	ug/L	0.50	1	02/28/13 14:40	03/05/13 13:33	7440-47-3	
Cobalt, Dissolved	**0.55**	ug/L	0.50	1	02/28/13 14:40	03/05/13 13:33	7440-48-4	
Copper, Dissolved	**1.5**	ug/L	0.50	1	02/28/13 14:40	03/05/13 13:33	7440-50-8	
Iron, Dissolved	**79.1**	ug/L	50.0	1	02/28/13 14:40	03/05/13 13:33	7439-89-6	
Lead, Dissolved	ND	ug/L	0.10	1	02/28/13 14:40	03/05/13 13:33	7439-92-1	
Magnesium, Dissolved	**13700**	ug/L	5.0	1	02/28/13 14:40	03/05/13 13:33	7439-95-4	

This report shall not be reproduced, except in full,
without the written consent of Pace Analytical Services, Inc..

Pace Analytical Services, Inc.
9608 Loiret Blvd.
Lenexa, KS 66219
(913)599-5665

ANALYTICAL RESULTS

Project: FEBRUARY 2013 RICO WATER SAMPL
Pace Project No.: 60139196

Sample: DR-4-SW_20130220 **Lab ID: 60139196001** Collected: 02/20/13 12:40 Received: 02/22/13 10:30 Matrix: Water

Parameters	Results	Units	Report Limit	DF	Prepared	Analyzed	CAS No.	Qual
200.8 MET ICPMS, Dissolved	Analytical Method: EPA 200.8 Preparation Method: EPA 200.8							
Manganese, Dissolved	**444**	ug/L	0.50	1	02/28/13 14:40	03/05/13 13:33	7439-96-5	
Molybdenum, Dissolved	**2.3**	ug/L	0.50	1	02/28/13 14:40	03/05/13 13:33	7439-98-7	
Nickel, Dissolved	**4.5**	ug/L	0.50	1	02/28/13 14:40	03/05/13 13:33	7440-02-0	
Potassium, Dissolved	**2700**	ug/L	20.0	1	02/28/13 14:40	03/05/13 13:33	7440-09-7	
Selenium, Dissolved	**0.51**	ug/L	0.50	1	02/28/13 14:40	03/05/13 13:33	7782-49-2	
Silver, Dissolved	ND	ug/L	0.50	1	02/28/13 14:40	03/05/13 13:33	7440-22-4	
Sodium, Dissolved	**7230**	ug/L	50.0	1	02/28/13 14:40	03/05/13 13:33	7440-23-5	
Thallium, Dissolved	ND	ug/L	0.10	1	02/28/13 14:40	03/05/13 13:33	7440-28-0	
Vanadium, Dissolved	ND	ug/L	0.10	1	02/28/13 14:40	03/05/13 13:33	7440-62-2	
Zinc, Dissolved	**249**	ug/L	5.0	1	02/28/13 14:40	03/05/13 13:33	7440-66-6	
200.8 Potentially Diss. Metals	Analytical Method: EPA 200.8 Preparation Method: EPA 200.8							
Aluminum, Dissolved	**14.9J**	ug/L	50.0	1	02/28/13 16:15	03/06/13 14:08	7429-90-5	
Antimony, Dissolved	**0.079J**	ug/L	1.0	1	02/28/13 16:15	03/06/13 14:08	7440-36-0	
Arsenic, Dissolved	**0.48J**	ug/L	1.0	1	02/28/13 16:15	03/06/13 14:08	7440-38-2	
Barium, Dissolved	**62.0**	ug/L	1.0	1	02/28/13 16:15	03/06/13 14:08	7440-39-3	
Beryllium, Dissolved	ND	ug/L	0.50	1	02/28/13 16:15	03/06/13 14:08	7440-41-7	
Cadmium, Dissolved	**0.75**	ug/L	0.50	1	02/28/13 16:15	03/06/13 14:08	7440-43-9	
Chromium, Dissolved	**0.50J**	ug/L	1.0	1	02/28/13 16:15	03/06/13 14:08	7440-47-3	B
Cobalt, Dissolved	**0.39J**	ug/L	1.0	1	02/28/13 16:15	03/06/13 14:08	7440-48-4	
Copper, Dissolved	**1.1**	ug/L	1.0	1	02/28/13 16:15	03/06/13 14:08	7440-50-8	
Iron, Dissolved	**173**	ug/L	50.0	1	02/28/13 16:15	03/06/13 14:08	7439-89-6	
Lead, Dissolved	**0.87J**	ug/L	1.0	1	02/28/13 16:15	03/06/13 14:08	7439-92-1	B
Manganese, Dissolved	**402**	ug/L	1.0	1	02/28/13 16:15	03/06/13 14:08	7439-96-5	
Molybdenum, Dissolved	**2.2**	ug/L	1.0	1	02/28/13 16:15	03/06/13 14:08	7439-98-7	
Nickel, Dissolved	ND	ug/L	1.0	1	02/28/13 16:15	03/06/13 14:08	7440-02-0	
Selenium, Dissolved	**0.45J**	ug/L	1.0	1	02/28/13 16:15	03/06/13 14:08	7782-49-2	
Silver, Dissolved	**0.64**	ug/L	0.50	1	02/28/13 16:15	03/06/13 14:08	7440-22-4	
Thallium, Dissolved	**0.091J**	ug/L	1.0	1	02/28/13 16:15	03/06/13 14:08	7440-28-0	
Vanadium, Dissolved	ND	ug/L	1.0	1	02/28/13 16:15	03/06/13 14:08	7440-62-2	
Zinc, Dissolved	**229**	ug/L	10.0	1	02/28/13 16:15	03/06/13 14:08	7440-66-6	
245.1 Mercury	Analytical Method: EPA 245.1 Preparation Method: EPA 245.1							
Mercury	ND	ug/L	0.20	1	02/28/13 13:48	03/01/13 14:59	7439-97-6	
245.1 Mercury, Dissolved	Analytical Method: EPA 245.1 Preparation Method: EPA 245.1							
Mercury, Dissolved	ND	ug/L	0.20	1	02/28/13 15:23	03/01/13 15:56	7439-97-6	
245.1 Potentially Diss Mercury	Analytical Method: EPA 245.1 Preparation Method: EPA 245.1							
Mercury, Dissolved	ND	ug/L	0.20	1	02/28/13 12:00	03/04/13 12:50	7439-97-6	
2510B Specific Conductance	Analytical Method: SM 2510B							
Specific Conductance	**637**	umhos/cm	10.0	1		03/07/13 12:53		
Salinity	Analytical Method: Calculated							
Salinity (as dissolved solids)	**407**	mg/L	6.4	1		03/07/13 15:39		

This report shall not be reproduced, except in full,
without the written consent of Pace Analytical Services, Inc..

Pace Analytical Services, Inc.
9608 Loiret Blvd.
Lenexa, KS 66219
(913)599-5665

ANALYTICAL RESULTS

Project: FEBRUARY 2013 RICO WATER SAMPL
Pace Project No.: 60139196

Sample: DR-4-SW_20130220 **Lab ID: 60139196001** Collected: 02/20/13 12:40 Received: 02/22/13 10:30 Matrix: Water

Parameters	Results	Units	Report Limit	DF	Prepared	Analyzed	CAS No.	Qual
Salinity	Analytical Method: Calculated							
Salinity (as seawater)	**0.31**	PSU	0.014	1		03/07/13 15:39		
2320B Alkalinity	Analytical Method: SM 2320B							
Alkalinity,Bicarbonate (CaCO3)	**156**	mg/L	20.0	1		02/28/13 13:55		
Alkalinity, Carbonate (CaCO3)	ND	mg/L	20.0	1		02/28/13 13:55		
Alkalinity, Total as CaCO3	**156**	mg/L	20.0	1		02/28/13 13:55		
2540C Total Dissolved Solids	Analytical Method: SM 2540C							
Total Dissolved Solids	**430**	mg/L	5.0	1		02/27/13 14:38		
2540D Total Suspended Solids	Analytical Method: SM 2540D							
Total Suspended Solids	ND	mg/L	5.0	1		02/25/13 12:52		
4500S2D Sulfide, Total	Analytical Method: SM 4500-S-2 D							
Sulfide, Total	ND	mg/L	0.050	1		02/27/13 11:31	18496-25-8	
300.0 IC Anions 28 Days	Analytical Method: EPA 300.0							
Chloride	**2.0**	mg/L	1.0	1		02/27/13 12:10	16887-00-6	
Sulfate	**172**	mg/L	10.0	10		02/27/13 12:28	14808-79-8	
353.2 Nitrogen, NO2/NO3 pres.	Analytical Method: EPA 353.2							
Nitrogen, NO2 plus NO3	ND	mg/L	0.10	1		02/27/13 14:37		
4500CNE Cyanide, Total	Analytical Method: SM 4500-CN-E							
Cyanide	ND	mg/L	0.0050	1		02/28/13 11:44	57-12-5	
5310C TOC	Analytical Method: SM 5310C							
Total Organic Carbon	**0.58**	mg/L	0.50	1		03/05/13 12:52	7440-44-0	

This report shall not be reproduced, except in full,
without the written consent of Pace Analytical Services, Inc..

Pace Analytical Services, Inc.
9608 Loiret Blvd.
Lenexa, KS 66219
(913)599-5665

ANALYTICAL RESULTS

Project: FEBRUARY 2013 RICO WATER SAMPL
Pace Project No.: 60139196

Sample: DR-G_20130220 **Lab ID: 60139196002** Collected: 02/20/13 13:30 Received: 02/22/13 10:30 Matrix: Water

Parameters	Results	Units	Report Limit	DF	Prepared	Analyzed	CAS No.	Qual
200.7 Potentially Diss. Metals	Analytical Method: EPA 200.7 Preparation Method: EPA 200.7							
Calcium, Dissolved	**94500**	ug/L	100	1	02/28/13 16:15	03/07/13 12:03	7440-70-2	
Magnesium, Dissolved	**12600**	ug/L	50.0	1	02/28/13 16:15	03/07/13 12:03	7439-95-4	
Potassium, Dissolved	**2130**	ug/L	500	1	02/28/13 16:15	03/07/13 12:03	7440-09-7	
Sodium, Dissolved	**6440**	ug/L	500	1	02/28/13 16:15	03/07/13 12:03	7440-23-5	
200.8 MET ICPMS	Analytical Method: EPA 200.8 Preparation Method: EPA 200.8							
Aluminum	**9.6**	ug/L	4.0	1	02/28/13 11:07	03/04/13 13:48	7429-90-5	
Antimony	ND	ug/L	0.50	1	02/28/13 11:07	03/04/13 13:48	7440-36-0	
Arsenic	ND	ug/L	0.50	1	02/28/13 11:07	03/04/13 13:48	7440-38-2	
Barium	**85.8**	ug/L	0.30	1	02/28/13 11:07	03/04/13 13:48	7440-39-3	
Beryllium	ND	ug/L	0.20	1	02/28/13 11:07	03/04/13 13:48	7440-41-7	
Cadmium	**0.40**	ug/L	0.080	1	02/28/13 11:07	03/04/13 13:48	7440-43-9	
Calcium	**105000**	ug/L	400	20	02/28/13 11:07	03/04/13 13:52	7440-70-2	
Chromium	ND	ug/L	0.50	1	02/28/13 11:07	03/04/13 13:48	7440-47-3	
Cobalt	ND	ug/L	0.50	1	02/28/13 11:07	03/04/13 13:48	7440-48-4	
Copper	**1.8**	ug/L	0.50	1	02/28/13 11:07	03/04/13 13:48	7440-50-8	
Iron	**59.8**	ug/L	50.0	1	02/28/13 11:07	03/04/13 13:48	7439-89-6	
Lead	**0.13**	ug/L	0.10	1	02/28/13 11:07	03/04/13 13:48	7439-92-1	
Magnesium	**12800**	ug/L	5.0	1	02/28/13 11:07	03/04/13 13:48	7439-95-4	
Manganese	**119**	ug/L	0.50	1	02/28/13 11:07	03/04/13 13:48	7439-96-5	
Molybdenum	**1.9**	ug/L	0.50	1	02/28/13 11:07	03/04/13 13:48	7439-98-7	
Nickel	ND	ug/L	0.50	1	02/28/13 11:07	03/04/13 13:48	7440-02-0	
Potassium	**2190**	ug/L	20.0	1	02/28/13 11:07	03/04/13 13:48	7440-09-7	
Selenium	ND	ug/L	0.50	1	02/28/13 11:07	03/04/13 13:48	7782-49-2	
Silica	**11000**	ug/L	1070	20	02/28/13 11:07	03/04/13 13:52	7631-86-9	
Silver	ND	ug/L	0.50	1	02/28/13 11:07	03/04/13 13:48	7440-22-4	
Sodium	**6390**	ug/L	50.0	1	02/28/13 11:07	03/04/13 13:48	7440-23-5	
Thallium	ND	ug/L	0.10	1	02/28/13 11:07	03/04/13 13:48	7440-28-0	
Total Hardness by 2340B	**314000**	ug/L	1420	20	02/28/13 11:07	03/04/13 13:52		
Vanadium	**0.11**	ug/L	0.10	1	02/28/13 11:07	03/04/13 13:48	7440-62-2	
Zinc	**129**	ug/L	5.0	1	02/28/13 11:07	03/04/13 13:48	7440-66-6	
200.8 MET ICPMS, Dissolved	Analytical Method: EPA 200.8 Preparation Method: EPA 200.8							
Aluminum, Dissolved	**12.9**	ug/L	4.0	1	02/28/13 14:40	03/05/13 13:43	7429-90-5	
Antimony, Dissolved	ND	ug/L	0.50	1	02/28/13 14:40	03/05/13 13:43	7440-36-0	
Arsenic, Dissolved	ND	ug/L	0.50	1	02/28/13 14:40	03/05/13 13:43	7440-38-2	
Barium, Dissolved	**84.8**	ug/L	0.30	1	02/28/13 14:40	03/05/13 13:43	7440-39-3	
Beryllium, Dissolved	ND	ug/L	0.20	1	02/28/13 14:40	03/05/13 13:43	7440-41-7	
Cadmium, Dissolved	**0.30**	ug/L	0.080	1	02/28/13 14:40	03/05/13 13:43	7440-43-9	
Calcium, Dissolved	**112000**	ug/L	400	20	02/28/13 14:40	03/05/13 13:48	7440-70-2	
Chromium, Dissolved	ND	ug/L	0.50	1	02/28/13 14:40	03/05/13 13:43	7440-47-3	
Cobalt, Dissolved	ND	ug/L	0.50	1	02/28/13 14:40	03/05/13 13:43	7440-48-4	
Copper, Dissolved	**2.3**	ug/L	0.50	1	02/28/13 14:40	03/05/13 13:43	7440-50-8	
Iron, Dissolved	ND	ug/L	50.0	1	02/28/13 14:40	03/05/13 13:43	7439-89-6	
Lead, Dissolved	ND	ug/L	0.10	1	02/28/13 14:40	03/05/13 13:43	7439-92-1	
Magnesium, Dissolved	**12900**	ug/L	5.0	1	02/28/13 14:40	03/05/13 13:43	7439-95-4	

This report shall not be reproduced, except in full,
without the written consent of Pace Analytical Services, Inc..

Pace Analytical Services, Inc.
9608 Loiret Blvd.
Lenexa, KS 66219
(913)599-5665

ANALYTICAL RESULTS

Project: FEBRUARY 2013 RICO WATER SAMPL
Pace Project No.: 60139196

Sample: DR-G_20130220 **Lab ID: 60139196002** Collected: 02/20/13 13:30 Received: 02/22/13 10:30 Matrix: Water

Parameters	Results	Units	Report Limit	DF	Prepared	Analyzed	CAS No.	Qual
200.8 MET ICPMS, Dissolved	Analytical Method: EPA 200.8 Preparation Method: EPA 200.8							
Manganese, Dissolved	**118**	ug/L	0.50	1	02/28/13 14:40	03/05/13 13:43	7439-96-5	
Molybdenum, Dissolved	**1.9**	ug/L	0.50	1	02/28/13 14:40	03/05/13 13:43	7439-98-7	
Nickel, Dissolved	**3.2**	ug/L	0.50	1	02/28/13 14:40	03/05/13 13:43	7440-02-0	
Potassium, Dissolved	**2130**	ug/L	20.0	1	02/28/13 14:40	03/04/13 16:56	7440-09-7	
Selenium, Dissolved	ND	ug/L	0.50	1	02/28/13 14:40	03/05/13 13:43	7782-49-2	
Silver, Dissolved	ND	ug/L	0.50	1	02/28/13 14:40	03/05/13 13:43	7440-22-4	
Sodium, Dissolved	**6560**	ug/L	50.0	1	02/28/13 14:40	03/05/13 13:43	7440-23-5	
Thallium, Dissolved	ND	ug/L	0.10	1	02/28/13 14:40	03/05/13 13:43	7440-28-0	
Vanadium, Dissolved	ND	ug/L	0.10	1	02/28/13 14:40	03/05/13 13:43	7440-62-2	
Zinc, Dissolved	**125**	ug/L	5.0	1	02/28/13 14:40	03/05/13 13:43	7440-66-6	
200.8 Potentially Diss. Metals	Analytical Method: EPA 200.8 Preparation Method: EPA 200.8							
Aluminum, Dissolved	**7.8J**	ug/L	50.0	1	02/28/13 16:15	03/06/13 14:12	7429-90-5	
Antimony, Dissolved	**0.058J**	ug/L	1.0	1	02/28/13 16:15	03/06/13 14:12	7440-36-0	
Arsenic, Dissolved	**0.32J**	ug/L	1.0	1	02/28/13 16:15	03/06/13 14:12	7440-38-2	
Barium, Dissolved	**79.2**	ug/L	1.0	1	02/28/13 16:15	03/06/13 14:12	7440-39-3	
Beryllium, Dissolved	ND	ug/L	0.50	1	02/28/13 16:15	03/06/13 14:12	7440-41-7	
Cadmium, Dissolved	**0.40J**	ug/L	0.50	1	02/28/13 16:15	03/06/13 14:12	7440-43-9	
Chromium, Dissolved	**0.50J**	ug/L	1.0	1	02/28/13 16:15	03/06/13 14:12	7440-47-3	B
Cobalt, Dissolved	**0.10J**	ug/L	1.0	1	02/28/13 16:15	03/06/13 14:12	7440-48-4	
Copper, Dissolved	**0.66J**	ug/L	1.0	1	02/28/13 16:15	03/06/13 14:12	7440-50-8	
Iron, Dissolved	**66.9**	ug/L	50.0	1	02/28/13 16:15	03/06/13 14:12	7439-89-6	B
Lead, Dissolved	**0.44J**	ug/L	1.0	1	02/28/13 16:15	03/06/13 14:12	7439-92-1	B
Manganese, Dissolved	**113**	ug/L	1.0	1	02/28/13 16:15	03/06/13 14:12	7439-96-5	
Molybdenum, Dissolved	**1.9**	ug/L	1.0	1	02/28/13 16:15	03/06/13 14:12	7439-98-7	
Nickel, Dissolved	ND	ug/L	1.0	1	02/28/13 16:15	03/06/13 14:12	7440-02-0	
Selenium, Dissolved	**0.44J**	ug/L	1.0	1	02/28/13 16:15	03/06/13 14:12	7782-49-2	
Silver, Dissolved	ND	ug/L	0.50	1	02/28/13 16:15	03/06/13 14:12	7440-22-4	
Thallium, Dissolved	**0.029J**	ug/L	1.0	1	02/28/13 16:15	03/06/13 14:12	7440-28-0	
Vanadium, Dissolved	ND	ug/L	1.0	1	02/28/13 16:15	03/06/13 14:12	7440-62-2	
Zinc, Dissolved	**125**	ug/L	10.0	1	02/28/13 16:15	03/06/13 14:12	7440-66-6	
245.1 Mercury	Analytical Method: EPA 245.1 Preparation Method: EPA 245.1							
Mercury	ND	ug/L	0.20	1	02/28/13 13:48	03/01/13 15:01	7439-97-6	
245.1 Mercury, Dissolved	Analytical Method: EPA 245.1 Preparation Method: EPA 245.1							
Mercury, Dissolved	ND	ug/L	0.20	1	02/28/13 15:23	03/01/13 15:58	7439-97-6	
245.1 Potentially Diss Mercury	Analytical Method: EPA 245.1 Preparation Method: EPA 245.1							
Mercury, Dissolved	ND	ug/L	0.20	1	02/28/13 12:00	03/04/13 12:57	7439-97-6	
2510B Specific Conductance	Analytical Method: SM 2510B							
Specific Conductance	**619**	umhos/cm	10.0	1		03/07/13 12:54		
Salinity	Analytical Method: Calculated							
Salinity (as dissolved solids)	**396**	mg/L	6.4	1		03/07/13 15:39		

This report shall not be reproduced, except in full,
without the written consent of Pace Analytical Services, Inc..

Pace Analytical Services, Inc.
9608 Loiret Blvd.
Lenexa, KS 66219
(913)599-5665

ANALYTICAL RESULTS

Project: FEBRUARY 2013 RICO WATER SAMPL
Pace Project No.: 60139196

Sample: DR-G_20130220 **Lab ID: 60139196002** Collected: 02/20/13 13:30 Received: 02/22/13 10:30 Matrix: Water

Parameters	Results	Units	Report Limit	DF	Prepared	Analyzed	CAS No.	Qual
Salinity	Analytical Method: Calculated							
Salinity (as seawater)	**0.30**	PSU	0.014	1		03/07/13 15:39		
2320B Alkalinity	Analytical Method: SM 2320B							
Alkalinity,Bicarbonate (CaCO3)	**164**	mg/L	20.0	1		02/28/13 13:59		
Alkalinity, Carbonate (CaCO3)	ND	mg/L	20.0	1		02/28/13 13:59		
Alkalinity, Total as CaCO3	**164**	mg/L	20.0	1		02/28/13 13:59		
2540C Total Dissolved Solids	Analytical Method: SM 2540C							
Total Dissolved Solids	**408**	mg/L	5.0	1		02/27/13 14:38		
2540D Total Suspended Solids	Analytical Method: SM 2540D							
Total Suspended Solids	ND	mg/L	5.0	1		02/25/13 12:53		
4500S2D Sulfide, Total	Analytical Method: SM 4500-S-2 D							
Sulfide, Total	ND	mg/L	0.050	1		02/27/13 11:32	18496-25-8	
300.0 IC Anions 28 Days	Analytical Method: EPA 300.0							
Chloride	**2.0**	mg/L	1.0	1		02/27/13 12:45	16887-00-6	
Sulfate	**141**	mg/L	20.0	20		02/27/13 13:03	14808-79-8	
353.2 Nitrogen, NO2/NO3 pres.	Analytical Method: EPA 353.2							
Nitrogen, NO2 plus NO3	ND	mg/L	0.10	1		02/27/13 14:39		
4500CNE Cyanide, Total	Analytical Method: SM 4500-CN-E							
Cyanide	ND	mg/L	0.0050	1		02/28/13 11:44	57-12-5	
5310C TOC	Analytical Method: SM 5310C							
Total Organic Carbon	**0.59**	mg/L	0.50	1		03/04/13 17:57	7440-44-0	

This report shall not be reproduced, except in full,
without the written consent of Pace Analytical Services, Inc..

Appendix D

Laboratory QC Results

Pace Analytical Services, Inc.
9608 Loiret Blvd.
Lenexa, KS 66219
(913)599-5665

QUALITY CONTROL DATA

Project: FEBRUARY 2013 RICO WATER SAMPL
Pace Project No.: 60138490

QC Batch: MERP/8057 Analysis Method: EPA 245.1
QC Batch Method: EPA 245.1 Analysis Description: 245.1 Mercury
Associated Lab Samples: 60138490001, 60138490002, 60138490003, 60138490004, 60138490005, 60138490006, 60138490007, 60138490008, 60138490009, 60138490010, 60138490011, 60138490012

METHOD BLANK: 1378442 Matrix: Water
Associated Lab Samples: 60138490001, 60138490002, 60138490003, 60138490004, 60138490005, 60138490006, 60138490007, 60138490008, 60138490009, 60138490010, 60138490011, 60138490012

Parameter	Units	Blank Result	Reporting Limit	Analyzed	Qualifiers
Mercury	ug/L	ND	0.20	02/19/13 12:13	

LABORATORY CONTROL SAMPLE: 1378443

Parameter	Units	Spike Conc.	LCS Result	LCS % Rec	% Rec Limits	Qualifiers
Mercury	ug/L	5	4.7	93	85-115	

MATRIX SPIKE SAMPLE: 1378464

Parameter	Units	60138490012 Result	Spike Conc.	MS Result	MS % Rec	% Rec Limits	Qualifiers
Mercury	ug/L	ND	5	4.3	86	85-115	

MATRIX SPIKE & MATRIX SPIKE DUPLICATE: 1378523 1378524

Parameter	Units	60138490002 Result	MS Spike Conc.	MSD Spike Conc.	MS Result	MSD Result	MS % Rec	MSD % Rec	% Rec Limits	RPD	Max RPD	Qual
Mercury	ug/L	ND	5	5	4.7	4.9	93	98	85-115	5	30	

This report shall not be reproduced, except in full,
without the written consent of Pace Analytical Services, Inc..

Pace Analytical Services, Inc.
9608 Loiret Blvd.
Lenexa, KS 66219
(913)599-5665

QUALITY CONTROL DATA

Project: FEBRUARY 2013 RICO WATER SAMPL
Pace Project No.: 60138490

QC Batch: MERP/8045 Analysis Method: EPA 245.1
QC Batch Method: EPA 245.1 Analysis Description: 245.1 Mercury - Dissolved
Associated Lab Samples: 60138490001, 60138490002, 60138490003, 60138490004, 60138490005, 60138490006, 60138490007, 60138490008, 60138490009, 60138490010, 60138490011, 60138490012

METHOD BLANK: 1376994 Matrix: Water
Associated Lab Samples: 60138490001, 60138490002, 60138490003, 60138490004, 60138490005, 60138490006, 60138490007, 60138490008, 60138490009, 60138490010, 60138490011, 60138490012

Parameter	Units	Blank Result	Reporting Limit	Analyzed	Qualifiers
Mercury, Dissolved	ug/L	ND	0.20	02/19/13 13:06	

LABORATORY CONTROL SAMPLE: 1376995

Parameter	Units	Spike Conc.	LCS Result	LCS % Rec	% Rec Limits	Qualifiers
Mercury, Dissolved	ug/L	5	5.2	105	85-115	

MATRIX SPIKE SAMPLE: 1376998

Parameter	Units	60138490012 Result	Spike Conc.	MS Result	MS % Rec	% Rec Limits	Qualifiers
Mercury, Dissolved	ug/L	ND	5	4.5	89	85-115	

MATRIX SPIKE & MATRIX SPIKE DUPLICATE: 1378525 1378526

Parameter	Units	60138490002 Result	MS Spike Conc.	MSD Spike Conc.	MS Result	MSD Result	MS % Rec	MSD % Rec	% Rec Limits	RPD	Max RPD	Qual
Mercury, Dissolved	ug/L	ND	5	5	4.8	3.8	96	76	85-115	24	20	M1,R1

This report shall not be reproduced, except in full,
without the written consent of Pace Analytical Services, Inc..

Pace Analytical Services, Inc.
9608 Loiret Blvd.
Lenexa, KS 66219
(913)599-5665

QUALITY CONTROL DATA

Project: FEBRUARY 2013 RICO WATER SAMPL
Pace Project No.: 60138490

QC Batch: MERP/7078 — Analysis Method: EPA 245.1
QC Batch Method: EPA 245.1 — Analysis Description: 245.1 Mercury, Potentially Dissolved
Associated Lab Samples: 60138490001, 60138490002, 60138490003, 60138490004, 60138490005, 60138490006, 60138490007, 60138490008, 60138490009, 60138490010, 60138490011, 60138490012

METHOD BLANK: 1139761 — Matrix: Water
Associated Lab Samples: 60138490001, 60138490002, 60138490003, 60138490004, 60138490005, 60138490006, 60138490007, 60138490008, 60138490009, 60138490010, 60138490011, 60138490012

Parameter	Units	Blank Result	Reporting Limit	Analyzed	Qualifiers
Mercury, Dissolved	ug/L	ND	0.20	02/13/13 14:14	

LABORATORY CONTROL SAMPLE: 1139762

Parameter	Units	Spike Conc.	LCS Result	LCS % Rec	% Rec Limits	Qualifiers
Mercury, Dissolved	ug/L	5	4.8	96	85-115	

MATRIX SPIKE & MATRIX SPIKE DUPLICATE: 1139763 1139764

Parameter	Units	60138490003 Result	MS Spike Conc.	MSD Spike Conc.	MS Result	MSD Result	MS % Rec	MSD % Rec	% Rec Limits	RPD	Max RPD	Qual
Mercury, Dissolved	ug/L	ND	5	5	4.8	4.9	97	97	70-130	0	20	

MATRIX SPIKE SAMPLE: 1139765

Parameter	Units	60138490009 Result	Spike Conc.	MS Result	MS % Rec	% Rec Limits	Qualifiers
Mercury, Dissolved	ug/L	ND	5	4.8	96	70-130	

This report shall not be reproduced, except in full,
without the written consent of Pace Analytical Services, Inc..

Pace Analytical Services, Inc.
9608 Loiret Blvd.
Lenexa, KS 66219
(913)599-5665

QUALITY CONTROL DATA

Project: FEBRUARY 2013 RICO WATER SAMPL
Pace Project No.: 60138490

QC Batch: MPRP/21569 | Analysis Method: EPA 200.7
QC Batch Method: EPA 200.7 | Analysis Description: 200.7 Potentially Dissolved Metals
Associated Lab Samples: 60138490001, 60138490002, 60138490003, 60138490004, 60138490005, 60138490006, 60138490007, 60138490008, 60138490009, 60138490010, 60138490011, 60138490012

METHOD BLANK: 1142315 | Matrix: Water
Associated Lab Samples: 60138490001, 60138490002, 60138490003, 60138490004, 60138490005, 60138490006, 60138490007, 60138490008, 60138490009, 60138490010, 60138490011, 60138490012

Parameter	Units	Blank Result	Reporting Limit	Analyzed	Qualifiers
Calcium, Dissolved	ug/L	15.5J	100	02/20/13 16:54	
Magnesium, Dissolved	ug/L	ND	50.0	02/20/13 16:54	
Potassium, Dissolved	ug/L	ND	500	02/20/13 16:54	
Sodium, Dissolved	ug/L	52.3J	500	02/20/13 16:54	

LABORATORY CONTROL SAMPLE: 1142316

Parameter	Units	Spike Conc.	LCS Result	LCS % Rec	% Rec Limits	Qualifiers
Calcium, Dissolved	ug/L	10000	10100	101	85-115	
Magnesium, Dissolved	ug/L	10000	10000	100	85-115	
Potassium, Dissolved	ug/L	10000	9790	98	85-115	
Sodium, Dissolved	ug/L	10000	10400	104	85-115	

MATRIX SPIKE & MATRIX SPIKE DUPLICATE: 1142317 1142318

Parameter	Units	60138490001 Result	MS Spike Conc.	MSD Spike Conc.	MS Result	MSD Result	MS % Rec	MSD % Rec	% Rec Limits	RPD	Max RPD	Qual
Calcium, Dissolved	ug/L	447000	10000	10000	451000	449000	38	21	70-130	0	20	M1
Magnesium, Dissolved	ug/L	37600	10000	10000	45300	48000	77	104	70-130	6	20	
Potassium, Dissolved	ug/L	4080	10000	10000	14400	14400	104	103	70-130	0	20	
Sodium, Dissolved	ug/L	6940	10000	10000	17600	17500	106	106	70-130	0	20	

MATRIX SPIKE SAMPLE: 1142319

Parameter	Units	60138490010 Result	Spike Conc.	MS Result	MS % Rec	% Rec Limits	Qualifiers
Calcium, Dissolved	ug/L	255000	10000	258000	22	70-130	M1
Magnesium, Dissolved	ug/L	19100	10000	29300	102	70-130	
Potassium, Dissolved	ug/L	8880	10000	19100	102	70-130	
Sodium, Dissolved	ug/L	12700	10000	23200	105	70-130	

This report shall not be reproduced, except in full,
without the written consent of Pace Analytical Services, Inc..

Pace Analytical Services, Inc.
9608 Loiret Blvd.
Lenexa, KS 66219
(913)599-5665

QUALITY CONTROL DATA

Project: FEBRUARY 2013 RICO WATER SAMPL
Pace Project No.: 60138490

QC Batch: MPRP/37603 Analysis Method: EPA 200.8
QC Batch Method: EPA 200.8 Analysis Description: 200.8 MET
Associated Lab Samples: 60138490001, 60138490002, 60138490003, 60138490004, 60138490005, 60138490006, 60138490007, 60138490008, 60138490009, 60138490010, 60138490011, 60138490012

METHOD BLANK: 1377016 Matrix: Water
Associated Lab Samples: 60138490001, 60138490002, 60138490003, 60138490004, 60138490005, 60138490006, 60138490007, 60138490008, 60138490009, 60138490010, 60138490011, 60138490012

Parameter	Units	Blank Result	Reporting Limit	Analyzed	Qualifiers
Aluminum	ug/L	ND	4.0	02/16/13 20:16	
Antimony	ug/L	ND	0.50	02/16/13 20:16	
Arsenic	ug/L	ND	0.50	02/16/13 20:16	
Barium	ug/L	ND	0.30	02/16/13 20:16	
Beryllium	ug/L	ND	0.20	02/17/13 13:15	
Cadmium	ug/L	ND	0.080	02/16/13 20:16	
Calcium	ug/L	ND	20.0	02/16/13 20:16	
Chromium	ug/L	ND	0.50	02/16/13 20:16	
Cobalt	ug/L	ND	0.50	02/16/13 20:16	
Copper	ug/L	ND	0.50	02/16/13 20:16	
Iron	ug/L	ND	50.0	02/16/13 20:16	
Lead	ug/L	ND	0.10	02/16/13 20:16	
Magnesium	ug/L	ND	5.0	02/16/13 20:16	
Manganese	ug/L	ND	0.50	02/16/13 20:16	
Molybdenum	ug/L	ND	0.50	02/16/13 20:16	
Nickel	ug/L	ND	0.50	02/16/13 20:16	
Potassium	ug/L	ND	20.0	02/16/13 20:16	
Selenium	ug/L	ND	0.50	02/16/13 20:16	
Silica	ug/L	ND	53.5	02/21/13 10:39	
Silver	ug/L	ND	0.50	02/17/13 13:15	
Sodium	ug/L	ND	50.0	02/16/13 20:16	
Thallium	ug/L	ND	0.10	02/16/13 20:16	
Total Hardness by 2340B	ug/L	ND	71.0	02/16/13 20:16	
Vanadium	ug/L	ND	0.10	02/16/13 20:16	
Zinc	ug/L	ND	5.0	02/16/13 20:16	

LABORATORY CONTROL SAMPLE: 1377017

Parameter	Units	Spike Conc.	LCS Result	LCS % Rec	% Rec Limits	Qualifiers
Aluminum	ug/L	80	78.8	98	85-115	
Antimony	ug/L	80	80.3	100	85-115	
Arsenic	ug/L	80	80.7	101	85-115	
Barium	ug/L	80	78.1	98	85-115	
Beryllium	ug/L	80	77.6	97	85-115	
Cadmium	ug/L	80	80.8	101	85-115	
Calcium	ug/L	1000	915	91	85-115	
Chromium	ug/L	80	78.6	98	85-115	
Cobalt	ug/L	80	77.4	97	85-115	
Copper	ug/L	80	79.4	99	85-115	
Iron	ug/L	1000	969	97	85-115	

This report shall not be reproduced, except in full,
without the written consent of Pace Analytical Services, Inc..

Pace Analytical Services, Inc.
9608 Loiret Blvd.
Lenexa, KS 66219
(913)599-5665

QUALITY CONTROL DATA

Project: FEBRUARY 2013 RICO WATER SAMPL
Pace Project No.: 60138490

LABORATORY CONTROL SAMPLE: 1377017

Parameter	Units	Spike Conc.	LCS Result	LCS % Rec	% Rec Limits	Qualifiers
Lead	ug/L	80	83.5	104	85-115	
Magnesium	ug/L	1000	980	98	85-115	
Manganese	ug/L	80	79.3	99	85-115	
Molybdenum	ug/L	80	77.0	96	85-115	
Nickel	ug/L	80	78.6	98	85-115	
Potassium	ug/L	1000	1010	101	85-115	
Selenium	ug/L	80	77.4	97	85-115	
Silica	ug/L	2140	2160	101	85-115	
Silver	ug/L	80	81.6	102	85-115	
Sodium	ug/L	1000	916	92	85-115	
Thallium	ug/L	80	82.1	103	85-115	
Total Hardness by 2340B	ug/L	6620	6320	96	85-115	
Vanadium	ug/L	80	77.3	97	85-115	
Zinc	ug/L	80	77.6	97	85-115	

MATRIX SPIKE & MATRIX SPIKE DUPLICATE: 1377018 1377019

Parameter	Units	60138490001 Result	MS Spike Conc.	MSD Spike Conc.	MS Result	MSD Result	MS % Rec	MSD % Rec	% Rec Limits	RPD	Max RPD	Qual
Aluminum	ug/L	2500	80	80	2640	2760	171	322	70-130	4	20	M6
Antimony	ug/L	0.50	80	80	81.8	82.0	102	102	70-130	.3	20	
Arsenic	ug/L	152	80	80	227	224	94	91	70-130	1	20	
Barium	ug/L	11.9	80	80	92.0	92.6	100	101	70-130	.6	20	
Beryllium	ug/L	0.32	80	80	75.8	76.3	94	95	70-130	.7	20	
Cadmium	ug/L	22.2	80	80	107	107	106	106	70-130	0	20	
Calcium	ug/L	513000	1000	1000	501000	488000	-1240	-2540	70-130	3	20	E,M6
Chromium	ug/L	1.9	80	80	83.4	84.2	102	103	70-130	1	20	
Cobalt	ug/L	7.2	80	80	86.0	82.9	99	95	70-130	4	20	
Copper	ug/L	129	80	80	223	232	117	128	70-130	4	20	
Iron	ug/L	15600	1000	1000	17500	17500	189	191	70-130	.1	20	M6
Lead	ug/L	2640	80	80	2710	2770	81	155	70-130	2	20	M6
Magnesium	ug/L	40600	1000	1000	41200	41300	59	74	70-130	.4	20	M6
Manganese	ug/L	5550	80	80	5770	5630	276	100	70-130	2	20	E,M6
Molybdenum	ug/L	8.1	80	80	91.6	90.3	104	103	70-130	1	20	
Nickel	ug/L	10.4	80	80	91.0	89.9	101	99	70-130	1	20	
Potassium	ug/L	3880	1000	1000	4990	5100	110	122	70-130	2	20	
Selenium	ug/L	ND	80	80	83.4	81.4	104	101	70-130	2	20	
Silica	ug/L	38600	2140	2140	41900	41200	155	123	70-130	2	20	M6
Silver	ug/L	ND	80	80	77.2	80.4	96	100	70-130	4	20	
Sodium	ug/L	5850	1000	1000	6960	7050	111	120	70-130	1	20	
Thallium	ug/L	0.18	80	80	79.3	78.9	99	98	70-130	.4	20	
Total Hardness by 2340B	ug/L	1450000	6620	6620	1420000	1390000	-429	-911	70-130	2	20	M6
Vanadium	ug/L	4.0	80	80	86.6	86.3	103	103	70-130	.3	20	
Zinc	ug/L	11200	80	80	11500	11200	425	88	70-130	2	20	E,M6

This report shall not be reproduced, except in full,
without the written consent of Pace Analytical Services, Inc..

Pace Analytical Services, Inc.
9608 Loiret Blvd.
Lenexa, KS 66219
(913)599-5665

QUALITY CONTROL DATA

Project: FEBRUARY 2013 RICO WATER SAMPL
Pace Project No.: 60138490

QC Batch: MPRP/37695 Analysis Method: EPA 200.8
QC Batch Method: EPA 200.8 Analysis Description: 200.8 MET Dissolved
Associated Lab Samples: 60138490001, 60138490002, 60138490003, 60138490004, 60138490005, 60138490006, 60138490007, 60138490008, 60138490009, 60138490010, 60138490011, 60138490012

METHOD BLANK: 1380335 Matrix: Water
Associated Lab Samples: 60138490001, 60138490002, 60138490003, 60138490004, 60138490005, 60138490006, 60138490007, 60138490008, 60138490009, 60138490010, 60138490011, 60138490012

Parameter	Units	Blank Result	Reporting Limit	Analyzed	Qualifiers
Aluminum, Dissolved	ug/L	ND	4.0	02/21/13 23:51	
Antimony, Dissolved	ug/L	ND	0.50	02/21/13 23:51	
Arsenic, Dissolved	ug/L	ND	0.50	02/21/13 23:51	
Barium, Dissolved	ug/L	ND	0.30	02/21/13 23:51	
Beryllium, Dissolved	ug/L	ND	0.20	02/21/13 23:51	
Cadmium, Dissolved	ug/L	ND	0.080	02/21/13 23:51	
Calcium, Dissolved	ug/L	ND	20.0	02/21/13 23:51	
Chromium, Dissolved	ug/L	ND	0.50	02/21/13 23:51	
Cobalt, Dissolved	ug/L	ND	0.50	02/21/13 23:51	
Copper, Dissolved	ug/L	ND	0.50	02/21/13 23:51	
Iron, Dissolved	ug/L	ND	50.0	02/21/13 23:51	
Lead, Dissolved	ug/L	ND	0.10	02/21/13 23:51	
Magnesium, Dissolved	ug/L	ND	5.0	02/21/13 23:51	
Manganese, Dissolved	ug/L	ND	0.50	02/21/13 23:51	
Molybdenum, Dissolved	ug/L	ND	0.50	02/21/13 23:51	
Nickel, Dissolved	ug/L	ND	0.50	02/21/13 23:51	
Potassium, Dissolved	ug/L	ND	20.0	02/23/13 12:14	
Selenium, Dissolved	ug/L	ND	0.50	02/21/13 23:51	
Silver, Dissolved	ug/L	ND	0.50	02/21/13 23:51	
Sodium, Dissolved	ug/L	ND	50.0	02/21/13 23:51	
Thallium, Dissolved	ug/L	ND	0.10	02/21/13 23:51	
Vanadium, Dissolved	ug/L	ND	0.10	02/21/13 23:51	
Zinc, Dissolved	ug/L	ND	5.0	02/21/13 23:51	

LABORATORY CONTROL SAMPLE: 1380336

Parameter	Units	Spike Conc.	LCS Result	LCS % Rec	% Rec Limits	Qualifiers
Aluminum, Dissolved	ug/L	80	88.4	111	85-115	
Antimony, Dissolved	ug/L	80	85.2	107	85-115	
Arsenic, Dissolved	ug/L	80	85.2	107	85-115	
Barium, Dissolved	ug/L	80	83.7	105	85-115	
Beryllium, Dissolved	ug/L	80	82.9	104	85-115	
Cadmium, Dissolved	ug/L	80	84.0	105	85-115	
Calcium, Dissolved	ug/L	1000	1020	102	85-115	
Chromium, Dissolved	ug/L	80	87.4	109	85-115	
Cobalt, Dissolved	ug/L	80	83.0	104	85-115	
Copper, Dissolved	ug/L	80	87.3	109	85-115	
Iron, Dissolved	ug/L	1000	1080	108	85-115	
Lead, Dissolved	ug/L	80	84.4	106	85-115	
Magnesium, Dissolved	ug/L	1000	1060	106	85-115	

This report shall not be reproduced, except in full,
without the written consent of Pace Analytical Services, Inc..

Pace Analytical Services, Inc.
9608 Loiret Blvd.
Lenexa, KS 66219
(913)599-5665

QUALITY CONTROL DATA

Project: FEBRUARY 2013 RICO WATER SAMPL
Pace Project No.: 60138490

LABORATORY CONTROL SAMPLE: 1380336

Parameter	Units	Spike Conc.	LCS Result	LCS % Rec	% Rec Limits	Qualifiers
Manganese, Dissolved	ug/L	80	86.6	108	85-115	
Molybdenum, Dissolved	ug/L	80	80.4	101	85-115	
Nickel, Dissolved	ug/L	80	83.4	104	85-115	
Potassium, Dissolved	ug/L	1000	994	99	85-115	
Selenium, Dissolved	ug/L	80	86.0	108	85-115	
Silver, Dissolved	ug/L	80	84.1	105	85-115	
Sodium, Dissolved	ug/L	1000	1030	103	85-115	
Thallium, Dissolved	ug/L	80	86.7	108	85-115	
Vanadium, Dissolved	ug/L	80	84.7	106	85-115	
Zinc, Dissolved	ug/L	80	86.6	108	85-115	

MATRIX SPIKE & MATRIX SPIKE DUPLICATE: 1380372 1380373

Parameter	Units	60138490003 Result	MS Spike Conc.	MSD Spike Conc.	MS Result	MSD Result	MS % Rec	MSD % Rec	% Rec Limits	RPD	Max RPD	Qual
Aluminum, Dissolved	ug/L	19800	80	80	21400	21400	2090	2060	70-130	.09	20	M6
Antimony, Dissolved	ug/L	1.4	80	80	86.9	84.6	107	104	70-130	3	20	
Arsenic, Dissolved	ug/L	239	80	80	369	370	162	164	70-130	.4	20	M6
Barium, Dissolved	ug/L	32.8	80	80	123	124	113	113	70-130	.2	20	
Beryllium, Dissolved	ug/L	5.7	80	80	75.2	82.9	87	96	70-130	10	20	
Cadmium, Dissolved	ug/L	120	80	80	219	220	124	126	70-130	.5	20	
Calcium, Dissolved	ug/L	492000	1000	1000	489000	486000	-330	-610	70-130	.6	20	E,M6
Chromium, Dissolved	ug/L	ND	80	80	82.5	84.3	103	105	70-130	2	20	
Cobalt, Dissolved	ug/L	72.8	80	80	173	176	126	129	70-130	1	20	
Copper, Dissolved	ug/L	198	80	80	362	365	205	208	70-130	.7	20	M6
Iron, Dissolved	ug/L	545000	1000	1000	544000	542000	-40	-280	70-130	.4	20	E,M6
Lead, Dissolved	ug/L	2570	80	80	2600	2620	34	60	70-130	.8	20	M6
Magnesium, Dissolved	ug/L	148000	1000	1000	149000	148000	106	-4	70-130	.7	20	M6
Manganese, Dissolved	ug/L	29900	80	80	30100	29900	262	75	70-130	.5	20	E,M6
Molybdenum, Dissolved	ug/L	2.1	80	80	83.1	84.1	101	103	70-130	1	20	
Nickel, Dissolved	ug/L	132	80	80	254	264	152	164	70-130	4	20	M6
Potassium, Dissolved	ug/L	2860	1000	1000	4140	4240	128	138	70-130	2	20	M6
Selenium, Dissolved	ug/L	2.0	80	80	84.4	87.3	103	107	70-130	3	20	
Silver, Dissolved	ug/L	8.3	80	80	89.4	91.1	101	104	70-130	2	20	
Sodium, Dissolved	ug/L	24300	1000	1000	25400	25600	115	128	70-130	.5	20	
Thallium, Dissolved	ug/L	ND	80	80	75.2	75.8	94	95	70-130	.8	20	
Vanadium, Dissolved	ug/L	4.5	80	80	91.7	92.7	109	110	70-130	1	20	
Zinc, Dissolved	ug/L	132000	80	80	132000	133000	-62	1190	70-130	.8	20	E,M6

This report shall not be reproduced, except in full,
without the written consent of Pace Analytical Services, Inc..

Pace Analytical Services, Inc.
9608 Loiret Blvd.
Lenexa, KS 66219
(913)599-5665

QUALITY CONTROL DATA

Project: FEBRUARY 2013 RICO WATER SAMPL
Pace Project No.: 60138490

QC Batch: MPRP/21574 Analysis Method: EPA 200.8
QC Batch Method: EPA 200.8 Analysis Description: 200.8 Potentially Dissolved Metals
Associated Lab Samples: 60138490001, 60138490002, 60138490003, 60138490004, 60138490005, 60138490006, 60138490007, 60138490008, 60138490009, 60138490010, 60138490011, 60138490012

METHOD BLANK: 1142462 Matrix: Water
Associated Lab Samples: 60138490001, 60138490002, 60138490003, 60138490004, 60138490005, 60138490006, 60138490007, 60138490008, 60138490009, 60138490010, 60138490011, 60138490012

Parameter	Units	Blank Result	Reporting Limit	Analyzed	Qualifiers
Aluminum, Dissolved	ug/L	ND	50.0	02/23/13 16:41	
Antimony, Dissolved	ug/L	0.058J	1.0	02/23/13 16:41	
Arsenic, Dissolved	ug/L	ND	1.0	02/23/13 16:41	
Barium, Dissolved	ug/L	0.31J	1.0	02/23/13 16:41	
Beryllium, Dissolved	ug/L	ND	0.50	02/23/13 16:41	
Cadmium, Dissolved	ug/L	ND	0.50	02/23/13 16:41	
Chromium, Dissolved	ug/L	0.16J	1.0	02/23/13 16:41	
Cobalt, Dissolved	ug/L	ND	1.0	02/23/13 16:41	
Copper, Dissolved	ug/L	ND	1.0	02/23/13 16:41	
Iron, Dissolved	ug/L	ND	50.0	02/23/13 16:41	
Lead, Dissolved	ug/L	0.18J	1.0	02/23/13 16:41	
Manganese, Dissolved	ug/L	ND	1.0	02/23/13 16:41	
Molybdenum, Dissolved	ug/L	ND	1.0	02/23/13 16:41	
Nickel, Dissolved	ug/L	ND	1.0	02/23/13 16:41	
Selenium, Dissolved	ug/L	ND	1.0	02/25/13 14:32	
Silver, Dissolved	ug/L	ND	0.50	02/23/13 16:41	
Thallium, Dissolved	ug/L	ND	1.0	02/23/13 16:41	
Vanadium, Dissolved	ug/L	ND	1.0	02/23/13 16:41	
Zinc, Dissolved	ug/L	ND	10.0	02/23/13 16:41	

LABORATORY CONTROL SAMPLE: 1142463

Parameter	Units	Spike Conc.	LCS Result	LCS % Rec	% Rec Limits	Qualifiers
Aluminum, Dissolved	ug/L	1000	927	93	85-115	
Antimony, Dissolved	ug/L	40	40.5	101	85-115	
Arsenic, Dissolved	ug/L	40	42.1	105	85-115	
Barium, Dissolved	ug/L	40	39.8	100	85-115	
Beryllium, Dissolved	ug/L	40	39.5	99	85-115	
Cadmium, Dissolved	ug/L	40	40.7	102	85-115	
Chromium, Dissolved	ug/L	40	41.7	104	85-115	
Cobalt, Dissolved	ug/L	40	40.7	102	85-115	
Copper, Dissolved	ug/L	40	41.7	104	85-115	
Iron, Dissolved	ug/L	1000	950	95	85-115	
Lead, Dissolved	ug/L	40	39.6	99	85-115	
Manganese, Dissolved	ug/L	40	40.7	102	85-115	
Molybdenum, Dissolved	ug/L	40	40.9	102	85-115	
Nickel, Dissolved	ug/L	40	40.8	102	85-115	
Selenium, Dissolved	ug/L	40	40.6	102	85-115	
Silver, Dissolved	ug/L	20	20.1	100	85-115	
Thallium, Dissolved	ug/L	40	38.9	97	85-115	

This report shall not be reproduced, except in full,
without the written consent of Pace Analytical Services, Inc..

Pace Analytical Services, Inc.
9608 Loiret Blvd.
Lenexa, KS 66219
(913)599-5665

QUALITY CONTROL DATA

Project: FEBRUARY 2013 RICO WATER SAMPL
Pace Project No.: 60138490

LABORATORY CONTROL SAMPLE: 1142463

Parameter	Units	Spike Conc.	LCS Result	LCS % Rec	% Rec Limits	Qualifiers
Vanadium, Dissolved	ug/L	40	40.7	102	85-115	
Zinc, Dissolved	ug/L	100	111	111	85-115	

MATRIX SPIKE & MATRIX SPIKE DUPLICATE: 1142464 1142465

Parameter	Units	60138242001 Result	MS Spike Conc.	MSD Spike Conc.	MS Result	MSD Result	MS % Rec	MSD % Rec	% Rec Limits	RPD	Max RPD	Qual
Aluminum, Dissolved	ug/L	ND	1000	1000	862	861	83	83	70-130	0	20	
Antimony, Dissolved	ug/L	ND	40	40	39.2	39.1	97	97	70-130	0	20	
Arsenic, Dissolved	ug/L	3.1	40	40	43.8	44.1	102	103	70-130	1	20	
Barium, Dissolved	ug/L	32.9	40	40	73.4	73.2	101	101	70-130	0	20	
Beryllium, Dissolved	ug/L	ND	40	40	35.4	35.0	88	87	70-130	1	20	
Cadmium, Dissolved	ug/L	ND	40	40	35.5	35.8	88	89	70-130	1	20	
Chromium, Dissolved	ug/L	4.5	40	40	41.7	41.5	93	92	70-130	1	20	
Cobalt, Dissolved	ug/L	3.2	40	40	38.9	39.1	89	90	70-130	0	20	
Copper, Dissolved	ug/L	142	40	40	171	166	73	60	70-130	3	20	M1
Iron, Dissolved	ug/L	1110	1000	1000	1960	1930	85	82	70-130	2	20	
Lead, Dissolved	ug/L	32.9	40	40	74.7	74.2	104	103	70-130	1	20	
Manganese, Dissolved	ug/L	4380	40	40	4470	4340	212	-102	70-130	3	20	M6
Molybdenum, Dissolved	ug/L	8.7	40	40	55.3	55.6	116	117	70-130	1	20	
Nickel, Dissolved	ug/L	26.0	40	40	60.2	58.8	86	82	70-130	2	20	
Selenium, Dissolved	ug/L	1.0	40	40	43.6	45.6	106	111	70-130	4	20	
Silver, Dissolved	ug/L	ND	20	20	17.5	17.5	88	87	70-130	0	20	
Thallium, Dissolved	ug/L	ND	40	40	40.7	41.0	102	102	70-130	1	20	
Vanadium, Dissolved	ug/L	ND	40	40	40.3	40.7	100	101	70-130	1	20	
Zinc, Dissolved	ug/L	562	100	100	634	615	72	54	70-130	3	20	M1

MATRIX SPIKE SAMPLE: 1142466

Parameter	Units	60138490005 Result	Spike Conc.	MS Result	MS % Rec	% Rec Limits	Qualifiers
Aluminum, Dissolved	ug/L	729	1000	1600	88	70-130	
Antimony, Dissolved	ug/L	0.14J	40	39.4	98	70-130	
Arsenic, Dissolved	ug/L	1.7	40	41.0	98	70-130	
Barium, Dissolved	ug/L	109	40	147	95	70-130	
Beryllium, Dissolved	ug/L	0.18J	40	43.0	107	70-130	
Cadmium, Dissolved	ug/L	0.46J	40	39.4	97	70-130	
Chromium, Dissolved	ug/L	1.2	40	40.4	98	70-130	
Cobalt, Dissolved	ug/L	1.8	40	39.2	94	70-130	
Copper, Dissolved	ug/L	10.8	40	47.1	91	70-130	
Iron, Dissolved	ug/L	1360	1000	2220	85	70-130	
Lead, Dissolved	ug/L	11.7	40	50.8	98	70-130	
Manganese, Dissolved	ug/L	392	40	419	68	70-130	M1
Molybdenum, Dissolved	ug/L	0.23J	40	42.0	104	70-130	
Nickel, Dissolved	ug/L	2.9	40	40.1	93	70-130	
Selenium, Dissolved	ug/L	0.92J	40	40.7	100	70-130	

This report shall not be reproduced, except in full,
without the written consent of Pace Analytical Services, Inc..

Pace Analytical Services, Inc.
9608 Loiret Blvd.
Lenexa, KS 66219
(913)599-5665

QUALITY CONTROL DATA

Project: FEBRUARY 2013 RICO WATER SAMPL
Pace Project No.: 60138490

MATRIX SPIKE SAMPLE: 1142466

Parameter	Units	60138490005 Result	Spike Conc.	MS Result	MS % Rec	% Rec Limits	Qualifiers
Silver, Dissolved	ug/L	0.22J	20	19.3	96	70-130	
Thallium, Dissolved	ug/L	ND	40	38.8	97	70-130	
Vanadium, Dissolved	ug/L	1.7	40	41.7	100	70-130	
Zinc, Dissolved	ug/L	36.0	100	128	92	70-130	

This report shall not be reproduced, except in full,
without the written consent of Pace Analytical Services, Inc..

Pace Analytical Services, Inc.
9608 Loiret Blvd.
Lenexa, KS 66219
(913)599-5665

QUALITY CONTROL DATA

Project: FEBRUARY 2013 RICO WATER SAMPL
Pace Project No.: 60138490

QC Batch: MT/11314 — Analysis Method: SM 2510B
QC Batch Method: SM 2510B — Analysis Description: 2510B Specific Conductance
Associated Lab Samples: 60138490001, 60138490002, 60138490003, 60138490004, 60138490005, 60138490006, 60138490007, 60138490008, 60138490009, 60138490010, 60138490011, 60138490012

METHOD BLANK: 1377181 — Matrix: Water
Associated Lab Samples: 60138490001, 60138490002, 60138490003, 60138490004, 60138490005, 60138490006, 60138490007, 60138490008, 60138490009, 60138490010, 60138490011, 60138490012

Parameter	Units	Blank Result	Reporting Limit	Analyzed	Qualifiers
Specific Conductance	umhos/cm	ND	10.0	02/13/13 12:26	

LABORATORY CONTROL SAMPLE: 1377182

Parameter	Units	Spike Conc.	LCS Result	LCS % Rec	% Rec Limits	Qualifiers
Specific Conductance	umhos/cm	1000	1050	105	90-110	

SAMPLE DUPLICATE: 1377183

Parameter	Units	10219612003 Result	Dup Result	RPD	Max RPD	Qualifiers
Specific Conductance	umhos/cm	3080	3140	2	20	

SAMPLE DUPLICATE: 1377184

Parameter	Units	60138490003 Result	Dup Result	RPD	Max RPD	Qualifiers
Specific Conductance	umhos/cm	4060	3920	3	20	

This report shall not be reproduced, except in full,
without the written consent of Pace Analytical Services, Inc..

Pace Analytical Services, Inc.
9608 Loiret Blvd.
Lenexa, KS 66219
(913)599-5665

QUALITY CONTROL DATA

Project: FEBRUARY 2013 RICO WATER SAMPL
Pace Project No.: 60138490

QC Batch: WET/39803 | Analysis Method: SM 2320B
QC Batch Method: SM 2320B | Analysis Description: 2320B Alkalinity
Associated Lab Samples: 60138490005, 60138490006

METHOD BLANK: 1142376 | Matrix: Water
Associated Lab Samples: 60138490005, 60138490006

Parameter	Units	Blank Result	Reporting Limit	Analyzed	Qualifiers
Alkalinity, Carbonate (CaCO3)	mg/L	ND	20.0	02/19/13 09:32	
Alkalinity, Total as CaCO3	mg/L	ND	20.0	02/19/13 09:32	
Alkalinity,Bicarbonate (CaCO3)	mg/L	ND	20.0	02/19/13 09:32	

LABORATORY CONTROL SAMPLE: 1142377

Parameter	Units	Spike Conc.	LCS Result	LCS % Rec	% Rec Limits	Qualifiers
Alkalinity, Total as CaCO3	mg/L	500	473	95	90-110	

SAMPLE DUPLICATE: 1142378

Parameter	Units	60138657001 Result	Dup Result	RPD	Max RPD	Qualifiers
Alkalinity, Carbonate (CaCO3)	mg/L	ND	ND		10	
Alkalinity, Total as CaCO3	mg/L	452	450	0	10	
Alkalinity,Bicarbonate (CaCO3)	mg/L	452	450	0	10	

SAMPLE DUPLICATE: 1142379

Parameter	Units	60138572002 Result	Dup Result	RPD	Max RPD	Qualifiers
Alkalinity, Carbonate (CaCO3)	mg/L	ND	ND		10	
Alkalinity, Total as CaCO3	mg/L	258	246	4	10	
Alkalinity,Bicarbonate (CaCO3)	mg/L	258	246	4	10	

This report shall not be reproduced, except in full,
without the written consent of Pace Analytical Services, Inc..

Pace Analytical Services, Inc.
9608 Loiret Blvd.
Lenexa, KS 66219
(913)599-5665

QUALITY CONTROL DATA

Project: FEBRUARY 2013 RICO WATER SAMPL
Pace Project No.: 60138490

QC Batch: WET/39820 Analysis Method: SM 2320B
QC Batch Method: SM 2320B Analysis Description: 2320B Alkalinity
Associated Lab Samples: 60138490001, 60138490002, 60138490003, 60138490004, 60138490007, 60138490008, 60138490009, 60138490010, 60138490011, 60138490012

METHOD BLANK: 1142607 Matrix: Water
Associated Lab Samples: 60138490001, 60138490002, 60138490003, 60138490004, 60138490007, 60138490008, 60138490009, 60138490010, 60138490011, 60138490012

Parameter	Units	Blank Result	Reporting Limit	Analyzed	Qualifiers
Alkalinity, Carbonate (CaCO3)	mg/L	ND	20.0	02/19/13 11:48	
Alkalinity, Total as CaCO3	mg/L	ND	20.0	02/19/13 11:48	
Alkalinity,Bicarbonate (CaCO3)	mg/L	ND	20.0	02/19/13 11:48	

LABORATORY CONTROL SAMPLE: 1142608

Parameter	Units	Spike Conc.	LCS Result	LCS % Rec	% Rec Limits	Qualifiers
Alkalinity, Total as CaCO3	mg/L	500	523	105	90-110	

SAMPLE DUPLICATE: 1142609

Parameter	Units	60138608003 Result	Dup Result	RPD	Max RPD	Qualifiers
Alkalinity, Carbonate (CaCO3)	mg/L	ND	ND		10	
Alkalinity, Total as CaCO3	mg/L	174	198	13	10	D6
Alkalinity,Bicarbonate (CaCO3)	mg/L	174	198	13	10	D6

SAMPLE DUPLICATE: 1142610

Parameter	Units	60138699001 Result	Dup Result	RPD	Max RPD	Qualifiers
Alkalinity, Carbonate (CaCO3)	mg/L	ND	ND		10	
Alkalinity, Total as CaCO3	mg/L	288	287	0	10	
Alkalinity,Bicarbonate (CaCO3)	mg/L	288	287	0	10	

This report shall not be reproduced, except in full,
without the written consent of Pace Analytical Services, Inc..

Pace Analytical Services, Inc.
9608 Loiret Blvd.
Lenexa, KS 66219
(913)599-5665

QUALITY CONTROL DATA

Project: FEBRUARY 2013 RICO WATER SAMPL
Pace Project No.: 60138490

QC Batch: WET/39689 Analysis Method: SM 2540C
QC Batch Method: SM 2540C Analysis Description: 2540C Total Dissolved Solids
Associated Lab Samples: 60138490001, 60138490002, 60138490003, 60138490004, 60138490005, 60138490006, 60138490007

METHOD BLANK: 1139419 Matrix: Water
Associated Lab Samples: 60138490001, 60138490002, 60138490003, 60138490004, 60138490005, 60138490006, 60138490007

Parameter	Units	Blank Result	Reporting Limit	Analyzed	Qualifiers
Total Dissolved Solids	mg/L	ND	5.0	02/12/13 16:18	

SAMPLE DUPLICATE: 1139420

Parameter	Units	60138398004 Result	Dup Result	RPD	Max RPD	Qualifiers
Total Dissolved Solids	mg/L	96.0	95.0	1	17	

SAMPLE DUPLICATE: 1139421

Parameter	Units	60138473002 Result	Dup Result	RPD	Max RPD	Qualifiers
Total Dissolved Solids	mg/L	2210	2360	7	17	

This report shall not be reproduced, except in full,
without the written consent of Pace Analytical Services, Inc..

Pace Analytical Services, Inc.
9608 Loiret Blvd.
Lenexa, KS 66219
(913)599-5665

QUALITY CONTROL DATA

Project: FEBRUARY 2013 RICO WATER SAMPL
Pace Project No.: 60138490

QC Batch: WET/39719 Analysis Method: SM 2540C
QC Batch Method: SM 2540C Analysis Description: 2540C Total Dissolved Solids
Associated Lab Samples: 60138490008, 60138490009, 60138490010, 60138490011, 60138490012

METHOD BLANK: 1140094 Matrix: Water
Associated Lab Samples: 60138490008, 60138490009, 60138490010, 60138490011, 60138490012

Parameter	Units	Blank Result	Reporting Limit	Analyzed	Qualifiers
Total Dissolved Solids	mg/L	ND	5.0	02/13/13 14:28	

SAMPLE DUPLICATE: 1140095

Parameter	Units	60138473007 Result	Dup Result	RPD	Max RPD	Qualifiers
Total Dissolved Solids	mg/L	1280	1300	1	17	

SAMPLE DUPLICATE: 1140096

Parameter	Units	60138541002 Result	Dup Result	RPD	Max RPD	Qualifiers
Total Dissolved Solids	mg/L	335	278	19	17	D6

This report shall not be reproduced, except in full,
without the written consent of Pace Analytical Services, Inc..

Pace Analytical Services, Inc.
9608 Loiret Blvd.
Lenexa, KS 66219
(913)599-5665

QUALITY CONTROL DATA

Project: FEBRUARY 2013 RICO WATER SAMPL
Pace Project No.: 60138490

QC Batch: WET/39710 | Analysis Method: SM 2540D
QC Batch Method: SM 2540D | Analysis Description: 2540D Total Suspended Solids
Associated Lab Samples: 60138490005, 60138490006

METHOD BLANK: 1139696 | Matrix: Water
Associated Lab Samples: 60138490005, 60138490006

Parameter	Units	Blank Result	Reporting Limit	Analyzed	Qualifiers
Total Suspended Solids	mg/L	ND	5.0	02/13/13 08:56	

SAMPLE DUPLICATE: 1139697

Parameter	Units	60138398001 Result	Dup Result	RPD	Max RPD	Qualifiers
Total Suspended Solids	mg/L	ND	ND		25	

SAMPLE DUPLICATE: 1139698

Parameter	Units	60138281002 Result	Dup Result	RPD	Max RPD	Qualifiers
Total Suspended Solids	mg/L	ND	5.0		25	

This report shall not be reproduced, except in full,
without the written consent of Pace Analytical Services, Inc..

Pace Analytical Services, Inc.
9608 Loiret Blvd.
Lenexa, KS 66219
(913)599-5665

QUALITY CONTROL DATA

Project: FEBRUARY 2013 RICO WATER SAMPL
Pace Project No.: 60138490

QC Batch: WET/39720 Analysis Method: SM 2540D
QC Batch Method: SM 2540D Analysis Description: 2540D Total Suspended Solids
Associated Lab Samples: 60138490001, 60138490002, 60138490003, 60138490004

METHOD BLANK: 1140099 Matrix: Water
Associated Lab Samples: 60138490001, 60138490002, 60138490003, 60138490004

Parameter	Units	Blank Result	Reporting Limit	Analyzed	Qualifiers
Total Suspended Solids	mg/L	ND	5.0	02/13/13 14:39	

SAMPLE DUPLICATE: 1140100

Parameter	Units	60138374001 Result	Dup Result	RPD	Max RPD	Qualifiers
Total Suspended Solids	mg/L	120	136	12	25	

SAMPLE DUPLICATE: 1140101

Parameter	Units	60138415004 Result	Dup Result	RPD	Max RPD	Qualifiers
Total Suspended Solids	mg/L	15.0	15.0	0	25	

This report shall not be reproduced, except in full,
without the written consent of Pace Analytical Services, Inc..

Pace Analytical Services, Inc.
9608 Loiret Blvd.
Lenexa, KS 66219
(913)599-5665

QUALITY CONTROL DATA

Project: FEBRUARY 2013 RICO WATER SAMPL
Pace Project No.: 60138490

QC Batch: WET/39723 Analysis Method: SM 2540D
QC Batch Method: SM 2540D Analysis Description: 2540D Total Suspended Solids
Associated Lab Samples: 60138490007, 60138490008, 60138490009, 60138490010, 60138490011, 60138490012

METHOD BLANK: 1140248 Matrix: Water
Associated Lab Samples: 60138490007, 60138490008, 60138490009, 60138490010, 60138490011, 60138490012

Parameter	Units	Blank Result	Reporting Limit	Analyzed	Qualifiers
Total Suspended Solids	mg/L	ND	5.0	02/14/13 11:04	

SAMPLE DUPLICATE: 1140249

Parameter	Units	60138490007 Result	Dup Result	RPD	Max RPD	Qualifiers
Total Suspended Solids	mg/L	554	578	4	25	

SAMPLE DUPLICATE: 1140250

Parameter	Units	60138383004 Result	Dup Result	RPD	Max RPD	Qualifiers
Total Suspended Solids	mg/L	81.0	72.0	12	25	

This report shall not be reproduced, except in full,
without the written consent of Pace Analytical Services, Inc..

Pace Analytical Services, Inc.
9608 Loiret Blvd.
Lenexa, KS 66219
(913)599-5665

QUALITY CONTROL DATA

Project: FEBRUARY 2013 RICO WATER SAMPL
Pace Project No.: 60138490

QC Batch: WET/39670 Analysis Method: SM 4500-S-2 D
QC Batch Method: SM 4500-S-2 D Analysis Description: 4500S2D Sulfide, Total
Associated Lab Samples: 60138490001, 60138490002, 60138490003, 60138490004, 60138490005, 60138490006, 60138490007, 60138490008, 60138490009, 60138490010, 60138490011, 60138490012

METHOD BLANK: 1138775 Matrix: Water
Associated Lab Samples: 60138490001, 60138490002, 60138490003, 60138490004, 60138490005, 60138490006, 60138490007, 60138490008, 60138490009, 60138490010, 60138490011, 60138490012

Parameter	Units	Blank Result	Reporting Limit	Analyzed	Qualifiers
Sulfide, Total	mg/L	ND	0.050	02/11/13 16:20	

LABORATORY CONTROL SAMPLE: 1138776

Parameter	Units	Spike Conc.	LCS Result	LCS % Rec	% Rec Limits	Qualifiers
Sulfide, Total	mg/L	.5	0.50	99	80-120	

MATRIX SPIKE SAMPLE: 1138777

Parameter	Units	60138490001 Result	Spike Conc.	MS Result	MS % Rec	% Rec Limits	Qualifiers
Sulfide, Total	mg/L	1.3	.5	1.5	43	75-125	M1

This report shall not be reproduced, except in full,
without the written consent of Pace Analytical Services, Inc..

Pace Analytical Services, Inc.
9608 Loiret Blvd.
Lenexa, KS 66219
(913)599-5665

QUALITY CONTROL DATA

Project: FEBRUARY 2013 RICO WATER SAMPL
Pace Project No.: 60138490

QC Batch: WETA/23506 | Analysis Method: EPA 300.0
QC Batch Method: EPA 300.0 | Analysis Description: 300.0 IC Anions
Associated Lab Samples: 60138490001, 60138490002, 60138490004, 60138490005, 60138490006, 60138490007, 60138490008, 60138490009, 60138490010, 60138490011, 60138490012

METHOD BLANK: 1139239 | Matrix: Water
Associated Lab Samples: 60138490001, 60138490002, 60138490004, 60138490005, 60138490006, 60138490007, 60138490008, 60138490009, 60138490010, 60138490011, 60138490012

Parameter	Units	Blank Result	Reporting Limit	Analyzed	Qualifiers
Chloride	mg/L	ND	1.0	02/12/13 12:13	
Sulfate	mg/L	ND	1.0	02/12/13 12:13	

LABORATORY CONTROL SAMPLE: 1139240

Parameter	Units	Spike Conc.	LCS Result	LCS % Rec	% Rec Limits	Qualifiers
Chloride	mg/L	5	4.9	98	90-110	
Sulfate	mg/L	5	5.1	101	90-110	

MATRIX SPIKE SAMPLE: 1139241

Parameter	Units	60138490004 Result	Spike Conc.	MS Result	MS % Rec	% Rec Limits	Qualifiers
Chloride	mg/L	1.0	5	5.9	98	64-118	
Sulfate	mg/L	1030	500	1550	104	61-119	

MATRIX SPIKE SAMPLE: 1139242

Parameter	Units	60138490008 Result	Spike Conc.	MS Result	MS % Rec	% Rec Limits	Qualifiers
Chloride	mg/L	1.2	5	6.1	97	64-118	
Sulfate	mg/L	192	100	292	100	61-119	

This report shall not be reproduced, except in full,
without the written consent of Pace Analytical Services, Inc..

Pace Analytical Services, Inc.
9608 Loiret Blvd.
Lenexa, KS 66219
(913)599-5665

QUALITY CONTROL DATA

Project: FEBRUARY 2013 RICO WATER SAMPL
Pace Project No.: 60138490

QC Batch: WETA/23557 | Analysis Method: EPA 300.0
QC Batch Method: EPA 300.0 | Analysis Description: 300.0 IC Anions
Associated Lab Samples: 60138490003

METHOD BLANK: 1141027 | Matrix: Water
Associated Lab Samples: 60138490003

Parameter	Units	Blank Result	Reporting Limit	Analyzed	Qualifiers
Chloride	mg/L	ND	1.0	02/16/13 09:58	
Sulfate	mg/L	ND	1.0	02/16/13 09:58	

METHOD BLANK: 1141905 | Matrix: Water
Associated Lab Samples: 60138490003

Parameter	Units	Blank Result	Reporting Limit	Analyzed	Qualifiers
Chloride	mg/L	ND	1.0	02/17/13 09:02	
Sulfate	mg/L	ND	1.0	02/17/13 09:02	

LABORATORY CONTROL SAMPLE: 1141028

Parameter	Units	Spike Conc.	LCS Result	LCS % Rec	% Rec Limits	Qualifiers
Chloride	mg/L	5	5.0	100	90-110	
Sulfate	mg/L	5	5.2	105	90-110	

LABORATORY CONTROL SAMPLE: 1141906

Parameter	Units	Spike Conc.	LCS Result	LCS % Rec	% Rec Limits	Qualifiers
Chloride	mg/L	5	4.9	99	90-110	
Sulfate	mg/L	5	5.0	100	90-110	

MATRIX SPIKE SAMPLE: 1141029

Parameter	Units	60138740001 Result	Spike Conc.	MS Result	MS % Rec	% Rec Limits	Qualifiers
Chloride	mg/L	26.8J	250	236	84	64-118	
Sulfate	mg/L	647	250	875	91	61-119	

MATRIX SPIKE SAMPLE: 1141030

Parameter	Units	60138740003 Result	Spike Conc.	MS Result	MS % Rec	% Rec Limits	Qualifiers
Chloride	mg/L	26.3J	250	237	84	64-118	
Sulfate	mg/L	605	250	848	97	61-119	

This report shall not be reproduced, except in full,
without the written consent of Pace Analytical Services, Inc..

Pace Analytical Services, Inc.
9608 Loiret Blvd.
Lenexa, KS 66219
(913)599-5665

QUALITY CONTROL DATA

Project: FEBRUARY 2013 RICO WATER SAMPL
Pace Project No.: 60138490

QC Batch: WETA/23599 Analysis Method: EPA 353.2
QC Batch Method: EPA 353.2 Analysis Description: 353.2 Nitrate + Nitrite, preserved
Associated Lab Samples: 60138490001, 60138490002, 60138490003

METHOD BLANK: 1142887 Matrix: Water
Associated Lab Samples: 60138490001, 60138490002, 60138490003

Parameter	Units	Blank Result	Reporting Limit	Analyzed	Qualifiers
Nitrogen, NO2 plus NO3	mg/L	ND	0.10	02/19/13 16:24	

LABORATORY CONTROL SAMPLE: 1142888

Parameter	Units	Spike Conc.	LCS Result	LCS % Rec	% Rec Limits	Qualifiers
Nitrogen, NO2 plus NO3	mg/L	2	2.2	109	90-110	

MATRIX SPIKE SAMPLE: 1142889

Parameter	Units	60138365001 Result	Spike Conc.	MS Result	MS % Rec	% Rec Limits	Qualifiers
Nitrogen, NO2 plus NO3	mg/L	1.0	2	3.1	104	90-110	

MATRIX SPIKE SAMPLE: 1142891

Parameter	Units	60138639001 Result	Spike Conc.	MS Result	MS % Rec	% Rec Limits	Qualifiers
Nitrogen, NO2 plus NO3	mg/L	15.6	10	25.0	94	90-110	

SAMPLE DUPLICATE: 1142890

Parameter	Units	60138637001 Result	Dup Result	RPD	Max RPD	Qualifiers
Nitrogen, NO2 plus NO3	mg/L	16.3	15.8	3	13	

This report shall not be reproduced, except in full,
without the written consent of Pace Analytical Services, Inc..

Pace Analytical Services, Inc.
9608 Loiret Blvd.
Lenexa, KS 66219
(913)599-5665

QUALITY CONTROL DATA

Project: FEBRUARY 2013 RICO WATER SAMPL
Pace Project No.: 60138490

QC Batch: WETA/23652 Analysis Method: EPA 353.2
QC Batch Method: EPA 353.2 Analysis Description: 353.2 Nitrate + Nitrite, preserved
Associated Lab Samples: 60138490004, 60138490005, 60138490006, 60138490007, 60138490008, 60138490009, 60138490010, 60138490011, 60138490012

METHOD BLANK: 1144760 Matrix: Water
Associated Lab Samples: 60138490004, 60138490005, 60138490006, 60138490007, 60138490008, 60138490009, 60138490010, 60138490011, 60138490012

Parameter	Units	Blank Result	Reporting Limit	Analyzed	Qualifiers
Nitrogen, NO2 plus NO3	mg/L	ND	0.10	02/25/13 10:36	

LABORATORY CONTROL SAMPLE: 1144761

Parameter	Units	Spike Conc.	LCS Result	LCS % Rec	% Rec Limits	Qualifiers
Nitrogen, NO2 plus NO3	mg/L	2	2.0	98	90-110	

MATRIX SPIKE SAMPLE: 1144762

Parameter	Units	60138490004 Result	Spike Conc.	MS Result	MS % Rec	% Rec Limits	Qualifiers
Nitrogen, NO2 plus NO3	mg/L	ND	2	1.9	94	90-110	

MATRIX SPIKE SAMPLE: 1144764

Parameter	Units	60138672002 Result	Spike Conc.	MS Result	MS % Rec	% Rec Limits	Qualifiers
Nitrogen, NO2 plus NO3	mg/L	2.9	2	4.8	97	90-110	

SAMPLE DUPLICATE: 1144763

Parameter	Units	60138490006 Result	Dup Result	RPD	Max RPD	Qualifiers
Nitrogen, NO2 plus NO3	mg/L	0.33	0.32	1	13	

This report shall not be reproduced, except in full,
without the written consent of Pace Analytical Services, Inc..

Pace Analytical Services, Inc.
9608 Loiret Blvd.
Lenexa, KS 66219
(913)599-5665

QUALITY CONTROL DATA

Project: FEBRUARY 2013 RICO WATER SAMPL
Pace Project No.: 60138490

QC Batch: WETA/23511 — Analysis Method: SM 4500-CN-E
QC Batch Method: SM 4500-CN-E — Analysis Description: 4500CNE Cyanide, Total
Associated Lab Samples: 60138490001, 60138490002, 60138490003, 60138490004, 60138490005, 60138490006, 60138490007, 60138490008, 60138490009

METHOD BLANK: 1139664 — Matrix: Water
Associated Lab Samples: 60138490001, 60138490002, 60138490003, 60138490004, 60138490005, 60138490006, 60138490007, 60138490008, 60138490009

Parameter	Units	Blank Result	Reporting Limit	Analyzed	Qualifiers
Cyanide	mg/L	ND	0.0050	02/13/13 12:07	

LABORATORY CONTROL SAMPLE: 1139665

Parameter	Units	Spike Conc.	LCS Result	LCS % Rec	% Rec Limits	Qualifiers
Cyanide	mg/L	.1	0.11	105	69-126	

MATRIX SPIKE SAMPLE: 1139666

Parameter	Units	60138588001 Result	Spike Conc.	MS Result	MS % Rec	% Rec Limits	Qualifiers
Cyanide	mg/L	ND	.1	0.11	108	41-136	

SAMPLE DUPLICATE: 1139667

Parameter	Units	60138402001 Result	Dup Result	RPD	Max RPD	Qualifiers
Cyanide	mg/L	0.0053	0.0069	26	26	

This report shall not be reproduced, except in full,
without the written consent of Pace Analytical Services, Inc..

Pace Analytical Services, Inc.
9608 Loiret Blvd.
Lenexa, KS 66219
(913)599-5665

QUALITY CONTROL DATA

Project: FEBRUARY 2013 RICO WATER SAMPL
Pace Project No.: 60138490

QC Batch: WETA/23512 — Analysis Method: SM 4500-CN-E
QC Batch Method: SM 4500-CN-E — Analysis Description: 4500CNE Cyanide, Total
Associated Lab Samples: 60138490010, 60138490011, 60138490012

METHOD BLANK: 1139668 — Matrix: Water
Associated Lab Samples: 60138490010, 60138490011, 60138490012

Parameter	Units	Blank Result	Reporting Limit	Analyzed	Qualifiers
Cyanide	mg/L	ND	0.0050	02/13/13 11:56	

LABORATORY CONTROL SAMPLE: 1139669

Parameter	Units	Spike Conc.	LCS Result	LCS % Rec	% Rec Limits	Qualifiers
Cyanide	mg/L	.1	0.11	110	69-126	

MATRIX SPIKE SAMPLE: 1139670

Parameter	Units	60138490010 Result	Spike Conc.	MS Result	MS % Rec	% Rec Limits	Qualifiers
Cyanide	mg/L	ND	.1	0.11	108	41-136	

SAMPLE DUPLICATE: 1139671

Parameter	Units	60138490011 Result	Dup Result	RPD	Max RPD	Qualifiers
Cyanide	mg/L	ND	0.0059		26	

This report shall not be reproduced, except in full,
without the written consent of Pace Analytical Services, Inc..

Pace Analytical Services, Inc.
9608 Loiret Blvd.
Lenexa, KS 66219
(913)599-5665

QUALITY CONTROL DATA

Project: FEBRUARY 2013 RICO WATER SAMPL
Pace Project No.: 60138490

QC Batch: WETA/16266 Analysis Method: SM 5310C
QC Batch Method: SM 5310C Analysis Description: 5310C Total Organic Carbon
Associated Lab Samples: 60138490001, 60138490002, 60138490003, 60138490004, 60138490005, 60138490006, 60138490007, 60138490008, 60138490009, 60138490010, 60138490011, 60138490012

METHOD BLANK: 748662 Matrix: Water
Associated Lab Samples: 60138490001, 60138490002, 60138490003, 60138490004, 60138490005, 60138490006, 60138490007, 60138490008, 60138490009, 60138490010, 60138490011, 60138490012

Parameter	Units	Blank Result	Reporting Limit	Analyzed	Qualifiers
Total Organic Carbon	mg/L	ND	0.50	02/13/13 10:55	

LABORATORY CONTROL SAMPLE: 748663

Parameter	Units	Spike Conc.	LCS Result	LCS % Rec	% Rec Limits	Qualifiers
Total Organic Carbon	mg/L	2.5	2.6	103	80-120	

MATRIX SPIKE & MATRIX SPIKE DUPLICATE: 748664 748665

Parameter	Units	60138354001 Result	MS Spike Conc.	MSD Spike Conc.	MS Result	MSD Result	MS % Rec	MSD % Rec	% Rec Limits	RPD	Max RPD	Qual
Total Organic Carbon	mg/L	109	250	250	379	382	108	109	80-120	1	20	

MATRIX SPIKE & MATRIX SPIKE DUPLICATE: 748666 748667

Parameter	Units	60138354002 Result	MS Spike Conc.	MSD Spike Conc.	MS Result	MSD Result	MS % Rec	MSD % Rec	% Rec Limits	RPD	Max RPD	Qual
Total Organic Carbon	mg/L	18.8	75	75	96.9	97.6	104	105	80-120	1	20	

This report shall not be reproduced, except in full,
without the written consent of Pace Analytical Services, Inc..

Pace Analytical Services, Inc.
9608 Loiret Blvd.
Lenexa, KS 66219
(913)599-5665

QUALIFIERS

Project: FEBRUARY 2013 RICO WATER SAMPL
Pace Project No.: 60138490

DEFINITIONS

DF - Dilution Factor, if reported, represents the factor applied to the reported data due to changes in sample preparation, dilution of the sample aliquot, or moisture content.

ND - Not Detected at or above adjusted reporting limit.

J - Estimated concentration above the adjusted method detection limit and below the adjusted reporting limit.

MDL - Adjusted Method Detection Limit.

PRL - Pace Reporting Limit.

RL - Reporting Limit.

S - Surrogate

1,2-Diphenylhydrazine (8270 listed analyte) decomposes to Azobenzene.

Consistent with EPA guidelines, unrounded data are displayed and have been used to calculate % recovery and RPD values.

LCS(D) - Laboratory Control Sample (Duplicate)

MS(D) - Matrix Spike (Duplicate)

DUP - Sample Duplicate

RPD - Relative Percent Difference

NC - Not Calculable.

SG - Silica Gel - Clean-Up

U - Indicates the compound was analyzed for, but not detected.

N-Nitrosodiphenylamine decomposes and cannot be separated from Diphenylamine using Method 8270. The result reported for each analyte is a combined concentration.

Pace Analytical is TNI accredited. Contact your Pace PM for the current list of accredited analytes.

TNI - The NELAC Institute.

LABORATORIES

PASI-G	Pace Analytical Services - Green Bay
PASI-K	Pace Analytical Services - Kansas City
PASI-M	Pace Analytical Services - Minneapolis

ANALYTE QUALIFIERS

B	Analyte was detected in the associated method blank.
D3	Sample was diluted due to the presence of high levels of non-target analytes or other matrix interference.
D6	The relative percent difference (RPD) between the sample and sample duplicate exceeded laboratory control limits.
E	Analyte concentration exceeded the calibration range. The reported result is estimated.
M1	Matrix spike recovery exceeded QC limits. Batch accepted based on laboratory control sample (LCS) recovery.
M6	Matrix spike and Matrix spike duplicate recovery not evaluated against control limits due to sample dilution.
R1	RPD value was outside control limits.

This report shall not be reproduced, except in full,
without the written consent of Pace Analytical Services, Inc..

Pace Analytical Services, Inc.
9608 Loiret Blvd.
Lenexa, KS 66219
(913)599-5665

QUALITY CONTROL DATA CROSS REFERENCE TABLE

Project: FEBRUARY 2013 RICO WATER SAMPL
Pace Project No.: 60138490

Lab ID	Sample ID	QC Batch Method	QC Batch	Analytical Method	Analytical Batch
60138490001	**GW-5_20130207**	EPA 200.7	MPRP/21569	EPA 200.7	ICP/17329
60138490002	**MW-204_20130207**	EPA 200.7	MPRP/21569	EPA 200.7	ICP/17329
60138490003	**MW-5 SHALLOW_20130207**	EPA 200.7	MPRP/21569	EPA 200.7	ICP/17329
60138490004	**MW-5 DEEP_20130207**	EPA 200.7	MPRP/21569	EPA 200.7	ICP/17329
60138490005	**GW-1_20130206**	EPA 200.7	MPRP/21569	EPA 200.7	ICP/17329
60138490006	**MW-101_20130206**	EPA 200.7	MPRP/21569	EPA 200.7	ICP/17329
60138490007	**MW-102_20130207**	EPA 200.7	MPRP/21569	EPA 200.7	ICP/17329
60138490008	**GW-3_20130208**	EPA 200.7	MPRP/21569	EPA 200.7	ICP/17329
60138490009	**DR-3_20130208**	EPA 200.7	MPRP/21569	EPA 200.7	ICP/17329
60138490010	**DR-8_20130208**	EPA 200.7	MPRP/21569	EPA 200.7	ICP/17329
60138490011	**EB-1_20130208**	EPA 200.7	MPRP/21569	EPA 200.7	ICP/17329
60138490012	**AT-2_20130208**	EPA 200.7	MPRP/21569	EPA 200.7	ICP/17329
60138490001	**GW-5_20130207**	EPA 200.8	MPRP/37603	EPA 200.8	ICPM/15344
60138490002	**MW-204_20130207**	EPA 200.8	MPRP/37603	EPA 200.8	ICPM/15344
60138490003	**MW-5 SHALLOW_20130207**	EPA 200.8	MPRP/37603	EPA 200.8	ICPM/15344
60138490004	**MW-5 DEEP_20130207**	EPA 200.8	MPRP/37603	EPA 200.8	ICPM/15344
60138490005	**GW-1_20130206**	EPA 200.8	MPRP/37603	EPA 200.8	ICPM/15344
60138490006	**MW-101_20130206**	EPA 200.8	MPRP/37603	EPA 200.8	ICPM/15344
60138490007	**MW-102_20130207**	EPA 200.8	MPRP/37603	EPA 200.8	ICPM/15344
60138490008	**GW-3_20130208**	EPA 200.8	MPRP/37603	EPA 200.8	ICPM/15344
60138490009	**DR-3_20130208**	EPA 200.8	MPRP/37603	EPA 200.8	ICPM/15344
60138490010	**DR-8_20130208**	EPA 200.8	MPRP/37603	EPA 200.8	ICPM/15344
60138490011	**EB-1_20130208**	EPA 200.8	MPRP/37603	EPA 200.8	ICPM/15344
60138490012	**AT-2_20130208**	EPA 200.8	MPRP/37603	EPA 200.8	ICPM/15344
60138490001	**GW-5_20130207**	EPA 200.8	MPRP/37695	EPA 200.8	ICPM/15374
60138490002	**MW-204_20130207**	EPA 200.8	MPRP/37695	EPA 200.8	ICPM/15374
60138490003	**MW-5 SHALLOW_20130207**	EPA 200.8	MPRP/37695	EPA 200.8	ICPM/15374
60138490004	**MW-5 DEEP_20130207**	EPA 200.8	MPRP/37695	EPA 200.8	ICPM/15374
60138490005	**GW-1_20130206**	EPA 200.8	MPRP/37695	EPA 200.8	ICPM/15374
60138490006	**MW-101_20130206**	EPA 200.8	MPRP/37695	EPA 200.8	ICPM/15374
60138490007	**MW-102_20130207**	EPA 200.8	MPRP/37695	EPA 200.8	ICPM/15374
60138490008	**GW-3_20130208**	EPA 200.8	MPRP/37695	EPA 200.8	ICPM/15374
60138490009	**DR-3_20130208**	EPA 200.8	MPRP/37695	EPA 200.8	ICPM/15374
60138490010	**DR-8_20130208**	EPA 200.8	MPRP/37695	EPA 200.8	ICPM/15374
60138490011	**EB-1_20130208**	EPA 200.8	MPRP/37695	EPA 200.8	ICPM/15374
60138490012	**AT-2_20130208**	EPA 200.8	MPRP/37695	EPA 200.8	ICPM/15374
60138490001	**GW-5_20130207**	EPA 200.8	MPRP/21574	EPA 200.8	ICPM/2042
60138490002	**MW-204_20130207**	EPA 200.8	MPRP/21574	EPA 200.8	ICPM/2042
60138490003	**MW-5 SHALLOW_20130207**	EPA 200.8	MPRP/21574	EPA 200.8	ICPM/2042
60138490004	**MW-5 DEEP_20130207**	EPA 200.8	MPRP/21574	EPA 200.8	ICPM/2042
60138490005	**GW-1_20130206**	EPA 200.8	MPRP/21574	EPA 200.8	ICPM/2042
60138490006	**MW-101_20130206**	EPA 200.8	MPRP/21574	EPA 200.8	ICPM/2042
60138490007	**MW-102_20130207**	EPA 200.8	MPRP/21574	EPA 200.8	ICPM/2042
60138490008	**GW-3_20130208**	EPA 200.8	MPRP/21574	EPA 200.8	ICPM/2042
60138490009	**DR-3_20130208**	EPA 200.8	MPRP/21574	EPA 200.8	ICPM/2042
60138490010	**DR-8_20130208**	EPA 200.8	MPRP/21574	EPA 200.8	ICPM/2042
60138490011	**EB-1_20130208**	EPA 200.8	MPRP/21574	EPA 200.8	ICPM/2042

This report shall not be reproduced, except in full,
without the written consent of Pace Analytical Services, Inc..

Pace Analytical Services, Inc.
9608 Loiret Blvd.
Lenexa, KS 66219
(913)599-5665

QUALITY CONTROL DATA CROSS REFERENCE TABLE

Project: FEBRUARY 2013 RICO WATER SAMPL
Pace Project No.: 60138490

Lab ID	Sample ID	QC Batch Method	QC Batch	Analytical Method	Analytical Batch
60138490012	**AT-2_20130208**	EPA 200.8	MPRP/21574	EPA 200.8	ICPM/2042
60138490001	**GW-5_20130207**	EPA 245.1	MERP/8057	EPA 245.1	MERC/9087
60138490002	**MW-204_20130207**	EPA 245.1	MERP/8057	EPA 245.1	MERC/9087
60138490003	**MW-5 SHALLOW_20130207**	EPA 245.1	MERP/8057	EPA 245.1	MERC/9087
60138490004	**MW-5 DEEP_20130207**	EPA 245.1	MERP/8057	EPA 245.1	MERC/9087
60138490005	**GW-1_20130206**	EPA 245.1	MERP/8057	EPA 245.1	MERC/9087
60138490006	**MW-101_20130206**	EPA 245.1	MERP/8057	EPA 245.1	MERC/9087
60138490007	**MW-102_20130207**	EPA 245.1	MERP/8057	EPA 245.1	MERC/9087
60138490008	**GW-3_20130208**	EPA 245.1	MERP/8057	EPA 245.1	MERC/9087
60138490009	**DR-3_20130208**	EPA 245.1	MERP/8057	EPA 245.1	MERC/9087
60138490010	**DR-8_20130208**	EPA 245.1	MERP/8057	EPA 245.1	MERC/9087
60138490011	**EB-1_20130208**	EPA 245.1	MERP/8057	EPA 245.1	MERC/9087
60138490012	**AT-2_20130208**	EPA 245.1	MERP/8057	EPA 245.1	MERC/9087
60138490001	**GW-5_20130207**	EPA 245.1	MERP/8045	EPA 245.1	MERC/9086
60138490002	**MW-204_20130207**	EPA 245.1	MERP/8045	EPA 245.1	MERC/9086
60138490003	**MW-5 SHALLOW_20130207**	EPA 245.1	MERP/8045	EPA 245.1	MERC/9086
60138490004	**MW-5 DEEP_20130207**	EPA 245.1	MERP/8045	EPA 245.1	MERC/9086
60138490005	**GW-1_20130206**	EPA 245.1	MERP/8045	EPA 245.1	MERC/9086
60138490006	**MW-101_20130206**	EPA 245.1	MERP/8045	EPA 245.1	MERC/9086
60138490007	**MW-102_20130207**	EPA 245.1	MERP/8045	EPA 245.1	MERC/9086
60138490008	**GW-3_20130208**	EPA 245.1	MERP/8045	EPA 245.1	MERC/9086
60138490009	**DR-3_20130208**	EPA 245.1	MERP/8045	EPA 245.1	MERC/9086
60138490010	**DR-8_20130208**	EPA 245.1	MERP/8045	EPA 245.1	MERC/9086
60138490011	**EB-1_20130208**	EPA 245.1	MERP/8045	EPA 245.1	MERC/9086
60138490012	**AT-2_20130208**	EPA 245.1	MERP/8045	EPA 245.1	MERC/9086
60138490001	**GW-5_20130207**	EPA 245.1	MERP/7078	EPA 245.1	MERC/7037
60138490002	**MW-204_20130207**	EPA 245.1	MERP/7078	EPA 245.1	MERC/7037
60138490003	**MW-5 SHALLOW_20130207**	EPA 245.1	MERP/7078	EPA 245.1	MERC/7037
60138490004	**MW-5 DEEP_20130207**	EPA 245.1	MERP/7078	EPA 245.1	MERC/7037
60138490005	**GW-1_20130206**	EPA 245.1	MERP/7078	EPA 245.1	MERC/7037
60138490006	**MW-101_20130206**	EPA 245.1	MERP/7078	EPA 245.1	MERC/7037
60138490007	**MW-102_20130207**	EPA 245.1	MERP/7078	EPA 245.1	MERC/7037
60138490008	**GW-3_20130208**	EPA 245.1	MERP/7078	EPA 245.1	MERC/7037
60138490009	**DR-3_20130208**	EPA 245.1	MERP/7078	EPA 245.1	MERC/7037
60138490010	**DR-8_20130208**	EPA 245.1	MERP/7078	EPA 245.1	MERC/7037
60138490011	**EB-1_20130208**	EPA 245.1	MERP/7078	EPA 245.1	MERC/7037
60138490012	**AT-2_20130208**	EPA 245.1	MERP/7078	EPA 245.1	MERC/7037
60138490001	**GW-5_20130207**	SM 2510B	MT/11314		
60138490002	**MW-204_20130207**	SM 2510B	MT/11314		
60138490003	**MW-5 SHALLOW_20130207**	SM 2510B	MT/11314		
60138490004	**MW-5 DEEP_20130207**	SM 2510B	MT/11314		
60138490005	**GW-1_20130206**	SM 2510B	MT/11314		
60138490006	**MW-101_20130206**	SM 2510B	MT/11314		
60138490007	**MW-102_20130207**	SM 2510B	MT/11314		
60138490008	**GW-3_20130208**	SM 2510B	MT/11314		
60138490009	**DR-3_20130208**	SM 2510B	MT/11314		
60138490010	**DR-8_20130208**	SM 2510B	MT/11314		

This report shall not be reproduced, except in full,
without the written consent of Pace Analytical Services, Inc..

Pace Analytical Services, Inc.
9608 Loiret Blvd.
Lenexa, KS 66219
(913)599-5665

QUALITY CONTROL DATA CROSS REFERENCE TABLE

Project: FEBRUARY 2013 RICO WATER SAMPL
Pace Project No.: 60138490

Lab ID	Sample ID	QC Batch Method	QC Batch	Analytical Method	Analytical Batch
60138490011	**EB-1_20130208**	SM 2510B	MT/11314		
60138490012	**AT-2_20130208**	SM 2510B	MT/11314		
60138490001	**GW-5_20130207**	Calculated	MT/11315		
60138490002	**MW-204_20130207**	Calculated	MT/11315		
60138490003	**MW-5 SHALLOW_20130207**	Calculated	MT/11315		
60138490004	**MW-5 DEEP_20130207**	Calculated	MT/11315		
60138490005	**GW-1_20130206**	Calculated	MT/11315		
60138490006	**MW-101_20130206**	Calculated	MT/11315		
60138490007	**MW-102_20130207**	Calculated	MT/11315		
60138490008	**GW-3_20130208**	Calculated	MT/11315		
60138490009	**DR-3_20130208**	Calculated	MT/11315		
60138490010	**DR-8_20130208**	Calculated	MT/11315		
60138490011	**EB-1_20130208**	Calculated	MT/11315		
60138490012	**AT-2_20130208**	Calculated	MT/11315		
60138490001	**GW-5_20130207**	SM 2320B	WET/39820		
60138490002	**MW-204_20130207**	SM 2320B	WET/39820		
60138490003	**MW-5 SHALLOW_20130207**	SM 2320B	WET/39820		
60138490004	**MW-5 DEEP_20130207**	SM 2320B	WET/39820		
60138490005	**GW-1_20130206**	SM 2320B	WET/39803		
60138490006	**MW-101_20130206**	SM 2320B	WET/39803		
60138490007	**MW-102_20130207**	SM 2320B	WET/39820		
60138490008	**GW-3_20130208**	SM 2320B	WET/39820		
60138490009	**DR-3_20130208**	SM 2320B	WET/39820		
60138490010	**DR-8_20130208**	SM 2320B	WET/39820		
60138490011	**EB-1_20130208**	SM 2320B	WET/39820		
60138490012	**AT-2_20130208**	SM 2320B	WET/39820		
60138490001	**GW-5_20130207**	SM 2540C	WET/39689		
60138490002	**MW-204_20130207**	SM 2540C	WET/39689		
60138490003	**MW-5 SHALLOW_20130207**	SM 2540C	WET/39689		
60138490004	**MW-5 DEEP_20130207**	SM 2540C	WET/39689		
60138490005	**GW-1_20130206**	SM 2540C	WET/39689		
60138490006	**MW-101_20130206**	SM 2540C	WET/39689		
60138490007	**MW-102_20130207**	SM 2540C	WET/39689		
60138490008	**GW-3_20130208**	SM 2540C	WET/39719		
60138490009	**DR-3_20130208**	SM 2540C	WET/39719		
60138490010	**DR-8_20130208**	SM 2540C	WET/39719		
60138490011	**EB-1_20130208**	SM 2540C	WET/39719		
60138490012	**AT-2_20130208**	SM 2540C	WET/39719		
60138490001	**GW-5_20130207**	SM 2540D	WET/39720		
60138490002	**MW-204_20130207**	SM 2540D	WET/39720		
60138490003	**MW-5 SHALLOW_20130207**	SM 2540D	WET/39720		
60138490004	**MW-5 DEEP_20130207**	SM 2540D	WET/39720		
60138490005	**GW-1_20130206**	SM 2540D	WET/39710		
60138490006	**MW-101_20130206**	SM 2540D	WET/39710		

This report shall not be reproduced, except in full,
without the written consent of Pace Analytical Services, Inc..

Pace Analytical Services, Inc.
9608 Loiret Blvd.
Lenexa, KS 66219
(913)599-5665

QUALITY CONTROL DATA CROSS REFERENCE TABLE

Project: FEBRUARY 2013 RICO WATER SAMPL
Pace Project No.: 60138490

Lab ID	Sample ID	QC Batch Method	QC Batch	Analytical Method	Analytical Batch
60138490007	**MW-102_20130207**	SM 2540D	WET/39723		
60138490008	**GW-3_20130208**	SM 2540D	WET/39723		
60138490009	**DR-3_20130208**	SM 2540D	WET/39723		
60138490010	**DR-8_20130208**	SM 2540D	WET/39723		
60138490011	**EB-1_20130208**	SM 2540D	WET/39723		
60138490012	**AT-2_20130208**	SM 2540D	WET/39723		
60138490001	**GW-5_20130207**	SM 4500-S-2 D	WET/39670		
60138490002	**MW-204_20130207**	SM 4500-S-2 D	WET/39670		
60138490003	**MW-5 SHALLOW_20130207**	SM 4500-S-2 D	WET/39670		
60138490004	**MW-5 DEEP_20130207**	SM 4500-S-2 D	WET/39670		
60138490005	**GW-1_20130206**	SM 4500-S-2 D	WET/39670		
60138490006	**MW-101_20130206**	SM 4500-S-2 D	WET/39670		
60138490007	**MW-102_20130207**	SM 4500-S-2 D	WET/39670		
60138490008	**GW-3_20130208**	SM 4500-S-2 D	WET/39670		
60138490009	**DR-3_20130208**	SM 4500-S-2 D	WET/39670		
60138490010	**DR-8_20130208**	SM 4500-S-2 D	WET/39670		
60138490011	**EB-1_20130208**	SM 4500-S-2 D	WET/39670		
60138490012	**AT-2_20130208**	SM 4500-S-2 D	WET/39670		
60138490001	**GW-5_20130207**	EPA 300.0	WETA/23506		
60138490002	**MW-204_20130207**	EPA 300.0	WETA/23506		
60138490003	**MW-5 SHALLOW_20130207**	EPA 300.0	WETA/23557		
60138490004	**MW-5 DEEP_20130207**	EPA 300.0	WETA/23506		
60138490005	**GW-1_20130206**	EPA 300.0	WETA/23506		
60138490006	**MW-101_20130206**	EPA 300.0	WETA/23506		
60138490007	**MW-102_20130207**	EPA 300.0	WETA/23506		
60138490008	**GW-3_20130208**	EPA 300.0	WETA/23506		
60138490009	**DR-3_20130208**	EPA 300.0	WETA/23506		
60138490010	**DR-8_20130208**	EPA 300.0	WETA/23506		
60138490011	**EB-1_20130208**	EPA 300.0	WETA/23506		
60138490012	**AT-2_20130208**	EPA 300.0	WETA/23506		
60138490001	**GW-5_20130207**	EPA 353.2	WETA/23599		
60138490002	**MW-204_20130207**	EPA 353.2	WETA/23599		
60138490003	**MW-5 SHALLOW_20130207**	EPA 353.2	WETA/23599		
60138490004	**MW-5 DEEP_20130207**	EPA 353.2	WETA/23652		
60138490005	**GW-1_20130206**	EPA 353.2	WETA/23652		
60138490006	**MW-101_20130206**	EPA 353.2	WETA/23652		
60138490007	**MW-102_20130207**	EPA 353.2	WETA/23652		
60138490008	**GW-3_20130208**	EPA 353.2	WETA/23652		
60138490009	**DR-3_20130208**	EPA 353.2	WETA/23652		
60138490010	**DR-8_20130208**	EPA 353.2	WETA/23652		
60138490011	**EB-1_20130208**	EPA 353.2	WETA/23652		
60138490012	**AT-2_20130208**	EPA 353.2	WETA/23652		
60138490001	**GW-5_20130207**	SM 4500-CN-E	WETA/23511		
60138490002	**MW-204_20130207**	SM 4500-CN-E	WETA/23511		
60138490003	**MW-5 SHALLOW_20130207**	SM 4500-CN-E	WETA/23511		

This report shall not be reproduced, except in full,
without the written consent of Pace Analytical Services, Inc..

Pace Analytical Services, Inc.
9608 Loiret Blvd.
Lenexa, KS 66219
(913)599-5665

QUALITY CONTROL DATA CROSS REFERENCE TABLE

Project: FEBRUARY 2013 RICO WATER SAMPL
Pace Project No.: 60138490

Lab ID	Sample ID	QC Batch Method	QC Batch	Analytical Method	Analytical Batch
60138490004	**MW-5 DEEP_20130207**	SM 4500-CN-E	WETA/23511		
60138490005	**GW-1_20130206**	SM 4500-CN-E	WETA/23511		
60138490006	**MW-101_20130206**	SM 4500-CN-E	WETA/23511		
60138490007	**MW-102_20130207**	SM 4500-CN-E	WETA/23511		
60138490008	**GW-3_20130208**	SM 4500-CN-E	WETA/23511		
60138490009	**DR-3_20130208**	SM 4500-CN-E	WETA/23511		
60138490010	**DR-8_20130208**	SM 4500-CN-E	WETA/23512		
60138490011	**EB-1_20130208**	SM 4500-CN-E	WETA/23512		
60138490012	**AT-2_20130208**	SM 4500-CN-E	WETA/23512		
60138490001	**GW-5_20130207**	SM 5310C	WETA/16266		
60138490002	**MW-204_20130207**	SM 5310C	WETA/16266		
60138490003	**MW-5 SHALLOW_20130207**	SM 5310C	WETA/16266		
60138490004	**MW-5 DEEP_20130207**	SM 5310C	WETA/16266		
60138490005	**GW-1_20130206**	SM 5310C	WETA/16266		
60138490006	**MW-101_20130206**	SM 5310C	WETA/16266		
60138490007	**MW-102_20130207**	SM 5310C	WETA/16266		
60138490008	**GW-3_20130208**	SM 5310C	WETA/16266		
60138490009	**DR-3_20130208**	SM 5310C	WETA/16266		
60138490010	**DR-8_20130208**	SM 5310C	WETA/16266		
60138490011	**EB-1_20130208**	SM 5310C	WETA/16266		
60138490012	**AT-2_20130208**	SM 5310C	WETA/16266		

This report shall not be reproduced, except in full,
without the written consent of Pace Analytical Services, Inc..

Pace Analytical Services, Inc.
9608 Loiret Blvd.
Lenexa, KS 66219
(913)599-5665

QUALITY CONTROL DATA

Project: February 2013 Rico Water Sampl
Pace Project No.: 60138913

QC Batch: MERP/8067 Analysis Method: EPA 245.1
QC Batch Method: EPA 245.1 Analysis Description: 245.1 Mercury
Associated Lab Samples: 60138913001, 60138913002, 60138913003, 60138913004, 60138913005, 60138913006, 60138913007, 60138913008, 60138913009, 60138913010, 60138913011, 60138913012, 60138913013, 60138913014, 60138913015, 60138913016, 60138913017

METHOD BLANK: 1380040 Matrix: Water
Associated Lab Samples: 60138913001, 60138913002, 60138913003, 60138913004, 60138913005, 60138913006, 60138913007, 60138913008, 60138913009, 60138913010, 60138913011, 60138913012, 60138913013, 60138913014, 60138913015, 60138913016, 60138913017

Parameter	Units	Blank Result	Reporting Limit	Analyzed	Qualifiers
Mercury	ug/L	ND	0.20	02/27/13 15:42	

LABORATORY CONTROL SAMPLE: 1380041

Parameter	Units	Spike Conc.	LCS Result	LCS % Rec	% Rec Limits	Qualifiers
Mercury	ug/L	5	4.4	87	85-115	

MATRIX SPIKE & MATRIX SPIKE DUPLICATE: 1380042 1380043

Parameter	Units	60138913001 Result	MS Spike Conc.	MSD Spike Conc.	MS Result	MSD Result	MS % Rec	MSD % Rec	% Rec Limits	RPD	Max RPD	Qual
Mercury	ug/L	0.30	5	5	4.6	4.9	86	93	85-115	7	30	

MATRIX SPIKE SAMPLE: 1380044

Parameter	Units	60138913017 Result	Spike Conc.	MS Result	MS % Rec	% Rec Limits	Qualifiers
Mercury	ug/L	ND	5	4.7	94	85-115	

This report shall not be reproduced, except in full,
without the written consent of Pace Analytical Services, Inc..

Pace Analytical Services, Inc.
9608 Loiret Blvd.
Lenexa, KS 66219
(913)599-5665

QUALITY CONTROL DATA

Project: February 2013 Rico Water Sampl
Pace Project No.: 60138913

QC Batch: MERP/8072 Analysis Method: EPA 245.1
QC Batch Method: EPA 245.1 Analysis Description: 245.1 Mercury - Dissolved
Associated Lab Samples: 60138913001, 60138913002, 60138913003, 60138913004, 60138913005, 60138913006, 60138913007, 60138913008, 60138913009, 60138913010, 60138913011, 60138913012, 60138913013, 60138913014, 60138913015, 60138913016, 60138913017

METHOD BLANK: 1380542 Matrix: Water
Associated Lab Samples: 60138913001, 60138913002, 60138913003, 60138913004, 60138913005, 60138913006, 60138913007, 60138913008, 60138913009, 60138913010, 60138913011, 60138913012, 60138913013, 60138913014, 60138913015, 60138913016, 60138913017

Parameter	Units	Blank Result	Reporting Limit	Analyzed	Qualifiers
Mercury, Dissolved	ug/L	ND	0.20	02/27/13 16:51	

LABORATORY CONTROL SAMPLE: 1380543

Parameter	Units	Spike Conc.	LCS Result	LCS % Rec	% Rec Limits	Qualifiers
Mercury, Dissolved	ug/L	5	5.1	101	85-115	

MATRIX SPIKE SAMPLE: 1380546

Parameter	Units	60138913016 Result	Spike Conc.	MS Result	MS % Rec	% Rec Limits	Qualifiers
Mercury, Dissolved	ug/L	ND	5	4.4	88	85-115	

MATRIX SPIKE & MATRIX SPIKE DUPLICATE: 1381039 1381040

Parameter	Units	60138913002 Result	MS Spike Conc.	MSD Spike Conc.	MS Result	MSD Result	MS % Rec	MSD % Rec	% Rec Limits	RPD	Max RPD	Qual
Mercury, Dissolved	ug/L	ND	5	5	5.0	5.1	99	101	85-115	2	20	

This report shall not be reproduced, except in full,
without the written consent of Pace Analytical Services, Inc..

Pace Analytical Services, Inc.
9608 Loiret Blvd.
Lenexa, KS 66219
(913)599-5665

QUALITY CONTROL DATA

Project: February 2013 Rico Water Sampl
Pace Project No.: 60138913

QC Batch: MERP/7109 — Analysis Method: EPA 245.1
QC Batch Method: EPA 245.1 — Analysis Description: 245.1 Mercury, Potentially Dissolved
Associated Lab Samples: 60138913001, 60138913002, 60138913003, 60138913004, 60138913005, 60138913006, 60138913007, 60138913008, 60138913009, 60138913010, 60138913011, 60138913012, 60138913013, 60138913014, 60138913015, 60138913016, 60138913017

METHOD BLANK: 1144852 — Matrix: Water
Associated Lab Samples: 60138913001, 60138913002, 60138913003, 60138913004, 60138913005, 60138913006, 60138913007, 60138913008, 60138913009, 60138913010, 60138913011, 60138913012, 60138913013, 60138913014, 60138913015, 60138913016, 60138913017

Parameter	Units	Blank Result	Reporting Limit	Analyzed	Qualifiers
Mercury, Dissolved	ug/L	ND	0.20	02/27/13 10:55	

LABORATORY CONTROL SAMPLE: 1144853

Parameter	Units	Spike Conc.	LCS Result	LCS % Rec	% Rec Limits	Qualifiers
Mercury, Dissolved	ug/L	5	5.3	106	85-115	

MATRIX SPIKE & MATRIX SPIKE DUPLICATE: 1144854 1144855

Parameter	Units	60138913003 Result	MS Spike Conc.	MSD Spike Conc.	MS Result	MSD Result	MS % Rec	MSD % Rec	% Rec Limits	RPD	Max RPD	Qual
Mercury, Dissolved	ug/L	ND	5	5	4.8	5.1	96	101	70-130	6	20	

MATRIX SPIKE SAMPLE: 1144864

Parameter	Units	60138913017 Result	Spike Conc.	MS Result	MS % Rec	% Rec Limits	Qualifiers
Mercury, Dissolved	ug/L	ND	5	4.8	97	70-130	

This report shall not be reproduced, except in full,
without the written consent of Pace Analytical Services, Inc..

Pace Analytical Services, Inc.
9608 Loiret Blvd.
Lenexa, KS 66219
(913)599-5665

QUALITY CONTROL DATA

Project: February 2013 Rico Water Sampl
Pace Project No.: 60138913

QC Batch: MPRP/21610 | Analysis Method: EPA 200.7
QC Batch Method: EPA 200.7 | Analysis Description: 200.7 Potentially Dissolved Metals
Associated Lab Samples: 60138913001, 60138913002, 60138913003, 60138913004, 60138913005, 60138913006, 60138913007, 60138913008, 60138913009, 60138913010, 60138913011, 60138913012, 60138913013, 60138913014, 60138913015, 60138913016, 60138913017

METHOD BLANK: 1143260 | Matrix: Water
Associated Lab Samples: 60138913001, 60138913002, 60138913003, 60138913004, 60138913005, 60138913006, 60138913007, 60138913008, 60138913009, 60138913010, 60138913011, 60138913012, 60138913013, 60138913014, 60138913015, 60138913016, 60138913017

Parameter	Units	Blank Result	Reporting Limit	Analyzed	Qualifiers
Calcium, Dissolved	ug/L	77.6J	100	02/28/13 14:06	
Magnesium, Dissolved	ug/L	11.0J	50.0	02/28/13 14:06	
Potassium, Dissolved	ug/L	95.2J	500	02/28/13 14:06	
Sodium, Dissolved	ug/L	86.9J	500	02/28/13 14:06	

LABORATORY CONTROL SAMPLE: 1143261

Parameter	Units	Spike Conc.	LCS Result	LCS % Rec	% Rec Limits	Qualifiers
Calcium, Dissolved	ug/L	10000	9660	97	85-115	
Magnesium, Dissolved	ug/L	10000	10000	100	85-115	
Potassium, Dissolved	ug/L	10000	9780	98	85-115	
Sodium, Dissolved	ug/L	10000	9860	99	85-115	

MATRIX SPIKE & MATRIX SPIKE DUPLICATE: 1143262 1143263

Parameter	Units	60138913001 Result	MS Spike Conc.	MSD Spike Conc.	MS Result	MSD Result	MS % Rec	MSD % Rec	% Rec Limits	RPD	Max RPD	Qual
Calcium, Dissolved	ug/L	226000	10000	10000	237000	235000	111	94	70-130	1	20	
Magnesium, Dissolved	ug/L	24700	10000	10000	34400	34100	97	94	70-130	1	20	
Potassium, Dissolved	ug/L	4220	10000	10000	14600	14500	104	103	70-130	1	20	
Sodium, Dissolved	ug/L	11500	10000	10000	22100	21900	106	104	70-130	1	20	

MATRIX SPIKE SAMPLE: 1143264

Parameter	Units	60138913010 Result	Spike Conc.	MS Result	MS % Rec	% Rec Limits	Qualifiers
Calcium, Dissolved	ug/L	237000	10000	255000	177	70-130	M1
Magnesium, Dissolved	ug/L	23200	10000	33500	103	70-130	
Potassium, Dissolved	ug/L	13200	10000	24200	110	70-130	
Sodium, Dissolved	ug/L	14000	10000	25100	111	70-130	

This report shall not be reproduced, except in full,
without the written consent of Pace Analytical Services, Inc..

Pace Analytical Services, Inc.
9608 Loiret Blvd.
Lenexa, KS 66219
(913)599-5665

QUALITY CONTROL DATA

Project: February 2013 Rico Water Sampl
Pace Project No.: 60138913

QC Batch: MPRP/37682 Analysis Method: EPA 200.8
QC Batch Method: EPA 200.8 Analysis Description: 200.8 MET
Associated Lab Samples: 60138913001, 60138913002, 60138913003, 60138913004, 60138913005, 60138913006, 60138913007, 60138913008, 60138913009, 60138913010, 60138913011, 60138913012, 60138913013, 60138913014, 60138913015, 60138913016, 60138913017

METHOD BLANK: 1379975 Matrix: Water
Associated Lab Samples: 60138913001, 60138913002, 60138913003, 60138913004, 60138913005, 60138913006, 60138913007, 60138913008, 60138913009, 60138913010, 60138913011, 60138913012, 60138913013, 60138913014, 60138913015, 60138913016, 60138913017

Parameter	Units	Blank Result	Reporting Limit	Analyzed	Qualifiers
Aluminum	ug/L	ND	4.0	02/23/13 23:08	
Antimony	ug/L	ND	0.50	02/23/13 23:08	
Arsenic	ug/L	ND	0.50	02/23/13 23:08	
Barium	ug/L	ND	0.30	02/23/13 23:08	
Beryllium	ug/L	ND	0.20	02/23/13 23:08	
Cadmium	ug/L	ND	0.080	02/23/13 23:08	
Calcium	ug/L	ND	20.0	02/23/13 23:08	
Chromium	ug/L	ND	0.50	02/23/13 23:08	
Cobalt	ug/L	ND	0.50	02/23/13 23:08	
Copper	ug/L	ND	0.50	02/23/13 23:08	
Iron	ug/L	ND	50.0	02/23/13 23:08	
Lead	ug/L	ND	0.10	02/23/13 23:08	
Magnesium	ug/L	ND	5.0	02/23/13 23:08	
Manganese	ug/L	ND	0.50	02/23/13 23:08	
Molybdenum	ug/L	ND	0.50	02/23/13 23:08	
Nickel	ug/L	ND	0.50	02/23/13 23:08	
Potassium	ug/L	ND	20.0	02/26/13 15:44	
Selenium	ug/L	ND	0.50	02/23/13 23:08	
Silica	ug/L	ND	53.5	02/24/13 09:58	
Silver	ug/L	ND	0.50	02/24/13 09:58	
Sodium	ug/L	ND	50.0	02/23/13 23:08	
Thallium	ug/L	ND	0.10	02/23/13 23:08	
Total Hardness by 2340B	ug/L	ND	71.0	02/23/13 23:08	
Vanadium	ug/L	ND	0.10	02/23/13 23:08	
Zinc	ug/L	ND	5.0	02/23/13 23:08	

LABORATORY CONTROL SAMPLE: 1379976

Parameter	Units	Spike Conc.	LCS Result	LCS % Rec	% Rec Limits	Qualifiers
Aluminum	ug/L	80	82.2	103	85-115	
Antimony	ug/L	80	79.6	100	85-115	
Arsenic	ug/L	80	82.6	103	85-115	
Barium	ug/L	80	81.6	102	85-115	
Beryllium	ug/L	80	84.2	105	85-115	
Cadmium	ug/L	80	80.8	101	85-115	
Calcium	ug/L	1000	1090	109	85-115	
Chromium	ug/L	80	82.2	103	85-115	
Cobalt	ug/L	80	82.8	104	85-115	

This report shall not be reproduced, except in full,
without the written consent of Pace Analytical Services, Inc..

Pace Analytical Services, Inc.
9608 Loiret Blvd.
Lenexa, KS 66219
(913)599-5665

QUALITY CONTROL DATA

Project: February 2013 Rico Water Sampl
Pace Project No.: 60138913

LABORATORY CONTROL SAMPLE: 1379976

Parameter	Units	Spike Conc.	LCS Result	LCS % Rec	% Rec Limits	Qualifiers
Copper	ug/L	80	84.7	106	85-115	
Iron	ug/L	1000	1020	102	85-115	
Lead	ug/L	80	83.1	104	85-115	
Magnesium	ug/L	1000	1040	104	85-115	
Manganese	ug/L	80	81.0	101	85-115	
Molybdenum	ug/L	80	84.2	105	85-115	
Nickel	ug/L	80	83.0	104	85-115	
Potassium	ug/L	1000	936	94	85-115	
Selenium	ug/L	80	82.2	103	85-115	
Silica	ug/L	2140	2110	99	85-115	
Silver	ug/L	80	73.0	91	85-115	
Sodium	ug/L	1000	1020	102	85-115	
Thallium	ug/L	80	82.3	103	85-115	
Total Hardness by 2340B	ug/L	6620	7010	106	85-115	
Vanadium	ug/L	80	82.2	103	85-115	
Zinc	ug/L	80	83.6	105	85-115	

MATRIX SPIKE & MATRIX SPIKE DUPLICATE: 1379977 1379978

Parameter	Units	60138913001 Result	MS Spike Conc.	MSD Spike Conc.	MS Result	MSD Result	MS % Rec	MSD % Rec	% Rec Limits	RPD	Max RPD	Qual
Aluminum	ug/L	13400	80	80	20500	20300	8820	8580	70-130	.9	20	M1
Antimony	ug/L	0.68	80	80	58.0	58.6	72	72	70-130	1	20	
Arsenic	ug/L	14.7	80	80	97.8	97.9	104	104	70-130	.1	20	
Barium	ug/L	224	80	80	333	325	136	125	70-130	3	20	M1
Beryllium	ug/L	1.0	80	80	84.3	84.9	104	105	70-130	.7	20	
Cadmium	ug/L	10.0	80	80	91.3	89.4	102	99	70-130	2	20	
Calcium	ug/L	239000	1000	1000	243000	242000	345	225	70-130	.5	20	E,M1
Chromium	ug/L	13.9	80	80	101	100	109	108	70-130	1	20	
Cobalt	ug/L	6.6	80	80	87.6	87.2	101	101	70-130	.6	20	
Copper	ug/L	108	80	80	191	189	105	102	70-130	1	20	
Iron	ug/L	23000	1000	1000	25000	24700	202	168	70-130	1	20	M1
Lead	ug/L	158	80	80	252	247	116	111	70-130	2	20	
Magnesium	ug/L	27700	1000	1000	29900	30000	224	231	70-130	.2	20	M1
Manganese	ug/L	1780	80	80	1900	1880	148	122	70-130	1	20	M1
Molybdenum	ug/L	12.7	80	80	95.7	93.9	104	101	70-130	2	20	
Nickel	ug/L	11.3	80	80	93.2	93.7	102	103	70-130	.5	20	
Potassium	ug/L	6980	1000	1000	10100	9960	314	299	70-130	1	20	M1
Selenium	ug/L	3.4	80	80	84.4	84.8	101	102	70-130	.4	20	
Silica	ug/L	60600	2140	2140	82500	83400	1020	1060	70-130	1	20	M1
Silver	ug/L	1.0	80	80	70.1	71.2	86	88	70-130	1	20	
Sodium	ug/L	12400	1000	1000	12800	12600	39	26	70-130	1	20	M1
Thallium	ug/L	0.49	80	80	79.0	78.2	98	97	70-130	1	20	
Total Hardness by 2340B	ug/L	712000	6620	6620	730000	727000	270	229	70-130	.4	20	M1
Vanadium	ug/L	29.1	80	80	123	124	118	118	70-130	.3	20	
Zinc	ug/L	493	80	80	574	568	101	94	70-130	1	20	

This report shall not be reproduced, except in full,
without the written consent of Pace Analytical Services, Inc..

Pace Analytical Services, Inc.
9608 Loiret Blvd.
Lenexa, KS 66219
(913)599-5665

QUALITY CONTROL DATA

Project: February 2013 Rico Water Sampl
Pace Project No.: 60138913

QC Batch: MPRP/37684 Analysis Method: EPA 200.8
QC Batch Method: EPA 200.8 Analysis Description: 200.8 MET Dissolved
Associated Lab Samples: 60138913001, 60138913002, 60138913003, 60138913004, 60138913005, 60138913006, 60138913007, 60138913008, 60138913009, 60138913010, 60138913011, 60138913012, 60138913013, 60138913014, 60138913015, 60138913016, 60138913017

METHOD BLANK: 1379983 Matrix: Water
Associated Lab Samples: 60138913001, 60138913002, 60138913003, 60138913004, 60138913005, 60138913006, 60138913007, 60138913008, 60138913009, 60138913010, 60138913011, 60138913012, 60138913013, 60138913014, 60138913015, 60138913016, 60138913017

Parameter	Units	Blank Result	Reporting Limit	Analyzed	Qualifiers
Aluminum, Dissolved	ug/L	ND	4.0	02/23/13 14:13	
Antimony, Dissolved	ug/L	ND	0.50	02/23/13 14:13	
Arsenic, Dissolved	ug/L	ND	0.50	02/23/13 14:13	
Barium, Dissolved	ug/L	ND	0.30	02/23/13 14:13	
Beryllium, Dissolved	ug/L	ND	0.20	02/23/13 14:13	
Cadmium, Dissolved	ug/L	ND	0.080	02/23/13 14:13	
Calcium, Dissolved	ug/L	ND	20.0	02/23/13 14:13	
Chromium, Dissolved	ug/L	ND	0.50	02/23/13 14:13	
Cobalt, Dissolved	ug/L	ND	0.50	02/23/13 14:13	
Copper, Dissolved	ug/L	ND	0.50	02/23/13 14:13	
Iron, Dissolved	ug/L	ND	50.0	02/23/13 14:13	
Lead, Dissolved	ug/L	ND	0.10	02/23/13 14:13	
Magnesium, Dissolved	ug/L	ND	5.0	02/23/13 14:13	
Manganese, Dissolved	ug/L	ND	0.50	02/23/13 14:13	
Molybdenum, Dissolved	ug/L	ND	0.50	02/23/13 14:13	
Nickel, Dissolved	ug/L	ND	0.50	02/23/13 14:13	
Potassium, Dissolved	ug/L	ND	20.0	02/23/13 14:13	
Selenium, Dissolved	ug/L	ND	0.50	02/23/13 14:13	
Silver, Dissolved	ug/L	ND	0.50	02/23/13 14:13	
Sodium, Dissolved	ug/L	ND	50.0	02/23/13 14:13	
Thallium, Dissolved	ug/L	ND	0.10	02/23/13 14:13	
Vanadium, Dissolved	ug/L	ND	0.10	02/23/13 14:13	
Zinc, Dissolved	ug/L	ND	5.0	02/23/13 14:13	

LABORATORY CONTROL SAMPLE: 1379984

Parameter	Units	Spike Conc.	LCS Result	LCS % Rec	% Rec Limits	Qualifiers
Aluminum, Dissolved	ug/L	80	84.3	105	85-115	
Antimony, Dissolved	ug/L	80	86.8	108	85-115	
Arsenic, Dissolved	ug/L	80	86.0	108	85-115	
Barium, Dissolved	ug/L	80	84.4	105	85-115	
Beryllium, Dissolved	ug/L	80	85.6	107	85-115	
Cadmium, Dissolved	ug/L	80	86.4	108	85-115	
Calcium, Dissolved	ug/L	1000	1040	104	85-115	
Chromium, Dissolved	ug/L	80	84.0	105	85-115	
Cobalt, Dissolved	ug/L	80	86.7	108	85-115	
Copper, Dissolved	ug/L	80	89.8	112	85-115	
Iron, Dissolved	ug/L	1000	1080	108	85-115	

This report shall not be reproduced, except in full,
without the written consent of Pace Analytical Services, Inc..

Pace Analytical Services, Inc.
9608 Loiret Blvd.
Lenexa, KS 66219
(913)599-5665

QUALITY CONTROL DATA

Project: February 2013 Rico Water Sampl
Pace Project No.: 60138913

LABORATORY CONTROL SAMPLE: 1379984

Parameter	Units	Spike Conc.	LCS Result	LCS % Rec	% Rec Limits	Qualifiers
Lead, Dissolved	ug/L	80	85.3	107	85-115	
Magnesium, Dissolved	ug/L	1000	1090	109	85-115	
Manganese, Dissolved	ug/L	80	84.3	105	85-115	
Molybdenum, Dissolved	ug/L	80	86.2	108	85-115	
Nickel, Dissolved	ug/L	80	87.4	109	85-115	
Potassium, Dissolved	ug/L	1000	1090	109	85-115	
Selenium, Dissolved	ug/L	80	85.1	106	85-115	
Silver, Dissolved	ug/L	80	81.4	102	85-115	
Sodium, Dissolved	ug/L	1000	1060	106	85-115	
Thallium, Dissolved	ug/L	80	85.1	106	85-115	
Vanadium, Dissolved	ug/L	80	86.1	108	85-115	
Zinc, Dissolved	ug/L	80	87.1	109	85-115	

MATRIX SPIKE & MATRIX SPIKE DUPLICATE: 1379985 1379986

Parameter	Units	60138913001 Result	MS Spike Conc.	MSD Spike Conc.	MS Result	MSD Result	MS % Rec	MSD % Rec	% Rec Limits	RPD	Max RPD	Qual
Aluminum, Dissolved	ug/L	73.7	80	80	301	196	284	153	70-130	42	20	M1,R1
Antimony, Dissolved	ug/L	ND	80	80	86.8	85.1	108	106	70-130	2	20	
Arsenic, Dissolved	ug/L	0.78	80	80	89.8	86.9	111	108	70-130	3	20	
Barium, Dissolved	ug/L	21.7	80	80	103	101	101	99	70-130	1	20	
Beryllium, Dissolved	ug/L	ND	80	80	83.0	83.0	104	104	70-130	0	20	
Cadmium, Dissolved	ug/L	0.43	80	80	86.6	85.8	108	107	70-130	.9	20	
Calcium, Dissolved	ug/L	249000	1000	1000	253000	250000	360	125	70-130	.9	20	E,M1
Chromium, Dissolved	ug/L	ND	80	80	86.2	85.6	108	107	70-130	.8	20	
Cobalt, Dissolved	ug/L	1.1	80	80	87.5	86.6	108	107	70-130	1	20	
Copper, Dissolved	ug/L	2.4	80	80	91.0	90.6	111	110	70-130	.6	20	
Iron, Dissolved	ug/L	1010	1000	1000	2100	2090	109	108	70-130	.2	20	
Lead, Dissolved	ug/L	1.4	80	80	83.6	83.4	103	103	70-130	.2	20	
Magnesium, Dissolved	ug/L	24400	1000	1000	25300	25000	85	58	70-130	1	20	M1
Manganese, Dissolved	ug/L	1570	80	80	1650	1650	109	106	70-130	.2	20	
Molybdenum, Dissolved	ug/L	8.4	80	80	99.2	96.2	113	110	70-130	3	20	
Nickel, Dissolved	ug/L	0.85	80	80	89.8	88.8	111	110	70-130	1	20	
Potassium, Dissolved	ug/L	4030	1000	1000	5260	5200	122	117	70-130	1	20	
Selenium, Dissolved	ug/L	ND	80	80	83.2	84.7	104	106	70-130	2	20	
Silver, Dissolved	ug/L	ND	80	80	70.6	73.2	88	91	70-130	4	20	
Sodium, Dissolved	ug/L	12300	1000	1000	12700	12600	44	30	70-130	1	20	M1
Thallium, Dissolved	ug/L	ND	80	80	83.2	84.0	104	105	70-130	1	20	
Vanadium, Dissolved	ug/L	0.35	80	80	88.4	87.7	110	109	70-130	.7	20	
Zinc, Dissolved	ug/L	39.3	80	80	127	125	109	108	70-130	1	20	

This report shall not be reproduced, except in full,
without the written consent of Pace Analytical Services, Inc..

Pace Analytical Services, Inc.
9608 Loiret Blvd.
Lenexa, KS 66219
(913)599-5665

QUALITY CONTROL DATA

Project: February 2013 Rico Water Sampl
Pace Project No.: 60138913

QC Batch: MPRP/21611 | Analysis Method: EPA 200.8
QC Batch Method: EPA 200.8 | Analysis Description: 200.8 Potentially Dissolved Metals
Associated Lab Samples: 60138913001, 60138913002, 60138913003, 60138913004, 60138913005, 60138913006, 60138913007, 60138913008, 60138913009, 60138913010, 60138913011, 60138913012, 60138913013, 60138913014, 60138913015, 60138913016, 60138913017

METHOD BLANK: 1143265 | Matrix: Water
Associated Lab Samples: 60138913001, 60138913002, 60138913003, 60138913004, 60138913005, 60138913006, 60138913007, 60138913008, 60138913009, 60138913010, 60138913011, 60138913012, 60138913013, 60138913014, 60138913015, 60138913016, 60138913017

Parameter	Units	Blank Result	Reporting Limit	Analyzed	Qualifiers
Aluminum, Dissolved	ug/L	10.2J	50.0	03/04/13 10:32	
Antimony, Dissolved	ug/L	ND	1.0	03/04/13 10:32	
Arsenic, Dissolved	ug/L	ND	1.0	03/04/13 10:32	
Barium, Dissolved	ug/L	0.25J	1.0	03/04/13 10:32	
Beryllium, Dissolved	ug/L	ND	0.50	03/04/13 10:32	
Cadmium, Dissolved	ug/L	ND	0.50	03/04/13 10:32	
Chromium, Dissolved	ug/L	0.36J	1.0	03/04/13 10:32	
Cobalt, Dissolved	ug/L	ND	1.0	03/04/13 10:32	
Copper, Dissolved	ug/L	ND	1.0	03/04/13 10:32	
Iron, Dissolved	ug/L	6.6J	50.0	03/04/13 10:32	
Lead, Dissolved	ug/L	0.25J	1.0	03/04/13 10:32	
Manganese, Dissolved	ug/L	0.26J	1.0	03/04/13 10:32	
Molybdenum, Dissolved	ug/L	ND	1.0	03/04/13 10:32	
Nickel, Dissolved	ug/L	ND	1.0	03/04/13 10:32	
Selenium, Dissolved	ug/L	ND	1.0	03/04/13 10:32	
Silver, Dissolved	ug/L	ND	0.50	03/04/13 10:32	
Thallium, Dissolved	ug/L	ND	1.0	03/04/13 10:32	
Vanadium, Dissolved	ug/L	ND	1.0	03/04/13 10:32	
Zinc, Dissolved	ug/L	5.6J	10.0	03/04/13 10:32	

LABORATORY CONTROL SAMPLE: 1143266

Parameter	Units	Spike Conc.	LCS Result	LCS % Rec	% Rec Limits	Qualifiers
Aluminum, Dissolved	ug/L	1000	940	94	85-115	
Antimony, Dissolved	ug/L	40	40.5	101	85-115	
Arsenic, Dissolved	ug/L	40	41.0	102	85-115	
Barium, Dissolved	ug/L	40	39.0	98	85-115	
Beryllium, Dissolved	ug/L	40	41.0	102	85-115	
Cadmium, Dissolved	ug/L	40	40.4	101	85-115	
Chromium, Dissolved	ug/L	40	40.4	101	85-115	
Cobalt, Dissolved	ug/L	40	39.7	99	85-115	
Copper, Dissolved	ug/L	40	39.8	99	85-115	
Iron, Dissolved	ug/L	1000	948	95	85-115	
Lead, Dissolved	ug/L	40	38.9	97	85-115	
Manganese, Dissolved	ug/L	40	40.6	101	85-115	
Molybdenum, Dissolved	ug/L	40	39.8	99	85-115	
Nickel, Dissolved	ug/L	40	40.2	100	85-115	
Selenium, Dissolved	ug/L	40	40.8	102	85-115	

This report shall not be reproduced, except in full,
without the written consent of Pace Analytical Services, Inc..

Pace Analytical Services, Inc.
9608 Loiret Blvd.
Lenexa, KS 66219
(913)599-5665

QUALITY CONTROL DATA

Project: February 2013 Rico Water Sampl
Pace Project No.: 60138913

LABORATORY CONTROL SAMPLE: 1143266

Parameter	Units	Spike Conc.	LCS Result	LCS % Rec	% Rec Limits	Qualifiers
Silver, Dissolved	ug/L	20	19.5	98	85-115	
Thallium, Dissolved	ug/L	40	40.0	100	85-115	
Vanadium, Dissolved	ug/L	40	40.4	101	85-115	
Zinc, Dissolved	ug/L	100	108	108	85-115	

MATRIX SPIKE & MATRIX SPIKE DUPLICATE: 1143267 1143268

Parameter	Units	60138913002 Result	MS Spike Conc.	MSD Spike Conc.	MS Result	MSD Result	MS % Rec	MSD % Rec	% Rec Limits	RPD	Max RPD	Qual
Aluminum, Dissolved	ug/L	3680	1000	1000	4440	4490	76	81	70-130	1	20	
Antimony, Dissolved	ug/L	0.29J	40	40	39.5	40.0	98	99	70-130	1	20	
Arsenic, Dissolved	ug/L	5.4	40	40	46.9	47.1	104	104	70-130	0	20	
Barium, Dissolved	ug/L	44.2	40	40	80.4	81.8	91	94	70-130	2	20	
Beryllium, Dissolved	ug/L	0.90	40	40	34.1	34.8	83	85	70-130	2	20	
Cadmium, Dissolved	ug/L	8.7	40	40	45.8	45.7	93	92	70-130	0	20	
Chromium, Dissolved	ug/L	8.1	40	40	45.5	45.9	94	95	70-130	1	20	
Cobalt, Dissolved	ug/L	3.4	40	40	40.2	40.4	92	93	70-130	1	20	
Copper, Dissolved	ug/L	48.6	40	40	82.4	82.2	84	84	70-130	0	20	
Iron, Dissolved	ug/L	11100	1000	1000	11700	11800	58	63	70-130	0	20	M1
Lead, Dissolved	ug/L	152	40	40	182	182	73	74	70-130	0	20	
Manganese, Dissolved	ug/L	818	40	40	836	839	44	51	70-130	0	20	M1
Molybdenum, Dissolved	ug/L	3.7	40	40	44.5	44.6	102	102	70-130	0	20	
Nickel, Dissolved	ug/L	3.5	40	40	38.9	39.3	88	89	70-130	1	20	
Selenium, Dissolved	ug/L	4.2	40	40	44.9	44.8	102	102	70-130	0	20	
Silver, Dissolved	ug/L	1.6	20	20	18.5	18.6	85	85	70-130	1	20	
Thallium, Dissolved	ug/L	0.17J	40	40	41.9	42.4	104	105	70-130	1	20	
Vanadium, Dissolved	ug/L	10.1	40	40	48.8	49.4	97	98	70-130	1	20	
Zinc, Dissolved	ug/L	275	100	100	366	363	91	88	70-130	1	20	

MATRIX SPIKE SAMPLE: 1143269

Parameter	Units	60138913011 Result	Spike Conc.	MS Result	MS % Rec	% Rec Limits	Qualifiers
Aluminum, Dissolved	ug/L	1240	1000	2110	88	70-130	
Antimony, Dissolved	ug/L	0.16J	40	39.5	98	70-130	
Arsenic, Dissolved	ug/L	10.5	40	53.2	107	70-130	
Barium, Dissolved	ug/L	42.6	40	82.5	100	70-130	
Beryllium, Dissolved	ug/L	0.96	40	32.4	79	70-130	
Cadmium, Dissolved	ug/L	2.0	40	39.2	93	70-130	
Chromium, Dissolved	ug/L	3.3	40	42.6	98	70-130	
Cobalt, Dissolved	ug/L	5.1	40	42.8	94	70-130	
Copper, Dissolved	ug/L	11.3	40	46.8	89	70-130	
Iron, Dissolved	ug/L	13500	1000	14600	114	70-130	
Lead, Dissolved	ug/L	17.3	40	58.8	104	70-130	
Manganese, Dissolved	ug/L	8890	40	9250	905	70-130	M6
Molybdenum, Dissolved	ug/L	4.3	40	46.7	106	70-130	

This report shall not be reproduced, except in full,
without the written consent of Pace Analytical Services, Inc..

Pace Analytical Services, Inc.
9608 Loiret Blvd.
Lenexa, KS 66219
(913)599-5665

QUALITY CONTROL DATA

Project: February 2013 Rico Water Sampl
Pace Project No.: 60138913

MATRIX SPIKE SAMPLE: 1143269

Parameter	Units	60138913011 Result	Spike Conc.	MS Result	MS % Rec	% Rec Limits	Qualifiers
Nickel, Dissolved	ug/L	3.0	40	39.5	91	70-130	
Selenium, Dissolved	ug/L	0.58J	40	41.0	101	70-130	
Silver, Dissolved	ug/L	ND	20	17.3	87	70-130	
Thallium, Dissolved	ug/L	0.32J	40	44.2	110	70-130	
Vanadium, Dissolved	ug/L	3.7	40	44.9	103	70-130	
Zinc, Dissolved	ug/L	276	100	375	100	70-130	

This report shall not be reproduced, except in full,
without the written consent of Pace Analytical Services, Inc..

Pace Analytical Services, Inc.
9608 Loiret Blvd.
Lenexa, KS 66219
(913)599-5665

QUALITY CONTROL DATA

Project: February 2013 Rico Water Sampl
Pace Project No.: 60138913

QC Batch: MT/11363 Analysis Method: SM 2510B
QC Batch Method: SM 2510B Analysis Description: 2510B Specific Conductance
Associated Lab Samples: 60138913001, 60138913002, 60138913003, 60138913004, 60138913005, 60138913006, 60138913007, 60138913008, 60138913009, 60138913010, 60138913011, 60138913012, 60138913013, 60138913014, 60138913015, 60138913016, 60138913017

METHOD BLANK: 1382298 Matrix: Water
Associated Lab Samples: 60138913001, 60138913002, 60138913003, 60138913004, 60138913005, 60138913006, 60138913007, 60138913008, 60138913009, 60138913010, 60138913011, 60138913012, 60138913013, 60138913014, 60138913015, 60138913016, 60138913017

Parameter	Units	Blank Result	Reporting Limit	Analyzed	Qualifiers
Specific Conductance	umhos/cm	ND	10.0	02/25/13 11:47	

LABORATORY CONTROL SAMPLE: 1382299

Parameter	Units	Spike Conc.	LCS Result	LCS % Rec	% Rec Limits	Qualifiers
Specific Conductance	umhos/cm	1000	991	99	90-110	

SAMPLE DUPLICATE: 1382300

Parameter	Units	60138913004 Result	Dup Result	RPD	Max RPD	Qualifiers
Specific Conductance	umhos/cm	2010	2190	8	20	

SAMPLE DUPLICATE: 1382301

Parameter	Units	60138913010 Result	Dup Result	RPD	Max RPD	Qualifiers
Specific Conductance	umhos/cm	1400	1360	2	20	

This report shall not be reproduced, except in full,
without the written consent of Pace Analytical Services, Inc..

Pace Analytical Services, Inc.
9608 Loiret Blvd.
Lenexa, KS 66219
(913)599-5665

QUALITY CONTROL DATA

Project: February 2013 Rico Water Sampl
Pace Project No.: 60138913

QC Batch: WET/39936 | Analysis Method: SM 2320B
QC Batch Method: SM 2320B | Analysis Description: 2320B Alkalinity
Associated Lab Samples: 60138913001, 60138913002

METHOD BLANK: 1145225 | Matrix: Water
Associated Lab Samples: 60138913001, 60138913002

Parameter	Units	Blank Result	Reporting Limit	Analyzed	Qualifiers
Alkalinity, Carbonate (CaCO3)	mg/L	ND	20.0	02/27/13 10:59	
Alkalinity, Total as CaCO3	mg/L	ND	20.0	02/27/13 10:59	
Alkalinity,Bicarbonate (CaCO3)	mg/L	ND	20.0	02/27/13 10:59	

LABORATORY CONTROL SAMPLE: 1145226

Parameter	Units	Spike Conc.	LCS Result	LCS % Rec	% Rec Limits	Qualifiers
Alkalinity, Total as CaCO3	mg/L	500	482	96	90-110	

SAMPLE DUPLICATE: 1145227

Parameter	Units	60138913001 Result	Dup Result	RPD	Max RPD	Qualifiers
Alkalinity, Carbonate (CaCO3)	mg/L	ND	ND		10	
Alkalinity, Total as CaCO3	mg/L	83.6	81.4	3	10	
Alkalinity,Bicarbonate (CaCO3)	mg/L	83.6	81.4	3	10	

SAMPLE DUPLICATE: 1145228

Parameter	Units	60139006003 Result	Dup Result	RPD	Max RPD	Qualifiers
Alkalinity, Carbonate (CaCO3)	mg/L	ND	ND		10	
Alkalinity, Total as CaCO3	mg/L	219	220	1	10	
Alkalinity,Bicarbonate (CaCO3)	mg/L	219	220	1	10	

This report shall not be reproduced, except in full,
without the written consent of Pace Analytical Services, Inc..

Pace Analytical Services, Inc.
9608 Loiret Blvd.
Lenexa, KS 66219
(913)599-5665

QUALITY CONTROL DATA

Project: February 2013 Rico Water Sampl
Pace Project No.: 60138913

QC Batch: WET/39937 Analysis Method: SM 2320B
QC Batch Method: SM 2320B Analysis Description: 2320B Alkalinity
Associated Lab Samples: 60138913003, 60138913004, 60138913005, 60138913006, 60138913007, 60138913008, 60138913009, 60138913010, 60138913011, 60138913012, 60138913013, 60138913014, 60138913015, 60138913016, 60138913017

METHOD BLANK: 1145229 Matrix: Water
Associated Lab Samples: 60138913003, 60138913004, 60138913005, 60138913006, 60138913007, 60138913008, 60138913009, 60138913010, 60138913011, 60138913012, 60138913013, 60138913014, 60138913015, 60138913016, 60138913017

Parameter	Units	Blank Result	Reporting Limit	Analyzed	Qualifiers
Alkalinity, Carbonate (CaCO3)	mg/L	ND	20.0	02/27/13 16:45	
Alkalinity, Total as CaCO3	mg/L	ND	20.0	02/27/13 16:45	
Alkalinity,Bicarbonate (CaCO3)	mg/L	ND	20.0	02/27/13 16:45	

LABORATORY CONTROL SAMPLE: 1145230

Parameter	Units	Spike Conc.	LCS Result	LCS % Rec	% Rec Limits	Qualifiers
Alkalinity, Total as CaCO3	mg/L	500	513	103	90-110	

SAMPLE DUPLICATE: 1145231

Parameter	Units	60139027002 Result	Dup Result	RPD	Max RPD	Qualifiers
Alkalinity, Carbonate (CaCO3)	mg/L	ND	ND		10	
Alkalinity, Total as CaCO3	mg/L	101	101	0	10	
Alkalinity,Bicarbonate (CaCO3)	mg/L	101	101	0	10	

SAMPLE DUPLICATE: 1145232

Parameter	Units	60138913008 Result	Dup Result	RPD	Max RPD	Qualifiers
Alkalinity, Carbonate (CaCO3)	mg/L	ND	ND		10	
Alkalinity, Total as CaCO3	mg/L	90.4	92.4	2	10	
Alkalinity,Bicarbonate (CaCO3)	mg/L	90.4	92.4	2	10	

This report shall not be reproduced, except in full,
without the written consent of Pace Analytical Services, Inc..

Pace Analytical Services, Inc.
9608 Loiret Blvd.
Lenexa, KS 66219
(913)599-5665

QUALITY CONTROL DATA

Project: February 2013 Rico Water Sampl
Pace Project No.: 60138913

QC Batch: WET/39811 — Analysis Method: SM 2540C
QC Batch Method: SM 2540C — Analysis Description: 2540C Total Dissolved Solids
Associated Lab Samples: 60138913001, 60138913002, 60138913003, 60138913004, 60138913005, 60138913006, 60138913007, 60138913008, 60138913009, 60138913010, 60138913011, 60138913012, 60138913013, 60138913014, 60138913015, 60138913016, 60138913017

METHOD BLANK: 1142498 — Matrix: Water
Associated Lab Samples: 60138913001, 60138913002, 60138913003, 60138913004, 60138913005, 60138913006, 60138913007, 60138913008, 60138913009, 60138913010, 60138913011, 60138913012, 60138913013, 60138913014, 60138913015, 60138913016, 60138913017

Parameter	Units	Blank Result	Reporting Limit	Analyzed	Qualifiers
Total Dissolved Solids	mg/L	ND	5.0	02/19/13 14:26	

SAMPLE DUPLICATE: 1142499

Parameter	Units	60138913001 Result	Dup Result	RPD	Max RPD	Qualifiers
Total Dissolved Solids	mg/L	1040	1040	0	17	

SAMPLE DUPLICATE: 1142500

Parameter	Units	60138913011 Result	Dup Result	RPD	Max RPD	Qualifiers
Total Dissolved Solids	mg/L	1270	1270	0	17	

This report shall not be reproduced, except in full,
without the written consent of Pace Analytical Services, Inc..

Pace Analytical Services, Inc.
9608 Loiret Blvd.
Lenexa, KS 66219
(913)599-5665

QUALITY CONTROL DATA

Project: February 2013 Rico Water Sampl
Pace Project No.: 60138913

QC Batch: WET/39815 | Analysis Method: SM 2540D
QC Batch Method: SM 2540D | Analysis Description: 2540D Total Suspended Solids
Associated Lab Samples: 60138913001, 60138913002

METHOD BLANK: 1142513 | Matrix: Water
Associated Lab Samples: 60138913001, 60138913002

Parameter	Units	Blank Result	Reporting Limit	Analyzed	Qualifiers
Total Suspended Solids	mg/L	ND	5.0	02/19/13 09:10	

SAMPLE DUPLICATE: 1142514

Parameter	Units	60138796001 Result	Dup Result	RPD	Max RPD	Qualifiers
Total Suspended Solids	mg/L	ND	ND		25	

SAMPLE DUPLICATE: 1142515

Parameter	Units	60138755001 Result	Dup Result	RPD	Max RPD	Qualifiers
Total Suspended Solids	mg/L	116	110	5	25	

This report shall not be reproduced, except in full,
without the written consent of Pace Analytical Services, Inc..

Pace Analytical Services, Inc.
9608 Loiret Blvd.
Lenexa, KS 66219
(913)599-5665

QUALITY CONTROL DATA

Project: February 2013 Rico Water Sampl
Pace Project No.: 60138913

QC Batch: WET/39817 Analysis Method: SM 2540D
QC Batch Method: SM 2540D Analysis Description: 2540D Total Suspended Solids
Associated Lab Samples: 60138913003, 60138913004, 60138913005, 60138913006, 60138913007, 60138913008, 60138913009, 60138913010, 60138913011

METHOD BLANK: 1142523 Matrix: Water
Associated Lab Samples: 60138913003, 60138913004, 60138913005, 60138913006, 60138913007, 60138913008, 60138913009, 60138913010, 60138913011

Parameter	Units	Blank Result	Reporting Limit	Analyzed	Qualifiers
Total Suspended Solids	mg/L	ND	5.0	02/19/13 09:18	

SAMPLE DUPLICATE: 1142524

Parameter	Units	60138822001 Result	Dup Result	RPD	Max RPD	Qualifiers
Total Suspended Solids	mg/L	11.0	11.0	0	25	

SAMPLE DUPLICATE: 1142525

Parameter	Units	60138875001 Result	Dup Result	RPD	Max RPD	Qualifiers
Total Suspended Solids	mg/L	90.0	94.0	4	25	

This report shall not be reproduced, except in full,
without the written consent of Pace Analytical Services, Inc..

Pace Analytical Services, Inc.
9608 Loiret Blvd.
Lenexa, KS 66219
(913)599-5665

QUALITY CONTROL DATA

Project: February 2013 Rico Water Sampl
Pace Project No.: 60138913

QC Batch: WET/39838 Analysis Method: SM 2540D
QC Batch Method: SM 2540D Analysis Description: 2540D Total Suspended Solids
Associated Lab Samples: 60138913012, 60138913013, 60138913014, 60138913015, 60138913016, 60138913017

METHOD BLANK: 1143021 Matrix: Water
Associated Lab Samples: 60138913012, 60138913013, 60138913014, 60138913015, 60138913016, 60138913017

Parameter	Units	Blank Result	Reporting Limit	Analyzed	Qualifiers
Total Suspended Solids	mg/L	ND	5.0	02/20/13 09:25	

SAMPLE DUPLICATE: 1143022

Parameter	Units	60138952001 Result	Dup Result	RPD	Max RPD	Qualifiers
Total Suspended Solids	mg/L	ND	ND		25	

SAMPLE DUPLICATE: 1143023

Parameter	Units	60138976001 Result	Dup Result	RPD	Max RPD	Qualifiers
Total Suspended Solids	mg/L	5280	5540	5	25	

This report shall not be reproduced, except in full,
without the written consent of Pace Analytical Services, Inc..

Pace Analytical Services, Inc.
9608 Loiret Blvd.
Lenexa, KS 66219
(913)599-5665

QUALITY CONTROL DATA

Project: February 2013 Rico Water Sampl
Pace Project No.: 60138913

QC Batch: WET/39813 Analysis Method: SM 4500-S-2 D
QC Batch Method: SM 4500-S-2 D Analysis Description: 4500S2D Sulfide, Total
Associated Lab Samples: 60138913001, 60138913002, 60138913003, 60138913004, 60138913005, 60138913006, 60138913007, 60138913008, 60138913009, 60138913010, 60138913011, 60138913012, 60138913013, 60138913014, 60138913015, 60138913016, 60138913017

METHOD BLANK: 1142508 Matrix: Water
Associated Lab Samples: 60138913001, 60138913002, 60138913003, 60138913004, 60138913005, 60138913006, 60138913007, 60138913008, 60138913009, 60138913010, 60138913011, 60138913012, 60138913013, 60138913014, 60138913015, 60138913016, 60138913017

Parameter	Units	Blank Result	Reporting Limit	Analyzed	Qualifiers
Sulfide, Total	mg/L	ND	0.050	02/19/13 13:45	

LABORATORY CONTROL SAMPLE: 1142509

Parameter	Units	Spike Conc.	LCS Result	LCS % Rec	% Rec Limits	Qualifiers
Sulfide, Total	mg/L	.5	0.46	91	80-120	

MATRIX SPIKE SAMPLE: 1142510

Parameter	Units	60138913007 Result	Spike Conc.	MS Result	MS % Rec	% Rec Limits	Qualifiers
Sulfide, Total	mg/L	ND	.5	ND	0	75-125	M1

This report shall not be reproduced, except in full,
without the written consent of Pace Analytical Services, Inc..

Pace Analytical Services, Inc.
9608 Loiret Blvd.
Lenexa, KS 66219
(913)599-5665

QUALITY CONTROL DATA

Project: February 2013 Rico Water Sampl
Pace Project No.: 60138913

QC Batch: WETA/23595 Analysis Method: EPA 300.0
QC Batch Method: EPA 300.0 Analysis Description: 300.0 IC Anions
Associated Lab Samples: 60138913001, 60138913002, 60138913003, 60138913004, 60138913005, 60138913006, 60138913007, 60138913008, 60138913009, 60138913010, 60138913011, 60138913012, 60138913013, 60138913014, 60138913015, 60138913016, 60138913017

METHOD BLANK: 1142552 Matrix: Water
Associated Lab Samples: 60138913001, 60138913002, 60138913003, 60138913004, 60138913005, 60138913006, 60138913007, 60138913008, 60138913009, 60138913010, 60138913011, 60138913012, 60138913013, 60138913014, 60138913015, 60138913016, 60138913017

Parameter	Units	Blank Result	Reporting Limit	Analyzed	Qualifiers
Chloride	mg/L	ND	1.0	02/19/13 11:12	
Sulfate	mg/L	ND	1.0	02/19/13 11:12	

METHOD BLANK: 1143035 Matrix: Water
Associated Lab Samples: 60138913001, 60138913002, 60138913003, 60138913004, 60138913005, 60138913006, 60138913007, 60138913008, 60138913009, 60138913010, 60138913011, 60138913012, 60138913013, 60138913014, 60138913015, 60138913016, 60138913017

Parameter	Units	Blank Result	Reporting Limit	Analyzed	Qualifiers
Chloride	mg/L	ND	1.0	02/21/13 00:30	
Sulfate	mg/L	ND	1.0	02/21/13 00:30	

LABORATORY CONTROL SAMPLE: 1142553

Parameter	Units	Spike Conc.	LCS Result	LCS % Rec	% Rec Limits	Qualifiers
Chloride	mg/L	5	4.9	99	90-110	
Sulfate	mg/L	5	5.2	103	90-110	

LABORATORY CONTROL SAMPLE: 1143036

Parameter	Units	Spike Conc.	LCS Result	LCS % Rec	% Rec Limits	Qualifiers
Chloride	mg/L	5	4.9	98	90-110	
Sulfate	mg/L	5	5.1	101	90-110	

MATRIX SPIKE SAMPLE: 1142554

Parameter	Units	60138913001 Result	Spike Conc.	MS Result	MS % Rec	% Rec Limits	Qualifiers
Chloride	mg/L	ND	5	5.3	89	64-118	
Sulfate	mg/L	622	250	865	97	61-119	

This report shall not be reproduced, except in full,
without the written consent of Pace Analytical Services, Inc..

Pace Analytical Services, Inc.
9608 Loiret Blvd.
Lenexa, KS 66219
(913)599-5665

QUALITY CONTROL DATA

Project: February 2013 Rico Water Sampl
Pace Project No.: 60138913

MATRIX SPIKE & MATRIX SPIKE DUPLICATE: 1142555 1142556

Parameter	Units	60138913003 Result	MS Spike Conc.	MSD Spike Conc.	MS Result	MSD Result	MS % Rec	MSD % Rec	% Rec Limits	RPD	Max RPD	Qual
Chloride	mg/L	1.3	5	5	5.8	5.7	91	89	64-118	1	12	
Sulfate	mg/L	235	250	250	478	327	97	37	61-119	37	10	M6,R1

This report shall not be reproduced, except in full,
without the written consent of Pace Analytical Services, Inc..

Pace Analytical Services, Inc.
9608 Loiret Blvd.
Lenexa, KS 66219
(913)599-5665

QUALITY CONTROL DATA

Project: February 2013 Rico Water Sampl
Pace Project No.: 60138913

QC Batch: WETA/23662 Analysis Method: EPA 353.2
QC Batch Method: EPA 353.2 Analysis Description: 353.2 Nitrate + Nitrite, preserved
Associated Lab Samples: 60138913001, 60138913002, 60138913003, 60138913004, 60138913005, 60138913006, 60138913007, 60138913008, 60138913009, 60138913010, 60138913011, 60138913012, 60138913013, 60138913014, 60138913015, 60138913016, 60138913017

METHOD BLANK: 1145178 Matrix: Water
Associated Lab Samples: 60138913001, 60138913002, 60138913003, 60138913004, 60138913005, 60138913006, 60138913007, 60138913008, 60138913009, 60138913010, 60138913011, 60138913012, 60138913013, 60138913014, 60138913015, 60138913016, 60138913017

Parameter	Units	Blank Result	Reporting Limit	Analyzed	Qualifiers
Nitrogen, NO2 plus NO3	mg/L	ND	0.10	02/27/13 13:57	

LABORATORY CONTROL SAMPLE: 1145179

Parameter	Units	Spike Conc.	LCS Result	LCS % Rec	% Rec Limits	Qualifiers
Nitrogen, NO2 plus NO3	mg/L	2	2.2	110	90-110	

MATRIX SPIKE SAMPLE: 1145180

Parameter	Units	60138913001 Result	Spike Conc.	MS Result	MS % Rec	% Rec Limits	Qualifiers
Nitrogen, NO2 plus NO3	mg/L	0.11	2	2.1	98	90-110	

MATRIX SPIKE SAMPLE: 1145181

Parameter	Units	60138913002 Result	Spike Conc.	MS Result	MS % Rec	% Rec Limits	Qualifiers
Nitrogen, NO2 plus NO3	mg/L	0.13	2	2.2	105	90-110	

SAMPLE DUPLICATE: 1145182

Parameter	Units	60138913003 Result	Dup Result	RPD	Max RPD	Qualifiers
Nitrogen, NO2 plus NO3	mg/L	0.13	0.13	1	13	

This report shall not be reproduced, except in full,
without the written consent of Pace Analytical Services, Inc..

Pace Analytical Services, Inc.
9608 Loiret Blvd.
Lenexa, KS 66219
(913)599-5665

QUALITY CONTROL DATA

Project: February 2013 Rico Water Sampl
Pace Project No.: 60138913

QC Batch: WETA/23602 Analysis Method: SM 4500-CN-E
QC Batch Method: SM 4500-CN-E Analysis Description: 4500CNE Cyanide, Total
Associated Lab Samples: 60138913001, 60138913002, 60138913003, 60138913004, 60138913005, 60138913006, 60138913007, 60138913008, 60138913009, 60138913010, 60138913011, 60138913012, 60138913013, 60138913014, 60138913015, 60138913016, 60138913017

METHOD BLANK: 1142936 Matrix: Water
Associated Lab Samples: 60138913001, 60138913002, 60138913003, 60138913004, 60138913005, 60138913006, 60138913007, 60138913008, 60138913009, 60138913010, 60138913011, 60138913012, 60138913013, 60138913014, 60138913015, 60138913016, 60138913017

Parameter	Units	Blank Result	Reporting Limit	Analyzed	Qualifiers
Cyanide	mg/L	ND	0.0050	02/20/13 13:21	

LABORATORY CONTROL SAMPLE: 1142937

Parameter	Units	Spike Conc.	LCS Result	LCS % Rec	% Rec Limits	Qualifiers
Cyanide	mg/L	.1	0.10	102	69-126	

MATRIX SPIKE SAMPLE: 1142938

Parameter	Units	60138939001 Result	Spike Conc.	MS Result	MS % Rec	% Rec Limits	Qualifiers
Cyanide	mg/L	ND	.1	0.11	101	41-136	

SAMPLE DUPLICATE: 1142939

Parameter	Units	60138988001 Result	Dup Result	RPD	Max RPD	Qualifiers
Cyanide	mg/L	ND	ND		26	

This report shall not be reproduced, except in full,
without the written consent of Pace Analytical Services, Inc..

Pace Analytical Services, Inc.
9608 Loiret Blvd.
Lenexa, KS 66219
(913)599-5665

QUALITY CONTROL DATA

Project: February 2013 Rico Water Sampl
Pace Project No.: 60138913

QC Batch: WETA/16362 Analysis Method: SM 5310C
QC Batch Method: SM 5310C Analysis Description: 5310C Total Organic Carbon
Associated Lab Samples: 60138913001, 60138913002, 60138913003, 60138913004, 60138913005, 60138913006, 60138913007, 60138913008, 60138913009, 60138913010, 60138913011, 60138913012, 60138913013, 60138913014, 60138913015, 60138913016, 60138913017

METHOD BLANK: 751689 Matrix: Water
Associated Lab Samples: 60138913001, 60138913002, 60138913003, 60138913004, 60138913005, 60138913006, 60138913007, 60138913008, 60138913009, 60138913010, 60138913011, 60138913012, 60138913013, 60138913014, 60138913015, 60138913016, 60138913017

Parameter	Units	Blank Result	Reporting Limit	Analyzed	Qualifiers
Total Organic Carbon	mg/L	ND	0.50	02/20/13 17:06	

LABORATORY CONTROL SAMPLE: 751690

Parameter	Units	Spike Conc.	LCS Result	LCS % Rec	% Rec Limits	Qualifiers
Total Organic Carbon	mg/L	2.5	2.5	101	80-120	

MATRIX SPIKE & MATRIX SPIKE DUPLICATE: 751691 751692

Parameter	Units	60138913001 Result	MS Spike Conc.	MSD Spike Conc.	MS Result	MSD Result	MS % Rec	MSD % Rec	% Rec Limits	RPD	Max RPD	Qual
Total Organic Carbon	mg/L	2.2	2.5	2.5	4.5	4.6	94	96	80-120	1	20	

MATRIX SPIKE & MATRIX SPIKE DUPLICATE: 751693 751694

Parameter	Units	60138913002 Result	MS Spike Conc.	MSD Spike Conc.	MS Result	MSD Result	MS % Rec	MSD % Rec	% Rec Limits	RPD	Max RPD	Qual
Total Organic Carbon	mg/L	0.80	2.5	2.5	3.3	3.5	102	107	80-120	4	20	

This report shall not be reproduced, except in full,
without the written consent of Pace Analytical Services, Inc..

Pace Analytical Services, Inc.
9608 Loiret Blvd.
Lenexa, KS 66219
(913)599-5665

QUALIFIERS

Project: February 2013 Rico Water Sampl
Pace Project No.: 60138913

DEFINITIONS

DF - Dilution Factor, if reported, represents the factor applied to the reported data due to changes in sample preparation, dilution of the sample aliquot, or moisture content.

ND - Not Detected at or above adjusted reporting limit.

J - Estimated concentration above the adjusted method detection limit and below the adjusted reporting limit.

MDL - Adjusted Method Detection Limit.

PRL - Pace Reporting Limit.

RL - Reporting Limit.

S - Surrogate

1,2-Diphenylhydrazine (8270 listed analyte) decomposes to Azobenzene.

Consistent with EPA guidelines, unrounded data are displayed and have been used to calculate % recovery and RPD values.

LCS(D) - Laboratory Control Sample (Duplicate)

MS(D) - Matrix Spike (Duplicate)

DUP - Sample Duplicate

RPD - Relative Percent Difference

NC - Not Calculable.

SG - Silica Gel - Clean-Up

U - Indicates the compound was analyzed for, but not detected.

N-Nitrosodiphenylamine decomposes and cannot be separated from Diphenylamine using Method 8270. The result reported for each analyte is a combined concentration.

Pace Analytical is TNI accredited. Contact your Pace PM for the current list of accredited analytes.

TNI - The NELAC Institute.

LABORATORIES

PASI-G	Pace Analytical Services - Green Bay
PASI-K	Pace Analytical Services - Kansas City
PASI-M	Pace Analytical Services - Minneapolis

ANALYTE QUALIFIERS

B	Analyte was detected in the associated method blank.
D3	Sample was diluted due to the presence of high levels of non-target analytes or other matrix interference.
E	Analyte concentration exceeded the calibration range. The reported result is estimated.
M1	Matrix spike recovery exceeded QC limits. Batch accepted based on laboratory control sample (LCS) recovery.
M6	Matrix spike and Matrix spike duplicate recovery not evaluated against control limits due to sample dilution.
R1	RPD value was outside control limits.

This report shall not be reproduced, except in full,
without the written consent of Pace Analytical Services, Inc..

Pace Analytical Services, Inc.
9608 Loiret Blvd.
Lenexa, KS 66219
(913)599-5665

QUALITY CONTROL DATA CROSS REFERENCE TABLE

Project: February 2013 Rico Water Sampl
Pace Project No.: 60138913

Lab ID	Sample ID	QC Batch Method	QC Batch	Analytical Method	Analytical Batch
60138913001	**MW-3 DEEP_20130213**	EPA 200.7	MPRP/21610	EPA 200.7	ICP/17357
60138913002	**MW-2 DEEP_20130213**	EPA 200.7	MPRP/21610	EPA 200.7	ICP/17357
60138913003	**GW-4_20130214**	EPA 200.7	MPRP/21610	EPA 200.7	ICP/17357
60138913004	**MW-4 DEEP_02130214**	EPA 200.7	MPRP/21610	EPA 200.7	ICP/17357
60138913005	**MW-6 SHALLOW_20130214**	EPA 200.7	MPRP/21610	EPA 200.7	ICP/17357
60138913006	**MW-6 DEEP_20130214**	EPA 200.7	MPRP/21610	EPA 200.7	ICP/17357
60138913007	**DR-9_20130214**	EPA 200.7	MPRP/21610	EPA 200.7	ICP/17357
60138913008	**MW-1 DEEP_20130214**	EPA 200.7	MPRP/21610	EPA 200.7	ICP/17357
60138913009	**MW-1 SHALLOW_20130214**	EPA 200.7	MPRP/21610	EPA 200.7	ICP/17357
60138913010	**MW-104_20130214**	EPA 200.7	MPRP/21610	EPA 200.7	ICP/17357
60138913011	**MW-103_20130214**	EPA 200.7	MPRP/21610	EPA 200.7	ICP/17357
60138913012	**DR-10_20130215**	EPA 200.7	MPRP/21610	EPA 200.7	ICP/17357
60138913013	**GW-7_20130215**	EPA 200.7	MPRP/21610	EPA 200.7	ICP/17357
60138913014	**P13-102_20130215**	EPA 200.7	MPRP/21610	EPA 200.7	ICP/17357
60138913015	**P13-103_20130215**	EPA 200.7	MPRP/21610	EPA 200.7	ICP/17357
60138913016	**MW-4 SHALLOW_20130215**	EPA 200.7	MPRP/21610	EPA 200.7	ICP/17357
60138913017	**EB-2_20130215**	EPA 200.7	MPRP/21610	EPA 200.7	ICP/17357
60138913001	**MW-3 DEEP_20130213**	EPA 200.8	MPRP/37682	EPA 200.8	ICPM/15391
60138913002	**MW-2 DEEP_20130213**	EPA 200.8	MPRP/37682	EPA 200.8	ICPM/15391
60138913003	**GW-4_20130214**	EPA 200.8	MPRP/37682	EPA 200.8	ICPM/15391
60138913004	**MW-4 DEEP_02130214**	EPA 200.8	MPRP/37682	EPA 200.8	ICPM/15391
60138913005	**MW-6 SHALLOW_20130214**	EPA 200.8	MPRP/37682	EPA 200.8	ICPM/15391
60138913006	**MW-6 DEEP_20130214**	EPA 200.8	MPRP/37682	EPA 200.8	ICPM/15391
60138913007	**DR-9_20130214**	EPA 200.8	MPRP/37682	EPA 200.8	ICPM/15391
60138913008	**MW-1 DEEP_20130214**	EPA 200.8	MPRP/37682	EPA 200.8	ICPM/15391
60138913009	**MW-1 SHALLOW_20130214**	EPA 200.8	MPRP/37682	EPA 200.8	ICPM/15391
60138913010	**MW-104_20130214**	EPA 200.8	MPRP/37682	EPA 200.8	ICPM/15391
60138913011	**MW-103_20130214**	EPA 200.8	MPRP/37682	EPA 200.8	ICPM/15391
60138913012	**DR-10_20130215**	EPA 200.8	MPRP/37682	EPA 200.8	ICPM/15391
60138913013	**GW-7_20130215**	EPA 200.8	MPRP/37682	EPA 200.8	ICPM/15391
60138913014	**P13-102_20130215**	EPA 200.8	MPRP/37682	EPA 200.8	ICPM/15391
60138913015	**P13-103_20130215**	EPA 200.8	MPRP/37682	EPA 200.8	ICPM/15391
60138913016	**MW-4 SHALLOW_20130215**	EPA 200.8	MPRP/37682	EPA 200.8	ICPM/15391
60138913017	**EB-2_20130215**	EPA 200.8	MPRP/37682	EPA 200.8	ICPM/15391
60138913001	**MW-3 DEEP_20130213**	EPA 200.8	MPRP/37684	EPA 200.8	ICPM/15388
60138913002	**MW-2 DEEP_20130213**	EPA 200.8	MPRP/37684	EPA 200.8	ICPM/15388
60138913003	**GW-4_20130214**	EPA 200.8	MPRP/37684	EPA 200.8	ICPM/15388
60138913004	**MW-4 DEEP_02130214**	EPA 200.8	MPRP/37684	EPA 200.8	ICPM/15388
60138913005	**MW-6 SHALLOW_20130214**	EPA 200.8	MPRP/37684	EPA 200.8	ICPM/15388
60138913006	**MW-6 DEEP_20130214**	EPA 200.8	MPRP/37684	EPA 200.8	ICPM/15388
60138913007	**DR-9_20130214**	EPA 200.8	MPRP/37684	EPA 200.8	ICPM/15388
60138913008	**MW-1 DEEP_20130214**	EPA 200.8	MPRP/37684	EPA 200.8	ICPM/15388
60138913009	**MW-1 SHALLOW_20130214**	EPA 200.8	MPRP/37684	EPA 200.8	ICPM/15388
60138913010	**MW-104_20130214**	EPA 200.8	MPRP/37684	EPA 200.8	ICPM/15388
60138913011	**MW-103_20130214**	EPA 200.8	MPRP/37684	EPA 200.8	ICPM/15388
60138913012	**DR-10_20130215**	EPA 200.8	MPRP/37684	EPA 200.8	ICPM/15388
60138913013	**GW-7_20130215**	EPA 200.8	MPRP/37684	EPA 200.8	ICPM/15388
60138913014	**P13-102_20130215**	EPA 200.8	MPRP/37684	EPA 200.8	ICPM/15388

This report shall not be reproduced, except in full,
without the written consent of Pace Analytical Services, Inc..

Pace Analytical Services, Inc.
9608 Loiret Blvd.
Lenexa, KS 66219
(913)599-5665

QUALITY CONTROL DATA CROSS REFERENCE TABLE

Project: February 2013 Rico Water Sampl
Pace Project No.: 60138913

Lab ID	Sample ID	QC Batch Method	QC Batch	Analytical Method	Analytical Batch
60138913015	**P13-103_20130215**	EPA 200.8	MPRP/37684	EPA 200.8	ICPM/15388
60138913016	**MW-4 SHALLOW_20130215**	EPA 200.8	MPRP/37684	EPA 200.8	ICPM/15388
60138913017	**EB-2_20130215**	EPA 200.8	MPRP/37684	EPA 200.8	ICPM/15388
60138913001	**MW-3 DEEP_20130213**	EPA 200.8	MPRP/21611	EPA 200.8	ICPM/2049
60138913002	**MW-2 DEEP_20130213**	EPA 200.8	MPRP/21611	EPA 200.8	ICPM/2049
60138913003	**GW-4_20130214**	EPA 200.8	MPRP/21611	EPA 200.8	ICPM/2049
60138913004	**MW-4 DEEP_02130214**	EPA 200.8	MPRP/21611	EPA 200.8	ICPM/2049
60138913005	**MW-6 SHALLOW_20130214**	EPA 200.8	MPRP/21611	EPA 200.8	ICPM/2049
60138913006	**MW-6 DEEP_20130214**	EPA 200.8	MPRP/21611	EPA 200.8	ICPM/2049
60138913007	**DR-9_20130214**	EPA 200.8	MPRP/21611	EPA 200.8	ICPM/2049
60138913008	**MW-1 DEEP_20130214**	EPA 200.8	MPRP/21611	EPA 200.8	ICPM/2049
60138913009	**MW-1 SHALLOW_20130214**	EPA 200.8	MPRP/21611	EPA 200.8	ICPM/2049
60138913010	**MW-104_20130214**	EPA 200.8	MPRP/21611	EPA 200.8	ICPM/2049
60138913011	**MW-103_20130214**	EPA 200.8	MPRP/21611	EPA 200.8	ICPM/2049
60138913012	**DR-10_20130215**	EPA 200.8	MPRP/21611	EPA 200.8	ICPM/2049
60138913013	**GW-7_20130215**	EPA 200.8	MPRP/21611	EPA 200.8	ICPM/2049
60138913014	**P13-102_20130215**	EPA 200.8	MPRP/21611	EPA 200.8	ICPM/2049
60138913015	**P13-103_20130215**	EPA 200.8	MPRP/21611	EPA 200.8	ICPM/2049
60138913016	**MW-4 SHALLOW_20130215**	EPA 200.8	MPRP/21611	EPA 200.8	ICPM/2049
60138913017	**EB-2_20130215**	EPA 200.8	MPRP/21611	EPA 200.8	ICPM/2049
60138913001	**MW-3 DEEP_20130213**	EPA 245.1	MERP/8067	EPA 245.1	MERC/9116
60138913002	**MW-2 DEEP_20130213**	EPA 245.1	MERP/8067	EPA 245.1	MERC/9116
60138913003	**GW-4_20130214**	EPA 245.1	MERP/8067	EPA 245.1	MERC/9116
60138913004	**MW-4 DEEP_02130214**	EPA 245.1	MERP/8067	EPA 245.1	MERC/9116
60138913005	**MW-6 SHALLOW_20130214**	EPA 245.1	MERP/8067	EPA 245.1	MERC/9116
60138913006	**MW-6 DEEP_20130214**	EPA 245.1	MERP/8067	EPA 245.1	MERC/9116
60138913007	**DR-9_20130214**	EPA 245.1	MERP/8067	EPA 245.1	MERC/9116
60138913008	**MW-1 DEEP_20130214**	EPA 245.1	MERP/8067	EPA 245.1	MERC/9116
60138913009	**MW-1 SHALLOW_20130214**	EPA 245.1	MERP/8067	EPA 245.1	MERC/9116
60138913010	**MW-104_20130214**	EPA 245.1	MERP/8067	EPA 245.1	MERC/9116
60138913011	**MW-103_20130214**	EPA 245.1	MERP/8067	EPA 245.1	MERC/9116
60138913012	**DR-10_20130215**	EPA 245.1	MERP/8067	EPA 245.1	MERC/9116
60138913013	**GW-7_20130215**	EPA 245.1	MERP/8067	EPA 245.1	MERC/9116
60138913014	**P13-102_20130215**	EPA 245.1	MERP/8067	EPA 245.1	MERC/9116
60138913015	**P13-103_20130215**	EPA 245.1	MERP/8067	EPA 245.1	MERC/9116
60138913016	**MW-4 SHALLOW_20130215**	EPA 245.1	MERP/8067	EPA 245.1	MERC/9116
60138913017	**EB-2_20130215**	EPA 245.1	MERP/8067	EPA 245.1	MERC/9116
60138913001	**MW-3 DEEP_20130213**	EPA 245.1	MERP/8072	EPA 245.1	MERC/9117
60138913002	**MW-2 DEEP_20130213**	EPA 245.1	MERP/8072	EPA 245.1	MERC/9117
60138913003	**GW-4_20130214**	EPA 245.1	MERP/8072	EPA 245.1	MERC/9117
60138913004	**MW-4 DEEP_02130214**	EPA 245.1	MERP/8072	EPA 245.1	MERC/9117
60138913005	**MW-6 SHALLOW_20130214**	EPA 245.1	MERP/8072	EPA 245.1	MERC/9117
60138913006	**MW-6 DEEP_20130214**	EPA 245.1	MERP/8072	EPA 245.1	MERC/9117
60138913007	**DR-9_20130214**	EPA 245.1	MERP/8072	EPA 245.1	MERC/9117
60138913008	**MW-1 DEEP_20130214**	EPA 245.1	MERP/8072	EPA 245.1	MERC/9117
60138913009	**MW-1 SHALLOW_20130214**	EPA 245.1	MERP/8072	EPA 245.1	MERC/9117
60138913010	**MW-104_20130214**	EPA 245.1	MERP/8072	EPA 245.1	MERC/9117

This report shall not be reproduced, except in full,
without the written consent of Pace Analytical Services, Inc..

Pace Analytical Services, Inc.
9608 Loiret Blvd.
Lenexa, KS 66219
(913)599-5665

QUALITY CONTROL DATA CROSS REFERENCE TABLE

Project: February 2013 Rico Water Sampl
Pace Project No.: 60138913

Lab ID	Sample ID	QC Batch Method	QC Batch	Analytical Method	Analytical Batch
60138913011	**MW-103_20130214**	EPA 245.1	MERP/8072	EPA 245.1	MERC/9117
60138913012	**DR-10_20130215**	EPA 245.1	MERP/8072	EPA 245.1	MERC/9117
60138913013	**GW-7_20130215**	EPA 245.1	MERP/8072	EPA 245.1	MERC/9117
60138913014	**P13-102_20130215**	EPA 245.1	MERP/8072	EPA 245.1	MERC/9117
60138913015	**P13-103_20130215**	EPA 245.1	MERP/8072	EPA 245.1	MERC/9117
60138913016	**MW-4 SHALLOW_20130215**	EPA 245.1	MERP/8072	EPA 245.1	MERC/9117
60138913017	**EB-2_20130215**	EPA 245.1	MERP/8072	EPA 245.1	MERC/9117
60138913001	**MW-3 DEEP_20130213**	EPA 245.1	MERP/7109	EPA 245.1	MERC/7066
60138913002	**MW-2 DEEP_20130213**	EPA 245.1	MERP/7109	EPA 245.1	MERC/7066
60138913003	**GW-4_20130214**	EPA 245.1	MERP/7109	EPA 245.1	MERC/7066
60138913004	**MW-4 DEEP_02130214**	EPA 245.1	MERP/7109	EPA 245.1	MERC/7066
60138913005	**MW-6 SHALLOW_20130214**	EPA 245.1	MERP/7109	EPA 245.1	MERC/7066
60138913006	**MW-6 DEEP_20130214**	EPA 245.1	MERP/7109	EPA 245.1	MERC/7066
60138913007	**DR-9_20130214**	EPA 245.1	MERP/7109	EPA 245.1	MERC/7066
60138913008	**MW-1 DEEP_20130214**	EPA 245.1	MERP/7109	EPA 245.1	MERC/7066
60138913009	**MW-1 SHALLOW_20130214**	EPA 245.1	MERP/7109	EPA 245.1	MERC/7066
60138913010	**MW-104_20130214**	EPA 245.1	MERP/7109	EPA 245.1	MERC/7066
60138913011	**MW-103_20130214**	EPA 245.1	MERP/7109	EPA 245.1	MERC/7066
60138913012	**DR-10_20130215**	EPA 245.1	MERP/7109	EPA 245.1	MERC/7066
60138913013	**GW-7_20130215**	EPA 245.1	MERP/7109	EPA 245.1	MERC/7066
60138913014	**P13-102_20130215**	EPA 245.1	MERP/7109	EPA 245.1	MERC/7066
60138913015	**P13-103_20130215**	EPA 245.1	MERP/7109	EPA 245.1	MERC/7066
60138913016	**MW-4 SHALLOW_20130215**	EPA 245.1	MERP/7109	EPA 245.1	MERC/7066
60138913017	**EB-2_20130215**	EPA 245.1	MERP/7109	EPA 245.1	MERC/7066
60138913001	**MW-3 DEEP_20130213**	SM 2510B	MT/11363		
60138913002	**MW-2 DEEP_20130213**	SM 2510B	MT/11363		
60138913003	**GW-4_20130214**	SM 2510B	MT/11363		
60138913004	**MW-4 DEEP_02130214**	SM 2510B	MT/11363		
60138913005	**MW-6 SHALLOW_20130214**	SM 2510B	MT/11363		
60138913006	**MW-6 DEEP_20130214**	SM 2510B	MT/11363		
60138913007	**DR-9_20130214**	SM 2510B	MT/11363		
60138913008	**MW-1 DEEP_20130214**	SM 2510B	MT/11363		
60138913009	**MW-1 SHALLOW_20130214**	SM 2510B	MT/11363		
60138913010	**MW-104_20130214**	SM 2510B	MT/11363		
60138913011	**MW-103_20130214**	SM 2510B	MT/11363		
60138913012	**DR-10_20130215**	SM 2510B	MT/11363		
60138913013	**GW-7_20130215**	SM 2510B	MT/11363		
60138913014	**P13-102_20130215**	SM 2510B	MT/11363		
60138913015	**P13-103_20130215**	SM 2510B	MT/11363		
60138913016	**MW-4 SHALLOW_20130215**	SM 2510B	MT/11363		
60138913017	**EB-2_20130215**	SM 2510B	MT/11363		
60138913001	**MW-3 DEEP_20130213**	Calculated	MT/11365		
60138913002	**MW-2 DEEP_20130213**	Calculated	MT/11365		
60138913003	**GW-4_20130214**	Calculated	MT/11365		
60138913004	**MW-4 DEEP_02130214**	Calculated	MT/11365		
60138913005	**MW-6 SHALLOW_20130214**	Calculated	MT/11365		
60138913006	**MW-6 DEEP_20130214**	Calculated	MT/11365		

This report shall not be reproduced, except in full,
without the written consent of Pace Analytical Services, Inc..

Pace Analytical Services, Inc.
9608 Loiret Blvd.
Lenexa, KS 66219
(913)599-5665

QUALITY CONTROL DATA CROSS REFERENCE TABLE

Project: February 2013 Rico Water Sampl
Pace Project No.: 60138913

Lab ID	Sample ID	QC Batch Method	QC Batch	Analytical Method	Analytical Batch
60138913007	**DR-9_20130214**	Calculated	MT/11365		
60138913008	**MW-1 DEEP_20130214**	Calculated	MT/11365		
60138913009	**MW-1 SHALLOW_20130214**	Calculated	MT/11365		
60138913010	**MW-104_20130214**	Calculated	MT/11365		
60138913011	**MW-103_20130214**	Calculated	MT/11365		
60138913012	**DR-10_20130215**	Calculated	MT/11365		
60138913013	**GW-7_20130215**	Calculated	MT/11365		
60138913014	**P13-102_20130215**	Calculated	MT/11365		
60138913015	**P13-103_20130215**	Calculated	MT/11365		
60138913016	**MW-4 SHALLOW_20130215**	Calculated	MT/11365		
60138913017	**EB-2_20130215**	Calculated	MT/11365		
60138913001	**MW-3 DEEP_20130213**	SM 2320B	WET/39936		
60138913002	**MW-2 DEEP_20130213**	SM 2320B	WET/39936		
60138913003	**GW-4_20130214**	SM 2320B	WET/39937		
60138913004	**MW-4 DEEP_02130214**	SM 2320B	WET/39937		
60138913005	**MW-6 SHALLOW_20130214**	SM 2320B	WET/39937		
60138913006	**MW-6 DEEP_20130214**	SM 2320B	WET/39937		
60138913007	**DR-9_20130214**	SM 2320B	WET/39937		
60138913008	**MW-1 DEEP_20130214**	SM 2320B	WET/39937		
60138913009	**MW-1 SHALLOW_20130214**	SM 2320B	WET/39937		
60138913010	**MW-104_20130214**	SM 2320B	WET/39937		
60138913011	**MW-103_20130214**	SM 2320B	WET/39937		
60138913012	**DR-10_20130215**	SM 2320B	WET/39937		
60138913013	**GW-7_20130215**	SM 2320B	WET/39937		
60138913014	**P13-102_20130215**	SM 2320B	WET/39937		
60138913015	**P13-103_20130215**	SM 2320B	WET/39937		
60138913016	**MW-4 SHALLOW_20130215**	SM 2320B	WET/39937		
60138913017	**EB-2_20130215**	SM 2320B	WET/39937		
60138913001	**MW-3 DEEP_20130213**	SM 2540C	WET/39811		
60138913002	**MW-2 DEEP_20130213**	SM 2540C	WET/39811		
60138913003	**GW-4_20130214**	SM 2540C	WET/39811		
60138913004	**MW-4 DEEP_02130214**	SM 2540C	WET/39811		
60138913005	**MW-6 SHALLOW_20130214**	SM 2540C	WET/39811		
60138913006	**MW-6 DEEP_20130214**	SM 2540C	WET/39811		
60138913007	**DR-9_20130214**	SM 2540C	WET/39811		
60138913008	**MW-1 DEEP_20130214**	SM 2540C	WET/39811		
60138913009	**MW-1 SHALLOW_20130214**	SM 2540C	WET/39811		
60138913010	**MW-104_20130214**	SM 2540C	WET/39811		
60138913011	**MW-103_20130214**	SM 2540C	WET/39811		
60138913012	**DR-10_20130215**	SM 2540C	WET/39811		
60138913013	**GW-7_20130215**	SM 2540C	WET/39811		
60138913014	**P13-102_20130215**	SM 2540C	WET/39811		
60138913015	**P13-103_20130215**	SM 2540C	WET/39811		
60138913016	**MW-4 SHALLOW_20130215**	SM 2540C	WET/39811		
60138913017	**EB-2_20130215**	SM 2540C	WET/39811		
60138913001	**MW-3 DEEP_20130213**	SM 2540D	WET/39815		
60138913002	**MW-2 DEEP_20130213**	SM 2540D	WET/39815		

This report shall not be reproduced, except in full,
without the written consent of Pace Analytical Services, Inc..

Pace Analytical Services, Inc.
9608 Loiret Blvd.
Lenexa, KS 66219
(913)599-5665

QUALITY CONTROL DATA CROSS REFERENCE TABLE

Project: February 2013 Rico Water Sampl
Pace Project No.: 60138913

Lab ID	Sample ID	QC Batch Method	QC Batch	Analytical Method	Analytical Batch
60138913003	**GW-4_20130214**	SM 2540D	WET/39817		
60138913004	**MW-4 DEEP_02130214**	SM 2540D	WET/39817		
60138913005	**MW-6 SHALLOW_20130214**	SM 2540D	WET/39817		
60138913006	**MW-6 DEEP_20130214**	SM 2540D	WET/39817		
60138913007	**DR-9_20130214**	SM 2540D	WET/39817		
60138913008	**MW-1 DEEP_20130214**	SM 2540D	WET/39817		
60138913009	**MW-1 SHALLOW_20130214**	SM 2540D	WET/39817		
60138913010	**MW-104_20130214**	SM 2540D	WET/39817		
60138913011	**MW-103_20130214**	SM 2540D	WET/39817		
60138913012	**DR-10_20130215**	SM 2540D	WET/39838		
60138913013	**GW-7_20130215**	SM 2540D	WET/39838		
60138913014	**P13-102_20130215**	SM 2540D	WET/39838		
60138913015	**P13-103_20130215**	SM 2540D	WET/39838		
60138913016	**MW-4 SHALLOW_20130215**	SM 2540D	WET/39838		
60138913017	**EB-2_20130215**	SM 2540D	WET/39838		
60138913001	**MW-3 DEEP_20130213**	SM 4500-S-2 D	WET/39813		
60138913002	**MW-2 DEEP_20130213**	SM 4500-S-2 D	WET/39813		
60138913003	**GW-4_20130214**	SM 4500-S-2 D	WET/39813		
60138913004	**MW-4 DEEP_02130214**	SM 4500-S-2 D	WET/39813		
60138913005	**MW-6 SHALLOW_20130214**	SM 4500-S-2 D	WET/39813		
60138913006	**MW-6 DEEP_20130214**	SM 4500-S-2 D	WET/39813		
60138913007	**DR-9_20130214**	SM 4500-S-2 D	WET/39813		
60138913008	**MW-1 DEEP_20130214**	SM 4500-S-2 D	WET/39813		
60138913009	**MW-1 SHALLOW_20130214**	SM 4500-S-2 D	WET/39813		
60138913010	**MW-104_20130214**	SM 4500-S-2 D	WET/39813		
60138913011	**MW-103_20130214**	SM 4500-S-2 D	WET/39813		
60138913012	**DR-10_20130215**	SM 4500-S-2 D	WET/39813		
60138913013	**GW-7_20130215**	SM 4500-S-2 D	WET/39813		
60138913014	**P13-102_20130215**	SM 4500-S-2 D	WET/39813		
60138913015	**P13-103_20130215**	SM 4500-S-2 D	WET/39813		
60138913016	**MW-4 SHALLOW_20130215**	SM 4500-S-2 D	WET/39813		
60138913017	**EB-2_20130215**	SM 4500-S-2 D	WET/39813		
60138913001	**MW-3 DEEP_20130213**	EPA 300.0	WETA/23595		
60138913002	**MW-2 DEEP_20130213**	EPA 300.0	WETA/23595		
60138913003	**GW-4_20130214**	EPA 300.0	WETA/23595		
60138913004	**MW-4 DEEP_02130214**	EPA 300.0	WETA/23595		
60138913005	**MW-6 SHALLOW_20130214**	EPA 300.0	WETA/23595		
60138913006	**MW-6 DEEP_20130214**	EPA 300.0	WETA/23595		
60138913007	**DR-9_20130214**	EPA 300.0	WETA/23595		
60138913008	**MW-1 DEEP_20130214**	EPA 300.0	WETA/23595		
60138913009	**MW-1 SHALLOW_20130214**	EPA 300.0	WETA/23595		
60138913010	**MW-104_20130214**	EPA 300.0	WETA/23595		
60138913011	**MW-103_20130214**	EPA 300.0	WETA/23595		
60138913012	**DR-10_20130215**	EPA 300.0	WETA/23595		
60138913013	**GW-7_20130215**	EPA 300.0	WETA/23595		
60138913014	**P13-102_20130215**	EPA 300.0	WETA/23595		
60138913015	**P13-103_20130215**	EPA 300.0	WETA/23595		

This report shall not be reproduced, except in full,
without the written consent of Pace Analytical Services, Inc..

Pace Analytical Services, Inc.
9608 Loiret Blvd.
Lenexa, KS 66219
(913)599-5665

QUALITY CONTROL DATA CROSS REFERENCE TABLE

Project: February 2013 Rico Water Sampl
Pace Project No.: 60138913

Lab ID	Sample ID	QC Batch Method	QC Batch	Analytical Method	Analytical Batch
60138913016	**MW-4 SHALLOW_20130215**	EPA 300.0	WETA/23595		
60138913017	**EB-2_20130215**	EPA 300.0	WETA/23595		
60138913001	**MW-3 DEEP_20130213**	EPA 353.2	WETA/23662		
60138913002	**MW-2 DEEP_20130213**	EPA 353.2	WETA/23662		
60138913003	**GW-4_20130214**	EPA 353.2	WETA/23662		
60138913004	**MW-4 DEEP_02130214**	EPA 353.2	WETA/23662		
60138913005	**MW-6 SHALLOW_20130214**	EPA 353.2	WETA/23662		
60138913006	**MW-6 DEEP_20130214**	EPA 353.2	WETA/23662		
60138913007	**DR-9_20130214**	EPA 353.2	WETA/23662		
60138913008	**MW-1 DEEP_20130214**	EPA 353.2	WETA/23662		
60138913009	**MW-1 SHALLOW_20130214**	EPA 353.2	WETA/23662		
60138913010	**MW-104_20130214**	EPA 353.2	WETA/23662		
60138913011	**MW-103_20130214**	EPA 353.2	WETA/23662		
60138913012	**DR-10_20130215**	EPA 353.2	WETA/23662		
60138913013	**GW-7_20130215**	EPA 353.2	WETA/23662		
60138913014	**P13-102_20130215**	EPA 353.2	WETA/23662		
60138913015	**P13-103_20130215**	EPA 353.2	WETA/23662		
60138913016	**MW-4 SHALLOW_20130215**	EPA 353.2	WETA/23662		
60138913017	**EB-2_20130215**	EPA 353.2	WETA/23662		
60138913001	**MW-3 DEEP_20130213**	SM 4500-CN-E	WETA/23602		
60138913002	**MW-2 DEEP_20130213**	SM 4500-CN-E	WETA/23602		
60138913003	**GW-4_20130214**	SM 4500-CN-E	WETA/23602		
60138913004	**MW-4 DEEP_02130214**	SM 4500-CN-E	WETA/23602		
60138913005	**MW-6 SHALLOW_20130214**	SM 4500-CN-E	WETA/23602		
60138913006	**MW-6 DEEP_20130214**	SM 4500-CN-E	WETA/23602		
60138913007	**DR-9_20130214**	SM 4500-CN-E	WETA/23602		
60138913008	**MW-1 DEEP_20130214**	SM 4500-CN-E	WETA/23602		
60138913009	**MW-1 SHALLOW_20130214**	SM 4500-CN-E	WETA/23602		
60138913010	**MW-104_20130214**	SM 4500-CN-E	WETA/23602		
60138913011	**MW-103_20130214**	SM 4500-CN-E	WETA/23602		
60138913012	**DR-10_20130215**	SM 4500-CN-E	WETA/23602		
60138913013	**GW-7_20130215**	SM 4500-CN-E	WETA/23602		
60138913014	**P13-102_20130215**	SM 4500-CN-E	WETA/23602		
60138913015	**P13-103_20130215**	SM 4500-CN-E	WETA/23602		
60138913016	**MW-4 SHALLOW_20130215**	SM 4500-CN-E	WETA/23602		
60138913017	**EB-2_20130215**	SM 4500-CN-E	WETA/23602		
60138913001	**MW-3 DEEP_20130213**	SM 5310C	WETA/16362		
60138913002	**MW-2 DEEP_20130213**	SM 5310C	WETA/16362		
60138913003	**GW-4_20130214**	SM 5310C	WETA/16362		
60138913004	**MW-4 DEEP_02130214**	SM 5310C	WETA/16362		
60138913005	**MW-6 SHALLOW_20130214**	SM 5310C	WETA/16362		
60138913006	**MW-6 DEEP_20130214**	SM 5310C	WETA/16362		
60138913007	**DR-9_20130214**	SM 5310C	WETA/16362		
60138913008	**MW-1 DEEP_20130214**	SM 5310C	WETA/16362		
60138913009	**MW-1 SHALLOW_20130214**	SM 5310C	WETA/16362		
60138913010	**MW-104_20130214**	SM 5310C	WETA/16362		
60138913011	**MW-103_20130214**	SM 5310C	WETA/16362		

This report shall not be reproduced, except in full,
without the written consent of Pace Analytical Services, Inc..

Pace Analytical Services, Inc.
9608 Loiret Blvd.
Lenexa, KS 66219
(913)599-5665

QUALITY CONTROL DATA CROSS REFERENCE TABLE

Project: February 2013 Rico Water Sampl
Pace Project No.: 60138913

Lab ID	Sample ID	QC Batch Method	QC Batch	Analytical Method	Analytical Batch
60138913012	**DR-10_20130215**	SM 5310C	WETA/16362		
60138913013	**GW-7_20130215**	SM 5310C	WETA/16362		
60138913014	**P13-102_20130215**	SM 5310C	WETA/16362		
60138913015	**P13-103_20130215**	SM 5310C	WETA/16362		
60138913016	**MW-4 SHALLOW_20130215**	SM 5310C	WETA/16362		
60138913017	**EB-2_20130215**	SM 5310C	WETA/16362		

This report shall not be reproduced, except in full,
without the written consent of Pace Analytical Services, Inc..

Pace Analytical Services, Inc.
9608 Loiret Blvd.
Lenexa, KS 66219
(913)599-5665

QUALITY CONTROL DATA

Project: February 2013 Rico Water Sampl
Pace Project No.: 60139049

QC Batch: MERP/8095 Analysis Method: EPA 245.1
QC Batch Method: EPA 245.1 Analysis Description: 245.1 Mercury
Associated Lab Samples: 60139049001, 60139049002, 60139049003, 60139049004, 60139049005, 60139049006, 60139049007, 60139049008, 60139049009, 60139049010

METHOD BLANK: 1383860 Matrix: Water
Associated Lab Samples: 60139049001, 60139049002, 60139049003, 60139049004, 60139049005, 60139049006, 60139049007, 60139049008, 60139049009, 60139049010

Parameter	Units	Blank Result	Reporting Limit	Analyzed	Qualifiers
Mercury	ug/L	ND	0.20	03/01/13 14:15	

LABORATORY CONTROL SAMPLE: 1383861

Parameter	Units	Spike Conc.	LCS Result	LCS % Rec	% Rec Limits	Qualifiers
Mercury	ug/L	5	4.6	93	85-115	

MATRIX SPIKE SAMPLE: 1383864

Parameter	Units	60139196002 Result	Spike Conc.	MS Result	MS % Rec	% Rec Limits	Qualifiers
Mercury	ug/L	ND	5	5.0	99	85-115	

MATRIX SPIKE & MATRIX SPIKE DUPLICATE: 1384019 1384020

Parameter	Units	60139049002 Result	MS Spike Conc.	MSD Spike Conc.	MS Result	MSD Result	MS % Rec	MSD % Rec	% Rec Limits	RPD	Max RPD	Qual
Mercury	ug/L	ND	5	5	4.8	5.0	95	100	85-115	5	30	

This report shall not be reproduced, except in full,
without the written consent of Pace Analytical Services, Inc..

Pace Analytical Services, Inc.
9608 Loiret Blvd.
Lenexa, KS 66219
(913)599-5665

QUALITY CONTROL DATA

Project: February 2013 Rico Water Sampl
Pace Project No.: 60139049

QC Batch: MERP/8093 | Analysis Method: EPA 245.1
QC Batch Method: EPA 245.1 | Analysis Description: 245.1 Mercury - Dissolved
Associated Lab Samples: 60139049001, 60139049002, 60139049003, 60139049004, 60139049005, 60139049006, 60139049007, 60139049008, 60139049009, 60139049010

METHOD BLANK: 1383848 | Matrix: Water
Associated Lab Samples: 60139049001, 60139049002, 60139049003, 60139049004, 60139049005, 60139049006, 60139049007, 60139049008, 60139049009, 60139049010

Parameter	Units	Blank Result	Reporting Limit	Analyzed	Qualifiers
Mercury, Dissolved	ug/L	ND	0.20	03/01/13 15:12	

LABORATORY CONTROL SAMPLE: 1383849

Parameter	Units	Spike Conc.	LCS Result	LCS % Rec	% Rec Limits	Qualifiers
Mercury, Dissolved	ug/L	5	5.1	102	85-115	

MATRIX SPIKE SAMPLE: 1383852

Parameter	Units	60139196002 Result	Spike Conc.	MS Result	MS % Rec	% Rec Limits	Qualifiers
Mercury, Dissolved	ug/L	ND	5	4.9	98	85-115	

MATRIX SPIKE & MATRIX SPIKE DUPLICATE: 1384017 1384018

Parameter	Units	60139049002 Result	MS Spike Conc.	MSD Spike Conc.	MS Result	MSD Result	MS % Rec	MSD % Rec	% Rec Limits	RPD	Max RPD	Qual
Mercury, Dissolved	ug/L	ND	5	5	4.9	5.0	97	101	85-115	4	20	

This report shall not be reproduced, except in full,
without the written consent of Pace Analytical Services, Inc..

Pace Analytical Services, Inc.
9608 Loiret Blvd.
Lenexa, KS 66219
(913)599-5665

QUALITY CONTROL DATA

Project: February 2013 Rico Water Sampl
Pace Project No.: 60139049

QC Batch: MERP/7172 | Analysis Method: EPA 245.1
QC Batch Method: EPA 245.1 | Analysis Description: 245.1 Mercury, Potentially Dissolved
Associated Lab Samples: 60139049001, 60139049002, 60139049003, 60139049004, 60139049005, 60139049006, 60139049007, 60139049008, 60139049009, 60139049010

METHOD BLANK: 1155452 | Matrix: Water
Associated Lab Samples: 60139049001, 60139049002, 60139049003, 60139049004, 60139049005, 60139049006, 60139049007, 60139049008, 60139049009, 60139049010

Parameter	Units	Blank Result	Reporting Limit	Analyzed	Qualifiers
Mercury, Dissolved	ug/L	ND	0.20	03/18/13 15:53	

LABORATORY CONTROL SAMPLE: 1155453

Parameter	Units	Spike Conc.	LCS Result	LCS % Rec	% Rec Limits	Qualifiers
Mercury, Dissolved	ug/L	5	5.0	100	85-115	

MATRIX SPIKE & MATRIX SPIKE DUPLICATE: 1155454 1155455

Parameter	Units	60139049006 Result	MS Spike Conc.	MSD Spike Conc.	MS Result	MSD Result	MS % Rec	MSD % Rec	% Rec Limits	RPD	Max RPD	Qual
Mercury, Dissolved	ug/L	ND	5	5	5.0	4.8	99	96	70-130	2	20	

This report shall not be reproduced, except in full,
without the written consent of Pace Analytical Services, Inc..

Pace Analytical Services, Inc.
9608 Loiret Blvd.
Lenexa, KS 66219
(913)599-5665

QUALITY CONTROL DATA

Project: February 2013 Rico Water Sampl
Pace Project No.: 60139049

QC Batch: MPRP/21639 | Analysis Method: EPA 200.7
QC Batch Method: EPA 200.7 | Analysis Description: 200.7 Potentially Dissolved Metals
Associated Lab Samples: 60139049001, 60139049002, 60139049003, 60139049004, 60139049005, 60139049006, 60139049007, 60139049008, 60139049009, 60139049010

METHOD BLANK: 1143938 | Matrix: Water
Associated Lab Samples: 60139049001, 60139049002, 60139049003, 60139049004, 60139049005, 60139049006, 60139049007, 60139049008, 60139049009, 60139049010

Parameter	Units	Blank Result	Reporting Limit	Analyzed	Qualifiers
Calcium, Dissolved	ug/L	ND	100	03/05/13 10:08	
Magnesium, Dissolved	ug/L	ND	50.0	03/05/13 10:08	
Potassium, Dissolved	ug/L	ND	500	03/05/13 10:08	
Sodium, Dissolved	ug/L	68.7J	500	03/05/13 10:08	

LABORATORY CONTROL SAMPLE: 1143939

Parameter	Units	Spike Conc.	LCS Result	LCS % Rec	% Rec Limits	Qualifiers
Calcium, Dissolved	ug/L	10000	10600	106	85-115	
Magnesium, Dissolved	ug/L	10000	10200	102	85-115	
Potassium, Dissolved	ug/L	10000	11200	112	85-115	
Sodium, Dissolved	ug/L	10000	10700	107	85-115	

MATRIX SPIKE & MATRIX SPIKE DUPLICATE: 1143940 1143941

Parameter	Units	60139049001 Result	MS Spike Conc.	MSD Spike Conc.	MS Result	MSD Result	MS % Rec	MSD % Rec	% Rec Limits	RPD	Max RPD	Qual
Calcium, Dissolved	ug/L	269000	10000	10000	276000	273000	73	41	70-130	1	20	M1
Magnesium, Dissolved	ug/L	22200	10000	10000	31100	30800	89	86	70-130	1	20	
Potassium, Dissolved	ug/L	8800	10000	10000	19600	19300	108	105	70-130	2	20	
Sodium, Dissolved	ug/L	14600	10000	10000	25100	24600	105	100	70-130	2	20	

This report shall not be reproduced, except in full,
without the written consent of Pace Analytical Services, Inc..

Pace Analytical Services, Inc.
9608 Loiret Blvd.
Lenexa, KS 66219
(913)599-5665

QUALITY CONTROL DATA

Project: February 2013 Rico Water Sampl
Pace Project No.: 60139049

QC Batch: MPRP/37780 Analysis Method: EPA 200.8
QC Batch Method: EPA 200.8 Analysis Description: 200.8 MET
Associated Lab Samples: 60139049001, 60139049002, 60139049003, 60139049004, 60139049005, 60139049006, 60139049007, 60139049008, 60139049009, 60139049010

METHOD BLANK: 1383250 Matrix: Water
Associated Lab Samples: 60139049001, 60139049002, 60139049003, 60139049004, 60139049005, 60139049006, 60139049007, 60139049008, 60139049009, 60139049010

Parameter	Units	Blank Result	Reporting Limit	Analyzed	Qualifiers
Aluminum	ug/L	ND	4.0	03/04/13 11:12	
Antimony	ug/L	ND	0.50	03/04/13 11:12	
Arsenic	ug/L	ND	0.50	03/04/13 11:12	
Barium	ug/L	ND	0.30	03/04/13 11:12	
Beryllium	ug/L	ND	0.20	03/04/13 11:12	
Cadmium	ug/L	ND	0.080	03/04/13 11:12	
Calcium	ug/L	ND	20.0	03/04/13 11:12	
Chromium	ug/L	ND	0.50	03/04/13 11:12	
Cobalt	ug/L	ND	0.50	03/04/13 11:12	
Copper	ug/L	ND	0.50	03/04/13 11:12	
Iron	ug/L	ND	50.0	03/04/13 11:12	
Lead	ug/L	ND	0.10	03/04/13 11:12	
Magnesium	ug/L	ND	5.0	03/04/13 11:12	
Manganese	ug/L	ND	0.50	03/04/13 11:12	
Molybdenum	ug/L	ND	0.50	03/04/13 11:12	
Nickel	ug/L	ND	0.50	03/04/13 11:12	
Potassium	ug/L	ND	20.0	03/03/13 15:50	
Selenium	ug/L	ND	0.50	03/04/13 11:12	
Silica	ug/L	ND	53.5	03/03/13 15:50	
Silver	ug/L	ND	0.50	03/04/13 11:12	
Sodium	ug/L	ND	50.0	03/04/13 11:12	
Thallium	ug/L	ND	0.10	03/04/13 11:12	
Total Hardness by 2340B	ug/L	ND	71.0	03/04/13 11:12	
Vanadium	ug/L	ND	0.10	03/04/13 11:12	
Zinc	ug/L	ND	5.0	03/04/13 11:12	

LABORATORY CONTROL SAMPLE: 1383251

Parameter	Units	Spike Conc.	LCS Result	LCS % Rec	% Rec Limits	Qualifiers
Aluminum	ug/L	80	81.1	101	85-115	
Antimony	ug/L	80	80.7	101	85-115	
Arsenic	ug/L	80	80.6	101	85-115	
Barium	ug/L	80	81.0	101	85-115	
Beryllium	ug/L	80	82.2	103	85-115	
Cadmium	ug/L	80	82.4	103	85-115	
Calcium	ug/L	1000	1080	108	85-115	
Chromium	ug/L	80	83.2	104	85-115	
Cobalt	ug/L	80	83.9	105	85-115	
Copper	ug/L	80	85.8	107	85-115	
Iron	ug/L	1000	1030	103	85-115	

This report shall not be reproduced, except in full,
without the written consent of Pace Analytical Services, Inc..

Pace Analytical Services, Inc.
9608 Loiret Blvd.
Lenexa, KS 66219
(913)599-5665

QUALITY CONTROL DATA

Project: February 2013 Rico Water Sampl
Pace Project No.: 60139049

LABORATORY CONTROL SAMPLE: 1383251

Parameter	Units	Spike Conc.	LCS Result	LCS % Rec	% Rec Limits	Qualifiers
Lead	ug/L	80	82.0	103	85-115	
Magnesium	ug/L	1000	1020	102	85-115	
Manganese	ug/L	80	80.2	100	85-115	
Molybdenum	ug/L	80	83.3	104	85-115	
Nickel	ug/L	80	82.7	103	85-115	
Potassium	ug/L	1000	1000	100	85-115	
Selenium	ug/L	80	80.2	100	85-115	
Silica	ug/L	2140	2170	102	85-115	
Silver	ug/L	80	82.8	104	85-115	
Sodium	ug/L	1000	975	98	85-115	
Thallium	ug/L	80	84.3	105	85-115	
Total Hardness by 2340B	ug/L	6620	6870	104	85-115	
Vanadium	ug/L	80	82.9	104	85-115	
Zinc	ug/L	80	81.5	102	85-115	

MATRIX SPIKE & MATRIX SPIKE DUPLICATE: 1383252 1383253

Parameter	Units	60139049001 Result	MS Spike Conc.	MSD Spike Conc.	MS Result	MSD Result	MS % Rec	MSD % Rec	% Rec Limits	RPD	Max RPD	Qual
Aluminum	ug/L	76.9	80	80	165	169	110	115	70-130	3	20	
Antimony	ug/L	ND	80	80	81.4	81.3	101	101	70-130	.09	20	
Arsenic	ug/L	ND	80	80	81.5	81.8	101	102	70-130	.4	20	
Barium	ug/L	20.7	80	80	99.8	104	99	104	70-130	4	20	
Beryllium	ug/L	0.22	80	80	84.1	84.2	105	105	70-130	.06	20	
Cadmium	ug/L	5.7	80	80	87.5	87.4	102	102	70-130	.06	20	
Calcium	ug/L	279000	1000	1000	274000	278000	-470	-110	70-130	1	20	E,M6
Chromium	ug/L	ND	80	80	84.2	82.8	105	103	70-130	2	20	
Cobalt	ug/L	2.2	80	80	85.7	85.5	104	104	70-130	.2	20	
Copper	ug/L	18.6	80	80	104	103	107	106	70-130	.9	20	
Iron	ug/L	1370	1000	1000	2420	2490	105	112	70-130	3	20	
Lead	ug/L	1.7	80	80	80.9	81.0	99	99	70-130	.1	20	
Magnesium	ug/L	21600	1000	1000	24500	24600	289	305	70-130	.7	20	M6
Manganese	ug/L	1650	80	80	1690	1700	57	62	70-130	.2	20	M6
Molybdenum	ug/L	15.3	80	80	100	102	106	109	70-130	2	20	
Nickel	ug/L	3.2	80	80	86.2	87.2	104	105	70-130	1	20	
Potassium	ug/L	8440	1000	1000	9290	9410	86	98	70-130	1	20	
Selenium	ug/L	ND	80	80	77.9	80.0	97	100	70-130	3	20	
Silica	ug/L	19600	2140	2140	20900	21500	60	86	70-130	3	20	M6
Silver	ug/L	ND	80	80	73.3	76.2	91	95	70-130	4	20	
Sodium	ug/L	13700	1000	1000	14600	14900	89	120	70-130	2	20	
Thallium	ug/L	ND	80	80	80.0	80.2	100	100	70-130	.3	20	
Total Hardness by 2340B	ug/L	785000	6620	6620	785000	795000	2	148	70-130	1	20	M6
Vanadium	ug/L	ND	80	80	83.5	83.4	104	104	70-130	.1	20	
Zinc	ug/L	1780	80	80	1860	1860	101	92	70-130	.4	20	

This report shall not be reproduced, except in full,
without the written consent of Pace Analytical Services, Inc..

Pace Analytical Services, Inc.
9608 Loiret Blvd.
Lenexa, KS 66219
(913)599-5665

QUALITY CONTROL DATA

Project: February 2013 Rico Water Sampl
Pace Project No.: 60139049

QC Batch: MPRP/37781 Analysis Method: EPA 200.8
QC Batch Method: EPA 200.8 Analysis Description: 200.8 MET Dissolved
Associated Lab Samples: 60139049001, 60139049002, 60139049003, 60139049004, 60139049005, 60139049006, 60139049007, 60139049008, 60139049009, 60139049010

METHOD BLANK: 1383258 Matrix: Water
Associated Lab Samples: 60139049001, 60139049002, 60139049003, 60139049004, 60139049005, 60139049006, 60139049007, 60139049008, 60139049009, 60139049010

Parameter	Units	Blank Result	Reporting Limit	Analyzed	Qualifiers
Aluminum, Dissolved	ug/L	ND	4.0	03/05/13 19:29	
Antimony, Dissolved	ug/L	ND	0.50	03/05/13 19:29	
Arsenic, Dissolved	ug/L	ND	0.50	03/05/13 19:29	
Barium, Dissolved	ug/L	ND	0.30	03/05/13 19:29	
Beryllium, Dissolved	ug/L	ND	0.20	03/05/13 19:29	
Cadmium, Dissolved	ug/L	ND	0.080	03/05/13 19:29	
Calcium, Dissolved	ug/L	ND	20.0	03/05/13 19:29	
Chromium, Dissolved	ug/L	ND	0.50	03/05/13 19:29	
Cobalt, Dissolved	ug/L	ND	0.50	03/05/13 19:29	
Copper, Dissolved	ug/L	ND	0.50	03/05/13 19:29	
Iron, Dissolved	ug/L	ND	50.0	03/05/13 19:29	
Lead, Dissolved	ug/L	ND	0.10	03/05/13 19:29	
Magnesium, Dissolved	ug/L	ND	5.0	03/06/13 10:55	
Manganese, Dissolved	ug/L	ND	0.50	03/05/13 19:29	
Molybdenum, Dissolved	ug/L	ND	0.50	03/05/13 19:29	
Nickel, Dissolved	ug/L	ND	0.50	03/05/13 19:29	
Potassium, Dissolved	ug/L	ND	20.0	03/06/13 10:55	
Selenium, Dissolved	ug/L	ND	0.50	03/05/13 19:29	
Silver, Dissolved	ug/L	ND	0.50	03/05/13 19:29	
Sodium, Dissolved	ug/L	ND	50.0	03/05/13 19:29	
Thallium, Dissolved	ug/L	ND	0.10	03/05/13 19:29	
Vanadium, Dissolved	ug/L	ND	0.10	03/05/13 19:29	
Zinc, Dissolved	ug/L	ND	5.0	03/05/13 19:29	

LABORATORY CONTROL SAMPLE: 1383259

Parameter	Units	Spike Conc.	LCS Result	LCS % Rec	% Rec Limits	Qualifiers
Aluminum, Dissolved	ug/L	80	83.6	104	85-115	
Antimony, Dissolved	ug/L	80	79.2	99	85-115	
Arsenic, Dissolved	ug/L	80	82.0	102	85-115	
Barium, Dissolved	ug/L	80	78.8	99	85-115	
Beryllium, Dissolved	ug/L	80	86.9	109	85-115	
Cadmium, Dissolved	ug/L	80	80.4	101	85-115	
Calcium, Dissolved	ug/L	1000	1060	106	85-115	
Chromium, Dissolved	ug/L	80	82.9	104	85-115	
Cobalt, Dissolved	ug/L	80	82.0	102	85-115	
Copper, Dissolved	ug/L	80	87.2	109	85-115	
Iron, Dissolved	ug/L	1000	1040	104	85-115	
Lead, Dissolved	ug/L	80	77.0	96	85-115	
Magnesium, Dissolved	ug/L	1000	1030	103	85-115	

This report shall not be reproduced, except in full,
without the written consent of Pace Analytical Services, Inc..

Pace Analytical Services, Inc.
9608 Loiret Blvd.
Lenexa, KS 66219
(913)599-5665

QUALITY CONTROL DATA

Project: February 2013 Rico Water Sampl
Pace Project No.: 60139049

LABORATORY CONTROL SAMPLE: 1383259

Parameter	Units	Spike Conc.	LCS Result	LCS % Rec	% Rec Limits	Qualifiers
Manganese, Dissolved	ug/L	80	80.2	100	85-115	
Molybdenum, Dissolved	ug/L	80	84.4	106	85-115	
Nickel, Dissolved	ug/L	80	85.9	107	85-115	
Potassium, Dissolved	ug/L	1000	1010	101	85-115	
Selenium, Dissolved	ug/L	80	79.3	99	85-115	
Silver, Dissolved	ug/L	80	85.2	107	85-115	
Sodium, Dissolved	ug/L	1000	1020	102	85-115	
Thallium, Dissolved	ug/L	80	76.7	96	85-115	
Vanadium, Dissolved	ug/L	80	83.9	105	85-115	
Zinc, Dissolved	ug/L	80	81.0	101	85-115	

MATRIX SPIKE & MATRIX SPIKE DUPLICATE: 1383260 1383261

Parameter	Units	60139049001 Result	MS Spike Conc.	MSD Spike Conc.	MS Result	MSD Result	MS % Rec	MSD % Rec	% Rec Limits	RPD	Max RPD	Qual
Aluminum, Dissolved	ug/L	8.9	80	80	96.0	91.0	109	103	70-130	5	20	
Antimony, Dissolved	ug/L	ND	80	80	79.9	81.4	100	102	70-130	2	20	
Arsenic, Dissolved	ug/L	ND	80	80	84.4	84.6	105	106	70-130	.4	20	
Barium, Dissolved	ug/L	20.6	80	80	97.4	101	96	101	70-130	4	20	
Beryllium, Dissolved	ug/L	ND	80	80	86.0	84.4	107	105	70-130	2	20	
Cadmium, Dissolved	ug/L	ND	80	80	78.7	81.7	98	102	70-130	4	20	
Calcium, Dissolved	ug/L	301000	1000	1000	296000	297000	-430	-400	70-130	.1	20	E,M1
Chromium, Dissolved	ug/L	ND	80	80	83.2	85.3	104	106	70-130	2	20	
Cobalt, Dissolved	ug/L	2.2	80	80	86.5	87.4	105	106	70-130	1	20	
Copper, Dissolved	ug/L	0.69	80	80	88.3	88.4	110	110	70-130	.06	20	
Iron, Dissolved	ug/L	247	1000	1000	1260	1300	102	106	70-130	3	20	
Lead, Dissolved	ug/L	ND	80	80	74.7	73.9	93	92	70-130	1	20	
Magnesium, Dissolved	ug/L	24600	1000	1000	25200	25000	61	44	70-130	.7	20	M1
Manganese, Dissolved	ug/L	1680	80	80	1680	1700	11	34	70-130	1	20	M1
Molybdenum, Dissolved	ug/L	15.6	80	80	101	105	107	112	70-130	3	20	
Nickel, Dissolved	ug/L	4.1	80	80	92.4	93.0	110	111	70-130	.6	20	
Potassium, Dissolved	ug/L	9270	1000	1000	9440	9480	17	22	70-130	.5	20	M1
Selenium, Dissolved	ug/L	ND	80	80	79.5	80.6	99	100	70-130	1	20	
Silver, Dissolved	ug/L	ND	80	80	75.4	81.0	94	101	70-130	7	20	
Sodium, Dissolved	ug/L	15500	1000	1000	15600	15600	12	14	70-130	.1	20	M1
Thallium, Dissolved	ug/L	ND	80	80	75.4	74.8	94	94	70-130	.7	20	
Vanadium, Dissolved	ug/L	ND	80	80	84.0	86.4	105	108	70-130	3	20	
Zinc, Dissolved	ug/L	1520	80	80	1600	1580	97	71	70-130	1	20	

This report shall not be reproduced, except in full,
without the written consent of Pace Analytical Services, Inc..

Pace Analytical Services, Inc.
9608 Loiret Blvd.
Lenexa, KS 66219
(913)599-5665

QUALITY CONTROL DATA

Project: February 2013 Rico Water Sampl
Pace Project No.: 60139049

QC Batch: MPRP/21640 Analysis Method: EPA 200.8
QC Batch Method: EPA 200.8 Analysis Description: 200.8 Potentially Dissolved Metals
Associated Lab Samples: 60139049001, 60139049002, 60139049003, 60139049004, 60139049005, 60139049006, 60139049007, 60139049008, 60139049009, 60139049010

METHOD BLANK: 1143943 Matrix: Water
Associated Lab Samples: 60139049001, 60139049002, 60139049003, 60139049004, 60139049005, 60139049006, 60139049007, 60139049008, 60139049009, 60139049010

Parameter	Units	Blank Result	Reporting Limit	Analyzed	Qualifiers
Aluminum, Dissolved	ug/L	ND	50.0	03/06/13 09:59	
Antimony, Dissolved	ug/L	ND	1.0	03/06/13 09:59	
Arsenic, Dissolved	ug/L	ND	1.0	03/06/13 09:59	
Barium, Dissolved	ug/L	0.22J	1.0	03/06/13 09:59	
Beryllium, Dissolved	ug/L	ND	0.50	03/06/13 09:59	
Cadmium, Dissolved	ug/L	ND	0.50	03/06/13 09:59	
Chromium, Dissolved	ug/L	0.23J	1.0	03/06/13 09:59	
Cobalt, Dissolved	ug/L	ND	1.0	03/06/13 09:59	
Copper, Dissolved	ug/L	ND	1.0	03/06/13 09:59	
Iron, Dissolved	ug/L	ND	50.0	03/06/13 09:59	
Lead, Dissolved	ug/L	0.052J	1.0	03/06/13 09:59	
Manganese, Dissolved	ug/L	ND	1.0	03/06/13 09:59	
Molybdenum, Dissolved	ug/L	ND	1.0	03/06/13 09:59	
Nickel, Dissolved	ug/L	ND	1.0	03/06/13 09:59	
Selenium, Dissolved	ug/L	ND	1.0	03/06/13 09:59	
Silver, Dissolved	ug/L	ND	0.50	03/06/13 09:59	
Thallium, Dissolved	ug/L	ND	1.0	03/06/13 09:59	
Vanadium, Dissolved	ug/L	ND	1.0	03/06/13 09:59	
Zinc, Dissolved	ug/L	ND	10.0	03/06/13 09:59	

LABORATORY CONTROL SAMPLE: 1143944

Parameter	Units	Spike Conc.	LCS Result	LCS % Rec	% Rec Limits	Qualifiers
Aluminum, Dissolved	ug/L	1000	960	96	85-115	
Antimony, Dissolved	ug/L	40	38.4	96	85-115	
Arsenic, Dissolved	ug/L	40	39.9	100	85-115	
Barium, Dissolved	ug/L	40	38.0	95	85-115	
Beryllium, Dissolved	ug/L	40	40.2	101	85-115	
Cadmium, Dissolved	ug/L	40	38.3	96	85-115	
Chromium, Dissolved	ug/L	40	38.0	95	85-115	
Cobalt, Dissolved	ug/L	40	38.4	96	85-115	
Copper, Dissolved	ug/L	40	39.6	99	85-115	
Iron, Dissolved	ug/L	1000	899	90	85-115	
Lead, Dissolved	ug/L	40	37.0	92	85-115	
Manganese, Dissolved	ug/L	40	38.0	95	85-115	
Molybdenum, Dissolved	ug/L	40	38.4	96	85-115	
Nickel, Dissolved	ug/L	40	38.9	97	85-115	
Selenium, Dissolved	ug/L	40	40.1	100	85-115	
Silver, Dissolved	ug/L	20	18.7	94	85-115	
Thallium, Dissolved	ug/L	40	36.8	92	85-115	

This report shall not be reproduced, except in full,
without the written consent of Pace Analytical Services, Inc..

Pace Analytical Services, Inc.
9608 Loiret Blvd.
Lenexa, KS 66219
(913)599-5665

QUALITY CONTROL DATA

Project: February 2013 Rico Water Sampl
Pace Project No.: 60139049

LABORATORY CONTROL SAMPLE: 1143944

Parameter	Units	Spike Conc.	LCS Result	LCS % Rec	% Rec Limits	Qualifiers
Vanadium, Dissolved	ug/L	40	38.8	97	85-115	
Zinc, Dissolved	ug/L	100	104	104	85-115	

MATRIX SPIKE & MATRIX SPIKE DUPLICATE: 1143945 1143946

Parameter	Units	60139049002 Result	MS Spike Conc.	MSD Spike Conc.	MS Result	MSD Result	MS % Rec	MSD % Rec	% Rec Limits	RPD	Max RPD	Qual
Aluminum, Dissolved	ug/L	14.4J	1000	1000	977	963	96	95	70-130	1	20	
Antimony, Dissolved	ug/L	0.083J	40	40	39.1	38.4	98	96	70-130	2	20	
Arsenic, Dissolved	ug/L	1.1	40	40	41.2	40.9	100	99	70-130	1	20	
Barium, Dissolved	ug/L	59.8	40	40	97.3	97.1	94	93	70-130	0	20	
Beryllium, Dissolved	ug/L	0.11J	40	40	37.5	37.0	93	92	70-130	1	20	
Cadmium, Dissolved	ug/L	0.56	40	40	38.5	38.3	95	94	70-130	0	20	
Chromium, Dissolved	ug/L	0.70J	40	40	39.7	39.9	98	98	70-130	1	20	
Cobalt, Dissolved	ug/L	0.41J	40	40	38.1	38.2	94	95	70-130	0	20	
Copper, Dissolved	ug/L	2.6	40	40	39.5	40.8	92	96	70-130	3	20	
Iron, Dissolved	ug/L	321	1000	1000	1240	1240	92	92	70-130	0	20	
Lead, Dissolved	ug/L	14.4	40	40	53.2	53.4	97	98	70-130	0	20	
Manganese, Dissolved	ug/L	411	40	40	446	447	87	90	70-130	0	20	
Molybdenum, Dissolved	ug/L	2.7	40	40	43.4	44.0	102	103	70-130	2	20	
Nickel, Dissolved	ug/L	0.43J	40	40	38.0	38.2	94	94	70-130	1	20	
Selenium, Dissolved	ug/L	0.43J	40	40	37.6	38.6	93	96	70-130	3	20	
Silver, Dissolved	ug/L	ND	20	20	18.5	18.4	93	92	70-130	0	20	
Thallium, Dissolved	ug/L	0.047J	40	40	39.0	39.3	98	98	70-130	1	20	
Vanadium, Dissolved	ug/L	ND	40	40	39.9	40.2	100	100	70-130	1	20	
Zinc, Dissolved	ug/L	208	100	100	299	299	91	91	70-130	0	20	

This report shall not be reproduced, except in full,
without the written consent of Pace Analytical Services, Inc..

Pace Analytical Services, Inc.
9608 Loiret Blvd.
Lenexa, KS 66219
(913)599-5665

QUALITY CONTROL DATA

Project: February 2013 Rico Water Sampl
Pace Project No.: 60139049

QC Batch: MT/11364 Analysis Method: SM 2510B
QC Batch Method: SM 2510B Analysis Description: 2510B Specific Conductance
Associated Lab Samples: 60139049001, 60139049002, 60139049003, 60139049004, 60139049005, 60139049006, 60139049007, 60139049008, 60139049009, 60139049010

METHOD BLANK: 1382303 Matrix: Water
Associated Lab Samples: 60139049001, 60139049002, 60139049003, 60139049004, 60139049005, 60139049006, 60139049007, 60139049008, 60139049009, 60139049010

Parameter	Units	Blank Result	Reporting Limit	Analyzed	Qualifiers
Specific Conductance	umhos/cm	ND	10.0	02/25/13 12:33	

LABORATORY CONTROL SAMPLE: 1382304

Parameter	Units	Spike Conc.	LCS Result	LCS % Rec	% Rec Limits	Qualifiers
Specific Conductance	umhos/cm	1000	979	98	90-110	

SAMPLE DUPLICATE: 1382305

Parameter	Units	10220692003 Result	Dup Result	RPD	Max RPD	Qualifiers
Specific Conductance	umhos/cm	646	676	4	20	

SAMPLE DUPLICATE: 1382504

Parameter	Units	60139049005 Result	Dup Result	RPD	Max RPD	Qualifiers
Specific Conductance	umhos/cm	1240	1270	2	20	

This report shall not be reproduced, except in full,
without the written consent of Pace Analytical Services, Inc..

Pace Analytical Services, Inc.
9608 Loiret Blvd.
Lenexa, KS 66219
(913)599-5665

QUALITY CONTROL DATA

Project: February 2013 Rico Water Sampl
Pace Project No.: 60139049

QC Batch: WET/39961 Analysis Method: SM 2320B
QC Batch Method: SM 2320B Analysis Description: 2320B Alkalinity
Associated Lab Samples: 60139049001, 60139049002, 60139049003, 60139049004, 60139049005, 60139049006, 60139049007, 60139049008, 60139049009, 60139049010

METHOD BLANK: 1145696 Matrix: Water
Associated Lab Samples: 60139049001, 60139049002, 60139049003, 60139049004, 60139049005, 60139049006, 60139049007, 60139049008, 60139049009, 60139049010

Parameter	Units	Blank Result	Reporting Limit	Analyzed	Qualifiers
Alkalinity, Carbonate (CaCO3)	mg/L	ND	20.0	02/28/13 12:28	
Alkalinity, Total as CaCO3	mg/L	ND	20.0	02/28/13 12:28	
Alkalinity,Bicarbonate (CaCO3)	mg/L	ND	20.0	02/28/13 12:28	

LABORATORY CONTROL SAMPLE: 1145697

Parameter	Units	Spike Conc.	LCS Result	LCS % Rec	% Rec Limits	Qualifiers
Alkalinity, Total as CaCO3	mg/L	500	500	100	90-110	

SAMPLE DUPLICATE: 1145698

Parameter	Units	60139049001 Result	Dup Result	RPD	Max RPD	Qualifiers
Alkalinity, Carbonate (CaCO3)	mg/L	ND	ND		10	
Alkalinity, Total as CaCO3	mg/L	141	152	7	10	
Alkalinity,Bicarbonate (CaCO3)	mg/L	141	152	7	10	

SAMPLE DUPLICATE: 1145699

Parameter	Units	60139049010 Result	Dup Result	RPD	Max RPD	Qualifiers
Alkalinity, Carbonate (CaCO3)	mg/L	ND	ND		10	
Alkalinity, Total as CaCO3	mg/L	99.0	102	3	10	
Alkalinity,Bicarbonate (CaCO3)	mg/L	99.0	102	3	10	

This report shall not be reproduced, except in full,
without the written consent of Pace Analytical Services, Inc..

Pace Analytical Services, Inc.
9608 Loiret Blvd.
Lenexa, KS 66219
(913)599-5665

QUALITY CONTROL DATA

Project: February 2013 Rico Water Sampl
Pace Project No.: 60139049

QC Batch: WET/39902 | Analysis Method: SM 2540C
QC Batch Method: SM 2540C | Analysis Description: 2540C Total Dissolved Solids
Associated Lab Samples: 60139049001, 60139049002, 60139049003, 60139049004, 60139049005, 60139049006, 60139049007, 60139049008, 60139049009, 60139049010

METHOD BLANK: 1144624 | Matrix: Water
Associated Lab Samples: 60139049001, 60139049002, 60139049003, 60139049004, 60139049005, 60139049006, 60139049007, 60139049008, 60139049009, 60139049010

Parameter	Units	Blank Result	Reporting Limit	Analyzed	Qualifiers
Total Dissolved Solids	mg/L	ND	5.0	02/25/13 09:31	

SAMPLE DUPLICATE: 1144625

Parameter	Units	60139049001 Result	Dup Result	RPD	Max RPD	Qualifiers
Total Dissolved Solids	mg/L	1110	1100	0	17	

SAMPLE DUPLICATE: 1144626

Parameter	Units	60139065001 Result	Dup Result	RPD	Max RPD	Qualifiers
Total Dissolved Solids	mg/L	945	940	1	17	

This report shall not be reproduced, except in full,
without the written consent of Pace Analytical Services, Inc..

Pace Analytical Services, Inc.
9608 Loiret Blvd.
Lenexa, KS 66219
(913)599-5665

QUALITY CONTROL DATA

Project: February 2013 Rico Water Sampl
Pace Project No.: 60139049

QC Batch: WET/39881 Analysis Method: SM 2540D
QC Batch Method: SM 2540D Analysis Description: 2540D Total Suspended Solids
Associated Lab Samples: 60139049001, 60139049002, 60139049003, 60139049004, 60139049005, 60139049006, 60139049007, 60139049008, 60139049009, 60139049010

METHOD BLANK: 1143957 Matrix: Water
Associated Lab Samples: 60139049001, 60139049002, 60139049003, 60139049004, 60139049005, 60139049006, 60139049007, 60139049008, 60139049009, 60139049010

Parameter	Units	Blank Result	Reporting Limit	Analyzed	Qualifiers
Total Suspended Solids	mg/L	ND	5.0	02/22/13 12:29	

SAMPLE DUPLICATE: 1143958

Parameter	Units	60139105001 Result	Dup Result	RPD	Max RPD	Qualifiers
Total Suspended Solids	mg/L	ND	ND		25	

SAMPLE DUPLICATE: 1143959

Parameter	Units	60139049002 Result	Dup Result	RPD	Max RPD	Qualifiers
Total Suspended Solids	mg/L	ND	ND		25	

This report shall not be reproduced, except in full,
without the written consent of Pace Analytical Services, Inc..

Pace Analytical Services, Inc.
9608 Loiret Blvd.
Lenexa, KS 66219
(913)599-5665

QUALITY CONTROL DATA

Project: February 2013 Rico Water Sampl
Pace Project No.: 60139049

QC Batch: WET/39864 Analysis Method: SM 4500-S-2 D
QC Batch Method: SM 4500-S-2 D Analysis Description: 4500S2D Sulfide, Total
Associated Lab Samples: 60139049001, 60139049002, 60139049003, 60139049004, 60139049005, 60139049006, 60139049007, 60139049008, 60139049009, 60139049010

METHOD BLANK: 1143666 Matrix: Water
Associated Lab Samples: 60139049001, 60139049002, 60139049003, 60139049004, 60139049005, 60139049006, 60139049007, 60139049008, 60139049009, 60139049010

Parameter	Units	Blank Result	Reporting Limit	Analyzed	Qualifiers
Sulfide, Total	mg/L	ND	0.050	02/21/13 10:43	

LABORATORY CONTROL SAMPLE: 1143667

Parameter	Units	Spike Conc.	LCS Result	LCS % Rec	% Rec Limits	Qualifiers
Sulfide, Total	mg/L	.5	0.51	102	80-120	

MATRIX SPIKE SAMPLE: 1143668

Parameter	Units	60139049001 Result	Spike Conc.	MS Result	MS % Rec	% Rec Limits	Qualifiers
Sulfide, Total	mg/L	0.077	.5	0.60	105	75-125	

This report shall not be reproduced, except in full,
without the written consent of Pace Analytical Services, Inc..

Pace Analytical Services, Inc.
9608 Loiret Blvd.
Lenexa, KS 66219
(913)599-5665

QUALITY CONTROL DATA

Project: February 2013 Rico Water Sampl
Pace Project No.: 60139049

QC Batch: WETA/23645 Analysis Method: EPA 300.0
QC Batch Method: EPA 300.0 Analysis Description: 300.0 IC Anions
Associated Lab Samples: 60139049001, 60139049002, 60139049003, 60139049004, 60139049005, 60139049006, 60139049007, 60139049008, 60139049009, 60139049010

METHOD BLANK: 1144615 Matrix: Water
Associated Lab Samples: 60139049001, 60139049002, 60139049003, 60139049004, 60139049005, 60139049006, 60139049007, 60139049008, 60139049009, 60139049010

Parameter	Units	Blank Result	Reporting Limit	Analyzed	Qualifiers
Chloride	mg/L	ND	1.0	02/25/13 11:19	
Sulfate	mg/L	ND	1.0	02/25/13 11:19	

LABORATORY CONTROL SAMPLE: 1144616

Parameter	Units	Spike Conc.	LCS Result	LCS % Rec	% Rec Limits	Qualifiers
Chloride	mg/L	5	5.0	100	90-110	
Sulfate	mg/L	5	5.0	100	90-110	

MATRIX SPIKE SAMPLE: 1144617

Parameter	Units	60139049001 Result	Spike Conc.	MS Result	MS % Rec	% Rec Limits	Qualifiers
Chloride	mg/L	ND	5	5.5	92	64-118	
Sulfate	mg/L	646	250	895	100	61-119	

MATRIX SPIKE & MATRIX SPIKE DUPLICATE: 1144618 1144619

Parameter	Units	60139182001 Result	MS Spike Conc.	MSD Spike Conc.	MS Result	MSD Result	MS % Rec	MSD % Rec	% Rec Limits	RPD	Max RPD	Qual
Chloride	mg/L	225	100	100	320	319	95	94	64-118	0	12	
Sulfate	mg/L	14.4	5	5	19.9	19.9	109	109	61-119	0	10	

This report shall not be reproduced, except in full,
without the written consent of Pace Analytical Services, Inc..

Pace Analytical Services, Inc.
9608 Loiret Blvd.
Lenexa, KS 66219
(913)599-5665

QUALITY CONTROL DATA

Project: February 2013 Rico Water Sampl
Pace Project No.: 60139049

QC Batch: WETA/23663 Analysis Method: EPA 353.2
QC Batch Method: EPA 353.2 Analysis Description: 353.2 Nitrate + Nitrite, preserved
Associated Lab Samples: 60139049001, 60139049002, 60139049003, 60139049004, 60139049005, 60139049006, 60139049007, 60139049008, 60139049009, 60139049010

METHOD BLANK: 1145183 Matrix: Water
Associated Lab Samples: 60139049001, 60139049002, 60139049003, 60139049004, 60139049005, 60139049006, 60139049007, 60139049008, 60139049009, 60139049010

Parameter	Units	Blank Result	Reporting Limit	Analyzed	Qualifiers
Nitrogen, NO2 plus NO3	mg/L	ND	0.10	02/27/13 14:22	

LABORATORY CONTROL SAMPLE: 1145184

Parameter	Units	Spike Conc.	LCS Result	LCS % Rec	% Rec Limits	Qualifiers
Nitrogen, NO2 plus NO3	mg/L	2	2.0	102	90-110	

MATRIX SPIKE SAMPLE: 1145185

Parameter	Units	60139049001 Result	Spike Conc.	MS Result	MS % Rec	% Rec Limits	Qualifiers
Nitrogen, NO2 plus NO3	mg/L	0.10	2	2.3	110	90-110	

MATRIX SPIKE SAMPLE: 1145186

Parameter	Units	60139049004 Result	Spike Conc.	MS Result	MS % Rec	% Rec Limits	Qualifiers
Nitrogen, NO2 plus NO3	mg/L	0.18	2	2.4	111	90-110	M1

SAMPLE DUPLICATE: 1145187

Parameter	Units	60139196001 Result	Dup Result	RPD	Max RPD	Qualifiers
Nitrogen, NO2 plus NO3	mg/L	ND	ND		13	

This report shall not be reproduced, except in full,
without the written consent of Pace Analytical Services, Inc..

Pace Analytical Services, Inc.
9608 Loiret Blvd.
Lenexa, KS 66219
(913)599-5665

QUALITY CONTROL DATA

Project: February 2013 Rico Water Sampl
Pace Project No.: 60139049

QC Batch: WETA/23641 Analysis Method: SM 4500-CN-E
QC Batch Method: SM 4500-CN-E Analysis Description: 4500CNE Cyanide, Total
Associated Lab Samples: 60139049001, 60139049002, 60139049003, 60139049004, 60139049005, 60139049006, 60139049007, 60139049008, 60139049009, 60139049010

METHOD BLANK: 1144589 Matrix: Water
Associated Lab Samples: 60139049001, 60139049002, 60139049003, 60139049004, 60139049005, 60139049006, 60139049007, 60139049008, 60139049009, 60139049010

Parameter	Units	Blank Result	Reporting Limit	Analyzed	Qualifiers
Cyanide	mg/L	ND	0.0050	02/25/13 11:09	

LABORATORY CONTROL SAMPLE: 1144590

Parameter	Units	Spike Conc.	LCS Result	LCS % Rec	% Rec Limits	Qualifiers
Cyanide	mg/L	.1	0.11	109	69-126	

MATRIX SPIKE SAMPLE: 1144591

Parameter	Units	60139081001 Result	Spike Conc.	MS Result	MS % Rec	% Rec Limits	Qualifiers
Cyanide	mg/L	ND	.1	0.11	109	41-136	

SAMPLE DUPLICATE: 1144592

Parameter	Units	60139081002 Result	Dup Result	RPD	Max RPD	Qualifiers
Cyanide	mg/L	ND	ND		26	

This report shall not be reproduced, except in full,
without the written consent of Pace Analytical Services, Inc..

Pace Analytical Services, Inc.
9608 Loiret Blvd.
Lenexa, KS 66219
(913)599-5665

QUALITY CONTROL DATA

Project: February 2013 Rico Water Sampl
Pace Project No.: 60139049

QC Batch: WETA/16437 Analysis Method: SM 5310C
QC Batch Method: SM 5310C Analysis Description: 5310C Total Organic Carbon
Associated Lab Samples: 60139049001, 60139049002, 60139049003, 60139049004, 60139049005, 60139049006, 60139049007, 60139049008, 60139049009, 60139049010

METHOD BLANK: 754245 Matrix: Water
Associated Lab Samples: 60139049001, 60139049002, 60139049003, 60139049004, 60139049005, 60139049006, 60139049007, 60139049008, 60139049009, 60139049010

Parameter	Units	Blank Result	Reporting Limit	Analyzed	Qualifiers
Total Organic Carbon	mg/L	ND	0.50	02/27/13 15:28	

LABORATORY CONTROL SAMPLE: 754246

Parameter	Units	Spike Conc.	LCS Result	LCS % Rec	% Rec Limits	Qualifiers
Total Organic Carbon	mg/L	2.5	2.6	102	80-120	

MATRIX SPIKE & MATRIX SPIKE DUPLICATE: 754247 754248

Parameter	Units	60139049001 Result	MS Spike Conc.	MSD Spike Conc.	MS Result	MSD Result	MS % Rec	MSD % Rec	% Rec Limits	RPD	Max RPD	Qual
Total Organic Carbon	mg/L	ND	2.5	2.5	2.9	2.9	105	105	80-120	0	20	

MATRIX SPIKE & MATRIX SPIKE DUPLICATE: 754249 754250

Parameter	Units	60139137001 Result	MS Spike Conc.	MSD Spike Conc.	MS Result	MSD Result	MS % Rec	MSD % Rec	% Rec Limits	RPD	Max RPD	Qual
Total Organic Carbon	mg/L	2.3	2.5	2.5	4.8	4.7	100	98	80-120	1	20	

This report shall not be reproduced, except in full,
without the written consent of Pace Analytical Services, Inc..

Pace Analytical Services, Inc.
9608 Loiret Blvd.
Lenexa, KS 66219
(913)599-5665

QUALIFIERS

Project: February 2013 Rico Water Sampl
Pace Project No.: 60139049

DEFINITIONS

DF - Dilution Factor, if reported, represents the factor applied to the reported data due to changes in sample preparation, dilution of the sample aliquot, or moisture content.

ND - Not Detected at or above adjusted reporting limit.

J - Estimated concentration above the adjusted method detection limit and below the adjusted reporting limit.

MDL - Adjusted Method Detection Limit.

PRL - Pace Reporting Limit.

RL - Reporting Limit.

S - Surrogate

1,2-Diphenylhydrazine (8270 listed analyte) decomposes to Azobenzene.

Consistent with EPA guidelines, unrounded data are displayed and have been used to calculate % recovery and RPD values.

LCS(D) - Laboratory Control Sample (Duplicate)

MS(D) - Matrix Spike (Duplicate)

DUP - Sample Duplicate

RPD - Relative Percent Difference

NC - Not Calculable.

SG - Silica Gel - Clean-Up

U - Indicates the compound was analyzed for, but not detected.

N-Nitrosodiphenylamine decomposes and cannot be separated from Diphenylamine using Method 8270. The result reported for each analyte is a combined concentration.

Pace Analytical is TNI accredited. Contact your Pace PM for the current list of accredited analytes.

TNI - The NELAC Institute.

LABORATORIES

PASI-G	Pace Analytical Services - Green Bay
PASI-K	Pace Analytical Services - Kansas City
PASI-M	Pace Analytical Services - Minneapolis

ANALYTE QUALIFIERS

B	Analyte was detected in the associated method blank.
E	Analyte concentration exceeded the calibration range. The reported result is estimated.
M1	Matrix spike recovery exceeded QC limits. Batch accepted based on laboratory control sample (LCS) recovery.
M6	Matrix spike and Matrix spike duplicate recovery not evaluated against control limits due to sample dilution.

This report shall not be reproduced, except in full,
without the written consent of Pace Analytical Services, Inc..

Pace Analytical Services, Inc.
9608 Loiret Blvd.
Lenexa, KS 66219
(913)599-5665

QUALITY CONTROL DATA CROSS REFERENCE TABLE

Project: February 2013 Rico Water Sampl
Pace Project No.: 60139049

Lab ID	Sample ID	QC Batch Method	QC Batch	Analytical Method	Analytical Batch
60139049001	**DR-6_20130218**	EPA 200.7	MPRP/21639	EPA 200.7	ICP/17369
60139049002	**DR-7_20130218**	EPA 200.7	MPRP/21639	EPA 200.7	ICP/17369
60139049003	**DR-2 COMPOSITE_20130218**	EPA 200.7	MPRP/21639	EPA 200.7	ICP/17369
60139049004	**DR-2_20130218**	EPA 200.7	MPRP/21639	EPA 200.7	ICP/17369
60139049005	**DR-4_20130218**	EPA 200.7	MPRP/21639	EPA 200.7	ICP/17369
60139049006	**DR-1_20130218**	EPA 200.7	MPRP/21639	EPA 200.7	ICP/17369
60139049007	**DR-5_20130218**	EPA 200.7	MPRP/21639	EPA 200.7	ICP/17369
60139049008	**DR-7 COMPOSITE_20130218**	EPA 200.7	MPRP/21639	EPA 200.7	ICP/17369
60139049009	**FB_20130218**	EPA 200.7	MPRP/21639	EPA 200.7	ICP/17369
60139049010	**DR-11_20130218**	EPA 200.7	MPRP/21639	EPA 200.7	ICP/17369
60139049001	**DR-6_20130218**	EPA 200.8	MPRP/37780	EPA 200.8	ICPM/15434
60139049002	**DR-7_20130218**	EPA 200.8	MPRP/37780	EPA 200.8	ICPM/15434
60139049003	**DR-2 COMPOSITE_20130218**	EPA 200.8	MPRP/37780	EPA 200.8	ICPM/15434
60139049004	**DR-2_20130218**	EPA 200.8	MPRP/37780	EPA 200.8	ICPM/15434
60139049005	**DR-4_20130218**	EPA 200.8	MPRP/37780	EPA 200.8	ICPM/15434
60139049006	**DR-1_20130218**	EPA 200.8	MPRP/37780	EPA 200.8	ICPM/15434
60139049007	**DR-5_20130218**	EPA 200.8	MPRP/37780	EPA 200.8	ICPM/15434
60139049008	**DR-7 COMPOSITE_20130218**	EPA 200.8	MPRP/37780	EPA 200.8	ICPM/15434
60139049009	**FB_20130218**	EPA 200.8	MPRP/37780	EPA 200.8	ICPM/15434
60139049010	**DR-11_20130218**	EPA 200.8	MPRP/37780	EPA 200.8	ICPM/15434
60139049001	**DR-6_20130218**	EPA 200.8	MPRP/37781	EPA 200.8	ICPM/15448
60139049002	**DR-7_20130218**	EPA 200.8	MPRP/37781	EPA 200.8	ICPM/15448
60139049003	**DR-2 COMPOSITE_20130218**	EPA 200.8	MPRP/37781	EPA 200.8	ICPM/15448
60139049004	**DR-2_20130218**	EPA 200.8	MPRP/37781	EPA 200.8	ICPM/15448
60139049005	**DR-4_20130218**	EPA 200.8	MPRP/37781	EPA 200.8	ICPM/15448
60139049006	**DR-1_20130218**	EPA 200.8	MPRP/37781	EPA 200.8	ICPM/15448
60139049007	**DR-5_20130218**	EPA 200.8	MPRP/37781	EPA 200.8	ICPM/15448
60139049008	**DR-7 COMPOSITE_20130218**	EPA 200.8	MPRP/37781	EPA 200.8	ICPM/15448
60139049009	**FB_20130218**	EPA 200.8	MPRP/37781	EPA 200.8	ICPM/15448
60139049010	**DR-11_20130218**	EPA 200.8	MPRP/37781	EPA 200.8	ICPM/15448
60139049001	**DR-6_20130218**	EPA 200.8	MPRP/21640	EPA 200.8	ICPM/2059
60139049002	**DR-7_20130218**	EPA 200.8	MPRP/21640	EPA 200.8	ICPM/2059
60139049003	**DR-2 COMPOSITE_20130218**	EPA 200.8	MPRP/21640	EPA 200.8	ICPM/2059
60139049004	**DR-2_20130218**	EPA 200.8	MPRP/21640	EPA 200.8	ICPM/2059
60139049005	**DR-4_20130218**	EPA 200.8	MPRP/21640	EPA 200.8	ICPM/2059
60139049006	**DR-1_20130218**	EPA 200.8	MPRP/21640	EPA 200.8	ICPM/2059
60139049007	**DR-5_20130218**	EPA 200.8	MPRP/21640	EPA 200.8	ICPM/2059
60139049008	**DR-7 COMPOSITE_20130218**	EPA 200.8	MPRP/21640	EPA 200.8	ICPM/2059
60139049009	**FB_20130218**	EPA 200.8	MPRP/21640	EPA 200.8	ICPM/2059
60139049010	**DR-11_20130218**	EPA 200.8	MPRP/21640	EPA 200.8	ICPM/2059
60139049001	**DR-6_20130218**	EPA 245.1	MERP/8095	EPA 245.1	MERC/9141
60139049002	**DR-7_20130218**	EPA 245.1	MERP/8095	EPA 245.1	MERC/9141
60139049003	**DR-2 COMPOSITE_20130218**	EPA 245.1	MERP/8095	EPA 245.1	MERC/9141
60139049004	**DR-2_20130218**	EPA 245.1	MERP/8095	EPA 245.1	MERC/9141
60139049005	**DR-4_20130218**	EPA 245.1	MERP/8095	EPA 245.1	MERC/9141
60139049006	**DR-1_20130218**	EPA 245.1	MERP/8095	EPA 245.1	MERC/9141
60139049007	**DR-5_20130218**	EPA 245.1	MERP/8095	EPA 245.1	MERC/9141

This report shall not be reproduced, except in full,
without the written consent of Pace Analytical Services, Inc..

Pace Analytical Services, Inc.
9608 Loiret Blvd.
Lenexa, KS 66219
(913)599-5665

QUALITY CONTROL DATA CROSS REFERENCE TABLE

Project: February 2013 Rico Water Sampl
Pace Project No.: 60139049

Lab ID	Sample ID	QC Batch Method	QC Batch	Analytical Method	Analytical Batch
60139049008	**DR-7 COMPOSITE_20130218**	EPA 245.1	MERP/8095	EPA 245.1	MERC/9141
60139049009	**FB_20130218**	EPA 245.1	MERP/8095	EPA 245.1	MERC/9141
60139049010	**DR-11_20130218**	EPA 245.1	MERP/8095	EPA 245.1	MERC/9141
60139049001	**DR-6_20130218**	EPA 245.1	MERP/8093	EPA 245.1	MERC/9140
60139049002	**DR-7_20130218**	EPA 245.1	MERP/8093	EPA 245.1	MERC/9140
60139049003	**DR-2 COMPOSITE_20130218**	EPA 245.1	MERP/8093	EPA 245.1	MERC/9140
60139049004	**DR-2_20130218**	EPA 245.1	MERP/8093	EPA 245.1	MERC/9140
60139049005	**DR-4_20130218**	EPA 245.1	MERP/8093	EPA 245.1	MERC/9140
60139049006	**DR-1_20130218**	EPA 245.1	MERP/8093	EPA 245.1	MERC/9140
60139049007	**DR-5_20130218**	EPA 245.1	MERP/8093	EPA 245.1	MERC/9140
60139049008	**DR-7 COMPOSITE_20130218**	EPA 245.1	MERP/8093	EPA 245.1	MERC/9140
60139049009	**FB_20130218**	EPA 245.1	MERP/8093	EPA 245.1	MERC/9140
60139049010	**DR-11_20130218**	EPA 245.1	MERP/8093	EPA 245.1	MERC/9140
60139049001	**DR-6_20130218**	EPA 245.1	MERP/7172	EPA 245.1	MERC/7132
60139049002	**DR-7_20130218**	EPA 245.1	MERP/7172	EPA 245.1	MERC/7132
60139049003	**DR-2 COMPOSITE_20130218**	EPA 245.1	MERP/7172	EPA 245.1	MERC/7132
60139049004	**DR-2_20130218**	EPA 245.1	MERP/7172	EPA 245.1	MERC/7132
60139049005	**DR-4_20130218**	EPA 245.1	MERP/7172	EPA 245.1	MERC/7132
60139049006	**DR-1_20130218**	EPA 245.1	MERP/7172	EPA 245.1	MERC/7132
60139049007	**DR-5_20130218**	EPA 245.1	MERP/7172	EPA 245.1	MERC/7132
60139049008	**DR-7 COMPOSITE_20130218**	EPA 245.1	MERP/7172	EPA 245.1	MERC/7132
60139049009	**FB_20130218**	EPA 245.1	MERP/7172	EPA 245.1	MERC/7132
60139049010	**DR-11_20130218**	EPA 245.1	MERP/7172	EPA 245.1	MERC/7132
60139049001	**DR-6_20130218**	SM 2510B	MT/11364		
60139049002	**DR-7_20130218**	SM 2510B	MT/11364		
60139049003	**DR-2 COMPOSITE_20130218**	SM 2510B	MT/11364		
60139049004	**DR-2_20130218**	SM 2510B	MT/11364		
60139049005	**DR-4_20130218**	SM 2510B	MT/11364		
60139049006	**DR-1_20130218**	SM 2510B	MT/11364		
60139049007	**DR-5_20130218**	SM 2510B	MT/11364		
60139049008	**DR-7 COMPOSITE_20130218**	SM 2510B	MT/11364		
60139049009	**FB_20130218**	SM 2510B	MT/11364		
60139049010	**DR-11_20130218**	SM 2510B	MT/11364		
60139049001	**DR-6_20130218**	Calculated	MT/11366		
60139049002	**DR-7_20130218**	Calculated	MT/11366		
60139049003	**DR-2 COMPOSITE_20130218**	Calculated	MT/11366		
60139049004	**DR-2_20130218**	Calculated	MT/11366		
60139049005	**DR-4_20130218**	Calculated	MT/11366		
60139049006	**DR-1_20130218**	Calculated	MT/11366		
60139049007	**DR-5_20130218**	Calculated	MT/11366		
60139049008	**DR-7 COMPOSITE_20130218**	Calculated	MT/11366		
60139049009	**FB_20130218**	Calculated	MT/11366		
60139049010	**DR-11_20130218**	Calculated	MT/11366		
60139049001	**DR-6_20130218**	SM 2320B	WET/39961		
60139049002	**DR-7_20130218**	SM 2320B	WET/39961		
60139049003	**DR-2 COMPOSITE_20130218**	SM 2320B	WET/39961		

This report shall not be reproduced, except in full,
without the written consent of Pace Analytical Services, Inc..

Pace Analytical Services, Inc.
9608 Loiret Blvd.
Lenexa, KS 66219
(913)599-5665

QUALITY CONTROL DATA CROSS REFERENCE TABLE

Project: February 2013 Rico Water Sampl
Pace Project No.: 60139049

Lab ID	Sample ID	QC Batch Method	QC Batch	Analytical Method	Analytical Batch
60139049004	**DR-2_20130218**	SM 2320B	WET/39961		
60139049005	**DR-4_20130218**	SM 2320B	WET/39961		
60139049006	**DR-1_20130218**	SM 2320B	WET/39961		
60139049007	**DR-5_20130218**	SM 2320B	WET/39961		
60139049008	**DR-7 COMPOSITE_20130218**	SM 2320B	WET/39961		
60139049009	**FB_20130218**	SM 2320B	WET/39961		
60139049010	**DR-11_20130218**	SM 2320B	WET/39961		
60139049001	**DR-6_20130218**	SM 2540C	WET/39902		
60139049002	**DR-7_20130218**	SM 2540C	WET/39902		
60139049003	**DR-2 COMPOSITE_20130218**	SM 2540C	WET/39902		
60139049004	**DR-2_20130218**	SM 2540C	WET/39902		
60139049005	**DR-4_20130218**	SM 2540C	WET/39902		
60139049006	**DR-1_20130218**	SM 2540C	WET/39902		
60139049007	**DR-5_20130218**	SM 2540C	WET/39902		
60139049008	**DR-7 COMPOSITE_20130218**	SM 2540C	WET/39902		
60139049009	**FB_20130218**	SM 2540C	WET/39902		
60139049010	**DR-11_20130218**	SM 2540C	WET/39902		
60139049001	**DR-6_20130218**	SM 2540D	WET/39881		
60139049002	**DR-7_20130218**	SM 2540D	WET/39881		
60139049003	**DR-2 COMPOSITE_20130218**	SM 2540D	WET/39881		
60139049004	**DR-2_20130218**	SM 2540D	WET/39881		
60139049005	**DR-4_20130218**	SM 2540D	WET/39881		
60139049006	**DR-1_20130218**	SM 2540D	WET/39881		
60139049007	**DR-5_20130218**	SM 2540D	WET/39881		
60139049008	**DR-7 COMPOSITE_20130218**	SM 2540D	WET/39881		
60139049009	**FB_20130218**	SM 2540D	WET/39881		
60139049010	**DR-11_20130218**	SM 2540D	WET/39881		
60139049001	**DR-6_20130218**	SM 4500-S-2 D	WET/39864		
60139049002	**DR-7_20130218**	SM 4500-S-2 D	WET/39864		
60139049003	**DR-2 COMPOSITE_20130218**	SM 4500-S-2 D	WET/39864		
60139049004	**DR-2_20130218**	SM 4500-S-2 D	WET/39864		
60139049005	**DR-4_20130218**	SM 4500-S-2 D	WET/39864		
60139049006	**DR-1_20130218**	SM 4500-S-2 D	WET/39864		
60139049007	**DR-5_20130218**	SM 4500-S-2 D	WET/39864		
60139049008	**DR-7 COMPOSITE_20130218**	SM 4500-S-2 D	WET/39864		
60139049009	**FB_20130218**	SM 4500-S-2 D	WET/39864		
60139049010	**DR-11_20130218**	SM 4500-S-2 D	WET/39864		
60139049001	**DR-6_20130218**	EPA 300.0	WETA/23645		
60139049002	**DR-7_20130218**	EPA 300.0	WETA/23645		
60139049003	**DR-2 COMPOSITE_20130218**	EPA 300.0	WETA/23645		
60139049004	**DR-2_20130218**	EPA 300.0	WETA/23645		
60139049005	**DR-4_20130218**	EPA 300.0	WETA/23645		
60139049006	**DR-1_20130218**	EPA 300.0	WETA/23645		
60139049007	**DR-5_20130218**	EPA 300.0	WETA/23645		
60139049008	**DR-7 COMPOSITE_20130218**	EPA 300.0	WETA/23645		
60139049009	**FB_20130218**	EPA 300.0	WETA/23645		
60139049010	**DR-11_20130218**	EPA 300.0	WETA/23645		

This report shall not be reproduced, except in full,
without the written consent of Pace Analytical Services, Inc..

Pace Analytical Services, Inc.
9608 Loiret Blvd.
Lenexa, KS 66219
(913)599-5665

QUALITY CONTROL DATA CROSS REFERENCE TABLE

Project: February 2013 Rico Water Sampl
Pace Project No.: 60139049

Lab ID	Sample ID	QC Batch Method	QC Batch	Analytical Method	Analytical Batch
60139049001	**DR-6_20130218**	EPA 353.2	WETA/23663		
60139049002	**DR-7_20130218**	EPA 353.2	WETA/23663		
60139049003	**DR-2 COMPOSITE_20130218**	EPA 353.2	WETA/23663		
60139049004	**DR-2_20130218**	EPA 353.2	WETA/23663		
60139049005	**DR-4_20130218**	EPA 353.2	WETA/23663		
60139049006	**DR-1_20130218**	EPA 353.2	WETA/23663		
60139049007	**DR-5_20130218**	EPA 353.2	WETA/23663		
60139049008	**DR-7 COMPOSITE_20130218**	EPA 353.2	WETA/23663		
60139049009	**FB_20130218**	EPA 353.2	WETA/23663		
60139049010	**DR-11_20130218**	EPA 353.2	WETA/23663		
60139049001	**DR-6_20130218**	SM 4500-CN-E	WETA/23641		
60139049002	**DR-7_20130218**	SM 4500-CN-E	WETA/23641		
60139049003	**DR-2 COMPOSITE_20130218**	SM 4500-CN-E	WETA/23641		
60139049004	**DR-2_20130218**	SM 4500-CN-E	WETA/23641		
60139049005	**DR-4_20130218**	SM 4500-CN-E	WETA/23641		
60139049006	**DR-1_20130218**	SM 4500-CN-E	WETA/23641		
60139049007	**DR-5_20130218**	SM 4500-CN-E	WETA/23641		
60139049008	**DR-7 COMPOSITE_20130218**	SM 4500-CN-E	WETA/23641		
60139049009	**FB_20130218**	SM 4500-CN-E	WETA/23641		
60139049010	**DR-11_20130218**	SM 4500-CN-E	WETA/23641		
60139049001	**DR-6_20130218**	SM 5310C	WETA/16437		
60139049002	**DR-7_20130218**	SM 5310C	WETA/16437		
60139049003	**DR-2 COMPOSITE_20130218**	SM 5310C	WETA/16437		
60139049004	**DR-2_20130218**	SM 5310C	WETA/16437		
60139049005	**DR-4_20130218**	SM 5310C	WETA/16437		
60139049006	**DR-1_20130218**	SM 5310C	WETA/16437		
60139049007	**DR-5_20130218**	SM 5310C	WETA/16437		
60139049008	**DR-7 COMPOSITE_20130218**	SM 5310C	WETA/16437		
60139049009	**FB_20130218**	SM 5310C	WETA/16437		
60139049010	**DR-11_20130218**	SM 5310C	WETA/16437		

This report shall not be reproduced, except in full,
without the written consent of Pace Analytical Services, Inc..

Pace Analytical Services, Inc.
9608 Loiret Blvd.
Lenexa, KS 66219
(913)599-5665

QUALITY CONTROL DATA

Project: FEBRUARY 2013 RICO WATER SAMPL
Pace Project No.: 60139196

QC Batch: MERP/8095 | Analysis Method: EPA 245.1
QC Batch Method: EPA 245.1 | Analysis Description: 245.1 Mercury
Associated Lab Samples: 60139196001, 60139196002

METHOD BLANK: 1383860 | Matrix: Water
Associated Lab Samples: 60139196001, 60139196002

Parameter	Units	Blank Result	Reporting Limit	Analyzed	Qualifiers
Mercury	ug/L	ND	0.20	03/01/13 14:15	

LABORATORY CONTROL SAMPLE: 1383861

Parameter	Units	Spike Conc.	LCS Result	LCS % Rec	% Rec Limits	Qualifiers
Mercury	ug/L	5	4.6	93	85-115	

MATRIX SPIKE SAMPLE: 1383864

Parameter	Units	60139196002 Result	Spike Conc.	MS Result	MS % Rec	% Rec Limits	Qualifiers
Mercury	ug/L	ND	5	5.0	99	85-115	

MATRIX SPIKE & MATRIX SPIKE DUPLICATE: 1384019 1384020

Parameter	Units	60139049002 Result	MS Spike Conc.	MSD Spike Conc.	MS Result	MSD Result	MS % Rec	MSD % Rec	% Rec Limits	RPD	Max RPD	Qual
Mercury	ug/L	ND	5	5	4.8	5.0	95	100	85-115	5	30	

This report shall not be reproduced, except in full,
without the written consent of Pace Analytical Services, Inc..

Pace Analytical Services, Inc.
9608 Loiret Blvd.
Lenexa, KS 66219
(913)599-5665

QUALITY CONTROL DATA

Project: FEBRUARY 2013 RICO WATER SAMPL
Pace Project No.: 60139196

QC Batch: MERP/8093 | Analysis Method: EPA 245.1
QC Batch Method: EPA 245.1 | Analysis Description: 245.1 Mercury - Dissolved
Associated Lab Samples: 60139196001, 60139196002

METHOD BLANK: 1383848 | Matrix: Water
Associated Lab Samples: 60139196001, 60139196002

Parameter	Units	Blank Result	Reporting Limit	Analyzed	Qualifiers
Mercury, Dissolved	ug/L	ND	0.20	03/01/13 15:12	

LABORATORY CONTROL SAMPLE: 1383849

Parameter	Units	Spike Conc.	LCS Result	LCS % Rec	% Rec Limits	Qualifiers
Mercury, Dissolved	ug/L	5	5.1	102	85-115	

MATRIX SPIKE SAMPLE: 1383852

Parameter	Units	60139196002 Result	Spike Conc.	MS Result	MS % Rec	% Rec Limits	Qualifiers
Mercury, Dissolved	ug/L	ND	5	4.9	98	85-115	

MATRIX SPIKE & MATRIX SPIKE DUPLICATE: 1384017 1384018

Parameter	Units	60139049002 Result	MS Spike Conc.	MSD Spike Conc.	MS Result	MSD Result	MS % Rec	MSD % Rec	% Rec Limits	RPD	Max RPD	Qual
Mercury, Dissolved	ug/L	ND	5	5	4.9	5.0	97	101	85-115	4	20	

This report shall not be reproduced, except in full,
without the written consent of Pace Analytical Services, Inc..

Pace Analytical Services, Inc.
9608 Loiret Blvd.
Lenexa, KS 66219
(913)599-5665

QUALITY CONTROL DATA

Project: FEBRUARY 2013 RICO WATER SAMPL
Pace Project No.: 60139196

QC Batch: MERP/7123 | Analysis Method: EPA 245.1
QC Batch Method: EPA 245.1 | Analysis Description: 245.1 Mercury, Potentially Dissolved
Associated Lab Samples: 60139196001, 60139196002

METHOD BLANK: 1145986 | Matrix: Water
Associated Lab Samples: 60139196001, 60139196002

Parameter	Units	Blank Result	Reporting Limit	Analyzed	Qualifiers
Mercury, Dissolved	ug/L	ND	0.20	03/04/13 12:46	

LABORATORY CONTROL SAMPLE: 1145987

Parameter	Units	Spike Conc.	LCS Result	LCS % Rec	% Rec Limits	Qualifiers
Mercury, Dissolved	ug/L	5	4.9	97	85-115	

MATRIX SPIKE & MATRIX SPIKE DUPLICATE: 1145988 1145989

Parameter	Units	60139196001 Result	MS Spike Conc.	MSD Spike Conc.	MS Result	MSD Result	MS % Rec	MSD % Rec	% Rec Limits	RPD	Max RPD	Qual
Mercury, Dissolved	ug/L	ND	5	5	4.7	4.9	94	98	70-130	4	20	

REPORT OF LABORATORY ANALYSIS

This report shall not be reproduced, except in full,
without the written consent of Pace Analytical Services, Inc..

Pace Analytical Services, Inc.
9608 Loiret Blvd.
Lenexa, KS 66219
(913)599-5665

QUALITY CONTROL DATA

Project: FEBRUARY 2013 RICO WATER SAMPL
Pace Project No.: 60139196

QC Batch: MPRP/21697 | Analysis Method: EPA 200.7
QC Batch Method: EPA 200.7 | Analysis Description: 200.7 Potentially Dissolved Metals
Associated Lab Samples: 60139196001, 60139196002

METHOD BLANK: 1146222 | Matrix: Water
Associated Lab Samples: 60139196001, 60139196002

Parameter	Units	Blank Result	Reporting Limit	Analyzed	Qualifiers
Calcium, Dissolved	ug/L	25.9J	100	03/07/13 11:55	
Magnesium, Dissolved	ug/L	31.2J	50.0	03/07/13 11:55	
Potassium, Dissolved	ug/L	86.7J	500	03/07/13 11:55	
Sodium, Dissolved	ug/L	192J	500	03/07/13 11:55	

LABORATORY CONTROL SAMPLE: 1146223

Parameter	Units	Spike Conc.	LCS Result	LCS % Rec	% Rec Limits	Qualifiers
Calcium, Dissolved	ug/L	10000	9280	93	85-115	
Magnesium, Dissolved	ug/L	10000	9730	97	85-115	
Potassium, Dissolved	ug/L	10000	10000	100	85-115	
Sodium, Dissolved	ug/L	10000	10200	102	85-115	

MATRIX SPIKE & MATRIX SPIKE DUPLICATE: 1146224 1146225

Parameter	Units	60139196001 Result	MS Spike Conc.	MSD Spike Conc.	MS Result	MSD Result	MS % Rec	MSD % Rec	% Rec Limits	RPD	Max RPD	Qual
Calcium, Dissolved	ug/L	101000	10000	10000	112000	110000	108	88	70-130	2	20	
Magnesium, Dissolved	ug/L	12900	10000	10000	23100	22900	102	99	70-130	1	20	
Potassium, Dissolved	ug/L	2510	10000	10000	13300	13200	108	107	70-130	0	20	
Sodium, Dissolved	ug/L	7120	10000	10000	18200	18100	111	110	70-130	1	20	

This report shall not be reproduced, except in full,
without the written consent of Pace Analytical Services, Inc..

Pace Analytical Services, Inc.
9608 Loiret Blvd.
Lenexa, KS 66219
(913)599-5665

QUALITY CONTROL DATA

Project: FEBRUARY 2013 RICO WATER SAMPL
Pace Project No.: 60139196

QC Batch: MPRP/37780 Analysis Method: EPA 200.8
QC Batch Method: EPA 200.8 Analysis Description: 200.8 MET
Associated Lab Samples: 60139196001, 60139196002

METHOD BLANK: 1383250 Matrix: Water
Associated Lab Samples: 60139196001, 60139196002

Parameter	Units	Blank Result	Reporting Limit	Analyzed	Qualifiers
Aluminum	ug/L	ND	4.0	03/04/13 11:12	
Antimony	ug/L	ND	0.50	03/04/13 11:12	
Arsenic	ug/L	ND	0.50	03/04/13 11:12	
Barium	ug/L	ND	0.30	03/04/13 11:12	
Beryllium	ug/L	ND	0.20	03/04/13 11:12	
Cadmium	ug/L	ND	0.080	03/04/13 11:12	
Calcium	ug/L	ND	20.0	03/04/13 11:12	
Chromium	ug/L	ND	0.50	03/04/13 11:12	
Cobalt	ug/L	ND	0.50	03/04/13 11:12	
Copper	ug/L	ND	0.50	03/04/13 11:12	
Iron	ug/L	ND	50.0	03/04/13 11:12	
Lead	ug/L	ND	0.10	03/04/13 11:12	
Magnesium	ug/L	ND	5.0	03/04/13 11:12	
Manganese	ug/L	ND	0.50	03/04/13 11:12	
Molybdenum	ug/L	ND	0.50	03/04/13 11:12	
Nickel	ug/L	ND	0.50	03/04/13 11:12	
Potassium	ug/L	ND	20.0	03/03/13 15:50	
Selenium	ug/L	ND	0.50	03/04/13 11:12	
Silica	ug/L	ND	53.5	03/03/13 15:50	
Silver	ug/L	ND	0.50	03/04/13 11:12	
Sodium	ug/L	ND	50.0	03/04/13 11:12	
Thallium	ug/L	ND	0.10	03/04/13 11:12	
Total Hardness by 2340B	ug/L	ND	71.0	03/04/13 11:12	
Vanadium	ug/L	ND	0.10	03/04/13 11:12	
Zinc	ug/L	ND	5.0	03/04/13 11:12	

LABORATORY CONTROL SAMPLE: 1383251

Parameter	Units	Spike Conc.	LCS Result	LCS % Rec	% Rec Limits	Qualifiers
Aluminum	ug/L	80	81.1	101	85-115	
Antimony	ug/L	80	80.7	101	85-115	
Arsenic	ug/L	80	80.6	101	85-115	
Barium	ug/L	80	81.0	101	85-115	
Beryllium	ug/L	80	82.2	103	85-115	
Cadmium	ug/L	80	82.4	103	85-115	
Calcium	ug/L	1000	1080	108	85-115	
Chromium	ug/L	80	83.2	104	85-115	
Cobalt	ug/L	80	83.9	105	85-115	
Copper	ug/L	80	85.8	107	85-115	
Iron	ug/L	1000	1030	103	85-115	
Lead	ug/L	80	82.0	103	85-115	

This report shall not be reproduced, except in full,
without the written consent of Pace Analytical Services, Inc..

Pace Analytical Services, Inc.
9608 Loiret Blvd.
Lenexa, KS 66219
(913)599-5665

QUALITY CONTROL DATA

Project: FEBRUARY 2013 RICO WATER SAMPL
Pace Project No.: 60139196

LABORATORY CONTROL SAMPLE: 1383251

Parameter	Units	Spike Conc.	LCS Result	LCS % Rec	% Rec Limits	Qualifiers
Magnesium	ug/L	1000	1020	102	85-115	
Manganese	ug/L	80	80.2	100	85-115	
Molybdenum	ug/L	80	83.3	104	85-115	
Nickel	ug/L	80	82.7	103	85-115	
Potassium	ug/L	1000	1000	100	85-115	
Selenium	ug/L	80	80.2	100	85-115	
Silica	ug/L	2140	2170	102	85-115	
Silver	ug/L	80	82.8	104	85-115	
Sodium	ug/L	1000	975	98	85-115	
Thallium	ug/L	80	84.3	105	85-115	
Total Hardness by 2340B	ug/L	6620	6870	104	85-115	
Vanadium	ug/L	80	82.9	104	85-115	
Zinc	ug/L	80	81.5	102	85-115	

MATRIX SPIKE & MATRIX SPIKE DUPLICATE: 1383252 1383253

Parameter	Units	60139049001 Result	MS Spike Conc.	MSD Spike Conc.	MS Result	MSD Result	MS % Rec	MSD % Rec	% Rec Limits	RPD	Max RPD	Qual
Aluminum	ug/L	76.9	80	80	165	169	110	115	70-130	3	20	
Antimony	ug/L	ND	80	80	81.4	81.3	101	101	70-130	.09	20	
Arsenic	ug/L	ND	80	80	81.5	81.8	101	102	70-130	.4	20	
Barium	ug/L	20.7	80	80	99.8	104	99	104	70-130	4	20	
Beryllium	ug/L	0.22	80	80	84.1	84.2	105	105	70-130	.06	20	
Cadmium	ug/L	5.7	80	80	87.5	87.4	102	102	70-130	.06	20	
Calcium	ug/L	279000	1000	1000	274000	278000	-470	-110	70-130	1	20	E,M6
Chromium	ug/L	ND	80	80	84.2	82.8	105	103	70-130	2	20	
Cobalt	ug/L	2.2	80	80	85.7	85.5	104	104	70-130	.2	20	
Copper	ug/L	18.6	80	80	104	103	107	106	70-130	.9	20	
Iron	ug/L	1370	1000	1000	2420	2490	105	112	70-130	3	20	
Lead	ug/L	1.7	80	80	80.9	81.0	99	99	70-130	.1	20	
Magnesium	ug/L	21600	1000	1000	24500	24600	289	305	70-130	.7	20	M6
Manganese	ug/L	1650	80	80	1690	1700	57	62	70-130	.2	20	M6
Molybdenum	ug/L	15.3	80	80	100	102	106	109	70-130	2	20	
Nickel	ug/L	3.2	80	80	86.2	87.2	104	105	70-130	1	20	
Potassium	ug/L	8440	1000	1000	9290	9410	86	98	70-130	1	20	
Selenium	ug/L	ND	80	80	77.9	80.0	97	100	70-130	3	20	
Silica	ug/L	19600	2140	2140	20900	21500	60	86	70-130	3	20	M6
Silver	ug/L	ND	80	80	73.3	76.2	91	95	70-130	4	20	
Sodium	ug/L	13700	1000	1000	14600	14900	89	120	70-130	2	20	
Thallium	ug/L	ND	80	80	80.0	80.2	100	100	70-130	.3	20	
Total Hardness by 2340B	ug/L	785000	6620	6620	785000	795000	2	148	70-130	1	20	M6
Vanadium	ug/L	ND	80	80	83.5	83.4	104	104	70-130	.1	20	
Zinc	ug/L	1780	80	80	1860	1860	101	92	70-130	.4	20	

This report shall not be reproduced, except in full,
without the written consent of Pace Analytical Services, Inc..

Pace Analytical Services, Inc.
9608 Loiret Blvd.
Lenexa, KS 66219
(913)599-5665

QUALITY CONTROL DATA

Project: FEBRUARY 2013 RICO WATER SAMPL
Pace Project No.: 60139196

QC Batch: MPRP/37781 | Analysis Method: EPA 200.8
QC Batch Method: EPA 200.8 | Analysis Description: 200.8 MET Dissolved
Associated Lab Samples: 60139196001, 60139196002

METHOD BLANK: 1383258 | Matrix: Water
Associated Lab Samples: 60139196001, 60139196002

Parameter	Units	Blank Result	Reporting Limit	Analyzed	Qualifiers
Aluminum, Dissolved	ug/L	ND	4.0	03/05/13 19:29	
Antimony, Dissolved	ug/L	ND	0.50	03/05/13 19:29	
Arsenic, Dissolved	ug/L	ND	0.50	03/05/13 19:29	
Barium, Dissolved	ug/L	ND	0.30	03/05/13 19:29	
Beryllium, Dissolved	ug/L	ND	0.20	03/05/13 19:29	
Cadmium, Dissolved	ug/L	ND	0.080	03/05/13 19:29	
Calcium, Dissolved	ug/L	ND	20.0	03/05/13 19:29	
Chromium, Dissolved	ug/L	ND	0.50	03/05/13 19:29	
Cobalt, Dissolved	ug/L	ND	0.50	03/05/13 19:29	
Copper, Dissolved	ug/L	ND	0.50	03/05/13 19:29	
Iron, Dissolved	ug/L	ND	50.0	03/05/13 19:29	
Lead, Dissolved	ug/L	ND	0.10	03/05/13 19:29	
Magnesium, Dissolved	ug/L	ND	5.0	03/06/13 10:55	
Manganese, Dissolved	ug/L	ND	0.50	03/05/13 19:29	
Molybdenum, Dissolved	ug/L	ND	0.50	03/05/13 19:29	
Nickel, Dissolved	ug/L	ND	0.50	03/05/13 19:29	
Potassium, Dissolved	ug/L	ND	20.0	03/06/13 10:55	
Selenium, Dissolved	ug/L	ND	0.50	03/05/13 19:29	
Silver, Dissolved	ug/L	ND	0.50	03/05/13 19:29	
Sodium, Dissolved	ug/L	ND	50.0	03/05/13 19:29	
Thallium, Dissolved	ug/L	ND	0.10	03/05/13 19:29	
Vanadium, Dissolved	ug/L	ND	0.10	03/05/13 19:29	
Zinc, Dissolved	ug/L	ND	5.0	03/05/13 19:29	

LABORATORY CONTROL SAMPLE: 1383259

Parameter	Units	Spike Conc.	LCS Result	LCS % Rec	% Rec Limits	Qualifiers
Aluminum, Dissolved	ug/L	80	83.6	104	85-115	
Antimony, Dissolved	ug/L	80	79.2	99	85-115	
Arsenic, Dissolved	ug/L	80	82.0	102	85-115	
Barium, Dissolved	ug/L	80	78.8	99	85-115	
Beryllium, Dissolved	ug/L	80	86.9	109	85-115	
Cadmium, Dissolved	ug/L	80	80.4	101	85-115	
Calcium, Dissolved	ug/L	1000	1060	106	85-115	
Chromium, Dissolved	ug/L	80	82.9	104	85-115	
Cobalt, Dissolved	ug/L	80	82.0	102	85-115	
Copper, Dissolved	ug/L	80	87.2	109	85-115	
Iron, Dissolved	ug/L	1000	1040	104	85-115	
Lead, Dissolved	ug/L	80	77.0	96	85-115	
Magnesium, Dissolved	ug/L	1000	1030	103	85-115	
Manganese, Dissolved	ug/L	80	80.2	100	85-115	

This report shall not be reproduced, except in full,
without the written consent of Pace Analytical Services, Inc..

Pace Analytical Services, Inc.
9608 Loiret Blvd.
Lenexa, KS 66219
(913)599-5665

QUALITY CONTROL DATA

Project: FEBRUARY 2013 RICO WATER SAMPL
Pace Project No.: 60139196

LABORATORY CONTROL SAMPLE: 1383259

Parameter	Units	Spike Conc.	LCS Result	LCS % Rec	% Rec Limits	Qualifiers
Molybdenum, Dissolved	ug/L	80	84.4	106	85-115	
Nickel, Dissolved	ug/L	80	85.9	107	85-115	
Potassium, Dissolved	ug/L	1000	1010	101	85-115	
Selenium, Dissolved	ug/L	80	79.3	99	85-115	
Silver, Dissolved	ug/L	80	85.2	107	85-115	
Sodium, Dissolved	ug/L	1000	1020	102	85-115	
Thallium, Dissolved	ug/L	80	76.7	96	85-115	
Vanadium, Dissolved	ug/L	80	83.9	105	85-115	
Zinc, Dissolved	ug/L	80	81.0	101	85-115	

MATRIX SPIKE & MATRIX SPIKE DUPLICATE: 1383260 1383261

Parameter	Units	60139049001 Result	MS Spike Conc.	MSD Spike Conc.	MS Result	MSD Result	MS % Rec	MSD % Rec	% Rec Limits	RPD	Max RPD	Qual
Aluminum, Dissolved	ug/L	8.9	80	80	96.0	91.0	109	103	70-130	5	20	
Antimony, Dissolved	ug/L	ND	80	80	79.9	81.4	100	102	70-130	2	20	
Arsenic, Dissolved	ug/L	ND	80	80	84.4	84.6	105	106	70-130	.4	20	
Barium, Dissolved	ug/L	20.6	80	80	97.4	101	96	101	70-130	4	20	
Beryllium, Dissolved	ug/L	ND	80	80	86.0	84.4	107	105	70-130	2	20	
Cadmium, Dissolved	ug/L	ND	80	80	78.7	81.7	98	102	70-130	4	20	
Calcium, Dissolved	ug/L	301000	1000	1000	296000	297000	-430	-400	70-130	.1	20	E,M1
Chromium, Dissolved	ug/L	ND	80	80	83.2	85.3	104	106	70-130	2	20	
Cobalt, Dissolved	ug/L	2.2	80	80	86.5	87.4	105	106	70-130	1	20	
Copper, Dissolved	ug/L	0.69	80	80	88.3	88.4	110	110	70-130	.06	20	
Iron, Dissolved	ug/L	247	1000	1000	1260	1300	102	106	70-130	3	20	
Lead, Dissolved	ug/L	ND	80	80	74.7	73.9	93	92	70-130	1	20	
Magnesium, Dissolved	ug/L	24600	1000	1000	25200	25000	61	44	70-130	.7	20	M1
Manganese, Dissolved	ug/L	1680	80	80	1680	1700	11	34	70-130	1	20	M1
Molybdenum, Dissolved	ug/L	15.6	80	80	101	105	107	112	70-130	3	20	
Nickel, Dissolved	ug/L	4.1	80	80	92.4	93.0	110	111	70-130	.6	20	
Potassium, Dissolved	ug/L	9270	1000	1000	9440	9480	17	22	70-130	.5	20	M1
Selenium, Dissolved	ug/L	ND	80	80	79.5	80.6	99	100	70-130	1	20	
Silver, Dissolved	ug/L	ND	80	80	75.4	81.0	94	101	70-130	7	20	
Sodium, Dissolved	ug/L	15500	1000	1000	15600	15600	12	14	70-130	.1	20	M1
Thallium, Dissolved	ug/L	ND	80	80	75.4	74.8	94	94	70-130	.7	20	
Vanadium, Dissolved	ug/L	ND	80	80	84.0	86.4	105	108	70-130	3	20	
Zinc, Dissolved	ug/L	1520	80	80	1600	1580	97	71	70-130	1	20	

This report shall not be reproduced, except in full,
without the written consent of Pace Analytical Services, Inc..

Pace Analytical Services, Inc.
9608 Loiret Blvd.
Lenexa, KS 66219
(913)599-5665

QUALITY CONTROL DATA

Project: FEBRUARY 2013 RICO WATER SAMPL
Pace Project No.: 60139196

QC Batch: MPRP/21698 | Analysis Method: EPA 200.8
QC Batch Method: EPA 200.8 | Analysis Description: 200.8 Potentially Dissolved Metals
Associated Lab Samples: 60139196001, 60139196002

METHOD BLANK: 1146226 | Matrix: Water
Associated Lab Samples: 60139196001, 60139196002

Parameter	Units	Blank Result	Reporting Limit	Analyzed	Qualifiers
Aluminum, Dissolved	ug/L	ND	50.0	03/06/13 14:00	
Antimony, Dissolved	ug/L	ND	1.0	03/06/13 14:00	
Arsenic, Dissolved	ug/L	ND	1.0	03/06/13 14:00	
Barium, Dissolved	ug/L	0.26J	1.0	03/06/13 14:00	
Beryllium, Dissolved	ug/L	ND	0.50	03/06/13 14:00	
Cadmium, Dissolved	ug/L	ND	0.50	03/06/13 14:00	
Chromium, Dissolved	ug/L	0.30J	1.0	03/06/13 14:00	
Cobalt, Dissolved	ug/L	ND	1.0	03/06/13 14:00	
Copper, Dissolved	ug/L	ND	1.0	03/06/13 14:00	
Iron, Dissolved	ug/L	8.7J	50.0	03/06/13 14:00	
Lead, Dissolved	ug/L	0.15J	1.0	03/06/13 14:00	
Manganese, Dissolved	ug/L	1.8	1.0	03/06/13 14:00	
Molybdenum, Dissolved	ug/L	ND	1.0	03/06/13 14:00	
Nickel, Dissolved	ug/L	ND	1.0	03/06/13 14:00	
Selenium, Dissolved	ug/L	ND	1.0	03/06/13 14:00	
Silver, Dissolved	ug/L	ND	0.50	03/06/13 14:00	
Thallium, Dissolved	ug/L	ND	1.0	03/06/13 14:00	
Vanadium, Dissolved	ug/L	ND	1.0	03/06/13 14:00	
Zinc, Dissolved	ug/L	3.1J	10.0	03/06/13 14:00	

LABORATORY CONTROL SAMPLE: 1146227

Parameter	Units	Spike Conc.	LCS Result	LCS % Rec	% Rec Limits	Qualifiers
Aluminum, Dissolved	ug/L	1000	1010	101	85-115	
Antimony, Dissolved	ug/L	40	40.9	102	85-115	
Arsenic, Dissolved	ug/L	40	41.6	104	85-115	
Barium, Dissolved	ug/L	40	39.7	99	85-115	
Beryllium, Dissolved	ug/L	40	38.4	96	85-115	
Cadmium, Dissolved	ug/L	40	40.1	100	85-115	
Chromium, Dissolved	ug/L	40	40.5	101	85-115	
Cobalt, Dissolved	ug/L	40	39.7	99	85-115	
Copper, Dissolved	ug/L	40	40.6	102	85-115	
Iron, Dissolved	ug/L	1000	956	96	85-115	
Lead, Dissolved	ug/L	40	39.0	97	85-115	
Manganese, Dissolved	ug/L	40	40.4	101	85-115	
Molybdenum, Dissolved	ug/L	40	40.5	101	85-115	
Nickel, Dissolved	ug/L	40	40.7	102	85-115	
Selenium, Dissolved	ug/L	40	41.6	104	85-115	
Silver, Dissolved	ug/L	20	19.8	99	85-115	
Thallium, Dissolved	ug/L	40	38.9	97	85-115	
Vanadium, Dissolved	ug/L	40	40.1	100	85-115	

This report shall not be reproduced, except in full,
without the written consent of Pace Analytical Services, Inc..

Pace Analytical Services, Inc.
9608 Loiret Blvd.
Lenexa, KS 66219
(913)599-5665

QUALITY CONTROL DATA

Project: FEBRUARY 2013 RICO WATER SAMPL
Pace Project No.: 60139196

LABORATORY CONTROL SAMPLE: 1146227

Parameter	Units	Spike Conc.	LCS Result	LCS % Rec	% Rec Limits	Qualifiers
Zinc, Dissolved	ug/L	100	108	108	85-115	

MATRIX SPIKE & MATRIX SPIKE DUPLICATE: 1146228 1146229

Parameter	Units	60139196002 Result	MS Spike Conc.	MSD Spike Conc.	MS Result	MSD Result	MS % Rec	MSD % Rec	% Rec Limits	RPD	Max RPD	Qual
Aluminum, Dissolved	ug/L	7.8J	1000	1000	973	957	97	95	70-130	2	20	
Antimony, Dissolved	ug/L	0.058J	40	40	40.4	40.1	101	100	70-130	1	20	
Arsenic, Dissolved	ug/L	0.32J	40	40	42.1	41.4	104	103	70-130	2	20	
Barium, Dissolved	ug/L	79.2	40	40	120	118	102	97	70-130	2	20	
Beryllium, Dissolved	ug/L	ND	40	40	36.1	35.0	90	87	70-130	3	20	
Cadmium, Dissolved	ug/L	0.40J	40	40	39.5	38.9	98	96	70-130	1	20	
Chromium, Dissolved	ug/L	0.50J	40	40	40.0	39.3	99	97	70-130	2	20	
Cobalt, Dissolved	ug/L	0.10J	40	40	38.3	37.7	95	94	70-130	2	20	
Copper, Dissolved	ug/L	0.66J	40	40	38.5	37.5	94	92	70-130	3	20	
Iron, Dissolved	ug/L	66.9	1000	1000	993	994	93	93	70-130	0	20	
Lead, Dissolved	ug/L	0.44J	40	40	39.8	39.4	99	97	70-130	1	20	
Manganese, Dissolved	ug/L	113	40	40	155	152	104	96	70-130	2	20	
Molybdenum, Dissolved	ug/L	1.9	40	40	43.3	43.2	104	103	70-130	0	20	
Nickel, Dissolved	ug/L	ND	40	40	38.2	37.8	95	94	70-130	1	20	
Selenium, Dissolved	ug/L	0.44J	40	40	39.4	38.2	97	94	70-130	3	20	
Silver, Dissolved	ug/L	ND	20	20	19.0	18.8	95	94	70-130	1	20	
Thallium, Dissolved	ug/L	0.029J	40	40	39.8	39.4	99	99	70-130	1	20	
Vanadium, Dissolved	ug/L	ND	40	40	40.9	40.2	102	101	70-130	2	20	
Zinc, Dissolved	ug/L	125	100	100	225	221	100	96	70-130	2	20	

This report shall not be reproduced, except in full,
without the written consent of Pace Analytical Services, Inc..

Pace Analytical Services, Inc.
9608 Loiret Blvd.
Lenexa, KS 66219
(913)599-5665

QUALITY CONTROL DATA

Project: FEBRUARY 2013 RICO WATER SAMPL
Pace Project No.: 60139196

QC Batch: MT/11427 | Analysis Method: SM 2510B
QC Batch Method: SM 2510B | Analysis Description: 2510B Specific Conductance
Associated Lab Samples: 60139196001, 60139196002

METHOD BLANK: 1387540 | Matrix: Water
Associated Lab Samples: 60139196001, 60139196002

Parameter	Units	Blank Result	Reporting Limit	Analyzed	Qualifiers
Specific Conductance	umhos/cm	ND	10.0	03/07/13 12:51	

LABORATORY CONTROL SAMPLE: 1387541

Parameter	Units	Spike Conc.	LCS Result	LCS % Rec	% Rec Limits	Qualifiers
Specific Conductance	umhos/cm	1000	1010	101	90-110	

SAMPLE DUPLICATE: 1387542

Parameter	Units	10221129001 Result	Dup Result	RPD	Max RPD	Qualifiers
Specific Conductance	umhos/cm	194	191	2	20	

SAMPLE DUPLICATE: 1387543

Parameter	Units	10221136003 Result	Dup Result	RPD	Max RPD	Qualifiers
Specific Conductance	umhos/cm	24.6	27.4	11	20	

This report shall not be reproduced, except in full,
without the written consent of Pace Analytical Services, Inc..

Pace Analytical Services, Inc.
9608 Loiret Blvd.
Lenexa, KS 66219
(913)599-5665

QUALITY CONTROL DATA

Project: FEBRUARY 2013 RICO WATER SAMPL
Pace Project No.: 60139196

QC Batch: WET/39961 | Analysis Method: SM 2320B
QC Batch Method: SM 2320B | Analysis Description: 2320B Alkalinity
Associated Lab Samples: 60139196001, 60139196002

METHOD BLANK: 1145696 | Matrix: Water
Associated Lab Samples: 60139196001, 60139196002

Parameter	Units	Blank Result	Reporting Limit	Analyzed	Qualifiers
Alkalinity, Carbonate (CaCO3)	mg/L	ND	20.0	02/28/13 12:28	
Alkalinity, Total as CaCO3	mg/L	ND	20.0	02/28/13 12:28	
Alkalinity,Bicarbonate (CaCO3)	mg/L	ND	20.0	02/28/13 12:28	

LABORATORY CONTROL SAMPLE: 1145697

Parameter	Units	Spike Conc.	LCS Result	LCS % Rec	% Rec Limits	Qualifiers
Alkalinity, Total as CaCO3	mg/L	500	500	100	90-110	

SAMPLE DUPLICATE: 1145698

Parameter	Units	60139049001 Result	Dup Result	RPD	Max RPD	Qualifiers
Alkalinity, Carbonate (CaCO3)	mg/L	ND	ND		10	
Alkalinity, Total as CaCO3	mg/L	141	152	7	10	
Alkalinity,Bicarbonate (CaCO3)	mg/L	141	152	7	10	

SAMPLE DUPLICATE: 1145699

Parameter	Units	60139049010 Result	Dup Result	RPD	Max RPD	Qualifiers
Alkalinity, Carbonate (CaCO3)	mg/L	ND	ND		10	
Alkalinity, Total as CaCO3	mg/L	99.0	102	3	10	
Alkalinity,Bicarbonate (CaCO3)	mg/L	99.0	102	3	10	

This report shall not be reproduced, except in full,
without the written consent of Pace Analytical Services, Inc..

Pace Analytical Services, Inc.
9608 Loiret Blvd.
Lenexa, KS 66219
(913)599-5665

QUALITY CONTROL DATA

Project: FEBRUARY 2013 RICO WATER SAMPL
Pace Project No.: 60139196

QC Batch: WET/39939 Analysis Method: SM 2540C
QC Batch Method: SM 2540C Analysis Description: 2540C Total Dissolved Solids
Associated Lab Samples: 60139196001, 60139196002

METHOD BLANK: 1145244 Matrix: Water
Associated Lab Samples: 60139196001, 60139196002

Parameter	Units	Blank Result	Reporting Limit	Analyzed	Qualifiers
Total Dissolved Solids	mg/L	ND	5.0	02/27/13 14:36	

SAMPLE DUPLICATE: 1145245

Parameter	Units	60139111002 Result	Dup Result	RPD	Max RPD	Qualifiers
Total Dissolved Solids	mg/L	1090	1100	1	17	

This report shall not be reproduced, except in full,
without the written consent of Pace Analytical Services, Inc..

Pace Analytical Services, Inc.
9608 Loiret Blvd.
Lenexa, KS 66219
(913)599-5665

QUALITY CONTROL DATA

Project: FEBRUARY 2013 RICO WATER SAMPL
Pace Project No.: 60139196

QC Batch: WET/39916 | Analysis Method: SM 2540D
QC Batch Method: SM 2540D | Analysis Description: 2540D Total Suspended Solids
Associated Lab Samples: 60139196001, 60139196002

METHOD BLANK: 1144755 | Matrix: Water
Associated Lab Samples: 60139196001, 60139196002

Parameter	Units	Blank Result	Reporting Limit	Analyzed	Qualifiers
Total Suspended Solids	mg/L	ND	5.0	02/25/13 12:48	

SAMPLE DUPLICATE: 1144756

Parameter	Units	60139122009 Result	Dup Result	RPD	Max RPD	Qualifiers
Total Suspended Solids	mg/L	ND	ND		25	

SAMPLE DUPLICATE: 1144757

Parameter	Units	60139138001 Result	Dup Result	RPD	Max RPD	Qualifiers
Total Suspended Solids	mg/L	60.0	60.0	0	25	

This report shall not be reproduced, except in full,
without the written consent of Pace Analytical Services, Inc..

Pace Analytical Services, Inc.
9608 Loiret Blvd.
Lenexa, KS 66219
(913)599-5665

QUALITY CONTROL DATA

Project: FEBRUARY 2013 RICO WATER SAMPL
Pace Project No.: 60139196

QC Batch: WET/39932 | Analysis Method: SM 4500-S-2 D
QC Batch Method: SM 4500-S-2 D | Analysis Description: 4500S2D Sulfide, Total
Associated Lab Samples: 60139196001, 60139196002

METHOD BLANK: 1145107 | Matrix: Water
Associated Lab Samples: 60139196001, 60139196002

Parameter	Units	Blank Result	Reporting Limit	Analyzed	Qualifiers
Sulfide, Total	mg/L	ND	0.050	02/27/13 11:31	

LABORATORY CONTROL SAMPLE: 1145108

Parameter	Units	Spike Conc.	LCS Result	LCS % Rec	% Rec Limits	Qualifiers
Sulfide, Total	mg/L	.5	0.48	95	80-120	

MATRIX SPIKE SAMPLE: 1145109

Parameter	Units	60139196001 Result	Spike Conc.	MS Result	MS % Rec	% Rec Limits	Qualifiers
Sulfide, Total	mg/L	ND	.5	0.59	118	75-125	

This report shall not be reproduced, except in full,
without the written consent of Pace Analytical Services, Inc..

Pace Analytical Services, Inc.
9608 Loiret Blvd.
Lenexa, KS 66219
(913)599-5665

QUALITY CONTROL DATA

Project: FEBRUARY 2013 RICO WATER SAMPL
Pace Project No.: 60139196

QC Batch: WETA/23658 — Analysis Method: EPA 300.0
QC Batch Method: EPA 300.0 — Analysis Description: 300.0 IC Anions
Associated Lab Samples: 60139196001, 60139196002

METHOD BLANK: 1145134 — Matrix: Water
Associated Lab Samples: 60139196001, 60139196002

Parameter	Units	Blank Result	Reporting Limit	Analyzed	Qualifiers
Chloride	mg/L	ND	1.0	02/27/13 09:48	
Sulfate	mg/L	ND	1.0	02/27/13 09:48	

LABORATORY CONTROL SAMPLE: 1145135

Parameter	Units	Spike Conc.	LCS Result	LCS % Rec	% Rec Limits	Qualifiers
Chloride	mg/L	5	4.8	96	90-110	
Sulfate	mg/L	5	5.0	99	90-110	

MATRIX SPIKE & MATRIX SPIKE DUPLICATE: 1145136 1145137

Parameter	Units	60139244001 Result	MS Spike Conc.	MSD Spike Conc.	MS Result	MSD Result	MS % Rec	MSD % Rec	% Rec Limits	RPD	Max RPD	Qual
Chloride	mg/L	175	500	500	570	593	79	84	64-118	4	12	
Sulfate	mg/L	1210	500	500	1600	1700	77	97	61-119	6	10	

This report shall not be reproduced, except in full,
without the written consent of Pace Analytical Services, Inc..

Pace Analytical Services, Inc.
9608 Loiret Blvd.
Lenexa, KS 66219
(913)599-5665

QUALITY CONTROL DATA

Project: FEBRUARY 2013 RICO WATER SAMPL
Pace Project No.: 60139196

QC Batch: WETA/23663 | Analysis Method: EPA 353.2
QC Batch Method: EPA 353.2 | Analysis Description: 353.2 Nitrate + Nitrite, preserved
Associated Lab Samples: 60139196001, 60139196002

METHOD BLANK: 1145183 | Matrix: Water
Associated Lab Samples: 60139196001, 60139196002

Parameter	Units	Blank Result	Reporting Limit	Analyzed	Qualifiers
Nitrogen, NO2 plus NO3	mg/L	ND	0.10	02/27/13 14:22	

LABORATORY CONTROL SAMPLE: 1145184

Parameter	Units	Spike Conc.	LCS Result	LCS % Rec	% Rec Limits	Qualifiers
Nitrogen, NO2 plus NO3	mg/L	2	2.0	102	90-110	

MATRIX SPIKE SAMPLE: 1145185

Parameter	Units	60139049001 Result	Spike Conc.	MS Result	MS % Rec	% Rec Limits	Qualifiers
Nitrogen, NO2 plus NO3	mg/L	0.10	2	2.3	110	90-110	

MATRIX SPIKE SAMPLE: 1145186

Parameter	Units	60139049004 Result	Spike Conc.	MS Result	MS % Rec	% Rec Limits	Qualifiers
Nitrogen, NO2 plus NO3	mg/L	0.18	2	2.4	111	90-110	M1

SAMPLE DUPLICATE: 1145187

Parameter	Units	60139196001 Result	Dup Result	RPD	Max RPD	Qualifiers
Nitrogen, NO2 plus NO3	mg/L	ND	ND		13	

This report shall not be reproduced, except in full,
without the written consent of Pace Analytical Services, Inc..

Pace Analytical Services, Inc.
9608 Loiret Blvd.
Lenexa, KS 66219
(913)599-5665

QUALITY CONTROL DATA

Project: FEBRUARY 2013 RICO WATER SAMPL
Pace Project No.: 60139196

QC Batch: WETA/23681 | Analysis Method: SM 4500-CN-E
QC Batch Method: SM 4500-CN-E | Analysis Description: 4500CNE Cyanide, Total
Associated Lab Samples: 60139196001, 60139196002

METHOD BLANK: 1145653 | Matrix: Water
Associated Lab Samples: 60139196001, 60139196002

Parameter	Units	Blank Result	Reporting Limit	Analyzed	Qualifiers
Cyanide	mg/L	ND	0.0050	02/28/13 11:31	

LABORATORY CONTROL SAMPLE: 1145654

Parameter	Units	Spike Conc.	LCS Result	LCS % Rec	% Rec Limits	Qualifiers
Cyanide	mg/L	.1	0.096	96	69-126	

MATRIX SPIKE SAMPLE: 1145655

Parameter	Units	60139303001 Result	Spike Conc.	MS Result	MS % Rec	% Rec Limits	Qualifiers
Cyanide	mg/L	ND	.1	0.083	81	41-136	

SAMPLE DUPLICATE: 1145656

Parameter	Units	60139151005 Result	Dup Result	RPD	Max RPD	Qualifiers
Cyanide	mg/L	ND	ND		26	

This report shall not be reproduced, except in full,
without the written consent of Pace Analytical Services, Inc..

Pace Analytical Services, Inc.
9608 Loiret Blvd.
Lenexa, KS 66219
(913)599-5665

QUALITY CONTROL DATA

Project: FEBRUARY 2013 RICO WATER SAMPL
Pace Project No.: 60139196

QC Batch: WETA/16480 | Analysis Method: SM 5310C
QC Batch Method: SM 5310C | Analysis Description: 5310C Total Organic Carbon
Associated Lab Samples: 60139196001, 60139196002

METHOD BLANK: 755880 | Matrix: Water
Associated Lab Samples: 60139196001, 60139196002

Parameter	Units	Blank Result	Reporting Limit	Analyzed	Qualifiers
Total Organic Carbon	mg/L	ND	0.50	03/04/13 16:26	

LABORATORY CONTROL SAMPLE: 755881

Parameter	Units	Spike Conc.	LCS Result	LCS % Rec	% Rec Limits	Qualifiers
Total Organic Carbon	mg/L	2.5	2.6	103	80-120	

MATRIX SPIKE & MATRIX SPIKE DUPLICATE: 755882 755883

Parameter	Units	4074426001 Result	MS Spike Conc.	MSD Spike Conc.	MS Result	MSD Result	MS % Rec	MSD % Rec	% Rec Limits	RPD	Max RPD	Qual
Total Organic Carbon	mg/L	3.0	5	5	8.8	8.8	115	115	80-120	0	20	

MATRIX SPIKE & MATRIX SPIKE DUPLICATE: 755884 755885

Parameter	Units	4074426002 Result	MS Spike Conc.	MSD Spike Conc.	MS Result	MSD Result	MS % Rec	MSD % Rec	% Rec Limits	RPD	Max RPD	Qual
Total Organic Carbon	mg/L	8.6	15	15	26.2	26.6	117	119	80-120	1	20	

This report shall not be reproduced, except in full,
without the written consent of Pace Analytical Services, Inc..

Pace Analytical Services, Inc.
9608 Loiret Blvd.
Lenexa, KS 66219
(913)599-5665

QUALIFIERS

Project: FEBRUARY 2013 RICO WATER SAMPL
Pace Project No.: 60139196

DEFINITIONS

DF - Dilution Factor, if reported, represents the factor applied to the reported data due to changes in sample preparation, dilution of the sample aliquot, or moisture content.

ND - Not Detected at or above adjusted reporting limit.

J - Estimated concentration above the adjusted method detection limit and below the adjusted reporting limit.

MDL - Adjusted Method Detection Limit.

PRL - Pace Reporting Limit.

RL - Reporting Limit.

S - Surrogate

1,2-Diphenylhydrazine (8270 listed analyte) decomposes to Azobenzene.

Consistent with EPA guidelines, unrounded data are displayed and have been used to calculate % recovery and RPD values.

LCS(D) - Laboratory Control Sample (Duplicate)

MS(D) - Matrix Spike (Duplicate)

DUP - Sample Duplicate

RPD - Relative Percent Difference

NC - Not Calculable.

SG - Silica Gel - Clean-Up

U - Indicates the compound was analyzed for, but not detected.

N-Nitrosodiphenylamine decomposes and cannot be separated from Diphenylamine using Method 8270. The result reported for each analyte is a combined concentration.

Pace Analytical is TNI accredited. Contact your Pace PM for the current list of accredited analytes.

TNI - The NELAC Institute.

LABORATORIES

PASI-G	Pace Analytical Services - Green Bay
PASI-K	Pace Analytical Services - Kansas City
PASI-M	Pace Analytical Services - Minneapolis

ANALYTE QUALIFIERS

B	Analyte was detected in the associated method blank.
E	Analyte concentration exceeded the calibration range. The reported result is estimated.
M1	Matrix spike recovery exceeded QC limits. Batch accepted based on laboratory control sample (LCS) recovery.
M6	Matrix spike and Matrix spike duplicate recovery not evaluated against control limits due to sample dilution.

This report shall not be reproduced, except in full,
without the written consent of Pace Analytical Services, Inc..

Pace Analytical Services, Inc.
9608 Loiret Blvd.
Lenexa, KS 66219
(913)599-5665

QUALITY CONTROL DATA CROSS REFERENCE TABLE

Project: FEBRUARY 2013 RICO WATER SAMPL
Pace Project No.: 60139196

Lab ID	Sample ID	QC Batch Method	QC Batch	Analytical Method	Analytical Batch
60139196001	**DR-4-SW_20130220**	EPA 200.7	MPRP/21697	EPA 200.7	ICP/17403
60139196002	**DR-G_20130220**	EPA 200.7	MPRP/21697	EPA 200.7	ICP/17403
60139196001	**DR-4-SW_20130220**	EPA 200.8	MPRP/37780	EPA 200.8	ICPM/15434
60139196002	**DR-G_20130220**	EPA 200.8	MPRP/37780	EPA 200.8	ICPM/15434
60139196001	**DR-4-SW_20130220**	EPA 200.8	MPRP/37781	EPA 200.8	ICPM/15448
60139196002	**DR-G_20130220**	EPA 200.8	MPRP/37781	EPA 200.8	ICPM/15448
60139196001	**DR-4-SW_20130220**	EPA 200.8	MPRP/21698	EPA 200.8	ICPM/2075
60139196002	**DR-G_20130220**	EPA 200.8	MPRP/21698	EPA 200.8	ICPM/2075
60139196001	**DR-4-SW_20130220**	EPA 245.1	MERP/8095	EPA 245.1	MERC/9141
60139196002	**DR-G_20130220**	EPA 245.1	MERP/8095	EPA 245.1	MERC/9141
60139196001	**DR-4-SW_20130220**	EPA 245.1	MERP/8093	EPA 245.1	MERC/9140
60139196002	**DR-G_20130220**	EPA 245.1	MERP/8093	EPA 245.1	MERC/9140
60139196001	**DR-4-SW_20130220**	EPA 245.1	MERP/7123	EPA 245.1	MERC/7083
60139196002	**DR-G_20130220**	EPA 245.1	MERP/7123	EPA 245.1	MERC/7083
60139196001	**DR-4-SW_20130220**	SM 2510B	MT/11427		
60139196002	**DR-G_20130220**	SM 2510B	MT/11427		
60139196001	**DR-4-SW_20130220**	Calculated	MT/11428		
60139196002	**DR-G_20130220**	Calculated	MT/11428		
60139196001	**DR-4-SW_20130220**	SM 2320B	WET/39961		
60139196002	**DR-G_20130220**	SM 2320B	WET/39961		
60139196001	**DR-4-SW_20130220**	SM 2540C	WET/39939		
60139196002	**DR-G_20130220**	SM 2540C	WET/39939		
60139196001	**DR-4-SW_20130220**	SM 2540D	WET/39916		
60139196002	**DR-G_20130220**	SM 2540D	WET/39916		
60139196001	**DR-4-SW_20130220**	SM 4500-S-2 D	WET/39932		
60139196002	**DR-G_20130220**	SM 4500-S-2 D	WET/39932		
60139196001	**DR-4-SW_20130220**	EPA 300.0	WETA/23658		
60139196002	**DR-G_20130220**	EPA 300.0	WETA/23658		
60139196001	**DR-4-SW_20130220**	EPA 353.2	WETA/23663		
60139196002	**DR-G_20130220**	EPA 353.2	WETA/23663		
60139196001	**DR-4-SW_20130220**	SM 4500-CN-E	WETA/23681		
60139196002	**DR-G_20130220**	SM 4500-CN-E	WETA/23681		
60139196001	**DR-4-SW_20130220**	SM 5310C	WETA/16480		
60139196002	**DR-G_20130220**	SM 5310C	WETA/16480		

This report shall not be reproduced, except in full,
without the written consent of Pace Analytical Services, Inc..

Appendix E

Flow Cross Sections

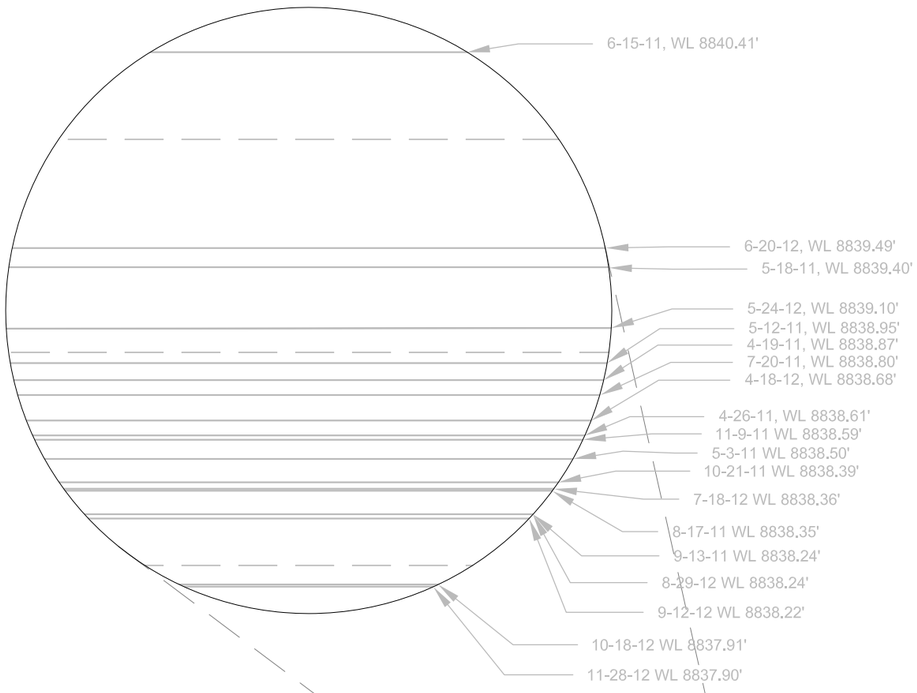

DR-1 CROSS SECTION

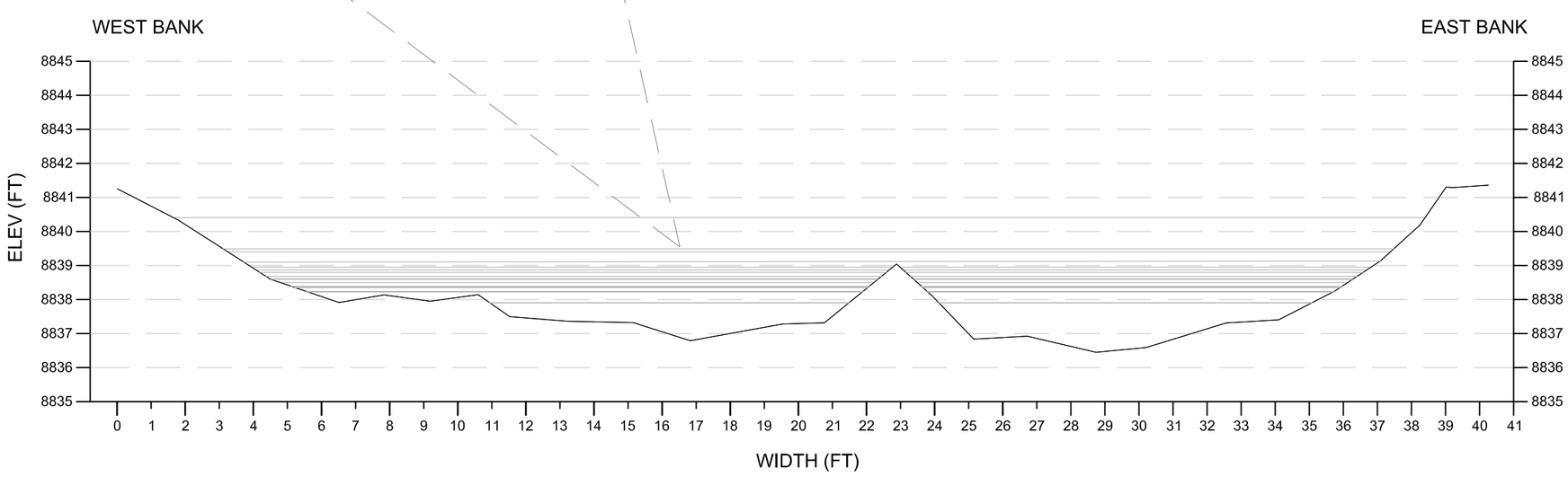

4 **CROSS SECTION AT DR-1**

SCALE - 1" = 4'

THESE PLANS AND SPECIFICATIONS ARE THE PROPERTY OF ANDERSON ENGINEERING COMPANY, INC., 977 WEST 2100 SOUTH, SALT LAKE CITY, UTAH, 84119 AND SHALL NOT BE COPIED, REDUCED, OR REPRODUCED WITHOUT THEIR WRITTEN PERMISSION.

General Notes

NOTE: COULD NOT OBTAIN FLOW DUE TO LARGE ICE SHELF OVER RIVER PREVENTING SAFE ACCESS

Scale in Feet
0 2 4

No.	Revision/Issue	Date

ATLANTIC RICHFIELD COMPANY

ANDERSON
ENGINEERING COMPANY, INC.

DRAWN BY: MAD
ENGINEER: CS, MAD
APPROVED:

RICO SURFACE WATER SAMPLING

DOLORES RIVER CROSS SECTION AT SAMPLING STATION DR-1

RICO, CO

Project
Date 18-FEB-2013
Scale
Figure 4

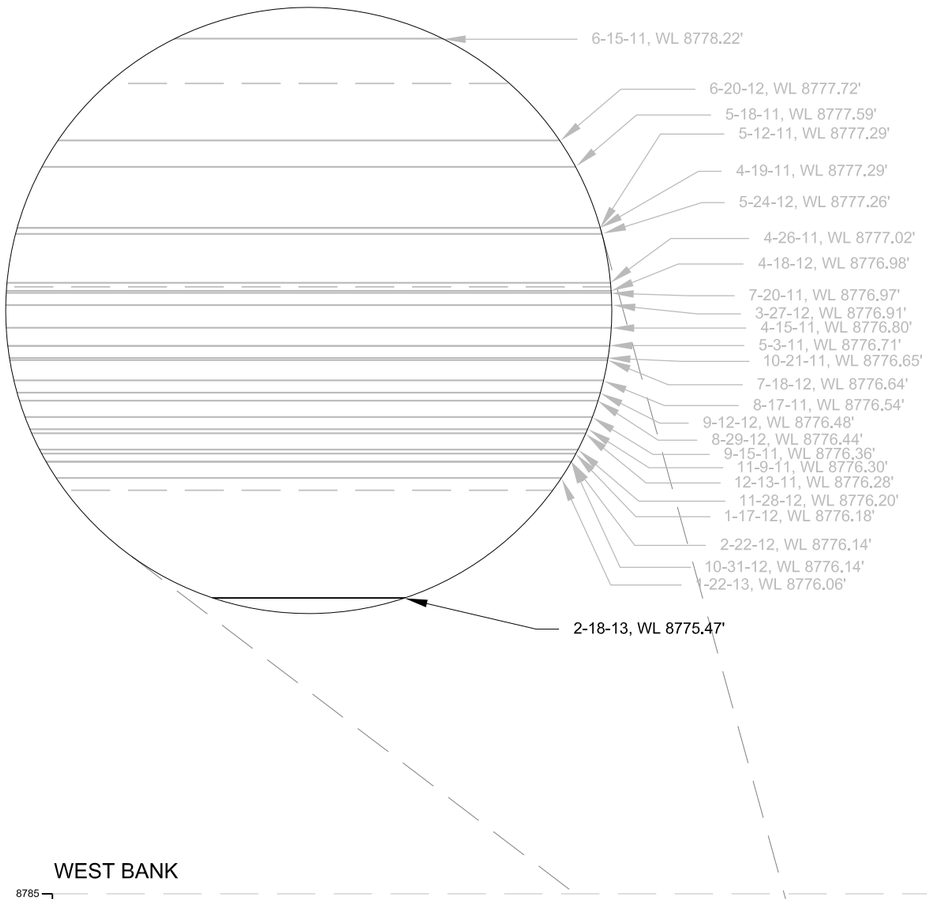

DR-2 CROSS SECTION

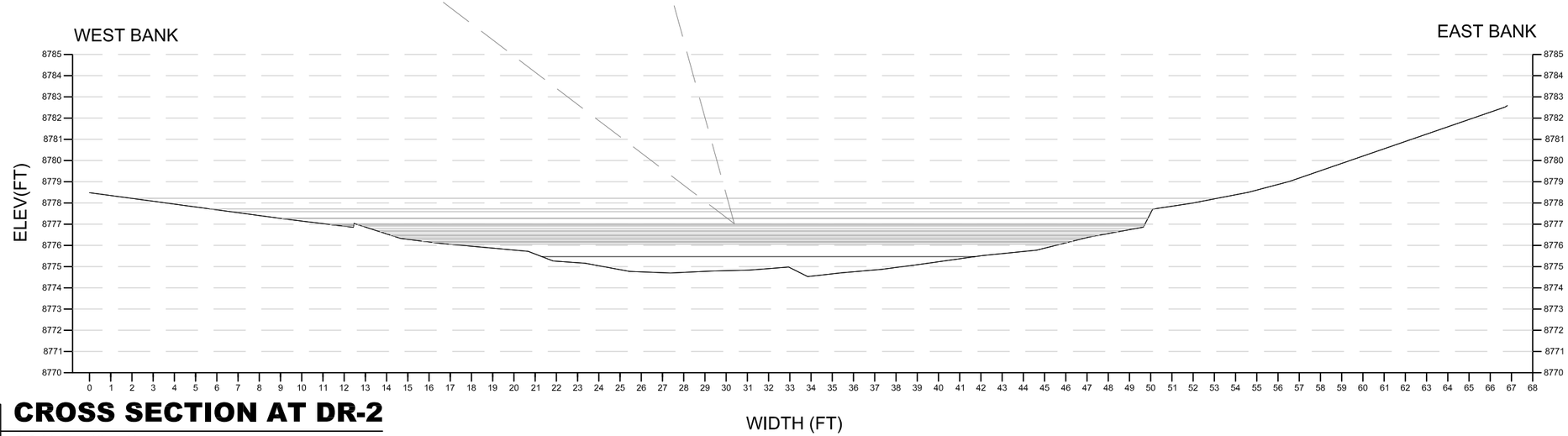

5 CROSS SECTION AT DR-2

SCALE - 1" = 6'

General Notes

Scale in Feet
0 3 6

No.	Revision/Issue	Date

ATLANTIC RICHFIELD COMPANY

ANDERSON
ENGINEERING COMPANY, INC.

DRAWN BY: MAD
ENGINEER: CS, MAD
APPROVED:

RICO SURFACE WATER SAMPLING

DOLORES RIVER CROSS SECTION AT SAMPLING STATION DR-2

RICO, CO

Project
Date 18-FEB-2013
Scale
Figure 5

THESE PLANS AND SPECIFICATIONS ARE THE PROPERTY OF ANDERSON ENGINEERING COMPANY, INC., 977 WEST 2100 SOUTH, SALT LAKE CITY, UTAH, 84119 AND SHALL NOT BE COPIED, REDUCED, OR REPRODUCED WITHOUT THEIR WRITTEN PERMISSION.

DR-5 CROSS SECTION

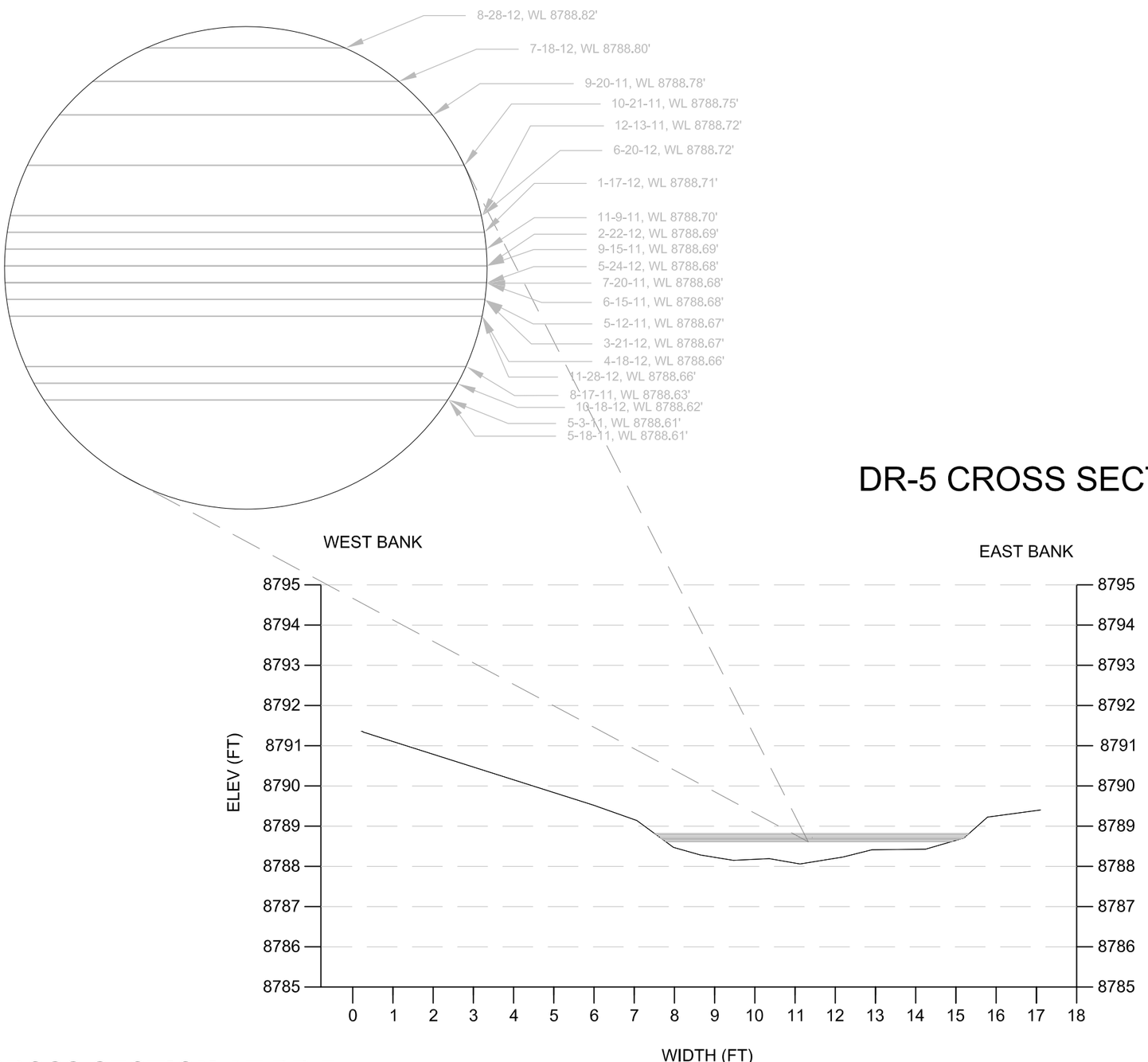

6 **CROSS SECTION AT DR-5**

SCALE - 1" = 3'

General Notes

NOTE: COULD NOT OBTAIN FLOW DUE TO EXCESSIVE SNOW AND ICE AROUND SPILLWAY PREVENTING SAFE ACCESS

Scale in Feet
0 1.5 3

No.	Revision/Issue	Date

ATLANTIC RICHFIELD COMPANY

ANDERSON
ENGINEERING COMPANY, INC.

DRAWN BY: MAD
ENGINEER: CS, MAD
APPROVED:

RICO SURFACE WATER SAMPLING

POND 8 EMBANKMENT CROSS SECTION AT SAMPLING STATION DR-5

RICO, CO

Project
Date 18-FEB-2013
Scale
Figure 6

THESE PLANS AND SPECIFICATIONS ARE THE PROPERTY OF ANDERSON ENGINEERING COMPANY, INC., 977 WEST 2100 SOUTH, SALT LAKE CITY, UTAH, 84119 AND SHALL NOT BE COPIED, REDUCED, OR REPRODUCED WITHOUT THEIR WRITTEN PERMISSION.

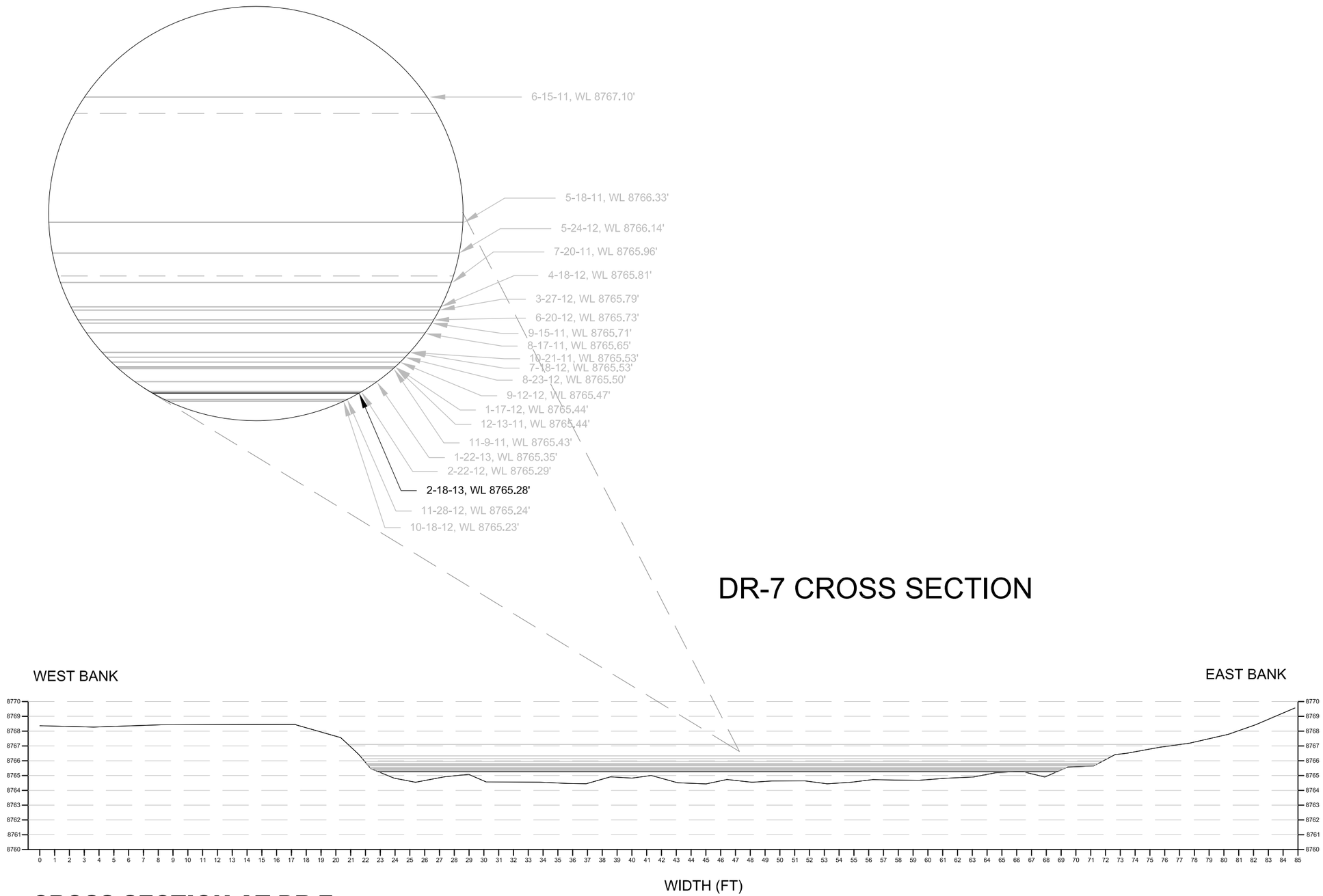

7 CROSS SECTION AT DR-7

SCALE - 1" = 7'

THESE PLANS AND SPECIFICATIONS ARE THE PROPERTY OF ANDERSON ENGINEERING COMPANY, INC., 977 WEST 2100 SOUTH, SALT LAKE CITY, UTAH, 84119 AND SHALL NOT BE COPIED, REDUCED, OR REPRODUCED WITHOUT THEIR WRITTEN PERMISSION.

General Notes

Scale in Feet

0 3.5 7

No.	Revision/Issue	Date

ATLANTIC RICHFIELD COMPANY

ANDERSON
ENGINEERING COMPANY, INC.

DRAWN BY: MAD
ENGINEER: CS, MAD
APPROVED:

RICO SURFACE WATER SAMPLING

DOLORES RIVER CROSS SECTION AT SAMPLING STATION DR-7

RICO, CO

Project
Date 18-FEB-2013
Scale
Figure 7

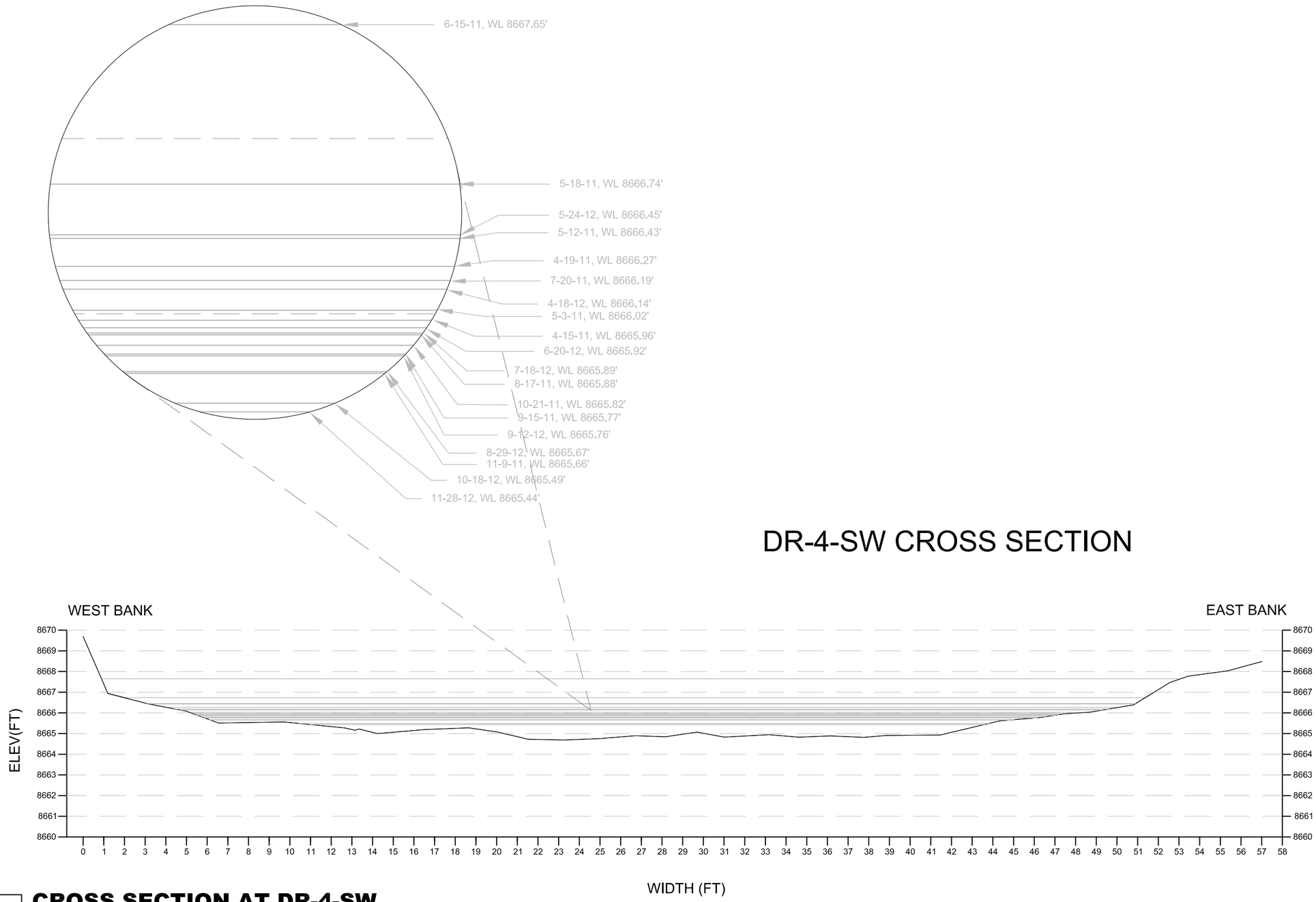

DR-4-SW CROSS SECTION

8 **CROSS SECTION AT DR-4-SW**

SCALE - 1" = 5'

General Notes

NOTE: COULD NOT OBTAIN FLOW DUE TO LARGE ICE SHELF OVER RIVER PREVENTING SAFE ACCESS

Scale in Feet
0 2.5 5

No.	Revision/Issue	Date

ATLANTIC RICHFIELD COMPANY

ANDERSON
ENGINEERING COMPANY, INC.

DRAWN BY: MAD
ENGINEER: CS, MAD
APPROVED:

RICO SURFACE WATER SAMPLING

DOLORES RIVER CROSS SECTION AT SAMPLING STATION DR-4-SW

RICO, CO

Project
Date 18-FEB-2013
Scale
Figure 8

THESE PLANS AND SPECIFICATIONS ARE THE PROPERTY OF ANDERSON ENGINEERING COMPANY, INC., 977 WEST 2100 SOUTH, SALT LAKE CITY, UTAH, 84119 AND SHALL NOT BE COPIED, REDUCED, OR REPRODUCED WITHOUT THEIR WRITTEN PERMISSION.

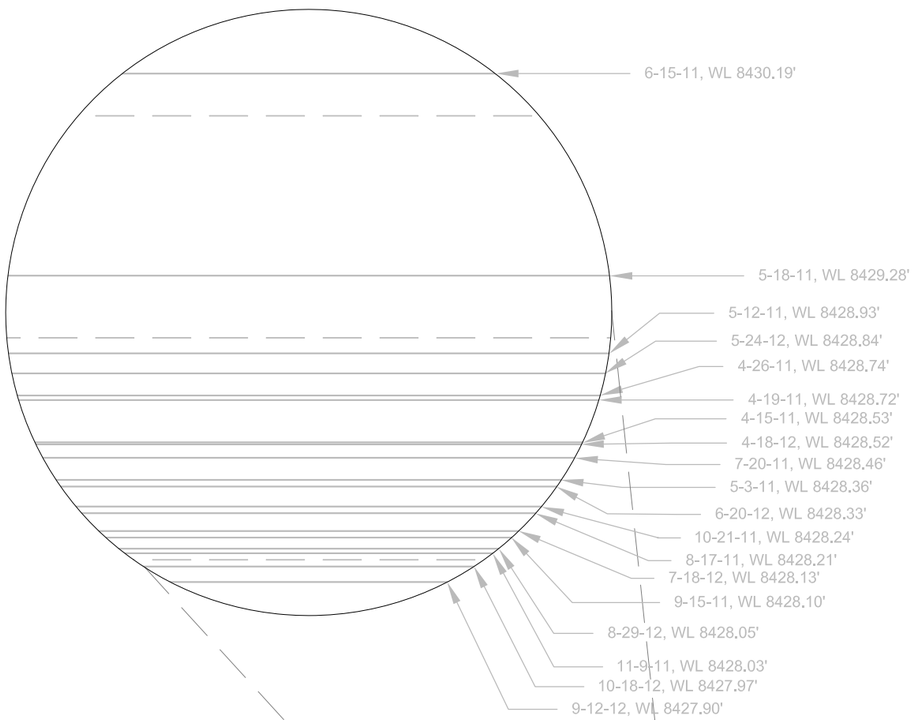

DR-G CROSS SECTION

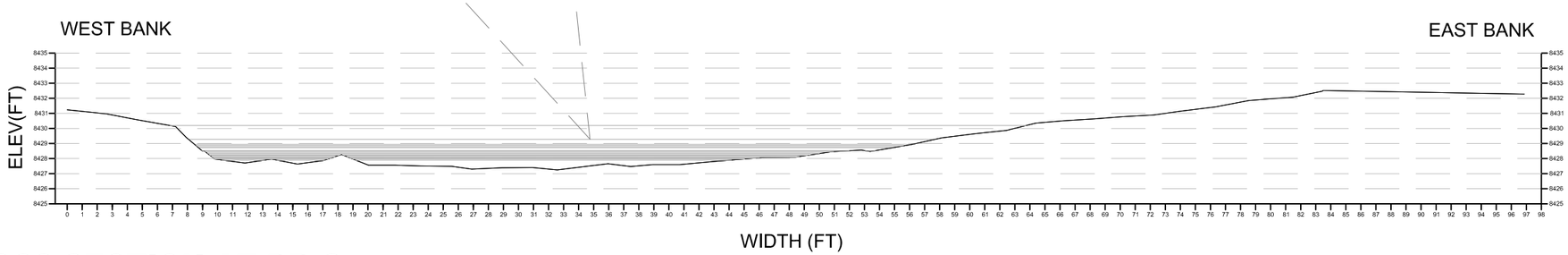

9 CROSS SECTION AT DR-G

SCALE - 1" = 9'

General Notes

NOTE: COULD NOT OBTAIN FLOW DUE TO LARGE ICE SHELF OVER RIVER PREVENTING SAFE ACCESS

Scale in Feet
0 4.5 9

No.	Revision/Issue	Date

ATLANTIC RICHFIELD COMPANY

ANDERSON ENGINEERING COMPANY, INC.

DRAWN BY: MAD
ENGINEER: CS, MAD
APPROVED:

RICO SURFACE WATER SAMPLING

DOLORES RIVER CROSS SECTION AT SAMPLING STATION DR-G

RICO, CO

Project
Date 18-FEB-2013
Scale
Figure 9

THESE PLANS AND SPECIFICATIONS ARE THE PROPERTY OF ANDERSON ENGINEERING COMPANY, INC., 977 WEST 2100 SOUTH, SALT LAKE CITY, UTAH, 84119 AND SHALL NOT BE COPIED, REDUCED, OR REPRODUCED WITHOUT THEIR WRITTEN PERMISSION.

Appendix F

Chain of Custody Records

Pace Analytical
www.pacelabs.com

Sample Condition Upon Receipt
ESI Tech Spec Client

WO#: 60138490

60138490

Client Name: BP Anderson

Optional
Proj Due Date:
Proj Name:

Courier: Fed Ex ☒ UPS ☐ USPS ☐ Client ☐ Commercial ☐ Pace ☐ Other ☐

Tracking #: 6015530 8361, 8340, 8350 Pace Shipping Label Used? Yes ☐ No ☑

Custody Seal on Cooler/Box Present: Yes ☑ No ☐ Seals intact: Yes ☑ No ☐

Packing Material: Bubble Wrap ☐ Bubble Bags ☑ Foam ☐ None ☐ Other ☑ 2 P/C

Thermometer Used: T-112 / T-194 **Type of Ice:** Wet Blue None ☐ Samples received on ice, cooling process has begun.
(circle one)

Cooler Temperature: 3.6/4.2/2.6

Date and initials of person examining contents: PU 2-9-13

Temperature should be above freezing to 6°C

Chain of Custody present:	☑Yes ☐No ☐N/A	1.	
Chain of Custody filled out:	☑Yes ☐No ☐N/A	2.	
Chain of Custody relinquished:	☑Yes ☐No ☐N/A	3.	
Sampler name & signature on COC:	☑Yes ☐No ☐N/A	4.	
Samples arrived within holding time:	☑Yes ☐No ☐N/A	5.	
Short Hold Time analyses (<72hr):	☐Yes ☑No ☐N/A	6.	
Rush Turn Around Time requested:	☐Yes ☑No ☐N/A	7.	
Sufficient volume:	☑Yes ☐No ☐N/A	8.	
Correct containers used:	☑Yes ☐No ☐N/A		
Pace containers used:	☑Yes ☐No ☐N/A	9.	
Containers intact:	☑Yes ☐No ☐N/A	10.	
Unpreserved 5035A soils frozen w/in 48hrs?	☐Yes ☐No ☑N/A	11.	
Filtered volume received for dissolved tests?	☑Yes ☐No ~~☑N/A~~	12. PU 2-9-13	
Sample labels match COC:	☑Yes ☐No ☐N/A		
Includes date/time/ID/analyses Matrix: WT		13.	
All containers needing preservation have been checked.	☑Yes ☐No ☐N/A		
All containers needing preservation are found to be in compliance with EPA recommendation.	☑Yes ☐No ☐N/A	14.	
Exceptions: VOA, coliform, TOC, O&G, WI-DRO (water), Phenolics	☑Yes ☐No	Initial when completed	Lot # of added preservative
Trip Blank present:	☐Yes ☐No ☑N/A		
Pace Trip Blank lot # (if purchased):		15.	
Headspace in VOA vials (>6mm):	☐Yes ☐No ☑N/A	16.	
Project sampled in USDA Regulated Area:	☐Yes ☐No ☑N/A	17. List State:	

Client Notification/ Resolution: Copy COC to Client? Y / N Field Data Required? Y / N

Person Contacted: _____ Date/Time: _____

Comments/ Resolution: Split container for TOC/Nitrates in order to send TOC to Green Bay Lab

Project Manager Review: AMW Date: 2/11/13

Temp Log: Record start and finish times when unpacking cooler, if >20 min, recheck sample temps.	
Start: 1035	Start:
End: 1055	End:
Temp:	Temp:

ANDERSON
ENGINEERING COMPANY INC.

977 West 2100 South
Salt Lake City, UT
84119
(801) 972-6222
FAX (801) 972-6235

CHAIN OF CUSTODY RECORD

COC# _____
Page 1 of 1

Client: BP
Project: February 2013 Rico Water Sampling
AECI Contact: Mark DeFriez (801) 234-9583

Lab Name: Pace Analytical Services
Lab Contact: Heather Wilson, (913) 563-1407
Lab Address: 9608 Loiret Blvd.
Lenexa, KS 66219

Matrix Codes
(W) Water
(S) Soil
(L) Liquid

QC: (circle one)
I II III IV

60138490

Field Location	Field Sample ID Number	Date	Time	Matrix	No. of Containers	Total Metals / Hardness / Silica	Potentially Dissolved Metals	Dissolved Metals	Alkalinity / TDS / TSS / Sulfate / Chloride	Cyanide	Salinity	Total Organic Carbon / Nitrate	Sulfide			COMMENTS	
GW-5	1BP2U 1A635 GW-5_20130207 2BP3N1.5	2/7/2013	11:00 AM	W	8	X	X	X	X	X	X	X	X	1BP3	F1.5 1BP3C12.5 1BP3Z10.5 1BP2U		01
MW-204	MW-204_20130207	2/7/2013	1:30 PM	W	8	X	X	X	X	X	X	X	X				02
MW-5 SHALLOW	MW-5 SHALLOW_20130207	2/7/2013	12:30 PM	W	8	X	X	X	X	X	X	X	X				03
MW-5 DEEP	MW-5 DEEP_20130207	2/7/2013	12:15 PM	W	8	X	X	X	X	X	X	X	X				04
GW-1	GW-1_20130206	2/6/2013	3:30 PM	W	8	X	X	X	X	X	X	X	X				05
MW-101	MW-101_20130206	2/6/2013	3:45 PM	W	8	X	X	X	X	X	X	X	X				06
MW-102	MW-102_20130207	2/7/2013	4:15 PM	W	8	X	X	X	X	X	X	X	X				07
GW-3	GW-3_20130208	2/8/2013	9:30 AM	W	8	X	X	X	X	X	X	X	X				08
DR-3	DR-3_20130208	2/8/2013	8:00 AM	W	8	X	X	X	X	X	X	X	X				09
DR-8	DR-8_20130208	2/8/2013	8:05 AM	W	8	X	X	X	X	X	X	X	X				010
EB-1	EB-1_20130208	2/8/2013	9:45 AM	W	8	X	X	X	X	X	X	X	X				011
AT-2	AT-2_20130208	2/8/2013	9:00 AM	W	8	X	X	X	X	X	X	X	X				012

Relinquished By: *signature*	Date	Time	Received By: *signature*		Time	Special Instructions
[signature]	2/8/12	10:00a	[signature]	2/9/13	0940	3·6/4·2/26
Relinquished By: *signature*	Date	Time	Received By: *signature*		Time	
Relinquished By: *signature*	Date	Time	Received By: *signature*		Time	
Relinquished By: *signature*	Date	Time	Received By: *signature*		Time	

FLD-002

Chain of Custody

Pace Analytical
www.pacelabs.com

Workorder: 60138490 **Workorder Name:** FEBRUARY 2013 RICO WATER SAMPL **Owner Received Date:** 2/9/2013 **Results Requested By:** 2/25/2013

Report To	Subcontract To
Heather Wilson Pace Analytical Services, Inc. 9608 Loiret Blvd. Lenexa, KS 66219 Phone (913)599-5665 Fax (913)599-1759	Pace Analytical Billings MT 602 S 25th Street Billings, MT, MT 591014549 Phone (406) 254-7226

Item	Sample ID	Sample Type	Collect Date/Time	Lab ID	Matrix	Preserved Containers: none	Requested Analysis: Salinity	LAB USE ONLY 10219846
1	GW-5_20130207	PS	2/7/2013 11:00	60138490001	Water	1	X	001
2	MW-204_20130207	PS	2/7/2013 13:30	60138490002	Water	1	X	002
3	MW-5 SHALLOW_201 30207	PS	2/7/2013 12:30	60138490003	Water	1	X	003
4	MW-5 DEEP_20130207	PS	2/7/2013 12:15	60138490004	Water	1	X	004
5	GW-1_20130206	PS	2/6/2013 15:30	60138490005	Water	1	X	005
6	MW-101_20130206	PS	2/6/2013 15:45	60138490006	Water	1	X	006
7	MW-102_20130207	PS	2/7/2013 16:15	60138490007	Water	1	X	007
8	GW-3_201 30208	PS	2/8/2013 09:30	60138490008	Water	1	X	008
9	DR-3_201 30208	PS	2/8/2013 08:00	60138490009	Water	1	X	009
10	DR-8_20130208	PS	2/8/2013 08:05	60138490010	Water	1	X	010
11	EB-1_20130208	PS	2/8/2013 09:45	60138490011	Water	1	X	011
12	AT-2_20130208	PS	2/8/2013 09:00	60138490012	Water	1	X	012

Transfers	Released By	Date/Time	Received By	Date/Time
1	[signature]	2/11/13 1700		
2	[signature]		[signature] - Pace	2/12/13 1025
3				

Comments

Cooler Temperature on Receipt °C **Custody Seal** Y or N **Received on Ice** Y or N **Samples Intact** Y or N

Pace Analytical	Document Name: **Sample Condition Upon Receipt Form**	Document Revised: 14Nov2012 Page 1 of 1
	Document No.: **F-MT-C-184-rev.02**	Issuing Authority: Pace Montana Quality Office

Sample Condition Upon Receipt

Client Name: PACE-KS

Project #: WO#: 10219846

Courier: ☒ Fed Ex ☐ UPS ☐ USPS ☐ Client ☐ Commercial ☐ Pace ☐ Other:

Tracking Number: 5552 4795 9559

Custody Seal on Cooler/Box Present? ☒ Yes ☐ No **Seals Intact?** ☒ Yes ☐ No

Optional: Proj. Due Date: Proj. Name:

Packing Material: ☒ Bubble Wrap ☐ Bubble Bags ☐ None ☐ Other: **Temp Blank?** ☒ Yes ☐ No

Thermometer Used: ☒ 1383045 ☐ 135 ☐ NA **Type of Ice:** ☒ Wet ☐ Blue ☐ None ☒ Samples on ice, cooling process has begun

Cooler Temp Read: 2.8 **Date and Initials of Person Examining Contents:** DLW 2/12/13

Cooler Temp Corrected: 2.6 **Biological Tissue Frozen?** ☐ Yes ☒ No

Temp should be above freezing to 6°C

				Comments:
Chain of Custody Present?	☒ Yes	☐ No	☐ N/A	1.
Chain of Custody Filled Out?	☒ Yes	☐ No	☐ N/A	2.
Chain of Custody Relinquished?	☒ Yes	☐ No	☐ N/A	3.
Sampler Name and Signature on COC?	☐ Yes	☒ No	☐ N/A	4.
Samples Arrived within Hold Time?	☒ Yes	☐ No	☐ N/A	5.
Short Hold Time Analysis (<72 hr)?	☐ Yes	☒ No	☐ N/A	6.
Rush Turn Around Time Requested?	☐ Yes	☒ No	☐ N/A	7.
Sufficient Volume?	☒ Yes	☐ No	☐ N/A	8.
Correct Containers Used?	☒ Yes	☐ No	☐ N/A	9.
-Pace Containers Used?	☒ Yes	☐ No	☐ N/A	
Containers Intact?	☒ Yes	☐ No	☐ N/A	10.
Filtered Volume Received for Dissolved Tests?	☐ Yes	☐ No	☒ N/A	11.
Sample Labels Match COC? -Includes Date/Time/ID/Analysis Matrix: H_2O	☒ Yes	☐ No	☐ N/A	12.
All containers needing acid/base preservation have been checked? Noncompliances are noted in 13.	☐ Yes	☐ No	☒ N/A	13. ☐ HNO_3 ☐ H_2SO_4 ☐ NaOH ☐ HCl
All containers needing preservation are found to be in compliance with EPA recommendation? (HNO_3, H_2SO_4, HCl<2; NaOH>12)	☐ Yes	☐ No	☒ N/A	Sample #
Exceptions: VOA, Coliform, TOC, Oil and Grease, WI-DRO (water)	☐ Yes	☒ No		Initial when completed: Lot # of added preservative:
Samples checked for dechlorination?	☐ Yes	☐ No	☒ N/A	14.
Headspace in VOA Vials (>6mm)?	☐ Yes	☐ No	☒ N/A	15.
Trip Blank Present?	☐ Yes	☐ No	☒ N/A	16.
Trip Blank Custody Seals Present?	☐ Yes	☐ No	☒ N/A	
Pace Trip Blank Lot # (if purchased):				

CLIENT NOTIFICATION/RESOLUTION **Field Data Required?** ☐ Yes ☐ No

Person Contacted: Date/Time:

Comments/Resolution:

Project Manager Review: **Date:** 2-12-13

Note: Whenever there is a discrepancy affecting North Carolina compliance samples, a copy of this form will be sent to the North Carolina DEHNR Certification Office (i.e out of hold, incorrect preservative, out of temp, incorrect containers)

Chain of Custody

1125

10219844

Pace Analytical®
www.pacelabs.com

Workorder: 60138490 **Workorder Name:** FEBRUARY 2013 RICO WATER SAMPL **Owner Received Date:** 2/9/2013 **Results Requested By:** 2/25/2013

Report To	Subcontract To
Heather Wilson Pace Analytical Services, Inc. 9608 Loiret Blvd. Lenexa, KS 66219 Phone (913)599-5665 Fax (913)599-1759	Pace Analytical Minnesota 1700 Elm Street Suite 200 Minneapolis, MN 55414 Phone (612)607-1700

Item	Sample ID	Sample Type	Collect Date/Time	Lab ID	Matrix	Preserved Containers: HNO3						Requested Analysis: 200.8 Total Metal + Hardness + Silica	245.1 Total Mercury	200.8 Dissolved Metals	245.1 Dissolved Mercury									LAB USE ONLY
1	GW-5_20130207	PS	2/7/2013 11:00	60138490001	Water	2						X	X	X	X									
2	MW-204_20130207	PS	2/7/2013 13:30	60138490002	Water	2						X	X	X	X									
3	MW-5 SHALLOW_201 30207	PS	2/7/2013 12:30	60138490003	Water	2						X	X	X	X									
4	MW-5 DEEP_20130207	PS	2/7/2013 12:15	60138490004	Water	2						X	X	X	X									
5	GW-1_20130206	PS	2/6/2013 15:30	60138490005	Water	2						X	X	X	X									
6	MW-101_20130206	PS	2/6/2013 15:45	60138490006	Water	2						X	X	X	X									
7	MW-102_20130207	PS	2/7/2013 16:15	60138490007	Water	2						X	X	X	X									
8	GW-3_201 30208	PS	2/8/2013 09:30	60138490008	Water	2						X	X	X	X									
9	DR-3_201 30208	PS	2/8/2013 08:00	60138490009	Water	2						X	X	X	X									
10	DR-8_20130208	PS	2/8/2013 08:05	60138490010	Water	2						X	X	X	X									
11	EB-1_20130208	PS	2/8/2013 09:45	60138490011	Water	2						X	X	X	X									
12	AT-2_20130208	PS	2/8/2013 09:00	60138490012	Water	2						X	X	X	X									

Transfers	Released By	Date/Time	Received By	Date/Time
1	[signature]	2/10/13 1700	[illegible] pace	2/12/13 9:18
2				
3				

Comments: Use Profile 26985

Cooler Temperature on Receipt 8.9 °C **Custody Seal** Y or N **Received on Ice** Y or N **Samples Intact** Y or N

Pace Analytical®	Document Name: **Sample Condition Upon Receipt Form**	Document Revised: 28Jan2013 Page 1 of 1
	Document No.: **F-MN-L-213-rev.06**	Issuing Authority: Pace Minnesota Quality Office

Sample Condition Upon Receipt

Client Name: Pace ks

Project #: WO#: 10219844

10219844

Courier: ☒ Fed Ex ☐ UPS ☐ USPS ☐ Client ☐ Commercial ☐ Pace ☐ Other:

Tracking Number: 5552 9795 9607

Custody Seal on Cooler/Box Present? ☒ Yes ☐ No **Seals Intact?** ☒ Yes ☐ No

Optional: Proj. Due Date: Proj. Name:

Packing Material: ☒ Bubble Wrap ☐ Bubble Bags ☐ None ☐ Other: **Temp Blank?** ☐ Yes ☒ No

Thermom. Used: ☐ B88A912167504 ☐ 80512447 ☒ 72337080 **Type of Ice:** ☐ Wet ☐ Blue ☒ None ☐ Samples on ice, cooling process has begun

Cooler Temp Read (°C): 8.9 **Cooler Temp Corrected (°C):** 8.9 **Biological Tissue Frozen?** ☐ Yes ☐ No

Temp should be above freezing to 6°C **Correction Factor:** true **Date and Initials of Person Examining Contents:** CJ 2-12-13

				Comments:
Chain of Custody Present?	☒ Yes	☐ No	☐ N/A	1.
Chain of Custody Filled Out?	☒ Yes	☐ No	☐ N/A	2.
Chain of Custody Relinquished?	☒ Yes	☐ No	☐ N/A	3.
Sampler Name and/or Signature on COC?	☐ Yes	☒ No	☐ N/A	4.
Samples Arrived within Hold Time?	☒ Yes	☐ No	☐ N/A	5.
Short Hold Time Analysis (<72 hr)?	☐ Yes	☒ No	☐ N/A	6.
Rush Turn Around Time Requested?	☐ Yes	☐ No	☐ N/A	7.
Sufficient Volume?	☒ Yes	☐ No	☐ N/A	8.
Correct Containers Used?	☒ Yes	☐ No	☐ N/A	9.
-Pace Containers Used?	☒ Yes	☐ No	☐ N/A	
Containers Intact?	☒ Yes	☐ No	☐ N/A	10.
Filtered Volume Received for Dissolved Tests?	☐ Yes	☐ No	☒ N/A	11.
Sample Labels Match COC? -Includes Date/Time/ID/Analysis Matrix: WT	☒ Yes	☐ No	☐ N/A	12.
All containers needing acid/base preservation have been checked? Noncompliances are noted in 13.	☒ Yes	☐ No	☐ N/A	13. ☒ HNO_3 ☐ H_2SO_4 ☐ NaOH ☐ HCl
All containers needing preservation are found to be in compliance with EPA recommendation? (HNO_3, H_2SO_4, HCl<2; NaOH>12)	☒ Yes	☐ No	☐ N/A	Sample # ALL
Exceptions: VOA, Coliform, TOC, Oil and Grease, WI-DRO (water)	☐ Yes	☒ No		Initial when completed: CJ Lot # of added preservative:
Headspace in VOA Vials (>6mm)?	☐ Yes	☐ No	☒ N/A	14.
Trip Blank Present?	☐ Yes	☐ No	☒ N/A	15.
Trip Blank Custody Seals Present?	☐ Yes	☐ No	☒ N/A	
Pace Trip Blank Lot # (if purchased):				

CLIENT NOTIFICATION/RESOLUTION **Field Data Required?** ☐ Yes ☐ No

Person Contacted: Date/Time:

Comments/Resolution: Temp ok metals only.

Project Manager Review: **Date:** 2/12/13

Note: Whenever there is a discrepancy affecting North Carolina compliance samples, a copy of this form will be sent to the North Carolina DEHNR Certification Office (i.e out of hold, incorrect preservative, out of temp, incorrect containers)

Pace Analytical®	Document Name: Sample Container Count	Document Revised: 22Sept2011 Page 1 of 1
	Document No.: F-MN-C-090-Rev.00	Issuing Authority: Pace Minnesota Quality Office

Client: _____ **Project #:** _____

COC ID: _____ **COC Page** _____ of _____

Sample Line Item	DG9H	AG1U	WGFU	JGFU	BP2N	BP2U	BP2S	BP3N	BP3U	BP3S	AG3S	AG1H	VG9M	VG9H	VG9U	Comments
1								2								
2																
3																
4																
5																
6																
7																
8																
9																
10																
11																
12																

Container Codes:

DG9H	40mL HCL amber VOA vial	AF	Air Filter	BP1N	1 liter HNO3 plastic	DG9P	40mL TSP amber vial
AG1U	1liter unpreserved amber glass	AG1H	1 liter HCL amber glass	BP1S	1 liter H2SO4 plastic	DG9S	40mL H2SO4 amber vial
WGFU	4oz clear soil jar	AG1S	1 liter H2SO4 amber glass	BP1U	1 liter unpreserved plastic	DG9T	40mL Na Thio amber vial
R	terra core kit	AG1T	1 liter Na Thiosulfate amber glass	BP1Z	1 liter NaOH, Zn, Ac	DG9U	40mL unpreserved **amber** vial
BP2N	500mL HNO3 plastic	AG2N	500mL HNO3 amber glass	BP2A	500mL NaOH, Asc Acid plastic	I	Wipe/Swab
BP2U	500mL unpreserved plastic	AG2S	500mL H2SO4 amber glass	BP2O	500mL NaOH plastic	JGFU	4oz unpreserved amber wide
BP2S	500mL H2SO4 plastic	AG2U	500mL unpreserved amber glass	BP2Z	500mL NaOH, Zn Ac	U	Summa Can
BP3N	250mL HNO3 plastic	AG3U	250mL unpreserved amber glass	BP3A	250mL NaOh, Asc Acid plastic	VG9H	40mL HCL clear vial
BP3U	250mL unpreserved plastic	BG1H	1 liter HCL clear glass	BP3C	250mL NaOH plastic	VG9T	40mL Na Thio. clear vial
BP3S	250mL H2SO4 plastic	BG1S	1 liter H2SO4 clear glass	BP3Z	250mL NaOH, Zn Ac plastic	VG9U	40mL unpreserved **clear** vial
AG3S	250mL H2SO4 glass amber	BG1T	1 liter Na Thiosulfate clear glass	C	Air Cassettes	VSG	Headspace septa vial & HCL
AG1S	1 liter H2SO4 amber glass	BG1U	1 liter unpreserved glass	DG9B	40mL Na Bisulfate amber vial	WGFX	4oz wide jar w/hexane wipe
BP1U	1 liter unpreserved plastic	BP1A	1 liter NaOH, Asc Acid plastic	DG9M	40mL MeOH clear vial	ZPLC	Ziploc Bag

Pace Analytical
www.pacelabs.com

Sample Condition Upon Receipt
ESI Tech Spec Client

WO#: 60138913
60138913

Client Name: BP Anderson

Optional
Proj Due Date:
Proj Name:

Courier: Fed Ex ☐ UPS ☑ USPS ☐ Client ☐ Commercial ☐ Pace ☐ Other ☐

Tracking #: 1Z733W8722005 7457 7448 Pace Shipping Label Used? Yes ☑ No ☐

Custody Seal on Cooler/Box Present: Yes ☑ No ☐ Seals intact: Yes ☑ No ☐

Packing Material: Bubble Wrap ☐ Bubble Bags ☑ Foam ☐ None ☐ Other ☑ Zplc

Thermometer Used: T-112 / T-194 **Type of Ice:** Wet Blue None (circle one) ☐ Samples received on ice, cooling process has begun.

Cooler Temperature: 3.4, 2.6

Temperature should be above freezing to 6°C

Date and initials of person examining contents: 2/16/13

Chain of Custody present:	☑Yes ☐No ☐N/A	1.	
Chain of Custody filled out:	☑Yes ☐No ☐N/A	2.	
Chain of Custody relinquished:	☑Yes ☐No ☐N/A	3.	
Sampler name & signature on COC:	☑Yes ☐No ☐N/A	4.	
Samples arrived within holding time:	☑Yes ☐No ☐N/A	5.	
Short Hold Time analyses (<72hr):	☐Yes ☑No ☐N/A	6.	
Rush Turn Around Time requested:	☐Yes ☑No ☐N/A	7.	
Sufficient volume:	☑Yes ☐No ☐N/A	8.	
Correct containers used:	☑Yes ☐No ☐N/A		
Pace containers used:	☑Yes ☐No ☐N/A	9.	
Containers intact:	☑Yes ☐No ☐N/A	10.	
Unpreserved 5035A soils frozen w/in 48hrs?	☐Yes ☐No ☑N/A	11.	
Filtered volume received for dissolved tests?	☐Yes ☐No ☑N/A	12.	
Sample labels match COC: Includes date/time/ID/analyses Matrix: WT	☑Yes ☐No ☐N/A	13.	
All containers needing preservation have been checked.	☑Yes ☐No ☐N/A		
All containers needing preservation are found to be in compliance with EPA recommendation.	☑Yes ☐No ☐N/A	14.	
Exceptions: VOA, coliform, TOC, O&G, WI-DRO (water), Phenolics	☐Yes ☑No	Initial when completed	Lot # of added preservative
Trip Blank present:	☐Yes ☐No ☑N/A		
Pace Trip Blank lot # (if purchased):		15.	
Headspace in VOA vials (>6mm):	☐Yes ☐No ☑N/A	16.	
Project sampled in USDA Regulated Area:	☐Yes ☐No ☑N/A	17. List State:	

Client Notification/ Resolution: Copy COC to Client? Y / (N) Field Data Required? Y / N

Person Contacted: _____ Date/Time: _____

Comments/ Resolution: Split AG35 container for TOC + Nitrate in order to sub to another Pace lab. AMW 2/18/13

Project Manager Review: AMW Date: 2/18/13

Temp Log: Record start and finish times when unpacking cooler, if >20 min, recheck sample temps.	
Start: 1015	Start:
End: 1035	End:
Temp:	Temp:

Pace Analytical®
www.pacelabs.com

Sample Condition Upon Receipt
ESI Tech Spec Client

Optional
Proj Due Date:
Proj Name:

Client Name: BP Anderson

Courier: Fed Ex ☐ UPS ☑ USPS ☐ Client ☐ Commercial ☐ Pace ☐ Other ☐

Tracking #: 1Z733W872210057411 Pace Shipping Label Used? Yes ☑ No ☐

Custody Seal on Cooler/Box Present: Yes ☑ No ☐ Seals intact: Yes ☑ No ☐

Packing Material: Bubble Wrap ☐ Bubble Bags ☑ Foam ☐ None ☐ Other ☐

Thermometer Used: T-112 / T-194 **Type of Ice:** Wet Blue None ☐ Samples received on ice, cooling process has begun.
(circle one)

Cooler Temperature: 2.4

Temperature should be above freezing to 6°C

Date and initials of person examining contents: 2/16/13 (AB)

Chain of Custody present:	☑Yes	☐No	☐N/A	1.
Chain of Custody filled out:	☑Yes	☐No	☐N/A	2.
Chain of Custody relinquished:	☑Yes	☐No	☐N/A	3.
Sampler name & signature on COC:	☑Yes	☐No	☐N/A	4.
Samples arrived within holding time:	☑Yes	☐No	☐N/A	5.
Short Hold Time analyses (<72hr):	☐Yes	☑No	☐N/A	6.
Rush Turn Around Time requested:	☐Yes	☑No	☐N/A	7.
Sufficient volume:	☑Yes	☐No	☐N/A	8.
Correct containers used:	☑Yes	☐No	☐N/A	
Pace containers used:	☑Yes	☐No	☐N/A	9.
Containers intact:	☑Yes	☐No	☐N/A	10.
Unpreserved 5035A soils frozen w/in 48hrs?	☐Yes	☐No	☑N/A	11.
Filtered volume received for dissolved tests?	☐Yes	☐No	☑N/A	12.
Sample labels match COC:	☑Yes	☐No	☐N/A	
Includes date/time/ID/analyses Matrix: WT				13.
All containers needing preservation have been checked.	☑Yes	☐No	☐N/A	
All containers needing preservation are found to be in compliance with EPA recommendation.	☑Yes	☐No	☐N/A	14.
Exceptions: VOA, coliform, TOC, O&G, WI-DRO (water), Phenolics	☐Yes	☑No		Initial when completed / Lot # of added preservative
Trip Blank present:	☐Yes	☐No	☑N/A	
Pace Trip Blank lot # (if purchased): _____				15.
Headspace in VOA vials (>6mm):	☐Yes	☐No	☑N/A	16.
Project sampled in USDA Regulated Area:	☐Yes	☐No	☑N/A	17. List State:

Client Notification/ Resolution: Copy COC to Client? Y / N Field Data Required? Y / N

Person Contacted: _____ Date/Time: _____

Comments/ Resolution: _____

Project Manager Review: _____ Date: _____

Temp Log: Record start and finish times when unpacking cooler, if >20 min, recheck sample temps.	
Start: 1048	Start:
End: 1105	End:
Temp:	Temp:

6013891 3

ANDERSON
ENGINEERING COMPANY INC.

977 West 2100 South
Salt Lake City, UT
84119
(801) 972-6222
FAX (801) 972-6235

CHAIN OF CUSTODY RECORD

COC# ____
Page 1 of 1

Client: BP
Project: February 2013 Rico Water Sampling
AECI Contact Mark DeFriez (801) 234-9583

Lab Name: Pace Analytical Services
Lab Contact: Heather Wilson, (913) 563-1407
Lab Address: 9608 Loiret Blvd.
Lenexa, KS 66219

Matrix Codes
(W) Water
(S) Soil
(L) Liquid

QC: (circle one)
I II III IV

Field Location	Field Sample ID Number	Date	Time	Matrix	No. of Containers	Total Metals / Hardness / Silica	Potentially Dissolved Metals	Dissolved Metals	Alkalinity / TDS / TSS / Sulfate / Chloride	Cyanide	Salinity	Total Organic Carbon / Nitrate	Sulfide			COMMENTS	
MW-3 DEEP	MW-3 DEEP_20130213	2/13/2013	15:00	W	8	X	X	X	X	X	X	X	X	1BP2U, 2BP3N[15], 1BP3F[15], 1BP3C[120], 1BP3Z[120], 1BP3U, 1AG3S			001
MW-2 DEEP	MW-2 DEEP_20130213	2/13/2013	15:46	W	8	X	X	X	X	X	X	X	X				002
GW-4	GW-4_20130214	2/14/2013	12:47	W	8	X	X	X	X	X	X	X	X				003
MW-4 DEEP	MW-4 DEEP_20130214	2/14/2013	11:48	W	8	X	X	X	X	X	X	X	X				004
MW-6 SHALLOW	MW-6 SHALLOW_20130214	2/14/2013	15:20	W	8	X	X	X	X	X	X	X	X				005
MW-6 DEEP	MW-6 DEEP_20130214	2/14/2013	15:25	W	8	X	X	X	X	X	X	X	X				006
DR-9	DR-9_20130214	2/14/2013	15:35	W	8	X	X	X	X	X	X	X	X				007
MW-1 DEEP	MW-1 DEEP_20130214	2/14/2013	16:20	W	8	X	X	X	X	X	X	X	X				008
MW-1 SHALLOW	MW-1 SHALLOW_20130214	2/14/2013	16:22	W	8	X	X	X	X	X	X	X	X				009
MW-104	MW-104_20130214	2/14/2013	15:54	W	8	X	X	X	X	X	X	X	X				010
MW-103	MW-103_20130214	2/14/2013	16:23	W	8	X	X	X	X	X	X	X	X				011

Relinquished By: *signature*	Date	Time	Received By: *signature*	Date	Time	Special Instructions
Joanne E Gessman	2-15-13	10:00	UPS	2-15-13	13:00	
Relinquished By: *signature*	Date	Time	Received By: *signature*		Time	
			E Brockett	2/16/13	900	3.4°, 2.6°
Relinquished By: *signature*	Date	Time	Received By: *signature*		Time	
Relinquished By: *signature*	Date	Time	Received By: *signature*		Time	

FLD-002

60136913

ANDERSON
ENGINEERING COMPANY INC.

977 West 2100 South
Salt Lake City, UT
84119
(801) 972-6222
FAX (801) 972-6235

CHAIN OF CUSTODY RECORD

COC# _____
Page 1 of 1

Client: BP
Project: February 2013 Rico Water Sampling
AECI Contact Mark DeFriez (801) 234-9583

Lab Name: Pace Analytical Services
Lab Contact: Heather Wilson, (913) 563-1407
Lab Address: 9608 Loiret Blvd.
Lenexa, KS 66219

Matrix Codes
(W) Water
(S) Soil
(L) Liquid

QC: (circle one)
I II III IV

Field Location	Field Sample ID Number	Date	Time	Matrix	No. of Containers	Total Metals / Hardness / Silica	Potentially Dissolved Metals	Dissolved Metals	Alkalinity / TDS / TSS / Sulfate / Chloride	Cyanide	Salinity	Total Organic Carbon / Nitrate	Sulfide			COMMENTS
DR-10	DR-10_20130215	2/15/2013	12:10	W	8	X	X	X	X	X	X	X	X	1BP3U	2BP3N[15]	012
GW-7	GW-7_20130215	2/15/2013	10:04	W	8	X	X	X	X	X	X	X	X	1BP3F[15]	1BP3C[120]	013
P13-102	P13-102_20130215	2/15/2013	12:28	W	8	X	X	X	X	X	X	X	X	1BP3E[120]	1BP3U	014
P13-103	P13-103_20130215	2/15/2013	12:08	W	8	X	X	X	X	X	X	X	X	1A035		015
MW-4 SHALLOW	MW-4 SHALLOW_20130215	2/15/2013	10:54	W	8	X	X	X	X	X	X	X	X			016
EB-2	EB-2_20130215	2/15/2013	10:22	W	8	X	X	X	X	X	X	X	X			017

Relinquished By: *signature*	Date	Time	Received By: *signature*	Date	Time	Special Instructions
Joanne E Gussemann	2-15-13	13:45	UPS	2-15-13	15:00	
						2-4°
Relinquished By: *signature*	Date	Time	Received By: *signature*	Date	Time	
			E Brockuff	2/16/13	0900	
Relinquished By: *signature*	Date	Time	Received By: *signature*		Time	
Relinquished By: *signature*	Date	Time	Received By: *signature*		Time	

FLD-002

Chain of Custody

Pace Analytical®
www.pacelabs.com

Workorder: 60138913 **Workorder Name:** February 2013 Rico Water Sampl **Owner Received Date:** 2/16/2013 **Results Requested By:** 3/1/2013

Report To	Subcontract To
Heather Wilson Pace Analytical Services, Inc. 9608 Loiret Blvd. Lenexa, KS 66219 Phone (913)599-5665 Fax (913)599-1759	Pace Analytical Billings MT 602 S 25th Street Billings, MT, MT 591014549 Phone (406) 254-7226

Item	Sample ID	Sample Type	Collect Date/Time	Lab ID	Matrix	Preserved Containers: none						Requested Analysis: Salinity												10220452 LAB USE ONLY
1	MW-3 DEEP_20130213	PS	2/13/2013 15:00	60138913001	Water	1						X												001
2	MW-2 DEEP_20130213	PS	2/13/2013 15:46	60138913002	Water	1						X												002
3	GW-4_201 30214	PS	2/14/2013 12:47	60138913003	Water	1						X												003
4	MW-4 DEEP_02130214	PS	2/14/2013 11:48	60138913004	Water	1						X												004
5	MW-6 SHALLOW_201 30214	PS	2/14/2013 15:20	60138913005	Water	1						X												005
6	MW-6 DEEP_20130214	PS	2/14/2013 15:25	60138913006	Water	1						X												006
7	DR-9_201 30214	PS	2/14/2013 15:35	60138913007	Water	1						X												007
8	MW-1 DEEP_20130214	PS	2/14/2013 16:20	60138913008	Water	1						X												008
9	MW-1 SHALLOW_20130214	PS	2/14/2013 16:22	60138913009	Water	1						X												009
10	MW-104_20130214	PS	2/14/2013 15:54	60138913010	Water	1						X												010
11	MW-103_20130214	PS	2/14/2013 16:23	60138913011	Water	1						X												011
12	DR-10_20130215	PS	2/15/2013 12:10	60138913012	Water	1						X												012
13	GW-7_20130215	PS	2/15/2013 10:04	60138913013	Water	1						X												013
14	P13-102_20130215	PS	2/15/2013 12:28	60138913014	Water	1						X												014
15	P13-103_20130215	PS	2/15/2013 12:08	60138913015	Water	1						X												015
16	MW-4 SHALLOW_20130215	PS	2/15/2013 10:54	60138913016	Water	1						X												016
17	EB-2_20130215	PS	2/15/2013 10:22	60138913017	Water	1						X												017

Transfers	Released By	Date/Time	Received By	Date/Time	Comments
1	[illegible]	2/18/13 1700			No J flags
2					
3					

Cooler Temperature on Receipt °C Custody Seal Y or N Received on Ice Y or N Samples Intact Y or N

Pace Analytical	Document Name: **Sample Condition Upon Receipt Form**	Document Revised: 14Nov2012 Page 1 of 1
	Document No.: **F-MT-C-184-rev.02**	Issuing Authority: Pace Montana Quality Office

Sample Condition Upon Receipt

Client Name: Pace-KS

Project #: WO#: 10220452

10220452

Courier: ☒ Fed Ex ☐ UPS ☐ USPS ☐ Client ☐ Commercial ☐ Pace ☐ Other:

Tracking Number: 5558 4796 0162

Custody Seal on Cooler/Box Present? ☒ Yes ☐ No **Seals Intact?** ☒ Yes ☐ No **Optional:** Proj. Due Date: Proj. Name:

Packing Material: ☒ Bubble Wrap ☐ Bubble Bags ☐ None ☐ Other: **Temp Blank?** ☒ Yes ☐ No

Thermometer Used: ☒ 1383045 ☐ 135 ☐ NA **Type of Ice:** ☒ Wet ☐ Blue ☐ None ☒ Samples on ice, cooling process has begun

Cooler Temp Read: 1.2 **Date and Initials of Person Examining Contents:** MLW 2/19/13

Cooler Temp Corrected: 1.0 **Biological Tissue Frozen?** ☐ Yes ☒ No

Temp should be above freezing to 6°C

				Comments:
Chain of Custody Present?	☒ Yes	☐ No	☐ N/A	1.
Chain of Custody Filled Out?	☒ Yes	☐ No	☐ N/A	2.
Chain of Custody Relinquished?	☒ Yes	☐ No	☐ N/A	3.
Sampler Name and Signature on COC?	☐ Yes	☒ No	☐ N/A	4.
Samples Arrived within Hold Time?	☒ Yes	☐ No	☐ N/A	5.
Short Hold Time Analysis (<72 hr)?	☐ Yes	☒ No	☐ N/A	6.
Rush Turn Around Time Requested?	☐ Yes	☒ No	☐ N/A	7.
Sufficient Volume?	☒ Yes	☐ No	☐ N/A	8.
Correct Containers Used?	☒ Yes	☐ No	☐ N/A	9.
-Pace Containers Used?	☐ Yes	☒ No	☐ N/A	
Containers Intact?	☒ Yes	☐ No	☐ N/A	10.
Filtered Volume Received for Dissolved Tests?	☐ Yes	☐ No	☒ N/A	11.
Sample Labels Match COC? -Includes Date/Time/ID/Analysis Matrix: H_2O	☒ Yes	☐ No	☐ N/A	12.
All containers needing acid/base preservation have been checked? Noncompliances are noted in 13.	☐ Yes	☐ No	☒ N/A	13. ☐ HNO_3 ☐ H_2SO_4 ☐ NaOH ☐ HCl Sample #
All containers needing preservation are found to be in compliance with EPA recommendation? (HNO_3, H_2SO_4, HCl<2; NaOH>12)	☐ Yes	☐ No	☒ N/A	
Exceptions: VOA, Coliform, TOC, Oil and Grease, WI-DRO (water)	☐ Yes	☒ No		Initial when completed: Lot # of added preservative:
Samples checked for dechlorination?	☐ Yes	☐ No	☒ N/A	14.
Headspace in VOA Vials (>6mm)?	☐ Yes	☐ No	☒ N/A	15.
Trip Blank Present?	☐ Yes	☐ No	☒ N/A	16.
Trip Blank Custody Seals Present?	☐ Yes	☐ No	☒ N/A	
Pace Trip Blank Lot # (if purchased):				

CLIENT NOTIFICATION/RESOLUTION **Field Data Required?** ☐ Yes ☐ No

Person Contacted: Date/Time:

Comments/Resolution:

Project Manager Review: **Date:** 2-19-13

Note: Whenever there is a discrepancy affecting North Carolina compliance samples, a copy of this form will be sent to the North Carolina DEHNR Certification Office (i.e out of hold, incorrect preservative, out of temp, incorrect containers)

Chain of Custody

4074119

Pace Analytical
www.pacelabs.com

Workorder: 60138913 **Workorder Name:** February 2013 Rico Water Sampl **Owner Received Date:** 2/16/2013 **Results Requested By:** 3/1/2013

Report To	Subcontract To
Heather Wilson Pace Analytical Services, Inc. 9608 Loiret Blvd. Lenexa, KS 66219 Phone (913)599-5665 Fax (913)599-1759	Pace Analytical Green Bay 1241 Bellevue Street Suite 9 Green Bay, WI 54302 Phone (920)469-2436

	Item	Sample ID	Sample Type	Collect Date/Time	Lab ID	Matrix	Preserved Containers: H2SO4						Requested Analysis: 5310C TOC												LAB USE ONLY
01	1	MW-3 DEEP_20130213	PS	2/13/2013 15:00	60138913001	Water	1						X												1-250 ml bag C
02	2	MW-2 DEEP_20130213	PS	2/13/2013 15:46	60138913002	Water	1						X												
03	3	GW-4_201 30214	PS	2/14/2013 12:47	60138913003	Water	1						X												
04	4	MW-4 DEEP_02130214	PS	2/14/2013 11:48	60138913004	Water	1						X												
05	5	MW-6 SHALLOW_201 30214	PS	2/14/2013 15:20	60138913005	Water	1						X												
06	6	MW-6 DEEP_20130214	PS	2/14/2013 15:25	60138913006	Water	1						X												
07	7	DR-9_201 30214	PS	2/14/2013 15:35	60138913007	Water	1						X												
08	8	MW-1 DEEP_20130214	PS	2/14/2013 16:20	60138913008	Water	1						X												
09	9	MW-1 SHALLOW_20130214	PS	2/14/2013 16:22	60138913009	Water	1						X												
10	10	MW-104_20130214	PS	2/14/2013 15:54	60138913010	Water	1						X												
11	11	MW-103_20130214	PS	2/14/2013 16:23	60138913011	Water	1						X												
12	12	DR-10_20130215	PS	2/15/2013 12:10	60138913012	Water	1						X												
13	13	GW-7_20130215	PS	2/15/2013 10:04	60138913013	Water	1						X												
14	14	P13-102_20130215	PS	2/15/2013 12:28	60138913014	Water	1						X												
15	15	P13-103_20130215	PS	2/15/2013 12:08	60138913015	Water	1						X												
16	16	MW-4 SHALLOW_20130215	PS	2/15/2013 10:54	60138913016	Water	1						X												
17	17	EB-2_20130215	PS	2/15/2013 10:22	60138913017	Water	1						X												

4074119

Transfers	Released By	Date/Time	Received By	Date/Time	Comments
1	[illegible]	2/18/13 1700			No J flags
2	Fed Ex	2/19/13 1355	[illegible] Pace	2/19/13 1355	
3					

Cooler Temperature on Receipt 3 °C Custody Seal Y or N Received on Ice Y or N Samples Intact Y or N

Pace Analytical Services, Inc.
1241 Bellevue Street, Suite 9
Green Bay, WI 54302

Pace Analytical

Sample Condition Upon Receipt

Client Name: Pace, KS Project # 4607411 9

Courier: [X] Fed Ex [ ] UPS [ ] USPS [ ] Client [ ] Commercial [ ] Pace Other _____

Tracking #: 0201555 247960107

Custody Seal on Cooler/Box Present: [X] yes [ ] no Seals intact: [X] yes [ ] no

Custody Seal on Samples Present: [ ] yes [X] no Seals intact: [ ] yes [ ] no

Packing Material: [ ] Bubble Wrap [X] Bubble Bags [ ] None Other

Thermometer Used SR46 Type of Ice: (Wet) Blue Dry None [X] Samples on ice, cooling process has begun.

Cooler Temperature 5°C Biological Tissue is Frozen: [ ] yes [ ] no

Temp Blank Present: [X] yes [ ] no

Optional
Proj. Due Date:
Proj. Name:

Person examining contents:
Date: 2-19-13
Initials: SEW

Temp should be above freezing to 6°C for all sample except Biota.
Biota Samples should be received ≤ 0°C.

		Comments:
Chain of Custody Present:	[X] Yes [ ] No [ ] N/A	1.
Chain of Custody Filled Out:	[X] Yes [ ] No [ ] N/A	2.
Chain of Custody Relinquished:	[X] Yes [ ] No [ ] N/A	3.
Sampler Name & Signature on COC:	[ ] Yes [X] No [ ] N/A	4. IRWO 2/19/13 SEW
Samples Arrived within Hold Time:	[X] Yes [ ] No [ ] N/A	5.
Short Hold Time Analysis (<72hr):	[ ] Yes [X] No [ ] N/A	6.
Rush Turn Around Time Requested:	[ ] Yes [X] No [ ] N/A	7.
Sufficient Volume:	[X] Yes [ ] No [ ] N/A	8.
Correct Containers Used:	[X] Yes [ ] No [ ] N/A	9.
-Pace Containers Used:	[X] Yes [ ] No [ ] N/A	
Containers Intact:	[X] Yes [ ] No [ ] N/A	10.
Filtered volume received for Dissolved tests	[ ] Yes [ ] No [X] N/A	11.
Sample Labels match COC: -Includes date/time/ID/Analysis Matrix: W	[X] Yes [ ] No [ ] N/A	12.
All containers needing preservation have been checked.	[ ] Yes [ ] No [X] N/A	13.
All containers needing preservation are found to be in compliance with EPA recommendation.	[ ] Yes [ ] No [X] N/A	Initial when completed / Lot # of added preservative
exceptions: VOA, coliform, TOC, O&G, WI-DRO (water)	[ ] Yes [X] No	
Samples checked for dechlorination:	[ ] Yes [ ] No [X] N/A	14.
Headspace in VOA Vials (>6mm):	[ ] Yes [ ] No [X] N/A	15.
Trip Blank Present:	[ ] Yes [ ] No [X] N/A	16.
Trip Blank Custody Seals Present	[ ] Yes [ ] No [X] N/A	
Pace Trip Blank Lot # (if purchased):		

Field Data Required? Y / N

Client Notification/ Resolution:
Person Contacted: _____ Date/Time: _____
Comments/ Resolution: Client comment "No J Flag" 2/19/13 SEW

Project Manager Review: CW **Date:** 2/19/13

Note: Whenever there is a discrepancy affecting North Carolina compliance samples, a copy of this form will be sent to the North Carolina DEHNR Certification Office (i.e out of hold, incorrect preservative, out of temp, incorrect containers)

F-GB-C-031-Rev.00 (29Sept2011) SCUR Form

1129-1130

10220449

Chain of Custody

Pace Analytical®
www.pacelabs.com

Workorder: 60138913 **Workorder Name:** February 2013 Rico Water Sampl **Owner Received Date:** 2/16/2013 **Results Requested By:** 3/1/2013

Report To	Subcontract To
Heather Wilson Pace Analytical Services, Inc. 9608 Loiret Blvd. Lenexa, KS 66219 Phone (913)599-5665 Fax (913)599-1759	Pace Analytical Minnesota 1700 Elm Street Suite 200 Minneapolis, MN 55414 Phone (612)607-1700

Item	Sample ID	Sample Type	Collect Date/Time	Lab ID	Matrix	Preserved Containers: HNO3						Requested Analysis: 200.8 Total metal + Hardness + Silica	245.1 Total Mercury	200.8 Dissolved metals	245.1 Dissolved Mercury									LAB USE ONLY
1	MW-3 DEEP_20130213	PS	2/13/2013 15:00	60138913001	Water	2						X	X	X	X									
2	MW-2 DEEP_20130213	PS	2/13/2013 15:46	60138913002	Water	2						X	X	X	X									
3	GW-4_201 30214	PS	2/14/2013 12:47	60138913003	Water	2						X	X	X	X									
4	MW-4 DEEP_02130214	PS	2/14/2013 11:48	60138913004	Water	2						X	X	X	X									
5	MW-6 SHALLOW_201 30214	PS	2/14/2013 15:20	60138913005	Water	2						X	X	X	X									
6	MW-6 DEEP_20130214	PS	2/14/2013 15:25	60138913006	Water	2						X	X	X	X									
7	DR-9_201 30214	PS	2/14/2013 15:35	60138913007	Water	2						X	X	X	X									
8	MW-1 DEEP_20130214	PS	2/14/2013 16:20	60138913008	Water	2						X	X	X	X									
9	MW-1 SHALLOW_20130214	PS	2/14/2013 16:22	60138913009	Water	2						X	X	X	X									
10	MW-104_20130214	PS	2/14/2013 15:54	60138913010	Water	2						X	X	X	X									
11	MW-103_20130214	PS	2/14/2013 16:23	60138913011	Water	2						X	X	X	X									
12	DR-10_20130215	PS	2/15/2013 12:10	60138913012	Water	2						X	X	X	X									
13	GW-7_20130215	PS	2/15/2013 10:04	60138913013	Water	2						X	X	X	X									
14	P13-102_20130215	PS	2/15/2013 12:28	60138913014	Water	2						X	X	X	X									
15	P13-103_20130215	PS	2/15/2013 12:08	60138913015	Water	2						X	X	X	X									
16	MW-4 SHALLOW_20130215	PS	2/15/2013 10:54	60138913016	Water	2						X	X	X	X									
17	EB-2_20130215	PS	2/15/2013 10:22	60138913017	Water	2						X	X	X	X									

Transfers	Released By	Date/Time	Received By	Date/Time	Comments
1	[illegible] / Pa	2/18/13 1700	TN / Pea	21913/930	Use Profile 26985 No J-flags
2					
3					

Cooler Temperature on Receipt 3.1 °C Custody Seal Y or N Received on Ice Y or N Samples Intact Y or N

Pace Analytical®	Document Name: **Sample Condition Upon Receipt Form**	Document Revised: 28Jan2013 Page 1 of 1
	Document No.: **F-MN-L-213-rev.06**	Issuing Authority: Pace Minnesota Quality Office

Sample Condition Upon Receipt

Client Name: Pace KS

Project #: WO#: 10220449

10220449

Courier: ☒ Fed Ex ☐ UPS ☐ USPS ☐ Client ☐ Commercial ☐ Pace ☐ Other:

Tracking Number: 5552 4796 0118

Custody Seal on Cooler/Box Present? ☒ Yes ☐ No **Seals Intact?** ☒ Yes ☐ No

Optional: Proj. Due Date: Proj. Name:

Packing Material: ☐ Bubble Wrap ☐ Bubble Bags ☒ None ☐ Other: **Temp Blank?** ☐ Yes ☒ No

Thermom. Used: ☒ B88A912167504 ☐ 80512447 ☐ 72337080 **Type of Ice:** ☐ Wet ☐ Blue ☒ None ☐ Samples on ice, cooling process has begun

Cooler Temp Read (°C): 2.6 **Cooler Temp Corrected (°C):** 3.1 **Biological Tissue Frozen?** ☐ Yes ☐ No

Temp should be above freezing to 6°C **Correction Factor:** +.5 **Date and Initials of Person Examining Contents:** 2/19/13 TN

				Comments:
Chain of Custody Present?	☒ Yes	☐ No	☐ N/A	1.
Chain of Custody Filled Out?	☒ Yes	☐ No	☐ N/A	2.
Chain of Custody Relinquished?	☒ Yes	☐ No	☐ N/A	3.
Sampler Name and/or Signature on COC?	☐ Yes	☒ No	☐ N/A	4.
Samples Arrived within Hold Time?	☒ Yes	☐ No	☐ N/A	5.
Short Hold Time Analysis (<72 hr)?	☐ Yes	☒ No	☐ N/A	6.
Rush Turn Around Time Requested?	☐ Yes	☒ No	☐ N/A	7.
Sufficient Volume?	☒ Yes	☐ No	☐ N/A	8.
Correct Containers Used?	☒ Yes	☐ No	☐ N/A	9.
-Pace Containers Used?	☒ Yes	☐ No	☐ N/A	
Containers Intact?	☒ Yes	☐ No	☐ N/A	10.
Filtered Volume Received for Dissolved Tests?	☐ Yes	☐ No	☒ N/A	11.
Sample Labels Match COC?	☒ Yes	☐ No	☐ N/A	12.
-Includes Date/Time/ID/Analysis Matrix: WT				
All containers needing acid/base preservation have been checked? Noncompliances are noted in 13.	☒ Yes	☐ No	☐ N/A	13. ☒ HNO_3 ☐ H_2SO_4 ☐ NaOH ☐ HCl
All containers needing preservation are found to be in compliance with EPA recommendation? (HNO_3, H_2SO_4, HCl<2; NaOH>12)	☒ Yes	☐ No	☐ N/A	Sample # All 2/2
Exceptions: VOA, Coliform, TOC, Oil and Grease, WI-DRO (water)	☐ Yes	☒ No		Initial when completed: TN Lot # of added preservative:
Headspace in VOA Vials (>6mm)?	☐ Yes	☐ No	☒ N/A	14.
Trip Blank Present?	☐ Yes	☐ No	☒ N/A	15.
Trip Blank Custody Seals Present?	☐ Yes	☐ No	☒ N/A	
Pace Trip Blank Lot # (if purchased):				

CLIENT NOTIFICATION/RESOLUTION **Field Data Required?** ☐ Yes ☐ No

Person Contacted: Date/Time:

Comments/Resolution:

Project Manager Review: **Date:** 2/19/13

Note: Whenever there is a discrepancy affecting North Carolina compliance samples, a copy of this form will be sent to the North Carolina DEHNR Certification Office (i.e out of hold, incorrect preservative, out of temp, incorrect containers)

Pace Analytical
www.pacelabs.com

Sample Condition Upon Receipt
ESI Tech Spec Client

WO#: 60139049

60139049

Client Name: BP Anderson

Optional
Proj Due Date:
Proj Name:

Courier: Fed Ex ☐ UPS ☑ USPS ☐ Client ☐ Commercial ☐ Pace ☐ Other ☐

Tracking #: 12 733 W87 Y0 4779 6769 Pace Shipping Label Used? Yes ☑ No ☐
4943 5976

Custody Seal on Cooler/Box Present: Yes ☑ No ☐ Seals intact: Yes ☑ No ☐

Packing Material: Bubble Wrap ☐ Bubble Bags ☑ Foam ☐ None ☐ Other ☑ ZPLC

Thermometer Used: T-112 / T-194 **Type of Ice:** Wet Blue None ☐ Samples received on ice, cooling process has begun.
(circle one)

Cooler Temperature: 3.4, 2.6

Date and initials of person examining contents: 2/20/13 BA

Temperature should be above freezing to 6°C

Chain of Custody present:	☑Yes ☐No ☐N/A	1.	
Chain of Custody filled out:	☑Yes ☐No ☐N/A	2.	
Chain of Custody relinquished:	☑Yes ☐No ☐N/A	3.	
Sampler name & signature on COC:	☐Yes ☑No ☐N/A	4.	
Samples arrived within holding time:	☑Yes ☐No ☐N/A	5.	
Short Hold Time analyses (<72hr):	☐Yes ☑No ☐N/A	6.	
Rush Turn Around Time requested:	☐Yes ☑No ☐N/A	7.	
Sufficient volume:	☑Yes ☐No ☐N/A	8.	
Correct containers used:	☑Yes ☐No ☐N/A		
Pace containers used:	☑Yes ☐No ☐N/A	9.	
Containers intact:	☑Yes ☐No ☐N/A	10.	
Unpreserved 5035A soils frozen w/in 48hrs?	☐Yes ☐No ☑N/A	11.	
Filtered volume received for dissolved tests?	☑Yes ☐No ☐N/A	12.	
Sample labels match COC: Includes date/time/ID/analyses Matrix: WT	☑Yes ☐No ☐N/A	13.	
All containers needing preservation have been checked.	☑Yes ☐No ☐N/A		
All containers needing preservation are found to be in compliance with EPA recommendation.	☑Yes ☐No ☐N/A	14.	
Exceptions: VOA, coliform, TOC, O&G, WI-DRO (water), Phenolics	☑Yes ☐No	Initial when completed	Lot # of added preservative
Trip Blank present: Pace Trip Blank lot # (if purchased):	☐Yes ☐No ☑N/A	15.	
Headspace in VOA vials (>6mm):	☐Yes ☐No ☑N/A	16.	
Project sampled in USDA Regulated Area:	☐Yes ☐No ☑N/A	17. List State:	

Client Notification/ Resolution: Copy COC to Client? Y / N Field Data Required? Y / N

Person Contacted: _____ Date/Time: _____

Comments/ Resolution: _____

Temp Log: Record start and finish times when unpacking cooler, if >20 min, recheck sample temps.	
Start: 1140	Start:
End: 1150	End:
Temp:	Temp:

Project Manager Review: TAMW Date: 2/20/13

ANDERSON
ENGINEERING COMPANY INC.

977 West 2100 South
Salt Lake City, UT 84119
(801) 972-6222
FAX (801) 972-6235

CHAIN OF CUSTODY RECORD

COC# 2013218
Page 1 of 1

Client: BP
Project: February 2013 Rico Water Sampling
AECI Contact Mark DeFriez (801) 234-9583

Lab Name: Pace Analytical Services
Lab Contact: Heather Wilson, (913) 563-1407
Lab Address: 9608 Loiret Blvd.
Lenexa, KS 66219

Matrix Codes
(W) Water
(S) Soil
(L) Liquid

QC: (circle one)
I II III IV

Field Location	Field Sample ID Number	Date	Time	Matrix	No. of Containers	Total Metals / Hardness / Silica	Potentially Dissolved Metals	Dissolved Metals	Alkalinity / TDS / TSS / Sulfate / Chloride	Cyanide	Salinity	Total Organic Carbon / Nitrate	Sulfide			COMMENTS
DR-6	DR-6_20130218	2/18/2013	2:59 PM	W	8	X	X	X	X	X	X	X	X			1BP2U 1BP3U 1AG3S 1BP3Z 1.5 1BP3C 1.5 2BP3N 1.5 1BP3F 1.5 001
DR-7	DR-7_20130218	2/18/2013	12:00 AM	W	8	X	X	X	X	X	X	X	X			002
DR-2 composite	DR-2 composite_20130218	2/18/2013	2:00 PM	W	8	X	X	X	X	X	X	X	X			003
DR-2	DR-2 _20130218	2/18/2013	2:25 PM	W	8	X	X	X	X	X	X	X	X			004
DR-4	DR-4_20130218	2/18/2013	3:33 PM	W	8	X	X	X	X	X	X	X	X			005
DR-1	DR-1_20130218	2/18/2013	4:05 PM	W	8	X	X	X	X	X	X	X	X			006
DR-5	DR-5_20130218	2/18/2013	3:11 PM	W	8	X	X	X	X	X	X	X	X			007
DR-7 composite	DR-7 composite_20130218	2/18/2013	11:55 PM	W	8	X	X	X	X	X	X	X	X			008
FB	FB_20130218	2/18/2013	4:40 PM	W	8	X	X	X	X	X	X	X	X			009
DR-11	DR-11_20130218	2/18/2013	3:41 PM	W	8	X	X	X	X	X	X	X	X			010

Relinquished By: *signature*	Date	Time	Received By: *signature*		Time	Special Instructions
[signature]	2/19/13	1053	[signature]	2/20/13	1030	Cooler temps: 3.4, 2.6
Relinquished By: *signature*	Date	Time	Received By: *signature*		Time	
Relinquished By: *signature*	Date	Time	Received By: *signature*		Time	
Relinquished By: *signature*	Date	Time	Received By: *signature*		Time	

FLD-002

Chain of Custody

Pace Analytical
www.pacelabs.com

Workorder: 60139049 **Workorder Name:** February 2013 Rico Water Sampl **Owner Received Date:** 2/20/2013 **Results Requested By:** 3/6/2013

Report To	Subcontract To
Heather Wilson Pace Analytical Services, Inc. 9608 Loiret Blvd. Lenexa, KS 66219 Phone (913)599-5665 Fax (913)599-1759	Pace Analytical Billings MT 602 S 25th Street Billings, MT, MT 591014549 Phone (406) 254-7226

Item	Sample ID	Sample Type	Collect Date/Time	Lab ID	Matrix	Preserved Containers: none	Requested Analysis: Salinity	LAB USE ONLY 10220912
1	DR-6_20130218	PS	2/18/2013 14:59	60139049001	Water	1	X	001
2	DR-7_20130218	PS	2/18/2013 12:00	60139049002	Water	1	X	002
3	DR-2 COMPOSITE_20130218	PS	2/18/2013 14:00	60139049003	Water	1	X	003
4	DR-2_20130218	PS	2/18/2013 14:25	60139049004	Water	1	X	004
5	DR-4_20130218	PS	2/18/2013 15:33	60139049005	Water	1	X	005
6	DR-1_20130218	PS	2/18/2013 16:05	60139049006	Water	1	X	006
7	DR-5_20130218	PS	2/18/2013 15:11	60139049007	Water	1	X	007
8	DR-7 COMPOSITE_20130218	PS	2/18/2013 11:55	60139049008	Water	1	X	008
9	FB_20130218	PS	2/18/2013 16:40	60139049009	Water	1	X	009
10	DR-11_20130218	PS	2/18/2013 15:41	60139049010	Water	1	X	010

Transfers	Released By	Date/Time	Received By	Date/Time
1	[illegible]	2/20/13 1100		
2	[illegible]		[illegible] Pace	2/25/13 0925
3				

Comments: No Jflags

Cooler Temperature on Receipt 0.0 °C Custody Seal Y or N Received on Ice Y or N Samples Intact Y or N

Pace Analytical	Document Name: **Sample Condition Upon Receipt Form**	Document Revised: 14Nov2012 Page 1 of 1
	Document No.: **F-MT-C-184-rev.02**	Issuing Authority: Pace Montana Quality Office

Sample Condition Upon Receipt

Client Name: Pace-KS

Project #: WO#:10220912 10220912

Courier: ☒ Fed Ex ☐ UPS ☐ USPS ☐ Client ☐ Commercial ☐ Pace ☐ Other:

Tracking Number: 5552 4796 0287

Custody Seal on Cooler/Box Present? ☒ Yes ☐ No **Seals Intact?** ☒ Yes ☐ No

Optional: Proj. Due Date: Proj. Name:

Packing Material: ☒ Bubble Wrap ☐ Bubble Bags ☐ None ☐ Other: **Temp Blank?** ☒ Yes ☐ No

Thermometer Used: ☒ 1383045 ☐ 135 ☐ NA **Type of Ice:** ☒ Wet ☐ Blue ☐ None ☒ Samples on ice, cooling process has begun

Cooler Temp Read: 0.0 **Date and Initials of Person Examining Contents:** MW 2/25/13

Cooler Temp Corrected: 0.0 **Biological Tissue Frozen?** ☐ Yes ☐ No

Temp should be above freezing to 6°C

				Comments:
Chain of Custody Present?	☒ Yes	☐ No	☐ N/A	1.
Chain of Custody Filled Out?	☒ Yes	☐ No	☐ N/A	2.
Chain of Custody Relinquished?	☒ Yes	☐ No	☐ N/A	3.
Sampler Name and Signature on COC?	☐ Yes	☒ No	☐ N/A	4.
Samples Arrived within Hold Time?	☒ Yes	☐ No	☐ N/A	5.
Short Hold Time Analysis (<72 hr)?	☐ Yes	☒ No	☐ N/A	6.
Rush Turn Around Time Requested?	☐ Yes	☒ No	☐ N/A	7.
Sufficient Volume?	☒ Yes	☐ No	☐ N/A	8.
Correct Containers Used?	☒ Yes	☐ No	☐ N/A	9.
-Pace Containers Used?	☐ Yes	☒ No	☐ N/A	
Containers Intact?	☒ Yes	☐ No	☐ N/A	10.
Filtered Volume Received for Dissolved Tests?	☐ Yes	☐ No	☒ N/A	11.
Sample Labels Match COC? -Includes Date/Time/ID/Analysis Matrix: H_2O	☒ Yes	☐ No	☐ N/A	12.
All containers needing acid/base preservation have been checked? Noncompliances are noted in 13.	☐ Yes	☐ No	☒ N/A	13. ☐ HNO_3 ☐ H_2SO_4 ☐ NaOH ☐ HCl
All containers needing preservation are found to be in compliance with EPA recommendation? (HNO_3, H_2SO_4, HCl<2; NaOH>12)	☐ Yes	☐ No	☒ N/A	Sample #
Exceptions: VOA, Coliform, TOC, Oil and Grease, WI-DRO (water)	☐ Yes	☒ No		Initial when completed: Lot # of added preservative:
Samples checked for dechlorination?	☐ Yes	☐ No	☒ N/A	14.
Headspace in VOA Vials (>6mm)?	☐ Yes	☐ No	☒ N/A	15.
Trip Blank Present?	☐ Yes	☐ No	☒ N/A	16.
Trip Blank Custody Seals Present?	☐ Yes	☐ No	☒ N/A	
Pace Trip Blank Lot # (if purchased):				

CLIENT NOTIFICATION/RESOLUTION **Field Data Required?** ☐ Yes ☐ No

Person Contacted: Date/Time:

Comments/Resolution:

Project Manager Review: **Date:** 2-25-13

Note: Whenever there is a discrepancy affecting North Carolina compliance samples, a copy of this form will be sent to the North Carolina DEHNR Certification Office (i.e out of hold, incorrect preservative, out of temp, incorrect containers)

4074339

Chain of Custody

Pace Analytical
www.pacelabs.com

EMHU

Workorder: 60139049 **Workorder Name:** February 2013 Rico Water Sampl **Owner Received Date:** 2/20/2013 **Results Requested By:** 3/6/2013

Report To	Subcontract To
Heather Wilson Pace Analytical Services, Inc. 9608 Loiret Blvd. Lenexa, KS 66219 Phone (913)599-5665 Fax (913)599-1759	Pace Analytical Green Bay 1241 Bellevue Street Suite 9 Green Bay, WI 54302 Phone (920)469-2436

Requested Analysis

Item	Sample ID	Sample Type	Collect Date/Time	Lab ID	Matrix	Preserved Containers: H2SO4						5310C TOC												LAB USE ONLY
1	DR-6_20130218	PS 001	2/18/2013 14:59	60139049001	Water	1						X												1-250ml ag
2	DR-7_20130218	PS 002	2/18/2013 12:00	60139049002	Water	1						X												
3	DR-2 COMPOSITE_20130218	PS 003	2/18/2013 14:00	60139049003	Water	1						X												
4	DR-2_20130218	PS 004	2/18/2013 14:25	60139049004	Water	1						X												
5	DR-4_20130218	PS 005	2/18/2013 15:33	60139049005	Water	1						X												
6	DR-1_20130218	PS 006	2/18/2013 16:05	60139049006	Water	1						X												
7	DR-5_20130218	PS 007	2/18/2013 15:11	60139049007	Water	1						X												
8	DR-7 COMPOSITE_20130218	PS 008	2/18/2013 11:55	60139049008	Water	1						X												
9	FB_20130218	PS 009	2/18/2013 16:40	60139049009	Water	1						X												
10	DR-11_20130218	PS 010	2/18/2013 15:41	60139049010	Water	1						X												

Transfers	Released By	Date/Time	Received By	Date/Time
1	[signature]	2/25/13 1700		
2	FedEx	2/26/13 1110	E Adelinny Pace GB	2/26/13 1110
3				

Comments: No Jflags

Cooler Temperature on Receipt 3 °C **Custody Seal** Y or N **Received on Ice** Y or N **Samples Intact** Y or N

Pace Analytical Services, Inc.
1241 Bellevue Street, Suite 9
Green Bay, WI 54302

Pace Analytical

Sample Condition Upon Receipt

Client Name: Pace KS Project # 4074339

Courier: ☑ Fed Ex ☐ UPS ☐ USPS ☐ Client ☐ Commercial ☐ Pace Other _____

Tracking #: 5552 4796 0438

Custody Seal on Cooler/Box Present: ☑ yes ☐ no Seals intact: ☑ yes ☐ no

Custody Seal on Samples Present: ☐ yes ☑ no Seals intact: ☐ yes ☐ no

Packing Material: ☐ Bubble Wrap ☑ Bubble Bags ☐ None Other

Thermometer Used SR5 Type of Ice: (Wet) Blue Dry None ☑ Samples on ice, cooling process has begun.

Cooler Temperature 3°C Biological Tissue is Frozen: ☐ yes ☐ no

Temp Blank Present: ☐ yes ☑ no

Optional
Proj. Due Date:
Proj. Name:

Person examining contents:
Date: 2/26/13
Initials: EMH

Temp should be above freezing to 6°C for all sample except Biota.
Biota Samples should be received ≤ 0°C.

		Comments:
Chain of Custody Present:	☑Yes ☐No ☐N/A	1.
Chain of Custody Filled Out:	☑Yes ☐No ☐N/A	2.
Chain of Custody Relinquished:	☑Yes ☐No ☐N/A	3.
Sampler Name & Signature on COC:	☐Yes ☐No ☑N/A	4.
Samples Arrived within Hold Time:	☑Yes ☐No ☐N/A	5.
Short Hold Time Analysis (<72hr):	☐Yes ☑No ☐N/A	6.
Rush Turn Around Time Requested:	☐Yes ☑No ☐N/A	7.
Sufficient Volume:	☑Yes ☐No ☐N/A	8. All bottles ~1/2 full EMH 2/26/13
Correct Containers Used:	☑Yes ☐No ☐N/A	9.
-Pace Containers Used:	☑Yes ☐No ☐N/A	Not Pace GB containers EMH 2/26/13
Containers Intact:	☑Yes ☐No ☐N/A	10.
Filtered volume received for Dissolved tests	☐Yes ☐No ☑N/A	11.
Sample Labels match COC: -Includes date/time/ID/Analysis Matrix: W	☑Yes ☐No ☐N/A	12.
All containers needing preservation have been checked.	☐Yes ☐No ☑N/A	13.
All containers needing preservation are found to be in compliance with EPA recommendation.	☐Yes ☐No ☑N/A	Initial when completed / Lot # of added preservative
exceptions: VOA, coliform, (TOC), O&G, WI-DRO (water)	☑Yes ☐No	
Samples checked for dechlorination:	☐Yes ☐No ☑N/A	14.
Headspace in VOA Vials (>6mm):	☐Yes ☐No ☑N/A	15.
Trip Blank Present:	☐Yes ☐No ☑N/A	16.
Trip Blank Custody Seals Present	☐Yes ☐No ☑N/A	
Pace Trip Blank Lot # (if purchased):		

Field Data Required? Y / N

Client Notification/ Resolution:
Person Contacted: _____ Date/Time: _____
Comments/ Resolution: _____

Project Manager Review: [signature] **Date:** 2/26/13

Note: Whenever there is a discrepancy affecting North Carolina compliance samples, a copy of this form will be sent to the North Carolina DEHNR Certification Office (i.e out of hold, incorrect preservative, out of temp, incorrect containers)

F-GB-C-031-Rev.00 (29Sept2011) SCUR Form

1126

Chain of Custody

10221061

Pace Analytical®
www.pacelabs.com

Workorder: 60139049 **Workorder Name:** February 2013 Rico Water Sampl **Owner Received Date:** 2/20/2013 **Results Requested By:** 3/6/2013

Report To	Subcontract To
Heather Wilson Pace Analytical Services, Inc. 9608 Loiret Blvd. Lenexa, KS 66219 Phone (913)599-5665 Fax (913)599-1759	Pace Analytical Minnesota 1700 Elm Street Suite 200 Minneapolis, MN 55414 Phone (612)607-1700

Item	Sample ID	Sample Type	Collect Date/Time	Lab ID	Matrix	Preserved Containers: HNO3						Requested Analysis: 200.8 Total Metal + Hardness + Silica	200.8 Dissolved Metals	245.1 Total Mercury	245.1 Dissolved Mercury									LAB USE ONLY
1	DR-6_20130218	PS	2/18/2013 14:59	60139049001	Water	2						X	X	X	X									
2	DR-7_20130218	PS	2/18/2013 12:00	60139049002	Water	2						X	X	X	X									
3	DR-2 COMPOSITE_20130218	PS	2/18/2013 14:00	60139049003	Water	2						X	X	X	X									
4	DR-2_20130218	PS	2/18/2013 14:25	60139049004	Water	2						X	X	X	X									
5	DR-4_20130218	PS	2/18/2013 15:33	60139049005	Water	2						X	X	X	X									
6	DR-1_20130218	PS	2/18/2013 16:05	60139049006	Water	2						X	X	X	X									
7	DR-5_20130218	PS	2/18/2013 15:11	60139049007	Water	2						X	X	X	X									
8	DR-7 COMPOSITE_20130218	PS	2/18/2013 11:55	60139049008	Water	2						X	X	X	X									
9	FB_20130218	PS	2/18/2013 16:40	60139049009	Water	2						X	X	X	X									
10	DR-11_20130218	PS	2/18/2013 15:41	60139049010	Water	2						X	X	X	X									

Transfers	Released By	Date/Time	Received By	Date/Time
1	[signature]	2/25/13 1700	TN/Pace	22513/908
2				
3				

Comments
Use Profile 26985
No Jflags

Cooler Temperature on Receipt 8.10 °C **Custody Seal** Y or N **Received on Ice** Y or N **Samples Intact** Y or N

Pace Analytical	Document Name: Sample Condition Upon Receipt Form	Document Revised: 28Jan2013 Page 1 of 1
	Document No.: F-MN-L-213-rev.06	Issuing Authority: Pace Minnesota Quality Office

Sample Condition Upon Receipt

Client Name: **Project #:** WO#: 10221061

10221061

Courier: ☒ Fed Ex ☐ UPS ☐ USPS ☐ Client ☐ Commercial ☐ Pace ☐ Other:

Tracking Number: 5552 4796 0390

Custody Seal on Cooler/Box Present? ☒ Yes ☐ No **Seals Intact?** ☒ Yes ☐ No

Optional: Proj. Due Date: Proj. Name:

Packing Material: ☐ Bubble Wrap ☐ Bubble Bags ☒ None ☐ Other: **Temp Blank?** ☐ Yes ☒ No

Thermom. Used: ☐ B88A912167504 ☐ 80512447 ☒ 72337080 **Type of Ice:** ☐ Wet ☐ Blue ☒ None ☐ Samples on ice, cooling process has begun

Cooler Temp Read (°C): 8.0 **Cooler Temp Corrected (°C):** 8.0 **Biological Tissue Frozen?** ☐ Yes ☐ No

Temp should be above freezing to 6°C **Correction Factor:** true **Date and Initials of Person Examining Contents:** 2 25 13 TN

				Comments:
Chain of Custody Present?	☒ Yes	☐ No	☐ N/A	1.
Chain of Custody Filled Out?	☒ Yes	☐ No	☐ N/A	2.
Chain of Custody Relinquished?	☒ Yes	☐ No	☐ N/A	3.
Sampler Name and/or Signature on COC?	☐ Yes	☒ No	☐ N/A	4.
Samples Arrived within Hold Time?	☒ Yes	☐ No	☐ N/A	5.
Short Hold Time Analysis (<72 hr)?	☐ Yes	☒ No	☐ N/A	6.
Rush Turn Around Time Requested?	☐ Yes	☒ No	☐ N/A	7.
Sufficient Volume?	☒ Yes	☐ No	☐ N/A	8.
Correct Containers Used?	☒ Yes	☐ No	☐ N/A	9.
-Pace Containers Used?	☒ Yes	☐ No	☐ N/A	
Containers Intact?	☒ Yes	☐ No	☐ N/A	10.
Filtered Volume Received for Dissolved Tests?	☐ Yes	☐ No	☒ N/A	11.
Sample Labels Match COC? -Includes Date/Time/ID/Analysis Matrix: WT	☒ Yes	☐ No	☐ N/A	12.
All containers needing acid/base preservation have been checked? Noncompliances are noted in 13.	☒ Yes	☐ No	☐ N/A	13. ☒ HNO_3 ☐ H_2SO_4 ☐ NaOH ☐ HCl
All containers needing preservation are found to be in compliance with EPA recommendation? (HNO_3, H_2SO_4, HCl<2; NaOH>12)	☒ Yes	☐ No	☐ N/A	Sample # All 2/2
Exceptions: VOA, Coliform, TOC, Oil and Grease, WI-DRO (water)	☐ Yes	☒ No		Initial when completed: TN Lot # of added preservative:
Headspace in VOA Vials (>6mm)?	☐ Yes	☐ No	☒ N/A	14.
Trip Blank Present?	☐ Yes	☐ No	☒ N/A	15.
Trip Blank Custody Seals Present?	☐ Yes	☐ No	☒ N/A	
Pace Trip Blank Lot # (if purchased):				

CLIENT NOTIFICATION/RESOLUTION **Field Data Required?** ☐ Yes ☐ No

Person Contacted: Date/Time:

Comments/Resolution: Temp ok metals only.

Project Manager Review: **Date:** 2/20/12

Note: Whenever there is a discrepancy affecting North Carolina compliance samples, a copy of this form will be sent to the North Carolina DEHNR Certification Office (i.e out of hold, incorrect preservative, out of temp, incorrect containers)

Pace Analytical	Document Name: Sample Container Count	Document Revised: 22Sept2011 Page 1 of 1
	Document No.: F-MN-C-090-Rev.00	Issuing Authority: Pace Minnesota Quality Office

Client: Pace K S **Project #:** _____

COC ID: _____ **COC Page** _____ of _____

Sample Line Item	DG9H	AG1U	WGFU	JGFU	BP2N	BP2U	BP2S	BP3N	BP3U	BP3S	AG3S	AG1H	VG9M	VG9H	VG9U	Comments
1								2								
2																
3																
4																
5																
6																
7																
8																
9																
10								2								
11																
12																

Container Codes:

DG9H	40mL HCL amber VOA vial	AF	Air Filter	BP1N	1 liter HNO3 plastic	DG9P	40mL TSP amber vial
AG1U	1liter unpreserved amber glass	AG1H	1 liter HCL amber glass	BP1S	1 liter H2SO4 plastic	DG9S	40mL H2SO4 amber vial
WGFU	4oz clear soil jar	AG1S	1 liter H2SO4 amber glass	BP1U	1 liter unpreserved plastic	DG9T	40mL Na Thio amber vial
R	terra core kit	AG1T	1 liter Na Thiosulfate amber glass	BP1Z	1 liter NaOH, Zn, Ac	DG9U	40mL unpreserved **amber** vial
BP2N	500mL HNO3 plastic	AG2N	500mL HNO3 amber glass	BP2A	500mL NaOH, Asc Acid plastic	I	Wipe/Swab
BP2U	500mL unpreserved plastic	AG2S	500mL H2SO4 amber glass	BP2O	500mL NaOH plastic	JGFU	4oz unpreserved amber wide
BP2S	500mL H2SO4 plastic	AG2U	500mL unpreserved amber glass	BP2Z	500mL NaOH, Zn Ac	U	Summa Can
BP3N	250mL HNO3 plastic	AG3U	250mL unpreserved amber glass	BP3A	250mL NaOh, Asc Acid plastic	VG9H	40mL HCL clear vial
BP3U	250mL unpreserved plastic	BG1H	1 liter HCL clear glass	BP3C	250mL NaOH plastic	VG9T	40mL Na Thio. clear vial
BP3S	250mL H2SO4 plastic	BG1S	1 liter H2SO4 clear glass	BP3Z	250mL NaOH, Zn Ac plastic	VG9U	40mL unpreserved **clear** vial
AG3S	250mL H2SO4 glass amber	BG1T	1 liter Na Thiosulfate clear glass	C	Air Cassettes	VSG	Headspace septa vial & HCL
AG1S	1 liter H2SO4 amber glass	BG1U	1 liter unpreserved glass	DG9B	40mL Na Bisulfate amber vial	WGFX	4oz wide jar w/hexane wipe
BP1U	1 liter unpreserved plastic	BP1A	1 liter NaOH, Asc Acid plastic	DG9M	40mL MeOH clear vial	ZPLC	Ziploc Bag

Pace Analytical
www.pacelabs.com

Sample Condition Upon Receipt
ESI Tech Spec Client

WO#: 60139196
60139196

Client Name: BP Anderson

Optional
Proj Due Date:
Proj Name:

Courier: Fed Ex ☐ UPS ☑ USPS ☐ Client ☐ Commercial ☐ Pace ☐ Other ☐

Tracking #: 12 733 487 40 4968 825 Pace Shipping Label Used? Yes ☑ No ☐

Custody Seal on Cooler/Box Present: Yes ☑ No ☐ Seals intact: Yes ☑ No ☐

Packing Material: Bubble Wrap ☐ Bubble Bags ☑ Foam ☐ None ☐ Other ☐

Thermometer Used: T-152 / T-194 **Type of Ice:** Wet Blue None (circle one) ☐ Samples received on ice, cooling process has begun.

Cooler Temperature: 4.4

Temperature should be above freezing to 6°C

Date and initials of person examining contents: 2/27/13

Chain of Custody present:	☑Yes ☐No ☐N/A	1.
Chain of Custody filled out:	☑Yes ☐No ☐N/A	2.
Chain of Custody relinquished:	☑Yes ☐No ☐N/A	3.
Sampler name & signature on COC:	☑Yes ☐No ☐N/A	4.
Samples arrived within holding time:	☑Yes ☐No ☐N/A	5.
Short Hold Time analyses (<72hr):	☐Yes ☑No ☐N/A	6.
Rush Turn Around Time requested:	☐Yes ☑No ☐N/A	7.
Sufficient volume:	☑Yes ☐No ☐N/A	8.
Correct containers used:	☑Yes ☐No ☐N/A	
Pace containers used:	☑Yes ☐No ☐N/A	9.
Containers intact:	☑Yes ☐No ☐N/A	10.
Unpreserved 5035A soils frozen w/in 48hrs?	☐Yes ☐No ☑N/A	11.
Filtered volume received for dissolved tests?	☑Yes ☐No ☐N/A	12.
Sample labels match COC: Includes date/time/ID/analyses Matrix: WT	☑Yes ☐No ☐N/A	13.
All containers needing preservation have been checked.	☑Yes ☐No ☐N/A	
All containers needing preservation are found to be in compliance with EPA recommendation.	☑Yes ☐No ☐N/A	14.
Exceptions: VOA, coliform, TOC, O&G, WI-DRO (water), Phenolics	☑Yes ☐No	Initial when completed / Lot # of added preservative
Trip Blank present: Pace Trip Blank lot # (if purchased):	☐Yes ☑No ☐N/A	15.
Headspace in VOA vials (>6mm):	☐Yes ☐No ☑N/A	16.
Project sampled in USDA Regulated Area:	☐Yes ☐No ☑N/A	17. List State:

Client Notification/ Resolution: Copy COC to Client? Y (N) Field Data Required? Y / N

Person Contacted: Date/Time:

Comments/ Resolution: Split sample from 250mL H_2SO_4 container w/ headspace for TOC analysis AMW 2/27/13

Project Manager Review: AMW Date: 2/25/13

Temp Log: Record start and finish times when unpacking cooler, if >20 min, recheck sample temps.	
Start: 1330	Start:
End: 1341	End:
Temp:	Temp:

ANDERSON
ENGINEERING COMPANY INC.

977 West 2100 South
Salt Lake City, UT
84119
(801) 972-6222
FAX (801) 972-6235

CHAIN OF CUSTODY RECORD

COC# _____
Page 1 of 1

Client: BP
Project: February 2013 Rico Water Sampling
AECI Contact: Mark DeFriez (801) 234-9583

Lab Name: Pace Analytical Services
Lab Contact: Heather Wilson, (913) 563-1407
Lab Address: 9608 Loiret Blvd.
Lenexa, KS 66219

Matrix Codes
(W) Water
(S) Soil
(L) Liquid

QC: (circle one)
I II III IV

66139196

Field Location	Field Sample ID Number	Date	Time	Matrix	No. of Containers	Total Metals / Hardness / Silica	Potentially Dissolved Metals	Dissolved Metals	Alkalinity / TDS / TSS / Sulfate / Chloride	Cyanide	Salinity	Total Organic Carbon / Nitrate	Sulfide			COMMENTS	
DR-4-SW	DR-4-SW_20130220	2/20/2013	12:40	W	8	X	X	X	X	X	X	X	X			BP3W BP3F 2/BP3N BP3X BP3Z BP3U AG3S	01
DR-G	DR-G_20130220	2/20/2013	13:30	W	8	X	X	X	X	X	X	X	X			↓	02

Relinquished By: *signature*	Date	Time	Received By: *signature*	Date	Time	Special Instructions
Joanne E Gisseman J GISSEMAN	2-20-13	14:15	UPS	2-20-13	15:30	
Relinquished By: *signature*	Date	Time	Received By: *signature*	2/22/13	1030	4.4°C
Relinquished By: *signature*	Date	Time	Received By: *signature*			
Relinquished By: *signature*	Date	Time	Received By: *signature*			

FLD-002

Chain of Custody

JDF

4074468

Pace Analytical®
www.pacelabs.com

Workorder: 60139196 **Workorder Name:** FEBRUARY 2013 RICO WATER SAMPL **Owner Received Date:** 2/22/2013 **Results Requested By:** 3/8/2013

Report To	Subcontract To
Heather Wilson Pace Analytical Services, Inc. 9608 Loiret Blvd. Lenexa, KS 66219 Phone (913)599-5665 Fax (913)599-1759	Pace Analytical Green Bay 1241 Bellevue Street Suite 9 Green Bay, WI 54302 Phone (920)469-2436

	Item	Sample ID	Sample Type	Collect Date/Time	Lab ID	Matrix	Preserved Containers: H2SO4						Requested Analysis: 5310C TOC												LAB USE ONLY
001	1	DR-4-SW_20130220	PS	2/20/2013 12:40	60139196001	Water	1						X												1-40mlag c
002	2	DR-G _20130220	PS	2/20/2013 13:30	60139196002	Water	1						X												↓
	3																								
	4																								
	5																								

Transfers	Released By	Date/Time	Received By	Date/Time
1	[signature]	2/25/13 17:00		
2	Fedex	3/1/13 0945	[signature]	3/1/13 0945
3				

Comments: No Jflags

Cooler Temperature on Receipt 4 °C Custody Seal Y or N Received on Ice Y or N Samples Intact Y or N

Pace Analytical Services, Inc.
1241 Bellevue Street, Suite 9
Green Bay, WI 54302

Pace Analytical

Sample Condition Upon Receipt

Client Name: Pace KS Project # 4074468

Courier: ☑ Fed Ex ☐ UPS ☐ USPS ☐ Client ☐ Commercial ☐ Pace Other _____

Tracking #: 555247960471

Custody Seal on Cooler/Box Present: ☑ yes ☐ no Seals intact: ☑ yes ☐ no

Custody Seal on Samples Present: ☐ yes ☑ no Seals intact: ☐ yes ☐ no

Packing Material: ☐ Bubble Wrap ☑ Bubble Bags ☐ None Other

Thermometer Used SR-45 Type of Ice: (Wet) Blue Dry None ☑ Samples on ice, cooling process has begun.

Cooler Temperature 4° Biological Tissue is Frozen: ☐ yes ☐ no

Temp Blank Present: ☑ yes ☐ no

Optional
Proj. Due Date:
Proj. Name:

Person examining contents:
Date: 3/1/13
Initials: [illegible]

Temp should be above freezing to 6°C for all sample except Biota.
Biota Samples should be received ≤ 0°C.

		Comments:
Chain of Custody Present:	☑Yes ☐No ☐N/A	1.
Chain of Custody Filled Out:	☑Yes ☐No ☐N/A	2.
Chain of Custody Relinquished:	☑Yes ☐No ☐N/A	3.
Sampler Name & Signature on COC:	☐Yes ☐No ☑N/A	4.
Samples Arrived within Hold Time:	☑Yes ☐No ☐N/A	5.
Short Hold Time Analysis (<72hr):	☐Yes ☑No ☐N/A	6.
Rush Turn Around Time Requested:	☐Yes ☑No ☐N/A	7.
Sufficient Volume:	☐Yes ☑No ☐N/A	8. Only received one 40ml vial each [illegible] 3/1/13
Correct Containers Used:	☑Yes ☐No ☐N/A	9.
-Pace Containers Used:	☐Yes ☑No ☐N/A	
Containers Intact:	☑Yes ☐No ☐N/A	10.
Filtered volume received for Dissolved tests	☐Yes ☐No ☑N/A	11.
Sample Labels match COC:	☑Yes ☐No ☐N/A	12.
-Includes date/time/ID/Analysis Matrix: W		
All containers needing preservation have been checked.	☐Yes ☐No ☑N/A	13.
All containers needing preservation are found to be in compliance with EPA recommendation.	☐Yes ☐No ☑N/A	Initial when completed ____ Lot # of added preservative ____
exceptions: VOA, coliform, TOC, O&G, WI-DRO (water)	☑Yes ☐No	
Samples checked for dechlorination:	☐Yes ☐No ☑N/A	14.
Headspace in VOA Vials (>6mm):	☐Yes ☐No ☑N/A	15.
Trip Blank Present:	☐Yes ☐No ☑N/A	16.
Trip Blank Custody Seals Present	☐Yes ☐No ☑N/A	
Pace Trip Blank Lot # (if purchased): ____		

Field Data Required? Y / N

Client Notification/ Resolution:
Person Contacted: _____ Date/Time: _____
Comments/ Resolution: _____

Project Manager Review: [illegible] **Date:** 3/1/13

Note: Whenever there is a discrepancy affecting North Carolina compliance samples, a copy of this form will be sent to the North Carolina DEHNR Certification Office (i.e out of hold, incorrect preservative, out of temp, incorrect containers)

F-GB-C-031-Rev.00 (29Sept2011) SCUR Form

Chain of Custody

1126

10221060

Pace Analytical®
www.pacelabs.com

Workorder: 60139196 **Workorder Name:** FEBRUARY 2013 RICO WATER SAMPL **Owner Received Date:** 2/22/2013 **Results Requested By:** 3/8/2013

Report To	Subcontract To
Heather Wilson Pace Analytical Services, Inc. 9608 Loiret Blvd. Lenexa, KS 66219 Phone (913)599-5665 Fax (913)599-1759	Pace Analytical Minnesota 1700 Elm Street Suite 200 Minneapolis, MN 55414 Phone (612)607-1700

Item	Sample ID	Sample Type	Collect Date/Time	Lab ID	Matrix	Preserved Containers: HNO3						Requested Analysis: 200.8 Total Metal + Hardness + Silica	200.8 Dissolved Metals	245.1 Total Mercury	245.1 Dissolved Mercury									LAB USE ONLY
1	DR-4-SW_20130220	PS	2/20/2013 12:40	60139196001	Water	2						X	X	X	X									
2	DR-G _20130220	PS	2/20/2013 13:30	60139196002	Water	2						X	X	X	X									
3																								
4																								
5																								

Transfers	Released By	Date/Time	Received By	Date/Time
1	[signature]	2/25/13 1700	TN/Pace	2/25/13/9:18
2				
3				

Comments: Use Profile 26985. No ↓ flags

Cooler Temperature on Receipt 8.0 °C Custody Seal Y or N Received on Ice Y or N Samples Intact Y or N

Pace Analytical®	Document Name: Sample Container Count	Document Revised: 22Sept2011 Page 1 of 1
	Document No.: F-MN-C-090-Rev.00	Issuing Authority: Pace Minnesota Quality Office

Client: Pace KS **Project #:** _____

COC ID: _____ **COC Page** _____ of _____

Sample Line Item	DG9H	AG1U	WGFU	JGFU	BP2N	BP2U	BP2S	BP3N	BP3U	BP3S	AG3S	AG1H	VG9M	VG9H	VG9U	Comments
1								2								
2								2								
3																
4																
5																
6																
7																
8																
9																
10																
11																
12																

Container Codes:

DG9H	40mL HCL amber VOA vial	AF	Air Filter	BP1N	1 liter HNO3 plastic	DG9P	40mL TSP amber vial
AG1U	1liter unpreserved amber glass	AG1H	1 liter HCL amber glass	BP1S	1 liter H2SO4 plastic	DG9S	40mL H2SO4 amber vial
WGFU	4oz clear soil jar	AG1S	1 liter H2SO4 amber glass	BP1U	1 liter unpreserved plastic	DG9T	40mL Na Thio amber vial
R	terra core kit	AG1T	1 liter Na Thiosulfate amber glass	BP1Z	1 liter NaOH, Zn, Ac	DG9U	40mL unpreserved **amber** vial
BP2N	500mL HNO3 plastic	AG2N	500mL HNO3 amber glass	BP2A	500mL NaOH, Asc Acid plastic	I	Wipe/Swab
BP2U	500mL unpreserved plastic	AG2S	500mL H2SO4 amber glass	BP2O	500mL NaOH plastic	JGFU	4oz unpreserved amber wide
BP2S	500mL H2SO4 plastic	AG2U	500mL unpreserved amber glass	BP2Z	500mL NaOH, Zn Ac	U	Summa Can
BP3N	250mL HNO3 plastic	AG3U	250mL unpreserved amber glass	BP3A	250mL NaOh, Asc Acid plastic	VG9H	40mL HCL clear vial
BP3U	250mL unpreserved plastic	BG1H	1 liter HCL clear glass	BP3C	250mL NaOH plastic	VG9T	40mL Na Thio. clear vial
BP3S	250mL H2SO4 plastic	BG1S	1 liter H2SO4 clear glass	BP3Z	250mL NaOH, Zn Ac plastic	VG9U	40mL unpreserved **clear** vial
AG3S	250mL H2SO4 glass amber	BG1T	1 liter Na Thiosulfate clear glass	C	Air Cassettes	VSG	Headspace septa vial & HCL
AG1S	1 liter H2SO4 amber glass	BG1U	1 liter unpreserved glass	DG9B	40mL Na Bisulfate amber vial	WGFX	4oz wide jar w/hexane wipe
BP1U	1 liter unpreserved plastic	BP1A	1 liter NaOH, Asc Acid plastic	DG9M	40mL MeOH clear vial	ZPLC	Ziploc Bag

Pace Analytical®	Document Name: Sample Condition Upon Receipt Form	Document Revised: 28Jan2013 Page 1 of 1
	Document No.: F-MN-L-213-rev.06	Issuing Authority: Pace Minnesota Quality Office

Sample Condition Upon Receipt

Client Name: **Project #:** WO#: 10221060

10221060

Courier: ☒ Fed Ex ☐ UPS ☐ USPS ☐ Client ☐ Commercial ☐ Pace ☐ Other:

Tracking Number: 5552 4796 0390

Custody Seal on Cooler/Box Present? ☒ Yes ☐ No **Seals Intact?** ☒ Yes ☐ No

Optional: Proj. Due Date: Proj. Name:

Packing Material: ☐ Bubble Wrap ☐ Bubble Bags ☒ None ☐ Other: **Temp Blank?** ☐ Yes ☒ No

Thermom. Used: ☐ B88A912167504 ☐ 80512447 ☒ 92337080 **Type of Ice:** ☐ Wet ☐ Blue ☒ None ☐ Samples on ice, cooling process has begun

Cooler Temp Read (°C): 8.0 **Cooler Temp Corrected (°C):** 8.0 **Biological Tissue Frozen?** ☐ Yes ☐ No

Temp should be above freezing to 6°C **Correction Factor:** true **Date and Initials of Person Examining Contents:** 2 25 13 TN

				Comments:
Chain of Custody Present?	☒ Yes	☐ No	☐ N/A	1.
Chain of Custody Filled Out?	☒ Yes	☐ No	☐ N/A	2.
Chain of Custody Relinquished?	☒ Yes	☐ No	☐ N/A	3.
Sampler Name and/or Signature on COC?	☐ Yes	☒ No	☐ N/A	4.
Samples Arrived within Hold Time?	☒ Yes	☐ No	☐ N/A	5.
Short Hold Time Analysis (<72 hr)?	☐ Yes	☒ No	☐ N/A	6.
Rush Turn Around Time Requested?	☐ Yes	☒ No	☐ N/A	7.
Sufficient Volume?	☒ Yes	☐ No	☐ N/A	8.
Correct Containers Used?	☒ Yes	☐ No	☐ N/A	9.
-Pace Containers Used?	☒ Yes	☐ No	☐ N/A	
Containers Intact?	☒ Yes	☐ No	☐ N/A	10.
Filtered Volume Received for Dissolved Tests?	☐ Yes	☐ No	☒ N/A	11.
Sample Labels Match COC? -Includes Date/Time/ID/Analysis Matrix: WT	☒ Yes	☐ No	☐ N/A	12.
All containers needing acid/base preservation have been checked? Noncompliances are noted in 13.	☒ Yes	☐ No	☐ N/A	13. ☒ HNO_3 ☐ H_2SO_4 ☐ NaOH ☐ HCl
All containers needing preservation are found to be in compliance with EPA recommendation? (HNO_3, H_2SO_4, HCl<2; NaOH>12)	☒ Yes	☐ No	☐ N/A	Sample # All 2/2
Exceptions: VOA; Coliform, TOC, Oil and Grease, WI-DRO (water)	☐ Yes	☒ No		Initial when completed: TN Lot # of added preservative:
Headspace in VOA Vials (>6mm)?	☐ Yes	☐ No	☒ N/A	14.
Trip Blank Present?	☐ Yes	☐ No	☒ N/A	15.
Trip Blank Custody Seals Present?	☐ Yes	☐ No	☒ N/A	
Pace Trip Blank Lot # (if purchased):				

CLIENT NOTIFICATION/RESOLUTION **Field Data Required?** ☐ Yes ☐ No

Person Contacted: Date/Time:

Comments/Resolution: Temp o.c metals only.

Project Manager Review: **Date:** 2/26/13

Note: Whenever there is a discrepancy affecting North Carolina compliance samples, a copy of this form will be sent to the North Carolina DEHNR Certification Office (i.e out of hold, incorrect preservative, out of temp, incorrect containers)

Chain of Custody

Pace Analytical®
www.pacelabs.com

Workorder: 60139196 **Workorder Name:** FEBRUARY 2013 RICO WATER SAMPL **Owner Received Date:** 2/22/2013 **Results Requested By:** 3/8/2013

Report To	Subcontract To
Heather Wilson Pace Analytical Services, Inc. 9608 Loiret Blvd. Lenexa, KS 66219 Phone (913)599-5665 Fax (913)599-1759	Pace Analytical Billings MT 602 S 25th Street Billings, MT, MT 591014549 Phone (406) 254-7226

Requested Analysis

Item	Sample ID	Sample Type	Collect Date/Time	Lab ID	Matrix	Preserved Containers: none	Salinity	LAB USE ONLY 10221027
1	DR-4-SW_20130220	PS	2/20/2013 12:40	60139196001	Water	1	X	001
2	DR-G _20130220	PS	2/20/2013 13:30	60139196002	Water	1	X	002
3								
4								
5								

Transfers	Released By	Date/Time	Received By	Date/Time
1	[signature]	2/21/13 1700		
2	Fedex	2/26/13 1012	Norma C Noble/Pace	2/26/13 1012
3				

Comments: No Jflags

Cooler Temperature on Receipt 0.6 °C Custody Seal (Y) or N Received on Ice (Y) or N Samples Intact (Y) or N

Pace Analytical	Document Name: **Sample Condition Upon Receipt Form**	Document Revised: 14Nov2012 Page 1 of 1
	Document No.: **F-MT-C-184-rev.02**	Issuing Authority: Pace Montana Quality Office

Sample Condition Upon Receipt

Client Name: Pace KS

Project #: WO#: 10221027 (10221027)

Courier: ☒ Fed Ex ☐ UPS ☐ USPS ☐ Client ☐ Commercial ☐ Pace ☐ Other:

Tracking Number: 5552 4796 0379

Custody Seal on Cooler/Box Present? ☒ Yes ☐ No **Seals Intact?** ☒ Yes ☐ No

Optional: Proj. Due Date: Proj. Name:

Packing Material: ☐ Bubble Wrap ☐ Bubble Bags ☒ None ☐ Other: **Temp Blank?** ☒ Yes ☐ No

Thermometer Used: ☒ 1383045 ☐ 135 ☐ NA **Type of Ice:** ☒ Wet ☐ Blue ☐ None ☒ Samples on ice, cooling process has begun

Cooler Temp Read: 0.6 **Date and Initials of Person Examining Contents:** KCT 2/26/13

Cooler Temp Corrected: 0.6 **Biological Tissue Frozen?** ☐ Yes ☐ No

Temp should be above freezing to 6°C

				Comments:
Chain of Custody Present?	☒ Yes	☐ No	☐ N/A	1.
Chain of Custody Filled Out?	☒ Yes	☐ No	☐ N/A	2.
Chain of Custody Relinquished?	☒ Yes	☐ No	☐ N/A	3.
Sampler Name and Signature on COC?	☐ Yes	☒ No	☐ N/A	4.
Samples Arrived within Hold Time?	☒ Yes	☐ No	☐ N/A	5.
Short Hold Time Analysis (<72 hr)?	☐ Yes	☒ No	☐ N/A	6.
Rush Turn Around Time Requested?	☐ Yes	☒ No	☐ N/A	7. Results requested by 3/8/13
Sufficient Volume?	☒ Yes	☐ No	☐ N/A	8.
Correct Containers Used?	☒ Yes	☐ No	☐ N/A	9.
-Pace Containers Used?	☒ Yes	☐ No	☐ N/A	
Containers Intact?	☒ Yes	☐ No	☐ N/A	10.
Filtered Volume Received for Dissolved Tests?	☐ Yes	☐ No	☒ N/A	11.
Sample Labels Match COC? -Includes Date/Time/ID/Analysis Matrix: H_2O	☒ Yes	☐ No	☐ N/A	12.
All containers needing acid/base preservation have been checked? Noncompliances are noted in 13.	☐ Yes	☐ No	☒ N/A	13. ☐ HNO_3 ☐ H_2SO_4 ☐ NaOH ☐ HCl Sample #
All containers needing preservation are found to be in compliance with EPA recommendation? (HNO_3, H_2SO_4, HCl<2; NaOH>12)	☐ Yes	☐ No	☒ N/A	
Exceptions: VOA, Coliform, TOC, Oil and Grease, WI-DRO (water)	☐ Yes	☒ No		Initial when completed: Lot # of added preservative:
Samples checked for dechlorination?	☐ Yes	☐ No	☒ N/A	14.
Headspace in VOA Vials (>6mm)?	☐ Yes	☐ No	☒ N/A	15.
Trip Blank Present?	☐ Yes	☐ No	☒ N/A	16.
Trip Blank Custody Seals Present?	☐ Yes	☐ No	☒ N/A	
Pace Trip Blank Lot # (if purchased):				

CLIENT NOTIFICATION/RESOLUTION **Field Data Required?** ☐ Yes ☐ No

Person Contacted: Date/Time:

Comments/Resolution:

Project Manager Review: **Date:** 2-26-13

Note: Whenever there is a discrepancy affecting North Carolina compliance samples, a copy of this form will be sent to the North Carolina DEHNR Certification Office (i.e out of hold, incorrect preservative, out of temp, incorrect containers)

Appendix G

Field Photos

February
2013 Field Photos

Cross Section at Station DR-1

Cross Section at Station DR-2

Cross Section at Station DR-5

Cross Section at Station DR-4-SW

February
2013 Field Photos

Cross Section at Station DR-G

Appendix H

Field Log Book Records

Feb. Sampling

Rico Water Sampling: Sampling Event Main Checklist

Check off each item as their corresponding forms are completed. An item is **NOT** to be checked off until its cooresponding form is completed in full. If a water sample cannot be completed, its sampling form **must** still be completed, noting reasons for problems, and it still must be checked off on this list.

Surface Water Samples

Grab Samples

- [x] DR-1 frozen-no sample - sampled TB 2/18/13
- [x] DR-2 2-18
- [x] DR-3 (duplicate DR-8 taken from here)
- [x] DR-4 2-18
- [x] DR-5 2-18
- [x] DR-6 2-18
- [x] DR-7 2-18
- [x] DR-4-SW 2-20-13 iced
- [x] DR-G 2-20-13 iced

Composite Samples

- [x] DR-1 COMPOSITE partially iced
- [x] DR-2 COMPOSITE
- [x] DR-7 COMPOSITE
- [x] DR-4-SW COMPOSITE iced

Groundwater Samples

- [x] GW-1
- [x] GW-3 purge dry (2-6-13) finished on 2-8-13
- [x] GW-4 2-14
- [x] GW-5 JSR
- [ ] GW-6 covered in ice 2-14
- [x] GW-7 2-15 purge dry 2-14
- [x] EB-1 JSR (purge dry 2-7-13); 2-8-13 sample
- [x] EB-2 2-15 purge dry 2-15
- [x] MW-101 JSR
- [x] MW-102 Todd
- [x] MW-103 6-14
- [x] MW-104 6-14
- [x] MW-202 JSR
- [ ] ~~MW-203~~
- [x] MW-204 JSR ~~purge dry~~ done 2-7-13
- [x] P13-102 2-15
- [x] P13-103 2-15 Dup DR-10
- [x] MW-1 DEEP 2-14
- [x] MW-1 SHALLOW 2-14
- [x] MW-2 DEEP
- [x] MW-2 SHALLOW DRY
- [x] MW-3 DEEP 2-13

Groundwater Samples (cont.)

- [x] MW-3 SHALLOW Dry 2-13
- [x] MW-4 DEEP 2-14
- [x] MW-4 SHALLOW 2-14 purge dry 2-15 sample
- [x] MW-5 DEEP JSR
- [x] MW-5 SHALLOW JSR
- [x] MW-6 DEEP 2-14
- [x] MW-6 SHALLOW 2-14

Other Samples

- [x] AT-2

Quality Control Samples

Blind Duplicates

- [x] DR-8 (of DR-3) 2-8-13
- [x] DR-9
- [x] DR-10 of P13-103 2-15
- [x] DR-11 of DR-4

Field Blanks

- [x] FB

Flowrate Measurements

- [x] DR-1 — iced
- [x] DR-2
- [x] DR-7
- [x] DR-4-SW
- [x] DR-G
- [x] DR-1A
- [x] DR-2A
- [x] DR-3A

Additional Tasks

- [x] Pond inspection completed
- [ ] Pond water levels measured — iced

Need Boxes for pictures

pictures

DR-1 ✓

DR-2 ✓

⋮

Rico Water Sampling Form: *Calibration Information*

Name of instrument: GeoTech Rental YSI 556 MPS

Date: 2-13-13

J Gisseman

Perfom calibration check in order listed below. Check off if calibration is successful:

- [x] OK Electrical Conductivity standard 1413 µS/cm Reading 1,398 mS/cm
- [x] OK pH Standards 7.0, 4.0 Readings: 7.07, 4.07
- [ ] Dissolved Oxygen 09:33 DO water,
- [ ] ORP No solution to check

Calibration Notes:

Ran calibration check - GeoTech rental unit company said to check calibration daily - not calibrate daily.

DO: used DI water - should stabilize between 70 + 100 % - OK at 72.4%

Rico Water Sampling Form: *Calibration Information*

Name of instrument: HANNA HI 9828

Date: 2-14-13

Perfom calibrations in order listed below. Check off if calibration is successful:

- [x] Electrical Conductivity
- [x] pH
- [x] Dissolved Oxygen
- [x] ORP

J GISSEMAN
0846 start
0935 finish

Calibration Notes:

Cal Solution HI 9828-0

pH - out of scale - skipped

Conductivity - OK

DO - invalid input

- pH 3 point Cal

	Solution	Initial		final
pH	7.0	7.68	OK	7.06
	4.0	4.36	OK	4.0
	10.0	9.79	OK	

ORP temp 16.40° Zobell: 234.5 192.4 OK

DO w/ DI water 110.0% → 100% OK

Rico Water Sampling Form: *Calibration Information*

Name of instrument: YSI 55 MPS GeoTech Rental

Date: 2-14-13
0846 start
0946 finish

Perfom calibrations in order listed below. Check off if calibration is successful:

- [x] Electrical Conductivity
- [x] pH
- [x] Dissolved Oxygen
- [x] ORP

Calibration Notes:

	Cal Solution	Initial reading	Calibrated
Conductivity	1413 µS/cm	1.388 mS/cm	OK 1.618
pH	7.0	~~-8.1 pH mV~~	~~-6.8 pH mV~~
	4.0	~~-6.1~~ 3.99	4.0 OK
	10.0	9.57	9.92 OK
ORP	Temp 15.7°C 20 Bell 234.0	230.4	234.0 OK
DO	tap water 551.3 mmHg	73.1 DO%	72.5 % OK

Rico Water Sampling Form: *Calibration Information*

Name of instrument: HANNA HI 9828

Date: 2-15-13

J Gisseman

Perfom calibrations in order listed below. Check off if calibration is successful:

- [x] Electrical Conductivity
- [ ] pH
- [ ] Dissolved Oxygen
- [ ] ORP

Calibration Notes:

HI 9828-0 Cal
pH 7.0 OK, S conductivity, OK, DO - Invalid Input - Skipped

---

pH 7.0 - would not accept - said buffer was wrong but other meter confirmed buffer correct and not degraded.

Will not use meter

Rico Water Sampling Form: *Calibration Information*

Name of instrument: YSI 556 MPS Geotech Rental

Date: 2-15-13

Perfom calibrations in order listed below. Check off if calibration is successful:

J GISSEMAN

	Electrical Conductivity - out of range - not accepted
OK	pH
OK	Dissolved Oxygen
	ORP - no calibration solution

Calibration Notes:

	cal solution	Initial reading	final reading	
Conductivity	1413 µS/cm	1,669 mS/cm	out of range not accepted	
pH	7.0	7.06	6.99	OK
	4.0	3.75	4.0	OK
	10.0	9.92	9.99	OK
DO	554.9 mmHg	7.41 mg/L | 76.0 %		OK

Rico Water Sampling Form: *Calibration Information*

Name of instrument: YSI 556 MPS Geotech Rental

Date: 2-18-13

J GISSEMN

Perfom calibrations in order listed below. Check off if calibration is successful:

- [x] Electrical Conductivity
- [x] pH
- [x] Dissolved Oxygen
- [x] ORP

Calibration Notes:

	Standard	Initial Reading	Final	
Conductivity	1413 µS/cm	1,602 mS/cm²	1,413	OK
pH	7.0	6,79	7,0	OK
	4,0	3,92	4,0	OK
	10,0	10,37	10,05	OK
ORP	240 mV @ 25°C	Temp 13,9° 261,3	240.0	OK
DO	Tap Water 100%	549,4 mmHg 70,7 %	72,3 %	OK

Rico Water Sampling Form: *Calibration Information*

Name of instrument: YSI 556 MPS

Date: 2-20-13
J Gisseman

Perfom calibrations in order listed below. Check off if calibration is successful:

- [x] ~~Electrical~~ Conductivity Specific Conductivity
- [x] pH
- [x] Dissolved Oxygen
- [x] ORP

Calibration Notes:

	Standard	Initial Reading	Final Reading	
Specific Conductivity	1413 µS/cm	1410 mS/cm	~~1480~~ 1413	OK
pH	7.0	missed	7.0	
	4.0	4.29	4.0	OK
	10.0	9.94	9.99	
ORP	240 mV at 25°C	temp 16.9°C 235.5	240	OK
~~937~~ DO	tap water 542.0 mmHg	71.4 %	71.3%	OK

Rico Water Sampling Form: *Calibration Information*

Name of instrument: Hanna HI 9828 Multimeter 2-7-13

Perfom calibrations in order listed below. Check off if calibration is successful:

- [x] Electrical Conductivity
- [x] pH
- [x] Dissolved Oxygen
- [x] ORP

Calibration Notes:

All calibrations successfull

Solutions used:

- Extech Instruments pH 4.01, 7.00, and 10.00 buffer solution
- Hanna Instruments HI 9828-0 Quick calibration solution
- Zobell's Solution Oxydation Reduction potential Standard solution

Rico Water Sampling Form: *Calibration Information*

Name of instrument: HANNA HI 9828

Date: 2-13-13

J Gissemann

Perfom calibrations in order listed below. Check off if calibration is successful:

- [x] OK Electrical Conductivity
- [x] OK pH
- [x] OK Dissolved Oxygen
- [x] OK ORP

Calibration Notes:

HI 9828-0 cal solution - Quick Calibration done

~~DO: used DI water - should stabilize between 70-100 DO%~~ for YSI

pH - OK

Conductivity - OK

DO - failed - invalid input

pH 3 point calibration

7.0 : 7:03 OK

4.0 : 3.95 OK 4:01

10.0 ; 10:23 OK 10:01

DO : 1 point cal with DI water point 100%

Initial 74.1% confirmed 100.0%

ORP

16.7° = 233.0 Initial 204.0 mV OK reading 232.8 mV

Rico Water Sampling Form: *Station Information*

Sampling completed at this location ☑
(Do not check box until **ALL** items have been completed)

☒ Surface Water ☐ Groundwater ☐ Other

Sample Location: **DR-1**

Field Sample ID (as shown on bottle label): DR-1-20130218

Date of Sample Collection: 2-18-13

Time of Sample Collection: 1605

Sampler's Identity: J Gisseman / T Barbee

FIELD PARAMETERS / MEASUREMENTS

pH	SPC, µS/cm	DO, ppm	Temp, °C	ORP, mV
8.25	349	13.87	2.00	103.4

YSI Meter

Picture taken of cross section? ☑ Yes

SAMPLE BOTTLE INFORMATION

Check if Collected	Analysis	Bottle size/Type	Preservative	Seal Color
☑	Total Metals, Hardness, Silica	250 mL HDPE	HNO_3	RED
☑	Dissolved Metals	250 mL HDPE	HNO_3	RED
☑	Potentially Dissolved Metals	250 mL HDPE	HNO_3	RED
☑	Alkalinity, TSS, TDS, Chloride, Sulfate	500 mL HDPE	None	None
☑	Salinity	250 mL HDPE	None	None
☑	Cyanide	250 mL HDPE	NaOH	GREEN
☑	Sulfide	250 mL HDPE	NaOH + Zn Acetate	BLACK
☑	Total Organic Carbon, Nitrate	250 mL Amber Glass	H_2SO_4	YELLOW

Notes:

On 2-6-13 DR-1 location was frozen over - could not be sampled

2/18/13 sampled

Rico Water Sampling Form: *Station Information*

☒ Surface Water ☐ Groundwater ☐ Other

Sampling completed at this location ☑
(Do not check box until **ALL** items have been completed)

Sample Location: **DR-2**

Field Sample ID (as shown on bottle label): DR-2_20130218

Date of Sample Collection: 2/18/13

Time of Sample Collection: 14:25

Sampler's Identity: TB

FIELD PARAMETERS / MEASUREMENTS

pH	~~EC~~ SC, µS/cm	DO, ppm	Temp, °C	ORP, mV
6.11	437	9.25	3.41	205.5

Ysi meter

Picture taken of cross section? ☑ Yes

SAMPLE BOTTLE INFORMATION

Check if Collected	Analysis	Bottle size/Type	Preservative	Seal Color
☑	Total Metals, Hardness, Silica	250 mL HDPE	HNO_3	RED
☑	Dissolved Metals	250 mL HDPE	HNO_3	RED
☑	Potentially Dissolved Metals	250 mL HDPE	HNO_3	RED
☑	Alkalinity, TSS, TDS, Chloride, Sulfate	500 mL HDPE	None	None
☑	Salinity	250 mL HDPE	None	None
☑	Cyanide	250 mL HDPE	NaOH	GREEN
☑	Sulfide	250 mL HDPE	NaOH + Zn Acetate	BLACK
☑	Total Organic Carbon, Nitrate	250 mL Amber Glass	H_2SO_4	YELLOW

Notes:

Rico Water Sampling Form: *Station Information*

Sampling completed at this location ☑
(Do not check box until **ALL** items have been completed)

☒ Surface Water ☐ Groundwater ☐ Other

Sample Location: **DR-3**

Field Sample ID (as shown on bottle label): DR-3_20130208

Date of Sample Collection: 2-8-13

Time of Sample Collection: 0800

Sampler's Identity: J. Roehrig / JSR

FIELD PARAMETERS / MEASUREMENTS

pH	EC, µS/cm	DO, ppm	Temp, °C	ORP, mV	Manual Flume Water Depth Measurement, ft
7.05	1393	2.19	14.52	57.6	0.56'

HANNA Meter

Data downloaded from transducer? ☑ Yes

Has transducer been cleaned and recalibrated? ☒ Yes (Monthly cleaning required)

SAMPLE BOTTLE INFORMATION

Check if Collected	Analysis	Bottle size/Type	Preservative	Seal Color
✓	Total Metals, Hardness, Silica	250 mL HDPE	HNO_3	RED
✓	Dissolved Metals	250 mL HDPE	HNO_3	RED
✓	Potentially Dissolved Metals	250 mL HDPE	HNO_3	RED
✓	Alkalinity, TSS, TDS, Chloride, Sulfate	500 mL HDPE	None	None
✓	Salinity	250 mL HDPE	None	None
✓	Cyanide	250 mL HDPE	NaOH	GREEN
✓	Sulfide	250 mL HDPE	NaOH + Zn Acetate	BLACK
✓	Total Organic Carbon, Nitrate	250 mL Amber Glass	H_2SO_4	YELLOW

Notes:

A duplicate DR-8 was collected from this location;

Rico Water Sampling Form: *Station Information*

☒ Surface Water ☐ Groundwater ☐ Other

Sampling completed at this location ☑
(Do not check box until **ALL** items have been completed)

Sample Location: **DR-4**

Field Sample ID (as shown on bottle label): DR-4-20130218

Date of Sample Collection: 2-18-13

Time of Sample Collection: 3:33

Sampler's Identity: TB / JG

FIELD PARAMETERS / MEASUREMENTS

pH	SPC, µS/cm	DO, ppm	Temp, °C	ORP, mV
8.01	1287	7.29	9.38	100.9

YSI METER

Discharge Pipe Flowrates			
Upper Pipe		Lower Pipe	
Depth	Velocity	Depth	Velocity
.45	6.85	No measurement	
.2			

SAMPLE BOTTLE INFORMATION

Check if Collected	Analysis	Bottle size/Type	Preservative	Seal Color
☑	Total Metals, Hardness, Silica	250 mL HDPE	HNO_3	RED
☑	Dissolved Metals	250 mL HDPE	HNO_3	RED
☑	Potentially Dissolved Metals	250 mL HDPE	HNO_3	RED
☑	Alkalinity, TSS, TDS, Chloride, Sulfate	500 mL HDPE	None	None
☑	Salinity	250 mL HDPE	None	None
☑	Cyanide	250 mL HDPE	NaOH	GREEN
☑	Sulfide	250 mL HDPE	NaOH + Zn Acetate	BLACK
☑	Total Organic Carbon, Nitrate	250 mL Amber Glass	H_2SO_4	YELLOW

Notes: Took DR-11 at this Location

Rico Water Sampling Form: *Station Information*

☒ Surface Water ☐ Groundwater ☐ Other

Sampling completed at this location ☑
(Do not check box until **ALL** items have been completed)

Sample Location: **DR-5**

Field Sample ID (as shown on bottle label): DR-5_20130218

Date of Sample Collection: 2/18/13

Time of Sample Collection: 311

Sampler's Identity: TB / J

Benchmark Elevation: 542

Spillway Water Elevation: 812

☐ East to West

☑ West to East

Velocity (ft/sec)		Depth (ft)	
1	0.16	4.19	10.4	4.4
2	0.19	5.07	20.4	5.4
3	0.16	6.08	30.5	6.3

FIELD PARAMETERS / MEASUREMENTS

YSI METER

pH	SPC, µS/cm	DO, ppm	Temp, °C	ORP, mV
7.48	1324	10.91	2.28	106.1

SU

Picture taken of cross section? ☑ Yes

SAMPLE BOTTLE INFORMATION

Check if Collected	Analysis	Bottle size/Type	Preservative	Seal Color
☑	Total Metals, Hardness, Silica	250 mL HDPE	HNO_3	RED
☑	Dissolved Metals	250 mL HDPE	HNO_3	RED
☑	Potentially Dissolved Metals	250 mL HDPE	HNO_3	RED
☑	Alkalinity, TSS, TDS, Chloride, Sulfate	500 mL HDPE	None	None
☑	Salinity	250 mL HDPE	None	None
☑	Cyanide	250 mL HDPE	NaOH	GREEN
☑	Sulfide	250 mL HDPE	NaOH + Zn Acetate	BLACK
☑	Total Organic Carbon, Nitrate	250 mL Amber Glass	H_2SO_4	YELLOW

Notes:

Rico Water Sampling Form: *Station Information*

Sampling completed at this location ☑
(Do not check box until **ALL** items have been completed)

☒ Surface Water ☐ Groundwater ☐ Other

Sample Location: **DR-6**

Field Sample ID (as shown on bottle label): DR-6-20130218

Date of Sample Collection: 2/18/13

Time of Sample Collection: 2:59

Sampler's Identity: TB

FIELD PARAMETERS / MEASUREMENTS YSI METER

pH	SpC, µS/cm	DO, ppm	Temp, °C	ORP, mV	Manual Flume Water Depth Measurement, ft
7.08	376	11.16	1.38	11.1	5 7/16" = 0.45'

Data downloaded from transducer? ☑ Yes

Has transducer been cleaned and recalibrated? ☐ Yes ☑ No (Only required every 3 months: Jan, Apr, Jul, Oct)

Have batteries been replaced? ☐ Yes ☑ No (Replace once a year in January)

SAMPLE BOTTLE INFORMATION

Check if Collected	Analysis	Bottle size/Type	Preservative	Seal Color
☑	Total Metals, Hardness, Silica	250 mL HDPE	HNO_3	RED
☑	Dissolved Metals	250 mL HDPE	HNO_3	RED
☑	Potentially Dissolved Metals	250 mL HDPE	HNO_3	RED
☑	Alkalinity, TSS, TDS, Chloride, Sulfate	500 mL HDPE	None	None
☑	Salinity	250 mL HDPE	None	None
☑	Cyanide	250 mL HDPE	NaOH	GREEN
☑	Sulfide	250 mL HDPE	NaOH + Zn Acetate	BLACK
☑	Total Organic Carbon, Nitrate	250 mL Amber Glass	H_2SO_4	YELLOW

Notes: mark, has the manual flume water Depth -TB

Rico Water Sampling Form: *Station Information*

Sampling completed at this location ☑
(Do not check box until **ALL** items have been completed)

☒ Surface Water ☐ Groundwater ☐ Other

Sample Location: **DR-7**

Field Sample ID (as shown on bottle label): DR-7_20130218

Date of Sample Collection: 2-18-13

Time of Sample Collection: 1200

Sampler's Identity: J GISSEMAN / T BARBEE

FIELD PARAMETERS / MEASUREMENTS YSI METER

pH	SPC, µS/cm	DO, ppm	Temp, °C	ORP, mV
5.72	678	9.24	4.08	246.9

SC

Picture taken of cross section? ☑ Yes

SAMPLE BOTTLE INFORMATION

Check if Collected	Analysis	Bottle size/Type	Preservative	Seal Color
✓	Total Metals, Hardness, Silica	250 mL HDPE	HNO_3	RED
✓	Dissolved Metals	250 mL HDPE	HNO_3	RED
✓	Potentially Dissolved Metals	250 mL HDPE	HNO_3	RED
✓	Alkalinity, TSS, TDS, Chloride, Sulfate	500 mL HDPE	None	None
✓	Salinity	250 mL HDPE	None	None
✓	Cyanide	250 mL HDPE	NaOH	GREEN
✓	Sulfide	250 mL HDPE	NaOH + Zn Acetate	BLACK
✓	Total Organic Carbon, Nitrate	250 mL Amber Glass	H_2SO_4	YELLOW

Notes: Jodee Sampler
Tim Tester

Rico Water Sampling Form: *Station Information*

Sampling completed at this location ☑
(Do not check box until **ALL** items have been completed)

☒ Surface Water ☐ Groundwater ☐ Other

Sample Location: **DR-4-SW**

Field Sample ID (as shown on bottle label): DR-4-SW 20130220

Date of Sample Collection: 2/20/13

Time of Sample Collection: 12:40

Sampler's Identity: T. THACKER / J. GISSEMAN

FIELD PARAMETERS / MEASUREMENTS YSI METER

pH	SpC, µS/cm	DO, ppm	Temp, °C	ORP, mV
4.12	656	10.45	0.02	355.9

Specific

Picture taken of cross section? ☑ Yes

SAMPLE BOTTLE INFORMATION

Check if Collected	Analysis	Bottle size/Type	Preservative	Seal Color
☑	Total Metals, Hardness, Silica	250 mL HDPE	HNO_3	RED
☑	Dissolved Metals	250 mL HDPE	HNO_3	RED
☑	Potentially Dissolved Metals	250 mL HDPE	HNO_3	RED
☑	Alkalinity, TSS, TDS, Chloride, Sulfate	500 mL HDPE	None	None
☑	Salinity	250 mL HDPE	None	None
☑	Cyanide	250 mL HDPE	NaOH	GREEN
☑	Sulfide	250 mL HDPE	NaOH + Zn Acetate	BLACK
☑	Total Organic Carbon, Nitrate	250 mL Amber Glass	H_2SO_4	YELLOW

Notes:

Approx. half of river covered in ice, ice shelves on both banks of river, bottom ice present

Rico Water Sampling Form: *Station Information*

Sampling completed at this location ☐
(Do not check box until **ALL** items have been completed)

☒ Surface Water ☐ Groundwater ☐ Other

Sample Location: **DR-G**

Field Sample ID (as shown on bottle label): DR-G 20130220

Date of Sample Collection: 2/20/13

Time of Sample Collection: 1:30

Sampler's Identity: J GISSEMAN / T BARBEE

FIELD PARAMETERS / MEASUREMENTS YSI METER

pH	SEC, µS/cm	DO, ppm	Temp, °C	ORP, mV
8.05	609	12.25	.04	246

Picture taken of cross section? ☑ Yes

SAMPLE BOTTLE INFORMATION

Check if Collected	Analysis	Bottle size/Type	Preservative	Seal Color
✓	Total Metals, Hardness, Silica	250 mL HDPE	HNO_3	RED
✓	Dissolved Metals	250 mL HDPE	HNO_3	RED
✓	Potentially Dissolved Metals	250 mL HDPE	HNO_3	RED
✓	Alkalinity, TSS, TDS, Chloride, Sulfate	500 mL HDPE	None	None
✓	Salinity	250 mL HDPE	None	None
✓	Cyanide	250 mL HDPE	NaOH	GREEN
✓	Sulfide	250 mL HDPE	NaOH + Zn Acetate	BLACK
✓	Total Organic Carbon, Nitrate	250 mL Amber Glass	H_2SO_4	YELLOW

Notes:
Approx 8' diameter hole in the ice at the center of the river. no ~~frazzle~~ frazil ice or bottom ice

Rico Water Sampling Form: *Station Information*

☒ Surface Water ☐ Groundwater ☐ Other

Sampling completed at this location ☐
(Do not check box until **ALL** items have been completed)

Sample Location: **DR-1 COMPOSITE**

Field Sample ID (as shown on bottle label):

Date of Sample Collection: 2/18/13

Time of Sample Collection: iced over

Sampler's Identity:

Collected:
☐ East to West
☐ West to East

FIELD PARAMETERS / MEASUREMENTS

Compartment Number	Compartment Width, ft	pH	EC, µS/cm	DO, ppm	Temp, °C	ORP, mV
Total Composite	Total Width*:					

*Width here must match width on corresponding flow measurement sheet from Stream Flow Measurements Form

SAMPLE BOTTLE INFORMATION

Check if Collected	Analysis	Bottle size/Type	Preservative	Seal Color
☐	Total Metals, Hardness, Silica	250 mL HDPE	HNO_3	RED
☐	Dissolved Metals	250 mL HDPE	HNO_3	RED
☐	Potentially Dissolved Metals	250 mL HDPE	HNO_3	RED
☐	Alkalinity, TSS, TDS, Chloride, Sulfate	500 mL HDPE	None	None
☐	Salinity	250 mL HDPE	None	None
☐	Cyanide	250 mL HDPE	NaOH	GREEN
☐	Sulfide	250 mL HDPE	NaOH + Zn Acetate	BLACK
☐	Total Organic Carbon, Nitrate	250 mL Amber Glass	H_2SO_4	YELLOW

Notes:

Rico Water Sampling Form: *Station Information*

Sampling completed at this location ☑
(Do not check box until **ALL** items have been completed)

☒ Surface Water ☐ Groundwater ☐ Other

Sample Location: **DR-2 COMPOSITE**

Field Sample ID (as shown on bottle label): DR -2 composite _ 20132 18

Date of Sample Collection: 2/18/13

Time of Sample Collection: 1200

Sampler's Identity: TB JG

Collected:
☑ East to West
☐ West to East

YSI METER

FIELD PARAMETERS / MEASUREMENTS

Compartment Number	Compartment Width, ft	pH (4)	SEC, µS/cm (2)	DO, ppm (3)	Temp, °C (1)	ORP, mV
1	6	4.87	448	10.24	3.35	277.4
2	6	4.80	430	9.77	3.18	280.7
3	6	4.79	433	9.69	3.15	277.0
4	6	4.94	455	9.56	3.23	263.8
ice on surface 5	6	4.67	507	8.40	3.72	250.0
Total Composite	Total Width*:	5.77	453	9.70	3.40	218.9

*Width here must match width on corresponding flow measurement sheet from Stream Flow Measurements Form

SAMPLE BOTTLE INFORMATION

Check if Collected	Analysis	Bottle size/Type	Preservative	Seal Color
☑	Total Metals, Hardness, Silica	250 mL HDPE	HNO_3	RED
☑	Dissolved Metals	250 mL HDPE	HNO_3	RED
☑	Potentially Dissolved Metals	250 mL HDPE	HNO_3	RED
☑	Alkalinity, TSS, TDS, Chloride, Sulfate	500 mL HDPE	None	None
☑	Salinity	250 mL HDPE	None	None
☑	Cyanide	250 mL HDPE	NaOH	GREEN
☑	Sulfide	250 mL HDPE	NaOH + Zn Acetate	BLACK
☑	Total Organic Carbon, Nitrate	250 mL Amber Glass	H_2SO_4	YELLOW

Notes: 30 ft 5 comp / 6 ft
Iodce in water
Tim on shore
Comp. 5 ice on surface

Rico Water Sampling Form: *Station Information*

☒ Surface Water ☐ Groundwater ☐ Other

Sampling completed at this location ☑
(Do not check box until **ALL** items have been completed)

Sample Location: **DR-7 COMPOSITE**

Field Sample ID (as shown on bottle label): DR-7_COMP_20130218

Date of Sample Collection: 2-18-13

Time of Sample Collection: 1155

Sampler's Identity: J GISSEMAN / T BARBEE

Collected:
☐ East to West
☒ West to East

FIELD PARAMETERS / MEASUREMENTS YSI METER

Compartment Number	Compartment Width, ft	pH	SEC, µS/cm	DO, ppm	Temp, °C	ORP, mV
#1	6	3.60	662	10.25	3.42	394.7
2	6	3.64	650	10.02	3.33	390.9
3	6	3.79	606	9.96	3.09	379.2
4	6	4.45	581	9.97	3.05	342.1
5	6	4.66	582	9.94	3.12	325.6
6	6	4.90	581	9.86	3.18	308.6
7	6	4.95	603	9.36	3.74	301.0
Total Composite	Total Width*:	7.07	613	9.00	4.01	193.4

*Width here must match width on corresponding flow measurement sheet from Stream Flow Measurements Form

SAMPLE BOTTLE INFORMATION

Check if Collected	Analysis	Bottle size/Type	Preservative	Seal Color
✓	Total Metals, Hardness, Silica	250 mL HDPE	HNO_3	RED
✓	Dissolved Metals	250 mL HDPE	HNO_3	RED
✓	Potentially Dissolved Metals	250 mL HDPE	HNO_3	RED
✓	Alkalinity, TSS, TDS, Chloride, Sulfate	500 mL HDPE	None	None
✓	Salinity	250 mL HDPE	None	None
✓	Cyanide	250 mL HDPE	NaOH	GREEN
✓	Sulfide	250 mL HDPE	NaOH + Zn Acetate	BLACK
✓	Total Organic Carbon, Nitrate	250 mL Amber Glass	H_2SO_4	YELLOW

Notes: 7 comp. 6 ft width 44 ft wide crossing
Jedec in water
Tim on shore

Rico Water Sampling Form: *Station Information*

☒ Surface Water ☐ Groundwater ☐ Other

Sample Location: **DR-4-SW COMPOSITE**

Field Sample ID (as shown on bottle label):

Date of Sample Collection: 2/18/13

Time of Sample Collection: iced over

Sampler's Identity:

Sampling completed at this location ☐
(Do not check box until **ALL** items have been completed)

Collected:
☐ East to West
☐ West to East

FIELD PARAMETERS / MEASUREMENTS

Compartment Number	Compartment Width, ft	pH	EC, µS/cm	DO, ppm	Temp, °C	ORP, mV
Total Composite	Total Width*:					

*Width here must match width on corresponding flow measurement sheet from Stream Flow Measurements Form

SAMPLE BOTTLE INFORMATION

Check if Collected	Analysis	Bottle size/Type	Preservative	Seal Color
☐	Total Metals, Hardness, Silica	250 mL HDPE	HNO_3	RED
☐	Dissolved Metals	250 mL HDPE	HNO_3	RED
☐	Potentially Dissolved Metals	250 mL HDPE	HNO_3	RED
☐	Alkalinity, TSS, TDS, Chloride, Sulfate	500 mL HDPE	None	None
☐	Salinity	250 mL HDPE	None	None
☐	Cyanide	250 mL HDPE	NaOH	GREEN
☐	Sulfide	250 mL HDPE	NaOH + Zn Acetate	BLACK
☐	Total Organic Carbon, Nitrate	250 mL Amber Glass	H_2SO_4	YELLOW

Notes:

Rico Water Sampling Form: *Station Information*

☐ Surface Water ☒ Groundwater ☐ Other

Sampling completed at this location ☒
(Do not check box until **ALL** items have been completed)

Sample Location: **GW-1**

Field Sample ID (as shown on bottle label): GW-1 _ 20130206

Date of Sample Collection: 2-6-13

Time of Sample Collection: 330p

Sampler's Identity: BL

FIELD PARAMETERS / MEASUREMENTS

Measured Water Level: 2.08 ft

Total Well Depth (Bottom): 6.44 ft

	pH	EC, µS/cm	DO, ppm	Temp, ~~°C~~ °F	ORP, mV
1st purge volume	7.99	404		42.6	
2nd purge volume	7.96	349		43.7	
3rd purge volume	7.73	331		38.6	
Collected Sample	8.07	330	3.31	5.85°C	

EXTECH ExStik II meter

Total Purge Volume: 4.25 gal

SAMPLE BOTTLE INFORMATION

Check if Collected	Analysis	Bottle size/Type	Preservative	Seal Color
X	Total Metals, Hardness, Silica	250 mL HDPE	HNO_3	RED
X	Dissolved Metals (Field Filtered)	250 mL HDPE	HNO_3	RED
X	Potentially Dissolved Metals	250 mL HDPE	HNO_3	RED
X	Alkalinity, TSS, TDS, Chloride, Sulfate	500 mL HDPE	None	None
X	Salinity	250 mL HDPE	None	None
X	Cyanide	250 mL HDPE	NaOH	GREEN
X	Sulfide	250 mL HDPE	NaOH + Zn Acetate	BLACK
X	Total Organic Carbon, Nitrate	250 mL Amber Glass	H_2SO_4	YELLOW

Notes:

Measured Depth	Quantity (gal) to Purge X Volumes 1	3
0.00	1.70	5.10
0.25	1.66	4.97
0.50	1.61	4.84
0.75	1.57	4.71
1.00	1.53	4.58
1.25	1.48	4.44
1.50	1.44	4.31
1.75	1.39	4.18
2.00	1.35	4.05
2.25	1.31	3.92
2.50	1.26	3.79
2.75	1.22	3.66
3.00	1.18	3.53
3.25	1.13	3.40
3.50	1.09	3.27
3.75	1.05	3.14
4.00	1.00	3.01
4.25	0.96	2.88
4.50	0.92	2.75
4.75	0.87	2.61
5.00	0.83	2.48
5.25	0.78	2.35
5.50	0.74	2.22
5.75	0.70	2.09
6.00	0.65	1.96
6.25	0.61	1.83
6.50	0.57	1.70
6.75	0.52	1.57
7.00	0.48	1.44
7.25	0.44	1.31
7.50	0.39	1.18
7.75	0.35	1.05
8.00	0.31	0.92
8.25	0.26	0.78
8.50	0.22	0.65
8.75	0.17	0.52
9.00	0.13	0.39
9.25	0.09	0.26
9.50	0.04	0.13

Rico Water Sampling Form: *Station Information*

☐ Surface Water ☒ Groundwater ☐ Other

Sampling completed at this location ☑
(Do not check box until **ALL** items have been completed)

Sample Location: **GW-3**

Field Sample ID (as shown on bottle label): GW-3 — 20130207

Date of Sample Collection: 2-7-13 and 2-8-13

Time of Sample Collection: 930

Sampler's Identity: J Roehrig

FIELD PARAMETERS / MEASUREMENTS

Measured Water Level: 12.97 ft 13.04 $\frac{2.04}{2.11} = 96.7\%$

Total Well Depth (Bottom): 15.08 ft

2.11 2.04

	pH	EC, µS/cm	DO, ppm	Temp, °C	ORP, mV
1st purge volume	7.66	375		6.3°C 41.3°F	
2nd purge volume					
3rd purge volume					
Collected Sample	7.68	205	3.49	9.62	65.0

2-7-13 HANNA METER

Total Purge Volume: ~~0.9~~ 0.4 gal

SAMPLE BOTTLE INFORMATION

Check if Collected	Analysis	Bottle size/Type	Preservative	Seal Color
✓	Total Metals, Hardness, Silica 2-8-13/0830	250 mL HDPE	HNO_3	RED
✓	Dissolved Metals (Field Filtered) 2-8-13/0830	250 mL HDPE	HNO_3	RED
✓	Potentially Dissolved Metals 2-7-13	250 mL HDPE	HNO_3	RED
✓	Alkalinity, TSS, TDS, Chloride, Sulfate 2-7-13	500 mL HDPE	None	None
✓	Salinity 2-7-13	250 mL HDPE	None	None
✓	Cyanide 2-7-13/1345	250 mL HDPE	NaOH	GREEN
✓	Sulfide 2-8-13/0830	250 mL HDPE	NaOH + Zn Acetate	BLACK
✓	Total Organic Carbon, Nitrate 2-8-13/0830	250 mL Amber Glass	H_2SO_4	YELLOW

Notes: purged Dry on 2-6-13 @ 1545.

2-7-13 @ 1330 well recharged to 97%. ~~of original~~

Sample well;

Only a portion of samples collected (3 bottles as noted), due to water in well; JSR 2-7-13

Remainder of sample collected on 2-8-13/0830 – not enough sample to collect WQ on 2-8-13 JSR 2-8-13

Measured Depth	Quantity (gal) to Purge X Volumes 1	3
5.75	1.66	4.99
6.00	1.62	4.86
6.25	1.58	4.73
6.50	1.53	4.60
6.75	1.49	4.47
7.00	1.45	4.34
7.25	1.40	4.21
7.50	1.36	4.08
7.75	1.32	3.95
8.00	1.27	3.82
8.25	1.23	3.69
8.50	1.19	3.56
8.75	1.14	3.43
9.00	1.10	3.29
9.25	1.05	3.16
9.50	1.01	3.03
9.75	0.97	2.90
10.00	0.92	2.77
10.25	0.88	2.64
10.50	0.84	2.51
10.75	0.79	2.38
11.00	0.75	2.25
11.25	0.71	2.12
11.50	0.66	1.99
11.75	0.62	1.86
12.00	0.58	1.73
12.25	0.53	1.59
12.50	0.49	1.46
12.75	0.44	1.33
13.00	0.40	1.20
13.25	0.36	1.07
13.50	0.31	0.94
13.75	0.27	0.81
14.00	0.23	0.68
14.25	0.18	0.55
14.50	0.14	0.42
14.75	0.10	0.29
15.00	0.05	0.16
15.25	0.01	0.03

Rico Water Sampling Form: *Station Information*

☐ Surface Water ☒ Groundwater ☐ Other

Sampling completed at this location ☑
(Do not check box until **ALL** items have been completed)

Sample Location: **GW-4**

Field Sample ID (as shown on bottle label): GW-4-20130214

Date of Sample Collection: 2-14-13

Time of Sample Collection: 1247

Sampler's Identity: J GISSEMAN / J FREITAS

FIELD PARAMETERS / MEASUREMENTS

Measured Water Level: 10.96 ft

Total Well Depth (Bottom): 14.97 ft

HANNA METER

2-14-13

	pH	EC, µS/cm	DO, ppm	Temp, °C	ORP, mV	Time	Purge Vol gal
1st purge volume	8.75	782	0	3.62	67.7	1236	1.5
2nd purge volume	8.11	828	0.14	3.55	71.3	1241	3.75
3rd purge volume	7.75	860	1.26	3.38	72.1	1244	5.0
Collected Sample	7.51	861	0.94	3.35	72.0	1247	5.2

Total Purge Volume: 5.2 ft

SAMPLE BOTTLE INFORMATION

Check if Collected	Analysis	Bottle size/Type	Preservative	Seal Color
✓	Total Metals, Hardness, Silica	250 mL HDPE	HNO_3	RED
✓	Dissolved Metals (Field Filtered)	250 mL HDPE	HNO_3	RED
✓	Potentially Dissolved Metals	250 mL HDPE	HNO_3	RED
✓	Alkalinity, TSS, TDS, Chloride, Sulfate	500 mL HDPE	None	None
✓	Salinity	250 mL HDPE	None	None
✓	Cyanide	250 mL HDPE	NaOH	GREEN
✓	Sulfide	250 mL HDPE	NaOH + Zn Acetate	BLACK
✓	Total Organic Carbon, Nitrate	250 mL Amber Glass	H_2SO_4	YELLOW

Notes:

purge volume 2.04 gal

Fine grain sand + silt, Dark brown color

10.95

Measured Depth	Quantity (gal) to Purge X Volumes 1	3
5.50	1.68	5.05
5.75	1.64	4.92
6.00	1.59	4.78
6.25	1.55	4.65
6.50	1.51	4.52
6.75	1.46	4.39
7.00	1.42	4.26
7.25	1.38	4.13
7.50	1.33	4.00
7.75	1.29	3.87
8.00	1.25	3.74
8.25	1.20	3.61
8.50	1.16	3.48
8.75	1.12	3.35
9.00	1.07	3.22
9.25	1.03	3.09
9.50	0.98	2.95
9.75	0.94	2.82
10.00	0.90	2.69
10.25	0.85	2.56
10.50	0.81	2.43
10.75	0.77	2.30
11.00	0.72	2.17
11.25	0.68	2.04
11.50	0.64	1.91
11.75	0.59	1.78
12.00	0.55	1.65
12.25	0.51	1.52
12.50	0.46	1.39
12.75	0.42	1.25
13.00	0.37	1.12
13.25	0.33	0.99
13.50	0.29	0.86
13.75	0.24	0.73
14.00	0.20	0.60
14.25	0.16	0.47
14.50	0.11	0.34
14.75	0.07	0.21
15.00	0.03	0.08

Rico Water Sampling Form: *Station Information*

☐ Surface Water ☒ Groundwater ☐ Other

Sampling completed at this location ✓
(Do not check box until **ALL** items have been completed)

Sample Location: **GW-5**

Field Sample ID (as shown on bottle label): GW-5-20130207

Date of Sample Collection: 2-7-13

Time of Sample Collection: 1100A

Sampler's Identity: J.Rohrig / BR

FIELD PARAMETERS / MEASUREMENTS

Measured Water Level: 22.52 ft

Total Well Depth (Bottom): 24.55 ft

	pH	EC, µS/cm	DO, ppm	Temp, °C	ORP, mV
1st purge volume				48.7°F	
2nd purge volume					
3rd purge volume					
Collected Sample	7.27	2273	1.00	9.01°C	75.5

HANNA METER

Total Purge Volume: 1.10 ~~ft~~ gal

SAMPLE BOTTLE INFORMATION

Check if Collected	Analysis	Bottle size/Type	Preservative	Seal Color
✓	Total Metals, Hardness, Silica	250 mL HDPE	HNO_3	RED
✓	Dissolved Metals (Field Filtered)	250 mL HDPE	HNO_3	RED
✓	Potentially Dissolved Metals	250 mL HDPE	HNO_3	RED
✓	Alkalinity, TSS, TDS, Chloride, Sulfate	500 mL HDPE	None	None
✓	Salinity	250 mL HDPE	None	None
✓	Cyanide	250 mL HDPE	NaOH	GREEN
✓	Sulfide	250 mL HDPE	NaOH + Zn Acetate	BLACK
✓	Total Organic Carbon, Nitrate	250 mL Amber Glass	H_2SO_4	YELLOW

Notes: Water parameter ExStikII malfunction and no water parameters were taken.

Measured Depth	Quantity (gal) to Purge X Volumes 1	3
15.00	1.66	4.97
15.25	1.61	4.84
15.50	1.57	4.71
15.75	1.53	4.58
16.00	1.48	4.44
16.25	1.44	4.31
16.50	1.39	4.18
16.75	1.35	4.05
17.00	1.31	3.92
17.25	1.26	3.79
17.50	1.22	3.66
17.75	1.18	3.53
18.00	1.13	3.40
18.25	1.09	3.27
18.50	1.05	3.14
18.75	1.00	3.01
19.00	0.96	2.88
19.25	0.92	2.75
19.50	0.87	2.61
19.75	0.83	2.48
20.00	0.78	2.35
20.25	0.74	2.22
20.50	0.70	2.09
20.75	0.65	1.96
21.00	0.61	1.83
21.25	0.57	1.70
21.50	0.52	1.57
21.75	0.48	1.44
22.00	0.44	1.31
22.25	0.39	1.18
22.50	0.35	1.05
22.75	0.31	0.92
23.00	0.26	0.78
23.25	0.22	0.65
23.50	0.17	0.52
23.75	0.13	0.39
24.00	0.09	0.26
24.25	0.04	0.13
24.50	0.00	0.00

Rico Water Sampling Form: *Station Information*

☐ Surface Water ☒ Groundwater ☐ Other

Sample Location: **GW-6**

Field Sample ID (as shown on bottle label):

Date of Sample Collection: 2/14/13

Time of Sample Collection: 1230

Sampler's Identity: TB

Sampling completed at this location ☐
(Do not check box until **ALL** items have been completed)

FIELD PARAMETERS / MEASUREMENTS

Measured Water Level: _____ ft

Total Well Depth (Bottom): _____ ft

	pH	EC, µS/cm	DO, ppm	Temp, °C	ORP, mV
1st purge volume					
2nd purge volume					
3rd purge volume					
Collected Sample					

Total Purge Volume: _____ ft

SAMPLE BOTTLE INFORMATION

Check if Collected	Analysis	Bottle size/Type	Preservative	Seal Color
☐	Total Metals, Hardness, Silica	250 mL HDPE	HNO_3	RED
☐	Dissolved Metals (Field Filtered)	250 mL HDPE	HNO_3	RED
☐	Potentially Dissolved Metals	250 mL HDPE	HNO_3	RED
☐	Alkalinity, TSS, TDS, Chloride, Sulfate	500 mL HDPE	None	None
☐	Salinity	250 mL HDPE	None	None
☐	Cyanide	250 mL HDPE	NaOH	GREEN
☐	Sulfide	250 mL HDPE	NaOH + Zn Acetate	BLACK
☐	Total Organic Carbon, Nitrate	250 mL Amber Glass	H_2SO_4	YELLOW

Notes:

Well Frozen in 6" of ice
No Sample talk to mark
about ice

took picture

Maintenance - need to raise well above ground & install
Completion - current PVC well is at ground level covered
with ice

Measured Depth	Quantity (gal) to Purge X Volumes 1	3
17.25	1.68	5.03
17.50	1.63	4.89
17.75	1.59	4.76
18.00	1.54	4.63
18.25	1.50	4.50
18.50	1.46	4.37
18.75	1.41	4.24
19.00	1.37	4.11
19.25	1.33	3.98
19.50	1.28	3.85
19.75	1.24	3.72
20.00	1.20	3.59
20.25	1.15	3.46
20.50	1.11	3.33
20.75	1.07	3.20
21.00	1.02	3.06
21.25	0.98	2.93
21.50	0.93	2.80
21.75	0.89	2.67
22.00	0.85	2.54
22.25	0.80	2.41
22.50	0.76	2.28
22.75	0.72	2.15
23.00	0.67	2.02
23.25	0.63	1.89
23.50	0.59	1.76
23.75	0.54	1.63
24.00	0.50	1.50
24.25	0.45	1.36
24.50	0.41	1.23
24.75	0.37	1.10
25.00	0.32	0.97
25.25	0.28	0.84
25.50	0.24	0.71
25.75	0.19	0.58
26.00	0.15	0.45
26.25	0.11	0.32
26.50	0.06	0.19
26.75	0.02	0.06

Rico Water Sampling Form: *Station Information*

☐ Surface Water ☒ Groundwater ☐ Other

Sampling completed at this location ☑
(Do not check box until **ALL** items have been completed)

Sample Location: **GW-7**

Field Sample ID (as shown on bottle label): GW-7_ 20130215

Date of Sample Collection: 20130214 - 1110

Time of Sample Collection: 20130215_ 10:04

Sampler's Identity: TB

Measured Depth	Quantity (gal) to Purge X Volumes	
	1	3

FIELD PARAMETERS / MEASUREMENTS

Measured Water Level: 23.~~31~~ ft (old 23.31; new 23 34)

Total Well Depth (Bottom): 25.~~31~~ 15 ft (old 25.31; new 25 34)

2/15/13 23.41

	pH	~~SPC~~ mS/cm	DO, ppm	Temp, °C	ORP, mV
1st purge volume 1.20	4.33	1.614	15.10	9.61	~~308~~ 270.1
2nd purge volume	DRY				
3rd purge volume					
Collected Sample 10:04	6.09	1.640	32.6	8.51	172.6

YSI meter

2/15/13

Total Purge Volume: 1 gal ft

SAMPLE BOTTLE INFORMATION

Check if Collected	Analysis	Bottle size/Type	Preservative	Seal Color
✓	Total Metals, Hardness, Silica	250 mL HDPE	HNO_3	RED
✓	Dissolved Metals (Field Filtered)	250 mL HDPE	HNO_3	RED
✓	Potentially Dissolved Metals	250 mL HDPE	HNO_3	RED
✓	Alkalinity, TSS, TDS, Chloride, Sulfate	500 mL HDPE	None	None
✓	Salinity	250 mL HDPE	None	None
✓	Cyanide	250 mL HDPE	NaOH	GREEN
✓	Sulfide	250 mL HDPE	NaOH + Zn Acetate	BLACK
✓	Total Organic Carbon, Nitrate	250 mL Amber Glass	H_2SO_4	YELLOW

Notes:

No water in well

1/3 1 volum of purg. – Purged Dry 1 Volume

1 gal full purg

10:04 2/15/13 Sample taken

Rico Water Sampling Form: *Station Information*

☐ Surface Water ☒ Groundwater ☐ Other

Sampling completed at this location ☑
(Do not check box until **ALL** items have been completed)

Sample Location: **EB-1**

Field Sample ID (as shown on bottle label): EB-1 - 20130208

Date of Sample Collection: 2/8/13

Time of Sample Collection: 9:45

Sampler's Identity: J Roehrig / BL

FIELD PARAMETERS / MEASUREMENTS

Measured Water Level: 22.97 ft

Total Well Depth (Bottom): 33.36 ft

	pH	EC, µS/cm	DO, ppm	Temp, °C	ORP, mV
1st purge volume	—	—	—	—	—
2nd purge volume	—	—	—	—	—
3rd purge volume	—	—	—	—	—
Collected Sample	7.75	2173	0.37	9.43	51.4

HANNA METER

Total Purge Volume: 2.00 gal

SAMPLE BOTTLE INFORMATION

Check if Collected	Analysis	Bottle size/Type	Preservative	Seal Color
✓	Total Metals, Hardness, Silica	250 mL HDPE	HNO_3	RED
✓	Dissolved Metals (Field Filtered)	250 mL HDPE	HNO_3	RED
✓	Potentially Dissolved Metals	250 mL HDPE	HNO_3	RED
✓	Alkalinity, TSS, TDS, Chloride, Sulfate	500 mL HDPE	None	None
✓	Salinity	250 mL HDPE	None	None
✓	Cyanide	250 mL HDPE	NaOH	GREEN
✓	Sulfide	250 mL HDPE	NaOH + Zn Acetate	BLACK
✓	Total Organic Carbon, Nitrate	250 mL Amber Glass	H_2SO_4	YELLOW

Notes:

- Well purged dry - not enough water to collect WQ readings - purged less than 1 WV BR 2-7-13

- Sample collected from EB-1 on 2-8-13 BR

Measured Depth	Quantity (gal) to Purge X Volumes 1	3
19.00	2.85	8.55
19.25	2.81	8.42
19.50	2.76	8.29
19.75	2.72	8.16
20.00	2.68	8.03
20.25	2.63	7.90
20.50	2.59	7.77
20.75	2.54	7.63
21.00	2.50	7.50
21.25	2.46	7.37
21.50	2.41	7.24
21.75	2.37	7.11
22.00	2.33	6.98
22.25	2.28	6.85
22.50	2.24	6.72
22.75	2.20	6.59
23.00	2.15	6.46
23.25	2.11	6.33
23.50	2.07	6.20
23.75	2.02	6.07
24.00	1.98	5.94
24.25	1.93	5.80
24.50	1.89	5.67
24.75	1.85	5.54
25.00	1.80	5.41
25.25	1.76	5.28
25.50	1.72	5.15
25.75	1.67	5.02
26.00	1.63	4.89
26.25	1.59	4.76
26.50	1.54	4.63
26.75	1.50	4.50
27.00	1.46	4.37
27.25	1.41	4.24
27.50	1.37	4.10
27.75	1.32	3.97
28.00	1.28	3.84
28.25	1.24	3.71
28.50	1.19	3.58

Rico Water Sampling Form: *Station Information*

☐ Surface Water ☒ Groundwater ☐ Other

Sampling completed at this location ☑
(Do not check box until **ALL** items have been completed)

Sample Location: **EB-2**

Field Sample ID (as shown on bottle label): EB-2_20130214

Date of Sample Collection: 2-14-12

Time of Sample Collection: 1254

Sampler's Identity: TB

2/15/13

FIELD PARAMETERS / MEASUREMENTS

	New	old
Measured Water Level:	17 25 ft	17 33
Total Well Depth (Bottom):	26 64 ft	

	pH	SpC, µS/cm	DO, ppm	Temp, °C	ORP, mV
1st purge volume	5.39	4826	21.3	9 28	45.3
2nd purge volume	DRY				
3rd purge volume					
Collected Sample 10:22	5.58	4583	20.7	7.95	79.1

YSI MOTOR

Total Purge Volume: 2.5 ~~ft~~ gal

SAMPLE BOTTLE INFORMATION

Check if Collected	Analysis	Bottle size/Type	Preservative	Seal Color
✓	Total Metals, Hardness, Silica	250 mL HDPE	HNO_3	RED
✓	Dissolved Metals (Field Filtered)	250 mL HDPE	HNO_3	RED
✓	Potentially Dissolved Metals	250 mL HDPE	HNO_3	RED
✓	Alkalinity, TSS, TDS, Chloride, Sulfate	500 mL HDPE	None	None
✓	Salinity	250 mL HDPE	None	None
✓	Cyanide	250 mL HDPE	NaOH	GREEN
✓	Sulfide	250 mL HDPE	NaOH + Zn Acetate	BLACK
✓	Total Organic Carbon, Nitrate	250 mL Amber Glass	H_2SO_4	YELLOW

Notes:
Purg 2.5 gal called it Dry
Fe need 5gal for full purg.

2/15/13 10:22 Sample taken

Measured Depth	Quantity (gal) to Purge X Volumes 1	3
14.00	2.18	6.54
14.25	2.14	6.41
14.50	2.09	6.27
14.75	2.05	6.14
15.00	2.00	6.01
15.25	1.96	5.88
15.50	1.92	5.75
15.75	1.87	5.62
16.00	1.83	5.49
16.25	1.79	5.36
16.50	1.74	5.23
16.75	1.70	5.10
17.00	1.66	4.97
17.25	1.61	4.84
17.50	1.57	4.71
17.75	1.53	4.58
18.00	1.48	4.44
18.25	1.44	4.31
18.50	1.39	4.18
18.75	1.35	4.05
19.00	1.31	3.92
19.25	1.26	3.79
19.50	1.22	3.66
19.75	1.18	3.53
20.00	1.13	3.40
20.25	1.09	3.27
20.50	1.05	3.14
20.75	1.00	3.01
21.00	0.96	2.88
21.25	0.92	2.75
21.50	0.87	2.61
21.75	0.83	2.48
22.00	0.78	2.35
22.25	0.74	2.22
22.50	0.70	2.09
22.75	0.65	1.96
23.00	0.61	1.83
23.25	0.57	1.70
23.50	0.52	1.57

Rico Water Sampling Form: *Station Information*

☐ Surface Water ☒ Groundwater ☐ Other

Sampling completed at this location ☑
(Do not check box until **ALL** items have been completed)

Sample Location: **MW-101**

Field Sample ID (as shown on bottle label): MW-101_20130206

Date of Sample Collection: 2-6-13

Time of Sample Collection: ~~345~~

Sampler's Identity: JR [signature] Jeff Adelmy

FIELD PARAMETERS / MEASUREMENTS

Measured Water Level: 28.4 ft

Total Well Depth (Bottom): ~~38~~ 37.9 ft

	pH	EC, µS/cm	DO, ppm	Temp, °C	ORP, mV	
1st purge volume	6.31	1.680	0.76 ~~0.4~~	11.3	81.2	YSI METER
2nd purge volume	4.72	1.640	0.15.9%	11.4	~~#~~126.0	
3rd purge volume	5.07	1.610	0.15.3%	10.8	117.7	
Collected Sample	7.80	1746	0.16	10.52	46.2	HANNA METER

Total Purge Volume: 4.76 ~~#~~ gal.

SAMPLE BOTTLE INFORMATION

Check if Collected	Analysis	Bottle size/Type	Preservative	Seal Color
✓	Total Metals, Hardness, Silica	250 mL HDPE	HNO_3	RED
✓	Dissolved Metals (Field Filtered)	250 mL HDPE	HNO_3	RED
✓	Potentially Dissolved Metals	250 mL HDPE	HNO_3	RED
✓	Alkalinity, TSS, TDS, Chloride, Sulfate	500 mL HDPE	None	None
✓	Salinity	250 mL HDPE	None	None
✓	Cyanide	250 mL HDPE	NaOH	GREEN
✓	Sulfide	250 mL HDPE	NaOH + Zn Acetate	BLACK
✓	Total Organic Carbon, Nitrate	250 mL Amber Glass	H_2SO_4	YELLOW

Notes:
Sample collected, and logged as noted. JR 2-6-12

Measured Depth	Quantity (gal) to Purge X Volumes 1	3
23.00	2.55	7.64
23.25	2.50	7.51
23.50	2.46	7.38
23.75	2.42	7.25
24.00	2.37	7.12
24.25	2.33	6.98
24.50	2.28	6.85
24.75	2.24	6.72
25.00	2.20	6.59
25.25	2.15	6.46
25.50	2.11	6.33
25.75	2.07	6.20
26.00	2.02	6.07
26.25	1.98	5.94
26.50	1.94	5.81
26.75	1.89	5.68
27.00	1.85	5.55
27.25	1.81	5.42
27.50	1.76	5.29
27.75	1.72	5.15
28.00	1.67	5.02
28.25	1.63	4.89
28.50	1.59	4.76
28.75	1.54	4.63
29.00	1.50	4.50
29.25	1.46	4.37
29.50	1.41	4.24
29.75	1.37	4.11
30.00	1.33	3.98
30.25	1.28	3.85
30.50	1.24	3.72
30.75	1.20	3.59
31.00	1.15	3.45
31.25	1.11	3.32
31.50	1.06	3.19
31.75	1.02	3.06
32.00	0.98	2.93
32.25	0.93	2.80
32.50	0.89	2.67

Rico Water Sampling Form: *Station Information*

☐ Surface Water ☒ Groundwater ☐ Other

Sample Location: **MW-102**

Field Sample ID (as shown on bottle label): MW-102_20130207

Date of Sample Collection: 2-7-13

Time of Sample Collection: 1615

Sampler's Identity: J. Roehrig / JSR

Sampling completed at this location ☑
(Do not check box until **ALL** items have been completed)

FIELD PARAMETERS / MEASUREMENTS

Measured Water Level: 24.63 ft

Total Well Depth (Bottom): 31.22 ft

	pH	EC, µS/cm	DO, ppm	Temp, °C	ORP, mV
1st purge volume	6.61	1.157	29.5	10.64	156.4
2nd purge volume	6.81	1.154	27.8	11.67	187.1
3rd purge volume	6.69	1.137	27.1	11.50	184.1
Collected Sample	6.79	1200 µS/cm	1.20	12.49	56.7

YSI METER

HANNA METER

Total Purge Volume: 3.5 gal.

SAMPLE BOTTLE INFORMATION

Check if Collected	Analysis	Bottle size/Type	Preservative	Seal Color
✓	Total Metals, Hardness, Silica	250 mL HDPE	HNO_3	RED
✓	Dissolved Metals (Field Filtered)	250 mL HDPE	HNO_3	RED
✓	Potentially Dissolved Metals	250 mL HDPE	HNO_3	RED
✓	Alkalinity, TSS, TDS, Chloride, Sulfate	500 mL HDPE	None	None
✓	Salinity	250 mL HDPE	None	None
✓	Cyanide	250 mL HDPE	NaOH	GREEN
✓	Sulfide	250 mL HDPE	NaOH + Zn Acetate	BLACK
✓	Total Organic Carbon, Nitrate	250 mL Amber Glass	H_2SO_4	YELLOW

Notes:

Sample analyzed completed 2-7-13 JSR

Measured Depth	Quantity (gal) to Purge X Volumes 1	3
21.50	1.66	4.99
21.75	1.62	4.86
22.00	1.58	4.73
22.25	1.53	4.60
22.50	1.49	4.47
22.75	1.45	4.34
23.00	1.40	4.21
23.25	1.36	4.08
23.50	1.31	3.94
23.75	1.27	3.81
24.00	1.23	3.68
24.25	1.18	3.55
24.50	1.14	3.42
24.75	1.10	3.29
25.00	1.05	3.16
25.25	1.01	3.03
25.50	0.97	2.90
25.75	0.92	2.77
26.00	0.88	2.64
26.25	0.84	2.51
26.50	0.79	2.38
26.75	0.75	2.25
27.00	0.70	2.11
27.25	0.66	1.98
27.50	0.62	1.85
27.75	0.57	1.72
28.00	0.53	1.59
28.25	0.49	1.46
28.50	0.44	1.33
28.75	0.40	1.20
29.00	0.36	1.07
29.25	0.31	0.94
29.50	0.27	0.81
29.75	0.23	0.68
30.00	0.18	0.55
30.25	0.14	0.42
30.50	0.09	0.28
30.75	0.05	0.15
31.00	0.01	0.02

Rico Water Sampling Form: *Station Information*

☐ Surface Water ☒ Groundwater ☐ Other

Sampling completed at this location ☑
(Do not check box until **ALL** items have been completed)

Sample Location: **MW-103**

Field Sample ID (as shown on bottle label): MW-103-20130214

Date of Sample Collection: 2-14-13

Time of Sample Collection: 4:23

Sampler's Identity: TB

FIELD PARAMETERS / MEASUREMENTS

Measured Water Level: 6.99 ft

Total Well Depth (Bottom): 19.84 ft

704

	pH	SpC, µS/cm	DO, ppm	Temp, °C	ORP, mV
1st purge volume 4.08	6.57	1.836	14.1	5.31	75.7
2nd purge volume 4.15	6.56	1.851	14.7	5.35	70.0
3rd purge volume	6.47	1.861	18.7	4.67	68.1
Collected Sample 4.23	6.30	1.857	18.9	4.82	72.0

YSI METER

Total Purge Volume: 6.72 ft

SAMPLE BOTTLE INFORMATION

Check if Collected	Analysis	Bottle size/Type	Preservative	Seal Color
✓	Total Metals, Hardness, Silica	250 mL HDPE	HNO_3	RED
✓	Dissolved Metals (Field Filtered)	250 mL HDPE	HNO_3	RED
✓	Potentially Dissolved Metals	250 mL HDPE	HNO_3	RED
✓	Alkalinity, TSS, TDS, Chloride, Sulfate	500 mL HDPE	None	None
✓	Salinity	250 mL HDPE	None	None
✓	Cyanide	250 mL HDPE	NaOH	GREEN
✓	Sulfide	250 mL HDPE	NaOH + Zn Acetate	BLACK
✓	Total Organic Carbon, Nitrate	250 mL Amber Glass	H_2SO_4	YELLOW

Notes: great Recharge

Measured Depth	Quantity (gal) to Purge X Volumes 1	3
3.00	2.94	8.82
3.25	2.90	8.69
3.50	2.85	8.55
3.75	2.81	8.42
4.00	2.76	8.29
4.25	2.72	8.16
4.50	2.68	8.03
4.75	2.63	7.90
5.00	2.59	7.77
5.25	2.55	7.64
5.50	2.50	7.51
5.75	2.46	7.38
6.00	2.42	7.25
6.25	2.37	7.12
6.50	2.33	6.99
6.75	2.28	6.85
7.00	2.24	6.72
7.25	2.20	6.59
7.50	2.15	6.46
7.75	2.11	6.33
8.00	2.07	6.20
8.25	2.02	6.07
8.50	1.98	5.94
8.75	1.94	5.81
9.00	1.89	5.68
9.25	1.85	5.55
9.50	1.81	5.42
9.75	1.76	5.29
10.00	1.72	5.16
10.25	1.67	5.02
10.50	1.63	4.89
10.75	1.59	4.76
11.00	1.54	4.63
11.25	1.50	4.50
11.50	1.46	4.37
11.75	1.41	4.24
12.00	1.37	4.11
12.25	1.33	3.98
12.50	1.28	3.85

Rico Water Sampling Form: *Station Information*

☐ Surface Water ☒ Groundwater ☐ Other

Sampling completed at this location ☑
(Do not check box until **ALL** items have been completed)

Sample Location: **MW-104**

Field Sample ID (as shown on bottle label): MW-104_20130214

Date of Sample Collection: 2/14/13

Time of Sample Collection: 1:45 ⇒ 335 (1554)

Sampler's Identity: TB

FIELD PARAMETERS / MEASUREMENTS

Measured Water Level: 4.34 ft

Total Well Depth (Bottom): 17.88 ft

m 4.49

	pH	SpC, µS/cm	DO, ppm	Temp, °C	ORP, mV
1st purge volume 335	6.49	1.567	48.6	3.16	122.2
2nd purge volume 341	6.96	1.613	43.1	3.23	118.0
3rd purge volume 350	7.04	1.616	44.4	3.37	115.8
Collected Sample 354	6.66	1.610	44.5	3.10	136.9

YSI METER

Total Purge Volume: 7.00 ft

SAMPLE BOTTLE INFORMATION

Check if Collected	Analysis	Bottle size/Type	Preservative	Seal Color
✓	Total Metals, Hardness, Silica	250 mL HDPE	HNO_3	RED
✓	Dissolved Metals (Field Filtered)	250 mL HDPE	HNO_3	RED
✓	Potentially Dissolved Metals	250 mL HDPE	HNO_3	RED
✓	Alkalinity, TSS, TDS, Chloride, Sulfate	500 mL HDPE	None	None
✓	Salinity	250 mL HDPE	None	None
✓	Cyanide	250 mL HDPE	NaOH	GREEN
✓	Sulfide	250 mL HDPE	NaOH + Zn Acetate	BLACK
✓	Total Organic Carbon, Nitrate	250 mL Amber Glass	H_2SO_4	YELLOW

Notes: great Recharge

Measured Depth	Quantity (gal) to Purge X Volumes 1	3
0.00	3.11	9.34
0.25	3.07	9.21
0.50	3.03	9.08
0.75	2.98	8.95
1.00	2.94	8.82
1.25	2.89	8.68
1.50	2.85	8.55
1.75	2.81	8.42
2.00	2.76	8.29
2.25	2.72	8.16
2.50	2.68	8.03
2.75	2.63	7.90
3.00	2.59	7.77
3.25	2.55	7.64
3.50	2.50	7.51
3.75	2.46	7.38
4.00	2.42	7.25
4.25	2.37	7.12
4.50	2.33	6.99
4.75	2.28	6.85
5.00	2.24	6.72
5.25	2.20	6.59
5.50	2.15	6.46
5.75	2.11	6.33
6.00	2.07	6.20
6.25	2.02	6.07
6.50	1.98	5.94
6.75	1.94	5.81
7.00	1.89	5.68
7.25	1.85	5.55
7.50	1.81	5.42
7.75	1.76	5.29
8.00	1.72	5.15
8.25	1.67	5.02
8.50	1.63	4.89
8.75	1.59	4.76
9.00	1.54	4.63
9.25	1.50	4.50
9.50	1.46	4.37

Rico Water Sampling Form: *Station Information*

☐ Surface Water ☒ Groundwater ☐ Other

Sample Location: **MW-202**

Field Sample ID (as shown on bottle label):

Date of Sample Collection: N/A 2-8-13

Time of Sample Collection: N/A

Sampler's Identity: N/A

Sampling completed at this location ☐
(Do not check box until **ALL** items have been completed)

Measured Depth	Quantity (gal) to Purge X Volumes	
	1	3

Monitor Well casing is approx. 11 ft S. of Stake

Rico Water Sampling Form: *Station Information*

☐ Surface Water ☒ Groundwater ☐ Other

Sampling completed at this location ☐
(Do not check box until **ALL** items have been completed)

Sample Location: **MW-204**

Field Sample ID (as shown on bottle label): MW-204_20130207

Date of Sample Collection: 2-7-13

Time of Sample Collection: 1330

Sampler's Identity: J. Roehrig / BR

FIELD PARAMETERS / MEASUREMENTS

Measured Water Level: 14.67 ft 15.34

Total Well Depth (Bottom): 28.73 ft

14.06 13.39

13.39 / 14.06 = 95.2%

	pH	EC, µS/cm	DO, ppm	Temp, °C	ORP, mV	
1st purge volume	N/A - See notes below					10 bailers
2nd purge volume	N/A	—	—	—	—	10 bailers
3rd purge volume	N/A	—	—	—	—	10 bailers
Collected Sample	6.75	1349	0.52	13.78	58.3	HANNA METER

Total Purge Volume: 2.40 gal

SAMPLE BOTTLE INFORMATION

Check if Collected	Analysis	Bottle size/Type	Preservative	Seal Color
✓	Total Metals, Hardness, Silica	250 mL HDPE	HNO_3	RED
✓	Dissolved Metals (Field Filtered)	250 mL HDPE	HNO_3	RED
✓	Potentially Dissolved Metals	250 mL HDPE	HNO_3	RED
✓	Alkalinity, TSS, TDS, Chloride, Sulfate	500 mL HDPE	None	None
✓	Salinity	250 mL HDPE	None	None
✓	Cyanide	250 mL HDPE	NaOH	GREEN
✓	Sulfide	250 mL HDPE	NaOH + Zn Acetate	BLACK
✓	Total Organic Carbon, Nitrate	250 mL Amber Glass	H_2SO_4	YELLOW

Notes:

The well purged to about 1-inch in bailer at ≈ 1 well volume. No field parameters were collected. No sampling on 2-6-13, either. BR

@1300 2-7-13 well recharged to 95%, proceed to sample well.

Measured Depth	Quantity (gal) to Purge X Volumes 1	3
11.00	3.09	9.26
11.25	3.04	9.13
11.50	3.00	9.00
11.75	2.96	8.87
12.00	2.91	8.73
12.25	2.87	8.60
12.50	2.82	8.47
12.75	2.78	8.34
13.00	2.74	8.21
13.25	2.69	8.08
13.50	2.65	7.95
13.75	2.61	7.82
14.00	2.56	7.69
14.25	2.52	7.56
14.50	2.48	7.43
14.75	2.43	7.30
15.00	2.39	7.17
15.25	2.35	7.04
15.50	2.30	6.90
15.75	2.26	6.77
16.00	2.21	6.64
16.25	2.17	6.51
16.50	2.13	6.38
16.75	2.08	6.25
17.00	2.04	6.12
17.25	2.00	5.99
17.50	1.95	5.86
17.75	1.91	5.73
18.00	1.87	5.60
18.25	1.82	5.47
18.50	1.78	5.34
18.75	1.74	5.21
19.00	1.69	5.07
19.25	1.65	4.94
19.50	1.60	4.81
19.75	1.56	4.68
20.00	1.52	4.55
20.25	1.47	4.42
20.50	1.43	4.29

Rico Water Sampling Form: *Station Information*

☐ Surface Water ☒ Groundwater ☐ Other

Sampling completed at this location ☑
(Do not check box until **ALL** items have been completed)

Sample Location: **P13-102**

Field Sample ID (as shown on bottle label): P13-102_20130215

Date of Sample Collection: 2-15-13

Time of Sample Collection: 1228

Sampler's Identity: JGISSEMAN

FIELD PARAMETERS / MEASUREMENTS

Measured Water Level: 10.79 ft

Total Well Depth (Bottom): 35.41 ft

HANNA METER

	pH	EC, µS/cm	DO, ppm	Temp, °C	ORP, mV	Time	Purge Vol gal
1st purge volume	6.79	2148	16.7%	6.72	22.2		4.50
2nd purge volume	6.30	2118	22.8%	7.35	24.3	1218	10.00
3rd purge volume	6.74	2187	2187	7.80	25.7	1225	14.50
Collected Sample	6.78	2167	~~22.8~~ 2166	7.35	43.1	1228	15

Total Purge Volume: 15 GAL ft

Clear

SAMPLE BOTTLE INFORMATION

Check if Collected	Analysis	Bottle size/Type	Preservative	Seal Color
✓	Total Metals, Hardness, Silica	250 mL HDPE	HNO_3	RED
✓	Dissolved Metals (Field Filtered)	250 mL HDPE	HNO_3	RED
✓	Potentially Dissolved Metals	250 mL HDPE	HNO_3	RED
✓	Alkalinity, TSS, TDS, Chloride, Sulfate	500 mL HDPE	None	None
✓	Salinity	250 mL HDPE	None	None
✓	Cyanide	250 mL HDPE	NaOH	GREEN
✓	Sulfide	250 mL HDPE	NaOH + Zn Acetate	BLACK
✓	Total Organic Carbon, Nitrate	250 mL Amber Glass	H_2SO_4	YELLOW

Notes:

DTW at sampling 10.89 ft

Cold + windy

Measured Depth	Quantity (gal) to Purge X Volumes 1	3
6.00	5.13	15.38
6.25	5.08	15.25
6.50	5.04	15.12
6.75	5.00	14.99
7.00	4.95	14.86
7.25	4.91	14.73
7.50	4.87	14.60
7.75	4.82	14.47
8.00	4.78	14.33
8.25	4.73	14.20
8.50	4.69	14.07
8.75	4.65	13.94
9.00	4.60	13.81
9.25	4.56	13.68
9.50	4.52	13.55
9.75	4.47	13.42
10.00	4.43	13.29
10.25	4.39	13.16
10.50	4.34	13.03
10.75	4.30	12.90
11.00	4.26	12.77
11.25	4.21	12.64
11.50	4.17	12.50
11.75	4.12	12.37
12.00	4.08	12.24
12.25	4.04	12.11
12.50	3.99	11.98
12.75	3.95	11.85
13.00	3.91	11.72
13.25	3.86	11.59
13.50	3.82	11.46
13.75	3.78	11.33
14.00	3.73	11.20
14.25	3.69	11.07
14.50	3.65	10.94
14.75	3.60	10.80
15.00	3.56	10.67
15.25	3.51	10.54
15.50	3.47	10.41

Rico Water Sampling Form: *Station Information*

☐ Surface Water ☒ Groundwater ☐ Other

Sample Location: **P13-103**

Field Sample ID (as shown on bottle label): P13-103_20130215

Date of Sample Collection: 2/15/13

Time of Sample Collection: 11:44

Sampler's Identity: TB

Sampling completed at this location ☑
(Do not check box until **ALL** items have been completed)

FIELD PARAMETERS / MEASUREMENTS

Measured Water Level: 11.10 ft

Total Well Depth (Bottom): 20.20 ft

	pH	SpC, µS/cm	DO, ppm	Temp, °C	ORP, mV
1st purge volume 159	6.97	1.726	12.1	6.74	18.0
2nd purge volume 200	6.90	1.758	10.6	6.86	11.2
3rd purge volume					
Collected Sample 100	6.93	1.759	15.5	5.92	5.2

YSI METER

Total Purge Volume: 5 ~~ft~~ gal

SAMPLE BOTTLE INFORMATION

Check if Collected	Analysis	Bottle size/Type	Preservative	Seal Color
✓	Total Metals, Hardness, Silica	250 mL HDPE	HNO_3	RED
✓	Dissolved Metals (Field Filtered)	250 mL HDPE	HNO_3	RED
✓	Potentially Dissolved Metals	250 mL HDPE	HNO_3	RED
✓	Alkalinity, TSS, TDS, Chloride, Sulfate	500 mL HDPE	None	None
✓	Salinity	250 mL HDPE	None	None
✓	Cyanide	250 mL HDPE	NaOH	GREEN
✓	Sulfide	250 mL HDPE	NaOH + Zn Acetate	BLACK
✓	Total Organic Carbon, Nitrate	250 mL Amber Glass	H_2SO_4	YELLOW

Notes: great Recharge

Measured Depth	Quantity (gal) to Purge X Volumes 1	3
6.00	2.50	7.50
6.25	2.45	7.36
6.50	2.41	7.23
6.75	2.37	7.10
7.00	2.32	6.97
7.25	2.28	6.84
7.50	2.24	6.71
7.75	2.19	6.58
8.00	2.15	6.45
8.25	2.11	6.32
8.50	2.06	6.19
8.75	2.02	6.06
9.00	1.98	5.93
9.25	1.93	5.80
9.50	1.89	5.67
9.75	1.84	5.53
10.00	1.80	5.40
10.25	1.76	5.27
10.50	1.71	5.14
10.75	1.67	5.01
11.00	1.63	4.88
11.25	1.58	4.75
11.50	1.54	4.62
11.75	1.50	4.49
12.00	1.45	4.36
12.25	1.41	4.23
12.50	1.37	4.10
12.75	1.32	3.97
13.00	1.28	3.84
13.25	1.23	3.70
13.50	1.19	3.57
13.75	1.15	3.44
14.00	1.10	3.31
14.25	1.06	3.18
14.50	1.02	3.05
14.75	0.97	2.92
15.00	0.93	2.79
15.25	0.89	2.66
15.50	0.84	2.53

Rico Water Sampling Form: *Station Information*

☐ Surface Water ☒ Groundwater ☐ Other

Sampling completed at this location ☑
(Do not check box until **ALL** items have been completed)

Sample Location: **MW-1 SHALLOW**

Field Sample ID (as shown on bottle label): MW-1 SHALLOW_20130214

Date of Sample Collection: 2-14-13

Time of Sample Collection: 1622

Sampler's Identity: J GISSEMAN / J FREITAS

FIELD PARAMETERS / MEASUREMENTS

Measured Water Level: 6.65 ft

Total Well Depth (Bottom): 10.15 ft

HANNA METER

	pH	EC, µS/cm	DO, ppm	Temp, °C	ORP, mV	TIME	Purge Vol (gal)
1st purge volume	9.05	1523	5.72	0.95	59.6	1607	1.75
2nd purge volume	8.37	1541	5.31	0.53	63.6	1611	1.75
3rd purge volume	7.88	1481	4.96	0.80	65.2	1617	2.50
Collected Sample	7.71	1520	4.83	0.59	72.1	1622	3.50

Total Purge Volume: 3.50 ft

SAMPLE BOTTLE INFORMATION

Check if Collected	Analysis	Bottle size/Type	Preservative	Seal Color
✓	Total Metals, Hardness, Silica	250 mL HDPE	HNO_3	RED
✓	Dissolved Metals (Field Filtered)	250 mL HDPE	HNO_3	RED
✓	Potentially Dissolved Metals	250 mL HDPE	HNO_3	RED
✓	Alkalinity, TSS, TDS, Chloride, Sulfate	500 mL HDPE	None	None
✓	Salinity	250 mL HDPE	None	None
✓	Cyanide	250 mL HDPE	NaOH	GREEN
✓	Sulfide	250 mL HDPE	NaOH + Zn Acetate	BLACK
✓	Total Organic Carbon, Nitrate	250 mL Amber Glass	H_2SO_4	YELLOW

Notes:

7.05' BTW after sampling

Measured Depth	Quantity (gal) to Purge X Volumes 1	3
0.75	1.66	4.99
1.00	1.62	4.86
1.25	1.58	4.73
1.50	1.53	4.60
1.75	1.49	4.47
2.00	1.44	4.33
2.25	1.40	4.20
2.50	1.36	4.07
2.75	1.31	3.94
3.00	1.27	3.81
3.25	1.23	3.68
3.50	1.18	3.55
3.75	1.14	3.42
4.00	1.10	3.29
4.25	1.05	3.16
4.50	1.01	3.03
4.75	0.97	2.90
5.00	0.92	2.77
5.25	0.88	2.64
5.50	0.83	2.50
5.75	0.79	2.37
6.00	0.75	2.24
6.25	0.70	2.11
6.50	0.66	1.98
6.75	0.62	1.85
7.00	0.57	1.72
7.25	0.53	1.59
7.50	0.49	1.46
7.75	0.44	1.33
8.00	0.40	1.20
8.25	0.36	1.07
8.50	0.31	0.94
8.75	0.27	0.81
9.00	0.22	0.67
9.25	0.18	0.54
9.50	0.14	0.41
9.75	0.09	0.28
10.00	0.05	0.15
10.25	0.01	0.02

Rico Water Sampling Form: *Station Information*

☐ Surface Water ☒ Groundwater ☐ Other

Sampling completed at this location ☑
(Do not check box until **ALL** items have been completed)

Sample Location: **MW-1 DEEP**

Field Sample ID (as shown on bottle label): MW-1 DEEP - 20130214

Date of Sample Collection: 2-14-13

Time of Sample Collection: 1620

Sampler's Identity: J GISSEMAN / J FREITAS

FIELD PARAMETERS / MEASUREMENTS

Measured Water Level: 9.75 ft

Total Well Depth (Bottom): 24.93 ft

HANNA METER

	pH	EC, µS/cm	DO, ppm	Temp, °C	ORP, mV	TIME	PURGE VOL gal
1st purge volume	9.46	1541	5.36	1.86	64.3	1606	2.75
2nd purge volume	~~8.37~~	~~1541~~	~~5.31~~	~~0.53~~	~~63.4~~		
3rd purge volume	7.79	1478	4.36	0.78	71.6		7.75
Collected Sample	7.74	1552	4.49	0.28	75.1	1620	8.25
	7.98	1528	4.90	0.91	69.6	1614	5.5

Total Purge Volume: 8.25 ft

SAMPLE BOTTLE INFORMATION

Check if Collected	Analysis	Bottle size/Type	Preservative	Seal Color
✓	Total Metals, Hardness, Silica	250 mL HDPE	HNO_3	RED
✓	Dissolved Metals (Field Filtered)	250 mL HDPE	HNO_3	RED
✓	Potentially Dissolved Metals	250 mL HDPE	HNO_3	RED
✓	Alkalinity, TSS, TDS, Chloride, Sulfate	500 mL HDPE	None	None
✓	Salinity	250 mL HDPE	None	None
✓	Cyanide	250 mL HDPE	NaOH	GREEN
✓	Sulfide	250 mL HDPE	NaOH + Zn Acetate	BLACK
✓	Total Organic Carbon, Nitrate	250 mL Amber Glass	H_2SO_4	YELLOW

Notes:

Measured Depth	Quantity (gal) to Purge X Volumes 1	3
6.00	3.32	9.97
6.25	3.28	9.84
6.50	3.24	9.71
6.75	3.19	9.58
7.00	3.15	9.45
7.25	3.11	9.32
7.50	3.06	9.19
7.75	3.02	9.06
8.00	2.98	8.93
8.25	2.93	8.80
8.50	2.89	8.66
8.75	2.84	8.53
9.00	2.80	8.40
9.25	2.76	8.27
9.50	2.71	8.14
9.75	2.67	8.01
10.00	2.63	7.88
10.25	2.58	7.75
10.50	2.54	7.62
10.75	2.50	7.49
11.00	2.45	7.36
11.25	2.41	7.23
11.50	2.37	7.10
11.75	2.32	6.97
12.00	2.28	6.83
12.25	2.23	6.70
12.50	2.19	6.57
12.75	2.15	6.44
13.00	2.10	6.31
13.25	2.06	6.18
13.50	2.02	6.05
13.75	1.97	5.92
14.00	1.93	5.79
14.25	1.89	5.66
14.50	1.84	5.53
14.75	1.80	5.40
15.00	1.76	5.27
15.25	1.71	5.14
15.50	1.67	5.00

Rico Water Sampling Form: *Station Information*

☐ Surface Water ☒ Groundwater ☐ Other

Sampling completed at this location ☐
(Do not check box until **ALL** items have been completed)

Sample Location: **MW-2 SHALLOW**

Field Sample ID (as shown on bottle label): mw-2shallow_20130213

Date of Sample Collection: 2-13-13

Time of Sample Collection: 1512b

Sampler's Identity: J GISSEMAN / J FREITAS

Measured Depth	Quantity (gal) to Purge X Volumes	
	1	3

Rico Water Sampling Form: *Station Information*

☐ Surface Water ☒ Groundwater ☐ Other

Sampling completed at this location ☑
(Do not check box until **ALL** items have been completed)

Sample Location: **MW-2 DEEP**

Field Sample ID (as shown on bottle label): MW-2 DEEP_20130213

Date of Sample Collection: 2-13-13

Time of Sample Collection: 15:46

Sampler's Identity: J GISSEMAN / J FREITAS

FIELD PARAMETERS / MEASUREMENTS

Measured Water Level: 10.19 ft ~~7.28~~

Total Well Depth (Bottom): 22.91 ft

Depth to water immediately after sampling: 10.23 ft HANNA METER

	pH	EC, µS/cm	DO, ppm	Temp, °C	ORP, mV	TIME
1st purge volume	7.91	1477	4.38	7.53	106.8	15:30
2nd purge volume	7.72	1597	5.31	5.63	104.5	15:33
3rd purge volume	7.58	1486	5.56	7.64	108.0	15:38
Collected Sample	7.34	1483	5.31	7.74	110.2	15:46

Total Purge Volume: 17 gals ~~ft~~

SAMPLE BOTTLE INFORMATION

Check if Collected	Analysis	Bottle size/Type	Preservative	Seal Color
✓	Total Metals, Hardness, Silica	250 mL HDPE	HNO_3	RED
✓	Dissolved Metals (Field Filtered)	250 mL HDPE	HNO_3	RED
✓	Potentially Dissolved Metals	250 mL HDPE	HNO_3	RED
✓	Alkalinity, TSS, TDS, Chloride, Sulfate	500 mL HDPE	None	None
✓	Salinity	250 mL HDPE	None	None
✓	Cyanide	250 mL HDPE	NaOH	GREEN
✓	Sulfide	250 mL HDPE	NaOH + Zn Acetate	BLACK
✓	Total Organic Carbon, Nitrate	250 mL Amber Glass	H_2SO_4	YELLOW

Notes:

Arrive at location ~15:12

Depart location at

10.23 POST SAMPLE H2O Level / 15:52

Measured Depth	Quantity (gal) to Purge X Volumes 1	3
6.00	2.97	8.92
6.25	2.93	8.78
6.50	2.88	8.65
6.75	2.84	8.52
7.00	2.80	8.39
7.25	2.75	8.26
7.50	2.71	8.13
7.75	2.67	8.00
8.00	2.62	7.87
8.25	2.58	7.74
8.50	2.54	7.61
8.75	2.49	7.48
9.00	2.45	7.35
9.25	2.41	7.22
9.50	2.36	7.09
9.75	2.32	6.95
10.00	2.27	6.82
10.25	2.23	6.69
10.50	2.19	6.56
10.75	2.14	6.43
11.00	2.10	6.30
11.25	2.06	6.17
11.50	2.01	6.04
11.75	1.97	5.91
12.00	1.93	5.78
12.25	1.88	5.65
12.50	1.84	5.52
12.75	1.80	5.39
13.00	1.75	5.26
13.25	1.71	5.12
13.50	1.66	4.99
13.75	1.62	4.86
14.00	1.58	4.73
14.25	1.53	4.60
14.50	1.49	4.47
14.75	1.45	4.34
15.00	1.40	4.21
15.25	1.36	4.08
15.50	1.32	3.95

Rico Water Sampling Form: *Station Information*

☐ Surface Water ☒ Groundwater ☐ Other

Sampling completed at this location ☐
(Do not check box until **ALL** items have been completed)

Sample Location: **MW-3 SHALLOW**

Field Sample ID (as shown on bottle label): ~~MW-3 SHALLOW-201302~~

Date of Sample Collection: 2-13-13

Time of Sample Collection: 14:35

Sampler's Identity: J Gisseman / J Freitas

Measured Depth	Quantity (gal) to Purge X Volumes	
	1	3

Rico Water Sampling Form: *Station Information*

☐ Surface Water ☒ Groundwater ☐ Other

Sampling completed at this location ☑
(Do not check box until **ALL** items have been completed)

Sample Location: **MW-3 DEEP**

Field Sample ID (as shown on bottle label): MW-3 DEEP_20130213

Date of Sample Collection: 2-13-13

Time of Sample Collection: 15:00

Sampler's Identity: J GISSEMAN

10.04 DTW
23.14 TD

FIELD PARAMETERS / MEASUREMENTS

Measured Water Level: 10.04 ft

Total Well Depth (Bottom): 23.14 ft

Depth to Water after sample 10.06 ft

HANNA METER

	pH	EC, µS/cm	DO, ppm	Temp, °C	ORP, mV	TIME
1st purge volume	11.71	1475	2.45	9.38	80.9	14:45
2nd purge volume	8.35	1502	1.26	9.41	101.1	14:53
3rd purge volume	7.78	1502	2.63	9.39	105.1	14:57
Collected Sample	7.60	1516	1.92	8.77	102.9	14:59

Total Purge Volume: 5.5 gals ~~ft~~

SAMPLE BOTTLE INFORMATION

Check if Collected	Analysis	Bottle size/Type	Preservative	Seal Color
✓	Total Metals, Hardness, Silica	250 mL HDPE	HNO_3	RED
✓	Dissolved Metals (Field Filtered)	250 mL HDPE	HNO_3	RED
✓	Potentially Dissolved Metals	250 mL HDPE	HNO_3	RED
✓	Alkalinity, TSS, TDS, Chloride, Sulfate	500 mL HDPE	None	None
✓	Salinity	250 mL HDPE	None	None
✓	Cyanide	250 mL HDPE	NaOH	GREEN
✓	Sulfide	250 mL HDPE	NaOH + Zn Acetate	BLACK
✓	Total Organic Carbon, Nitrate	250 mL Amber Glass	H_2SO_4	YELLOW

Notes:

Depart Site 15:08

Measured Depth	Quantity (gal) to Purge X Volumes 1	3
6.00	3.01	9.04
6.25	2.97	8.91
6.50	2.93	8.78
6.75	2.88	8.65
7.00	2.84	8.52
7.25	2.80	8.39
7.50	2.75	8.26
7.75	2.71	8.13
8.00	2.67	8.00
8.25	2.62	7.86
8.50	2.58	7.73
8.75	2.53	7.60
9.00	2.49	7.47
9.25	2.45	7.34
9.50	2.40	7.21
9.75	2.36	7.08
10.00	2.32	6.95
10.25	2.27	6.82
10.50	2.23	6.69
10.75	2.19	6.56
11.00	2.14	6.43
11.25	2.10	6.30
11.50	2.06	6.17
11.75	2.01	6.03
12.00	1.97	5.90
12.25	1.92	5.77
12.50	1.88	5.64
12.75	1.84	5.51
13.00	1.79	5.38
13.25	1.75	5.25
13.50	1.71	5.12
13.75	1.66	4.99
14.00	1.62	4.86
14.25	1.58	4.73
14.50	1.53	4.60
14.75	1.49	4.47
15.00	1.44	4.33
15.25	1.40	4.20
15.50	1.36	4.07

Rico Water Sampling Form: *Station Information*

☐ Surface Water ☒ Groundwater ☐ Other

Sampling completed at this location ✓
(Do not check box until **ALL** items have been completed)

Sample Location: **MW-4 SHALLOW**

Field Sample ID (as shown on bottle label): MW-4 SHALLOW - 20130215

Date of Sample Collection: 2-15-13

Time of Sample Collection: 10:54

Sampler's Identity: J GISSEMAN / J FREITAS / T BARBEE

FIELD PARAMETERS / MEASUREMENTS

Measured Water Level: 17.22 ft

Total Well Depth (Bottom): 18.20 ft

2/15/13 17.22

	pH	SEC, mS/cm	DO, ppm	Temp, °C	ORP, mV	
2-14-13 1st purge volume	7.84	1.22	~~192~~ 6.01	7.43	81.1	11:53 1/4 gal
2nd purge volume	DRY					12:00 1/2 gal
3rd purge volume						
Collected Sample 1054	6.74	1.599	46.2%	7.40	14.3	YSI METER

Total Purge Volume: 1/2 gal ft

SAMPLE BOTTLE INFORMATION

Check if Collected	Analysis	Bottle size/Type	Preservative	Seal Color
✓	Total Metals, Hardness, Silica	250 mL HDPE	HNO_3	RED
✓	Dissolved Metals (Field Filtered)	250 mL HDPE	HNO_3	RED
✓	Potentially Dissolved Metals	250 mL HDPE	HNO_3	RED
✓	Alkalinity, TSS, TDS, Chloride, Sulfate	500 mL HDPE	None	None
✓	Salinity	250 mL HDPE	None	None
✓	Cyanide	250 mL HDPE	NaOH	GREEN
✓	Sulfide	250 mL HDPE	NaOH + Zn Acetate	BLACK
✓	Total Organic Carbon, Nitrate	250 mL Amber Glass	H_2SO_4	YELLOW

Notes: ~~17.20 After Sampl~~ 4EQ

2/15/13 10:54
WtR 17.22 : DTW at sampling

Measured Depth	Quantity (gal) to Purge X Volumes 1	3
8.75	1.68	5.04
9.00	1.64	4.91
9.25	1.59	4.78
9.50	1.55	4.65
9.75	1.51	4.52
10.00	1.46	4.39
10.25	1.42	4.26
10.50	1.38	4.13
10.75	1.33	4.00
11.00	1.29	3.86
11.25	1.24	3.73
11.50	1.20	3.60
11.75	1.16	3.47
12.00	1.11	3.34
12.25	1.07	3.21
12.50	1.03	3.08
12.75	0.98	2.95
13.00	0.94	2.82
13.25	0.90	2.69
13.50	0.85	2.56
13.75	0.81	2.43
14.00	0.77	2.30
14.25	0.72	2.16
14.50	0.68	2.03
14.75	0.63	1.90
15.00	0.59	1.77
15.25	0.55	1.64
15.50	0.50	1.51
15.75	0.46	1.38
16.00	0.42	1.25
16.25	0.37	1.12
16.50	0.33	0.99
16.75	0.29	0.86
17.00	0.24	0.73
17.25	0.20	0.60
17.50	0.16	0.47
17.75	0.11	0.33
18.00	0.07	0.20
18.25	0.02	0.07

Rico Water Sampling Form: *Station Information*

☐ Surface Water ☒ Groundwater ☐ Other

Sampling completed at this location ☑
(Do not check box until **ALL** items have been completed)

Sample Location: **MW-4 DEEP**

Field Sample ID (as shown on bottle label): MW-4 DEEP_20130214

Date of Sample Collection: 2-14-13

Time of Sample Collection: 1148

Sampler's Identity: J GISSEMAN / J FREITAS

FIELD PARAMETERS / MEASUREMENTS

Measured Water Level: 17.16 ft

Total Well Depth (Bottom): 38.98 ft

HANNA METER

	pH	EC, µS/cm	DO, ppm	Temp, °C	ORP, mV	TIME	Purge VOL GALS
1st purge volume	7.09	1728	2.01	8.63	79.2	11:35	1.75
2nd purge volume	6.53	1753	1.96	8.66	80.3	11:38	2.75
3rd purge volume	6.49	1743	2.67	7.73	81.5	11:44	5 gal
Collected Sample	6.63	1741	2.28	7.06	82.8	1148	5.5

Total Purge Volume: 5.5 ~~ft~~ gal

SAMPLE BOTTLE INFORMATION

Check if Collected	Analysis	Bottle size/Type	Preservative	Seal Color
✓	Total Metals, Hardness, Silica	250 mL HDPE	HNO_3	RED
✓	Dissolved Metals (Field Filtered)	250 mL HDPE	HNO_3	RED
✓	Potentially Dissolved Metals	250 mL HDPE	HNO_3	RED
✓	Alkalinity, TSS, TDS, Chloride, Sulfate	500 mL HDPE	None	None
✓	Salinity	250 mL HDPE	None	None
✓	Cyanide	250 mL HDPE	NaOH	GREEN
✓	Sulfide	250 mL HDPE	NaOH + Zn Acetate	BLACK
✓	Total Organic Carbon, Nitrate	250 mL Amber Glass	H_2SO_4	YELLOW

Notes:

DTW after sampling 17.20'

Measured Depth	Quantity (gal) to Purge X Volumes 1	3
13.00	3.18	9.54
13.25	3.14	9.41
13.50	3.09	9.28
13.75	3.05	9.15
14.00	3.01	9.02
14.25	2.96	8.88
14.50	2.92	8.75
14.75	2.87	8.62
15.00	2.83	8.49
15.25	2.79	8.36
15.50	2.74	8.23
15.75	2.70	8.10
16.00	2.66	7.97
16.25	2.61	7.84
16.50	2.57	7.71
16.75	2.53	7.58
17.00	2.48	7.45
17.25	2.44	7.32
17.50	2.39	7.18
17.75	2.35	7.05
18.00	2.31	6.92
18.25	2.26	6.79
18.50	2.22	6.66
18.75	2.18	6.53
19.00	2.13	6.40
19.25	2.09	6.27
19.50	2.05	6.14
19.75	2.00	6.01
20.00	1.96	5.88
20.25	1.92	5.75
20.50	1.87	5.62
20.75	1.83	5.49
21.00	1.78	5.35
21.25	1.74	5.22
21.50	1.70	5.09
21.75	1.65	4.96
22.00	1.61	4.83
22.25	1.57	4.70
22.50	1.52	4.57

Rico Water Sampling Form: *Station Information*

☐ Surface Water ☒ Groundwater ☐ Other

Sampling completed at this location ☐ ✓
(Do not check box until **ALL** items have been completed)

Sample Location: **MW-5 SHALLOW**

Field Sample ID (as shown on bottle label): MW-5_SHALLOW_20130207

Date of Sample Collection: 2-7-13

Time of Sample Collection: 1230p

Sampler's Identity: J. Roehrig / JBR

FIELD PARAMETERS / MEASUREMENTS

Measured Water Level: 17.12 ft

Total Well Depth (Bottom): 21.10 ft

	pH	EC, ~~µS~~ mS/cm	DO, ppm	Temp, °C	ORP, mV	
1st purge volume	4.84	3.594	~~[illegible]~~	9.85	170.5	YSI METER
2nd purge volume	4.90	3.706	7.44/1.88	9.68	167.5	
3rd purge volume	5.04	3.567	7.36	9.87	159.5	
Collected Sample	4.85	3651 µS/cm	0.41	11.06	78.5	HANNA METER

Total Purge Volume: 2.5 ~~ft~~ GALS

SAMPLE BOTTLE INFORMATION

Check if Collected	Analysis	Bottle size/Type	Preservative	Seal Color
✓	Total Metals, Hardness, Silica	250 mL HDPE	HNO_3	RED
✓	Dissolved Metals (Field Filtered)	250 mL HDPE	HNO_3	RED
✓	Potentially Dissolved Metals	250 mL HDPE	HNO_3	RED
✓	Alkalinity, TSS, TDS, Chloride, Sulfate	500 mL HDPE	None	None
✓	Salinity	250 mL HDPE	None	None
✓	Cyanide	250 mL HDPE	NaOH	GREEN
✓	Sulfide	250 mL HDPE	NaOH + Zn Acetate	BLACK
✓	Total Organic Carbon, Nitrate	250 mL Amber Glass	H_2SO_4	YELLOW

Notes:

Measured Depth	Quantity (gal) to Purge X Volumes 1	3
11.50	1.66	4.98
11.75	1.62	4.85
12.00	1.57	4.72
12.25	1.53	4.59
12.50	1.49	4.46
12.75	1.44	4.32
13.00	1.40	4.19
13.25	1.35	4.06
13.50	1.31	3.93
13.75	1.27	3.80
14.00	1.22	3.67
14.25	1.18	3.54
14.50	1.14	3.41
14.75	1.09	3.28
15.00	1.05	3.15
15.25	1.01	3.02
15.50	0.96	2.89
15.75	0.92	2.76
16.00	0.88	2.63
16.25	0.83	2.49
16.50	0.79	2.36
16.75	0.74	2.23
17.00	0.70	2.10
17.25	0.66	1.97
17.50	0.61	1.84
17.75	0.57	1.71
18.00	0.53	1.58
18.25	0.48	1.45
18.50	0.44	1.32
18.75	0.40	1.19
19.00	0.35	1.06
19.25	0.31	0.93
19.50	0.26	0.79
19.75	0.22	0.66
20.00	0.18	0.53
20.25	0.13	0.40
20.50	0.09	0.27
20.75	0.05	0.14
21.00	0.00	0.01

Rico Water Sampling Form: *Station Information*

☐ Surface Water ☒ Groundwater ☐ Other

Sampling completed at this location ☑
(Do not check box until **ALL** items have been completed)

Sample Location: **MW-5 DEEP**

Field Sample ID (as shown on bottle label): MW-5_DEEP_20130207

Date of Sample Collection: 2-7-13

Time of Sample Collection: 1215p

Sampler's Identity: J. Rolling / SSR

FIELD PARAMETERS / MEASUREMENTS

Measured Water Level: 17.79 ft

Total Well Depth (Bottom): 34.45 ft

	pH	EC, µS/cm	DO, ppm	Temp, °C	ORP, mV	
1st purge volume	6.49	2.009	2.21	9.94	70.3	YSI METER
2nd purge volume	6.44	1.855	1.64	9.95	34.1	
3rd purge volume	6.50	1.712	~~5.44~~ 4.55	10.26	24.9	
Collected Sample	6.80	1.789 µS/cm	0.56	13.56	46.0	HANNA METER

Total Purge Volume: 9 ~~ft~~ gallons

SAMPLE BOTTLE INFORMATION

Check if Collected	Analysis	Bottle size/Type	Preservative	Seal Color
✓	Total Metals, Hardness, Silica	250 mL HDPE	HNO_3	RED
✓	Dissolved Metals (Field Filtered)	250 mL HDPE	HNO_3	RED
✓	Potentially Dissolved Metals	250 mL HDPE	HNO_3	RED
✓	Alkalinity, TSS, TDS, Chloride, Sulfate	500 mL HDPE	None	None
✓	Salinity	250 mL HDPE	None	None
✓	Cyanide	250 mL HDPE	NaOH	GREEN
✓	Sulfide	250 mL HDPE	NaOH + Zn Acetate	BLACK
✓	Total Organic Carbon, Nitrate	250 mL Amber Glass	H_2SO_4	YELLOW

Notes:

Measured Depth	Quantity (gal) to Purge X Volumes 1	3
14.00	3.52	10.56
14.25	3.48	10.43
14.50	3.43	10.30
14.75	3.39	10.17
15.00	3.35	10.04
15.25	3.30	9.91
15.50	3.26	9.78
15.75	3.22	9.65
16.00	3.17	9.52
16.25	3.13	9.39
16.50	3.09	9.26
16.75	3.04	9.12
17.00	3.00	8.99
17.25	2.95	8.86
17.50	2.91	8.73
17.75	2.87	8.60
18.00	2.82	8.47
18.25	2.78	8.34
18.50	2.74	8.21
18.75	2.69	8.08
19.00	2.65	7.95
19.25	2.61	7.82
19.50	2.56	7.69
19.75	2.52	7.56
20.00	2.48	7.43
20.25	2.43	7.29
20.50	2.39	7.16
20.75	2.34	7.03
21.00	2.30	6.90
21.25	2.26	6.77
21.50	2.21	6.64
21.75	2.17	6.51
22.00	2.13	6.38
22.25	2.08	6.25
22.50	2.04	6.12
22.75	2.00	5.99
23.00	1.95	5.86
23.25	1.91	5.73
23.50	1.87	5.60

Rico Water Sampling Form: *Station Information*

Sampling completed at this location ☑
(Do not check box until **ALL** items have been completed)

☐ Surface Water ☒ Groundwater ☐ Other

Sample Location: **MW-6 SHALLOW**

Field Sample ID (as shown on bottle label): MW-6 SHALLOW_20130214

Date of Sample Collection: 2-14-13

Time of Sample Collection: 15:20

Sampler's Identity: J GRISSEMAN / JF

FIELD PARAMETERS / MEASUREMENTS

Measured Water Level: 23.83 ft

Total Well Depth (Bottom): 27.15 ft

HANNA METER

	pH	EC, µS/cm	DO, ppm	Temp, °C	ORP, mV	TIME	Purge Vol gal
1st purge volume	6.70	2546	0.56	9.09	59.8	1506	0.6
2nd purge volume	6.46	2599	0.00	9.13	62.5	1510	1.3
3rd purge volume	6.36	2542	0.00	9.36	64.0	1515	1.9
Collected Sample	6.28	2602	0.00	9.58	60.7	1520	2.0

Total Purge Volume: 2.0 ~~ft~~ gal

SAMPLE BOTTLE INFORMATION

Check if Collected	Analysis	Bottle size/Type	Preservative	Seal Color
✓	Total Metals, Hardness, Silica	250 mL HDPE	HNO_3	RED
✓	Dissolved Metals (Field Filtered)	250 mL HDPE	HNO_3	RED
✓	Potentially Dissolved Metals	250 mL HDPE	HNO_3	RED
✓	Alkalinity, TSS, TDS, Chloride, Sulfate	500 mL HDPE	None	None
✓	Salinity	250 mL HDPE	None	None
✓	Cyanide	250 mL HDPE	NaOH	GREEN
✓	Sulfide	250 mL HDPE	NaOH + Zn Acetate	BLACK
✓	Total Organic Carbon, Nitrate	250 mL Amber Glass	H_2SO_4	YELLOW

Notes:

DTW after sampling 24.05 ft

Measured Depth	Quantity (gal) to Purge X Volumes 1	3
17.50	1.70	5.09
17.75	1.65	4.96
18.00	1.61	4.83
18.25	1.57	4.70
18.50	1.52	4.57
18.75	1.48	4.44
19.00	1.44	4.31
19.25	1.39	4.18
19.50	1.35	4.05
19.75	1.31	3.92
20.00	1.26	3.79
20.25	1.22	3.66
20.50	1.17	3.52
20.75	1.13	3.39
21.00	1.09	3.26
21.25	1.04	3.13
21.50	1.00	3.00
21.75	0.96	2.87
22.00	0.91	2.74
22.25	0.87	2.61
22.50	0.83	2.48
22.75	0.78	2.35
23.00	0.74	2.22
23.25	0.70	2.09
23.50	0.65	1.96
23.75	0.61	1.82
24.00	0.56	1.69
24.25	0.52	1.56
24.50	0.48	1.43
24.75	0.43	1.30
25.00	0.39	1.17
25.25	0.35	1.04
25.50	0.30	0.91
25.75	0.26	0.78
26.00	0.22	0.65
26.25	0.17	0.52
26.50	0.13	0.39
26.75	0.09	0.26
27.00	0.04	0.13

Rico Water Sampling Form: *Station Information*

Sampling completed at this location ☑
(Do not check box until **ALL** items have been completed)

☐ Surface Water ☒ Groundwater ☐ Other

Sample Location: **MW-6 DEEP**

Field Sample ID (as shown on bottle label): MW-6 DEEP - 20130214

Date of Sample Collection: 2-14-13

Time of Sample Collection: 1525

Sampler's Identity: JGUSSEMAN / J. FREITAS

FIELD PARAMETERS / MEASUREMENTS

Measured Water Level: 23.6 ft

Total Well Depth (Bottom): 40.05 ft HANNA METER

	pH	EC, µS/cm	DO, ppm	Temp, °C	ORP, mV	Time	Purge Vol
1st purge volume	8.24	1874	2.08	9.87	47.3	1501	1.75
2nd purge volume	6.50	1927	1.41	9.41	59.2	1514	6
3rd purge volume	6.41	1897	1.81	9.69	57.8	1522	8.75
Collected Sample	6.41	1875	1.62	9.94	59.0	1525	9

Total Purge Volume: 9 ~~ft~~ gal

SAMPLE BOTTLE INFORMATION

Check if Collected	Analysis	Bottle size/Type	Preservative	Seal Color
✓	Total Metals, Hardness, Silica	250 mL HDPE	HNO_3	RED
✓	Dissolved Metals (Field Filtered)	250 mL HDPE	HNO_3	RED
✓	Potentially Dissolved Metals	250 mL HDPE	HNO_3	RED
✓	Alkalinity, TSS, TDS, Chloride, Sulfate	500 mL HDPE	None	None
✓	Salinity	250 mL HDPE	None	None
✓	Cyanide	250 mL HDPE	NaOH	GREEN
✓	Sulfide	250 mL HDPE	NaOH + Zn Acetate	BLACK
✓	Total Organic Carbon, Nitrate	250 mL Amber Glass	H_2SO_4	YELLOW

Notes:

DTW after sampling 23.50 ft

Measured Depth	Quantity (gal) to Purge X Volumes 1	3
19.00	3.71	11.14
19.25	3.67	11.01
19.50	3.63	10.88
19.75	3.58	10.75
20.00	3.54	10.62
20.25	3.49	10.48
20.50	3.45	10.35
20.75	3.41	10.22
21.00	3.36	10.09
21.25	3.32	9.96
21.50	3.28	9.83
21.75	3.23	9.70
22.00	3.19	9.57
22.25	3.15	9.44
22.50	3.10	9.31
22.75	3.06	9.18
23.00	3.02	9.05
23.25	2.97	8.92
23.50	2.93	8.78
23.75	2.88	8.65
24.00	2.84	8.52
24.25	2.80	8.39
24.50	2.75	8.26
24.75	2.71	8.13
25.00	2.67	8.00
25.25	2.62	7.87
25.50	2.58	7.74
25.75	2.54	7.61
26.00	2.49	7.48
26.25	2.45	7.35
26.50	2.41	7.22
26.75	2.36	7.09
27.00	2.32	6.95
27.25	2.27	6.82
27.50	2.23	6.69
27.75	2.19	6.56
28.00	2.14	6.43
28.25	2.10	6.30
28.50	2.06	6.17

Rico Water Sampling Form: *Station Information*

☐ Surface Water ☐ Groundwater ☒ Other

Sampling completed at this location ☑
(Do not check box until **ALL** items have been completed)

Sample Location: **AT-2**

Field Sample ID (as shown on bottle label): AT-2 – 20130208

Date of Sample Collection: 2-8-13

Time of Sample Collection: 0909

Sampler's Identity: J. Rehrig / SSR

FIELD PARAMETERS / MEASUREMENTS HANNA METER

pH	EC, µS/cm	DO, ppm	Temp, °C	ORP, mV	Depth along angle from casing invert (ft)
7.73	1047	0.47	12.43	53.3	11.58

Data downloaded from transducer? ☑ Yes

Has transducer been cleaned and recalibrated? ☑ Yes (Monthly cleaning required)

Have batteries been replaced? ☑ Yes ☒ No (Replace once a year in January)

SAMPLE BOTTLE INFORMATION

Check if Collected	Analysis	Bottle size/Type	Preservative	Seal Color
☑	Total Metals, Hardness, Silica	250 mL HDPE	HNO_3	RED
☑	Dissolved Metals	250 mL HDPE	HNO_3	RED
☑	Potentially Dissolved Metals	250 mL HDPE	HNO_3	RED
☑	Alkalinity, TSS, TDS, Chloride, Sulfate	500 mL HDPE	None	None
☑	Salinity	250 mL HDPE	None	None
☑	Cyanide	250 mL HDPE	NaOH	GREEN
☑	Sulfide	250 mL HDPE	NaOH + Zn Acetate	BLACK
☑	Total Organic Carbon, Nitrate	250 mL Amber Glass	H_2SO_4	YELLOW

Notes: ~~Rear~~ mark Verified : Data down Load

Jim

: Cleaning

: Battery Replace

Rico Water Sampling Form: *Station Information*

☐ Surface Water ☐ Groundwater ☐ Other

** DR-8 is a Blind Duplicate Sample. Collect one blind duplicate sample for every 10 regular samples.*

Sampling completed at this location ☑
(Do not check box until **ALL** items have been completed)

Sample Location: **DR-8**

Field Sample ID (as shown on bottle label): DR-8_20130208

Date of Sample Collection: 2-8-13

Time of Sample Collection: 0800

Sampler's Identity: J. Roehrig / BK

Duplicate sample of: DR-3

FIELD PARAMETERS / MEASUREMENTS HANNA METER

pH	EC, µS/cm	DO, ppm	Temp, °C	ORP, mV
7.61	1339	2.45	13.05	60.4

SAMPLE BOTTLE INFORMATION

Check if Collected	Analysis	Bottle size/Type	Preservative	Seal Color
✓	Total Metals, Hardness, Silica	250 mL HDPE	HNO_3	RED
✓	Dissolved Metals	250 mL HDPE	HNO_3	RED
✓	Potentially Dissolved Metals	250 mL HDPE	HNO_3	RED
✓	Alkalinity, TSS, TDS, Chloride, Sulfate	500 mL HDPE	None	None
✓	Salinity	250 mL HDPE	None	None
✓	Cyanide	250 mL HDPE	NaOH	GREEN
✓	Sulfide	250 mL HDPE	NaOH + Zn Acetate	BLACK
✓	Total Organic Carbon, Nitrate	250 mL Amber Glass	H_2SO_4	YELLOW

Notes:

Duplicate of DR-3, collected on 02-08-13

Rico Water Sampling Form: *Station Information*

☐ Surface Water ☐ Groundwater ☐ Other

Sampling completed at this location ☑
(Do not check box until **ALL** items have been completed)

** DR-9 is a Blind Duplicate Sample. Collect one blind duplicate sample for every 10 regular samples.*

Sample Location: **DR-9** Dup of MW6-SHALLOW

Field Sample ID (as shown on bottle label): DR-9_20130214

Date of Sample Collection: 2-14-13

Time of Sample Collection: 1535

Sampler's Identity: JGRISSEMAN

Duplicate sample of: MW-6 SHALLOW

FIELD PARAMETERS / MEASUREMENTS

pH	EC, µS/cm	DO, ppm	Temp, °C	ORP, mV

SAMPLER DID NOT MEASURE ~ SEE MW-6SHALLOW

SAMPLE BOTTLE INFORMATION

Check if Collected	Analysis	Bottle size/Type	Preservative	Seal Color
✓	Total Metals, Hardness, Silica	250 mL HDPE	HNO_3	RED
✓	Dissolved Metals	250 mL HDPE	HNO_3	RED
✓	Potentially Dissolved Metals	250 mL HDPE	HNO_3	RED
✓	Alkalinity, TSS, TDS, Chloride, Sulfate	500 mL HDPE	None	None
✓	Salinity	250 mL HDPE	None	None
✓	Cyanide	250 mL HDPE	NaOH	GREEN
✓	Sulfide	250 mL HDPE	NaOH + Zn Acetate	BLACK
✓	Total Organic Carbon, Nitrate	250 mL Amber Glass	H_2SO_4	YELLOW

Notes:

Rico Water Sampling Form: *Station Information*

☐ Surface Water ☒ Groundwater ☐ Other

** DR-10 is a Blind Duplicate Sample. Collect one blind duplicate sample for every 10 regular samples.*

Sampling completed at this location ☑
(Do not check box until **ALL** items have been completed)

Sample Location: **DR-10**

Field Sample ID (as shown on bottle label): DR-10-20130213

Date of Sample Collection: 2-15-13

Time of Sample Collection: 1210

Sampler's Identity: TD

Duplicate sample of: P13-103

FIELD PARAMETERS / MEASUREMENTS YSI METER

pH	SpC, µS/cm	DO, ppm	Temp, °C	ORP, mV
6.57	1747	18.6	6.71	5.1

SAMPLE BOTTLE INFORMATION

Check if Collected	Analysis	Bottle size/Type	Preservative	Seal Color
✓	Total Metals, Hardness, Silica	250 mL HDPE	HNO_3	RED
✓	Dissolved Metals	250 mL HDPE	HNO_3	RED
✓	Potentially Dissolved Metals	250 mL HDPE	HNO_3	RED
✓	Alkalinity, TSS, TDS, Chloride, Sulfate	500 mL HDPE	None	None
✓	Salinity	250 mL HDPE	None	None
✓	Cyanide	250 mL HDPE	NaOH	GREEN
✓	Sulfide	250 mL HDPE	NaOH + Zn Acetate	BLACK
✓	Total Organic Carbon, Nitrate	250 mL Amber Glass	H_2SO_4	YELLOW

Notes:

Rico Water Sampling Form: *Station Information*

☑ Surface Water ☐ Groundwater ☐ Other

** DR-11 is a Blind Duplicate Sample. Collect one blind duplicate sample for every 10 regular samples.*

Sampling completed at this location ☑
(Do not check box until **ALL** items have been completed)

Sample Location: **DR-11**

Field Sample ID (as shown on bottle label):

Date of Sample Collection: 2-18-13

Time of Sample Collection: 3:41

Sampler's Identity: TB/JG

Duplicate sample of: DR-4

FIELD PARAMETERS / MEASUREMENTS YSI METER

pH	SpC, µS/cm	DO, ppm	Temp, °C	ORP, mV
7.83	1275	7.48	9.45	110.0

SAMPLE BOTTLE INFORMATION

Check if Collected	Analysis	Bottle size/Type	Preservative	Seal Color
☑	Total Metals, Hardness, Silica	250 mL HDPE	HNO_3	RED
☑	Dissolved Metals	250 mL HDPE	HNO_3	RED
☑	Potentially Dissolved Metals	250 mL HDPE	HNO_3	RED
☑	Alkalinity, TSS, TDS, Chloride, Sulfate	500 mL HDPE	None	None
☑	Salinity	250 mL HDPE	None	None
☑	Cyanide	250 mL HDPE	NaOH	GREEN
☑	Sulfide	250 mL HDPE	NaOH + Zn Acetate	BLACK
☑	Total Organic Carbon, Nitrate	250 mL Amber Glass	H_2SO_4	YELLOW

Notes:

Rico Water Sampling Form: *Station Information*

☐ Surface Water ☐ Groundwater ☒ Other

**Sample is a field blank. Run distilled water through standard sampling procedures.*

Sampling completed at this location ☑
(Do not check box until **ALL** items have been completed)

Sample Location: **FB**

Field Sample ID (as shown on bottle label):

Date of Sample Collection: 2-18-13

Time of Sample Collection: 440

Sampler's Identity: TB / JG

FIELD PARAMETERS / MEASUREMENTS YSI METER

pH	SpC, µS/cm	DO, ppm	Temp, °C	ORP, mV
8.00	3	8.73	8.34	73

SAMPLE BOTTLE INFORMATION

Check if Collected	Analysis	Bottle size/Type	Preservative	Seal Color
☑	Total Metals, Hardness, Silica	250 mL HDPE	HNO_3	RED
☑	Dissolved Metals	250 mL HDPE	HNO_3	RED
☑	Potentially Dissolved Metals	250 mL HDPE	HNO_3	RED
☑	Alkalinity, TSS, TDS, Chloride, Sulfate	500 mL HDPE	None	None
☑	Salinity	250 mL HDPE	None	None
☑	Cyanide	250 mL HDPE	NaOH	GREEN
☑	Sulfide	250 mL HDPE	NaOH + Zn Acetate	BLACK
☑	Total Organic Carbon, Nitrate	250 mL Amber Glass	H_2SO_4	YELLOW

Notes:

Rico Water Sampling Form: *Stream Flow Measurements*

2-18-13

Location:	DR-1			Location:	DR-2			Location:	DR-7		
Benchmark Elevation:				Benchmark Elevation:	479			Benchmark Elevation:	765		
River Water Elevation:				River Water Elevation:	1191			River Water Elevation:	1194		
☐ East to West				☑ East to West	14:29			☐ East to West			
☐ West to East				☐ West to East	2-18-13			☒ West to East			
Velocity (ft/sec)		Depth (ft)		Velocity (ft/sec)		Depth (ft)		Velocity (ft/sec)		Depth (ft)	
				0		0		~~.10~~	~~0.07~~	~~0~~	~~.25~~
				.29		.45		0.01		.25	
				.15		.45		0.80		.3	
				.14		.35		0.15		.4	
				.03		1.0		1.43		.5	
				.13		1.15		.57		.7	
				.38		1.15		.08		.6	
				.55		1.15		.74		.55	
				.24		1.15		.05		.5	
				.05		.90		.46		.45	
				.62		.30		.46		.5	
				.35		1.1		.49		.45	
				.39		1.17					
				.53		1.17					
				.40		1.1		.02	.07	.45	.45
				.16		1.0		.07	.50	.40	.50
				.12		1.05		.06	1.33	.30	.65
				.01		.7		0	.20	0	.75
				.02		.7		0	.98	0	.80
				0		.55		.29	1.40	.70	.50
				.01		.4		0	.84	0	.55
								.35	~~.72~~ .12	.30	.5
								.53	.53	.5	.35
								1.40	.09	.5	.4
								0	0	0	.2
								0	.90	0	.3
								.10	.57	.35	.4
								0	0	0	0
								0	0.06	0	.25
								.34	0	.25	0
								.48		.5	
								.34		.6	
								1.65		.7	
								.44		.6	
								.21		.5	

NOTE: Each velocity reading must have a corresponding depth reading with matching cell number. Each cell represents a 1-foot subsection. Measurements are to be taken every foot.

Tim / Jodee

Appendix I

North Flume OTT PLS Data with Flowrates

OTT PLS Data at North Flume, February 2013

Due to power failures caused by winter storm activities, previous data for the month is not available.

Date, Time	Depth Reading (ft)	Flowrate (cfs)	Flowrate (gpm)	
2/7/2013 14:50	0.98	2.98	1335.3	Diagnostic tests of transducers occuring. Data not representative of flow in parshall flume
2/7/2013 15:00	0.88	2.53	1134.9	
2/7/2013 15:10	0.77	2.07	927.6	
2/7/2013 15:20	0.87	2.49	1115.5	
2/7/2013 15:30	0.95	2.84	1274.0	
2/7/2013 15:40	0.95	2.84	1274.0	
2/7/2013 15:50	0.85	2.40	1077.0	
2/7/2013 16:00	0.52	1.14	512.6	
2/7/2013 16:10	0.51	1.11	497.8	
2/7/2013 16:20	0.51	1.11	497.8	
2/7/2013 16:30	0.51	1.11	497.8	
2/7/2013 16:40	0.51	1.11	497.8	
2/7/2013 16:50	0.51	1.11	497.8	
2/7/2013 17:00	0.51	1.11	497.8	
2/7/2013 17:10	0.51	1.11	497.8	
2/7/2013 17:20	0.51	1.11	497.8	
2/7/2013 17:30	0.51	1.11	497.8	
2/7/2013 17:40	0.51	1.11	497.8	
2/7/2013 17:50	0.51	1.11	497.8	
2/7/2013 18:00	0.51	1.11	497.8	
2/7/2013 18:10	0.51	1.11	497.8	
2/7/2013 18:20	0.51	1.11	497.8	
2/7/2013 18:30	0.51	1.11	497.8	
2/7/2013 18:40	0.51	1.11	497.8	
2/7/2013 18:50	0.51	1.11	497.8	
2/7/2013 19:00	0.51	1.11	497.8	
2/7/2013 19:10	0.51	1.11	497.8	
2/7/2013 19:20	0.51	1.11	497.8	
2/7/2013 19:30	0.51	1.11	497.8	
2/7/2013 19:40	0.51	1.11	497.8	
2/7/2013 19:50	0.51	1.11	497.8	
2/7/2013 20:00	0.51	1.11	497.8	
2/7/2013 20:10	0.51	1.11	497.8	
2/7/2013 20:20	0.51	1.11	497.8	
2/7/2013 20:30	0.51	1.11	497.8	
2/7/2013 20:40	0.51	1.11	497.8	
2/7/2013 20:50	0.51	1.11	497.8	
2/7/2013 21:00	0.51	1.11	497.8	
2/7/2013 21:10	0.51	1.11	497.8	

2/7/2013 21:20	0.51	1.11	497.8
2/7/2013 21:30	0.51	1.11	497.8
2/7/2013 21:40	0.51	1.11	497.8
2/7/2013 21:50	0.51	1.11	497.8
2/7/2013 22:00	0.51	1.11	497.8
2/7/2013 22:10	0.51	1.11	497.8
2/7/2013 22:20	0.51	1.11	497.8
2/7/2013 22:30	0.51	1.11	497.8
2/7/2013 22:40	0.51	1.11	497.8
2/7/2013 22:50	0.51	1.11	497.8
2/7/2013 23:00	0.51	1.11	497.8
2/7/2013 23:10	0.51	1.11	497.8
2/7/2013 23:20	0.51	1.11	497.8
2/7/2013 23:30	0.51	1.11	497.8
2/7/2013 23:40	0.51	1.11	497.8
2/7/2013 23:50	0.51	1.11	497.8
2/8/2013 0:00	0.51	1.11	497.8
2/8/2013 0:10	0.51	1.11	497.8
2/8/2013 0:20	0.51	1.11	497.8
2/8/2013 0:30	0.51	1.11	497.8
2/8/2013 0:40	0.51	1.11	497.8
2/8/2013 0:50	0.51	1.11	497.8
2/8/2013 1:00	0.51	1.11	497.8
2/8/2013 1:10	0.51	1.11	497.8
2/8/2013 1:20	0.51	1.11	497.8
2/8/2013 1:30	0.51	1.11	497.8
2/8/2013 1:40	0.51	1.11	497.8
2/8/2013 1:50	0.51	1.11	497.8
2/8/2013 2:00	0.51	1.11	497.8
2/8/2013 2:10	0.51	1.11	497.8
2/8/2013 2:20	0.51	1.11	497.8
2/8/2013 2:30	0.51	1.11	497.8
2/8/2013 2:40	0.51	1.11	497.8
2/8/2013 2:50	0.51	1.11	497.8
2/8/2013 3:00	0.51	1.11	497.8
2/8/2013 3:10	0.51	1.11	497.8
2/8/2013 3:20	0.51	1.11	497.8
2/8/2013 3:30	0.51	1.11	497.8
2/8/2013 3:40	0.51	1.11	497.8
2/8/2013 3:50	0.51	1.11	497.8
2/8/2013 4:00	0.51	1.11	497.8
2/8/2013 4:10	0.51	1.11	497.8
2/8/2013 4:20	0.51	1.11	497.8
2/8/2013 4:30	0.51	1.11	497.8
2/8/2013 4:40	0.51	1.11	497.8
2/8/2013 4:50	0.51	1.11	497.8
2/8/2013 5:00	0.51	1.11	497.8

2/8/2013 5:10	0.51	1.11	497.8
2/8/2013 5:20	0.51	1.11	497.8
2/8/2013 5:30	0.51	1.11	497.8
2/8/2013 5:40	0.51	1.11	497.8
2/8/2013 5:50	0.51	1.11	497.8
2/8/2013 6:00	0.51	1.11	497.8
2/8/2013 6:10	0.51	1.11	497.8
2/8/2013 6:20	0.51	1.11	497.8
2/8/2013 6:30	0.51	1.11	497.8
2/8/2013 6:40	0.51	1.11	497.8
2/8/2013 6:50	0.51	1.11	497.8
2/8/2013 7:00	0.51	1.11	497.8
2/8/2013 7:10	0.51	1.11	497.8
2/8/2013 7:20	0.51	1.11	497.8
2/8/2013 7:30	0.51	1.11	497.8
2/8/2013 7:40	0.51	1.11	497.8
2/8/2013 7:50	0.51	1.11	497.8
2/8/2013 8:00	0.51	1.11	497.8
2/8/2013 8:30	0.51	1.11	497.8
2/8/2013 8:40	0.51	1.11	497.8
2/8/2013 8:50	0.51	1.11	497.8
2/8/2013 9:00	0.51	1.11	497.8
2/8/2013 9:30	0.51	1.11	497.8
2/8/2013 9:40	0.51	1.11	497.8
2/8/2013 9:50	0.51	1.11	497.8
2/8/2013 10:00	0.51	1.11	497.8
2/8/2013 10:10	0.51	1.11	497.8
2/8/2013 10:20	0.51	1.11	497.8
2/8/2013 10:30	0.51	1.11	497.8
2/8/2013 10:40	0.51	1.11	497.8
2/8/2013 10:50	0.51	1.11	497.8
2/8/2013 11:00	0.51	1.11	497.8
2/8/2013 11:10	0.51	1.11	497.8
2/8/2013 11:20	0.51	1.11	497.8
2/8/2013 11:30	0.51	1.11	497.8
2/8/2013 11:40	0.51	1.11	497.8
2/8/2013 11:50	0.51	1.11	497.8
2/8/2013 12:00	0.51	1.11	497.8
2/8/2013 12:10	0.51	1.11	497.8
2/8/2013 12:20	0.51	1.11	497.8
2/8/2013 12:30	0.51	1.11	497.8
2/8/2013 12:40	0.51	1.11	497.8
2/8/2013 12:50	0.51	1.11	497.8
2/8/2013 13:00	0.51	1.11	497.8
2/8/2013 13:10	0.51	1.11	497.8
2/8/2013 13:20	0.51	1.11	497.8
2/8/2013 13:30	0.51	1.11	497.8

2/8/2013 13:40	0.51	1.11	497.8
2/8/2013 13:50	0.51	1.11	497.8
2/8/2013 14:00	0.51	1.11	497.8
2/8/2013 14:10	0.51	1.11	497.8
2/8/2013 14:20	0.51	1.11	497.8
2/8/2013 14:30	0.51	1.11	497.8
2/8/2013 14:40	0.51	1.11	497.8
2/8/2013 14:50	0.51	1.11	497.8
2/8/2013 15:00	0.51	1.11	497.8
2/8/2013 15:10	0.51	1.11	497.8
2/8/2013 15:20	0.51	1.11	497.8
2/8/2013 15:30	0.51	1.11	497.8
2/8/2013 15:40	0.51	1.11	497.8
2/8/2013 15:50	0.51	1.11	497.8
2/8/2013 16:00	0.51	1.11	497.8
2/8/2013 16:10	0.51	1.11	497.8
2/8/2013 16:20	0.51	1.11	497.8
2/8/2013 16:30	0.51	1.11	497.8
2/8/2013 16:40	0.51	1.11	497.8
2/8/2013 16:50	0.51	1.11	497.8
2/8/2013 17:00	0.51	1.11	497.8
2/8/2013 17:10	0.51	1.11	497.8
2/8/2013 17:20	0.51	1.11	497.8
2/8/2013 17:30	0.51	1.11	497.8
2/8/2013 17:40	0.51	1.11	497.8
2/8/2013 17:50	0.51	1.11	497.8
2/8/2013 18:00	0.51	1.11	497.8
2/8/2013 18:10	0.51	1.11	497.8
2/8/2013 18:20	0.51	1.11	497.8
2/8/2013 18:30	0.51	1.11	497.8
2/8/2013 18:40	0.51	1.11	497.8
2/8/2013 18:50	0.51	1.11	497.8
2/8/2013 19:00	0.51	1.11	497.8
2/8/2013 19:10	0.51	1.11	497.8
2/8/2013 19:20	0.51	1.11	497.8
2/8/2013 19:30	0.51	1.11	497.8
2/8/2013 19:40	0.51	1.11	497.8
2/8/2013 19:50	0.51	1.11	497.8
2/8/2013 20:00	0.51	1.11	497.8
2/8/2013 20:10	0.51	1.11	497.8
2/8/2013 20:20	0.51	1.11	497.8
2/8/2013 20:30	0.51	1.11	497.8
2/8/2013 20:40	0.51	1.11	497.8
2/8/2013 20:50	0.51	1.11	497.8
2/8/2013 21:00	0.51	1.11	497.8
2/8/2013 21:10	0.51	1.11	497.8
2/8/2013 21:20	0.51	1.11	497.8

2/8/2013 21:30	0.51	1.11	497.8
2/8/2013 21:40	0.51	1.11	497.8
2/8/2013 21:50	0.51	1.11	497.8
2/8/2013 22:00	0.51	1.11	497.8
2/8/2013 22:10	0.51	1.11	497.8
2/8/2013 22:20	0.51	1.11	497.8
2/8/2013 22:30	0.51	1.11	497.8
2/8/2013 22:40	0.51	1.11	497.8
2/8/2013 22:50	0.51	1.11	497.8
2/8/2013 23:00	0.51	1.11	497.8
2/8/2013 23:10	0.51	1.11	497.8
2/8/2013 23:20	0.51	1.11	497.8
2/8/2013 23:30	0.51	1.11	497.8
2/8/2013 23:40	0.51	1.11	497.8
2/8/2013 23:50	0.51	1.11	497.8
2/9/2013 0:00	0.51	1.11	497.8
2/9/2013 0:10	0.51	1.11	497.8
2/9/2013 0:20	0.51	1.11	497.8
2/9/2013 0:30	0.51	1.11	497.8
2/9/2013 0:40	0.51	1.11	497.8
2/9/2013 0:50	0.51	1.11	497.8
2/9/2013 1:00	0.51	1.11	497.8
2/9/2013 1:10	0.51	1.11	497.8
2/9/2013 1:20	0.51	1.11	497.8
2/9/2013 1:30	0.51	1.11	497.8
2/9/2013 1:40	0.51	1.11	497.8
2/9/2013 1:50	0.51	1.11	497.8
2/9/2013 2:00	0.51	1.11	497.8
2/9/2013 2:10	0.51	1.11	497.8
2/9/2013 2:20	0.51	1.11	497.8
2/9/2013 2:30	0.51	1.11	497.8
2/9/2013 2:40	0.51	1.11	497.8
2/9/2013 2:50	0.51	1.11	497.8
2/9/2013 3:00	0.51	1.11	497.8
2/9/2013 3:10	0.51	1.11	497.8
2/9/2013 3:20	0.51	1.11	497.8
2/9/2013 3:30	0.51	1.11	497.8
2/9/2013 3:40	0.51	1.11	497.8
2/9/2013 3:50	0.51	1.11	497.8
2/9/2013 4:00	0.51	1.11	497.8
2/9/2013 4:10	0.51	1.11	497.8
2/9/2013 4:20	0.51	1.11	497.8
2/9/2013 4:30	0.51	1.11	497.8
2/9/2013 4:40	0.51	1.11	497.8
2/9/2013 4:50	0.51	1.11	497.8
2/9/2013 5:00	0.51	1.11	497.8
2/9/2013 5:10	0.51	1.11	497.8

2/9/2013 5:20	0.51	1.11	497.8
2/9/2013 5:30	0.51	1.11	497.8
2/9/2013 5:40	0.51	1.11	497.8
2/9/2013 5:50	0.51	1.11	497.8
2/9/2013 6:00	0.51	1.11	497.8
2/9/2013 6:10	0.51	1.11	497.8
2/9/2013 6:20	0.51	1.11	497.8
2/9/2013 6:30	0.51	1.11	497.8
2/9/2013 6:40	0.51	1.11	497.8
2/9/2013 6:50	0.51	1.11	497.8
2/9/2013 7:00	0.51	1.11	497.8
2/9/2013 7:10	0.51	1.11	497.8
2/9/2013 7:20	0.51	1.11	497.8
2/9/2013 7:30	0.51	1.11	497.8
2/9/2013 7:40	0.51	1.11	497.8
2/9/2013 7:50	0.51	1.11	497.8
2/9/2013 8:00	0.51	1.11	497.8
2/9/2013 8:10	0.51	1.11	497.8
2/9/2013 8:20	0.51	1.11	497.8
2/9/2013 8:30	0.51	1.11	497.8
2/9/2013 8:40	0.51	1.11	497.8
2/9/2013 8:50	0.51	1.11	497.8
2/9/2013 9:00	0.51	1.11	497.8
2/9/2013 9:10	0.51	1.11	497.8
2/9/2013 9:20	0.51	1.11	497.8
2/9/2013 9:30	0.51	1.11	497.8
2/9/2013 9:40	0.51	1.11	497.8
2/9/2013 9:50	0.51	1.11	497.8
2/9/2013 10:00	0.51	1.11	497.8
2/9/2013 10:10	0.51	1.11	497.8
2/9/2013 10:20	0.51	1.11	497.8
2/9/2013 10:30	0.51	1.11	497.8
2/9/2013 10:40	0.51	1.11	497.8
2/9/2013 10:50	0.51	1.11	497.8
2/9/2013 11:00	0.51	1.11	497.8
2/9/2013 11:10	0.51	1.11	497.8
2/9/2013 11:20	0.51	1.11	497.8
2/9/2013 11:30	0.51	1.11	497.8
2/9/2013 11:40	0.51	1.11	497.8
2/9/2013 11:50	0.51	1.11	497.8
2/9/2013 12:00	0.51	1.11	497.8
2/9/2013 12:10	0.51	1.11	497.8
2/9/2013 12:20	0.51	1.11	497.8
2/9/2013 12:30	0.51	1.11	497.8
2/9/2013 12:40	0.51	1.11	497.8
2/9/2013 12:50	0.51	1.11	497.8
2/9/2013 13:00	0.51	1.11	497.8

2/9/2013 13:10	0.51	1.11	497.8
2/9/2013 13:20	0.51	1.11	497.8
2/9/2013 13:30	0.51	1.11	497.8
2/9/2013 13:40	0.51	1.11	497.8
2/9/2013 13:50	0.51	1.11	497.8
2/9/2013 14:00	0.51	1.11	497.8
2/9/2013 14:10	0.51	1.11	497.8
2/9/2013 14:20	0.51	1.11	497.8
2/9/2013 14:30	0.51	1.11	497.8
2/9/2013 14:40	0.51	1.11	497.8
2/9/2013 14:50	0.51	1.11	497.8
2/9/2013 15:00	0.51	1.11	497.8
2/9/2013 15:10	0.51	1.11	497.8
2/9/2013 15:20	0.51	1.11	497.8
2/9/2013 15:30	0.51	1.11	497.8
2/9/2013 15:40	0.51	1.11	497.8
2/9/2013 15:50	0.51	1.11	497.8
2/9/2013 16:00	0.51	1.11	497.8
2/9/2013 16:10	0.51	1.11	497.8
2/9/2013 16:20	0.51	1.11	497.8
2/9/2013 16:30	0.51	1.11	497.8
2/9/2013 16:40	0.51	1.11	497.8
2/9/2013 16:50	0.51	1.11	497.8
2/9/2013 17:00	0.51	1.11	497.8
2/9/2013 17:10	0.51	1.11	497.8
2/9/2013 17:20	0.51	1.11	497.8
2/9/2013 17:30	0.51	1.11	497.8
2/9/2013 17:40	0.51	1.11	497.8
2/9/2013 17:50	0.51	1.11	497.8
2/9/2013 18:00	0.51	1.11	497.8
2/9/2013 18:10	0.51	1.11	497.8
2/9/2013 18:20	0.51	1.11	497.8
2/9/2013 18:30	0.51	1.11	497.8
2/9/2013 18:40	0.51	1.11	497.8
2/9/2013 18:50	0.51	1.11	497.8
2/9/2013 19:00	0.51	1.11	497.8
2/9/2013 19:10	0.51	1.11	497.8
2/9/2013 19:20	0.51	1.11	497.8
2/9/2013 19:30	0.51	1.11	497.8
2/9/2013 19:40	0.51	1.11	497.8
2/9/2013 19:50	0.51	1.11	497.8
2/9/2013 20:00	0.51	1.11	497.8
2/9/2013 20:10	0.51	1.11	497.8
2/9/2013 20:20	0.51	1.11	497.8
2/9/2013 20:30	0.51	1.11	497.8
2/9/2013 20:40	0.51	1.11	497.8
2/9/2013 20:50	0.51	1.11	497.8

2/9/2013 21:00	0.51	1.11	497.8
2/9/2013 21:10	0.51	1.11	497.8
2/9/2013 21:20	0.51	1.11	497.8
2/9/2013 21:30	0.51	1.11	497.8
2/9/2013 21:40	0.51	1.11	497.8
2/9/2013 21:50	0.51	1.11	497.8
2/9/2013 22:00	0.51	1.11	497.8
2/9/2013 22:10	0.51	1.11	497.8
2/9/2013 22:20	0.51	1.11	497.8
2/9/2013 22:30	0.51	1.11	497.8
2/9/2013 22:40	0.51	1.11	497.8
2/9/2013 22:50	0.51	1.11	497.8
2/9/2013 23:00	0.51	1.11	497.8
2/9/2013 23:10	0.51	1.11	497.8
2/9/2013 23:20	0.51	1.11	497.8
2/9/2013 23:30	0.51	1.11	497.8
2/9/2013 23:40	0.51	1.11	497.8
2/9/2013 23:50	0.51	1.11	497.8
2/10/2013 0:00	0.51	1.11	497.8
2/10/2013 0:10	0.51	1.11	497.8
2/10/2013 0:20	0.51	1.11	497.8
2/10/2013 0:30	0.51	1.11	497.8
2/10/2013 0:40	0.51	1.11	497.8
2/10/2013 0:50	0.51	1.11	497.8
2/10/2013 1:00	0.51	1.11	497.8
2/10/2013 1:10	0.51	1.11	497.8
2/10/2013 1:20	0.51	1.11	497.8
2/10/2013 1:30	0.51	1.11	497.8
2/10/2013 1:40	0.51	1.11	497.8
2/10/2013 1:50	0.51	1.11	497.8
2/10/2013 2:00	0.51	1.11	497.8
2/10/2013 2:10	0.51	1.11	497.8
2/10/2013 2:20	0.51	1.11	497.8
2/10/2013 2:30	0.51	1.11	497.8
2/10/2013 2:40	0.51	1.11	497.8
2/10/2013 2:50	0.51	1.11	497.8
2/10/2013 3:00	0.51	1.11	497.8
2/10/2013 3:10	0.51	1.11	497.8
2/10/2013 3:20	0.51	1.11	497.8
2/10/2013 3:30	0.51	1.11	497.8
2/10/2013 3:40	0.51	1.11	497.8
2/10/2013 3:50	0.51	1.11	497.8
2/10/2013 4:00	0.51	1.11	497.8
2/10/2013 4:10	0.51	1.11	497.8
2/10/2013 4:20	0.51	1.11	497.8
2/10/2013 4:30	0.51	1.11	497.8
2/10/2013 4:40	0.51	1.11	497.8

2/10/2013 4:50	0.51	1.11	497.8
2/10/2013 5:00	0.51	1.11	497.8
2/10/2013 5:10	0.51	1.11	497.8
2/10/2013 5:20	0.51	1.11	497.8
2/10/2013 5:30	0.51	1.11	497.8
2/10/2013 5:40	0.51	1.11	497.8
2/10/2013 5:50	0.51	1.11	497.8
2/10/2013 6:00	0.51	1.11	497.8
2/10/2013 6:10	0.51	1.11	497.8
2/10/2013 6:20	0.51	1.11	497.8
2/10/2013 6:30	0.51	1.11	497.8
2/10/2013 6:40	0.51	1.11	497.8
2/10/2013 6:50	0.51	1.11	497.8
2/10/2013 7:00	0.51	1.11	497.8
2/10/2013 7:10	0.51	1.11	497.8
2/10/2013 7:20	0.51	1.11	497.8
2/10/2013 7:30	0.51	1.11	497.8
2/10/2013 7:40	0.51	1.11	497.8
2/10/2013 7:50	0.51	1.11	497.8
2/10/2013 8:00	0.51	1.11	497.8
2/10/2013 8:10	0.51	1.11	497.8
2/10/2013 8:20	0.51	1.11	497.8
2/10/2013 8:30	0.51	1.11	497.8
2/10/2013 8:40	0.51	1.11	497.8
2/10/2013 8:50	0.51	1.11	497.8
2/10/2013 9:00	0.51	1.11	497.8
2/10/2013 9:10	0.51	1.11	497.8
2/10/2013 9:20	0.51	1.11	497.8
2/10/2013 9:30	0.51	1.11	497.8
2/10/2013 9:40	0.51	1.11	497.8
2/10/2013 9:50	0.51	1.11	497.8
2/10/2013 10:00	0.51	1.11	497.8
2/10/2013 10:10	0.51	1.11	497.8
2/10/2013 10:20	0.51	1.11	497.8
2/10/2013 10:30	0.51	1.11	497.8
2/10/2013 10:40	0.51	1.11	497.8
2/10/2013 10:50	0.51	1.11	497.8
2/10/2013 11:00	0.51	1.11	497.8
2/10/2013 11:10	0.51	1.11	497.8
2/10/2013 11:20	0.51	1.11	497.8
2/10/2013 11:30	0.51	1.11	497.8
2/10/2013 11:40	0.51	1.11	497.8
2/10/2013 11:50	0.51	1.11	497.8
2/10/2013 12:00	0.51	1.11	497.8
2/10/2013 12:10	0.51	1.11	497.8
2/10/2013 12:20	0.51	1.11	497.8
2/10/2013 12:30	0.51	1.11	497.8

2/10/2013 12:40	0.51	1.11	497.8
2/10/2013 12:50	0.51	1.11	497.8
2/10/2013 13:00	0.51	1.11	497.8
2/10/2013 13:10	0.51	1.11	497.8
2/10/2013 13:20	0.51	1.11	497.8
2/10/2013 13:30	0.51	1.11	497.8
2/10/2013 13:40	0.51	1.11	497.8
2/10/2013 13:50	0.51	1.11	497.8
2/10/2013 14:00	0.51	1.11	497.8
2/10/2013 14:10	0.51	1.11	497.8
2/10/2013 14:20	0.51	1.11	497.8
2/10/2013 14:30	0.51	1.11	497.8
2/10/2013 14:40	0.51	1.11	497.8
2/10/2013 14:50	0.51	1.11	497.8
2/10/2013 15:00	0.51	1.11	497.8
2/10/2013 15:10	0.51	1.11	497.8
2/10/2013 15:20	0.51	1.11	497.8
2/10/2013 15:30	0.51	1.11	497.8
2/10/2013 15:40	0.51	1.11	497.8
2/10/2013 15:50	0.51	1.11	497.8
2/10/2013 16:00	0.51	1.11	497.8
2/10/2013 16:10	0.51	1.11	497.8
2/10/2013 16:20	0.51	1.11	497.8
2/10/2013 16:30	0.51	1.11	497.8
2/10/2013 16:40	0.51	1.11	497.8
2/10/2013 16:50	0.51	1.11	497.8
2/10/2013 17:00	0.51	1.11	497.8
2/10/2013 17:10	0.51	1.11	497.8
2/10/2013 17:20	0.51	1.11	497.8
2/10/2013 17:30	0.51	1.11	497.8
2/10/2013 17:40	0.51	1.11	497.8
2/10/2013 17:50	0.51	1.11	497.8
2/10/2013 18:00	0.51	1.11	497.8
2/10/2013 18:10	0.51	1.11	497.8
2/10/2013 18:20	0.51	1.11	497.8
2/10/2013 18:30	0.51	1.11	497.8
2/10/2013 18:40	0.51	1.11	497.8
2/10/2013 18:50	0.51	1.11	497.8
2/10/2013 19:00	0.51	1.11	497.8
2/10/2013 19:10	0.51	1.11	497.8
2/10/2013 19:20	0.51	1.11	497.8
2/10/2013 19:30	0.51	1.11	497.8
2/10/2013 19:40	0.51	1.11	497.8
2/10/2013 19:50	0.51	1.11	497.8
2/10/2013 20:00	0.51	1.11	497.8
2/13/2013 11:50	0.51	1.11	497.8
2/13/2013 11:51	0.51	1.11	497.8

2/13/2013 11:51	0.51	1.11	497.8
2/13/2013 11:52	0.51	1.11	497.8
2/13/2013 11:52	0.51	1.11	497.8
2/13/2013 12:00	0.51	1.11	497.8
2/13/2013 12:10	0.51	1.11	497.8
2/13/2013 12:20	0.51	1.11	497.8
2/13/2013 12:30	0.51	1.11	497.8
2/13/2013 12:40	0.51	1.11	497.8
2/13/2013 12:50	0.51	1.11	497.8
2/13/2013 13:00	0.51	1.11	497.8
2/13/2013 13:10	0.51	1.11	497.8
2/13/2013 13:20	0.51	1.11	497.8
2/13/2013 13:30	0.51	1.11	497.8
2/13/2013 13:40	0.51	1.11	497.8
2/13/2013 13:50	0.51	1.11	497.8
2/13/2013 14:00	0.51	1.11	497.8
2/13/2013 14:10	0.51	1.11	497.8
2/13/2013 14:20	0.51	1.11	497.8
2/13/2013 14:30	0.51	1.11	497.8
2/13/2013 14:40	0.51	1.11	497.8
2/13/2013 14:50	0.51	1.11	497.8
2/13/2013 15:00	0.51	1.11	497.8
2/13/2013 15:10	0.51	1.11	497.8
2/13/2013 15:20	0.51	1.11	497.8
2/13/2013 15:30	0.51	1.11	497.8
2/13/2013 15:40	0.51	1.11	497.8
2/13/2013 15:50	0.51	1.11	497.8
2/13/2013 16:00	0.51	1.11	497.8
2/13/2013 16:10	0.51	1.11	497.8
2/13/2013 16:20	0.51	1.11	497.8
2/13/2013 16:30	0.51	1.11	497.8
2/13/2013 16:40	0.51	1.11	497.8
2/13/2013 16:50	0.51	1.11	497.8
2/13/2013 17:00	0.51	1.11	497.8
2/13/2013 17:10	0.51	1.11	497.8
2/13/2013 17:20	0.51	1.11	497.8
2/13/2013 17:30	0.51	1.11	497.8
2/13/2013 17:40	0.51	1.11	497.8
2/13/2013 17:50	0.51	1.11	497.8
2/13/2013 18:00	0.51	1.11	497.8
2/13/2013 18:10	0.51	1.11	497.8
2/13/2013 18:20	0.51	1.11	497.8
2/13/2013 18:30	0.51	1.11	497.8
2/13/2013 18:40	0.51	1.11	497.8
2/13/2013 18:50	0.51	1.11	497.8
2/13/2013 19:00	0.51	1.11	497.8
2/13/2013 19:10	0.51	1.11	497.8

2/13/2013 19:20	0.51	1.11	497.8
2/13/2013 19:30	0.51	1.11	497.8
2/13/2013 19:40	0.51	1.11	497.8
2/13/2013 19:50	0.51	1.11	497.8
2/13/2013 20:00	0.51	1.11	497.8
2/13/2013 20:10	0.51	1.11	497.8
2/13/2013 20:20	0.51	1.11	497.8
2/13/2013 20:30	0.51	1.11	497.8
2/13/2013 20:40	0.51	1.11	497.8
2/13/2013 20:50	0.51	1.11	497.8
2/13/2013 21:00	0.51	1.11	497.8
2/13/2013 21:10	0.51	1.11	497.8
2/13/2013 21:20	0.51	1.11	497.8
2/13/2013 21:30	0.51	1.11	497.8
2/13/2013 21:40	0.51	1.11	497.8
2/13/2013 21:50	0.51	1.11	497.8
2/13/2013 22:00	0.51	1.11	497.8
2/13/2013 22:10	0.51	1.11	497.8
2/13/2013 22:20	0.51	1.11	497.8
2/13/2013 22:30	0.51	1.11	497.8
2/13/2013 22:40	0.51	1.11	497.8
2/13/2013 22:50	0.51	1.11	497.8
2/13/2013 23:00	0.51	1.11	497.8
2/13/2013 23:10	0.51	1.11	497.8
2/13/2013 23:20	0.51	1.11	497.8
2/13/2013 23:30	0.51	1.11	497.8
2/13/2013 23:40	0.51	1.11	497.8
2/13/2013 23:50	0.51	1.11	497.8
2/14/2013 0:00	0.51	1.11	497.8
2/14/2013 8:30	0.51	1.11	497.8
2/14/2013 8:40	0.51	1.11	497.8
2/14/2013 9:30	0.51	1.11	497.8
2/14/2013 9:40	0.51	1.11	497.8
2/14/2013 9:50	0.51	1.11	497.8
2/14/2013 10:00	0.51	1.11	497.8
2/14/2013 10:10	0.51	1.11	497.8
2/14/2013 10:20	0.51	1.11	497.8
2/14/2013 10:30	0.51	1.11	497.8
2/14/2013 10:40	0.51	1.11	497.8
2/14/2013 10:50	0.51	1.11	497.8
2/14/2013 11:00	0.51	1.11	497.8
2/14/2013 11:10	0.51	1.11	497.8
2/14/2013 11:20	0.51	1.11	497.8
2/14/2013 11:30	0.51	1.11	497.8
2/14/2013 11:40	0.51	1.11	497.8
2/14/2013 11:50	0.51	1.11	497.8
2/14/2013 12:00	0.51	1.11	497.8

2/14/2013 12:10	0.51	1.11	497.8
2/14/2013 12:20	0.51	1.11	497.8
2/14/2013 12:30	0.51	1.11	497.8
2/14/2013 12:40	0.51	1.11	497.8
2/14/2013 12:50	0.51	1.11	497.8
2/14/2013 13:00	0.51	1.11	497.8
2/14/2013 13:10	0.51	1.11	497.8
2/14/2013 13:20	0.51	1.11	497.8
2/14/2013 13:30	0.51	1.11	497.8
2/14/2013 13:40	0.51	1.11	497.8
2/14/2013 13:50	0.51	1.11	497.8
2/14/2013 14:00	0.51	1.11	497.8
2/14/2013 14:10	0.51	1.11	497.8
2/14/2013 14:20	0.51	1.11	497.8
2/14/2013 14:30	0.51	1.11	497.8
2/14/2013 14:40	0.51	1.11	497.8
2/14/2013 14:50	0.51	1.11	497.8
2/14/2013 15:00	0.51	1.11	497.8
2/14/2013 15:10	0.51	1.11	497.8
2/14/2013 15:20	0.51	1.11	497.8
2/14/2013 15:30	0.51	1.11	497.8
2/14/2013 15:40	0.51	1.11	497.8
2/14/2013 15:50	0.51	1.11	497.8
2/14/2013 16:00	0.51	1.11	497.8
2/14/2013 16:10	0.51	1.11	497.8
2/14/2013 16:20	0.51	1.11	497.8
2/14/2013 16:30	0.51	1.11	497.8
2/14/2013 16:40	0.51	1.11	497.8
2/14/2013 16:50	0.51	1.11	497.8
2/14/2013 17:00	0.51	1.11	497.8
2/14/2013 17:10	0.51	1.11	497.8
2/14/2013 17:20	0.51	1.11	497.8
2/14/2013 17:30	0.51	1.11	497.8
2/14/2013 17:40	0.51	1.11	497.8
2/14/2013 17:50	0.51	1.11	497.8
2/14/2013 18:00	0.51	1.11	497.8
2/14/2013 18:10	0.51	1.11	497.8
2/14/2013 18:20	0.51	1.11	497.8
2/14/2013 18:30	0.51	1.11	497.8
2/14/2013 18:40	0.51	1.11	497.8
2/14/2013 18:50	0.51	1.11	497.8
2/14/2013 19:00	0.51	1.11	497.8
2/14/2013 19:10	0.51	1.11	497.8
2/14/2013 19:20	0.51	1.11	497.8
2/14/2013 19:30	0.51	1.11	497.8
2/14/2013 19:40	0.51	1.11	497.8
2/14/2013 19:50	0.51	1.11	497.8

2/14/2013 20:00	0.51	1.11	497.8
2/14/2013 20:10	0.51	1.11	497.8
2/14/2013 20:20	0.51	1.11	497.8
2/14/2013 20:30	0.51	1.11	497.8
2/14/2013 20:40	0.51	1.11	497.8
2/14/2013 20:50	0.51	1.11	497.8
2/14/2013 21:00	0.51	1.11	497.8
2/14/2013 21:10	0.51	1.11	497.8
2/14/2013 21:20	0.51	1.11	497.8
2/14/2013 21:30	0.51	1.11	497.8
2/14/2013 21:40	0.51	1.11	497.8
2/14/2013 21:50	0.51	1.11	497.8
2/14/2013 22:00	0.51	1.11	497.8
2/14/2013 22:10	0.51	1.11	497.8
2/14/2013 22:20	0.51	1.11	497.8
2/14/2013 22:30	0.51	1.11	497.8
2/14/2013 22:40	0.51	1.11	497.8
2/14/2013 22:50	0.51	1.11	497.8
2/14/2013 23:00	0.51	1.11	497.8
2/14/2013 23:10	0.51	1.11	497.8
2/14/2013 23:20	0.51	1.11	497.8
2/14/2013 23:30	0.51	1.11	497.8
2/14/2013 23:40	0.51	1.11	497.8
2/14/2013 23:50	0.51	1.11	497.8
2/15/2013 0:00	0.51	1.11	497.8
2/15/2013 0:10	0.51	1.11	497.8
2/15/2013 0:20	0.51	1.11	497.8
2/15/2013 0:30	0.51	1.11	497.8
2/15/2013 0:40	0.51	1.11	497.8
2/15/2013 0:50	0.51	1.11	497.8
2/15/2013 1:00	0.51	1.11	497.8
2/15/2013 1:10	0.51	1.11	497.8
2/15/2013 1:20	0.51	1.11	497.8
2/15/2013 1:30	0.51	1.11	497.8
2/15/2013 1:40	0.51	1.11	497.8
2/15/2013 1:50	0.51	1.11	497.8
2/15/2013 2:00	0.51	1.11	497.8
2/15/2013 2:10	0.51	1.11	497.8
2/15/2013 2:20	0.51	1.11	497.8
2/15/2013 2:30	0.51	1.11	497.8
2/15/2013 2:40	0.51	1.11	497.8
2/15/2013 2:50	0.51	1.11	497.8
2/15/2013 3:00	0.51	1.11	497.8
2/15/2013 3:10	0.51	1.11	497.8
2/15/2013 3:20	0.51	1.11	497.8
2/15/2013 3:30	0.51	1.11	497.8
2/15/2013 3:40	0.51	1.11	497.8

2/15/2013 3:50	0.51	1.11	497.8
2/15/2013 4:00	0.51	1.11	497.8
2/15/2013 4:10	0.51	1.11	497.8
2/15/2013 4:20	0.51	1.11	497.8
2/15/2013 4:30	0.51	1.11	497.8
2/15/2013 4:40	0.51	1.11	497.8
2/15/2013 4:50	0.51	1.11	497.8
2/15/2013 5:00	0.51	1.11	497.8
2/15/2013 9:30	0.51	1.11	497.8
2/15/2013 9:40	0.51	1.11	497.8
2/15/2013 9:50	0.51	1.11	497.8
2/15/2013 10:00	0.51	1.11	497.8
2/15/2013 10:10	0.51	1.11	497.8
2/15/2013 10:20	0.51	1.11	497.8
2/15/2013 10:30	0.51	1.11	497.8
2/15/2013 10:40	0.51	1.11	497.8
2/15/2013 10:50	0.51	1.11	497.8
2/15/2013 11:00	0.51	1.11	497.8
2/15/2013 11:10	0.51	1.11	497.8
2/15/2013 11:20	0.51	1.11	497.8
2/15/2013 11:30	0.51	1.11	497.8
2/15/2013 11:40	0.51	1.11	497.8
2/15/2013 11:50	0.51	1.11	497.8
2/15/2013 12:00	0.51	1.11	497.8
2/15/2013 12:10	0.51	1.11	497.8
2/15/2013 12:20	0.51	1.11	497.8
2/15/2013 12:30	0.51	1.11	497.8
2/15/2013 12:40	0.51	1.11	497.8
2/15/2013 12:50	0.51	1.11	497.8
2/15/2013 13:00	0.51	1.11	497.8
2/15/2013 13:10	0.51	1.11	497.8
2/15/2013 13:20	0.51	1.11	497.8
2/15/2013 13:30	0.51	1.11	497.8
2/15/2013 13:40	0.51	1.11	497.8
2/15/2013 13:50	0.51	1.11	497.8
2/15/2013 14:00	0.51	1.11	497.8
2/15/2013 14:10	0.51	1.11	497.8
2/15/2013 14:20	0.51	1.11	497.8
2/15/2013 14:30	0.51	1.11	497.8
2/15/2013 14:40	0.51	1.11	497.8
2/15/2013 14:50	0.51	1.11	497.8
2/15/2013 15:00	0.51	1.11	497.8
2/15/2013 15:10	0.51	1.11	497.8
2/15/2013 15:20	0.51	1.11	497.8
2/15/2013 15:30	0.51	1.11	497.8
2/15/2013 15:40	0.51	1.11	497.8
2/15/2013 15:50	0.51	1.11	497.8

2/15/2013 16:00	0.51	1.11	497.8
2/15/2013 16:10	0.51	1.11	497.8
2/15/2013 16:20	0.51	1.11	497.8
2/15/2013 16:30	0.51	1.11	497.8
2/15/2013 16:40	0.51	1.11	497.8
2/15/2013 16:50	0.51	1.11	497.8
2/15/2013 17:00	0.51	1.11	497.8
2/15/2013 17:10	0.51	1.11	497.8
2/15/2013 17:20	0.51	1.11	497.8
2/15/2013 17:30	0.51	1.11	497.8
2/15/2013 17:40	0.51	1.11	497.8
2/15/2013 17:50	0.51	1.11	497.8
2/15/2013 18:00	0.51	1.11	497.8
2/15/2013 18:10	0.51	1.11	497.8
2/15/2013 18:20	0.51	1.11	497.8
2/15/2013 18:30	0.51	1.11	497.8
2/15/2013 18:40	0.51	1.11	497.8
2/15/2013 18:50	0.51	1.11	497.8
2/15/2013 19:00	0.51	1.11	497.8
2/15/2013 19:10	0.51	1.11	497.8
2/15/2013 19:20	0.51	1.11	497.8
2/15/2013 19:30	0.51	1.11	497.8
2/15/2013 19:40	0.51	1.11	497.8
2/15/2013 19:50	0.51	1.11	497.8
2/15/2013 20:00	0.51	1.11	497.8
2/15/2013 20:10	0.51	1.11	497.8
2/15/2013 20:20	0.51	1.11	497.8
2/15/2013 20:30	0.51	1.11	497.8
2/15/2013 20:40	0.51	1.11	497.8
2/15/2013 20:50	0.51	1.11	497.8
2/15/2013 21:00	0.51	1.11	497.8
2/15/2013 21:10	0.51	1.11	497.8
2/15/2013 21:20	0.51	1.11	497.8
2/15/2013 21:30	0.51	1.11	497.8
2/15/2013 21:40	0.51	1.11	497.8
2/15/2013 21:50	0.51	1.11	497.8
2/15/2013 22:00	0.51	1.11	497.8
2/15/2013 22:10	0.51	1.11	497.8
2/15/2013 22:20	0.51	1.11	497.8
2/15/2013 22:30	0.51	1.11	497.8
2/15/2013 22:40	0.51	1.11	497.8
2/15/2013 22:50	0.51	1.11	497.8
2/15/2013 23:00	0.51	1.11	497.8
2/15/2013 23:10	0.51	1.11	497.8
2/15/2013 23:20	0.51	1.11	497.8
2/15/2013 23:30	0.51	1.11	497.8
2/15/2013 23:40	0.51	1.11	497.8

2/15/2013 23:50	0.51	1.11	497.8
2/16/2013 0:00	0.51	1.11	497.8
2/16/2013 0:10	0.51	1.11	497.8
2/16/2013 0:20	0.51	1.11	497.8
2/16/2013 0:30	0.51	1.11	497.8
2/16/2013 0:40	0.51	1.11	497.8
2/16/2013 0:50	0.51	1.11	497.8
2/16/2013 1:00	0.51	1.11	497.8
2/16/2013 1:10	0.51	1.11	497.8
2/16/2013 1:20	0.51	1.11	497.8
2/16/2013 9:20	0.51	1.11	497.8
2/16/2013 9:30	0.51	1.11	497.8
2/16/2013 9:40	0.51	1.11	497.8
2/16/2013 9:50	0.51	1.11	497.8
2/16/2013 10:00	0.51	1.11	497.8
2/16/2013 10:10	0.51	1.11	497.8
2/16/2013 10:20	0.51	1.11	497.8
2/16/2013 10:30	0.51	1.11	497.8
2/16/2013 10:40	0.51	1.11	497.8
2/16/2013 10:50	0.51	1.11	497.8
2/16/2013 11:00	0.51	1.11	497.8
2/16/2013 11:10	0.51	1.11	497.8
2/16/2013 11:20	0.51	1.11	497.8
2/16/2013 11:30	0.51	1.11	497.8
2/16/2013 11:40	0.51	1.11	497.8
2/16/2013 11:50	0.51	1.11	497.8
2/16/2013 12:00	0.51	1.11	497.8
2/16/2013 12:10	0.51	1.11	497.8
2/16/2013 12:20	0.51	1.11	497.8
2/16/2013 12:30	0.51	1.11	497.8
2/16/2013 12:40	0.51	1.11	497.8
2/16/2013 12:50	0.51	1.11	497.8
2/16/2013 13:00	0.51	1.11	497.8
2/16/2013 13:10	0.51	1.11	497.8
2/16/2013 13:20	0.51	1.11	497.8
2/16/2013 13:30	0.51	1.11	497.8
2/16/2013 13:40	0.51	1.11	497.8
2/16/2013 13:50	0.51	1.11	497.8
2/16/2013 14:00	0.51	1.11	497.8
2/16/2013 14:10	0.51	1.11	497.8
2/16/2013 14:20	0.51	1.11	497.8
2/16/2013 14:30	0.51	1.11	497.8
2/16/2013 14:40	0.51	1.11	497.8
2/16/2013 14:50	0.51	1.11	497.8
2/16/2013 15:00	0.51	1.11	497.8
2/16/2013 15:10	0.51	1.11	497.8
2/16/2013 15:20	0.51	1.11	497.8

2/16/2013 15:30	0.51	1.11	497.8
2/16/2013 15:40	0.51	1.11	497.8
2/16/2013 15:50	0.51	1.11	497.8
2/16/2013 16:00	0.51	1.11	497.8
2/16/2013 16:10	0.51	1.11	497.8
2/16/2013 16:20	0.51	1.11	497.8
2/16/2013 16:30	0.51	1.11	497.8
2/16/2013 16:40	0.51	1.11	497.8
2/16/2013 16:50	0.51	1.11	497.8
2/16/2013 17:00	0.51	1.11	497.8
2/16/2013 17:10	0.51	1.11	497.8
2/16/2013 17:20	0.51	1.11	497.8
2/16/2013 17:30	0.51	1.11	497.8
2/16/2013 17:40	0.51	1.11	497.8
2/16/2013 17:50	0.51	1.11	497.8
2/16/2013 18:00	0.51	1.11	497.8
2/16/2013 18:10	0.51	1.11	497.8
2/16/2013 18:20	0.51	1.11	497.8
2/16/2013 18:30	0.51	1.11	497.8
2/16/2013 18:40	0.51	1.11	497.8
2/16/2013 18:50	0.51	1.11	497.8
2/16/2013 19:00	0.51	1.11	497.8
2/16/2013 19:10	0.51	1.11	497.8
2/16/2013 19:20	0.51	1.11	497.8
2/16/2013 19:30	0.51	1.11	497.8
2/16/2013 19:40	0.51	1.11	497.8
2/16/2013 19:50	0.51	1.11	497.8
2/16/2013 20:00	0.51	1.11	497.8
2/16/2013 20:10	0.51	1.11	497.8
2/16/2013 20:20	0.51	1.11	497.8
2/16/2013 20:30	0.51	1.11	497.8
2/16/2013 20:40	0.51	1.11	497.8
2/16/2013 20:50	0.51	1.11	497.8
2/16/2013 21:00	0.51	1.11	497.8
2/16/2013 21:10	0.51	1.11	497.8
2/16/2013 21:20	0.51	1.11	497.8
2/16/2013 21:30	0.51	1.11	497.8
2/16/2013 21:40	0.51	1.11	497.8
2/16/2013 21:50	0.51	1.11	497.8
2/16/2013 22:00	0.51	1.11	497.8
2/16/2013 22:10	0.51	1.11	497.8
2/16/2013 22:20	0.51	1.11	497.8
2/16/2013 22:30	0.51	1.11	497.8
2/16/2013 22:40	0.51	1.11	497.8
2/16/2013 22:50	0.51	1.11	497.8
2/16/2013 23:00	0.51	1.11	497.8
2/16/2013 23:10	0.51	1.11	497.8

2/16/2013 23:20	0.51	1.11	497.8
2/16/2013 23:30	0.51	1.11	497.8
2/16/2013 23:40	0.51	1.11	497.8
2/16/2013 23:50	0.51	1.11	497.8
2/17/2013 0:00	0.51	1.11	497.8
2/17/2013 0:10	0.51	1.11	497.8
2/17/2013 0:20	0.51	1.11	497.8
2/17/2013 0:30	0.51	1.11	497.8
2/17/2013 0:40	0.51	1.11	497.8
2/17/2013 0:50	0.51	1.11	497.8
2/17/2013 1:00	0.51	1.11	497.8
2/17/2013 1:10	0.51	1.11	497.8
2/17/2013 1:20	0.51	1.11	497.8
2/17/2013 1:30	0.51	1.11	497.8
2/17/2013 1:40	0.51	1.11	497.8
2/17/2013 1:50	0.51	1.11	497.8
2/17/2013 2:00	0.51	1.11	497.8
2/17/2013 2:10	0.51	1.11	497.8
2/17/2013 2:20	0.51	1.11	497.8
2/17/2013 2:30	0.51	1.11	497.8
2/17/2013 2:40	0.51	1.11	497.8
2/17/2013 2:50	0.51	1.11	497.8
2/17/2013 3:00	0.51	1.11	497.8
2/17/2013 3:10	0.51	1.11	497.8
2/17/2013 3:20	0.51	1.11	497.8
2/17/2013 3:30	0.51	1.11	497.8
2/17/2013 3:40	0.51	1.11	497.8
2/17/2013 3:50	0.51	1.11	497.8
2/17/2013 4:00	0.51	1.11	497.8
2/17/2013 4:10	0.51	1.11	497.8
2/17/2013 4:20	0.51	1.11	497.8
2/17/2013 4:30	0.51	1.11	497.8
2/17/2013 4:40	0.51	1.11	497.8
2/17/2013 4:50	0.51	1.11	497.8
2/17/2013 5:00	0.51	1.11	497.8
2/17/2013 5:10	0.51	1.11	497.8
2/17/2013 5:20	0.51	1.11	497.8
2/17/2013 5:30	0.51	1.11	497.8
2/17/2013 5:40	0.51	1.11	497.8
2/17/2013 5:50	0.51	1.11	497.8
2/17/2013 6:00	0.51	1.11	497.8
2/17/2013 6:10	0.51	1.11	497.8
2/17/2013 6:20	0.51	1.11	497.8
2/17/2013 6:30	0.51	1.11	497.8
2/17/2013 6:40	0.51	1.11	497.8
2/17/2013 6:50	0.51	1.11	497.8
2/17/2013 7:00	0.51	1.11	497.8

2/17/2013 7:10	0.51	1.11	497.8
2/17/2013 7:20	0.51	1.11	497.8
2/17/2013 7:30	0.51	1.11	497.8
2/17/2013 7:40	0.51	1.11	497.8
2/17/2013 7:50	0.51	1.11	497.8
2/17/2013 8:00	0.51	1.11	497.8
2/17/2013 8:10	0.51	1.11	497.8
2/17/2013 8:20	0.51	1.11	497.8
2/17/2013 8:30	0.51	1.11	497.8
2/17/2013 8:40	0.51	1.11	497.8
2/17/2013 8:50	0.51	1.11	497.8
2/17/2013 9:00	0.51	1.11	497.8
2/17/2013 9:10	0.51	1.11	497.8
2/17/2013 9:20	0.51	1.11	497.8
2/17/2013 9:30	0.51	1.11	497.8
2/17/2013 9:40	0.51	1.11	497.8
2/17/2013 9:50	0.51	1.11	497.8
2/17/2013 10:00	0.51	1.11	497.8
2/17/2013 10:10	0.51	1.11	497.8
2/17/2013 10:20	0.51	1.11	497.8
2/17/2013 10:30	0.51	1.11	497.8
2/17/2013 10:40	0.51	1.11	497.8
2/17/2013 10:50	0.51	1.11	497.8
2/17/2013 11:00	0.51	1.11	497.8
2/17/2013 11:10	0.51	1.11	497.8
2/17/2013 11:20	0.51	1.11	497.8
2/17/2013 11:30	0.51	1.11	497.8
2/17/2013 11:40	0.51	1.11	497.8
2/17/2013 11:50	0.51	1.11	497.8
2/17/2013 12:00	0.51	1.11	497.8
2/17/2013 12:10	0.51	1.11	497.8
2/17/2013 12:20	0.51	1.11	497.8
2/17/2013 12:30	0.51	1.11	497.8
2/17/2013 12:40	0.51	1.11	497.8
2/17/2013 12:50	0.51	1.11	497.8
2/17/2013 13:00	0.51	1.11	497.8
2/17/2013 13:10	0.51	1.11	497.8
2/17/2013 13:20	0.51	1.11	497.8
2/17/2013 13:30	0.51	1.11	497.8
2/17/2013 13:40	0.51	1.11	497.8
2/17/2013 13:50	0.51	1.11	497.8
2/17/2013 14:00	0.51	1.11	497.8
2/17/2013 14:10	0.51	1.11	497.8
2/17/2013 14:20	0.51	1.11	497.8
2/17/2013 14:30	0.51	1.11	497.8
2/17/2013 14:40	0.51	1.11	497.8
2/17/2013 14:50	0.51	1.11	497.8

2/17/2013 15:00	0.51	1.11	497.8
2/17/2013 15:10	0.51	1.11	497.8
2/17/2013 15:20	0.51	1.11	497.8
2/17/2013 15:30	0.51	1.11	497.8
2/17/2013 15:40	0.51	1.11	497.8
2/17/2013 15:50	0.51	1.11	497.8
2/17/2013 16:00	0.51	1.11	497.8
2/17/2013 16:10	0.51	1.11	497.8
2/17/2013 16:20	0.51	1.11	497.8
2/17/2013 16:30	0.51	1.11	497.8
2/17/2013 16:40	0.51	1.11	497.8
2/17/2013 16:50	0.51	1.11	497.8
2/17/2013 17:00	0.51	1.11	497.8
2/17/2013 17:10	0.51	1.11	497.8
2/17/2013 17:20	0.51	1.11	497.8
2/17/2013 17:30	0.51	1.11	497.8
2/17/2013 17:40	0.51	1.11	497.8
2/17/2013 17:50	0.51	1.11	497.8
2/17/2013 18:00	0.51	1.11	497.8
2/17/2013 18:10	0.51	1.11	497.8
2/17/2013 18:20	0.51	1.11	497.8
2/17/2013 18:30	0.51	1.11	497.8
2/17/2013 18:40	0.51	1.11	497.8
2/17/2013 18:50	0.51	1.11	497.8
2/17/2013 19:00	0.51	1.11	497.8
2/17/2013 19:10	0.51	1.11	497.8
2/17/2013 19:20	0.51	1.11	497.8
2/17/2013 19:30	0.51	1.11	497.8
2/17/2013 19:40	0.51	1.11	497.8
2/17/2013 19:50	0.51	1.11	497.8
2/17/2013 20:00	0.51	1.11	497.8
2/17/2013 20:10	0.51	1.11	497.8
2/17/2013 20:20	0.51	1.11	497.8
2/17/2013 20:30	0.51	1.11	497.8
2/17/2013 20:40	0.51	1.11	497.8
2/17/2013 20:50	0.51	1.11	497.8
2/17/2013 21:00	0.51	1.11	497.8
2/17/2013 21:10	0.51	1.11	497.8
2/17/2013 21:20	0.51	1.11	497.8
2/17/2013 21:30	0.51	1.11	497.8
2/17/2013 21:40	0.51	1.11	497.8
2/17/2013 21:50	0.51	1.11	497.8
2/17/2013 22:00	0.51	1.11	497.8
2/17/2013 22:10	0.51	1.11	497.8
2/17/2013 22:20	0.51	1.11	497.8
2/17/2013 22:30	0.51	1.11	497.8
2/17/2013 22:40	0.51	1.11	497.8

2/17/2013 22:50	0.51	1.11	497.8
2/17/2013 23:00	0.51	1.11	497.8
2/17/2013 23:10	0.51	1.11	497.8
2/17/2013 23:20	0.51	1.11	497.8
2/17/2013 23:30	0.51	1.11	497.8
2/17/2013 23:40	0.51	1.11	497.8
2/17/2013 23:50	0.51	1.11	497.8
2/18/2013 0:00	0.51	1.11	497.8
2/18/2013 0:10	0.51	1.11	497.8
2/18/2013 0:20	0.51	1.11	497.8
2/18/2013 0:30	0.51	1.11	497.8
2/18/2013 0:40	0.51	1.11	497.8
2/18/2013 0:50	0.51	1.11	497.8
2/18/2013 1:00	0.51	1.11	497.8
2/18/2013 1:10	0.51	1.11	497.8
2/18/2013 1:20	0.51	1.11	497.8
2/18/2013 1:30	0.51	1.11	497.8
2/18/2013 1:40	0.51	1.11	497.8
2/18/2013 1:50	0.51	1.11	497.8
2/18/2013 2:00	0.51	1.11	497.8
2/18/2013 2:10	0.51	1.11	497.8
2/18/2013 2:20	0.51	1.11	497.8
2/18/2013 2:30	0.51	1.11	497.8
2/18/2013 2:40	0.51	1.11	497.8
2/18/2013 2:50	0.51	1.11	497.8
2/18/2013 3:00	0.51	1.11	497.8
2/18/2013 3:10	0.51	1.11	497.8
2/18/2013 3:20	0.51	1.11	497.8
2/18/2013 3:30	0.51	1.11	497.8
2/18/2013 3:40	0.51	1.11	497.8
2/18/2013 3:50	0.51	1.11	497.8
2/18/2013 4:00	0.51	1.11	497.8
2/18/2013 4:10	0.51	1.11	497.8
2/18/2013 4:20	0.51	1.11	497.8
2/18/2013 4:30	0.51	1.11	497.8
2/18/2013 4:40	0.51	1.11	497.8
2/18/2013 4:50	0.51	1.11	497.8
2/18/2013 5:00	0.51	1.11	497.8
2/18/2013 5:10	0.51	1.11	497.8
2/18/2013 5:20	0.51	1.11	497.8
2/18/2013 5:30	0.51	1.11	497.8
2/18/2013 5:40	0.51	1.11	497.8
2/18/2013 5:50	0.51	1.11	497.8
2/18/2013 6:00	0.51	1.11	497.8
2/18/2013 6:10	0.51	1.11	497.8
2/18/2013 6:20	0.51	1.11	497.8
2/18/2013 6:30	0.51	1.11	497.8

2/18/2013 6:40	0.51	1.11	497.8
2/18/2013 6:50	0.51	1.11	497.8
2/18/2013 7:00	0.51	1.11	497.8
2/18/2013 7:10	0.51	1.11	497.8
2/18/2013 7:20	0.51	1.11	497.8
2/18/2013 7:30	0.51	1.11	497.8
2/18/2013 7:40	0.51	1.11	497.8
2/18/2013 7:50	0.51	1.11	497.8
2/18/2013 8:00	0.51	1.11	497.8
2/18/2013 8:10	0.51	1.11	497.8
2/18/2013 8:20	0.51	1.11	497.8
2/18/2013 8:30	0.51	1.11	497.8
2/18/2013 8:40	0.51	1.11	497.8
2/18/2013 8:50	0.51	1.11	497.8
2/18/2013 9:00	0.51	1.11	497.8
2/18/2013 9:10	0.51	1.11	497.8
2/18/2013 9:20	0.51	1.11	497.8
2/18/2013 9:30	0.51	1.11	497.8
2/18/2013 9:40	0.51	1.11	497.8
2/18/2013 9:50	0.51	1.11	497.8
2/18/2013 10:00	0.51	1.11	497.8
2/18/2013 10:10	0.51	1.11	497.8
2/18/2013 10:20	0.51	1.11	497.8
2/18/2013 10:30	0.51	1.11	497.8
2/18/2013 10:40	0.51	1.11	497.8
2/18/2013 10:50	0.51	1.11	497.8
2/18/2013 11:00	0.51	1.11	497.8
2/18/2013 11:10	0.51	1.11	497.8
2/18/2013 11:20	0.51	1.11	497.8
2/18/2013 11:30	0.51	1.11	497.8
2/18/2013 11:40	0.51	1.11	497.8
2/18/2013 11:50	0.51	1.11	497.8
2/18/2013 12:00	0.51	1.11	497.8
2/18/2013 12:10	0.51	1.11	497.8
2/18/2013 12:20	0.51	1.11	497.8
2/18/2013 12:30	0.51	1.11	497.8
2/18/2013 12:40	0.51	1.11	497.8
2/18/2013 12:50	0.51	1.11	497.8
2/18/2013 13:00	0.51	1.11	497.8
2/18/2013 13:10	0.51	1.11	497.8
2/18/2013 13:20	0.51	1.11	497.8
2/18/2013 13:30	0.51	1.11	497.8
2/18/2013 13:40	0.51	1.11	497.8
2/18/2013 13:50	0.51	1.11	497.8
2/18/2013 14:00	0.51	1.11	497.8
2/18/2013 14:10	0.51	1.11	497.8
2/18/2013 14:20	0.51	1.11	497.8

2/18/2013 14:30	0.51	1.11	497.8
2/18/2013 14:40	0.51	1.11	497.8
2/18/2013 14:50	0.51	1.11	497.8
2/18/2013 15:00	0.51	1.11	497.8
2/18/2013 15:10	0.51	1.11	497.8
2/18/2013 15:20	0.51	1.11	497.8
2/18/2013 15:30	0.51	1.11	497.8
2/18/2013 15:40	0.51	1.11	497.8
2/18/2013 15:50	0.51	1.11	497.8
2/18/2013 16:00	0.51	1.11	497.8
2/18/2013 16:10	0.51	1.11	497.8
2/18/2013 16:20	0.51	1.11	497.8
2/18/2013 16:30	0.51	1.11	497.8
2/18/2013 16:40	0.51	1.11	497.8
2/18/2013 16:50	0.51	1.11	497.8
2/18/2013 17:00	0.51	1.11	497.8
2/18/2013 17:10	0.51	1.11	497.8
2/18/2013 17:20	0.51	1.11	497.8
2/18/2013 17:30	0.51	1.11	497.8
2/18/2013 17:40	0.51	1.11	497.8
2/18/2013 17:50	0.51	1.11	497.8
2/18/2013 18:00	0.51	1.11	497.8
2/18/2013 18:10	0.51	1.11	497.8
2/18/2013 18:20	0.51	1.11	497.8
2/18/2013 18:30	0.51	1.11	497.8
2/18/2013 18:40	0.51	1.11	497.8
2/18/2013 18:50	0.51	1.11	497.8
2/18/2013 19:00	0.51	1.11	497.8
2/18/2013 19:10	0.51	1.11	497.8
2/18/2013 19:20	0.51	1.11	497.8
2/18/2013 19:30	0.51	1.11	497.8
2/18/2013 19:40	0.51	1.11	497.8
2/18/2013 19:50	0.51	1.11	497.8
2/18/2013 20:00	0.51	1.11	497.8
2/18/2013 20:10	0.51	1.11	497.8
2/18/2013 20:20	0.51	1.11	497.8
2/18/2013 20:30	0.51	1.11	497.8
2/18/2013 20:40	0.51	1.11	497.8
2/18/2013 20:50	0.51	1.11	497.8
2/18/2013 21:00	0.51	1.11	497.8
2/18/2013 21:10	0.51	1.11	497.8
2/18/2013 21:20	0.51	1.11	497.8
2/18/2013 21:30	0.51	1.11	497.8
2/18/2013 21:40	0.51	1.11	497.8
2/18/2013 21:50	0.51	1.11	497.8
2/18/2013 22:00	0.51	1.11	497.8
2/18/2013 22:10	0.51	1.11	497.8

2/18/2013 22:20	0.51	1.11	497.8
2/18/2013 22:30	0.51	1.11	497.8
2/18/2013 22:40	0.51	1.11	497.8
2/18/2013 22:50	0.51	1.11	497.8
2/18/2013 23:00	0.51	1.11	497.8
2/18/2013 23:10	0.51	1.11	497.8
2/18/2013 23:20	0.51	1.11	497.8
2/18/2013 23:30	0.51	1.11	497.8
2/18/2013 23:40	0.51	1.11	497.8
2/18/2013 23:50	0.51	1.11	497.8
2/19/2013 0:00	0.51	1.11	497.8
2/19/2013 0:10	0.51	1.11	497.8
2/19/2013 0:20	0.51	1.11	497.8
2/19/2013 0:30	0.51	1.11	497.8
2/19/2013 0:40	0.51	1.11	497.8
2/19/2013 0:50	0.51	1.11	497.8
2/19/2013 1:00	0.51	1.11	497.8
2/19/2013 1:10	0.51	1.11	497.8
2/19/2013 1:20	0.51	1.11	497.8
2/19/2013 1:30	0.51	1.11	497.8
2/19/2013 1:40	0.51	1.11	497.8
2/19/2013 1:50	0.51	1.11	497.8
2/19/2013 2:00	0.51	1.11	497.8
2/19/2013 2:10	0.51	1.11	497.8
2/19/2013 2:20	0.51	1.11	497.8
2/19/2013 2:30	0.51	1.11	497.8
2/19/2013 2:40	0.51	1.11	497.8
2/19/2013 2:50	0.51	1.11	497.8
2/19/2013 4:40	0.51	1.11	497.8
2/19/2013 4:50	0.51	1.11	497.8
2/19/2013 5:00	0.51	1.11	497.8
2/19/2013 5:10	0.51	1.11	497.8
2/19/2013 5:20	0.51	1.11	497.8
2/19/2013 5:30	0.51	1.11	497.8
2/19/2013 5:40	0.51	1.11	497.8
2/19/2013 5:50	0.51	1.11	497.8
2/19/2013 6:00	0.51	1.11	497.8
2/19/2013 6:10	0.51	1.11	497.8
2/19/2013 6:20	0.51	1.11	497.8
2/19/2013 6:30	0.51	1.11	497.8
2/19/2013 6:40	0.51	1.11	497.8
2/19/2013 6:50	0.51	1.11	497.8
2/19/2013 7:00	0.51	1.11	497.8
2/19/2013 7:10	0.51	1.11	497.8
2/19/2013 7:20	0.51	1.11	497.8
2/19/2013 7:30	0.51	1.11	497.8
2/19/2013 7:40	0.51	1.11	497.8

2/19/2013 7:50	0.51	1.11	497.8
2/19/2013 8:00	0.51	1.11	497.8
2/19/2013 8:10	0.51	1.11	497.8
2/19/2013 8:20	0.51	1.11	497.8
2/19/2013 8:30	0.51	1.11	497.8
2/19/2013 8:40	0.51	1.11	497.8
2/19/2013 8:50	0.51	1.11	497.8
2/19/2013 9:00	0.51	1.11	497.8
2/19/2013 9:10	0.51	1.11	497.8
2/19/2013 9:20	0.51	1.11	497.8
2/19/2013 9:30	0.51	1.11	497.8
2/19/2013 9:40	0.51	1.11	497.8
2/19/2013 9:50	0.51	1.11	497.8
2/19/2013 10:00	0.51	1.11	497.8
2/19/2013 10:10	0.51	1.11	497.8
2/19/2013 10:20	0.51	1.11	497.8
2/19/2013 10:30	0.51	1.11	497.8
2/19/2013 10:40	0.51	1.11	497.8
2/19/2013 10:50	0.51	1.11	497.8
2/19/2013 11:00	0.51	1.11	497.8
2/19/2013 11:10	0.51	1.11	497.8
2/19/2013 11:20	0.51	1.11	497.8
2/19/2013 11:30	0.51	1.11	497.8
2/19/2013 11:40	0.52	1.14	512.6
2/19/2013 11:50	0.51	1.11	497.8
2/19/2013 12:00	0.52	1.14	512.6
2/19/2013 12:10	0.51	1.11	497.8
2/19/2013 12:20	0.51	1.11	497.8
2/19/2013 12:30	0.51	1.11	497.8
2/19/2013 12:40	0.51	1.11	497.8
2/19/2013 12:50	0.51	1.11	497.8
2/19/2013 13:00	0.51	1.11	497.8
2/19/2013 13:10	0.51	1.11	497.8
2/19/2013 13:20	0.51	1.11	497.8
2/19/2013 13:30	0.51	1.11	497.8
2/19/2013 13:40	0.51	1.11	497.8
2/19/2013 13:50	0.51	1.11	497.8
2/19/2013 14:00	0.51	1.11	497.8
2/19/2013 14:10	0.51	1.11	497.8
2/19/2013 14:20	0.51	1.11	497.8
2/19/2013 14:30	0.51	1.11	497.8
2/19/2013 14:40	0.51	1.11	497.8
2/19/2013 14:50	0.51	1.11	497.8
2/19/2013 15:00	0.51	1.11	497.8
2/19/2013 15:10	0.51	1.11	497.8
2/19/2013 15:20	0.51	1.11	497.8
2/19/2013 15:30	0.51	1.11	497.8

2/19/2013 15:40	0.51	1.11	497.8
2/19/2013 15:50	0.51	1.11	497.8
2/19/2013 16:00	0.51	1.11	497.8
2/19/2013 16:10	0.52	1.14	512.6
2/19/2013 16:20	0.51	1.11	497.8
2/19/2013 16:30	0.51	1.11	497.8
2/19/2013 16:40	0.51	1.11	497.8
2/19/2013 16:50	0.51	1.11	497.8
2/19/2013 17:00	0.51	1.11	497.8
2/19/2013 17:10	0.51	1.11	497.8
2/19/2013 17:20	0.51	1.11	497.8
2/19/2013 17:30	0.51	1.11	497.8
2/19/2013 17:40	0.51	1.11	497.8
2/19/2013 17:50	0.51	1.11	497.8
2/19/2013 18:00	0.51	1.11	497.8
2/19/2013 18:10	0.51	1.11	497.8
2/19/2013 18:20	0.51	1.11	497.8
2/19/2013 18:30	0.51	1.11	497.8
2/19/2013 18:40	0.51	1.11	497.8
2/19/2013 18:50	0.51	1.11	497.8
2/19/2013 19:00	0.51	1.11	497.8
2/19/2013 19:10	0.51	1.11	497.8
2/19/2013 19:20	0.51	1.11	497.8
2/19/2013 19:30	0.51	1.11	497.8
2/19/2013 19:40	0.51	1.11	497.8
2/19/2013 19:50	0.51	1.11	497.8
2/19/2013 20:00	0.51	1.11	497.8
2/19/2013 20:10	0.51	1.11	497.8
2/19/2013 20:20	0.51	1.11	497.8
2/19/2013 20:30	0.51	1.11	497.8
2/19/2013 20:40	0.51	1.11	497.8
2/19/2013 20:50	0.51	1.11	497.8
2/19/2013 21:00	0.51	1.11	497.8
2/19/2013 21:10	0.51	1.11	497.8
2/19/2013 21:20	0.51	1.11	497.8
2/19/2013 21:30	0.51	1.11	497.8
2/19/2013 21:40	0.51	1.11	497.8
2/19/2013 21:50	0.51	1.11	497.8
2/19/2013 22:00	0.51	1.11	497.8
2/19/2013 22:10	0.51	1.11	497.8
2/19/2013 22:20	0.51	1.11	497.8
2/19/2013 22:30	0.51	1.11	497.8
2/19/2013 22:40	0.51	1.11	497.8
2/19/2013 22:50	0.51	1.11	497.8
2/19/2013 23:00	0.51	1.11	497.8
2/19/2013 23:10	0.51	1.11	497.8
2/19/2013 23:20	0.51	1.11	497.8

2/19/2013 23:30	0.51	1.11	497.8
2/19/2013 23:40	0.51	1.11	497.8
2/19/2013 23:50	0.51	1.11	497.8
2/20/2013 0:00	0.51	1.11	497.8
2/20/2013 0:10	0.51	1.11	497.8
2/20/2013 0:20	0.51	1.11	497.8
2/20/2013 0:30	0.51	1.11	497.8
2/20/2013 0:40	0.51	1.11	497.8
2/20/2013 0:50	0.51	1.11	497.8
2/20/2013 1:00	0.51	1.11	497.8
2/20/2013 1:10	0.51	1.11	497.8
2/20/2013 1:20	0.51	1.11	497.8
2/20/2013 1:30	0.51	1.11	497.8
2/20/2013 1:40	0.51	1.11	497.8
2/20/2013 1:50	0.51	1.11	497.8
2/20/2013 2:00	0.51	1.11	497.8
2/20/2013 2:10	0.51	1.11	497.8
2/20/2013 2:20	0.51	1.11	497.8
2/20/2013 2:30	0.51	1.11	497.8
2/20/2013 2:40	0.51	1.11	497.8
2/20/2013 2:50	0.51	1.11	497.8
2/20/2013 3:00	0.51	1.11	497.8
2/20/2013 3:10	0.51	1.11	497.8
2/20/2013 3:20	0.51	1.11	497.8
2/20/2013 3:30	0.51	1.11	497.8
2/20/2013 3:40	0.51	1.11	497.8
2/20/2013 3:50	0.51	1.11	497.8
2/20/2013 4:00	0.51	1.11	497.8
2/20/2013 4:10	0.51	1.11	497.8
2/20/2013 4:20	0.51	1.11	497.8
2/20/2013 4:30	0.51	1.11	497.8
2/20/2013 4:40	0.51	1.11	497.8
2/20/2013 4:50	0.51	1.11	497.8
2/20/2013 5:00	0.51	1.11	497.8
2/20/2013 5:10	0.51	1.11	497.8
2/20/2013 5:20	0.51	1.11	497.8
2/20/2013 5:30	0.51	1.11	497.8
2/20/2013 5:40	0.51	1.11	497.8
2/20/2013 5:50	0.51	1.11	497.8
2/20/2013 6:00	0.51	1.11	497.8
2/20/2013 6:10	0.51	1.11	497.8
2/20/2013 6:20	0.51	1.11	497.8
2/20/2013 6:30	0.51	1.11	497.8
2/20/2013 6:40	0.51	1.11	497.8
2/20/2013 6:50	0.51	1.11	497.8
2/20/2013 7:00	0.51	1.11	497.8
2/20/2013 7:10	0.51	1.11	497.8

2/20/2013 7:20	0.51	1.11	497.8
2/20/2013 7:30	0.51	1.11	497.8
2/20/2013 7:40	0.51	1.11	497.8
2/20/2013 7:50	0.51	1.11	497.8
2/20/2013 8:00	0.51	1.11	497.8
2/20/2013 8:10	0.51	1.11	497.8
2/20/2013 8:20	0.51	1.11	497.8
2/20/2013 8:30	0.51	1.11	497.8
2/20/2013 8:40	0.51	1.11	497.8
2/20/2013 8:50	0.51	1.11	497.8
2/20/2013 9:00	0.51	1.11	497.8
2/20/2013 9:10	0.51	1.11	497.8
2/20/2013 9:20	0.51	1.11	497.8
2/20/2013 9:30	0.51	1.11	497.8
2/20/2013 9:40	0.51	1.11	497.8
2/20/2013 9:50	0.51	1.11	497.8
2/20/2013 10:00	0.51	1.11	497.8
2/20/2013 10:10	0.51	1.11	497.8
2/20/2013 10:20	0.51	1.11	497.8
2/20/2013 10:30	0.51	1.11	497.8
2/20/2013 10:40	0.51	1.11	497.8
2/20/2013 10:50	0.51	1.11	497.8
2/20/2013 11:00	0.51	1.11	497.8
2/20/2013 11:10	0.51	1.11	497.8
2/20/2013 11:20	0.51	1.11	497.8
2/20/2013 11:30	0.51	1.11	497.8
2/20/2013 11:40	0.52	1.14	512.6
2/20/2013 11:50	0.51	1.11	497.8
2/20/2013 12:00	0.51	1.11	497.8
2/20/2013 12:10	0.51	1.11	497.8
2/20/2013 12:20	0.51	1.11	497.8
2/20/2013 12:30	0.51	1.11	497.8
2/20/2013 12:40	0.51	1.11	497.8
2/20/2013 12:50	0.51	1.11	497.8
2/20/2013 13:00	0.51	1.11	497.8
2/20/2013 13:10	0.51	1.11	497.8
2/20/2013 13:20	0.51	1.11	497.8
2/20/2013 13:30	0.51	1.11	497.8
2/20/2013 13:40	0.52	1.14	512.6
2/20/2013 13:50	0.51	1.11	497.8
2/20/2013 14:00	0.51	1.11	497.8
2/20/2013 14:10	0.51	1.11	497.8
2/20/2013 14:20	0.51	1.11	497.8
2/20/2013 14:30	0.51	1.11	497.8
2/20/2013 14:40	0.51	1.11	497.8
2/20/2013 14:50	0.51	1.11	497.8
2/20/2013 15:00	0.51	1.11	497.8

2/20/2013 15:10	0.51	1.11	497.8
2/20/2013 15:20	0.51	1.11	497.8
2/20/2013 15:30	0.51	1.11	497.8
2/20/2013 15:40	0.51	1.11	497.8
2/20/2013 15:50	0.51	1.11	497.8
2/20/2013 16:00	0.51	1.11	497.8
2/20/2013 16:10	0.51	1.11	497.8
2/20/2013 16:20	0.51	1.11	497.8
2/20/2013 16:30	0.51	1.11	497.8
2/20/2013 16:40	0.51	1.11	497.8
2/20/2013 16:50	0.51	1.11	497.8
2/20/2013 17:00	0.51	1.11	497.8
2/20/2013 17:10	0.51	1.11	497.8
2/20/2013 17:20	0.51	1.11	497.8
2/20/2013 17:30	0.51	1.11	497.8
2/20/2013 17:40	0.51	1.11	497.8
2/20/2013 17:50	0.51	1.11	497.8
2/20/2013 18:00	0.51	1.11	497.8
2/20/2013 18:10	0.51	1.11	497.8
2/20/2013 18:20	0.51	1.11	497.8
2/20/2013 18:30	0.51	1.11	497.8
2/20/2013 18:40	0.51	1.11	497.8
2/20/2013 18:50	0.51	1.11	497.8
2/20/2013 19:00	0.51	1.11	497.8
2/20/2013 19:10	0.51	1.11	497.8
2/21/2013 11:20	0.51	1.11	497.8
2/21/2013 11:40	0.51	1.11	497.8
2/21/2013 11:50	0.51	1.11	497.8
2/21/2013 11:51	0.51	1.11	497.8
2/21/2013 11:51	0.51	1.11	497.8
2/21/2013 11:52	0.51	1.11	497.8
2/21/2013 11:52	0.51	1.11	497.8
2/21/2013 11:55	0.51	1.11	497.8
2/21/2013 11:55	0.51	1.11	497.8
2/21/2013 11:56	0.51	1.11	497.8
2/21/2013 11:56	0.51	1.11	497.8
2/21/2013 11:56	0.51	1.11	497.8
2/21/2013 11:57	0.51	1.11	497.8
2/21/2013 11:57	0.51	1.11	497.8
2/21/2013 11:59	0.51	1.11	497.8
2/21/2013 11:59	0.51	1.11	497.8
2/21/2013 11:59	0.51	1.11	497.8
2/21/2013 12:00	0.51	1.11	497.8
2/21/2013 12:10	0.51	1.11	497.8
2/21/2013 12:20	0.51	1.11	497.8
2/21/2013 12:30	0.51	1.11	497.8
2/21/2013 12:50	0.51	1.11	497.8

2/21/2013 13:20	0.51	1.11	497.8
2/21/2013 13:30	0.51	1.11	497.8
2/21/2013 13:40	0.51	1.11	497.8
2/21/2013 13:50	0.51	1.11	497.8
2/21/2013 14:20	0.51	1.11	497.8
2/21/2013 14:40	0.51	1.11	497.8
2/21/2013 14:51	0.51	1.11	497.8
2/21/2013 14:51	0.51	1.11	497.8
2/21/2013 15:00	0.51	1.11	497.8
2/21/2013 15:10	0.51	1.11	497.8
2/21/2013 15:20	0.51	1.11	497.8
2/21/2013 15:30	0.51	1.11	497.8
2/21/2013 15:40	0.51	1.11	497.8
2/21/2013 15:50	0.51	1.11	497.8
2/21/2013 16:00	0.51	1.11	497.8
2/21/2013 16:10	0.51	1.11	497.8
2/25/2013 13:20	0.51	1.11	497.8
2/25/2013 13:30	0.51	1.11	497.8
2/25/2013 13:40	0.51	1.11	497.8
2/25/2013 13:50	0.51	1.11	497.8
2/25/2013 14:00	0.51	1.11	497.8
2/25/2013 14:10	0.51	1.11	497.8
2/25/2013 14:20	0.51	1.11	497.8
2/25/2013 14:30	0.51	1.11	497.8
2/25/2013 14:40	0.51	1.11	497.8
2/25/2013 14:50	0.51	1.11	497.8
2/25/2013 15:00	0.51	1.11	497.8
2/25/2013 15:10	0.51	1.11	497.8
2/25/2013 15:20	0.51	1.11	497.8
2/25/2013 15:30	0.51	1.11	497.8
2/25/2013 15:40	0.51	1.11	497.8
2/25/2013 15:50	0.51	1.11	497.8
2/25/2013 16:00	0.51	1.11	497.8
2/25/2013 16:10	0.51	1.11	497.8
2/25/2013 16:20	0.51	1.11	497.8
2/25/2013 16:30	0.51	1.11	497.8
2/25/2013 16:40	0.51	1.11	497.8
2/25/2013 16:50	0.52	1.14	512.6
2/25/2013 17:00	0.52	1.14	512.6
2/25/2013 17:10	0.52	1.14	512.6
2/25/2013 17:20	0.53	1.18	527.6
2/25/2013 17:30	0.52	1.14	512.6
2/25/2013 17:40	0.52	1.14	512.6
2/25/2013 17:50	0.53	1.18	527.6
2/25/2013 18:00	0.52	1.14	512.6
2/25/2013 18:10	0.53	1.18	527.6
2/25/2013 18:20	0.52	1.14	512.6

2/25/2013 18:30	0.52	1.14	512.6
2/25/2013 18:40	0.52	1.14	512.6
2/25/2013 18:50	0.52	1.14	512.6
2/25/2013 19:00	0.52	1.14	512.6
2/25/2013 19:10	0.52	1.14	512.6
2/25/2013 19:20	0.53	1.18	527.6
2/25/2013 19:30	0.52	1.14	512.6
2/25/2013 19:40	0.52	1.14	512.6
2/25/2013 19:50	0.52	1.14	512.6
2/25/2013 20:00	0.52	1.14	512.6
2/25/2013 20:10	0.52	1.14	512.6
2/25/2013 20:20	0.52	1.14	512.6
2/25/2013 20:30	0.52	1.14	512.6
2/25/2013 20:40	0.52	1.14	512.6
2/25/2013 20:50	0.52	1.14	512.6
2/25/2013 21:00	0.52	1.14	512.6
2/25/2013 21:10	0.52	1.14	512.6
2/25/2013 21:20	0.52	1.14	512.6
2/25/2013 21:30	0.52	1.14	512.6
2/25/2013 21:40	0.53	1.18	527.6
2/25/2013 21:50	0.52	1.14	512.6
2/25/2013 22:00	0.52	1.14	512.6
2/25/2013 22:10	0.52	1.14	512.6
2/25/2013 22:20	0.53	1.18	527.6
2/25/2013 22:30	0.52	1.14	512.6
2/25/2013 22:40	0.52	1.14	512.6
2/25/2013 22:50	0.52	1.14	512.6
2/25/2013 23:00	0.52	1.14	512.6
2/25/2013 23:10	0.52	1.14	512.6
2/25/2013 23:20	0.52	1.14	512.6
2/25/2013 23:40	0.52	1.14	512.6
2/26/2013 9:40	0.52	1.14	512.6
2/26/2013 9:50	0.52	1.14	512.6
2/26/2013 9:51	0.52	1.14	512.6
2/26/2013 9:51	0.52	1.14	512.6
2/26/2013 9:51	0.52	1.14	512.6
2/26/2013 9:52	0.52	1.14	512.6
2/26/2013 9:52	0.52	1.14	512.6
2/26/2013 9:52	0.52	1.14	512.6
2/26/2013 9:53	0.52	1.14	512.6
2/26/2013 9:53	0.52	1.14	512.6
2/26/2013 9:54	0.53	1.18	527.6
2/26/2013 9:54	0.53	1.18	527.6
2/26/2013 9:54	0.52	1.14	512.6
2/26/2013 9:55	0.52	1.14	512.6
2/26/2013 9:55	0.52	1.14	512.6
2/26/2013 9:56	0.52	1.14	512.6

2/26/2013 9:56	0.52	1.14	512.6
2/26/2013 9:56	0.52	1.14	512.6
2/26/2013 9:56	0.52	1.14	512.6
2/26/2013 9:57	0.52	1.14	512.6
2/26/2013 9:57	0.52	1.14	512.6
2/26/2013 9:57	0.52	1.14	512.6
2/26/2013 9:57	0.52	1.14	512.6
2/26/2013 9:57	0.52	1.14	512.6
2/26/2013 9:58	0.52	1.14	512.6
2/26/2013 9:58	0.52	1.14	512.6
2/26/2013 9:58	0.52	1.14	512.6
2/26/2013 9:58	0.52	1.14	512.6
2/26/2013 9:58	0.52	1.14	512.6
2/26/2013 9:59	0.52	1.14	512.6
2/26/2013 9:59	0.52	1.14	512.6
2/26/2013 9:59	0.52	1.14	512.6
2/26/2013 9:59	0.52	1.14	512.6
2/26/2013 10:00	0.52	1.14	512.6
2/26/2013 10:10	0.52	1.14	512.6
2/26/2013 10:20	0.52	1.14	512.6
2/26/2013 10:30	0.52	1.14	512.6
2/26/2013 10:40	0.52	1.14	512.6
2/26/2013 10:50	0.52	1.14	512.6
2/26/2013 11:00	0.52	1.14	512.6
2/26/2013 11:10	0.52	1.14	512.6
2/26/2013 11:20	0.52	1.14	512.6
2/26/2013 11:30	0.52	1.14	512.6
2/26/2013 11:40	0.52	1.14	512.6
2/26/2013 11:50	0.52	1.14	512.6
2/26/2013 12:00	0.52	1.14	512.6
2/26/2013 12:10	0.52	1.14	512.6
2/26/2013 12:20	0.52	1.14	512.6
2/26/2013 12:30	0.52	1.14	512.6
2/26/2013 12:40	0.52	1.14	512.6
2/26/2013 12:50	0.52	1.14	512.6
2/26/2013 13:00	0.52	1.14	512.6
2/26/2013 13:10	0.52	1.14	512.6
2/26/2013 13:20	0.52	1.14	512.6
2/26/2013 13:30	0.52	1.14	512.6
2/26/2013 13:40	0.52	1.14	512.6
2/26/2013 13:50	0.52	1.14	512.6
2/26/2013 14:00	0.52	1.14	512.6
2/26/2013 14:10	0.52	1.14	512.6
2/26/2013 14:20	0.52	1.14	512.6
2/26/2013 14:30	0.52	1.14	512.6
2/26/2013 14:40	0.52	1.14	512.6
2/26/2013 14:50	0.52	1.14	512.6

2/26/2013 15:00	0.52	1.14	512.6
2/26/2013 15:10	0.52	1.14	512.6
2/26/2013 15:20	0.52	1.14	512.6
2/26/2013 15:30	0.52	1.14	512.6
2/26/2013 15:40	0.52	1.14	512.6
2/26/2013 15:50	0.52	1.14	512.6
2/26/2013 16:00	0.52	1.14	512.6
2/26/2013 16:10	0.52	1.14	512.6
2/26/2013 16:20	0.52	1.14	512.6
2/26/2013 16:30	0.52	1.14	512.6
2/26/2013 16:40	0.52	1.14	512.6
2/26/2013 16:50	0.52	1.14	512.6
2/26/2013 17:00	0.52	1.14	512.6
2/26/2013 17:10	0.52	1.14	512.6
2/26/2013 17:20	0.52	1.14	512.6
2/26/2013 17:30	0.52	1.14	512.6
2/26/2013 17:40	0.52	1.14	512.6
2/26/2013 17:50	0.52	1.14	512.6
2/26/2013 18:00	0.52	1.14	512.6
2/26/2013 18:10	0.52	1.14	512.6
2/26/2013 18:20	0.52	1.14	512.6
2/26/2013 18:30	0.52	1.14	512.6
2/26/2013 18:40	0.52	1.14	512.6
2/26/2013 18:50	0.52	1.14	512.6
2/26/2013 19:00	0.52	1.14	512.6
2/26/2013 19:10	0.52	1.14	512.6
2/26/2013 19:20	0.52	1.14	512.6
2/26/2013 19:30	0.52	1.14	512.6
2/26/2013 19:40	0.52	1.14	512.6
2/26/2013 19:50	0.52	1.14	512.6
2/26/2013 20:00	0.52	1.14	512.6
2/26/2013 20:10	0.52	1.14	512.6
2/26/2013 20:20	0.52	1.14	512.6
2/26/2013 20:30	0.52	1.14	512.6
2/26/2013 20:40	0.52	1.14	512.6
2/26/2013 20:50	0.52	1.14	512.6
2/26/2013 21:00	0.52	1.14	512.6
2/26/2013 21:10	0.52	1.14	512.6
2/26/2013 21:20	0.52	1.14	512.6
2/26/2013 21:30	0.52	1.14	512.6
2/26/2013 21:40	0.52	1.14	512.6
2/26/2013 21:50	0.52	1.14	512.6
2/26/2013 22:00	0.52	1.14	512.6
2/26/2013 22:10	0.52	1.14	512.6
2/26/2013 22:20	0.52	1.14	512.6
2/26/2013 22:30	0.52	1.14	512.6
2/26/2013 22:40	0.52	1.14	512.6

2/26/2013 22:50	0.52	1.14	512.6
2/26/2013 23:00	0.52	1.14	512.6
2/26/2013 23:10	0.52	1.14	512.6
2/26/2013 23:20	0.52	1.14	512.6
2/26/2013 23:30	0.52	1.14	512.6
2/26/2013 23:40	0.52	1.14	512.6
2/26/2013 23:50	0.52	1.14	512.6
2/27/2013 0:00	0.52	1.14	512.6
2/27/2013 0:10	0.52	1.14	512.6
2/27/2013 0:20	0.52	1.14	512.6
2/27/2013 0:30	0.52	1.14	512.6
2/27/2013 0:40	0.52	1.14	512.6
2/27/2013 0:50	0.52	1.14	512.6
2/27/2013 1:00	0.52	1.14	512.6
2/27/2013 1:10	0.52	1.14	512.6
2/27/2013 1:20	0.52	1.14	512.6
2/27/2013 1:30	0.52	1.14	512.6
2/27/2013 1:40	0.52	1.14	512.6
2/27/2013 1:50	0.52	1.14	512.6
2/27/2013 2:00	0.52	1.14	512.6
2/27/2013 2:10	0.52	1.14	512.6
2/27/2013 2:20	0.52	1.14	512.6
2/27/2013 2:30	0.52	1.14	512.6
2/27/2013 2:40	0.52	1.14	512.6
2/27/2013 2:50	0.52	1.14	512.6
2/27/2013 3:00	0.52	1.14	512.6
2/27/2013 3:10	0.52	1.14	512.6
2/27/2013 3:20	0.52	1.14	512.6
2/27/2013 3:30	0.52	1.14	512.6
2/27/2013 3:40	0.52	1.14	512.6
2/27/2013 3:50	0.52	1.14	512.6
2/27/2013 4:00	0.52	1.14	512.6
2/27/2013 4:10	0.52	1.14	512.6
2/27/2013 4:20	0.52	1.14	512.6
2/27/2013 4:30	0.52	1.14	512.6
2/27/2013 4:40	0.52	1.14	512.6
2/27/2013 4:50	0.52	1.14	512.6
2/27/2013 5:00	0.52	1.14	512.6
2/27/2013 5:10	0.52	1.14	512.6
2/27/2013 5:20	0.52	1.14	512.6
2/27/2013 5:30	0.52	1.14	512.6
2/27/2013 5:40	0.52	1.14	512.6
2/27/2013 5:50	0.52	1.14	512.6
2/27/2013 6:00	0.52	1.14	512.6
2/27/2013 6:10	0.52	1.14	512.6
2/27/2013 6:20	0.52	1.14	512.6
2/27/2013 6:30	0.52	1.14	512.6

2/27/2013 6:40	0.52	1.14	512.6
2/27/2013 6:50	0.52	1.14	512.6
2/27/2013 7:00	0.52	1.14	512.6
2/27/2013 7:10	0.52	1.14	512.6
2/27/2013 7:20	0.52	1.14	512.6
2/27/2013 7:30	0.52	1.14	512.6
2/27/2013 7:40	0.52	1.14	512.6
2/27/2013 7:50	0.52	1.14	512.6
2/27/2013 8:00	0.52	1.14	512.6
2/27/2013 8:10	0.52	1.14	512.6
2/27/2013 8:20	0.52	1.14	512.6
2/27/2013 8:30	0.52	1.14	512.6
2/27/2013 8:40	0.52	1.14	512.6
2/27/2013 8:50	0.52	1.14	512.6
2/27/2013 9:00	0.53	1.18	527.6
2/27/2013 9:10	0.52	1.14	512.6
2/27/2013 9:20	0.52	1.14	512.6
2/27/2013 9:30	0.52	1.14	512.6
2/27/2013 9:40	0.52	1.14	512.6
2/27/2013 9:50	0.52	1.14	512.6
2/27/2013 10:00	0.52	1.14	512.6
2/27/2013 10:10	0.52	1.14	512.6
2/27/2013 10:20	0.52	1.14	512.6
2/27/2013 10:30	0.53	1.18	527.6
2/27/2013 10:40	0.52	1.14	512.6
2/27/2013 10:50	0.53	1.18	527.6
2/27/2013 11:00	0.41	0.80	358.0
2/27/2013 11:10	0.48	1.01	454.3
2/27/2013 11:20	0.48	1.01	454.3
2/27/2013 11:30	0.48	1.01	454.3
2/27/2013 11:40	0.4	0.77	344.9
2/27/2013 11:50	0.64	1.56	701.5
2/27/2013 12:00	0.77	2.07	927.6
2/27/2013 12:20	0.78	2.11	945.9
2/27/2013 12:30	0.72	1.87	838.1
2/27/2013 12:57	0.7	1.79	803.2
2/27/2013 12:58	0.7	1.79	803.2
2/27/2013 13:00	0.7	1.79	803.2
2/27/2013 13:10	0.7	1.79	803.2
2/27/2013 13:20	0.52	1.14	512.6
2/27/2013 13:30	0.52	1.14	512.6
2/27/2013 13:40	0.52	1.14	512.6
2/27/2013 13:50	0.52	1.14	512.6
2/27/2013 14:00	0.52	1.14	512.6
2/27/2013 14:10	0.52	1.14	512.6
2/27/2013 14:20	0.52	1.14	512.6
2/27/2013 14:30	0.52	1.14	512.6

2/27/2013 14:40	0.52	1.14	512.6
2/27/2013 14:50	0.52	1.14	512.6
2/27/2013 15:00	0.52	1.14	512.6
2/27/2013 15:10	0.52	1.14	512.6
2/27/2013 15:20	0.52	1.14	512.6
2/27/2013 15:30	0.52	1.14	512.6
2/27/2013 15:40	0.52	1.14	512.6
2/27/2013 15:50	0.52	1.14	512.6
2/27/2013 16:00	0.52	1.14	512.6
2/27/2013 16:10	0.52	1.14	512.6
2/27/2013 16:20	0.52	1.14	512.6
2/27/2013 16:30	0.52	1.14	512.6
2/27/2013 16:40	0.52	1.14	512.6
2/27/2013 16:50	0.52	1.14	512.6
2/27/2013 17:00	0.52	1.14	512.6
2/27/2013 17:10	0.52	1.14	512.6
2/27/2013 17:20	0.52	1.14	512.6
2/27/2013 17:30	0.52	1.14	512.6
2/27/2013 17:40	0.52	1.14	512.6
2/27/2013 17:50	0.52	1.14	512.6
2/27/2013 18:00	0.52	1.14	512.6
2/27/2013 18:10	0.52	1.14	512.6
2/27/2013 18:20	0.52	1.14	512.6
2/27/2013 18:30	0.52	1.14	512.6
2/27/2013 18:40	0.52	1.14	512.6
2/27/2013 18:50	0.52	1.14	512.6
2/27/2013 19:00	0.52	1.14	512.6
2/27/2013 19:10	0.52	1.14	512.6
2/27/2013 19:20	0.52	1.14	512.6
2/27/2013 19:30	0.52	1.14	512.6
2/27/2013 19:40	0.52	1.14	512.6
2/27/2013 19:50	0.52	1.14	512.6
2/27/2013 20:00	0.52	1.14	512.6
2/27/2013 20:10	0.52	1.14	512.6
2/27/2013 20:20	0.52	1.14	512.6
2/27/2013 20:30	0.52	1.14	512.6
2/27/2013 20:40	0.52	1.14	512.6
2/27/2013 20:50	0.52	1.14	512.6
2/27/2013 21:00	0.52	1.14	512.6
2/27/2013 21:10	0.52	1.14	512.6
2/27/2013 21:20	0.52	1.14	512.6
2/27/2013 21:30	0.52	1.14	512.6
2/27/2013 21:40	0.52	1.14	512.6
2/27/2013 21:50	0.52	1.14	512.6
2/27/2013 22:00	0.52	1.14	512.6
2/27/2013 22:10	0.52	1.14	512.6
2/27/2013 22:20	0.52	1.14	512.6

2/27/2013 22:30	0.52	1.14	512.6
2/27/2013 22:40	0.52	1.14	512.6
2/27/2013 22:50	0.52	1.14	512.6
2/27/2013 23:00	0.52	1.14	512.6
2/27/2013 23:10	0.52	1.14	512.6
2/27/2013 23:20	0.52	1.14	512.6
2/27/2013 23:30	0.51	1.11	497.8
2/27/2013 23:40	0.52	1.14	512.6
2/27/2013 23:50	0.52	1.14	512.6
2/28/2013 0:00	0.52	1.14	512.6
2/28/2013 0:10	0.52	1.14	512.6
2/28/2013 0:20	0.52	1.14	512.6
2/28/2013 0:30	0.52	1.14	512.6
2/28/2013 0:40	0.52	1.14	512.6
2/28/2013 0:50	0.52	1.14	512.6
2/28/2013 1:00	0.52	1.14	512.6
2/28/2013 1:10	0.52	1.14	512.6
2/28/2013 1:20	0.52	1.14	512.6
2/28/2013 1:30	0.52	1.14	512.6
2/28/2013 1:40	0.51	1.11	497.8
2/28/2013 1:50	0.51	1.11	497.8
2/28/2013 2:00	0.51	1.11	497.8
2/28/2013 2:10	0.52	1.14	512.6
2/28/2013 2:20	0.51	1.11	497.8
2/28/2013 2:30	0.51	1.11	497.8
2/28/2013 2:40	0.51	1.11	497.8
2/28/2013 2:50	0.51	1.11	497.8
2/28/2013 3:00	0.51	1.11	497.8
2/28/2013 3:10	0.51	1.11	497.8
2/28/2013 3:20	0.51	1.11	497.8
2/28/2013 3:30	0.51	1.11	497.8
2/28/2013 3:40	0.52	1.14	512.6
2/28/2013 3:50	0.52	1.14	512.6
2/28/2013 4:00	0.52	1.14	512.6
2/28/2013 4:10	0.51	1.11	497.8
2/28/2013 4:20	0.52	1.14	512.6
2/28/2013 4:30	0.52	1.14	512.6
2/28/2013 4:40	0.52	1.14	512.6
2/28/2013 4:50	0.52	1.14	512.6
2/28/2013 5:00	0.52	1.14	512.6
2/28/2013 5:10	0.51	1.11	497.8
2/28/2013 5:20	0.51	1.11	497.8
2/28/2013 5:30	0.52	1.14	512.6
2/28/2013 5:40	0.52	1.14	512.6
2/28/2013 5:50	0.51	1.11	497.8
2/28/2013 6:00	0.51	1.11	497.8
2/28/2013 6:10	0.51	1.11	497.8

2/28/2013 6:20	0.51	1.11	497.8
2/28/2013 6:30	0.51	1.11	497.8
2/28/2013 6:40	0.51	1.11	497.8
2/28/2013 6:50	0.51	1.11	497.8
2/28/2013 7:00	0.51	1.11	497.8
2/28/2013 7:10	0.51	1.11	497.8
2/28/2013 7:20	0.51	1.11	497.8
2/28/2013 7:30	0.52	1.14	512.6
2/28/2013 7:40	0.51	1.11	497.8
2/28/2013 7:50	0.51	1.11	497.8
2/28/2013 8:00	0.51	1.11	497.8
2/28/2013 8:10	0.51	1.11	497.8
2/28/2013 8:20	0.51	1.11	497.8
2/28/2013 8:30	0.52	1.14	512.6
2/28/2013 8:40	0.52	1.14	512.6
2/28/2013 8:50	0.52	1.14	512.6
2/28/2013 9:00	0.52	1.14	512.6
2/28/2013 9:10	0.52	1.14	512.6
2/28/2013 9:20	0.52	1.14	512.6
2/28/2013 9:30	0.52	1.14	512.6
2/28/2013 9:40	0.52	1.14	512.6
2/28/2013 9:50	0.52	1.14	512.6
2/28/2013 10:00	0.52	1.14	512.6
2/28/2013 10:10	0.52	1.14	512.6
2/28/2013 10:20	0.51	1.11	497.8
2/28/2013 10:30	0.52	1.14	512.6
2/28/2013 10:40	0.51	1.11	497.8
2/28/2013 10:50	0.51	1.11	497.8
2/28/2013 11:00	0.51	1.11	497.8
2/28/2013 11:10	0.51	1.11	497.8
2/28/2013 11:20	0.52	1.14	512.6
2/28/2013 11:30	0.52	1.14	512.6
2/28/2013 11:40	0.52	1.14	512.6
2/28/2013 11:50	0.51	1.11	497.8
2/28/2013 12:00	0.51	1.11	497.8
2/28/2013 12:10	0.52	1.14	512.6
2/28/2013 12:20	0.52	1.14	512.6
2/28/2013 12:30	0.51	1.11	497.8
2/28/2013 12:40	0.51	1.11	497.8
2/28/2013 12:50	0.52	1.14	512.6
2/28/2013 13:00	0.51	1.11	497.8
2/28/2013 13:10	0.51	1.11	497.8
2/28/2013 13:20	0.51	1.11	497.8
2/28/2013 13:30	0.51	1.11	497.8
2/28/2013 13:40	0.51	1.11	497.8
2/28/2013 13:50	0.51	1.11	497.8
2/28/2013 14:00	0.52	1.14	512.6

2/28/2013 14:10	0.51	1.11	497.8
2/28/2013 14:20	0.51	1.11	497.8
2/28/2013 14:30	0.52	1.14	512.6
2/28/2013 14:40	0.51	1.11	497.8
2/28/2013 14:50	0.51	1.11	497.8
2/28/2013 15:00	0.51	1.11	497.8
2/28/2013 15:10	0.52	1.14	512.6
2/28/2013 15:20	0.52	1.14	512.6
2/28/2013 15:30	0.51	1.11	497.8
2/28/2013 15:40	0.51	1.11	497.8
2/28/2013 15:50	0.52	1.14	512.6
2/28/2013 16:00	0.51	1.11	497.8
2/28/2013 16:10	0.52	1.14	512.6
2/28/2013 16:20	0.51	1.11	497.8
2/28/2013 16:30	0.51	1.11	497.8
2/28/2013 16:40	0.52	1.14	512.6
2/28/2013 16:50	0.51	1.11	497.8
2/28/2013 17:00	0.51	1.11	497.8
2/28/2013 17:10	0.52	1.14	512.6
2/28/2013 17:20	0.51	1.11	497.8
2/28/2013 17:30	0.51	1.11	497.8
2/28/2013 17:40	0.51	1.11	497.8
2/28/2013 17:50	0.51	1.11	497.8
2/28/2013 18:00	0.51	1.11	497.8
2/28/2013 18:10	0.52	1.14	512.6
2/28/2013 18:20	0.51	1.11	497.8
2/28/2013 18:30	0.51	1.11	497.8
2/28/2013 18:40	0.51	1.11	497.8
2/28/2013 18:50	0.52	1.14	512.6
2/28/2013 19:00	0.51	1.11	497.8
2/28/2013 19:10	0.52	1.14	512.6
2/28/2013 19:20	0.51	1.11	497.8
2/28/2013 19:30	0.52	1.14	512.6
2/28/2013 19:40	0.51	1.11	497.8
2/28/2013 19:50	0.51	1.11	497.8
2/28/2013 20:00	0.51	1.11	497.8
2/28/2013 20:10	0.51	1.11	497.8
2/28/2013 20:20	0.51	1.11	497.8
2/28/2013 20:30	0.51	1.11	497.8
2/28/2013 20:40	0.51	1.11	497.8
2/28/2013 20:50	0.51	1.11	497.8
2/28/2013 21:00	0.51	1.11	497.8
2/28/2013 21:10	0.51	1.11	497.8
2/28/2013 21:20	0.51	1.11	497.8
2/28/2013 21:30	0.51	1.11	497.8
2/28/2013 21:40	0.51	1.11	497.8
2/28/2013 21:50	0.51	1.11	497.8

2/28/2013 22:00	0.51	1.11	497.8
2/28/2013 22:10	0.51	1.11	497.8
2/28/2013 22:20	0.51	1.11	497.8
2/28/2013 22:30	0.51	1.11	497.8
2/28/2013 22:40	0.51	1.11	497.8
2/28/2013 22:50	0.51	1.11	497.8
2/28/2013 23:00	0.51	1.11	497.8
2/28/2013 23:10	0.51	1.11	497.8
2/28/2013 23:20	0.51	1.11	497.8
2/28/2013 23:30	0.51	1.11	497.8
2/28/2013 23:40	0.51	1.11	497.8
2/28/2013 23:50	0.51	1.11	497.8

Appendix J

North Flume Ultrasonic Sensor Data with Flowrates

Ultrasonic Sensor Data at North Flume, February 2013

Date, Time	Depth of Flow (ft)	Depth of Flow (in)	Flowrate (cfs)	Flowrate (gpm)
2/07/2013 02:45:00 PM	0.510	6.12	1.11	497.8
2/07/2013 03:00:00 PM	0.500	6.00	1.08	483.2
2/07/2013 03:15:00 PM	0.510	6.12	1.11	497.8
2/07/2013 03:30:00 PM	0.500	6.00	1.08	483.2
2/07/2013 03:45:00 PM	0.500	6.00	1.08	483.2
2/07/2013 04:00:00 PM	0.510	6.12	1.11	497.8
2/07/2013 04:15:00 PM	0.510	6.12	1.11	497.8
2/07/2013 04:30:00 PM	0.510	6.12	1.11	497.8
2/07/2013 04:45:00 PM	0.510	6.12	1.11	497.8
2/07/2013 05:00:00 PM	0.510	6.12	1.11	497.8
2/07/2013 05:15:00 PM	0.500	6.00	1.08	483.2
2/07/2013 05:30:00 PM	0.510	6.12	1.11	497.8
2/07/2013 05:45:00 PM	0.510	6.12	1.11	497.8
2/07/2013 06:00:00 PM	0.510	6.12	1.11	497.8
2/07/2013 06:15:00 PM	0.510	6.12	1.11	497.8
2/07/2013 06:30:00 PM	0.510	6.12	1.11	497.8
2/07/2013 06:45:00 PM	0.510	6.12	1.11	497.8
2/07/2013 07:00:00 PM	0.510	6.12	1.11	497.8
2/07/2013 07:15:00 PM	0.510	6.12	1.11	497.8
2/07/2013 07:30:00 PM	0.510	6.12	1.11	497.8
2/07/2013 07:45:00 PM	0.510	6.12	1.11	497.8
2/07/2013 08:00:00 PM	0.510	6.12	1.11	497.8
2/07/2013 08:15:00 PM	0.510	6.12	1.11	497.8
2/07/2013 08:30:00 PM	0.510	6.12	1.11	497.8
2/07/2013 08:45:00 PM	0.510	6.12	1.11	497.8
2/07/2013 09:00:00 PM	0.510	6.12	1.11	497.8
2/07/2013 09:15:00 PM	0.510	6.12	1.11	497.8
2/07/2013 09:30:00 PM	0.510	6.12	1.11	497.8
2/07/2013 09:45:00 PM	0.510	6.12	1.11	497.8
2/07/2013 10:00:00 PM	0.510	6.12	1.11	497.8
2/07/2013 10:15:00 PM	0.510	6.12	1.11	497.8
2/07/2013 10:30:00 PM	0.510	6.12	1.11	497.8
2/07/2013 10:45:00 PM	0.510	6.12	1.11	497.8
2/07/2013 11:00:00 PM	0.510	6.12	1.11	497.8
2/07/2013 11:15:00 PM	0.510	6.12	1.11	497.8
2/07/2013 11:30:00 PM	0.510	6.12	1.11	497.8
2/07/2013 11:45:00 PM	0.510	6.12	1.11	497.8
2/08/2013 12:00:00 AM	0.510	6.12	1.11	497.8
2/08/2013 12:15:00 AM	0.510	6.12	1.11	497.8
2/08/2013 12:30:00 AM	0.510	6.12	1.11	497.8
2/08/2013 12:45:00 AM	0.510	6.12	1.11	497.8
2/08/2013 01:00:00 AM	0.510	6.12	1.11	497.8
2/08/2013 01:15:00 AM	0.510	6.12	1.11	497.8

2/08/2013 01:30:00 AM	0.500	6.00	1.08	483.2
2/08/2013 01:45:00 AM	0.510	6.12	1.11	497.8
2/08/2013 02:00:00 AM	0.510	6.12	1.11	497.8
2/08/2013 02:15:00 AM	0.510	6.12	1.11	497.8
2/08/2013 02:30:00 AM	0.510	6.12	1.11	497.8
2/08/2013 02:45:00 AM	0.510	6.12	1.11	497.8
2/08/2013 03:00:00 AM	0.510	6.12	1.11	497.8
2/08/2013 03:15:00 AM	0.510	6.12	1.11	497.8
2/08/2013 03:30:00 AM	0.510	6.12	1.11	497.8
2/08/2013 03:45:00 AM	0.510	6.12	1.11	497.8
2/08/2013 04:00:00 AM	0.510	6.12	1.11	497.8
2/08/2013 04:15:00 AM	0.510	6.12	1.11	497.8
2/08/2013 04:30:00 AM	0.510	6.12	1.11	497.8
2/08/2013 04:45:00 AM	0.510	6.12	1.11	497.8
2/08/2013 05:00:00 AM	0.510	6.12	1.11	497.8
2/08/2013 05:15:00 AM	0.510	6.12	1.11	497.8
2/08/2013 05:30:00 AM	0.510	6.12	1.11	497.8
2/08/2013 05:45:00 AM	0.510	6.12	1.11	497.8
2/08/2013 06:00:00 AM	0.510	6.12	1.11	497.8
2/08/2013 06:15:00 AM	0.510	6.12	1.11	497.8
2/08/2013 06:30:00 AM	0.510	6.12	1.11	497.8
2/08/2013 06:45:00 AM	0.510	6.12	1.11	497.8
2/08/2013 07:00:00 AM	0.510	6.12	1.11	497.8
2/08/2013 07:15:00 AM	0.500	6.00	1.08	483.2
2/08/2013 07:30:00 AM	0.510	6.12	1.11	497.8
2/08/2013 07:45:00 AM	0.510	6.12	1.11	497.8
2/08/2013 08:00:00 AM	0.510	6.12	1.11	497.8
2/08/2013 08:23:25 AM	0.510	6.12	1.11	497.8
2/08/2013 08:30:00 AM	0.510	6.12	1.11	497.8
2/08/2013 08:45:00 AM	0.510	6.12	1.11	497.8
2/08/2013 09:00:00 AM	0.500	6.00	1.08	483.2
2/08/2013 09:26:16 AM	0.510	6.12	1.11	497.8
2/08/2013 09:30:00 AM	0.510	6.12	1.11	497.8
2/08/2013 09:45:00 AM	0.500	6.00	1.08	483.2
2/08/2013 10:00:00 AM	0.510	6.12	1.11	497.8
2/08/2013 10:15:00 AM	0.510	6.12	1.11	497.8
2/08/2013 10:30:00 AM	0.510	6.12	1.11	497.8
2/08/2013 10:45:00 AM	0.510	6.12	1.11	497.8
2/08/2013 11:00:00 AM	0.510	6.12	1.11	497.8
2/08/2013 11:15:00 AM	0.510	6.12	1.11	497.8
2/08/2013 11:30:00 AM	0.500	6.00	1.08	483.2
2/08/2013 11:45:00 AM	0.510	6.12	1.11	497.8
2/08/2013 12:00:00 PM	0.510	6.12	1.11	497.8
2/08/2013 12:15:00 PM	0.510	6.12	1.11	497.8
2/08/2013 12:30:00 PM	0.510	6.12	1.11	497.8
2/08/2013 12:45:00 PM	0.510	6.12	1.11	497.8
2/08/2013 01:00:00 PM	0.510	6.12	1.11	497.8

2/08/2013 01:15:00 PM	0.510	6.12	1.11	497.8
2/08/2013 01:30:00 PM	0.510	6.12	1.11	497.8
2/08/2013 01:45:00 PM	0.510	6.12	1.11	497.8
2/08/2013 02:00:00 PM	0.510	6.12	1.11	497.8
2/08/2013 02:15:00 PM	0.510	6.12	1.11	497.8
2/08/2013 02:30:00 PM	0.500	6.00	1.08	483.2
2/08/2013 02:45:00 PM	0.510	6.12	1.11	497.8
2/08/2013 03:00:00 PM	0.510	6.12	1.11	497.8
2/08/2013 03:15:00 PM	0.500	6.00	1.08	483.2
2/08/2013 03:30:00 PM	0.510	6.12	1.11	497.8
2/08/2013 03:45:00 PM	0.510	6.12	1.11	497.8
2/08/2013 04:00:00 PM	0.510	6.12	1.11	497.8
2/08/2013 04:15:00 PM	0.510	6.12	1.11	497.8
2/08/2013 04:30:00 PM	0.510	6.12	1.11	497.8
2/08/2013 04:45:00 PM	0.510	6.12	1.11	497.8
2/08/2013 05:00:00 PM	0.510	6.12	1.11	497.8
2/08/2013 05:15:00 PM	0.510	6.12	1.11	497.8
2/08/2013 05:30:00 PM	0.510	6.12	1.11	497.8
2/08/2013 05:45:00 PM	0.510	6.12	1.11	497.8
2/08/2013 06:00:00 PM	0.510	6.12	1.11	497.8
2/08/2013 06:15:00 PM	0.510	6.12	1.11	497.8
2/08/2013 06:30:00 PM	0.510	6.12	1.11	497.8
2/08/2013 06:45:00 PM	0.510	6.12	1.11	497.8
2/08/2013 07:00:00 PM	0.510	6.12	1.11	497.8
2/08/2013 07:15:00 PM	0.510	6.12	1.11	497.8
2/08/2013 07:30:00 PM	0.510	6.12	1.11	497.8
2/08/2013 07:45:00 PM	0.510	6.12	1.11	497.8
2/08/2013 08:00:00 PM	0.510	6.12	1.11	497.8
2/08/2013 08:15:00 PM	0.510	6.12	1.11	497.8
2/08/2013 08:30:00 PM	0.510	6.12	1.11	497.8
2/08/2013 08:45:00 PM	0.510	6.12	1.11	497.8
2/08/2013 09:00:00 PM	0.510	6.12	1.11	497.8
2/08/2013 09:15:00 PM	0.500	6.00	1.08	483.2
2/08/2013 09:30:00 PM	0.510	6.12	1.11	497.8
2/08/2013 09:45:00 PM	0.510	6.12	1.11	497.8
2/08/2013 10:00:00 PM	0.510	6.12	1.11	497.8
2/08/2013 10:15:00 PM	0.510	6.12	1.11	497.8
2/08/2013 10:30:00 PM	0.510	6.12	1.11	497.8
2/08/2013 10:45:00 PM	0.510	6.12	1.11	497.8
2/08/2013 11:00:00 PM	0.510	6.12	1.11	497.8
2/08/2013 11:15:00 PM	0.510	6.12	1.11	497.8
2/08/2013 11:30:00 PM	0.510	6.12	1.11	497.8
2/08/2013 11:45:00 PM	0.510	6.12	1.11	497.8
2/09/2013 12:00:00 AM	0.510	6.12	1.11	497.8
2/09/2013 12:15:00 AM	0.510	6.12	1.11	497.8
2/09/2013 12:30:00 AM	0.510	6.12	1.11	497.8
2/09/2013 12:45:00 AM	0.500	6.00	1.08	483.2

2/09/2013 01:00:00 AM	0.510	6.12	1.11	497.8
2/09/2013 01:15:00 AM	0.510	6.12	1.11	497.8
2/09/2013 01:30:00 AM	0.510	6.12	1.11	497.8
2/09/2013 01:45:00 AM	0.500	6.00	1.08	483.2
2/09/2013 02:00:00 AM	0.510	6.12	1.11	497.8
2/09/2013 02:15:00 AM	0.510	6.12	1.11	497.8
2/09/2013 02:30:00 AM	0.510	6.12	1.11	497.8
2/09/2013 02:45:00 AM	0.510	6.12	1.11	497.8
2/09/2013 03:00:00 AM	0.510	6.12	1.11	497.8
2/09/2013 03:15:00 AM	0.510	6.12	1.11	497.8
2/09/2013 03:30:00 AM	0.510	6.12	1.11	497.8
2/09/2013 03:45:00 AM	0.510	6.12	1.11	497.8
2/09/2013 04:00:00 AM	0.510	6.12	1.11	497.8
2/09/2013 04:15:00 AM	0.510	6.12	1.11	497.8
2/09/2013 04:30:00 AM	0.510	6.12	1.11	497.8
2/09/2013 04:45:00 AM	0.510	6.12	1.11	497.8
2/09/2013 05:00:00 AM	0.510	6.12	1.11	497.8
2/09/2013 05:15:00 AM	0.510	6.12	1.11	497.8
2/09/2013 05:30:00 AM	0.510	6.12	1.11	497.8
2/09/2013 05:45:00 AM	0.510	6.12	1.11	497.8
2/09/2013 06:00:00 AM	0.510	6.12	1.11	497.8
2/09/2013 06:15:00 AM	0.510	6.12	1.11	497.8
2/09/2013 06:30:00 AM	0.510	6.12	1.11	497.8
2/09/2013 06:45:00 AM	0.510	6.12	1.11	497.8
2/09/2013 07:00:00 AM	0.510	6.12	1.11	497.8
2/09/2013 07:15:00 AM	0.510	6.12	1.11	497.8
2/09/2013 07:30:00 AM	0.510	6.12	1.11	497.8
2/09/2013 07:45:00 AM	0.510	6.12	1.11	497.8
2/09/2013 08:00:00 AM	0.510	6.12	1.11	497.8
2/09/2013 08:15:00 AM	0.510	6.12	1.11	497.8
2/09/2013 08:30:00 AM	0.510	6.12	1.11	497.8
2/09/2013 08:45:00 AM	0.510	6.12	1.11	497.8
2/09/2013 09:00:00 AM	0.510	6.12	1.11	497.8
2/09/2013 09:15:00 AM	0.500	6.00	1.08	483.2
2/09/2013 09:30:00 AM	0.510	6.12	1.11	497.8
2/09/2013 09:45:00 AM	0.510	6.12	1.11	497.8
2/09/2013 10:00:00 AM	0.510	6.12	1.11	497.8
2/09/2013 10:15:00 AM	0.510	6.12	1.11	497.8
2/09/2013 10:30:00 AM	0.510	6.12	1.11	497.8
2/09/2013 10:45:00 AM	0.510	6.12	1.11	497.8
2/09/2013 11:00:00 AM	0.510	6.12	1.11	497.8
2/09/2013 11:15:00 AM	0.500	6.00	1.08	483.2
2/09/2013 11:30:00 AM	0.510	6.12	1.11	497.8
2/09/2013 11:45:00 AM	0.500	6.00	1.08	483.2
2/09/2013 12:00:00 PM	0.510	6.12	1.11	497.8
2/09/2013 12:15:00 PM	0.510	6.12	1.11	497.8
2/09/2013 12:30:00 PM	0.500	6.00	1.08	483.2

2/09/2013 12:45:00 PM	0.510	6.12	1.11	497.8
2/09/2013 01:00:00 PM	0.510	6.12	1.11	497.8
2/09/2013 01:15:00 PM	0.510	6.12	1.11	497.8
2/09/2013 01:30:00 PM	0.510	6.12	1.11	497.8
2/09/2013 01:45:00 PM	0.510	6.12	1.11	497.8
2/09/2013 02:00:00 PM	0.510	6.12	1.11	497.8
2/09/2013 02:15:00 PM	0.510	6.12	1.11	497.8
2/09/2013 02:30:00 PM	0.510	6.12	1.11	497.8
2/09/2013 02:45:00 PM	0.510	6.12	1.11	497.8
2/09/2013 03:00:00 PM	0.510	6.12	1.11	497.8
2/09/2013 03:15:00 PM	0.510	6.12	1.11	497.8
2/09/2013 03:30:00 PM	0.510	6.12	1.11	497.8
2/09/2013 03:45:00 PM	0.510	6.12	1.11	497.8
2/09/2013 04:00:00 PM	0.510	6.12	1.11	497.8
2/09/2013 04:15:00 PM	0.510	6.12	1.11	497.8
2/09/2013 04:30:00 PM	0.510	6.12	1.11	497.8
2/09/2013 04:45:00 PM	0.510	6.12	1.11	497.8
2/09/2013 05:00:00 PM	0.510	6.12	1.11	497.8
2/09/2013 05:15:00 PM	0.510	6.12	1.11	497.8
2/09/2013 05:30:00 PM	0.510	6.12	1.11	497.8
2/09/2013 05:45:00 PM	0.510	6.12	1.11	497.8
2/09/2013 06:00:00 PM	0.510	6.12	1.11	497.8
2/09/2013 06:15:00 PM	0.510	6.12	1.11	497.8
2/09/2013 06:30:00 PM	0.510	6.12	1.11	497.8
2/09/2013 06:45:00 PM	0.510	6.12	1.11	497.8
2/09/2013 07:00:00 PM	0.510	6.12	1.11	497.8
2/09/2013 07:15:00 PM	0.510	6.12	1.11	497.8
2/09/2013 07:30:00 PM	0.510	6.12	1.11	497.8
2/09/2013 07:45:00 PM	0.510	6.12	1.11	497.8
2/09/2013 08:00:00 PM	0.510	6.12	1.11	497.8
2/09/2013 08:15:00 PM	0.510	6.12	1.11	497.8
2/09/2013 08:30:00 PM	0.510	6.12	1.11	497.8
2/09/2013 08:45:00 PM	0.510	6.12	1.11	497.8
2/09/2013 09:00:00 PM	0.510	6.12	1.11	497.8
2/09/2013 09:15:00 PM	0.510	6.12	1.11	497.8
2/09/2013 09:30:00 PM	0.510	6.12	1.11	497.8
2/09/2013 09:45:00 PM	0.510	6.12	1.11	497.8
2/09/2013 10:00:00 PM	0.510	6.12	1.11	497.8
2/09/2013 10:15:00 PM	0.510	6.12	1.11	497.8
2/09/2013 10:30:00 PM	0.510	6.12	1.11	497.8
2/09/2013 10:45:00 PM	0.510	6.12	1.11	497.8
2/09/2013 11:00:00 PM	0.510	6.12	1.11	497.8
2/09/2013 11:15:00 PM	0.510	6.12	1.11	497.8
2/09/2013 11:30:00 PM	0.510	6.12	1.11	497.8
2/09/2013 11:45:00 PM	0.510	6.12	1.11	497.8
2/10/2013 12:00:00 AM	0.510	6.12	1.11	497.8
2/10/2013 12:15:00 AM	0.510	6.12	1.11	497.8

2/10/2013 12:30:00 AM	0.510	6.12	1.11	497.8
2/10/2013 12:45:00 AM	0.510	6.12	1.11	497.8
2/10/2013 01:00:00 AM	0.510	6.12	1.11	497.8
2/10/2013 01:15:00 AM	0.510	6.12	1.11	497.8
2/10/2013 01:30:00 AM	0.510	6.12	1.11	497.8
2/10/2013 01:45:00 AM	0.510	6.12	1.11	497.8
2/10/2013 02:00:00 AM	0.510	6.12	1.11	497.8
2/10/2013 02:15:00 AM	0.510	6.12	1.11	497.8
2/10/2013 02:30:00 AM	0.510	6.12	1.11	497.8
2/10/2013 02:45:00 AM	0.510	6.12	1.11	497.8
2/10/2013 03:00:00 AM	0.510	6.12	1.11	497.8
2/10/2013 03:15:00 AM	0.510	6.12	1.11	497.8
2/10/2013 03:30:00 AM	0.510	6.12	1.11	497.8
2/10/2013 03:45:00 AM	0.510	6.12	1.11	497.8
2/10/2013 04:00:00 AM	0.510	6.12	1.11	497.8
2/10/2013 04:15:00 AM	0.500	6.00	1.08	483.2
2/10/2013 04:30:00 AM	0.510	6.12	1.11	497.8
2/10/2013 04:45:00 AM	0.510	6.12	1.11	497.8
2/10/2013 05:00:00 AM	0.510	6.12	1.11	497.8
2/10/2013 05:15:00 AM	0.510	6.12	1.11	497.8
2/10/2013 05:30:00 AM	0.510	6.12	1.11	497.8
2/10/2013 05:45:00 AM	0.510	6.12	1.11	497.8
2/10/2013 06:00:00 AM	0.510	6.12	1.11	497.8
2/10/2013 06:15:00 AM	0.510	6.12	1.11	497.8
2/10/2013 06:30:00 AM	0.510	6.12	1.11	497.8
2/10/2013 06:45:00 AM	0.510	6.12	1.11	497.8
2/10/2013 07:00:00 AM	0.510	6.12	1.11	497.8
2/10/2013 07:15:00 AM	0.510	6.12	1.11	497.8
2/10/2013 07:30:00 AM	0.510	6.12	1.11	497.8
2/10/2013 07:45:00 AM	0.510	6.12	1.11	497.8
2/10/2013 08:00:00 AM	0.510	6.12	1.11	497.8
2/10/2013 08:15:00 AM	0.510	6.12	1.11	497.8
2/10/2013 08:30:00 AM	0.510	6.12	1.11	497.8
2/10/2013 08:45:00 AM	0.510	6.12	1.11	497.8
2/10/2013 09:00:00 AM	0.500	6.00	1.08	483.2
2/10/2013 09:15:00 AM	0.510	6.12	1.11	497.8
2/10/2013 09:30:00 AM	0.510	6.12	1.11	497.8
2/10/2013 09:45:00 AM	0.500	6.00	1.08	483.2
2/10/2013 10:00:00 AM	0.510	6.12	1.11	497.8
2/10/2013 10:15:00 AM	0.510	6.12	1.11	497.8
2/10/2013 10:30:00 AM	0.510	6.12	1.11	497.8
2/10/2013 10:45:00 AM	0.510	6.12	1.11	497.8
2/10/2013 11:00:00 AM	0.510	6.12	1.11	497.8
2/10/2013 11:15:00 AM	0.510	6.12	1.11	497.8
2/10/2013 11:30:00 AM	0.510	6.12	1.11	497.8
2/10/2013 11:45:00 AM	0.510	6.12	1.11	497.8
2/10/2013 12:00:00 PM	0.510	6.12	1.11	497.8

2/10/2013 12:15:00 PM	0.510	6.12	1.11	497.8
2/10/2013 12:30:00 PM	0.510	6.12	1.11	497.8
2/10/2013 12:45:00 PM	0.510	6.12	1.11	497.8
2/10/2013 01:00:00 PM	0.510	6.12	1.11	497.8
2/10/2013 01:15:00 PM	0.510	6.12	1.11	497.8
2/10/2013 01:30:00 PM	0.510	6.12	1.11	497.8
2/10/2013 01:45:00 PM	0.510	6.12	1.11	497.8
2/10/2013 02:00:00 PM	0.510	6.12	1.11	497.8
2/10/2013 02:15:00 PM	0.510	6.12	1.11	497.8
2/10/2013 02:30:00 PM	0.510	6.12	1.11	497.8
2/10/2013 02:45:00 PM	0.510	6.12	1.11	497.8
2/10/2013 03:00:00 PM	0.510	6.12	1.11	497.8
2/10/2013 03:15:00 PM	0.510	6.12	1.11	497.8
2/10/2013 03:30:00 PM	0.510	6.12	1.11	497.8
2/10/2013 03:45:00 PM	0.510	6.12	1.11	497.8
2/10/2013 04:00:00 PM	0.510	6.12	1.11	497.8
2/10/2013 04:15:00 PM	0.510	6.12	1.11	497.8
2/10/2013 04:30:00 PM	0.510	6.12	1.11	497.8
2/10/2013 04:45:00 PM	0.510	6.12	1.11	497.8
2/10/2013 05:00:00 PM	0.510	6.12	1.11	497.8
2/10/2013 05:15:00 PM	0.510	6.12	1.11	497.8
2/10/2013 05:30:00 PM	0.510	6.12	1.11	497.8
2/10/2013 05:45:00 PM	0.500	6.00	1.08	483.2
2/10/2013 06:00:00 PM	0.510	6.12	1.11	497.8
2/10/2013 06:15:00 PM	0.500	6.00	1.08	483.2
2/10/2013 06:30:00 PM	0.510	6.12	1.11	497.8
2/10/2013 06:45:00 PM	0.510	6.12	1.11	497.8
2/10/2013 07:00:00 PM	0.510	6.12	1.11	497.8
2/10/2013 07:15:00 PM	0.510	6.12	1.11	497.8
2/10/2013 07:30:00 PM	0.510	6.12	1.11	497.8
2/10/2013 07:45:00 PM	0.510	6.12	1.11	497.8
2/10/2013 08:00:00 PM	0.510	6.12	1.11	497.8
2/13/2013 11:49:01 AM	0.510	6.12	1.11	497.8
2/13/2013 11:49:58 AM	0.510	6.12	1.11	497.8
2/13/2013 11:50:30 AM	0.500	6.00	1.08	483.2
2/13/2013 11:50:59 AM	0.510	6.12	1.11	497.8
2/13/2013 11:51:26 AM	0.510	6.12	1.11	497.8
2/13/2013 12:00:00 PM	0.510	6.12	1.11	497.8
2/13/2013 12:15:00 PM	0.500	6.00	1.08	483.2
2/13/2013 12:30:00 PM	0.510	6.12	1.11	497.8
2/13/2013 12:45:00 PM	0.510	6.12	1.11	497.8
2/13/2013 01:00:00 PM	0.500	6.00	1.08	483.2
2/13/2013 01:15:00 PM	0.510	6.12	1.11	497.8
2/13/2013 01:30:00 PM	0.510	6.12	1.11	497.8
2/13/2013 01:45:00 PM	0.510	6.12	1.11	497.8
2/13/2013 02:00:00 PM	0.510	6.12	1.11	497.8
2/13/2013 02:15:00 PM	0.500	6.00	1.08	483.2

2/13/2013 02:30:00 PM	0.500	6.00	1.08	483.2
2/13/2013 02:45:00 PM	0.500	6.00	1.08	483.2
2/13/2013 03:00:00 PM	0.510	6.12	1.11	497.8
2/13/2013 03:15:00 PM	0.510	6.12	1.11	497.8
2/13/2013 03:30:00 PM	0.500	6.00	1.08	483.2
2/13/2013 03:45:00 PM	0.500	6.00	1.08	483.2
2/13/2013 04:00:00 PM	0.510	6.12	1.11	497.8
2/13/2013 04:15:00 PM	0.510	6.12	1.11	497.8
2/13/2013 04:30:00 PM	0.510	6.12	1.11	497.8
2/13/2013 04:45:00 PM	0.510	6.12	1.11	497.8
2/13/2013 05:00:00 PM	0.510	6.12	1.11	497.8
2/13/2013 05:15:00 PM	0.510	6.12	1.11	497.8
2/13/2013 05:30:00 PM	0.510	6.12	1.11	497.8
2/13/2013 05:45:00 PM	0.510	6.12	1.11	497.8
2/13/2013 06:00:00 PM	0.510	6.12	1.11	497.8
2/13/2013 06:15:00 PM	0.510	6.12	1.11	497.8
2/13/2013 06:30:00 PM	0.510	6.12	1.11	497.8
2/13/2013 06:45:00 PM	0.510	6.12	1.11	497.8
2/13/2013 07:00:00 PM	0.510	6.12	1.11	497.8
2/13/2013 07:15:00 PM	0.500	6.00	1.08	483.2
2/13/2013 07:30:00 PM	0.510	6.12	1.11	497.8
2/13/2013 07:45:00 PM	0.510	6.12	1.11	497.8
2/13/2013 08:00:00 PM	0.510	6.12	1.11	497.8
2/13/2013 08:15:00 PM	0.500	6.00	1.08	483.2
2/13/2013 08:30:00 PM	0.510	6.12	1.11	497.8
2/13/2013 08:45:00 PM	0.510	6.12	1.11	497.8
2/13/2013 09:00:00 PM	0.510	6.12	1.11	497.8
2/13/2013 09:15:00 PM	0.510	6.12	1.11	497.8
2/13/2013 09:30:00 PM	0.510	6.12	1.11	497.8
2/13/2013 09:45:00 PM	0.510	6.12	1.11	497.8
2/13/2013 10:00:00 PM	0.510	6.12	1.11	497.8
2/13/2013 10:15:00 PM	0.510	6.12	1.11	497.8
2/13/2013 10:30:00 PM	0.510	6.12	1.11	497.8
2/13/2013 10:45:00 PM	0.510	6.12	1.11	497.8
2/13/2013 11:00:00 PM	0.510	6.12	1.11	497.8
2/13/2013 11:15:00 PM	0.510	6.12	1.11	497.8
2/13/2013 11:30:00 PM	0.510	6.12	1.11	497.8
2/13/2013 11:45:00 PM	0.510	6.12	1.11	497.8
2/14/2013 12:00:00 AM	0.510	6.12	1.11	497.8
2/14/2013 08:22:06 AM	0.510	6.12	1.11	497.8
2/14/2013 08:22:38 AM	0.510	6.12	1.11	497.8
2/14/2013 08:23:08 AM	0.510	6.12	1.11	497.8
2/14/2013 08:23:39 AM	0.510	6.12	1.11	497.8
2/14/2013 08:24:09 AM	0.510	6.12	1.11	497.8
2/14/2013 08:24:39 AM	0.510	6.12	1.11	497.8
2/14/2013 08:25:08 AM	0.510	6.12	1.11	497.8
2/14/2013 08:25:37 AM	0.510	6.12	1.11	497.8

2/14/2013 08:26:06 AM	0.500	6.00	1.08	483.2
2/14/2013 08:26:34 AM	0.510	6.12	1.11	497.8
2/14/2013 08:27:03 AM	0.510	6.12	1.11	497.8
2/14/2013 08:27:32 AM	0.510	6.12	1.11	497.8
2/14/2013 08:28:02 AM	0.510	6.12	1.11	497.8
2/14/2013 08:28:33 AM	0.510	6.12	1.11	497.8
2/14/2013 08:29:04 AM	0.510	6.12	1.11	497.8
2/14/2013 08:29:37 AM	0.510	6.12	1.11	497.8
2/14/2013 08:30:23 AM	0.510	6.12	1.11	497.8
2/14/2013 08:31:34 AM	0.510	6.12	1.11	497.8
2/14/2013 09:27:15 AM	0.510	6.12	1.11	497.8
2/14/2013 09:27:38 AM	0.510	6.12	1.11	497.8
2/14/2013 09:28:01 AM	0.510	6.12	1.11	497.8
2/14/2013 09:28:23 AM	0.510	6.12	1.11	497.8
2/14/2013 09:28:46 AM	0.510	6.12	1.11	497.8
2/14/2013 09:29:09 AM	0.510	6.12	1.11	497.8
2/14/2013 09:29:32 AM	0.510	6.12	1.11	497.8
2/14/2013 09:29:54 AM	0.510	6.12	1.11	497.8
2/14/2013 09:30:17 AM	0.510	6.12	1.11	497.8
2/14/2013 09:30:40 AM	0.510	6.12	1.11	497.8
2/14/2013 09:31:02 AM	0.510	6.12	1.11	497.8
2/14/2013 09:31:25 AM	0.510	6.12	1.11	497.8
2/14/2013 09:31:48 AM	0.510	6.12	1.11	497.8
2/14/2013 09:32:10 AM	0.510	6.12	1.11	497.8
2/14/2013 09:32:33 AM	0.510	6.12	1.11	497.8
2/14/2013 09:32:56 AM	0.510	6.12	1.11	497.8
2/14/2013 09:33:18 AM	0.510	6.12	1.11	497.8
2/14/2013 09:33:41 AM	0.510	6.12	1.11	497.8
2/14/2013 09:34:04 AM	0.510	6.12	1.11	497.8
2/14/2013 09:34:27 AM	0.510	6.12	1.11	497.8
2/14/2013 09:45:00 AM	0.510	6.12	1.11	497.8
2/14/2013 10:00:00 AM	0.510	6.12	1.11	497.8
2/14/2013 10:15:00 AM	0.510	6.12	1.11	497.8
2/14/2013 10:30:00 AM	0.510	6.12	1.11	497.8
2/14/2013 10:45:00 AM	0.510	6.12	1.11	497.8
2/14/2013 11:00:00 AM	0.510	6.12	1.11	497.8
2/14/2013 11:15:00 AM	0.510	6.12	1.11	497.8
2/14/2013 11:30:00 AM	0.510	6.12	1.11	497.8
2/14/2013 11:45:00 AM	0.510	6.12	1.11	497.8
2/14/2013 12:00:00 PM	0.500	6.00	1.08	483.2
2/14/2013 12:15:00 PM	0.510	6.12	1.11	497.8
2/14/2013 12:30:00 PM	0.510	6.12	1.11	497.8
2/14/2013 12:45:00 PM	0.500	6.00	1.08	483.2
2/14/2013 01:00:00 PM	0.510	6.12	1.11	497.8
2/14/2013 01:15:00 PM	0.500	6.00	1.08	483.2
2/14/2013 01:30:00 PM	0.500	6.00	1.08	483.2
2/14/2013 01:45:00 PM	0.510	6.12	1.11	497.8

2/14/2013 02:00:00 PM	0.510	6.12	1.11	497.8
2/14/2013 02:15:00 PM	0.510	6.12	1.11	497.8
2/14/2013 02:30:00 PM	0.510	6.12	1.11	497.8
2/14/2013 02:45:00 PM	0.500	6.00	1.08	483.2
2/14/2013 03:00:00 PM	0.500	6.00	1.08	483.2
2/14/2013 03:15:00 PM	0.500	6.00	1.08	483.2
2/14/2013 03:30:00 PM	0.510	6.12	1.11	497.8
2/14/2013 03:45:00 PM	0.510	6.12	1.11	497.8
2/14/2013 04:00:00 PM	0.510	6.12	1.11	497.8
2/14/2013 04:15:00 PM	0.510	6.12	1.11	497.8
2/14/2013 04:30:00 PM	0.510	6.12	1.11	497.8
2/14/2013 04:45:00 PM	0.510	6.12	1.11	497.8
2/14/2013 05:00:00 PM	0.510	6.12	1.11	497.8
2/14/2013 05:15:00 PM	0.510	6.12	1.11	497.8
2/14/2013 05:30:00 PM	0.510	6.12	1.11	497.8
2/14/2013 05:45:00 PM	0.510	6.12	1.11	497.8
2/14/2013 06:00:00 PM	0.510	6.12	1.11	497.8
2/14/2013 06:15:00 PM	0.510	6.12	1.11	497.8
2/14/2013 06:30:00 PM	0.510	6.12	1.11	497.8
2/14/2013 06:45:00 PM	0.510	6.12	1.11	497.8
2/14/2013 07:00:00 PM	0.510	6.12	1.11	497.8
2/14/2013 07:15:00 PM	0.510	6.12	1.11	497.8
2/14/2013 07:30:00 PM	0.500	6.00	1.08	483.2
2/14/2013 07:45:00 PM	0.510	6.12	1.11	497.8
2/14/2013 08:00:00 PM	0.510	6.12	1.11	497.8
2/14/2013 08:15:00 PM	0.510	6.12	1.11	497.8
2/14/2013 08:30:00 PM	0.510	6.12	1.11	497.8
2/14/2013 08:45:00 PM	0.510	6.12	1.11	497.8
2/14/2013 09:00:00 PM	0.510	6.12	1.11	497.8
2/14/2013 09:15:00 PM	0.510	6.12	1.11	497.8
2/14/2013 09:30:00 PM	0.510	6.12	1.11	497.8
2/14/2013 09:45:00 PM	0.510	6.12	1.11	497.8
2/14/2013 10:00:00 PM	0.510	6.12	1.11	497.8
2/14/2013 10:15:00 PM	0.510	6.12	1.11	497.8
2/14/2013 10:30:00 PM	0.510	6.12	1.11	497.8
2/14/2013 10:45:00 PM	0.510	6.12	1.11	497.8
2/14/2013 11:00:00 PM	0.510	6.12	1.11	497.8
2/14/2013 11:15:00 PM	0.510	6.12	1.11	497.8
2/14/2013 11:30:00 PM	0.510	6.12	1.11	497.8
2/14/2013 11:45:00 PM	0.510	6.12	1.11	497.8
2/15/2013 12:00:00 AM	0.510	6.12	1.11	497.8
2/15/2013 12:15:00 AM	0.510	6.12	1.11	497.8
2/15/2013 12:30:00 AM	0.510	6.12	1.11	497.8
2/15/2013 12:45:00 AM	0.510	6.12	1.11	497.8
2/15/2013 01:00:00 AM	0.510	6.12	1.11	497.8
2/15/2013 01:15:00 AM	0.510	6.12	1.11	497.8
2/15/2013 01:30:00 AM	0.510	6.12	1.11	497.8

2/15/2013 01:45:00 AM	0.510	6.12	1.11	497.8
2/15/2013 02:00:00 AM	0.510	6.12	1.11	497.8
2/15/2013 02:15:00 AM	0.510	6.12	1.11	497.8
2/15/2013 02:30:00 AM	0.510	6.12	1.11	497.8
2/15/2013 02:45:00 AM	0.510	6.12	1.11	497.8
2/15/2013 03:00:00 AM	0.510	6.12	1.11	497.8
2/15/2013 03:15:00 AM	0.510	6.12	1.11	497.8
2/15/2013 03:30:00 AM	0.510	6.12	1.11	497.8
2/15/2013 03:45:00 AM	0.510	6.12	1.11	497.8
2/15/2013 04:00:00 AM	0.510	6.12	1.11	497.8
2/15/2013 04:15:00 AM	0.510	6.12	1.11	497.8
2/15/2013 04:30:00 AM	0.510	6.12	1.11	497.8
2/15/2013 04:45:00 AM	0.510	6.12	1.11	497.8
2/15/2013 05:00:00 AM	0.510	6.12	1.11	497.8
2/15/2013 09:25:56 AM	0.510	6.12	1.11	497.8
2/15/2013 09:26:19 AM	0.510	6.12	1.11	497.8
2/15/2013 09:26:43 AM	0.510	6.12	1.11	497.8
2/15/2013 09:27:06 AM	0.510	6.12	1.11	497.8
2/15/2013 09:27:30 AM	0.510	6.12	1.11	497.8
2/15/2013 09:27:52 AM	0.510	6.12	1.11	497.8
2/15/2013 09:28:15 AM	0.510	6.12	1.11	497.8
2/15/2013 09:28:38 AM	0.510	6.12	1.11	497.8
2/15/2013 09:29:00 AM	0.510	6.12	1.11	497.8
2/15/2013 09:29:23 AM	0.510	6.12	1.11	497.8
2/15/2013 09:29:46 AM	0.510	6.12	1.11	497.8
2/15/2013 09:30:09 AM	0.510	6.12	1.11	497.8
2/15/2013 09:30:31 AM	0.510	6.12	1.11	497.8
2/15/2013 09:30:54 AM	0.510	6.12	1.11	497.8
2/15/2013 09:31:17 AM	0.510	6.12	1.11	497.8
2/15/2013 09:31:39 AM	0.510	6.12	1.11	497.8
2/15/2013 09:32:02 AM	0.510	6.12	1.11	497.8
2/15/2013 09:32:25 AM	0.510	6.12	1.11	497.8
2/15/2013 09:45:00 AM	0.510	6.12	1.11	497.8
2/15/2013 10:00:00 AM	0.510	6.12	1.11	497.8
2/15/2013 10:15:00 AM	0.510	6.12	1.11	497.8
2/15/2013 10:30:00 AM	0.510	6.12	1.11	497.8
2/15/2013 10:45:00 AM	0.510	6.12	1.11	497.8
2/15/2013 11:00:00 AM	0.510	6.12	1.11	497.8
2/15/2013 11:15:00 AM	0.510	6.12	1.11	497.8
2/15/2013 11:30:00 AM	0.510	6.12	1.11	497.8
2/15/2013 11:45:00 AM	0.510	6.12	1.11	497.8
2/15/2013 12:00:00 PM	0.510	6.12	1.11	497.8
2/15/2013 12:15:00 PM	0.500	6.00	1.08	483.2
2/15/2013 12:30:00 PM	0.500	6.00	1.08	483.2
2/15/2013 12:45:00 PM	0.510	6.12	1.11	497.8
2/15/2013 01:00:00 PM	0.500	6.00	1.08	483.2
2/15/2013 01:15:00 PM	0.500	6.00	1.08	483.2

2/15/2013 01:30:00 PM	0.510	6.12	1.11	497.8
2/15/2013 01:45:00 PM	0.510	6.12	1.11	497.8
2/15/2013 02:00:00 PM	0.500	6.00	1.08	483.2
2/15/2013 02:15:00 PM	0.510	6.12	1.11	497.8
2/15/2013 02:30:00 PM	0.510	6.12	1.11	497.8
2/15/2013 02:45:00 PM	0.510	6.12	1.11	497.8
2/15/2013 03:00:00 PM	0.510	6.12	1.11	497.8
2/15/2013 03:15:00 PM	0.510	6.12	1.11	497.8
2/15/2013 03:30:00 PM	0.510	6.12	1.11	497.8
2/15/2013 03:45:00 PM	0.510	6.12	1.11	497.8
2/15/2013 04:00:00 PM	0.510	6.12	1.11	497.8
2/15/2013 04:15:00 PM	0.500	6.00	1.08	483.2
2/15/2013 04:30:00 PM	0.510	6.12	1.11	497.8
2/15/2013 04:45:00 PM	0.510	6.12	1.11	497.8
2/15/2013 05:00:00 PM	0.510	6.12	1.11	497.8
2/15/2013 05:15:00 PM	0.510	6.12	1.11	497.8
2/15/2013 05:30:00 PM	0.510	6.12	1.11	497.8
2/15/2013 05:45:00 PM	0.510	6.12	1.11	497.8
2/15/2013 06:00:00 PM	0.510	6.12	1.11	497.8
2/15/2013 06:15:00 PM	0.510	6.12	1.11	497.8
2/15/2013 06:30:00 PM	0.510	6.12	1.11	497.8
2/15/2013 06:45:00 PM	0.510	6.12	1.11	497.8
2/15/2013 07:00:00 PM	0.510	6.12	1.11	497.8
2/15/2013 07:15:00 PM	0.510	6.12	1.11	497.8
2/15/2013 07:30:00 PM	0.510	6.12	1.11	497.8
2/15/2013 07:45:00 PM	0.510	6.12	1.11	497.8
2/15/2013 08:00:00 PM	0.510	6.12	1.11	497.8
2/15/2013 08:15:00 PM	0.510	6.12	1.11	497.8
2/15/2013 08:30:00 PM	0.510	6.12	1.11	497.8
2/15/2013 08:45:00 PM	0.510	6.12	1.11	497.8
2/15/2013 09:00:00 PM	0.510	6.12	1.11	497.8
2/15/2013 09:15:00 PM	0.510	6.12	1.11	497.8
2/15/2013 09:30:00 PM	0.510	6.12	1.11	497.8
2/15/2013 09:45:00 PM	0.510	6.12	1.11	497.8
2/15/2013 10:00:00 PM	0.510	6.12	1.11	497.8
2/15/2013 10:15:00 PM	0.510	6.12	1.11	497.8
2/15/2013 10:30:00 PM	0.510	6.12	1.11	497.8
2/15/2013 10:45:00 PM	0.510	6.12	1.11	497.8
2/15/2013 11:00:00 PM	0.510	6.12	1.11	497.8
2/15/2013 11:15:00 PM	0.510	6.12	1.11	497.8
2/15/2013 11:30:00 PM	0.510	6.12	1.11	497.8
2/15/2013 11:45:00 PM	0.510	6.12	1.11	497.8
2/16/2013 12:00:00 AM	0.510	6.12	1.11	497.8
2/16/2013 12:15:00 AM	0.510	6.12	1.11	497.8
2/16/2013 12:30:00 AM	0.510	6.12	1.11	497.8
2/16/2013 12:45:00 AM	0.510	6.12	1.11	497.8
2/16/2013 01:00:00 AM	0.510	6.12	1.11	497.8

2/16/2013 01:15:00 AM	0.510	6.12	1.11	497.8
2/16/2013 09:14:36 AM	0.510	6.12	1.11	497.8
2/16/2013 09:14:59 AM	0.510	6.12	1.11	497.8
2/16/2013 09:15:23 AM	0.510	6.12	1.11	497.8
2/16/2013 09:15:46 AM	0.510	6.12	1.11	497.8
2/16/2013 09:16:10 AM	0.510	6.12	1.11	497.8
2/16/2013 09:16:33 AM	0.510	6.12	1.11	497.8
2/16/2013 09:16:57 AM	0.510	6.12	1.11	497.8
2/16/2013 09:17:21 AM	0.510	6.12	1.11	497.8
2/16/2013 09:17:44 AM	0.510	6.12	1.11	497.8
2/16/2013 09:18:07 AM	0.510	6.12	1.11	497.8
2/16/2013 09:18:30 AM	0.510	6.12	1.11	497.8
2/16/2013 09:18:53 AM	0.510	6.12	1.11	497.8
2/16/2013 09:19:16 AM	0.510	6.12	1.11	497.8
2/16/2013 09:19:38 AM	0.510	6.12	1.11	497.8
2/16/2013 09:20:01 AM	0.510	6.12	1.11	497.8
2/16/2013 09:20:24 AM	0.510	6.12	1.11	497.8
2/16/2013 09:20:47 AM	0.510	6.12	1.11	497.8
2/16/2013 09:21:10 AM	0.510	6.12	1.11	497.8
2/16/2013 09:21:32 AM	0.510	6.12	1.11	497.8
2/16/2013 09:21:55 AM	0.510	6.12	1.11	497.8
2/16/2013 09:22:18 AM	0.510	6.12	1.11	497.8
2/16/2013 09:22:41 AM	0.510	6.12	1.11	497.8
2/16/2013 09:23:04 AM	0.510	6.12	1.11	497.8
2/16/2013 09:23:27 AM	0.510	6.12	1.11	497.8
2/16/2013 09:23:49 AM	0.510	6.12	1.11	497.8
2/16/2013 09:24:12 AM	0.510	6.12	1.11	497.8
2/16/2013 09:24:35 AM	0.510	6.12	1.11	497.8
2/16/2013 09:24:58 AM	0.510	6.12	1.11	497.8
2/16/2013 09:25:21 AM	0.510	6.12	1.11	497.8
2/16/2013 09:25:43 AM	0.510	6.12	1.11	497.8
2/16/2013 09:26:06 AM	0.500	6.00	1.08	483.2
2/16/2013 09:26:29 AM	0.510	6.12	1.11	497.8
2/16/2013 09:30:12 AM	0.510	6.12	1.11	497.8
2/16/2013 09:45:00 AM	0.500	6.00	1.08	483.2
2/16/2013 10:00:00 AM	0.510	6.12	1.11	497.8
2/16/2013 10:15:00 AM	0.510	6.12	1.11	497.8
2/16/2013 10:30:00 AM	0.510	6.12	1.11	497.8
2/16/2013 10:45:00 AM	0.510	6.12	1.11	497.8
2/16/2013 11:00:00 AM	0.510	6.12	1.11	497.8
2/16/2013 11:15:00 AM	0.510	6.12	1.11	497.8
2/16/2013 11:30:00 AM	0.510	6.12	1.11	497.8
2/16/2013 11:45:00 AM	0.510	6.12	1.11	497.8
2/16/2013 12:00:00 PM	0.510	6.12	1.11	497.8
2/16/2013 12:15:00 PM	0.510	6.12	1.11	497.8
2/16/2013 12:30:00 PM	0.510	6.12	1.11	497.8
2/16/2013 12:45:00 PM	0.500	6.00	1.08	483.2

2/16/2013 01:00:00 PM	0.510	6.12	1.11	497.8
2/16/2013 01:15:00 PM	0.510	6.12	1.11	497.8
2/16/2013 01:30:00 PM	0.510	6.12	1.11	497.8
2/16/2013 01:45:00 PM	0.510	6.12	1.11	497.8
2/16/2013 02:00:00 PM	0.510	6.12	1.11	497.8
2/16/2013 02:15:00 PM	0.510	6.12	1.11	497.8
2/16/2013 02:30:00 PM	0.510	6.12	1.11	497.8
2/16/2013 02:45:00 PM	0.510	6.12	1.11	497.8
2/16/2013 03:00:00 PM	0.510	6.12	1.11	497.8
2/16/2013 03:15:00 PM	0.510	6.12	1.11	497.8
2/16/2013 03:30:00 PM	0.510	6.12	1.11	497.8
2/16/2013 03:45:00 PM	0.510	6.12	1.11	497.8
2/16/2013 04:00:00 PM	0.510	6.12	1.11	497.8
2/16/2013 04:15:00 PM	0.510	6.12	1.11	497.8
2/16/2013 04:30:00 PM	0.510	6.12	1.11	497.8
2/16/2013 04:45:00 PM	0.510	6.12	1.11	497.8
2/16/2013 05:00:00 PM	0.510	6.12	1.11	497.8
2/16/2013 05:15:00 PM	0.510	6.12	1.11	497.8
2/16/2013 05:30:00 PM	0.510	6.12	1.11	497.8
2/16/2013 05:45:00 PM	0.500	6.00	1.08	483.2
2/16/2013 06:00:00 PM	0.510	6.12	1.11	497.8
2/16/2013 06:15:00 PM	0.510	6.12	1.11	497.8
2/16/2013 06:30:00 PM	0.500	6.00	1.08	483.2
2/16/2013 06:45:00 PM	0.510	6.12	1.11	497.8
2/16/2013 07:00:00 PM	0.510	6.12	1.11	497.8
2/16/2013 07:15:00 PM	0.510	6.12	1.11	497.8
2/16/2013 07:30:00 PM	0.510	6.12	1.11	497.8
2/16/2013 07:45:00 PM	0.510	6.12	1.11	497.8
2/16/2013 08:00:00 PM	0.510	6.12	1.11	497.8
2/16/2013 08:15:00 PM	0.510	6.12	1.11	497.8
2/16/2013 08:30:00 PM	0.510	6.12	1.11	497.8
2/16/2013 08:45:00 PM	0.510	6.12	1.11	497.8
2/16/2013 09:00:00 PM	0.510	6.12	1.11	497.8
2/16/2013 09:15:00 PM	0.510	6.12	1.11	497.8
2/16/2013 09:30:00 PM	0.510	6.12	1.11	497.8
2/16/2013 09:45:00 PM	0.500	6.00	1.08	483.2
2/16/2013 10:00:00 PM	0.510	6.12	1.11	497.8
2/16/2013 10:15:00 PM	0.510	6.12	1.11	497.8
2/16/2013 10:30:00 PM	0.510	6.12	1.11	497.8
2/16/2013 10:45:00 PM	0.510	6.12	1.11	497.8
2/16/2013 11:00:00 PM	0.510	6.12	1.11	497.8
2/16/2013 11:15:00 PM	0.510	6.12	1.11	497.8
2/16/2013 11:30:00 PM	0.510	6.12	1.11	497.8
2/16/2013 11:45:00 PM	0.510	6.12	1.11	497.8
2/17/2013 12:00:00 AM	0.510	6.12	1.11	497.8
2/17/2013 12:15:00 AM	0.510	6.12	1.11	497.8
2/17/2013 12:30:00 AM	0.510	6.12	1.11	497.8

2/17/2013 12:45:00 AM	0.510	6.12	1.11	497.8
2/17/2013 01:00:00 AM	0.510	6.12	1.11	497.8
2/17/2013 01:15:00 AM	0.510	6.12	1.11	497.8
2/17/2013 01:30:00 AM	0.510	6.12	1.11	497.8
2/17/2013 01:45:00 AM	0.510	6.12	1.11	497.8
2/17/2013 02:00:00 AM	0.510	6.12	1.11	497.8
2/17/2013 02:15:00 AM	0.510	6.12	1.11	497.8
2/17/2013 02:30:00 AM	0.510	6.12	1.11	497.8
2/17/2013 02:45:00 AM	0.510	6.12	1.11	497.8
2/17/2013 03:00:00 AM	0.500	6.00	1.08	483.2
2/17/2013 03:15:00 AM	0.510	6.12	1.11	497.8
2/17/2013 03:30:00 AM	0.510	6.12	1.11	497.8
2/17/2013 03:45:00 AM	0.510	6.12	1.11	497.8
2/17/2013 04:00:00 AM	0.510	6.12	1.11	497.8
2/17/2013 04:15:00 AM	0.510	6.12	1.11	497.8
2/17/2013 04:30:00 AM	0.510	6.12	1.11	497.8
2/17/2013 04:45:00 AM	0.510	6.12	1.11	497.8
2/17/2013 05:00:00 AM	0.510	6.12	1.11	497.8
2/17/2013 05:15:00 AM	0.510	6.12	1.11	497.8
2/17/2013 05:30:00 AM	0.510	6.12	1.11	497.8
2/17/2013 05:45:00 AM	0.510	6.12	1.11	497.8
2/17/2013 06:00:00 AM	0.510	6.12	1.11	497.8
2/17/2013 06:15:00 AM	0.510	6.12	1.11	497.8
2/17/2013 06:30:00 AM	0.510	6.12	1.11	497.8
2/17/2013 06:45:00 AM	0.510	6.12	1.11	497.8
2/17/2013 07:00:00 AM	0.510	6.12	1.11	497.8
2/17/2013 07:15:00 AM	0.510	6.12	1.11	497.8
2/17/2013 07:30:00 AM	0.510	6.12	1.11	497.8
2/17/2013 07:45:00 AM	0.510	6.12	1.11	497.8
2/17/2013 08:00:00 AM	0.510	6.12	1.11	497.8
2/17/2013 08:15:00 AM	0.510	6.12	1.11	497.8
2/17/2013 08:30:00 AM	0.510	6.12	1.11	497.8
2/17/2013 08:45:00 AM	0.510	6.12	1.11	497.8
2/17/2013 09:00:00 AM	0.510	6.12	1.11	497.8
2/17/2013 09:15:00 AM	0.510	6.12	1.11	497.8
2/17/2013 09:30:00 AM	0.510	6.12	1.11	497.8
2/17/2013 09:45:00 AM	0.510	6.12	1.11	497.8
2/17/2013 10:00:00 AM	0.510	6.12	1.11	497.8
2/17/2013 10:15:00 AM	0.500	6.00	1.08	483.2
2/17/2013 10:30:00 AM	0.510	6.12	1.11	497.8
2/17/2013 10:45:00 AM	0.510	6.12	1.11	497.8
2/17/2013 11:00:00 AM	0.510	6.12	1.11	497.8
2/17/2013 11:15:00 AM	0.510	6.12	1.11	497.8
2/17/2013 11:30:00 AM	0.510	6.12	1.11	497.8
2/17/2013 11:45:00 AM	0.500	6.00	1.08	483.2
2/17/2013 12:00:00 PM	0.510	6.12	1.11	497.8
2/17/2013 12:15:00 PM	0.510	6.12	1.11	497.8

2/17/2013 12:30:00 PM	0.510	6.12	1.11	497.8
2/17/2013 12:45:00 PM	0.510	6.12	1.11	497.8
2/17/2013 01:00:00 PM	0.510	6.12	1.11	497.8
2/17/2013 01:15:00 PM	0.510	6.12	1.11	497.8
2/17/2013 01:30:00 PM	0.500	6.00	1.08	483.2
2/17/2013 01:45:00 PM	0.510	6.12	1.11	497.8
2/17/2013 02:00:00 PM	0.510	6.12	1.11	497.8
2/17/2013 02:15:00 PM	0.510	6.12	1.11	497.8
2/17/2013 02:30:00 PM	0.510	6.12	1.11	497.8
2/17/2013 02:45:00 PM	0.510	6.12	1.11	497.8
2/17/2013 03:00:00 PM	0.500	6.00	1.08	483.2
2/17/2013 03:15:00 PM	0.510	6.12	1.11	497.8
2/17/2013 03:30:00 PM	0.510	6.12	1.11	497.8
2/17/2013 03:45:00 PM	0.500	6.00	1.08	483.2
2/17/2013 04:00:00 PM	0.510	6.12	1.11	497.8
2/17/2013 04:15:00 PM	0.510	6.12	1.11	497.8
2/17/2013 04:30:00 PM	0.510	6.12	1.11	497.8
2/17/2013 04:45:00 PM	0.510	6.12	1.11	497.8
2/17/2013 05:00:00 PM	0.510	6.12	1.11	497.8
2/17/2013 05:15:00 PM	0.510	6.12	1.11	497.8
2/17/2013 05:30:00 PM	0.510	6.12	1.11	497.8
2/17/2013 05:45:00 PM	0.510	6.12	1.11	497.8
2/17/2013 06:00:00 PM	0.510	6.12	1.11	497.8
2/17/2013 06:15:00 PM	0.500	6.00	1.08	483.2
2/17/2013 06:30:00 PM	0.510	6.12	1.11	497.8
2/17/2013 06:45:00 PM	0.510	6.12	1.11	497.8
2/17/2013 07:00:00 PM	0.510	6.12	1.11	497.8
2/17/2013 07:15:00 PM	0.510	6.12	1.11	497.8
2/17/2013 07:30:00 PM	0.510	6.12	1.11	497.8
2/17/2013 07:45:00 PM	0.510	6.12	1.11	497.8
2/17/2013 08:00:00 PM	0.510	6.12	1.11	497.8
2/17/2013 08:15:00 PM	0.510	6.12	1.11	497.8
2/17/2013 08:30:00 PM	0.510	6.12	1.11	497.8
2/17/2013 08:45:00 PM	0.510	6.12	1.11	497.8
2/17/2013 09:00:00 PM	0.510	6.12	1.11	497.8
2/17/2013 09:15:00 PM	0.510	6.12	1.11	497.8
2/17/2013 09:30:00 PM	0.500	6.00	1.08	483.2
2/17/2013 09:45:00 PM	0.500	6.00	1.08	483.2
2/17/2013 10:00:00 PM	0.510	6.12	1.11	497.8
2/17/2013 10:15:00 PM	0.510	6.12	1.11	497.8
2/17/2013 10:30:00 PM	0.510	6.12	1.11	497.8
2/17/2013 10:45:00 PM	0.510	6.12	1.11	497.8
2/17/2013 11:00:00 PM	0.510	6.12	1.11	497.8
2/17/2013 11:15:00 PM	0.510	6.12	1.11	497.8
2/17/2013 11:30:00 PM	0.510	6.12	1.11	497.8
2/17/2013 11:45:00 PM	0.510	6.12	1.11	497.8
2/18/2013 12:00:00 AM	0.500	6.00	1.08	483.2

2/18/2013 12:15:00 AM	0.510	6.12	1.11	497.8
2/18/2013 12:30:00 AM	0.510	6.12	1.11	497.8
2/18/2013 12:45:00 AM	0.510	6.12	1.11	497.8
2/18/2013 01:00:00 AM	0.510	6.12	1.11	497.8
2/18/2013 01:15:00 AM	0.510	6.12	1.11	497.8
2/18/2013 01:30:00 AM	0.510	6.12	1.11	497.8
2/18/2013 01:45:00 AM	0.510	6.12	1.11	497.8
2/18/2013 02:00:00 AM	0.510	6.12	1.11	497.8
2/18/2013 02:15:00 AM	0.510	6.12	1.11	497.8
2/18/2013 02:30:00 AM	0.510	6.12	1.11	497.8
2/18/2013 02:45:00 AM	0.510	6.12	1.11	497.8
2/18/2013 03:00:00 AM	0.500	6.00	1.08	483.2
2/18/2013 03:15:00 AM	0.510	6.12	1.11	497.8
2/18/2013 03:30:00 AM	0.510	6.12	1.11	497.8
2/18/2013 03:45:00 AM	0.510	6.12	1.11	497.8
2/18/2013 04:00:00 AM	0.510	6.12	1.11	497.8
2/18/2013 04:15:00 AM	0.510	6.12	1.11	497.8
2/18/2013 04:30:00 AM	0.510	6.12	1.11	497.8
2/18/2013 04:45:00 AM	0.510	6.12	1.11	497.8
2/18/2013 05:00:00 AM	0.510	6.12	1.11	497.8
2/18/2013 05:15:00 AM	0.510	6.12	1.11	497.8
2/18/2013 05:30:00 AM	0.510	6.12	1.11	497.8
2/18/2013 05:45:00 AM	0.510	6.12	1.11	497.8
2/18/2013 06:00:00 AM	0.510	6.12	1.11	497.8
2/18/2013 06:15:00 AM	0.510	6.12	1.11	497.8
2/18/2013 06:30:00 AM	0.510	6.12	1.11	497.8
2/18/2013 06:45:00 AM	0.510	6.12	1.11	497.8
2/18/2013 07:00:00 AM	0.510	6.12	1.11	497.8
2/18/2013 07:15:00 AM	0.510	6.12	1.11	497.8
2/18/2013 07:30:00 AM	0.510	6.12	1.11	497.8
2/18/2013 07:45:00 AM	0.510	6.12	1.11	497.8
2/18/2013 08:00:00 AM	0.510	6.12	1.11	497.8
2/18/2013 08:15:00 AM	0.510	6.12	1.11	497.8
2/18/2013 08:30:00 AM	0.510	6.12	1.11	497.8
2/18/2013 08:45:00 AM	0.510	6.12	1.11	497.8
2/18/2013 09:00:00 AM	0.510	6.12	1.11	497.8
2/18/2013 09:15:00 AM	0.510	6.12	1.11	497.8
2/18/2013 09:30:00 AM	0.510	6.12	1.11	497.8
2/18/2013 09:45:00 AM	0.510	6.12	1.11	497.8
2/18/2013 10:00:00 AM	0.510	6.12	1.11	497.8
2/18/2013 10:15:00 AM	0.510	6.12	1.11	497.8
2/18/2013 10:30:00 AM	0.510	6.12	1.11	497.8
2/18/2013 10:45:00 AM	0.510	6.12	1.11	497.8
2/18/2013 11:00:00 AM	0.510	6.12	1.11	497.8
2/18/2013 11:15:00 AM	0.500	6.00	1.08	483.2
2/18/2013 11:30:00 AM	0.510	6.12	1.11	497.8
2/18/2013 11:45:00 AM	0.500	6.00	1.08	483.2

2/18/2013 12:00:00 PM	0.510	6.12	1.11	497.8
2/18/2013 12:15:00 PM	0.510	6.12	1.11	497.8
2/18/2013 12:30:00 PM	0.510	6.12	1.11	497.8
2/18/2013 12:45:00 PM	0.500	6.00	1.08	483.2
2/18/2013 01:00:00 PM	0.510	6.12	1.11	497.8
2/18/2013 01:15:00 PM	0.510	6.12	1.11	497.8
2/18/2013 01:30:00 PM	0.510	6.12	1.11	497.8
2/18/2013 01:45:00 PM	0.510	6.12	1.11	497.8
2/18/2013 02:00:00 PM	0.510	6.12	1.11	497.8
2/18/2013 02:15:00 PM	0.510	6.12	1.11	497.8
2/18/2013 02:30:00 PM	0.510	6.12	1.11	497.8
2/18/2013 02:45:00 PM	0.510	6.12	1.11	497.8
2/18/2013 03:00:00 PM	0.510	6.12	1.11	497.8
2/18/2013 03:15:00 PM	0.510	6.12	1.11	497.8
2/18/2013 03:30:00 PM	0.510	6.12	1.11	497.8
2/18/2013 03:45:00 PM	0.510	6.12	1.11	497.8
2/18/2013 04:00:00 PM	0.510	6.12	1.11	497.8
2/18/2013 04:15:00 PM	0.510	6.12	1.11	497.8
2/18/2013 04:30:00 PM	0.510	6.12	1.11	497.8
2/18/2013 04:45:00 PM	0.500	6.00	1.08	483.2
2/18/2013 05:00:00 PM	0.510	6.12	1.11	497.8
2/18/2013 05:15:00 PM	0.510	6.12	1.11	497.8
2/18/2013 05:30:00 PM	0.510	6.12	1.11	497.8
2/18/2013 05:45:00 PM	0.510	6.12	1.11	497.8
2/18/2013 06:00:00 PM	0.510	6.12	1.11	497.8
2/18/2013 06:15:00 PM	0.510	6.12	1.11	497.8
2/18/2013 06:30:00 PM	0.500	6.00	1.08	483.2
2/18/2013 06:45:00 PM	0.510	6.12	1.11	497.8
2/18/2013 07:00:00 PM	0.510	6.12	1.11	497.8
2/18/2013 07:15:00 PM	0.510	6.12	1.11	497.8
2/18/2013 07:30:00 PM	0.510	6.12	1.11	497.8
2/18/2013 07:45:00 PM	0.510	6.12	1.11	497.8
2/18/2013 08:00:00 PM	0.510	6.12	1.11	497.8
2/18/2013 08:15:00 PM	0.510	6.12	1.11	497.8
2/18/2013 08:30:00 PM	0.510	6.12	1.11	497.8
2/18/2013 08:45:00 PM	0.510	6.12	1.11	497.8
2/18/2013 09:00:00 PM	0.510	6.12	1.11	497.8
2/18/2013 09:15:00 PM	0.510	6.12	1.11	497.8
2/18/2013 09:30:00 PM	0.510	6.12	1.11	497.8
2/18/2013 09:45:00 PM	0.510	6.12	1.11	497.8
2/18/2013 10:00:00 PM	0.510	6.12	1.11	497.8
2/18/2013 10:15:00 PM	0.510	6.12	1.11	497.8
2/18/2013 10:30:00 PM	0.510	6.12	1.11	497.8
2/18/2013 10:45:00 PM	0.500	6.00	1.08	483.2
2/18/2013 11:00:00 PM	0.510	6.12	1.11	497.8
2/18/2013 11:15:00 PM	0.510	6.12	1.11	497.8
2/18/2013 11:30:00 PM	0.510	6.12	1.11	497.8

2/18/2013 11:45:00 PM	0.510	6.12	1.11	497.8
2/19/2013 12:00:00 AM	0.510	6.12	1.11	497.8
2/19/2013 12:15:00 AM	0.510	6.12	1.11	497.8
2/19/2013 12:30:00 AM	0.510	6.12	1.11	497.8
2/19/2013 12:45:00 AM	0.510	6.12	1.11	497.8
2/19/2013 01:00:00 AM	0.510	6.12	1.11	497.8
2/19/2013 01:15:00 AM	0.510	6.12	1.11	497.8
2/19/2013 01:30:00 AM	0.510	6.12	1.11	497.8
2/19/2013 01:45:00 AM	0.510	6.12	1.11	497.8
2/19/2013 02:00:00 AM	0.510	6.12	1.11	497.8
2/19/2013 02:15:00 AM	0.510	6.12	1.11	497.8
2/19/2013 02:30:00 AM	0.510	6.12	1.11	497.8
2/19/2013 02:45:00 AM	0.510	6.12	1.11	497.8
2/19/2013 04:35:17 AM	0.510	6.12	1.11	497.8
2/19/2013 04:35:40 AM	0.510	6.12	1.11	497.8
2/19/2013 04:36:04 AM	0.510	6.12	1.11	497.8
2/19/2013 04:36:27 AM	0.510	6.12	1.11	497.8
2/19/2013 04:36:50 AM	0.510	6.12	1.11	497.8
2/19/2013 04:37:13 AM	0.510	6.12	1.11	497.8
2/19/2013 04:37:36 AM	0.510	6.12	1.11	497.8
2/19/2013 04:45:00 AM	0.510	6.12	1.11	497.8
2/19/2013 05:00:00 AM	0.510	6.12	1.11	497.8
2/19/2013 05:15:00 AM	0.510	6.12	1.11	497.8
2/19/2013 05:30:00 AM	0.510	6.12	1.11	497.8
2/19/2013 05:45:00 AM	0.510	6.12	1.11	497.8
2/19/2013 06:00:00 AM	0.510	6.12	1.11	497.8
2/19/2013 06:15:00 AM	0.510	6.12	1.11	497.8
2/19/2013 06:30:00 AM	0.510	6.12	1.11	497.8
2/19/2013 06:45:00 AM	0.510	6.12	1.11	497.8
2/19/2013 07:00:00 AM	0.510	6.12	1.11	497.8
2/19/2013 07:15:00 AM	0.510	6.12	1.11	497.8
2/19/2013 07:30:00 AM	0.510	6.12	1.11	497.8
2/19/2013 07:45:00 AM	0.510	6.12	1.11	497.8
2/19/2013 08:00:00 AM	0.510	6.12	1.11	497.8
2/19/2013 08:15:00 AM	0.510	6.12	1.11	497.8
2/19/2013 08:30:00 AM	0.510	6.12	1.11	497.8
2/19/2013 08:45:00 AM	0.510	6.12	1.11	497.8
2/19/2013 09:00:00 AM	0.510	6.12	1.11	497.8
2/19/2013 09:15:00 AM	0.510	6.12	1.11	497.8
2/19/2013 09:30:00 AM	0.510	6.12	1.11	497.8
2/19/2013 09:45:00 AM	0.510	6.12	1.11	497.8
2/19/2013 10:00:00 AM	0.510	6.12	1.11	497.8
2/19/2013 10:15:00 AM	0.510	6.12	1.11	497.8
2/19/2013 10:30:00 AM	0.510	6.12	1.11	497.8
2/19/2013 10:45:00 AM	0.510	6.12	1.11	497.8
2/19/2013 11:00:00 AM	0.510	6.12	1.11	497.8
2/19/2013 11:15:00 AM	0.510	6.12	1.11	497.8

2/19/2013 11:30:00 AM	0.510	6.12	1.11	497.8
2/19/2013 11:45:00 AM	0.510	6.12	1.11	497.8
2/19/2013 12:00:00 PM	0.500	6.00	1.08	483.2
2/19/2013 12:15:00 PM	0.510	6.12	1.11	497.8
2/19/2013 12:30:00 PM	0.510	6.12	1.11	497.8
2/19/2013 12:45:00 PM	0.510	6.12	1.11	497.8
2/19/2013 01:00:00 PM	0.500	6.00	1.08	483.2
2/19/2013 01:15:00 PM	0.510	6.12	1.11	497.8
2/19/2013 01:30:00 PM	0.510	6.12	1.11	497.8
2/19/2013 01:45:00 PM	0.510	6.12	1.11	497.8
2/19/2013 02:00:00 PM	0.510	6.12	1.11	497.8
2/19/2013 02:15:00 PM	0.500	6.00	1.08	483.2
2/19/2013 02:30:00 PM	0.510	6.12	1.11	497.8
2/19/2013 02:45:00 PM	0.510	6.12	1.11	497.8
2/19/2013 03:00:00 PM	0.500	6.00	1.08	483.2
2/19/2013 03:15:00 PM	0.510	6.12	1.11	497.8
2/19/2013 03:30:00 PM	0.510	6.12	1.11	497.8
2/19/2013 03:45:00 PM	0.500	6.00	1.08	483.2
2/19/2013 04:00:00 PM	0.510	6.12	1.11	497.8
2/19/2013 04:15:00 PM	0.510	6.12	1.11	497.8
2/19/2013 04:30:00 PM	0.510	6.12	1.11	497.8
2/19/2013 04:45:00 PM	0.510	6.12	1.11	497.8
2/19/2013 05:00:00 PM	0.500	6.00	1.08	483.2
2/19/2013 05:15:00 PM	0.510	6.12	1.11	497.8
2/19/2013 05:30:00 PM	0.510	6.12	1.11	497.8
2/19/2013 05:45:00 PM	0.510	6.12	1.11	497.8
2/19/2013 06:00:00 PM	0.510	6.12	1.11	497.8
2/19/2013 06:15:00 PM	0.510	6.12	1.11	497.8
2/19/2013 06:30:00 PM	0.510	6.12	1.11	497.8
2/19/2013 06:45:00 PM	0.510	6.12	1.11	497.8
2/19/2013 07:00:00 PM	0.510	6.12	1.11	497.8
2/19/2013 07:15:00 PM	0.510	6.12	1.11	497.8
2/19/2013 07:30:00 PM	0.510	6.12	1.11	497.8
2/19/2013 07:45:00 PM	0.510	6.12	1.11	497.8
2/19/2013 08:00:00 PM	0.510	6.12	1.11	497.8
2/19/2013 08:15:00 PM	0.510	6.12	1.11	497.8
2/19/2013 08:30:00 PM	0.510	6.12	1.11	497.8
2/19/2013 08:45:00 PM	0.510	6.12	1.11	497.8
2/19/2013 09:00:00 PM	0.510	6.12	1.11	497.8
2/19/2013 09:15:00 PM	0.510	6.12	1.11	497.8
2/19/2013 09:30:00 PM	0.510	6.12	1.11	497.8
2/19/2013 09:45:00 PM	0.510	6.12	1.11	497.8
2/19/2013 10:00:00 PM	0.510	6.12	1.11	497.8
2/19/2013 10:15:00 PM	0.510	6.12	1.11	497.8
2/19/2013 10:30:00 PM	0.510	6.12	1.11	497.8
2/19/2013 10:45:00 PM	0.510	6.12	1.11	497.8
2/19/2013 11:00:00 PM	0.510	6.12	1.11	497.8

2/19/2013 11:15:00 PM	0.510	6.12	1.11	497.8
2/19/2013 11:30:00 PM	0.510	6.12	1.11	497.8
2/19/2013 11:45:00 PM	0.510	6.12	1.11	497.8
2/20/2013 12:00:00 AM	0.510	6.12	1.11	497.8
2/20/2013 12:15:00 AM	0.510	6.12	1.11	497.8
2/20/2013 12:30:00 AM	0.510	6.12	1.11	497.8
2/20/2013 12:45:00 AM	0.510	6.12	1.11	497.8
2/20/2013 01:00:00 AM	0.510	6.12	1.11	497.8
2/20/2013 01:15:00 AM	0.510	6.12	1.11	497.8
2/20/2013 01:30:00 AM	0.510	6.12	1.11	497.8
2/20/2013 01:45:00 AM	0.510	6.12	1.11	497.8
2/20/2013 02:00:00 AM	0.510	6.12	1.11	497.8
2/20/2013 02:15:00 AM	0.510	6.12	1.11	497.8
2/20/2013 02:30:00 AM	0.510	6.12	1.11	497.8
2/20/2013 02:45:00 AM	0.510	6.12	1.11	497.8
2/20/2013 03:00:00 AM	0.510	6.12	1.11	497.8
2/20/2013 03:15:00 AM	0.510	6.12	1.11	497.8
2/20/2013 03:30:00 AM	0.510	6.12	1.11	497.8
2/20/2013 03:45:00 AM	0.510	6.12	1.11	497.8
2/20/2013 04:00:00 AM	0.510	6.12	1.11	497.8
2/20/2013 04:15:00 AM	0.510	6.12	1.11	497.8
2/20/2013 04:30:00 AM	0.510	6.12	1.11	497.8
2/20/2013 04:45:00 AM	0.510	6.12	1.11	497.8
2/20/2013 05:00:00 AM	0.510	6.12	1.11	497.8
2/20/2013 05:15:00 AM	0.510	6.12	1.11	497.8
2/20/2013 05:30:00 AM	0.510	6.12	1.11	497.8
2/20/2013 05:45:00 AM	0.510	6.12	1.11	497.8
2/20/2013 06:00:00 AM	0.510	6.12	1.11	497.8
2/20/2013 06:15:00 AM	0.510	6.12	1.11	497.8
2/20/2013 06:30:00 AM	0.510	6.12	1.11	497.8
2/20/2013 06:45:00 AM	0.510	6.12	1.11	497.8
2/20/2013 07:00:00 AM	0.510	6.12	1.11	497.8
2/20/2013 07:15:00 AM	0.510	6.12	1.11	497.8
2/20/2013 07:30:00 AM	0.510	6.12	1.11	497.8
2/20/2013 07:45:00 AM	0.510	6.12	1.11	497.8
2/20/2013 08:00:00 AM	0.510	6.12	1.11	497.8
2/20/2013 08:15:00 AM	0.510	6.12	1.11	497.8
2/20/2013 08:30:00 AM	0.510	6.12	1.11	497.8
2/20/2013 08:45:00 AM	0.510	6.12	1.11	497.8
2/20/2013 09:00:00 AM	0.510	6.12	1.11	497.8
2/20/2013 09:15:00 AM	0.510	6.12	1.11	497.8
2/20/2013 09:30:00 AM	0.510	6.12	1.11	497.8
2/20/2013 09:45:00 AM	0.510	6.12	1.11	497.8
2/20/2013 10:00:00 AM	0.510	6.12	1.11	497.8
2/20/2013 10:15:00 AM	0.510	6.12	1.11	497.8
2/20/2013 10:30:00 AM	0.510	6.12	1.11	497.8
2/20/2013 10:45:00 AM	0.510	6.12	1.11	497.8

2/20/2013 11:00:00 AM	0.510	6.12	1.11	497.8
2/20/2013 11:15:00 AM	0.510	6.12	1.11	497.8
2/20/2013 11:30:00 AM	0.510	6.12	1.11	497.8
2/20/2013 11:45:00 AM	0.510	6.12	1.11	497.8
2/20/2013 12:00:00 PM	0.510	6.12	1.11	497.8
2/20/2013 12:15:00 PM	0.510	6.12	1.11	497.8
2/20/2013 12:30:00 PM	0.510	6.12	1.11	497.8
2/20/2013 12:45:00 PM	0.510	6.12	1.11	497.8
2/20/2013 01:00:00 PM	0.510	6.12	1.11	497.8
2/20/2013 01:15:00 PM	0.510	6.12	1.11	497.8
2/20/2013 01:30:00 PM	0.510	6.12	1.11	497.8
2/20/2013 01:45:00 PM	0.510	6.12	1.11	497.8
2/20/2013 02:00:00 PM	0.510	6.12	1.11	497.8
2/20/2013 02:15:00 PM	0.510	6.12	1.11	497.8
2/20/2013 02:30:00 PM	0.510	6.12	1.11	497.8
2/20/2013 02:45:00 PM	0.510	6.12	1.11	497.8
2/20/2013 03:00:00 PM	0.510	6.12	1.11	497.8
2/20/2013 03:15:00 PM	0.510	6.12	1.11	497.8
2/20/2013 03:30:00 PM	0.510	6.12	1.11	497.8
2/20/2013 03:45:00 PM	0.510	6.12	1.11	497.8
2/20/2013 04:00:00 PM	0.510	6.12	1.11	497.8
2/20/2013 04:15:00 PM	0.510	6.12	1.11	497.8
2/20/2013 04:30:00 PM	0.510	6.12	1.11	497.8
2/20/2013 04:45:00 PM	0.510	6.12	1.11	497.8
2/20/2013 05:00:00 PM	0.510	6.12	1.11	497.8
2/20/2013 05:15:00 PM	0.510	6.12	1.11	497.8
2/20/2013 05:30:00 PM	0.510	6.12	1.11	497.8
2/20/2013 05:45:00 PM	0.510	6.12	1.11	497.8
2/20/2013 06:00:00 PM	0.510	6.12	1.11	497.8
2/20/2013 06:15:00 PM	0.510	6.12	1.11	497.8
2/20/2013 06:30:00 PM	0.510	6.12	1.11	497.8
2/20/2013 06:45:00 PM	0.510	6.12	1.11	497.8
2/20/2013 07:00:00 PM	0.510	6.12	1.11	497.8
2/20/2013 07:15:00 PM	0.510	6.12	1.11	497.8
2/21/2013 11:14:22 AM	0.510	6.12	1.11	497.8
2/21/2013 11:16:46 AM	0.510	6.12	1.11	497.8
2/21/2013 11:35:12 AM	0.510	6.12	1.11	497.8
2/21/2013 11:35:46 AM	0.510	6.12	1.11	497.8
2/21/2013 11:36:16 AM	0.510	6.12	1.11	497.8
2/21/2013 11:36:45 AM	0.510	6.12	1.11	497.8
2/21/2013 11:41:02 AM	0.500	6.00	1.08	483.2
2/21/2013 11:43:26 AM	0.510	6.12	1.11	497.8
2/21/2013 11:48:55 AM	0.510	6.12	1.11	497.8
2/21/2013 11:49:41 AM	0.510	6.12	1.11	497.8
2/21/2013 11:50:10 AM	0.510	6.12	1.11	497.8
2/21/2013 11:50:38 AM	0.510	6.12	1.11	497.8
2/21/2013 11:51:06 AM	0.510	6.12	1.11	497.8

2/21/2013 11:51:34 AM	0.510	6.12	1.11	497.8
2/21/2013 11:52:05 AM	0.510	6.12	1.11	497.8
2/21/2013 11:52:34 AM	0.510	6.12	1.11	497.8
2/21/2013 11:55:09 AM	0.510	6.12	1.11	497.8
2/21/2013 11:55:36 AM	0.510	6.12	1.11	497.8
2/21/2013 11:56:03 AM	0.500	6.00	1.08	483.2
2/21/2013 11:56:30 AM	0.510	6.12	1.11	497.8
2/21/2013 11:56:58 AM	0.500	6.00	1.08	483.2
2/21/2013 11:57:25 AM	0.510	6.12	1.11	497.8
2/21/2013 11:57:52 AM	0.510	6.12	1.11	497.8
2/21/2013 11:59:02 AM	0.500	6.00	1.08	483.2
2/21/2013 11:59:31 AM	0.510	6.12	1.11	497.8
2/21/2013 11:59:58 AM	0.510	6.12	1.11	497.8
2/21/2013 12:00:50 PM	0.510	6.12	1.11	497.8
2/21/2013 12:01:47 PM	0.510	6.12	1.11	497.8
2/21/2013 12:04:22 PM	0.510	6.12	1.11	497.8
2/21/2013 12:04:53 PM	0.510	6.12	1.11	497.8
2/21/2013 12:05:20 PM	0.510	6.12	1.11	497.8
2/21/2013 12:05:51 PM	0.510	6.12	1.11	497.8
2/21/2013 12:06:24 PM	0.510	6.12	1.11	497.8
2/21/2013 12:06:51 PM	0.510	6.12	1.11	497.8
2/21/2013 12:07:18 PM	0.510	6.12	1.11	497.8
2/21/2013 12:07:46 PM	0.510	6.12	1.11	497.8
2/21/2013 12:08:15 PM	0.510	6.12	1.11	497.8
2/21/2013 12:09:13 PM	0.510	6.12	1.11	497.8
2/21/2013 12:09:40 PM	0.510	6.12	1.11	497.8
2/21/2013 12:10:07 PM	0.510	6.12	1.11	497.8
2/21/2013 12:10:35 PM	0.510	6.12	1.11	497.8
2/21/2013 12:11:02 PM	0.510	6.12	1.11	497.8
2/21/2013 12:11:29 PM	0.510	6.12	1.11	497.8
2/21/2013 12:11:56 PM	0.510	6.12	1.11	497.8
2/21/2013 12:12:23 PM	0.510	6.12	1.11	497.8
2/21/2013 12:12:50 PM	0.510	6.12	1.11	497.8
2/21/2013 12:13:18 PM	0.510	6.12	1.11	497.8
2/21/2013 12:13:49 PM	0.510	6.12	1.11	497.8
2/21/2013 12:14:17 PM	0.510	6.12	1.11	497.8
2/21/2013 12:14:46 PM	0.510	6.12	1.11	497.8
2/21/2013 12:15:58 PM	0.510	6.12	1.11	497.8
2/21/2013 12:16:50 PM	0.510	6.12	1.11	497.8
2/21/2013 12:17:17 PM	0.510	6.12	1.11	497.8
2/21/2013 12:17:44 PM	0.510	6.12	1.11	497.8
2/21/2013 12:18:11 PM	0.510	6.12	1.11	497.8
2/21/2013 12:18:34 PM	0.510	6.12	1.11	497.8
2/21/2013 12:19:01 PM	0.510	6.12	1.11	497.8
2/21/2013 12:20:04 PM	0.510	6.12	1.11	497.8
2/21/2013 12:20:31 PM	0.510	6.12	1.11	497.8
2/21/2013 12:20:58 PM	0.510	6.12	1.11	497.8

2/21/2013 12:21:25 PM	0.510	6.12	1.11	497.8
2/21/2013 12:22:33 PM	0.510	6.12	1.11	497.8
2/21/2013 12:23:00 PM	0.510	6.12	1.11	497.8
2/21/2013 12:23:27 PM	0.510	6.12	1.11	497.8
2/21/2013 12:23:54 PM	0.510	6.12	1.11	497.8
2/21/2013 12:24:21 PM	0.510	6.12	1.11	497.8
2/21/2013 12:24:48 PM	0.510	6.12	1.11	497.8
2/21/2013 12:25:18 PM	0.510	6.12	1.11	497.8
2/21/2013 12:42:37 PM	0.510	6.12	1.11	497.8
2/21/2013 12:45:06 PM	0.510	6.12	1.11	497.8
2/21/2013 01:15:39 PM	0.510	6.12	1.11	497.8
2/21/2013 01:16:07 PM	0.510	6.12	1.11	497.8
2/21/2013 01:37:43 PM	0.510	6.12	1.11	497.8
2/21/2013 01:45:00 PM	0.510	6.12	1.11	497.8
2/21/2013 02:14:10 PM	0.510	6.12	1.11	497.8
2/21/2013 02:15:01 PM	0.510	6.12	1.11	497.8
2/21/2013 02:35:49 PM	0.510	6.12	1.11	497.8
2/21/2013 02:51:27 PM	0.500	6.00	1.08	483.2
2/21/2013 03:00:00 PM	0.510	6.12	1.11	497.8
2/21/2013 03:15:00 PM	0.510	6.12	1.11	497.8
2/21/2013 03:30:00 PM	0.500	6.00	1.08	483.2
2/21/2013 03:45:00 PM	0.510	6.12	1.11	497.8
2/21/2013 04:00:00 PM	0.510	6.12	1.11	497.8
2/21/2013 04:15:00 PM	0.510	6.12	1.11	497.8
2/25/2013 01:14:08 PM	0.510	6.12	1.11	497.8
2/25/2013 01:14:44 PM	0.510	6.12	1.11	497.8
2/25/2013 01:15:08 PM	0.510	6.12	1.11	497.8
2/25/2013 01:15:32 PM	0.510	6.12	1.11	497.8
2/25/2013 01:15:55 PM	0.510	6.12	1.11	497.8
2/25/2013 01:16:18 PM	0.510	6.12	1.11	497.8
2/25/2013 01:16:41 PM	0.510	6.12	1.11	497.8
2/25/2013 01:17:04 PM	0.510	6.12	1.11	497.8
2/25/2013 01:17:27 PM	0.510	6.12	1.11	497.8
2/25/2013 01:17:50 PM	0.500	6.00	1.08	483.2
2/25/2013 01:18:13 PM	0.510	6.12	1.11	497.8
2/25/2013 01:30:00 PM	0.510	6.12	1.11	497.8
2/25/2013 01:45:00 PM	0.510	6.12	1.11	497.8
2/25/2013 02:00:00 PM	0.500	6.00	1.08	483.2
2/25/2013 02:15:00 PM	0.510	6.12	1.11	497.8
2/25/2013 02:30:00 PM	0.510	6.12	1.11	497.8
2/25/2013 02:45:00 PM	0.510	6.12	1.11	497.8
2/25/2013 03:00:00 PM	0.510	6.12	1.11	497.8
2/25/2013 03:15:00 PM	0.510	6.12	1.11	497.8
2/25/2013 03:30:00 PM	0.500	6.00	1.08	483.2
2/25/2013 03:45:00 PM	0.510	6.12	1.11	497.8
2/25/2013 04:00:00 PM	0.510	6.12	1.11	497.8
2/25/2013 04:15:00 PM	0.510	6.12	1.11	497.8

2/25/2013 04:30:00 PM	0.510	6.12	1.11	497.8
2/25/2013 04:45:00 PM	0.510	6.12	1.11	497.8
2/25/2013 05:00:00 PM	0.510	6.12	1.11	497.8
2/25/2013 05:15:00 PM	0.510	6.12	1.11	497.8
2/25/2013 05:30:00 PM	0.510	6.12	1.11	497.8
2/25/2013 05:45:00 PM	0.510	6.12	1.11	497.8
2/25/2013 06:00:00 PM	0.510	6.12	1.11	497.8
2/25/2013 06:15:00 PM	0.510	6.12	1.11	497.8
2/25/2013 06:30:00 PM	0.510	6.12	1.11	497.8
2/25/2013 06:45:00 PM	0.510	6.12	1.11	497.8
2/25/2013 07:00:00 PM	0.510	6.12	1.11	497.8
2/25/2013 07:15:00 PM	0.510	6.12	1.11	497.8
2/25/2013 07:30:00 PM	0.510	6.12	1.11	497.8
2/25/2013 07:45:00 PM	0.510	6.12	1.11	497.8
2/25/2013 08:00:00 PM	0.510	6.12	1.11	497.8
2/25/2013 08:15:00 PM	0.510	6.12	1.11	497.8
2/25/2013 08:30:00 PM	0.510	6.12	1.11	497.8
2/25/2013 08:45:00 PM	0.510	6.12	1.11	497.8
2/25/2013 09:00:00 PM	0.510	6.12	1.11	497.8
2/25/2013 09:15:00 PM	0.510	6.12	1.11	497.8
2/25/2013 09:30:00 PM	0.510	6.12	1.11	497.8
2/25/2013 09:45:00 PM	0.510	6.12	1.11	497.8
2/25/2013 10:00:00 PM	0.510	6.12	1.11	497.8
2/25/2013 10:15:00 PM	0.510	6.12	1.11	497.8
2/25/2013 10:30:00 PM	0.500	6.00	1.08	483.2
2/25/2013 10:45:00 PM	0.510	6.12	1.11	497.8
2/25/2013 11:00:00 PM	0.510	6.12	1.11	497.8
2/25/2013 11:15:00 PM	0.510	6.12	1.11	497.8
2/25/2013 11:31:28 PM	0.510	6.12	1.11	497.8
2/26/2013 09:39:50 AM	0.510	6.12	1.11	497.8
2/26/2013 09:40:20 AM	0.510	6.12	1.11	497.8
2/26/2013 09:40:48 AM	0.510	6.12	1.11	497.8
2/26/2013 09:41:16 AM	0.510	6.12	1.11	497.8
2/26/2013 09:41:44 AM	0.510	6.12	1.11	497.8
2/26/2013 09:42:12 AM	0.510	6.12	1.11	497.8
2/26/2013 09:42:40 AM	0.510	6.12	1.11	497.8
2/26/2013 09:43:08 AM	0.510	6.12	1.11	497.8
2/26/2013 09:43:36 AM	0.510	6.12	1.11	497.8
2/26/2013 09:44:04 AM	0.510	6.12	1.11	497.8
2/26/2013 09:44:32 AM	0.510	6.12	1.11	497.8
2/26/2013 09:44:55 AM	0.510	6.12	1.11	497.8
2/26/2013 09:45:18 AM	0.510	6.12	1.11	497.8
2/26/2013 09:45:41 AM	0.510	6.12	1.11	497.8
2/26/2013 09:46:04 AM	0.510	6.12	1.11	497.8
2/26/2013 09:46:27 AM	0.510	6.12	1.11	497.8
2/26/2013 09:46:50 AM	0.510	6.12	1.11	497.8
2/26/2013 09:47:13 AM	0.510	6.12	1.11	497.8

2/26/2013 09:47:36 AM	0.510	6.12	1.11	497.8
2/26/2013 09:47:59 AM	0.510	6.12	1.11	497.8
2/26/2013 09:48:22 AM	0.510	6.12	1.11	497.8
2/26/2013 09:48:45 AM	0.510	6.12	1.11	497.8
2/26/2013 09:49:08 AM	0.510	6.12	1.11	497.8
2/26/2013 09:49:31 AM	0.510	6.12	1.11	497.8
2/26/2013 09:49:54 AM	0.510	6.12	1.11	497.8
2/26/2013 09:50:17 AM	0.510	6.12	1.11	497.8
2/26/2013 09:50:40 AM	0.510	6.12	1.11	497.8
2/26/2013 09:51:04 AM	0.510	6.12	1.11	497.8
2/26/2013 09:51:27 AM	0.510	6.12	1.11	497.8
2/26/2013 09:51:50 AM	0.510	6.12	1.11	497.8
2/26/2013 09:52:13 AM	0.510	6.12	1.11	497.8
2/26/2013 09:52:36 AM	0.510	6.12	1.11	497.8
2/26/2013 09:52:59 AM	0.510	6.12	1.11	497.8
2/26/2013 09:53:22 AM	0.510	6.12	1.11	497.8
2/26/2013 09:53:45 AM	0.510	6.12	1.11	497.8
2/26/2013 09:54:08 AM	0.510	6.12	1.11	497.8
2/26/2013 09:54:31 AM	0.510	6.12	1.11	497.8
2/26/2013 09:54:54 AM	0.510	6.12	1.11	497.8
2/26/2013 09:55:17 AM	0.510	6.12	1.11	497.8
2/26/2013 09:55:40 AM	0.510	6.12	1.11	497.8
2/26/2013 09:56:03 AM	0.510	6.12	1.11	497.8
2/26/2013 10:00:01 AM	0.510	6.12	1.11	497.8
2/26/2013 10:15:00 AM	0.510	6.12	1.11	497.8
2/26/2013 10:30:00 AM	0.510	6.12	1.11	497.8
2/26/2013 10:45:00 AM	0.510	6.12	1.11	497.8
2/26/2013 11:00:00 AM	0.510	6.12	1.11	497.8
2/26/2013 11:15:00 AM	0.500	6.00	1.08	483.2
2/26/2013 11:30:00 AM	0.510	6.12	1.11	497.8
2/26/2013 11:45:00 AM	0.510	6.12	1.11	497.8
2/26/2013 12:00:00 PM	0.510	6.12	1.11	497.8
2/26/2013 12:15:00 PM	0.510	6.12	1.11	497.8
2/26/2013 12:30:00 PM	0.510	6.12	1.11	497.8
2/26/2013 12:45:00 PM	0.510	6.12	1.11	497.8
2/26/2013 01:00:00 PM	0.500	6.00	1.08	483.2
2/26/2013 01:15:00 PM	0.510	6.12	1.11	497.8
2/26/2013 01:30:00 PM	0.510	6.12	1.11	497.8
2/26/2013 01:45:00 PM	0.510	6.12	1.11	497.8
2/26/2013 02:00:00 PM	0.510	6.12	1.11	497.8
2/26/2013 02:15:00 PM	0.510	6.12	1.11	497.8
2/26/2013 02:30:00 PM	0.510	6.12	1.11	497.8
2/26/2013 02:45:00 PM	0.510	6.12	1.11	497.8
2/26/2013 03:00:00 PM	0.510	6.12	1.11	497.8
2/26/2013 03:15:00 PM	0.510	6.12	1.11	497.8
2/26/2013 03:30:00 PM	0.510	6.12	1.11	497.8
2/26/2013 03:45:00 PM	0.510	6.12	1.11	497.8

2/26/2013 04:00:00 PM	0.510	6.12	1.11	497.8
2/26/2013 04:15:00 PM	0.510	6.12	1.11	497.8
2/26/2013 04:30:00 PM	0.510	6.12	1.11	497.8
2/26/2013 04:45:00 PM	0.510	6.12	1.11	497.8
2/26/2013 05:00:00 PM	0.510	6.12	1.11	497.8
2/26/2013 05:15:00 PM	0.510	6.12	1.11	497.8
2/26/2013 05:30:00 PM	0.510	6.12	1.11	497.8
2/26/2013 05:45:00 PM	0.510	6.12	1.11	497.8
2/26/2013 06:00:00 PM	0.510	6.12	1.11	497.8
2/26/2013 06:15:00 PM	0.510	6.12	1.11	497.8
2/26/2013 06:30:00 PM	0.510	6.12	1.11	497.8
2/26/2013 06:45:00 PM	0.510	6.12	1.11	497.8
2/26/2013 07:00:00 PM	0.510	6.12	1.11	497.8
2/26/2013 07:15:00 PM	0.510	6.12	1.11	497.8
2/26/2013 07:30:00 PM	0.510	6.12	1.11	497.8
2/26/2013 07:45:00 PM	0.510	6.12	1.11	497.8
2/26/2013 08:00:00 PM	0.510	6.12	1.11	497.8
2/26/2013 08:15:00 PM	0.510	6.12	1.11	497.8
2/26/2013 08:30:00 PM	0.510	6.12	1.11	497.8
2/26/2013 08:45:00 PM	0.510	6.12	1.11	497.8
2/26/2013 09:00:00 PM	0.510	6.12	1.11	497.8
2/26/2013 09:15:00 PM	0.510	6.12	1.11	497.8
2/26/2013 09:30:00 PM	0.510	6.12	1.11	497.8
2/26/2013 09:45:00 PM	0.510	6.12	1.11	497.8
2/26/2013 10:00:00 PM	0.510	6.12	1.11	497.8
2/26/2013 10:15:00 PM	0.510	6.12	1.11	497.8
2/26/2013 10:30:00 PM	0.510	6.12	1.11	497.8
2/26/2013 10:45:00 PM	0.510	6.12	1.11	497.8
2/26/2013 11:00:00 PM	0.510	6.12	1.11	497.8
2/26/2013 11:15:00 PM	0.510	6.12	1.11	497.8
2/26/2013 11:30:00 PM	0.510	6.12	1.11	497.8
2/26/2013 11:45:00 PM	0.510	6.12	1.11	497.8
2/27/2013 12:00:00 AM	0.510	6.12	1.11	497.8
2/27/2013 12:15:00 AM	0.500	6.00	1.08	483.2
2/27/2013 12:30:00 AM	0.510	6.12	1.11	497.8
2/27/2013 12:45:00 AM	0.510	6.12	1.11	497.8
2/27/2013 01:00:00 AM	0.510	6.12	1.11	497.8
2/27/2013 01:15:00 AM	0.510	6.12	1.11	497.8
2/27/2013 01:30:00 AM	0.510	6.12	1.11	497.8
2/27/2013 01:45:00 AM	0.510	6.12	1.11	497.8
2/27/2013 02:00:00 AM	0.510	6.12	1.11	497.8
2/27/2013 02:15:00 AM	0.510	6.12	1.11	497.8
2/27/2013 02:30:00 AM	0.510	6.12	1.11	497.8
2/27/2013 02:45:00 AM	0.510	6.12	1.11	497.8
2/27/2013 03:00:00 AM	0.510	6.12	1.11	497.8
2/27/2013 03:15:00 AM	0.510	6.12	1.11	497.8
2/27/2013 03:30:00 AM	0.510	6.12	1.11	497.8

2/27/2013 03:45:00 AM	0.510	6.12	1.11	497.8
2/27/2013 04:00:00 AM	0.510	6.12	1.11	497.8
2/27/2013 04:15:00 AM	0.510	6.12	1.11	497.8
2/27/2013 04:30:00 AM	0.510	6.12	1.11	497.8
2/27/2013 04:45:00 AM	0.510	6.12	1.11	497.8
2/27/2013 05:00:00 AM	0.510	6.12	1.11	497.8
2/27/2013 05:15:00 AM	0.510	6.12	1.11	497.8
2/27/2013 05:30:00 AM	0.510	6.12	1.11	497.8
2/27/2013 05:45:00 AM	0.510	6.12	1.11	497.8
2/27/2013 06:00:00 AM	0.510	6.12	1.11	497.8
2/27/2013 06:15:00 AM	0.510	6.12	1.11	497.8
2/27/2013 06:30:00 AM	0.510	6.12	1.11	497.8
2/27/2013 06:45:00 AM	0.510	6.12	1.11	497.8
2/27/2013 07:00:00 AM	0.510	6.12	1.11	497.8
2/27/2013 07:15:00 AM	0.510	6.12	1.11	497.8
2/27/2013 07:30:00 AM	0.510	6.12	1.11	497.8
2/27/2013 07:45:00 AM	0.510	6.12	1.11	497.8
2/27/2013 08:00:00 AM	0.510	6.12	1.11	497.8
2/27/2013 08:15:00 AM	0.510	6.12	1.11	497.8
2/27/2013 08:30:00 AM	0.510	6.12	1.11	497.8
2/27/2013 08:45:00 AM	0.510	6.12	1.11	497.8
2/27/2013 09:00:00 AM	0.510	6.12	1.11	497.8
2/27/2013 09:15:00 AM	0.510	6.12	1.11	497.8
2/27/2013 09:30:00 AM	0.510	6.12	1.11	497.8
2/27/2013 09:45:00 AM	0.510	6.12	1.11	497.8
2/27/2013 10:00:00 AM	0.510	6.12	1.11	497.8
2/27/2013 10:15:00 AM	0.510	6.12	1.11	497.8
2/27/2013 10:30:00 AM	0.510	6.12	1.11	497.8
2/27/2013 10:45:00 AM	0.510	6.12	1.11	497.8
2/27/2013 11:00:00 AM	0.510	6.12	1.11	497.8
2/27/2013 11:15:00 AM	0.510	6.12	1.11	497.8
2/27/2013 11:30:00 AM	0.510	6.12	1.11	497.8
2/27/2013 11:45:00 AM	0.510	6.12	1.11	497.8
2/27/2013 12:00:00 PM	0.510	6.12	1.11	497.8
2/27/2013 12:15:00 PM	0.510	6.12	1.11	497.8
2/27/2013 12:30:00 PM	0.500	6.00	1.08	483.2
2/27/2013 12:57:35 PM	0.510	6.12	1.11	497.8
2/27/2013 01:00:00 PM	0.510	6.12	1.11	497.8
2/27/2013 01:15:00 PM	0.510	6.12	1.11	497.8
2/27/2013 01:30:00 PM	0.510	6.12	1.11	497.8
2/27/2013 01:45:00 PM	0.500	6.00	1.08	483.2
2/27/2013 02:00:00 PM	0.510	6.12	1.11	497.8
2/27/2013 02:15:00 PM	0.510	6.12	1.11	497.8
2/27/2013 02:30:00 PM	0.510	6.12	1.11	497.8
2/27/2013 02:45:00 PM	0.510	6.12	1.11	497.8
2/27/2013 03:00:00 PM	0.510	6.12	1.11	497.8
2/27/2013 03:15:00 PM	0.510	6.12	1.11	497.8

2/27/2013 03:30:00 PM	0.500	6.00	1.08	483.2
2/27/2013 03:45:00 PM	0.510	6.12	1.11	497.8
2/27/2013 04:00:00 PM	0.510	6.12	1.11	497.8
2/27/2013 04:15:00 PM	0.500	6.00	1.08	483.2
2/27/2013 04:30:00 PM	0.510	6.12	1.11	497.8
2/27/2013 04:45:00 PM	0.510	6.12	1.11	497.8
2/27/2013 05:00:00 PM	0.510	6.12	1.11	497.8
2/27/2013 05:15:00 PM	0.500	6.00	1.08	483.2
2/27/2013 05:30:00 PM	0.510	6.12	1.11	497.8
2/27/2013 05:45:00 PM	0.510	6.12	1.11	497.8
2/27/2013 06:00:00 PM	0.510	6.12	1.11	497.8
2/27/2013 06:15:00 PM	0.510	6.12	1.11	497.8
2/27/2013 06:30:00 PM	0.510	6.12	1.11	497.8
2/27/2013 06:45:00 PM	0.500	6.00	1.08	483.2
2/27/2013 07:00:00 PM	0.510	6.12	1.11	497.8
2/27/2013 07:15:00 PM	0.510	6.12	1.11	497.8
2/27/2013 07:30:00 PM	0.510	6.12	1.11	497.8
2/27/2013 07:45:00 PM	0.510	6.12	1.11	497.8
2/27/2013 08:00:00 PM	0.510	6.12	1.11	497.8
2/27/2013 08:15:00 PM	0.510	6.12	1.11	497.8
2/27/2013 08:30:00 PM	0.510	6.12	1.11	497.8
2/27/2013 08:45:00 PM	0.510	6.12	1.11	497.8
2/27/2013 09:00:00 PM	0.510	6.12	1.11	497.8
2/27/2013 09:15:00 PM	0.510	6.12	1.11	497.8
2/27/2013 09:30:00 PM	0.510	6.12	1.11	497.8
2/27/2013 09:45:00 PM	0.510	6.12	1.11	497.8
2/27/2013 10:00:00 PM	0.510	6.12	1.11	497.8
2/27/2013 10:15:00 PM	0.510	6.12	1.11	497.8
2/27/2013 10:30:00 PM	0.500	6.00	1.08	483.2
2/27/2013 10:45:00 PM	0.510	6.12	1.11	497.8
2/27/2013 11:00:00 PM	0.500	6.00	1.08	483.2
2/27/2013 11:15:00 PM	0.510	6.12	1.11	497.8
2/27/2013 11:30:00 PM	0.510	6.12	1.11	497.8
2/27/2013 11:45:00 PM	0.510	6.12	1.11	497.8
2/28/2013 12:00:00 AM	0.510	6.12	1.11	497.8
2/28/2013 12:15:00 AM	0.510	6.12	1.11	497.8
2/28/2013 12:30:00 AM	0.510	6.12	1.11	497.8
2/28/2013 12:45:00 AM	0.510	6.12	1.11	497.8
2/28/2013 01:00:00 AM	0.510	6.12	1.11	497.8
2/28/2013 01:15:00 AM	0.500	6.00	1.08	483.2
2/28/2013 01:30:00 AM	0.510	6.12	1.11	497.8
2/28/2013 01:45:00 AM	0.510	6.12	1.11	497.8
2/28/2013 02:00:00 AM	0.510	6.12	1.11	497.8
2/28/2013 02:15:00 AM	0.510	6.12	1.11	497.8
2/28/2013 02:30:00 AM	0.510	6.12	1.11	497.8
2/28/2013 02:45:00 AM	0.510	6.12	1.11	497.8
2/28/2013 03:00:00 AM	0.510	6.12	1.11	497.8

2/28/2013 03:15:00 AM	0.510	6.12	1.11	497.8
2/28/2013 03:30:00 AM	0.510	6.12	1.11	497.8
2/28/2013 03:45:00 AM	0.510	6.12	1.11	497.8
2/28/2013 04:00:00 AM	0.500	6.00	1.08	483.2
2/28/2013 04:15:00 AM	0.510	6.12	1.11	497.8
2/28/2013 04:30:00 AM	0.510	6.12	1.11	497.8
2/28/2013 04:45:00 AM	0.510	6.12	1.11	497.8
2/28/2013 05:00:00 AM	0.510	6.12	1.11	497.8
2/28/2013 05:15:00 AM	0.510	6.12	1.11	497.8
2/28/2013 05:30:00 AM	0.510	6.12	1.11	497.8
2/28/2013 05:45:00 AM	0.510	6.12	1.11	497.8
2/28/2013 06:00:00 AM	0.510	6.12	1.11	497.8
2/28/2013 06:15:00 AM	0.510	6.12	1.11	497.8
2/28/2013 06:30:00 AM	0.510	6.12	1.11	497.8
2/28/2013 06:45:00 AM	0.510	6.12	1.11	497.8
2/28/2013 07:00:00 AM	0.510	6.12	1.11	497.8
2/28/2013 07:15:00 AM	0.510	6.12	1.11	497.8
2/28/2013 07:30:00 AM	0.510	6.12	1.11	497.8
2/28/2013 07:45:00 AM	0.510	6.12	1.11	497.8
2/28/2013 08:00:00 AM	0.510	6.12	1.11	497.8
2/28/2013 08:15:00 AM	0.510	6.12	1.11	497.8
2/28/2013 08:30:00 AM	0.510	6.12	1.11	497.8
2/28/2013 08:45:00 AM	0.510	6.12	1.11	497.8
2/28/2013 09:00:00 AM	0.510	6.12	1.11	497.8
2/28/2013 09:15:00 AM	0.510	6.12	1.11	497.8
2/28/2013 09:30:00 AM	0.510	6.12	1.11	497.8
2/28/2013 09:45:00 AM	0.510	6.12	1.11	497.8
2/28/2013 10:00:00 AM	0.510	6.12	1.11	497.8
2/28/2013 10:15:00 AM	0.510	6.12	1.11	497.8
2/28/2013 10:30:00 AM	0.510	6.12	1.11	497.8
2/28/2013 10:45:00 AM	0.510	6.12	1.11	497.8
2/28/2013 11:00:00 AM	0.510	6.12	1.11	497.8
2/28/2013 11:15:00 AM	0.510	6.12	1.11	497.8
2/28/2013 11:30:00 AM	0.510	6.12	1.11	497.8
2/28/2013 11:45:00 AM	0.510	6.12	1.11	497.8
2/28/2013 12:00:00 PM	0.510	6.12	1.11	497.8
2/28/2013 12:15:00 PM	0.500	6.00	1.08	483.2
2/28/2013 12:30:00 PM	0.510	6.12	1.11	497.8
2/28/2013 12:45:00 PM	0.500	6.00	1.08	483.2
2/28/2013 01:00:00 PM	0.510	6.12	1.11	497.8
2/28/2013 01:15:00 PM	0.510	6.12	1.11	497.8
2/28/2013 01:30:00 PM	0.510	6.12	1.11	497.8
2/28/2013 01:45:00 PM	0.510	6.12	1.11	497.8
2/28/2013 02:00:00 PM	0.500	6.00	1.08	483.2
2/28/2013 02:15:00 PM	0.500	6.00	1.08	483.2
2/28/2013 02:30:00 PM	0.510	6.12	1.11	497.8
2/28/2013 02:45:00 PM	0.510	6.12	1.11	497.8

2/28/2013 03:00:00 PM	0.510	6.12	1.11	497.8
2/28/2013 03:15:00 PM	0.510	6.12	1.11	497.8
2/28/2013 03:30:00 PM	0.510	6.12	1.11	497.8
2/28/2013 03:45:00 PM	0.510	6.12	1.11	497.8
2/28/2013 04:00:00 PM	0.500	6.00	1.08	483.2
2/28/2013 04:15:00 PM	0.510	6.12	1.11	497.8
2/28/2013 04:30:00 PM	0.510	6.12	1.11	497.8
2/28/2013 04:45:00 PM	0.510	6.12	1.11	497.8
2/28/2013 05:00:00 PM	0.510	6.12	1.11	497.8
2/28/2013 05:15:00 PM	0.510	6.12	1.11	497.8
2/28/2013 05:30:00 PM	0.510	6.12	1.11	497.8
2/28/2013 05:45:00 PM	0.510	6.12	1.11	497.8
2/28/2013 06:00:00 PM	0.510	6.12	1.11	497.8
2/28/2013 06:15:00 PM	0.510	6.12	1.11	497.8
2/28/2013 06:30:00 PM	0.510	6.12	1.11	497.8
2/28/2013 06:45:00 PM	0.510	6.12	1.11	497.8
2/28/2013 07:00:00 PM	0.510	6.12	1.11	497.8
2/28/2013 07:15:00 PM	0.510	6.12	1.11	497.8
2/28/2013 07:30:00 PM	0.510	6.12	1.11	497.8
2/28/2013 07:45:00 PM	0.510	6.12	1.11	497.8
2/28/2013 08:00:00 PM	0.510	6.12	1.11	497.8
2/28/2013 08:15:00 PM	0.510	6.12	1.11	497.8
2/28/2013 08:30:00 PM	0.510	6.12	1.11	497.8
2/28/2013 08:45:00 PM	0.510	6.12	1.11	497.8
2/28/2013 09:00:00 PM	0.510	6.12	1.11	497.8
2/28/2013 09:15:00 PM	0.510	6.12	1.11	497.8
2/28/2013 09:30:00 PM	0.510	6.12	1.11	497.8
2/28/2013 09:45:00 PM	0.500	6.00	1.08	483.2
2/28/2013 10:00:00 PM	0.510	6.12	1.11	497.8
2/28/2013 10:15:00 PM	0.510	6.12	1.11	497.8
2/28/2013 10:30:00 PM	0.510	6.12	1.11	497.8
2/28/2013 10:45:00 PM	0.510	6.12	1.11	497.8
2/28/2013 11:00:00 PM	0.510	6.12	1.11	497.8
2/28/2013 11:15:00 PM	0.510	6.12	1.11	497.8
2/28/2013 11:30:00 PM	0.510	6.12	1.11	497.8
2/28/2013 11:45:00 PM	0.510	6.12	1.11	497.8

Appendix K

South Flume Orpheus Mini Data with Flowrates

OTT Opheus Mini Data at South Flume, Feb 2013

Date	Time	Depth from top of flume to water (ft)	Depth of Flume Total (ft)	Depth of Flow (ft)	Flowrate (cfs)	Flowrate (gpm)
2/1/2013	12:00:00 AM	2.03	2.5	0.47	0.98	440.0
2/1/2013	1:00:00 AM	2.03	2.5	0.47	0.98	440.0
2/1/2013	2:00:00 AM	2.02	2.5	0.48	1.01	454.3
2/1/2013	3:00:00 AM	2.03	2.5	0.47	0.98	440.0
2/1/2013	4:00:00 AM	2.03	2.5	0.47	0.98	440.0
2/1/2013	5:00:00 AM	2.03	2.5	0.47	0.98	440.0
2/1/2013	6:00:00 AM	2.03	2.5	0.47	0.98	440.0
2/1/2013	7:00:00 AM	2.03	2.5	0.47	0.98	440.0
2/1/2013	8:00:00 AM	2.03	2.5	0.47	0.98	440.0
2/1/2013	9:00:00 AM	2.03	2.5	0.47	0.98	440.0
2/1/2013	10:00:00 AM	2.03	2.5	0.47	0.98	440.0
2/1/2013	11:00:00 AM	2.03	2.5	0.47	0.98	440.0
2/1/2013	12:00:00 PM	2.03	2.5	0.47	0.98	440.0
2/1/2013	1:00:00 PM	2.03	2.5	0.47	0.98	440.0
2/1/2013	2:00:00 PM	2.03	2.5	0.47	0.98	440.0
2/1/2013	3:00:00 PM	2.03	2.5	0.47	0.98	440.0
2/1/2013	4:00:00 PM	2.04	2.5	0.46	0.95	426.0
2/1/2013	5:00:00 PM	2.03	2.5	0.47	0.98	440.0
2/1/2013	6:00:00 PM	2.03	2.5	0.47	0.98	440.0
2/1/2013	7:00:00 PM	2.03	2.5	0.47	0.98	440.0
2/1/2013	8:00:00 PM	2.03	2.5	0.47	0.98	440.0
2/1/2013	9:00:00 PM	2.02	2.5	0.48	1.01	454.3
2/1/2013	10:00:00 PM	2.03	2.5	0.47	0.98	440.0
2/1/2013	11:00:00 PM	2.02	2.5	0.48	1.01	454.3
2/2/2013	12:00:00 AM	2.03	2.5	0.47	0.98	440.0
2/2/2013	1:00:00 AM	2.04	2.5	0.46	0.95	426.0
2/2/2013	2:00:00 AM	2.04	2.5	0.46	0.95	426.0
2/2/2013	3:00:00 AM	2.03	2.5	0.47	0.98	440.0
2/2/2013	4:00:00 AM	2.03	2.5	0.47	0.98	440.0
2/2/2013	5:00:00 AM	2.03	2.5	0.47	0.98	440.0
2/2/2013	6:00:00 AM	2.03	2.5	0.47	0.98	440.0
2/2/2013	7:00:00 AM	2.03	2.5	0.47	0.98	440.0
2/2/2013	8:00:00 AM	2.03	2.5	0.47	0.98	440.0
2/2/2013	9:00:00 AM	2.03	2.5	0.47	0.98	440.0
2/2/2013	10:00:00 AM	2.03	2.5	0.47	0.98	440.0
2/2/2013	11:00:00 AM	2.03	2.5	0.47	0.98	440.0
2/2/2013	12:00:00 PM	2.03	2.5	0.47	0.98	440.0
2/2/2013	1:00:00 PM	2.03	2.5	0.47	0.98	440.0
2/2/2013	2:00:00 PM	2.03	2.5	0.47	0.98	440.0
2/2/2013	3:00:00 PM	2.03	2.5	0.47	0.98	440.0
2/2/2013	4:00:00 PM	2.03	2.5	0.47	0.98	440.0
2/2/2013	5:00:00 PM	2.03	2.5	0.47	0.98	440.0
2/2/2013	6:00:00 PM	2.03	2.5	0.47	0.98	440.0

2/2/2013	7:00:00 PM	2.03	2.5	0.47	0.98	440.0
2/2/2013	8:00:00 PM	2.03	2.5	0.47	0.98	440.0
2/2/2013	9:00:00 PM	2.03	2.5	0.47	0.98	440.0
2/2/2013	10:00:00 PM	2.03	2.5	0.47	0.98	440.0
2/2/2013	11:00:00 PM	2.03	2.5	0.47	0.98	440.0
2/3/2013	12:00:00 AM	2.03	2.5	0.47	0.98	440.0
2/3/2013	1:00:00 AM	2.03	2.5	0.47	0.98	440.0
2/3/2013	2:00:00 AM	2.03	2.5	0.47	0.98	440.0
2/3/2013	3:00:00 AM	2.03	2.5	0.47	0.98	440.0
2/3/2013	4:00:00 AM	2.03	2.5	0.47	0.98	440.0
2/3/2013	5:00:00 AM	2.03	2.5	0.47	0.98	440.0
2/3/2013	6:00:00 AM	2.03	2.5	0.47	0.98	440.0
2/3/2013	7:00:00 AM	2.03	2.5	0.47	0.98	440.0
2/3/2013	8:00:00 AM	2.03	2.5	0.47	0.98	440.0
2/3/2013	9:00:00 AM	2.03	2.5	0.47	0.98	440.0
2/3/2013	10:00:00 AM	2.03	2.5	0.47	0.98	440.0
2/3/2013	11:00:00 AM	2.03	2.5	0.47	0.98	440.0
2/3/2013	12:00:00 PM	2.03	2.5	0.47	0.98	440.0
2/3/2013	1:00:00 PM	2.03	2.5	0.47	0.98	440.0
2/3/2013	2:00:00 PM	2.03	2.5	0.47	0.98	440.0
2/3/2013	3:00:00 PM	2.03	2.5	0.47	0.98	440.0
2/3/2013	4:00:00 PM	2.03	2.5	0.47	0.98	440.0
2/3/2013	5:00:00 PM	2.03	2.5	0.47	0.98	440.0
2/3/2013	6:00:00 PM	2.03	2.5	0.47	0.98	440.0
2/3/2013	7:00:00 PM	2.03	2.5	0.47	0.98	440.0
2/3/2013	8:00:00 PM	2.03	2.5	0.47	0.98	440.0
2/3/2013	9:00:00 PM	2.03	2.5	0.47	0.98	440.0
2/3/2013	10:00:00 PM	2.03	2.5	0.47	0.98	440.0
2/3/2013	11:00:00 PM	2.02	2.5	0.48	1.01	454.3
2/4/2013	12:00:00 AM	2.02	2.5	0.48	1.01	454.3
2/4/2013	1:00:00 AM	2.02	2.5	0.48	1.01	454.3
2/4/2013	2:00:00 AM	2.02	2.5	0.48	1.01	454.3
2/4/2013	3:00:00 AM	2.03	2.5	0.47	0.98	440.0
2/4/2013	4:00:00 AM	2.03	2.5	0.47	0.98	440.0
2/4/2013	5:00:00 AM	2.02	2.5	0.48	1.01	454.3
2/4/2013	6:00:00 AM	2.03	2.5	0.47	0.98	440.0
2/4/2013	7:00:00 AM	2.03	2.5	0.47	0.98	440.0
2/4/2013	8:00:00 AM	2.03	2.5	0.47	0.98	440.0
2/4/2013	9:00:00 AM	2.03	2.5	0.47	0.98	440.0
2/4/2013	10:00:00 AM	2.03	2.5	0.47	0.98	440.0
2/4/2013	11:00:00 AM	2.03	2.5	0.47	0.98	440.0
2/4/2013	12:00:00 PM	2.03	2.5	0.47	0.98	440.0
2/4/2013	1:00:00 PM	2.03	2.5	0.47	0.98	440.0
2/4/2013	2:00:00 PM	2.03	2.5	0.47	0.98	440.0
2/4/2013	3:00:00 PM	2.03	2.5	0.47	0.98	440.0
2/4/2013	4:00:00 PM	2.03	2.5	0.47	0.98	440.0
2/4/2013	5:00:00 PM	2.03	2.5	0.47	0.98	440.0

2/4/2013	6:00:00 PM	2.03	2.5	0.47	0.98	440.0
2/4/2013	7:00:00 PM	2.03	2.5	0.47	0.98	440.0
2/4/2013	8:00:00 PM	2.03	2.5	0.47	0.98	440.0
2/4/2013	9:00:00 PM	2.03	2.5	0.47	0.98	440.0
2/4/2013	10:00:00 PM	2.03	2.5	0.47	0.98	440.0
2/4/2013	11:00:00 PM	2.03	2.5	0.47	0.98	440.0
2/5/2013	12:00:00 AM	2.03	2.5	0.47	0.98	440.0
2/5/2013	1:00:00 AM	2.03	2.5	0.47	0.98	440.0
2/5/2013	2:00:00 AM	2.03	2.5	0.47	0.98	440.0
2/5/2013	3:00:00 AM	2.03	2.5	0.47	0.98	440.0
2/5/2013	4:00:00 AM	2.03	2.5	0.47	0.98	440.0
2/5/2013	5:00:00 AM	2.03	2.5	0.47	0.98	440.0
2/5/2013	6:00:00 AM	2.03	2.5	0.47	0.98	440.0
2/5/2013	7:00:00 AM	2.03	2.5	0.47	0.98	440.0
2/5/2013	8:00:00 AM	2.03	2.5	0.47	0.98	440.0
2/5/2013	9:00:00 AM	2.03	2.5	0.47	0.98	440.0
2/5/2013	10:00:00 AM	2.04	2.5	0.46	0.95	426.0
2/5/2013	11:00:00 AM	2.03	2.5	0.47	0.98	440.0
2/5/2013	12:00:00 PM	2.04	2.5	0.46	0.95	426.0
2/5/2013	1:00:00 PM	2.04	2.5	0.46	0.95	426.0
2/5/2013	2:00:00 PM	2.03	2.5	0.47	0.98	440.0
2/5/2013	3:00:00 PM	2.03	2.5	0.47	0.98	440.0
2/5/2013	4:00:00 PM	2.03	2.5	0.47	0.98	440.0
2/5/2013	5:00:00 PM	2.03	2.5	0.47	0.98	440.0
2/5/2013	6:00:00 PM	2.03	2.5	0.47	0.98	440.0
2/5/2013	7:00:00 PM	2.03	2.5	0.47	0.98	440.0
2/5/2013	8:00:00 PM	2.03	2.5	0.47	0.98	440.0
2/5/2013	9:00:00 PM	2.03	2.5	0.47	0.98	440.0
2/5/2013	10:00:00 PM	2.03	2.5	0.47	0.98	440.0
2/5/2013	11:00:00 PM	2.02	2.5	0.48	1.01	454.3
2/6/2013	12:00:00 AM	2.03	2.5	0.47	0.98	440.0
2/6/2013	1:00:00 AM	2.03	2.5	0.47	0.98	440.0
2/6/2013	2:00:00 AM	2.03	2.5	0.47	0.98	440.0
2/6/2013	3:00:00 AM	2.03	2.5	0.47	0.98	440.0
2/6/2013	4:00:00 AM	2.03	2.5	0.47	0.98	440.0
2/6/2013	5:00:00 AM	2.03	2.5	0.47	0.98	440.0
2/6/2013	6:00:00 AM	2.03	2.5	0.47	0.98	440.0
2/6/2013	7:00:00 AM	2.03	2.5	0.47	0.98	440.0
2/6/2013	8:00:00 AM	2.03	2.5	0.47	0.98	440.0
2/6/2013	9:00:00 AM	2.03	2.5	0.47	0.98	440.0
2/6/2013	10:00:00 AM	2.03	2.5	0.47	0.98	440.0
2/6/2013	11:00:00 AM	2.03	2.5	0.47	0.98	440.0
2/6/2013	12:00:00 PM	2.04	2.5	0.46	0.95	426.0
2/6/2013	1:00:00 PM	2.04	2.5	0.46	0.95	426.0
2/6/2013	2:00:00 PM	2.04	2.5	0.46	0.95	426.0
2/6/2013	3:00:00 PM	2.04	2.5	0.46	0.95	426.0
2/6/2013	4:00:00 PM	2.03	2.5	0.47	0.98	440.0

2/6/2013	5:00:00 PM	2.03	2.5	0.47	0.98	440.0
2/6/2013	6:00:00 PM	2.03	2.5	0.47	0.98	440.0
2/6/2013	7:00:00 PM	2.03	2.5	0.47	0.98	440.0
2/6/2013	8:00:00 PM	2.03	2.5	0.47	0.98	440.0
2/6/2013	9:00:00 PM	2.03	2.5	0.47	0.98	440.0
2/6/2013	10:00:00 PM	2.03	2.5	0.47	0.98	440.0
2/6/2013	11:00:00 PM	2.03	2.5	0.47	0.98	440.0
2/7/2013	12:00:00 AM	2.03	2.5	0.47	0.98	440.0
2/7/2013	1:00:00 AM	2.03	2.5	0.47	0.98	440.0
2/7/2013	2:00:00 AM	2.03	2.5	0.47	0.98	440.0
2/7/2013	3:00:00 AM	2.03	2.5	0.47	0.98	440.0
2/7/2013	4:00:00 AM	2.03	2.5	0.47	0.98	440.0
2/7/2013	5:00:00 AM	2.03	2.5	0.47	0.98	440.0
2/7/2013	6:00:00 AM	2.03	2.5	0.47	0.98	440.0
2/7/2013	7:00:00 AM	2.03	2.5	0.47	0.98	440.0
2/7/2013	8:00:00 AM	2.03	2.5	0.47	0.98	440.0
2/7/2013	9:00:00 AM	2.04	2.5	0.46	0.95	426.0
2/7/2013	10:00:00 AM	2.03	2.5	0.47	0.98	440.0
2/7/2013	11:00:00 AM	2.04	2.5	0.46	0.95	426.0
2/7/2013	12:00:00 PM	2.04	2.5	0.46	0.95	426.0
2/7/2013	1:00:00 PM	2.04	2.5	0.46	0.95	426.0
2/7/2013	2:00:00 PM	2.04	2.5	0.46	0.95	426.0
2/7/2013	3:00:00 PM	2.04	2.5	0.46	0.95	426.0
2/7/2013	4:00:00 PM	2.03	2.5	0.47	0.98	440.0
2/7/2013	5:00:00 PM	2.03	2.5	0.47	0.98	440.0
2/7/2013	6:00:00 PM	2.03	2.5	0.47	0.98	440.0
2/7/2013	7:00:00 PM	2.03	2.5	0.47	0.98	440.0
2/7/2013	8:00:00 PM	2.03	2.5	0.47	0.98	440.0
2/7/2013	9:00:00 PM	2.03	2.5	0.47	0.98	440.0
2/7/2013	10:00:00 PM	2.03	2.5	0.47	0.98	440.0
2/7/2013	11:00:00 PM	2.03	2.5	0.47	0.98	440.0
2/8/2013	12:00:00 AM	2.03	2.5	0.47	0.98	440.0
2/8/2013	1:00:00 AM	2.03	2.5	0.47	0.98	440.0
2/8/2013	2:00:00 AM	2.03	2.5	0.47	0.98	440.0
2/8/2013	3:00:00 AM	2.03	2.5	0.47	0.98	440.0
2/8/2013	4:00:00 AM	2.03	2.5	0.47	0.98	440.0
2/8/2013	5:00:00 AM	2.03	2.5	0.47	0.98	440.0
2/8/2013	6:00:00 AM	2.04	2.5	0.46	0.95	426.0
2/8/2013	7:00:00 AM	2.03	2.5	0.47	0.98	440.0
2/8/2013	8:00:00 AM	2.03	2.5	0.47	0.98	440.0
2/8/2013	9:00:00 AM	2.03	2.5	0.47	0.98	440.0
2/8/2013	10:00:00 AM	2.03	2.5	0.47	0.98	440.0
2/8/2013	11:00:00 AM	2.03	2.5	0.47	0.98	440.0
2/8/2013	12:00:00 PM	2.03	2.5	0.47	0.98	440.0
2/8/2013	1:00:00 PM	2.03	2.5	0.47	0.98	440.0
2/8/2013	2:00:00 PM	2.03	2.5	0.47	0.98	440.0
2/8/2013	3:00:00 PM	2.03	2.5	0.47	0.98	440.0

2/8/2013	4:00:00 PM	2.03	2.5	0.47	0.98	440.0
2/8/2013	5:00:00 PM	2.03	2.5	0.47	0.98	440.0
2/8/2013	6:00:00 PM	2.03	2.5	0.47	0.98	440.0
2/8/2013	7:00:00 PM	2.03	2.5	0.47	0.98	440.0
2/8/2013	8:00:00 PM	2.03	2.5	0.47	0.98	440.0
2/8/2013	9:00:00 PM	2.03	2.5	0.47	0.98	440.0
2/8/2013	10:00:00 PM	2.03	2.5	0.47	0.98	440.0
2/8/2013	11:00:00 PM	2.03	2.5	0.47	0.98	440.0
2/9/2013	12:00:00 AM	2.03	2.5	0.47	0.98	440.0
2/9/2013	1:00:00 AM	2.03	2.5	0.47	0.98	440.0
2/9/2013	2:00:00 AM	2.03	2.5	0.47	0.98	440.0
2/9/2013	3:00:00 AM	2.03	2.5	0.47	0.98	440.0
2/9/2013	4:00:00 AM	2.03	2.5	0.47	0.98	440.0
2/9/2013	5:00:00 AM	2.03	2.5	0.47	0.98	440.0
2/9/2013	6:00:00 AM	2.04	2.5	0.46	0.95	426.0
2/9/2013	7:00:00 AM	2.03	2.5	0.47	0.98	440.0
2/9/2013	8:00:00 AM	2.03	2.5	0.47	0.98	440.0
2/9/2013	9:00:00 AM	2.02	2.5	0.48	1.01	454.3
2/9/2013	10:00:00 AM	2.02	2.5	0.48	1.01	454.3
2/9/2013	11:00:00 AM	2.02	2.5	0.48	1.01	454.3
2/9/2013	12:00:00 PM	2.02	2.5	0.48	1.01	454.3
2/9/2013	1:00:00 PM	2.02	2.5	0.48	1.01	454.3
2/9/2013	2:00:00 PM	2.02	2.5	0.48	1.01	454.3
2/9/2013	3:00:00 PM	2.03	2.5	0.47	0.98	440.0
2/9/2013	4:00:00 PM	2.02	2.5	0.48	1.01	454.3
2/9/2013	5:00:00 PM	2.02	2.5	0.48	1.01	454.3
2/9/2013	6:00:00 PM	2.02	2.5	0.48	1.01	454.3
2/9/2013	7:00:00 PM	2.03	2.5	0.47	0.98	440.0
2/9/2013	8:00:00 PM	2.02	2.5	0.48	1.01	454.3
2/9/2013	9:00:00 PM	2.01	2.5	0.49	1.04	468.6
2/9/2013	10:00:00 PM	2.02	2.5	0.48	1.01	454.3
2/9/2013	11:00:00 PM	2.02	2.5	0.48	1.01	454.3
2/10/2013	12:00:00 AM	2.01	2.5	0.49	1.04	468.6
2/10/2013	1:00:00 AM	2.01	2.5	0.49	1.04	468.6
2/10/2013	2:00:00 AM	2.01	2.5	0.49	1.04	468.6
2/10/2013	3:00:00 AM	2.01	2.5	0.49	1.04	468.6
2/10/2013	4:00:00 AM	2.01	2.5	0.49	1.04	468.6
2/10/2013	5:00:00 AM	2.01	2.5	0.49	1.04	468.6
2/10/2013	6:00:00 AM	2.0	2.5	0.50	1.08	483.2
2/10/2013	7:00:00 AM	2.0	2.5	0.50	1.08	483.2
2/10/2013	8:00:00 AM	2.01	2.5	0.49	1.04	468.6
2/10/2013	9:00:00 AM	2.0	2.5	0.50	1.08	483.2
2/10/2013	10:00:00 AM	2.0	2.5	0.50	1.08	483.2
2/10/2013	11:00:00 AM	2.0	2.5	0.50	1.08	483.2
2/10/2013	12:00:00 PM	2.0	2.5	0.50	1.08	483.2
2/10/2013	1:00:00 PM	2.01	2.5	0.49	1.04	468.6
2/10/2013	2:00:00 PM	2.01	2.5	0.49	1.04	468.6

2/10/2013	3:00:00 PM	2.01	2.5	0.49	1.04	468.6
2/10/2013	4:00:00 PM	2.01	2.5	0.49	1.04	468.6
2/10/2013	5:00:00 PM	2.01	2.5	0.49	1.04	468.6
2/10/2013	6:00:00 PM	2.02	2.5	0.48	1.01	454.3
2/10/2013	7:00:00 PM	2.02	2.5	0.48	1.01	454.3
2/10/2013	8:00:00 PM	2.02	2.5	0.48	1.01	454.3
2/10/2013	9:00:00 PM	2.02	2.5	0.48	1.01	454.3
2/10/2013	10:00:00 PM	2.02	2.5	0.48	1.01	454.3
2/10/2013	11:00:00 PM	2.02	2.5	0.48	1.01	454.3
2/11/2013	12:00:00 AM	2.01	2.5	0.49	1.04	468.6
2/11/2013	1:00:00 AM	2.02	2.5	0.48	1.01	454.3
2/11/2013	2:00:00 AM	2.02	2.5	0.48	1.01	454.3
2/11/2013	3:00:00 AM	2.02	2.5	0.48	1.01	454.3
2/11/2013	4:00:00 AM	2.02	2.5	0.48	1.01	454.3
2/11/2013	5:00:00 AM	2.02	2.5	0.48	1.01	454.3
2/11/2013	6:00:00 AM	2.02	2.5	0.48	1.01	454.3
2/11/2013	7:00:00 AM	2.02	2.5	0.48	1.01	454.3
2/11/2013	8:00:00 AM	2.02	2.5	0.48	1.01	454.3
2/11/2013	9:00:00 AM	2.02	2.5	0.48	1.01	454.3
2/11/2013	10:00:00 AM	2.02	2.5	0.48	1.01	454.3
2/11/2013	11:00:00 AM	2.01	2.5	0.49	1.04	468.6
2/11/2013	12:00:00 PM	2.02	2.5	0.48	1.01	454.3
2/11/2013	1:00:00 PM	2.02	2.5	0.48	1.01	454.3
2/11/2013	2:00:00 PM	2.02	2.5	0.48	1.01	454.3
2/11/2013	3:00:00 PM	2.02	2.5	0.48	1.01	454.3
2/11/2013	4:00:00 PM	2.02	2.5	0.48	1.01	454.3
2/11/2013	5:00:00 PM	2.03	2.5	0.47	0.98	440.0
2/11/2013	6:00:00 PM	2.03	2.5	0.47	0.98	440.0
2/11/2013	7:00:00 PM	2.03	2.5	0.47	0.98	440.0
2/11/2013	8:00:00 PM	2.03	2.5	0.47	0.98	440.0
2/11/2013	9:00:00 PM	2.03	2.5	0.47	0.98	440.0
2/11/2013	10:00:00 PM	2.03	2.5	0.47	0.98	440.0
2/11/2013	11:00:00 PM	2.03	2.5	0.47	0.98	440.0
2/12/2013	12:00:00 AM	2.03	2.5	0.47	0.98	440.0
2/12/2013	1:00:00 AM	2.03	2.5	0.47	0.98	440.0
2/12/2013	2:00:00 AM	2.03	2.5	0.47	0.98	440.0
2/12/2013	3:00:00 AM	2.03	2.5	0.47	0.98	440.0
2/12/2013	4:00:00 AM	2.03	2.5	0.47	0.98	440.0
2/12/2013	5:00:00 AM	2.03	2.5	0.47	0.98	440.0
2/12/2013	6:00:00 AM	2.03	2.5	0.47	0.98	440.0
2/12/2013	7:00:00 AM	2.03	2.5	0.47	0.98	440.0
2/12/2013	8:00:00 AM	2.03	2.5	0.47	0.98	440.0
2/12/2013	9:00:00 AM	2.03	2.5	0.47	0.98	440.0
2/12/2013	10:00:00 AM	2.03	2.5	0.47	0.98	440.0
2/12/2013	11:00:00 AM	2.03	2.5	0.47	0.98	440.0
2/12/2013	12:00:00 PM	2.03	2.5	0.47	0.98	440.0
2/12/2013	1:00:00 PM	2.03	2.5	0.47	0.98	440.0

2/12/2013	2:00:00 PM	2.03	2.5	0.47	0.98	440.0
2/12/2013	3:00:00 PM	2.03	2.5	0.47	0.98	440.0
2/12/2013	4:00:00 PM	2.03	2.5	0.47	0.98	440.0
2/12/2013	5:00:00 PM	2.03	2.5	0.47	0.98	440.0
2/12/2013	6:00:00 PM	2.03	2.5	0.47	0.98	440.0
2/12/2013	7:00:00 PM	2.03	2.5	0.47	0.98	440.0
2/12/2013	8:00:00 PM	2.03	2.5	0.47	0.98	440.0
2/12/2013	9:00:00 PM	2.03	2.5	0.47	0.98	440.0
2/12/2013	10:00:00 PM	2.03	2.5	0.47	0.98	440.0
2/12/2013	11:00:00 PM	2.03	2.5	0.47	0.98	440.0
2/13/2013	12:00:00 AM	2.03	2.5	0.47	0.98	440.0
2/13/2013	1:00:00 AM	2.03	2.5	0.47	0.98	440.0
2/13/2013	2:00:00 AM	2.03	2.5	0.47	0.98	440.0
2/13/2013	3:00:00 AM	2.03	2.5	0.47	0.98	440.0
2/13/2013	4:00:00 AM	2.03	2.5	0.47	0.98	440.0
2/13/2013	5:00:00 AM	2.03	2.5	0.47	0.98	440.0
2/13/2013	6:00:00 AM	2.03	2.5	0.47	0.98	440.0
2/13/2013	7:00:00 AM	2.03	2.5	0.47	0.98	440.0
2/13/2013	8:00:00 AM	2.03	2.5	0.47	0.98	440.0
2/13/2013	9:00:00 AM	2.03	2.5	0.47	0.98	440.0
2/13/2013	10:00:00 AM	2.03	2.5	0.47	0.98	440.0
2/13/2013	11:00:00 AM	2.03	2.5	0.47	0.98	440.0
2/13/2013	12:00:00 PM	2.03	2.5	0.47	0.98	440.0
2/13/2013	1:00:00 PM	2.03	2.5	0.47	0.98	440.0
2/13/2013	2:00:00 PM	2.04	2.5	0.46	0.95	426.0
2/13/2013	3:00:00 PM	2.04	2.5	0.46	0.95	426.0
2/13/2013	4:00:00 PM	2.04	2.5	0.46	0.95	426.0
2/13/2013	5:00:00 PM	2.04	2.5	0.46	0.95	426.0
2/13/2013	6:00:00 PM	2.04	2.5	0.46	0.95	426.0
2/13/2013	7:00:00 PM	2.04	2.5	0.46	0.95	426.0
2/13/2013	8:00:00 PM	2.03	2.5	0.47	0.98	440.0
2/13/2013	9:00:00 PM	2.03	2.5	0.47	0.98	440.0
2/13/2013	10:00:00 PM	2.03	2.5	0.47	0.98	440.0
2/13/2013	11:00:00 PM	2.03	2.5	0.47	0.98	440.0
2/14/2013	12:00:00 AM	2.03	2.5	0.47	0.98	440.0
2/14/2013	1:00:00 AM	2.03	2.5	0.47	0.98	440.0
2/14/2013	2:00:00 AM	2.03	2.5	0.47	0.98	440.0
2/14/2013	3:00:00 AM	2.03	2.5	0.47	0.98	440.0
2/14/2013	4:00:00 AM	2.03	2.5	0.47	0.98	440.0
2/14/2013	5:00:00 AM	2.03	2.5	0.47	0.98	440.0
2/14/2013	6:00:00 AM	2.03	2.5	0.47	0.98	440.0
2/14/2013	7:00:00 AM	2.03	2.5	0.47	0.98	440.0
2/14/2013	8:00:00 AM	2.03	2.5	0.47	0.98	440.0
2/14/2013	9:00:00 AM	2.03	2.5	0.47	0.98	440.0
2/14/2013	10:00:00 AM	2.03	2.5	0.47	0.98	440.0
2/14/2013	11:00:00 AM	2.04	2.5	0.46	0.95	426.0
2/14/2013	12:00:00 PM	2.04	2.5	0.46	0.95	426.0

2/14/2013	1:00:00 PM	2.04	2.5	0.46	0.95	426.0
2/14/2013	2:00:00 PM	2.04	2.5	0.46	0.95	426.0
2/14/2013	3:00:00 PM	2.04	2.5	0.46	0.95	426.0
2/14/2013	4:00:00 PM	2.04	2.5	0.46	0.95	426.0
2/14/2013	5:00:00 PM	2.04	2.5	0.46	0.95	426.0
2/14/2013	6:00:00 PM	2.03	2.5	0.47	0.98	440.0
2/14/2013	7:00:00 PM	2.03	2.5	0.47	0.98	440.0
2/14/2013	8:00:00 PM	2.03	2.5	0.47	0.98	440.0
2/14/2013	9:00:00 PM	2.03	2.5	0.47	0.98	440.0
2/14/2013	10:00:00 PM	2.03	2.5	0.47	0.98	440.0
2/14/2013	11:00:00 PM	2.03	2.5	0.47	0.98	440.0
2/15/2013	12:00:00 AM	2.03	2.5	0.47	0.98	440.0
2/15/2013	1:00:00 AM	2.03	2.5	0.47	0.98	440.0
2/15/2013	2:00:00 AM	2.03	2.5	0.47	0.98	440.0
2/15/2013	3:00:00 AM	2.03	2.5	0.47	0.98	440.0
2/15/2013	4:00:00 AM	2.03	2.5	0.47	0.98	440.0
2/15/2013	5:00:00 AM	2.03	2.5	0.47	0.98	440.0
2/15/2013	6:00:00 AM	2.03	2.5	0.47	0.98	440.0
2/15/2013	7:00:00 AM	2.03	2.5	0.47	0.98	440.0
2/15/2013	8:00:00 AM	2.04	2.5	0.46	0.95	426.0
2/15/2013	9:00:00 AM	2.04	2.5	0.46	0.95	426.0
2/15/2013	10:00:00 AM	2.03	2.5	0.47	0.98	440.0
2/15/2013	11:00:00 AM	2.04	2.5	0.46	0.95	426.0
2/15/2013	12:00:00 PM	2.03	2.5	0.47	0.98	440.0
2/15/2013	1:00:00 PM	2.05	2.5	0.45	0.92	412.1
2/15/2013	2:00:00 PM	2.04	2.5	0.46	0.95	426.0
2/15/2013	3:00:00 PM	2.04	2.5	0.46	0.95	426.0
2/15/2013	4:00:00 PM	2.04	2.5	0.46	0.95	426.0
2/15/2013	5:00:00 PM	2.04	2.5	0.46	0.95	426.0
2/15/2013	6:00:00 PM	2.04	2.5	0.46	0.95	426.0
2/15/2013	7:00:00 PM	2.03	2.5	0.47	0.98	440.0
2/15/2013	8:00:00 PM	2.03	2.5	0.47	0.98	440.0
2/15/2013	9:00:00 PM	2.03	2.5	0.47	0.98	440.0
2/15/2013	10:00:00 PM	2.03	2.5	0.47	0.98	440.0
2/15/2013	11:00:00 PM	2.03	2.5	0.47	0.98	440.0
2/16/2013	12:00:00 AM	2.03	2.5	0.47	0.98	440.0
2/16/2013	1:00:00 AM	2.03	2.5	0.47	0.98	440.0
2/16/2013	2:00:00 AM	2.03	2.5	0.47	0.98	440.0
2/16/2013	3:00:00 AM	2.03	2.5	0.47	0.98	440.0
2/16/2013	4:00:00 AM	2.03	2.5	0.47	0.98	440.0
2/16/2013	5:00:00 AM	2.03	2.5	0.47	0.98	440.0
2/16/2013	6:00:00 AM	2.03	2.5	0.47	0.98	440.0
2/16/2013	7:00:00 AM	2.03	2.5	0.47	0.98	440.0
2/16/2013	8:00:00 AM	2.03	2.5	0.47	0.98	440.0
2/16/2013	9:00:00 AM	2.04	2.5	0.46	0.95	426.0
2/16/2013	10:00:00 AM	2.04	2.5	0.46	0.95	426.0
2/16/2013	11:00:00 AM	2.04	2.5	0.46	0.95	426.0

2/16/2013	12:00:00 PM	2.04	2.5	0.46	0.95	426.0
2/16/2013	1:00:00 PM	2.05	2.5	0.45	0.92	412.1
2/16/2013	2:00:00 PM	2.04	2.5	0.46	0.95	426.0
2/16/2013	3:00:00 PM	2.04	2.5	0.46	0.95	426.0
2/16/2013	4:00:00 PM	2.04	2.5	0.46	0.95	426.0
2/16/2013	5:00:00 PM	2.05	2.5	0.45	0.92	412.1
2/16/2013	6:00:00 PM	2.04	2.5	0.46	0.95	426.0
2/16/2013	7:00:00 PM	2.03	2.5	0.47	0.98	440.0
2/16/2013	8:00:00 PM	2.03	2.5	0.47	0.98	440.0
2/16/2013	9:00:00 PM	2.03	2.5	0.47	0.98	440.0
2/16/2013	10:00:00 PM	2.03	2.5	0.47	0.98	440.0
2/16/2013	11:00:00 PM	2.03	2.5	0.47	0.98	440.0
2/17/2013	12:00:00 AM	2.03	2.5	0.47	0.98	440.0
2/17/2013	1:00:00 AM	2.03	2.5	0.47	0.98	440.0
2/17/2013	2:00:00 AM	2.03	2.5	0.47	0.98	440.0
2/17/2013	3:00:00 AM	2.03	2.5	0.47	0.98	440.0
2/17/2013	4:00:00 AM	2.03	2.5	0.47	0.98	440.0
2/17/2013	5:00:00 AM	2.03	2.5	0.47	0.98	440.0
2/17/2013	6:00:00 AM	2.03	2.5	0.47	0.98	440.0
2/17/2013	7:00:00 AM	2.04	2.5	0.46	0.95	426.0
2/17/2013	8:00:00 AM	2.04	2.5	0.46	0.95	426.0
2/17/2013	9:00:00 AM	2.04	2.5	0.46	0.95	426.0
2/17/2013	10:00:00 AM	2.05	2.5	0.45	0.92	412.1
2/17/2013	11:00:00 AM	2.07	2.5	0.43	0.86	384.7
2/17/2013	12:00:00 PM	2.08	2.5	0.42	0.83	371.3
2/17/2013	1:00:00 PM	2.08	2.5	0.42	0.83	371.3
2/17/2013	2:00:00 PM	2.06	2.5	0.44	0.89	398.3
2/17/2013	3:00:00 PM	2.04	2.5	0.46	0.95	426.0
2/17/2013	4:00:00 PM	2.03	2.5	0.47	0.98	440.0
2/17/2013	5:00:00 PM	2.01	2.5	0.49	1.04	468.6
2/17/2013	6:00:00 PM	2.02	2.5	0.48	1.01	454.3
2/17/2013	7:00:00 PM	2.01	2.5	0.49	1.04	468.6
2/17/2013	8:00:00 PM	2.01	2.5	0.49	1.04	468.6
2/17/2013	9:00:00 PM	2.02	2.5	0.48	1.01	454.3
2/17/2013	10:00:00 PM	2.02	2.5	0.48	1.01	454.3
2/17/2013	11:00:00 PM	2.03	2.5	0.47	0.98	440.0
2/18/2013	12:00:00 AM	2.03	2.5	0.47	0.98	440.0
2/18/2013	1:00:00 AM	2.03	2.5	0.47	0.98	440.0
2/18/2013	2:00:00 AM	2.03	2.5	0.47	0.98	440.0
2/18/2013	3:00:00 AM	2.03	2.5	0.47	0.98	440.0
2/18/2013	4:00:00 AM	2.03	2.5	0.47	0.98	440.0
2/18/2013	5:00:00 AM	2.04	2.5	0.46	0.95	426.0
2/18/2013	6:00:00 AM	2.03	2.5	0.47	0.98	440.0
2/18/2013	7:00:00 AM	2.03	2.5	0.47	0.98	440.0
2/18/2013	8:00:00 AM	2.02	2.5	0.48	1.01	454.3
2/18/2013	9:00:00 AM	2.03	2.5	0.47	0.98	440.0
2/18/2013	10:00:00 AM	2.03	2.5	0.47	0.98	440.0

2/18/2013	11:00:00 AM	2.03	2.5	0.47	0.98	440.0
2/18/2013	12:00:00 PM	2.04	2.5	0.46	0.95	426.0
2/18/2013	1:00:00 PM	2.04	2.5	0.46	0.95	426.0
2/18/2013	2:00:00 PM	2.04	2.5	0.46	0.95	426.0
2/18/2013	3:00:00 PM	2.04	2.5	0.46	0.95	426.0
2/18/2013	4:00:00 PM	2.04	2.5	0.46	0.95	426.0
2/18/2013	5:00:00 PM	2.04	2.5	0.46	0.95	426.0
2/18/2013	6:00:00 PM	2.03	2.5	0.47	0.98	440.0
2/18/2013	7:00:00 PM	2.03	2.5	0.47	0.98	440.0
2/18/2013	8:00:00 PM	2.03	2.5	0.47	0.98	440.0
2/18/2013	9:00:00 PM	2.03	2.5	0.47	0.98	440.0
2/18/2013	10:00:00 PM	2.03	2.5	0.47	0.98	440.0
2/18/2013	11:00:00 PM	2.03	2.5	0.47	0.98	440.0
2/19/2013	12:00:00 AM	2.03	2.5	0.47	0.98	440.0
2/19/2013	1:00:00 AM	2.03	2.5	0.47	0.98	440.0
2/19/2013	2:00:00 AM	2.04	2.5	0.46	0.95	426.0
2/19/2013	3:00:00 AM	2.03	2.5	0.47	0.98	440.0
2/19/2013	4:00:00 AM	2.04	2.5	0.46	0.95	426.0
2/19/2013	5:00:00 AM	2.03	2.5	0.47	0.98	440.0
2/19/2013	6:00:00 AM	2.04	2.5	0.46	0.95	426.0
2/19/2013	7:00:00 AM	2.04	2.5	0.46	0.95	426.0
2/19/2013	8:00:00 AM	2.04	2.5	0.46	0.95	426.0
2/19/2013	9:00:00 AM	2.04	2.5	0.46	0.95	426.0
2/19/2013	10:00:00 AM	2.05	2.5	0.45	0.92	412.1
2/19/2013	11:00:00 AM	2.05	2.5	0.45	0.92	412.1
2/19/2013	12:00:00 PM	2.05	2.5	0.45	0.92	412.1
2/19/2013	1:00:00 PM	2.05	2.5	0.45	0.92	412.1
2/19/2013	2:00:00 PM	2.04	2.5	0.46	0.95	426.0
2/19/2013	3:00:00 PM	2.04	2.5	0.46	0.95	426.0
2/19/2013	4:00:00 PM	2.04	2.5	0.46	0.95	426.0
2/19/2013	5:00:00 PM	2.03	2.5	0.47	0.98	440.0
2/19/2013	6:00:00 PM	2.03	2.5	0.47	0.98	440.0
2/19/2013	7:00:00 PM	2.03	2.5	0.47	0.98	440.0
2/19/2013	8:00:00 PM	2.03	2.5	0.47	0.98	440.0
2/19/2013	9:00:00 PM	2.03	2.5	0.47	0.98	440.0
2/19/2013	10:00:00 PM	2.03	2.5	0.47	0.98	440.0
2/19/2013	11:00:00 PM	2.03	2.5	0.47	0.98	440.0
2/20/2013	12:00:00 AM	2.03	2.5	0.47	0.98	440.0
2/20/2013	1:00:00 AM	2.03	2.5	0.47	0.98	440.0
2/20/2013	2:00:00 AM	2.03	2.5	0.47	0.98	440.0
2/20/2013	3:00:00 AM	2.03	2.5	0.47	0.98	440.0
2/20/2013	4:00:00 AM	2.03	2.5	0.47	0.98	440.0
2/20/2013	5:00:00 AM	2.03	2.5	0.47	0.98	440.0
2/20/2013	6:00:00 AM	2.03	2.5	0.47	0.98	440.0
2/20/2013	7:00:00 AM	2.03	2.5	0.47	0.98	440.0
2/20/2013	8:00:00 AM	2.03	2.5	0.47	0.98	440.0
2/20/2013	9:00:00 AM	2.03	2.5	0.47	0.98	440.0

2/20/2013	10:00:00 AM	2.03	2.5	0.47	0.98	440.0
2/20/2013	11:00:00 AM	2.03	2.5	0.47	0.98	440.0
2/20/2013	12:00:00 PM	2.02	2.5	0.48	1.01	454.3
2/20/2013	1:00:00 PM	2.02	2.5	0.48	1.01	454.3
2/20/2013	2:00:00 PM	2.02	2.5	0.48	1.01	454.3
2/20/2013	3:00:00 PM	2.02	2.5	0.48	1.01	454.3
2/20/2013	4:00:00 PM	2.03	2.5	0.47	0.98	440.0
2/20/2013	5:00:00 PM	2.02	2.5	0.48	1.01	454.3
2/20/2013	6:00:00 PM	2.02	2.5	0.48	1.01	454.3
2/20/2013	7:00:00 PM	2.02	2.5	0.48	1.01	454.3
2/20/2013	8:00:00 PM	2.02	2.5	0.48	1.01	454.3
2/20/2013	9:00:00 PM	2.02	2.5	0.48	1.01	454.3
2/20/2013	10:00:00 PM	2.02	2.5	0.48	1.01	454.3
2/20/2013	11:00:00 PM	2.02	2.5	0.48	1.01	454.3
2/21/2013	12:00:00 AM	2.02	2.5	0.48	1.01	454.3
2/21/2013	1:00:00 AM	2.03	2.5	0.47	0.98	440.0
2/21/2013	2:00:00 AM	2.02	2.5	0.48	1.01	454.3
2/21/2013	3:00:00 AM	2.03	2.5	0.47	0.98	440.0
2/21/2013	4:00:00 AM	2.02	2.5	0.48	1.01	454.3
2/21/2013	5:00:00 AM	2.02	2.5	0.48	1.01	454.3
2/21/2013	6:00:00 AM	2.03	2.5	0.47	0.98	440.0
2/21/2013	7:00:00 AM	2.03	2.5	0.47	0.98	440.0
2/21/2013	8:00:00 AM	2.03	2.5	0.47	0.98	440.0
2/21/2013	9:00:00 AM	2.03	2.5	0.47	0.98	440.0
2/21/2013	10:00:00 AM	2.02	2.5	0.48	1.01	454.3
2/21/2013	11:00:00 AM	2.03	2.5	0.47	0.98	440.0
2/21/2013	12:00:00 PM	2.03	2.5	0.47	0.98	440.0
2/21/2013	1:00:00 PM	2.03	2.5	0.47	0.98	440.0
2/21/2013	2:00:00 PM	2.03	2.5	0.47	0.98	440.0
2/21/2013	3:00:00 PM	2.04	2.5	0.46	0.95	426.0
2/21/2013	4:00:00 PM	2.03	2.5	0.47	0.98	440.0
2/21/2013	5:00:00 PM	2.03	2.5	0.47	0.98	440.0
2/21/2013	6:00:00 PM	2.03	2.5	0.47	0.98	440.0
2/21/2013	7:00:00 PM	2.03	2.5	0.47	0.98	440.0
2/21/2013	8:00:00 PM	2.03	2.5	0.47	0.98	440.0
2/21/2013	9:00:00 PM	2.03	2.5	0.47	0.98	440.0
2/21/2013	10:00:00 PM	2.03	2.5	0.47	0.98	440.0
2/21/2013	11:00:00 PM	2.03	2.5	0.47	0.98	440.0
2/22/2013	12:00:00 AM	2.03	2.5	0.47	0.98	440.0
2/22/2013	1:00:00 AM	2.03	2.5	0.47	0.98	440.0
2/22/2013	2:00:00 AM	2.03	2.5	0.47	0.98	440.0
2/22/2013	3:00:00 AM	2.03	2.5	0.47	0.98	440.0
2/22/2013	4:00:00 AM	2.02	2.5	0.48	1.01	454.3
2/22/2013	5:00:00 AM	2.03	2.5	0.47	0.98	440.0
2/22/2013	6:00:00 AM	2.03	2.5	0.47	0.98	440.0
2/22/2013	7:00:00 AM	2.03	2.5	0.47	0.98	440.0
2/22/2013	8:00:00 AM	2.03	2.5	0.47	0.98	440.0

2/22/2013	9:00:00 AM	2.03	2.5	0.47	0.98	440.0
2/22/2013	10:00:00 AM	2.03	2.5	0.47	0.98	440.0
2/22/2013	11:00:00 AM	2.03	2.5	0.47	0.98	440.0
2/22/2013	12:00:00 PM	2.03	2.5	0.47	0.98	440.0
2/22/2013	1:00:00 PM	2.03	2.5	0.47	0.98	440.0
2/22/2013	2:00:00 PM	2.03	2.5	0.47	0.98	440.0
2/22/2013	3:00:00 PM	2.03	2.5	0.47	0.98	440.0
2/22/2013	4:00:00 PM	2.03	2.5	0.47	0.98	440.0
2/22/2013	5:00:00 PM	2.03	2.5	0.47	0.98	440.0
2/22/2013	6:00:00 PM	2.03	2.5	0.47	0.98	440.0
2/22/2013	7:00:00 PM	2.03	2.5	0.47	0.98	440.0
2/22/2013	8:00:00 PM	2.03	2.5	0.47	0.98	440.0
2/22/2013	9:00:00 PM	2.03	2.5	0.47	0.98	440.0
2/22/2013	10:00:00 PM	2.03	2.5	0.47	0.98	440.0
2/22/2013	11:00:00 PM	2.03	2.5	0.47	0.98	440.0
2/23/2013	12:00:00 AM	2.03	2.5	0.47	0.98	440.0
2/23/2013	1:00:00 AM	2.03	2.5	0.47	0.98	440.0
2/23/2013	2:00:00 AM	2.03	2.5	0.47	0.98	440.0
2/23/2013	3:00:00 AM	2.03	2.5	0.47	0.98	440.0
2/23/2013	4:00:00 AM	2.03	2.5	0.47	0.98	440.0
2/23/2013	5:00:00 AM	2.03	2.5	0.47	0.98	440.0
2/23/2013	6:00:00 AM	2.03	2.5	0.47	0.98	440.0
2/23/2013	7:00:00 AM	2.04	2.5	0.46	0.95	426.0
2/23/2013	8:00:00 AM	2.03	2.5	0.47	0.98	440.0
2/23/2013	9:00:00 AM	2.03	2.5	0.47	0.98	440.0
2/23/2013	10:00:00 AM	2.03	2.5	0.47	0.98	440.0
2/23/2013	11:00:00 AM	2.04	2.5	0.46	0.95	426.0
2/23/2013	12:00:00 PM	2.03	2.5	0.47	0.98	440.0
2/23/2013	1:00:00 PM	2.04	2.5	0.46	0.95	426.0
2/23/2013	2:00:00 PM	2.03	2.5	0.47	0.98	440.0
2/23/2013	3:00:00 PM	2.04	2.5	0.46	0.95	426.0
2/23/2013	4:00:00 PM	2.03	2.5	0.47	0.98	440.0
2/23/2013	5:00:00 PM	2.03	2.5	0.47	0.98	440.0
2/23/2013	6:00:00 PM	2.03	2.5	0.47	0.98	440.0
2/23/2013	7:00:00 PM	2.03	2.5	0.47	0.98	440.0
2/23/2013	8:00:00 PM	2.03	2.5	0.47	0.98	440.0
2/23/2013	9:00:00 PM	2.03	2.5	0.47	0.98	440.0
2/23/2013	10:00:00 PM	2.02	2.5	0.48	1.01	454.3
2/23/2013	11:00:00 PM	2.02	2.5	0.48	1.01	454.3
2/24/2013	12:00:00 AM	2.02	2.5	0.48	1.01	454.3
2/24/2013	1:00:00 AM	2.02	2.5	0.48	1.01	454.3
2/24/2013	2:00:00 AM	2.02	2.5	0.48	1.01	454.3
2/24/2013	3:00:00 AM	2.01	2.5	0.49	1.04	468.6
2/24/2013	4:00:00 AM	2.02	2.5	0.48	1.01	454.3
2/24/2013	5:00:00 AM	2.02	2.5	0.48	1.01	454.3
2/24/2013	6:00:00 AM	2.02	2.5	0.48	1.01	454.3
2/24/2013	7:00:00 AM	2.02	2.5	0.48	1.01	454.3

2/24/2013	8:00:00 AM	2.02	2.5	0.48	1.01	454.3
2/24/2013	9:00:00 AM	2.03	2.5	0.47	0.98	440.0
2/24/2013	10:00:00 AM	2.03	2.5	0.47	0.98	440.0
2/24/2013	11:00:00 AM	2.03	2.5	0.47	0.98	440.0
2/24/2013	12:00:00 PM	2.02	2.5	0.48	1.01	454.3
2/24/2013	1:00:00 PM	2.03	2.5	0.47	0.98	440.0
2/24/2013	2:00:00 PM	2.03	2.5	0.47	0.98	440.0
2/24/2013	3:00:00 PM	2.04	2.5	0.46	0.95	426.0
2/24/2013	4:00:00 PM	2.03	2.5	0.47	0.98	440.0
2/24/2013	5:00:00 PM	2.04	2.5	0.46	0.95	426.0
2/24/2013	6:00:00 PM	2.04	2.5	0.46	0.95	426.0
2/24/2013	7:00:00 PM	2.04	2.5	0.46	0.95	426.0
2/24/2013	8:00:00 PM	2.04	2.5	0.46	0.95	426.0
2/24/2013	9:00:00 PM	2.04	2.5	0.46	0.95	426.0
2/24/2013	10:00:00 PM	2.03	2.5	0.47	0.98	440.0
2/24/2013	11:00:00 PM	2.04	2.5	0.46	0.95	426.0
2/25/2013	12:00:00 AM	2.04	2.5	0.46	0.95	426.0
2/25/2013	1:00:00 AM	2.03	2.5	0.47	0.98	440.0
2/25/2013	2:00:00 AM	2.03	2.5	0.47	0.98	440.0
2/25/2013	3:00:00 AM	2.03	2.5	0.47	0.98	440.0
2/25/2013	4:00:00 AM	2.03	2.5	0.47	0.98	440.0
2/25/2013	5:00:00 AM	2.04	2.5	0.46	0.95	426.0
2/25/2013	6:00:00 AM	2.04	2.5	0.46	0.95	426.0
2/25/2013	7:00:00 AM	2.04	2.5	0.46	0.95	426.0
2/25/2013	8:00:00 AM	2.04	2.5	0.46	0.95	426.0
2/25/2013	9:00:00 AM	2.04	2.5	0.46	0.95	426.0
2/25/2013	10:00:00 AM	2.04	2.5	0.46	0.95	426.0
2/25/2013	11:00:00 AM	2.04	2.5	0.46	0.95	426.0
2/25/2013	12:00:00 PM	2.04	2.5	0.46	0.95	426.0
2/25/2013	1:00:00 PM	2.03	2.5	0.47	0.98	440.0
2/25/2013	2:00:00 PM	2.04	2.5	0.46	0.95	426.0
2/25/2013	3:00:00 PM	2.04	2.5	0.46	0.95	426.0
2/25/2013	4:00:00 PM	2.04	2.5	0.46	0.95	426.0
2/25/2013	5:00:00 PM	2.03	2.5	0.47	0.98	440.0
2/25/2013	6:00:00 PM	2.04	2.5	0.46	0.95	426.0
2/25/2013	7:00:00 PM	2.04	2.5	0.46	0.95	426.0
2/25/2013	8:00:00 PM	2.03	2.5	0.47	0.98	440.0
2/25/2013	9:00:00 PM	2.03	2.5	0.47	0.98	440.0
2/25/2013	10:00:00 PM	2.03	2.5	0.47	0.98	440.0
2/25/2013	11:00:00 PM	2.03	2.5	0.47	0.98	440.0
2/26/2013	12:00:00 AM	2.03	2.5	0.47	0.98	440.0
2/26/2013	1:00:00 AM	2.03	2.5	0.47	0.98	440.0
2/26/2013	2:00:00 AM	2.03	2.5	0.47	0.98	440.0
2/26/2013	3:00:00 AM	2.03	2.5	0.47	0.98	440.0
2/26/2013	4:00:00 AM	2.03	2.5	0.47	0.98	440.0
2/26/2013	5:00:00 AM	2.04	2.5	0.46	0.95	426.0
2/26/2013	6:00:00 AM	2.03	2.5	0.47	0.98	440.0

2/26/2013	7:00:00 AM	2.04	2.5	0.46	0.95	426.0
2/26/2013	8:00:00 AM	2.03	2.5	0.47	0.98	440.0
2/26/2013	9:00:00 AM	2.03	2.5	0.47	0.98	440.0
2/26/2013	10:00:00 AM	2.03	2.5	0.47	0.98	440.0
2/26/2013	11:00:00 AM	2.03	2.5	0.47	0.98	440.0
2/26/2013	12:00:00 PM	2.04	2.5	0.46	0.95	426.0
2/26/2013	1:00:00 PM	2.04	2.5	0.46	0.95	426.0
2/26/2013	2:00:00 PM	2.05	2.5	0.45	0.92	412.1
2/26/2013	3:00:00 PM	2.04	2.5	0.46	0.95	426.0
2/26/2013	4:00:00 PM	2.04	2.5	0.46	0.95	426.0
2/26/2013	5:00:00 PM	2.04	2.5	0.46	0.95	426.0
2/26/2013	6:00:00 PM	2.04	2.5	0.46	0.95	426.0
2/26/2013	7:00:00 PM	2.03	2.5	0.47	0.98	440.0
2/26/2013	8:00:00 PM	2.04	2.5	0.46	0.95	426.0
2/26/2013	9:00:00 PM	2.03	2.5	0.47	0.98	440.0
2/26/2013	10:00:00 PM	2.03	2.5	0.47	0.98	440.0
2/26/2013	11:00:00 PM	2.03	2.5	0.47	0.98	440.0
2/27/2013	12:00:00 AM	2.03	2.5	0.47	0.98	440.0
2/27/2013	1:00:00 AM	2.03	2.5	0.47	0.98	440.0
2/27/2013	2:00:00 AM	2.02	2.5	0.48	1.01	454.3
2/27/2013	3:00:00 AM	2.03	2.5	0.47	0.98	440.0
2/27/2013	4:00:00 AM	2.03	2.5	0.47	0.98	440.0
2/27/2013	5:00:00 AM	2.03	2.5	0.47	0.98	440.0
2/27/2013	6:00:00 AM	2.03	2.5	0.47	0.98	440.0
2/27/2013	7:00:00 AM	2.03	2.5	0.47	0.98	440.0
2/27/2013	8:00:00 AM	2.03	2.5	0.47	0.98	440.0
2/27/2013	9:00:00 AM	2.03	2.5	0.47	0.98	440.0
2/27/2013	10:00:00 AM	2.04	2.5	0.46	0.95	426.0
2/27/2013	11:00:00 AM	2.05	2.5	0.45	0.92	412.1
2/27/2013	12:00:00 PM	2.06	2.5	0.44	0.89	398.3
2/27/2013	1:00:00 PM	2.07	2.5	0.43	0.86	384.7
2/27/2013	2:00:00 PM	2.06	2.5	0.44	0.89	398.3
2/27/2013	3:00:00 PM	2.04	2.5	0.46	0.95	426.0

==========

Transducer taken offline to perform functions tests and routine maintenance

==========

2/27/2013	5:00:00 PM	2.07	2.5	0.43	0.86	384.7
2/27/2013	6:00:00 PM	2.06	2.5	0.44	0.89	398.3
2/27/2013	7:00:00 PM	2.07	2.5	0.43	0.86	384.7
2/27/2013	8:00:00 PM	2.06	2.5	0.44	0.89	398.3
2/27/2013	9:00:00 PM	2.07	2.5	0.43	0.86	384.7
2/27/2013	10:00:00 PM	2.07	2.5	0.43	0.86	384.7
2/27/2013	11:00:00 PM	2.07	2.5	0.43	0.86	384.7
2/28/2013	12:00:00 AM	2.07	2.5	0.43	0.86	384.7
2/28/2013	1:00:00 AM	2.07	2.5	0.43	0.86	384.7
2/28/2013	2:00:00 AM	2.07	2.5	0.43	0.86	384.7
2/28/2013	3:00:00 AM	2.07	2.5	0.43	0.86	384.7

2/28/2013	4:00:00 AM	2.07	2.5	0.43	0.86	384.7
2/28/2013	5:00:00 AM	2.07	2.5	0.43	0.86	384.7
2/28/2013	6:00:00 AM	2.07	2.5	0.43	0.86	384.7
2/28/2013	7:00:00 AM	2.07	2.5	0.43	0.86	384.7
2/28/2013	8:00:00 AM	2.08	2.5	0.42	0.83	371.3
2/28/2013	9:00:00 AM	2.08	2.5	0.42	0.83	371.3
2/28/2013	10:00:00 AM	2.08	2.5	0.42	0.83	371.3
2/28/2013	11:00:00 AM	2.08	2.5	0.42	0.83	371.3
2/28/2013	12:00:00 PM	2.08	2.5	0.42	0.83	371.3
2/28/2013	1:00:00 PM	2.09	2.5	0.41	0.80	358.0
2/28/2013	2:00:00 PM	2.09	2.5	0.41	0.80	358.0
2/28/2013	3:00:00 PM	2.09	2.5	0.41	0.80	358.0
2/28/2013	4:00:00 PM	2.09	2.5	0.41	0.80	358.0
2/28/2013	5:00:00 PM	2.09	2.5	0.41	0.80	358.0
2/28/2013	6:00:00 PM	2.08	2.5	0.42	0.83	371.3
2/28/2013	7:00:00 PM	2.08	2.5	0.42	0.83	371.3
2/28/2013	8:00:00 PM	2.07	2.5	0.43	0.86	384.7
2/28/2013	9:00:00 PM	2.08	2.5	0.42	0.83	371.3
2/28/2013	10:00:00 PM	2.08	2.5	0.42	0.83	371.3
2/28/2013	11:00:00 PM	2.08	2.5	0.42	0.83	371.3

Appendix L

Technical Standard Operating Procedure – Collection of Cross-Channel Surface Water Samples

TABLE OF CONTENTS

1.0 PURPOSE ..... Page 2

2.0 SCOPE ..... Page 2

3.0 REQUIREMENTS ..... Page 2

3.1 Health and Safety ..... Page 2

4.0 REFERENCES ..... Page 2

5.0 DEFINITIONS ..... Page 3

6.0 RESPONSIBILITIES ..... Page 3

7.0 EQUIPMENT ..... Page 3

8.0 PROCEDURE ..... Page 3

8.1 General Procedures for Collection of Cross-Channel Water Samples ..... Page 3

8.2 Collection of Independent Samples in each Compartment ..... Page 4

8.3 Collection of a Composite Sample ..... Page 5

8.4 Dividing a Sample to Individual Analyte Bottles ..... Page 6

9.0 DOCUMENTATION/VERIFICATION ..... Page 6

Figure 1 ..... Page 7

1.0 PURPOSE

This standard operating procedure (SOP) describes the requirements and process for collecting surface water samples from multiple locations across the channel of a wadeable stream. Collecting multiple samples along a transect perpendicular to the stream flow will provide information on the homogeneity of water chemistry across the channel (if samples are analyzed independently) or will provide a representative sample of stream water chemistry (if individual samples are composited before analysis). This procedure can be used wherever it is possible to wade completely across the channel. Where the water is too deep for wading, these procedures maybe modified to be used from a stable boat. Samples collected using this method may be analyzed on-site or transported to a laboratory. Proper preservation techniques may vary depending on the target analytes. Site-specific deviations from this SOP must be approved by the AECI Project Manager or the Client Project Manager prior to initiation of the sampling activity.

2.0 SCOPE

Surface water sampling is applicable to most study sites with surface drainages directly on the site or that are located hydraulically downgradient from such drainages.

3.0 REQUIREMENTS

Factors that may affect the ability to collect cross-channel samples include channel width, water depth, water velocity, channel bed stability and composition of the substrata. For successful completion of this procedure, a site must be safely accessible by sampling personnel access to the entire width of the stream channel must be possible. Ultra clean methods shall be followed for sampling activities.

3.1 Health and Safety

Stream substrata, or bed material, can be highly variable, even within a small stream section, and may pose a risk to those working in the stream. Large rocks with significant algal growth can be slick and those pose a fall risk. Rocks and sand can shift when weight is applied to them. Sharp rocks, sticks and artificial debris (broken bottles, metals, barbed wire) can puncture boots and skin. Before wading into a new area of the stream, examine the area visually, if possible, and use one foot to gently probe and stream bottom for suitable footing. If necessary, use a wading staff for stability.

PPE: Waders, nitrile or similar gloves.

Operational or safety issues associated with this procedure shall be reported to the on-site supervisor, AECI Project Manager, SH&E Coordinator, or their designees for resolution. Employees and contractors are required to stop work when they believe work conditions are unsafe.

4.0 REFERENCES

USGS. 1999. *National Field Manual for the Collection of Water-Quality Data, Chapter A4. Collection of Water Samples*.

USEPA. *Water: Monitoring and Assessment*. Chapter 5 Water Quality Conditions. (website)

USEPA. 1999. Rapid *Bioassessment Protocols for use in Wadeable Streams and Rivers*. EPA 841-B-99-002.

USEPA. 1996. *Sampling Ambient Water for Trace Metals at EPA Water Quality Criteria Levels.* EPA Method 1669. Office of Water, Engineering and Analysis Division, Washington, DC.
USGS. 1985. *Study and Interpretation of the Chemical Characteristics of Natural Water*. USGS Water Supply Paper 2254.

5.0 DEFINITIONS

Environmental Sample – Low concentration sample typically collected offsite and not requiring DOT hazardous waste labeling as a high hazard sample.

Clean Hands – All operations involving contact with the sample bottle and transfer of the sample from the sample collection device to the sample bottle are handled by the individual designated as "clean hands."

Dirty Hands – All operations involving preparation of the sampler (except the sample container itself), operation of any machinery and all other activities that do not involve direct contact with the sample, shall be performed by the individual designated as "dirty hands."

6.0 RESPONSIBILITIES

Project Manager

The Project Manager (PM) is responsible for the selection of the appropriate methodology, technique and field procedure for conducting the sampling.

Field Project Leader

The Field Project Leader (FPL) may be an AECI employee or contractor who is responsible for overseeing the sampling activities. The FPL is also responsible for making on-site decisions as to slight shifts in the cross-channel sampling location in order to ensure a safe working environment and that representative samples will be collected. The FPL provides oversight for all work performed and verification that the activity satisfies the requirements of this SOP and the Project Plan.

7.0 EQUIPMENT

1. Sampling bottles (certified clean and pre-treated with preservatives, if necessary)
2. Large (~2 L to 5 gallon) mixing bottles (e.g., a clean cubitainer)
3. Decontamination equipment and supplies
4. Nitrile gloves
5. Shoulder-length gloves
6. Peristaltic sump, clean tubing and 0.45 µm inline filters, or
7. 60 cc syringes and 0.45 µm syringe filters
8. Labels
9. Sharpies® or other indelible markers
10. 100-foot tape measure or rope with accurately-marked intervals
11. ≥ 3 foot rebar or wooden stakes
12. Orange plastic flagging
13. Hammer

8.0 PROCEDURE

8.1 General Procedures for Collection of Cross-Channel Water Samples

- Determine whether the multiple samples collected across the channel will be composited into a single sample, or analyzed independently. If the latter, then sufficient volume must be collected at each site for all analyses.
- Acquire the necessary number and type of sample containers for all samples. A "sample" (composite or multiple individual samples) will consist of five (5) bottles, including two 250-mL acidified (to ≤ 2 pH with nitric acid) high density polyethylene (HDPE) bottles (one non-filtered for total metals and hardness analysis, and one filtered (0.45 µm) for dissolved metals analysis), one 250-mL HPDE bottle with NaOH (for cyanide analysis), one 250-mL HDPE bottle (unpreserved) for salinity, and one 500-mL HDPE bottle (unpreserved) for the remaining inorganic analyses.
- Upon arrival at the site, one member of the sampling shall be designated as "dirty hands" and a second member shall be designated as "clean hands."
- The cross-channel samples shall follow the general USGS procedure of equal-width-increment (EWI) sampling. Each stream section to be sampled will be of approximately equal width.
- If samples are to be collected at multiple transects, begin work at the furthest downstream location.
- Select the sampling transect location. One person shall stand at the edge of one bank of the stream holding the tape or rope and a second person shall carry the end of the tape or rope across the stream. As much as possible, minimize disturbance of the stream bottom and limit the area of travel to a narrow corridor. Samples shall always be collected upstream of the disturbed area.
- With the tape or rope as taut as possible, secure the tape/rope to stakes on each bank.
- Determine the number of sampling compartments (sections). See Figure 1 of this SOP and follow this general guidance:
    - Small stream (≤25 ft in width): 4-6 compartments
    - Intermediate stream (>25 – 50 ft in width): 6-12 compartments
    - Large stream (>50 ft in width): ≥ 12 compartments
- Stream features should also be used in determining the number of compartments. IT may be appropriate to place different features (pools, runs, ripples, eddies) into separate compartments. A seemingly homogenous reach (e.g., a consistent run) will probably require fewer compartments.
- Using the hammer, drive a stake into the stream bed marking the center of the compartment. Tie an orange flag at the top of each stake to make them more visible.

8.2 Collection of Independent Samples in each Compartment

- One of the unpreserved sample bottles may be used to collect water from the stream at each staked location, or a separate container may be used. As 1500 mL are needed for all analyses, a 2 L collection bottle would be adequate for collecting the individual compartment samples (new bottle for each compartment).
- Don clean gloves. Nitrile gloves are acceptable, however, for deeper water wear clean, shoulder-length gloves.
- Approach the location from the downstream side. Once in position, wait approximately 30 seconds (or longer if needed) for any disturbed fine sediment to be carried downstream.

- At the midpoint of the compartment, where the stake is located, rinse the bottle three times with stream water. Just upstream of the stake, place the sampling bottle into the water, gently lowering it through the water column. The mouth of the bottle should be facing generally upstream, but the bottle should be angled upward at ~20-45° to allow air to escape as the bottle fills. Do not touch the bottom of the stream, as that may disturb sediment. Raise the bottle slowly back up through the water column. The bottle should be full when it is lifted from the water.
- Securely replace the bottle cap and hand the filled bottle to another staff member (or place it on a rock or other location where it will not be carried downstream). Each bottle should be appropriately marked with the correct compartment number.
- Go to the next compartment, again approaching from the downstream side, and repeat the collection process.
- Divide the sample into the appropriate preserved and unpreserved bottles (see Section 8.4 of this SOP).

8.3 Collection of a Composite Sample

- Before collecting samples for analysis, determine in which compartment a sample bottle will fill the fastest when lowered and raised through the water column (e.g., 1 minute, 30 seconds, etc.). This will be the Transit time. Use this same Transit time at all compartments, even if a bottle is not completely filled when brought back to the surface.
- As 1500 mL are needed for all analyses, a 1 L collection bottle should be adequate for collecting the individual compartment samples, which will be mixed as a composite sample before being subdivided for analyses. Use a new bottle for each compartment.
- Don clean gloves. Nitrile gloves are acceptable, however, for deeper water wear clean, shoulder-length gloves.
- Approach the location from the downstream side. Once in position, wait approximately 30 seconds (or longer if needed) for any disturbed fine sediment to be carried downstream.
- At the midpoint of the compartment, where the stake is located, rinse the bottle three times with stream water. Just upstream of the stake, gently lower and raise the sampling bottle into the water within the pre-determined Transit time. The mouth of the bottle should be facing generally upstream, but the bottle should be angled upward at ~20-45° to allow air to escape as the bottle fills. Do not touch the bottom of the stream, as that may disturb sediment. The bottle may not be completely full when it is lifted from the water.
- Securely replace the bottle cap and hand the filled bottle to another staff member (or place it on a rock or other location where it will not be carried downstream). Each bottle should be appropriately marked with the correct compartment number.
- Go to the next compartment, again approaching from the downstream side, and repeat the collection process.

- When all compartment samples have been collected, mix each by vigorously inverting them no less than three times, and immediately emptying them into the large mixing bottle. Make sure the mixing bottle is large enough to contain the water collected.
- Cap the mixing bottle and homogenize the composite sample by vigorously and repeatedly swirling and inverting the bottle for no less than one minute.
- Divide the sample into the appropriate preserved and unpreserved bottles (see Section 8.4 of this SOP). Some sample may remain in the mixing bottle.

8.4 Dividing a Sample to Individual Analyte Bottles

- Fill all containers, <u>except</u> the one for dissolved metals, with the raw water sample, either the individual compartment samples, or the composite.
- <u>Do not</u> overfill the bottles that already contain preservative.
- For the dissolved metals sample, filter 250 mL of the raw water sample using a 1) peristaltic pump equipped with new, disposable tubing and a new, 0.45 µm filter, or 2) new, 60 cc syringe and 0.45 µm filter syringes.
- If using a pump, tubing and filter, place the intake tube into the raw sample and the outlet tube into the 250 mL sample bottle with preservative. Activate the pump and filter enough water to fill the sample bottle, without overfilling.
- If using a syringe and syringe filters, draw approximately 60 cc of the raw water sample into the syringe <u>before</u> the filter is attached. Attach the filter and depress the plunger while holding the syringe filter outlet over the preserved sample bottle. It may be necessary to stop and replace the filter if the raw water contains a high level of solids.
- Make sure all sample bottles are securely capped and labeled.

9.0 DOCUMENTATION/VERIFICATION

A record of field activities, including the number and type of samples collected, shall be recorded on field data sheets or in a field log. The log shall be reviewed by the FPL to verify the accuracy of the data.
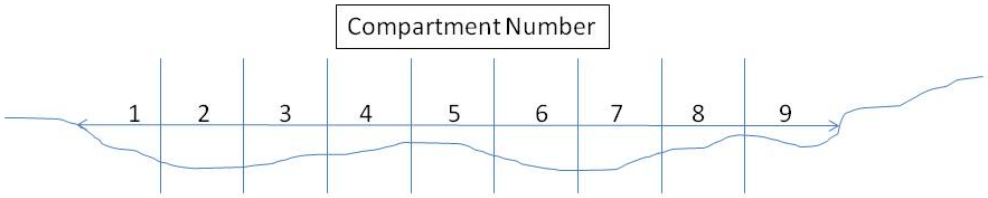
Figure 1. Example of the general placement of the cross-channel sampling compartments for the equal-width-increment (EWI) sampling procedure.