1290074

Rico Surface Water Sampling
Supplemental Surface Water Quality Monitoring
Rico, Colorado
Data Summary Report

Prepared for:
Atlantic Richfield Company
4 Centerpointe Drive
La Palma, CA 90623

Prepared by:

ANDERSON
ENGINEERING COMPANY INC.

977 West 2100 South
Salt Lake City, UT 84119
(801) 972-6222

January 2013

Table of Contents

1.0 Introduction 3
2.0 Field Sampling 3
2.1 Sampling Frequency 3
2.2 Water Quality and Flow Measurement Sampling Locations 3
2.3 Sampling Station Conditions and Desctiptions 5
2.4 Additional Sampling Locations 6
2.5 Simultaneous Operations 6
3.0 Sampling and Analysis Parameters and Methods 6
4.0 Flow Measurement Methods 10
5.0 Analytical Results 10
6.0 Quality Control 10
6.1 Field QC 10
6.2 Laboratory QC 11

List of Figures

Figure 1 Northern St. Louis Ponds Sampling Locations
Figure 2 Southern St. Louis Ponds Sampling Locations
Figure 3 Sampling Locations South of Rico
Figure 4 Dolores River Cross Section at Sampling Station DR-1
Figure 5 Dolores River Cross Section at Sampling Station DR-2
Figure 6 Pond 8 Embankment Cross Section at Sampling Station DR-5
Figure 7 Dolores River Cross Section at Sampling Station DR-7
Figure 8 Dolores River Cross Section at Sampling Station DR-4-SW
Figure 9 Dolores River Cross Section at Sampling Station DR-G

List of Tables

Table 1 Sampling Location Descriptions
Table 2 Analytical Procedures Summary
Table 3A Surface Water Location Sampling Field Data and Station Information Summary, January 2013
Table 3B Groundwater Well Sampling Field Data and Station Information Summary, January 2013
Table 3C Quality Control Samples Field Data and Station Information Summary, January 2013
Table 3D DR-2 Cross Section Composite Sampling Field Data and Flow Information Summary, January 2013
Table 3E DR-7 Cross Section Composite Sampling Field Data and Flow Information Summary, January 2013
Table 4A Surface Water Sampling Analytical Sampling Results Summary
Table 4B Groundwater Sampling Analytical Sampling Results Summary
Table 4C Dolores River Composite Sampling Analytical Sampling Results Summary, January 2013
Table 5A Relative Percent Difference (RPD) of Lab Analysis between DR-3 and Duplicate Sample DR-8
Table 5B Relative Percent Difference (RPD) of Lab Analysis between MW-4 DEEP and Duplicate Sample DR-9
Table 5C Relative Percent Difference (RPD) of Lab Analysis between MW-6 DEEP and Duplicate Sample DR-10
Table 5D Relative Percent Difference (RPD) of Lab Analysis between MW-104 and Duplicate Sample DR-11

List of Appendices

Appendix A	Sampling Location Maps
Appendix B	Data Tables
Appendix C	Project Narrative and Laboratory Analytical Reports
Appendix D	Laboratory QC Results
Appendix E	Flow Cross Sections
Appendix F	Chain of Custody Records
Appendix G	Field Photos
Appendix H	Field Log Book Records
Appendix I	North Flume OTT PLS Transducer Data with Flowrates
Appendix J	North Flume Ultrasonic Sensor Data with Flowrates
Appendix K	South Flume OTT Orpheus Mini Data with Flowrates
Appendix L	Technical Standard Operating Procedure – Collection of Cross Channel Surface Water Samples

1.0 Introduction

In accordance with the Rico Sampling and Analysis Plan for Supplemental Surface Water Quality Monitoring at Rico, CO prepared by AECOM, dated November 2010, the surface water sampling event was completed on January 15th – 24th, 2013. Sampling was completed by Anderson Engineering Co. Inc., by technicians who are familiar with the Rico sites and the BP Control of Work Management System. Surface water samples were collected from prescribed locations within the St. Louis settling pond system and at the system discharge (DR-6) to the Dolores River (collectively referred to as the St. Louis pond system), and previously sampled locations along the Dolores River above, at and below the St. Louis pond system. Figures 1, 2, and 3 in Appendix A illustrate the locations of the various points sampled monthly. Sample results have been summarized and laboratory analytical results are attached with quality control documentation.

2.0 Field Sampling

2.1 Sampling Frequency

The sampling period represented by this sampling event is for the month of January of 2013. Sampling will be performed on a monthly basis through at least the end of 2013.

2.2 Water Quality and Flow Measurement Sampling Locations

Surface water and groundwater samples were collected from the locations described on Table 1 and shown on Figures 1, 2, and 3 in Appendix A. In the fall of 2011, twelve (12) new monitoring wells were drilled in the vicinity of the recently constructed interim drying facility. Beginning November 2011, those wells were sampled and will continue to be sampled monthly along with the other sampling locations mentioned. In the fall of 2012, eight (8) new monitoring wells were drilled throughout the St. Louis Ponds site. Beginning November 2012, those wells were sampled and will continue to be sampled monthly along with the other sampling locations mentioned. Additionally, eight (8) historic groundwater wells are sampled on a monthly basis.

The Dolores River was sampled above the St. Louis pond system, and below the adit outfalls downstream of the reclaimed Silver Swan Mine area. The river was also sampled at the USGS gaging station downstream of the Silver Swan site.

TABLE 1 - Sample Location Descriptions

SITE ID	SITE LOCATION / DESCRIPTION
Surface Water Locations	
DR-1	Cross-section on the Dolores River approximately 1000 feet North of Pond 18.
DR-2	Cross-section on the Dolores River approximately 150 feet North of the system outfall.
DR-3	St. Louis Tunnel discharge at adit entrance. Sampling location is at the parshll flume located approximately 50 ft west of the cinder block structure at the former adit entrance.

DR-4	Discharge of Pond 15. The sampling location is at the outlet of the upper discharge pipe located on the midpoint of the Pond 15 south embankment.
DR-5	Discharge of Pond 8. The sampling location is at the inlet of the discharge spillway located at the southwest corner of Pond 8.
DR-6	St. Louis settling ponds system outfall to the Dolores River (previous permit Outfall 002). Sample location is at installed 9" parshall flume.
DR-7	Dolores River below St. Louis settling ponds system outfall. Sampling/flow measurement location is located just off the entrance road to the St. Louis ponds site where the Dolores River is adjacent to the entrance road. The site is located approximately 75 feet downstream of a large bend in the river that first brings the Dolores adjacent to the entrance road.
DR-4-SW	Dolores River below Silver Swan. Sampling/flow measurement location is on the Dolores River below the Silver Swan site just downstream of a bend in the river and below a cemetery on the east bank.
DR-G	Located approximately 3.5 miles downstream of the Silver Swan site, at the USGS gauging station #09165000 immediately downstream of the bridge at this location.
Groundwater Locations	
GW-1	Well is located on the north end of the site, approximately 1000 feet north of the northern edge of Pond 18 and about 75 feet northeast of DR-1
GW-3	Located approximately 200 feet north of the northern edge of pond 18, and approximately 60 feet west of the main access road.
GW-4	Located on the western flood dike of Pond 18, approximately midway along the dike.
GW-5	Located on the northern edge of the former Pond 17 area, or on the northern dike of the newly constructed drying cell 1.
GW-6	Located on the middle of the former Pond 17 area, or on the western edge of the south dike of the newly constructed drying cell 1.
GW-7	Located on the eastern edge of the access road directly across from the former Pond 17, or directly across from the newly constructed drying cell 2.
EB-1	Located on the northern edge of the former Pond 17 area, or on the northern dike of the newly constructed drying cell 1. It is within ten feet of GW-5.
EB-2	Located on the southern portion of the former Pond 16 area, or on the western edge of the south dike of the newly constructed drying cell 3.
MW-1 Shallow MW-1 Deep	Both wells are located about 4 feet apart on the western embankment of Pond 13 at the division between Pond 11 and Pond 12.
MW-2 Shallow MW-2 Deep	Both wells are located about 4 feet apart on the western flood embankment of Pond 12, about mid-way along the pond.
MW-3 Shallow MW-3 Deep	Both wells are located about 4 feet apart on the western flood embankment of Pond 15, on the southern half of the embankment.
MW-4 Shallow MW-4 Deep	Both wells are located about 4 feet apart on the southern embankment of Pond 13, approximately 60 west of the main east access road.
MW-5 Shallow	Both wells are located about 4 feet apart on the western dike of drying cell 3 (refer to Figure 2).

MW-5 Deep	
MW-6 Shallow MW-6 Deep	Both wells are located about 4 feet apart on northern embankment of Pond 13, approximately 75 feet west of the main east access road
MW-101	Well is located approximately 200 feet south of the lime plant building in the large open clearing within the St. Louis Road loop.
MW-102	Well is located approximately 150 feet southeast of well GW-7 at the point that the access road splits in two directions.
MW-103	Well is located at the southwest corner of Pond 7 on the flood control dike adjacent to the Dolores River.
MW-104	Well is located approximately midway along the west flood control dike of Pond 9.
MW-202	Well is located approximately 25 feet southeast of the cinder block structure at the former adit entrance.
MW-204	Well is located approximately 200 feet east of the cinder block structure at the former adit entrance, adjacent to the collapsed tunnel.
P13-102	Well is located at approximately the southeast end of the newly constructed dike at the southwest corner of Pond 13.
P13-103	Well is located approximately midway along the newly constructed dike at the south corner of Pond 13.
AT-2	Angle borehole casing is located approximately 220 feet east of the cinder block structure at the former adit entrance, adjacent to the collapsed tunnel.

2.3 Sampling Station Conditions and Desctiptions

The sampling requirements and stations are described in detail below, as well as the conditions at each station for this sampling period. Samples collected were collected per protocols identified in the Sampling and Analysis Plan (SAP). Flow measurements were collected per protocols identified in the SAP.

DR-1. Sampling location inaccessible due to excessive ice buildup in river and unsafe access conditions. Sample could not be collected. Flow measurements could not be collected.

DR-2. Sampling location fully accessible. Grab sample collected from east bank of river and composite sample collected from stream cross section. Flow measurements were collected by flowmeter.

DR-3. Flow measurement collected monthly by an installed 9” flume and water level measurement devices at the sampling location. Due to excessive winter storm activity in January, equipment at north flume suffered several power failures and data could not be obtained for this month. Manual measurement collected on 1-24-13 at 11:30 AM.

DR-4. Sample location partially accessible. Sample collected from upper drain pipe inlet in Pond 15. Snow conditions onsite prevented safe access to collect flow measurements. Flow estimated from water balance and previous month's flow measurements.

DR-5. Sampling location partially accessible. Sample collected at spillway. Due to excessive ice buildup and unsafe access conditions, flow measurements at the spillway could not be collected. Due to the shallow water and multiple paths,

accurate flow measurements could not be determined for this sampling location and period. Flows estimated by water balance between DR-3 and DR-6.

DR-6. Flow measurement by an installed 9" flume and water level measurement devices at the sampling location. Manual measurement collected on 1-24-13 at 2:15 PM.

DR-7. Sampling location fully accessible. Grab sample collected from east bank of river and composite sample collected from stream cross section. Flow measurements were collected by flowmeter.

DR-4-SW. Sampling location inaccessible due to excessive ice buildup in river and unsafe access conditions. Sample could not be collected. Flow measurements could not be collected.

DR-G. Sampling location inaccessible due to excessive ice buildup in river and unsafe access conditions. Sample could not be collected. Flow measurements could not be collected.

Monitoring Wells. All monitoring wells were sampled by use of a bailer, and field measurements were taken at the time of sampling, per protocols identified in the SAP. Depth measurements were also taken at this time. For the January 2013 sampling period, MW-2 Shallow, MW-3 Shallow, and MW-202 were dry. GW-7 well inaccessible due to snow and ice formation and could not be sampled.

2.4 Additional Sampling Locations

Some additional locations may be sampled during a monthly sampling event that are not included in the monthly sampling routine listed in Table 1. These samples are collected by special request for use in other projects or for other purposes outside of the scope of the monthly water sampling. Samples and field parameters for these locations are collected and processed per protocols identified in the SAP and Quality Assurance Project Plan (QAPP) for surface and groundwater sampling. Since they are collected during the same time period and sent to the lab with the other samples, these additional samples are often included in the same reports received from the lab.

Additional samples collected during the January 2013 sampling period include the following locations:

- CHV-101

Figure 10 in Appendix A shows the location of this additional sample. Field parameters for CHV-101 are included in Table 3B in Appendix B. The laboratory analysis data summary for this location is found on Table 4B in Appendix B.

2.5 Simultaneous Operations

During the month of January 2013, other projects were occurring simultaneously at the St. Louis Ponds site.

- Operation of the pilot scale wetland test was occurring during the sampling period. Detrimental effects from these operation are little to none.

3.0 Sampling and Analysis Parameters and Methods

All samples were collected as grab or composite samples. Samples were collected from well-mixed locations, which are representative of conditions within

the flow stream. Groundwater samples are purged according to protocols identified in the SAP. Lab-certified plastic bottles were used to collect sample water for analyses. Clean hands, dirty hands procedures were followed throughout the sampling. For quality control purposes, one duplicate sample was collected for every 10 samples collected and one field blank was included with the water samples being submitted to the laboratory for analysis. Composite river samples were collected in accordance with the technical standard operating procedure found in Appendix L.

Lab-certified plastic bottles were used to collect all water samples. Sample water was first collected in clean plastic jugs and field parameters were measured at the time of sample collection. Sample water was then placed in the sampling bottles soon thereafter per protocols identified in the SAP. The following sample bottles were used for collection and analysis (all samples collected without filtration unless otherwise indicated):

- One (1) 500mL HDPE bottle, unpreserved, for alkalinity, Total Dissolved Solids (TDS), Total Suspended Solids (TSS), chloride and sulfate analysis
- One (1) 250mL HDPE bottle, unpreserved, for salinity analysis
- One (1) 250mL HDPE bottle, preserved with HNO_3, for total metals, silica, and water hardness analysis
- One (1) 250mL HDPE bottle, preserved with HNO_3, for dissolved metals analysis. This sample is filtered in the field through a 0.45µm filter.
- One (1) 250mL HDPE bottle, preserved with HNO_3, for potentially dissolved metals analysis
- One (1) 250 mL HDPE bottle, preserved with NaOH and Zn Acetate, for sulfide analysis.
- One (1) 250 mL HDPE bottle, preserved with NaOH, for cyanide analysis
- One (1) 250 mL amber glass bottle, preserved with H_2SO_4, for Total Organic Carbon (TOC) and nitrate analysis

Field parameters were measured at the time of sample collection. Field measurement data for pH, temperature, electrical conductivity, dissolved oxygen, and Oxydation-Reduction Potential were recorded using a Hanna Instruments HI 9828 Multiparameter Meter, and results were logged in the field log book. Results of field measurements for all samples collected on site can be found in Tables 3A – 3E in Appendix B. Weather parameters including temperature and precipitation were obtained and documented in the Daily Toolbox Meeting Record.

All sample bottles were labeled to identify sample number, date and time of collection, type of analysis, and appropriate preservative. In addition, sample analysis/chain of custody forms were completed and processed at the time of sample collection. Original chain of custody forms are signed, dated, and placed in the sample container prior to sealing the container for shipment.

Water samples were kept in cooled containers and sent to the analytical laboratory. Samples were submitted to Pace Analytical Laboratories in Lenexa, Kansas for analysis by analytical procedures listed on Table 2. Analysis was performed according to methods specified in 40 CFR, Part 136 or other methods approved by the EPA. Laboratory methods and reporting limits for all parameters are presented in Table 2. Laboratory results and supporting documentation including quality assurance results are contained in the Appendix C and

Appendix D of this report. Results are summarized in Tables 4A – 4C in Appendix B of this report.

TABLE 2 - Analytical Procedures Summary

PARAMETER	DETECTION LIMIT (MDL)	REPORTING LIMIT (RL)	METHOD
FIELD PARAMETERS			
Dissolved Oxygen (ppm)	+/- 1.5% of reading	+/- 1.5% of reading	SM 4500-OG
Electrical Conductivity (mS/cm)	+/- 1% of reading	+/- 1% of reading	EPA 120.1
Temperature (°C)	+/- 0.15° C	+/- 0.15° C	Standard Method 2550
ORP (Oxidation Reduction Potential, mV)	+/- 1.0 mV	+/- 1.0 mV	Ag/AgCl Probe
pH (Standard pH Units)	+/- 0.02 pH	+/- 0.02 pH	EPA 150.2
NON-METALS			
Alkalinity (mg/L as $CaCO_3$)	20 mg/L	20 mg/L	SM 2320B
Chloride (mg/L)	1.0 mg/L	1.0 mg/L	EPA 300.0
Cyanide (μg/L as CN)	0.0021 mg/L	0.005 mg/L	SM 4500-CN-E
Hardness (mg/L as $CaCO_3$)	0.036 mg/L	0.071 mg/L	SM 2340B
Nitrogen, NO2 plus NO3 (mg/L)	0.022 mg/L	0.1 mg/L	EPA 353.2
Salinity (mg/L as dissolved solids)	6 mg/L	6 mg/L	SM 2510B (calculated)
Silica	0.027 mg/L	0.054 mg/L	EPA 200.8
Sulfate (mg/L as SO4)	0.15 mg/L	1.0 mg/L	EPA 300.0
Sulfides (mg/L)	0.018 mg/L	0.05 mg/L	4500-S-2 D
Total Dissolved Solids (mg/L as TDS)	5.0 mg/L	5.0 mg/L	SM 2540C
Total Organic Carbon (mg/L)	0.072 mg/L	0.5 mg/L	SM 5310C
Total Suspended Solids (mg/L as TSS)	5.0 mg/L	5.0 mg/L	SM 2540D
TOTAL, DISSOLVED, AND POTENTIALLY DISSOLVED METALS*			
Aluminum (μg/L as Al)	2.00 μg/L, 6.35 μg/L	4 μg/L, 50 μg/L	EPA 200.8, EPA 200.8
Antimony (μg/L as Sb)	0.100 μg/L, 0.03 μg/L	0.5 μg/L, 1 μg/L	EPA 200.8, EPA 200.8
Arsenic (μg/L as As)	0.138 μg/L, 0.05 μg/L	0.5 μg/L, 1 μg/L	EPA 200.8, EPA 200.8
Barium (μg/L as Ba)	0.150 μg/L, 0.08 μg/L	0.3 μg/L, 1 μg/L	EPA 200.8, EPA 200.8
Beryllium (μg/L as Be)	0.092 μg/L, 0.05 μg/L	0.2 μg/L, 0.5 μg/L	EPA 200.8, EPA 200.8
Cadmium (μg/L as Cd)	0.028 μg/L, 0.05 μg/L	0.08 μg/L, 0.5 μg/L	EPA 200.8, EPA 200.8
Calcium (μg/L as Ca)	10.000 μg/L, 10.35 μg/L	20 μg/L, 100 μg/L	EPA 200.8, EPA 200.7
Chromium (ug/l as Cr)	0.094 μg/L, 0.07 μg/L	0.5 μg/L, 1 μg/L	EPA 200.8, EPA 200.8
Cobalt (ug/l as Co)	0.250 μg/L, 0.08 μg/L	0.5 μg/L, 1 μg/L	EPA 200.8, EPA 200.8
Copper (μg/L as Cu)	0.184 μg/L, 0.12 μg/L	0.5 μg/L, 1 μg/L	EPA 200.8, EPA 200.8
Iron (μg/L as Fe)	10.00 μg/L, 2.95 μg/L	50 μg/L, 50 μg/L	EPA 200.8, EPA 200.8
Lead (μg/L as Pb)	0.018 μg/L, 0.03 μg/L	0.1 μg/L, 1 μg/L	EPA 200.8, EPA 200.8
Magnesium (μg/L as Mg)	2.31 μg/L, 6.48 μg/L	5 μg/L, 50 μg/L	EPA 200.8, EPA 200.7
Manganese (μg/L as Mn)	0.250 μg/L, 0.14 μg/L	0.5 μg/L, 1 μg/L	EPA 200.8, EPA 200.8
Mercury (μg/L as Hg)	0.1 μg/L, 0.053 μg/L	0.2 μg/L, 1 μg/L	EPA 245.1, EPA 245.1
Molybdenum (μg/L as Mo)	0.069 μg/L, 0.12 μg/L	0.5 μg/L, 1 μg/L	EPA 200.8, EPA 200.8
Nickel (μg/L as Ni)	0.151 μg/L, 0.07 μg/L	0.5 μg/L, 1 μg/L	EPA 200.8, EPA 200.8
Potassium (μg/L as K)	5.24 μg/L, 44.38 μg/L	20 μg/L, 500 μg/L	EPA 200.8, EPA 200.7
Selenium (ug/l as Se)	0.094 μg/L, 0.14 μg/L	0.5 μg/L, 1 μg/L	EPA 200.8, EPA 200.8
Silver (ug/L as Ag)	0.040 μg/L, 0.01 μg/L	0.5 μg/L, 0.5 μg/L	EPA 200.8, EPA 200.8
Sodium (μg/L as Na)	10.40 μg/L, 21.68 μg/L	50 μg/L, 500 μg/L	EPA 200.8, EPA 200.7
Thallium (μg/L as Tl)	0.019 μg/L, 0.02 μg/L	0.1 μg/L, 1 μg/L	EPA 200.8, EPA 200.8
Vanadium (μg/L as V)	0.037 μg/L, 0.11 μg/L	0.1 μg/L, 1 μg/L	EPA 200.8, EPA 200.8
Zinc (μg/L as Zn)	1.00 μg/L, 1.04 μg/L	5 μg/L, 10 μg/L	EPA 200.8, EPA 200.8

*Limits and methods for metals displayed in following format: Total and Dissolved Metals, Potentially Dissolved Metals

4.0 Flow Measurement Methods

Flow velocity measurements were taken at the river sampling locations where accessible. Flow measurements were not collected at areas where ice and snow buildup or high, fast flows prohibited safe access. The flow measurements obtained this sampling period are described in Section 2.3. For this sampling period, flowrates were not measured for river and pond sampling locations DR-1, DR-4, DR-5, DR-4-SW, and DR-G due to excessive ice buildup and unsafe access conditions. Flow measurements were collected at DR-2, DR-3, DR-6, and DR-7. Refer to Figures 4 through 9 in Appendix E for Dolores River cross sections. The flowrates are presented on Tables 3A, 3D, and 3E in Appendix B.

The St. Louis tunnel flow (DR-3) and St. Louis pond discharge (DR-6) currently have Parshall flumes installed. Flow measurements can be determined at these flumes when the depth of flow is known at a particular point. In order to continuously monitor and measure the depth of flow, depth measurement devices were installed on May 11th, 2011 and May 12th, 2011 at both the north and south flumes. An STI Ultrasonic IRU-5180 automated water level detector was installed at the north Parshall flume. In order to obtain further flow data, an OTT PLS submersible pressure transducer was installed at the north flume in December 2011. In January 2012, it was decided that the OTT PLS would be used exclusively at the north flume to report flow data, and that the ultrasonic meter would remain only as a backup flow measurement system. This was due in large part to the stability and uniformity observed in the data from the OTT PLS, as opposed to the ultrasonic meter, which exhibited greater instability and variability in the readings that the OTT PLS. The south flume has a submersible pressure transducer called the OTT Orpheus Mini. It records deviations from a pre-programmed depth of air space from the top edge of the flume down to the water level. Knowing then the total depth of the flume, the depth of flow can be determined. The post processed data for the OTT PLS, the STI Ultrasonic IRU-5180, and the OTT Orpheus Mini are given in Appendix I, J, and K, respectively.

During the month of January 2013, snow storms on-site caused snow to build up on the solar panel that charges the battery powering the flow equipment at DR-3. As a result, the battery lost power multiple times throughout the month. Usable data was not recorded during the month of January. Power was not restored until early February.

5.0 Analytical Results

The results of the laboratory analysis are summarized on Tables 4A – 4C in Appendix B. The data is organized by sample location. The Pace Lab reports for all results are contained in Appendix C.

6.0 Quality Control

In addition to the standard laboratory Quality Control (QC), field QC samples for this sampling event included one field duplicate for every 10 samples collected and a Field Blank (FB).

6.1 Field QC

A field duplicate water sample was obtained for every 10 samples collected. Field duplicate samples are assigned the Sample IDs DR-8, DR-9, DR-10, DR-11, and so forth for as many samples as are collected. During the January 2013

sampling period these duplicate samples were collected at stations DR-3 (DR-8), MW-4 DEEP (DR-9), MW-6 DEEP (DR-10), and MW-104 (DR-11). During sample collection, the duplicate sample bottles were filled simultaneously from the discharge stream or source of water. The duplicate sample was submitted to the analytical laboratory as “blind duplicate” samples.

Tables 5A – 5D in Appendix B compare the analytical results for all parameters from all duplicate sample collected and present the Relative Percent Difference (RPD). The RPD for aqueous samples should be +/- 20%.

A Field Blank (FB) was collected by processing and analyzing a bottle of distilled water in the field in the same manner as any other sample. The FB was analyzed for the same constituents as the other samples. The FB had concentrations below the reporting limit for all metals except for a small number of total, dissolved, and potentially dissolved metals. The pH was slightly above neutral, the Electrical Conductivity (EC) was very low, it showed a non-detectable level of alkalinity, and a non-detectable level of TDS.

6.2 Laboratory QC

The laboratory control sample (LCS), method blank, matrix spike, and matrix spike duplicate sample results were all within the established limits of concentration, percent recovery, and relative percent difference, with several minor exceptions. Please refer to the Laboratory QC Results in Appendix D for exceptions and for a full QC report.

Appendix A

Sampling Location Maps

1 NORTHERN ST. LOUIS PONDS SAMPLING LOCATIONS

SCALE - 1" = 350'

THESE PLANS AND SPECIFICATIONS ARE THE PROPERTY OF ANDERSON ENGINEERING COMPANY, INC., 977 WEST 2100 SOUTH, SALT LAKE CITY, UTAH, 84119 AND SHALL NOT BE COPIED, REDUCED, OR REPRODUCED WITHOUT THEIR WRITTEN PERMISSION.

General Notes

SCALE IN FEET
0 175 350

No.	Revision/Issue	Date

BP

ANDERSON
ENGINEERING COMPANY, INC.
977 WEST 2100 SOUTH
SALT LAKE CITY, UTAH 84119
(801) 972-6222

RICO WATER SAMPLING

NORTHERN ST. LOUIS PONDS
SAMPLING LOCATIONS

RICO,
COLORADO

DRAWN BY:	MAD
ENGINEER:	MAD
APPROVED:	MAD

Project	Sheet
Date 22-Oct-12	1
Scale 1" = 350'	

C:\Users\MRG-AD\Documents\RICO\Rico Water Sampling\Monthly Sampling Data\December 2012\Appendices\Appendix A - Sampling Location Maps\Rico 2012 sampling locations maps.dwg

2 SOUTHERN ST. LOUIS PONDS SAMPLING LOCATIONS

SCALE - 1" = 350'

THESE PLANS AND SPECIFICATIONS ARE THE PROPERTY OF ANDERSON ENGINEERING COMPANY, INC., 977 WEST 2100 SOUTH, SALT LAKE CITY, UTAH, 84119 AND SHALL NOT BE COPIED, REDUCED, OR REPRODUCED WITHOUT THEIR WRITTEN PERMISSION.

General Notes

SCALE IN FEET
0 175 350

No.	Revision/Issue	Date

BP

ANDERSON
ENGINEERING COMPANY, INC.
977 WEST 2100 SOUTH
SALT LAKE CITY, UTAH 84119
(801) 972-6222

RICO WATER SAMPLING

SOUTHERN ST. LOUIS PONDS
SAMPLING LOCATIONS

RICO,
COLORADO

DRAWN BY:	MAD
ENGINEER:	MAD
APPROVED:	MAD

Project	Sheet
Date 22-Oct-12	2
Scale 1" = 350'	

C:\Users\AEC2-MD\Documents\AECO\Rico Water Sampling\Monthly Sampling Data\December 2012\Appendices\Appendix A - Sampling Location Maps\Rico Map\2012 sampling locations map2.dwg

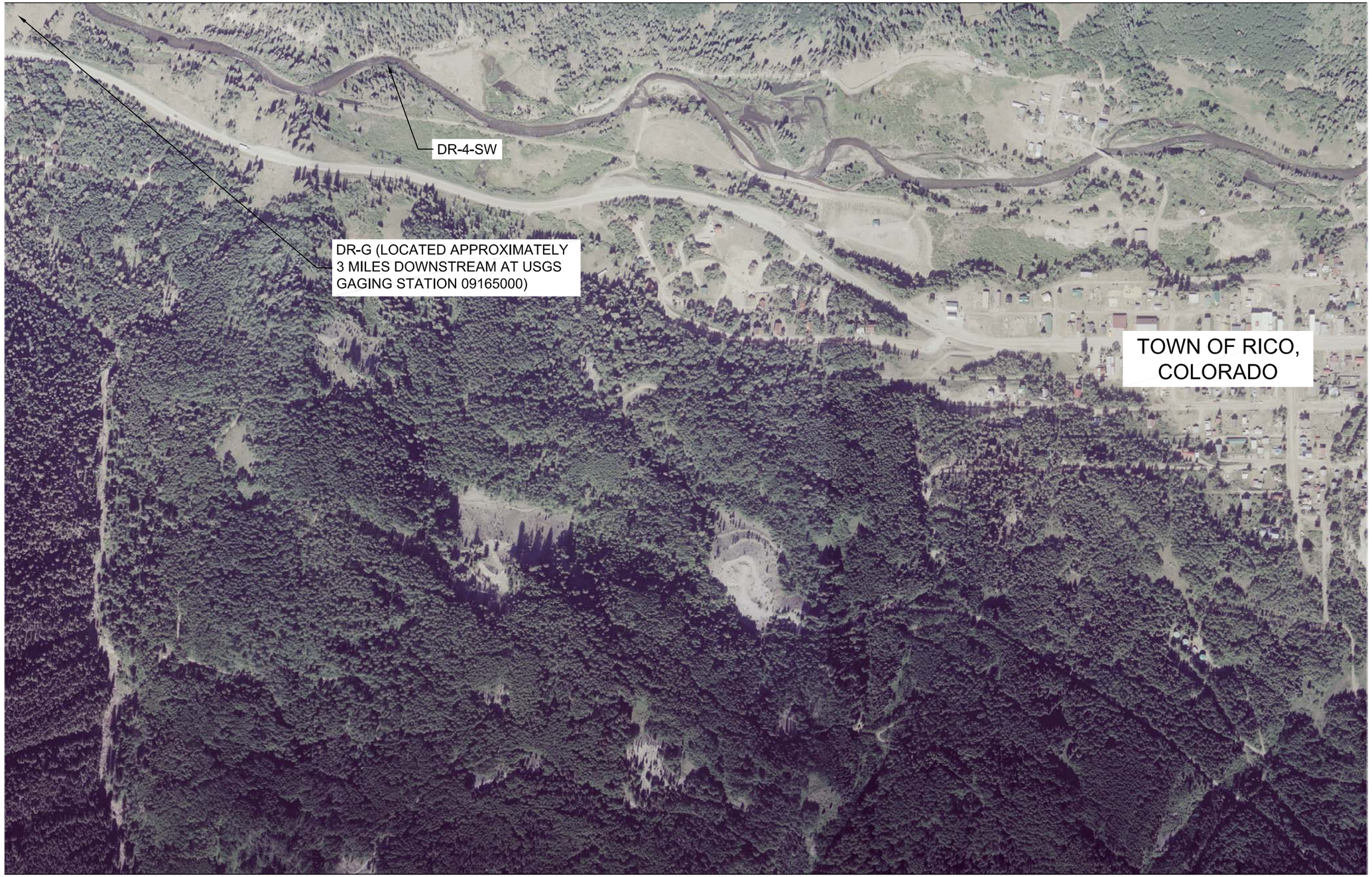

3 **SAMPLING LOCATIONS SOUTH OF RICO, CO**

SCALE - 1" = 500'

THESE PLANS AND SPECIFICATIONS ARE THE PROPERTY OF ANDERSON ENGINEERING COMPANY, INC., 977 WEST 2100 SOUTH, SALT LAKE CITY, UTAH, 84119 AND SHALL NOT BE COPIED, REDUCED, OR REPRODUCED WITHOUT THEIR WRITTEN PERMISSION.

General Notes

SCALE IN FEET
0 250 500

No.	Revision/Issue	Date

BP / ARCO

ANDERSON
ENGINEERING COMPANY, INC.
977 WEST 2100 SOUTH
SALT LAKE CITY, UTAH 84119
(801) 972-6222

RICO SURFACE WATER SAMOPLING

SAMPLING LOCATIONS SOUTH OF RICO, CO

RICO, COLORADO

DRAWN BY:	MAD
ENGINEER:	MAD
APPROVED:	CES

Project	Sheet 3
Date 5-Apr-12	
Scale 1" = 500'	

C:\Users\AECI-MD\Documents\RICO\Rico Water Sampling\Monthly Sampling Data\November 2012\Appendices\Appendix A - Sampling Location Maps\Locations south of Rico.dwg

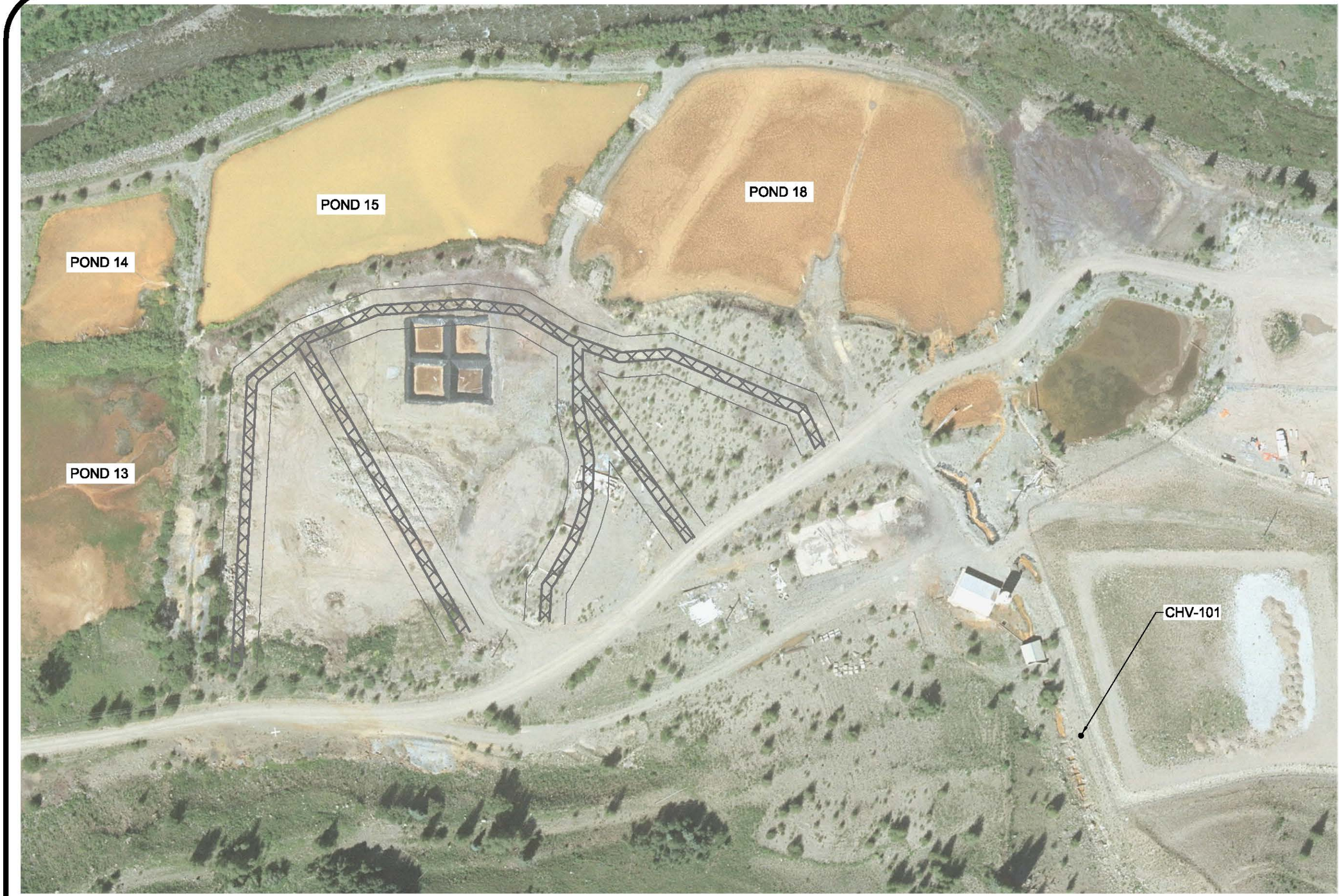

10 **ADDITIONAL SAMPLE COLLECTION POINTS, JAN 2013**

SCALE - 1" = 100'

General Notes

SCALE IN FEET
0 50 100

No.	Revision/Issue	Date

BP

ANDERSON
ENGINEERING COMPANY, INC.
977 WEST 2100 SOUTH
SALT LAKE CITY, UTAH 84119
(801) 972-6222

RICO WATER SAMPLING

ADDITIONAL SAMPLE COLLECTION LOCATIONS, JANUARY 2013

RICO, COLORADO

DRAWN BY:	MAD
ENGINEER:	MAD
APPROVED:	MAD

Project	Sheet
Date JAN 2013	10
Scale 1" = 100'	

THESE PLANS AND SPECIFICATIONS ARE THE PROPERTY OF ANDERSON ENGINEERING COMPANY, INC., 977 WEST 2100 SOUTH, SALT LAKE CITY, UTAH, 84119 AND SHALL NOT BE COPIED, REDUCED, OR REPRODUCED WITHOUT THEIR WRITTEN PERMISSION.

G:\Users\AEC2-820\Documents\2020\Rico Water Sampling\Monthly Sampling Data\January 2013\Jan 2013 extra samples.dwg

Appendix B

Data Tables

TABLE 3A - Surface Water Location Sampling Field Data and Station Information Summary, January 2013

			Field Measurements							GPS Location (Colorado State Plane NAD83)		Flow Data				Comments
Sample Location	Date of Sample Collection	Field Technicians	pH	Temp (°C)	EC (mS/cm)	Dissolved Oxygen (ppm)	Oxydation Reduction Potential (ORP, mV)	Well Casing Elevation (ft)	Well Water Elevation (ft)	Northing	Easting	Stream Cross section area (ft^2)	Flowrate cfs / gpm			
DR-1	COULD NOT OBTAIN DUE TO SEVERE WEATHER AND UNSAFE ACCESS CONDITIONS							NA	NA	1389970.4600	2267573.6490	CNO	CNO		CNO	Cross section on the Dolores River above St. Louis settling pond system (approximately 800 ft north of the northern edge of Pond 18). Flow measurement could not be obtained due to excessive ice buildup and unsafe access conditions.
DR-2	1/24/2013	Tim Barbee, Jody Gisseman	7.20	3.68	0.562	7.56	-8.2	NA	NA	1386660.9610	2267971.4630	20.35	8.41		3774	Cross section on the Dolores River, approximately 150 ft north of system outfall. Flow measurement by flowmeter
DR-3	1/15/2013	Tim Barbee, Jody Gisseman	6.31	14.08	1.449	2.52	-63.7	NA	NA	1388963.0808	2268004.6974	NA	Ultrasonic	CNO	CNO	St Louis adit discharge. Flow measurement by installed Parshall Flume. Due to excessive winter storm activity in January, equipment at north flume suffered several power failures and data could not be obtained for this month. Manual measurement collected on 1-24-13 at 11:30 AM.
													Transducer	CNO	CNO	
													Manual	1.42	637	
DR-4	1/15/2013	Tim Barbee, Jody Gisseman	11.44	5.12	1.432	5.56	-53.7	NA	NA	1388153.6284	2267799.1579	NA	1.33		597	Pond 15 discharge. Snow conditions onsite prevented safe access to collect flow measurements. Flow estimated from water balance and previous month's flow measurements. pH value higher than expected, possibly due to slight degredation of pH probe. Replacement probe already on order.
DR-5	1/24/2013	Tim Barbee, Jody Gisseman	7.10	4.36	1.625	5.60	-6.9	NA	NA	1387273.4503	2268024.8524	NA	1.28		574	Pond 8 was discharging at multiple small locations as well as the spillway. Due to the shallow water and multiple paths, accurate flow measurements could not be determined for this sampling location and period. Due to excessive ice buildup and unsafe access conditions, flow measurements at the spillway could not be collected. Flows estimated by water balance between DR-3 and DR-6.
DR-6	1/24/2013	Tim Barbee, Jody Gisseman	6.66	2.34	1.773	7.22	-14.1	NA	NA	1386431.4984	2267964.5711	NA	Transducer	1.27	570	Outfall to Dolores River. Flow measurement by installed Parshall Flume. Water level by OTT Orpheus Mini submersible pressure transducer. Manual flow measurement collected on 1-24-13 at 2:15 PM.
													Manual	1.21	543	
DR-7	1/24/2013	Tim Barbee, Jody Gisseman	8.04	5.34	0.834	6.44	-10.6	NA	NA	1385880.1050	2267983.4510	16.45	11.25		5047	Cross section on the Dolores River, approximately 500 ft below St. Louis settling pond system outfall. Flow measurement could not be obtained due to excessive ice buildup and unsafe access conditions.
DR-4-SW	COULD NOT OBTAIN DUE TO SEVERE WEATHER AND UNSAFE ACCESS CONDITIONS							NA	NA	1379176.1190	2266285.0850	CNO	CNO		CNO	Cross section on the Dolores River approximately 100 below the Silver Swan site. Flow measurement could not be obtained due to excessive ice buildup and unsafe access conditions.
DR-G	COULD NOT OBTAIN DUE TO SEVERE WEATHER AND UNSAFE ACCESS CONDITIONS							NA	NA	1364029.7850	2258752.9060	CNO	CNO		CNO	Cross section on the Dolores River at USGS gauging station #09165000, approximately 3.5 miles downstream of the Silver Swan site. Flow measurement could not be obtained due to excessive ice buildup and unsafe access conditions.

ANDERSON
ENGINEERING COMPANY INC.

TABLE 3B - Groundwater Well Sampling Field Data and Station Information Summary, January 2013

			Field Measurements							GPS Location (Colorado State Plane NAD83)		Flow Data			
Sample Location	Date of Sample Collection	Field Technicians	pH	Temp (°C)	EC (mS/cm)	Dissolved Oxygen (ppm)	Oxydation Reduction Potential (ORP, mV)	Well Casing Elevation (ft)	Well Water Elevation (ft)	Northing	Easting	Stream Cross section area (ft^2)	Flowrate cfs / gpm		Comments
GW-1	1/15/2013	Tim Barbee, Jody Gisseman	7.03	4.65	0.464	3.67	-83.4	8840.13	8837.49	1390006.0210	2267642.6870	NA	NA	NA	Located on the north end of the site, approximately a quarter mile north of the northern edge of Pond 18.
GW-3	1/17/2013	Tim Barbee, Jody Gisseman	7.81	6.41	0.839	4.14	-46.7	8836.68	8823.59	1389221.9930	2267708.3940	NA	NA	NA	Located approximately 200 feet north of the northern edge of pond 18, and approximately 60 feet west of the main access road.
GW-4	1/16/2013	Tim Barbee, Jody Gisseman	8.95	6.44	1.260	0.00	-111.3	8826.79	8815.72	1388790.0720	2267553.5420	NA	NA	NA	Located on the western flood dike of Pond 18, approximately midway along the dike.
GW-5	1/15/2013	Tim Barbee, Jody Gisseman	6.47	6.79	2.853	0.66	-65.1	8839.52	8816.92	1388802.0650	2267911.8020	NA	NA	NA	Located on the northern edge of the former Pond 17 area, or on the northern dike of the newly constructed drying cell 1.
GW-6	1/15/2013	Tim Barbee, Jody Gisseman	14.00	6.66	2.234	0.21	-51.1	8837.45	8815.43	1388589.3950	2267922.5090	NA	NA	NA	Located on the middle of the former Pond 17 area, or on the western edge of the south dike of the newly constructed drying cell 1. pH value higher than expected, possibly due to slight degredation of pH probe. Replacement probe already on order.
GW-7	WELL FROZEN, COULD NOT OBTAIN SAMPLE							8840.00	CNO	1388611.4370	2268158.0170	NA	NA	NA	GW-7 Located on the eastern edge of the access road directly across from the former Pond 17, or directly across from the newly constructed drying cell 2. Well was inaccessible due to snow and ice formation and could not be sampled.
EB-1	1/16/2013	Tim Barbee, Jody Gisseman	6.64	8.31	2.419	1.55	-92.6	8839.86	8816.88	1388792.4420	2267916.9080	NA	NA	NA	Located on the northern edge of the former Pond 17 area, or on the northern dike of the newly constructed drying cell 1. It is within ten feet of GW-5.
EB-2	1/16/2013	Tim Barbee, Jody Gisseman	5.42	10.07	3.905	0.11	-77.6	8829.84	8812.57	1388306.1480	2267920.2500	NA	NA	NA	Located on the southern portion of the former Pond 16 area, or on the western edge of the south dike of the newly constructed drying cell 3.
MW-1 SHALLOW	1/16/2013	Tim Barbee, Jody Gisseman	6.58	4.50	1.434	5.53	-68.7	8810.87	8804.21	1387826.7470	2267944.5160	NA	NA	NA	Both wells are located about 4 feet apart on the western embankment of Pond 13 at the division between Pond 11 and Pond 12.
MW-1 DEEP	1/16/2013	Tim Barbee, Jody Gisseman	7.84	6.00	1.453	4.11	-95.6	8810.85	8801.09	1387829.4070	2267940.5680	NA	NA	NA	
MW-2 SHALLOW	DRY WELL							8810.23	CNO	1387829.7580	2267759.0810	NA	NA	NA	Both wells are located about 4 feet apart on the western flood embankment of Pond 12, about mid-way along the pond. MW-2 SHALLOW was dry
MW-2 DEEP	1/16/2013	Tim Barbee, Jody Gisseman	7.01	9.38	1.465	2.64	-91.2	8810.21	8800.01	1387836.0950	2267756.0910	NA	NA	NA	
MW-3 SHALLOW	DRY WELL							8819.57	CNO	1388308.0910	2267603.5420	NA	NA	NA	Both wells are located about 4 feet apart on the western flood embankment of Pond 15, on the southern half of the embankment. MW-3 SHALLOW was dry.
MW-3 DEEP	1/16/2013	Tim Barbee, Jody Gisseman	7.59	8.70	1.493	0.12	-88.6	8819.72	8809.65	1388313.2060	2267601.6050	NA	NA	NA	
MW-4 SHALLOW	1/17/2013	Tim Barbee, Jody Gisseman	14.00	11.31	1.366	3.01	81.1	8816.83	8799.62	1387836.9670	2268221.9370	NA	NA	NA	Both wells are located about 4 feet apart on the southern embankment of Pond 13, approximately 60 west of the main east access road. pH value higher than expected, possibly due to slight degredation of pH probe. Replacement probe already on order.
MW-4 DEEP	1/16/2013	Tim Barbee, Jody Gisseman	13.01	8.10	1.721	1.14	-56.9	8816.77	8799.62	1387839.1320	2268224.8950	NA	NA	NA	
MW-5 SHALLOW	1/16/2013	Tim Barbee, Jody Gisseman	14.00	10.03	3.984	0.3	-51.7	8830.95	8813.99	1388369.7050	2267814.3980	NA	NA	NA	Both wells are located about 4 feet apart on the western dike of drying cell 3 (refer to Figure 2). pH value higher than expected, possibly due to slight degredation of pH probe. Replacement probe already on order.
MW-5 DEEP	1/16/2013	Tim Barbee, Jody Gisseman	8.02	10.10	2.123	0.22	-91.6	8830.73	8812.92	1388374.5740	2267813.8150	NA	NA	NA	
MW-6 SHALLOW	1/16/2013	Tim Barbee, Jody Gisseman	6.44	9.32	2.476	0.51	-89.7	8830.58	8806.90	1388166.1000	2268148.1000	NA	NA	NA	Both wells are located about 4 feet apart on northern embankment of Pond 13, approximately 75 feet west of the main east access road. MW-6 Deep was frozen at the time of depth measurement, but not at the time of sample collection.
MW-6 DEEP	1/16/2013	Tim Barbee, Jody Gisseman	7.26	10.02	1.823	0.42	-106.8	8830.11	8806.61	1388165.5290	2268153.3270	NA	NA	NA	
MW-101	1/24/2013	Tim Barbee, Jody Gisseman	6.23	10.44	2.212	0.12	-16.7	8845.417	8818.32	1388742.4460	2268096.7400	NA	NA	NA	Located east of Drying Cells 1 / 2 boundary dike, inside the St Louis Access road loop, south of the St. Louis lab bldg.
MW-102	1/24/2013	Tim Barbee, Jody Gisseman	6.75	10.37	1.476	1.92	-12.9	8841.30	8816.66	1388482.8360	2268230.4920	NA	NA	NA	Located east of Drying Cell 4, in the St Louis Access road at the south end of the road loop.
MW-103	1/24/2013	Tim Barbee, Jody Gisseman	6.04	7.13	2.026	0.31	-10.9	8797.799	8790.74	1387371.9920	2268003.3380	NA	NA	NA	Located on the western flood embankment of Pond 9, approximately 175 feet south of the north west corner of Pond 9.
MW-104	1/24/2013	Tim Barbee, Jody Gisseman	6.75	4.03	1.813	3.42	-17.4	8785.60	8781.22	1390006.0210	2267642.6870	NA	NA	NA	Located on the western flood embankment between Ponds 6 and 7.
MW-202	DRY WELL							8859.206	CNO	1388999.6490	2268195.9780	NA	NA	NA	Located approximately 30 feet south of the remnant portal structure of the St. Louis Adit discharge.
MW-204	1/24/2013	Tim Barbee, Jody Gisseman	6.54	12.34	1.577	1.69	-15.4	8865.95	8851.01	1389122.4820	2268373.7870	NA	NA	NA	Located west of collapsed St. Louis adit base, approximately 30 feet west of AT-2.
P13-102	1/16/2013	Tim Barbee, Jody Gisseman	14.00	8.63	2.231	0.84	-74.2	8810.643	8799.83	1387785.4540	2268076.6470	NA	NA	NA	Located on Pond 13 dike near southeast corner of pond. pH value higher than expected, possibly due to slight degredation of pH probe. Replacement probe already on order.
P13-103	1/16/2013	Tim Barbee, Jody Gisseman	6.40	8.00	1.793	0.08	-83.4	8811.46	8800.35	1387856.4350	2267994.0830	NA	NA	NA	Located on Pond 13 causeway just north of the dike.
AT-2	1/24/2013	Tim Barbee, Jody Gisseman	6.88	15.79	1.152	4.27	-19.7	8811.464	-	1387856.4350	2267994.0830	NA	NA	NA	Located on Pond 13 causeway just north of the dike.
CHV-101	1/24/2013	Tim Barbee, Jody Gisseman	6.32	13.84	1.622	2.04	-2.3	8858.93	-	1389079.2880	2268257.5150	NA	NA	NA	Located approximately 100 feet northeast of the remnant portal structure of the St. Louis Discharge Adit.

ANDERSON
ENGINEERING COMPANY INC.

TABLE 3C - Quality Control Samples Field Data and Station Information Summary, January 2013

			Field Measurements							GPS Location (Colorado State Plane NAD83)		Flow Data			Comments
Sample Location	Date of Sample Collection	Field Technicians	pH	Temp (°C)	EC (mS/cm)	Dissolved Oxygen (ppm)	Oxydation Reduction Potential (ORP, mV)	Well Casing Elevation (ft)	Well Water Elevation (ft)	Northing	Easting	Stream Cross section area (ft^2)	Flowrate cfs / gpm		
Duplicate Samples															
DR-8	1/15/2013	Tim Barbee, Jody Gisseman	6.27	14.91	1.448	3.05	-54.7	NA	NA	NA	NA	NA	NA	NA	Duplicate of DR-3.
DR-9	1/16/2013	Tim Barbee, Jody Gisseman	12.26	9.18	1.697	1.16	-51.8	NA	NA	NA	NA	NA	NA	NA	Duplicate of MW-4 DEEP. pH value higher than expected, possibly due to slight degredation of pH probe. Replacement probe already on order.
DR-10	1/16/2013	Tim Barbee, Jody Gisseman	6.22	9.44	1.835	0.42	-89.0	NA	NA	NA	NA	NA	NA	NA	Duplicate of MW-6 DEEP.
DR-11	1/24/2013	Tim Barbee, Jody Gisseman	7.88	5.61	1.759	3.52	-14.3	NA	NA	NA	NA	NA	NA	NA	Duplicate of MW-104.
Field Blanks															
FB	1/24/2013	Tim Barbee, Jody Gisseman	7.56	9.51	0.003	7.69	-31.9	NA	NA	NA	NA	NA	NA	NA	Field blank

ANDERSON
ENGINEERING COMPANY INC.

Table 3D - DR-2 Cross Section Composite Sampling Field Data and Flow Information Summary, January 2013

			Field Measurements					GPS Location (Colorado State Plane NAD83)		Flow Data			
Sample Location	Date of Sample Collection	Field Technicians	pH	Temp (°C)	EC (mS/cm)	Dissolved Oxygen (ppm)	Oxydation Reduction Potential (ORP, mV)	Northing*	Easting*	Compartment Geometry		Average Flowrate**	
										Width (ft)	Area (ft^2)	cfs	gpm
DR-2_COMPARTMENT 1	1/24/2013	Tim Barbee, Jody Gisseman	8.43	2.12	0.581	10.31	-11.5	1386655.2194	2267948.6853	5	2.85	0.40	181
DR-2_COMPARTMENT 2	1/24/2013	Tim Barbee, Jody Gisseman	8.41	1.96	0.559	10.25	-12.4	1386654.0005	2267943.8362	5	5.45	3.09	1389
DR-2_COMPARTMENT 3	1/24/2013	Tim Barbee, Jody Gisseman	8.41	1.97	0.563	10.40	-12.1	1386652.7816	2267938.9870	5	4.30	2.97	1334
DR-2_COMPARTMENT 4	1/24/2013	Tim Barbee, Jody Gisseman	8.26	2.11	0.587	10.22	-11.7	1386651.5626	2267934.1379	5	4.90	1.87	840
DR-2_COMPARTMENT 5	1/24/2013	Tim Barbee, Jody Gisseman	7.94	2.29	0.651	9.36	-11.4	1386650.3437	2267929.2887	5	2.85	0.06	28
DR-2_COMPOSITE	1/24/2013	Tim Barbee, Jody Gisseman	7.34	4.45	0.561	5.93	-12.5	-	-	25	20.35	8.41	3772

*Northing and easting values are estimates based on surveyed benchmark on east bank of river at this location

**Flowrates collected on 1/22/13

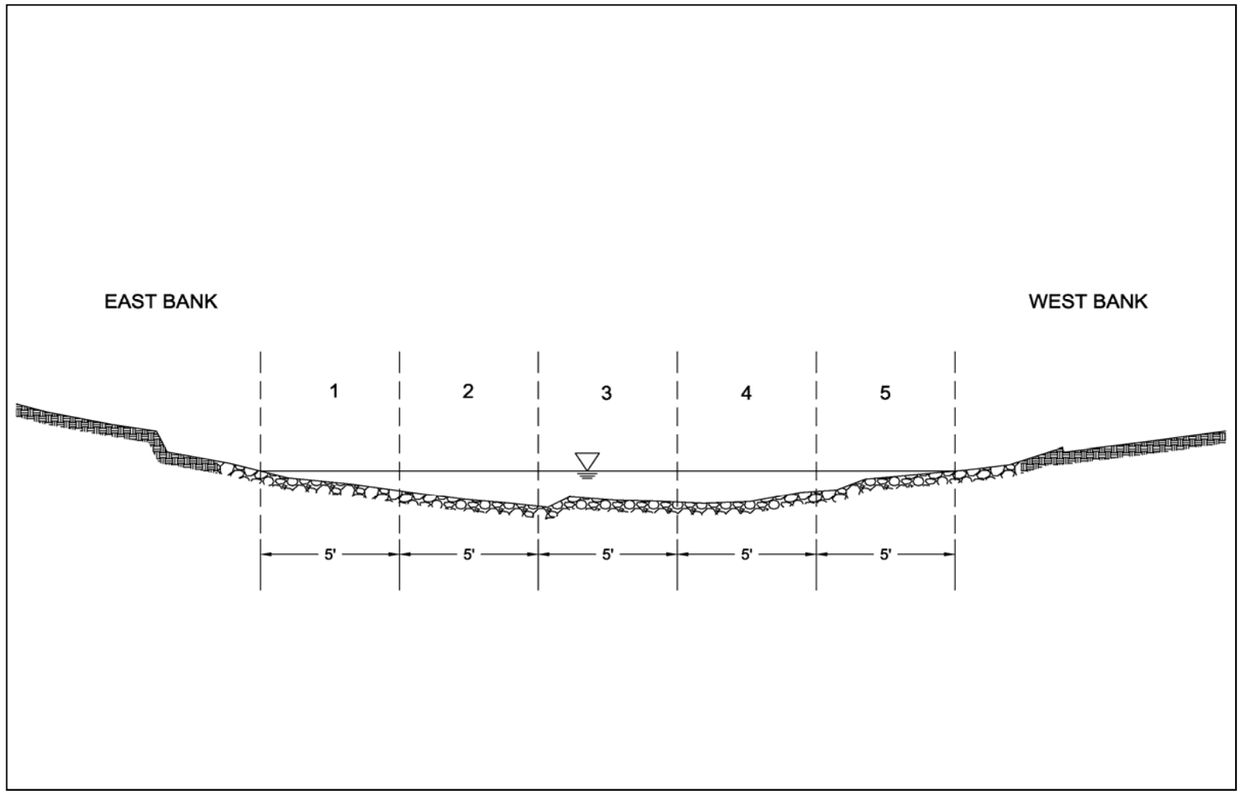

ANDERSON
ENGINEERING COMPANY INC.

Table 3E - DR-7 Cross Section Composite Sampling Field Data and Flow Information Summary, January 2013

			Field Measurements					GPS Location (Colorado State Plane NAD83)		Flow Data			
Sample Location	Date of Sample Collection	Field Technicians	pH	Temp (°C)	EC (mS/cm)	Dissolved Oxygen (ppm)	Oxydation Reduction Potential (ORP, mV)	Northing*	Easting*	Compartment Geometry		Average Flowrate	
										Width (ft)	Area (ft^2)	cfs	gpm
DR-7_COMPARTMENT 1	1/24/2013	Tim Barbee, Jody Gisseman	8.03	3.09	0.896	10.33	-15.8	1385879.1415	2267954.8098	6	2.56	1.01	454
DR-7_COMPARTMENT 2	1/24/2013	Tim Barbee, Jody Gisseman	7.91	2.90	0.866	10.39	-16.2	1385877.3585	2267949.0808	6	3.48	2.32	1039
DR-7_COMPARTMENT 3	1/24/2013	Tim Barbee, Jody Gisseman	7.84	2.67	0.815	10.55	-16.3	1385875.5756	2267943.3518	6	2.78	2.20	988
DR-7_COMPARTMENT 4	1/24/2013	Tim Barbee, Jody Gisseman	7.77	2.59	0.783	10.63	-16.1	1385873.7926	2267937.6229	6	3.64	2.89	1299
DR-7_COMPARTMENT 5	1/24/2013	Tim Barbee, Jody Gisseman	7.65	2.62	0.781	9.44	-16.7	1385872.0097	2267931.8939	6	0.59	0.33	150
DR-7_COMPARTMENT 6	1/24/2013	Tim Barbee, Jody Gisseman	7.56	2.69	0.778	10.36	-16.6	1385870.2267	2267926.1649	6	1.71	1.66	746
DR-7_COMPARTMENT 7	1/24/2013	Tim Barbee, Jody Gisseman	7.44	3.03	0.808	9.33	-17.5	1385868.4438	2267920.4359	6	1.71	0.83	371
DR-7_COMPOSITE	1/24/2013	Tim Barbee, Jody Gisseman	7.22	4.21	0.842	6.25	-12.1	-	-	42	16.46	11.25	5047

*Northing and easting values are estimates based on surveyed benchmark on east bank of river at this location

**Flowrates collected on 1/22/13

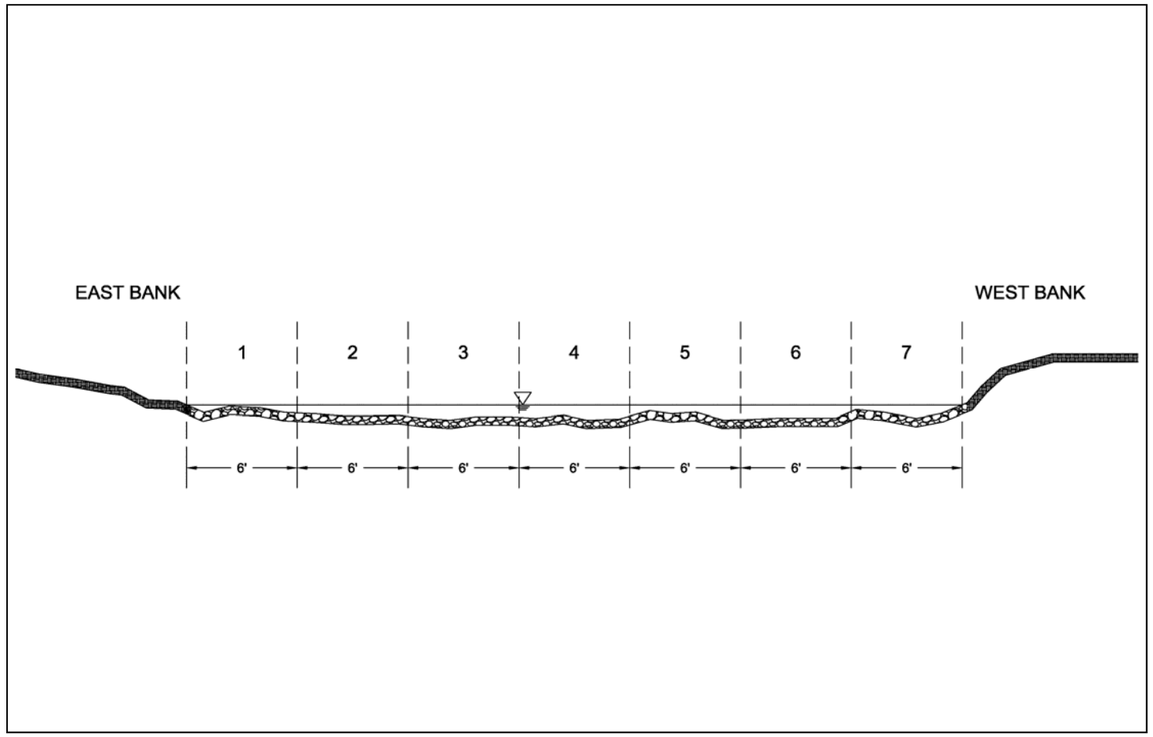

TABLE 4A - Surface Water Analytical Sampling Results Summary, January 2013

Field Sample ID	Date Collected	Fraction	Metals (µg/L)																								Non-Metals (mg/L, unless otherwise indicated)														
			Aluminum	Antimony	Arsenic	Barium	Beryllium	Cadmium	Calcium	Chromium	Cobalt	Copper	Iron	Lead	Magnesium	Manganese	Mercury	Molybdenum	Nickel	Potassium	Selenium	Silver	Sodium	Thallium	Vanadium	Zinc	Alkalinity, Bicarbonate (CaCO3)	Alkalinity, Carbonate (CaCO3)	Alkalinity, Total as CaCO3	Chloride	Cyanide	Hardness (µg/L as CaCO3)	Nitrogen, NO2 plus NO3	Salinity, as dissolved solids	Salinity, as sea water (PSU)	Silica (µg/L)	Sulfate	Sulfide	TDS	TOC	TSS
DR-1	NA	Total	COULD NOT OBTAIN SAMPLE DUE TO EXCESSIVE ICE BUILDUP IN STREAM																																						
		Dissolved																																							
		Potentially Dissolved																																							
DR-2	1/24/13	Total	9.3	<0.50	<0.50	70.0	<0.20	<0.080	71800	<0.50	<0.50	<0.50	61.5	<0.10	9450	289	<0.20	1.3	<0.50	1100	0.56	<0.50	4080	<0.10	0.10	12.2	125	<20.0	125	1.6	<0.0050	218000	<0.10	296	0.22	6680	109	<0.050	295	<1.0	<5.0
		Dissolved	6.7	<0.50	<0.50	66.3	<0.20	<0.080	67800	<0.50	0.84	1.1	50.2	<0.10	9260	274	<0.20	1.3	1.5	1110	0.65	<0.50	4010	<0.10	<0.10	18.5															
		Potentially Dissolved	6.8J	0.054J	0.17J	65.9	<0.50	<0.50	70700	0.90J	0.076J	<1.0	65.2	0.53J	8840	281	<0.20	1.4	<1.0	1230	0.63J	<0.50	4070	<1.0	<1.0	13.1															
DR-3	1/15/13	Total	932	<0.50	1.9	20.1	1.1	14.1	232000	0.69	2.6	190	10500	19.8	17800	1620	<0.20	19.0	4.0	14700	<0.50	<0.50	11900	<0.10	0.21	3000	<20.0	<20.0	<20.0	<1.0	<0.0050	653000	<0.10	845	0.66	17000	651	<0.050	1070	1.3	46.0
		Dissolved	16.4	<0.50	<0.50	19.3	0.32	12.2	266000	<0.50	2.5	6.0	805	<0.10	17600	1620	<0.20	15.2	4.1	13800	<0.50	<0.50	10900	<0.10	<0.10	2490															
		Potentially Dissolved	963	0.38J	2.0	22.2	1.0	15.1	234000	0.89J	2.6	193	11100	22.4	19200	1760	<0.20	21.0	2.5	13800	<1.0	<0.50	10500	0.050J	<1.0	2920															
DR-4	1/15/13	Total	389	<0.50	0.84	19.8	0.50	12.1	277000	<0.50	2.5	81.1	4600	8.3	18500	4320	<0.20	18.3	4.1	15800	<0.50	<0.50	12400	<0.10	0.13	8000	38.4	<20.0	40.4	<1.0	<0.0050	768000	<0.10	814	0.63	31500	657	<0.050	1030	<1.0	17.0
		Dissolved	16.0	<0.50	<0.50	18.6	<0.20	9.4	260000	<0.50	2.3	3.0	<50.0	<0.10	17500	1670	<0.20	15.8	3.5	14300	<0.50	<0.50	10900	<0.10	<0.10	2070															
		Potentially Dissolved	388	0.25J	0.98J	19.5	0.46J	12.3	240000	0.47J	2.4	77.9	4630	9.2	19800	1680	<0.20	19.1	2.2	14800	<1.0	<0.50	10800	0.039J	<1.0	2340															
DR-5	1/24/13	Total	135	<0.50	<0.50	19.6	<0.20	8.7	242000	<0.50	2.2	29.1	1860	2.8	19500	1560	<0.20	15.9	3.2	11600	<0.50	<0.50	11200	<0.10	<0.10	1820	119	<20.0	119	<1.0	<0.0050	684000	<0.10	865	0.67	15000	677	0.15	1090	<1.0	<5.0
		Dissolved	6.1	<0.50	<0.50	19.6	<0.20	<0.080	264000	<0.50	2.5	0.71	307	<0.10	20000	1580	<0.20	15.7	3.9	11800	<0.50	<0.50	11300	<0.10	<0.10	1360															
		Potentially Dissolved	134	0.20J	0.39J	19.2	0.18J	8.4	247000	0.94J	2.1	27.4	1880	3.8	19800	1600	<0.20	17.2	2.2	12900	<1.0	<0.50	12000	0.065J	<1.0	1600															
DR-6	1/24/13	Total	76.8	<0.50	<0.50	19.3	<0.20	5.6	246000	<0.50	2.1	16.3	1230	1.6	21400	1530	<0.20	14.9	3.1	12600	<0.50	<0.50	13000	<0.10	<0.10	1630	138	<20.0	138	1.1	<0.0050	702000	<0.10	864	0.66	16200	680	0.074	1050	<1.0	<5.0
		Dissolved	10.6	<0.50	<0.50	20.1	<0.20	<0.080	272000	<0.50	2.1	0.58	224	<0.10	23200	1650	<0.20	15.4	3.4	13300	<0.50	<0.50	13900	<0.10	<0.10	1550															
		Potentially Dissolved	78.3	0.22J	0.44J	20.3	0.14J	6.0	261000	0.46J	2.3	15.8	1290	8.5	22300	1690	<0.20	16.8	2.5	14300	<1.0	0.11J	14400	0.13J	<1.0	1540															
DR-7	1/24/13	Total	15.2	<0.50	0.98	60.0	<0.20	0.57	111000	<0.50	<0.50	1.9	337	0.23	14200	438	<0.20	2.8	0.51	3360	0.50	<0.50	8000	<0.10	<0.10	192	171	<20.0	171	1.6	<0.0050	335000	<0.10	455	0.35	12000	205	<0.050	482	<1.0	<5.0
		Dissolved	4.9	<0.50	1.0	60.4	<0.20	0.12	105000	<0.50	1.1	1.3	212	0.12	14300	448	<0.20	2.8	3.0	3530	0.50	<0.50	8100	<0.10	<0.10	195															
		Potentially Dissolved	12.2J	0.057J	1.1	61.3	0.10J	0.64	114000	0.46J	0.40J	1.8	345	0.61J	14100	458	<0.20	3.1	<1.0	3790	0.55J	<0.50	8330	0.049J	<1.0	187															
DR-8 DUPLICATE OF DR-3	1/15/13	Total	946	<0.50	2.0	20.1	1.1	14.4	231000	1.1	2.6	194	10700	20.0	18100	1610	<0.20	19.6	4.0	15000	<0.50	<0.50	12200	<0.10	0.32	2980	99.0	<20.0	99.2	<1.0	<0.0050	652000	<0.10	838	0.65	16900	651	<0.050	1070	<1.0	40.0
		Dissolved	14.9	<0.50	<0.50	19.0	0.30	11.9	258000	<0.50	2.4	6.8	581	<0.10	17200	1640	<0.20	14.7	3.9	13500	<0.50	<0.50	10600	<0.10	<0.10	2530															
		Potentially Dissolved	958	0.34J	2.0	20.4	0.98	14.7	235000	0.84J	2.5	190	11000	21.6	19500	1700	<0.20	20.4	2.2	13800	<1.0	<0.50	10500	0.038J	<1.0	2850															
DR-9 DUPLICATE OF MW-4 DEEP	1/16/13	Total	6950	<0.50	18.1	141	0.78	4.6	258000	8.5	10.4	83.2	15200	77.2	33200	1770	<0.20	8.6	8.3	4390	32.2	1.4	7190	0.28	15.2	527	<20.0	<20.0	<20.0	1.1	<0.0050	781000	<0.10	910	0.71	38800	599	<0.050	1100	1.7	227
		Dissolved	34.4	<0.50	<0.50	12.4	<0.20	2.0	266000	<0.50	<0.50	3.0	<50.0	0.16	33900	4.2	<0.20	2.2	<0.50	3350	34.3	<0.50	8090	<0.10	<0.10	275															
		Potentially Dissolved	1980	0.15J	4.3	32.4	0.50J	4.0	275000	6.3	2.1	57.4	4040	26.2	31300	311	<0.20	1.1	2.4	3640	30.8	0.71	7490	0.074J	3.3	421															
DR-10 DUPLICATE OF MW-6 DEEP	1/16/13	Total	8800	0.75	107	117	1.1	5.0	259000	9.6	6.7	54.2	32900	99.5	38500	6530	<0.20	9.8	11.0	7700	3.3	<0.50	4590	0.17	17.0	1390	153	<20.0	153	1.1	0.0051	805000	<0.10	913	0.71	44800	765	<0.050	1260	1.4	322
		Dissolved	602	<0.50	22.0	14.0	0.78	0.22	302000	0.56	2.7	2.2	18800	3.6	40000	7140	<0.20	5.3	2.6	5790	0.85	<0.50	4420	<0.10	0.70	308															
		Potentially Dissolved	3370	0.20J	89.7	30.5	0.95	4.6	271000	4.1	4.9	31.0	27600	49.0	41800	7340	<0.20	4.5	4.4	6100	1.3	0.075J	4390	0.056J	7.5	1320															
DR-11 DUPLICATE OF MW-104	1/24/13	Total	610	<0.50	0.73	37.4	<0.20	2.7	257000	1.8	0.65	5.7	1040	6.5	26400	318	<0.20	11.1	1.3	17700	1.7	<0.50	17100	<0.10	1.4	937	148	<20.0	148	1.0	<0.0050	751000	<0.10	886	0.69	13700	704	0.058	1140	<1.0	43.0
		Dissolved	378	<0.50	<0.50	27.8	<0.20	2.2	302000	0.74	0.85	3.7	628	3.6	25300	148	<0.20	10.7	2.2	16700	1.6	<0.50	16800	<0.10	0.80	918															
		Potentially Dissolved	210	0.081J	0.48J	26.2	<0.50	2.3	249000	1.1	0.34J	3.3	481	5.7	23900	160	<0.20	9.8	<1.0	17600	1.4	<0.50	16400	<1.0	0.62J	767															
DR-4-SW	NA	Total	COULD NOT OBTAIN SAMPLE DUE TO EXCESSIVE ICE BUILDUP IN STREAM																																						
		Dissolved																																							
		Potentially Dissolved																																							
DR-G	NA	Total	COULD NOT OBTAIN SAMPLE DUE TO EXCESSIVE ICE BUILDUP IN STREAM																																						
		Dissolved																																							
		Potentially Dissolved																																							
FB	1/24/13	Total	<4.0	<0.50	<0.50	<0.30	<0.20	<0.080	<20.0	<0.50	<0.50	0.53	<50.0	<0.10	<5.0	<0.50	<0.20	<0.50	<0.50	<20.0	<0.50	<0.50	369	<0.10	<0.10	<5.0	<20.0	<20.0	<20.0	<1.0	<0.0050	<71.0	<0.10	<6.0	0.012	<53.5	<1.0	<0.050	<5.0	<1.0	<5.0
		Dissolved	<4.0	<0.50	<0.50	<0.30	<0.20	<0.080	<20.0	<0.50	<0.50	0.70	<50.0	<0.10	<5.0	<0.50	<0.20	<0.50	0.73	27.7	<0.50	<0.50	382	<0.10	<0.10	<5.0															
		Potentially Dissolved	<50.0	<1.0	<1.0	0.17J	<0.50	<0.50	98.6J	0.55J	<1.0	<1.0	7.6J	0.25J	11.2J	0.56J	<0.20	<1.0	<1.0	<500	<1.0	<0.50	492J	<1.0	<1.0	2.9J															

ANDERSON
ENGINEERING COMPANY INC.

TABLE 4B - Groundwater Analytical Sampling Results Summary, January 2013

			Metals (µg/L)																								Non-Metals (mg/L, unless otherwise indicated)														
Field Sample ID	Date Collected	Fraction	Aluminum	Antimony	Arsenic	Barium	Beryllium	Cadmium	Calcium	Chromium	Cobalt	Copper	Iron	Lead	Magnesium	Manganese	Mercury	Molybdenum	Nickel	Potassium	Selenium	Silver	Sodium	Thallium	Vanadium	Zinc	Alkalinity, Bicarbonate (CaCO3)	Alkalinity, Carbonate (CaCO3)	Alkalinity, Total as CaCO3	Chloride	Cyanide	Hardness (µg/L as CaCO3)	Nitrogen, NO2 plus NO3	Salinity, as dissolved solids	Salinity, as seawater (PSU)	Silica (µg/L)	Sulfate	Sulfide	TDS	TOC	TSS
GW-1	1/15/13	Total	15100	0.64	23.6	400	1.5	2.9	60200	15.4	17.3	103	28400	80.5	12900	3380	1.3	5.7	31.3	3960	3.6	1.3	3060	0.39	33.8	330	105	<20.0	105	1.3	0.018	203000	<0.10	204	0.15	53800	59.7	<0.050	203	5.0	1700
		Dissolved	325	<0.50	<0.50	64.7	<0.20	<0.080	58000	<0.50	0.89	2.5	336	1.0	7070	39.4	<0.20	1.3	1.9	791	0.56	<0.50	2780	<0.10	0.68	13.1																
		Potentially Dissolved	2640	0.14J	2.2	227	0.70	2.0	55600	2.7	4.9	45.1	4200	30.6	7500	1150	<0.20	0.51J	11.0	955	1.2	0.71	2620	0.046J	4.5	136																
GW-3	1/17/13	Total	9350	0.52	16.6	199	0.53	2.4	127000	14.2	9.5	83.5	18200	157	21300	8240	<0.20	2.9	12.7	4190	4.9	1.6	3190	0.24	21.7	473	193	<20.0	193	1.4	<0.0050	404000	<0.10	462	0.35	43800	181	<0.050	531	<1.0	366
		Dissolved	7.5	<0.50	<0.50	18.1	<0.20	0.19	127000	0.53	<0.50	1.4	<50.0	<0.10	15400	26.0	<0.20	0.53	1.1	2540	1.6	<0.50	2820	<0.10	<0.10	29.0																
		Potentially Dissolved	2050	0.18J	4.8	65.3	0.20J	1.8	133000	3.9	3.8	51.3	4570	71.9	17200	919	<0.20	0.21J	3.7	2760	2.4	0.41J	2660	<1.0	3.7	292																
GW-4	1/16/13	Total	38700	0.60	25.7	716	2.2	24.4	198000	65.0	23.9	191	71500	148	50100	1670	0.41	18.3	51.1	8860	5.0	3.6	8350	0.89	89.9	1500	106	<20.0	106	1.3	<0.0050	700000	<0.10	698	0.54	126000	511	<0.050	845	3.2	1400
		Dissolved	9.0	<0.50	0.84	35.3	<0.20	<0.080	188000	<0.50	0.83	0.72	1470	<0.10	19700	673	<0.20	10	1.3	3640	<0.50	<0.50	7600	<0.10	0.22	18.6																
		Potentially Dissolved	8560	0.17J	6.7	85.3	2.0	32.5	219000	18.3	12.0	128	23100	188	26200	1590	<0.20	5.2	18.7	5070	2.7	<0.50	7540	0.35J	25.6	1680																
GW-5	1/15/13	Total	6000	1.7	150	60.2	0.68	60.4	555000	7.4	20.2	843	30900	9120	51900	7080	<0.20	18.4	28.4	5500	3.4	42.3	6150	1.0	10.1	16300	128	<20.0	141	1.2	<0.0050	1600000	<0.10	1580	1.3	48200	1640	2.4	2220	4.6	1400
		Dissolved	106	<0.50	62.8	14.1	<0.20	1.1	620000	<0.50	6.4	11.6	7090	190	53700	6060	<0.20	10.7	8.8	4620	<0.50	<0.50	6580	<0.10	0.23	4540																
		Potentially Dissolved	7410	0.41J	173	11.9	0.97	67.2	566000	8.3	15.9	23.5	36000	2880	56500	8230	<0.20	3.2	25.8	4900	2.0	0.11J	6020	0.57J	13.6	31700																
GW-6	1/15/13	Total	64800	4.2	848	251	14.1	230	478000	68.4	62.5	1780	339000	17400	83900	26500	0.76	16.9	103	19600	19.7	36.7	6920	2.4	146	50600	126	<20.0	140	1.2	<0.0050	1540000	<0.10	1180	0.93	164000	1130	<0.050	1650	6.6	1180
		Dissolved	310	<0.50	84.9	14.8	0.70	0.77	398000	0.54	3.2	8.8	48700	140	48100	7840	<0.20	6.9	6.6	10500	<0.50	<0.50	6300	<0.10	0.70	8820																
		Potentially Dissolved	40600	0.66J	703	39.2	12.2	148	478000	30.5	36.2	258	294000	11100	73400	31900	<0.20	1.3	53.1	14200	6.6	<0.50	6300	0.65J	101	58600																
GW-7	NA	Total	WELL FROZEN AND INACCESSIBLE																																						
		Dissolved																																							
		Potentially Dissolved																																							
EB-1	1/16/13	Total	2990	0.71	35.9	47.8	0.52	7.7	403000	6.3	8.0	173	27400	971	31000	4420	<0.20	14.1	10.0	6040	1.1	7.5	6860	0.16	5.6	3240	162	<20.0	162	1.2	<0.0050	1130000	<0.10	1350	1.1	36400	1230	<0.050	1880	<1.0	150
		Dissolved	352	<0.50	8.2	17.0	0.22	0.90	455000	0.88	6.5	20.3	5710	128	30600	4540	<0.20	15.0	7.2	6280	<0.50	<0.50	8100	<0.10	0.60	1660																
		Potentially Dissolved	1090	0.21J	25.2	14.1	0.40J	3.8	463000	2.0	5.9	68.5	13700	845	31300	4830	<0.20	13.2	3.0	5930	<1.0	0.072J	7260	0.054J	1.7	2400																
EB-2	1/16/13	Total	28600	<2.5	442	107	8.5	11.4	326000	6.1	91.0	212	645000	1560	141000	33000	<0.20	7.7	140	14700	6.8	7.2	6400	<0.50	8.4	67200	42.0	<20.0	42.0	2.6	0.0050	1390000	<0.10	2400	2.0	88600	3480	<0.050	3560	1.5	520
		Dissolved	22400	<2.5	389	37.0	9.1	4.2	382000	<2.5	103	68.2	630000	534	151000	33900	<0.20	5.0	151	15500	3.7	<2.5	7330	<0.50	2.6	66300																
		Potentially Dissolved	19400	0.54J	391	13.9	6.7	5.5	335000	2.4	88.0	109	627000	1230	149000	33500	<0.20	2.6	126	14100	3.3	<0.50	6400	0.16J	2.8	68200																
MW-1 SHALLOW	1/16/13	Total	29300	0.93	57.0	394	3.5	6.7	238000	39.3	25.5	286	53900	839	35400	2890	<0.20	13.2	35.4	9820	24.8	6.0	12000	0.80	51.8	1240	89.1	<20.0	89.3	<1.0	<0.0050	740000	<0.10	805	0.63	100000	637	<0.050	663	1.5	466
		Dissolved	<4.0	<0.50	<0.50	19.0	<0.20	0.76	253000	<0.50	<0.50	0.80	<50.0	<0.10	19800	60.7	<0.20	7.4	0.77	5400	7.4	<0.50	11400	<0.10	<0.10	91.3																
		Potentially Dissolved	8620	0.26J	7.5	59.8	2.5	7.2	240000	9.9	17.6	194	12100	704	24200	2860	<0.20	3.5	12.1	6150	11.1	3.3	10300	0.22J	12.6	990																
MW-1 DEEP	1/16/13	Total	15700	0.80	31.7	284	1.3	17.7	227000	24.4	11.6	268	28700	440	26000	3120	<0.20	17.9	19.1	16600	15.7	2.3	12500	0.50	31.7	2240	84.8	<20.0	84.8	<1.0	0.0058	673000	<0.10	816	0.63	60500	638	<0.050	939	<1.0	608
		Dissolved	587	<0.50	1.4	23.0	<0.20	2.2	248000	0.87	<0.50	8.7	900	12.2	18300	76.6	<0.20	7.4	1.4	12800	8.9	<0.50	10900	0.10	1.2	449																
		Potentially Dissolved	3270	0.30J	8.8	36.2	0.60	15.3	236000	8.5	4.4	204	7230	309	21700	1600	<0.20	3.6	4.6	13200	10.2	0.59	10800	0.060J	7.0	1810																
MW-2 SHALLOW	NA	Total	DRY WELL																																						
		Dissolved																																							
		Potentially Dissolved																																							
MW-2 DEEP	1/16/13	Total	2860	<0.50	5.1	63.0	0.27	3.2	205000	4.3	1.5	15.0	5480	41.6	19200	320	<0.20	10.1	2.2	2490	2.3	<0.50	9690	0.19	5.4	90.4	77.8	<20.0	77.8	1.0	<0.0050	591000	<0.10	769	0.60	22500	661	<0.050	980	<1.0	101
		Dissolved	62.1	<0.50	<0.50	12.4	<0.20	0.93	216000	<0.50	<0.50	1.1	126	1.3	19300	9.4	<0.20	7.2	0.54	1690	1.2	<0.50	9930	<0.10	0.18	19.5																
		Potentially Dissolved	523	0.13J	1.5	20.4	0.14J	3.2	232000	2.7	0.47J	9.1	1420	25.1	20900	114	<0.20	4.4	<1.0	1810	1.4	0.25J	9660	0.038J	1.4	64.1																
MW-3 SHALLOW	NA	Total	DRY WELL																																						
		Dissolved																																							
		Potentially Dissolved																																							
MW-3 DEEP	1/16/13	Total	4780	<0.50	6.7	101	0.40	3.7	201000	5.2	3.2	36.7	9820	45.0	22500	1450	<0.20	9.4	4.2	4280	0.87	<0.50	10600	0.24	11.8	195	78.5	<20.0	78.5	1.0	<0.0050	596000	<0.10	754	0.58	30900	649	<0.050	1070	<1.0	145
		Dissolved	4.5	<0.50	0.72	15.6	<0.20	<0.080	246000	<0.50	0.99	0.80	1430	<0.10	22000	1690	<0.20	7.5	<0.50	3140	<0.50	<0.50	10800	<0.10	0.11	26.8																
		Potentially Dissolved	1090	0.14J	2.6	26.6	0.25J	3.0	233000	2.2	1.8	20.4	4020	43.7	24800	1620	<0.20	5.5	0.42J	3780	0.45J	0.17J	10900	0.18J	3.9	164																
MW-4 SHALLOW	1/17/13	Total	6310	<0.50	5.5	93.0	0.63	2.2	243000	8.1	3.8	38.2	8110	49.5	30900	336	<0.20	2.5	6.4	3970	23.8	0.54	8590	0.17	8.9	268	92.5	<20.0	92.5	1.2	0.0066	734000	0.41	847	0.66	41500	605	<0.050	1040	<1.0	199
		Dissolved	27.0	<0.50	<0.50	24.9	<0.20	1.7	265000	<0.50	<0.50	1.5	<50.0	0.28	30900	113	<0.20	1.5	0.86	2790	23.4	<0.50	9000	<0.10	0.11	156																
		Potentially Dissolved	1890	0.097J	2.9	41.6	0.39J	2.1	264000	3.7	2.2	24.8	2620	40.7	28600	280	<0.20	1.2	1.1	2840	21.9	0.08J	8370	<1.0	2.3	222																
MW-4 DEEP	1/16/13	Total	9440	0.56	24.6	192	0.94	5.6	251000	11.4	14.2	117	21200	106	33700	2360	<0.20	11.0	11.0	4860	34.8	2.1	7300	0.35	20.6	620	262	<20.0	262	1.1	<0.0050	765000	<0.10	859	0.67	46700	597	<0.050	1150	1.6	272
		Dissolved	838	<0.50	1.5	22.3	<0.20	2.1	277000	1.1	0.86	10	1440	6.9	34700	112	<0.20	2.8	1.8	3610	35.4	<0.50	8160	<0.10	1.6	303																
		Potentially Dissolved	2450	0.14J	4.8	35.1	0.61	5.0	277000	3.3	2.7	79.8	5310	30.6	31700	394	<0.20	0.85J	1.1	3610	33.2	0.63	7490	<1.0	4.1	481																
MW-5 SHALLOW	1/16/13	Total	65600	5.4	639	206	14.4	401	457000	71.8	126	5040	814000	32700	153000	29200	<0.20	21.3	225	13600	18.6	150	22100	4.4	63.4	126000	<20.0	<20.0	<20.0	1.7	<0.0050	1770000	<0.10	2440	2.0	157000	4270	<0.050	3730	2.0	456
		Dissolved	15000	<0.50	242	13.8	5.5	84.2	489000	2.2	68.9	14.8	511000	889	139000	27400	<0.20	0.67	135	2910	7.1	<0.50	22800	0.14	2.1	121000																
		Potentially Dissolved	18900	0.70J	314	7.7	5.2	133	462000	9.9	83.0	567	479000	2300	141000	25500	<0.20	2.1	150	3190	5.9	<0.50	21700	0.41J	7.7	116000																
MW-5 DEEP	1/16/13	Total	11400	<2.5	332	196	3.6	10.9	296000	12.2	14.0	225	134000	1560	47700	9230	<0.20	28.7	19.8	9080	4.3	5.8	6960	0.58	22.6	9260	116	<20.0	116	1.2	0.0070	935000	<0.10	1040	0.82	58100	994	<0.050	1550	1.2	398
		Dissolved	7040	<2.5	244	85.2	3.2	5.7	342000	6.6	11.8	114	99400	871	52000	9520	<0.20	19.6	16.4	9340	<2.5	<2.5	7950	<0.50	12.4	8210																
		Potentially Dissolved	4840	0.19J	227	13.9	2.8	4.4	311000	5.0	10.4	112	69300	1420	50600	9500	<0.20	5.6	10.9	7700	2.0	<0.50	7040	0.26J	7.5	8180																
MW-6 SHALLOW	1/16/13	Total	56800	<2.5	216	402	3.9	67.3	394000	58.2	38.6	364	134000	664	75200	8580	<0.20	15.9	79.2	17300	14.5	2.7	4110	1.6	73.4	9570	128	<20.0	128	1.5	<0.0050	1290000	<0.10	1280	1.0	159000	1260	<0.050	2060	1.9	757
		Dissolved	933	<0.50	43.2	17.5	1.1	0.33	430000	<0.50	3.9	2.1	57000	2.4	57000	8290	<0.20	4.5	2.8	11400	<0.50	<0.50	4000	<0.10	0.38	688																
		Potentially Dissolved	20400	0.20J	128	30.8	2.4	61.3	414000	15.4	24.5	192	86200	635	63000	8880	<0.20	3.4	33.8	12900	4.0	<0.50	4140	0.62J	21.2	8310																
MW-6 DEEP	1/16/13	Total	9200	0.78	143	123	1.3	5.2	258000	10.3	6.9	57.0	34100	106	38400	6500	<0.20	10.1	11.6	7720	3.9	<0.50	4650	0.19	18.0	1440	85.3	<20.0	85.3	1.1	0.0079	802000	<0.10	955	0.75	45800	760	<0.050	1260	1.4	317
		Dissolved	342	<0.50	22.5	11.0	0.67	<0.080	289000	<0.50	3.0	0.75	20900	<0.10	33200	5910	<0.20	6.0	2.8	6500	0.86	<0.50	5040	<0.10	0.12	309																
		Potentially Dissolved	3890	0.19J	138	33.8	1.1	5.2	277000	4.8	5.7	35.6	33400	42.0	41000	8680	<0.20	5.5	4.9	6500	1.6	<0.50	4630	<1.0	8.7	1560																
MW-101	1/24/13	Total	8790	<0.50	10.8	105	0.87	4.0	315000	14.4	16.6	59.9	48600	616	44200	5750	<0.20	7.0	18.1	7270	3.2	0.87	16400	0.38	14.7	780	303	<0.20	303	1.5	<0.0050	969000	0.27	1100	0.87	41500	800	<0.050	1340	2.0	1200
		Dissolved	192	<0.50	<0.50	10.9	0.25	0.26	331000	<0.50	12.3	0.78	27500	0.95	38500	5330	<0.20	2.0	10.0	5570	1.5	<0.50	17300	<0.10	<0.10	301																
		Potentially Dissolved	3180	0.12J	3.1	27.3	0.93	6.1	306000	7.5	15.5	48.6	37800	717	38200	6290	<0.20	0.93J	12.8	6380	2.3	<0.50	16800	0.27J	6.3	792																
MW-102	1/24/13	Total	55300	0.99	79.5	447	5.3	14.0	239000	80.7	105	281	93300	445	60300	12300	<0.20	29.3	89.6	8790	13.2	1.4	7540	1.1	94.9	2460	222	<20.0	222	1.0	<0.0050	846000	0.38	753	0.58	135000	477	<0.050	911	2.5	367
		Dissolved	15.6	<0.50	<0.50	14.3	<0.20	0.89	251000	<0.50	<0.50	1.3	<50.0	0.12	19800	190	<0.20	1.8	3.8	2280	1.8	<0.50	6080	<0.10	<0.10	72.1																
		Potentially Dissolved	10900	0.13J	4.1	89.7	4.2	10.9	199000	15.1	27.8	126	8030	162	20800	3570	<0.20	0.53J	23.2	3240	9.5	0.63	6020	0.039J	6.8	1320																
MW-103	1/24/13	Total	3980	<0.50	20.5	68.8	1.1	1.0	291000	4.9	5.9	14.9	17900	13.7	30600	8260	<0.20	10.5	5.2	4470	0.54	<0.50	14400	0.24	7.6	290	351	<20.0	351	1.2	0.0067	852000	<0.10	1040	0.81	38900	645	<0.050	1250	2.2	258
		Dissolved	47.7	<0.50	3.2	33.2	0.33	0.16	328000	<0.50	4.6	2.8	8300	0.15	32000	8620	<0.20	8.2	3.0	4050	<0.50	<0.50	17000	<0.10	0.13	209																
		Potentially Dissolved	764	0.078J	7.1	39.0	0.72	0.88	310000	2.0	4.5	6.5	11100	11.3	31600	9570	<0.20	6.2	1.2	4210	<1.0	<0.50	15100	0.15J	2.0	232																
MW-104	1/24/13	Total	3830	<0.50	4.5	115	<0.20	3.9	247000	6.7	3.2	23.0	6510	32.1	26000	1550	<0.20	14.0	5.3	15100	1.9	<0.50	14400	0.12	8.0	1050	165	<20.0	165	1.1	<0.0050	723000	<0.10	898	0.70	26600	831	<0.050	1100	<1.0	220
		Dissolved	2690	<0.50	3.4	86.3	0.23	3.7	276000	5.0	2.7	20.5	4820	26.9	33400	1200	<0.20	11.4	7.0	16000	1.8	<0.50	16500	<0.10	5.8	1080																
		Potentially Dissolved	1290	0.20J	1.8	51.2	0.17J	4.5	262000	4.5	1.9	20.6	3020	30.8	25000	986	<0.20	2.1	3.3	17200	1.6	0.30J	16200	<1.0	2.8	1050																
MW-202	NA	Total	DRY WELL																																						
		Dissolved																																							
		Potentially Dissolved																																							
MW-204	1/24/13	Total	29100	0.54	12.2	304	1.6	7.7	259000	60.8	22.0	56.7	43900	104	45300	2150	<0.20	8.6	47.8	6160	2.7	<0.50	11600	0.45	47.7	286	132	<20.0	132	<1.0	0.0051	833000	<0.10	814	0.63	90900	639	<0.050	1060	1.9	500
		Dissolved	6850	<0.50	2.6	88.2	0.53	2.6	268000	13.4	6.2	13.5	9220	25.5	24700	1310	<0.20	4.4	14.0	3120	0.77	<0.50	10500	0.14	11.2	71.7																
		Potentially Dissolved	3370	0.14J	1.6	60.8	0.93	7.0	246000	12.8	11.1	24.7	8590	64.7	21100	1680	<0.20	3.5	14.5	2800	1.2	0.10J	11200	0.17J	7.1	108																
P13-102	1/16/13	Total	3380	<0.50	7.6	83.9	0.52	0.29	326000	7.2	14.5	17.4	8420	18.7	47300	23300	<0.20	6.1	9.4	6300	0.83	<0.50	16400	0.16	8.3	120	<20.0	<20.0	<20.0	1.6	<0.0050	1010000	<0.10	1220	0.96	30400	1090	<0.050	1520	<1.0	147
		Dissolved	27.4	<0.50	0.54	16.9	0.22	0.089	377000	<0.50	11.8	<0.50	1130	<0.10	52100	25800	<0.20	4.1	5.8	5200	<0.50	<0.50	14400	<0.10	<0.10	68.5																
		Potentially Dissolved	676	0.11J	2.2	26.6	0.38J	0.25J	351000	3.8	12.0	7.1	3010	17.1	51800	24100	<0.20	3.3	4.1	5580	<1.0	<0.50	14400	0.066J	2.3	90.8																
P13-103	1/16/13	Total	8230	1.4	107	160	0.69	7.0	281000	13.5	8.4	516	67700	1660	32900	2730	<0.20	11.4	14.3	6400	12.9	15.8	11300	1.1	14.2	1210	132	<20.0	132	1.1	<0.0050	837000	<0.10	939	0.73	54300	786	<0.050	1170	1.2	314
		Dissolved	4.2	<0.50	48.6	15.5	<0.20	<0.080	317000	<0.50	2.7	0.50	11500	0.24	29600	2420	<0.20	7.1	2.0	4040	<0.50	<0.50	9470	<0.10	<0.10	111																
		Potentially Dissolved	2220	0.52J	101	39.8	0.50J	4.8	291000	6.4	3.7	230	26400	1230	33500	3280	<0.20	5.8	3.5	4860	1.1	0.13J	10000	0.62J	5.2	786																
AT-2	1/24/13	Total	5700	0.55	5.0	110	0.64	1.8	172000	9.3	4.0	110	58300	57.3	16800	1550	<0.20	18.1	9.0	6800	0.86	<0.50	10700	0.11	8.4	517	<20.0	<20.0	<20.0	2.0	0.0059	498000	<0.10	591	0.45	18600	507	<0.050	741	1.3	328
		Dissolved	23.1	<0.50	<0.50	63.2	<0.20	<0.080	182000	<0.50	<0.50	1.5	190	0.25	11000	288	<0.20	7.3	0.87	5130	<0.50	<0.50	9050	<0.10	<0.10	7.1																
		Potentially Dissolved	1080	0.097J	0.82J	82.7	0.46J	1.7	155000	3.0	2.7	66.1	31500	59.6	11500	1370	<0.20	3.0	4.3	5740	0.55J	<0.50	9620	0.026J	1.6	415																
CHV-101	1/24/13	Total	6180	<0.50	5.8	130	0.88	1.2	246000	14.2	9.0	20.6	9370	24.0	23900	2100	<0.20	1.9	10.4	3940	1.1	<0.50	12000	0.14	12.2	152	174	<20.0	174	1.0	<0.0050	713000	<0.10	838	0.65	31500	629	<0.050	1030	3.1	2790
		Dissolved	79.6	<0.50	<0.50	27.2	<0.20	0.35	286000	<0.50	1.2	1.1	126	0.25	27900	939	<0.20	1.8	1.7	2610	<0.50	<0.50	11500	<0.10	0.23	21.3																
		Potentially Dissolved	2260	0.12J	2.0	50.3	0.58	0.96	264000	7.9	5.9	11.6	3990	21.4	22400	1840	<0.20	1.5	5.0	3480	0.75J	0.18J	12700	0.13J	5.3	98.9																

ANDERSON
ENGINEERING COMPANY INC.

TABLE 4C - Dolores River Composite Sampling Analytical Sampling Results Summary, January 2013

			Metals (µg/L)																							Non-Metals (mg/L, unless otherwise indicated)														
Field Sample ID	Date Collected	Fraction	Aluminum	Antimony	Arsenic	Barium	Beryllium	Cadmium	Calcium	Chromium	Cobalt	Copper	Iron	Lead	Magnesium	Manganese	Mercury	Molybdenum	Nickel	Potassium	Selenium	Silver	Sodium	Thallium	Vanadium	Zinc	Alkalinity, Bicarbonate (CaCO3)	Alkalinity, Carbonate (CaCO3)	Alkalinity, Total as CaCO3	Chloride	Cyanide	Hardness (µg/L as CaCO3)	Nitrogen, NO2 plus NO3	Salinity, as dissolved solids	Salinity, as sea water (PSU)	Silica (µg/L)	Sulfate	Sulfide	TDS	TOC	TSS
DR-1 COMP	NA	Total	COULD NOT OBTAIN SAMPLE DUE TO EXCESSIVE ICE BUILDUP IN STREAM																																				
		Dissolved																																					
		Potentially Dissolved																																					
DR-2 COMP	1/24/13	Total	8.9	<0.50	<0.50	69.4	<0.20	<0.080	71100	<0.50	<0.50	<0.50	85.5	<0.10	9550	262	<0.20	1.2	<0.50	524	0.73	<0.50	4240	<0.10	<0.10	7.6	125	<20.0	125	1.6	0.0051	217000	<0.10	289	0.22	7350	105	<0.050	293	<1.0	<5.0
		Dissolved	<4.0	<0.50	<0.50	66.9	<0.20	<0.080	67400	<0.50	<0.50	0.76	<50.0	<0.10	9240	254	<0.20	1.3	<0.50	1160	0.67	<0.50	4210	<0.10	<0.10	<5.0															
		Potentially Dissolved	9.8J	0.053J	0.23J	66.4	<0.50	<0.50	70300	0.62J	0.10J	0.45J	100	0.49J	8920	261	<0.20	1.3	<1.0	1260	0.53J	<0.50	4200	<1.0	<1.0	10.7															
DR-7 COMP	1/24/13	Total	19.9	<0.50	0.76	63.0	<0.20	0.68	99600	<0.50	<0.50	2.0	358	0.24	12700	432	<0.20	2.7	<0.50	2800	0.52	<0.50	6560	<0.10	<0.10	176	151	<20.0	151	1.9	0.0061	301000	<0.10	394	0.29	10500	178	<0.050	418	<1.0	<5.0
		Dissolved	<4.0	<0.50	<0.50	59.7	<0.20	<0.080	92400	<0.50	<0.50	0.82	144	<0.10	11900	404	<0.20	2.5	0.61	2740	<0.50	<0.50	6320	<0.10	<0.10	147															
		Potentially Dissolved	18.6J	0.10J	0.78J	59.6	0.12J	0.74	100000	0.80J	0.38J	2.2	399	0.62J	12200	421	<0.20	2.7	<1.0	2970	0.54J	<0.50	6570	0.067J	0.28J	160															
DR-4-SW COMP	NA	Total	COULD NOT OBTAIN SAMPLE DUE TO EXCESSIVE ICE BUILDUP IN STREAM																																				
		Dissolved																																					
		Potentially Dissolved																																					

ANDERSON
ENGINEERING COMPANY INC.

Table 5A - Relative Percent Difference (RPD) of Lab Analysis Between DR-3 and DR-8

Analyte	Total Metals / Non Metals			Dissolved Metals			Potentially Dissolved Metals		
	DR-3 (µg/L)	DR-8 (µg/L)	RPD (%)	DR-3 (µg/L)	DR-8 (µg/L)	RPD (%)	DR-3 (µg/L)	DR-8 (µg/L)	RPD (%)
Aluminum	932	946	1.49	16.4	14.9	-9.58	963	958	-0.52
Antimony	<0.50	<0.50	-	<0.50	<0.50	-	0.38J	0.34J	-
Arsenic	1.9	2.0	5.13	<0.50	<0.50	-	2.0	2.0	0.00
Barium	20.1	20.1	0.00	19.3	19.0	-1.57	22.2	20.4	-8.45
Beryllium	1.1	1.1	0.00	0.32	0.30	-6.45	1.0	0.98	-2.02
Cadmium	14.1	14.4	2.11	12.2	11.9	-2.49	15.1	14.7	-2.68
Calcium	232000	231000	-0.43	266000	258000	-3.05	234000	235000	0.43
Chromium	0.69	1.1	45.81	<0.50	<0.50	-	0.89J	0.84J	-
Cobalt	2.6	2.6	0.00	2.5	2.4	-4.08	2.6	2.5	-3.92
Copper	190	194	2.08	6.0	6.8	12.50	193	190	-1.57
Iron	10500	10700	1.89	805	581	-32.32	11100	11000	-0.90
Lead	19.8	20.0	1.01	<0.10	<0.10	-	22.4	21.6	-3.64
Magnesium	17800	18100	1.67	17600	17200	-2.30	19200	19500	1.55
Manganese	1620	1610	-0.62	1620	1640	1.23	1760	1700	-3.47
Mercury	<0.20	<0.20	-	<0.20	<0.20	-	<0.20	<0.20	-
Molybdenum	19.0	19.6	3.11	15.2	14.7	-3.34	21.0	20.4	-2.90
Nickel	4.0	4.0	0.00	4.1	3.9	-5.00	2.5	2.2	-12.77
Potassium	14700	15000	2.02	13800	13500	-2.20	13800	13800	0.00
Selenium	<0.50	<0.50	-	<0.50	<0.50	-	<1.0	<1.0	-
Silver	<0.50	<0.50	-	<0.50	<0.50	-	<0.50	<0.50	-
Sodium	11900	12200	2.49	10900	10600	-2.79	10500	10500	0.00
Thallium	<0.10	<0.10	-	<0.10	<0.10	-	0.050J	0.038J	-
Vanadium	0.21	0.32	41.51	<0.10	<0.10	-	<1.0	<1.0	-
Zinc	3000	2980	-0.67	2490	2530	1.59	2920	2850	-2.43
Alkalinity, Bicarbonate (CaCO3, mg/L)	<20.0	99	-	-	-	-	-	-	-
Alkalinity, Carbonate (CaCO3, mg/L)	<20.0	<20.0	-	-	-	-	-	-	-
Alkalinity, Total as CaCO3 (mg/L)	<20.0	99.2	-	-	-	-	-	-	-
Chloride (mg/L)	<1.0	<1.0	-	-	-	-	-	-	-
Cyanide	<0.0050	<0.0050	-	-	-	-	-	-	-
Hardness	653000	652000	-0.15	-	-	-	-	-	-
Nitrogen, NO2 plus NO3 (mg/L)	<0.10	<0.10	-	-	-	-	-	-	-
Salinity, as dissolved solids (mg/L)	845	838	-0.83	-	-	-	-	-	-
Salinity, as sea water (PSU)	0.66	0.65	-1.53	-	-	-	-	-	-
Silica	17000	16900	-0.59	-	-	-	-	-	-
Sulfate (mg/L)	651	651	0.00	-	-	-	-	-	-
Sulfide (mg/L)	<0.050	<0.050	-	-	-	-	-	-	-
TDS (mg/L)	1070	1070	0.00	-	-	-	-	-	-
TOC (mg/L)	1.3	<1.0	-	-	-	-	-	-	-
TSS (mg/L)	46.0	40.0	-13.95	-	-	-	-	-	-

Table 5B - Relative Percent Difference (RPD) of Lab Analysis Between MW-4 DEEP and DR-9

Analyte	Total Metals / Non Metals			Dissolved Metals			Potentially Dissolved Metals		
	MW-4 DEEP (µg/L)	DR-9 (µg/L)	RPD (%)	MW-4 DEEP (µg/L)	DR-9 (µg/L)	RPD (%)	MW-4 DEEP (µg/L)	DR-9 (µg/L)	RPD (%)
Aluminum	9440	6950	-30.38	838	34.4	-184.23	2450	1980	-21.22
Antimony	0.56	<0.50	-	<0.50	<0.50	-	0.14J	0.15J	-
Arsenic	24.6	18.1	-30.44	1.5	<0.50	-	4.8	4.3	-10.99
Barium	192	141	-30.63	22.3	12.4	-57.06	35.1	32.4	-8.00
Beryllium	0.94	0.78	-18.60	<0.20	<0.20	-	0.61	0.50J	-
Cadmium	5.6	4.6	-19.61	2.1	2.0	-4.88	5.0	4.0	-22.22
Calcium	251000	258000	2.75	277000	266000	-4.05	277000	275000	-0.72
Chromium	11.4	8.5	-29.15	1.1	<0.50	-	3.3	6.3	62.50
Cobalt	14.2	10.4	-30.89	0.86	<0.50	-	2.7	2.1	-25.00
Copper	117	83.2	-33.77	10	3.0	-107.69	79.8	57.4	-32.65
Iron	21200	15200	-32.97	1440	<50.0	-	5310	4040	-27.17
Lead	106	77.2	-31.44	6.9	0.16	-190.93	30.6	26.2	-15.49
Magnesium	33700	33200	-1.49	34700	33900	-2.33	31700	31300	-1.27
Manganese	2360	1770	-28.57	112	4.2	-185.54	394	311	-23.55
Mercury	<0.20	<0.20	-	<0.20	<0.20	-	<0.20	<0.20	-
Molybdenum	11.0	8.6	-24.49	2.8	2.2	-24.00	0.85J	1.1	-
Nickel	11.0	8.3	-27.98	1.8	<0.50	-	1.1	2.4	74.29
Potassium	4860	4390	-10.16	3610	3350	-7.47	3610	3640	0.83
Selenium	34.8	32.2	-7.76	35.4	34.3	-3.16	33.2	30.8	-7.50
Silver	2.1	1.4	-40.00	<0.50	<0.50	-	0.63	0.71	11.94
Sodium	7300	7190	-1.52	8160	8090	-0.86	7490	7490	0.00
Thallium	0.35	0.28	-22.22	<0.10	<0.10	-	<1.0	0.074J	-
Vanadium	20.6	15.2	-30.17	1.6	<0.10	-	4.1	3.3	-21.62
Zinc	620	527	-16.22	303	275	-9.69	481	421	-13.30
Alkalinity, Bicarbonate (CaCO3, mg/L)	262	<20.0	-	-	-	-	-	-	-
Alkalinity, Carbonate (CaCO3, mg/L)	<20.0	<20.0	-	-	-	-	-	-	-
Alkalinity, Total as CaCO3 (mg/L)	262	<20.0	-	-	-	-	-	-	-
Chloride (mg/L)	1.1	1.1	0.00	-	-	-	-	-	-
Cyanide	<0.0050	<0.0050	-	-	-	-	-	-	-
Hardness	765000	781000	2.07	-	-	-	-	-	-
Nitrogen, NO2 plus NO3 (mg/L)	<0.10	<0.10	-	-	-	-	-	-	-
Salinity, as dissolved solids (mg/L)	859	910	5.77	-	-	-	-	-	-
Salinity, as sea water (PSU)	0.67	0.71	5.80	-	-	-	-	-	-
Silica	46700	38800	-18.48	-	-	-	-	-	-
Sulfate (mg/L)	597	599	0.33	-	-	-	-	-	-
Sulfide (mg/L)	<0.050	<0.050	-	-	-	-	-	-	-
TDS (mg/L)	1150	1100	-4.44	-	-	-	-	-	-
TOC (mg/L)	1.6	1.7	6.06	-	-	-	-	-	-
TSS (mg/L)	272	227	-18.04	-	-	-	-	-	-

Table 5C - Relative Percent Difference (RPD) of Lab Analysis Between MW-6 DEEP and DR-10

Analyte	Total Metals / Non Metals			Dissolved Metals			Potentially Dissolved Metals		
	MW-6 DEEP (µg/L)	DR-10 (µg/L)	RPD (%)	MW-6 DEEP (µg/L)	DR-10 (µg/L)	RPD (%)	MW-6 DEEP (µg/L)	DR-10 (µg/L)	RPD (%)
Aluminum	9200	8800	-4.44	342	602	55.08	3890	3370	-14.33
Antimony	0.78	0.75	-3.92	<0.50	<0.50	-	0.19J	0.20J	-
Arsenic	143	107	-28.80	22.5	22.0	-2.25	138	89.7	-42.42
Barium	123	117	-5.00	11.0	14.0	24.00	33.8	30.5	-10.26
Beryllium	1.3	1.1	-16.67	0.67	0.78	15.17	1.1	0.95	-14.63
Cadmium	5.2	5.0	-3.92	<0.080	0.22	-	5.2	4.6	-12.24
Calcium	258000	259000	0.39	289000	302000	4.40	277000	271000	-2.19
Chromium	10.3	9.6	-7.04	<0.50	0.56	-	4.8	4.1	-15.73
Cobalt	6.9	6.7	-2.94	3.0	2.7	-10.53	5.7	4.9	-15.09
Copper	57.0	54.2	-5.04	0.75	2.2	98.31	35.6	31.0	-13.81
Iron	34100	32900	-3.58	20900	18800	-10.58	33400	27600	-19.02
Lead	106	99.5	-6.33	<0.10	3.6	-	42.0	49.0	15.38
Magnesium	38400	38500	0.26	33200	40000	18.58	41000	41800	1.93
Manganese	6500	6530	0.46	5910	7140	18.85	8680	7340	-16.73
Mercury	<0.20	<0.20	-	<0.20	<0.20	-	<0.20	<0.20	-
Molybdenum	10.1	9.8	-3.02	6.0	5.3	-12.39	5.5	4.5	-20.00
Nickel	11.6	11.0	-5.31	2.8	2.6	-7.41	4.9	4.4	-10.75
Potassium	7720	7700	-0.26	6500	5790	-11.55	6500	6100	-6.35
Selenium	3.9	3.3	-16.67	0.86	0.85	-1.17	1.6	1.3	-20.69
Silver	<0.50	<0.50	-	<0.50	<0.50	-	<0.50	0.075J	-
Sodium	4650	4590	-1.30	5040	4420	-13.11	4630	4390	-5.32
Thallium	0.19	0.17	-11.11	<0.10	<0.10	-	<1.0	0.056J	-
Vanadium	18.0	17.0	-5.71	0.12	0.70	141.46	8.7	7.5	-14.81
Zinc	1440	1390	-3.53	309	308	-0.32	1560	1320	-16.67
Alkalinity, Bicarbonate (CaCO3, mg/L)	85.3	153	56.82	-	-	-	-	-	-
Alkalinity, Carbonate (CaCO3, mg/L)	<20.0	<20.0	-	-	-	-	-	-	-
Alkalinity, Total as CaCO3 (mg/L)	85.3	153	56.82	-	-	-	-	-	-
Chloride (mg/L)	1.1	1.1	0.00	-	-	-	-	-	-
Cyanide	0.0079	0.0051	-43.08	-	-	-	-	-	-
Hardness	802000	805000	0.37	-	-	-	-	-	-
Nitrogen, NO2 plus NO3 (mg/L)	<0.10	<0.10	-	-	-	-	-	-	-
Salinity, as dissolved solids (mg/L)	955	913	-4.50	-	-	-	-	-	-
Salinity, as sea water (PSU)	0.75	0.71	-5.48	-	-	-	-	-	-
Silica	45800	44800	-2.21	-	-	-	-	-	-
Sulfate (mg/L)	760	765	0.66	-	-	-	-	-	-
Sulfide (mg/L)	<0.050	<0.050	-	-	-	-	-	-	-
TDS (mg/L)	1260	1260	0.00	-	-	-	-	-	-
TOC (mg/L)	1.4	1.4	0.00	-	-	-	-	-	-
TSS (mg/L)	317	322	1.56	-	-	-	-	-	-

Table 5D - Relative Percent Difference (RPD) of Lab Analysis Between MW-104 and DR-11

Analyte	Total Metals / Non Metals			Dissolved Metals			Potentially Dissolved Metals		
	MW-104 (µg/L)	DR-11 (µg/L)	RPD (%)	MW-104 (µg/L)	DR-11 (µg/L)	RPD (%)	MW-104 (µg/L)	DR-11 (µg/L)	RPD (%)
Aluminum	3830	610	-145.05	2690	378	-150.72	1290	210	-144.00
Antimony	<0.50	<0.50	-	<0.50	<0.50	-	0.20J	0.081J	-
Arsenic	4.5	0.73	-144.17	3.4	<0.50	-	1.8	0.48J	-
Barium	115	37.4	-101.84	86.3	27.8	-102.54	51.2	26.2	-64.60
Beryllium	<0.20	<0.20	-	0.23	<0.20	-	0.17J	<0.50	-
Cadmium	3.9	2.7	-36.36	3.7	2.2	-50.85	4.5	2.3	-64.71
Calcium	247000	257000	3.97	276000	302000	9.00	262000	249000	-5.09
Chromium	6.7	1.8	-115.29	5.0	0.74	-148.43	4.5	1.1	-121.43
Cobalt	3.2	0.65	-132.47	2.7	0.85	-104.23	1.9	0.34J	-
Copper	23.0	5.7	-120.56	20.5	3.7	-138.84	20.6	3.3	-144.77
Iron	6510	1040	-144.90	4820	628	-153.89	3020	481	-145.04
Lead	32.1	6.5	-132.64	26.9	3.6	-152.79	30.8	5.7	-137.53
Magnesium	26000	26400	1.53	33400	25300	-27.60	25000	23900	-4.50
Manganese	1550	318	-131.91	1200	148	-156.08	986	160	-144.15
Mercury	<0.20	<0.20	-	<0.20	<0.20	-	<0.20	<0.20	-
Molybdenum	14.0	11.1	-23.11	11.4	10.7	-6.33	2.1	9.8	129.41
Nickel	5.3	1.3	-121.21	7.0	2.2	-104.35	3.3	<1.0	-
Potassium	15100	17700	15.85	16000	16700	4.28	17200	17600	2.30
Selenium	1.9	1.7	-11.11	1.8	1.6	-11.76	1.6	1.4	-13.33
Silver	<0.50	<0.50	-	<0.50	<0.50	-	0.30J	<0.50	-
Sodium	14400	17100	17.14	16500	16800	1.80	16200	16400	1.23
Thallium	0.12	<0.10	-	<0.10	<0.10	-	<1.0	<1.0	-
Vanadium	8.0	1.4	-140.43	5.8	0.80	-151.52	2.8	0.62J	-
Zinc	1050	937	-11.37	1080	918	-16.22	1050	767	-31.15
Alkalinity, Bicarbonate (CaCO3, mg/L)	165	148	-10.86	-	-	-	-	-	-
Alkalinity, Carbonate (CaCO3, mg/L)	<20.0	<20.0	-	-	-	-	-	-	-
Alkalinity, Total as CaCO3 (mg/L)	165	148	-10.86	-	-	-	-	-	-
Chloride (mg/L)	1.1	1.0	-9.52	-	-	-	-	-	-
Cyanide	<0.0050	<0.0050	-	-	-	-	-	-	-
Hardness	723000	751000	3.80	-	-	-	-	-	-
Nitrogen, NO2 plus NO3 (mg/L)	<0.10	<0.10	-	-	-	-	-	-	-
Salinity, as dissolved solids (mg/L)	898	886	-1.35	-	-	-	-	-	-
Salinity, as sea water (PSU)	0.7	0.69	-1.44	-	-	-	-	-	-
Silica	26600	13700	-64.02	-	-	-	-	-	-
Sulfate (mg/L)	831	704	-16.55	-	-	-	-	-	-
Sulfide (mg/L)	<0.050	0.058	-	-	-	-	-	-	-
TDS (mg/L)	1100	1140	3.57	-	-	-	-	-	-
TOC (mg/L)	<1.0	<1.0	-	-	-	-	-	-	-
TSS (mg/L)	220	43.0	-134.60	-	-	-	-	-	-

Appendix C

Project Narrative and Laboratory Analytical Reports

Pace Analytical Services, Inc.
9608 Loiret Blvd.
Lenexa, KS 66219
(913)599-5665

February 27, 2013

Mark DeFriez
Anderson Engineering Company I
977 W 2100 S.
Salt Lake City, UT 84119

RE: Project: JANUARY 2013 RICO WATER SAMPLI
Pace Project No.: 60137200

Dear Mark DeFriez:
Enclosed are the analytical results for sample(s) received by the laboratory between January 18, 2013 and January 19, 2013. The results relate only to the within this report conform to the most current version of the TNI standards, BP LaMP Technical Requirements Revision 10.1, and any applicable Quality Assurance Project Plan (QAPP), or Work Plan unless otherwise narrated in the body of this report.

If you have any questions concerning this report, please feel free to contact me.

Sincerely,

Heather Wilson

heather.wilson@pacelabs.com
Project Manager

Enclosures

Pace Analytical Services, Inc.
9608 Loiret Blvd.
Lenexa, KS 66219
(913)599-5665

CERTIFICATIONS

Project: JANUARY 2013 RICO WATER SAMPLI
Pace Project No.: 60137200

Minnesota Certification IDs
1700 Elm Street SE Suite 200, Minneapolis, MN 55414
A2LA Certification #: 2926.01
Alaska Certification #: UST-078
Alaska Certification #MN00064
Arizona Certification #: AZ-0014
Arkansas Certification #: 88-0680
California Certification #: 01155CA
Colorado Certification #Pace
Connecticut Certification #: PH-0256
EPA Region 8 Certification #: Pace
Florida/NELAP Certification #: E87605
Georgia Certification #: 959
Hawaii Certification #Pace
Idaho Certification #: MN00064
Illinois Certification #: 200011
Kansas Certification #: E-10167
Louisiana Certification #: 03086
Louisiana Certification #: LA080009
Maine Certification #: 2007029
Maryland Certification #: 322
Michigan DEQ Certification #: 9909
Minnesota Certification #: 027-053-137
Mississippi Certification #: Pace
Montana Certification #: MT CERT0092
Nebraska Certification #: Pace
Nevada Certification #: MN_00064
New Jersey Certification #: MN-002
New York Certification #: 11647
North Carolina Certification #: 530
North Dakota Certification #: R-036
North Dakota Certification #: R-036A
Ohio VAP Certification #: CL101
Oklahoma Certification #: 9507
Oregon Certification #: MN200001
Oregon Certification #: MN300001
Pennsylvania Certification #: 68-00563
Puerto Rico Certification
Tennessee Certification #: 02818
Texas Certification #: T104704192
Utah Certification #: MN00064
Virginia/DCLS Certification #: 002521
Virginia/VELAP Certification #: 460163
Washington Certification #: C754
West Virginia Certification #: 382
Wisconsin Certification #: 999407970

Montana Certification IDs
602 South 25th Street, Billings, MT 59101
EPA Region 8 Certification #: 8TMS-Q
Idaho Certification #: MT00012
Montana Certification #: MT CERT0040
NVLAP Certification #: 101292-0
Minnesota Dept of Health Certification #: 030-999-442
Washington Department of Ecology #: C993

Kansas Certification IDs
9608 Loiret Boulevard, Lenexa, KS 66219
A2LA Certification #: 2456.01
Arkansas Certification #: 12-019-0
Illinois Certification #: 002885
Iowa Certification #: 118
Kansas/NELAP Certification #: E-10116
Louisiana Certification #: 03055
Nevada Certification #: KS000212008A
Oklahoma Certification #: 9205/9935
Texas Certification #: T104704407-12-3
Utah Certification #: KS000212012-2
Illinois Certification #: 003097

This report shall not be reproduced, except in full,
without the written consent of Pace Analytical Services, Inc..

Pace Analytical Services, Inc.
9608 Loiret Blvd.
Lenexa, KS 66219
(913)599-5665

SAMPLE SUMMARY

Project: JANUARY 2013 RICO WATER SAMPLI
Pace Project No.: 60137200

Lab ID	Sample ID	Matrix	Date Collected	Date Received
60137200001	**GW-1_20130115**	Water	01/15/13 14:55	01/18/13 10:20
60137200002	**GW-5_20130115**	Water	01/15/13 15:15	01/18/13 10:20
60137200003	**DR-3_20130115**	Water	01/15/13 15:33	01/18/13 10:20
60137200004	**DR-8_20130115**	Water	01/15/13 15:43	01/18/13 10:20
60137200005	**GW-6_20130115**	Water	01/15/13 15:59	01/18/13 10:20
60137200006	**DR-4_20130115**	Water	01/15/13 16:01	01/18/13 10:20
60137200007	**MW-1 SHALLOW_20130116**	Water	01/16/13 12:20	01/18/13 10:20
60137200008	**MW-1 DEEP_20130116**	Water	01/16/13 13:14	01/18/13 10:20
60137200009	**P13-103_20130116**	Water	01/16/13 12:55	01/18/13 10:20
60137200010	**P13-102_20130116**	Water	01/16/13 13:18	01/18/13 10:20
60137200011	**MW-6 DEEP_20130116**	Water	01/16/13 13:50	01/18/13 10:20
60137200012	**DR-10_20130116**	Water	01/16/13 14:15	01/18/13 10:20
60137200013	**MW-6 SHALLOW_20130116**	Water	01/16/13 14:14	01/18/13 10:20
60137200014	**EB-2_20130116**	Water	01/16/13 14:25	01/18/13 10:20
60137200015	**MW-5 DEEP_20130116**	Water	01/16/13 15:13	01/18/13 10:20
60137200016	**MW-5 SHALLOW_20130116**	Water	01/16/13 14:59	01/18/13 10:20
60137200017	**GW-3_20130117**	Water	01/17/13 11:56	01/18/13 10:20
60137200018	**MW-4 SHALLOW_20130117**	Water	01/17/13 11:47	01/18/13 10:20
60137200019	**MW-4 DEEP_20130116**	Water	01/16/13 11:15	01/19/13 08:30
60137200020	**DR-9_20130116**	Water	01/16/13 11:35	01/19/13 08:30
60137200021	**GW-4_20130116**	Water	01/16/13 11:25	01/19/13 08:30
60137200022	**MW-3 DEEP_20130116**	Water	01/16/13 11:50	01/19/13 08:30
60137200023	**MW-2 DEEP_20130116**	Water	01/16/13 12:15	01/19/13 08:30
60137200024	**EB-1_20130116**	Water	01/16/13 10:30	01/19/13 08:30

This report shall not be reproduced, except in full,
without the written consent of Pace Analytical Services, Inc..

Pace Analytical Services, Inc.
9608 Loiret Blvd.
Lenexa, KS 66219
(913)599-5665

SAMPLE ANALYTE COUNT

Project: JANUARY 2013 RICO WATER SAMPLI
Pace Project No.: 60137200

Lab ID	Sample ID	Method	Analysts	Analytes Reported	Laboratory
60137200001	**GW-1_20130115**	EPA 200.7	NDJ, SMW	4	PASI-K
		EPA 200.8	RJS	25	PASI-M
		EPA 200.8	RJS, TT3	23	PASI-M
		EPA 200.8	JGP	19	PASI-K
		EPA 245.1	WBS	1	PASI-M
		EPA 245.1	WBS	1	PASI-M
		EPA 245.1	TDS	1	PASI-K
		SM 2510B	WT1	1	
		Calculated	WT1	2	
		SM 2320B	DJR	3	PASI-K
		SM 2540C	JML	1	PASI-K
		SM 2540D	JML	1	PASI-K
		SM 4500-S-2 D	AJM	1	PASI-K
		EPA 300.0	AJM	2	PASI-K
		EPA 353.2	AJM	1	PASI-K
		SM 4500-CN-E	OL	1	PASI-K
		SM 5310C	SEL	1	PASI-K
60137200002	**GW-5_20130115**	EPA 200.7	NDJ	4	PASI-K
		EPA 200.8	RJS	25	PASI-M
		EPA 200.8	RJS, TT3	23	PASI-M
		EPA 200.8	JGP	19	PASI-K
		EPA 245.1	WBS	1	PASI-M
		EPA 245.1	WBS	1	PASI-M
		EPA 245.1	TDS	1	PASI-K
		SM 2510B	WT1	1	
		Calculated	WT1	2	
		SM 2320B	DJR	3	PASI-K
		SM 2540C	JML	1	PASI-K
		SM 2540D	JML	1	PASI-K
		SM 4500-S-2 D	AJM	1	PASI-K
		EPA 300.0	AJM	2	PASI-K
		EPA 353.2	AJM	1	PASI-K
		SM 4500-CN-E	OL	1	PASI-K
		SM 5310C	SEL	1	PASI-K
60137200003	**DR-3_20130115**	EPA 200.7	NDJ	4	PASI-K
		EPA 200.8	RJS	25	PASI-M
		EPA 200.8	RJS, TT3	23	PASI-M

This report shall not be reproduced, except in full,
without the written consent of Pace Analytical Services, Inc..

Pace Analytical Services, Inc.
9608 Loiret Blvd.
Lenexa, KS 66219
(913)599-5665

SAMPLE ANALYTE COUNT

Project: JANUARY 2013 RICO WATER SAMPLI
Pace Project No.: 60137200

Lab ID	Sample ID	Method	Analysts	Analytes Reported	Laboratory
		EPA 200.8	JGP	19	PASI-K
		EPA 245.1	WBS	1	PASI-M
		EPA 245.1	WBS	1	PASI-M
		EPA 245.1	TDS	1	PASI-K
		SM 2510B	WT1	1	
		Calculated	WT1	2	
		SM 2320B	DJR	3	PASI-K
		SM 2540C	JML	1	PASI-K
		SM 2540D	JML	1	PASI-K
		SM 4500-S-2 D	AJM	1	PASI-K
		EPA 300.0	AJM	2	PASI-K
		EPA 353.2	AJM	1	PASI-K
		SM 4500-CN-E	OL	1	PASI-K
		SM 5310C	SEL	1	PASI-K
60137200004	**DR-8_20130115**	EPA 200.7	NDJ	4	PASI-K
		EPA 200.8	RJS	25	PASI-M
		EPA 200.8	RJS, TT3	23	PASI-M
		EPA 200.8	JGP	19	PASI-K
		EPA 245.1	WBS	1	PASI-M
		EPA 245.1	WBS	1	PASI-M
		EPA 245.1	TDS	1	PASI-K
		SM 2510B	WT1	1	
		Calculated	WT1	2	
		SM 2320B	DJR	3	PASI-K
		SM 2540C	JML	1	PASI-K
		SM 2540D	JML	1	PASI-K
		SM 4500-S-2 D	AJM	1	PASI-K
		EPA 300.0	AJM	2	PASI-K
		EPA 353.2	AJM	1	PASI-K
		SM 4500-CN-E	OL	1	PASI-K
		SM 5310C	SEL	1	PASI-K
60137200005	**GW-6_20130115**	EPA 200.7	NDJ	4	PASI-K
		EPA 200.8	AS2, RJS	25	PASI-M
		EPA 200.8	RJS, TT3	23	PASI-M
		EPA 200.8	JGP	19	PASI-K
		EPA 245.1	WBS	1	PASI-M
		EPA 245.1	WBS	1	PASI-M

This report shall not be reproduced, except in full,
without the written consent of Pace Analytical Services, Inc..

Pace Analytical Services, Inc.
9608 Loiret Blvd.
Lenexa, KS 66219
(913)599-5665

SAMPLE ANALYTE COUNT

Project: JANUARY 2013 RICO WATER SAMPLI
Pace Project No.: 60137200

Lab ID	Sample ID	Method	Analysts	Analytes Reported	Laboratory
		EPA 245.1	TDS	1	PASI-K
		SM 2510B	WT1	1	
		Calculated	WT1	2	
		SM 2320B	DJR	3	PASI-K
		SM 2540C	JML	1	PASI-K
		SM 2540D	JML	1	PASI-K
		SM 4500-S-2 D	AJM	1	PASI-K
		EPA 300.0	AJM	2	PASI-K
		EPA 353.2	AJM	1	PASI-K
		SM 4500-CN-E	OL	1	PASI-K
		SM 5310C	SEL	1	PASI-K
60137200006	**DR-4_20130115**	EPA 200.7	NDJ	4	PASI-K
		EPA 200.8	RJS	25	PASI-M
		EPA 200.8	RJS, TT3	23	PASI-M
		EPA 200.8	JGP	19	PASI-K
		EPA 245.1	WBS	1	PASI-M
		EPA 245.1	WBS	1	PASI-M
		EPA 245.1	TDS	1	PASI-K
		SM 2510B	WT1	1	
		Calculated	WT1	2	
		SM 2320B	DJR	3	PASI-K
		SM 2540C	JML	1	PASI-K
		SM 2540D	JML	1	PASI-K
		SM 4500-S-2 D	AJM	1	PASI-K
		EPA 300.0	AJM	2	PASI-K
		EPA 353.2	AJM	1	PASI-K
		SM 4500-CN-E	OL	1	PASI-K
		SM 5310C	SEL	1	PASI-K
60137200007	**MW-1 SHALLOW_20130116**	EPA 200.7	NDJ	4	PASI-K
		EPA 200.8	RJS	25	PASI-M
		EPA 200.8	RJS, TT3	23	PASI-M
		EPA 200.8	JGP	19	PASI-K
		EPA 245.1	WBS	1	PASI-M
		EPA 245.1	WBS	1	PASI-M
		EPA 245.1	TDS	1	PASI-K
		SM 2510B	WT1	1	
		Calculated	WT1	2	

This report shall not be reproduced, except in full,
without the written consent of Pace Analytical Services, Inc..

Pace Analytical Services, Inc.
9608 Loiret Blvd.
Lenexa, KS 66219
(913)599-5665

SAMPLE ANALYTE COUNT

Project: JANUARY 2013 RICO WATER SAMPLI
Pace Project No.: 60137200

Lab ID	Sample ID	Method	Analysts	Analytes Reported	Laboratory
		SM 2320B	DJR	3	PASI-K
		SM 2540C	JML	1	PASI-K
		SM 2540D	JML	1	PASI-K
		SM 4500-S-2 D	AJM	1	PASI-K
		EPA 300.0	AJM	2	PASI-K
		EPA 353.2	AJM	1	PASI-K
		SM 4500-CN-E	OL	1	PASI-K
		SM 5310C	SEL	1	PASI-K
60137200008	**MW-1 DEEP_20130116**	EPA 200.7	NDJ	4	PASI-K
		EPA 200.8	RJS	25	PASI-M
		EPA 200.8	RJS, TT3	23	PASI-M
		EPA 200.8	JGP	19	PASI-K
		EPA 245.1	WBS	1	PASI-M
		EPA 245.1	WBS	1	PASI-M
		EPA 245.1	TDS	1	PASI-K
		SM 2510B	WT1	1	
		Calculated	WT1	2	
		SM 2320B	DJR	3	PASI-K
		SM 2540C	JML	1	PASI-K
		SM 2540D	JML	1	PASI-K
		SM 4500-S-2 D	AJM	1	PASI-K
		EPA 300.0	AJM	2	PASI-K
		EPA 353.2	AJM	1	PASI-K
		SM 4500-CN-E	OL	1	PASI-K
		SM 5310C	SEL	1	PASI-K
60137200009	**P13-103_20130116**	EPA 200.7	NDJ	4	PASI-K
		EPA 200.8	RJS	25	PASI-M
		EPA 200.8	RJS, TT3	23	PASI-M
		EPA 200.8	JGP	19	PASI-K
		EPA 245.1	WBS	1	PASI-M
		EPA 245.1	WBS	1	PASI-M
		EPA 245.1	TDS	1	PASI-K
		SM 2510B	WT1	1	
		Calculated	WT1	2	
		SM 2320B	DJR	3	PASI-K
		SM 2540C	JML	1	PASI-K
		SM 2540D	JML	1	PASI-K

This report shall not be reproduced, except in full,
without the written consent of Pace Analytical Services, Inc..

Pace Analytical Services, Inc.
9608 Loiret Blvd.
Lenexa, KS 66219
(913)599-5665

SAMPLE ANALYTE COUNT

Project: JANUARY 2013 RICO WATER SAMPLI
Pace Project No.: 60137200

Lab ID	Sample ID	Method	Analysts	Analytes Reported	Laboratory
		SM 4500-S-2 D	AJM	1	PASI-K
		EPA 300.0	AJM	2	PASI-K
		EPA 353.2	AJM	1	PASI-K
		SM 4500-CN-E	OL	1	PASI-K
		SM 5310C	SEL	1	PASI-K
60137200010	**P13-102_20130116**	EPA 200.7	NDJ	4	PASI-K
		EPA 200.8	RJS	25	PASI-M
		EPA 200.8	RJS, TT3	23	PASI-M
		EPA 200.8	JGP	19	PASI-K
		EPA 245.1	WBS	1	PASI-M
		EPA 245.1	WBS	1	PASI-M
		EPA 245.1	TDS	1	PASI-K
		SM 2510B	WT1	1	
		Calculated	WT1	2	
		SM 2320B	DJR	3	PASI-K
		SM 2540C	JML	1	PASI-K
		SM 2540D	JML	1	PASI-K
		SM 4500-S-2 D	AJM	1	PASI-K
		EPA 300.0	AJM	2	PASI-K
		EPA 353.2	AJM	1	PASI-K
		SM 4500-CN-E	OL	1	PASI-K
		SM 5310C	SEL	1	PASI-K
60137200011	**MW-6 DEEP_20130116**	EPA 200.7	NDJ	4	PASI-K
		EPA 200.8	RJS	25	PASI-M
		EPA 200.8	RJS, TT3	23	PASI-M
		EPA 200.8	JGP	19	PASI-K
		EPA 245.1	WBS	1	PASI-M
		EPA 245.1	WBS	1	PASI-M
		EPA 245.1	TDS	1	PASI-K
		SM 2510B	WT1	1	
		Calculated	WT1	2	
		SM 2320B	DJR	3	PASI-K
		SM 2540C	JML	1	PASI-K
		SM 2540D	JML	1	PASI-K
		SM 4500-S-2 D	AJM	1	PASI-K
		EPA 300.0	AJM	2	PASI-K
		EPA 353.2	AJM	1	PASI-K

This report shall not be reproduced, except in full,
without the written consent of Pace Analytical Services, Inc..

Pace Analytical Services, Inc.
9608 Loiret Blvd.
Lenexa, KS 66219
(913)599-5665

SAMPLE ANALYTE COUNT

Project: JANUARY 2013 RICO WATER SAMPLI
Pace Project No.: 60137200

Lab ID	Sample ID	Method	Analysts	Analytes Reported	Laboratory
		SM 4500-CN-E	OL	1	PASI-K
		SM 5310C	SEL	1	PASI-K
60137200012	**DR-10_20130116**	EPA 200.7	NDJ	4	PASI-K
		EPA 200.8	RJS	25	PASI-M
		EPA 200.8	RJS, TT3	23	PASI-M
		EPA 200.8	JGP	19	PASI-K
		EPA 245.1	WBS	1	PASI-M
		EPA 245.1	WBS	1	PASI-M
		EPA 245.1	TDS	1	PASI-K
		SM 2510B	WT1	1	
		Calculated	WT1	2	
		SM 2320B	DJR	3	PASI-K
		SM 2540C	JML	1	PASI-K
		SM 2540D	JML	1	PASI-K
		SM 4500-S-2 D	AJM	1	PASI-K
		EPA 300.0	AJM	2	PASI-K
		EPA 353.2	AJM	1	PASI-K
		SM 4500-CN-E	OL	1	PASI-K
		SM 5310C	SEL	1	PASI-K
60137200013	**MW-6 SHALLOW_20130116**	EPA 200.7	NDJ	4	PASI-K
		EPA 200.8	RJS	25	PASI-M
		EPA 200.8	RJS, TT3	23	PASI-M
		EPA 200.8	JGP	19	PASI-K
		EPA 245.1	WBS	1	PASI-M
		EPA 245.1	WBS	1	PASI-M
		EPA 245.1	TDS	1	PASI-K
		SM 2510B	WT1	1	
		Calculated	WT1	2	
		SM 2320B	DJR	3	PASI-K
		SM 2540C	JML	1	PASI-K
		SM 2540D	JML	1	PASI-K
		SM 4500-S-2 D	AJM	1	PASI-K
		EPA 300.0	AJM	2	PASI-K
		EPA 353.2	AJM	1	PASI-K
		SM 4500-CN-E	OL	1	PASI-K
		SM 5310C	SEL	1	PASI-K
60137200014	**EB-2_20130116**	EPA 200.7	NDJ	4	PASI-K

This report shall not be reproduced, except in full,
without the written consent of Pace Analytical Services, Inc..

Pace Analytical Services, Inc.
9608 Loiret Blvd.
Lenexa, KS 66219
(913)599-5665

SAMPLE ANALYTE COUNT

Project: JANUARY 2013 RICO WATER SAMPLI
Pace Project No.: 60137200

Lab ID	Sample ID	Method	Analysts	Analytes Reported	Laboratory
		EPA 200.8	RJS	25	PASI-M
		EPA 200.8	RJS, TT3	23	PASI-M
		EPA 200.8	JGP	19	PASI-K
		EPA 245.1	WBS	1	PASI-M
		EPA 245.1	WBS	1	PASI-M
		EPA 245.1	TDS	1	PASI-K
		SM 2510B	WT1	1	
		Calculated	WT1	2	
		SM 2320B	DJR	3	PASI-K
		SM 2540C	JML	1	PASI-K
		SM 2540D	JML	1	PASI-K
		SM 4500-S-2 D	AJM	1	PASI-K
		EPA 300.0	AJM	2	PASI-K
		EPA 353.2	AJM	1	PASI-K
		SM 4500-CN-E	OL	1	PASI-K
		SM 5310C	SEL	1	PASI-K
60137200015	**MW-5 DEEP_20130116**	EPA 200.7	NDJ	4	PASI-K
		EPA 200.8	RJS	25	PASI-M
		EPA 200.8	RJS, TT3	23	PASI-M
		EPA 200.8	JGP	19	PASI-K
		EPA 245.1	WBS	1	PASI-M
		EPA 245.1	WBS	1	PASI-M
		EPA 245.1	TDS	1	PASI-K
		SM 2510B	WT1	1	
		Calculated	WT1	2	
		SM 2320B	DJR	3	PASI-K
		SM 2540C	JML	1	PASI-K
		SM 2540D	JML	1	PASI-K
		SM 4500-S-2 D	AJM	1	PASI-K
		EPA 300.0	AJM	2	PASI-K
		EPA 353.2	AJM	1	PASI-K
		SM 4500-CN-E	OL	1	PASI-K
		SM 5310C	SEL	1	PASI-K
60137200016	**MW-5 SHALLOW_20130116**	EPA 200.7	NDJ	4	PASI-K
		EPA 200.8	RJS	25	PASI-M
		EPA 200.8	RJS	23	PASI-M
		EPA 200.8	JGP	19	PASI-K

This report shall not be reproduced, except in full,
without the written consent of Pace Analytical Services, Inc..

Pace Analytical Services, Inc.
9608 Loiret Blvd.
Lenexa, KS 66219
(913)599-5665

SAMPLE ANALYTE COUNT

Project: JANUARY 2013 RICO WATER SAMPLI
Pace Project No.: 60137200

Lab ID	Sample ID	Method	Analysts	Analytes Reported	Laboratory
		EPA 245.1	WBS	1	PASI-M
		EPA 245.1	WBS	1	PASI-M
		EPA 245.1	TDS	1	PASI-K
		SM 2510B	WT1	1	
		Calculated	WT1	2	
		SM 2320B	DJR	3	PASI-K
		SM 2540C	JML	1	PASI-K
		SM 2540D	JML	1	PASI-K
		SM 4500-S-2 D	AJM	1	PASI-K
		EPA 300.0	AJM	2	PASI-K
		EPA 353.2	AJM	1	PASI-K
		SM 4500-CN-E	OL	1	PASI-K
		SM 5310C	SEL	1	PASI-K
60137200017	**GW-3_20130117**	EPA 200.7	NDJ	4	PASI-K
		EPA 200.8	RJS	25	PASI-M
		EPA 200.8	RJS	23	PASI-M
		EPA 200.8	JGP	19	PASI-K
		EPA 245.1	WBS	1	PASI-M
		EPA 245.1	WBS	1	PASI-M
		EPA 245.1	TDS	1	PASI-K
		SM 2510B	WT1	1	
		Calculated	WT1	2	
		SM 2320B	DJR	3	PASI-K
		SM 2540C	JML	1	PASI-K
		SM 2540D	JML	1	PASI-K
		SM 4500-S-2 D	AJM	1	PASI-K
		EPA 300.0	AJM	2	PASI-K
		EPA 353.2	AJM	1	PASI-K
		SM 4500-CN-E	OL	1	PASI-K
		SM 5310C	SEL	1	PASI-K
60137200018	**MW-4 SHALLOW_20130117**	EPA 200.7	NDJ	4	PASI-K
		EPA 200.8	RJS	25	PASI-M
		EPA 200.8	RJS, TT3	23	PASI-M
		EPA 200.8	JGP	19	PASI-K
		EPA 245.1	WBS	1	PASI-M
		EPA 245.1	WBS	1	PASI-M
		EPA 245.1	TDS	1	PASI-K

This report shall not be reproduced, except in full,
without the written consent of Pace Analytical Services, Inc..

Pace Analytical Services, Inc.
9608 Loiret Blvd.
Lenexa, KS 66219
(913)599-5665

SAMPLE ANALYTE COUNT

Project: JANUARY 2013 RICO WATER SAMPLI
Pace Project No.: 60137200

Lab ID	Sample ID	Method	Analysts	Analytes Reported	Laboratory
		SM 2510B	WT1	1	
		Calculated	WT1	2	
		SM 2320B	DJR	3	PASI-K
		SM 2540C	JML	1	PASI-K
		SM 2540D	JML	1	PASI-K
		SM 4500-S-2 D	AJM	1	PASI-K
		EPA 300.0	AJM	2	PASI-K
		EPA 353.2	AJM	1	PASI-K
		SM 4500-CN-E	OL	1	PASI-K
		SM 5310C	SEL	1	PASI-K
60137200019	**MW-4 DEEP_20130116**	EPA 200.7	NDJ	4	PASI-K
		EPA 200.8	RJS	25	PASI-M
		EPA 200.8	RJS, TT3	23	PASI-M
		EPA 200.8	JGP	19	PASI-K
		EPA 245.1	WBS	1	PASI-M
		EPA 245.1	WBS	1	PASI-M
		EPA 245.1	TDS	1	PASI-K
		SM 2510B	WT1	1	
		Calculated	WT1	2	
		SM 2320B	DJR	3	PASI-K
		SM 2540C	JML	1	PASI-K
		SM 2540D	JML	1	PASI-K
		SM 4500-S-2 D	AJM	1	PASI-K
		EPA 300.0	AJM	2	PASI-K
		EPA 353.2	AJM	1	PASI-K
		SM 4500-CN-E	OL	1	PASI-K
		SM 5310C	SEL	1	PASI-K
60137200020	**DR-9_20130116**	EPA 200.7	NDJ	4	PASI-K
		EPA 200.8	RJS	25	PASI-M
		EPA 200.8	RJS, TT3	23	PASI-M
		EPA 200.8	JGP	19	PASI-K
		EPA 245.1	WBS	1	PASI-M
		EPA 245.1	WBS	1	PASI-M
		EPA 245.1	TDS	1	PASI-K
		SM 2510B	WT1	1	
		Calculated	WT1	2	
		SM 2320B	DJR	3	PASI-K

This report shall not be reproduced, except in full,
without the written consent of Pace Analytical Services, Inc..

Pace Analytical Services, Inc.
9608 Loiret Blvd.
Lenexa, KS 66219
(913)599-5665

SAMPLE ANALYTE COUNT

Project: JANUARY 2013 RICO WATER SAMPLI
Pace Project No.: 60137200

Lab ID	Sample ID	Method	Analysts	Analytes Reported	Laboratory
		SM 2540C	JML	1	PASI-K
		SM 2540D	JML	1	PASI-K
		SM 4500-S-2 D	AJM	1	PASI-K
		EPA 300.0	AJM	2	PASI-K
		EPA 353.2	AJM	1	PASI-K
		SM 4500-CN-E	OL	1	PASI-K
		SM 5310C	SEL	1	PASI-K
60137200021	**GW-4_20130116**	EPA 200.7	NDJ	4	PASI-K
		EPA 200.8	RJS	25	PASI-M
		EPA 200.8	RJS	23	PASI-M
		EPA 200.8	JGP	19	PASI-K
		EPA 245.1	WBS	1	PASI-M
		EPA 245.1	WBS	1	PASI-M
		EPA 245.1	TDS	1	PASI-K
		SM 2510B	WT1	1	
		Calculated	WT1	2	
		SM 2320B	DJR	3	PASI-K
		SM 2540C	JML	1	PASI-K
		SM 2540D	JML	1	PASI-K
		SM 4500-S-2 D	AJM	1	PASI-K
		EPA 300.0	AJM	2	PASI-K
		EPA 353.2	AJM	1	PASI-K
		SM 4500-CN-E	OL	1	PASI-K
		SM 5310C	SEL	1	PASI-K
60137200022	**MW-3 DEEP_20130116**	EPA 200.7	NDJ	4	PASI-K
		EPA 200.8	RJS	25	PASI-M
		EPA 200.8	RJS	23	PASI-M
		EPA 200.8	JGP	19	PASI-K
		EPA 245.1	WBS	1	PASI-M
		EPA 245.1	WBS	1	PASI-M
		EPA 245.1	TDS	1	PASI-K
		SM 2510B	WT1	1	
		Calculated	WT1	2	
		SM 2320B	DJR	3	PASI-K
		SM 2540C	JML	1	PASI-K
		SM 2540D	JML	1	PASI-K
		SM 4500-S-2 D	AJM	1	PASI-K

This report shall not be reproduced, except in full,
without the written consent of Pace Analytical Services, Inc..

Pace Analytical Services, Inc.
9608 Loiret Blvd.
Lenexa, KS 66219
(913)599-5665

SAMPLE ANALYTE COUNT

Project: JANUARY 2013 RICO WATER SAMPLI
Pace Project No.: 60137200

Lab ID	Sample ID	Method	Analysts	Analytes Reported	Laboratory
		EPA 300.0	AJM	2	PASI-K
		EPA 353.2	AJM	1	PASI-K
		SM 4500-CN-E	OL	1	PASI-K
		SM 5310C	SEL	1	PASI-K
60137200023	**MW-2 DEEP_20130116**	EPA 200.7	NDJ, SMW	4	PASI-K
		EPA 200.8	RJS	25	PASI-M
		EPA 200.8	RJS	23	PASI-M
		EPA 200.8	JGP	19	PASI-K
		EPA 245.1	WBS	1	PASI-M
		EPA 245.1	WBS	1	PASI-M
		EPA 245.1	TDS	1	PASI-K
		SM 2510B	WT1	1	
		Calculated	WT1	2	
		SM 2320B	DJR	3	PASI-K
		SM 2540C	JML	1	PASI-K
		SM 2540D	JML	1	PASI-K
		SM 4500-S-2 D	AJM	1	PASI-K
		EPA 300.0	AJM	2	PASI-K
		EPA 353.2	AJM	1	PASI-K
		SM 4500-CN-E	OL	1	PASI-K
		SM 5310C	SEL	1	PASI-K
60137200024	**EB-1_20130116**	EPA 200.7	NDJ	4	PASI-K
		EPA 200.8	RJS	25	PASI-M
		EPA 200.8	RJS	23	PASI-M
		EPA 200.8	JGP	19	PASI-K
		EPA 245.1	WBS	1	PASI-M
		EPA 245.1	WBS	1	PASI-M
		EPA 245.1	TDS	1	PASI-K
		SM 2510B	WT1	1	
		Calculated	WT1	2	
		SM 2320B	DJR	3	PASI-K
		SM 2540C	JML	1	PASI-K
		SM 2540D	JML	1	PASI-K
		SM 4500-S-2 D	AJM	1	PASI-K
		EPA 300.0	AJM	2	PASI-K
		EPA 353.2	AJM	1	PASI-K
		SM 4500-CN-E	OL	1	PASI-K

This report shall not be reproduced, except in full,
without the written consent of Pace Analytical Services, Inc..

Pace Analytical Services, Inc.
9608 Loiret Blvd.
Lenexa, KS 66219
(913)599-5665

SAMPLE ANALYTE COUNT

Project: JANUARY 2013 RICO WATER SAMPLI
Pace Project No.: 60137200

Lab ID	Sample ID	Method	Analysts	Analytes Reported	Laboratory
		SM 5310C	SEL	1	PASI-K

This report shall not be reproduced, except in full,
without the written consent of Pace Analytical Services, Inc..

Pace Analytical Services, Inc.
9608 Loiret Blvd.
Lenexa, KS 66219
(913)599-5665

PROJECT NARRATIVE

Project: JANUARY 2013 RICO WATER SAMPLI
Pace Project No.: 60137200

Method: **EPA 200.7**
Description: 200.7 Potentially Diss. Metals
Client: BP Anderson Engineering Company Inc.
Date: February 27, 2013

General Information:
24 samples were analyzed for EPA 200.7. All samples were received in acceptable condition with any exceptions noted below.

Hold Time:
The samples were analyzed within the method required hold times with any exceptions noted below.

Sample Preparation:
The samples were prepared in accordance with EPA 200.7 with any exceptions noted below.

Initial Calibrations (including MS Tune as applicable):
All criteria were within method requirements with any exceptions noted below.

Continuing Calibration:
All criteria were within method requirements with any exceptions noted below.

Method Blank:
All analytes were below the report limit in the method blank with any exceptions noted below.

Laboratory Control Spike:
All laboratory control spike compounds were within QC limits with any exceptions noted below.

Matrix Spikes:
All percent recoveries and relative percent differences (RPDs) were within acceptance criteria with any exceptions noted below.

QC Batch: MPRP/21301

A matrix spike and matrix spike duplicate (MS/MSD) were performed on the following sample(s): 60137200002,60137200012

M1: Matrix spike recovery exceeded QC limits. Batch accepted based on laboratory control sample (LCS) recovery.

- MS (Lab ID: 1132017)
  - Calcium, Dissolved

Additional Comments:

This report shall not be reproduced, except in full,
without the written consent of Pace Analytical Services, Inc..

Pace Analytical Services, Inc.
9608 Loiret Blvd.
Lenexa, KS 66219
(913)599-5665

PROJECT NARRATIVE

Project: JANUARY 2013 RICO WATER SAMPLI
Pace Project No.: 60137200

Method: **EPA 200.8**
Description: 200.8 MET ICPMS
Client: BP Anderson Engineering Company Inc.
Date: February 27, 2013

General Information:
24 samples were analyzed for EPA 200.8. All samples were received in acceptable condition with any exceptions noted below.

Hold Time:
The samples were analyzed within the method required hold times with any exceptions noted below.

Sample Preparation:
The samples were prepared in accordance with EPA 200.8 with any exceptions noted below.

Initial Calibrations (including MS Tune as applicable):
All criteria were within method requirements with any exceptions noted below.

Continuing Calibration:
All criteria were within method requirements with any exceptions noted below.

Internal Standards:
All internal standards were within QC limits with any exceptions noted below.

Method Blank:
All analytes were below the report limit in the method blank with any exceptions noted below.

Laboratory Control Spike:
All laboratory control spike compounds were within QC limits with any exceptions noted below.

Matrix Spikes:
All percent recoveries and relative percent differences (RPDs) were within acceptance criteria with any exceptions noted below.

QC Batch: MPRP/37352

A matrix spike and matrix spike duplicate (MS/MSD) were performed on the following sample(s): 60137200017

M1: Matrix spike recovery exceeded QC limits. Batch accepted based on laboratory control sample (LCS) recovery.

- MS (Lab ID: 1369256)
  - Silica
  - Total Hardness by 2340B
- MSD (Lab ID: 1369257)
  - Silica
  - Total Hardness by 2340B

QC Batch: MPRP/37351

A matrix spike and matrix spike duplicate (MS/MSD) were performed on the following sample(s): 60137200001

D6: The relative percent difference (RPD) between the sample and sample duplicate exceeded laboratory control limits.

- MSD (Lab ID: 1368381)
  - Zinc

M1: Matrix spike recovery exceeded QC limits. Batch accepted based on laboratory control sample (LCS) recovery.

- MS (Lab ID: 1368380)

This report shall not be reproduced, except in full,
without the written consent of Pace Analytical Services, Inc..

Pace Analytical Services, Inc.
9608 Loiret Blvd.
Lenexa, KS 66219
(913)599-5665

PROJECT NARRATIVE

Project: JANUARY 2013 RICO WATER SAMPLI
Pace Project No.: 60137200

Method: **EPA 200.8**
Description: 200.8 MET ICPMS
Client: BP Anderson Engineering Company Inc.
Date: February 27, 2013

QC Batch: MPRP/37351

A matrix spike and matrix spike duplicate (MS/MSD) were performed on the following sample(s): 60137200001

M1: Matrix spike recovery exceeded QC limits. Batch accepted based on laboratory control sample (LCS) recovery.

- Silica
- Total Hardness by 2340B

- MSD (Lab ID: 1368381)
  - Silica
  - Total Hardness by 2340B

Additional Comments:

Analyte Comments:

QC Batch: MPRP/37351

D3: Sample was diluted due to the presence of high levels of non-target analytes or other matrix interference.

- EB-2_20130116 (Lab ID: 60137200014)
  - Antimony
  - Thallium
- MW-5 DEEP_20130116 (Lab ID: 60137200015)
  - Antimony
- MW-6 SHALLOW_20130116 (Lab ID: 60137200013)
  - Antimony

P8: Analyte was detected in the method blank. All associated samples had concentrations of at least ten times greater than the blank or were below the reporting limit.

- BLANK (Lab ID: 1368378)
  - Copper

This report shall not be reproduced, except in full,
without the written consent of Pace Analytical Services, Inc..

Pace Analytical Services, Inc.
9608 Loiret Blvd.
Lenexa, KS 66219
(913)599-5665

PROJECT NARRATIVE

Project: JANUARY 2013 RICO WATER SAMPLI
Pace Project No.: 60137200

Method: **EPA 200.8**
Description: 200.8 MET ICPMS, Dissolved
Client: BP Anderson Engineering Company Inc.
Date: February 27, 2013

General Information:
24 samples were analyzed for EPA 200.8. All samples were received in acceptable condition with any exceptions noted below.

Hold Time:
The samples were analyzed within the method required hold times with any exceptions noted below.

Sample Preparation:
The samples were prepared in accordance with EPA 200.8 with any exceptions noted below.

Initial Calibrations (including MS Tune as applicable):
All criteria were within method requirements with any exceptions noted below.

Continuing Calibration:
All criteria were within method requirements with any exceptions noted below.

Internal Standards:
All internal standards were within QC limits with any exceptions noted below.

Method Blank:
All analytes were below the report limit in the method blank with any exceptions noted below.

Laboratory Control Spike:
All laboratory control spike compounds were within QC limits with any exceptions noted below.

Matrix Spikes:
All percent recoveries and relative percent differences (RPDs) were within acceptance criteria with any exceptions noted below.

QC Batch: MPRP/37358

A matrix spike and matrix spike duplicate (MS/MSD) were performed on the following sample(s): 60137200001

M1: Matrix spike recovery exceeded QC limits. Batch accepted based on laboratory control sample (LCS) recovery.

- MS (Lab ID: 1368433)
  - Aluminum, Dissolved
  - Magnesium, Dissolved
- MSD (Lab ID: 1368434)
  - Magnesium, Dissolved

Additional Comments:

Analyte Comments:

QC Batch: MPRP/37358

D3: Sample was diluted due to the presence of high levels of non-target analytes or other matrix interference.

- EB-2_20130116 (Lab ID: 60137200014)
  - Silver, Dissolved

This report shall not be reproduced, except in full,
without the written consent of Pace Analytical Services, Inc..

Pace Analytical Services, Inc.
9608 Loiret Blvd.
Lenexa, KS 66219
(913)599-5665

PROJECT NARRATIVE

Project: JANUARY 2013 RICO WATER SAMPLI
Pace Project No.: 60137200

Method: **EPA 200.8**
Description: 200.8 MET ICPMS, Dissolved
Client: BP Anderson Engineering Company Inc.
Date: February 27, 2013

Analyte Comments:

QC Batch: MPRP/37358

D3: Sample was diluted due to the presence of high levels of non-target analytes or other matrix interference.

- EB-2_20130116 (Lab ID: 60137200014)
  - Chromium, Dissolved
  - Antimony, Dissolved
  - Thallium, Dissolved
- MW-5 DEEP_20130116 (Lab ID: 60137200015)
  - Silver, Dissolved
  - Antimony, Dissolved
  - Selenium, Dissolved
  - Thallium, Dissolved

QC Batch: MPRP/37359

E: Analyte concentration exceeded the calibration range. The reported result is estimated.

- MS (Lab ID: 1368449)
  - Calcium, Dissolved
  - Iron, Dissolved
  - Manganese, Dissolved
  - Zinc, Dissolved
- MSD (Lab ID: 1368450)
  - Calcium, Dissolved
  - Iron, Dissolved
  - Manganese, Dissolved
  - Zinc, Dissolved

This report shall not be reproduced, except in full,
without the written consent of Pace Analytical Services, Inc..

Pace Analytical Services, Inc.
9608 Loiret Blvd.
Lenexa, KS 66219
(913)599-5665

PROJECT NARRATIVE

Project: JANUARY 2013 RICO WATER SAMPLI
Pace Project No.: 60137200

Method: **EPA 200.8**
Description: 200.8 Potentially Diss. Metals
Client: BP Anderson Engineering Company Inc.
Date: February 27, 2013

General Information:
24 samples were analyzed for EPA 200.8. All samples were received in acceptable condition with any exceptions noted below.

Hold Time:
The samples were analyzed within the method required hold times with any exceptions noted below.

Sample Preparation:
The samples were prepared in accordance with EPA 200.8 with any exceptions noted below.

Initial Calibrations (including MS Tune as applicable):
All criteria were within method requirements with any exceptions noted below.

Continuing Calibration:
All criteria were within method requirements with any exceptions noted below.

Internal Standards:
All internal standards were within QC limits with any exceptions noted below.

Method Blank:
All analytes were below the report limit in the method blank with any exceptions noted below.

Laboratory Control Spike:
All laboratory control spike compounds were within QC limits with any exceptions noted below.

Matrix Spikes:
All percent recoveries and relative percent differences (RPDs) were within acceptance criteria with any exceptions noted below.

QC Batch: MPRP/21262

A matrix spike and matrix spike duplicate (MS/MSD) were performed on the following sample(s): 60137200021

M1: Matrix spike recovery exceeded QC limits. Batch accepted based on laboratory control sample (LCS) recovery.

- MS (Lab ID: 1129433)
  - Aluminum, Dissolved
  - Iron, Dissolved
  - Manganese, Dissolved
  - Zinc, Dissolved
- MSD (Lab ID: 1129434)
  - Aluminum, Dissolved
  - Iron, Dissolved
  - Manganese, Dissolved
  - Zinc, Dissolved

This report shall not be reproduced, except in full,
without the written consent of Pace Analytical Services, Inc..

Pace Analytical Services, Inc.
9608 Loiret Blvd.
Lenexa, KS 66219
(913)599-5665

PROJECT NARRATIVE

Project: JANUARY 2013 RICO WATER SAMPLI
Pace Project No.: 60137200

Method: **EPA 200.8**
Description: 200.8 Potentially Diss. Metals
Client: BP Anderson Engineering Company Inc.
Date: February 27, 2013

QC Batch: MPRP/21261

A matrix spike and matrix spike duplicate (MS/MSD) were performed on the following sample(s): 60137200001,60137200011

M1: Matrix spike recovery exceeded QC limits. Batch accepted based on laboratory control sample (LCS) recovery.

- MS (Lab ID: 1129430)
  - Aluminum, Dissolved
  - Arsenic, Dissolved
  - Iron, Dissolved
  - Zinc, Dissolved
- MSD (Lab ID: 1129429)
  - Manganese, Dissolved

Additional Comments:

Analyte Comments:

QC Batch: MPRP/21261

1e: Post Digestion Spike Performed - 90.3% Recovery

- MS (Lab ID: 1129430)
  - Arsenic, Dissolved

2e: Post Digestion Spike Performed - 92.4% Recovery

- MS (Lab ID: 1129430)
  - Aluminum, Dissolved

B: Analyte was detected in the associated method blank.

- DR-10_20130116 (Lab ID: 60137200012)
  - Chromium, Dissolved
- DR-3_20130115 (Lab ID: 60137200003)
  - Chromium, Dissolved
  - Nickel, Dissolved
- DR-4_20130115 (Lab ID: 60137200006)
  - Chromium, Dissolved
  - Nickel, Dissolved
- DR-8_20130115 (Lab ID: 60137200004)
  - Chromium, Dissolved
  - Nickel, Dissolved
- EB-2_20130116 (Lab ID: 60137200014)
  - Chromium, Dissolved
- GW-1_20130115 (Lab ID: 60137200001)
  - Chromium, Dissolved
  - Molybdenum, Dissolved
- GW-3_20130117 (Lab ID: 60137200017)
  - Chromium, Dissolved
  - Molybdenum, Dissolved
  - Nickel, Dissolved
- GW-6_20130115 (Lab ID: 60137200005)
  - Molybdenum, Dissolved

This report shall not be reproduced, except in full,
without the written consent of Pace Analytical Services, Inc..

Pace Analytical Services, Inc.
9608 Loiret Blvd.
Lenexa, KS 66219
(913)599-5665

PROJECT NARRATIVE

Project: JANUARY 2013 RICO WATER SAMPLI
Pace Project No.: 60137200

Method: **EPA 200.8**
Description: 200.8 Potentially Diss. Metals
Client: BP Anderson Engineering Company Inc.
Date: February 27, 2013

Analyte Comments:

QC Batch: MPRP/21261

B: Analyte was detected in the associated method blank.

- MW-4 DEEP_20130116 (Lab ID: 60137200019)
  - Chromium, Dissolved
  - Molybdenum, Dissolved
  - Nickel, Dissolved
- MW-4 SHALLOW_20130117 (Lab ID: 60137200018)
  - Chromium, Dissolved
  - Molybdenum, Dissolved
  - Nickel, Dissolved
- MW-5 SHALLOW_20130116 (Lab ID: 60137200016)
  - Molybdenum, Dissolved
- P13-102_20130116 (Lab ID: 60137200010)
  - Chromium, Dissolved
- P13-103_20130116 (Lab ID: 60137200009)
  - Nickel, Dissolved

QC Batch: MPRP/21262

B: Analyte was detected in the associated method blank.

- EB-1_20130116 (Lab ID: 60137200024)
  - Chromium, Dissolved
- MW-2 DEEP_20130116 (Lab ID: 60137200023)
  - Chromium, Dissolved
- MW-3 DEEP_20130116 (Lab ID: 60137200022)
  - Chromium, Dissolved

This report shall not be reproduced, except in full,
without the written consent of Pace Analytical Services, Inc..

Pace Analytical Services, Inc.
9608 Loiret Blvd.
Lenexa, KS 66219
(913)599-5665

PROJECT NARRATIVE

Project: JANUARY 2013 RICO WATER SAMPLI
Pace Project No.: 60137200

Method: **EPA 245.1**
Description: 245.1 Mercury
Client: BP Anderson Engineering Company Inc.
Date: February 27, 2013

General Information:
24 samples were analyzed for EPA 245.1. All samples were received in acceptable condition with any exceptions noted below.

Hold Time:
The samples were analyzed within the method required hold times with any exceptions noted below.

Sample Preparation:
The samples were prepared in accordance with EPA 245.1 with any exceptions noted below.

Initial Calibrations (including MS Tune as applicable):
All criteria were within method requirements with any exceptions noted below.

Continuing Calibration:
All criteria were within method requirements with any exceptions noted below.

Method Blank:
All analytes were below the report limit in the method blank with any exceptions noted below.

Laboratory Control Spike:
All laboratory control spike compounds were within QC limits with any exceptions noted below.

Matrix Spikes:
All percent recoveries and relative percent differences (RPDs) were within acceptance criteria with any exceptions noted below.

QC Batch: MERP/7978

A matrix spike and matrix spike duplicate (MS/MSD) were performed on the following sample(s): 10218320001

D6: The relative percent difference (RPD) between the sample and sample duplicate exceeded laboratory control limits.

- MSD (Lab ID: 1369665)
  - Mercury

M1: Matrix spike recovery exceeded QC limits. Batch accepted based on laboratory control sample (LCS) recovery.

- MS (Lab ID: 1369664)
  - Mercury
- MSD (Lab ID: 1369665)
  - Mercury

Additional Comments:

This report shall not be reproduced, except in full,
without the written consent of Pace Analytical Services, Inc..

Pace Analytical Services, Inc.
9608 Loiret Blvd.
Lenexa, KS 66219
(913)599-5665

PROJECT NARRATIVE

Project: JANUARY 2013 RICO WATER SAMPLI
Pace Project No.: 60137200

Method: **EPA 245.1**
Description: 245.1 Mercury, Dissolved
Client: BP Anderson Engineering Company Inc.
Date: February 27, 2013

General Information:
24 samples were analyzed for EPA 245.1. All samples were received in acceptable condition with any exceptions noted below.

Hold Time:
The samples were analyzed within the method required hold times with any exceptions noted below.

Sample Preparation:
The samples were prepared in accordance with EPA 245.1 with any exceptions noted below.

Initial Calibrations (including MS Tune as applicable):
All criteria were within method requirements with any exceptions noted below.

Continuing Calibration:
All criteria were within method requirements with any exceptions noted below.

Method Blank:
All analytes were below the report limit in the method blank with any exceptions noted below.

Laboratory Control Spike:
All laboratory control spike compounds were within QC limits with any exceptions noted below.

Matrix Spikes:
All percent recoveries and relative percent differences (RPDs) were within acceptance criteria with any exceptions noted below.

QC Batch: MERP/7989

A matrix spike and matrix spike duplicate (MS/MSD) were performed on the following sample(s): 60137200022

M1: Matrix spike recovery exceeded QC limits. Batch accepted based on laboratory control sample (LCS) recovery.

- MS (Lab ID: 1370960)
  - Mercury, Dissolved
- MSD (Lab ID: 1370961)
  - Mercury, Dissolved

Additional Comments:

This report shall not be reproduced, except in full,
without the written consent of Pace Analytical Services, Inc..

Pace Analytical Services, Inc.
9608 Loiret Blvd.
Lenexa, KS 66219
(913)599-5665

PROJECT NARRATIVE

Project: JANUARY 2013 RICO WATER SAMPLI
Pace Project No.: 60137200

Method: **EPA 245.1**
Description: 245.1 Potentially Diss Mercury
Client: BP Anderson Engineering Company Inc.
Date: February 27, 2013

General Information:
24 samples were analyzed for EPA 245.1. All samples were received in acceptable condition with any exceptions noted below.

Hold Time:
The samples were analyzed within the method required hold times with any exceptions noted below.

Sample Preparation:
The samples were prepared in accordance with EPA 245.1 with any exceptions noted below.

Initial Calibrations (including MS Tune as applicable):
All criteria were within method requirements with any exceptions noted below.

Continuing Calibration:
All criteria were within method requirements with any exceptions noted below.

Method Blank:
All analytes were below the report limit in the method blank with any exceptions noted below.

Laboratory Control Spike:
All laboratory control spike compounds were within QC limits with any exceptions noted below.

Matrix Spikes:
All percent recoveries and relative percent differences (RPDs) were within acceptance criteria with any exceptions noted below.

Additional Comments:

This report shall not be reproduced, except in full,
without the written consent of Pace Analytical Services, Inc..

Pace Analytical Services, Inc.
9608 Loiret Blvd.
Lenexa, KS 66219
(913)599-5665

PROJECT NARRATIVE

Project: JANUARY 2013 RICO WATER SAMPLI
Pace Project No.: 60137200

Method: **SM 2510B**
Description: 2510B Specific Conductance
Client: BP Anderson Engineering Company Inc.
Date: February 27, 2013

General Information:
24 samples were analyzed for SM 2510B. All samples were received in acceptable condition with any exceptions noted below.

Hold Time:
The samples were analyzed within the method required hold times with any exceptions noted below.

Initial Calibrations (including MS Tune as applicable):
All criteria were within method requirements with any exceptions noted below.

Continuing Calibration:
All criteria were within method requirements with any exceptions noted below.

Internal Standards:
All internal standards were within QC limits with any exceptions noted below.

Surrogates:
All surrogates were within QC limits with any exceptions noted below.

Method Blank:
All analytes were below the report limit in the method blank with any exceptions noted below.

Laboratory Control Spike:
All laboratory control spike compounds were within QC limits with any exceptions noted below.

Matrix Spikes:
All percent recoveries and relative percent differences (RPDs) were within acceptance criteria with any exceptions noted below.

Duplicate Sample:
All duplicate sample results were within method acceptance criteria with any exceptions noted below.

Additional Comments:

This report shall not be reproduced, except in full,
without the written consent of Pace Analytical Services, Inc..

Pace Analytical Services, Inc.
9608 Loiret Blvd.
Lenexa, KS 66219
(913)599-5665

PROJECT NARRATIVE

Project: JANUARY 2013 RICO WATER SAMPLI
Pace Project No.: 60137200

Method: **Calculated**
Description: Salinity
Client: BP Anderson Engineering Company Inc.
Date: February 27, 2013

General Information:
24 samples were analyzed for Calculated. All samples were received in acceptable condition with any exceptions noted below.

Hold Time:
The samples were analyzed within the method required hold times with any exceptions noted below.

Initial Calibrations (including MS Tune as applicable):
All criteria were within method requirements with any exceptions noted below.

Continuing Calibration:
All criteria were within method requirements with any exceptions noted below.

Internal Standards:
All internal standards were within QC limits with any exceptions noted below.

Surrogates:
All surrogates were within QC limits with any exceptions noted below.

Method Blank:
All analytes were below the report limit in the method blank with any exceptions noted below.

Laboratory Control Spike:
All laboratory control spike compounds were within QC limits with any exceptions noted below.

Matrix Spikes:
All percent recoveries and relative percent differences (RPDs) were within acceptance criteria with any exceptions noted below.

Additional Comments:

This report shall not be reproduced, except in full,
without the written consent of Pace Analytical Services, Inc..

Pace Analytical Services, Inc.
9608 Loiret Blvd.
Lenexa, KS 66219
(913)599-5665

PROJECT NARRATIVE

Project: JANUARY 2013 RICO WATER SAMPLI
Pace Project No.: 60137200

Method: **SM 2320B**
Description: 2320B Alkalinity
Client: BP Anderson Engineering Company Inc.
Date: February 27, 2013

General Information:
24 samples were analyzed for SM 2320B. All samples were received in acceptable condition with any exceptions noted below.

Hold Time:
The samples were analyzed within the method required hold times with any exceptions noted below.

Method Blank:
All analytes were below the report limit in the method blank with any exceptions noted below.

Laboratory Control Spike:
All laboratory control spike compounds were within QC limits with any exceptions noted below.

Matrix Spikes:
All percent recoveries and relative percent differences (RPDs) were within acceptance criteria with any exceptions noted below.

Duplicate Sample:
All duplicate sample results were within method acceptance criteria with any exceptions noted below.

Additional Comments:

This report shall not be reproduced, except in full,
without the written consent of Pace Analytical Services, Inc..

Pace Analytical Services, Inc.
9608 Loiret Blvd.
Lenexa, KS 66219
(913)599-5665

PROJECT NARRATIVE

Project: JANUARY 2013 RICO WATER SAMPLI
Pace Project No.: 60137200

Method: **SM 2540C**
Description: 2540C Total Dissolved Solids
Client: BP Anderson Engineering Company Inc.
Date: February 27, 2013

General Information:
24 samples were analyzed for SM 2540C. All samples were received in acceptable condition with any exceptions noted below.

Hold Time:
The samples were analyzed within the method required hold times with any exceptions noted below.

Method Blank:
All analytes were below the report limit in the method blank with any exceptions noted below.

Laboratory Control Spike:
All laboratory control spike compounds were within QC limits with any exceptions noted below.

Matrix Spikes:
All percent recoveries and relative percent differences (RPDs) were within acceptance criteria with any exceptions noted below.

Duplicate Sample:
All duplicate sample results were within method acceptance criteria with any exceptions noted below.

Additional Comments:

This report shall not be reproduced, except in full,
without the written consent of Pace Analytical Services, Inc..

Pace Analytical Services, Inc.
9608 Loiret Blvd.
Lenexa, KS 66219
(913)599-5665

PROJECT NARRATIVE

Project: JANUARY 2013 RICO WATER SAMPLI
Pace Project No.: 60137200

Method: **SM 2540D**
Description: 2540D Total Suspended Solids
Client: BP Anderson Engineering Company Inc.
Date: February 27, 2013

General Information:
24 samples were analyzed for SM 2540D. All samples were received in acceptable condition with any exceptions noted below.

Hold Time:
The samples were analyzed within the method required hold times with any exceptions noted below.

Method Blank:
All analytes were below the report limit in the method blank with any exceptions noted below.

Laboratory Control Spike:
All laboratory control spike compounds were within QC limits with any exceptions noted below.

Matrix Spikes:
All percent recoveries and relative percent differences (RPDs) were within acceptance criteria with any exceptions noted below.

Duplicate Sample:
All duplicate sample results were within method acceptance criteria with any exceptions noted below.

QC Batch: WET/39381

D6: The relative percent difference (RPD) between the sample and sample duplicate exceeded laboratory control limits.

- DUP (Lab ID: 1129743)
  - Total Suspended Solids

Additional Comments:

This report shall not be reproduced, except in full,
without the written consent of Pace Analytical Services, Inc..

Pace Analytical Services, Inc.
9608 Loiret Blvd.
Lenexa, KS 66219
(913)599-5665

PROJECT NARRATIVE

Project: JANUARY 2013 RICO WATER SAMPLI
Pace Project No.: 60137200

Method: **SM 4500-S-2 D**
Description: 4500S2D Sulfide, Total
Client: BP Anderson Engineering Company Inc.
Date: February 27, 2013

General Information:
24 samples were analyzed for SM 4500-S-2 D. All samples were received in acceptable condition with any exceptions noted below.

Hold Time:
The samples were analyzed within the method required hold times with any exceptions noted below.

Method Blank:
All analytes were below the report limit in the method blank with any exceptions noted below.

Laboratory Control Spike:
All laboratory control spike compounds were within QC limits with any exceptions noted below.

Matrix Spikes:
All percent recoveries and relative percent differences (RPDs) were within acceptance criteria with any exceptions noted below.

QC Batch: WET/39362

A matrix spike and matrix spike duplicate (MS/MSD) were performed on the following sample(s): 60137200001

M1: Matrix spike recovery exceeded QC limits. Batch accepted based on laboratory control sample (LCS) recovery.

- MS (Lab ID: 1129120)
  - Sulfide, Total

QC Batch: WET/39363

A matrix spike and matrix spike duplicate (MS/MSD) were performed on the following sample(s): 60137200021

M1: Matrix spike recovery exceeded QC limits. Batch accepted based on laboratory control sample (LCS) recovery.

- MS (Lab ID: 1129123)
  - Sulfide, Total

Additional Comments:

This report shall not be reproduced, except in full,
without the written consent of Pace Analytical Services, Inc..

Pace Analytical Services, Inc.
9608 Loiret Blvd.
Lenexa, KS 66219
(913)599-5665

PROJECT NARRATIVE

Project: JANUARY 2013 RICO WATER SAMPLI
Pace Project No.: 60137200

Method: **EPA 300.0**
Description: 300.0 IC Anions 28 Days
Client: BP Anderson Engineering Company Inc.
Date: February 27, 2013

General Information:
24 samples were analyzed for EPA 300.0. All samples were received in acceptable condition with any exceptions noted below.

Hold Time:
The samples were analyzed within the method required hold times with any exceptions noted below.

Initial Calibrations (including MS Tune as applicable):
All criteria were within method requirements with any exceptions noted below.

Continuing Calibration:
All criteria were within method requirements with any exceptions noted below.

Method Blank:
All analytes were below the report limit in the method blank with any exceptions noted below.

Laboratory Control Spike:
All laboratory control spike compounds were within QC limits with any exceptions noted below.

Matrix Spikes:
All percent recoveries and relative percent differences (RPDs) were within acceptance criteria with any exceptions noted below.

Additional Comments:

This report shall not be reproduced, except in full,
without the written consent of Pace Analytical Services, Inc..

Pace Analytical Services, Inc.
9608 Loiret Blvd.
Lenexa, KS 66219
(913)599-5665

PROJECT NARRATIVE

Project: JANUARY 2013 RICO WATER SAMPLI
Pace Project No.: 60137200

Method: **EPA 353.2**
Description: 353.2 Nitrogen, NO2/NO3 pres.
Client: BP Anderson Engineering Company Inc.
Date: February 27, 2013

General Information:
24 samples were analyzed for EPA 353.2. All samples were received in acceptable condition with any exceptions noted below.

Hold Time:
The samples were analyzed within the method required hold times with any exceptions noted below.

Initial Calibrations (including MS Tune as applicable):
All criteria were within method requirements with any exceptions noted below.

Continuing Calibration:
All criteria were within method requirements with any exceptions noted below.

Method Blank:
All analytes were below the report limit in the method blank with any exceptions noted below.

Laboratory Control Spike:
All laboratory control spike compounds were within QC limits with any exceptions noted below.

Matrix Spikes:
All percent recoveries and relative percent differences (RPDs) were within acceptance criteria with any exceptions noted below.

Duplicate Sample:
All duplicate sample results were within method acceptance criteria with any exceptions noted below.

Additional Comments:

This report shall not be reproduced, except in full,
without the written consent of Pace Analytical Services, Inc..

Pace Analytical Services, Inc.
9608 Loiret Blvd.
Lenexa, KS 66219
(913)599-5665

PROJECT NARRATIVE

Project: JANUARY 2013 RICO WATER SAMPLI
Pace Project No.: 60137200

Method: **SM 4500-CN-E**
Description: 4500CNE Cyanide, Total
Client: BP Anderson Engineering Company Inc.
Date: February 27, 2013

General Information:
24 samples were analyzed for SM 4500-CN-E. All samples were received in acceptable condition with any exceptions noted below.

Hold Time:
The samples were analyzed within the method required hold times with any exceptions noted below.

Initial Calibrations (including MS Tune as applicable):
All criteria were within method requirements with any exceptions noted below.

Continuing Calibration:
All criteria were within method requirements with any exceptions noted below.

Method Blank:
All analytes were below the report limit in the method blank with any exceptions noted below.

Laboratory Control Spike:
All laboratory control spike compounds were within QC limits with any exceptions noted below.

Matrix Spikes:
All percent recoveries and relative percent differences (RPDs) were within acceptance criteria with any exceptions noted below.

Duplicate Sample:
All duplicate sample results were within method acceptance criteria with any exceptions noted below.

Additional Comments:

This report shall not be reproduced, except in full,
without the written consent of Pace Analytical Services, Inc..

Pace Analytical Services, Inc.
9608 Loiret Blvd.
Lenexa, KS 66219
(913)599-5665

PROJECT NARRATIVE

Project: JANUARY 2013 RICO WATER SAMPLI
Pace Project No.: 60137200

Method: **SM 5310C**
Description: 5310C TOC
Client: BP Anderson Engineering Company Inc.
Date: February 27, 2013

General Information:
24 samples were analyzed for SM 5310C. All samples were received in acceptable condition with any exceptions noted below.

Hold Time:
The samples were analyzed within the method required hold times with any exceptions noted below.

Initial Calibrations (including MS Tune as applicable):
All criteria were within method requirements with any exceptions noted below.

Continuing Calibration:
All criteria were within method requirements with any exceptions noted below.

Method Blank:
All analytes were below the report limit in the method blank with any exceptions noted below.

Laboratory Control Spike:
All laboratory control spike compounds were within QC limits with any exceptions noted below.

Matrix Spikes:
All percent recoveries and relative percent differences (RPDs) were within acceptance criteria with any exceptions noted below.

Duplicate Sample:
All duplicate sample results were within method acceptance criteria with any exceptions noted below.

Additional Comments:

This data package has been reviewed for quality and completeness and is approved for release.

This report shall not be reproduced, except in full,
without the written consent of Pace Analytical Services, Inc..

Pace Analytical Services, Inc.
9608 Loiret Blvd.
Lenexa, KS 66219
(913)599-5665

ANALYTICAL RESULTS

Project: JANUARY 2013 RICO WATER SAMPLI
Pace Project No.: 60137200

Sample: GW-1_20130115 **Lab ID: 60137200001** Collected: 01/15/13 14:55 Received: 01/18/13 10:20 Matrix: Water

Parameters	Results	Units	Report Limit	DF	Prepared	Analyzed	CAS No.	Qual
200.7 Potentially Diss. Metals	Analytical Method: EPA 200.7 Preparation Method: EPA 200.7							
Calcium, Dissolved	**55600**	ug/L	500	5	01/28/13 11:45	01/29/13 17:26	7440-70-2	
Magnesium, Dissolved	**7500**	ug/L	250	5	01/28/13 11:45	01/29/13 17:26	7439-95-4	
Potassium, Dissolved	**955**	ug/L	500	1	01/28/13 11:45	01/31/13 09:53	7440-09-7	
Sodium, Dissolved	**2620**	ug/L	1000	2	01/28/13 11:45	01/31/13 17:01	7440-23-5	
200.8 MET ICPMS	Analytical Method: EPA 200.8 Preparation Method: EPA 200.8							
Aluminum	**15100**	ug/L	4.0	1	01/25/13 10:27	01/29/13 23:43	7429-90-5	M6
Antimony	**0.64**	ug/L	0.50	1	01/25/13 10:27	01/29/13 23:43	7440-36-0	M6
Arsenic	**23.6**	ug/L	0.50	1	01/25/13 10:27	01/29/13 23:43	7440-38-2	
Barium	**400**	ug/L	0.30	1	01/25/13 10:27	01/29/13 23:43	7440-39-3	
Beryllium	**1.5**	ug/L	0.20	1	01/25/13 10:27	01/29/13 23:43	7440-41-7	
Cadmium	**2.9**	ug/L	0.080	1	01/25/13 10:27	01/29/13 23:43	7440-43-9	
Calcium	**60200**	ug/L	100	5	01/25/13 10:27	01/30/13 00:06	7440-70-2	M6
Chromium	**15.4**	ug/L	0.50	1	01/25/13 10:27	01/29/13 23:43	7440-47-3	
Cobalt	**17.3**	ug/L	0.50	1	01/25/13 10:27	01/29/13 23:43	7440-48-4	
Copper	**103**	ug/L	0.50	1	01/25/13 10:27	01/29/13 23:43	7440-50-8	
Iron	**28400**	ug/L	250	5	01/25/13 10:27	01/30/13 00:06	7439-89-6	M6
Lead	**80.5**	ug/L	0.10	1	01/25/13 10:27	01/29/13 23:43	7439-92-1	
Magnesium	**12900**	ug/L	5.0	1	01/25/13 10:27	01/29/13 23:43	7439-95-4	M6
Manganese	**3380**	ug/L	12.5	25	01/25/13 10:27	01/30/13 00:12	7439-96-5	M6
Molybdenum	**5.7**	ug/L	0.50	1	01/25/13 10:27	01/29/13 23:43	7439-98-7	
Nickel	**31.3**	ug/L	0.50	1	01/25/13 10:27	01/29/13 23:43	7440-02-0	
Potassium	**3960**	ug/L	20.0	1	01/25/13 10:27	01/29/13 23:43	7440-09-7	M6
Selenium	**3.6**	ug/L	0.50	1	01/25/13 10:27	01/29/13 23:43	7782-49-2	
Silica	**53800**	ug/L	1340	25	01/25/13 10:27	01/30/13 00:12	7631-86-9	M1
Silver	**1.3**	ug/L	0.50	1	01/25/13 10:27	01/29/13 23:43	7440-22-4	
Sodium	**3060**	ug/L	50.0	1	01/25/13 10:27	01/29/13 23:43	7440-23-5	
Thallium	**0.39**	ug/L	0.10	1	01/25/13 10:27	01/29/13 23:43	7440-28-0	
Total Hardness by 2340B	**203000**	ug/L	355	5	01/25/13 10:27	01/30/13 00:06		M1
Vanadium	**33.8**	ug/L	0.10	1	01/25/13 10:27	01/29/13 23:43	7440-62-2	
Zinc	**330**	ug/L	5.0	1	01/25/13 10:27	01/29/13 23:43	7440-66-6	M6
200.8 MET ICPMS, Dissolved	Analytical Method: EPA 200.8 Preparation Method: EPA 200.8							
Aluminum, Dissolved	**325**	ug/L	4.0	1	01/25/13 10:33	02/01/13 14:47	7429-90-5	M1
Antimony, Dissolved	ND	ug/L	0.50	1	01/25/13 10:33	02/01/13 14:47	7440-36-0	
Arsenic, Dissolved	ND	ug/L	0.50	1	01/25/13 10:33	02/01/13 14:47	7440-38-2	
Barium, Dissolved	**64.7**	ug/L	0.30	1	01/25/13 10:33	02/01/13 14:47	7440-39-3	
Beryllium, Dissolved	ND	ug/L	0.20	1	01/25/13 10:33	02/01/13 14:47	7440-41-7	
Cadmium, Dissolved	ND	ug/L	0.080	1	01/25/13 10:33	02/01/13 14:47	7440-43-9	
Calcium, Dissolved	**58000**	ug/L	400	20	01/25/13 10:33	01/28/13 16:43	7440-70-2	M6
Chromium, Dissolved	ND	ug/L	0.50	1	01/25/13 10:33	02/01/13 14:47	7440-47-3	
Cobalt, Dissolved	**0.89**	ug/L	0.50	1	01/25/13 10:33	02/01/13 14:47	7440-48-4	
Copper, Dissolved	**2.5**	ug/L	0.50	1	01/25/13 10:33	02/01/13 14:47	7440-50-8	
Iron, Dissolved	**336**	ug/L	50.0	1	01/25/13 10:33	02/01/13 14:47	7439-89-6	
Lead, Dissolved	**1.0**	ug/L	0.10	1	01/25/13 10:33	02/01/13 14:47	7439-92-1	
Magnesium, Dissolved	**7070**	ug/L	5.0	1	01/25/13 10:33	02/01/13 14:47	7439-95-4	M1

This report shall not be reproduced, except in full,
without the written consent of Pace Analytical Services, Inc..

Pace Analytical Services, Inc.
9608 Loiret Blvd.
Lenexa, KS 66219
(913)599-5665

ANALYTICAL RESULTS

Project: JANUARY 2013 RICO WATER SAMPLI
Pace Project No.: 60137200

Sample: GW-1_20130115 **Lab ID: 60137200001** Collected: 01/15/13 14:55 Received: 01/18/13 10:20 Matrix: Water

Parameters	Results	Units	Report Limit	DF	Prepared	Analyzed	CAS No.	Qual
200.8 MET ICPMS, Dissolved	Analytical Method: EPA 200.8 Preparation Method: EPA 200.8							
Manganese, Dissolved	**39.4**	ug/L	0.50	1	01/25/13 10:33	02/01/13 14:47	7439-96-5	
Molybdenum, Dissolved	**1.3**	ug/L	0.50	1	01/25/13 10:33	02/01/13 14:47	7439-98-7	
Nickel, Dissolved	**1.9**	ug/L	0.50	1	01/25/13 10:33	02/01/13 14:47	7440-02-0	
Potassium, Dissolved	**791**	ug/L	20.0	1	01/25/13 10:33	02/01/13 14:47	7440-09-7	
Selenium, Dissolved	**0.56**	ug/L	0.50	1	01/25/13 10:33	02/01/13 14:47	7782-49-2	
Silver, Dissolved	ND	ug/L	0.50	1	01/25/13 10:33	02/01/13 14:47	7440-22-4	
Sodium, Dissolved	**2780**	ug/L	50.0	1	01/25/13 10:33	02/01/13 14:47	7440-23-5	
Thallium, Dissolved	ND	ug/L	0.10	1	01/25/13 10:33	02/01/13 14:47	7440-28-0	
Vanadium, Dissolved	**0.68**	ug/L	0.10	1	01/25/13 10:33	02/01/13 14:47	7440-62-2	
Zinc, Dissolved	**13.1**	ug/L	5.0	1	01/25/13 10:33	02/01/13 14:47	7440-66-6	
200.8 Potentially Diss. Metals	Analytical Method: EPA 200.8 Preparation Method: EPA 200.8							
Aluminum, Dissolved	**2640**	ug/L	50.0	1	01/23/13 11:30	01/25/13 12:34	7429-90-5	
Antimony, Dissolved	**0.14J**	ug/L	1.0	1	01/23/13 11:30	01/25/13 12:34	7440-36-0	
Arsenic, Dissolved	**2.2**	ug/L	1.0	1	01/23/13 11:30	01/25/13 12:34	7440-38-2	
Barium, Dissolved	**227**	ug/L	1.0	1	01/23/13 11:30	01/25/13 12:34	7440-39-3	
Beryllium, Dissolved	**0.70**	ug/L	0.50	1	01/23/13 11:30	01/25/13 12:34	7440-41-7	
Cadmium, Dissolved	**2.0**	ug/L	0.50	1	01/23/13 11:30	01/25/13 12:34	7440-43-9	
Chromium, Dissolved	**2.7**	ug/L	1.0	1	01/23/13 11:30	01/25/13 12:34	7440-47-3	B
Cobalt, Dissolved	**4.9**	ug/L	1.0	1	01/23/13 11:30	01/25/13 12:34	7440-48-4	
Copper, Dissolved	**45.1**	ug/L	1.0	1	01/23/13 11:30	01/25/13 12:34	7440-50-8	
Iron, Dissolved	**4200**	ug/L	50.0	1	01/23/13 11:30	01/25/13 12:34	7439-89-6	
Lead, Dissolved	**30.6**	ug/L	1.0	1	01/23/13 11:30	01/25/13 12:34	7439-92-1	
Manganese, Dissolved	**1150**	ug/L	1.0	1	01/23/13 11:30	01/25/13 12:34	7439-96-5	M1
Molybdenum, Dissolved	**0.51J**	ug/L	1.0	1	01/23/13 11:30	01/25/13 12:34	7439-98-7	B
Nickel, Dissolved	**11.0**	ug/L	1.0	1	01/23/13 11:30	01/25/13 12:34	7440-02-0	
Selenium, Dissolved	**1.2**	ug/L	1.0	1	01/23/13 11:30	01/25/13 12:34	7782-49-2	
Silver, Dissolved	**0.71**	ug/L	0.50	1	01/23/13 11:30	01/25/13 12:34	7440-22-4	
Thallium, Dissolved	**0.046J**	ug/L	1.0	1	01/23/13 11:30	01/25/13 12:34	7440-28-0	
Vanadium, Dissolved	**4.5**	ug/L	1.0	1	01/23/13 11:30	01/25/13 12:34	7440-62-2	
Zinc, Dissolved	**136**	ug/L	10.0	1	01/23/13 11:30	01/25/13 12:34	7440-66-6	
245.1 Mercury	Analytical Method: EPA 245.1 Preparation Method: EPA 245.1							
Mercury	**1.3**	ug/L	0.20	1	02/05/13 12:02	02/05/13 20:51	7439-97-6	
245.1 Mercury, Dissolved	Analytical Method: EPA 245.1 Preparation Method: EPA 245.1							
Mercury, Dissolved	ND	ug/L	0.20	1	01/31/13 09:37	01/31/13 15:56	7439-97-6	
245.1 Potentially Diss Mercury	Analytical Method: EPA 245.1 Preparation Method: EPA 245.1							
Mercury, Dissolved	ND	ug/L	0.20	1	01/29/13 10:30	01/29/13 14:55	7439-97-6	
2510B Specific Conductance	Analytical Method: SM 2510B							
Specific Conductance	**318**	umhos/cm	10.0	1		01/25/13 12:05		
Salinity	Analytical Method: Calculated							
Salinity (as dissolved solids)	**204**	mg/L	6.0	1		01/25/13 14:35		

This report shall not be reproduced, except in full,
without the written consent of Pace Analytical Services, Inc..

Pace Analytical Services, Inc.
9608 Loiret Blvd.
Lenexa, KS 66219
(913)599-5665

ANALYTICAL RESULTS

Project: JANUARY 2013 RICO WATER SAMPLI
Pace Project No.: 60137200

Sample: GW-1_20130115 **Lab ID: 60137200001** Collected: 01/15/13 14:55 Received: 01/18/13 10:20 Matrix: Water

Parameters	Results	Units	Report Limit	DF	Prepared	Analyzed	CAS No.	Qual
Salinity	Analytical Method: Calculated							
Salinity (as seawater)	**0.15**	PSU	0.010	1		01/25/13 14:35		
2320B Alkalinity	Analytical Method: SM 2320B							
Alkalinity,Bicarbonate (CaCO3)	**105**	mg/L	20.0	1		01/23/13 08:18		
Alkalinity, Carbonate (CaCO3)	ND	mg/L	20.0	1		01/23/13 08:18		
Alkalinity, Total as CaCO3	**105**	mg/L	20.0	1		01/23/13 08:18		
2540C Total Dissolved Solids	Analytical Method: SM 2540C							
Total Dissolved Solids	**203**	mg/L	5.0	1		01/22/13 16:04		
2540D Total Suspended Solids	Analytical Method: SM 2540D							
Total Suspended Solids	**1700**	mg/L	5.0	1		01/22/13 16:07		
4500S2D Sulfide, Total	Analytical Method: SM 4500-S-2 D							
Sulfide, Total	ND	mg/L	0.050	1		01/22/13 14:31	18496-25-8	M1
300.0 IC Anions 28 Days	Analytical Method: EPA 300.0							
Chloride	**1.3**	mg/L	1.0	1		01/27/13 14:36	16887-00-6	
Sulfate	**59.7**	mg/L	5.0	5		01/27/13 14:54	14808-79-8	
353.2 Nitrogen, NO2/NO3 pres.	Analytical Method: EPA 353.2							
Nitrogen, NO2 plus NO3	ND	mg/L	0.10	1		01/23/13 11:43		
4500CNE Cyanide, Total	Analytical Method: SM 4500-CN-E							
Cyanide	**0.018**	mg/L	0.0050	1		01/23/13 13:11	57-12-5	
5310C TOC	Analytical Method: SM 5310C							
Total Organic Carbon	**5.0**	mg/L	1.0	1		01/23/13 21:19	7440-44-0	

This report shall not be reproduced, except in full,
without the written consent of Pace Analytical Services, Inc..

Pace Analytical Services, Inc.
9608 Loiret Blvd.
Lenexa, KS 66219
(913)599-5665

ANALYTICAL RESULTS

Project: JANUARY 2013 RICO WATER SAMPLI
Pace Project No.: 60137200

Sample: GW-5_20130115 **Lab ID: 60137200002** Collected: 01/15/13 15:15 Received: 01/18/13 10:20 Matrix: Water

Parameters	Results	Units	Report Limit	DF	Prepared	Analyzed	CAS No.	Qual
200.7 Potentially Diss. Metals	Analytical Method: EPA 200.7 Preparation Method: EPA 200.7							
Calcium, Dissolved	**566000**	ug/L	500	5	01/28/13 11:45	01/29/13 17:28	7440-70-2	
Magnesium, Dissolved	**56500**	ug/L	250	5	01/28/13 11:45	01/29/13 17:28	7439-95-4	
Potassium, Dissolved	**4900**	ug/L	2500	5	01/28/13 11:45	01/29/13 17:28	7440-09-7	
Sodium, Dissolved	**6020**	ug/L	2500	5	01/28/13 11:45	01/29/13 17:28	7440-23-5	
200.8 MET ICPMS	Analytical Method: EPA 200.8 Preparation Method: EPA 200.8							
Aluminum	**6000**	ug/L	4.0	1	01/25/13 10:27	01/30/13 00:17	7429-90-5	
Antimony	**1.7**	ug/L	0.50	1	01/25/13 10:27	01/30/13 00:17	7440-36-0	
Arsenic	**150**	ug/L	0.50	1	01/25/13 10:27	01/30/13 00:17	7440-38-2	
Barium	**60.2**	ug/L	0.30	1	01/25/13 10:27	01/30/13 00:17	7440-39-3	
Beryllium	**0.68**	ug/L	0.20	1	01/25/13 10:27	01/30/13 00:17	7440-41-7	
Cadmium	**60.4**	ug/L	0.080	1	01/25/13 10:27	01/30/13 00:17	7440-43-9	
Calcium	**555000**	ug/L	2000	100	01/25/13 10:27	01/30/13 00:29	7440-70-2	
Chromium	**7.4**	ug/L	0.50	1	01/25/13 10:27	01/30/13 00:17	7440-47-3	
Cobalt	**20.2**	ug/L	0.50	1	01/25/13 10:27	01/30/13 00:17	7440-48-4	
Copper	**843**	ug/L	10.0	20	01/25/13 10:27	01/30/13 00:23	7440-50-8	
Iron	**30900**	ug/L	1000	20	01/25/13 10:27	01/30/13 00:23	7439-89-6	
Lead	**9120**	ug/L	10.0	100	01/25/13 10:27	01/30/13 00:29	7439-92-1	
Magnesium	**51900**	ug/L	100	20	01/25/13 10:27	01/30/13 00:23	7439-95-4	
Manganese	**7060**	ug/L	10.0	20	01/25/13 10:27	01/30/13 00:23	7439-96-5	
Molybdenum	**18.4**	ug/L	0.50	1	01/25/13 10:27	01/30/13 00:17	7439-98-7	
Nickel	**28.4**	ug/L	0.50	1	01/25/13 10:27	01/30/13 00:17	7440-02-0	
Potassium	**5500**	ug/L	20.0	1	01/25/13 10:27	01/30/13 00:17	7440-09-7	
Selenium	**3.4**	ug/L	0.50	1	01/25/13 10:27	01/30/13 00:17	7782-49-2	
Silica	**48200**	ug/L	1070	20	01/25/13 10:27	01/30/13 00:23	7631-86-9	
Silver	**42.3**	ug/L	0.50	1	01/25/13 10:27	01/30/13 00:17	7440-22-4	
Sodium	**6150**	ug/L	50.0	1	01/25/13 10:27	01/30/13 00:17	7440-23-5	
Thallium	**1.0**	ug/L	0.10	1	01/25/13 10:27	01/30/13 00:17	7440-28-0	
Total Hardness by 2340B	**1600000**	ug/L	7100	100	01/25/13 10:27	01/30/13 00:29		
Vanadium	**10.1**	ug/L	0.10	1	01/25/13 10:27	01/30/13 00:17	7440-62-2	
Zinc	**16300**	ug/L	500	100	01/25/13 10:27	01/30/13 00:29	7440-66-6	
200.8 MET ICPMS, Dissolved	Analytical Method: EPA 200.8 Preparation Method: EPA 200.8							
Aluminum, Dissolved	**106**	ug/L	4.0	1	01/25/13 10:33	02/01/13 13:28	7429-90-5	
Antimony, Dissolved	ND	ug/L	0.50	1	01/25/13 10:33	02/01/13 13:28	7440-36-0	
Arsenic, Dissolved	**62.8**	ug/L	0.50	1	01/25/13 10:33	02/01/13 13:28	7440-38-2	
Barium, Dissolved	**14.1**	ug/L	0.30	1	01/25/13 10:33	02/01/13 13:28	7440-39-3	
Beryllium, Dissolved	ND	ug/L	0.20	1	01/25/13 10:33	02/01/13 13:28	7440-41-7	
Cadmium, Dissolved	**1.1**	ug/L	0.080	1	01/25/13 10:33	02/01/13 13:28	7440-43-9	
Calcium, Dissolved	**620000**	ug/L	1000	50	01/25/13 10:33	01/28/13 22:46	7440-70-2	
Chromium, Dissolved	ND	ug/L	0.50	1	01/25/13 10:33	02/01/13 13:28	7440-47-3	
Cobalt, Dissolved	**6.4**	ug/L	0.50	1	01/25/13 10:33	02/01/13 13:28	7440-48-4	
Copper, Dissolved	**11.6**	ug/L	0.50	1	01/25/13 10:33	02/01/13 13:28	7440-50-8	
Iron, Dissolved	**7090**	ug/L	50.0	1	01/25/13 10:33	02/01/13 13:28	7439-89-6	
Lead, Dissolved	**190**	ug/L	0.10	1	01/25/13 10:33	02/01/13 13:28	7439-92-1	
Magnesium, Dissolved	**53700**	ug/L	100	20	01/25/13 10:33	02/01/13 13:34	7439-95-4	

This report shall not be reproduced, except in full,
without the written consent of Pace Analytical Services, Inc..

Pace Analytical Services, Inc.
9608 Loiret Blvd.
Lenexa, KS 66219
(913)599-5665

ANALYTICAL RESULTS

Project: JANUARY 2013 RICO WATER SAMPLI
Pace Project No.: 60137200

Sample: GW-5_20130115 **Lab ID: 60137200002** Collected: 01/15/13 15:15 Received: 01/18/13 10:20 Matrix: Water

Parameters	Results	Units	Report Limit	DF	Prepared	Analyzed	CAS No.	Qual
200.8 MET ICPMS, Dissolved	Analytical Method: EPA 200.8 Preparation Method: EPA 200.8							
Manganese, Dissolved	**6060**	ug/L	10.0	20	01/25/13 10:33	02/01/13 13:34	7439-96-5	
Molybdenum, Dissolved	**10.7**	ug/L	0.50	1	01/25/13 10:33	02/01/13 13:28	7439-98-7	
Nickel, Dissolved	**8.8**	ug/L	0.50	1	01/25/13 10:33	02/01/13 13:28	7440-02-0	
Potassium, Dissolved	**4620**	ug/L	20.0	1	01/25/13 10:33	02/01/13 13:28	7440-09-7	
Selenium, Dissolved	ND	ug/L	0.50	1	01/25/13 10:33	02/01/13 13:28	7782-49-2	
Silver, Dissolved	ND	ug/L	0.50	1	01/25/13 10:33	02/01/13 13:28	7440-22-4	
Sodium, Dissolved	**6580**	ug/L	50.0	1	01/25/13 10:33	02/01/13 13:28	7440-23-5	
Thallium, Dissolved	ND	ug/L	0.10	1	01/25/13 10:33	02/01/13 13:28	7440-28-0	
Vanadium, Dissolved	**0.23**	ug/L	0.10	1	01/25/13 10:33	02/01/13 13:28	7440-62-2	
Zinc, Dissolved	**4540**	ug/L	100	20	01/25/13 10:33	02/01/13 13:34	7440-66-6	
200.8 Potentially Diss. Metals	Analytical Method: EPA 200.8 Preparation Method: EPA 200.8							
Aluminum, Dissolved	**7410**	ug/L	50.0	1	01/23/13 11:30	01/25/13 12:55	7429-90-5	
Antimony, Dissolved	**0.41J**	ug/L	1.0	1	01/23/13 11:30	01/25/13 12:55	7440-36-0	
Arsenic, Dissolved	**173**	ug/L	1.0	1	01/23/13 11:30	01/25/13 12:55	7440-38-2	
Barium, Dissolved	**11.9**	ug/L	1.0	1	01/23/13 11:30	01/25/13 12:55	7440-39-3	
Beryllium, Dissolved	**0.97**	ug/L	0.50	1	01/23/13 11:30	01/25/13 12:55	7440-41-7	
Cadmium, Dissolved	**67.2**	ug/L	0.50	1	01/23/13 11:30	01/25/13 12:55	7440-43-9	
Chromium, Dissolved	**8.3**	ug/L	1.0	1	01/23/13 11:30	01/25/13 12:55	7440-47-3	
Cobalt, Dissolved	**15.9**	ug/L	1.0	1	01/23/13 11:30	01/25/13 12:55	7440-48-4	
Copper, Dissolved	**23.5**	ug/L	1.0	1	01/23/13 11:30	01/25/13 12:55	7440-50-8	
Iron, Dissolved	**36000**	ug/L	50.0	1	01/23/13 11:30	01/25/13 12:55	7439-89-6	
Lead, Dissolved	**2880**	ug/L	1.0	1	01/23/13 11:30	01/25/13 12:55	7439-92-1	
Manganese, Dissolved	**8230**	ug/L	100	100	01/23/13 11:30	01/25/13 14:43	7439-96-5	
Molybdenum, Dissolved	**3.2**	ug/L	1.0	1	01/23/13 11:30	01/25/13 12:55	7439-98-7	
Nickel, Dissolved	**25.8**	ug/L	1.0	1	01/23/13 11:30	01/25/13 12:55	7440-02-0	
Selenium, Dissolved	**2.0**	ug/L	1.0	1	01/23/13 11:30	01/25/13 12:55	7782-49-2	
Silver, Dissolved	**0.11J**	ug/L	0.50	1	01/23/13 11:30	01/25/13 12:55	7440-22-4	
Thallium, Dissolved	**0.57J**	ug/L	1.0	1	01/23/13 11:30	01/25/13 12:55	7440-28-0	
Vanadium, Dissolved	**13.6**	ug/L	1.0	1	01/23/13 11:30	01/25/13 12:55	7440-62-2	
Zinc, Dissolved	**31700**	ug/L	1000	100	01/23/13 11:30	01/25/13 14:43	7440-66-6	
245.1 Mercury	Analytical Method: EPA 245.1 Preparation Method: EPA 245.1							
Mercury	ND	ug/L	0.20	1	02/05/13 12:02	02/05/13 20:54	7439-97-6	
245.1 Mercury, Dissolved	Analytical Method: EPA 245.1 Preparation Method: EPA 245.1							
Mercury, Dissolved	ND	ug/L	0.20	1	01/31/13 09:37	01/31/13 15:58	7439-97-6	
245.1 Potentially Diss Mercury	Analytical Method: EPA 245.1 Preparation Method: EPA 245.1							
Mercury, Dissolved	ND	ug/L	0.20	1	01/29/13 10:30	01/29/13 14:57	7439-97-6	
2510B Specific Conductance	Analytical Method: SM 2510B							
Specific Conductance	**2470**	umhos/cm	10.0	1		01/25/13 12:07		
Salinity	Analytical Method: Calculated							
Salinity (as dissolved solids)	**1580**	mg/L	6.0	1		01/25/13 14:35		

This report shall not be reproduced, except in full,
without the written consent of Pace Analytical Services, Inc..

Pace Analytical Services, Inc.
9608 Loiret Blvd.
Lenexa, KS 66219
(913)599-5665

ANALYTICAL RESULTS

Project: JANUARY 2013 RICO WATER SAMPLI
Pace Project No.: 60137200

Sample: GW-5_20130115 **Lab ID: 60137200002** Collected: 01/15/13 15:15 Received: 01/18/13 10:20 Matrix: Water

Parameters	Results	Units	Report Limit	DF	Prepared	Analyzed	CAS No.	Qual
Salinity	Analytical Method: Calculated							
Salinity (as seawater)	**1.3**	PSU	0.010	1		01/25/13 14:35		
2320B Alkalinity	Analytical Method: SM 2320B							
Alkalinity,Bicarbonate (CaCO3)	**128**	mg/L	20.0	1		01/23/13 08:25		
Alkalinity, Carbonate (CaCO3)	ND	mg/L	20.0	1		01/23/13 08:25		
Alkalinity, Total as CaCO3	**141**	mg/L	20.0	1		01/23/13 08:25		
2540C Total Dissolved Solids	Analytical Method: SM 2540C							
Total Dissolved Solids	**2220**	mg/L	5.0	1		01/22/13 16:04		
2540D Total Suspended Solids	Analytical Method: SM 2540D							
Total Suspended Solids	**1400**	mg/L	5.0	1		01/22/13 16:07		
4500S2D Sulfide, Total	Analytical Method: SM 4500-S-2 D							
Sulfide, Total	**2.4**	mg/L	0.25	1		01/22/13 14:32	18496-25-8	
300.0 IC Anions 28 Days	Analytical Method: EPA 300.0							
Chloride	**1.2**	mg/L	1.0	1		01/27/13 16:22	16887-00-6	
Sulfate	**1640**	mg/L	100	100		01/27/13 16:40	14808-79-8	
353.2 Nitrogen, NO2/NO3 pres.	Analytical Method: EPA 353.2							
Nitrogen, NO2 plus NO3	ND	mg/L	0.10	1		01/23/13 11:45		
4500CNE Cyanide, Total	Analytical Method: SM 4500-CN-E							
Cyanide	ND	mg/L	0.0050	1		01/23/13 14:27	57-12-5	
5310C TOC	Analytical Method: SM 5310C							
Total Organic Carbon	**4.6**	mg/L	1.0	1		01/23/13 21:33	7440-44-0	

This report shall not be reproduced, except in full,
without the written consent of Pace Analytical Services, Inc..

Pace Analytical Services, Inc.
9608 Loiret Blvd.
Lenexa, KS 66219
(913)599-5665

ANALYTICAL RESULTS

Project: JANUARY 2013 RICO WATER SAMPLI
Pace Project No.: 60137200

Sample: DR-3_20130115 **Lab ID: 60137200003** Collected: 01/15/13 15:33 Received: 01/18/13 10:20 Matrix: Water

Parameters	Results	Units	Report Limit	DF	Prepared	Analyzed	CAS No.	Qual
200.7 Potentially Diss. Metals	Analytical Method: EPA 200.7 Preparation Method: EPA 200.7							
Calcium, Dissolved	**234000**	ug/L	500	5	01/28/13 11:45	01/29/13 17:34	7440-70-2	
Magnesium, Dissolved	**19200**	ug/L	250	5	01/28/13 11:45	01/29/13 17:34	7439-95-4	
Potassium, Dissolved	**13800**	ug/L	2500	5	01/28/13 11:45	01/29/13 17:34	7440-09-7	
Sodium, Dissolved	**10500**	ug/L	2500	5	01/28/13 11:45	01/29/13 17:34	7440-23-5	
200.8 MET ICPMS	Analytical Method: EPA 200.8 Preparation Method: EPA 200.8							
Aluminum	**932**	ug/L	4.0	1	01/25/13 10:27	01/30/13 00:51	7429-90-5	
Antimony	ND	ug/L	0.50	1	01/25/13 10:27	01/30/13 00:51	7440-36-0	
Arsenic	**1.9**	ug/L	0.50	1	01/25/13 10:27	01/30/13 00:51	7440-38-2	
Barium	**20.1**	ug/L	0.30	1	01/25/13 10:27	01/30/13 00:51	7440-39-3	
Beryllium	**1.1**	ug/L	0.20	1	01/25/13 10:27	01/30/13 00:51	7440-41-7	
Cadmium	**14.1**	ug/L	0.080	1	01/25/13 10:27	01/30/13 00:51	7440-43-9	
Calcium	**232000**	ug/L	400	20	01/25/13 10:27	01/30/13 00:56	7440-70-2	
Chromium	**0.69**	ug/L	0.50	1	01/25/13 10:27	01/30/13 00:51	7440-47-3	
Cobalt	**2.6**	ug/L	0.50	1	01/25/13 10:27	01/30/13 00:51	7440-48-4	
Copper	**190**	ug/L	0.50	1	01/25/13 10:27	01/30/13 00:51	7440-50-8	
Iron	**10500**	ug/L	50.0	1	01/25/13 10:27	01/30/13 00:51	7439-89-6	
Lead	**19.8**	ug/L	0.10	1	01/25/13 10:27	01/30/13 00:51	7439-92-1	
Magnesium	**17800**	ug/L	5.0	1	01/25/13 10:27	01/30/13 00:51	7439-95-4	
Manganese	**1620**	ug/L	10.0	20	01/25/13 10:27	01/30/13 00:56	7439-96-5	
Molybdenum	**19.0**	ug/L	0.50	1	01/25/13 10:27	01/30/13 00:51	7439-98-7	
Nickel	**4.0**	ug/L	0.50	1	01/25/13 10:27	01/30/13 00:51	7440-02-0	
Potassium	**14700**	ug/L	20.0	1	01/25/13 10:27	01/30/13 00:51	7440-09-7	
Selenium	ND	ug/L	0.50	1	01/25/13 10:27	01/30/13 00:51	7782-49-2	
Silica	**17000**	ug/L	1070	20	01/25/13 10:27	01/30/13 00:56	7631-86-9	
Silver	ND	ug/L	0.50	1	01/25/13 10:27	01/30/13 00:51	7440-22-4	
Sodium	**11900**	ug/L	50.0	1	01/25/13 10:27	01/30/13 00:51	7440-23-5	
Thallium	ND	ug/L	0.10	1	01/25/13 10:27	01/30/13 00:51	7440-28-0	
Total Hardness by 2340B	**653000**	ug/L	1420	20	01/25/13 10:27	01/30/13 00:56		
Vanadium	**0.21**	ug/L	0.10	1	01/25/13 10:27	01/30/13 00:51	7440-62-2	
Zinc	**3000**	ug/L	100	20	01/25/13 10:27	01/30/13 00:56	7440-66-6	
200.8 MET ICPMS, Dissolved	Analytical Method: EPA 200.8 Preparation Method: EPA 200.8							
Aluminum, Dissolved	**16.4**	ug/L	4.0	1	01/25/13 10:33	02/01/13 15:14	7429-90-5	
Antimony, Dissolved	ND	ug/L	0.50	1	01/25/13 10:33	02/01/13 15:14	7440-36-0	
Arsenic, Dissolved	ND	ug/L	0.50	1	01/25/13 10:33	02/01/13 15:14	7440-38-2	
Barium, Dissolved	**19.3**	ug/L	0.30	1	01/25/13 10:33	02/01/13 15:14	7440-39-3	
Beryllium, Dissolved	**0.32**	ug/L	0.20	1	01/25/13 10:33	01/28/13 17:09	7440-41-7	
Cadmium, Dissolved	**12.2**	ug/L	0.080	1	01/25/13 10:33	02/01/13 15:14	7440-43-9	
Calcium, Dissolved	**266000**	ug/L	400	20	01/25/13 10:33	01/28/13 17:30	7440-70-2	
Chromium, Dissolved	ND	ug/L	0.50	1	01/25/13 10:33	02/01/13 15:14	7440-47-3	
Cobalt, Dissolved	**2.5**	ug/L	0.50	1	01/25/13 10:33	02/01/13 15:14	7440-48-4	
Copper, Dissolved	**6.0**	ug/L	0.50	1	01/25/13 10:33	02/01/13 15:14	7440-50-8	
Iron, Dissolved	**805**	ug/L	50.0	1	01/25/13 10:33	02/01/13 15:14	7439-89-6	
Lead, Dissolved	ND	ug/L	0.10	1	01/25/13 10:33	02/01/13 15:14	7439-92-1	
Magnesium, Dissolved	**17600**	ug/L	5.0	1	01/25/13 10:33	02/01/13 15:14	7439-95-4	

This report shall not be reproduced, except in full,
without the written consent of Pace Analytical Services, Inc..

Pace Analytical Services, Inc.
9608 Loiret Blvd.
Lenexa, KS 66219
(913)599-5665

ANALYTICAL RESULTS

Project: JANUARY 2013 RICO WATER SAMPLI
Pace Project No.: 60137200

Sample: DR-3_20130115 **Lab ID: 60137200003** Collected: 01/15/13 15:33 Received: 01/18/13 10:20 Matrix: Water

Parameters	Results	Units	Report Limit	DF	Prepared	Analyzed	CAS No.	Qual
200.8 MET ICPMS, Dissolved	Analytical Method: EPA 200.8 Preparation Method: EPA 200.8							
Manganese, Dissolved	**1620**	ug/L	10.0	20	01/25/13 10:33	02/01/13 15:18	7439-96-5	
Molybdenum, Dissolved	**15.2**	ug/L	0.50	1	01/25/13 10:33	02/01/13 15:14	7439-98-7	
Nickel, Dissolved	**4.1**	ug/L	0.50	1	01/25/13 10:33	02/01/13 15:14	7440-02-0	
Potassium, Dissolved	**13800**	ug/L	20.0	1	01/25/13 10:33	02/01/13 15:14	7440-09-7	
Selenium, Dissolved	ND	ug/L	0.50	1	01/25/13 10:33	02/01/13 15:14	7782-49-2	
Silver, Dissolved	ND	ug/L	0.50	1	01/25/13 10:33	02/01/13 15:14	7440-22-4	
Sodium, Dissolved	**10900**	ug/L	50.0	1	01/25/13 10:33	02/01/13 15:14	7440-23-5	
Thallium, Dissolved	ND	ug/L	0.10	1	01/25/13 10:33	02/01/13 15:14	7440-28-0	
Vanadium, Dissolved	ND	ug/L	0.10	1	01/25/13 10:33	02/01/13 15:14	7440-62-2	
Zinc, Dissolved	**2490**	ug/L	100	20	01/25/13 10:33	02/01/13 15:18	7440-66-6	
200.8 Potentially Diss. Metals	Analytical Method: EPA 200.8 Preparation Method: EPA 200.8							
Aluminum, Dissolved	**963**	ug/L	50.0	1	01/23/13 11:30	01/25/13 12:59	7429-90-5	
Antimony, Dissolved	**0.38J**	ug/L	1.0	1	01/23/13 11:30	01/25/13 12:59	7440-36-0	
Arsenic, Dissolved	**2.0**	ug/L	1.0	1	01/23/13 11:30	01/25/13 12:59	7440-38-2	
Barium, Dissolved	**22.2**	ug/L	1.0	1	01/23/13 11:30	01/25/13 12:59	7440-39-3	
Beryllium, Dissolved	**1.0**	ug/L	0.50	1	01/23/13 11:30	01/25/13 12:59	7440-41-7	
Cadmium, Dissolved	**15.1**	ug/L	0.50	1	01/23/13 11:30	01/25/13 12:59	7440-43-9	
Chromium, Dissolved	**0.89J**	ug/L	1.0	1	01/23/13 11:30	01/25/13 12:59	7440-47-3	B
Cobalt, Dissolved	**2.6**	ug/L	1.0	1	01/23/13 11:30	01/25/13 12:59	7440-48-4	
Copper, Dissolved	**193**	ug/L	1.0	1	01/23/13 11:30	01/25/13 12:59	7440-50-8	
Iron, Dissolved	**11100**	ug/L	50.0	1	01/23/13 11:30	01/25/13 12:59	7439-89-6	
Lead, Dissolved	**22.4**	ug/L	1.0	1	01/23/13 11:30	01/25/13 12:59	7439-92-1	
Manganese, Dissolved	**1760**	ug/L	1.0	1	01/23/13 11:30	01/25/13 12:59	7439-96-5	
Molybdenum, Dissolved	**21.0**	ug/L	1.0	1	01/23/13 11:30	01/25/13 12:59	7439-98-7	
Nickel, Dissolved	**2.5**	ug/L	1.0	1	01/23/13 11:30	01/25/13 12:59	7440-02-0	B
Selenium, Dissolved	ND	ug/L	1.0	1	01/23/13 11:30	01/25/13 12:59	7782-49-2	
Silver, Dissolved	ND	ug/L	0.50	1	01/23/13 11:30	01/25/13 12:59	7440-22-4	
Thallium, Dissolved	**0.050J**	ug/L	1.0	1	01/23/13 11:30	01/25/13 12:59	7440-28-0	
Vanadium, Dissolved	ND	ug/L	1.0	1	01/23/13 11:30	01/25/13 12:59	7440-62-2	
Zinc, Dissolved	**2920**	ug/L	10.0	1	01/23/13 11:30	01/25/13 12:59	7440-66-6	
245.1 Mercury	Analytical Method: EPA 245.1 Preparation Method: EPA 245.1							
Mercury	ND	ug/L	0.20	1	02/05/13 12:02	02/05/13 21:06	7439-97-6	
245.1 Mercury, Dissolved	Analytical Method: EPA 245.1 Preparation Method: EPA 245.1							
Mercury, Dissolved	ND	ug/L	0.20	1	01/31/13 09:37	01/31/13 16:14	7439-97-6	
245.1 Potentially Diss Mercury	Analytical Method: EPA 245.1 Preparation Method: EPA 245.1							
Mercury, Dissolved	ND	ug/L	0.20	1	01/29/13 10:30	01/29/13 14:59	7439-97-6	
2510B Specific Conductance	Analytical Method: SM 2510B							
Specific Conductance	**1320**	umhos/cm	10.0	1		01/25/13 12:09		
Salinity	Analytical Method: Calculated							
Salinity (as dissolved solids)	**845**	mg/L	6.0	1		01/25/13 14:35		

This report shall not be reproduced, except in full,
without the written consent of Pace Analytical Services, Inc..

Pace Analytical Services, Inc.
9608 Loiret Blvd.
Lenexa, KS 66219
(913)599-5665

ANALYTICAL RESULTS

Project: JANUARY 2013 RICO WATER SAMPLI
Pace Project No.: 60137200

Sample: DR-3_20130115 **Lab ID: 60137200003** Collected: 01/15/13 15:33 Received: 01/18/13 10:20 Matrix: Water

Parameters	Results	Units	Report Limit	DF	Prepared	Analyzed	CAS No.	Qual
Salinity	Analytical Method: Calculated							
Salinity (as seawater)	**0.66**	PSU	0.010	1		01/25/13 14:35		
2320B Alkalinity	Analytical Method: SM 2320B							
Alkalinity,Bicarbonate (CaCO3)	ND	mg/L	20.0	1		01/23/13 08:34		
Alkalinity, Carbonate (CaCO3)	ND	mg/L	20.0	1		01/23/13 08:34		
Alkalinity, Total as CaCO3	ND	mg/L	20.0	1		01/23/13 08:34		
2540C Total Dissolved Solids	Analytical Method: SM 2540C							
Total Dissolved Solids	**1070**	mg/L	5.0	1		01/22/13 16:05		
2540D Total Suspended Solids	Analytical Method: SM 2540D							
Total Suspended Solids	**46.0**	mg/L	5.0	1		01/22/13 16:07		
4500S2D Sulfide, Total	Analytical Method: SM 4500-S-2 D							
Sulfide, Total	ND	mg/L	0.050	1		01/22/13 14:32	18496-25-8	
300.0 IC Anions 28 Days	Analytical Method: EPA 300.0							
Chloride	ND	mg/L	1.0	1		01/27/13 16:58	16887-00-6	
Sulfate	**651**	mg/L	50.0	50		01/27/13 17:16	14808-79-8	
353.2 Nitrogen, NO2/NO3 pres.	Analytical Method: EPA 353.2							
Nitrogen, NO2 plus NO3	ND	mg/L	0.10	1		01/23/13 11:46		
4500CNE Cyanide, Total	Analytical Method: SM 4500-CN-E							
Cyanide	ND	mg/L	0.0050	1		01/23/13 14:30	57-12-5	
5310C TOC	Analytical Method: SM 5310C							
Total Organic Carbon	**1.3**	mg/L	1.0	1		01/23/13 21:47	7440-44-0	

This report shall not be reproduced, except in full,
without the written consent of Pace Analytical Services, Inc..

Pace Analytical Services, Inc.
9608 Loiret Blvd.
Lenexa, KS 66219
(913)599-5665

ANALYTICAL RESULTS

Project: JANUARY 2013 RICO WATER SAMPLI
Pace Project No.: 60137200

Sample: DR-8_20130115 **Lab ID: 60137200004** Collected: 01/15/13 15:43 Received: 01/18/13 10:20 Matrix: Water

Parameters	Results	Units	Report Limit	DF	Prepared	Analyzed	CAS No.	Qual
200.7 Potentially Diss. Metals	Analytical Method: EPA 200.7 Preparation Method: EPA 200.7							
Calcium, Dissolved	**235000**	ug/L	500	5	01/28/13 11:45	01/29/13 17:40	7440-70-2	
Magnesium, Dissolved	**19500**	ug/L	250	5	01/28/13 11:45	01/29/13 17:40	7439-95-4	
Potassium, Dissolved	**13800**	ug/L	2500	5	01/28/13 11:45	01/29/13 17:40	7440-09-7	
Sodium, Dissolved	**10500**	ug/L	2500	5	01/28/13 11:45	01/29/13 17:40	7440-23-5	
200.8 MET ICPMS	Analytical Method: EPA 200.8 Preparation Method: EPA 200.8							
Aluminum	**946**	ug/L	4.0	1	01/25/13 10:27	01/30/13 01:00	7429-90-5	
Antimony	ND	ug/L	0.50	1	01/25/13 10:27	01/30/13 01:00	7440-36-0	
Arsenic	**2.0**	ug/L	0.50	1	01/25/13 10:27	01/30/13 01:00	7440-38-2	
Barium	**20.1**	ug/L	0.30	1	01/25/13 10:27	01/30/13 01:00	7440-39-3	
Beryllium	**1.1**	ug/L	0.20	1	01/25/13 10:27	01/30/13 01:00	7440-41-7	
Cadmium	**14.4**	ug/L	0.080	1	01/25/13 10:27	01/30/13 01:00	7440-43-9	
Calcium	**231000**	ug/L	400	20	01/25/13 10:27	01/30/13 01:04	7440-70-2	
Chromium	**1.1**	ug/L	0.50	1	01/25/13 10:27	01/30/13 01:00	7440-47-3	
Cobalt	**2.6**	ug/L	0.50	1	01/25/13 10:27	01/30/13 01:00	7440-48-4	
Copper	**194**	ug/L	0.50	1	01/25/13 10:27	01/30/13 01:00	7440-50-8	
Iron	**10700**	ug/L	50.0	1	01/25/13 10:27	01/30/13 01:00	7439-89-6	
Lead	**20.0**	ug/L	0.10	1	01/25/13 10:27	01/30/13 01:00	7439-92-1	
Magnesium	**18100**	ug/L	5.0	1	01/25/13 10:27	01/30/13 01:00	7439-95-4	
Manganese	**1610**	ug/L	10.0	20	01/25/13 10:27	01/30/13 01:04	7439-96-5	
Molybdenum	**19.6**	ug/L	0.50	1	01/25/13 10:27	01/30/13 01:00	7439-98-7	
Nickel	**4.0**	ug/L	0.50	1	01/25/13 10:27	01/30/13 01:00	7440-02-0	
Potassium	**15000**	ug/L	20.0	1	01/25/13 10:27	01/30/13 01:00	7440-09-7	
Selenium	ND	ug/L	0.50	1	01/25/13 10:27	01/30/13 01:00	7782-49-2	
Silica	**16900**	ug/L	1070	20	01/25/13 10:27	01/30/13 01:04	7631-86-9	
Silver	ND	ug/L	0.50	1	01/25/13 10:27	01/30/13 01:00	7440-22-4	
Sodium	**12200**	ug/L	50.0	1	01/25/13 10:27	01/30/13 01:00	7440-23-5	
Thallium	ND	ug/L	0.10	1	01/25/13 10:27	01/30/13 01:00	7440-28-0	
Total Hardness by 2340B	**652000**	ug/L	1420	20	01/25/13 10:27	01/30/13 01:04		
Vanadium	**0.32**	ug/L	0.10	1	01/25/13 10:27	01/30/13 01:00	7440-62-2	
Zinc	**2980**	ug/L	100	20	01/25/13 10:27	01/30/13 01:04	7440-66-6	
200.8 MET ICPMS, Dissolved	Analytical Method: EPA 200.8 Preparation Method: EPA 200.8							
Aluminum, Dissolved	**14.9**	ug/L	4.0	1	01/25/13 10:33	02/01/13 15:23	7429-90-5	
Antimony, Dissolved	ND	ug/L	0.50	1	01/25/13 10:33	02/01/13 15:23	7440-36-0	
Arsenic, Dissolved	ND	ug/L	0.50	1	01/25/13 10:33	02/01/13 15:23	7440-38-2	
Barium, Dissolved	**19.0**	ug/L	0.30	1	01/25/13 10:33	02/01/13 15:23	7440-39-3	
Beryllium, Dissolved	**0.30**	ug/L	0.20	1	01/25/13 10:33	01/28/13 17:34	7440-41-7	
Cadmium, Dissolved	**11.9**	ug/L	0.080	1	01/25/13 10:33	02/01/13 15:23	7440-43-9	
Calcium, Dissolved	**258000**	ug/L	400	20	01/25/13 10:33	01/28/13 17:39	7440-70-2	
Chromium, Dissolved	ND	ug/L	0.50	1	01/25/13 10:33	02/01/13 15:23	7440-47-3	
Cobalt, Dissolved	**2.4**	ug/L	0.50	1	01/25/13 10:33	02/01/13 15:23	7440-48-4	
Copper, Dissolved	**6.8**	ug/L	0.50	1	01/25/13 10:33	02/01/13 15:23	7440-50-8	
Iron, Dissolved	**581**	ug/L	50.0	1	01/25/13 10:33	02/01/13 15:23	7439-89-6	
Lead, Dissolved	ND	ug/L	0.10	1	01/25/13 10:33	02/01/13 15:23	7439-92-1	
Magnesium, Dissolved	**17200**	ug/L	5.0	1	01/25/13 10:33	02/01/13 15:23	7439-95-4	

This report shall not be reproduced, except in full,
without the written consent of Pace Analytical Services, Inc..

Pace Analytical Services, Inc.
9608 Loiret Blvd.
Lenexa, KS 66219
(913)599-5665

ANALYTICAL RESULTS

Project: JANUARY 2013 RICO WATER SAMPLI
Pace Project No.: 60137200

Sample: DR-8_20130115 **Lab ID: 60137200004** Collected: 01/15/13 15:43 Received: 01/18/13 10:20 Matrix: Water

Parameters	Results	Units	Report Limit	DF	Prepared	Analyzed	CAS No.	Qual
200.8 MET ICPMS, Dissolved	Analytical Method: EPA 200.8 Preparation Method: EPA 200.8							
Manganese, Dissolved	**1640**	ug/L	10.0	20	01/25/13 10:33	02/01/13 15:27	7439-96-5	
Molybdenum, Dissolved	**14.7**	ug/L	0.50	1	01/25/13 10:33	02/01/13 15:23	7439-98-7	
Nickel, Dissolved	**3.9**	ug/L	0.50	1	01/25/13 10:33	02/01/13 15:23	7440-02-0	
Potassium, Dissolved	**13500**	ug/L	20.0	1	01/25/13 10:33	02/01/13 15:23	7440-09-7	
Selenium, Dissolved	ND	ug/L	0.50	1	01/25/13 10:33	02/01/13 15:23	7782-49-2	
Silver, Dissolved	ND	ug/L	0.50	1	01/25/13 10:33	02/01/13 15:23	7440-22-4	
Sodium, Dissolved	**10600**	ug/L	50.0	1	01/25/13 10:33	02/01/13 15:23	7440-23-5	
Thallium, Dissolved	ND	ug/L	0.10	1	01/25/13 10:33	02/01/13 15:23	7440-28-0	
Vanadium, Dissolved	ND	ug/L	0.10	1	01/25/13 10:33	02/01/13 15:23	7440-62-2	
Zinc, Dissolved	**2530**	ug/L	100	20	01/25/13 10:33	02/01/13 15:27	7440-66-6	
200.8 Potentially Diss. Metals	Analytical Method: EPA 200.8 Preparation Method: EPA 200.8							
Aluminum, Dissolved	**958**	ug/L	50.0	1	01/23/13 11:30	01/25/13 13:03	7429-90-5	
Antimony, Dissolved	**0.34J**	ug/L	1.0	1	01/23/13 11:30	01/25/13 13:03	7440-36-0	
Arsenic, Dissolved	**2.0**	ug/L	1.0	1	01/23/13 11:30	01/25/13 13:03	7440-38-2	
Barium, Dissolved	**20.4**	ug/L	1.0	1	01/23/13 11:30	01/25/13 13:03	7440-39-3	
Beryllium, Dissolved	**0.98**	ug/L	0.50	1	01/23/13 11:30	01/25/13 13:03	7440-41-7	
Cadmium, Dissolved	**14.7**	ug/L	0.50	1	01/23/13 11:30	01/25/13 13:03	7440-43-9	
Chromium, Dissolved	**0.84J**	ug/L	1.0	1	01/23/13 11:30	01/25/13 13:03	7440-47-3	B
Cobalt, Dissolved	**2.5**	ug/L	1.0	1	01/23/13 11:30	01/25/13 13:03	7440-48-4	
Copper, Dissolved	**190**	ug/L	1.0	1	01/23/13 11:30	01/25/13 13:03	7440-50-8	
Iron, Dissolved	**11000**	ug/L	50.0	1	01/23/13 11:30	01/25/13 13:03	7439-89-6	
Lead, Dissolved	**21.6**	ug/L	1.0	1	01/23/13 11:30	01/25/13 13:03	7439-92-1	
Manganese, Dissolved	**1700**	ug/L	1.0	1	01/23/13 11:30	01/25/13 13:03	7439-96-5	
Molybdenum, Dissolved	**20.4**	ug/L	1.0	1	01/23/13 11:30	01/25/13 13:03	7439-98-7	
Nickel, Dissolved	**2.2**	ug/L	1.0	1	01/23/13 11:30	01/25/13 13:03	7440-02-0	B
Selenium, Dissolved	ND	ug/L	1.0	1	01/23/13 11:30	01/25/13 13:03	7782-49-2	
Silver, Dissolved	ND	ug/L	0.50	1	01/23/13 11:30	01/25/13 13:03	7440-22-4	
Thallium, Dissolved	**0.038J**	ug/L	1.0	1	01/23/13 11:30	01/25/13 13:03	7440-28-0	
Vanadium, Dissolved	ND	ug/L	1.0	1	01/23/13 11:30	01/25/13 13:03	7440-62-2	
Zinc, Dissolved	**2850**	ug/L	10.0	1	01/23/13 11:30	01/25/13 13:03	7440-66-6	
245.1 Mercury	Analytical Method: EPA 245.1 Preparation Method: EPA 245.1							
Mercury	ND	ug/L	0.20	1	02/05/13 12:02	02/05/13 21:09	7439-97-6	
245.1 Mercury, Dissolved	Analytical Method: EPA 245.1 Preparation Method: EPA 245.1							
Mercury, Dissolved	ND	ug/L	0.20	1	01/31/13 09:37	01/31/13 16:16	7439-97-6	
245.1 Potentially Diss Mercury	Analytical Method: EPA 245.1 Preparation Method: EPA 245.1							
Mercury, Dissolved	ND	ug/L	0.20	1	01/29/13 10:30	01/29/13 15:06	7439-97-6	
2510B Specific Conductance	Analytical Method: SM 2510B							
Specific Conductance	**1310**	umhos/cm	10.0	1		01/25/13 12:11		
Salinity	Analytical Method: Calculated							
Salinity (as dissolved solids)	**838**	mg/L	6.0	1		01/25/13 14:35		

This report shall not be reproduced, except in full,
without the written consent of Pace Analytical Services, Inc..

Pace Analytical Services, Inc.
9608 Loiret Blvd.
Lenexa, KS 66219
(913)599-5665

ANALYTICAL RESULTS

Project: JANUARY 2013 RICO WATER SAMPLI
Pace Project No.: 60137200

Sample: DR-8_20130115 **Lab ID: 60137200004** Collected: 01/15/13 15:43 Received: 01/18/13 10:20 Matrix: Water

Parameters	Results	Units	Report Limit	DF	Prepared	Analyzed	CAS No.	Qual
Salinity	Analytical Method: Calculated							
Salinity (as seawater)	**0.65**	PSU	0.010	1		01/25/13 14:35		
2320B Alkalinity	Analytical Method: SM 2320B							
Alkalinity,Bicarbonate (CaCO3)	**99.0**	mg/L	20.0	1		01/23/13 08:41		
Alkalinity, Carbonate (CaCO3)	ND	mg/L	20.0	1		01/23/13 08:41		
Alkalinity, Total as CaCO3	**99.2**	mg/L	20.0	1		01/23/13 08:41		
2540C Total Dissolved Solids	Analytical Method: SM 2540C							
Total Dissolved Solids	**1070**	mg/L	5.0	1		01/22/13 16:05		
2540D Total Suspended Solids	Analytical Method: SM 2540D							
Total Suspended Solids	**40.0**	mg/L	5.0	1		01/22/13 16:08		
4500S2D Sulfide, Total	Analytical Method: SM 4500-S-2 D							
Sulfide, Total	ND	mg/L	0.050	1		01/22/13 14:32	18496-25-8	
300.0 IC Anions 28 Days	Analytical Method: EPA 300.0							
Chloride	ND	mg/L	1.0	1		01/27/13 17:33	16887-00-6	
Sulfate	**651**	mg/L	50.0	50		01/27/13 17:51	14808-79-8	
353.2 Nitrogen, NO2/NO3 pres.	Analytical Method: EPA 353.2							
Nitrogen, NO2 plus NO3	ND	mg/L	0.10	1		01/23/13 11:49		
4500CNE Cyanide, Total	Analytical Method: SM 4500-CN-E							
Cyanide	ND	mg/L	0.0050	1		01/23/13 14:31	57-12-5	
5310C TOC	Analytical Method: SM 5310C							
Total Organic Carbon	ND	mg/L	1.0	1		01/23/13 22:01	7440-44-0	

This report shall not be reproduced, except in full,
without the written consent of Pace Analytical Services, Inc..

Pace Analytical Services, Inc.
9608 Loiret Blvd.
Lenexa, KS 66219
(913)599-5665

ANALYTICAL RESULTS

Project: JANUARY 2013 RICO WATER SAMPLI
Pace Project No.: 60137200

Sample: GW-6_20130115 **Lab ID: 60137200005** Collected: 01/15/13 15:59 Received: 01/18/13 10:20 Matrix: Water

Parameters	Results	Units	Report Limit	DF	Prepared	Analyzed	CAS No.	Qual
200.7 Potentially Diss. Metals	Analytical Method: EPA 200.7 Preparation Method: EPA 200.7							
Calcium, Dissolved	**478000**	ug/L	500	5	01/28/13 11:45	01/29/13 17:42	7440-70-2	
Magnesium, Dissolved	**73400**	ug/L	250	5	01/28/13 11:45	01/29/13 17:42	7439-95-4	
Potassium, Dissolved	**14200**	ug/L	2500	5	01/28/13 11:45	01/29/13 17:42	7440-09-7	
Sodium, Dissolved	**6300**	ug/L	2500	5	01/28/13 11:45	01/29/13 17:42	7440-23-5	
200.8 MET ICPMS	Analytical Method: EPA 200.8 Preparation Method: EPA 200.8							
Aluminum	**64800**	ug/L	20.0	5	01/25/13 10:27	01/30/13 01:09	7429-90-5	
Antimony	**4.2**	ug/L	2.5	5	01/25/13 10:27	01/30/13 01:09	7440-36-0	
Arsenic	**848**	ug/L	2.5	5	01/25/13 10:27	01/30/13 01:09	7440-38-2	
Barium	**251**	ug/L	1.5	5	01/25/13 10:27	01/30/13 01:09	7440-39-3	
Beryllium	**14.1**	ug/L	1.0	5	01/25/13 10:27	01/30/13 01:09	7440-41-7	
Cadmium	**230**	ug/L	0.40	5	01/25/13 10:27	01/30/13 01:09	7440-43-9	
Calcium	**478000**	ug/L	500	25	01/25/13 10:27	01/30/13 01:14	7440-70-2	
Chromium	**68.4**	ug/L	2.5	5	01/25/13 10:27	01/30/13 01:09	7440-47-3	
Cobalt	**62.5**	ug/L	2.5	5	01/25/13 10:27	01/30/13 01:09	7440-48-4	
Copper	**1780**	ug/L	2.5	5	01/25/13 10:27	01/30/13 01:09	7440-50-8	
Iron	**339000**	ug/L	1250	25	01/25/13 10:27	01/30/13 01:14	7439-89-6	
Lead	**17400**	ug/L	20.0	200	01/25/13 10:27	02/17/13 10:59	7439-92-1	
Magnesium	**83900**	ug/L	25.0	5	01/25/13 10:27	01/30/13 01:09	7439-95-4	
Manganese	**26500**	ug/L	100	200	01/25/13 10:27	02/17/13 10:59	7439-96-5	
Molybdenum	**16.9**	ug/L	2.5	5	01/25/13 10:27	01/30/13 01:09	7439-98-7	
Nickel	**103**	ug/L	2.5	5	01/25/13 10:27	01/30/13 01:09	7440-02-0	
Potassium	**19600**	ug/L	100	5	01/25/13 10:27	01/30/13 01:09	7440-09-7	
Selenium	**19.7**	ug/L	2.5	5	01/25/13 10:27	01/30/13 01:09	7782-49-2	
Silica	**164000**	ug/L	10700	200	01/25/13 10:27	02/17/13 10:59	7631-86-9	
Silver	**36.7**	ug/L	2.5	5	01/25/13 10:27	01/30/13 01:09	7440-22-4	
Sodium	**6920**	ug/L	250	5	01/25/13 10:27	01/30/13 01:09	7440-23-5	
Thallium	**2.4**	ug/L	0.50	5	01/25/13 10:27	01/30/13 01:09	7440-28-0	
Total Hardness by 2340B	**1540000**	ug/L	1780	25	01/25/13 10:27	01/30/13 01:14		
Vanadium	**146**	ug/L	0.50	5	01/25/13 10:27	01/30/13 01:09	7440-62-2	
Zinc	**50600**	ug/L	1000	200	01/25/13 10:27	02/17/13 10:59	7440-66-6	
200.8 MET ICPMS, Dissolved	Analytical Method: EPA 200.8 Preparation Method: EPA 200.8							
Aluminum, Dissolved	**310**	ug/L	4.0	1	01/25/13 10:33	02/01/13 13:42	7429-90-5	
Antimony, Dissolved	ND	ug/L	0.50	1	01/25/13 10:33	02/01/13 13:42	7440-36-0	
Arsenic, Dissolved	**84.9**	ug/L	0.50	1	01/25/13 10:33	02/01/13 13:42	7440-38-2	
Barium, Dissolved	**14.8**	ug/L	0.30	1	01/25/13 10:33	02/01/13 13:42	7440-39-3	
Beryllium, Dissolved	**0.70**	ug/L	0.20	1	01/25/13 10:33	01/28/13 17:44	7440-41-7	
Cadmium, Dissolved	**0.77**	ug/L	0.080	1	01/25/13 10:33	02/01/13 13:42	7440-43-9	
Calcium, Dissolved	**398000**	ug/L	400	20	01/25/13 10:33	01/28/13 17:49	7440-70-2	
Chromium, Dissolved	**0.54**	ug/L	0.50	1	01/25/13 10:33	02/01/13 13:42	7440-47-3	
Cobalt, Dissolved	**3.2**	ug/L	0.50	1	01/25/13 10:33	02/01/13 13:42	7440-48-4	
Copper, Dissolved	**8.8**	ug/L	0.50	1	01/25/13 10:33	02/01/13 13:42	7440-50-8	
Iron, Dissolved	**48700**	ug/L	1000	20	01/25/13 10:33	02/01/13 13:47	7439-89-6	
Lead, Dissolved	**140**	ug/L	0.10	1	01/25/13 10:33	02/01/13 13:42	7439-92-1	
Magnesium, Dissolved	**48100**	ug/L	100	20	01/25/13 10:33	02/01/13 13:47	7439-95-4	

This report shall not be reproduced, except in full,
without the written consent of Pace Analytical Services, Inc..

Pace Analytical Services, Inc.
9608 Loiret Blvd.
Lenexa, KS 66219
(913)599-5665

ANALYTICAL RESULTS

Project: JANUARY 2013 RICO WATER SAMPLI
Pace Project No.: 60137200

Sample: GW-6_20130115 **Lab ID: 60137200005** Collected: 01/15/13 15:59 Received: 01/18/13 10:20 Matrix: Water

Parameters	Results	Units	Report Limit	DF	Prepared	Analyzed	CAS No.	Qual
200.8 MET ICPMS, Dissolved	Analytical Method: EPA 200.8 Preparation Method: EPA 200.8							
Manganese, Dissolved	**7840**	ug/L	10.0	20	01/25/13 10:33	02/01/13 13:47	7439-96-5	
Molybdenum, Dissolved	**6.9**	ug/L	0.50	1	01/25/13 10:33	02/01/13 13:42	7439-98-7	
Nickel, Dissolved	**6.6**	ug/L	0.50	1	01/25/13 10:33	02/01/13 13:42	7440-02-0	
Potassium, Dissolved	**10500**	ug/L	20.0	1	01/25/13 10:33	02/01/13 13:42	7440-09-7	
Selenium, Dissolved	ND	ug/L	0.50	1	01/25/13 10:33	02/01/13 13:42	7782-49-2	
Silver, Dissolved	ND	ug/L	0.50	1	01/25/13 10:33	02/01/13 13:42	7440-22-4	
Sodium, Dissolved	**6300**	ug/L	50.0	1	01/25/13 10:33	02/01/13 13:42	7440-23-5	
Thallium, Dissolved	ND	ug/L	0.10	1	01/25/13 10:33	02/01/13 13:42	7440-28-0	
Vanadium, Dissolved	**0.70**	ug/L	0.10	1	01/25/13 10:33	02/01/13 13:42	7440-62-2	
Zinc, Dissolved	**8820**	ug/L	100	20	01/25/13 10:33	02/01/13 13:47	7440-66-6	
200.8 Potentially Diss. Metals	Analytical Method: EPA 200.8 Preparation Method: EPA 200.8							
Aluminum, Dissolved	**40600**	ug/L	50.0	1	01/23/13 11:30	01/25/13 13:16	7429-90-5	
Antimony, Dissolved	**0.66J**	ug/L	1.0	1	01/23/13 11:30	01/25/13 13:16	7440-36-0	
Arsenic, Dissolved	**703**	ug/L	1.0	1	01/23/13 11:30	01/25/13 13:16	7440-38-2	
Barium, Dissolved	**39.2**	ug/L	1.0	1	01/23/13 11:30	01/25/13 13:16	7440-39-3	
Beryllium, Dissolved	**12.2**	ug/L	0.50	1	01/23/13 11:30	01/25/13 13:16	7440-41-7	
Cadmium, Dissolved	**148**	ug/L	0.50	1	01/23/13 11:30	01/25/13 13:16	7440-43-9	
Chromium, Dissolved	**30.5**	ug/L	1.0	1	01/23/13 11:30	01/25/13 13:16	7440-47-3	
Cobalt, Dissolved	**36.2**	ug/L	1.0	1	01/23/13 11:30	01/25/13 13:16	7440-48-4	
Copper, Dissolved	**258**	ug/L	1.0	1	01/23/13 11:30	01/25/13 13:16	7440-50-8	
Iron, Dissolved	**294000**	ug/L	10000	200	01/23/13 11:30	01/25/13 14:47	7439-89-6	
Lead, Dissolved	**11100**	ug/L	200	200	01/23/13 11:30	01/25/13 14:47	7439-92-1	
Manganese, Dissolved	**31900**	ug/L	200	200	01/23/13 11:30	01/25/13 14:47	7439-96-5	
Molybdenum, Dissolved	**1.3**	ug/L	1.0	1	01/23/13 11:30	01/25/13 13:16	7439-98-7	B
Nickel, Dissolved	**53.1**	ug/L	1.0	1	01/23/13 11:30	01/25/13 13:16	7440-02-0	
Selenium, Dissolved	**6.6**	ug/L	1.0	1	01/23/13 11:30	01/25/13 13:16	7782-49-2	
Silver, Dissolved	ND	ug/L	0.50	1	01/23/13 11:30	01/25/13 13:16	7440-22-4	
Thallium, Dissolved	**0.65J**	ug/L	1.0	1	01/23/13 11:30	01/25/13 13:16	7440-28-0	
Vanadium, Dissolved	**101**	ug/L	1.0	1	01/23/13 11:30	01/25/13 13:16	7440-62-2	
Zinc, Dissolved	**58600**	ug/L	2000	200	01/23/13 11:30	01/25/13 14:47	7440-66-6	
245.1 Mercury	Analytical Method: EPA 245.1 Preparation Method: EPA 245.1							
Mercury	**0.76**	ug/L	0.20	1	02/05/13 12:02	02/05/13 21:11	7439-97-6	
245.1 Mercury, Dissolved	Analytical Method: EPA 245.1 Preparation Method: EPA 245.1							
Mercury, Dissolved	ND	ug/L	0.20	1	01/31/13 09:37	01/31/13 16:19	7439-97-6	
245.1 Potentially Diss Mercury	Analytical Method: EPA 245.1 Preparation Method: EPA 245.1							
Mercury, Dissolved	ND	ug/L	0.20	1	01/29/13 10:30	01/29/13 15:20	7439-97-6	
2510B Specific Conductance	Analytical Method: SM 2510B							
Specific Conductance	**1840**	umhos/cm	10.0	1		01/25/13 12:17		
Salinity	Analytical Method: Calculated							
Salinity (as dissolved solids)	**1180**	mg/L	6.0	1		01/25/13 14:35		

This report shall not be reproduced, except in full,
without the written consent of Pace Analytical Services, Inc..

Pace Analytical Services, Inc.
9608 Loiret Blvd.
Lenexa, KS 66219
(913)599-5665

ANALYTICAL RESULTS

Project: JANUARY 2013 RICO WATER SAMPLI
Pace Project No.: 60137200

Sample: GW-6_20130115 **Lab ID: 60137200005** Collected: 01/15/13 15:59 Received: 01/18/13 10:20 Matrix: Water

Parameters	Results	Units	Report Limit	DF	Prepared	Analyzed	CAS No.	Qual
Salinity	Analytical Method: Calculated							
Salinity (as seawater)	**0.93**	PSU	0.010	1		01/25/13 14:35		
2320B Alkalinity	Analytical Method: SM 2320B							
Alkalinity,Bicarbonate (CaCO3)	**126**	mg/L	20.0	1		01/23/13 09:02		
Alkalinity, Carbonate (CaCO3)	ND	mg/L	20.0	1		01/23/13 09:02		
Alkalinity, Total as CaCO3	**140**	mg/L	20.0	1		01/23/13 09:02		
2540C Total Dissolved Solids	Analytical Method: SM 2540C							
Total Dissolved Solids	**1650**	mg/L	5.0	1		01/22/13 16:05		
2540D Total Suspended Solids	Analytical Method: SM 2540D							
Total Suspended Solids	**1180**	mg/L	5.0	1		01/22/13 16:08		
4500S2D Sulfide, Total	Analytical Method: SM 4500-S-2 D							
Sulfide, Total	ND	mg/L	0.050	1		01/22/13 14:32	18496-25-8	
300.0 IC Anions 28 Days	Analytical Method: EPA 300.0							
Chloride	**1.2**	mg/L	1.0	1		01/27/13 18:09	16887-00-6	
Sulfate	**1130**	mg/L	100	100		01/27/13 18:26	14808-79-8	
353.2 Nitrogen, NO2/NO3 pres.	Analytical Method: EPA 353.2							
Nitrogen, NO2 plus NO3	ND	mg/L	0.10	1		01/23/13 11:49		
4500CNE Cyanide, Total	Analytical Method: SM 4500-CN-E							
Cyanide	ND	mg/L	0.0050	1		01/23/13 14:32	57-12-5	
5310C TOC	Analytical Method: SM 5310C							
Total Organic Carbon	**6.6**	mg/L	1.0	1		01/24/13 16:21	7440-44-0	

This report shall not be reproduced, except in full,
without the written consent of Pace Analytical Services, Inc..

Pace Analytical Services, Inc.
9608 Loiret Blvd.
Lenexa, KS 66219
(913)599-5665

ANALYTICAL RESULTS

Project: JANUARY 2013 RICO WATER SAMPLI
Pace Project No.: 60137200

Sample: DR-4_20130115 **Lab ID: 60137200006** Collected: 01/15/13 16:01 Received: 01/18/13 10:20 Matrix: Water

Parameters	Results	Units	Report Limit	DF	Prepared	Analyzed	CAS No.	Qual
200.7 Potentially Diss. Metals	Analytical Method: EPA 200.7 Preparation Method: EPA 200.7							
Calcium, Dissolved	**240000**	ug/L	500	5	01/28/13 11:45	01/29/13 17:44	7440-70-2	
Magnesium, Dissolved	**19800**	ug/L	250	5	01/28/13 11:45	01/29/13 17:44	7439-95-4	
Potassium, Dissolved	**14800**	ug/L	2500	5	01/28/13 11:45	01/29/13 17:44	7440-09-7	
Sodium, Dissolved	**10800**	ug/L	2500	5	01/28/13 11:45	01/29/13 17:44	7440-23-5	
200.8 MET ICPMS	Analytical Method: EPA 200.8 Preparation Method: EPA 200.8							
Aluminum	**389**	ug/L	4.0	1	01/25/13 10:27	01/30/13 01:59	7429-90-5	
Antimony	ND	ug/L	0.50	1	01/25/13 10:27	01/30/13 01:59	7440-36-0	
Arsenic	**0.84**	ug/L	0.50	1	01/25/13 10:27	01/30/13 01:59	7440-38-2	
Barium	**19.8**	ug/L	0.30	1	01/25/13 10:27	01/30/13 01:59	7440-39-3	
Beryllium	**0.50**	ug/L	0.20	1	01/25/13 10:27	01/30/13 01:59	7440-41-7	
Cadmium	**12.1**	ug/L	0.080	1	01/25/13 10:27	01/30/13 01:59	7440-43-9	
Calcium	**277000**	ug/L	400	20	01/25/13 10:27	01/30/13 02:03	7440-70-2	
Chromium	ND	ug/L	0.50	1	01/25/13 10:27	01/30/13 01:59	7440-47-3	
Cobalt	**2.5**	ug/L	0.50	1	01/25/13 10:27	01/30/13 01:59	7440-48-4	
Copper	**81.1**	ug/L	0.50	1	01/25/13 10:27	01/30/13 01:59	7440-50-8	
Iron	**4600**	ug/L	50.0	1	01/25/13 10:27	01/30/13 01:59	7439-89-6	
Lead	**8.3**	ug/L	0.10	1	01/25/13 10:27	01/30/13 01:59	7439-92-1	
Magnesium	**18500**	ug/L	5.0	1	01/25/13 10:27	01/30/13 01:59	7439-95-4	
Manganese	**4320**	ug/L	10.0	20	01/25/13 10:27	01/30/13 02:03	7439-96-5	
Molybdenum	**18.3**	ug/L	0.50	1	01/25/13 10:27	01/30/13 01:59	7439-98-7	
Nickel	**4.1**	ug/L	0.50	1	01/25/13 10:27	01/30/13 01:59	7440-02-0	
Potassium	**15800**	ug/L	20.0	1	01/25/13 10:27	01/30/13 01:59	7440-09-7	
Selenium	ND	ug/L	0.50	1	01/25/13 10:27	01/30/13 01:59	7782-49-2	
Silica	**31500**	ug/L	1070	20	01/25/13 10:27	01/30/13 02:03	7631-86-9	
Silver	ND	ug/L	0.50	1	01/25/13 10:27	01/30/13 01:59	7440-22-4	
Sodium	**12400**	ug/L	50.0	1	01/25/13 10:27	01/30/13 01:59	7440-23-5	
Thallium	ND	ug/L	0.10	1	01/25/13 10:27	01/30/13 01:59	7440-28-0	
Total Hardness by 2340B	**768000**	ug/L	1420	20	01/25/13 10:27	01/30/13 02:03		
Vanadium	**0.13**	ug/L	0.10	1	01/25/13 10:27	01/30/13 01:59	7440-62-2	
Zinc	**8000**	ug/L	100	20	01/25/13 10:27	01/30/13 02:03	7440-66-6	
200.8 MET ICPMS, Dissolved	Analytical Method: EPA 200.8 Preparation Method: EPA 200.8							
Aluminum, Dissolved	**16.0**	ug/L	4.0	1	01/25/13 10:33	02/01/13 13:57	7429-90-5	
Antimony, Dissolved	ND	ug/L	0.50	1	01/25/13 10:33	02/01/13 13:57	7440-36-0	
Arsenic, Dissolved	ND	ug/L	0.50	1	01/25/13 10:33	02/01/13 13:57	7440-38-2	
Barium, Dissolved	**18.6**	ug/L	0.30	1	01/25/13 10:33	02/01/13 13:57	7440-39-3	
Beryllium, Dissolved	ND	ug/L	0.20	1	01/25/13 10:33	02/01/13 13:57	7440-41-7	
Cadmium, Dissolved	**9.4**	ug/L	0.080	1	01/25/13 10:33	02/01/13 13:57	7440-43-9	
Calcium, Dissolved	**260000**	ug/L	400	20	01/25/13 10:33	01/28/13 17:58	7440-70-2	
Chromium, Dissolved	ND	ug/L	0.50	1	01/25/13 10:33	02/01/13 13:57	7440-47-3	
Cobalt, Dissolved	**2.3**	ug/L	0.50	1	01/25/13 10:33	02/01/13 13:57	7440-48-4	
Copper, Dissolved	**3.0**	ug/L	0.50	1	01/25/13 10:33	02/01/13 13:57	7440-50-8	
Iron, Dissolved	ND	ug/L	50.0	1	01/25/13 10:33	02/01/13 13:57	7439-89-6	
Lead, Dissolved	ND	ug/L	0.10	1	01/25/13 10:33	02/01/13 13:57	7439-92-1	
Magnesium, Dissolved	**17500**	ug/L	5.0	1	01/25/13 10:33	02/01/13 13:57	7439-95-4	

This report shall not be reproduced, except in full,
without the written consent of Pace Analytical Services, Inc..

Pace Analytical Services, Inc.
9608 Loiret Blvd.
Lenexa, KS 66219
(913)599-5665

ANALYTICAL RESULTS

Project: JANUARY 2013 RICO WATER SAMPLI
Pace Project No.: 60137200

Sample: DR-4_20130115 **Lab ID: 60137200006** Collected: 01/15/13 16:01 Received: 01/18/13 10:20 Matrix: Water

Parameters	Results	Units	Report Limit	DF	Prepared	Analyzed	CAS No.	Qual
200.8 MET ICPMS, Dissolved	Analytical Method: EPA 200.8 Preparation Method: EPA 200.8							
Manganese, Dissolved	**1670**	ug/L	10.0	20	01/25/13 10:33	02/01/13 14:01	7439-96-5	
Molybdenum, Dissolved	**15.8**	ug/L	0.50	1	01/25/13 10:33	02/01/13 13:57	7439-98-7	
Nickel, Dissolved	**3.5**	ug/L	0.50	1	01/25/13 10:33	02/01/13 13:57	7440-02-0	
Potassium, Dissolved	**14300**	ug/L	20.0	1	01/25/13 10:33	02/01/13 13:57	7440-09-7	
Selenium, Dissolved	ND	ug/L	0.50	1	01/25/13 10:33	02/01/13 13:57	7782-49-2	
Silver, Dissolved	ND	ug/L	0.50	1	01/25/13 10:33	02/01/13 13:57	7440-22-4	
Sodium, Dissolved	**10900**	ug/L	50.0	1	01/25/13 10:33	02/01/13 13:57	7440-23-5	
Thallium, Dissolved	ND	ug/L	0.10	1	01/25/13 10:33	02/01/13 13:57	7440-28-0	
Vanadium, Dissolved	ND	ug/L	0.10	1	01/25/13 10:33	02/01/13 13:57	7440-62-2	
Zinc, Dissolved	**2070**	ug/L	100	20	01/25/13 10:33	02/01/13 14:01	7440-66-6	
200.8 Potentially Diss. Metals	Analytical Method: EPA 200.8 Preparation Method: EPA 200.8							
Aluminum, Dissolved	**388**	ug/L	50.0	1	01/23/13 11:30	01/25/13 13:20	7429-90-5	
Antimony, Dissolved	**0.25J**	ug/L	1.0	1	01/23/13 11:30	01/25/13 13:20	7440-36-0	
Arsenic, Dissolved	**0.98J**	ug/L	1.0	1	01/23/13 11:30	01/25/13 13:20	7440-38-2	
Barium, Dissolved	**19.5**	ug/L	1.0	1	01/23/13 11:30	01/25/13 13:20	7440-39-3	
Beryllium, Dissolved	**0.46J**	ug/L	0.50	1	01/23/13 11:30	01/25/13 13:20	7440-41-7	
Cadmium, Dissolved	**12.3**	ug/L	0.50	1	01/23/13 11:30	01/25/13 13:20	7440-43-9	
Chromium, Dissolved	**0.47J**	ug/L	1.0	1	01/23/13 11:30	01/25/13 13:20	7440-47-3	B
Cobalt, Dissolved	**2.4**	ug/L	1.0	1	01/23/13 11:30	01/25/13 13:20	7440-48-4	
Copper, Dissolved	**77.9**	ug/L	1.0	1	01/23/13 11:30	01/25/13 13:20	7440-50-8	
Iron, Dissolved	**4630**	ug/L	50.0	1	01/23/13 11:30	01/25/13 13:20	7439-89-6	
Lead, Dissolved	**9.2**	ug/L	1.0	1	01/23/13 11:30	01/25/13 13:20	7439-92-1	
Manganese, Dissolved	**1680**	ug/L	1.0	1	01/23/13 11:30	01/25/13 13:20	7439-96-5	
Molybdenum, Dissolved	**19.1**	ug/L	1.0	1	01/23/13 11:30	01/25/13 13:20	7439-98-7	
Nickel, Dissolved	**2.2**	ug/L	1.0	1	01/23/13 11:30	01/25/13 13:20	7440-02-0	B
Selenium, Dissolved	ND	ug/L	1.0	1	01/23/13 11:30	01/25/13 13:20	7782-49-2	
Silver, Dissolved	ND	ug/L	0.50	1	01/23/13 11:30	01/25/13 13:20	7440-22-4	
Thallium, Dissolved	**0.039J**	ug/L	1.0	1	01/23/13 11:30	01/25/13 13:20	7440-28-0	
Vanadium, Dissolved	ND	ug/L	1.0	1	01/23/13 11:30	01/25/13 13:20	7440-62-2	
Zinc, Dissolved	**2340**	ug/L	10.0	1	01/23/13 11:30	01/25/13 13:20	7440-66-6	
245.1 Mercury	Analytical Method: EPA 245.1 Preparation Method: EPA 245.1							
Mercury	ND	ug/L	0.20	1	02/05/13 12:02	02/05/13 21:14	7439-97-6	
245.1 Mercury, Dissolved	Analytical Method: EPA 245.1 Preparation Method: EPA 245.1							
Mercury, Dissolved	ND	ug/L	0.20	1	01/31/13 09:37	01/31/13 16:21	7439-97-6	
245.1 Potentially Diss Mercury	Analytical Method: EPA 245.1 Preparation Method: EPA 245.1							
Mercury, Dissolved	ND	ug/L	0.20	1	01/29/13 10:30	01/29/13 15:22	7439-97-6	
2510B Specific Conductance	Analytical Method: SM 2510B							
Specific Conductance	**1270**	umhos/cm	10.0	1		01/25/13 12:19		
Salinity	Analytical Method: Calculated							
Salinity (as dissolved solids)	**814**	mg/L	6.0	1		01/25/13 14:35		

This report shall not be reproduced, except in full,
without the written consent of Pace Analytical Services, Inc..

Pace Analytical Services, Inc.
9608 Loiret Blvd.
Lenexa, KS 66219
(913)599-5665

ANALYTICAL RESULTS

Project: JANUARY 2013 RICO WATER SAMPLI
Pace Project No.: 60137200

Sample: DR-4_20130115 **Lab ID: 60137200006** Collected: 01/15/13 16:01 Received: 01/18/13 10:20 Matrix: Water

Parameters	Results	Units	Report Limit	DF	Prepared	Analyzed	CAS No.	Qual
Salinity	Analytical Method: Calculated							
Salinity (as seawater)	**0.63**	PSU	0.010	1		01/25/13 14:35		
2320B Alkalinity	Analytical Method: SM 2320B							
Alkalinity,Bicarbonate (CaCO3)	**38.4**	mg/L	20.0	1		01/23/13 09:10		
Alkalinity, Carbonate (CaCO3)	ND	mg/L	20.0	1		01/23/13 09:10		
Alkalinity, Total as CaCO3	**40.4**	mg/L	20.0	1		01/23/13 09:10		
2540C Total Dissolved Solids	Analytical Method: SM 2540C							
Total Dissolved Solids	**1030**	mg/L	5.0	1		01/22/13 16:05		
2540D Total Suspended Solids	Analytical Method: SM 2540D							
Total Suspended Solids	**17.0**	mg/L	5.0	1		01/22/13 16:08		
4500S2D Sulfide, Total	Analytical Method: SM 4500-S-2 D							
Sulfide, Total	ND	mg/L	0.050	1		01/22/13 14:32	18496-25-8	
300.0 IC Anions 28 Days	Analytical Method: EPA 300.0							
Chloride	ND	mg/L	1.0	1		01/27/13 18:44	16887-00-6	
Sulfate	**657**	mg/L	50.0	50		01/27/13 19:02	14808-79-8	
353.2 Nitrogen, NO2/NO3 pres.	Analytical Method: EPA 353.2							
Nitrogen, NO2 plus NO3	ND	mg/L	0.10	1		01/23/13 11:50		
4500CNE Cyanide, Total	Analytical Method: SM 4500-CN-E							
Cyanide	ND	mg/L	0.0050	1		01/23/13 14:32	57-12-5	
5310C TOC	Analytical Method: SM 5310C							
Total Organic Carbon	ND	mg/L	1.0	1		01/24/13 16:35	7440-44-0	

This report shall not be reproduced, except in full,
without the written consent of Pace Analytical Services, Inc..

Pace Analytical Services, Inc.
9608 Loiret Blvd.
Lenexa, KS 66219
(913)599-5665

ANALYTICAL RESULTS

Project: JANUARY 2013 RICO WATER SAMPLI
Pace Project No.: 60137200

Sample: MW-1 SHALLOW_20130116 **Lab ID: 60137200007** Collected: 01/16/13 12:20 Received: 01/18/13 10:20 Matrix: Water

Parameters	Results	Units	Report Limit	DF	Prepared	Analyzed	CAS No.	Qual
200.7 Potentially Diss. Metals	Analytical Method: EPA 200.7 Preparation Method: EPA 200.7							
Calcium, Dissolved	**240000**	ug/L	500	5	01/28/13 11:45	01/29/13 17:46	7440-70-2	
Magnesium, Dissolved	**24200**	ug/L	250	5	01/28/13 11:45	01/29/13 17:46	7439-95-4	
Potassium, Dissolved	**6150**	ug/L	2500	5	01/28/13 11:45	01/29/13 17:46	7440-09-7	
Sodium, Dissolved	**10300**	ug/L	2500	5	01/28/13 11:45	01/29/13 17:46	7440-23-5	
200.8 MET ICPMS	Analytical Method: EPA 200.8 Preparation Method: EPA 200.8							
Aluminum	**29300**	ug/L	80.0	20	01/25/13 10:27	01/30/13 01:30	7429-90-5	
Antimony	**0.93**	ug/L	0.50	1	01/25/13 10:27	01/30/13 01:25	7440-36-0	
Arsenic	**57.0**	ug/L	0.50	1	01/25/13 10:27	01/30/13 01:25	7440-38-2	
Barium	**394**	ug/L	0.30	1	01/25/13 10:27	01/30/13 01:25	7440-39-3	
Beryllium	**3.5**	ug/L	0.20	1	01/25/13 10:27	01/30/13 01:25	7440-41-7	
Cadmium	**6.7**	ug/L	0.080	1	01/25/13 10:27	01/30/13 01:25	7440-43-9	
Calcium	**238000**	ug/L	400	20	01/25/13 10:27	01/30/13 01:30	7440-70-2	
Chromium	**39.3**	ug/L	0.50	1	01/25/13 10:27	01/30/13 01:25	7440-47-3	
Cobalt	**25.5**	ug/L	0.50	1	01/25/13 10:27	01/30/13 01:25	7440-48-4	
Copper	**286**	ug/L	0.50	1	01/25/13 10:27	01/30/13 01:25	7440-50-8	
Iron	**53900**	ug/L	1000	20	01/25/13 10:27	01/30/13 01:30	7439-89-6	
Lead	**839**	ug/L	2.0	20	01/25/13 10:27	01/30/13 01:30	7439-92-1	
Magnesium	**35400**	ug/L	100	20	01/25/13 10:27	01/30/13 01:30	7439-95-4	
Manganese	**2890**	ug/L	10.0	20	01/25/13 10:27	01/30/13 01:30	7439-96-5	
Molybdenum	**13.2**	ug/L	0.50	1	01/25/13 10:27	01/30/13 01:25	7439-98-7	
Nickel	**35.4**	ug/L	0.50	1	01/25/13 10:27	01/30/13 01:25	7440-02-0	
Potassium	**9820**	ug/L	20.0	1	01/25/13 10:27	01/30/13 01:25	7440-09-7	
Selenium	**24.8**	ug/L	0.50	1	01/25/13 10:27	01/30/13 01:25	7782-49-2	
Silica	**100000**	ug/L	5350	100	01/25/13 10:27	01/30/13 01:36	7631-86-9	
Silver	**6.0**	ug/L	0.50	1	01/25/13 10:27	01/30/13 01:25	7440-22-4	
Sodium	**12000**	ug/L	50.0	1	01/25/13 10:27	01/30/13 01:25	7440-23-5	
Thallium	**0.80**	ug/L	0.10	1	01/25/13 10:27	01/30/13 01:25	7440-28-0	
Total Hardness by 2340B	**740000**	ug/L	1420	20	01/25/13 10:27	01/30/13 01:30		
Vanadium	**51.8**	ug/L	0.10	1	01/25/13 10:27	01/30/13 01:25	7440-62-2	
Zinc	**1240**	ug/L	100	20	01/25/13 10:27	01/30/13 01:30	7440-66-6	
200.8 MET ICPMS, Dissolved	Analytical Method: EPA 200.8 Preparation Method: EPA 200.8							
Aluminum, Dissolved	ND	ug/L	4.0	1	01/25/13 10:33	02/01/13 14:05	7429-90-5	
Antimony, Dissolved	ND	ug/L	0.50	1	01/25/13 10:33	02/01/13 14:05	7440-36-0	
Arsenic, Dissolved	ND	ug/L	0.50	1	01/25/13 10:33	02/01/13 14:05	7440-38-2	
Barium, Dissolved	**19.0**	ug/L	0.30	1	01/25/13 10:33	02/01/13 14:05	7440-39-3	
Beryllium, Dissolved	ND	ug/L	0.20	1	01/25/13 10:33	02/01/13 14:05	7440-41-7	
Cadmium, Dissolved	**0.76**	ug/L	0.080	1	01/25/13 10:33	02/01/13 14:05	7440-43-9	
Calcium, Dissolved	**253000**	ug/L	400	20	01/25/13 10:33	01/28/13 18:07	7440-70-2	
Chromium, Dissolved	ND	ug/L	0.50	1	01/25/13 10:33	02/01/13 14:05	7440-47-3	
Cobalt, Dissolved	ND	ug/L	0.50	1	01/25/13 10:33	02/01/13 14:05	7440-48-4	
Copper, Dissolved	**0.80**	ug/L	0.50	1	01/25/13 10:33	02/01/13 14:05	7440-50-8	
Iron, Dissolved	ND	ug/L	50.0	1	01/25/13 10:33	02/01/13 14:05	7439-89-6	
Lead, Dissolved	ND	ug/L	0.10	1	01/25/13 10:33	02/01/13 14:05	7439-92-1	
Magnesium, Dissolved	**19800**	ug/L	5.0	1	01/25/13 10:33	02/01/13 14:05	7439-95-4	

This report shall not be reproduced, except in full,
without the written consent of Pace Analytical Services, Inc..

Pace Analytical Services, Inc.
9608 Loiret Blvd.
Lenexa, KS 66219
(913)599-5665

ANALYTICAL RESULTS

Project: JANUARY 2013 RICO WATER SAMPLI
Pace Project No.: 60137200

Sample: MW-1 SHALLOW_20130116 **Lab ID: 60137200007** Collected: 01/16/13 12:20 Received: 01/18/13 10:20 Matrix: Water

Parameters	Results	Units	Report Limit	DF	Prepared	Analyzed	CAS No.	Qual
200.8 MET ICPMS, Dissolved	Analytical Method: EPA 200.8 Preparation Method: EPA 200.8							
Manganese, Dissolved	**60.7**	ug/L	0.50	1	01/25/13 10:33	02/01/13 14:05	7439-96-5	
Molybdenum, Dissolved	**7.4**	ug/L	0.50	1	01/25/13 10:33	02/01/13 14:05	7439-98-7	
Nickel, Dissolved	**0.77**	ug/L	0.50	1	01/25/13 10:33	02/01/13 14:05	7440-02-0	
Potassium, Dissolved	**5400**	ug/L	20.0	1	01/25/13 10:33	02/01/13 14:05	7440-09-7	
Selenium, Dissolved	**7.4**	ug/L	0.50	1	01/25/13 10:33	02/01/13 14:05	7782-49-2	
Silver, Dissolved	ND	ug/L	0.50	1	01/25/13 10:33	02/01/13 14:05	7440-22-4	
Sodium, Dissolved	**11400**	ug/L	50.0	1	01/25/13 10:33	02/01/13 14:05	7440-23-5	
Thallium, Dissolved	ND	ug/L	0.10	1	01/25/13 10:33	02/01/13 14:05	7440-28-0	
Vanadium, Dissolved	ND	ug/L	0.10	1	01/25/13 10:33	02/01/13 14:05	7440-62-2	
Zinc, Dissolved	**91.3**	ug/L	5.0	1	01/25/13 10:33	02/01/13 14:05	7440-66-6	
200.8 Potentially Diss. Metals	Analytical Method: EPA 200.8 Preparation Method: EPA 200.8							
Aluminum, Dissolved	**8620**	ug/L	50.0	1	01/23/13 11:30	01/25/13 13:24	7429-90-5	
Antimony, Dissolved	**0.26J**	ug/L	1.0	1	01/23/13 11:30	01/25/13 13:24	7440-36-0	
Arsenic, Dissolved	**7.5**	ug/L	1.0	1	01/23/13 11:30	01/25/13 13:24	7440-38-2	
Barium, Dissolved	**59.8**	ug/L	1.0	1	01/23/13 11:30	01/25/13 13:24	7440-39-3	
Beryllium, Dissolved	**2.5**	ug/L	0.50	1	01/23/13 11:30	01/25/13 13:24	7440-41-7	
Cadmium, Dissolved	**7.2**	ug/L	0.50	1	01/23/13 11:30	01/25/13 13:24	7440-43-9	
Chromium, Dissolved	**9.9**	ug/L	1.0	1	01/23/13 11:30	01/25/13 13:24	7440-47-3	
Cobalt, Dissolved	**17.6**	ug/L	1.0	1	01/23/13 11:30	01/25/13 13:24	7440-48-4	
Copper, Dissolved	**194**	ug/L	1.0	1	01/23/13 11:30	01/25/13 13:24	7440-50-8	
Iron, Dissolved	**12100**	ug/L	50.0	1	01/23/13 11:30	01/25/13 13:24	7439-89-6	
Lead, Dissolved	**704**	ug/L	1.0	1	01/23/13 11:30	01/25/13 13:24	7439-92-1	
Manganese, Dissolved	**2860**	ug/L	1.0	1	01/23/13 11:30	01/25/13 13:24	7439-96-5	
Molybdenum, Dissolved	**3.5**	ug/L	1.0	1	01/23/13 11:30	01/25/13 13:24	7439-98-7	
Nickel, Dissolved	**12.1**	ug/L	1.0	1	01/23/13 11:30	01/25/13 13:24	7440-02-0	
Selenium, Dissolved	**11.1**	ug/L	1.0	1	01/23/13 11:30	01/25/13 13:24	7782-49-2	
Silver, Dissolved	**3.3**	ug/L	0.50	1	01/23/13 11:30	01/25/13 13:24	7440-22-4	
Thallium, Dissolved	**0.22J**	ug/L	1.0	1	01/23/13 11:30	01/25/13 13:24	7440-28-0	
Vanadium, Dissolved	**12.6**	ug/L	1.0	1	01/23/13 11:30	01/25/13 13:24	7440-62-2	
Zinc, Dissolved	**990**	ug/L	10.0	1	01/23/13 11:30	01/25/13 13:24	7440-66-6	
245.1 Mercury	Analytical Method: EPA 245.1 Preparation Method: EPA 245.1							
Mercury	ND	ug/L	0.20	1	02/05/13 12:02	02/05/13 21:16	7439-97-6	
245.1 Mercury, Dissolved	Analytical Method: EPA 245.1 Preparation Method: EPA 245.1							
Mercury, Dissolved	ND	ug/L	0.20	1	01/31/13 09:37	01/31/13 16:24	7439-97-6	
245.1 Potentially Diss Mercury	Analytical Method: EPA 245.1 Preparation Method: EPA 245.1							
Mercury, Dissolved	ND	ug/L	0.20	1	01/29/13 10:30	01/29/13 15:24	7439-97-6	
2510B Specific Conductance	Analytical Method: SM 2510B							
Specific Conductance	**1260**	umhos/cm	10.0	1		01/25/13 12:20		
Salinity	Analytical Method: Calculated							
Salinity (as dissolved solids)	**805**	mg/L	6.0	1		01/25/13 14:35		

This report shall not be reproduced, except in full,
without the written consent of Pace Analytical Services, Inc..

Pace Analytical Services, Inc.
9608 Loiret Blvd.
Lenexa, KS 66219
(913)599-5665

ANALYTICAL RESULTS

Project: JANUARY 2013 RICO WATER SAMPLI
Pace Project No.: 60137200

Sample: MW-1 SHALLOW_20130116 **Lab ID: 60137200007** Collected: 01/16/13 12:20 Received: 01/18/13 10:20 Matrix: Water

Parameters	Results	Units	Report Limit	DF	Prepared	Analyzed	CAS No.	Qual
Salinity	Analytical Method: Calculated							
Salinity (as seawater)	**0.63**	PSU	0.010	1		01/25/13 14:35		
2320B Alkalinity	Analytical Method: SM 2320B							
Alkalinity,Bicarbonate (CaCO3)	**89.1**	mg/L	20.0	1		01/23/13 09:14		
Alkalinity, Carbonate (CaCO3)	ND	mg/L	20.0	1		01/23/13 09:14		
Alkalinity, Total as CaCO3	**89.3**	mg/L	20.0	1		01/23/13 09:14		
2540C Total Dissolved Solids	Analytical Method: SM 2540C							
Total Dissolved Solids	**663**	mg/L	5.0	1		01/23/13 15:23		
2540D Total Suspended Solids	Analytical Method: SM 2540D							
Total Suspended Solids	**466**	mg/L	5.0	1		01/22/13 16:09		
4500S2D Sulfide, Total	Analytical Method: SM 4500-S-2 D							
Sulfide, Total	ND	mg/L	0.050	1		01/22/13 14:32	18496-25-8	
300.0 IC Anions 28 Days	Analytical Method: EPA 300.0							
Chloride	ND	mg/L	1.0	1		01/27/13 19:55	16887-00-6	
Sulfate	**637**	mg/L	50.0	50		01/27/13 20:13	14808-79-8	
353.2 Nitrogen, NO2/NO3 pres.	Analytical Method: EPA 353.2							
Nitrogen, NO2 plus NO3	ND	mg/L	0.10	1		01/23/13 11:51		
4500CNE Cyanide, Total	Analytical Method: SM 4500-CN-E							
Cyanide	ND	mg/L	0.0050	1		01/23/13 14:35	57-12-5	
5310C TOC	Analytical Method: SM 5310C							
Total Organic Carbon	**1.5**	mg/L	1.0	1		01/24/13 16:49	7440-44-0	

This report shall not be reproduced, except in full,
without the written consent of Pace Analytical Services, Inc..

Pace Analytical Services, Inc.
9608 Loiret Blvd.
Lenexa, KS 66219
(913)599-5665

ANALYTICAL RESULTS

Project: JANUARY 2013 RICO WATER SAMPLI
Pace Project No.: 60137200

Sample: MW-1 DEEP_20130116 **Lab ID: 60137200008** Collected: 01/16/13 13:14 Received: 01/18/13 10:20 Matrix: Water

Parameters	Results	Units	Report Limit	DF	Prepared	Analyzed	CAS No.	Qual
200.7 Potentially Diss. Metals	Analytical Method: EPA 200.7 Preparation Method: EPA 200.7							
Calcium, Dissolved	**236000**	ug/L	500	5	01/28/13 11:45	01/29/13 17:49	7440-70-2	
Magnesium, Dissolved	**21700**	ug/L	250	5	01/28/13 11:45	01/29/13 17:49	7439-95-4	
Potassium, Dissolved	**13200**	ug/L	2500	5	01/28/13 11:45	01/29/13 17:49	7440-09-7	
Sodium, Dissolved	**10800**	ug/L	2500	5	01/28/13 11:45	01/29/13 17:49	7440-23-5	
200.8 MET ICPMS	Analytical Method: EPA 200.8 Preparation Method: EPA 200.8							
Aluminum	**15700**	ug/L	4.0	1	01/25/13 10:27	01/30/13 02:09	7429-90-5	
Antimony	**0.80**	ug/L	0.50	1	01/25/13 10:27	01/30/13 02:09	7440-36-0	
Arsenic	**31.7**	ug/L	0.50	1	01/25/13 10:27	01/30/13 02:09	7440-38-2	
Barium	**284**	ug/L	0.30	1	01/25/13 10:27	01/30/13 02:09	7440-39-3	
Beryllium	**1.3**	ug/L	0.20	1	01/25/13 10:27	01/30/13 02:09	7440-41-7	
Cadmium	**17.7**	ug/L	0.080	1	01/25/13 10:27	01/30/13 02:09	7440-43-9	
Calcium	**227000**	ug/L	400	20	01/25/13 10:27	01/30/13 02:14	7440-70-2	
Chromium	**24.4**	ug/L	0.50	1	01/25/13 10:27	01/30/13 02:09	7440-47-3	
Cobalt	**11.6**	ug/L	0.50	1	01/25/13 10:27	01/30/13 02:09	7440-48-4	
Copper	**268**	ug/L	0.50	1	01/25/13 10:27	01/30/13 02:09	7440-50-8	
Iron	**28700**	ug/L	1000	20	01/25/13 10:27	01/30/13 02:14	7439-89-6	
Lead	**440**	ug/L	0.10	1	01/25/13 10:27	01/30/13 02:09	7439-92-1	
Magnesium	**26000**	ug/L	100	20	01/25/13 10:27	01/30/13 02:14	7439-95-4	
Manganese	**3120**	ug/L	10.0	20	01/25/13 10:27	01/30/13 02:14	7439-96-5	
Molybdenum	**17.9**	ug/L	0.50	1	01/25/13 10:27	01/30/13 02:09	7439-98-7	
Nickel	**19.1**	ug/L	0.50	1	01/25/13 10:27	01/30/13 02:09	7440-02-0	
Potassium	**16600**	ug/L	20.0	1	01/25/13 10:27	01/30/13 02:09	7440-09-7	
Selenium	**15.7**	ug/L	0.50	1	01/25/13 10:27	01/30/13 02:09	7782-49-2	
Silica	**60500**	ug/L	1070	20	01/25/13 10:27	01/30/13 02:14	7631-86-9	
Silver	**2.3**	ug/L	0.50	1	01/25/13 10:27	01/30/13 02:09	7440-22-4	
Sodium	**12500**	ug/L	50.0	1	01/25/13 10:27	01/30/13 02:09	7440-23-5	
Thallium	**0.50**	ug/L	0.10	1	01/25/13 10:27	01/30/13 02:09	7440-28-0	
Total Hardness by 2340B	**673000**	ug/L	1420	20	01/25/13 10:27	01/30/13 02:14		
Vanadium	**31.7**	ug/L	0.10	1	01/25/13 10:27	01/30/13 02:09	7440-62-2	
Zinc	**2240**	ug/L	100	20	01/25/13 10:27	01/30/13 02:14	7440-66-6	
200.8 MET ICPMS, Dissolved	Analytical Method: EPA 200.8 Preparation Method: EPA 200.8							
Aluminum, Dissolved	**587**	ug/L	4.0	1	01/25/13 10:33	02/01/13 15:48	7429-90-5	
Antimony, Dissolved	ND	ug/L	0.50	1	01/25/13 10:33	02/01/13 15:48	7440-36-0	
Arsenic, Dissolved	**1.4**	ug/L	0.50	1	01/25/13 10:33	02/01/13 15:48	7440-38-2	
Barium, Dissolved	**23.0**	ug/L	0.30	1	01/25/13 10:33	02/01/13 15:48	7440-39-3	
Beryllium, Dissolved	ND	ug/L	0.20	1	01/25/13 10:33	02/01/13 15:48	7440-41-7	
Cadmium, Dissolved	**2.2**	ug/L	0.080	1	01/25/13 10:33	02/01/13 15:48	7440-43-9	
Calcium, Dissolved	**248000**	ug/L	400	20	01/25/13 10:33	01/28/13 18:33	7440-70-2	
Chromium, Dissolved	**0.87**	ug/L	0.50	1	01/25/13 10:33	02/01/13 15:48	7440-47-3	
Cobalt, Dissolved	ND	ug/L	0.50	1	01/25/13 10:33	02/01/13 15:48	7440-48-4	
Copper, Dissolved	**8.7**	ug/L	0.50	1	01/25/13 10:33	02/01/13 15:48	7440-50-8	
Iron, Dissolved	**900**	ug/L	50.0	1	01/25/13 10:33	02/01/13 15:48	7439-89-6	
Lead, Dissolved	**12.2**	ug/L	0.10	1	01/25/13 10:33	02/01/13 15:48	7439-92-1	
Magnesium, Dissolved	**18300**	ug/L	5.0	1	01/25/13 10:33	02/01/13 15:48	7439-95-4	

This report shall not be reproduced, except in full,
without the written consent of Pace Analytical Services, Inc..

Pace Analytical Services, Inc.
9608 Loiret Blvd.
Lenexa, KS 66219
(913)599-5665

ANALYTICAL RESULTS

Project: JANUARY 2013 RICO WATER SAMPLI
Pace Project No.: 60137200

Sample: MW-1 DEEP_20130116 **Lab ID: 60137200008** Collected: 01/16/13 13:14 Received: 01/18/13 10:20 Matrix: Water

Parameters	Results	Units	Report Limit	DF	Prepared	Analyzed	CAS No.	Qual
200.8 MET ICPMS, Dissolved	Analytical Method: EPA 200.8 Preparation Method: EPA 200.8							
Manganese, Dissolved	**76.6**	ug/L	0.50	1	01/25/13 10:33	02/01/13 15:48	7439-96-5	
Molybdenum, Dissolved	**7.4**	ug/L	0.50	1	01/25/13 10:33	02/01/13 15:48	7439-98-7	
Nickel, Dissolved	**1.4**	ug/L	0.50	1	01/25/13 10:33	02/01/13 15:48	7440-02-0	
Potassium, Dissolved	**12800**	ug/L	20.0	1	01/25/13 10:33	02/01/13 15:48	7440-09-7	
Selenium, Dissolved	**8.9**	ug/L	0.50	1	01/25/13 10:33	02/01/13 15:48	7782-49-2	
Silver, Dissolved	ND	ug/L	0.50	1	01/25/13 10:33	02/01/13 15:48	7440-22-4	
Sodium, Dissolved	**10900**	ug/L	50.0	1	01/25/13 10:33	02/01/13 15:48	7440-23-5	
Thallium, Dissolved	**0.10**	ug/L	0.10	1	01/25/13 10:33	02/01/13 15:48	7440-28-0	
Vanadium, Dissolved	**1.2**	ug/L	0.10	1	01/25/13 10:33	02/01/13 15:48	7440-62-2	
Zinc, Dissolved	**449**	ug/L	5.0	1	01/25/13 10:33	02/01/13 15:48	7440-66-6	
200.8 Potentially Diss. Metals	Analytical Method: EPA 200.8 Preparation Method: EPA 200.8							
Aluminum, Dissolved	**3270**	ug/L	50.0	1	01/23/13 11:30	01/25/13 13:28	7429-90-5	
Antimony, Dissolved	**0.30J**	ug/L	1.0	1	01/23/13 11:30	01/25/13 13:28	7440-36-0	
Arsenic, Dissolved	**8.8**	ug/L	1.0	1	01/23/13 11:30	01/25/13 13:28	7440-38-2	
Barium, Dissolved	**36.2**	ug/L	1.0	1	01/23/13 11:30	01/25/13 13:28	7440-39-3	
Beryllium, Dissolved	**0.60**	ug/L	0.50	1	01/23/13 11:30	01/25/13 13:28	7440-41-7	
Cadmium, Dissolved	**15.3**	ug/L	0.50	1	01/23/13 11:30	01/25/13 13:28	7440-43-9	
Chromium, Dissolved	**8.5**	ug/L	1.0	1	01/23/13 11:30	01/25/13 13:28	7440-47-3	
Cobalt, Dissolved	**4.4**	ug/L	1.0	1	01/23/13 11:30	01/25/13 13:28	7440-48-4	
Copper, Dissolved	**204**	ug/L	1.0	1	01/23/13 11:30	01/25/13 13:28	7440-50-8	
Iron, Dissolved	**7230**	ug/L	50.0	1	01/23/13 11:30	01/25/13 13:28	7439-89-6	
Lead, Dissolved	**309**	ug/L	1.0	1	01/23/13 11:30	01/25/13 13:28	7439-92-1	
Manganese, Dissolved	**1600**	ug/L	1.0	1	01/23/13 11:30	01/25/13 13:28	7439-96-5	
Molybdenum, Dissolved	**3.6**	ug/L	1.0	1	01/23/13 11:30	01/25/13 13:28	7439-98-7	
Nickel, Dissolved	**4.6**	ug/L	1.0	1	01/23/13 11:30	01/25/13 13:28	7440-02-0	
Selenium, Dissolved	**10.2**	ug/L	1.0	1	01/23/13 11:30	01/25/13 13:28	7782-49-2	
Silver, Dissolved	**0.59**	ug/L	0.50	1	01/23/13 11:30	01/25/13 13:28	7440-22-4	
Thallium, Dissolved	**0.060J**	ug/L	1.0	1	01/23/13 11:30	01/25/13 13:28	7440-28-0	
Vanadium, Dissolved	**7.0**	ug/L	1.0	1	01/23/13 11:30	01/25/13 13:28	7440-62-2	
Zinc, Dissolved	**1810**	ug/L	10.0	1	01/23/13 11:30	01/25/13 13:28	7440-66-6	
245.1 Mercury	Analytical Method: EPA 245.1 Preparation Method: EPA 245.1							
Mercury	ND	ug/L	0.20	1	02/05/13 12:02	02/05/13 21:19	7439-97-6	
245.1 Mercury, Dissolved	Analytical Method: EPA 245.1 Preparation Method: EPA 245.1							
Mercury, Dissolved	ND	ug/L	0.20	1	01/31/13 09:37	01/31/13 16:26	7439-97-6	
245.1 Potentially Diss Mercury	Analytical Method: EPA 245.1 Preparation Method: EPA 245.1							
Mercury, Dissolved	ND	ug/L	0.20	1	01/29/13 10:30	01/29/13 15:26	7439-97-6	
2510B Specific Conductance	Analytical Method: SM 2510B							
Specific Conductance	**1280**	umhos/cm	10.0	1		01/25/13 12:21		
Salinity	Analytical Method: Calculated							
Salinity (as dissolved solids)	**816**	mg/L	6.0	1		01/25/13 14:35		

This report shall not be reproduced, except in full,
without the written consent of Pace Analytical Services, Inc..

Pace Analytical Services, Inc.
9608 Loiret Blvd.
Lenexa, KS 66219
(913)599-5665

ANALYTICAL RESULTS

Project: JANUARY 2013 RICO WATER SAMPLI
Pace Project No.: 60137200

Sample: MW-1 DEEP_20130116 **Lab ID: 60137200008** Collected: 01/16/13 13:14 Received: 01/18/13 10:20 Matrix: Water

Parameters	Results	Units	Report Limit	DF	Prepared	Analyzed	CAS No.	Qual
Salinity	Analytical Method: Calculated							
Salinity (as seawater)	**0.63**	PSU	0.010	1		01/25/13 14:35		
2320B Alkalinity	Analytical Method: SM 2320B							
Alkalinity,Bicarbonate (CaCO3)	**84.8**	mg/L	20.0	1		01/23/13 10:38		
Alkalinity, Carbonate (CaCO3)	ND	mg/L	20.0	1		01/23/13 10:38		
Alkalinity, Total as CaCO3	**84.8**	mg/L	20.0	1		01/23/13 10:38		
2540C Total Dissolved Solids	Analytical Method: SM 2540C							
Total Dissolved Solids	**939**	mg/L	5.0	1		01/23/13 15:24		
2540D Total Suspended Solids	Analytical Method: SM 2540D							
Total Suspended Solids	**608**	mg/L	5.0	1		01/22/13 16:09		
4500S2D Sulfide, Total	Analytical Method: SM 4500-S-2 D							
Sulfide, Total	ND	mg/L	0.050	1		01/22/13 14:32	18496-25-8	
300.0 IC Anions 28 Days	Analytical Method: EPA 300.0							
Chloride	ND	mg/L	1.0	1		01/27/13 20:30	16887-00-6	
Sulfate	**638**	mg/L	50.0	50		01/27/13 20:48	14808-79-8	
353.2 Nitrogen, NO2/NO3 pres.	Analytical Method: EPA 353.2							
Nitrogen, NO2 plus NO3	ND	mg/L	0.10	1		01/23/13 11:52		
4500CNE Cyanide, Total	Analytical Method: SM 4500-CN-E							
Cyanide	**0.0058**	mg/L	0.0050	1		01/23/13 14:35	57-12-5	
5310C TOC	Analytical Method: SM 5310C							
Total Organic Carbon	ND	mg/L	1.0	1		01/24/13 17:03	7440-44-0	

This report shall not be reproduced, except in full,
without the written consent of Pace Analytical Services, Inc..

Pace Analytical Services, Inc.
9608 Loiret Blvd.
Lenexa, KS 66219
(913)599-5665

ANALYTICAL RESULTS

Project: JANUARY 2013 RICO WATER SAMPLI
Pace Project No.: 60137200

Sample: P13-103_20130116 **Lab ID: 60137200009** Collected: 01/16/13 12:55 Received: 01/18/13 10:20 Matrix: Water

Parameters	Results	Units	Report Limit	DF	Prepared	Analyzed	CAS No.	Qual
200.7 Potentially Diss. Metals	Analytical Method: EPA 200.7 Preparation Method: EPA 200.7							
Calcium, Dissolved	**291000**	ug/L	500	5	01/28/13 11:45	01/29/13 17:51	7440-70-2	
Magnesium, Dissolved	**33500**	ug/L	250	5	01/28/13 11:45	01/29/13 17:51	7439-95-4	
Potassium, Dissolved	**4860**	ug/L	2500	5	01/28/13 11:45	01/29/13 17:51	7440-09-7	
Sodium, Dissolved	**10000**	ug/L	2500	5	01/28/13 11:45	01/29/13 17:51	7440-23-5	
200.8 MET ICPMS	Analytical Method: EPA 200.8 Preparation Method: EPA 200.8							
Aluminum	**8230**	ug/L	4.0	1	01/25/13 10:27	01/30/13 02:20	7429-90-5	
Antimony	**1.4**	ug/L	0.50	1	01/25/13 10:27	01/30/13 02:20	7440-36-0	
Arsenic	**107**	ug/L	0.50	1	01/25/13 10:27	01/30/13 02:20	7440-38-2	
Barium	**160**	ug/L	0.30	1	01/25/13 10:27	01/30/13 02:20	7440-39-3	
Beryllium	**0.69**	ug/L	0.20	1	01/25/13 10:27	01/30/13 02:20	7440-41-7	
Cadmium	**7.0**	ug/L	0.080	1	01/25/13 10:27	01/30/13 02:20	7440-43-9	
Calcium	**281000**	ug/L	400	20	01/25/13 10:27	01/30/13 02:26	7440-70-2	
Chromium	**13.5**	ug/L	0.50	1	01/25/13 10:27	01/30/13 02:20	7440-47-3	
Cobalt	**8.4**	ug/L	0.50	1	01/25/13 10:27	01/30/13 02:20	7440-48-4	
Copper	**516**	ug/L	10.0	20	01/25/13 10:27	01/30/13 02:26	7440-50-8	
Iron	**67700**	ug/L	1000	20	01/25/13 10:27	01/30/13 02:26	7439-89-6	
Lead	**1660**	ug/L	2.0	20	01/25/13 10:27	01/30/13 02:26	7439-92-1	
Magnesium	**32900**	ug/L	100	20	01/25/13 10:27	01/30/13 02:26	7439-95-4	
Manganese	**2730**	ug/L	10.0	20	01/25/13 10:27	01/30/13 02:26	7439-96-5	
Molybdenum	**11.4**	ug/L	0.50	1	01/25/13 10:27	01/30/13 02:20	7439-98-7	
Nickel	**14.3**	ug/L	0.50	1	01/25/13 10:27	01/30/13 02:20	7440-02-0	
Potassium	**6400**	ug/L	20.0	1	01/25/13 10:27	01/30/13 02:20	7440-09-7	
Selenium	**12.9**	ug/L	0.50	1	01/25/13 10:27	01/30/13 02:20	7782-49-2	
Silica	**54300**	ug/L	1070	20	01/25/13 10:27	01/30/13 02:26	7631-86-9	
Silver	**15.8**	ug/L	0.50	1	01/25/13 10:27	01/30/13 02:20	7440-22-4	
Sodium	**11300**	ug/L	50.0	1	01/25/13 10:27	01/30/13 02:20	7440-23-5	
Thallium	**1.1**	ug/L	0.10	1	01/25/13 10:27	01/30/13 02:20	7440-28-0	
Total Hardness by 2340B	**837000**	ug/L	1420	20	01/25/13 10:27	01/30/13 02:26		
Vanadium	**14.2**	ug/L	0.10	1	01/25/13 10:27	01/30/13 02:20	7440-62-2	
Zinc	**1210**	ug/L	100	20	01/25/13 10:27	01/30/13 02:26	7440-66-6	
200.8 MET ICPMS, Dissolved	Analytical Method: EPA 200.8 Preparation Method: EPA 200.8							
Aluminum, Dissolved	**4.2**	ug/L	4.0	1	01/25/13 10:33	02/01/13 15:57	7429-90-5	
Antimony, Dissolved	ND	ug/L	0.50	1	01/25/13 10:33	02/01/13 15:57	7440-36-0	
Arsenic, Dissolved	**48.6**	ug/L	0.50	1	01/25/13 10:33	02/01/13 15:57	7440-38-2	
Barium, Dissolved	**15.5**	ug/L	0.30	1	01/25/13 10:33	02/01/13 15:57	7440-39-3	
Beryllium, Dissolved	ND	ug/L	0.20	1	01/25/13 10:33	02/01/13 15:57	7440-41-7	
Cadmium, Dissolved	ND	ug/L	0.080	1	01/25/13 10:33	02/01/13 15:57	7440-43-9	
Calcium, Dissolved	**317000**	ug/L	400	20	01/25/13 10:33	01/28/13 18:42	7440-70-2	
Chromium, Dissolved	ND	ug/L	0.50	1	01/25/13 10:33	02/01/13 15:57	7440-47-3	
Cobalt, Dissolved	**2.7**	ug/L	0.50	1	01/25/13 10:33	02/01/13 15:57	7440-48-4	
Copper, Dissolved	**0.50**	ug/L	0.50	1	01/25/13 10:33	02/01/13 15:57	7440-50-8	
Iron, Dissolved	**11500**	ug/L	50.0	1	01/25/13 10:33	02/01/13 15:57	7439-89-6	
Lead, Dissolved	**0.24**	ug/L	0.10	1	01/25/13 10:33	02/01/13 15:57	7439-92-1	
Magnesium, Dissolved	**29600**	ug/L	100	20	01/25/13 10:33	02/01/13 16:02	7439-95-4	

This report shall not be reproduced, except in full,
without the written consent of Pace Analytical Services, Inc..

Pace Analytical Services, Inc.
9608 Loiret Blvd.
Lenexa, KS 66219
(913)599-5665

ANALYTICAL RESULTS

Project: JANUARY 2013 RICO WATER SAMPLI
Pace Project No.: 60137200

Sample: P13-103_20130116 **Lab ID: 60137200009** Collected: 01/16/13 12:55 Received: 01/18/13 10:20 Matrix: Water

Parameters	Results	Units	Report Limit	DF	Prepared	Analyzed	CAS No.	Qual
200.8 MET ICPMS, Dissolved	Analytical Method: EPA 200.8 Preparation Method: EPA 200.8							
Manganese, Dissolved	**2420**	ug/L	10.0	20	01/25/13 10:33	02/01/13 16:02	7439-96-5	
Molybdenum, Dissolved	**7.1**	ug/L	0.50	1	01/25/13 10:33	02/01/13 15:57	7439-98-7	
Nickel, Dissolved	**2.0**	ug/L	0.50	1	01/25/13 10:33	02/01/13 15:57	7440-02-0	
Potassium, Dissolved	**4040**	ug/L	20.0	1	01/25/13 10:33	02/01/13 15:57	7440-09-7	
Selenium, Dissolved	ND	ug/L	0.50	1	01/25/13 10:33	02/01/13 15:57	7782-49-2	
Silver, Dissolved	ND	ug/L	0.50	1	01/25/13 10:33	02/01/13 15:57	7440-22-4	
Sodium, Dissolved	**9470**	ug/L	50.0	1	01/25/13 10:33	02/01/13 15:57	7440-23-5	
Thallium, Dissolved	ND	ug/L	0.10	1	01/25/13 10:33	02/01/13 15:57	7440-28-0	
Vanadium, Dissolved	ND	ug/L	0.10	1	01/25/13 10:33	02/01/13 15:57	7440-62-2	
Zinc, Dissolved	**111**	ug/L	5.0	1	01/25/13 10:33	02/01/13 15:57	7440-66-6	
200.8 Potentially Diss. Metals	Analytical Method: EPA 200.8 Preparation Method: EPA 200.8							
Aluminum, Dissolved	**2220**	ug/L	50.0	1	01/23/13 11:30	01/25/13 13:32	7429-90-5	
Antimony, Dissolved	**0.52J**	ug/L	1.0	1	01/23/13 11:30	01/25/13 13:32	7440-36-0	
Arsenic, Dissolved	**101**	ug/L	1.0	1	01/23/13 11:30	01/25/13 13:32	7440-38-2	
Barium, Dissolved	**39.8**	ug/L	1.0	1	01/23/13 11:30	01/25/13 13:32	7440-39-3	
Beryllium, Dissolved	**0.50J**	ug/L	0.50	1	01/23/13 11:30	01/25/13 13:32	7440-41-7	
Cadmium, Dissolved	**4.8**	ug/L	0.50	1	01/23/13 11:30	01/25/13 13:32	7440-43-9	
Chromium, Dissolved	**6.4**	ug/L	1.0	1	01/23/13 11:30	01/25/13 13:32	7440-47-3	
Cobalt, Dissolved	**3.7**	ug/L	1.0	1	01/23/13 11:30	01/25/13 13:32	7440-48-4	
Copper, Dissolved	**230**	ug/L	1.0	1	01/23/13 11:30	01/25/13 13:32	7440-50-8	
Iron, Dissolved	**26400**	ug/L	50.0	1	01/23/13 11:30	01/25/13 13:32	7439-89-6	
Lead, Dissolved	**1230**	ug/L	1.0	1	01/23/13 11:30	01/25/13 13:32	7439-92-1	
Manganese, Dissolved	**3280**	ug/L	1.0	1	01/23/13 11:30	01/25/13 13:32	7439-96-5	
Molybdenum, Dissolved	**5.8**	ug/L	1.0	1	01/23/13 11:30	01/25/13 13:32	7439-98-7	
Nickel, Dissolved	**3.5**	ug/L	1.0	1	01/23/13 11:30	01/25/13 13:32	7440-02-0	B
Selenium, Dissolved	**1.1**	ug/L	1.0	1	01/23/13 11:30	01/25/13 13:32	7782-49-2	
Silver, Dissolved	**0.13J**	ug/L	0.50	1	01/23/13 11:30	01/25/13 13:32	7440-22-4	
Thallium, Dissolved	**0.62J**	ug/L	1.0	1	01/23/13 11:30	01/25/13 13:32	7440-28-0	
Vanadium, Dissolved	**5.2**	ug/L	1.0	1	01/23/13 11:30	01/25/13 13:32	7440-62-2	
Zinc, Dissolved	**786**	ug/L	10.0	1	01/23/13 11:30	01/25/13 13:32	7440-66-6	
245.1 Mercury	Analytical Method: EPA 245.1 Preparation Method: EPA 245.1							
Mercury	ND	ug/L	0.20	1	02/05/13 12:02	02/05/13 21:21	7439-97-6	
245.1 Mercury, Dissolved	Analytical Method: EPA 245.1 Preparation Method: EPA 245.1							
Mercury, Dissolved	ND	ug/L	0.20	1	01/31/13 09:37	01/31/13 16:29	7439-97-6	
245.1 Potentially Diss Mercury	Analytical Method: EPA 245.1 Preparation Method: EPA 245.1							
Mercury, Dissolved	ND	ug/L	0.20	1	01/29/13 10:30	01/29/13 15:28	7439-97-6	
2510B Specific Conductance	Analytical Method: SM 2510B							
Specific Conductance	**1470**	umhos/cm	10.0	1		01/25/13 12:22		
Salinity	Analytical Method: Calculated							
Salinity (as dissolved solids)	**939**	mg/L	6.0	1		01/25/13 14:35		

This report shall not be reproduced, except in full,
without the written consent of Pace Analytical Services, Inc..

Pace Analytical Services, Inc.
9608 Loiret Blvd.
Lenexa, KS 66219
(913)599-5665

ANALYTICAL RESULTS

Project: JANUARY 2013 RICO WATER SAMPLI
Pace Project No.: 60137200

Sample: P13-103_20130116 **Lab ID: 60137200009** Collected: 01/16/13 12:55 Received: 01/18/13 10:20 Matrix: Water

Parameters	Results	Units	Report Limit	DF	Prepared	Analyzed	CAS No.	Qual
Salinity	Analytical Method: Calculated							
Salinity (as seawater)	**0.73**	PSU	0.010	1		01/25/13 14:35		
2320B Alkalinity	Analytical Method: SM 2320B							
Alkalinity,Bicarbonate (CaCO3)	**132**	mg/L	20.0	1		01/23/13 09:32		
Alkalinity, Carbonate (CaCO3)	ND	mg/L	20.0	1		01/23/13 09:32		
Alkalinity, Total as CaCO3	**132**	mg/L	20.0	1		01/23/13 09:32		
2540C Total Dissolved Solids	Analytical Method: SM 2540C							
Total Dissolved Solids	**1170**	mg/L	5.0	1		01/23/13 15:24		
2540D Total Suspended Solids	Analytical Method: SM 2540D							
Total Suspended Solids	**314**	mg/L	5.0	1		01/22/13 16:09		
4500S2D Sulfide, Total	Analytical Method: SM 4500-S-2 D							
Sulfide, Total	ND	mg/L	0.050	1		01/22/13 14:33	18496-25-8	
300.0 IC Anions 28 Days	Analytical Method: EPA 300.0							
Chloride	**1.1**	mg/L	1.0	1		01/27/13 21:06	16887-00-6	
Sulfate	**786**	mg/L	50.0	50		01/27/13 21:23	14808-79-8	
353.2 Nitrogen, NO2/NO3 pres.	Analytical Method: EPA 353.2							
Nitrogen, NO2 plus NO3	ND	mg/L	0.10	1		01/23/13 11:54		
4500CNE Cyanide, Total	Analytical Method: SM 4500-CN-E							
Cyanide	ND	mg/L	0.0050	1		01/23/13 14:36	57-12-5	
5310C TOC	Analytical Method: SM 5310C							
Total Organic Carbon	**1.2**	mg/L	1.0	1		01/24/13 17:18	7440-44-0	

This report shall not be reproduced, except in full,
without the written consent of Pace Analytical Services, Inc..

Pace Analytical Services, Inc.
9608 Loiret Blvd.
Lenexa, KS 66219
(913)599-5665

ANALYTICAL RESULTS

Project: JANUARY 2013 RICO WATER SAMPLI
Pace Project No.: 60137200

Sample: P13-102_20130116 **Lab ID: 60137200010** Collected: 01/16/13 13:18 Received: 01/18/13 10:20 Matrix: Water

Parameters	Results	Units	Report Limit	DF	Prepared	Analyzed	CAS No.	Qual
200.7 Potentially Diss. Metals	Analytical Method: EPA 200.7 Preparation Method: EPA 200.7							
Calcium, Dissolved	**351000**	ug/L	500	5	01/28/13 11:45	01/29/13 17:53	7440-70-2	
Magnesium, Dissolved	**51800**	ug/L	250	5	01/28/13 11:45	01/29/13 17:53	7439-95-4	
Potassium, Dissolved	**5580**	ug/L	2500	5	01/28/13 11:45	01/29/13 17:53	7440-09-7	
Sodium, Dissolved	**14400**	ug/L	2500	5	01/28/13 11:45	01/29/13 17:53	7440-23-5	
200.8 MET ICPMS	Analytical Method: EPA 200.8 Preparation Method: EPA 200.8							
Aluminum	**3380**	ug/L	4.0	1	01/25/13 10:27	01/30/13 02:32	7429-90-5	
Antimony	ND	ug/L	0.50	1	01/25/13 10:27	01/30/13 02:32	7440-36-0	
Arsenic	**7.6**	ug/L	0.50	1	01/25/13 10:27	01/30/13 02:32	7440-38-2	
Barium	**83.9**	ug/L	0.30	1	01/25/13 10:27	01/30/13 02:32	7440-39-3	
Beryllium	**0.52**	ug/L	0.20	1	01/25/13 10:27	01/30/13 02:32	7440-41-7	
Cadmium	**0.29**	ug/L	0.080	1	01/25/13 10:27	01/30/13 02:32	7440-43-9	
Calcium	**326000**	ug/L	400	20	01/25/13 10:27	01/30/13 02:37	7440-70-2	
Chromium	**7.2**	ug/L	0.50	1	01/25/13 10:27	01/30/13 02:32	7440-47-3	
Cobalt	**14.5**	ug/L	0.50	1	01/25/13 10:27	01/30/13 02:32	7440-48-4	
Copper	**17.4**	ug/L	0.50	1	01/25/13 10:27	01/30/13 02:32	7440-50-8	
Iron	**8420**	ug/L	50.0	1	01/25/13 10:27	01/30/13 02:32	7439-89-6	
Lead	**18.7**	ug/L	0.10	1	01/25/13 10:27	01/30/13 02:32	7439-92-1	
Magnesium	**47300**	ug/L	100	20	01/25/13 10:27	01/30/13 02:37	7439-95-4	
Manganese	**23300**	ug/L	50.0	100	01/25/13 10:27	01/30/13 02:42	7439-96-5	
Molybdenum	**6.1**	ug/L	0.50	1	01/25/13 10:27	01/30/13 02:32	7439-98-7	
Nickel	**9.4**	ug/L	0.50	1	01/25/13 10:27	01/30/13 02:32	7440-02-0	
Potassium	**6300**	ug/L	20.0	1	01/25/13 10:27	01/30/13 02:32	7440-09-7	
Selenium	**0.83**	ug/L	0.50	1	01/25/13 10:27	01/30/13 02:32	7782-49-2	
Silica	**30400**	ug/L	1070	20	01/25/13 10:27	01/30/13 02:37	7631-86-9	
Silver	ND	ug/L	0.50	1	01/25/13 10:27	01/30/13 02:32	7440-22-4	
Sodium	**16400**	ug/L	50.0	1	01/25/13 10:27	01/30/13 02:32	7440-23-5	
Thallium	**0.16**	ug/L	0.10	1	01/25/13 10:27	01/30/13 02:32	7440-28-0	
Total Hardness by 2340B	**1010000**	ug/L	1420	20	01/25/13 10:27	01/30/13 02:37		
Vanadium	**8.3**	ug/L	0.10	1	01/25/13 10:27	01/30/13 02:32	7440-62-2	
Zinc	**120**	ug/L	5.0	1	01/25/13 10:27	01/30/13 02:32	7440-66-6	
200.8 MET ICPMS, Dissolved	Analytical Method: EPA 200.8 Preparation Method: EPA 200.8							
Aluminum, Dissolved	**27.4**	ug/L	4.0	1	01/25/13 10:33	02/01/13 16:06	7429-90-5	
Antimony, Dissolved	ND	ug/L	0.50	1	01/25/13 10:33	02/01/13 16:06	7440-36-0	
Arsenic, Dissolved	**0.54**	ug/L	0.50	1	01/25/13 10:33	02/01/13 16:06	7440-38-2	
Barium, Dissolved	**16.9**	ug/L	0.30	1	01/25/13 10:33	02/01/13 16:06	7440-39-3	
Beryllium, Dissolved	**0.22**	ug/L	0.20	1	01/25/13 10:33	01/28/13 18:47	7440-41-7	
Cadmium, Dissolved	**0.089**	ug/L	0.080	1	01/25/13 10:33	02/01/13 16:06	7440-43-9	
Calcium, Dissolved	**377000**	ug/L	400	20	01/25/13 10:33	01/28/13 18:51	7440-70-2	
Chromium, Dissolved	ND	ug/L	0.50	1	01/25/13 10:33	02/01/13 16:06	7440-47-3	
Cobalt, Dissolved	**11.8**	ug/L	0.50	1	01/25/13 10:33	02/01/13 16:06	7440-48-4	
Copper, Dissolved	ND	ug/L	0.50	1	01/25/13 10:33	02/01/13 16:06	7440-50-8	
Iron, Dissolved	**1130**	ug/L	50.0	1	01/25/13 10:33	02/01/13 16:06	7439-89-6	
Lead, Dissolved	ND	ug/L	0.10	1	01/25/13 10:33	02/01/13 16:06	7439-92-1	
Magnesium, Dissolved	**52100**	ug/L	100	20	01/25/13 10:33	02/01/13 16:11	7439-95-4	

This report shall not be reproduced, except in full,
without the written consent of Pace Analytical Services, Inc..

Pace Analytical Services, Inc.
9608 Loiret Blvd.
Lenexa, KS 66219
(913)599-5665

ANALYTICAL RESULTS

Project: JANUARY 2013 RICO WATER SAMPLI
Pace Project No.: 60137200

Sample: P13-102_20130116 **Lab ID: 60137200010** Collected: 01/16/13 13:18 Received: 01/18/13 10:20 Matrix: Water

Parameters	Results	Units	Report Limit	DF	Prepared	Analyzed	CAS No.	Qual
200.8 MET ICPMS, Dissolved	Analytical Method: EPA 200.8 Preparation Method: EPA 200.8							
Manganese, Dissolved	**25800**	ug/L	50.0	100	01/25/13 10:33	02/01/13 16:15	7439-96-5	
Molybdenum, Dissolved	**4.1**	ug/L	0.50	1	01/25/13 10:33	02/01/13 16:06	7439-98-7	
Nickel, Dissolved	**5.8**	ug/L	0.50	1	01/25/13 10:33	02/01/13 16:06	7440-02-0	
Potassium, Dissolved	**5200**	ug/L	20.0	1	01/25/13 10:33	02/01/13 16:06	7440-09-7	
Selenium, Dissolved	ND	ug/L	0.50	1	01/25/13 10:33	02/01/13 16:06	7782-49-2	
Silver, Dissolved	ND	ug/L	0.50	1	01/25/13 10:33	02/01/13 16:06	7440-22-4	
Sodium, Dissolved	**14400**	ug/L	50.0	1	01/25/13 10:33	02/01/13 16:06	7440-23-5	
Thallium, Dissolved	ND	ug/L	0.10	1	01/25/13 10:33	02/01/13 16:06	7440-28-0	
Vanadium, Dissolved	ND	ug/L	0.10	1	01/25/13 10:33	02/01/13 16:06	7440-62-2	
Zinc, Dissolved	**68.5**	ug/L	5.0	1	01/25/13 10:33	02/01/13 16:06	7440-66-6	
200.8 Potentially Diss. Metals	Analytical Method: EPA 200.8 Preparation Method: EPA 200.8							
Aluminum, Dissolved	**676**	ug/L	50.0	1	01/23/13 11:30	01/25/13 13:36	7429-90-5	
Antimony, Dissolved	**0.11J**	ug/L	1.0	1	01/23/13 11:30	01/25/13 13:36	7440-36-0	
Arsenic, Dissolved	**2.2**	ug/L	1.0	1	01/23/13 11:30	01/25/13 13:36	7440-38-2	
Barium, Dissolved	**26.6**	ug/L	1.0	1	01/23/13 11:30	01/25/13 13:36	7440-39-3	
Beryllium, Dissolved	**0.38J**	ug/L	0.50	1	01/23/13 11:30	01/25/13 13:36	7440-41-7	
Cadmium, Dissolved	**0.25J**	ug/L	0.50	1	01/23/13 11:30	01/25/13 13:36	7440-43-9	
Chromium, Dissolved	**3.8**	ug/L	1.0	1	01/23/13 11:30	01/25/13 13:36	7440-47-3	B
Cobalt, Dissolved	**12.0**	ug/L	1.0	1	01/23/13 11:30	01/25/13 13:36	7440-48-4	
Copper, Dissolved	**7.1**	ug/L	1.0	1	01/23/13 11:30	01/25/13 13:36	7440-50-8	
Iron, Dissolved	**3010**	ug/L	50.0	1	01/23/13 11:30	01/25/13 13:36	7439-89-6	
Lead, Dissolved	**17.1**	ug/L	1.0	1	01/23/13 11:30	01/25/13 13:36	7439-92-1	
Manganese, Dissolved	**24100**	ug/L	200	200	01/23/13 11:30	01/25/13 14:51	7439-96-5	
Molybdenum, Dissolved	**3.3**	ug/L	1.0	1	01/23/13 11:30	01/25/13 13:36	7439-98-7	
Nickel, Dissolved	**4.1**	ug/L	1.0	1	01/23/13 11:30	01/25/13 13:36	7440-02-0	
Selenium, Dissolved	ND	ug/L	1.0	1	01/23/13 11:30	01/25/13 13:36	7782-49-2	
Silver, Dissolved	ND	ug/L	0.50	1	01/23/13 11:30	01/25/13 13:36	7440-22-4	
Thallium, Dissolved	**0.066J**	ug/L	1.0	1	01/23/13 11:30	01/25/13 13:36	7440-28-0	
Vanadium, Dissolved	**2.3**	ug/L	1.0	1	01/23/13 11:30	01/25/13 13:36	7440-62-2	
Zinc, Dissolved	**90.8**	ug/L	10.0	1	01/23/13 11:30	01/25/13 13:36	7440-66-6	
245.1 Mercury	Analytical Method: EPA 245.1 Preparation Method: EPA 245.1							
Mercury	ND	ug/L	0.20	1	02/05/13 12:02	02/05/13 21:23	7439-97-6	
245.1 Mercury, Dissolved	Analytical Method: EPA 245.1 Preparation Method: EPA 245.1							
Mercury, Dissolved	ND	ug/L	0.20	1	01/31/13 09:37	01/31/13 16:31	7439-97-6	
245.1 Potentially Diss Mercury	Analytical Method: EPA 245.1 Preparation Method: EPA 245.1							
Mercury, Dissolved	ND	ug/L	0.20	1	01/29/13 10:30	01/29/13 15:31	7439-97-6	
2510B Specific Conductance	Analytical Method: SM 2510B							
Specific Conductance	**1900**	umhos/cm	10.0	1		01/25/13 12:23		
Salinity	Analytical Method: Calculated							
Salinity (as dissolved solids)	**1220**	mg/L	6.0	1		01/25/13 14:35		

This report shall not be reproduced, except in full,
without the written consent of Pace Analytical Services, Inc..

Pace Analytical Services, Inc.
9608 Loiret Blvd.
Lenexa, KS 66219
(913)599-5665

ANALYTICAL RESULTS

Project: JANUARY 2013 RICO WATER SAMPLI
Pace Project No.: 60137200

Sample: P13-102_20130116 **Lab ID: 60137200010** Collected: 01/16/13 13:18 Received: 01/18/13 10:20 Matrix: Water

Parameters	Results	Units	Report Limit	DF	Prepared	Analyzed	CAS No.	Qual
Salinity	Analytical Method: Calculated							
Salinity (as seawater)	**0.96**	PSU	0.010	1		01/25/13 14:35		
2320B Alkalinity	Analytical Method: SM 2320B							
Alkalinity,Bicarbonate (CaCO3)	ND	mg/L	20.0	1		01/23/13 09:36		
Alkalinity, Carbonate (CaCO3)	ND	mg/L	20.0	1		01/23/13 09:36		
Alkalinity, Total as CaCO3	ND	mg/L	20.0	1		01/23/13 09:36		
2540C Total Dissolved Solids	Analytical Method: SM 2540C							
Total Dissolved Solids	**1520**	mg/L	5.0	1		01/23/13 15:24		
2540D Total Suspended Solids	Analytical Method: SM 2540D							
Total Suspended Solids	**147**	mg/L	5.0	1		01/22/13 16:10		
4500S2D Sulfide, Total	Analytical Method: SM 4500-S-2 D							
Sulfide, Total	ND	mg/L	0.050	1		01/22/13 14:33	18496-25-8	
300.0 IC Anions 28 Days	Analytical Method: EPA 300.0							
Chloride	**1.6**	mg/L	1.0	1		01/28/13 11:52	16887-00-6	
Sulfate	**1090**	mg/L	100	100		01/28/13 12:10	14808-79-8	
353.2 Nitrogen, NO2/NO3 pres.	Analytical Method: EPA 353.2							
Nitrogen, NO2 plus NO3	ND	mg/L	0.10	1		01/23/13 11:55		
4500CNE Cyanide, Total	Analytical Method: SM 4500-CN-E							
Cyanide	ND	mg/L	0.0050	1		01/23/13 14:36	57-12-5	
5310C TOC	Analytical Method: SM 5310C							
Total Organic Carbon	ND	mg/L	1.0	1		01/24/13 17:32	7440-44-0	

This report shall not be reproduced, except in full,
without the written consent of Pace Analytical Services, Inc..

Pace Analytical Services, Inc.
9608 Loiret Blvd.
Lenexa, KS 66219
(913)599-5665

ANALYTICAL RESULTS

Project: JANUARY 2013 RICO WATER SAMPLI
Pace Project No.: 60137200

Sample: MW-6 DEEP_20130116 **Lab ID: 60137200011** Collected: 01/16/13 13:50 Received: 01/18/13 10:20 Matrix: Water

Parameters	Results	Units	Report Limit	DF	Prepared	Analyzed	CAS No.	Qual
200.7 Potentially Diss. Metals	Analytical Method: EPA 200.7 Preparation Method: EPA 200.7							
Calcium, Dissolved	**277000**	ug/L	500	5	01/28/13 11:45	01/29/13 17:55	7440-70-2	
Magnesium, Dissolved	**41000**	ug/L	250	5	01/28/13 11:45	01/29/13 17:55	7439-95-4	
Potassium, Dissolved	**6500**	ug/L	2500	5	01/28/13 11:45	01/29/13 17:55	7440-09-7	
Sodium, Dissolved	**4630**	ug/L	2500	5	01/28/13 11:45	01/29/13 17:55	7440-23-5	
200.8 MET ICPMS	Analytical Method: EPA 200.8 Preparation Method: EPA 200.8							
Aluminum	**9200**	ug/L	4.0	1	01/25/13 10:27	01/30/13 03:03	7429-90-5	
Antimony	**0.78**	ug/L	0.50	1	01/25/13 10:27	01/30/13 03:03	7440-36-0	
Arsenic	**143**	ug/L	0.50	1	01/25/13 10:27	01/30/13 03:03	7440-38-2	
Barium	**123**	ug/L	0.30	1	01/25/13 10:27	01/30/13 03:03	7440-39-3	
Beryllium	**1.3**	ug/L	0.20	1	01/25/13 10:27	01/30/13 03:03	7440-41-7	
Cadmium	**5.2**	ug/L	0.080	1	01/25/13 10:27	01/30/13 03:03	7440-43-9	
Calcium	**258000**	ug/L	400	20	01/25/13 10:27	01/30/13 03:08	7440-70-2	
Chromium	**10.3**	ug/L	0.50	1	01/25/13 10:27	01/30/13 03:03	7440-47-3	
Cobalt	**6.9**	ug/L	0.50	1	01/25/13 10:27	01/30/13 03:03	7440-48-4	
Copper	**57.0**	ug/L	0.50	1	01/25/13 10:27	01/30/13 03:03	7440-50-8	
Iron	**34100**	ug/L	1000	20	01/25/13 10:27	01/30/13 03:08	7439-89-6	
Lead	**106**	ug/L	0.10	1	01/25/13 10:27	01/30/13 03:03	7439-92-1	
Magnesium	**38400**	ug/L	100	20	01/25/13 10:27	01/30/13 03:08	7439-95-4	
Manganese	**6500**	ug/L	10.0	20	01/25/13 10:27	01/30/13 03:08	7439-96-5	
Molybdenum	**10.1**	ug/L	0.50	1	01/25/13 10:27	01/30/13 03:03	7439-98-7	
Nickel	**11.6**	ug/L	0.50	1	01/25/13 10:27	01/30/13 03:03	7440-02-0	
Potassium	**7720**	ug/L	20.0	1	01/25/13 10:27	01/30/13 03:03	7440-09-7	
Selenium	**3.9**	ug/L	0.50	1	01/25/13 10:27	01/30/13 03:03	7782-49-2	
Silica	**45800**	ug/L	1070	20	01/25/13 10:27	01/30/13 03:08	7631-86-9	
Silver	ND	ug/L	0.50	1	01/25/13 10:27	01/30/13 03:03	7440-22-4	
Sodium	**4650**	ug/L	50.0	1	01/25/13 10:27	01/30/13 03:03	7440-23-5	
Thallium	**0.19**	ug/L	0.10	1	01/25/13 10:27	01/30/13 03:03	7440-28-0	
Total Hardness by 2340B	**802000**	ug/L	1420	20	01/25/13 10:27	01/30/13 03:08		
Vanadium	**18.0**	ug/L	0.10	1	01/25/13 10:27	01/30/13 03:03	7440-62-2	
Zinc	**1440**	ug/L	100	20	01/25/13 10:27	01/30/13 03:08	7440-66-6	
200.8 MET ICPMS, Dissolved	Analytical Method: EPA 200.8 Preparation Method: EPA 200.8							
Aluminum, Dissolved	**342**	ug/L	4.0	1	01/25/13 10:33	02/01/13 16:50	7429-90-5	
Antimony, Dissolved	ND	ug/L	0.50	1	01/25/13 10:33	02/01/13 16:50	7440-36-0	
Arsenic, Dissolved	**22.5**	ug/L	0.50	1	01/25/13 10:33	02/01/13 16:50	7440-38-2	
Barium, Dissolved	**11.0**	ug/L	0.30	1	01/25/13 10:33	02/01/13 16:50	7440-39-3	
Beryllium, Dissolved	**0.67**	ug/L	0.20	1	01/25/13 10:33	01/28/13 18:56	7440-41-7	
Cadmium, Dissolved	ND	ug/L	0.080	1	01/25/13 10:33	02/01/13 16:50	7440-43-9	
Calcium, Dissolved	**289000**	ug/L	400	20	01/25/13 10:33	01/28/13 19:01	7440-70-2	
Chromium, Dissolved	ND	ug/L	0.50	1	01/25/13 10:33	02/01/13 16:50	7440-47-3	
Cobalt, Dissolved	**3.0**	ug/L	0.50	1	01/25/13 10:33	02/01/13 16:50	7440-48-4	
Copper, Dissolved	**0.75**	ug/L	0.50	1	01/25/13 10:33	02/01/13 16:50	7440-50-8	
Iron, Dissolved	**20900**	ug/L	50.0	1	01/25/13 10:33	02/01/13 16:50	7439-89-6	
Lead, Dissolved	ND	ug/L	0.10	1	01/25/13 10:33	02/01/13 16:50	7439-92-1	
Magnesium, Dissolved	**33200**	ug/L	100	20	01/25/13 10:33	02/01/13 16:54	7439-95-4	

This report shall not be reproduced, except in full,
without the written consent of Pace Analytical Services, Inc..

Pace Analytical Services, Inc.
9608 Loiret Blvd.
Lenexa, KS 66219
(913)599-5665

ANALYTICAL RESULTS

Project: JANUARY 2013 RICO WATER SAMPLI
Pace Project No.: 60137200

Sample: MW-6 DEEP_20130116 **Lab ID: 60137200011** Collected: 01/16/13 13:50 Received: 01/18/13 10:20 Matrix: Water

Parameters	Results	Units	Report Limit	DF	Prepared	Analyzed	CAS No.	Qual
200.8 MET ICPMS, Dissolved	Analytical Method: EPA 200.8 Preparation Method: EPA 200.8							
Manganese, Dissolved	**5910**	ug/L	10.0	20	01/25/13 10:33	02/01/13 16:54	7439-96-5	
Molybdenum, Dissolved	**6.0**	ug/L	0.50	1	01/25/13 10:33	02/01/13 16:50	7439-98-7	
Nickel, Dissolved	**2.8**	ug/L	0.50	1	01/25/13 10:33	02/01/13 16:50	7440-02-0	
Potassium, Dissolved	**6500**	ug/L	20.0	1	01/25/13 10:33	02/01/13 16:50	7440-09-7	
Selenium, Dissolved	**0.86**	ug/L	0.50	1	01/25/13 10:33	02/01/13 16:50	7782-49-2	
Silver, Dissolved	ND	ug/L	0.50	1	01/25/13 10:33	02/01/13 16:50	7440-22-4	
Sodium, Dissolved	**5040**	ug/L	50.0	1	01/25/13 10:33	02/01/13 16:50	7440-23-5	
Thallium, Dissolved	ND	ug/L	0.10	1	01/25/13 10:33	02/01/13 16:50	7440-28-0	
Vanadium, Dissolved	**0.12**	ug/L	0.10	1	01/25/13 10:33	02/01/13 16:50	7440-62-2	
Zinc, Dissolved	**309**	ug/L	5.0	1	01/25/13 10:33	02/01/13 16:50	7440-66-6	
200.8 Potentially Diss. Metals	Analytical Method: EPA 200.8 Preparation Method: EPA 200.8							
Aluminum, Dissolved	**3890**	ug/L	50.0	1	01/23/13 11:30	01/25/13 13:41	7429-90-5	M1
Antimony, Dissolved	**0.19J**	ug/L	1.0	1	01/23/13 11:30	01/25/13 13:41	7440-36-0	
Arsenic, Dissolved	**138**	ug/L	1.0	1	01/23/13 11:30	01/25/13 13:41	7440-38-2	M1
Barium, Dissolved	**33.8**	ug/L	1.0	1	01/23/13 11:30	01/25/13 13:41	7440-39-3	
Beryllium, Dissolved	**1.1**	ug/L	0.50	1	01/23/13 11:30	01/25/13 13:41	7440-41-7	
Cadmium, Dissolved	**5.2**	ug/L	0.50	1	01/23/13 11:30	01/25/13 13:41	7440-43-9	
Chromium, Dissolved	**4.8**	ug/L	1.0	1	01/23/13 11:30	01/25/13 13:41	7440-47-3	
Cobalt, Dissolved	**5.7**	ug/L	1.0	1	01/23/13 11:30	01/25/13 13:41	7440-48-4	
Copper, Dissolved	**35.6**	ug/L	1.0	1	01/23/13 11:30	01/25/13 13:41	7440-50-8	
Iron, Dissolved	**33400**	ug/L	50.0	1	01/23/13 11:30	01/25/13 13:41	7439-89-6	M1
Lead, Dissolved	**42.0**	ug/L	1.0	1	01/23/13 11:30	01/25/13 13:41	7439-92-1	
Manganese, Dissolved	**8680**	ug/L	100	100	01/23/13 11:30	01/25/13 15:04	7439-96-5	M6
Molybdenum, Dissolved	**5.5**	ug/L	1.0	1	01/23/13 11:30	01/25/13 13:41	7439-98-7	
Nickel, Dissolved	**4.9**	ug/L	1.0	1	01/23/13 11:30	01/25/13 13:41	7440-02-0	
Selenium, Dissolved	**1.6**	ug/L	1.0	1	01/23/13 11:30	01/25/13 13:41	7782-49-2	
Silver, Dissolved	ND	ug/L	0.50	1	01/23/13 11:30	01/25/13 13:41	7440-22-4	
Thallium, Dissolved	ND	ug/L	1.0	1	01/23/13 11:30	01/25/13 13:41	7440-28-0	
Vanadium, Dissolved	**8.7**	ug/L	1.0	1	01/23/13 11:30	01/25/13 13:41	7440-62-2	
Zinc, Dissolved	**1560**	ug/L	10.0	1	01/23/13 11:30	01/25/13 13:41	7440-66-6	M1
245.1 Mercury	Analytical Method: EPA 245.1 Preparation Method: EPA 245.1							
Mercury	ND	ug/L	0.20	1	02/05/13 12:02	02/05/13 21:26	7439-97-6	
245.1 Mercury, Dissolved	Analytical Method: EPA 245.1 Preparation Method: EPA 245.1							
Mercury, Dissolved	ND	ug/L	0.20	1	01/31/13 09:37	01/31/13 16:38	7439-97-6	
245.1 Potentially Diss Mercury	Analytical Method: EPA 245.1 Preparation Method: EPA 245.1							
Mercury, Dissolved	ND	ug/L	0.20	1	01/29/13 10:30	01/29/13 15:33	7439-97-6	
2510B Specific Conductance	Analytical Method: SM 2510B							
Specific Conductance	**1490**	umhos/cm	10.0	1		01/25/13 12:24		
Salinity	Analytical Method: Calculated							
Salinity (as dissolved solids)	**955**	mg/L	6.0	1		01/25/13 14:35		

This report shall not be reproduced, except in full,
without the written consent of Pace Analytical Services, Inc..

Pace Analytical Services, Inc.
9608 Loiret Blvd.
Lenexa, KS 66219
(913)599-5665

ANALYTICAL RESULTS

Project: JANUARY 2013 RICO WATER SAMPLI
Pace Project No.: 60137200

Sample: MW-6 DEEP_20130116 **Lab ID: 60137200011** Collected: 01/16/13 13:50 Received: 01/18/13 10:20 Matrix: Water

Parameters	Results	Units	Report Limit	DF	Prepared	Analyzed	CAS No.	Qual
Salinity	Analytical Method: Calculated							
Salinity (as seawater)	**0.75**	PSU	0.010	1		01/25/13 14:35		
2320B Alkalinity	Analytical Method: SM 2320B							
Alkalinity,Bicarbonate (CaCO3)	**85.3**	mg/L	20.0	1		01/23/13 09:40		
Alkalinity, Carbonate (CaCO3)	ND	mg/L	20.0	1		01/23/13 09:40		
Alkalinity, Total as CaCO3	**85.3**	mg/L	20.0	1		01/23/13 09:40		
2540C Total Dissolved Solids	Analytical Method: SM 2540C							
Total Dissolved Solids	**1260**	mg/L	5.0	1		01/23/13 15:24		
2540D Total Suspended Solids	Analytical Method: SM 2540D							
Total Suspended Solids	**317**	mg/L	5.0	1		01/22/13 16:10		
4500S2D Sulfide, Total	Analytical Method: SM 4500-S-2 D							
Sulfide, Total	ND	mg/L	0.050	1		01/22/13 14:33	18496-25-8	
300.0 IC Anions 28 Days	Analytical Method: EPA 300.0							
Chloride	**1.1**	mg/L	1.0	1		01/27/13 22:16	16887-00-6	
Sulfate	**760**	mg/L	50.0	50		01/27/13 22:34	14808-79-8	
353.2 Nitrogen, NO2/NO3 pres.	Analytical Method: EPA 353.2							
Nitrogen, NO2 plus NO3	ND	mg/L	0.10	1		01/23/13 11:55		
4500CNE Cyanide, Total	Analytical Method: SM 4500-CN-E							
Cyanide	**0.0079**	mg/L	0.0050	1		01/23/13 15:18	57-12-5	
5310C TOC	Analytical Method: SM 5310C							
Total Organic Carbon	**1.4**	mg/L	1.0	1		01/24/13 17:46	7440-44-0	

This report shall not be reproduced, except in full,
without the written consent of Pace Analytical Services, Inc..

Pace Analytical Services, Inc.
9608 Loiret Blvd.
Lenexa, KS 66219
(913)599-5665

ANALYTICAL RESULTS

Project: JANUARY 2013 RICO WATER SAMPLI
Pace Project No.: 60137200

Sample: DR-10_20130116 **Lab ID: 60137200012** Collected: 01/16/13 14:15 Received: 01/18/13 10:20 Matrix: Water

Parameters	Results	Units	Report Limit	DF	Prepared	Analyzed	CAS No.	Qual
200.7 Potentially Diss. Metals	Analytical Method: EPA 200.7 Preparation Method: EPA 200.7							
Calcium, Dissolved	**271000**	ug/L	500	5	01/28/13 11:45	01/29/13 17:57	7440-70-2	M1
Magnesium, Dissolved	**41800**	ug/L	250	5	01/28/13 11:45	01/29/13 17:57	7439-95-4	
Potassium, Dissolved	**6100**	ug/L	2500	5	01/28/13 11:45	01/29/13 17:57	7440-09-7	
Sodium, Dissolved	**4390**	ug/L	2500	5	01/28/13 11:45	01/29/13 17:57	7440-23-5	
200.8 MET ICPMS	Analytical Method: EPA 200.8 Preparation Method: EPA 200.8							
Aluminum	**8800**	ug/L	4.0	1	01/25/13 10:27	01/30/13 03:13	7429-90-5	
Antimony	**0.75**	ug/L	0.50	1	01/25/13 10:27	01/30/13 03:13	7440-36-0	
Arsenic	**107**	ug/L	0.50	1	01/25/13 10:27	01/30/13 03:13	7440-38-2	
Barium	**117**	ug/L	0.30	1	01/25/13 10:27	01/30/13 03:13	7440-39-3	
Beryllium	**1.1**	ug/L	0.20	1	01/25/13 10:27	01/30/13 03:13	7440-41-7	
Cadmium	**5.0**	ug/L	0.080	1	01/25/13 10:27	01/30/13 03:13	7440-43-9	
Calcium	**259000**	ug/L	400	20	01/25/13 10:27	01/30/13 03:19	7440-70-2	
Chromium	**9.6**	ug/L	0.50	1	01/25/13 10:27	01/30/13 03:13	7440-47-3	
Cobalt	**6.7**	ug/L	0.50	1	01/25/13 10:27	01/30/13 03:13	7440-48-4	
Copper	**54.2**	ug/L	0.50	1	01/25/13 10:27	01/30/13 03:13	7440-50-8	
Iron	**32900**	ug/L	1000	20	01/25/13 10:27	01/30/13 03:19	7439-89-6	
Lead	**99.5**	ug/L	0.10	1	01/25/13 10:27	01/30/13 03:13	7439-92-1	
Magnesium	**38500**	ug/L	100	20	01/25/13 10:27	01/30/13 03:19	7439-95-4	
Manganese	**6530**	ug/L	10.0	20	01/25/13 10:27	01/30/13 03:19	7439-96-5	
Molybdenum	**9.8**	ug/L	0.50	1	01/25/13 10:27	01/30/13 03:13	7439-98-7	
Nickel	**11.0**	ug/L	0.50	1	01/25/13 10:27	01/30/13 03:13	7440-02-0	
Potassium	**7700**	ug/L	20.0	1	01/25/13 10:27	01/30/13 03:13	7440-09-7	
Selenium	**3.3**	ug/L	0.50	1	01/25/13 10:27	01/30/13 03:13	7782-49-2	
Silica	**44800**	ug/L	1070	20	01/25/13 10:27	01/30/13 03:19	7631-86-9	
Silver	ND	ug/L	0.50	1	01/25/13 10:27	01/30/13 03:13	7440-22-4	
Sodium	**4590**	ug/L	50.0	1	01/25/13 10:27	01/30/13 03:13	7440-23-5	
Thallium	**0.17**	ug/L	0.10	1	01/25/13 10:27	01/30/13 03:13	7440-28-0	
Total Hardness by 2340B	**805000**	ug/L	1420	20	01/25/13 10:27	01/30/13 03:19		
Vanadium	**17.0**	ug/L	0.10	1	01/25/13 10:27	01/30/13 03:13	7440-62-2	
Zinc	**1390**	ug/L	100	20	01/25/13 10:27	01/30/13 03:19	7440-66-6	
200.8 MET ICPMS, Dissolved	Analytical Method: EPA 200.8 Preparation Method: EPA 200.8							
Aluminum, Dissolved	**602**	ug/L	4.0	1	01/25/13 10:33	02/01/13 16:58	7429-90-5	
Antimony, Dissolved	ND	ug/L	0.50	1	01/25/13 10:33	02/01/13 16:58	7440-36-0	
Arsenic, Dissolved	**22.0**	ug/L	0.50	1	01/25/13 10:33	02/01/13 16:58	7440-38-2	
Barium, Dissolved	**14.0**	ug/L	0.30	1	01/25/13 10:33	02/01/13 16:58	7440-39-3	
Beryllium, Dissolved	**0.78**	ug/L	0.20	1	01/25/13 10:33	01/28/13 19:05	7440-41-7	
Cadmium, Dissolved	**0.22**	ug/L	0.080	1	01/25/13 10:33	02/01/13 16:58	7440-43-9	
Calcium, Dissolved	**302000**	ug/L	400	20	01/25/13 10:33	01/28/13 19:10	7440-70-2	
Chromium, Dissolved	**0.56**	ug/L	0.50	1	01/25/13 10:33	02/01/13 16:58	7440-47-3	
Cobalt, Dissolved	**2.7**	ug/L	0.50	1	01/25/13 10:33	02/01/13 16:58	7440-48-4	
Copper, Dissolved	**2.2**	ug/L	0.50	1	01/25/13 10:33	02/01/13 16:58	7440-50-8	
Iron, Dissolved	**18800**	ug/L	50.0	1	01/25/13 10:33	02/01/13 16:58	7439-89-6	
Lead, Dissolved	**3.6**	ug/L	0.10	1	01/25/13 10:33	02/01/13 16:58	7439-92-1	
Magnesium, Dissolved	**40000**	ug/L	100	20	01/25/13 10:33	02/01/13 17:03	7439-95-4	

This report shall not be reproduced, except in full,
without the written consent of Pace Analytical Services, Inc..

Pace Analytical Services, Inc.
9608 Loiret Blvd.
Lenexa, KS 66219
(913)599-5665

ANALYTICAL RESULTS

Project: JANUARY 2013 RICO WATER SAMPLI
Pace Project No.: 60137200

Sample: DR-10_20130116 **Lab ID: 60137200012** Collected: 01/16/13 14:15 Received: 01/18/13 10:20 Matrix: Water

Parameters	Results	Units	Report Limit	DF	Prepared	Analyzed	CAS No.	Qual
200.8 MET ICPMS, Dissolved	Analytical Method: EPA 200.8 Preparation Method: EPA 200.8							
Manganese, Dissolved	**7140**	ug/L	10.0	20	01/25/13 10:33	02/01/13 17:03	7439-96-5	
Molybdenum, Dissolved	**5.3**	ug/L	0.50	1	01/25/13 10:33	02/01/13 16:58	7439-98-7	
Nickel, Dissolved	**2.6**	ug/L	0.50	1	01/25/13 10:33	02/01/13 16:58	7440-02-0	
Potassium, Dissolved	**5790**	ug/L	20.0	1	01/25/13 10:33	02/01/13 16:58	7440-09-7	
Selenium, Dissolved	**0.85**	ug/L	0.50	1	01/25/13 10:33	02/01/13 16:58	7782-49-2	
Silver, Dissolved	ND	ug/L	0.50	1	01/25/13 10:33	02/01/13 16:58	7440-22-4	
Sodium, Dissolved	**4420**	ug/L	50.0	1	01/25/13 10:33	02/01/13 16:58	7440-23-5	
Thallium, Dissolved	ND	ug/L	0.10	1	01/25/13 10:33	02/01/13 16:58	7440-28-0	
Vanadium, Dissolved	**0.70**	ug/L	0.10	1	01/25/13 10:33	02/01/13 16:58	7440-62-2	
Zinc, Dissolved	**308**	ug/L	5.0	1	01/25/13 10:33	02/01/13 16:58	7440-66-6	
200.8 Potentially Diss. Metals	Analytical Method: EPA 200.8 Preparation Method: EPA 200.8							
Aluminum, Dissolved	**3370**	ug/L	50.0	1	01/23/13 11:30	01/25/13 13:49	7429-90-5	
Antimony, Dissolved	**0.20J**	ug/L	1.0	1	01/23/13 11:30	01/25/13 13:49	7440-36-0	
Arsenic, Dissolved	**89.7**	ug/L	1.0	1	01/23/13 11:30	01/25/13 13:49	7440-38-2	
Barium, Dissolved	**30.5**	ug/L	1.0	1	01/23/13 11:30	01/25/13 13:49	7440-39-3	
Beryllium, Dissolved	**0.95**	ug/L	0.50	1	01/23/13 11:30	01/25/13 13:49	7440-41-7	
Cadmium, Dissolved	**4.6**	ug/L	0.50	1	01/23/13 11:30	01/25/13 13:49	7440-43-9	
Chromium, Dissolved	**4.1**	ug/L	1.0	1	01/23/13 11:30	01/25/13 13:49	7440-47-3	B
Cobalt, Dissolved	**4.9**	ug/L	1.0	1	01/23/13 11:30	01/25/13 13:49	7440-48-4	
Copper, Dissolved	**31.0**	ug/L	1.0	1	01/23/13 11:30	01/25/13 13:49	7440-50-8	
Iron, Dissolved	**27600**	ug/L	50.0	1	01/23/13 11:30	01/25/13 13:49	7439-89-6	
Lead, Dissolved	**49.0**	ug/L	1.0	1	01/23/13 11:30	01/25/13 13:49	7439-92-1	
Manganese, Dissolved	**7340**	ug/L	100	100	01/23/13 11:30	01/25/13 15:12	7439-96-5	
Molybdenum, Dissolved	**4.5**	ug/L	1.0	1	01/23/13 11:30	01/25/13 13:49	7439-98-7	
Nickel, Dissolved	**4.4**	ug/L	1.0	1	01/23/13 11:30	01/25/13 13:49	7440-02-0	
Selenium, Dissolved	**1.3**	ug/L	1.0	1	01/23/13 11:30	01/25/13 13:49	7782-49-2	
Silver, Dissolved	**0.075J**	ug/L	0.50	1	01/23/13 11:30	01/25/13 13:49	7440-22-4	
Thallium, Dissolved	**0.056J**	ug/L	1.0	1	01/23/13 11:30	01/25/13 13:49	7440-28-0	
Vanadium, Dissolved	**7.5**	ug/L	1.0	1	01/23/13 11:30	01/25/13 13:49	7440-62-2	
Zinc, Dissolved	**1320**	ug/L	10.0	1	01/23/13 11:30	01/25/13 13:49	7440-66-6	
245.1 Mercury	Analytical Method: EPA 245.1 Preparation Method: EPA 245.1							
Mercury	ND	ug/L	0.20	1	02/05/13 12:02	02/05/13 21:33	7439-97-6	
245.1 Mercury, Dissolved	Analytical Method: EPA 245.1 Preparation Method: EPA 245.1							
Mercury, Dissolved	ND	ug/L	0.20	1	01/31/13 09:37	01/31/13 16:41	7439-97-6	
245.1 Potentially Diss Mercury	Analytical Method: EPA 245.1 Preparation Method: EPA 245.1							
Mercury, Dissolved	ND	ug/L	0.20	1	01/29/13 10:30	01/29/13 15:35	7439-97-6	
2510B Specific Conductance	Analytical Method: SM 2510B							
Specific Conductance	**1430**	umhos/cm	10.0	1		01/25/13 12:26		
Salinity	Analytical Method: Calculated							
Salinity (as dissolved solids)	**913**	mg/L	6.0	1		01/25/13 14:35		

This report shall not be reproduced, except in full,
without the written consent of Pace Analytical Services, Inc..

Pace Analytical Services, Inc.
9608 Loiret Blvd.
Lenexa, KS 66219
(913)599-5665

ANALYTICAL RESULTS

Project: JANUARY 2013 RICO WATER SAMPLI
Pace Project No.: 60137200

Sample: DR-10_20130116 **Lab ID: 60137200012** Collected: 01/16/13 14:15 Received: 01/18/13 10:20 Matrix: Water

Parameters	Results	Units	Report Limit	DF	Prepared	Analyzed	CAS No.	Qual
Salinity	Analytical Method: Calculated							
Salinity (as seawater)	**0.71**	PSU	0.010	1		01/25/13 14:35		
2320B Alkalinity	Analytical Method: SM 2320B							
Alkalinity,Bicarbonate (CaCO3)	**153**	mg/L	20.0	1		01/23/13 09:47		
Alkalinity, Carbonate (CaCO3)	ND	mg/L	20.0	1		01/23/13 09:47		
Alkalinity, Total as CaCO3	**153**	mg/L	20.0	1		01/23/13 09:47		
2540C Total Dissolved Solids	Analytical Method: SM 2540C							
Total Dissolved Solids	**1260**	mg/L	5.0	1		01/23/13 15:25		
2540D Total Suspended Solids	Analytical Method: SM 2540D							
Total Suspended Solids	**322**	mg/L	5.0	1		01/22/13 16:10		
4500S2D Sulfide, Total	Analytical Method: SM 4500-S-2 D							
Sulfide, Total	ND	mg/L	0.050	1		01/22/13 14:33	18496-25-8	
300.0 IC Anions 28 Days	Analytical Method: EPA 300.0							
Chloride	**1.1**	mg/L	1.0	1		01/28/13 00:38	16887-00-6	
Sulfate	**765**	mg/L	50.0	50		01/28/13 00:56	14808-79-8	
353.2 Nitrogen, NO2/NO3 pres.	Analytical Method: EPA 353.2							
Nitrogen, NO2 plus NO3	ND	mg/L	0.10	1		01/23/13 11:59		
4500CNE Cyanide, Total	Analytical Method: SM 4500-CN-E							
Cyanide	**0.0051**	mg/L	0.0050	1		01/23/13 15:18	57-12-5	
5310C TOC	Analytical Method: SM 5310C							
Total Organic Carbon	**1.4**	mg/L	1.0	1		01/25/13 17:37	7440-44-0	

This report shall not be reproduced, except in full,
without the written consent of Pace Analytical Services, Inc..

Pace Analytical Services, Inc.
9608 Loiret Blvd.
Lenexa, KS 66219
(913)599-5665

ANALYTICAL RESULTS

Project: JANUARY 2013 RICO WATER SAMPLI
Pace Project No.: 60137200

Sample: MW-6 SHALLOW_20130116 **Lab ID: 60137200013** Collected: 01/16/13 14:14 Received: 01/18/13 10:20 Matrix: Water

Parameters	Results	Units	Report Limit	DF	Prepared	Analyzed	CAS No.	Qual
200.7 Potentially Diss. Metals	Analytical Method: EPA 200.7 Preparation Method: EPA 200.7							
Calcium, Dissolved	**414000**	ug/L	500	5	01/28/13 11:45	01/29/13 18:05	7440-70-2	
Magnesium, Dissolved	**63000**	ug/L	250	5	01/28/13 11:45	01/29/13 18:05	7439-95-4	
Potassium, Dissolved	**12900**	ug/L	2500	5	01/28/13 11:45	01/29/13 18:05	7440-09-7	
Sodium, Dissolved	**4140**	ug/L	2500	5	01/28/13 11:45	01/29/13 18:05	7440-23-5	
200.8 MET ICPMS	Analytical Method: EPA 200.8 Preparation Method: EPA 200.8							
Aluminum	**56800**	ug/L	20.0	5	01/25/13 10:27	01/30/13 03:23	7429-90-5	
Antimony	ND	ug/L	2.5	5	01/25/13 10:27	01/30/13 03:23	7440-36-0	D3
Arsenic	**216**	ug/L	2.5	5	01/25/13 10:27	01/30/13 03:23	7440-38-2	
Barium	**402**	ug/L	1.5	5	01/25/13 10:27	01/30/13 03:23	7440-39-3	
Beryllium	**3.9**	ug/L	1.0	5	01/25/13 10:27	01/30/13 03:23	7440-41-7	
Cadmium	**67.3**	ug/L	0.40	5	01/25/13 10:27	01/30/13 03:23	7440-43-9	
Calcium	**394000**	ug/L	500	25	01/25/13 10:27	01/30/13 03:29	7440-70-2	
Chromium	**58.2**	ug/L	2.5	5	01/25/13 10:27	01/30/13 03:23	7440-47-3	
Cobalt	**38.6**	ug/L	2.5	5	01/25/13 10:27	01/30/13 03:23	7440-48-4	
Copper	**364**	ug/L	2.5	5	01/25/13 10:27	01/30/13 03:23	7440-50-8	
Iron	**134000**	ug/L	1250	25	01/25/13 10:27	01/30/13 03:29	7439-89-6	
Lead	**664**	ug/L	0.50	5	01/25/13 10:27	01/30/13 03:23	7439-92-1	
Magnesium	**75200**	ug/L	25.0	5	01/25/13 10:27	01/30/13 03:23	7439-95-4	
Manganese	**8580**	ug/L	12.5	25	01/25/13 10:27	01/30/13 03:29	7439-96-5	
Molybdenum	**15.9**	ug/L	2.5	5	01/25/13 10:27	01/30/13 03:23	7439-98-7	
Nickel	**79.2**	ug/L	2.5	5	01/25/13 10:27	01/30/13 03:23	7440-02-0	
Potassium	**17300**	ug/L	100	5	01/25/13 10:27	01/30/13 03:23	7440-09-7	
Selenium	**14.5**	ug/L	2.5	5	01/25/13 10:27	01/30/13 03:23	7782-49-2	
Silica	**159000**	ug/L	10700	200	01/25/13 10:27	01/30/13 03:35	7631-86-9	
Silver	**2.7**	ug/L	2.5	5	01/25/13 10:27	01/30/13 03:23	7440-22-4	
Sodium	**4110**	ug/L	250	5	01/25/13 10:27	01/30/13 03:23	7440-23-5	
Thallium	**1.6**	ug/L	0.50	5	01/25/13 10:27	01/30/13 03:23	7440-28-0	
Total Hardness by 2340B	**1290000**	ug/L	1780	25	01/25/13 10:27	01/30/13 03:29		
Vanadium	**73.4**	ug/L	0.50	5	01/25/13 10:27	01/30/13 03:23	7440-62-2	
Zinc	**9570**	ug/L	125	25	01/25/13 10:27	01/30/13 03:29	7440-66-6	
200.8 MET ICPMS, Dissolved	Analytical Method: EPA 200.8 Preparation Method: EPA 200.8							
Aluminum, Dissolved	**933**	ug/L	4.0	1	01/25/13 10:33	02/01/13 16:20	7429-90-5	
Antimony, Dissolved	ND	ug/L	0.50	1	01/25/13 10:33	02/01/13 16:20	7440-36-0	
Arsenic, Dissolved	**43.2**	ug/L	0.50	1	01/25/13 10:33	02/01/13 16:20	7440-38-2	
Barium, Dissolved	**17.5**	ug/L	0.30	1	01/25/13 10:33	02/01/13 16:20	7440-39-3	
Beryllium, Dissolved	**1.1**	ug/L	0.20	1	01/25/13 10:33	01/28/13 19:15	7440-41-7	
Cadmium, Dissolved	**0.33**	ug/L	0.080	1	01/25/13 10:33	02/01/13 16:20	7440-43-9	
Calcium, Dissolved	**430000**	ug/L	400	20	01/25/13 10:33	01/28/13 19:35	7440-70-2	
Chromium, Dissolved	ND	ug/L	0.50	1	01/25/13 10:33	02/01/13 16:20	7440-47-3	
Cobalt, Dissolved	**3.9**	ug/L	0.50	1	01/25/13 10:33	02/01/13 16:20	7440-48-4	
Copper, Dissolved	**2.1**	ug/L	0.50	1	01/25/13 10:33	02/01/13 16:20	7440-50-8	
Iron, Dissolved	**57000**	ug/L	1000	20	01/25/13 10:33	02/01/13 16:24	7439-89-6	
Lead, Dissolved	**2.4**	ug/L	0.10	1	01/25/13 10:33	02/01/13 16:20	7439-92-1	
Magnesium, Dissolved	**57000**	ug/L	100	20	01/25/13 10:33	02/01/13 16:24	7439-95-4	

This report shall not be reproduced, except in full,
without the written consent of Pace Analytical Services, Inc..

Pace Analytical Services, Inc.
9608 Loiret Blvd.
Lenexa, KS 66219
(913)599-5665

ANALYTICAL RESULTS

Project: JANUARY 2013 RICO WATER SAMPLI
Pace Project No.: 60137200

Sample: MW-6 SHALLOW_20130116 **Lab ID: 60137200013** Collected: 01/16/13 14:14 Received: 01/18/13 10:20 Matrix: Water

Parameters	Results	Units	Report Limit	DF	Prepared	Analyzed	CAS No.	Qual
200.8 MET ICPMS, Dissolved	Analytical Method: EPA 200.8 Preparation Method: EPA 200.8							
Manganese, Dissolved	**8290**	ug/L	10.0	20	01/25/13 10:33	02/01/13 16:24	7439-96-5	
Molybdenum, Dissolved	**4.5**	ug/L	0.50	1	01/25/13 10:33	02/01/13 16:20	7439-98-7	
Nickel, Dissolved	**2.8**	ug/L	0.50	1	01/25/13 10:33	02/01/13 16:20	7440-02-0	
Potassium, Dissolved	**11400**	ug/L	20.0	1	01/25/13 10:33	02/01/13 16:20	7440-09-7	
Selenium, Dissolved	ND	ug/L	0.50	1	01/25/13 10:33	02/01/13 16:20	7782-49-2	
Silver, Dissolved	ND	ug/L	0.50	1	01/25/13 10:33	02/01/13 16:20	7440-22-4	
Sodium, Dissolved	**4000**	ug/L	50.0	1	01/25/13 10:33	02/01/13 16:20	7440-23-5	
Thallium, Dissolved	ND	ug/L	0.10	1	01/25/13 10:33	02/01/13 16:20	7440-28-0	
Vanadium, Dissolved	**0.38**	ug/L	0.10	1	01/25/13 10:33	02/01/13 16:20	7440-62-2	
Zinc, Dissolved	**688**	ug/L	100	20	01/25/13 10:33	02/01/13 16:24	7440-66-6	
200.8 Potentially Diss. Metals	Analytical Method: EPA 200.8 Preparation Method: EPA 200.8							
Aluminum, Dissolved	**20400**	ug/L	50.0	1	01/23/13 11:30	01/25/13 13:53	7429-90-5	
Antimony, Dissolved	**0.20J**	ug/L	1.0	1	01/23/13 11:30	01/25/13 13:53	7440-36-0	
Arsenic, Dissolved	**128**	ug/L	1.0	1	01/23/13 11:30	01/25/13 13:53	7440-38-2	
Barium, Dissolved	**30.8**	ug/L	1.0	1	01/23/13 11:30	01/25/13 13:53	7440-39-3	
Beryllium, Dissolved	**2.4**	ug/L	0.50	1	01/23/13 11:30	01/25/13 13:53	7440-41-7	
Cadmium, Dissolved	**61.3**	ug/L	0.50	1	01/23/13 11:30	01/25/13 13:53	7440-43-9	
Chromium, Dissolved	**15.4**	ug/L	1.0	1	01/23/13 11:30	01/25/13 13:53	7440-47-3	
Cobalt, Dissolved	**24.5**	ug/L	1.0	1	01/23/13 11:30	01/25/13 13:53	7440-48-4	
Copper, Dissolved	**192**	ug/L	1.0	1	01/23/13 11:30	01/25/13 13:53	7440-50-8	
Iron, Dissolved	**88200**	ug/L	50.0	1	01/23/13 11:30	01/25/13 13:53	7439-89-6	
Lead, Dissolved	**635**	ug/L	1.0	1	01/23/13 11:30	01/25/13 13:53	7439-92-1	
Manganese, Dissolved	**8880**	ug/L	100	100	01/23/13 11:30	01/25/13 15:16	7439-96-5	
Molybdenum, Dissolved	**3.4**	ug/L	1.0	1	01/23/13 11:30	01/25/13 13:53	7439-98-7	
Nickel, Dissolved	**33.8**	ug/L	1.0	1	01/23/13 11:30	01/25/13 13:53	7440-02-0	
Selenium, Dissolved	**4.0**	ug/L	1.0	1	01/23/13 11:30	01/25/13 13:53	7782-49-2	
Silver, Dissolved	ND	ug/L	0.50	1	01/23/13 11:30	01/25/13 13:53	7440-22-4	
Thallium, Dissolved	**0.62J**	ug/L	1.0	1	01/23/13 11:30	01/25/13 13:53	7440-28-0	
Vanadium, Dissolved	**21.2**	ug/L	1.0	1	01/23/13 11:30	01/25/13 13:53	7440-62-2	
Zinc, Dissolved	**8310**	ug/L	10.0	1	01/23/13 11:30	01/25/13 13:53	7440-66-6	
245.1 Mercury	Analytical Method: EPA 245.1 Preparation Method: EPA 245.1							
Mercury	ND	ug/L	0.20	1	02/05/13 12:02	02/05/13 21:36	7439-97-6	
245.1 Mercury, Dissolved	Analytical Method: EPA 245.1 Preparation Method: EPA 245.1							
Mercury, Dissolved	ND	ug/L	0.20	1	01/31/13 09:37	01/31/13 16:43	7439-97-6	
245.1 Potentially Diss Mercury	Analytical Method: EPA 245.1 Preparation Method: EPA 245.1							
Mercury, Dissolved	ND	ug/L	0.20	1	01/29/13 10:30	01/29/13 15:44	7439-97-6	
2510B Specific Conductance	Analytical Method: SM 2510B							
Specific Conductance	**2010**	umhos/cm	10.0	1		01/25/13 12:27		
Salinity	Analytical Method: Calculated							
Salinity (as dissolved solids)	**1280**	mg/L	6.0	1		01/25/13 14:35		

This report shall not be reproduced, except in full,
without the written consent of Pace Analytical Services, Inc..

Pace Analytical Services, Inc.
9608 Loiret Blvd.
Lenexa, KS 66219
(913)599-5665

ANALYTICAL RESULTS

Project: JANUARY 2013 RICO WATER SAMPLI
Pace Project No.: 60137200

Sample: MW-6 SHALLOW_20130116 **Lab ID: 60137200013** Collected: 01/16/13 14:14 Received: 01/18/13 10:20 Matrix: Water

Parameters	Results	Units	Report Limit	DF	Prepared	Analyzed	CAS No.	Qual
Salinity	Analytical Method: Calculated							
Salinity (as seawater)	**1.0**	PSU	0.010	1		01/25/13 14:35		
2320B Alkalinity	Analytical Method: SM 2320B							
Alkalinity,Bicarbonate (CaCO3)	**128**	mg/L	20.0	1		01/23/13 09:53		
Alkalinity, Carbonate (CaCO3)	ND	mg/L	20.0	1		01/23/13 09:53		
Alkalinity, Total as CaCO3	**128**	mg/L	20.0	1		01/23/13 09:53		
2540C Total Dissolved Solids	Analytical Method: SM 2540C							
Total Dissolved Solids	**2060**	mg/L	5.0	1		01/23/13 15:25		
2540D Total Suspended Solids	Analytical Method: SM 2540D							
Total Suspended Solids	**757**	mg/L	5.0	1		01/22/13 16:11		
4500S2D Sulfide, Total	Analytical Method: SM 4500-S-2 D							
Sulfide, Total	ND	mg/L	0.050	1		01/22/13 14:33	18496-25-8	
300.0 IC Anions 28 Days	Analytical Method: EPA 300.0							
Chloride	**1.5**	mg/L	1.0	1		01/28/13 13:38	16887-00-6	
Sulfate	**1260**	mg/L	100	100		01/28/13 13:56	14808-79-8	
353.2 Nitrogen, NO2/NO3 pres.	Analytical Method: EPA 353.2							
Nitrogen, NO2 plus NO3	ND	mg/L	0.10	1		01/23/13 12:00		
4500CNE Cyanide, Total	Analytical Method: SM 4500-CN-E							
Cyanide	ND	mg/L	0.0050	1		01/23/13 15:21	57-12-5	
5310C TOC	Analytical Method: SM 5310C							
Total Organic Carbon	**1.9**	mg/L	1.0	1		01/25/13 17:51	7440-44-0	

This report shall not be reproduced, except in full,
without the written consent of Pace Analytical Services, Inc..

Pace Analytical Services, Inc.
9608 Loiret Blvd.
Lenexa, KS 66219
(913)599-5665

ANALYTICAL RESULTS

Project: JANUARY 2013 RICO WATER SAMPLI
Pace Project No.: 60137200

Sample: EB-2_20130116 **Lab ID: 60137200014** Collected: 01/16/13 14:25 Received: 01/18/13 10:20 Matrix: Water

Parameters	Results	Units	Report Limit	DF	Prepared	Analyzed	CAS No.	Qual
200.7 Potentially Diss. Metals	Analytical Method: EPA 200.7 Preparation Method: EPA 200.7							
Calcium, Dissolved	**335000**	ug/L	500	5	01/28/13 11:45	01/29/13 18:07	7440-70-2	
Magnesium, Dissolved	**149000**	ug/L	250	5	01/28/13 11:45	01/29/13 18:07	7439-95-4	
Potassium, Dissolved	**14100**	ug/L	2500	5	01/28/13 11:45	01/29/13 18:07	7440-09-7	
Sodium, Dissolved	**6400**	ug/L	2500	5	01/28/13 11:45	01/29/13 18:07	7440-23-5	
200.8 MET ICPMS	Analytical Method: EPA 200.8 Preparation Method: EPA 200.8							
Aluminum	**28600**	ug/L	20.0	5	01/25/13 10:27	01/30/13 03:39	7429-90-5	
Antimony	ND	ug/L	2.5	5	01/25/13 10:27	01/30/13 03:39	7440-36-0	D3
Arsenic	**442**	ug/L	2.5	5	01/25/13 10:27	01/30/13 03:39	7440-38-2	
Barium	**107**	ug/L	1.5	5	01/25/13 10:27	01/30/13 03:39	7440-39-3	
Beryllium	**8.5**	ug/L	1.0	5	01/25/13 10:27	01/30/13 03:39	7440-41-7	
Cadmium	**11.4**	ug/L	0.40	5	01/25/13 10:27	01/30/13 03:39	7440-43-9	
Calcium	**326000**	ug/L	500	25	01/25/13 10:27	01/30/13 03:45	7440-70-2	
Chromium	**6.1**	ug/L	2.5	5	01/25/13 10:27	01/30/13 03:39	7440-47-3	
Cobalt	**91.0**	ug/L	2.5	5	01/25/13 10:27	01/30/13 03:39	7440-48-4	
Copper	**212**	ug/L	2.5	5	01/25/13 10:27	01/30/13 03:39	7440-50-8	
Iron	**645000**	ug/L	10000	200	01/25/13 10:27	01/30/13 03:50	7439-89-6	
Lead	**1560**	ug/L	0.50	5	01/25/13 10:27	01/30/13 03:39	7439-92-1	
Magnesium	**141000**	ug/L	125	25	01/25/13 10:27	01/30/13 03:45	7439-95-4	
Manganese	**33000**	ug/L	100	200	01/25/13 10:27	01/30/13 03:50	7439-96-5	
Molybdenum	**7.7**	ug/L	2.5	5	01/25/13 10:27	01/30/13 03:39	7439-98-7	
Nickel	**140**	ug/L	2.5	5	01/25/13 10:27	01/30/13 03:39	7440-02-0	
Potassium	**14700**	ug/L	100	5	01/25/13 10:27	01/30/13 03:39	7440-09-7	
Selenium	**6.8**	ug/L	2.5	5	01/25/13 10:27	01/30/13 03:39	7782-49-2	
Silica	**88600**	ug/L	1340	25	01/25/13 10:27	01/30/13 03:45	7631-86-9	
Silver	**7.2**	ug/L	2.5	5	01/25/13 10:27	01/30/13 03:39	7440-22-4	
Sodium	**6400**	ug/L	250	5	01/25/13 10:27	01/30/13 03:39	7440-23-5	
Thallium	ND	ug/L	0.50	5	01/25/13 10:27	01/30/13 03:39	7440-28-0	D3
Total Hardness by 2340B	**1390000**	ug/L	1780	25	01/25/13 10:27	01/30/13 03:45		
Vanadium	**8.4**	ug/L	0.50	5	01/25/13 10:27	01/30/13 03:39	7440-62-2	
Zinc	**67200**	ug/L	1000	200	01/25/13 10:27	01/30/13 03:50	7440-66-6	
200.8 MET ICPMS, Dissolved	Analytical Method: EPA 200.8 Preparation Method: EPA 200.8							
Aluminum, Dissolved	**22400**	ug/L	20.0	5	01/25/13 10:33	02/01/13 12:36	7429-90-5	
Antimony, Dissolved	ND	ug/L	2.5	5	01/25/13 10:33	02/01/13 12:36	7440-36-0	D3
Arsenic, Dissolved	**389**	ug/L	2.5	5	01/25/13 10:33	02/01/13 12:36	7440-38-2	
Barium, Dissolved	**37.0**	ug/L	1.5	5	01/25/13 10:33	02/01/13 12:36	7440-39-3	
Beryllium, Dissolved	**9.1**	ug/L	1.0	5	01/25/13 10:33	01/28/13 19:39	7440-41-7	
Cadmium, Dissolved	**4.2**	ug/L	0.40	5	01/25/13 10:33	02/01/13 12:36	7440-43-9	
Calcium, Dissolved	**382000**	ug/L	1000	50	01/25/13 10:33	01/28/13 19:49	7440-70-2	
Chromium, Dissolved	ND	ug/L	2.5	5	01/25/13 10:33	02/01/13 12:36	7440-47-3	D3
Cobalt, Dissolved	**103**	ug/L	2.5	5	01/25/13 10:33	02/01/13 12:36	7440-48-4	
Copper, Dissolved	**68.2**	ug/L	2.5	5	01/25/13 10:33	02/01/13 12:36	7440-50-8	
Iron, Dissolved	**630000**	ug/L	2500	50	01/25/13 10:33	02/01/13 12:42	7439-89-6	
Lead, Dissolved	**534**	ug/L	0.50	5	01/25/13 10:33	02/01/13 12:36	7439-92-1	
Magnesium, Dissolved	**151000**	ug/L	250	50	01/25/13 10:33	02/01/13 12:42	7439-95-4	

This report shall not be reproduced, except in full,
without the written consent of Pace Analytical Services, Inc..

Pace Analytical Services, Inc.
9608 Loiret Blvd.
Lenexa, KS 66219
(913)599-5665

ANALYTICAL RESULTS

Project: JANUARY 2013 RICO WATER SAMPLI
Pace Project No.: 60137200

Sample: EB-2_20130116 **Lab ID: 60137200014** Collected: 01/16/13 14:25 Received: 01/18/13 10:20 Matrix: Water

Parameters	Results	Units	Report Limit	DF	Prepared	Analyzed	CAS No.	Qual
200.8 MET ICPMS, Dissolved	Analytical Method: EPA 200.8 Preparation Method: EPA 200.8							
Manganese, Dissolved	**33900**	ug/L	250	500	01/25/13 10:33	02/01/13 12:46	7439-96-5	
Molybdenum, Dissolved	**5.0**	ug/L	2.5	5	01/25/13 10:33	02/01/13 12:36	7439-98-7	
Nickel, Dissolved	**151**	ug/L	2.5	5	01/25/13 10:33	02/01/13 12:36	7440-02-0	
Potassium, Dissolved	**15500**	ug/L	100	5	01/25/13 10:33	02/01/13 12:36	7440-09-7	
Selenium, Dissolved	**3.7**	ug/L	2.5	5	01/25/13 10:33	02/01/13 12:36	7782-49-2	
Silver, Dissolved	ND	ug/L	2.5	5	01/25/13 10:33	02/01/13 12:36	7440-22-4	D3
Sodium, Dissolved	**7330**	ug/L	250	5	01/25/13 10:33	02/01/13 12:36	7440-23-5	
Thallium, Dissolved	ND	ug/L	0.50	5	01/25/13 10:33	02/01/13 12:36	7440-28-0	D3
Vanadium, Dissolved	**2.6**	ug/L	0.50	5	01/25/13 10:33	02/01/13 12:36	7440-62-2	
Zinc, Dissolved	**65300**	ug/L	2500	500	01/25/13 10:33	02/01/13 12:46	7440-66-6	
200.8 Potentially Diss. Metals	Analytical Method: EPA 200.8 Preparation Method: EPA 200.8							
Aluminum, Dissolved	**19400**	ug/L	50.0	1	01/23/13 11:30	01/25/13 14:14	7429-90-5	
Antimony, Dissolved	**0.54J**	ug/L	1.0	1	01/23/13 11:30	01/25/13 14:14	7440-36-0	
Arsenic, Dissolved	**391**	ug/L	1.0	1	01/23/13 11:30	01/25/13 14:14	7440-38-2	
Barium, Dissolved	**13.9**	ug/L	1.0	1	01/23/13 11:30	01/25/13 14:14	7440-39-3	
Beryllium, Dissolved	**6.7**	ug/L	0.50	1	01/23/13 11:30	01/25/13 14:14	7440-41-7	
Cadmium, Dissolved	**5.5**	ug/L	0.50	1	01/23/13 11:30	01/25/13 14:14	7440-43-9	
Chromium, Dissolved	**2.4**	ug/L	1.0	1	01/23/13 11:30	01/25/13 14:14	7440-47-3	B
Cobalt, Dissolved	**88.0**	ug/L	1.0	1	01/23/13 11:30	01/25/13 14:14	7440-48-4	
Copper, Dissolved	**109**	ug/L	1.0	1	01/23/13 11:30	01/25/13 14:14	7440-50-8	
Iron, Dissolved	**627000**	ug/L	10000	200	01/23/13 11:30	01/25/13 15:20	7439-89-6	
Lead, Dissolved	**1230**	ug/L	1.0	1	01/23/13 11:30	01/25/13 14:14	7439-92-1	
Manganese, Dissolved	**33500**	ug/L	200	200	01/23/13 11:30	01/25/13 15:20	7439-96-5	
Molybdenum, Dissolved	**2.6**	ug/L	1.0	1	01/23/13 11:30	01/25/13 14:14	7439-98-7	
Nickel, Dissolved	**126**	ug/L	1.0	1	01/23/13 11:30	01/25/13 14:14	7440-02-0	
Selenium, Dissolved	**3.3**	ug/L	1.0	1	01/23/13 11:30	01/25/13 14:14	7782-49-2	
Silver, Dissolved	ND	ug/L	0.50	1	01/23/13 11:30	01/25/13 14:14	7440-22-4	
Thallium, Dissolved	**0.16J**	ug/L	1.0	1	01/23/13 11:30	01/25/13 14:14	7440-28-0	
Vanadium, Dissolved	**2.8**	ug/L	1.0	1	01/23/13 11:30	01/25/13 14:14	7440-62-2	
Zinc, Dissolved	**68200**	ug/L	2000	200	01/23/13 11:30	01/25/13 15:20	7440-66-6	
245.1 Mercury	Analytical Method: EPA 245.1 Preparation Method: EPA 245.1							
Mercury	ND	ug/L	0.20	1	02/05/13 12:02	02/05/13 21:38	7439-97-6	
245.1 Mercury, Dissolved	Analytical Method: EPA 245.1 Preparation Method: EPA 245.1							
Mercury, Dissolved	ND	ug/L	0.20	1	01/31/13 09:37	01/31/13 16:46	7439-97-6	
245.1 Potentially Diss Mercury	Analytical Method: EPA 245.1 Preparation Method: EPA 245.1							
Mercury, Dissolved	ND	ug/L	0.20	1	01/29/13 10:30	01/29/13 15:46	7439-97-6	
2510B Specific Conductance	Analytical Method: SM 2510B							
Specific Conductance	**3750**	umhos/cm	10.0	1		01/25/13 12:28		
Salinity	Analytical Method: Calculated							
Salinity (as dissolved solids)	**2400**	mg/L	6.0	1		01/25/13 14:35		

This report shall not be reproduced, except in full,
without the written consent of Pace Analytical Services, Inc..

Pace Analytical Services, Inc.
9608 Loiret Blvd.
Lenexa, KS 66219
(913)599-5665

ANALYTICAL RESULTS

Project: JANUARY 2013 RICO WATER SAMPLI
Pace Project No.: 60137200

Sample: EB-2_20130116 **Lab ID: 60137200014** Collected: 01/16/13 14:25 Received: 01/18/13 10:20 Matrix: Water

Parameters	Results	Units	Report Limit	DF	Prepared	Analyzed	CAS No.	Qual
Salinity	Analytical Method: Calculated							
Salinity (as seawater)	**2.0**	PSU	0.010	1		01/25/13 14:35		
2320B Alkalinity	Analytical Method: SM 2320B							
Alkalinity,Bicarbonate (CaCO3)	**42.0**	mg/L	20.0	1		01/23/13 10:11		
Alkalinity, Carbonate (CaCO3)	ND	mg/L	20.0	1		01/23/13 10:11		
Alkalinity, Total as CaCO3	**42.0**	mg/L	20.0	1		01/23/13 10:11		
2540C Total Dissolved Solids	Analytical Method: SM 2540C							
Total Dissolved Solids	**3560**	mg/L	5.0	1		01/23/13 15:25		
2540D Total Suspended Solids	Analytical Method: SM 2540D							
Total Suspended Solids	**520**	mg/L	5.0	1		01/22/13 16:11		
4500S2D Sulfide, Total	Analytical Method: SM 4500-S-2 D							
Sulfide, Total	ND	mg/L	0.050	1		01/22/13 14:33	18496-25-8	
300.0 IC Anions 28 Days	Analytical Method: EPA 300.0							
Chloride	**2.6**	mg/L	1.0	1		01/29/13 12:13	16887-00-6	
Sulfate	**3480**	mg/L	500	500		01/29/13 12:48	14808-79-8	
353.2 Nitrogen, NO2/NO3 pres.	Analytical Method: EPA 353.2							
Nitrogen, NO2 plus NO3	ND	mg/L	0.10	1		01/23/13 12:01		
4500CNE Cyanide, Total	Analytical Method: SM 4500-CN-E							
Cyanide	**0.0050**	mg/L	0.0050	1		01/23/13 15:21	57-12-5	
5310C TOC	Analytical Method: SM 5310C							
Total Organic Carbon	**1.5**	mg/L	1.0	1		01/25/13 18:05	7440-44-0	

This report shall not be reproduced, except in full,
without the written consent of Pace Analytical Services, Inc..

Pace Analytical Services, Inc.
9608 Loiret Blvd.
Lenexa, KS 66219
(913)599-5665

ANALYTICAL RESULTS

Project: JANUARY 2013 RICO WATER SAMPLI
Pace Project No.: 60137200

Sample: MW-5 DEEP_20130116 **Lab ID: 60137200015** Collected: 01/16/13 15:13 Received: 01/18/13 10:20 Matrix: Water

Parameters	Results	Units	Report Limit	DF	Prepared	Analyzed	CAS No.	Qual
200.7 Potentially Diss. Metals	Analytical Method: EPA 200.7 Preparation Method: EPA 200.7							
Calcium, Dissolved	**311000**	ug/L	500	5	01/28/13 11:45	01/29/13 18:09	7440-70-2	
Magnesium, Dissolved	**50600**	ug/L	250	5	01/28/13 11:45	01/29/13 18:09	7439-95-4	
Potassium, Dissolved	**7700**	ug/L	2500	5	01/28/13 11:45	01/29/13 18:09	7440-09-7	
Sodium, Dissolved	**7040**	ug/L	2500	5	01/28/13 11:45	01/29/13 18:09	7440-23-5	
200.8 MET ICPMS	Analytical Method: EPA 200.8 Preparation Method: EPA 200.8							
Aluminum	**11400**	ug/L	20.0	5	01/25/13 10:27	01/30/13 04:12	7429-90-5	
Antimony	ND	ug/L	2.5	5	01/25/13 10:27	01/30/13 04:12	7440-36-0	D3
Arsenic	**332**	ug/L	2.5	5	01/25/13 10:27	01/30/13 04:12	7440-38-2	
Barium	**196**	ug/L	1.5	5	01/25/13 10:27	01/30/13 04:12	7440-39-3	
Beryllium	**3.6**	ug/L	1.0	5	01/25/13 10:27	01/30/13 04:12	7440-41-7	
Cadmium	**10.9**	ug/L	0.40	5	01/25/13 10:27	01/30/13 04:12	7440-43-9	
Calcium	**296000**	ug/L	500	25	01/25/13 10:27	01/30/13 04:18	7440-70-2	
Chromium	**12.2**	ug/L	2.5	5	01/25/13 10:27	01/30/13 04:12	7440-47-3	
Cobalt	**14.0**	ug/L	2.5	5	01/25/13 10:27	01/30/13 04:12	7440-48-4	
Copper	**225**	ug/L	2.5	5	01/25/13 10:27	01/30/13 04:12	7440-50-8	
Iron	**134000**	ug/L	1250	25	01/25/13 10:27	01/30/13 04:18	7439-89-6	
Lead	**1560**	ug/L	0.50	5	01/25/13 10:27	01/30/13 04:12	7439-92-1	
Magnesium	**47700**	ug/L	25.0	5	01/25/13 10:27	01/30/13 04:12	7439-95-4	
Manganese	**9230**	ug/L	12.5	25	01/25/13 10:27	01/30/13 04:18	7439-96-5	
Molybdenum	**28.7**	ug/L	2.5	5	01/25/13 10:27	01/30/13 04:12	7439-98-7	
Nickel	**19.8**	ug/L	2.5	5	01/25/13 10:27	01/30/13 04:12	7440-02-0	
Potassium	**9080**	ug/L	100	5	01/25/13 10:27	01/30/13 04:12	7440-09-7	
Selenium	**4.3**	ug/L	2.5	5	01/25/13 10:27	01/30/13 04:12	7782-49-2	
Silica	**58100**	ug/L	1340	25	01/25/13 10:27	01/30/13 04:18	7631-86-9	
Silver	**5.8**	ug/L	2.5	5	01/25/13 10:27	01/30/13 04:12	7440-22-4	
Sodium	**6960**	ug/L	250	5	01/25/13 10:27	01/30/13 04:12	7440-23-5	
Thallium	**0.58**	ug/L	0.50	5	01/25/13 10:27	01/30/13 04:12	7440-28-0	
Total Hardness by 2340B	**935000**	ug/L	1780	25	01/25/13 10:27	01/30/13 04:18		
Vanadium	**22.6**	ug/L	0.50	5	01/25/13 10:27	01/30/13 04:12	7440-62-2	
Zinc	**9260**	ug/L	125	25	01/25/13 10:27	01/30/13 04:18	7440-66-6	
200.8 MET ICPMS, Dissolved	Analytical Method: EPA 200.8 Preparation Method: EPA 200.8							
Aluminum, Dissolved	**7040**	ug/L	20.0	5	01/25/13 10:33	02/01/13 12:51	7429-90-5	
Antimony, Dissolved	ND	ug/L	2.5	5	01/25/13 10:33	02/01/13 12:51	7440-36-0	D3
Arsenic, Dissolved	**244**	ug/L	2.5	5	01/25/13 10:33	02/01/13 12:51	7440-38-2	
Barium, Dissolved	**85.2**	ug/L	1.5	5	01/25/13 10:33	02/01/13 12:51	7440-39-3	
Beryllium, Dissolved	**3.2**	ug/L	1.0	5	01/25/13 10:33	01/28/13 19:53	7440-41-7	
Cadmium, Dissolved	**5.7**	ug/L	0.40	5	01/25/13 10:33	02/01/13 12:51	7440-43-9	
Calcium, Dissolved	**342000**	ug/L	400	20	01/25/13 10:33	01/28/13 19:58	7440-70-2	
Chromium, Dissolved	**6.6**	ug/L	2.5	5	01/25/13 10:33	02/01/13 12:51	7440-47-3	
Cobalt, Dissolved	**11.8**	ug/L	2.5	5	01/25/13 10:33	02/01/13 12:51	7440-48-4	
Copper, Dissolved	**114**	ug/L	2.5	5	01/25/13 10:33	02/01/13 12:51	7440-50-8	
Iron, Dissolved	**99400**	ug/L	250	5	01/25/13 10:33	02/01/13 12:51	7439-89-6	
Lead, Dissolved	**871**	ug/L	0.50	5	01/25/13 10:33	02/01/13 12:51	7439-92-1	
Magnesium, Dissolved	**52000**	ug/L	25.0	5	01/25/13 10:33	02/01/13 12:51	7439-95-4	

This report shall not be reproduced, except in full,
without the written consent of Pace Analytical Services, Inc..

Pace Analytical Services, Inc.
9608 Loiret Blvd.
Lenexa, KS 66219
(913)599-5665

ANALYTICAL RESULTS

Project: JANUARY 2013 RICO WATER SAMPLI
Pace Project No.: 60137200

Sample: MW-5 DEEP_20130116 **Lab ID: 60137200015** Collected: 01/16/13 15:13 Received: 01/18/13 10:20 Matrix: Water

Parameters	Results	Units	Report Limit	DF	Prepared	Analyzed	CAS No.	Qual
200.8 MET ICPMS, Dissolved	Analytical Method: EPA 200.8 Preparation Method: EPA 200.8							
Manganese, Dissolved	**9520**	ug/L	25.0	50	01/25/13 10:33	02/01/13 12:56	7439-96-5	
Molybdenum, Dissolved	**19.6**	ug/L	2.5	5	01/25/13 10:33	02/01/13 12:51	7439-98-7	
Nickel, Dissolved	**16.4**	ug/L	2.5	5	01/25/13 10:33	02/01/13 12:51	7440-02-0	
Potassium, Dissolved	**9340**	ug/L	100	5	01/25/13 10:33	02/01/13 12:51	7440-09-7	
Selenium, Dissolved	ND	ug/L	2.5	5	01/25/13 10:33	02/01/13 12:51	7782-49-2	D3
Silver, Dissolved	ND	ug/L	2.5	5	01/25/13 10:33	02/01/13 12:51	7440-22-4	D3
Sodium, Dissolved	**7950**	ug/L	250	5	01/25/13 10:33	02/01/13 12:51	7440-23-5	
Thallium, Dissolved	ND	ug/L	0.50	5	01/25/13 10:33	02/01/13 12:51	7440-28-0	D3
Vanadium, Dissolved	**12.4**	ug/L	0.50	5	01/25/13 10:33	02/01/13 12:51	7440-62-2	
Zinc, Dissolved	**8210**	ug/L	250	50	01/25/13 10:33	02/01/13 12:56	7440-66-6	
200.8 Potentially Diss. Metals	Analytical Method: EPA 200.8 Preparation Method: EPA 200.8							
Aluminum, Dissolved	**4840**	ug/L	50.0	1	01/23/13 11:30	01/25/13 14:18	7429-90-5	
Antimony, Dissolved	**0.19J**	ug/L	1.0	1	01/23/13 11:30	01/25/13 14:18	7440-36-0	
Arsenic, Dissolved	**227**	ug/L	1.0	1	01/23/13 11:30	01/25/13 14:18	7440-38-2	
Barium, Dissolved	**13.9**	ug/L	1.0	1	01/23/13 11:30	01/25/13 14:18	7440-39-3	
Beryllium, Dissolved	**2.8**	ug/L	0.50	1	01/23/13 11:30	01/25/13 14:18	7440-41-7	
Cadmium, Dissolved	**4.4**	ug/L	0.50	1	01/23/13 11:30	01/25/13 14:18	7440-43-9	
Chromium, Dissolved	**5.0**	ug/L	1.0	1	01/23/13 11:30	01/25/13 14:18	7440-47-3	
Cobalt, Dissolved	**10.4**	ug/L	1.0	1	01/23/13 11:30	01/25/13 14:18	7440-48-4	
Copper, Dissolved	**112**	ug/L	1.0	1	01/23/13 11:30	01/25/13 14:18	7440-50-8	
Iron, Dissolved	**69300**	ug/L	50.0	1	01/23/13 11:30	01/25/13 14:18	7439-89-6	
Lead, Dissolved	**1420**	ug/L	1.0	1	01/23/13 11:30	01/25/13 14:18	7439-92-1	
Manganese, Dissolved	**9500**	ug/L	100	100	01/23/13 11:30	01/25/13 15:25	7439-96-5	
Molybdenum, Dissolved	**5.6**	ug/L	1.0	1	01/23/13 11:30	01/25/13 14:18	7439-98-7	
Nickel, Dissolved	**10.9**	ug/L	1.0	1	01/23/13 11:30	01/25/13 14:18	7440-02-0	
Selenium, Dissolved	**2.0**	ug/L	1.0	1	01/23/13 11:30	01/25/13 14:18	7782-49-2	
Silver, Dissolved	ND	ug/L	0.50	1	01/23/13 11:30	01/25/13 14:18	7440-22-4	
Thallium, Dissolved	**0.26J**	ug/L	1.0	1	01/23/13 11:30	01/25/13 14:18	7440-28-0	
Vanadium, Dissolved	**7.5**	ug/L	1.0	1	01/23/13 11:30	01/25/13 14:18	7440-62-2	
Zinc, Dissolved	**8180**	ug/L	10.0	1	01/23/13 11:30	01/25/13 14:18	7440-66-6	
245.1 Mercury	Analytical Method: EPA 245.1 Preparation Method: EPA 245.1							
Mercury	ND	ug/L	0.20	1	02/05/13 12:02	02/05/13 21:41	7439-97-6	
245.1 Mercury, Dissolved	Analytical Method: EPA 245.1 Preparation Method: EPA 245.1							
Mercury, Dissolved	ND	ug/L	0.20	1	01/31/13 09:37	01/31/13 16:48	7439-97-6	
245.1 Potentially Diss Mercury	Analytical Method: EPA 245.1 Preparation Method: EPA 245.1							
Mercury, Dissolved	ND	ug/L	0.20	1	01/29/13 10:30	01/29/13 15:48	7439-97-6	
2510B Specific Conductance	Analytical Method: SM 2510B							
Specific Conductance	**1630**	umhos/cm	10.0	1		01/25/13 12:31		
Salinity	Analytical Method: Calculated							
Salinity (as dissolved solids)	**1040**	mg/L	6.0	1		01/25/13 14:35		

This report shall not be reproduced, except in full,
without the written consent of Pace Analytical Services, Inc..

Pace Analytical Services, Inc.
9608 Loiret Blvd.
Lenexa, KS 66219
(913)599-5665

ANALYTICAL RESULTS

Project: JANUARY 2013 RICO WATER SAMPLI
Pace Project No.: 60137200

Sample: MW-5 DEEP_20130116 **Lab ID: 60137200015** Collected: 01/16/13 15:13 Received: 01/18/13 10:20 Matrix: Water

Parameters	Results	Units	Report Limit	DF	Prepared	Analyzed	CAS No.	Qual
Salinity	Analytical Method: Calculated							
Salinity (as seawater)	**0.82**	PSU	0.010	1		01/25/13 14:35		
2320B Alkalinity	Analytical Method: SM 2320B							
Alkalinity,Bicarbonate (CaCO3)	**116**	mg/L	20.0	1		01/23/13 10:15		
Alkalinity, Carbonate (CaCO3)	ND	mg/L	20.0	1		01/23/13 10:15		
Alkalinity, Total as CaCO3	**116**	mg/L	20.0	1		01/23/13 10:15		
2540C Total Dissolved Solids	Analytical Method: SM 2540C							
Total Dissolved Solids	**1550**	mg/L	5.0	1		01/23/13 15:25		
2540D Total Suspended Solids	Analytical Method: SM 2540D							
Total Suspended Solids	**398**	mg/L	5.0	1		01/22/13 16:11		
4500S2D Sulfide, Total	Analytical Method: SM 4500-S-2 D							
Sulfide, Total	ND	mg/L	0.050	1		01/22/13 14:33	18496-25-8	
300.0 IC Anions 28 Days	Analytical Method: EPA 300.0							
Chloride	**1.2**	mg/L	1.0	1		01/28/13 14:49	16887-00-6	
Sulfate	**994**	mg/L	100	100		01/28/13 15:07	14808-79-8	
353.2 Nitrogen, NO2/NO3 pres.	Analytical Method: EPA 353.2							
Nitrogen, NO2 plus NO3	ND	mg/L	0.10	1		01/23/13 12:02		
4500CNE Cyanide, Total	Analytical Method: SM 4500-CN-E							
Cyanide	**0.0070**	mg/L	0.0050	1		01/23/13 15:22	57-12-5	
5310C TOC	Analytical Method: SM 5310C							
Total Organic Carbon	**1.2**	mg/L	1.0	1		01/25/13 18:20	7440-44-0	

This report shall not be reproduced, except in full,
without the written consent of Pace Analytical Services, Inc..

Pace Analytical Services, Inc.
9608 Loiret Blvd.
Lenexa, KS 66219
(913)599-5665

ANALYTICAL RESULTS

Project: JANUARY 2013 RICO WATER SAMPLI
Pace Project No.: 60137200

Sample: MW-5 SHALLOW_20130116 **Lab ID: 60137200016** Collected: 01/16/13 14:59 Received: 01/18/13 10:20 Matrix: Water

Parameters	Results	Units	Report Limit	DF	Prepared	Analyzed	CAS No.	Qual
200.7 Potentially Diss. Metals	Analytical Method: EPA 200.7 Preparation Method: EPA 200.7							
Calcium, Dissolved	**462000**	ug/L	500	5	01/28/13 11:45	01/29/13 18:12	7440-70-2	
Magnesium, Dissolved	**141000**	ug/L	250	5	01/28/13 11:45	01/29/13 18:12	7439-95-4	
Potassium, Dissolved	**3190**	ug/L	2500	5	01/28/13 11:45	01/29/13 18:12	7440-09-7	
Sodium, Dissolved	**21700**	ug/L	2500	5	01/28/13 11:45	01/29/13 18:12	7440-23-5	
200.8 MET ICPMS	Analytical Method: EPA 200.8 Preparation Method: EPA 200.8							
Aluminum	**65600**	ug/L	20.0	5	01/25/13 10:23	01/31/13 16:44	7429-90-5	
Antimony	**5.4**	ug/L	2.5	5	01/25/13 10:23	01/31/13 16:44	7440-36-0	
Arsenic	**639**	ug/L	2.5	5	01/25/13 10:23	01/31/13 16:44	7440-38-2	
Barium	**206**	ug/L	1.5	5	01/25/13 10:23	01/31/13 16:44	7440-39-3	
Beryllium	**14.4**	ug/L	1.0	5	01/25/13 10:23	01/31/13 16:44	7440-41-7	
Cadmium	**401**	ug/L	0.40	5	01/25/13 10:23	01/31/13 16:44	7440-43-9	
Calcium	**457000**	ug/L	1000	50	01/25/13 10:23	01/31/13 16:49	7440-70-2	
Chromium	**71.8**	ug/L	2.5	5	01/25/13 10:23	01/31/13 16:44	7440-47-3	
Cobalt	**126**	ug/L	2.5	5	01/25/13 10:23	01/31/13 16:44	7440-48-4	
Copper	**5040**	ug/L	25.0	50	01/25/13 10:23	01/31/13 16:49	7440-50-8	
Iron	**814000**	ug/L	2500	50	01/25/13 10:23	01/31/13 16:49	7439-89-6	
Lead	**32700**	ug/L	50.0	500	01/25/13 10:23	01/31/13 16:55	7439-92-1	
Magnesium	**153000**	ug/L	250	50	01/25/13 10:23	01/31/13 16:49	7439-95-4	
Manganese	**29200**	ug/L	250	500	01/25/13 10:23	01/31/13 16:55	7439-96-5	
Molybdenum	**21.3**	ug/L	2.5	5	01/25/13 10:23	01/31/13 16:44	7439-98-7	
Nickel	**225**	ug/L	2.5	5	01/25/13 10:23	01/31/13 16:44	7440-02-0	
Potassium	**13600**	ug/L	100	5	01/25/13 10:23	01/31/13 16:44	7440-09-7	
Selenium	**18.6**	ug/L	2.5	5	01/25/13 10:23	01/31/13 16:44	7782-49-2	
Silica	**157000**	ug/L	2680	50	01/25/13 10:23	02/06/13 00:02	7631-86-9	
Silver	**150**	ug/L	2.5	5	01/25/13 10:23	01/31/13 16:44	7440-22-4	
Sodium	**22100**	ug/L	250	5	01/25/13 10:23	01/31/13 16:44	7440-23-5	
Thallium	**4.4**	ug/L	0.50	5	01/25/13 10:23	01/31/13 16:44	7440-28-0	
Total Hardness by 2340B	**1770000**	ug/L	3550	50	01/25/13 10:23	01/31/13 16:49		
Vanadium	**63.4**	ug/L	0.50	5	01/25/13 10:23	01/31/13 16:44	7440-62-2	
Zinc	**126000**	ug/L	2500	500	01/25/13 10:23	01/31/13 16:55	7440-66-6	
200.8 MET ICPMS, Dissolved	Analytical Method: EPA 200.8 Preparation Method: EPA 200.8							
Aluminum, Dissolved	**15000**	ug/L	4.0	1	01/25/13 10:36	01/31/13 11:48	7429-90-5	M6
Antimony, Dissolved	ND	ug/L	0.50	1	01/25/13 10:36	01/31/13 11:48	7440-36-0	
Arsenic, Dissolved	**242**	ug/L	0.50	1	01/25/13 10:36	01/31/13 11:48	7440-38-2	M6
Barium, Dissolved	**13.8**	ug/L	0.30	1	01/25/13 10:36	01/31/13 11:48	7440-39-3	
Beryllium, Dissolved	**5.5**	ug/L	0.20	1	01/25/13 10:36	01/31/13 11:48	7440-41-7	
Cadmium, Dissolved	**84.2**	ug/L	0.080	1	01/25/13 10:36	01/31/13 11:48	7440-43-9	
Calcium, Dissolved	**489000**	ug/L	5000	250	01/25/13 10:36	01/31/13 12:16	7440-70-2	M6
Chromium, Dissolved	**2.2**	ug/L	0.50	1	01/25/13 10:36	01/31/13 11:48	7440-47-3	
Cobalt, Dissolved	**68.9**	ug/L	0.50	1	01/25/13 10:36	01/31/13 11:48	7440-48-4	M6
Copper, Dissolved	**14.8**	ug/L	0.50	1	01/25/13 10:36	01/31/13 11:48	7440-50-8	
Iron, Dissolved	**511000**	ug/L	12500	250	01/25/13 10:36	01/31/13 12:16	7439-89-6	M6
Lead, Dissolved	**889**	ug/L	2.0	20	01/25/13 10:36	01/31/13 12:11	7439-92-1	M6
Magnesium, Dissolved	**139000**	ug/L	100	20	01/25/13 10:36	01/31/13 12:11	7439-95-4	M6

This report shall not be reproduced, except in full,
without the written consent of Pace Analytical Services, Inc..

Pace Analytical Services, Inc.
9608 Loiret Blvd.
Lenexa, KS 66219
(913)599-5665

ANALYTICAL RESULTS

Project: JANUARY 2013 RICO WATER SAMPLI
Pace Project No.: 60137200

Sample: MW-5 SHALLOW_20130116 **Lab ID: 60137200016** Collected: 01/16/13 14:59 Received: 01/18/13 10:20 Matrix: Water

Parameters	Results	Units	Report Limit	DF	Prepared	Analyzed	CAS No.	Qual
200.8 MET ICPMS, Dissolved	Analytical Method: EPA 200.8 Preparation Method: EPA 200.8							
Manganese, Dissolved	**27400**	ug/L	125	250	01/25/13 10:36	01/31/13 12:16	7439-96-5	M6
Molybdenum, Dissolved	**0.67**	ug/L	0.50	1	01/25/13 10:36	01/31/13 11:48	7439-98-7	
Nickel, Dissolved	**135**	ug/L	0.50	1	01/25/13 10:36	01/31/13 11:48	7440-02-0	M6
Potassium, Dissolved	**2910**	ug/L	20.0	1	01/25/13 10:36	01/31/13 11:48	7440-09-7	
Selenium, Dissolved	**7.1**	ug/L	0.50	1	01/25/13 10:36	01/31/13 11:48	7782-49-2	
Silver, Dissolved	ND	ug/L	0.50	1	01/25/13 10:36	01/31/13 11:48	7440-22-4	
Sodium, Dissolved	**22800**	ug/L	1000	20	01/25/13 10:36	01/31/13 12:11	7440-23-5	M6
Thallium, Dissolved	**0.14**	ug/L	0.10	1	01/25/13 10:36	01/31/13 11:48	7440-28-0	
Vanadium, Dissolved	**2.1**	ug/L	0.10	1	01/25/13 10:36	01/31/13 11:48	7440-62-2	
Zinc, Dissolved	**121000**	ug/L	1250	250	01/25/13 10:36	01/31/13 12:16	7440-66-6	M6
200.8 Potentially Diss. Metals	Analytical Method: EPA 200.8 Preparation Method: EPA 200.8							
Aluminum, Dissolved	**18900**	ug/L	50.0	1	01/23/13 11:30	01/25/13 14:22	7429-90-5	
Antimony, Dissolved	**0.70J**	ug/L	1.0	1	01/23/13 11:30	01/25/13 14:22	7440-36-0	
Arsenic, Dissolved	**314**	ug/L	1.0	1	01/23/13 11:30	01/25/13 14:22	7440-38-2	
Barium, Dissolved	**7.7**	ug/L	1.0	1	01/23/13 11:30	01/25/13 14:22	7440-39-3	
Beryllium, Dissolved	**5.2**	ug/L	0.50	1	01/23/13 11:30	01/25/13 14:22	7440-41-7	
Cadmium, Dissolved	**133**	ug/L	0.50	1	01/23/13 11:30	01/25/13 14:22	7440-43-9	
Chromium, Dissolved	**9.9**	ug/L	1.0	1	01/23/13 11:30	01/25/13 14:22	7440-47-3	
Cobalt, Dissolved	**83.0**	ug/L	1.0	1	01/23/13 11:30	01/25/13 14:22	7440-48-4	
Copper, Dissolved	**567**	ug/L	1.0	1	01/23/13 11:30	01/25/13 14:22	7440-50-8	
Iron, Dissolved	**479000**	ug/L	10000	200	01/23/13 11:30	01/25/13 15:29	7439-89-6	
Lead, Dissolved	**2300**	ug/L	1.0	1	01/23/13 11:30	01/25/13 14:22	7439-92-1	
Manganese, Dissolved	**25500**	ug/L	200	200	01/23/13 11:30	01/25/13 15:29	7439-96-5	
Molybdenum, Dissolved	**2.1**	ug/L	1.0	1	01/23/13 11:30	01/25/13 14:22	7439-98-7	B
Nickel, Dissolved	**150**	ug/L	1.0	1	01/23/13 11:30	01/25/13 14:22	7440-02-0	
Selenium, Dissolved	**5.9**	ug/L	1.0	1	01/23/13 11:30	01/25/13 14:22	7782-49-2	
Silver, Dissolved	ND	ug/L	0.50	1	01/23/13 11:30	01/25/13 14:22	7440-22-4	
Thallium, Dissolved	**0.41J**	ug/L	1.0	1	01/23/13 11:30	01/25/13 14:22	7440-28-0	
Vanadium, Dissolved	**7.7**	ug/L	1.0	1	01/23/13 11:30	01/25/13 14:22	7440-62-2	
Zinc, Dissolved	**116000**	ug/L	2000	200	01/23/13 11:30	01/25/13 15:29	7440-66-6	
245.1 Mercury	Analytical Method: EPA 245.1 Preparation Method: EPA 245.1							
Mercury	ND	ug/L	0.20	1	02/05/13 12:02	02/05/13 21:43	7439-97-6	
245.1 Mercury, Dissolved	Analytical Method: EPA 245.1 Preparation Method: EPA 245.1							
Mercury, Dissolved	ND	ug/L	0.20	1	01/31/13 09:37	01/31/13 16:56	7439-97-6	
245.1 Potentially Diss Mercury	Analytical Method: EPA 245.1 Preparation Method: EPA 245.1							
Mercury, Dissolved	ND	ug/L	0.20	1	01/29/13 10:30	01/29/13 15:51	7439-97-6	
2510B Specific Conductance	Analytical Method: SM 2510B							
Specific Conductance	**3810**	umhos/cm	10.0	1		01/25/13 12:35		
Salinity	Analytical Method: Calculated							
Salinity (as dissolved solids)	**2440**	mg/L	6.0	1		01/25/13 14:35		

This report shall not be reproduced, except in full,
without the written consent of Pace Analytical Services, Inc..

Pace Analytical Services, Inc.
9608 Loiret Blvd.
Lenexa, KS 66219
(913)599-5665

ANALYTICAL RESULTS

Project: JANUARY 2013 RICO WATER SAMPLI
Pace Project No.: 60137200

Sample: MW-5 SHALLOW_20130116 **Lab ID: 60137200016** Collected: 01/16/13 14:59 Received: 01/18/13 10:20 Matrix: Water

Parameters	Results	Units	Report Limit	DF	Prepared	Analyzed	CAS No.	Qual
Salinity	Analytical Method: Calculated							
Salinity (as seawater)	**2.0**	PSU	0.010	1		01/25/13 14:35		
2320B Alkalinity	Analytical Method: SM 2320B							
Alkalinity,Bicarbonate (CaCO3)	ND	mg/L	20.0	1		01/23/13 10:18		
Alkalinity, Carbonate (CaCO3)	ND	mg/L	20.0	1		01/23/13 10:18		
Alkalinity, Total as CaCO3	ND	mg/L	20.0	1		01/23/13 10:18		
2540C Total Dissolved Solids	Analytical Method: SM 2540C							
Total Dissolved Solids	**3730**	mg/L	5.0	1		01/23/13 15:26		
2540D Total Suspended Solids	Analytical Method: SM 2540D							
Total Suspended Solids	**456**	mg/L	5.0	1		01/22/13 16:11		
4500S2D Sulfide, Total	Analytical Method: SM 4500-S-2 D							
Sulfide, Total	ND	mg/L	0.050	1		01/22/13 14:33	18496-25-8	
300.0 IC Anions 28 Days	Analytical Method: EPA 300.0							
Chloride	**1.7**	mg/L	1.0	1		01/29/13 13:59	16887-00-6	
Sulfate	**4270**	mg/L	1000	1000		01/29/13 13:06	14808-79-8	
353.2 Nitrogen, NO2/NO3 pres.	Analytical Method: EPA 353.2							
Nitrogen, NO2 plus NO3	ND	mg/L	0.10	1		01/23/13 12:02		
4500CNE Cyanide, Total	Analytical Method: SM 4500-CN-E							
Cyanide	ND	mg/L	0.0050	1		01/23/13 15:23	57-12-5	
5310C TOC	Analytical Method: SM 5310C							
Total Organic Carbon	**2.0**	mg/L	1.0	1		01/25/13 19:02	7440-44-0	

This report shall not be reproduced, except in full,
without the written consent of Pace Analytical Services, Inc..

Pace Analytical Services, Inc.
9608 Loiret Blvd.
Lenexa, KS 66219
(913)599-5665

ANALYTICAL RESULTS

Project: JANUARY 2013 RICO WATER SAMPLI
Pace Project No.: 60137200

Sample: GW-3_20130117 **Lab ID: 60137200017** Collected: 01/17/13 11:56 Received: 01/18/13 10:20 Matrix: Water

Parameters	Results	Units	Report Limit	DF	Prepared	Analyzed	CAS No.	Qual
200.7 Potentially Diss. Metals	Analytical Method: EPA 200.7 Preparation Method: EPA 200.7							
Calcium, Dissolved	**133000**	ug/L	500	5	01/28/13 11:45	01/29/13 18:14	7440-70-2	
Magnesium, Dissolved	**17200**	ug/L	250	5	01/28/13 11:45	01/29/13 18:14	7439-95-4	
Potassium, Dissolved	**2760**	ug/L	2500	5	01/28/13 11:45	01/29/13 18:14	7440-09-7	
Sodium, Dissolved	**2660**	ug/L	2500	5	01/28/13 11:45	01/29/13 18:14	7440-23-5	
200.8 MET ICPMS	Analytical Method: EPA 200.8 Preparation Method: EPA 200.8							
Aluminum	**9350**	ug/L	4.0	1	01/25/13 10:23	01/31/13 17:00	7429-90-5	
Antimony	**0.52**	ug/L	0.50	1	01/25/13 10:23	01/31/13 17:00	7440-36-0	
Arsenic	**16.6**	ug/L	0.50	1	01/25/13 10:23	01/31/13 17:00	7440-38-2	
Barium	**199**	ug/L	0.30	1	01/25/13 10:23	01/31/13 17:00	7440-39-3	
Beryllium	**0.53**	ug/L	0.20	1	01/25/13 10:23	01/31/13 17:00	7440-41-7	
Cadmium	**2.4**	ug/L	0.080	1	01/25/13 10:23	01/31/13 17:00	7440-43-9	
Calcium	**127000**	ug/L	500	25	01/25/13 10:23	01/31/13 17:29	7440-70-2	
Chromium	**14.2**	ug/L	0.50	1	01/25/13 10:23	01/31/13 17:00	7440-47-3	
Cobalt	**9.5**	ug/L	0.50	1	01/25/13 10:23	01/31/13 17:00	7440-48-4	
Copper	**83.0**	ug/L	0.50	1	01/25/13 10:23	01/31/13 17:00	7440-50-8	
Iron	**18200**	ug/L	50.0	1	01/25/13 10:23	01/31/13 17:00	7439-89-6	
Lead	**157**	ug/L	0.10	1	01/25/13 10:23	01/31/13 17:00	7439-92-1	
Magnesium	**21300**	ug/L	5.0	1	01/25/13 10:23	01/31/13 17:00	7439-95-4	
Manganese	**2240**	ug/L	2.5	5	01/25/13 10:23	01/31/13 17:24	7439-96-5	
Molybdenum	**2.9**	ug/L	0.50	1	01/25/13 10:23	01/31/13 17:00	7439-98-7	
Nickel	**12.7**	ug/L	0.50	1	01/25/13 10:23	01/31/13 17:00	7440-02-0	
Potassium	**4190**	ug/L	20.0	1	01/25/13 10:23	01/31/13 17:00	7440-09-7	
Selenium	**4.9**	ug/L	0.50	1	01/25/13 10:23	01/31/13 17:00	7782-49-2	
Silica	**43800**	ug/L	1070	20	01/25/13 10:23	02/06/13 00:08	7631-86-9	M1,M6
Silver	**1.6**	ug/L	0.50	1	01/25/13 10:23	01/31/13 17:00	7440-22-4	
Sodium	**3190**	ug/L	50.0	1	01/25/13 10:23	01/31/13 17:00	7440-23-5	
Thallium	**0.24**	ug/L	0.10	1	01/25/13 10:23	01/31/13 17:00	7440-28-0	
Total Hardness by 2340B	**404000**	ug/L	1780	25	01/25/13 10:23	01/31/13 17:29		M1,M6
Vanadium	**21.7**	ug/L	0.10	1	01/25/13 10:23	01/31/13 17:00	7440-62-2	
Zinc	**473**	ug/L	25.0	5	01/25/13 10:23	01/31/13 17:24	7440-66-6	
200.8 MET ICPMS, Dissolved	Analytical Method: EPA 200.8 Preparation Method: EPA 200.8							
Aluminum, Dissolved	**7.5**	ug/L	4.0	1	01/25/13 10:36	01/31/13 12:50	7429-90-5	
Antimony, Dissolved	ND	ug/L	0.50	1	01/25/13 10:36	01/31/13 12:50	7440-36-0	
Arsenic, Dissolved	ND	ug/L	0.50	1	01/25/13 10:36	01/31/13 12:50	7440-38-2	
Barium, Dissolved	**18.1**	ug/L	0.30	1	01/25/13 10:36	01/31/13 12:50	7440-39-3	
Beryllium, Dissolved	ND	ug/L	0.20	1	01/25/13 10:36	01/31/13 12:50	7440-41-7	
Cadmium, Dissolved	**0.19**	ug/L	0.080	1	01/25/13 10:36	01/31/13 12:50	7440-43-9	
Calcium, Dissolved	**127000**	ug/L	400	20	01/25/13 10:36	01/31/13 12:55	7440-70-2	
Chromium, Dissolved	**0.53**	ug/L	0.50	1	01/25/13 10:36	01/31/13 12:50	7440-47-3	
Cobalt, Dissolved	ND	ug/L	0.50	1	01/25/13 10:36	01/31/13 12:50	7440-48-4	
Copper, Dissolved	**1.4**	ug/L	0.50	1	01/25/13 10:36	01/31/13 12:50	7440-50-8	
Iron, Dissolved	ND	ug/L	50.0	1	01/25/13 10:36	01/31/13 12:50	7439-89-6	
Lead, Dissolved	ND	ug/L	0.10	1	01/25/13 10:36	01/31/13 12:50	7439-92-1	
Magnesium, Dissolved	**15400**	ug/L	5.0	1	01/25/13 10:36	01/31/13 12:50	7439-95-4	

This report shall not be reproduced, except in full,
without the written consent of Pace Analytical Services, Inc..

Pace Analytical Services, Inc.
9608 Loiret Blvd.
Lenexa, KS 66219
(913)599-5665

ANALYTICAL RESULTS

Project: JANUARY 2013 RICO WATER SAMPLI
Pace Project No.: 60137200

Sample: GW-3_20130117 **Lab ID: 60137200017** Collected: 01/17/13 11:56 Received: 01/18/13 10:20 Matrix: Water

Parameters	Results	Units	Report Limit	DF	Prepared	Analyzed	CAS No.	Qual
200.8 MET ICPMS, Dissolved	Analytical Method: EPA 200.8 Preparation Method: EPA 200.8							
Manganese, Dissolved	**26.0**	ug/L	0.50	1	01/25/13 10:36	01/31/13 12:50	7439-96-5	
Molybdenum, Dissolved	**0.53**	ug/L	0.50	1	01/25/13 10:36	01/31/13 12:50	7439-98-7	
Nickel, Dissolved	**1.1**	ug/L	0.50	1	01/25/13 10:36	01/31/13 12:50	7440-02-0	
Potassium, Dissolved	**2540**	ug/L	20.0	1	01/25/13 10:36	01/31/13 12:50	7440-09-7	
Selenium, Dissolved	**1.6**	ug/L	0.50	1	01/25/13 10:36	01/31/13 12:50	7782-49-2	
Silver, Dissolved	ND	ug/L	0.50	1	01/25/13 10:36	01/31/13 12:50	7440-22-4	
Sodium, Dissolved	**2820**	ug/L	50.0	1	01/25/13 10:36	01/31/13 12:50	7440-23-5	
Thallium, Dissolved	ND	ug/L	0.10	1	01/25/13 10:36	01/31/13 12:50	7440-28-0	
Vanadium, Dissolved	ND	ug/L	0.10	1	01/25/13 10:36	01/31/13 12:50	7440-62-2	
Zinc, Dissolved	**29.0**	ug/L	5.0	1	01/25/13 10:36	01/31/13 12:50	7440-66-6	
200.8 Potentially Diss. Metals	Analytical Method: EPA 200.8 Preparation Method: EPA 200.8							
Aluminum, Dissolved	**2050**	ug/L	50.0	1	01/23/13 11:30	01/25/13 14:26	7429-90-5	
Antimony, Dissolved	**0.18J**	ug/L	1.0	1	01/23/13 11:30	01/25/13 14:26	7440-36-0	
Arsenic, Dissolved	**4.8**	ug/L	1.0	1	01/23/13 11:30	01/25/13 14:26	7440-38-2	
Barium, Dissolved	**65.3**	ug/L	1.0	1	01/23/13 11:30	01/25/13 14:26	7440-39-3	
Beryllium, Dissolved	**0.20J**	ug/L	0.50	1	01/23/13 11:30	01/25/13 14:26	7440-41-7	
Cadmium, Dissolved	**1.8**	ug/L	0.50	1	01/23/13 11:30	01/25/13 14:26	7440-43-9	
Chromium, Dissolved	**3.9**	ug/L	1.0	1	01/23/13 11:30	01/25/13 14:26	7440-47-3	B
Cobalt, Dissolved	**3.8**	ug/L	1.0	1	01/23/13 11:30	01/25/13 14:26	7440-48-4	
Copper, Dissolved	**51.3**	ug/L	1.0	1	01/23/13 11:30	01/25/13 14:26	7440-50-8	
Iron, Dissolved	**4570**	ug/L	50.0	1	01/23/13 11:30	01/25/13 14:26	7439-89-6	
Lead, Dissolved	**71.9**	ug/L	1.0	1	01/23/13 11:30	01/25/13 14:26	7439-92-1	
Manganese, Dissolved	**919**	ug/L	1.0	1	01/23/13 11:30	01/25/13 14:26	7439-96-5	
Molybdenum, Dissolved	**0.21J**	ug/L	1.0	1	01/23/13 11:30	01/25/13 14:26	7439-98-7	B
Nickel, Dissolved	**3.7**	ug/L	1.0	1	01/23/13 11:30	01/25/13 14:26	7440-02-0	B
Selenium, Dissolved	**2.4**	ug/L	1.0	1	01/23/13 11:30	01/25/13 14:26	7782-49-2	
Silver, Dissolved	**0.41J**	ug/L	0.50	1	01/23/13 11:30	01/25/13 14:26	7440-22-4	
Thallium, Dissolved	ND	ug/L	1.0	1	01/23/13 11:30	01/25/13 14:26	7440-28-0	
Vanadium, Dissolved	**3.7**	ug/L	1.0	1	01/23/13 11:30	01/25/13 14:26	7440-62-2	
Zinc, Dissolved	**292**	ug/L	10.0	1	01/23/13 11:30	01/25/13 14:26	7440-66-6	
245.1 Mercury	Analytical Method: EPA 245.1 Preparation Method: EPA 245.1							
Mercury	ND	ug/L	0.20	1	02/05/13 12:02	02/05/13 21:46	7439-97-6	
245.1 Mercury, Dissolved	Analytical Method: EPA 245.1 Preparation Method: EPA 245.1							
Mercury, Dissolved	ND	ug/L	0.20	1	01/31/13 09:37	01/31/13 16:58	7439-97-6	
245.1 Potentially Diss Mercury	Analytical Method: EPA 245.1 Preparation Method: EPA 245.1							
Mercury, Dissolved	ND	ug/L	0.20	1	01/29/13 10:30	01/29/13 15:53	7439-97-6	
2510B Specific Conductance	Analytical Method: SM 2510B							
Specific Conductance	**722**	umhos/cm	10.0	1		01/25/13 12:37		
Salinity	Analytical Method: Calculated							
Salinity (as dissolved solids)	**462**	mg/L	6.0	1		01/25/13 14:35		

This report shall not be reproduced, except in full,
without the written consent of Pace Analytical Services, Inc..

Pace Analytical Services, Inc.
9608 Loiret Blvd.
Lenexa, KS 66219
(913)599-5665

ANALYTICAL RESULTS

Project: JANUARY 2013 RICO WATER SAMPLI
Pace Project No.: 60137200

Sample: GW-3_20130117 **Lab ID: 60137200017** Collected: 01/17/13 11:56 Received: 01/18/13 10:20 Matrix: Water

Parameters	Results	Units	Report Limit	DF	Prepared	Analyzed	CAS No.	Qual
Salinity	Analytical Method: Calculated							
Salinity (as seawater)	**0.35**	PSU	0.010	1		01/25/13 14:35		
2320B Alkalinity	Analytical Method: SM 2320B							
Alkalinity,Bicarbonate (CaCO3)	**193**	mg/L	20.0	1		01/23/13 10:23		
Alkalinity, Carbonate (CaCO3)	ND	mg/L	20.0	1		01/23/13 10:23		
Alkalinity, Total as CaCO3	**193**	mg/L	20.0	1		01/23/13 10:23		
2540C Total Dissolved Solids	Analytical Method: SM 2540C							
Total Dissolved Solids	**531**	mg/L	5.0	1		01/23/13 15:28		
2540D Total Suspended Solids	Analytical Method: SM 2540D							
Total Suspended Solids	**366**	mg/L	5.0	1		01/23/13 15:16		
4500S2D Sulfide, Total	Analytical Method: SM 4500-S-2 D							
Sulfide, Total	ND	mg/L	0.050	1		01/22/13 14:33	18496-25-8	
300.0 IC Anions 28 Days	Analytical Method: EPA 300.0							
Chloride	**1.4**	mg/L	1.0	1		01/28/13 16:00	16887-00-6	
Sulfate	**181**	mg/L	20.0	20		01/28/13 16:17	14808-79-8	
353.2 Nitrogen, NO2/NO3 pres.	Analytical Method: EPA 353.2							
Nitrogen, NO2 plus NO3	ND	mg/L	0.10	1		01/23/13 12:03		
4500CNE Cyanide, Total	Analytical Method: SM 4500-CN-E							
Cyanide	ND	mg/L	0.0050	1		01/23/13 15:25	57-12-5	
5310C TOC	Analytical Method: SM 5310C							
Total Organic Carbon	ND	mg/L	1.0	1		01/25/13 19:16	7440-44-0	

This report shall not be reproduced, except in full,
without the written consent of Pace Analytical Services, Inc..

Pace Analytical Services, Inc.
9608 Loiret Blvd.
Lenexa, KS 66219
(913)599-5665

ANALYTICAL RESULTS

Project: JANUARY 2013 RICO WATER SAMPLI
Pace Project No.: 60137200

Sample: MW-4 SHALLOW_20130117 **Lab ID: 60137200018** Collected: 01/17/13 11:47 Received: 01/18/13 10:20 Matrix: Water

Parameters	Results	Units	Report Limit	DF	Prepared	Analyzed	CAS No.	Qual
200.7 Potentially Diss. Metals	Analytical Method: EPA 200.7 Preparation Method: EPA 200.7							
Calcium, Dissolved	**264000**	ug/L	500	5	01/28/13 11:45	01/29/13 18:16	7440-70-2	
Magnesium, Dissolved	**28600**	ug/L	250	5	01/28/13 11:45	01/29/13 18:16	7439-95-4	
Potassium, Dissolved	**2840**	ug/L	2500	5	01/28/13 11:45	01/29/13 18:16	7440-09-7	
Sodium, Dissolved	**8370**	ug/L	2500	5	01/28/13 11:45	01/29/13 18:16	7440-23-5	
200.8 MET ICPMS	Analytical Method: EPA 200.8 Preparation Method: EPA 200.8							
Aluminum	**6310**	ug/L	4.0	1	01/25/13 10:23	01/31/13 17:49	7429-90-5	
Antimony	ND	ug/L	0.50	1	01/25/13 10:23	01/31/13 17:49	7440-36-0	
Arsenic	**5.5**	ug/L	0.50	1	01/25/13 10:23	01/31/13 17:49	7440-38-2	
Barium	**93.0**	ug/L	0.30	1	01/25/13 10:23	01/31/13 17:49	7440-39-3	
Beryllium	**0.63**	ug/L	0.20	1	01/25/13 10:23	01/31/13 17:49	7440-41-7	
Cadmium	**2.2**	ug/L	0.080	1	01/25/13 10:23	01/31/13 17:49	7440-43-9	
Calcium	**243000**	ug/L	400	20	01/25/13 10:23	01/31/13 17:54	7440-70-2	
Chromium	**8.1**	ug/L	0.50	1	01/25/13 10:23	01/31/13 17:49	7440-47-3	
Cobalt	**3.8**	ug/L	0.50	1	01/25/13 10:23	01/31/13 17:49	7440-48-4	
Copper	**38.2**	ug/L	0.50	1	01/25/13 10:23	01/31/13 17:49	7440-50-8	
Iron	**8110**	ug/L	50.0	1	01/25/13 10:23	01/31/13 17:49	7439-89-6	
Lead	**49.5**	ug/L	0.10	1	01/25/13 10:23	01/31/13 17:49	7439-92-1	
Magnesium	**30900**	ug/L	50.0	10	01/25/13 10:23	02/06/13 00:24	7439-95-4	
Manganese	**336**	ug/L	0.50	1	01/25/13 10:23	01/31/13 17:49	7439-96-5	
Molybdenum	**2.5**	ug/L	0.50	1	01/25/13 10:23	01/31/13 17:49	7439-98-7	
Nickel	**6.4**	ug/L	0.50	1	01/25/13 10:23	01/31/13 17:49	7440-02-0	
Potassium	**3970**	ug/L	20.0	1	01/25/13 10:23	01/31/13 17:49	7440-09-7	
Selenium	**23.8**	ug/L	0.50	1	01/25/13 10:23	01/31/13 17:49	7782-49-2	
Silica	**41500**	ug/L	535	10	01/25/13 10:23	02/06/13 00:24	7631-86-9	
Silver	**0.54**	ug/L	0.50	1	01/25/13 10:23	01/31/13 17:49	7440-22-4	
Sodium	**8590**	ug/L	50.0	1	01/25/13 10:23	01/31/13 17:49	7440-23-5	
Thallium	**0.17**	ug/L	0.10	1	01/25/13 10:23	01/31/13 17:49	7440-28-0	
Total Hardness by 2340B	**734000**	ug/L	1420	20	01/25/13 10:23	01/31/13 17:54		
Vanadium	**8.9**	ug/L	0.10	1	01/25/13 10:23	01/31/13 17:49	7440-62-2	
Zinc	**268**	ug/L	5.0	1	01/25/13 10:23	01/31/13 17:49	7440-66-6	
200.8 MET ICPMS, Dissolved	Analytical Method: EPA 200.8 Preparation Method: EPA 200.8							
Aluminum, Dissolved	**27.0**	ug/L	4.0	1	01/25/13 10:36	01/31/13 12:59	7429-90-5	
Antimony, Dissolved	ND	ug/L	0.50	1	01/25/13 10:36	01/31/13 12:59	7440-36-0	
Arsenic, Dissolved	ND	ug/L	0.50	1	01/25/13 10:36	01/31/13 12:59	7440-38-2	
Barium, Dissolved	**24.9**	ug/L	0.30	1	01/25/13 10:36	01/31/13 12:59	7440-39-3	
Beryllium, Dissolved	ND	ug/L	0.20	1	01/25/13 10:36	01/31/13 12:59	7440-41-7	
Cadmium, Dissolved	**1.7**	ug/L	0.080	1	01/25/13 10:36	01/31/13 12:59	7440-43-9	
Calcium, Dissolved	**265000**	ug/L	400	20	01/25/13 10:36	01/31/13 13:04	7440-70-2	
Chromium, Dissolved	ND	ug/L	0.50	1	01/25/13 10:36	01/31/13 12:59	7440-47-3	
Cobalt, Dissolved	ND	ug/L	0.50	1	01/25/13 10:36	01/31/13 12:59	7440-48-4	
Copper, Dissolved	**1.5**	ug/L	0.50	1	01/25/13 10:36	01/31/13 12:59	7440-50-8	
Iron, Dissolved	ND	ug/L	50.0	1	01/25/13 10:36	01/31/13 12:59	7439-89-6	
Lead, Dissolved	**0.28**	ug/L	0.10	1	01/25/13 10:36	01/31/13 12:59	7439-92-1	
Magnesium, Dissolved	**30900**	ug/L	100	20	01/25/13 10:36	01/28/13 21:14	7439-95-4	

This report shall not be reproduced, except in full,
without the written consent of Pace Analytical Services, Inc..

Pace Analytical Services, Inc.
9608 Loiret Blvd.
Lenexa, KS 66219
(913)599-5665

ANALYTICAL RESULTS

Project: JANUARY 2013 RICO WATER SAMPLI
Pace Project No.: 60137200

Sample: MW-4 SHALLOW_20130117 **Lab ID: 60137200018** Collected: 01/17/13 11:47 Received: 01/18/13 10:20 Matrix: Water

Parameters	Results	Units	Report Limit	DF	Prepared	Analyzed	CAS No.	Qual
200.8 MET ICPMS, Dissolved	Analytical Method: EPA 200.8 Preparation Method: EPA 200.8							
Manganese, Dissolved	**113**	ug/L	0.50	1	01/25/13 10:36	01/31/13 12:59	7439-96-5	
Molybdenum, Dissolved	**1.5**	ug/L	0.50	1	01/25/13 10:36	01/31/13 12:59	7439-98-7	
Nickel, Dissolved	**0.86**	ug/L	0.50	1	01/25/13 10:36	01/31/13 12:59	7440-02-0	
Potassium, Dissolved	**2790**	ug/L	20.0	1	01/25/13 10:36	01/31/13 12:59	7440-09-7	
Selenium, Dissolved	**23.4**	ug/L	0.50	1	01/25/13 10:36	01/31/13 12:59	7782-49-2	
Silver, Dissolved	ND	ug/L	0.50	1	01/25/13 10:36	01/31/13 12:59	7440-22-4	
Sodium, Dissolved	**9000**	ug/L	50.0	1	01/25/13 10:36	01/31/13 12:59	7440-23-5	
Thallium, Dissolved	ND	ug/L	0.10	1	01/25/13 10:36	01/31/13 12:59	7440-28-0	
Vanadium, Dissolved	**0.11**	ug/L	0.10	1	01/25/13 10:36	01/31/13 12:59	7440-62-2	
Zinc, Dissolved	**156**	ug/L	5.0	1	01/25/13 10:36	01/31/13 12:59	7440-66-6	
200.8 Potentially Diss. Metals	Analytical Method: EPA 200.8 Preparation Method: EPA 200.8							
Aluminum, Dissolved	**1890**	ug/L	50.0	1	01/23/13 11:30	01/25/13 14:31	7429-90-5	
Antimony, Dissolved	**0.097J**	ug/L	1.0	1	01/23/13 11:30	01/25/13 14:31	7440-36-0	
Arsenic, Dissolved	**2.9**	ug/L	1.0	1	01/23/13 11:30	01/25/13 14:31	7440-38-2	
Barium, Dissolved	**41.6**	ug/L	1.0	1	01/23/13 11:30	01/25/13 14:31	7440-39-3	
Beryllium, Dissolved	**0.39J**	ug/L	0.50	1	01/23/13 11:30	01/25/13 14:31	7440-41-7	
Cadmium, Dissolved	**2.1**	ug/L	0.50	1	01/23/13 11:30	01/25/13 14:31	7440-43-9	
Chromium, Dissolved	**3.7**	ug/L	1.0	1	01/23/13 11:30	01/25/13 14:31	7440-47-3	B
Cobalt, Dissolved	**2.2**	ug/L	1.0	1	01/23/13 11:30	01/25/13 14:31	7440-48-4	
Copper, Dissolved	**24.8**	ug/L	1.0	1	01/23/13 11:30	01/25/13 14:31	7440-50-8	
Iron, Dissolved	**2620**	ug/L	50.0	1	01/23/13 11:30	01/25/13 14:31	7439-89-6	
Lead, Dissolved	**40.7**	ug/L	1.0	1	01/23/13 11:30	01/25/13 14:31	7439-92-1	
Manganese, Dissolved	**280**	ug/L	1.0	1	01/23/13 11:30	01/25/13 14:31	7439-96-5	
Molybdenum, Dissolved	**1.2**	ug/L	1.0	1	01/23/13 11:30	01/25/13 14:31	7439-98-7	B
Nickel, Dissolved	**1.1**	ug/L	1.0	1	01/23/13 11:30	01/25/13 14:31	7440-02-0	B
Selenium, Dissolved	**21.9**	ug/L	1.0	1	01/23/13 11:30	01/25/13 14:31	7782-49-2	
Silver, Dissolved	**0.089J**	ug/L	0.50	1	01/23/13 11:30	01/25/13 14:31	7440-22-4	
Thallium, Dissolved	ND	ug/L	1.0	1	01/23/13 11:30	01/25/13 14:31	7440-28-0	
Vanadium, Dissolved	**2.3**	ug/L	1.0	1	01/23/13 11:30	01/25/13 14:31	7440-62-2	
Zinc, Dissolved	**222**	ug/L	10.0	1	01/23/13 11:30	01/25/13 14:31	7440-66-6	
245.1 Mercury	Analytical Method: EPA 245.1 Preparation Method: EPA 245.1							
Mercury	ND	ug/L	0.20	1	02/05/13 12:02	02/05/13 21:48	7439-97-6	
245.1 Mercury, Dissolved	Analytical Method: EPA 245.1 Preparation Method: EPA 245.1							
Mercury, Dissolved	ND	ug/L	0.20	1	01/31/13 09:37	01/31/13 17:01	7439-97-6	
245.1 Potentially Diss Mercury	Analytical Method: EPA 245.1 Preparation Method: EPA 245.1							
Mercury, Dissolved	ND	ug/L	0.20	1	01/29/13 10:30	01/29/13 15:55	7439-97-6	
2510B Specific Conductance	Analytical Method: SM 2510B							
Specific Conductance	**1320**	umhos/cm	10.0	1		01/25/13 12:39		
Salinity	Analytical Method: Calculated							
Salinity (as dissolved solids)	**847**	mg/L	6.0	1		01/25/13 14:35		

This report shall not be reproduced, except in full,
without the written consent of Pace Analytical Services, Inc..

Pace Analytical Services, Inc.
9608 Loiret Blvd.
Lenexa, KS 66219
(913)599-5665

ANALYTICAL RESULTS

Project: JANUARY 2013 RICO WATER SAMPLI
Pace Project No.: 60137200

Sample: MW-4 SHALLOW_20130117 **Lab ID: 60137200018** Collected: 01/17/13 11:47 Received: 01/18/13 10:20 Matrix: Water

Parameters	Results	Units	Report Limit	DF	Prepared	Analyzed	CAS No.	Qual
Salinity	Analytical Method: Calculated							
Salinity (as seawater)	**0.66**	PSU	0.010	1		01/25/13 14:35		
2320B Alkalinity	Analytical Method: SM 2320B							
Alkalinity,Bicarbonate (CaCO3)	**92.5**	mg/L	20.0	1		01/24/13 10:22		
Alkalinity, Carbonate (CaCO3)	ND	mg/L	20.0	1		01/24/13 10:22		
Alkalinity, Total as CaCO3	**92.5**	mg/L	20.0	1		01/24/13 10:22		
2540C Total Dissolved Solids	Analytical Method: SM 2540C							
Total Dissolved Solids	**1040**	mg/L	5.0	1		01/23/13 15:28		
2540D Total Suspended Solids	Analytical Method: SM 2540D							
Total Suspended Solids	**199**	mg/L	5.0	1		01/23/13 15:17		
4500S2D Sulfide, Total	Analytical Method: SM 4500-S-2 D							
Sulfide, Total	ND	mg/L	0.050	1		01/22/13 14:34	18496-25-8	
300.0 IC Anions 28 Days	Analytical Method: EPA 300.0							
Chloride	**1.2**	mg/L	1.0	1		01/28/13 17:11	16887-00-6	
Sulfate	**605**	mg/L	50.0	50		01/28/13 17:28	14808-79-8	
353.2 Nitrogen, NO2/NO3 pres.	Analytical Method: EPA 353.2							
Nitrogen, NO2 plus NO3	**0.41**	mg/L	0.10	1		01/23/13 12:04		
4500CNE Cyanide, Total	Analytical Method: SM 4500-CN-E							
Cyanide	**0.0066**	mg/L	0.0050	1		01/23/13 15:26	57-12-5	
5310C TOC	Analytical Method: SM 5310C							
Total Organic Carbon	ND	mg/L	1.0	1		01/25/13 19:31	7440-44-0	

This report shall not be reproduced, except in full,
without the written consent of Pace Analytical Services, Inc..

Pace Analytical Services, Inc.
9608 Loiret Blvd.
Lenexa, KS 66219
(913)599-5665

ANALYTICAL RESULTS

Project: JANUARY 2013 RICO WATER SAMPLI
Pace Project No.: 60137200

Sample: MW-4 DEEP_20130116 **Lab ID: 60137200019** Collected: 01/16/13 11:15 Received: 01/19/13 08:30 Matrix: Water

Parameters	Results	Units	Report Limit	DF	Prepared	Analyzed	CAS No.	Qual
200.7 Potentially Diss. Metals	Analytical Method: EPA 200.7 Preparation Method: EPA 200.7							
Calcium, Dissolved	**277000**	ug/L	500	5	01/28/13 11:45	01/29/13 18:18	7440-70-2	
Magnesium, Dissolved	**31700**	ug/L	250	5	01/28/13 11:45	01/29/13 18:18	7439-95-4	
Potassium, Dissolved	**3610**	ug/L	2500	5	01/28/13 11:45	01/29/13 18:18	7440-09-7	
Sodium, Dissolved	**7490**	ug/L	2500	5	01/28/13 11:45	01/29/13 18:18	7440-23-5	
200.8 MET ICPMS	Analytical Method: EPA 200.8 Preparation Method: EPA 200.8							
Aluminum	**9440**	ug/L	4.0	1	01/25/13 10:23	01/31/13 17:59	7429-90-5	
Antimony	**0.56**	ug/L	0.50	1	01/25/13 10:23	01/31/13 17:59	7440-36-0	
Arsenic	**24.6**	ug/L	0.50	1	01/25/13 10:23	01/31/13 17:59	7440-38-2	
Barium	**192**	ug/L	0.30	1	01/25/13 10:23	01/31/13 17:59	7440-39-3	
Beryllium	**0.94**	ug/L	0.20	1	01/25/13 10:23	01/31/13 17:59	7440-41-7	
Cadmium	**5.6**	ug/L	0.080	1	01/25/13 10:23	01/31/13 17:59	7440-43-9	
Calcium	**251000**	ug/L	400	20	01/25/13 10:23	01/31/13 18:04	7440-70-2	
Chromium	**11.4**	ug/L	0.50	1	01/25/13 10:23	01/31/13 17:59	7440-47-3	
Cobalt	**14.2**	ug/L	0.50	1	01/25/13 10:23	01/31/13 17:59	7440-48-4	
Copper	**117**	ug/L	0.50	1	01/25/13 10:23	01/31/13 17:59	7440-50-8	
Iron	**21200**	ug/L	50.0	1	01/25/13 10:23	01/31/13 17:59	7439-89-6	
Lead	**106**	ug/L	0.10	1	01/25/13 10:23	01/31/13 17:59	7439-92-1	
Magnesium	**33700**	ug/L	100	20	01/25/13 10:23	02/06/13 00:28	7439-95-4	
Manganese	**2360**	ug/L	10.0	20	01/25/13 10:23	01/31/13 18:04	7439-96-5	
Molybdenum	**11.0**	ug/L	0.50	1	01/25/13 10:23	01/31/13 17:59	7439-98-7	
Nickel	**11.0**	ug/L	0.50	1	01/25/13 10:23	01/31/13 17:59	7440-02-0	
Potassium	**4860**	ug/L	20.0	1	01/25/13 10:23	01/31/13 17:59	7440-09-7	
Selenium	**34.8**	ug/L	0.50	1	01/25/13 10:23	01/31/13 17:59	7782-49-2	
Silica	**46700**	ug/L	1070	20	01/25/13 10:23	02/06/13 00:28	7631-86-9	
Silver	**2.1**	ug/L	0.50	1	01/25/13 10:23	01/31/13 17:59	7440-22-4	
Sodium	**7300**	ug/L	50.0	1	01/25/13 10:23	01/31/13 17:59	7440-23-5	
Thallium	**0.35**	ug/L	0.10	1	01/25/13 10:23	01/31/13 17:59	7440-28-0	
Total Hardness by 2340B	**765000**	ug/L	1420	20	01/25/13 10:23	02/06/13 00:28		
Vanadium	**20.6**	ug/L	0.10	1	01/25/13 10:23	01/31/13 17:59	7440-62-2	
Zinc	**620**	ug/L	100	20	01/25/13 10:23	01/31/13 18:04	7440-66-6	
200.8 MET ICPMS, Dissolved	Analytical Method: EPA 200.8 Preparation Method: EPA 200.8							
Aluminum, Dissolved	**838**	ug/L	4.0	1	01/25/13 10:36	01/31/13 13:08	7429-90-5	
Antimony, Dissolved	ND	ug/L	0.50	1	01/25/13 10:36	01/31/13 13:08	7440-36-0	
Arsenic, Dissolved	**1.5**	ug/L	0.50	1	01/25/13 10:36	01/31/13 13:08	7440-38-2	
Barium, Dissolved	**22.3**	ug/L	0.30	1	01/25/13 10:36	01/31/13 13:08	7440-39-3	
Beryllium, Dissolved	ND	ug/L	0.20	1	01/25/13 10:36	01/31/13 13:08	7440-41-7	
Cadmium, Dissolved	**2.1**	ug/L	0.080	1	01/25/13 10:36	01/31/13 13:08	7440-43-9	
Calcium, Dissolved	**277000**	ug/L	400	20	01/25/13 10:36	01/31/13 13:12	7440-70-2	
Chromium, Dissolved	**1.1**	ug/L	0.50	1	01/25/13 10:36	01/31/13 13:08	7440-47-3	
Cobalt, Dissolved	**0.86**	ug/L	0.50	1	01/25/13 10:36	01/31/13 13:08	7440-48-4	
Copper, Dissolved	**10**	ug/L	0.50	1	01/25/13 10:36	01/31/13 13:08	7440-50-8	
Iron, Dissolved	**1440**	ug/L	50.0	1	01/25/13 10:36	01/31/13 13:08	7439-89-6	
Lead, Dissolved	**6.9**	ug/L	0.10	1	01/25/13 10:36	01/31/13 13:08	7439-92-1	
Magnesium, Dissolved	**34700**	ug/L	100	20	01/25/13 10:36	01/28/13 21:23	7439-95-4	

This report shall not be reproduced, except in full,
without the written consent of Pace Analytical Services, Inc..

Pace Analytical Services, Inc.
9608 Loiret Blvd.
Lenexa, KS 66219
(913)599-5665

ANALYTICAL RESULTS

Project: JANUARY 2013 RICO WATER SAMPLI
Pace Project No.: 60137200

Sample: MW-4 DEEP_20130116 **Lab ID: 60137200019** Collected: 01/16/13 11:15 Received: 01/19/13 08:30 Matrix: Water

Parameters	Results	Units	Report Limit	DF	Prepared	Analyzed	CAS No.	Qual
200.8 MET ICPMS, Dissolved	Analytical Method: EPA 200.8 Preparation Method: EPA 200.8							
Manganese, Dissolved	**112**	ug/L	0.50	1	01/25/13 10:36	01/31/13 13:08	7439-96-5	
Molybdenum, Dissolved	**2.8**	ug/L	0.50	1	01/25/13 10:36	01/31/13 13:08	7439-98-7	
Nickel, Dissolved	**1.8**	ug/L	0.50	1	01/25/13 10:36	01/31/13 13:08	7440-02-0	
Potassium, Dissolved	**3610**	ug/L	20.0	1	01/25/13 10:36	01/31/13 13:08	7440-09-7	
Selenium, Dissolved	**35.4**	ug/L	0.50	1	01/25/13 10:36	01/31/13 13:08	7782-49-2	
Silver, Dissolved	ND	ug/L	0.50	1	01/25/13 10:36	01/31/13 13:08	7440-22-4	
Sodium, Dissolved	**8160**	ug/L	50.0	1	01/25/13 10:36	01/31/13 13:08	7440-23-5	
Thallium, Dissolved	ND	ug/L	0.10	1	01/25/13 10:36	01/31/13 13:08	7440-28-0	
Vanadium, Dissolved	**1.6**	ug/L	0.10	1	01/25/13 10:36	01/31/13 13:08	7440-62-2	
Zinc, Dissolved	**303**	ug/L	5.0	1	01/25/13 10:36	01/31/13 13:08	7440-66-6	
200.8 Potentially Diss. Metals	Analytical Method: EPA 200.8 Preparation Method: EPA 200.8							
Aluminum, Dissolved	**2450**	ug/L	50.0	1	01/23/13 11:30	01/25/13 14:35	7429-90-5	
Antimony, Dissolved	**0.14J**	ug/L	1.0	1	01/23/13 11:30	01/25/13 14:35	7440-36-0	
Arsenic, Dissolved	**4.8**	ug/L	1.0	1	01/23/13 11:30	01/25/13 14:35	7440-38-2	
Barium, Dissolved	**35.1**	ug/L	1.0	1	01/23/13 11:30	01/25/13 14:35	7440-39-3	
Beryllium, Dissolved	**0.61**	ug/L	0.50	1	01/23/13 11:30	01/25/13 14:35	7440-41-7	
Cadmium, Dissolved	**5.0**	ug/L	0.50	1	01/23/13 11:30	01/25/13 14:35	7440-43-9	
Chromium, Dissolved	**3.3**	ug/L	1.0	1	01/23/13 11:30	01/25/13 14:35	7440-47-3	B
Cobalt, Dissolved	**2.7**	ug/L	1.0	1	01/23/13 11:30	01/25/13 14:35	7440-48-4	
Copper, Dissolved	**79.8**	ug/L	1.0	1	01/23/13 11:30	01/25/13 14:35	7440-50-8	
Iron, Dissolved	**5310**	ug/L	50.0	1	01/23/13 11:30	01/25/13 14:35	7439-89-6	
Lead, Dissolved	**30.6**	ug/L	1.0	1	01/23/13 11:30	01/25/13 14:35	7439-92-1	
Manganese, Dissolved	**394**	ug/L	1.0	1	01/23/13 11:30	01/25/13 14:35	7439-96-5	
Molybdenum, Dissolved	**0.85J**	ug/L	1.0	1	01/23/13 11:30	01/25/13 14:35	7439-98-7	B
Nickel, Dissolved	**1.1**	ug/L	1.0	1	01/23/13 11:30	01/25/13 14:35	7440-02-0	B
Selenium, Dissolved	**33.2**	ug/L	1.0	1	01/23/13 11:30	01/25/13 14:35	7782-49-2	
Silver, Dissolved	**0.63**	ug/L	0.50	1	01/23/13 11:30	01/25/13 14:35	7440-22-4	
Thallium, Dissolved	ND	ug/L	1.0	1	01/23/13 11:30	01/25/13 14:35	7440-28-0	
Vanadium, Dissolved	**4.1**	ug/L	1.0	1	01/23/13 11:30	01/25/13 14:35	7440-62-2	
Zinc, Dissolved	**481**	ug/L	10.0	1	01/23/13 11:30	01/25/13 14:35	7440-66-6	
245.1 Mercury	Analytical Method: EPA 245.1 Preparation Method: EPA 245.1							
Mercury	ND	ug/L	0.20	1	02/05/13 12:02	02/05/13 21:50	7439-97-6	
245.1 Mercury, Dissolved	Analytical Method: EPA 245.1 Preparation Method: EPA 245.1							
Mercury, Dissolved	ND	ug/L	0.20	1	01/31/13 09:37	01/31/13 17:03	7439-97-6	
245.1 Potentially Diss Mercury	Analytical Method: EPA 245.1 Preparation Method: EPA 245.1							
Mercury, Dissolved	ND	ug/L	0.20	1	01/29/13 10:30	01/29/13 15:57	7439-97-6	
2510B Specific Conductance	Analytical Method: SM 2510B							
Specific Conductance	**1340**	umhos/cm	10.0	1		01/25/13 12:41		
Salinity	Analytical Method: Calculated							
Salinity (as dissolved solids)	**859**	mg/L	6.0	1		01/25/13 14:35		

This report shall not be reproduced, except in full,
without the written consent of Pace Analytical Services, Inc..

Pace Analytical Services, Inc.
9608 Loiret Blvd.
Lenexa, KS 66219
(913)599-5665

ANALYTICAL RESULTS

Project: JANUARY 2013 RICO WATER SAMPLI
Pace Project No.: 60137200

Sample: MW-4 DEEP_20130116 **Lab ID: 60137200019** Collected: 01/16/13 11:15 Received: 01/19/13 08:30 Matrix: Water

Parameters	Results	Units	Report Limit	DF	Prepared	Analyzed	CAS No.	Qual
Salinity	Analytical Method: Calculated							
Salinity (as seawater)	**0.67**	PSU	0.010	1		01/25/13 14:35		
2320B Alkalinity	Analytical Method: SM 2320B							
Alkalinity,Bicarbonate (CaCO3)	**262**	mg/L	20.0	1		01/24/13 10:56		
Alkalinity, Carbonate (CaCO3)	ND	mg/L	20.0	1		01/24/13 10:56		
Alkalinity, Total as CaCO3	**262**	mg/L	20.0	1		01/24/13 10:56		
2540C Total Dissolved Solids	Analytical Method: SM 2540C							
Total Dissolved Solids	**1150**	mg/L	5.0	1		01/23/13 15:27		
2540D Total Suspended Solids	Analytical Method: SM 2540D							
Total Suspended Solids	**272**	mg/L	5.0	1		01/23/13 15:14		
4500S2D Sulfide, Total	Analytical Method: SM 4500-S-2 D							
Sulfide, Total	ND	mg/L	0.050	1		01/22/13 14:34	18496-25-8	
300.0 IC Anions 28 Days	Analytical Method: EPA 300.0							
Chloride	**1.1**	mg/L	1.0	1		01/28/13 17:46	16887-00-6	
Sulfate	**597**	mg/L	50.0	50		01/28/13 18:04	14808-79-8	
353.2 Nitrogen, NO2/NO3 pres.	Analytical Method: EPA 353.2							
Nitrogen, NO2 plus NO3	ND	mg/L	0.10	1		01/23/13 12:05		
4500CNE Cyanide, Total	Analytical Method: SM 4500-CN-E							
Cyanide	ND	mg/L	0.0050	1		01/23/13 15:26	57-12-5	
5310C TOC	Analytical Method: SM 5310C							
Total Organic Carbon	**1.6**	mg/L	1.0	1		01/25/13 19:45	7440-44-0	

This report shall not be reproduced, except in full,
without the written consent of Pace Analytical Services, Inc..

Pace Analytical Services, Inc.
9608 Loiret Blvd.
Lenexa, KS 66219
(913)599-5665

ANALYTICAL RESULTS

Project: JANUARY 2013 RICO WATER SAMPLI
Pace Project No.: 60137200

Sample: DR-9_20130116 **Lab ID: 60137200020** Collected: 01/16/13 11:35 Received: 01/19/13 08:30 Matrix: Water

Parameters	Results	Units	Report Limit	DF	Prepared	Analyzed	CAS No.	Qual
200.7 Potentially Diss. Metals	Analytical Method: EPA 200.7 Preparation Method: EPA 200.7							
Calcium, Dissolved	**275000**	ug/L	500	5	01/28/13 11:45	01/29/13 16:54	7440-70-2	
Magnesium, Dissolved	**31300**	ug/L	250	5	01/28/13 11:45	01/29/13 16:54	7439-95-4	
Potassium, Dissolved	**3640**	ug/L	2500	5	01/28/13 11:45	01/29/13 16:54	7440-09-7	
Sodium, Dissolved	**7490**	ug/L	2500	5	01/28/13 11:45	01/29/13 16:54	7440-23-5	
200.8 MET ICPMS	Analytical Method: EPA 200.8 Preparation Method: EPA 200.8							
Aluminum	**6950**	ug/L	4.0	1	01/25/13 10:23	01/31/13 18:09	7429-90-5	
Antimony	ND	ug/L	0.50	1	01/25/13 10:23	01/31/13 18:09	7440-36-0	
Arsenic	**18.1**	ug/L	0.50	1	01/25/13 10:23	01/31/13 18:09	7440-38-2	
Barium	**141**	ug/L	0.30	1	01/25/13 10:23	01/31/13 18:09	7440-39-3	
Beryllium	**0.78**	ug/L	0.20	1	01/25/13 10:23	01/31/13 18:09	7440-41-7	
Cadmium	**4.6**	ug/L	0.080	1	01/25/13 10:23	01/31/13 18:09	7440-43-9	
Calcium	**258000**	ug/L	400	20	01/25/13 10:23	01/31/13 18:14	7440-70-2	
Chromium	**8.5**	ug/L	0.50	1	01/25/13 10:23	01/31/13 18:09	7440-47-3	
Cobalt	**10.4**	ug/L	0.50	1	01/25/13 10:23	01/31/13 18:09	7440-48-4	
Copper	**83.2**	ug/L	0.50	1	01/25/13 10:23	01/31/13 18:09	7440-50-8	
Iron	**15200**	ug/L	50.0	1	01/25/13 10:23	01/31/13 18:09	7439-89-6	
Lead	**77.2**	ug/L	0.10	1	01/25/13 10:23	01/31/13 18:09	7439-92-1	
Magnesium	**33200**	ug/L	50.0	10	01/25/13 10:23	02/06/13 00:33	7439-95-4	
Manganese	**1770**	ug/L	10.0	20	01/25/13 10:23	01/31/13 18:14	7439-96-5	
Molybdenum	**8.6**	ug/L	0.50	1	01/25/13 10:23	01/31/13 18:09	7439-98-7	
Nickel	**8.3**	ug/L	0.50	1	01/25/13 10:23	01/31/13 18:09	7440-02-0	
Potassium	**4390**	ug/L	20.0	1	01/25/13 10:23	01/31/13 18:09	7440-09-7	
Selenium	**32.2**	ug/L	0.50	1	01/25/13 10:23	01/31/13 18:09	7782-49-2	
Silica	**38800**	ug/L	535	10	01/25/13 10:23	02/06/13 00:33	7631-86-9	
Silver	**1.4**	ug/L	0.50	1	01/25/13 10:23	01/31/13 18:09	7440-22-4	
Sodium	**7190**	ug/L	50.0	1	01/25/13 10:23	01/31/13 18:09	7440-23-5	
Thallium	**0.28**	ug/L	0.10	1	01/25/13 10:23	01/31/13 18:09	7440-28-0	
Total Hardness by 2340B	**781000**	ug/L	1420	20	01/25/13 10:23	01/31/13 18:14		
Vanadium	**15.2**	ug/L	0.10	1	01/25/13 10:23	01/31/13 18:09	7440-62-2	
Zinc	**527**	ug/L	100	20	01/25/13 10:23	01/31/13 18:14	7440-66-6	
200.8 MET ICPMS, Dissolved	Analytical Method: EPA 200.8 Preparation Method: EPA 200.8							
Aluminum, Dissolved	**34.4**	ug/L	4.0	1	01/25/13 10:36	01/31/13 13:17	7429-90-5	
Antimony, Dissolved	ND	ug/L	0.50	1	01/25/13 10:36	01/31/13 13:17	7440-36-0	
Arsenic, Dissolved	ND	ug/L	0.50	1	01/25/13 10:36	01/31/13 13:17	7440-38-2	
Barium, Dissolved	**12.4**	ug/L	0.30	1	01/25/13 10:36	01/31/13 13:17	7440-39-3	
Beryllium, Dissolved	ND	ug/L	0.20	1	01/25/13 10:36	01/31/13 13:17	7440-41-7	
Cadmium, Dissolved	**2.0**	ug/L	0.080	1	01/25/13 10:36	01/31/13 13:17	7440-43-9	
Calcium, Dissolved	**266000**	ug/L	400	20	01/25/13 10:36	01/31/13 13:21	7440-70-2	
Chromium, Dissolved	ND	ug/L	0.50	1	01/25/13 10:36	01/31/13 13:17	7440-47-3	
Cobalt, Dissolved	ND	ug/L	0.50	1	01/25/13 10:36	01/31/13 13:17	7440-48-4	
Copper, Dissolved	**3.0**	ug/L	0.50	1	01/25/13 10:36	01/31/13 13:17	7440-50-8	
Iron, Dissolved	ND	ug/L	50.0	1	01/25/13 10:36	01/31/13 13:17	7439-89-6	
Lead, Dissolved	**0.16**	ug/L	0.10	1	01/25/13 10:36	01/31/13 13:17	7439-92-1	
Magnesium, Dissolved	**33900**	ug/L	100	20	01/25/13 10:36	01/28/13 21:48	7439-95-4	

This report shall not be reproduced, except in full,
without the written consent of Pace Analytical Services, Inc..

Pace Analytical Services, Inc.
9608 Loiret Blvd.
Lenexa, KS 66219
(913)599-5665

ANALYTICAL RESULTS

Project: JANUARY 2013 RICO WATER SAMPLI
Pace Project No.: 60137200

Sample: DR-9_20130116 **Lab ID: 60137200020** Collected: 01/16/13 11:35 Received: 01/19/13 08:30 Matrix: Water

Parameters	Results	Units	Report Limit	DF	Prepared	Analyzed	CAS No.	Qual
200.8 MET ICPMS, Dissolved	Analytical Method: EPA 200.8 Preparation Method: EPA 200.8							
Manganese, Dissolved	**4.2**	ug/L	0.50	1	01/25/13 10:36	01/31/13 13:17	7439-96-5	
Molybdenum, Dissolved	**2.2**	ug/L	0.50	1	01/25/13 10:36	01/31/13 13:17	7439-98-7	
Nickel, Dissolved	ND	ug/L	0.50	1	01/25/13 10:36	01/31/13 13:17	7440-02-0	
Potassium, Dissolved	**3350**	ug/L	20.0	1	01/25/13 10:36	01/31/13 13:17	7440-09-7	
Selenium, Dissolved	**34.3**	ug/L	0.50	1	01/25/13 10:36	01/31/13 13:17	7782-49-2	
Silver, Dissolved	ND	ug/L	0.50	1	01/25/13 10:36	01/31/13 13:17	7440-22-4	
Sodium, Dissolved	**8090**	ug/L	50.0	1	01/25/13 10:36	01/31/13 13:17	7440-23-5	
Thallium, Dissolved	ND	ug/L	0.10	1	01/25/13 10:36	01/31/13 13:17	7440-28-0	
Vanadium, Dissolved	ND	ug/L	0.10	1	01/25/13 10:36	01/31/13 13:17	7440-62-2	
Zinc, Dissolved	**275**	ug/L	5.0	1	01/25/13 10:36	01/31/13 13:17	7440-66-6	
200.8 Potentially Diss. Metals	Analytical Method: EPA 200.8 Preparation Method: EPA 200.8							
Aluminum, Dissolved	**1980**	ug/L	50.0	1	01/23/13 11:30	01/25/13 17:09	7429-90-5	
Antimony, Dissolved	**0.15J**	ug/L	1.0	1	01/23/13 11:30	01/25/13 17:09	7440-36-0	
Arsenic, Dissolved	**4.3**	ug/L	1.0	1	01/23/13 11:30	01/25/13 17:09	7440-38-2	
Barium, Dissolved	**32.4**	ug/L	1.0	1	01/23/13 11:30	01/25/13 17:09	7440-39-3	
Beryllium, Dissolved	**0.50J**	ug/L	0.50	1	01/23/13 11:30	01/25/13 17:09	7440-41-7	
Cadmium, Dissolved	**4.0**	ug/L	0.50	1	01/23/13 11:30	01/25/13 17:09	7440-43-9	
Chromium, Dissolved	**6.3**	ug/L	1.0	1	01/23/13 11:30	01/25/13 17:09	7440-47-3	
Cobalt, Dissolved	**2.1**	ug/L	1.0	1	01/23/13 11:30	01/25/13 17:09	7440-48-4	
Copper, Dissolved	**57.4**	ug/L	1.0	1	01/23/13 11:30	01/25/13 17:09	7440-50-8	
Iron, Dissolved	**4040**	ug/L	50.0	1	01/23/13 11:30	01/25/13 17:09	7439-89-6	
Lead, Dissolved	**26.2**	ug/L	1.0	1	01/23/13 11:30	01/25/13 17:09	7439-92-1	
Manganese, Dissolved	**311**	ug/L	1.0	1	01/23/13 11:30	01/25/13 17:09	7439-96-5	
Molybdenum, Dissolved	**1.1**	ug/L	1.0	1	01/23/13 11:30	01/25/13 17:09	7439-98-7	
Nickel, Dissolved	**2.4**	ug/L	1.0	1	01/23/13 11:30	01/25/13 17:09	7440-02-0	
Selenium, Dissolved	**30.8**	ug/L	1.0	1	01/23/13 11:30	01/25/13 17:09	7782-49-2	
Silver, Dissolved	**0.71**	ug/L	0.50	1	01/23/13 11:30	01/25/13 17:09	7440-22-4	
Thallium, Dissolved	**0.074J**	ug/L	1.0	1	01/23/13 11:30	01/25/13 17:09	7440-28-0	
Vanadium, Dissolved	**3.3**	ug/L	1.0	1	01/23/13 11:30	01/25/13 17:09	7440-62-2	
Zinc, Dissolved	**421**	ug/L	10.0	1	01/23/13 11:30	01/25/13 17:09	7440-66-6	
245.1 Mercury	Analytical Method: EPA 245.1 Preparation Method: EPA 245.1							
Mercury	ND	ug/L	0.20	1	02/05/13 12:02	02/05/13 21:53	7439-97-6	
245.1 Mercury, Dissolved	Analytical Method: EPA 245.1 Preparation Method: EPA 245.1							
Mercury, Dissolved	ND	ug/L	0.20	1	01/31/13 09:37	01/31/13 17:06	7439-97-6	
245.1 Potentially Diss Mercury	Analytical Method: EPA 245.1 Preparation Method: EPA 245.1							
Mercury, Dissolved	ND	ug/L	0.20	1	01/29/13 10:30	01/29/13 16:00	7439-97-6	
2510B Specific Conductance	Analytical Method: SM 2510B							
Specific Conductance	**1420**	umhos/cm	10.0	1		01/25/13 12:43		
Salinity	Analytical Method: Calculated							
Salinity (as dissolved solids)	**910**	mg/L	6.0	1		01/25/13 14:35		

This report shall not be reproduced, except in full,
without the written consent of Pace Analytical Services, Inc..

Pace Analytical Services, Inc.
9608 Loiret Blvd.
Lenexa, KS 66219
(913)599-5665

ANALYTICAL RESULTS

Project: JANUARY 2013 RICO WATER SAMPLI
Pace Project No.: 60137200

Sample: DR-9_20130116 **Lab ID: 60137200020** Collected: 01/16/13 11:35 Received: 01/19/13 08:30 Matrix: Water

Parameters	Results	Units	Report Limit	DF	Prepared	Analyzed	CAS No.	Qual
Salinity	Analytical Method: Calculated							
Salinity (as seawater)	**0.71**	PSU	0.010	1		01/25/13 14:35		
2320B Alkalinity	Analytical Method: SM 2320B							
Alkalinity,Bicarbonate (CaCO3)	ND	mg/L	20.0	1		01/24/13 11:03		
Alkalinity, Carbonate (CaCO3)	ND	mg/L	20.0	1		01/24/13 11:03		
Alkalinity, Total as CaCO3	ND	mg/L	20.0	1		01/24/13 11:03		
2540C Total Dissolved Solids	Analytical Method: SM 2540C							
Total Dissolved Solids	**1100**	mg/L	5.0	1		01/23/13 15:27		
2540D Total Suspended Solids	Analytical Method: SM 2540D							
Total Suspended Solids	**227**	mg/L	5.0	1		01/23/13 15:14		
4500S2D Sulfide, Total	Analytical Method: SM 4500-S-2 D							
Sulfide, Total	ND	mg/L	0.050	1		01/22/13 14:34	18496-25-8	
300.0 IC Anions 28 Days	Analytical Method: EPA 300.0							
Chloride	**1.1**	mg/L	1.0	1		01/28/13 19:32	16887-00-6	
Sulfate	**599**	mg/L	50.0	50		01/28/13 19:50	14808-79-8	
353.2 Nitrogen, NO2/NO3 pres.	Analytical Method: EPA 353.2							
Nitrogen, NO2 plus NO3	ND	mg/L	0.10	1		01/23/13 12:06		
4500CNE Cyanide, Total	Analytical Method: SM 4500-CN-E							
Cyanide	ND	mg/L	0.0050	1		01/23/13 13:41	57-12-5	
5310C TOC	Analytical Method: SM 5310C							
Total Organic Carbon	**1.7**	mg/L	1.0	1		01/25/13 19:59	7440-44-0	

This report shall not be reproduced, except in full,
without the written consent of Pace Analytical Services, Inc..

Pace Analytical Services, Inc.
9608 Loiret Blvd.
Lenexa, KS 66219
(913)599-5665

ANALYTICAL RESULTS

Project: JANUARY 2013 RICO WATER SAMPLI
Pace Project No.: 60137200

Sample: GW-4_20130116 **Lab ID: 60137200021** Collected: 01/16/13 11:25 Received: 01/19/13 08:30 Matrix: Water

Parameters	Results	Units	Report Limit	DF	Prepared	Analyzed	CAS No.	Qual
200.7 Potentially Diss. Metals	Analytical Method: EPA 200.7 Preparation Method: EPA 200.7							
Calcium, Dissolved	**219000**	ug/L	500	5	01/28/13 11:45	01/29/13 16:57	7440-70-2	
Magnesium, Dissolved	**26200**	ug/L	250	5	01/28/13 11:45	01/29/13 16:57	7439-95-4	
Potassium, Dissolved	**5070**	ug/L	2500	5	01/28/13 11:45	01/29/13 16:57	7440-09-7	
Sodium, Dissolved	**7540**	ug/L	2500	5	01/28/13 11:45	01/29/13 16:57	7440-23-5	
200.8 MET ICPMS	Analytical Method: EPA 200.8 Preparation Method: EPA 200.8							
Aluminum	**38700**	ug/L	80.0	20	01/25/13 10:23	01/31/13 18:24	7429-90-5	
Antimony	**0.60**	ug/L	0.50	1	01/25/13 10:23	01/31/13 18:19	7440-36-0	
Arsenic	**25.7**	ug/L	0.50	1	01/25/13 10:23	01/31/13 18:19	7440-38-2	
Barium	**716**	ug/L	6.0	20	01/25/13 10:23	01/31/13 18:24	7440-39-3	
Beryllium	**2.2**	ug/L	0.20	1	01/25/13 10:23	01/31/13 18:19	7440-41-7	
Cadmium	**24.4**	ug/L	0.080	1	01/25/13 10:23	01/31/13 18:19	7440-43-9	
Calcium	**198000**	ug/L	400	20	01/25/13 10:23	01/31/13 18:24	7440-70-2	
Chromium	**65.0**	ug/L	0.50	1	01/25/13 10:23	01/31/13 18:19	7440-47-3	
Cobalt	**23.9**	ug/L	0.50	1	01/25/13 10:23	01/31/13 18:19	7440-48-4	
Copper	**191**	ug/L	0.50	1	01/25/13 10:23	01/31/13 18:19	7440-50-8	
Iron	**71500**	ug/L	1000	20	01/25/13 10:23	01/31/13 18:24	7439-89-6	
Lead	**148**	ug/L	0.10	1	01/25/13 10:23	01/31/13 18:19	7439-92-1	
Magnesium	**50100**	ug/L	250	50	01/25/13 10:23	02/06/13 00:38	7439-95-4	
Manganese	**1670**	ug/L	10.0	20	01/25/13 10:23	01/31/13 18:24	7439-96-5	
Molybdenum	**18.3**	ug/L	0.50	1	01/25/13 10:23	01/31/13 18:19	7439-98-7	
Nickel	**51.1**	ug/L	0.50	1	01/25/13 10:23	01/31/13 18:19	7440-02-0	
Potassium	**8860**	ug/L	20.0	1	01/25/13 10:23	01/31/13 18:19	7440-09-7	
Selenium	**5.0**	ug/L	0.50	1	01/25/13 10:23	01/31/13 18:19	7782-49-2	
Silica	**126000**	ug/L	2680	50	01/25/13 10:23	02/06/13 00:38	7631-86-9	
Silver	**3.6**	ug/L	0.50	1	01/25/13 10:23	01/31/13 18:19	7440-22-4	
Sodium	**8350**	ug/L	50.0	1	01/25/13 10:23	01/31/13 18:19	7440-23-5	
Thallium	**0.89**	ug/L	0.10	1	01/25/13 10:23	01/31/13 18:19	7440-28-0	
Total Hardness by 2340B	**700000**	ug/L	3550	50	01/25/13 10:23	02/06/13 00:38		
Vanadium	**89.9**	ug/L	0.10	1	01/25/13 10:23	01/31/13 18:19	7440-62-2	
Zinc	**1500**	ug/L	100	20	01/25/13 10:23	01/31/13 18:24	7440-66-6	
200.8 MET ICPMS, Dissolved	Analytical Method: EPA 200.8 Preparation Method: EPA 200.8							
Aluminum, Dissolved	**9.0**	ug/L	4.0	1	01/25/13 10:36	01/31/13 13:26	7429-90-5	
Antimony, Dissolved	ND	ug/L	0.50	1	01/25/13 10:36	01/31/13 13:26	7440-36-0	
Arsenic, Dissolved	**0.84**	ug/L	0.50	1	01/25/13 10:36	01/31/13 13:26	7440-38-2	
Barium, Dissolved	**35.3**	ug/L	0.30	1	01/25/13 10:36	01/31/13 13:26	7440-39-3	
Beryllium, Dissolved	ND	ug/L	0.20	1	01/25/13 10:36	01/31/13 13:26	7440-41-7	
Cadmium, Dissolved	ND	ug/L	0.080	1	01/25/13 10:36	01/31/13 13:26	7440-43-9	
Calcium, Dissolved	**188000**	ug/L	400	20	01/25/13 10:36	01/31/13 13:30	7440-70-2	
Chromium, Dissolved	ND	ug/L	0.50	1	01/25/13 10:36	01/31/13 13:26	7440-47-3	
Cobalt, Dissolved	**0.83**	ug/L	0.50	1	01/25/13 10:36	01/31/13 13:26	7440-48-4	
Copper, Dissolved	**0.72**	ug/L	0.50	1	01/25/13 10:36	01/31/13 13:26	7440-50-8	
Iron, Dissolved	**1470**	ug/L	50.0	1	01/25/13 10:36	01/31/13 13:26	7439-89-6	
Lead, Dissolved	ND	ug/L	0.10	1	01/25/13 10:36	01/31/13 13:26	7439-92-1	
Magnesium, Dissolved	**19700**	ug/L	5.0	1	01/25/13 10:36	01/31/13 13:26	7439-95-4	

This report shall not be reproduced, except in full,
without the written consent of Pace Analytical Services, Inc..

Pace Analytical Services, Inc.
9608 Loiret Blvd.
Lenexa, KS 66219
(913)599-5665

ANALYTICAL RESULTS

Project: JANUARY 2013 RICO WATER SAMPLI
Pace Project No.: 60137200

Sample: GW-4_20130116 **Lab ID: 60137200021** Collected: 01/16/13 11:25 Received: 01/19/13 08:30 Matrix: Water

Parameters	Results	Units	Report Limit	DF	Prepared	Analyzed	CAS No.	Qual
200.8 MET ICPMS, Dissolved	Analytical Method: EPA 200.8 Preparation Method: EPA 200.8							
Manganese, Dissolved	**673**	ug/L	10.0	20	01/25/13 10:36	01/31/13 13:30	7439-96-5	
Molybdenum, Dissolved	**10**	ug/L	0.50	1	01/25/13 10:36	01/31/13 13:26	7439-98-7	
Nickel, Dissolved	**1.3**	ug/L	0.50	1	01/25/13 10:36	01/31/13 13:26	7440-02-0	
Potassium, Dissolved	**3640**	ug/L	20.0	1	01/25/13 10:36	01/31/13 13:26	7440-09-7	
Selenium, Dissolved	ND	ug/L	0.50	1	01/25/13 10:36	01/31/13 13:26	7782-49-2	
Silver, Dissolved	ND	ug/L	0.50	1	01/25/13 10:36	01/31/13 13:26	7440-22-4	
Sodium, Dissolved	**7600**	ug/L	50.0	1	01/25/13 10:36	01/31/13 13:26	7440-23-5	
Thallium, Dissolved	ND	ug/L	0.10	1	01/25/13 10:36	01/31/13 13:26	7440-28-0	
Vanadium, Dissolved	**0.22**	ug/L	0.10	1	01/25/13 10:36	01/31/13 13:26	7440-62-2	
Zinc, Dissolved	**18.6**	ug/L	5.0	1	01/25/13 10:36	01/31/13 13:26	7440-66-6	
200.8 Potentially Diss. Metals	Analytical Method: EPA 200.8 Preparation Method: EPA 200.8							
Aluminum, Dissolved	**8560**	ug/L	50.0	1	01/23/13 11:30	01/25/13 17:13	7429-90-5	M1
Antimony, Dissolved	**0.17J**	ug/L	1.0	1	01/23/13 11:30	01/25/13 17:13	7440-36-0	
Arsenic, Dissolved	**6.7**	ug/L	1.0	1	01/23/13 11:30	01/25/13 17:13	7440-38-2	
Barium, Dissolved	**85.3**	ug/L	1.0	1	01/23/13 11:30	01/25/13 17:13	7440-39-3	
Beryllium, Dissolved	**2.0**	ug/L	0.50	1	01/23/13 11:30	01/25/13 17:13	7440-41-7	
Cadmium, Dissolved	**32.5**	ug/L	0.50	1	01/23/13 11:30	01/25/13 17:13	7440-43-9	
Chromium, Dissolved	**18.3**	ug/L	1.0	1	01/23/13 11:30	01/25/13 17:13	7440-47-3	
Cobalt, Dissolved	**12.0**	ug/L	1.0	1	01/23/13 11:30	01/25/13 17:13	7440-48-4	
Copper, Dissolved	**128**	ug/L	1.0	1	01/23/13 11:30	01/25/13 17:13	7440-50-8	
Iron, Dissolved	**23100**	ug/L	50.0	1	01/23/13 11:30	01/25/13 17:13	7439-89-6	M1
Lead, Dissolved	**188**	ug/L	1.0	1	01/23/13 11:30	01/25/13 17:13	7439-92-1	
Manganese, Dissolved	**1590**	ug/L	1.0	1	01/23/13 11:30	01/25/13 17:13	7439-96-5	M1
Molybdenum, Dissolved	**5.2**	ug/L	1.0	1	01/23/13 11:30	01/25/13 17:13	7439-98-7	
Nickel, Dissolved	**18.7**	ug/L	1.0	1	01/23/13 11:30	01/25/13 17:13	7440-02-0	
Selenium, Dissolved	**2.7**	ug/L	1.0	1	01/23/13 11:30	01/25/13 17:13	7782-49-2	
Silver, Dissolved	ND	ug/L	0.50	1	01/23/13 11:30	01/25/13 17:13	7440-22-4	
Thallium, Dissolved	**0.35J**	ug/L	1.0	1	01/23/13 11:30	01/25/13 17:13	7440-28-0	
Vanadium, Dissolved	**25.6**	ug/L	1.0	1	01/23/13 11:30	01/25/13 17:13	7440-62-2	
Zinc, Dissolved	**1680**	ug/L	10.0	1	01/23/13 11:30	01/25/13 17:13	7440-66-6	M1
245.1 Mercury	Analytical Method: EPA 245.1 Preparation Method: EPA 245.1							
Mercury	**0.41**	ug/L	0.20	1	01/28/13 10:00	01/28/13 18:20	7439-97-6	
245.1 Mercury, Dissolved	Analytical Method: EPA 245.1 Preparation Method: EPA 245.1							
Mercury, Dissolved	ND	ug/L	0.20	1	01/29/13 11:54	01/30/13 18:15	7439-97-6	
245.1 Potentially Diss Mercury	Analytical Method: EPA 245.1 Preparation Method: EPA 245.1							
Mercury, Dissolved	ND	ug/L	0.20	1	01/29/13 10:30	01/29/13 16:13	7439-97-6	
2510B Specific Conductance	Analytical Method: SM 2510B							
Specific Conductance	**1090**	umhos/cm	10.0	1		01/25/13 12:49		
Salinity	Analytical Method: Calculated							
Salinity (as dissolved solids)	**698**	mg/L	6.0	1		01/25/13 14:37		

This report shall not be reproduced, except in full,
without the written consent of Pace Analytical Services, Inc..

Pace Analytical Services, Inc.
9608 Loiret Blvd.
Lenexa, KS 66219
(913)599-5665

ANALYTICAL RESULTS

Project: JANUARY 2013 RICO WATER SAMPLI
Pace Project No.: 60137200

Sample: GW-4_20130116 **Lab ID: 60137200021** Collected: 01/16/13 11:25 Received: 01/19/13 08:30 Matrix: Water

Parameters	Results	Units	Report Limit	DF	Prepared	Analyzed	CAS No.	Qual
Salinity	Analytical Method: Calculated							
Salinity (as seawater)	**0.54**	PSU	0.010	1		01/25/13 14:37		
2320B Alkalinity	Analytical Method: SM 2320B							
Alkalinity,Bicarbonate (CaCO3)	**106**	mg/L	20.0	1		01/24/13 11:07		
Alkalinity, Carbonate (CaCO3)	ND	mg/L	20.0	1		01/24/13 11:07		
Alkalinity, Total as CaCO3	**106**	mg/L	20.0	1		01/24/13 11:07		
2540C Total Dissolved Solids	Analytical Method: SM 2540C							
Total Dissolved Solids	**845**	mg/L	5.0	1		01/23/13 15:27		
2540D Total Suspended Solids	Analytical Method: SM 2540D							
Total Suspended Solids	**1400**	mg/L	5.0	1		01/23/13 15:15		
4500S2D Sulfide, Total	Analytical Method: SM 4500-S-2 D							
Sulfide, Total	ND	mg/L	0.050	1		01/22/13 14:34	18496-25-8	M1
300.0 IC Anions 28 Days	Analytical Method: EPA 300.0							
Chloride	**1.3**	mg/L	1.0	1		01/28/13 20:43	16887-00-6	
Sulfate	**511**	mg/L	50.0	50		01/28/13 21:01	14808-79-8	
353.2 Nitrogen, NO2/NO3 pres.	Analytical Method: EPA 353.2							
Nitrogen, NO2 plus NO3	ND	mg/L	0.10	1		01/23/13 12:10		
4500CNE Cyanide, Total	Analytical Method: SM 4500-CN-E							
Cyanide	ND	mg/L	0.0050	1		01/23/13 13:44	57-12-5	
5310C TOC	Analytical Method: SM 5310C							
Total Organic Carbon	**3.2**	mg/L	1.0	1		01/25/13 20:13	7440-44-0	

This report shall not be reproduced, except in full,
without the written consent of Pace Analytical Services, Inc..

Pace Analytical Services, Inc.
9608 Loiret Blvd.
Lenexa, KS 66219
(913)599-5665

ANALYTICAL RESULTS

Project: JANUARY 2013 RICO WATER SAMPLI
Pace Project No.: 60137200

Sample: MW-3 DEEP_20130116 **Lab ID: 60137200022** Collected: 01/16/13 11:50 Received: 01/19/13 08:30 Matrix: Water

Parameters	Results	Units	Report Limit	DF	Prepared	Analyzed	CAS No.	Qual
200.7 Potentially Diss. Metals	Analytical Method: EPA 200.7 Preparation Method: EPA 200.7							
Calcium, Dissolved	**233000**	ug/L	500	5	01/28/13 11:45	01/29/13 16:59	7440-70-2	
Magnesium, Dissolved	**24800**	ug/L	250	5	01/28/13 11:45	01/29/13 16:59	7439-95-4	
Potassium, Dissolved	**3780**	ug/L	2500	5	01/28/13 11:45	01/29/13 16:59	7440-09-7	
Sodium, Dissolved	**10900**	ug/L	2500	5	01/28/13 11:45	01/29/13 16:59	7440-23-5	
200.8 MET ICPMS	Analytical Method: EPA 200.8 Preparation Method: EPA 200.8							
Aluminum	**4780**	ug/L	4.0	1	01/25/13 10:23	01/31/13 18:29	7429-90-5	
Antimony	ND	ug/L	0.50	1	01/25/13 10:23	01/31/13 18:29	7440-36-0	
Arsenic	**6.7**	ug/L	0.50	1	01/25/13 10:23	01/31/13 18:29	7440-38-2	
Barium	**101**	ug/L	0.30	1	01/25/13 10:23	01/31/13 18:29	7440-39-3	
Beryllium	**0.40**	ug/L	0.20	1	01/25/13 10:23	01/31/13 18:29	7440-41-7	
Cadmium	**3.7**	ug/L	0.080	1	01/25/13 10:23	01/31/13 18:29	7440-43-9	
Calcium	**201000**	ug/L	400	20	01/25/13 10:23	01/31/13 18:34	7440-70-2	
Chromium	**5.2**	ug/L	0.50	1	01/25/13 10:23	01/31/13 18:29	7440-47-3	
Cobalt	**3.2**	ug/L	0.50	1	01/25/13 10:23	01/31/13 18:29	7440-48-4	
Copper	**36.7**	ug/L	0.50	1	01/25/13 10:23	01/31/13 18:29	7440-50-8	
Iron	**9820**	ug/L	50.0	1	01/25/13 10:23	01/31/13 18:29	7439-89-6	
Lead	**45.0**	ug/L	0.10	1	01/25/13 10:23	01/31/13 18:29	7439-92-1	
Magnesium	**22500**	ug/L	5.0	1	01/25/13 10:23	01/31/13 18:29	7439-95-4	
Manganese	**1450**	ug/L	10.0	20	01/25/13 10:23	01/31/13 18:34	7439-96-5	
Molybdenum	**9.4**	ug/L	0.50	1	01/25/13 10:23	01/31/13 18:29	7439-98-7	
Nickel	**4.2**	ug/L	0.50	1	01/25/13 10:23	01/31/13 18:29	7440-02-0	
Potassium	**4280**	ug/L	20.0	1	01/25/13 10:23	01/31/13 18:29	7440-09-7	
Selenium	**0.87**	ug/L	0.50	1	01/25/13 10:23	01/31/13 18:29	7782-49-2	
Silica	**30900**	ug/L	535	10	01/25/13 10:23	02/06/13 01:02	7631-86-9	
Silver	ND	ug/L	0.50	1	01/25/13 10:23	01/31/13 18:29	7440-22-4	
Sodium	**10600**	ug/L	50.0	1	01/25/13 10:23	01/31/13 18:29	7440-23-5	
Thallium	**0.24**	ug/L	0.10	1	01/25/13 10:23	01/31/13 18:29	7440-28-0	
Total Hardness by 2340B	**596000**	ug/L	1420	20	01/25/13 10:23	01/31/13 18:34		
Vanadium	**11.8**	ug/L	0.10	1	01/25/13 10:23	01/31/13 18:29	7440-62-2	
Zinc	**195**	ug/L	5.0	1	01/25/13 10:23	01/31/13 18:29	7440-66-6	
200.8 MET ICPMS, Dissolved	Analytical Method: EPA 200.8 Preparation Method: EPA 200.8							
Aluminum, Dissolved	**4.5**	ug/L	4.0	1	01/25/13 10:36	01/31/13 13:50	7429-90-5	
Antimony, Dissolved	ND	ug/L	0.50	1	01/25/13 10:36	01/31/13 13:50	7440-36-0	
Arsenic, Dissolved	**0.72**	ug/L	0.50	1	01/25/13 10:36	01/31/13 13:50	7440-38-2	
Barium, Dissolved	**15.6**	ug/L	0.30	1	01/25/13 10:36	01/31/13 13:50	7440-39-3	
Beryllium, Dissolved	ND	ug/L	0.20	1	01/25/13 10:36	01/31/13 13:50	7440-41-7	
Cadmium, Dissolved	ND	ug/L	0.080	1	01/25/13 10:36	01/31/13 13:50	7440-43-9	
Calcium, Dissolved	**246000**	ug/L	400	20	01/25/13 10:36	01/31/13 13:55	7440-70-2	
Chromium, Dissolved	ND	ug/L	0.50	1	01/25/13 10:36	01/31/13 13:50	7440-47-3	
Cobalt, Dissolved	**0.99**	ug/L	0.50	1	01/25/13 10:36	01/31/13 13:50	7440-48-4	
Copper, Dissolved	**0.80**	ug/L	0.50	1	01/25/13 10:36	01/31/13 13:50	7440-50-8	
Iron, Dissolved	**1430**	ug/L	50.0	1	01/25/13 10:36	01/31/13 13:50	7439-89-6	
Lead, Dissolved	ND	ug/L	0.10	1	01/25/13 10:36	01/31/13 13:50	7439-92-1	
Magnesium, Dissolved	**22000**	ug/L	5.0	1	01/25/13 10:36	01/31/13 13:50	7439-95-4	

This report shall not be reproduced, except in full,
without the written consent of Pace Analytical Services, Inc..

Pace Analytical Services, Inc.
9608 Loiret Blvd.
Lenexa, KS 66219
(913)599-5665

ANALYTICAL RESULTS

Project: JANUARY 2013 RICO WATER SAMPLI
Pace Project No.: 60137200

Sample: MW-3 DEEP_20130116 **Lab ID: 60137200022** Collected: 01/16/13 11:50 Received: 01/19/13 08:30 Matrix: Water

Parameters	Results	Units	Report Limit	DF	Prepared	Analyzed	CAS No.	Qual
200.8 MET ICPMS, Dissolved	Analytical Method: EPA 200.8 Preparation Method: EPA 200.8							
Manganese, Dissolved	**1690**	ug/L	10.0	20	01/25/13 10:36	01/31/13 13:55	7439-96-5	
Molybdenum, Dissolved	**7.5**	ug/L	0.50	1	01/25/13 10:36	01/31/13 13:50	7439-98-7	
Nickel, Dissolved	ND	ug/L	0.50	1	01/25/13 10:36	01/31/13 13:50	7440-02-0	
Potassium, Dissolved	**3140**	ug/L	20.0	1	01/25/13 10:36	01/31/13 13:50	7440-09-7	
Selenium, Dissolved	ND	ug/L	0.50	1	01/25/13 10:36	01/31/13 13:50	7782-49-2	
Silver, Dissolved	ND	ug/L	0.50	1	01/25/13 10:36	01/31/13 13:50	7440-22-4	
Sodium, Dissolved	**10800**	ug/L	50.0	1	01/25/13 10:36	01/31/13 13:50	7440-23-5	
Thallium, Dissolved	ND	ug/L	0.10	1	01/25/13 10:36	01/31/13 13:50	7440-28-0	
Vanadium, Dissolved	**0.11**	ug/L	0.10	1	01/25/13 10:36	01/31/13 13:50	7440-62-2	
Zinc, Dissolved	**26.8**	ug/L	5.0	1	01/25/13 10:36	01/31/13 13:50	7440-66-6	
200.8 Potentially Diss. Metals	Analytical Method: EPA 200.8 Preparation Method: EPA 200.8							
Aluminum, Dissolved	**1090**	ug/L	50.0	1	01/23/13 11:30	01/25/13 17:29	7429-90-5	
Antimony, Dissolved	**0.14J**	ug/L	1.0	1	01/23/13 11:30	01/25/13 17:29	7440-36-0	
Arsenic, Dissolved	**2.6**	ug/L	1.0	1	01/23/13 11:30	01/25/13 17:29	7440-38-2	
Barium, Dissolved	**26.6**	ug/L	1.0	1	01/23/13 11:30	01/25/13 17:29	7440-39-3	
Beryllium, Dissolved	**0.25J**	ug/L	0.50	1	01/23/13 11:30	01/25/13 17:29	7440-41-7	
Cadmium, Dissolved	**3.0**	ug/L	0.50	1	01/23/13 11:30	01/25/13 17:29	7440-43-9	
Chromium, Dissolved	**2.2**	ug/L	1.0	1	01/23/13 11:30	01/25/13 17:29	7440-47-3	B
Cobalt, Dissolved	**1.8**	ug/L	1.0	1	01/23/13 11:30	01/25/13 17:29	7440-48-4	
Copper, Dissolved	**20.4**	ug/L	1.0	1	01/23/13 11:30	01/25/13 17:29	7440-50-8	
Iron, Dissolved	**4020**	ug/L	50.0	1	01/23/13 11:30	01/25/13 17:29	7439-89-6	
Lead, Dissolved	**43.7**	ug/L	1.0	1	01/23/13 11:30	01/25/13 17:29	7439-92-1	
Manganese, Dissolved	**1620**	ug/L	1.0	1	01/23/13 11:30	01/25/13 17:29	7439-96-5	
Molybdenum, Dissolved	**5.5**	ug/L	1.0	1	01/23/13 11:30	01/25/13 17:29	7439-98-7	
Nickel, Dissolved	**0.42J**	ug/L	1.0	1	01/23/13 11:30	01/25/13 17:29	7440-02-0	
Selenium, Dissolved	**0.45J**	ug/L	1.0	1	01/23/13 11:30	01/25/13 17:29	7782-49-2	
Silver, Dissolved	**0.17J**	ug/L	0.50	1	01/23/13 11:30	01/25/13 17:29	7440-22-4	
Thallium, Dissolved	**0.18J**	ug/L	1.0	1	01/23/13 11:30	01/25/13 17:29	7440-28-0	
Vanadium, Dissolved	**3.9**	ug/L	1.0	1	01/23/13 11:30	01/25/13 17:29	7440-62-2	
Zinc, Dissolved	**164**	ug/L	10.0	1	01/23/13 11:30	01/25/13 17:29	7440-66-6	
245.1 Mercury	Analytical Method: EPA 245.1 Preparation Method: EPA 245.1							
Mercury	ND	ug/L	0.20	1	01/28/13 10:00	01/28/13 18:27	7439-97-6	
245.1 Mercury, Dissolved	Analytical Method: EPA 245.1 Preparation Method: EPA 245.1							
Mercury, Dissolved	ND	ug/L	0.20	1	01/29/13 11:54	01/30/13 18:17	7439-97-6	M1
245.1 Potentially Diss Mercury	Analytical Method: EPA 245.1 Preparation Method: EPA 245.1							
Mercury, Dissolved	ND	ug/L	0.20	1	01/29/13 10:30	01/29/13 16:15	7439-97-6	
2510B Specific Conductance	Analytical Method: SM 2510B							
Specific Conductance	**1180**	umhos/cm	10.0	1		01/25/13 12:51		
Salinity	Analytical Method: Calculated							
Salinity (as dissolved solids)	**754**	mg/L	6.0	1		01/25/13 14:37		

This report shall not be reproduced, except in full,
without the written consent of Pace Analytical Services, Inc..

Pace Analytical Services, Inc.
9608 Loiret Blvd.
Lenexa, KS 66219
(913)599-5665

ANALYTICAL RESULTS

Project: JANUARY 2013 RICO WATER SAMPLI
Pace Project No.: 60137200

Sample: MW-3 DEEP_20130116 **Lab ID: 60137200022** Collected: 01/16/13 11:50 Received: 01/19/13 08:30 Matrix: Water

Parameters	Results	Units	Report Limit	DF	Prepared	Analyzed	CAS No.	Qual
Salinity	Analytical Method: Calculated							
Salinity (as seawater)	**0.58**	PSU	0.010	1		01/25/13 14:37		
2320B Alkalinity	Analytical Method: SM 2320B							
Alkalinity,Bicarbonate (CaCO3)	**78.5**	mg/L	20.0	1		01/24/13 11:12		
Alkalinity, Carbonate (CaCO3)	ND	mg/L	20.0	1		01/24/13 11:12		
Alkalinity, Total as CaCO3	**78.5**	mg/L	20.0	1		01/24/13 11:12		
2540C Total Dissolved Solids	Analytical Method: SM 2540C							
Total Dissolved Solids	**1070**	mg/L	5.0	1		01/23/13 15:28		
2540D Total Suspended Solids	Analytical Method: SM 2540D							
Total Suspended Solids	**145**	mg/L	5.0	1		01/23/13 15:15		
4500S2D Sulfide, Total	Analytical Method: SM 4500-S-2 D							
Sulfide, Total	ND	mg/L	0.050	1		01/22/13 14:34	18496-25-8	
300.0 IC Anions 28 Days	Analytical Method: EPA 300.0							
Chloride	**1.0**	mg/L	1.0	1		01/28/13 21:18	16887-00-6	
Sulfate	**649**	mg/L	50.0	50		01/28/13 21:36	14808-79-8	
353.2 Nitrogen, NO2/NO3 pres.	Analytical Method: EPA 353.2							
Nitrogen, NO2 plus NO3	ND	mg/L	0.10	1		01/23/13 12:11		
4500CNE Cyanide, Total	Analytical Method: SM 4500-CN-E							
Cyanide	ND	mg/L	0.0050	1		01/23/13 13:44	57-12-5	
5310C TOC	Analytical Method: SM 5310C							
Total Organic Carbon	ND	mg/L	1.0	1		01/25/13 20:27	7440-44-0	

This report shall not be reproduced, except in full,
without the written consent of Pace Analytical Services, Inc..

Pace Analytical Services, Inc.
9608 Loiret Blvd.
Lenexa, KS 66219
(913)599-5665

ANALYTICAL RESULTS

Project: JANUARY 2013 RICO WATER SAMPLI
Pace Project No.: 60137200

Sample: MW-2 DEEP_20130116 **Lab ID: 60137200023** Collected: 01/16/13 12:15 Received: 01/19/13 08:30 Matrix: Water

Parameters	Results	Units	Report Limit	DF	Prepared	Analyzed	CAS No.	Qual
200.7 Potentially Diss. Metals	Analytical Method: EPA 200.7 Preparation Method: EPA 200.7							
Calcium, Dissolved	**232000**	ug/L	500	5	01/28/13 11:45	01/29/13 17:05	7440-70-2	
Magnesium, Dissolved	**20900**	ug/L	250	5	01/28/13 11:45	01/29/13 17:05	7439-95-4	
Potassium, Dissolved	**1810**	ug/L	1000	2	01/28/13 11:45	01/31/13 09:46	7440-09-7	
Sodium, Dissolved	**9660**	ug/L	2500	5	01/28/13 11:45	01/29/13 17:05	7440-23-5	
200.8 MET ICPMS	Analytical Method: EPA 200.8 Preparation Method: EPA 200.8							
Aluminum	**2860**	ug/L	4.0	1	01/25/13 10:23	01/31/13 18:54	7429-90-5	
Antimony	ND	ug/L	0.50	1	01/25/13 10:23	01/31/13 18:54	7440-36-0	
Arsenic	**5.1**	ug/L	0.50	1	01/25/13 10:23	01/31/13 18:54	7440-38-2	
Barium	**63.0**	ug/L	0.30	1	01/25/13 10:23	01/31/13 18:54	7440-39-3	
Beryllium	**0.27**	ug/L	0.20	1	01/25/13 10:23	01/31/13 18:54	7440-41-7	
Cadmium	**3.2**	ug/L	0.080	1	01/25/13 10:23	01/31/13 18:54	7440-43-9	
Calcium	**205000**	ug/L	400	20	01/25/13 10:23	01/31/13 18:59	7440-70-2	
Chromium	**4.3**	ug/L	0.50	1	01/25/13 10:23	01/31/13 18:54	7440-47-3	
Cobalt	**1.5**	ug/L	0.50	1	01/25/13 10:23	01/31/13 18:54	7440-48-4	
Copper	**15.0**	ug/L	0.50	1	01/25/13 10:23	01/31/13 18:54	7440-50-8	
Iron	**5480**	ug/L	50.0	1	01/25/13 10:23	01/31/13 18:54	7439-89-6	
Lead	**41.6**	ug/L	0.10	1	01/25/13 10:23	01/31/13 18:54	7439-92-1	
Magnesium	**19200**	ug/L	5.0	1	01/25/13 10:23	01/31/13 18:54	7439-95-4	
Manganese	**320**	ug/L	0.50	1	01/25/13 10:23	01/31/13 18:54	7439-96-5	
Molybdenum	**10.1**	ug/L	0.50	1	01/25/13 10:23	01/31/13 18:54	7439-98-7	
Nickel	**2.2**	ug/L	0.50	1	01/25/13 10:23	01/31/13 18:54	7440-02-0	
Potassium	**2490**	ug/L	20.0	1	01/25/13 10:23	01/31/13 18:54	7440-09-7	
Selenium	**2.3**	ug/L	0.50	1	01/25/13 10:23	01/31/13 18:54	7782-49-2	
Silica	**22500**	ug/L	535	10	01/25/13 10:23	02/06/13 01:06	7631-86-9	
Silver	ND	ug/L	0.50	1	01/25/13 10:23	01/31/13 18:54	7440-22-4	
Sodium	**9690**	ug/L	50.0	1	01/25/13 10:23	01/31/13 18:54	7440-23-5	
Thallium	**0.19**	ug/L	0.10	1	01/25/13 10:23	01/31/13 18:54	7440-28-0	
Total Hardness by 2340B	**591000**	ug/L	1420	20	01/25/13 10:23	01/31/13 18:59		
Vanadium	**5.4**	ug/L	0.10	1	01/25/13 10:23	01/31/13 18:54	7440-62-2	
Zinc	**90.4**	ug/L	5.0	1	01/25/13 10:23	01/31/13 18:54	7440-66-6	
200.8 MET ICPMS, Dissolved	Analytical Method: EPA 200.8 Preparation Method: EPA 200.8							
Aluminum, Dissolved	**62.1**	ug/L	4.0	1	01/25/13 10:36	01/31/13 13:59	7429-90-5	
Antimony, Dissolved	ND	ug/L	0.50	1	01/25/13 10:36	01/31/13 13:59	7440-36-0	
Arsenic, Dissolved	ND	ug/L	0.50	1	01/25/13 10:36	01/31/13 13:59	7440-38-2	
Barium, Dissolved	**12.4**	ug/L	0.30	1	01/25/13 10:36	01/31/13 13:59	7440-39-3	
Beryllium, Dissolved	ND	ug/L	0.20	1	01/25/13 10:36	01/31/13 13:59	7440-41-7	
Cadmium, Dissolved	**0.93**	ug/L	0.080	1	01/25/13 10:36	01/31/13 13:59	7440-43-9	
Calcium, Dissolved	**216000**	ug/L	400	20	01/25/13 10:36	01/31/13 14:04	7440-70-2	
Chromium, Dissolved	ND	ug/L	0.50	1	01/25/13 10:36	01/31/13 13:59	7440-47-3	
Cobalt, Dissolved	ND	ug/L	0.50	1	01/25/13 10:36	01/31/13 13:59	7440-48-4	
Copper, Dissolved	**1.1**	ug/L	0.50	1	01/25/13 10:36	01/31/13 13:59	7440-50-8	
Iron, Dissolved	**126**	ug/L	50.0	1	01/25/13 10:36	01/31/13 13:59	7439-89-6	
Lead, Dissolved	**1.3**	ug/L	0.10	1	01/25/13 10:36	01/31/13 13:59	7439-92-1	
Magnesium, Dissolved	**19300**	ug/L	5.0	1	01/25/13 10:36	01/31/13 13:59	7439-95-4	

This report shall not be reproduced, except in full,
without the written consent of Pace Analytical Services, Inc..

Pace Analytical Services, Inc.
9608 Loiret Blvd.
Lenexa, KS 66219
(913)599-5665

ANALYTICAL RESULTS

Project: JANUARY 2013 RICO WATER SAMPLI
Pace Project No.: 60137200

Sample: MW-2 DEEP_20130116 **Lab ID: 60137200023** Collected: 01/16/13 12:15 Received: 01/19/13 08:30 Matrix: Water

Parameters	Results	Units	Report Limit	DF	Prepared	Analyzed	CAS No.	Qual
200.8 MET ICPMS, Dissolved	Analytical Method: EPA 200.8 Preparation Method: EPA 200.8							
Manganese, Dissolved	**9.4**	ug/L	0.50	1	01/25/13 10:36	01/31/13 13:59	7439-96-5	
Molybdenum, Dissolved	**7.2**	ug/L	0.50	1	01/25/13 10:36	01/31/13 13:59	7439-98-7	
Nickel, Dissolved	**0.54**	ug/L	0.50	1	01/25/13 10:36	01/31/13 13:59	7440-02-0	
Potassium, Dissolved	**1690**	ug/L	20.0	1	01/25/13 10:36	01/31/13 13:59	7440-09-7	
Selenium, Dissolved	**1.2**	ug/L	0.50	1	01/25/13 10:36	01/31/13 13:59	7782-49-2	
Silver, Dissolved	ND	ug/L	0.50	1	01/25/13 10:36	01/31/13 13:59	7440-22-4	
Sodium, Dissolved	**9930**	ug/L	50.0	1	01/25/13 10:36	01/31/13 13:59	7440-23-5	
Thallium, Dissolved	ND	ug/L	0.10	1	01/25/13 10:36	01/31/13 13:59	7440-28-0	
Vanadium, Dissolved	**0.18**	ug/L	0.10	1	01/25/13 10:36	01/31/13 13:59	7440-62-2	
Zinc, Dissolved	**19.5**	ug/L	5.0	1	01/25/13 10:36	01/31/13 13:59	7440-66-6	
200.8 Potentially Diss. Metals	Analytical Method: EPA 200.8 Preparation Method: EPA 200.8							
Aluminum, Dissolved	**523**	ug/L	50.0	1	01/23/13 11:30	01/25/13 17:33	7429-90-5	
Antimony, Dissolved	**0.13J**	ug/L	1.0	1	01/23/13 11:30	01/25/13 17:33	7440-36-0	
Arsenic, Dissolved	**1.5**	ug/L	1.0	1	01/23/13 11:30	01/25/13 17:33	7440-38-2	
Barium, Dissolved	**20.4**	ug/L	1.0	1	01/23/13 11:30	01/25/13 17:33	7440-39-3	
Beryllium, Dissolved	**0.14J**	ug/L	0.50	1	01/23/13 11:30	01/25/13 17:33	7440-41-7	
Cadmium, Dissolved	**3.2**	ug/L	0.50	1	01/23/13 11:30	01/25/13 17:33	7440-43-9	
Chromium, Dissolved	**2.7**	ug/L	1.0	1	01/23/13 11:30	01/25/13 17:33	7440-47-3	B
Cobalt, Dissolved	**0.47J**	ug/L	1.0	1	01/23/13 11:30	01/25/13 17:33	7440-48-4	
Copper, Dissolved	**9.1**	ug/L	1.0	1	01/23/13 11:30	01/25/13 17:33	7440-50-8	
Iron, Dissolved	**1420**	ug/L	50.0	1	01/23/13 11:30	01/25/13 17:33	7439-89-6	
Lead, Dissolved	**25.1**	ug/L	1.0	1	01/23/13 11:30	01/25/13 17:33	7439-92-1	
Manganese, Dissolved	**114**	ug/L	1.0	1	01/23/13 11:30	01/25/13 17:33	7439-96-5	
Molybdenum, Dissolved	**4.4**	ug/L	1.0	1	01/23/13 11:30	01/25/13 17:33	7439-98-7	
Nickel, Dissolved	ND	ug/L	1.0	1	01/23/13 11:30	01/25/13 17:33	7440-02-0	
Selenium, Dissolved	**1.4**	ug/L	1.0	1	01/23/13 11:30	01/25/13 17:33	7782-49-2	
Silver, Dissolved	**0.25J**	ug/L	0.50	1	01/23/13 11:30	01/25/13 17:33	7440-22-4	
Thallium, Dissolved	**0.038J**	ug/L	1.0	1	01/23/13 11:30	01/25/13 17:33	7440-28-0	
Vanadium, Dissolved	**1.4**	ug/L	1.0	1	01/23/13 11:30	01/25/13 17:33	7440-62-2	
Zinc, Dissolved	**64.1**	ug/L	10.0	1	01/23/13 11:30	01/25/13 17:33	7440-66-6	
245.1 Mercury	Analytical Method: EPA 245.1 Preparation Method: EPA 245.1							
Mercury	ND	ug/L	0.20	1	01/28/13 10:00	01/28/13 18:29	7439-97-6	
245.1 Mercury, Dissolved	Analytical Method: EPA 245.1 Preparation Method: EPA 245.1							
Mercury, Dissolved	ND	ug/L	0.20	1	01/29/13 11:54	01/30/13 18:24	7439-97-6	
245.1 Potentially Diss Mercury	Analytical Method: EPA 245.1 Preparation Method: EPA 245.1							
Mercury, Dissolved	ND	ug/L	0.20	1	01/29/13 10:30	01/29/13 16:17	7439-97-6	
2510B Specific Conductance	Analytical Method: SM 2510B							
Specific Conductance	**1200**	umhos/cm	10.0	1		01/25/13 12:52		
Salinity	Analytical Method: Calculated							
Salinity (as dissolved solids)	**769**	mg/L	6.0	1		01/25/13 14:37		

This report shall not be reproduced, except in full,
without the written consent of Pace Analytical Services, Inc..

Pace Analytical Services, Inc.
9608 Loiret Blvd.
Lenexa, KS 66219
(913)599-5665

ANALYTICAL RESULTS

Project: JANUARY 2013 RICO WATER SAMPLI
Pace Project No.: 60137200

Sample: MW-2 DEEP_20130116 **Lab ID: 60137200023** Collected: 01/16/13 12:15 Received: 01/19/13 08:30 Matrix: Water

Parameters	Results	Units	Report Limit	DF	Prepared	Analyzed	CAS No.	Qual
Salinity	Analytical Method: Calculated							
Salinity (as seawater)	**0.60**	PSU	0.010	1		01/25/13 14:37		
2320B Alkalinity	Analytical Method: SM 2320B							
Alkalinity,Bicarbonate (CaCO3)	**77.8**	mg/L	20.0	1		01/24/13 11:16		
Alkalinity, Carbonate (CaCO3)	ND	mg/L	20.0	1		01/24/13 11:16		
Alkalinity, Total as CaCO3	**77.8**	mg/L	20.0	1		01/24/13 11:16		
2540C Total Dissolved Solids	Analytical Method: SM 2540C							
Total Dissolved Solids	**980**	mg/L	5.0	1		01/23/13 15:28		
2540D Total Suspended Solids	Analytical Method: SM 2540D							
Total Suspended Solids	**101**	mg/L	5.0	1		01/23/13 15:15		
4500S2D Sulfide, Total	Analytical Method: SM 4500-S-2 D							
Sulfide, Total	ND	mg/L	0.050	1		01/22/13 14:35	18496-25-8	
300.0 IC Anions 28 Days	Analytical Method: EPA 300.0							
Chloride	**1.0**	mg/L	1.0	1		01/28/13 21:54	16887-00-6	
Sulfate	**661**	mg/L	50.0	50		01/28/13 22:11	14808-79-8	
353.2 Nitrogen, NO2/NO3 pres.	Analytical Method: EPA 353.2							
Nitrogen, NO2 plus NO3	ND	mg/L	0.10	1		01/23/13 12:13		
4500CNE Cyanide, Total	Analytical Method: SM 4500-CN-E							
Cyanide	ND	mg/L	0.0050	1		01/23/13 13:45	57-12-5	
5310C TOC	Analytical Method: SM 5310C							
Total Organic Carbon	ND	mg/L	1.0	1		01/28/13 14:45	7440-44-0	

This report shall not be reproduced, except in full,
without the written consent of Pace Analytical Services, Inc..

Pace Analytical Services, Inc.
9608 Loiret Blvd.
Lenexa, KS 66219
(913)599-5665

ANALYTICAL RESULTS

Project: JANUARY 2013 RICO WATER SAMPLI
Pace Project No.: 60137200

Sample: EB-1_20130116 **Lab ID: 60137200024** Collected: 01/16/13 10:30 Received: 01/19/13 08:30 Matrix: Water

Parameters	Results	Units	Report Limit	DF	Prepared	Analyzed	CAS No.	Qual
200.7 Potentially Diss. Metals	Analytical Method: EPA 200.7 Preparation Method: EPA 200.7							
Calcium, Dissolved	**463000**	ug/L	500	5	01/28/13 11:45	01/29/13 17:07	7440-70-2	
Magnesium, Dissolved	**31300**	ug/L	250	5	01/28/13 11:45	01/29/13 17:07	7439-95-4	
Potassium, Dissolved	**5930**	ug/L	2500	5	01/28/13 11:45	01/29/13 17:07	7440-09-7	
Sodium, Dissolved	**7260**	ug/L	2500	5	01/28/13 11:45	01/29/13 17:07	7440-23-5	
200.8 MET ICPMS	Analytical Method: EPA 200.8 Preparation Method: EPA 200.8							
Aluminum	**2990**	ug/L	4.0	1	01/25/13 10:23	01/31/13 19:04	7429-90-5	
Antimony	**0.71**	ug/L	0.50	1	01/25/13 10:23	01/31/13 19:04	7440-36-0	
Arsenic	**35.9**	ug/L	0.50	1	01/25/13 10:23	01/31/13 19:04	7440-38-2	
Barium	**47.8**	ug/L	0.30	1	01/25/13 10:23	01/31/13 19:04	7440-39-3	
Beryllium	**0.52**	ug/L	0.20	1	01/25/13 10:23	01/31/13 19:04	7440-41-7	
Cadmium	**7.7**	ug/L	0.080	1	01/25/13 10:23	01/31/13 19:04	7440-43-9	
Calcium	**403000**	ug/L	400	20	01/25/13 10:23	01/31/13 19:10	7440-70-2	
Chromium	**6.3**	ug/L	0.50	1	01/25/13 10:23	01/31/13 19:04	7440-47-3	
Cobalt	**8.0**	ug/L	0.50	1	01/25/13 10:23	01/31/13 19:04	7440-48-4	
Copper	**173**	ug/L	0.50	1	01/25/13 10:23	01/31/13 19:04	7440-50-8	
Iron	**27400**	ug/L	1000	20	01/25/13 10:23	01/31/13 19:10	7439-89-6	
Lead	**971**	ug/L	2.0	20	01/25/13 10:23	01/31/13 19:10	7439-92-1	
Magnesium	**31000**	ug/L	50.0	10	01/25/13 10:23	02/06/13 01:10	7439-95-4	
Manganese	**4420**	ug/L	10.0	20	01/25/13 10:23	01/31/13 19:10	7439-96-5	
Molybdenum	**14.1**	ug/L	0.50	1	01/25/13 10:23	01/31/13 19:04	7439-98-7	
Nickel	**10.0**	ug/L	0.50	1	01/25/13 10:23	01/31/13 19:04	7440-02-0	
Potassium	**6040**	ug/L	20.0	1	01/25/13 10:23	01/31/13 19:04	7440-09-7	
Selenium	**1.1**	ug/L	0.50	1	01/25/13 10:23	01/31/13 19:04	7782-49-2	
Silica	**36400**	ug/L	535	10	01/25/13 10:23	02/06/13 01:10	7631-86-9	
Silver	**7.5**	ug/L	0.50	1	01/25/13 10:23	01/31/13 19:04	7440-22-4	
Sodium	**6860**	ug/L	50.0	1	01/25/13 10:23	01/31/13 19:04	7440-23-5	
Thallium	**0.16**	ug/L	0.10	1	01/25/13 10:23	01/31/13 19:04	7440-28-0	
Total Hardness by 2340B	**1130000**	ug/L	1420	20	01/25/13 10:23	01/31/13 19:10		
Vanadium	**5.6**	ug/L	0.10	1	01/25/13 10:23	01/31/13 19:04	7440-62-2	
Zinc	**3240**	ug/L	100	20	01/25/13 10:23	01/31/13 19:10	7440-66-6	
200.8 MET ICPMS, Dissolved	Analytical Method: EPA 200.8 Preparation Method: EPA 200.8							
Aluminum, Dissolved	**352**	ug/L	4.0	1	01/25/13 10:36	01/31/13 12:20	7429-90-5	
Antimony, Dissolved	ND	ug/L	0.50	1	01/25/13 10:36	01/31/13 12:20	7440-36-0	
Arsenic, Dissolved	**8.2**	ug/L	0.50	1	01/25/13 10:36	01/31/13 12:20	7440-38-2	
Barium, Dissolved	**17.0**	ug/L	0.30	1	01/25/13 10:36	01/31/13 12:20	7440-39-3	
Beryllium, Dissolved	**0.22**	ug/L	0.20	1	01/25/13 10:36	01/31/13 12:20	7440-41-7	
Cadmium, Dissolved	**0.90**	ug/L	0.080	1	01/25/13 10:36	01/31/13 12:20	7440-43-9	
Calcium, Dissolved	**455000**	ug/L	500	25	01/25/13 10:36	01/31/13 12:30	7440-70-2	
Chromium, Dissolved	**0.88**	ug/L	0.50	1	01/25/13 10:36	01/31/13 12:20	7440-47-3	
Cobalt, Dissolved	**6.5**	ug/L	0.50	1	01/25/13 10:36	01/31/13 12:20	7440-48-4	
Copper, Dissolved	**20.3**	ug/L	0.50	1	01/25/13 10:36	01/31/13 12:20	7440-50-8	
Iron, Dissolved	**5710**	ug/L	50.0	1	01/25/13 10:36	01/31/13 12:20	7439-89-6	
Lead, Dissolved	**128**	ug/L	0.10	1	01/25/13 10:36	01/31/13 12:20	7439-92-1	
Magnesium, Dissolved	**30600**	ug/L	25.0	5	01/25/13 10:36	01/31/13 12:26	7439-95-4	

This report shall not be reproduced, except in full,
without the written consent of Pace Analytical Services, Inc..

Pace Analytical Services, Inc.
9608 Loiret Blvd.
Lenexa, KS 66219
(913)599-5665

ANALYTICAL RESULTS

Project: JANUARY 2013 RICO WATER SAMPLI
Pace Project No.: 60137200

Sample: EB-1_20130116 **Lab ID: 60137200024** Collected: 01/16/13 10:30 Received: 01/19/13 08:30 Matrix: Water

Parameters	Results	Units	Report Limit	DF	Prepared	Analyzed	CAS No.	Qual
200.8 MET ICPMS, Dissolved	Analytical Method: EPA 200.8 Preparation Method: EPA 200.8							
Manganese, Dissolved	**4540**	ug/L	12.5	25	01/25/13 10:36	01/31/13 12:30	7439-96-5	
Molybdenum, Dissolved	**15.0**	ug/L	0.50	1	01/25/13 10:36	01/31/13 12:20	7439-98-7	
Nickel, Dissolved	**7.2**	ug/L	0.50	1	01/25/13 10:36	01/31/13 12:20	7440-02-0	
Potassium, Dissolved	**6280**	ug/L	20.0	1	01/25/13 10:36	01/31/13 12:20	7440-09-7	
Selenium, Dissolved	ND	ug/L	0.50	1	01/25/13 10:36	01/31/13 12:20	7782-49-2	
Silver, Dissolved	ND	ug/L	0.50	1	01/25/13 10:36	01/31/13 12:20	7440-22-4	
Sodium, Dissolved	**8100**	ug/L	50.0	1	01/25/13 10:36	01/31/13 12:20	7440-23-5	
Thallium, Dissolved	ND	ug/L	0.10	1	01/25/13 10:36	01/31/13 12:20	7440-28-0	
Vanadium, Dissolved	**0.60**	ug/L	0.10	1	01/25/13 10:36	01/31/13 12:20	7440-62-2	
Zinc, Dissolved	**1660**	ug/L	25.0	5	01/25/13 10:36	01/31/13 12:26	7440-66-6	
200.8 Potentially Diss. Metals	Analytical Method: EPA 200.8 Preparation Method: EPA 200.8							
Aluminum, Dissolved	**1090**	ug/L	50.0	1	01/23/13 11:30	01/25/13 17:50	7429-90-5	
Antimony, Dissolved	**0.21J**	ug/L	1.0	1	01/23/13 11:30	01/25/13 17:50	7440-36-0	
Arsenic, Dissolved	**25.2**	ug/L	1.0	1	01/23/13 11:30	01/25/13 17:50	7440-38-2	
Barium, Dissolved	**14.1**	ug/L	1.0	1	01/23/13 11:30	01/25/13 17:50	7440-39-3	
Beryllium, Dissolved	**0.40J**	ug/L	0.50	1	01/23/13 11:30	01/25/13 17:50	7440-41-7	
Cadmium, Dissolved	**3.8**	ug/L	0.50	1	01/23/13 11:30	01/25/13 17:50	7440-43-9	
Chromium, Dissolved	**2.0**	ug/L	1.0	1	01/23/13 11:30	01/25/13 17:50	7440-47-3	B
Cobalt, Dissolved	**5.9**	ug/L	1.0	1	01/23/13 11:30	01/25/13 17:50	7440-48-4	
Copper, Dissolved	**68.5**	ug/L	1.0	1	01/23/13 11:30	01/25/13 17:50	7440-50-8	
Iron, Dissolved	**13700**	ug/L	50.0	1	01/23/13 11:30	01/25/13 17:50	7439-89-6	
Lead, Dissolved	**845**	ug/L	1.0	1	01/23/13 11:30	01/25/13 17:50	7439-92-1	
Manganese, Dissolved	**4830**	ug/L	1.0	1	01/23/13 11:30	01/25/13 17:50	7439-96-5	
Molybdenum, Dissolved	**13.2**	ug/L	1.0	1	01/23/13 11:30	01/25/13 17:50	7439-98-7	
Nickel, Dissolved	**3.0**	ug/L	1.0	1	01/23/13 11:30	01/25/13 17:50	7440-02-0	
Selenium, Dissolved	ND	ug/L	1.0	1	01/23/13 11:30	01/25/13 17:50	7782-49-2	
Silver, Dissolved	**0.072J**	ug/L	0.50	1	01/23/13 11:30	01/25/13 17:50	7440-22-4	
Thallium, Dissolved	**0.054J**	ug/L	1.0	1	01/23/13 11:30	01/25/13 17:50	7440-28-0	
Vanadium, Dissolved	**1.7**	ug/L	1.0	1	01/23/13 11:30	01/25/13 17:50	7440-62-2	
Zinc, Dissolved	**2400**	ug/L	10.0	1	01/23/13 11:30	01/25/13 17:50	7440-66-6	
245.1 Mercury	Analytical Method: EPA 245.1 Preparation Method: EPA 245.1							
Mercury	ND	ug/L	0.20	1	01/28/13 10:00	01/28/13 18:32	7439-97-6	
245.1 Mercury, Dissolved	Analytical Method: EPA 245.1 Preparation Method: EPA 245.1							
Mercury, Dissolved	ND	ug/L	0.20	1	01/29/13 11:54	01/30/13 18:27	7439-97-6	
245.1 Potentially Diss Mercury	Analytical Method: EPA 245.1 Preparation Method: EPA 245.1							
Mercury, Dissolved	ND	ug/L	0.20	1	01/29/13 10:30	01/29/13 16:24	7439-97-6	
2510B Specific Conductance	Analytical Method: SM 2510B							
Specific Conductance	**2120**	umhos/cm	10.0	1		01/25/13 12:54		
Salinity	Analytical Method: Calculated							
Salinity (as dissolved solids)	**1350**	mg/L	6.0	1		01/25/13 14:37		

This report shall not be reproduced, except in full,
without the written consent of Pace Analytical Services, Inc..

Pace Analytical Services, Inc.
9608 Loiret Blvd.
Lenexa, KS 66219
(913)599-5665

ANALYTICAL RESULTS

Project: JANUARY 2013 RICO WATER SAMPLI
Pace Project No.: 60137200

Sample: EB-1_20130116 **Lab ID: 60137200024** Collected: 01/16/13 10:30 Received: 01/19/13 08:30 Matrix: Water

Parameters	Results	Units	Report Limit	DF	Prepared	Analyzed	CAS No.	Qual
Salinity	Analytical Method: Calculated							
Salinity (as seawater)	**1.1**	PSU	0.010	1		01/25/13 14:37		
2320B Alkalinity	Analytical Method: SM 2320B							
Alkalinity,Bicarbonate (CaCO3)	**162**	mg/L	20.0	1		01/24/13 11:21		
Alkalinity, Carbonate (CaCO3)	ND	mg/L	20.0	1		01/24/13 11:21		
Alkalinity, Total as CaCO3	**162**	mg/L	20.0	1		01/24/13 11:21		
2540C Total Dissolved Solids	Analytical Method: SM 2540C							
Total Dissolved Solids	**1880**	mg/L	5.0	1		01/23/13 15:28		
2540D Total Suspended Solids	Analytical Method: SM 2540D							
Total Suspended Solids	**150**	mg/L	5.0	1		01/23/13 15:15		
4500S2D Sulfide, Total	Analytical Method: SM 4500-S-2 D							
Sulfide, Total	ND	mg/L	0.050	1		01/22/13 14:35	18496-25-8	
300.0 IC Anions 28 Days	Analytical Method: EPA 300.0							
Chloride	**1.2**	mg/L	1.0	1		01/28/13 22:29	16887-00-6	
Sulfate	**1230**	mg/L	100	100		01/28/13 22:47	14808-79-8	
353.2 Nitrogen, NO2/NO3 pres.	Analytical Method: EPA 353.2							
Nitrogen, NO2 plus NO3	ND	mg/L	0.10	1		01/23/13 12:15		
4500CNE Cyanide, Total	Analytical Method: SM 4500-CN-E							
Cyanide	ND	mg/L	0.0050	1		01/23/13 13:46	57-12-5	
5310C TOC	Analytical Method: SM 5310C							
Total Organic Carbon	ND	mg/L	1.0	1		01/28/13 14:59	7440-44-0	

This report shall not be reproduced, except in full,
without the written consent of Pace Analytical Services, Inc..

Pace Analytical Services, Inc.
9608 Loiret Blvd.
Lenexa, KS 66219
(913)599-5665

March 08, 2013

Mark DeFriez
Anderson Engineering Company I
977 W 2100 S.
Salt Lake City, UT 84119

RE: Project: JANUARY 2013 RICO WATER SAMPLI
Pace Project No.: 60137618

Dear Mark DeFriez:
Enclosed are the analytical results for sample(s) received by the laboratory on January 26, 2013. The results relate only to the within this report conform to the most current version of the TNI standards, BP LaMP Technical Requirements Revision 10.1, and any applicable Quality Assurance Project Plan (QAPP), or Work Plan unless otherwise narrated in the body of this report.

If you have any questions concerning this report, please feel free to contact me.

Sincerely,

Heather M. Wilson

Heather Wilson

heather.wilson@pacelabs.com
Project Manager

Enclosures

This report shall not be reproduced, except in full,
without the written consent of Pace Analytical Services, Inc..

Pace Analytical Services, Inc.
9608 Loiret Blvd.
Lenexa, KS 66219
(913)599-5665

CERTIFICATIONS

Project: JANUARY 2013 RICO WATER SAMPLI
Pace Project No.: 60137618

Minnesota Certification IDs
1700 Elm Street SE Suite 200, Minneapolis, MN 55414
A2LA Certification #: 2926.01
Alaska Certification #: UST-078
Alaska Certification #MN00064
Arizona Certification #: AZ-0014
Arkansas Certification #: 88-0680
California Certification #: 01155CA
Colorado Certification #Pace
Connecticut Certification #: PH-0256
EPA Region 8 Certification #: Pace
Florida/NELAP Certification #: E87605
Georgia Certification #: 959
Hawaii Certification #Pace
Idaho Certification #: MN00064
Illinois Certification #: 200011
Kansas Certification #: E-10167
Louisiana Certification #: 03086
Louisiana Certification #: LA080009
Maine Certification #: 2007029
Maryland Certification #: 322
Michigan DEQ Certification #: 9909
Minnesota Certification #: 027-053-137
Mississippi Certification #: Pace
Montana Certification #: MT CERT0092
Nebraska Certification #: Pace
Nevada Certification #: MN_00064
New Jersey Certification #: MN-002
New York Certification #: 11647
North Carolina Certification #: 530
North Dakota Certification #: R-036
North Dakota Certification #: R-036A
Ohio VAP Certification #: CL101
Oklahoma Certification #: 9507
Oregon Certification #: MN200001
Oregon Certification #: MN300001
Pennsylvania Certification #: 68-00563
Puerto Rico Certification
Tennessee Certification #: 02818
Texas Certification #: T104704192
Utah Certification #: MN00064
Virginia/DCLS Certification #: 002521
Virginia/VELAP Certification #: 460163
Washington Certification #: C754
West Virginia Certification #: 382
Wisconsin Certification #: 999407970

Montana Certification IDs
602 South 25th Street, Billings, MT 59101
EPA Region 8 Certification #: 8TMS-Q
Idaho Certification #: MT00012
Montana Certification #: MT CERT0040
NVLAP Certification #: 101292-0
Minnesota Dept of Health Certification #: 030-999-442
Washington Department of Ecology #: C993

Kansas Certification IDs
9608 Loiret Boulevard, Lenexa, KS 66219
A2LA Certification #: 2456.01
Arkansas Certification #: 12-019-0
Illinois Certification #: 002885
Iowa Certification #: 118
Kansas/NELAP Certification #: E-10116
Louisiana Certification #: 03055
Nevada Certification #: KS000212008A
Oklahoma Certification #: 9205/9935
Texas Certification #: T104704407-12-3
Utah Certification #: KS000212012-2
Illinois Certification #: 003097

This report shall not be reproduced, except in full,
without the written consent of Pace Analytical Services, Inc..

Pace Analytical Services, Inc.
9608 Loiret Blvd.
Lenexa, KS 66219
(913)599-5665

SAMPLE SUMMARY

Project: JANUARY 2013 RICO WATER SAMPLI
Pace Project No.: 60137618

Lab ID	Sample ID	Matrix	Date Collected	Date Received
60137618001	**DR-6_20130124**	Water	01/24/13 09:00	01/26/13 08:50
60137618002	**MW-104_20130124**	Water	01/24/13 10:29	01/26/13 08:50
60137618003	**CHV-101_20130124**	Water	01/24/13 10:55	01/26/13 08:50
60137618004	**MW-103_20130124**	Water	01/24/13 11:05	01/26/13 08:50
60137618005	**MW-101_20130124**	Water	01/24/13 11:30	01/26/13 08:50
60137618006	**DR-7_20130124**	Water	01/24/13 11:48	01/26/13 08:50
60137618007	**DR-5_20130124**	Water	01/24/13 11:55	01/26/13 08:50
60137618008	**DR-2_20130124**	Water	01/24/13 12:07	01/26/13 08:50
60137618009	**FB_20130124**	Water	01/24/13 12:22	01/26/13 08:50
60137618010	**DR-11_20130124**	Water	01/24/13 02:13	01/26/13 08:50
60137618011	**DR-7 COMP_20130124**	Water	01/24/13 02:25	01/26/13 08:50
60137618012	**DR-2 COMP_20130124**	Water	01/24/13 02:34	01/26/13 08:50
60137618013	**MW-204_20130124**	Water	01/24/13 02:55	01/26/13 08:50
60137618014	**MW-102_20130124**	Water	01/24/13 03:15	01/26/13 08:50
60137618015	**AT-2_20130124**	Water	01/24/13 03:31	01/26/13 08:50

This report shall not be reproduced, except in full,
without the written consent of Pace Analytical Services, Inc..

Pace Analytical Services, Inc.
9608 Loiret Blvd.
Lenexa, KS 66219
(913)599-5665

SAMPLE ANALYTE COUNT

Project: JANUARY 2013 RICO WATER SAMPLI
Pace Project No.: 60137618

Lab ID	Sample ID	Method	Analysts	Analytes Reported	Laboratory
60137618001	**DR-6_20130124**	EPA 200.7	SMW	4	PASI-K
		EPA 200.8	RJS	25	PASI-M
		EPA 200.8	RJS	23	PASI-M
		EPA 200.8	JGP, SMW	19	PASI-K
		EPA 245.1	WBS	1	PASI-M
		EPA 245.1	WBS	1	PASI-M
		EPA 245.1	NDJ	1	PASI-K
		SM 2510B	WT1	1	
		Calculated	WT1	2	
		SM 2320B	DJR	3	PASI-K
		SM 2540C	DJR	1	PASI-K
		SM 2540D	NDL	1	PASI-K
		SM 4500-S-2 D	AJM	1	PASI-K
		EPA 300.0	AJM	2	PASI-K
		EPA 353.2	NDL	1	PASI-K
		SM 4500-CN-E	OL	1	PASI-K
		SM 5310C	SEL	1	PASI-K
60137618002	**MW-104_20130124**	EPA 200.7	SMW	4	PASI-K
		EPA 200.8	RJS	25	PASI-M
		EPA 200.8	RJS	23	PASI-M
		EPA 200.8	JGP	19	PASI-K
		EPA 245.1	WBS	1	PASI-M
		EPA 245.1	WBS	1	PASI-M
		EPA 245.1	NDJ	1	PASI-K
		SM 2510B	WT1	1	
		Calculated	WT1	2	
		SM 2320B	DJR	3	PASI-K
		SM 2540C	DJR	1	PASI-K
		SM 2540D	NDL	1	PASI-K
		SM 4500-S-2 D	AJM	1	PASI-K
		EPA 300.0	AJM	2	PASI-K
		EPA 353.2	NDL	1	PASI-K
		SM 4500-CN-E	OL	1	PASI-K
		SM 5310C	SEL	1	PASI-K
60137618003	**CHV-101_20130124**	EPA 200.7	SMW	4	PASI-K
		EPA 200.8	RJS	25	PASI-M
		EPA 200.8	RJS	23	PASI-M

This report shall not be reproduced, except in full,
without the written consent of Pace Analytical Services, Inc..

Pace Analytical Services, Inc.
9608 Loiret Blvd.
Lenexa, KS 66219
(913)599-5665

SAMPLE ANALYTE COUNT

Project: JANUARY 2013 RICO WATER SAMPLI
Pace Project No.: 60137618

Lab ID	Sample ID	Method	Analysts	Analytes Reported	Laboratory
		EPA 200.8	JGP	19	PASI-K
		EPA 245.1	WBS	1	PASI-M
		EPA 245.1	WBS	1	PASI-M
		EPA 245.1	NDJ	1	PASI-K
		SM 2510B	WT1	1	
		Calculated	WT1	2	
		SM 2320B	DJR	3	PASI-K
		SM 2540C	DJR	1	PASI-K
		SM 2540D	NDL	1	PASI-K
		SM 4500-S-2 D	AJM	1	PASI-K
		EPA 300.0	AJM	2	PASI-K
		EPA 353.2	NDL	1	PASI-K
		SM 4500-CN-E	OL	1	PASI-K
		SM 5310C	SEL	1	PASI-K
60137618004	**MW-103_20130124**	EPA 200.7	SMW	4	PASI-K
		EPA 200.8	RJS	25	PASI-M
		EPA 200.8	RJS	23	PASI-M
		EPA 200.8	JGP	19	PASI-K
		EPA 245.1	WBS	1	PASI-M
		EPA 245.1	WBS	1	PASI-M
		EPA 245.1	NDJ	1	PASI-K
		SM 2510B	WT1	1	
		Calculated	WT1	2	
		SM 2320B	DJR	3	PASI-K
		SM 2540C	DJR	1	PASI-K
		SM 2540D	NDL	1	PASI-K
		SM 4500-S-2 D	AJM	1	PASI-K
		EPA 300.0	AJM	2	PASI-K
		EPA 353.2	NDL	1	PASI-K
		SM 4500-CN-E	OL	1	PASI-K
		SM 5310C	SEL	1	PASI-K
60137618005	**MW-101_20130124**	EPA 200.7	SMW	4	PASI-K
		EPA 200.8	RJS	25	PASI-M
		EPA 200.8	RJS	23	PASI-M
		EPA 200.8	JGP	19	PASI-K
		EPA 245.1	WBS	1	PASI-M
		EPA 245.1	WBS	1	PASI-M

This report shall not be reproduced, except in full,
without the written consent of Pace Analytical Services, Inc..

Pace Analytical Services, Inc.
9608 Loiret Blvd.
Lenexa, KS 66219
(913)599-5665

SAMPLE ANALYTE COUNT

Project: JANUARY 2013 RICO WATER SAMPLI
Pace Project No.: 60137618

Lab ID	Sample ID	Method	Analysts	Analytes Reported	Laboratory
		EPA 245.1	NDJ	1	PASI-K
		SM 2510B	WT1	1	
		Calculated	WT1	2	
		SM 2320B	DJR	3	PASI-K
		SM 2540C	DJR	1	PASI-K
		SM 2540D	NDL	1	PASI-K
		SM 4500-S-2 D	AJM	1	PASI-K
		EPA 300.0	AJM	2	PASI-K
		EPA 353.2	NDL	1	PASI-K
		SM 4500-CN-E	OL	1	PASI-K
		SM 5310C	SEL	1	PASI-K
60137618006	**DR-7_20130124**	EPA 200.7	SMW	4	PASI-K
		EPA 200.8	RJS	25	PASI-M
		EPA 200.8	AS2, RJS	23	PASI-M
		EPA 200.8	JGP, SMW	19	PASI-K
		EPA 245.1	WBS	1	PASI-M
		EPA 245.1	WBS	1	PASI-M
		EPA 245.1	NDJ	1	PASI-K
		SM 2510B	WT1	1	
		Calculated	WT1	2	
		SM 2320B	DJR	3	PASI-K
		SM 2540C	NDL	1	PASI-K
		SM 2540D	NDL	1	PASI-K
		SM 4500-S-2 D	AJM	1	PASI-K
		EPA 300.0	AJM	2	PASI-K
		EPA 353.2	NDL	1	PASI-K
		SM 4500-CN-E	OL	1	PASI-K
		SM 5310C	SEL	1	PASI-K
60137618007	**DR-5_20130124**	EPA 200.7	SMW	4	PASI-K
		EPA 200.8	RJS	25	PASI-M
		EPA 200.8	RJS	23	PASI-M
		EPA 200.8	JGP	19	PASI-K
		EPA 245.1	WBS	1	PASI-M
		EPA 245.1	WBS	1	PASI-M
		EPA 245.1	NDJ	1	PASI-K
		SM 2510B	WT1	1	
		Calculated	WT1	2	

This report shall not be reproduced, except in full,
without the written consent of Pace Analytical Services, Inc..

Pace Analytical Services, Inc.
9608 Loiret Blvd.
Lenexa, KS 66219
(913)599-5665

SAMPLE ANALYTE COUNT

Project: JANUARY 2013 RICO WATER SAMPLI
Pace Project No.: 60137618

Lab ID	Sample ID	Method	Analysts	Analytes Reported	Laboratory
		SM 2320B	DJR	3	PASI-K
		SM 2540C	NDL	1	PASI-K
		SM 2540D	NDL	1	PASI-K
		SM 4500-S-2 D	AJM	1	PASI-K
		EPA 300.0	AJM	2	PASI-K
		EPA 353.2	NDL	1	PASI-K
		SM 4500-CN-E	OL	1	PASI-K
		SM 5310C	SEL	1	PASI-K
60137618008	**DR-2_20130124**	EPA 200.7	SMW	4	PASI-K
		EPA 200.8	RJS	25	PASI-M
		EPA 200.8	RJS	23	PASI-M
		EPA 200.8	JGP	19	PASI-K
		EPA 245.1	WBS	1	PASI-M
		EPA 245.1	WBS	1	PASI-M
		EPA 245.1	NDJ	1	PASI-K
		SM 2510B	WT1	1	
		Calculated	WT1	2	
		SM 2320B	DJR	3	PASI-K
		SM 2540C	NDL	1	PASI-K
		SM 2540D	NDL	1	PASI-K
		SM 4500-S-2 D	AJM	1	PASI-K
		EPA 300.0	AJM	2	PASI-K
		EPA 353.2	NDL	1	PASI-K
		SM 4500-CN-E	OL	1	PASI-K
		SM 5310C	SEL	1	PASI-K
60137618009	**FB_20130124**	EPA 200.7	SMW	4	PASI-K
		EPA 200.8	RJS	25	PASI-M
		EPA 200.8	RJS	23	PASI-M
		EPA 200.8	JGP	19	PASI-K
		EPA 245.1	WBS	1	PASI-M
		EPA 245.1	WBS	1	PASI-M
		EPA 245.1	NDJ	1	PASI-K
		SM 2510B	WT1	1	
		Calculated	WT1	2	
		SM 2320B	DJR	3	PASI-K
		SM 2540C	DJR	1	PASI-K
		SM 2540D	NDL	1	PASI-K

This report shall not be reproduced, except in full,
without the written consent of Pace Analytical Services, Inc..

Pace Analytical Services, Inc.
9608 Loiret Blvd.
Lenexa, KS 66219
(913)599-5665

SAMPLE ANALYTE COUNT

Project: JANUARY 2013 RICO WATER SAMPLI
Pace Project No.: 60137618

Lab ID	Sample ID	Method	Analysts	Analytes Reported	Laboratory
		SM 4500-S-2 D	AJM	1	PASI-K
		EPA 300.0	AJM	2	PASI-K
		EPA 353.2	NDL	1	PASI-K
		SM 4500-CN-E	OL	1	PASI-K
		SM 5310C	SEL	1	PASI-K
60137618010	**DR-11_20130124**	EPA 200.7	SMW	4	PASI-K
		EPA 200.8	RJS	25	PASI-M
		EPA 200.8	RJS	23	PASI-M
		EPA 200.8	JGP	19	PASI-K
		EPA 245.1	WBS	1	PASI-M
		EPA 245.1	WBS	1	PASI-M
		EPA 245.1	NDJ	1	PASI-K
		SM 2510B	WT1	1	
		Calculated	WT1	2	
		SM 2320B	DJR	3	PASI-K
		SM 2540C	NDL	1	PASI-K
		SM 2540D	NDL	1	PASI-K
		SM 4500-S-2 D	AJM	1	PASI-K
		EPA 300.0	AJM	2	PASI-K
		EPA 353.2	NDL	1	PASI-K
		SM 4500-CN-E	OL	1	PASI-K
		SM 5310C	SEL	1	PASI-K
60137618011	**DR-7 COMP_20130124**	EPA 200.7	SMW	4	PASI-K
		EPA 200.8	RJS	25	PASI-M
		EPA 200.8	RJS	23	PASI-M
		EPA 200.8	JGP, SMW	19	PASI-K
		EPA 245.1	WBS	1	PASI-M
		EPA 245.1	WBS	1	PASI-M
		EPA 245.1	NDJ	1	PASI-K
		SM 2510B	WT1	1	
		Calculated	WT1	2	
		SM 2320B	DJR	3	PASI-K
		SM 2540C	NDL	1	PASI-K
		SM 2540D	NDL	1	PASI-K
		SM 4500-S-2 D	AJM	1	PASI-K
		EPA 300.0	AJM	2	PASI-K
		EPA 353.2	NDL	1	PASI-K

This report shall not be reproduced, except in full,
without the written consent of Pace Analytical Services, Inc..

Pace Analytical Services, Inc.
9608 Loiret Blvd.
Lenexa, KS 66219
(913)599-5665

SAMPLE ANALYTE COUNT

Project: JANUARY 2013 RICO WATER SAMPLI
Pace Project No.: 60137618

Lab ID	Sample ID	Method	Analysts	Analytes Reported	Laboratory
		SM 4500-CN-E	OL	1	PASI-K
		SM 5310C	SEL	1	PASI-K
60137618012	**DR-2 COMP_20130124**	EPA 200.7	SMW	4	PASI-K
		EPA 200.8	RJS	25	PASI-M
		EPA 200.8	RJS	23	PASI-M
		EPA 200.8	JGP	19	PASI-K
		EPA 245.1	WBS	1	PASI-M
		EPA 245.1	WBS	1	PASI-M
		EPA 245.1	NDJ	1	PASI-K
		SM 2510B	WT1	1	
		Calculated	WT1	2	
		SM 2320B	DJR	3	PASI-K
		SM 2540C	NDL	1	PASI-K
		SM 2540D	NDL	1	PASI-K
		SM 4500-S-2 D	AJM	1	PASI-K
		EPA 300.0	AJM	2	PASI-K
		EPA 353.2	NDL	1	PASI-K
		SM 4500-CN-E	OL	1	PASI-K
		SM 5310C	SEL	1	PASI-K
60137618013	**MW-204_20130124**	EPA 200.7	SMW	4	PASI-K
		EPA 200.8	RJS	25	PASI-M
		EPA 200.8	RJS	23	PASI-M
		EPA 200.8	JGP	19	PASI-K
		EPA 245.1	WBS	1	PASI-M
		EPA 245.1	WBS	1	PASI-M
		EPA 245.1	NDJ	1	PASI-K
		SM 2510B	WT1	1	
		Calculated	WT1	2	
		SM 2320B	DJR	3	PASI-K
		SM 2540C	NDL	1	PASI-K
		SM 2540D	NDL	1	PASI-K
		SM 4500-S-2 D	AJM	1	PASI-K
		EPA 300.0	AJM	2	PASI-K
		EPA 353.2	NDL	1	PASI-K
		SM 4500-CN-E	OL	1	PASI-K
		SM 5310C	SEL	1	PASI-K
60137618014	**MW-102_20130124**	EPA 200.7	SMW	4	PASI-K

This report shall not be reproduced, except in full,
without the written consent of Pace Analytical Services, Inc..

Pace Analytical Services, Inc.
9608 Loiret Blvd.
Lenexa, KS 66219
(913)599-5665

SAMPLE ANALYTE COUNT

Project: JANUARY 2013 RICO WATER SAMPLI
Pace Project No.: 60137618

Lab ID	Sample ID	Method	Analysts	Analytes Reported	Laboratory
		EPA 200.8	RJS	25	PASI-M
		EPA 200.8	RJS	23	PASI-M
		EPA 200.8	JGP	19	PASI-K
		EPA 245.1	WBS	1	PASI-M
		EPA 245.1	WBS	1	PASI-M
		EPA 245.1	NDJ	1	PASI-K
		SM 2510B	WT1	1	
		Calculated	WT1	2	
		SM 2320B	DJR	3	PASI-K
		SM 2540C	NDL	1	PASI-K
		SM 2540D	NDL	1	PASI-K
		SM 4500-S-2 D	AJM	1	PASI-K
		EPA 300.0	AJM	2	PASI-K
		EPA 353.2	NDL	1	PASI-K
		SM 4500-CN-E	OL	1	PASI-K
		SM 5310C	SEL	1	PASI-K
60137618015	**AT-2_20130124**	EPA 200.7	SMW	4	PASI-K
		EPA 200.8	RJS	25	PASI-M
		EPA 200.8	RJS	23	PASI-M
		EPA 200.8	JGP	19	PASI-K
		EPA 245.1	WBS	1	PASI-M
		EPA 245.1	WBS	1	PASI-M
		EPA 245.1	NDJ	1	PASI-K
		SM 2510B	WT1	1	
		Calculated	WT1	2	
		SM 2320B	DJR	3	PASI-K
		SM 2540C	NDL	1	PASI-K
		SM 2540D	NDL	1	PASI-K
		SM 4500-S-2 D	AJM	1	PASI-K
		EPA 300.0	AJM	2	PASI-K
		EPA 353.2	NDL	1	PASI-K
		SM 4500-CN-E	OL	1	PASI-K
		SM 5310C	SEL	1	PASI-K

This report shall not be reproduced, except in full,
without the written consent of Pace Analytical Services, Inc..

Pace Analytical Services, Inc.
9608 Loiret Blvd.
Lenexa, KS 66219
(913)599-5665

PROJECT NARRATIVE

Project: JANUARY 2013 RICO WATER SAMPLI
Pace Project No.: 60137618

Method: **EPA 200.7**
Description: 200.7 Potentially Diss. Metals
Client: BP Anderson Engineering Company Inc.
Date: March 08, 2013

General Information:
15 samples were analyzed for EPA 200.7. All samples were received in acceptable condition with any exceptions noted below.

Hold Time:
The samples were analyzed within the method required hold times with any exceptions noted below.

Sample Preparation:
The samples were prepared in accordance with EPA 200.7 with any exceptions noted below.

Initial Calibrations (including MS Tune as applicable):
All criteria were within method requirements with any exceptions noted below.

Continuing Calibration:
All criteria were within method requirements with any exceptions noted below.

Method Blank:
All analytes were below the report limit in the method blank with any exceptions noted below.

Laboratory Control Spike:
All laboratory control spike compounds were within QC limits with any exceptions noted below.

Matrix Spikes:
All percent recoveries and relative percent differences (RPDs) were within acceptance criteria with any exceptions noted below.

QC Batch: MPRP/21345

A matrix spike and matrix spike duplicate (MS/MSD) were performed on the following sample(s): 60137618003,60137618013

M1: Matrix spike recovery exceeded QC limits. Batch accepted based on laboratory control sample (LCS) recovery.

- MS (Lab ID: 1133411)
  - Calcium, Dissolved
- MSD (Lab ID: 1133412)
  - Calcium, Dissolved

Additional Comments:

Analyte Comments:

QC Batch: MPRP/21345

B: Analyte was detected in the associated method blank.

- FB_20130124 (Lab ID: 60137618009)
  - Calcium, Dissolved
  - Sodium, Dissolved

This report shall not be reproduced, except in full,
without the written consent of Pace Analytical Services, Inc..

Pace Analytical Services, Inc.
9608 Loiret Blvd.
Lenexa, KS 66219
(913)599-5665

PROJECT NARRATIVE

Project: JANUARY 2013 RICO WATER SAMPLI
Pace Project No.: 60137618

Method: **EPA 200.8**
Description: 200.8 MET ICPMS
Client: BP Anderson Engineering Company Inc.
Date: March 08, 2013

General Information:
15 samples were analyzed for EPA 200.8. All samples were received in acceptable condition with any exceptions noted below.

Hold Time:
The samples were analyzed within the method required hold times with any exceptions noted below.

Sample Preparation:
The samples were prepared in accordance with EPA 200.8 with any exceptions noted below.

Initial Calibrations (including MS Tune as applicable):
All criteria were within method requirements with any exceptions noted below.

Continuing Calibration:
All criteria were within method requirements with any exceptions noted below.

Internal Standards:
All internal standards were within QC limits with any exceptions noted below.

Method Blank:
All analytes were below the report limit in the method blank with any exceptions noted below.

Laboratory Control Spike:
All laboratory control spike compounds were within QC limits with any exceptions noted below.

Matrix Spikes:
All percent recoveries and relative percent differences (RPDs) were within acceptance criteria with any exceptions noted below.

Additional Comments:

This report shall not be reproduced, except in full,
without the written consent of Pace Analytical Services, Inc..

Pace Analytical Services, Inc.
9608 Loiret Blvd.
Lenexa, KS 66219
(913)599-5665

PROJECT NARRATIVE

Project: JANUARY 2013 RICO WATER SAMPLI
Pace Project No.: 60137618

Method: **EPA 200.8**
Description: 200.8 MET ICPMS, Dissolved
Client: BP Anderson Engineering Company Inc.
Date: March 08, 2013

General Information:
15 samples were analyzed for EPA 200.8. All samples were received in acceptable condition with any exceptions noted below.

Hold Time:
The samples were analyzed within the method required hold times with any exceptions noted below.

Sample Preparation:
The samples were prepared in accordance with EPA 200.8 with any exceptions noted below.

Initial Calibrations (including MS Tune as applicable):
All criteria were within method requirements with any exceptions noted below.

Continuing Calibration:
All criteria were within method requirements with any exceptions noted below.

Internal Standards:
All internal standards were within QC limits with any exceptions noted below.

Method Blank:
All analytes were below the report limit in the method blank with any exceptions noted below.

Laboratory Control Spike:
All laboratory control spike compounds were within QC limits with any exceptions noted below.

Matrix Spikes:
All percent recoveries and relative percent differences (RPDs) were within acceptance criteria with any exceptions noted below.

Additional Comments:

This report shall not be reproduced, except in full,
without the written consent of Pace Analytical Services, Inc..

Pace Analytical Services, Inc.
9608 Loiret Blvd.
Lenexa, KS 66219
(913)599-5665

PROJECT NARRATIVE

Project: JANUARY 2013 RICO WATER SAMPLI
Pace Project No.: 60137618

Method: **EPA 200.8**
Description: 200.8 Potentially Diss. Metals
Client: BP Anderson Engineering Company Inc.
Date: March 08, 2013

General Information:
15 samples were analyzed for EPA 200.8. All samples were received in acceptable condition with any exceptions noted below.

Hold Time:
The samples were analyzed within the method required hold times with any exceptions noted below.

Sample Preparation:
The samples were prepared in accordance with EPA 200.8 with any exceptions noted below.

Initial Calibrations (including MS Tune as applicable):
All criteria were within method requirements with any exceptions noted below.

Continuing Calibration:
All criteria were within method requirements with any exceptions noted below.

Internal Standards:
All internal standards were within QC limits with any exceptions noted below.

Method Blank:
All analytes were below the report limit in the method blank with any exceptions noted below.

Laboratory Control Spike:
All laboratory control spike compounds were within QC limits with any exceptions noted below.

Matrix Spikes:
All percent recoveries and relative percent differences (RPDs) were within acceptance criteria with any exceptions noted below.

QC Batch: MPRP/21346

A matrix spike and matrix spike duplicate (MS/MSD) were performed on the following sample(s): 60137618002,60137618012

M1: Matrix spike recovery exceeded QC limits. Batch accepted based on laboratory control sample (LCS) recovery.

- MS (Lab ID: 1133416)
  - Manganese, Dissolved

Additional Comments:

Analyte Comments:

QC Batch: MPRP/21346

B: Analyte was detected in the associated method blank.

- AT-2_20130124 (Lab ID: 60137618015)
  - Chromium, Dissolved
- DR-11_20130124 (Lab ID: 60137618010)
  - Chromium, Dissolved

This report shall not be reproduced, except in full,
without the written consent of Pace Analytical Services, Inc..

Pace Analytical Services, Inc.
9608 Loiret Blvd.
Lenexa, KS 66219
(913)599-5665

PROJECT NARRATIVE

Project: JANUARY 2013 RICO WATER SAMPLI
Pace Project No.: 60137618

Method: **EPA 200.8**
Description: 200.8 Potentially Diss. Metals
Client: BP Anderson Engineering Company Inc.
Date: March 08, 2013

Analyte Comments:

QC Batch: MPRP/21346

B: Analyte was detected in the associated method blank.

- DR-2 COMP_20130124 (Lab ID: 60137618012)
  - Chromium, Dissolved
  - Zinc, Dissolved
- DR-2_20130124 (Lab ID: 60137618008)
  - Chromium, Dissolved
  - Zinc, Dissolved
- DR-5_20130124 (Lab ID: 60137618007)
  - Chromium, Dissolved
- DR-6_20130124 (Lab ID: 60137618001)
  - Chromium, Dissolved
- DR-7 COMP_20130124 (Lab ID: 60137618011)
  - Chromium, Dissolved
- DR-7_20130124 (Lab ID: 60137618006)
  - Chromium, Dissolved
- FB_20130124 (Lab ID: 60137618009)
  - Chromium, Dissolved
  - Zinc, Dissolved
- MW-103_20130124 (Lab ID: 60137618004)
  - Chromium, Dissolved

This report shall not be reproduced, except in full,
without the written consent of Pace Analytical Services, Inc..

Pace Analytical Services, Inc.
9608 Loiret Blvd.
Lenexa, KS 66219
(913)599-5665

PROJECT NARRATIVE

Project: JANUARY 2013 RICO WATER SAMPLI
Pace Project No.: 60137618

Method: **EPA 245.1**
Description: 245.1 Mercury
Client: BP Anderson Engineering Company Inc.
Date: March 08, 2013

General Information:
15 samples were analyzed for EPA 245.1. All samples were received in acceptable condition with any exceptions noted below.

Hold Time:
The samples were analyzed within the method required hold times with any exceptions noted below.

Sample Preparation:
The samples were prepared in accordance with EPA 245.1 with any exceptions noted below.

Initial Calibrations (including MS Tune as applicable):
All criteria were within method requirements with any exceptions noted below.

Continuing Calibration:
All criteria were within method requirements with any exceptions noted below.

Method Blank:
All analytes were below the report limit in the method blank with any exceptions noted below.

Laboratory Control Spike:
All laboratory control spike compounds were within QC limits with any exceptions noted below.

Matrix Spikes:
All percent recoveries and relative percent differences (RPDs) were within acceptance criteria with any exceptions noted below.

Additional Comments:

This report shall not be reproduced, except in full,
without the written consent of Pace Analytical Services, Inc..

Pace Analytical Services, Inc.
9608 Loiret Blvd.
Lenexa, KS 66219
(913)599-5665

PROJECT NARRATIVE

Project: JANUARY 2013 RICO WATER SAMPLI
Pace Project No.: 60137618

Method: **EPA 245.1**
Description: 245.1 Mercury, Dissolved
Client: BP Anderson Engineering Company Inc.
Date: March 08, 2013

General Information:
15 samples were analyzed for EPA 245.1. All samples were received in acceptable condition with any exceptions noted below.

Hold Time:
The samples were analyzed within the method required hold times with any exceptions noted below.

Sample Preparation:
The samples were prepared in accordance with EPA 245.1 with any exceptions noted below.

Initial Calibrations (including MS Tune as applicable):
All criteria were within method requirements with any exceptions noted below.

Continuing Calibration:
All criteria were within method requirements with any exceptions noted below.

Method Blank:
All analytes were below the report limit in the method blank with any exceptions noted below.

Laboratory Control Spike:
All laboratory control spike compounds were within QC limits with any exceptions noted below.

Matrix Spikes:
All percent recoveries and relative percent differences (RPDs) were within acceptance criteria with any exceptions noted below.

Additional Comments:

This report shall not be reproduced, except in full,
without the written consent of Pace Analytical Services, Inc..

Pace Analytical Services, Inc.
9608 Loiret Blvd.
Lenexa, KS 66219
(913)599-5665

PROJECT NARRATIVE

Project: JANUARY 2013 RICO WATER SAMPLI
Pace Project No.: 60137618

Method: **EPA 245.1**
Description: 245.1 Potentially Diss Mercury
Client: BP Anderson Engineering Company Inc.
Date: March 08, 2013

General Information:
15 samples were analyzed for EPA 245.1. All samples were received in acceptable condition with any exceptions noted below.

Hold Time:
The samples were analyzed within the method required hold times with any exceptions noted below.

Sample Preparation:
The samples were prepared in accordance with EPA 245.1 with any exceptions noted below.

Initial Calibrations (including MS Tune as applicable):
All criteria were within method requirements with any exceptions noted below.

Continuing Calibration:
All criteria were within method requirements with any exceptions noted below.

Method Blank:
All analytes were below the report limit in the method blank with any exceptions noted below.

Laboratory Control Spike:
All laboratory control spike compounds were within QC limits with any exceptions noted below.

Matrix Spikes:
All percent recoveries and relative percent differences (RPDs) were within acceptance criteria with any exceptions noted below.

Additional Comments:

This report shall not be reproduced, except in full,
without the written consent of Pace Analytical Services, Inc..

Pace Analytical Services, Inc.
9608 Loiret Blvd.
Lenexa, KS 66219
(913)599-5665

PROJECT NARRATIVE

Project: JANUARY 2013 RICO WATER SAMPLI
Pace Project No.: 60137618

Method: **SM 2510B**
Description: 2510B Specific Conductance
Client: BP Anderson Engineering Company Inc.
Date: March 08, 2013

General Information:
15 samples were analyzed for SM 2510B. All samples were received in acceptable condition with any exceptions noted below.

Hold Time:
The samples were analyzed within the method required hold times with any exceptions noted below.

Initial Calibrations (including MS Tune as applicable):
All criteria were within method requirements with any exceptions noted below.

Continuing Calibration:
All criteria were within method requirements with any exceptions noted below.

Internal Standards:
All internal standards were within QC limits with any exceptions noted below.

Surrogates:
All surrogates were within QC limits with any exceptions noted below.

Method Blank:
All analytes were below the report limit in the method blank with any exceptions noted below.

Laboratory Control Spike:
All laboratory control spike compounds were within QC limits with any exceptions noted below.

Matrix Spikes:
All percent recoveries and relative percent differences (RPDs) were within acceptance criteria with any exceptions noted below.

Duplicate Sample:
All duplicate sample results were within method acceptance criteria with any exceptions noted below.

Additional Comments:

This report shall not be reproduced, except in full,
without the written consent of Pace Analytical Services, Inc..

Pace Analytical Services, Inc.
9608 Loiret Blvd.
Lenexa, KS 66219
(913)599-5665

PROJECT NARRATIVE

Project: JANUARY 2013 RICO WATER SAMPLI
Pace Project No.: 60137618

Method: **Calculated**
Description: Salinity
Client: BP Anderson Engineering Company Inc.
Date: March 08, 2013

General Information:
15 samples were analyzed for Calculated. All samples were received in acceptable condition with any exceptions noted below.

Hold Time:
The samples were analyzed within the method required hold times with any exceptions noted below.

Initial Calibrations (including MS Tune as applicable):
All criteria were within method requirements with any exceptions noted below.

Continuing Calibration:
All criteria were within method requirements with any exceptions noted below.

Internal Standards:
All internal standards were within QC limits with any exceptions noted below.

Surrogates:
All surrogates were within QC limits with any exceptions noted below.

Method Blank:
All analytes were below the report limit in the method blank with any exceptions noted below.

Laboratory Control Spike:
All laboratory control spike compounds were within QC limits with any exceptions noted below.

Matrix Spikes:
All percent recoveries and relative percent differences (RPDs) were within acceptance criteria with any exceptions noted below.

Additional Comments:

This report shall not be reproduced, except in full,
without the written consent of Pace Analytical Services, Inc..

Pace Analytical Services, Inc.
9608 Loiret Blvd.
Lenexa, KS 66219
(913)599-5665

PROJECT NARRATIVE

Project: JANUARY 2013 RICO WATER SAMPLI
Pace Project No.: 60137618

Method: **SM 2320B**
Description: 2320B Alkalinity
Client: BP Anderson Engineering Company Inc.
Date: March 08, 2013

General Information:
15 samples were analyzed for SM 2320B. All samples were received in acceptable condition with any exceptions noted below.

Hold Time:
The samples were analyzed within the method required hold times with any exceptions noted below.

Method Blank:
All analytes were below the report limit in the method blank with any exceptions noted below.

Laboratory Control Spike:
All laboratory control spike compounds were within QC limits with any exceptions noted below.

Matrix Spikes:
All percent recoveries and relative percent differences (RPDs) were within acceptance criteria with any exceptions noted below.

Duplicate Sample:
All duplicate sample results were within method acceptance criteria with any exceptions noted below.

Additional Comments:

This report shall not be reproduced, except in full,
without the written consent of Pace Analytical Services, Inc..

Pace Analytical Services, Inc.
9608 Loiret Blvd.
Lenexa, KS 66219
(913)599-5665

PROJECT NARRATIVE

Project: JANUARY 2013 RICO WATER SAMPLI
Pace Project No.: 60137618

Method: **SM 2540C**
Description: 2540C Total Dissolved Solids
Client: BP Anderson Engineering Company Inc.
Date: March 08, 2013

General Information:
15 samples were analyzed for SM 2540C. All samples were received in acceptable condition with any exceptions noted below.

Hold Time:
The samples were analyzed within the method required hold times with any exceptions noted below.

Method Blank:
All analytes were below the report limit in the method blank with any exceptions noted below.

Laboratory Control Spike:
All laboratory control spike compounds were within QC limits with any exceptions noted below.

Matrix Spikes:
All percent recoveries and relative percent differences (RPDs) were within acceptance criteria with any exceptions noted below.

Duplicate Sample:
All duplicate sample results were within method acceptance criteria with any exceptions noted below.

Additional Comments:

This report shall not be reproduced, except in full,
without the written consent of Pace Analytical Services, Inc..

Pace Analytical Services, Inc.
9608 Loiret Blvd.
Lenexa, KS 66219
(913)599-5665

PROJECT NARRATIVE

Project: JANUARY 2013 RICO WATER SAMPLI
Pace Project No.: 60137618

Method: **SM 2540D**
Description: 2540D Total Suspended Solids
Client: BP Anderson Engineering Company Inc.
Date: March 08, 2013

General Information:
15 samples were analyzed for SM 2540D. All samples were received in acceptable condition with any exceptions noted below.

Hold Time:
The samples were analyzed within the method required hold times with any exceptions noted below.

Method Blank:
All analytes were below the report limit in the method blank with any exceptions noted below.

Laboratory Control Spike:
All laboratory control spike compounds were within QC limits with any exceptions noted below.

Matrix Spikes:
All percent recoveries and relative percent differences (RPDs) were within acceptance criteria with any exceptions noted below.

Duplicate Sample:
All duplicate sample results were within method acceptance criteria with any exceptions noted below.

Additional Comments:

This report shall not be reproduced, except in full,
without the written consent of Pace Analytical Services, Inc..

Pace Analytical Services, Inc.
9608 Loiret Blvd.
Lenexa, KS 66219
(913)599-5665

PROJECT NARRATIVE

Project: JANUARY 2013 RICO WATER SAMPLI
Pace Project No.: 60137618

Method: **SM 4500-S-2 D**
Description: 4500S2D Sulfide, Total
Client: BP Anderson Engineering Company Inc.
Date: March 08, 2013

General Information:
15 samples were analyzed for SM 4500-S-2 D. All samples were received in acceptable condition with any exceptions noted below.

Hold Time:
The samples were analyzed within the method required hold times with any exceptions noted below.

Method Blank:
All analytes were below the report limit in the method blank with any exceptions noted below.

Laboratory Control Spike:
All laboratory control spike compounds were within QC limits with any exceptions noted below.

Matrix Spikes:
All percent recoveries and relative percent differences (RPDs) were within acceptance criteria with any exceptions noted below.

Additional Comments:

This report shall not be reproduced, except in full,
without the written consent of Pace Analytical Services, Inc..

Pace Analytical Services, Inc.
9608 Loiret Blvd.
Lenexa, KS 66219
(913)599-5665

PROJECT NARRATIVE

Project: JANUARY 2013 RICO WATER SAMPLI
Pace Project No.: 60137618

Method: **EPA 300.0**
Description: 300.0 IC Anions 28 Days
Client: BP Anderson Engineering Company Inc.
Date: March 08, 2013

General Information:
15 samples were analyzed for EPA 300.0. All samples were received in acceptable condition with any exceptions noted below.

Hold Time:
The samples were analyzed within the method required hold times with any exceptions noted below.

Initial Calibrations (including MS Tune as applicable):
All criteria were within method requirements with any exceptions noted below.

Continuing Calibration:
All criteria were within method requirements with any exceptions noted below.

Method Blank:
All analytes were below the report limit in the method blank with any exceptions noted below.

Laboratory Control Spike:
All laboratory control spike compounds were within QC limits with any exceptions noted below.

Matrix Spikes:
All percent recoveries and relative percent differences (RPDs) were within acceptance criteria with any exceptions noted below.

Additional Comments:

This report shall not be reproduced, except in full,
without the written consent of Pace Analytical Services, Inc..

Pace Analytical Services, Inc.
9608 Loiret Blvd.
Lenexa, KS 66219
(913)599-5665

PROJECT NARRATIVE

Project: JANUARY 2013 RICO WATER SAMPLI
Pace Project No.: 60137618

Method: **EPA 353.2**
Description: 353.2 Nitrogen, NO2/NO3 pres.
Client: BP Anderson Engineering Company Inc.
Date: March 08, 2013

General Information:
15 samples were analyzed for EPA 353.2. All samples were received in acceptable condition with any exceptions noted below.

Hold Time:
The samples were analyzed within the method required hold times with any exceptions noted below.

Initial Calibrations (including MS Tune as applicable):
All criteria were within method requirements with any exceptions noted below.

Continuing Calibration:
All criteria were within method requirements with any exceptions noted below.

Method Blank:
All analytes were below the report limit in the method blank with any exceptions noted below.

Laboratory Control Spike:
All laboratory control spike compounds were within QC limits with any exceptions noted below.

Matrix Spikes:
All percent recoveries and relative percent differences (RPDs) were within acceptance criteria with any exceptions noted below.

Duplicate Sample:
All duplicate sample results were within method acceptance criteria with any exceptions noted below.

Additional Comments:

This report shall not be reproduced, except in full,
without the written consent of Pace Analytical Services, Inc..

Pace Analytical Services, Inc.
9608 Loiret Blvd.
Lenexa, KS 66219
(913)599-5665

PROJECT NARRATIVE

Project: JANUARY 2013 RICO WATER SAMPLI
Pace Project No.: 60137618

Method: **SM 4500-CN-E**
Description: 4500CNE Cyanide, Total
Client: BP Anderson Engineering Company Inc.
Date: March 08, 2013

General Information:
15 samples were analyzed for SM 4500-CN-E. All samples were received in acceptable condition with any exceptions noted below.

Hold Time:
The samples were analyzed within the method required hold times with any exceptions noted below.

Initial Calibrations (including MS Tune as applicable):
All criteria were within method requirements with any exceptions noted below.

Continuing Calibration:
All criteria were within method requirements with any exceptions noted below.

Method Blank:
All analytes were below the report limit in the method blank with any exceptions noted below.

Laboratory Control Spike:
All laboratory control spike compounds were within QC limits with any exceptions noted below.

Matrix Spikes:
All percent recoveries and relative percent differences (RPDs) were within acceptance criteria with any exceptions noted below.

Duplicate Sample:
All duplicate sample results were within method acceptance criteria with any exceptions noted below.

Additional Comments:

This report shall not be reproduced, except in full,
without the written consent of Pace Analytical Services, Inc..

Pace Analytical Services, Inc.
9608 Loiret Blvd.
Lenexa, KS 66219
(913)599-5665

PROJECT NARRATIVE

Project: JANUARY 2013 RICO WATER SAMPLI
Pace Project No.: 60137618

Method: **SM 5310C**
Description: 5310C TOC
Client: BP Anderson Engineering Company Inc.
Date: March 08, 2013

General Information:
15 samples were analyzed for SM 5310C. All samples were received in acceptable condition with any exceptions noted below.

Hold Time:
The samples were analyzed within the method required hold times with any exceptions noted below.

Initial Calibrations (including MS Tune as applicable):
All criteria were within method requirements with any exceptions noted below.

Continuing Calibration:
All criteria were within method requirements with any exceptions noted below.

Method Blank:
All analytes were below the report limit in the method blank with any exceptions noted below.

Laboratory Control Spike:
All laboratory control spike compounds were within QC limits with any exceptions noted below.

Matrix Spikes:
All percent recoveries and relative percent differences (RPDs) were within acceptance criteria with any exceptions noted below.

Duplicate Sample:
All duplicate sample results were within method acceptance criteria with any exceptions noted below.

Additional Comments:

This data package has been reviewed for quality and completeness and is approved for release.

This report shall not be reproduced, except in full,
without the written consent of Pace Analytical Services, Inc..

Pace Analytical Services, Inc.
9608 Loiret Blvd.
Lenexa, KS 66219
(913)599-5665

ANALYTICAL RESULTS

Project: JANUARY 2013 RICO WATER SAMPLI
Pace Project No.: 60137618

Sample: DR-6_20130124 **Lab ID: 60137618001** Collected: 01/24/13 09:00 Received: 01/26/13 08:50 Matrix: Water

Parameters	Results	Units	Report Limit	DF	Prepared	Analyzed	CAS No.	Qual
200.7 Potentially Diss. Metals	Analytical Method: EPA 200.7 Preparation Method: EPA 200.7							
Calcium, Dissolved	**261000**	ug/L	100	1	01/30/13 15:50	01/31/13 16:18	7440-70-2	
Magnesium, Dissolved	**22300**	ug/L	50.0	1	01/30/13 15:50	01/31/13 16:18	7439-95-4	
Potassium, Dissolved	**14300**	ug/L	500	1	01/30/13 15:50	01/31/13 16:18	7440-09-7	
Sodium, Dissolved	**14400**	ug/L	500	1	01/30/13 15:50	01/31/13 16:18	7440-23-5	
200.8 MET ICPMS	Analytical Method: EPA 200.8 Preparation Method: EPA 200.8							
Aluminum	**76.8**	ug/L	4.0	1	01/31/13 10:22	02/05/13 02:16	7429-90-5	
Antimony	ND	ug/L	0.50	1	01/31/13 10:22	02/05/13 02:16	7440-36-0	
Arsenic	ND	ug/L	0.50	1	01/31/13 10:22	02/05/13 02:16	7440-38-2	
Barium	**19.3**	ug/L	0.30	1	01/31/13 10:22	02/05/13 02:16	7440-39-3	
Beryllium	ND	ug/L	0.20	1	01/31/13 10:22	02/05/13 02:16	7440-41-7	
Cadmium	**5.6**	ug/L	0.080	1	01/31/13 10:22	02/05/13 02:16	7440-43-9	
Calcium	**246000**	ug/L	500	25	01/31/13 10:22	02/05/13 02:42	7440-70-2	M6
Chromium	ND	ug/L	0.50	1	01/31/13 10:22	02/05/13 02:16	7440-47-3	
Cobalt	**2.1**	ug/L	0.50	1	01/31/13 10:22	02/05/13 02:16	7440-48-4	
Copper	**16.3**	ug/L	0.50	1	01/31/13 10:22	02/05/13 02:16	7440-50-8	
Iron	**1230**	ug/L	50.0	1	01/31/13 10:22	02/05/13 02:16	7439-89-6	
Lead	**1.6**	ug/L	0.10	1	01/31/13 10:22	02/05/13 02:16	7439-92-1	
Magnesium	**21400**	ug/L	5.0	1	01/31/13 10:22	02/05/13 02:16	7439-95-4	M6
Manganese	**1530**	ug/L	2.5	5	01/31/13 10:22	02/05/13 02:38	7439-96-5	M6
Molybdenum	**14.9**	ug/L	0.50	1	01/31/13 10:22	02/05/13 02:16	7439-98-7	
Nickel	**3.1**	ug/L	0.50	1	01/31/13 10:22	02/05/13 02:16	7440-02-0	
Potassium	**12600**	ug/L	20.0	1	01/31/13 10:22	02/05/13 02:16	7440-09-7	M6
Selenium	ND	ug/L	0.50	1	01/31/13 10:22	02/05/13 02:16	7782-49-2	
Silica	**16200**	ug/L	268	5	01/31/13 10:22	02/06/13 01:16	7631-86-9	
Silver	ND	ug/L	0.50	1	01/31/13 10:22	02/05/13 02:16	7440-22-4	
Sodium	**13000**	ug/L	50.0	1	01/31/13 10:22	02/05/13 02:16	7440-23-5	M6
Thallium	ND	ug/L	0.10	1	01/31/13 10:22	02/05/13 02:16	7440-28-0	
Total Hardness by 2340B	**702000**	ug/L	1780	25	01/31/13 10:22	02/05/13 02:42		M6
Vanadium	ND	ug/L	0.10	1	01/31/13 10:22	02/05/13 02:16	7440-62-2	
Zinc	**1630**	ug/L	25.0	5	01/31/13 10:22	02/05/13 02:38	7440-66-6	M6
200.8 MET ICPMS, Dissolved	Analytical Method: EPA 200.8 Preparation Method: EPA 200.8							
Aluminum, Dissolved	**10.6**	ug/L	4.0	1	01/31/13 10:25	02/08/13 20:38	7429-90-5	
Antimony, Dissolved	ND	ug/L	0.50	1	01/31/13 10:25	02/08/13 20:38	7440-36-0	
Arsenic, Dissolved	ND	ug/L	0.50	1	01/31/13 10:25	02/08/13 20:38	7440-38-2	
Barium, Dissolved	**20.1**	ug/L	0.30	1	01/31/13 10:25	02/08/13 20:38	7440-39-3	
Beryllium, Dissolved	ND	ug/L	0.20	1	01/31/13 10:25	02/11/13 11:11	7440-41-7	
Cadmium, Dissolved	ND	ug/L	0.080	1	01/31/13 10:25	02/08/13 20:38	7440-43-9	
Calcium, Dissolved	**272000**	ug/L	400	20	01/31/13 10:25	02/08/13 20:53	7440-70-2	M6
Chromium, Dissolved	ND	ug/L	0.50	1	01/31/13 10:25	02/08/13 20:38	7440-47-3	
Cobalt, Dissolved	**2.1**	ug/L	0.50	1	01/31/13 10:25	02/08/13 20:38	7440-48-4	
Copper, Dissolved	**0.58**	ug/L	0.50	1	01/31/13 10:25	02/11/13 11:11	7440-50-8	
Iron, Dissolved	**224**	ug/L	50.0	1	01/31/13 10:25	02/08/13 20:38	7439-89-6	
Lead, Dissolved	ND	ug/L	0.10	1	01/31/13 10:25	02/08/13 20:38	7439-92-1	
Magnesium, Dissolved	**23200**	ug/L	25.0	5	01/31/13 10:25	02/11/13 11:28	7439-95-4	M6

This report shall not be reproduced, except in full,
without the written consent of Pace Analytical Services, Inc..

Pace Analytical Services, Inc.
9608 Loiret Blvd.
Lenexa, KS 66219
(913)599-5665

ANALYTICAL RESULTS

Project: JANUARY 2013 RICO WATER SAMPLI
Pace Project No.: 60137618

Sample: DR-6_20130124 **Lab ID: 60137618001** Collected: 01/24/13 09:00 Received: 01/26/13 08:50 Matrix: Water

Parameters	Results	Units	Report Limit	DF	Prepared	Analyzed	CAS No.	Qual
200.8 MET ICPMS, Dissolved	Analytical Method: EPA 200.8 Preparation Method: EPA 200.8							
Manganese, Dissolved	**1650**	ug/L	2.5	5	01/31/13 10:25	02/11/13 11:28	7439-96-5	M6
Molybdenum, Dissolved	**15.4**	ug/L	0.50	1	01/31/13 10:25	02/08/13 20:38	7439-98-7	
Nickel, Dissolved	**3.4**	ug/L	0.50	1	01/31/13 10:25	02/08/13 20:38	7440-02-0	
Potassium, Dissolved	**13300**	ug/L	20.0	1	01/31/13 10:25	02/08/13 20:38	7440-09-7	M6
Selenium, Dissolved	ND	ug/L	0.50	1	01/31/13 10:25	02/08/13 20:38	7782-49-2	
Silver, Dissolved	ND	ug/L	0.50	1	01/31/13 10:25	02/08/13 20:38	7440-22-4	
Sodium, Dissolved	**13900**	ug/L	50.0	1	01/31/13 10:25	02/08/13 20:38	7440-23-5	M6
Thallium, Dissolved	ND	ug/L	0.10	1	01/31/13 10:25	02/08/13 20:38	7440-28-0	
Vanadium, Dissolved	ND	ug/L	0.10	1	01/31/13 10:25	02/08/13 20:38	7440-62-2	
Zinc, Dissolved	**1550**	ug/L	25.0	5	01/31/13 10:25	02/11/13 11:28	7440-66-6	M6
200.8 Potentially Diss. Metals	Analytical Method: EPA 200.8 Preparation Method: EPA 200.8							
Aluminum, Dissolved	**78.3**	ug/L	50.0	1	01/30/13 15:50	01/31/13 14:02	7429-90-5	
Antimony, Dissolved	**0.22J**	ug/L	1.0	1	01/30/13 15:50	01/31/13 14:02	7440-36-0	
Arsenic, Dissolved	**0.44J**	ug/L	1.0	1	01/30/13 15:50	01/31/13 14:02	7440-38-2	
Barium, Dissolved	**20.3**	ug/L	1.0	1	01/30/13 15:50	01/31/13 14:02	7440-39-3	
Beryllium, Dissolved	**0.14J**	ug/L	0.50	1	01/30/13 15:50	01/31/13 14:02	7440-41-7	
Cadmium, Dissolved	**6.0**	ug/L	0.50	1	01/30/13 15:50	01/31/13 14:02	7440-43-9	
Chromium, Dissolved	**0.46J**	ug/L	1.0	1	01/30/13 15:50	02/04/13 15:44	7440-47-3	B
Cobalt, Dissolved	**2.3**	ug/L	1.0	1	01/30/13 15:50	01/31/13 14:02	7440-48-4	
Copper, Dissolved	**15.8**	ug/L	1.0	1	01/30/13 15:50	01/31/13 14:02	7440-50-8	
Iron, Dissolved	**1290**	ug/L	50.0	1	01/30/13 15:50	01/31/13 14:02	7439-89-6	
Lead, Dissolved	**8.5**	ug/L	1.0	1	01/30/13 15:50	01/31/13 14:02	7439-92-1	
Manganese, Dissolved	**1690**	ug/L	1.0	1	01/30/13 15:50	01/31/13 14:02	7439-96-5	
Molybdenum, Dissolved	**16.8**	ug/L	1.0	1	01/30/13 15:50	01/31/13 14:02	7439-98-7	
Nickel, Dissolved	**2.5**	ug/L	1.0	1	01/30/13 15:50	01/31/13 14:02	7440-02-0	
Selenium, Dissolved	ND	ug/L	1.0	1	01/30/13 15:50	01/31/13 14:02	7782-49-2	
Silver, Dissolved	**0.11J**	ug/L	0.50	1	01/30/13 15:50	01/31/13 14:02	7440-22-4	
Thallium, Dissolved	**0.13J**	ug/L	1.0	1	01/30/13 15:50	01/31/13 14:02	7440-28-0	
Vanadium, Dissolved	ND	ug/L	1.0	1	01/30/13 15:50	01/31/13 14:02	7440-62-2	
Zinc, Dissolved	**1540**	ug/L	10.0	1	01/30/13 15:50	01/31/13 14:02	7440-66-6	
245.1 Mercury	Analytical Method: EPA 245.1 Preparation Method: EPA 245.1							
Mercury	ND	ug/L	0.20	1	02/07/13 12:29	02/08/13 17:52	7439-97-6	
245.1 Mercury, Dissolved	Analytical Method: EPA 245.1 Preparation Method: EPA 245.1							
Mercury, Dissolved	ND	ug/L	0.20	1	02/06/13 15:39	02/07/13 18:01	7439-97-6	
245.1 Potentially Diss Mercury	Analytical Method: EPA 245.1 Preparation Method: EPA 245.1							
Mercury, Dissolved	ND	ug/L	0.20	1	01/30/13 15:30	01/31/13 09:20	7439-97-6	
2510B Specific Conductance	Analytical Method: SM 2510B							
Specific Conductance	**1320**	umhos/cm	10.0	1		01/30/13 14:46		
Salinity	Analytical Method: Calculated							
Salinity (as dissolved solids)	**864**	mg/L	6.0	1		01/31/13 15:31		

This report shall not be reproduced, except in full,
without the written consent of Pace Analytical Services, Inc..

Pace Analytical Services, Inc.
9608 Loiret Blvd.
Lenexa, KS 66219
(913)599-5665

ANALYTICAL RESULTS

Project: JANUARY 2013 RICO WATER SAMPLI
Pace Project No.: 60137618

Sample: DR-6_20130124 **Lab ID: 60137618001** Collected: 01/24/13 09:00 Received: 01/26/13 08:50 Matrix: Water

Parameters	Results	Units	Report Limit	DF	Prepared	Analyzed	CAS No.	Qual
Salinity	Analytical Method: Calculated							
Salinity (as seawater)	**0.66**	PSU	0.010	1		01/31/13 15:31		
2320B Alkalinity	Analytical Method: SM 2320B							
Alkalinity,Bicarbonate (CaCO3)	**138**	mg/L	20.0	1		01/30/13 12:19		
Alkalinity, Carbonate (CaCO3)	ND	mg/L	20.0	1		01/30/13 12:19		
Alkalinity, Total as CaCO3	**138**	mg/L	20.0	1		01/30/13 12:19		
2540C Total Dissolved Solids	Analytical Method: SM 2540C							
Total Dissolved Solids	**1050**	mg/L	5.0	1		01/29/13 10:29		
2540D Total Suspended Solids	Analytical Method: SM 2540D							
Total Suspended Solids	ND	mg/L	5.0	1		01/29/13 10:46		
4500S2D Sulfide, Total	Analytical Method: SM 4500-S-2 D							
Sulfide, Total	**0.074**	mg/L	0.050	1		01/29/13 14:33	18496-25-8	
300.0 IC Anions 28 Days	Analytical Method: EPA 300.0							
Chloride	**1.1**	mg/L	1.0	1		01/30/13 12:10	16887-00-6	
Sulfate	**680**	mg/L	50.0	50		01/30/13 12:27	14808-79-8	
353.2 Nitrogen, NO2/NO3 pres.	Analytical Method: EPA 353.2							
Nitrogen, NO2 plus NO3	ND	mg/L	0.10	1		01/31/13 16:34		
4500CNE Cyanide, Total	Analytical Method: SM 4500-CN-E							
Cyanide	ND	mg/L	0.0050	1		01/30/13 13:04	57-12-5	
5310C TOC	Analytical Method: SM 5310C							
Total Organic Carbon	ND	mg/L	1.0	1		01/30/13 16:34	7440-44-0	

This report shall not be reproduced, except in full,
without the written consent of Pace Analytical Services, Inc..

Pace Analytical Services, Inc.
9608 Loiret Blvd.
Lenexa, KS 66219
(913)599-5665

ANALYTICAL RESULTS

Project: JANUARY 2013 RICO WATER SAMPLI
Pace Project No.: 60137618

Sample: MW-104_20130124 **Lab ID: 60137618002** Collected: 01/24/13 10:29 Received: 01/26/13 08:50 Matrix: Water

Parameters	Results	Units	Report Limit	DF	Prepared	Analyzed	CAS No.	Qual
200.7 Potentially Diss. Metals	Analytical Method: EPA 200.7 Preparation Method: EPA 200.7							
Calcium, Dissolved	**262000**	ug/L	100	1	01/30/13 15:50	01/31/13 16:20	7440-70-2	
Magnesium, Dissolved	**25000**	ug/L	50.0	1	01/30/13 15:50	01/31/13 16:20	7439-95-4	
Potassium, Dissolved	**17200**	ug/L	500	1	01/30/13 15:50	01/31/13 16:20	7440-09-7	
Sodium, Dissolved	**16200**	ug/L	500	1	01/30/13 15:50	01/31/13 16:20	7440-23-5	
200.8 MET ICPMS	Analytical Method: EPA 200.8 Preparation Method: EPA 200.8							
Aluminum	**3830**	ug/L	4.0	1	01/31/13 10:22	02/05/13 02:47	7429-90-5	
Antimony	ND	ug/L	0.50	1	01/31/13 10:22	02/05/13 02:47	7440-36-0	
Arsenic	**4.5**	ug/L	0.50	1	01/31/13 10:22	02/05/13 02:47	7440-38-2	
Barium	**115**	ug/L	0.30	1	01/31/13 10:22	02/05/13 02:47	7440-39-3	
Beryllium	ND	ug/L	0.20	1	01/31/13 10:22	02/05/13 02:47	7440-41-7	
Cadmium	**3.9**	ug/L	0.080	1	01/31/13 10:22	02/05/13 02:47	7440-43-9	
Calcium	**247000**	ug/L	400	20	01/31/13 10:22	02/05/13 02:51	7440-70-2	
Chromium	**6.7**	ug/L	0.50	1	01/31/13 10:22	02/05/13 02:47	7440-47-3	
Cobalt	**3.2**	ug/L	0.50	1	01/31/13 10:22	02/05/13 02:47	7440-48-4	
Copper	**23.0**	ug/L	0.50	1	01/31/13 10:22	02/05/13 02:47	7440-50-8	
Iron	**6510**	ug/L	50.0	1	01/31/13 10:22	02/05/13 02:47	7439-89-6	
Lead	**32.1**	ug/L	0.10	1	01/31/13 10:22	02/05/13 02:47	7439-92-1	
Magnesium	**26000**	ug/L	100	20	01/31/13 10:22	02/05/13 02:51	7439-95-4	
Manganese	**1550**	ug/L	10.0	20	01/31/13 10:22	02/05/13 02:51	7439-96-5	
Molybdenum	**14.0**	ug/L	0.50	1	01/31/13 10:22	02/05/13 02:47	7439-98-7	
Nickel	**5.3**	ug/L	0.50	1	01/31/13 10:22	02/05/13 02:47	7440-02-0	
Potassium	**15100**	ug/L	20.0	1	01/31/13 10:22	02/05/13 02:47	7440-09-7	
Selenium	**1.9**	ug/L	0.50	1	01/31/13 10:22	02/05/13 02:47	7782-49-2	
Silica	**26600**	ug/L	1070	20	01/31/13 10:22	02/05/13 02:51	7631-86-9	
Silver	ND	ug/L	0.50	1	01/31/13 10:22	02/05/13 02:47	7440-22-4	
Sodium	**14400**	ug/L	50.0	1	01/31/13 10:22	02/05/13 02:47	7440-23-5	
Thallium	**0.12**	ug/L	0.10	1	01/31/13 10:22	02/05/13 02:47	7440-28-0	
Total Hardness by 2340B	**723000**	ug/L	1420	20	01/31/13 10:22	02/05/13 02:51		
Vanadium	**8.0**	ug/L	0.10	1	01/31/13 10:22	02/05/13 02:47	7440-62-2	
Zinc	**1050**	ug/L	100	20	01/31/13 10:22	02/05/13 02:51	7440-66-6	
200.8 MET ICPMS, Dissolved	Analytical Method: EPA 200.8 Preparation Method: EPA 200.8							
Aluminum, Dissolved	**2690**	ug/L	4.0	1	01/31/13 10:25	02/11/13 11:32	7429-90-5	
Antimony, Dissolved	ND	ug/L	0.50	1	01/31/13 10:25	02/11/13 11:32	7440-36-0	
Arsenic, Dissolved	**3.4**	ug/L	0.50	1	01/31/13 10:25	02/11/13 11:32	7440-38-2	
Barium, Dissolved	**86.3**	ug/L	0.30	1	01/31/13 10:25	02/11/13 11:32	7440-39-3	
Beryllium, Dissolved	**0.23**	ug/L	0.20	1	01/31/13 10:25	02/11/13 11:32	7440-41-7	
Cadmium, Dissolved	**3.7**	ug/L	0.080	1	01/31/13 10:25	02/11/13 11:32	7440-43-9	
Calcium, Dissolved	**276000**	ug/L	400	20	01/31/13 10:25	02/08/13 21:04	7440-70-2	
Chromium, Dissolved	**5.0**	ug/L	0.50	1	01/31/13 10:25	02/11/13 11:32	7440-47-3	
Cobalt, Dissolved	**2.7**	ug/L	0.50	1	01/31/13 10:25	02/11/13 11:32	7440-48-4	
Copper, Dissolved	**20.5**	ug/L	0.50	1	01/31/13 10:25	02/11/13 11:32	7440-50-8	
Iron, Dissolved	**4820**	ug/L	50.0	1	01/31/13 10:25	02/11/13 11:32	7439-89-6	
Lead, Dissolved	**26.9**	ug/L	0.10	1	01/31/13 10:25	02/11/13 11:32	7439-92-1	
Magnesium, Dissolved	**33400**	ug/L	25.0	5	01/31/13 10:25	02/11/13 11:37	7439-95-4	

This report shall not be reproduced, except in full,
without the written consent of Pace Analytical Services, Inc..

Pace Analytical Services, Inc.
9608 Loiret Blvd.
Lenexa, KS 66219
(913)599-5665

ANALYTICAL RESULTS

Project: JANUARY 2013 RICO WATER SAMPLI
Pace Project No.: 60137618

Sample: MW-104_20130124 **Lab ID: 60137618002** Collected: 01/24/13 10:29 Received: 01/26/13 08:50 Matrix: Water

Parameters	Results	Units	Report Limit	DF	Prepared	Analyzed	CAS No.	Qual
200.8 MET ICPMS, Dissolved	Analytical Method: EPA 200.8 Preparation Method: EPA 200.8							
Manganese, Dissolved	**1200**	ug/L	10.0	20	01/31/13 10:25	02/06/13 05:59	7439-96-5	
Molybdenum, Dissolved	**11.4**	ug/L	0.50	1	01/31/13 10:25	02/11/13 11:32	7439-98-7	
Nickel, Dissolved	**7.0**	ug/L	0.50	1	01/31/13 10:25	02/11/13 11:32	7440-02-0	
Potassium, Dissolved	**16000**	ug/L	20.0	1	01/31/13 10:25	02/11/13 11:32	7440-09-7	
Selenium, Dissolved	**1.8**	ug/L	0.50	1	01/31/13 10:25	02/11/13 11:32	7782-49-2	
Silver, Dissolved	ND	ug/L	0.50	1	01/31/13 10:25	02/11/13 11:32	7440-22-4	
Sodium, Dissolved	**16500**	ug/L	50.0	1	01/31/13 10:25	02/11/13 11:32	7440-23-5	
Thallium, Dissolved	ND	ug/L	0.10	1	01/31/13 10:25	02/11/13 11:32	7440-28-0	
Vanadium, Dissolved	**5.8**	ug/L	0.10	1	01/31/13 10:25	02/11/13 11:32	7440-62-2	
Zinc, Dissolved	**1080**	ug/L	100	20	01/31/13 10:25	02/06/13 05:59	7440-66-6	
200.8 Potentially Diss. Metals	Analytical Method: EPA 200.8 Preparation Method: EPA 200.8							
Aluminum, Dissolved	**1290**	ug/L	50.0	1	01/30/13 15:50	01/31/13 14:06	7429-90-5	
Antimony, Dissolved	**0.20J**	ug/L	1.0	1	01/30/13 15:50	01/31/13 14:06	7440-36-0	
Arsenic, Dissolved	**1.8**	ug/L	1.0	1	01/30/13 15:50	01/31/13 14:06	7440-38-2	
Barium, Dissolved	**51.2**	ug/L	1.0	1	01/30/13 15:50	01/31/13 14:06	7440-39-3	
Beryllium, Dissolved	**0.17J**	ug/L	0.50	1	01/30/13 15:50	01/31/13 14:06	7440-41-7	
Cadmium, Dissolved	**4.5**	ug/L	0.50	1	01/30/13 15:50	01/31/13 14:06	7440-43-9	
Chromium, Dissolved	**4.5**	ug/L	1.0	1	01/30/13 15:50	01/31/13 14:06	7440-47-3	
Cobalt, Dissolved	**1.9**	ug/L	1.0	1	01/30/13 15:50	01/31/13 14:06	7440-48-4	
Copper, Dissolved	**20.6**	ug/L	1.0	1	01/30/13 15:50	01/31/13 14:06	7440-50-8	
Iron, Dissolved	**3020**	ug/L	50.0	1	01/30/13 15:50	01/31/13 14:06	7439-89-6	
Lead, Dissolved	**30.8**	ug/L	1.0	1	01/30/13 15:50	01/31/13 14:06	7439-92-1	
Manganese, Dissolved	**986**	ug/L	1.0	1	01/30/13 15:50	01/31/13 14:06	7439-96-5	M1
Molybdenum, Dissolved	**2.1**	ug/L	1.0	1	01/30/13 15:50	01/31/13 14:06	7439-98-7	
Nickel, Dissolved	**3.3**	ug/L	1.0	1	01/30/13 15:50	01/31/13 14:06	7440-02-0	
Selenium, Dissolved	**1.6**	ug/L	1.0	1	01/30/13 15:50	01/31/13 14:06	7782-49-2	
Silver, Dissolved	**0.30J**	ug/L	0.50	1	01/30/13 15:50	01/31/13 14:06	7440-22-4	
Thallium, Dissolved	ND	ug/L	1.0	1	01/30/13 15:50	01/31/13 14:06	7440-28-0	
Vanadium, Dissolved	**2.8**	ug/L	1.0	1	01/30/13 15:50	01/31/13 14:06	7440-62-2	
Zinc, Dissolved	**1050**	ug/L	10.0	1	01/30/13 15:50	01/31/13 14:06	7440-66-6	
245.1 Mercury	Analytical Method: EPA 245.1 Preparation Method: EPA 245.1							
Mercury	ND	ug/L	0.20	1	02/07/13 12:29	02/08/13 17:54	7439-97-6	
245.1 Mercury, Dissolved	Analytical Method: EPA 245.1 Preparation Method: EPA 245.1							
Mercury, Dissolved	ND	ug/L	0.20	1	02/06/13 15:39	02/07/13 18:08	7439-97-6	
245.1 Potentially Diss Mercury	Analytical Method: EPA 245.1 Preparation Method: EPA 245.1							
Mercury, Dissolved	ND	ug/L	0.20	1	01/30/13 15:30	01/31/13 09:27	7439-97-6	
2510B Specific Conductance	Analytical Method: SM 2510B							
Specific Conductance	**1400**	umhos/cm	10.0	1		01/30/13 14:47		
Salinity	Analytical Method: Calculated							
Salinity (as dissolved solids)	**898**	mg/L	6.0	1		01/31/13 15:31		

This report shall not be reproduced, except in full,
without the written consent of Pace Analytical Services, Inc..

Pace Analytical Services, Inc.
9608 Loiret Blvd.
Lenexa, KS 66219
(913)599-5665

ANALYTICAL RESULTS

Project: JANUARY 2013 RICO WATER SAMPLI
Pace Project No.: 60137618

Sample: MW-104_20130124 **Lab ID: 60137618002** Collected: 01/24/13 10:29 Received: 01/26/13 08:50 Matrix: Water

Parameters	Results	Units	Report Limit	DF	Prepared	Analyzed	CAS No.	Qual
Salinity	Analytical Method: Calculated							
Salinity (as seawater)	**0.70**	PSU	0.010	1		01/31/13 15:31		
2320B Alkalinity	Analytical Method: SM 2320B							
Alkalinity,Bicarbonate (CaCO3)	**165**	mg/L	20.0	1		01/30/13 12:23		
Alkalinity, Carbonate (CaCO3)	ND	mg/L	20.0	1		01/30/13 12:23		
Alkalinity, Total as CaCO3	**165**	mg/L	20.0	1		01/30/13 12:23		
2540C Total Dissolved Solids	Analytical Method: SM 2540C							
Total Dissolved Solids	**1100**	mg/L	5.0	1		01/29/13 10:30		
2540D Total Suspended Solids	Analytical Method: SM 2540D							
Total Suspended Solids	**220**	mg/L	5.0	1		01/29/13 10:46		
4500S2D Sulfide, Total	Analytical Method: SM 4500-S-2 D							
Sulfide, Total	ND	mg/L	0.050	1		01/29/13 14:33	18496-25-8	
300.0 IC Anions 28 Days	Analytical Method: EPA 300.0							
Chloride	**1.1**	mg/L	1.0	1		01/30/13 14:02	16887-00-6	
Sulfate	**831**	mg/L	50.0	50		01/30/13 14:19	14808-79-8	M6
353.2 Nitrogen, NO2/NO3 pres.	Analytical Method: EPA 353.2							
Nitrogen, NO2 plus NO3	ND	mg/L	0.10	1		01/31/13 16:37		
4500CNE Cyanide, Total	Analytical Method: SM 4500-CN-E							
Cyanide	ND	mg/L	0.0050	1		01/30/13 13:05	57-12-5	
5310C TOC	Analytical Method: SM 5310C							
Total Organic Carbon	ND	mg/L	1.0	1		01/30/13 16:48	7440-44-0	

This report shall not be reproduced, except in full,
without the written consent of Pace Analytical Services, Inc..

Pace Analytical Services, Inc.
9608 Loiret Blvd.
Lenexa, KS 66219
(913)599-5665

ANALYTICAL RESULTS

Project: JANUARY 2013 RICO WATER SAMPLI
Pace Project No.: 60137618

Sample: CHV-101_20130124 **Lab ID: 60137618003** Collected: 01/24/13 10:55 Received: 01/26/13 08:50 Matrix: Water

Parameters	Results	Units	Report Limit	DF	Prepared	Analyzed	CAS No.	Qual
200.7 Potentially Diss. Metals	Analytical Method: EPA 200.7 Preparation Method: EPA 200.7							
Calcium, Dissolved	**264000**	ug/L	100	1	01/30/13 15:50	01/31/13 16:21	7440-70-2	M1
Magnesium, Dissolved	**22400**	ug/L	50.0	1	01/30/13 15:50	01/31/13 16:21	7439-95-4	
Potassium, Dissolved	**3480**	ug/L	500	1	01/30/13 15:50	01/31/13 16:21	7440-09-7	
Sodium, Dissolved	**12700**	ug/L	500	1	01/30/13 15:50	01/31/13 16:21	7440-23-5	
200.8 MET ICPMS	Analytical Method: EPA 200.8 Preparation Method: EPA 200.8							
Aluminum	**6180**	ug/L	4.0	1	01/31/13 10:22	02/05/13 03:10	7429-90-5	
Antimony	ND	ug/L	0.50	1	01/31/13 10:22	02/05/13 03:10	7440-36-0	
Arsenic	**5.8**	ug/L	0.50	1	01/31/13 10:22	02/05/13 03:10	7440-38-2	
Barium	**130**	ug/L	0.30	1	01/31/13 10:22	02/05/13 03:10	7440-39-3	
Beryllium	**0.88**	ug/L	0.20	1	01/31/13 10:22	02/05/13 03:10	7440-41-7	
Cadmium	**1.2**	ug/L	0.080	1	01/31/13 10:22	02/05/13 03:10	7440-43-9	
Calcium	**246000**	ug/L	400	20	01/31/13 10:22	02/05/13 03:15	7440-70-2	
Chromium	**14.2**	ug/L	0.50	1	01/31/13 10:22	02/05/13 03:10	7440-47-3	
Cobalt	**9.0**	ug/L	0.50	1	01/31/13 10:22	02/05/13 03:10	7440-48-4	
Copper	**20.6**	ug/L	0.50	1	01/31/13 10:22	02/05/13 03:10	7440-50-8	
Iron	**9370**	ug/L	50.0	1	01/31/13 10:22	02/05/13 03:10	7439-89-6	
Lead	**24.0**	ug/L	0.10	1	01/31/13 10:22	02/05/13 03:10	7439-92-1	
Magnesium	**23900**	ug/L	100	20	01/31/13 10:22	02/05/13 03:15	7439-95-4	
Manganese	**2100**	ug/L	10.0	20	01/31/13 10:22	02/05/13 03:15	7439-96-5	
Molybdenum	**1.9**	ug/L	0.50	1	01/31/13 10:22	02/05/13 03:10	7439-98-7	
Nickel	**10.4**	ug/L	0.50	1	01/31/13 10:22	02/05/13 03:10	7440-02-0	
Potassium	**3940**	ug/L	20.0	1	01/31/13 10:22	02/05/13 03:10	7440-09-7	
Selenium	**1.1**	ug/L	0.50	1	01/31/13 10:22	02/05/13 03:10	7782-49-2	
Silica	**31500**	ug/L	535	10	01/31/13 10:22	02/06/13 01:36	7631-86-9	
Silver	ND	ug/L	0.50	1	01/31/13 10:22	02/05/13 03:10	7440-22-4	
Sodium	**12000**	ug/L	50.0	1	01/31/13 10:22	02/05/13 03:10	7440-23-5	
Thallium	**0.14**	ug/L	0.10	1	01/31/13 10:22	02/05/13 03:10	7440-28-0	
Total Hardness by 2340B	**713000**	ug/L	1420	20	01/31/13 10:22	02/05/13 03:15		
Vanadium	**12.2**	ug/L	0.10	1	01/31/13 10:22	02/05/13 03:10	7440-62-2	
Zinc	**152**	ug/L	5.0	1	01/31/13 10:22	02/05/13 03:10	7440-66-6	
200.8 MET ICPMS, Dissolved	Analytical Method: EPA 200.8 Preparation Method: EPA 200.8							
Aluminum, Dissolved	**79.6**	ug/L	4.0	1	01/31/13 10:25	02/06/13 06:19	7429-90-5	
Antimony, Dissolved	ND	ug/L	0.50	1	01/31/13 10:25	02/06/13 06:19	7440-36-0	
Arsenic, Dissolved	ND	ug/L	0.50	1	01/31/13 10:25	02/06/13 06:19	7440-38-2	
Barium, Dissolved	**27.2**	ug/L	0.30	1	01/31/13 10:25	02/06/13 06:19	7440-39-3	
Beryllium, Dissolved	ND	ug/L	0.20	1	01/31/13 10:25	02/06/13 06:19	7440-41-7	
Cadmium, Dissolved	**0.35**	ug/L	0.080	1	01/31/13 10:25	02/06/13 06:19	7440-43-9	
Calcium, Dissolved	**286000**	ug/L	400	20	01/31/13 10:25	02/08/13 23:27	7440-70-2	
Chromium, Dissolved	ND	ug/L	0.50	1	01/31/13 10:25	02/06/13 06:19	7440-47-3	
Cobalt, Dissolved	**1.2**	ug/L	0.50	1	01/31/13 10:25	02/06/13 06:19	7440-48-4	
Copper, Dissolved	**1.1**	ug/L	0.50	1	01/31/13 10:25	02/06/13 06:19	7440-50-8	
Iron, Dissolved	**126**	ug/L	50.0	1	01/31/13 10:25	02/06/13 06:19	7439-89-6	
Lead, Dissolved	**0.25**	ug/L	0.10	1	01/31/13 10:25	02/06/13 06:19	7439-92-1	
Magnesium, Dissolved	**27900**	ug/L	25.0	5	01/31/13 10:25	02/11/13 11:42	7439-95-4	

This report shall not be reproduced, except in full,
without the written consent of Pace Analytical Services, Inc..

Pace Analytical Services, Inc.
9608 Loiret Blvd.
Lenexa, KS 66219
(913)599-5665

ANALYTICAL RESULTS

Project: JANUARY 2013 RICO WATER SAMPLI
Pace Project No.: 60137618

Sample: CHV-101_20130124 **Lab ID: 60137618003** Collected: 01/24/13 10:55 Received: 01/26/13 08:50 Matrix: Water

Parameters	Results	Units	Report Limit	DF	Prepared	Analyzed	CAS No.	Qual
200.8 MET ICPMS, Dissolved	Analytical Method: EPA 200.8 Preparation Method: EPA 200.8							
Manganese, Dissolved	**939**	ug/L	2.5	5	01/31/13 10:25	02/11/13 11:42	7439-96-5	
Molybdenum, Dissolved	**1.8**	ug/L	0.50	1	01/31/13 10:25	02/06/13 06:19	7439-98-7	
Nickel, Dissolved	**1.7**	ug/L	0.50	1	01/31/13 10:25	02/06/13 06:19	7440-02-0	
Potassium, Dissolved	**2610**	ug/L	20.0	1	01/31/13 10:25	02/06/13 06:19	7440-09-7	
Selenium, Dissolved	ND	ug/L	0.50	1	01/31/13 10:25	02/06/13 06:19	7782-49-2	
Silver, Dissolved	ND	ug/L	0.50	1	01/31/13 10:25	02/06/13 06:19	7440-22-4	
Sodium, Dissolved	**11500**	ug/L	50.0	1	01/31/13 10:25	02/06/13 06:19	7440-23-5	
Thallium, Dissolved	ND	ug/L	0.10	1	01/31/13 10:25	02/06/13 06:19	7440-28-0	
Vanadium, Dissolved	**0.23**	ug/L	0.10	1	01/31/13 10:25	02/06/13 06:19	7440-62-2	
Zinc, Dissolved	**21.3**	ug/L	5.0	1	01/31/13 10:25	02/06/13 06:19	7440-66-6	
200.8 Potentially Diss. Metals	Analytical Method: EPA 200.8 Preparation Method: EPA 200.8							
Aluminum, Dissolved	**2260**	ug/L	50.0	1	01/30/13 15:50	01/31/13 14:23	7429-90-5	
Antimony, Dissolved	**0.12J**	ug/L	1.0	1	01/30/13 15:50	01/31/13 14:23	7440-36-0	
Arsenic, Dissolved	**2.0**	ug/L	1.0	1	01/30/13 15:50	01/31/13 14:23	7440-38-2	
Barium, Dissolved	**50.3**	ug/L	1.0	1	01/30/13 15:50	01/31/13 14:23	7440-39-3	
Beryllium, Dissolved	**0.58**	ug/L	0.50	1	01/30/13 15:50	01/31/13 14:23	7440-41-7	
Cadmium, Dissolved	**0.96**	ug/L	0.50	1	01/30/13 15:50	01/31/13 14:23	7440-43-9	
Chromium, Dissolved	**7.9**	ug/L	1.0	1	01/30/13 15:50	01/31/13 14:23	7440-47-3	
Cobalt, Dissolved	**5.9**	ug/L	1.0	1	01/30/13 15:50	01/31/13 14:23	7440-48-4	
Copper, Dissolved	**11.6**	ug/L	1.0	1	01/30/13 15:50	01/31/13 14:23	7440-50-8	
Iron, Dissolved	**3990**	ug/L	50.0	1	01/30/13 15:50	01/31/13 14:23	7439-89-6	
Lead, Dissolved	**21.4**	ug/L	1.0	1	01/30/13 15:50	01/31/13 14:23	7439-92-1	
Manganese, Dissolved	**1840**	ug/L	1.0	1	01/30/13 15:50	01/31/13 14:23	7439-96-5	
Molybdenum, Dissolved	**1.5**	ug/L	1.0	1	01/30/13 15:50	01/31/13 14:23	7439-98-7	
Nickel, Dissolved	**5.0**	ug/L	1.0	1	01/30/13 15:50	01/31/13 14:23	7440-02-0	
Selenium, Dissolved	**0.75J**	ug/L	1.0	1	01/30/13 15:50	01/31/13 14:23	7782-49-2	
Silver, Dissolved	**0.18J**	ug/L	0.50	1	01/30/13 15:50	01/31/13 14:23	7440-22-4	
Thallium, Dissolved	**0.13J**	ug/L	1.0	1	01/30/13 15:50	01/31/13 14:23	7440-28-0	
Vanadium, Dissolved	**5.3**	ug/L	1.0	1	01/30/13 15:50	01/31/13 14:23	7440-62-2	
Zinc, Dissolved	**98.9**	ug/L	10.0	1	01/30/13 15:50	01/31/13 14:23	7440-66-6	
245.1 Mercury	Analytical Method: EPA 245.1 Preparation Method: EPA 245.1							
Mercury	ND	ug/L	0.20	1	02/07/13 12:29	02/08/13 18:07	7439-97-6	
245.1 Mercury, Dissolved	Analytical Method: EPA 245.1 Preparation Method: EPA 245.1							
Mercury, Dissolved	ND	ug/L	0.20	1	02/06/13 15:39	02/07/13 18:11	7439-97-6	
245.1 Potentially Diss Mercury	Analytical Method: EPA 245.1 Preparation Method: EPA 245.1							
Mercury, Dissolved	ND	ug/L	0.20	1	01/30/13 15:30	01/31/13 09:29	7439-97-6	
2510B Specific Conductance	Analytical Method: SM 2510B							
Specific Conductance	**1310**	umhos/cm	10.0	1		01/30/13 14:49		
Salinity	Analytical Method: Calculated							
Salinity (as dissolved solids)	**838**	mg/L	6.0	1		01/31/13 15:31		

This report shall not be reproduced, except in full,
without the written consent of Pace Analytical Services, Inc..

Pace Analytical Services, Inc.
9608 Loiret Blvd.
Lenexa, KS 66219
(913)599-5665

ANALYTICAL RESULTS

Project: JANUARY 2013 RICO WATER SAMPLI
Pace Project No.: 60137618

Sample: CHV-101_20130124 **Lab ID: 60137618003** Collected: 01/24/13 10:55 Received: 01/26/13 08:50 Matrix: Water

Parameters	Results	Units	Report Limit	DF	Prepared	Analyzed	CAS No.	Qual
Salinity	Analytical Method: Calculated							
Salinity (as seawater)	**0.65**	PSU	0.010	1		01/31/13 15:31		
2320B Alkalinity	Analytical Method: SM 2320B							
Alkalinity,Bicarbonate (CaCO3)	**174**	mg/L	20.0	1		01/30/13 12:36		
Alkalinity, Carbonate (CaCO3)	ND	mg/L	20.0	1		01/30/13 12:36		
Alkalinity, Total as CaCO3	**174**	mg/L	20.0	1		01/30/13 12:36		
2540C Total Dissolved Solids	Analytical Method: SM 2540C							
Total Dissolved Solids	**1030**	mg/L	5.0	1		01/29/13 10:30		
2540D Total Suspended Solids	Analytical Method: SM 2540D							
Total Suspended Solids	**2790**	mg/L	5.0	1		01/29/13 10:46		
4500S2D Sulfide, Total	Analytical Method: SM 4500-S-2 D							
Sulfide, Total	ND	mg/L	0.050	1		01/29/13 14:33	18496-25-8	
300.0 IC Anions 28 Days	Analytical Method: EPA 300.0							
Chloride	**1.0**	mg/L	1.0	1		01/30/13 15:47	16887-00-6	
Sulfate	**629**	mg/L	50.0	50		01/30/13 16:05	14808-79-8	
353.2 Nitrogen, NO2/NO3 pres.	Analytical Method: EPA 353.2							
Nitrogen, NO2 plus NO3	ND	mg/L	0.10	1		01/31/13 16:39		
4500CNE Cyanide, Total	Analytical Method: SM 4500-CN-E							
Cyanide	ND	mg/L	0.0050	1		01/30/13 13:05	57-12-5	
5310C TOC	Analytical Method: SM 5310C							
Total Organic Carbon	**3.1**	mg/L	1.0	1		01/30/13 17:02	7440-44-0	

This report shall not be reproduced, except in full,
without the written consent of Pace Analytical Services, Inc..

Pace Analytical Services, Inc.
9608 Loiret Blvd.
Lenexa, KS 66219
(913)599-5665

ANALYTICAL RESULTS

Project: JANUARY 2013 RICO WATER SAMPLI
Pace Project No.: 60137618

Sample: MW-103_20130124 **Lab ID: 60137618004** Collected: 01/24/13 11:05 Received: 01/26/13 08:50 Matrix: Water

Parameters	Results	Units	Report Limit	DF	Prepared	Analyzed	CAS No.	Qual
200.7 Potentially Diss. Metals	Analytical Method: EPA 200.7 Preparation Method: EPA 200.7							
Calcium, Dissolved	**310000**	ug/L	100	1	01/30/13 15:50	01/31/13 16:29	7440-70-2	
Magnesium, Dissolved	**31600**	ug/L	50.0	1	01/30/13 15:50	01/31/13 16:29	7439-95-4	
Potassium, Dissolved	**4210**	ug/L	500	1	01/30/13 15:50	01/31/13 16:29	7440-09-7	
Sodium, Dissolved	**15100**	ug/L	500	1	01/30/13 15:50	01/31/13 16:29	7440-23-5	
200.8 MET ICPMS	Analytical Method: EPA 200.8 Preparation Method: EPA 200.8							
Aluminum	**3980**	ug/L	4.0	1	01/31/13 10:22	02/05/13 03:19	7429-90-5	
Antimony	ND	ug/L	0.50	1	01/31/13 10:22	02/05/13 03:19	7440-36-0	
Arsenic	**20.5**	ug/L	0.50	1	01/31/13 10:22	02/05/13 03:19	7440-38-2	
Barium	**68.8**	ug/L	0.30	1	01/31/13 10:22	02/05/13 03:19	7440-39-3	
Beryllium	**1.1**	ug/L	0.20	1	01/31/13 10:22	02/05/13 03:19	7440-41-7	
Cadmium	**1.0**	ug/L	0.080	1	01/31/13 10:22	02/05/13 03:19	7440-43-9	
Calcium	**291000**	ug/L	400	20	01/31/13 10:22	02/05/13 03:24	7440-70-2	
Chromium	**4.9**	ug/L	0.50	1	01/31/13 10:22	02/05/13 03:19	7440-47-3	
Cobalt	**5.9**	ug/L	0.50	1	01/31/13 10:22	02/05/13 03:19	7440-48-4	
Copper	**14.9**	ug/L	0.50	1	01/31/13 10:22	02/05/13 03:19	7440-50-8	
Iron	**17900**	ug/L	50.0	1	01/31/13 10:22	02/05/13 03:19	7439-89-6	
Lead	**13.7**	ug/L	0.10	1	01/31/13 10:22	02/05/13 03:19	7439-92-1	
Magnesium	**30600**	ug/L	100	20	01/31/13 10:22	02/05/13 03:24	7439-95-4	
Manganese	**8260**	ug/L	10.0	20	01/31/13 10:22	02/05/13 03:24	7439-96-5	
Molybdenum	**10.5**	ug/L	0.50	1	01/31/13 10:22	02/05/13 03:19	7439-98-7	
Nickel	**5.2**	ug/L	0.50	1	01/31/13 10:22	02/05/13 03:19	7440-02-0	
Potassium	**4470**	ug/L	20.0	1	01/31/13 10:22	02/05/13 03:19	7440-09-7	
Selenium	**0.54**	ug/L	0.50	1	01/31/13 10:22	02/05/13 03:19	7782-49-2	
Silica	**38900**	ug/L	535	10	01/31/13 10:22	02/06/13 01:40	7631-86-9	
Silver	ND	ug/L	0.50	1	01/31/13 10:22	02/05/13 03:19	7440-22-4	
Sodium	**14400**	ug/L	50.0	1	01/31/13 10:22	02/05/13 03:19	7440-23-5	
Thallium	**0.24**	ug/L	0.10	1	01/31/13 10:22	02/05/13 03:19	7440-28-0	
Total Hardness by 2340B	**852000**	ug/L	1420	20	01/31/13 10:22	02/05/13 03:24		
Vanadium	**7.6**	ug/L	0.10	1	01/31/13 10:22	02/05/13 03:19	7440-62-2	
Zinc	**290**	ug/L	5.0	1	01/31/13 10:22	02/05/13 03:19	7440-66-6	
200.8 MET ICPMS, Dissolved	Analytical Method: EPA 200.8 Preparation Method: EPA 200.8							
Aluminum, Dissolved	**47.7**	ug/L	4.0	1	01/31/13 10:25	02/11/13 11:46	7429-90-5	
Antimony, Dissolved	ND	ug/L	0.50	1	01/31/13 10:25	02/11/13 11:46	7440-36-0	
Arsenic, Dissolved	**3.2**	ug/L	0.50	1	01/31/13 10:25	02/11/13 11:46	7440-38-2	
Barium, Dissolved	**33.2**	ug/L	0.30	1	01/31/13 10:25	02/11/13 11:46	7440-39-3	
Beryllium, Dissolved	**0.33**	ug/L	0.20	1	01/31/13 10:25	02/11/13 11:46	7440-41-7	
Cadmium, Dissolved	**0.16**	ug/L	0.080	1	01/31/13 10:25	02/11/13 11:46	7440-43-9	
Calcium, Dissolved	**328000**	ug/L	400	20	01/31/13 10:25	02/08/13 21:29	7440-70-2	
Chromium, Dissolved	ND	ug/L	0.50	1	01/31/13 10:25	02/11/13 11:46	7440-47-3	
Cobalt, Dissolved	**4.6**	ug/L	0.50	1	01/31/13 10:25	02/11/13 11:46	7440-48-4	
Copper, Dissolved	**2.8**	ug/L	0.50	1	01/31/13 10:25	02/11/13 11:46	7440-50-8	
Iron, Dissolved	**8300**	ug/L	50.0	1	01/31/13 10:25	02/11/13 11:46	7439-89-6	
Lead, Dissolved	**0.15**	ug/L	0.10	1	01/31/13 10:25	02/11/13 11:46	7439-92-1	
Magnesium, Dissolved	**32000**	ug/L	25.0	5	01/31/13 10:25	02/11/13 11:51	7439-95-4	

This report shall not be reproduced, except in full,
without the written consent of Pace Analytical Services, Inc..

Pace Analytical Services, Inc.
9608 Loiret Blvd.
Lenexa, KS 66219
(913)599-5665

ANALYTICAL RESULTS

Project: JANUARY 2013 RICO WATER SAMPLI
Pace Project No.: 60137618

Sample: MW-103_20130124 **Lab ID: 60137618004** Collected: 01/24/13 11:05 Received: 01/26/13 08:50 Matrix: Water

Parameters	Results	Units	Report Limit	DF	Prepared	Analyzed	CAS No.	Qual
200.8 MET ICPMS, Dissolved	Analytical Method: EPA 200.8 Preparation Method: EPA 200.8							
Manganese, Dissolved	**8620**	ug/L	10.0	20	01/31/13 10:25	02/08/13 21:29	7439-96-5	
Molybdenum, Dissolved	**8.2**	ug/L	0.50	1	01/31/13 10:25	02/11/13 11:46	7439-98-7	
Nickel, Dissolved	**3.0**	ug/L	0.50	1	01/31/13 10:25	02/11/13 11:46	7440-02-0	
Potassium, Dissolved	**4050**	ug/L	20.0	1	01/31/13 10:25	02/11/13 11:46	7440-09-7	
Selenium, Dissolved	ND	ug/L	0.50	1	01/31/13 10:25	02/11/13 11:46	7782-49-2	
Silver, Dissolved	ND	ug/L	0.50	1	01/31/13 10:25	02/11/13 11:46	7440-22-4	
Sodium, Dissolved	**17000**	ug/L	50.0	1	01/31/13 10:25	02/11/13 11:46	7440-23-5	
Thallium, Dissolved	ND	ug/L	0.10	1	01/31/13 10:25	02/11/13 11:46	7440-28-0	
Vanadium, Dissolved	**0.13**	ug/L	0.10	1	01/31/13 10:25	02/11/13 11:46	7440-62-2	
Zinc, Dissolved	**209**	ug/L	5.0	1	01/31/13 10:25	02/11/13 11:46	7440-66-6	
200.8 Potentially Diss. Metals	Analytical Method: EPA 200.8 Preparation Method: EPA 200.8							
Aluminum, Dissolved	**764**	ug/L	50.0	1	01/30/13 15:50	01/31/13 14:27	7429-90-5	
Antimony, Dissolved	**0.078J**	ug/L	1.0	1	01/30/13 15:50	01/31/13 14:27	7440-36-0	
Arsenic, Dissolved	**7.1**	ug/L	1.0	1	01/30/13 15:50	01/31/13 14:27	7440-38-2	
Barium, Dissolved	**39.0**	ug/L	1.0	1	01/30/13 15:50	01/31/13 14:27	7440-39-3	
Beryllium, Dissolved	**0.72**	ug/L	0.50	1	01/30/13 15:50	01/31/13 14:27	7440-41-7	
Cadmium, Dissolved	**0.88**	ug/L	0.50	1	01/30/13 15:50	01/31/13 14:27	7440-43-9	
Chromium, Dissolved	**2.0**	ug/L	1.0	1	01/30/13 15:50	01/31/13 14:27	7440-47-3	B
Cobalt, Dissolved	**4.5**	ug/L	1.0	1	01/30/13 15:50	01/31/13 14:27	7440-48-4	
Copper, Dissolved	**6.5**	ug/L	1.0	1	01/30/13 15:50	01/31/13 14:27	7440-50-8	
Iron, Dissolved	**11100**	ug/L	50.0	1	01/30/13 15:50	01/31/13 14:27	7439-89-6	
Lead, Dissolved	**11.3**	ug/L	1.0	1	01/30/13 15:50	01/31/13 14:27	7439-92-1	
Manganese, Dissolved	**9570**	ug/L	100	100	01/30/13 15:50	01/31/13 15:38	7439-96-5	
Molybdenum, Dissolved	**6.2**	ug/L	1.0	1	01/30/13 15:50	01/31/13 14:27	7439-98-7	
Nickel, Dissolved	**1.2**	ug/L	1.0	1	01/30/13 15:50	01/31/13 14:27	7440-02-0	
Selenium, Dissolved	ND	ug/L	1.0	1	01/30/13 15:50	01/31/13 14:27	7782-49-2	
Silver, Dissolved	ND	ug/L	0.50	1	01/30/13 15:50	01/31/13 14:27	7440-22-4	
Thallium, Dissolved	**0.15J**	ug/L	1.0	1	01/30/13 15:50	01/31/13 14:27	7440-28-0	
Vanadium, Dissolved	**2.0**	ug/L	1.0	1	01/30/13 15:50	01/31/13 14:27	7440-62-2	
Zinc, Dissolved	**232**	ug/L	10.0	1	01/30/13 15:50	01/31/13 14:27	7440-66-6	
245.1 Mercury	Analytical Method: EPA 245.1 Preparation Method: EPA 245.1							
Mercury	ND	ug/L	0.20	1	02/07/13 12:29	02/08/13 18:09	7439-97-6	
245.1 Mercury, Dissolved	Analytical Method: EPA 245.1 Preparation Method: EPA 245.1							
Mercury, Dissolved	ND	ug/L	0.20	1	02/06/13 15:39	02/07/13 18:13	7439-97-6	
245.1 Potentially Diss Mercury	Analytical Method: EPA 245.1 Preparation Method: EPA 245.1							
Mercury, Dissolved	ND	ug/L	0.20	1	01/30/13 15:30	01/31/13 09:31	7439-97-6	
2510B Specific Conductance	Analytical Method: SM 2510B							
Specific Conductance	**1620**	umhos/cm	10.0	1		01/30/13 15:01		
Salinity	Analytical Method: Calculated							
Salinity (as dissolved solids)	**1040**	mg/L	6.0	1		01/31/13 15:31		

This report shall not be reproduced, except in full,
without the written consent of Pace Analytical Services, Inc..

Pace Analytical Services, Inc.
9608 Loiret Blvd.
Lenexa, KS 66219
(913)599-5665

ANALYTICAL RESULTS

Project: JANUARY 2013 RICO WATER SAMPLI
Pace Project No.: 60137618

Sample: MW-103_20130124 **Lab ID: 60137618004** Collected: 01/24/13 11:05 Received: 01/26/13 08:50 Matrix: Water

Parameters	Results	Units	Report Limit	DF	Prepared	Analyzed	CAS No.	Qual
Salinity	Analytical Method: Calculated							
Salinity (as seawater)	**0.81**	PSU	0.010	1		01/31/13 15:31		
2320B Alkalinity	Analytical Method: SM 2320B							
Alkalinity,Bicarbonate (CaCO3)	**351**	mg/L	20.0	1		01/30/13 12:41		
Alkalinity, Carbonate (CaCO3)	ND	mg/L	20.0	1		01/30/13 12:41		
Alkalinity, Total as CaCO3	**351**	mg/L	20.0	1		01/30/13 12:41		
2540C Total Dissolved Solids	Analytical Method: SM 2540C							
Total Dissolved Solids	**1250**	mg/L	5.0	1		01/29/13 10:30		
2540D Total Suspended Solids	Analytical Method: SM 2540D							
Total Suspended Solids	**258**	mg/L	5.0	1		01/29/13 10:46		
4500S2D Sulfide, Total	Analytical Method: SM 4500-S-2 D							
Sulfide, Total	ND	mg/L	0.050	1		01/29/13 14:33	18496-25-8	
300.0 IC Anions 28 Days	Analytical Method: EPA 300.0							
Chloride	**1.2**	mg/L	1.0	1		01/30/13 16:23	16887-00-6	
Sulfate	**645**	mg/L	50.0	50		01/30/13 16:40	14808-79-8	
353.2 Nitrogen, NO2/NO3 pres.	Analytical Method: EPA 353.2							
Nitrogen, NO2 plus NO3	ND	mg/L	0.10	1		01/31/13 16:41		
4500CNE Cyanide, Total	Analytical Method: SM 4500-CN-E							
Cyanide	**0.0067**	mg/L	0.0050	1		01/30/13 13:08	57-12-5	
5310C TOC	Analytical Method: SM 5310C							
Total Organic Carbon	**2.2**	mg/L	1.0	1		01/30/13 17:45	7440-44-0	

This report shall not be reproduced, except in full,
without the written consent of Pace Analytical Services, Inc..

Pace Analytical Services, Inc.
9608 Loiret Blvd.
Lenexa, KS 66219
(913)599-5665

ANALYTICAL RESULTS

Project: JANUARY 2013 RICO WATER SAMPLI
Pace Project No.: 60137618

Sample: MW-101_20130124 **Lab ID: 60137618005** Collected: 01/24/13 11:30 Received: 01/26/13 08:50 Matrix: Water

Parameters	Results	Units	Report Limit	DF	Prepared	Analyzed	CAS No.	Qual
200.7 Potentially Diss. Metals	Analytical Method: EPA 200.7 Preparation Method: EPA 200.7							
Calcium, Dissolved	**306000**	ug/L	100	1	01/30/13 15:50	01/31/13 16:31	7440-70-2	
Magnesium, Dissolved	**38200**	ug/L	50.0	1	01/30/13 15:50	01/31/13 16:31	7439-95-4	
Potassium, Dissolved	**6380**	ug/L	500	1	01/30/13 15:50	01/31/13 16:31	7440-09-7	
Sodium, Dissolved	**16800**	ug/L	500	1	01/30/13 15:50	01/31/13 16:31	7440-23-5	
200.8 MET ICPMS	Analytical Method: EPA 200.8 Preparation Method: EPA 200.8							
Aluminum	**8780**	ug/L	4.0	1	01/31/13 10:22	02/05/13 03:28	7429-90-5	
Antimony	ND	ug/L	0.50	1	01/31/13 10:22	02/05/13 03:28	7440-36-0	
Arsenic	**10.8**	ug/L	0.50	1	01/31/13 10:22	02/05/13 03:28	7440-38-2	
Barium	**105**	ug/L	0.30	1	01/31/13 10:22	02/05/13 03:28	7440-39-3	
Beryllium	**0.87**	ug/L	0.20	1	01/31/13 10:22	02/05/13 03:28	7440-41-7	
Cadmium	**4.0**	ug/L	0.080	1	01/31/13 10:22	02/05/13 03:28	7440-43-9	
Calcium	**315000**	ug/L	400	20	01/31/13 10:22	02/05/13 03:34	7440-70-2	
Chromium	**14.4**	ug/L	0.50	1	01/31/13 10:22	02/05/13 03:28	7440-47-3	
Cobalt	**16.6**	ug/L	0.50	1	01/31/13 10:22	02/05/13 03:28	7440-48-4	
Copper	**59.9**	ug/L	0.50	1	01/31/13 10:22	02/05/13 03:28	7440-50-8	
Iron	**48600**	ug/L	1000	20	01/31/13 10:22	02/05/13 03:34	7439-89-6	
Lead	**616**	ug/L	2.0	20	01/31/13 10:22	02/05/13 03:34	7439-92-1	
Magnesium	**44200**	ug/L	100	20	01/31/13 10:22	02/05/13 03:34	7439-95-4	
Manganese	**5750**	ug/L	10.0	20	01/31/13 10:22	02/05/13 03:34	7439-96-5	
Molybdenum	**7.0**	ug/L	0.50	1	01/31/13 10:22	02/05/13 03:28	7439-98-7	
Nickel	**18.1**	ug/L	0.50	1	01/31/13 10:22	02/05/13 03:28	7440-02-0	
Potassium	**7270**	ug/L	20.0	1	01/31/13 10:22	02/05/13 03:28	7440-09-7	
Selenium	**3.2**	ug/L	0.50	1	01/31/13 10:22	02/05/13 03:28	7782-49-2	
Silica	**41500**	ug/L	1070	20	01/31/13 10:22	02/06/13 02:04	7631-86-9	
Silver	**2.9**	ug/L	0.50	1	01/31/13 10:22	02/05/13 03:28	7440-22-4	
Sodium	**16400**	ug/L	50.0	1	01/31/13 10:22	02/05/13 03:28	7440-23-5	
Thallium	**0.38**	ug/L	0.10	1	01/31/13 10:22	02/05/13 03:28	7440-28-0	
Total Hardness by 2340B	**969000**	ug/L	1420	20	01/31/13 10:22	02/05/13 03:34		
Vanadium	**14.7**	ug/L	0.10	1	01/31/13 10:22	02/05/13 03:28	7440-62-2	
Zinc	**780**	ug/L	100	20	01/31/13 10:22	02/05/13 03:34	7440-66-6	
200.8 MET ICPMS, Dissolved	Analytical Method: EPA 200.8 Preparation Method: EPA 200.8							
Aluminum, Dissolved	**192**	ug/L	4.0	1	01/31/13 10:25	02/11/13 12:45	7429-90-5	
Antimony, Dissolved	ND	ug/L	0.50	1	01/31/13 10:25	02/11/13 12:45	7440-36-0	
Arsenic, Dissolved	ND	ug/L	0.50	1	01/31/13 10:25	02/11/13 12:45	7440-38-2	
Barium, Dissolved	**10.9**	ug/L	0.30	1	01/31/13 10:25	02/11/13 12:45	7440-39-3	
Beryllium, Dissolved	**0.25**	ug/L	0.20	1	01/31/13 10:25	02/11/13 12:45	7440-41-7	
Cadmium, Dissolved	**0.26**	ug/L	0.080	1	01/31/13 10:25	02/11/13 12:45	7440-43-9	
Calcium, Dissolved	**331000**	ug/L	400	20	01/31/13 10:25	02/08/13 21:38	7440-70-2	
Chromium, Dissolved	ND	ug/L	0.50	1	01/31/13 10:25	02/11/13 12:45	7440-47-3	
Cobalt, Dissolved	**12.3**	ug/L	0.50	1	01/31/13 10:25	02/11/13 12:45	7440-48-4	
Copper, Dissolved	**0.78**	ug/L	0.50	1	01/31/13 10:25	02/11/13 12:45	7440-50-8	
Iron, Dissolved	**27500**	ug/L	250	5	01/31/13 10:25	02/11/13 13:40	7439-89-6	
Lead, Dissolved	**0.95**	ug/L	0.10	1	01/31/13 10:25	02/11/13 12:45	7439-92-1	
Magnesium, Dissolved	**38500**	ug/L	25.0	5	01/31/13 10:25	02/11/13 13:40	7439-95-4	

This report shall not be reproduced, except in full,
without the written consent of Pace Analytical Services, Inc..

Pace Analytical Services, Inc.
9608 Loiret Blvd.
Lenexa, KS 66219
(913)599-5665

ANALYTICAL RESULTS

Project: JANUARY 2013 RICO WATER SAMPLI
Pace Project No.: 60137618

Sample: MW-101_20130124 **Lab ID: 60137618005** Collected: 01/24/13 11:30 Received: 01/26/13 08:50 Matrix: Water

Parameters	Results	Units	Report Limit	DF	Prepared	Analyzed	CAS No.	Qual
200.8 MET ICPMS, Dissolved	Analytical Method: EPA 200.8 Preparation Method: EPA 200.8							
Manganese, Dissolved	**5330**	ug/L	10.0	20	01/31/13 10:25	02/08/13 21:38	7439-96-5	
Molybdenum, Dissolved	**2.0**	ug/L	0.50	1	01/31/13 10:25	02/11/13 12:45	7439-98-7	
Nickel, Dissolved	**10.0**	ug/L	0.50	1	01/31/13 10:25	02/11/13 12:45	7440-02-0	
Potassium, Dissolved	**5570**	ug/L	20.0	1	01/31/13 10:25	02/11/13 12:45	7440-09-7	
Selenium, Dissolved	**1.5**	ug/L	0.50	1	01/31/13 10:25	02/11/13 12:45	7782-49-2	
Silver, Dissolved	ND	ug/L	0.50	1	01/31/13 10:25	02/11/13 12:45	7440-22-4	
Sodium, Dissolved	**17300**	ug/L	50.0	1	01/31/13 10:25	02/11/13 12:45	7440-23-5	
Thallium, Dissolved	ND	ug/L	0.10	1	01/31/13 10:25	02/11/13 12:45	7440-28-0	
Vanadium, Dissolved	ND	ug/L	0.10	1	01/31/13 10:25	02/11/13 12:45	7440-62-2	
Zinc, Dissolved	**301**	ug/L	5.0	1	01/31/13 10:25	02/11/13 12:45	7440-66-6	
200.8 Potentially Diss. Metals	Analytical Method: EPA 200.8 Preparation Method: EPA 200.8							
Aluminum, Dissolved	**3180**	ug/L	50.0	1	01/30/13 15:50	01/31/13 14:31	7429-90-5	
Antimony, Dissolved	**0.12J**	ug/L	1.0	1	01/30/13 15:50	01/31/13 14:31	7440-36-0	
Arsenic, Dissolved	**3.1**	ug/L	1.0	1	01/30/13 15:50	01/31/13 14:31	7440-38-2	
Barium, Dissolved	**27.3**	ug/L	1.0	1	01/30/13 15:50	01/31/13 14:31	7440-39-3	
Beryllium, Dissolved	**0.93**	ug/L	0.50	1	01/30/13 15:50	01/31/13 14:31	7440-41-7	
Cadmium, Dissolved	**6.1**	ug/L	0.50	1	01/30/13 15:50	01/31/13 14:31	7440-43-9	
Chromium, Dissolved	**7.5**	ug/L	1.0	1	01/30/13 15:50	01/31/13 14:31	7440-47-3	
Cobalt, Dissolved	**15.5**	ug/L	1.0	1	01/30/13 15:50	01/31/13 14:31	7440-48-4	
Copper, Dissolved	**48.6**	ug/L	1.0	1	01/30/13 15:50	01/31/13 14:31	7440-50-8	
Iron, Dissolved	**37800**	ug/L	50.0	1	01/30/13 15:50	01/31/13 14:31	7439-89-6	
Lead, Dissolved	**717**	ug/L	1.0	1	01/30/13 15:50	01/31/13 14:31	7439-92-1	
Manganese, Dissolved	**6290**	ug/L	100	100	01/30/13 15:50	01/31/13 15:42	7439-96-5	
Molybdenum, Dissolved	**0.93J**	ug/L	1.0	1	01/30/13 15:50	01/31/13 14:31	7439-98-7	
Nickel, Dissolved	**12.8**	ug/L	1.0	1	01/30/13 15:50	01/31/13 14:31	7440-02-0	
Selenium, Dissolved	**2.3**	ug/L	1.0	1	01/30/13 15:50	01/31/13 14:31	7782-49-2	
Silver, Dissolved	ND	ug/L	0.50	1	01/30/13 15:50	01/31/13 14:31	7440-22-4	
Thallium, Dissolved	**0.27J**	ug/L	1.0	1	01/30/13 15:50	01/31/13 14:31	7440-28-0	
Vanadium, Dissolved	**6.3**	ug/L	1.0	1	01/30/13 15:50	01/31/13 14:31	7440-62-2	
Zinc, Dissolved	**792**	ug/L	10.0	1	01/30/13 15:50	01/31/13 14:31	7440-66-6	
245.1 Mercury	Analytical Method: EPA 245.1 Preparation Method: EPA 245.1							
Mercury	ND	ug/L	0.20	1	02/07/13 12:29	02/08/13 18:12	7439-97-6	
245.1 Mercury, Dissolved	Analytical Method: EPA 245.1 Preparation Method: EPA 245.1							
Mercury, Dissolved	ND	ug/L	0.20	1	02/06/13 15:39	02/07/13 18:21	7439-97-6	
245.1 Potentially Diss Mercury	Analytical Method: EPA 245.1 Preparation Method: EPA 245.1							
Mercury, Dissolved	ND	ug/L	0.20	1	01/30/13 15:30	01/31/13 09:33	7439-97-6	
2510B Specific Conductance	Analytical Method: SM 2510B							
Specific Conductance	**1720**	umhos/cm	10.0	1		01/30/13 15:03		
Salinity	Analytical Method: Calculated							
Salinity (as dissolved solids)	**1100**	mg/L	6.0	1		01/31/13 15:31		

This report shall not be reproduced, except in full,
without the written consent of Pace Analytical Services, Inc..

Pace Analytical Services, Inc.
9608 Loiret Blvd.
Lenexa, KS 66219
(913)599-5665

ANALYTICAL RESULTS

Project: JANUARY 2013 RICO WATER SAMPLI
Pace Project No.: 60137618

Sample: MW-101_20130124 **Lab ID: 60137618005** Collected: 01/24/13 11:30 Received: 01/26/13 08:50 Matrix: Water

Parameters	Results	Units	Report Limit	DF	Prepared	Analyzed	CAS No.	Qual
Salinity	Analytical Method: Calculated							
Salinity (as seawater)	**0.87**	PSU	0.010	1		01/31/13 15:31		
2320B Alkalinity	Analytical Method: SM 2320B							
Alkalinity,Bicarbonate (CaCO3)	**303**	mg/L	20.0	1		01/30/13 12:51		
Alkalinity, Carbonate (CaCO3)	ND	mg/L	20.0	1		01/30/13 12:51		
Alkalinity, Total as CaCO3	**303**	mg/L	20.0	1		01/30/13 12:51		
2540C Total Dissolved Solids	Analytical Method: SM 2540C							
Total Dissolved Solids	**1340**	mg/L	5.0	1		01/29/13 10:30		
2540D Total Suspended Solids	Analytical Method: SM 2540D							
Total Suspended Solids	**1200**	mg/L	5.0	1		01/29/13 10:47		
4500S2D Sulfide, Total	Analytical Method: SM 4500-S-2 D							
Sulfide, Total	ND	mg/L	0.050	1		01/29/13 14:34	18496-25-8	
300.0 IC Anions 28 Days	Analytical Method: EPA 300.0							
Chloride	**1.5**	mg/L	1.0	1		01/30/13 17:33	16887-00-6	
Sulfate	**800**	mg/L	100	100		01/30/13 17:51	14808-79-8	
353.2 Nitrogen, NO2/NO3 pres.	Analytical Method: EPA 353.2							
Nitrogen, NO2 plus NO3	**0.27**	mg/L	0.10	1		01/31/13 16:42		
4500CNE Cyanide, Total	Analytical Method: SM 4500-CN-E							
Cyanide	ND	mg/L	0.0050	1		01/30/13 13:08	57-12-5	
5310C TOC	Analytical Method: SM 5310C							
Total Organic Carbon	**2.0**	mg/L	1.0	1		01/30/13 17:59	7440-44-0	

This report shall not be reproduced, except in full,
without the written consent of Pace Analytical Services, Inc..

Pace Analytical Services, Inc.
9608 Loiret Blvd.
Lenexa, KS 66219
(913)599-5665

ANALYTICAL RESULTS

Project: JANUARY 2013 RICO WATER SAMPLI
Pace Project No.: 60137618

Sample: DR-7_20130124 **Lab ID: 60137618006** Collected: 01/24/13 11:48 Received: 01/26/13 08:50 Matrix: Water

Parameters	Results	Units	Report Limit	DF	Prepared	Analyzed	CAS No.	Qual
200.7 Potentially Diss. Metals	Analytical Method: EPA 200.7 Preparation Method: EPA 200.7							
Calcium, Dissolved	**114000**	ug/L	100	1	01/30/13 15:50	01/31/13 16:36	7440-70-2	
Magnesium, Dissolved	**14100**	ug/L	50.0	1	01/30/13 15:50	01/31/13 16:36	7439-95-4	
Potassium, Dissolved	**3790**	ug/L	500	1	01/30/13 15:50	01/31/13 16:36	7440-09-7	
Sodium, Dissolved	**8330**	ug/L	500	1	01/30/13 15:50	01/31/13 16:36	7440-23-5	
200.8 MET ICPMS	Analytical Method: EPA 200.8 Preparation Method: EPA 200.8							
Aluminum	**15.2**	ug/L	4.0	1	01/31/13 10:22	02/05/13 03:39	7429-90-5	
Antimony	ND	ug/L	0.50	1	01/31/13 10:22	02/05/13 03:39	7440-36-0	
Arsenic	**0.98**	ug/L	0.50	1	01/31/13 10:22	02/05/13 03:39	7440-38-2	
Barium	**60.0**	ug/L	0.30	1	01/31/13 10:22	02/05/13 03:39	7440-39-3	
Beryllium	ND	ug/L	0.20	1	01/31/13 10:22	02/05/13 03:39	7440-41-7	
Cadmium	**0.57**	ug/L	0.080	1	01/31/13 10:22	02/05/13 03:39	7440-43-9	
Calcium	**111000**	ug/L	400	20	01/31/13 10:22	02/05/13 03:43	7440-70-2	
Chromium	ND	ug/L	0.50	1	01/31/13 10:22	02/05/13 03:39	7440-47-3	
Cobalt	ND	ug/L	0.50	1	01/31/13 10:22	02/05/13 03:39	7440-48-4	
Copper	**1.9**	ug/L	0.50	1	01/31/13 10:22	02/05/13 03:39	7440-50-8	
Iron	**337**	ug/L	50.0	1	01/31/13 10:22	02/05/13 03:39	7439-89-6	
Lead	**0.23**	ug/L	0.10	1	01/31/13 10:22	02/05/13 03:39	7439-92-1	
Magnesium	**14200**	ug/L	5.0	1	01/31/13 10:22	02/05/13 03:39	7439-95-4	
Manganese	**438**	ug/L	0.50	1	01/31/13 10:22	02/05/13 03:39	7439-96-5	
Molybdenum	**2.8**	ug/L	0.50	1	01/31/13 10:22	02/05/13 03:39	7439-98-7	
Nickel	**0.51**	ug/L	0.50	1	01/31/13 10:22	02/05/13 03:39	7440-02-0	
Potassium	**3360**	ug/L	20.0	1	01/31/13 10:22	02/05/13 03:39	7440-09-7	
Selenium	**0.50**	ug/L	0.50	1	01/31/13 10:22	02/05/13 03:39	7782-49-2	
Silica	**12000**	ug/L	535	10	01/31/13 10:22	02/06/13 02:09	7631-86-9	
Silver	ND	ug/L	0.50	1	01/31/13 10:22	02/05/13 03:39	7440-22-4	
Sodium	**8000**	ug/L	50.0	1	01/31/13 10:22	02/05/13 03:39	7440-23-5	
Thallium	ND	ug/L	0.10	1	01/31/13 10:22	02/05/13 03:39	7440-28-0	
Total Hardness by 2340B	**335000**	ug/L	1420	20	01/31/13 10:22	02/05/13 03:43		
Vanadium	ND	ug/L	0.10	1	01/31/13 10:22	02/05/13 03:39	7440-62-2	
Zinc	**192**	ug/L	5.0	1	01/31/13 10:22	02/05/13 03:39	7440-66-6	
200.8 MET ICPMS, Dissolved	Analytical Method: EPA 200.8 Preparation Method: EPA 200.8							
Aluminum, Dissolved	**4.9**	ug/L	4.0	1	01/31/13 10:25	02/08/13 21:42	7429-90-5	
Antimony, Dissolved	ND	ug/L	0.50	1	01/31/13 10:25	02/06/13 06:45	7440-36-0	
Arsenic, Dissolved	**1.0**	ug/L	0.50	1	01/31/13 10:25	02/06/13 06:45	7440-38-2	
Barium, Dissolved	**60.4**	ug/L	0.30	1	01/31/13 10:25	02/06/13 06:45	7440-39-3	
Beryllium, Dissolved	ND	ug/L	0.20	1	01/31/13 10:25	02/06/13 06:45	7440-41-7	
Cadmium, Dissolved	**0.12**	ug/L	0.080	1	01/31/13 10:25	02/06/13 06:45	7440-43-9	
Calcium, Dissolved	**105000**	ug/L	100	5	01/31/13 10:25	02/11/13 13:45	7440-70-2	
Chromium, Dissolved	ND	ug/L	0.50	1	01/31/13 10:25	02/06/13 06:45	7440-47-3	
Cobalt, Dissolved	**1.1**	ug/L	0.50	1	01/31/13 10:25	02/06/13 06:45	7440-48-4	
Copper, Dissolved	**1.3**	ug/L	0.50	1	01/31/13 10:25	02/06/13 06:45	7440-50-8	
Iron, Dissolved	**212**	ug/L	50.0	1	01/31/13 10:25	02/06/13 06:45	7439-89-6	
Lead, Dissolved	**0.12**	ug/L	0.10	1	01/31/13 10:25	02/06/13 06:45	7439-92-1	
Magnesium, Dissolved	**14300**	ug/L	25.0	5	01/31/13 10:25	02/11/13 13:45	7439-95-4	

This report shall not be reproduced, except in full,
without the written consent of Pace Analytical Services, Inc..

Pace Analytical Services, Inc.
9608 Loiret Blvd.
Lenexa, KS 66219
(913)599-5665

ANALYTICAL RESULTS

Project: JANUARY 2013 RICO WATER SAMPLI
Pace Project No.: 60137618

Sample: DR-7_20130124 **Lab ID: 60137618006** Collected: 01/24/13 11:48 Received: 01/26/13 08:50 Matrix: Water

Parameters	Results	Units	Report Limit	DF	Prepared	Analyzed	CAS No.	Qual
200.8 MET ICPMS, Dissolved	Analytical Method: EPA 200.8 Preparation Method: EPA 200.8							
Manganese, Dissolved	**448**	ug/L	0.50	1	01/31/13 10:25	02/06/13 06:45	7439-96-5	
Molybdenum, Dissolved	**2.8**	ug/L	0.50	1	01/31/13 10:25	02/06/13 06:45	7439-98-7	
Nickel, Dissolved	**3.0**	ug/L	0.50	1	01/31/13 10:25	02/06/13 06:45	7440-02-0	
Potassium, Dissolved	**3530**	ug/L	20.0	1	01/31/13 10:25	02/06/13 06:45	7440-09-7	
Selenium, Dissolved	**0.50**	ug/L	0.50	1	01/31/13 10:25	02/06/13 06:45	7782-49-2	
Silver, Dissolved	ND	ug/L	0.50	1	01/31/13 10:25	02/06/13 06:45	7440-22-4	
Sodium, Dissolved	**8100**	ug/L	50.0	1	01/31/13 10:25	02/06/13 06:45	7440-23-5	
Thallium, Dissolved	ND	ug/L	0.10	1	01/31/13 10:25	02/06/13 06:45	7440-28-0	
Vanadium, Dissolved	ND	ug/L	0.10	1	01/31/13 10:25	02/06/13 06:45	7440-62-2	
Zinc, Dissolved	**195**	ug/L	5.0	1	01/31/13 10:25	02/06/13 06:45	7440-66-6	
200.8 Potentially Diss. Metals	Analytical Method: EPA 200.8 Preparation Method: EPA 200.8							
Aluminum, Dissolved	**12.2J**	ug/L	50.0	1	01/30/13 15:50	01/31/13 14:44	7429-90-5	
Antimony, Dissolved	**0.057J**	ug/L	1.0	1	01/30/13 15:50	01/31/13 14:44	7440-36-0	
Arsenic, Dissolved	**1.1**	ug/L	1.0	1	01/30/13 15:50	01/31/13 14:44	7440-38-2	
Barium, Dissolved	**61.3**	ug/L	1.0	1	01/30/13 15:50	01/31/13 14:44	7440-39-3	
Beryllium, Dissolved	**0.10J**	ug/L	0.50	1	01/30/13 15:50	01/31/13 14:44	7440-41-7	
Cadmium, Dissolved	**0.64**	ug/L	0.50	1	01/30/13 15:50	01/31/13 14:44	7440-43-9	
Chromium, Dissolved	**0.46J**	ug/L	1.0	1	01/30/13 15:50	02/04/13 15:48	7440-47-3	B
Cobalt, Dissolved	**0.40J**	ug/L	1.0	1	01/30/13 15:50	01/31/13 14:44	7440-48-4	
Copper, Dissolved	**1.8**	ug/L	1.0	1	01/30/13 15:50	01/31/13 14:44	7440-50-8	
Iron, Dissolved	**345**	ug/L	50.0	1	01/30/13 15:50	01/31/13 14:44	7439-89-6	
Lead, Dissolved	**0.61J**	ug/L	1.0	1	01/30/13 15:50	01/31/13 14:44	7439-92-1	
Manganese, Dissolved	**458**	ug/L	1.0	1	01/30/13 15:50	01/31/13 14:44	7439-96-5	
Molybdenum, Dissolved	**3.1**	ug/L	1.0	1	01/30/13 15:50	01/31/13 14:44	7439-98-7	
Nickel, Dissolved	ND	ug/L	1.0	1	01/30/13 15:50	01/31/13 14:44	7440-02-0	
Selenium, Dissolved	**0.55J**	ug/L	1.0	1	01/30/13 15:50	01/31/13 14:44	7782-49-2	
Silver, Dissolved	ND	ug/L	0.50	1	01/30/13 15:50	01/31/13 14:44	7440-22-4	
Thallium, Dissolved	**0.049J**	ug/L	1.0	1	01/30/13 15:50	01/31/13 14:44	7440-28-0	
Vanadium, Dissolved	ND	ug/L	1.0	1	01/30/13 15:50	01/31/13 14:44	7440-62-2	
Zinc, Dissolved	**187**	ug/L	10.0	1	01/30/13 15:50	01/31/13 14:44	7440-66-6	
245.1 Mercury	Analytical Method: EPA 245.1 Preparation Method: EPA 245.1							
Mercury	ND	ug/L	0.20	1	02/07/13 12:29	02/08/13 18:14	7439-97-6	
245.1 Mercury, Dissolved	Analytical Method: EPA 245.1 Preparation Method: EPA 245.1							
Mercury, Dissolved	ND	ug/L	0.20	1	02/06/13 15:39	02/07/13 18:23	7439-97-6	
245.1 Potentially Diss Mercury	Analytical Method: EPA 245.1 Preparation Method: EPA 245.1							
Mercury, Dissolved	ND	ug/L	0.20	1	01/30/13 15:30	01/31/13 09:36	7439-97-6	
2510B Specific Conductance	Analytical Method: SM 2510B							
Specific Conductance	**710**	umhos/cm	10.0	1		01/30/13 15:05		
Salinity	Analytical Method: Calculated							
Salinity (as dissolved solids)	**455**	mg/L	6.0	1		01/31/13 15:31		

This report shall not be reproduced, except in full,
without the written consent of Pace Analytical Services, Inc..

Pace Analytical Services, Inc.
9608 Loiret Blvd.
Lenexa, KS 66219
(913)599-5665

ANALYTICAL RESULTS

Project: JANUARY 2013 RICO WATER SAMPLI
Pace Project No.: 60137618

Sample: DR-7_20130124 **Lab ID: 60137618006** Collected: 01/24/13 11:48 Received: 01/26/13 08:50 Matrix: Water

Parameters	Results	Units	Report Limit	DF	Prepared	Analyzed	CAS No.	Qual
Salinity	Analytical Method: Calculated							
Salinity (as seawater)	**0.35**	PSU	0.010	1		01/31/13 15:31		
2320B Alkalinity	Analytical Method: SM 2320B							
Alkalinity,Bicarbonate (CaCO3)	**171**	mg/L	20.0	1		01/30/13 12:55		
Alkalinity, Carbonate (CaCO3)	ND	mg/L	20.0	1		01/30/13 12:55		
Alkalinity, Total as CaCO3	**171**	mg/L	20.0	1		01/30/13 12:55		
2540C Total Dissolved Solids	Analytical Method: SM 2540C							
Total Dissolved Solids	**482**	mg/L	5.0	1		01/30/13 09:29		
2540D Total Suspended Solids	Analytical Method: SM 2540D							
Total Suspended Solids	ND	mg/L	5.0	1		01/29/13 10:47		
4500S2D Sulfide, Total	Analytical Method: SM 4500-S-2 D							
Sulfide, Total	ND	mg/L	0.050	1		01/29/13 14:34	18496-25-8	
300.0 IC Anions 28 Days	Analytical Method: EPA 300.0							
Chloride	**1.6**	mg/L	1.0	1		01/30/13 18:09	16887-00-6	
Sulfate	**205**	mg/L	20.0	20		01/30/13 18:27	14808-79-8	
353.2 Nitrogen, NO2/NO3 pres.	Analytical Method: EPA 353.2							
Nitrogen, NO2 plus NO3	ND	mg/L	0.10	1		01/31/13 16:43		
4500CNE Cyanide, Total	Analytical Method: SM 4500-CN-E							
Cyanide	ND	mg/L	0.0050	1		01/30/13 13:09	57-12-5	
5310C TOC	Analytical Method: SM 5310C							
Total Organic Carbon	ND	mg/L	1.0	1		01/30/13 18:13	7440-44-0	

This report shall not be reproduced, except in full,
without the written consent of Pace Analytical Services, Inc..

Pace Analytical Services, Inc.
9608 Loiret Blvd.
Lenexa, KS 66219
(913)599-5665

ANALYTICAL RESULTS

Project: JANUARY 2013 RICO WATER SAMPLI
Pace Project No.: 60137618

Sample: DR-5_20130124 **Lab ID: 60137618007** Collected: 01/24/13 11:55 Received: 01/26/13 08:50 Matrix: Water

Parameters	Results	Units	Report Limit	DF	Prepared	Analyzed	CAS No.	Qual
200.7 Potentially Diss. Metals	Analytical Method: EPA 200.7 Preparation Method: EPA 200.7							
Calcium, Dissolved	**247000**	ug/L	100	1	01/30/13 15:50	01/31/13 16:38	7440-70-2	
Magnesium, Dissolved	**19800**	ug/L	50.0	1	01/30/13 15:50	01/31/13 16:38	7439-95-4	
Potassium, Dissolved	**12900**	ug/L	500	1	01/30/13 15:50	01/31/13 16:38	7440-09-7	
Sodium, Dissolved	**12000**	ug/L	500	1	01/30/13 15:50	01/31/13 16:38	7440-23-5	
200.8 MET ICPMS	Analytical Method: EPA 200.8 Preparation Method: EPA 200.8							
Aluminum	**135**	ug/L	4.0	1	01/31/13 10:22	02/05/13 03:47	7429-90-5	
Antimony	ND	ug/L	0.50	1	01/31/13 10:22	02/05/13 03:47	7440-36-0	
Arsenic	ND	ug/L	0.50	1	01/31/13 10:22	02/05/13 03:47	7440-38-2	
Barium	**19.6**	ug/L	0.30	1	01/31/13 10:22	02/05/13 03:47	7440-39-3	
Beryllium	ND	ug/L	0.20	1	01/31/13 10:22	02/05/13 03:47	7440-41-7	
Cadmium	**8.7**	ug/L	0.080	1	01/31/13 10:22	02/05/13 03:47	7440-43-9	
Calcium	**242000**	ug/L	400	20	01/31/13 10:22	02/05/13 03:52	7440-70-2	
Chromium	ND	ug/L	0.50	1	01/31/13 10:22	02/05/13 03:47	7440-47-3	
Cobalt	**2.2**	ug/L	0.50	1	01/31/13 10:22	02/05/13 03:47	7440-48-4	
Copper	**29.1**	ug/L	0.50	1	01/31/13 10:22	02/05/13 03:47	7440-50-8	
Iron	**1860**	ug/L	50.0	1	01/31/13 10:22	02/05/13 03:47	7439-89-6	
Lead	**2.8**	ug/L	0.10	1	01/31/13 10:22	02/05/13 03:47	7439-92-1	
Magnesium	**19500**	ug/L	5.0	1	01/31/13 10:22	02/05/13 03:47	7439-95-4	
Manganese	**1560**	ug/L	10.0	20	01/31/13 10:22	02/05/13 03:52	7439-96-5	
Molybdenum	**15.9**	ug/L	0.50	1	01/31/13 10:22	02/05/13 03:47	7439-98-7	
Nickel	**3.2**	ug/L	0.50	1	01/31/13 10:22	02/05/13 03:47	7440-02-0	
Potassium	**11600**	ug/L	20.0	1	01/31/13 10:22	02/05/13 03:47	7440-09-7	
Selenium	ND	ug/L	0.50	1	01/31/13 10:22	02/05/13 03:47	7782-49-2	
Silica	**15000**	ug/L	535	10	01/31/13 10:22	02/06/13 02:13	7631-86-9	
Silver	ND	ug/L	0.50	1	01/31/13 10:22	02/05/13 03:47	7440-22-4	
Sodium	**11200**	ug/L	50.0	1	01/31/13 10:22	02/05/13 03:47	7440-23-5	
Thallium	ND	ug/L	0.10	1	01/31/13 10:22	02/05/13 03:47	7440-28-0	
Total Hardness by 2340B	**684000**	ug/L	1420	20	01/31/13 10:22	02/05/13 03:52		
Vanadium	ND	ug/L	0.10	1	01/31/13 10:22	02/05/13 03:47	7440-62-2	
Zinc	**1820**	ug/L	100	20	01/31/13 10:22	02/05/13 03:52	7440-66-6	
200.8 MET ICPMS, Dissolved	Analytical Method: EPA 200.8 Preparation Method: EPA 200.8							
Aluminum, Dissolved	**6.1**	ug/L	4.0	1	01/31/13 10:25	02/08/13 21:52	7429-90-5	
Antimony, Dissolved	ND	ug/L	0.50	1	01/31/13 10:25	02/06/13 06:54	7440-36-0	
Arsenic, Dissolved	ND	ug/L	0.50	1	01/31/13 10:25	02/06/13 06:54	7440-38-2	
Barium, Dissolved	**19.6**	ug/L	0.30	1	01/31/13 10:25	02/06/13 06:54	7440-39-3	
Beryllium, Dissolved	ND	ug/L	0.20	1	01/31/13 10:25	02/06/13 06:54	7440-41-7	
Cadmium, Dissolved	ND	ug/L	0.080	1	01/31/13 10:25	02/06/13 06:54	7440-43-9	
Calcium, Dissolved	**264000**	ug/L	400	20	01/31/13 10:25	02/08/13 21:56	7440-70-2	
Chromium, Dissolved	ND	ug/L	0.50	1	01/31/13 10:25	02/06/13 06:54	7440-47-3	
Cobalt, Dissolved	**2.5**	ug/L	0.50	1	01/31/13 10:25	02/06/13 06:54	7440-48-4	
Copper, Dissolved	**0.71**	ug/L	0.50	1	01/31/13 10:25	02/08/13 21:52	7440-50-8	
Iron, Dissolved	**307**	ug/L	50.0	1	01/31/13 10:25	02/06/13 06:54	7439-89-6	
Lead, Dissolved	ND	ug/L	0.10	1	01/31/13 10:25	02/06/13 06:54	7439-92-1	
Magnesium, Dissolved	**20000**	ug/L	25.0	5	01/31/13 10:25	02/11/13 13:49	7439-95-4	

This report shall not be reproduced, except in full,
without the written consent of Pace Analytical Services, Inc..

Pace Analytical Services, Inc.
9608 Loiret Blvd.
Lenexa, KS 66219
(913)599-5665

ANALYTICAL RESULTS

Project: JANUARY 2013 RICO WATER SAMPLI
Pace Project No.: 60137618

Sample: DR-5_20130124 **Lab ID: 60137618007** Collected: 01/24/13 11:55 Received: 01/26/13 08:50 Matrix: Water

Parameters	Results	Units	Report Limit	DF	Prepared	Analyzed	CAS No.	Qual
200.8 MET ICPMS, Dissolved	Analytical Method: EPA 200.8 Preparation Method: EPA 200.8							
Manganese, Dissolved	**1580**	ug/L	2.5	5	01/31/13 10:25	02/11/13 13:49	7439-96-5	
Molybdenum, Dissolved	**15.7**	ug/L	0.50	1	01/31/13 10:25	02/06/13 06:54	7439-98-7	
Nickel, Dissolved	**3.9**	ug/L	0.50	1	01/31/13 10:25	02/06/13 06:54	7440-02-0	
Potassium, Dissolved	**11800**	ug/L	20.0	1	01/31/13 10:25	02/06/13 06:54	7440-09-7	
Selenium, Dissolved	ND	ug/L	0.50	1	01/31/13 10:25	02/06/13 06:54	7782-49-2	
Silver, Dissolved	ND	ug/L	0.50	1	01/31/13 10:25	02/06/13 06:54	7440-22-4	
Sodium, Dissolved	**11300**	ug/L	50.0	1	01/31/13 10:25	02/06/13 06:54	7440-23-5	
Thallium, Dissolved	ND	ug/L	0.10	1	01/31/13 10:25	02/06/13 06:54	7440-28-0	
Vanadium, Dissolved	ND	ug/L	0.10	1	01/31/13 10:25	02/06/13 06:54	7440-62-2	
Zinc, Dissolved	**1360**	ug/L	25.0	5	01/31/13 10:25	02/11/13 13:49	7440-66-6	
200.8 Potentially Diss. Metals	Analytical Method: EPA 200.8 Preparation Method: EPA 200.8							
Aluminum, Dissolved	**134**	ug/L	50.0	1	01/30/13 15:50	01/31/13 14:48	7429-90-5	
Antimony, Dissolved	**0.20J**	ug/L	1.0	1	01/30/13 15:50	01/31/13 14:48	7440-36-0	
Arsenic, Dissolved	**0.39J**	ug/L	1.0	1	01/30/13 15:50	01/31/13 14:48	7440-38-2	
Barium, Dissolved	**19.2**	ug/L	1.0	1	01/30/13 15:50	01/31/13 14:48	7440-39-3	
Beryllium, Dissolved	**0.18J**	ug/L	0.50	1	01/30/13 15:50	01/31/13 14:48	7440-41-7	
Cadmium, Dissolved	**8.4**	ug/L	0.50	1	01/30/13 15:50	01/31/13 14:48	7440-43-9	
Chromium, Dissolved	**0.94J**	ug/L	1.0	1	01/30/13 15:50	01/31/13 14:48	7440-47-3	B
Cobalt, Dissolved	**2.1**	ug/L	1.0	1	01/30/13 15:50	01/31/13 14:48	7440-48-4	
Copper, Dissolved	**27.4**	ug/L	1.0	1	01/30/13 15:50	01/31/13 14:48	7440-50-8	
Iron, Dissolved	**1880**	ug/L	50.0	1	01/30/13 15:50	01/31/13 14:48	7439-89-6	
Lead, Dissolved	**3.8**	ug/L	1.0	1	01/30/13 15:50	01/31/13 14:48	7439-92-1	
Manganese, Dissolved	**1600**	ug/L	1.0	1	01/30/13 15:50	01/31/13 14:48	7439-96-5	
Molybdenum, Dissolved	**17.2**	ug/L	1.0	1	01/30/13 15:50	01/31/13 14:48	7439-98-7	
Nickel, Dissolved	**2.2**	ug/L	1.0	1	01/30/13 15:50	01/31/13 14:48	7440-02-0	
Selenium, Dissolved	ND	ug/L	1.0	1	01/30/13 15:50	01/31/13 14:48	7782-49-2	
Silver, Dissolved	ND	ug/L	0.50	1	01/30/13 15:50	01/31/13 14:48	7440-22-4	
Thallium, Dissolved	**0.065J**	ug/L	1.0	1	01/30/13 15:50	01/31/13 14:48	7440-28-0	
Vanadium, Dissolved	ND	ug/L	1.0	1	01/30/13 15:50	01/31/13 14:48	7440-62-2	
Zinc, Dissolved	**1600**	ug/L	10.0	1	01/30/13 15:50	01/31/13 14:48	7440-66-6	
245.1 Mercury	Analytical Method: EPA 245.1 Preparation Method: EPA 245.1							
Mercury	ND	ug/L	0.20	1	02/07/13 12:29	02/08/13 18:17	7439-97-6	
245.1 Mercury, Dissolved	Analytical Method: EPA 245.1 Preparation Method: EPA 245.1							
Mercury, Dissolved	ND	ug/L	0.20	1	02/06/13 15:39	02/07/13 18:26	7439-97-6	
245.1 Potentially Diss Mercury	Analytical Method: EPA 245.1 Preparation Method: EPA 245.1							
Mercury, Dissolved	ND	ug/L	0.20	1	01/30/13 15:30	01/31/13 09:42	7439-97-6	
2510B Specific Conductance	Analytical Method: SM 2510B							
Specific Conductance	**1350**	umhos/cm	10.0	1		01/30/13 15:08		
Salinity	Analytical Method: Calculated							
Salinity (as dissolved solids)	**865**	mg/L	6.0	1		01/31/13 15:31		

This report shall not be reproduced, except in full,
without the written consent of Pace Analytical Services, Inc..

Pace Analytical Services, Inc.
9608 Loiret Blvd.
Lenexa, KS 66219
(913)599-5665

ANALYTICAL RESULTS

Project: JANUARY 2013 RICO WATER SAMPLI
Pace Project No.: 60137618

Sample: DR-5_20130124 **Lab ID: 60137618007** Collected: 01/24/13 11:55 Received: 01/26/13 08:50 Matrix: Water

Parameters	Results	Units	Report Limit	DF	Prepared	Analyzed	CAS No.	Qual
Salinity	Analytical Method: Calculated							
Salinity (as seawater)	**0.67**	PSU	0.010	1		01/31/13 15:31		
2320B Alkalinity	Analytical Method: SM 2320B							
Alkalinity,Bicarbonate (CaCO3)	**119**	mg/L	20.0	1		01/30/13 13:00		
Alkalinity, Carbonate (CaCO3)	ND	mg/L	20.0	1		01/30/13 13:00		
Alkalinity, Total as CaCO3	**119**	mg/L	20.0	1		01/30/13 13:00		
2540C Total Dissolved Solids	Analytical Method: SM 2540C							
Total Dissolved Solids	**1090**	mg/L	5.0	1		01/30/13 09:29		
2540D Total Suspended Solids	Analytical Method: SM 2540D							
Total Suspended Solids	ND	mg/L	5.0	1		01/29/13 10:47		
4500S2D Sulfide, Total	Analytical Method: SM 4500-S-2 D							
Sulfide, Total	**0.15**	mg/L	0.050	1		01/29/13 14:35	18496-25-8	
300.0 IC Anions 28 Days	Analytical Method: EPA 300.0							
Chloride	ND	mg/L	1.0	1		01/30/13 18:44	16887-00-6	
Sulfate	**677**	mg/L	50.0	50		01/30/13 19:02	14808-79-8	
353.2 Nitrogen, NO2/NO3 pres.	Analytical Method: EPA 353.2							
Nitrogen, NO2 plus NO3	ND	mg/L	0.10	1		01/31/13 16:43		
4500CNE Cyanide, Total	Analytical Method: SM 4500-CN-E							
Cyanide	ND	mg/L	0.0050	1		01/30/13 13:09	57-12-5	
5310C TOC	Analytical Method: SM 5310C							
Total Organic Carbon	ND	mg/L	1.0	1		01/30/13 18:27	7440-44-0	

This report shall not be reproduced, except in full,
without the written consent of Pace Analytical Services, Inc..

Pace Analytical Services, Inc.
9608 Loiret Blvd.
Lenexa, KS 66219
(913)599-5665

ANALYTICAL RESULTS

Project: JANUARY 2013 RICO WATER SAMPLI
Pace Project No.: 60137618

Sample: DR-2_20130124 **Lab ID: 60137618008** Collected: 01/24/13 12:07 Received: 01/26/13 08:50 Matrix: Water

Parameters	Results	Units	Report Limit	DF	Prepared	Analyzed	CAS No.	Qual
200.7 Potentially Diss. Metals	Analytical Method: EPA 200.7 Preparation Method: EPA 200.7							
Calcium, Dissolved	**70700**	ug/L	100	1	01/30/13 15:50	01/31/13 16:40	7440-70-2	
Magnesium, Dissolved	**8840**	ug/L	50.0	1	01/30/13 15:50	01/31/13 16:40	7439-95-4	
Potassium, Dissolved	**1230**	ug/L	500	1	01/30/13 15:50	01/31/13 16:40	7440-09-7	
Sodium, Dissolved	**4070**	ug/L	500	1	01/30/13 15:50	01/31/13 16:40	7440-23-5	
200.8 MET ICPMS	Analytical Method: EPA 200.8 Preparation Method: EPA 200.8							
Aluminum	**9.3**	ug/L	4.0	1	01/31/13 10:22	02/05/13 04:11	7429-90-5	
Antimony	ND	ug/L	0.50	1	01/31/13 10:22	02/05/13 04:11	7440-36-0	
Arsenic	ND	ug/L	0.50	1	01/31/13 10:22	02/05/13 04:11	7440-38-2	
Barium	**70.0**	ug/L	0.30	1	01/31/13 10:22	02/05/13 04:11	7440-39-3	
Beryllium	ND	ug/L	0.20	1	01/31/13 10:22	02/05/13 04:11	7440-41-7	
Cadmium	ND	ug/L	0.080	1	01/31/13 10:22	02/05/13 04:11	7440-43-9	
Calcium	**71800**	ug/L	400	20	01/31/13 10:22	02/05/13 04:15	7440-70-2	
Chromium	ND	ug/L	0.50	1	01/31/13 10:22	02/05/13 04:11	7440-47-3	
Cobalt	ND	ug/L	0.50	1	01/31/13 10:22	02/05/13 04:11	7440-48-4	
Copper	ND	ug/L	0.50	1	01/31/13 10:22	02/05/13 04:11	7440-50-8	
Iron	**61.5**	ug/L	50.0	1	01/31/13 10:22	02/05/13 04:11	7439-89-6	
Lead	ND	ug/L	0.10	1	01/31/13 10:22	02/05/13 04:11	7439-92-1	
Magnesium	**9450**	ug/L	5.0	1	01/31/13 10:22	02/05/13 04:11	7439-95-4	
Manganese	**289**	ug/L	0.50	1	01/31/13 10:22	02/05/13 04:11	7439-96-5	
Molybdenum	**1.3**	ug/L	0.50	1	01/31/13 10:22	02/05/13 04:11	7439-98-7	
Nickel	ND	ug/L	0.50	1	01/31/13 10:22	02/05/13 04:11	7440-02-0	
Potassium	**1100**	ug/L	20.0	1	01/31/13 10:22	02/05/13 04:11	7440-09-7	
Selenium	**0.56**	ug/L	0.50	1	01/31/13 10:22	02/05/13 04:11	7782-49-2	
Silica	**6680**	ug/L	535	10	01/31/13 10:22	02/06/13 02:17	7631-86-9	
Silver	ND	ug/L	0.50	1	01/31/13 10:22	02/05/13 04:11	7440-22-4	
Sodium	**4080**	ug/L	50.0	1	01/31/13 10:22	02/05/13 04:11	7440-23-5	
Thallium	ND	ug/L	0.10	1	01/31/13 10:22	02/05/13 04:11	7440-28-0	
Total Hardness by 2340B	**218000**	ug/L	1420	20	01/31/13 10:22	02/05/13 04:15		
Vanadium	**0.10**	ug/L	0.10	1	01/31/13 10:22	02/05/13 04:11	7440-62-2	
Zinc	**12.2**	ug/L	5.0	1	01/31/13 10:22	02/05/13 04:11	7440-66-6	
200.8 MET ICPMS, Dissolved	Analytical Method: EPA 200.8 Preparation Method: EPA 200.8							
Aluminum, Dissolved	**6.7**	ug/L	4.0	1	01/31/13 10:25	02/08/13 22:01	7429-90-5	
Antimony, Dissolved	ND	ug/L	0.50	1	01/31/13 10:25	02/06/13 07:18	7440-36-0	
Arsenic, Dissolved	ND	ug/L	0.50	1	01/31/13 10:25	02/06/13 07:18	7440-38-2	
Barium, Dissolved	**66.3**	ug/L	0.30	1	01/31/13 10:25	02/06/13 07:18	7440-39-3	
Beryllium, Dissolved	ND	ug/L	0.20	1	01/31/13 10:25	02/06/13 07:18	7440-41-7	
Cadmium, Dissolved	ND	ug/L	0.080	1	01/31/13 10:25	02/06/13 07:18	7440-43-9	
Calcium, Dissolved	**67800**	ug/L	100	5	01/31/13 10:25	02/11/13 13:54	7440-70-2	
Chromium, Dissolved	ND	ug/L	0.50	1	01/31/13 10:25	02/06/13 07:18	7440-47-3	
Cobalt, Dissolved	**0.84**	ug/L	0.50	1	01/31/13 10:25	02/06/13 07:18	7440-48-4	
Copper, Dissolved	**1.1**	ug/L	0.50	1	01/31/13 10:25	02/06/13 07:18	7440-50-8	
Iron, Dissolved	**50.2**	ug/L	50.0	1	01/31/13 10:25	02/06/13 07:18	7439-89-6	
Lead, Dissolved	ND	ug/L	0.10	1	01/31/13 10:25	02/06/13 07:18	7439-92-1	
Magnesium, Dissolved	**9260**	ug/L	25.0	5	01/31/13 10:25	02/11/13 13:54	7439-95-4	

This report shall not be reproduced, except in full,
without the written consent of Pace Analytical Services, Inc..

Pace Analytical Services, Inc.
9608 Loiret Blvd.
Lenexa, KS 66219
(913)599-5665

ANALYTICAL RESULTS

Project: JANUARY 2013 RICO WATER SAMPLI
Pace Project No.: 60137618

Sample: DR-2_20130124 **Lab ID: 60137618008** Collected: 01/24/13 12:07 Received: 01/26/13 08:50 Matrix: Water

Parameters	Results	Units	Report Limit	DF	Prepared	Analyzed	CAS No.	Qual
200.8 MET ICPMS, Dissolved	Analytical Method: EPA 200.8 Preparation Method: EPA 200.8							
Manganese, Dissolved	**274**	ug/L	0.50	1	01/31/13 10:25	02/06/13 07:18	7439-96-5	
Molybdenum, Dissolved	**1.3**	ug/L	0.50	1	01/31/13 10:25	02/06/13 07:18	7439-98-7	
Nickel, Dissolved	**1.5**	ug/L	0.50	1	01/31/13 10:25	02/06/13 07:18	7440-02-0	
Potassium, Dissolved	**1110**	ug/L	20.0	1	01/31/13 10:25	02/06/13 07:18	7440-09-7	
Selenium, Dissolved	**0.65**	ug/L	0.50	1	01/31/13 10:25	02/06/13 07:18	7782-49-2	
Silver, Dissolved	ND	ug/L	0.50	1	01/31/13 10:25	02/06/13 07:18	7440-22-4	
Sodium, Dissolved	**4010**	ug/L	50.0	1	01/31/13 10:25	02/06/13 07:18	7440-23-5	
Thallium, Dissolved	ND	ug/L	0.10	1	01/31/13 10:25	02/06/13 07:18	7440-28-0	
Vanadium, Dissolved	ND	ug/L	0.10	1	01/31/13 10:25	02/06/13 07:18	7440-62-2	
Zinc, Dissolved	**18.5**	ug/L	5.0	1	01/31/13 10:25	02/06/13 07:18	7440-66-6	
200.8 Potentially Diss. Metals	Analytical Method: EPA 200.8 Preparation Method: EPA 200.8							
Aluminum, Dissolved	**6.8J**	ug/L	50.0	1	01/30/13 15:50	01/31/13 14:52	7429-90-5	
Antimony, Dissolved	**0.054J**	ug/L	1.0	1	01/30/13 15:50	01/31/13 14:52	7440-36-0	
Arsenic, Dissolved	**0.17J**	ug/L	1.0	1	01/30/13 15:50	01/31/13 14:52	7440-38-2	
Barium, Dissolved	**65.9**	ug/L	1.0	1	01/30/13 15:50	01/31/13 14:52	7440-39-3	
Beryllium, Dissolved	ND	ug/L	0.50	1	01/30/13 15:50	01/31/13 14:52	7440-41-7	
Cadmium, Dissolved	ND	ug/L	0.50	1	01/30/13 15:50	01/31/13 14:52	7440-43-9	
Chromium, Dissolved	**0.90J**	ug/L	1.0	1	01/30/13 15:50	01/31/13 14:52	7440-47-3	B
Cobalt, Dissolved	**0.076J**	ug/L	1.0	1	01/30/13 15:50	01/31/13 14:52	7440-48-4	
Copper, Dissolved	ND	ug/L	1.0	1	01/30/13 15:50	01/31/13 14:52	7440-50-8	
Iron, Dissolved	**65.2**	ug/L	50.0	1	01/30/13 15:50	01/31/13 14:52	7439-89-6	
Lead, Dissolved	**0.53J**	ug/L	1.0	1	01/30/13 15:50	01/31/13 14:52	7439-92-1	
Manganese, Dissolved	**281**	ug/L	1.0	1	01/30/13 15:50	01/31/13 14:52	7439-96-5	
Molybdenum, Dissolved	**1.4**	ug/L	1.0	1	01/30/13 15:50	01/31/13 14:52	7439-98-7	
Nickel, Dissolved	ND	ug/L	1.0	1	01/30/13 15:50	01/31/13 14:52	7440-02-0	
Selenium, Dissolved	**0.63J**	ug/L	1.0	1	01/30/13 15:50	01/31/13 14:52	7782-49-2	
Silver, Dissolved	ND	ug/L	0.50	1	01/30/13 15:50	01/31/13 14:52	7440-22-4	
Thallium, Dissolved	ND	ug/L	1.0	1	01/30/13 15:50	01/31/13 14:52	7440-28-0	
Vanadium, Dissolved	ND	ug/L	1.0	1	01/30/13 15:50	01/31/13 14:52	7440-62-2	
Zinc, Dissolved	**13.1**	ug/L	10.0	1	01/30/13 15:50	01/31/13 14:52	7440-66-6	B
245.1 Mercury	Analytical Method: EPA 245.1 Preparation Method: EPA 245.1							
Mercury	ND	ug/L	0.20	1	02/07/13 12:29	02/08/13 18:19	7439-97-6	
245.1 Mercury, Dissolved	Analytical Method: EPA 245.1 Preparation Method: EPA 245.1							
Mercury, Dissolved	ND	ug/L	0.20	1	02/06/13 15:39	02/07/13 18:28	7439-97-6	
245.1 Potentially Diss Mercury	Analytical Method: EPA 245.1 Preparation Method: EPA 245.1							
Mercury, Dissolved	ND	ug/L	0.20	1	01/30/13 15:30	01/31/13 09:44	7439-97-6	
2510B Specific Conductance	Analytical Method: SM 2510B							
Specific Conductance	**462**	umhos/cm	10.0	1		01/30/13 15:11		
Salinity	Analytical Method: Calculated							
Salinity (as dissolved solids)	**296**	mg/L	6.0	1		01/31/13 15:31		

This report shall not be reproduced, except in full,
without the written consent of Pace Analytical Services, Inc..

Pace Analytical Services, Inc.
9608 Loiret Blvd.
Lenexa, KS 66219
(913)599-5665

ANALYTICAL RESULTS

Project: JANUARY 2013 RICO WATER SAMPLI
Pace Project No.: 60137618

Sample: DR-2_20130124 **Lab ID: 60137618008** Collected: 01/24/13 12:07 Received: 01/26/13 08:50 Matrix: Water

Parameters	Results	Units	Report Limit	DF	Prepared	Analyzed	CAS No.	Qual
Salinity	Analytical Method: Calculated							
Salinity (as seawater)	**0.22**	PSU	0.010	1		01/31/13 15:31		
2320B Alkalinity	Analytical Method: SM 2320B							
Alkalinity,Bicarbonate (CaCO3)	**125**	mg/L	20.0	1		01/30/13 13:04		
Alkalinity, Carbonate (CaCO3)	ND	mg/L	20.0	1		01/30/13 13:04		
Alkalinity, Total as CaCO3	**125**	mg/L	20.0	1		01/30/13 13:04		
2540C Total Dissolved Solids	Analytical Method: SM 2540C							
Total Dissolved Solids	**295**	mg/L	5.0	1		01/30/13 09:29		
2540D Total Suspended Solids	Analytical Method: SM 2540D							
Total Suspended Solids	ND	mg/L	5.0	1		01/29/13 10:47		
4500S2D Sulfide, Total	Analytical Method: SM 4500-S-2 D							
Sulfide, Total	ND	mg/L	0.050	1		01/29/13 14:35	18496-25-8	
300.0 IC Anions 28 Days	Analytical Method: EPA 300.0							
Chloride	**1.6**	mg/L	1.0	1		01/30/13 19:20	16887-00-6	
Sulfate	**109**	mg/L	10.0	10		01/30/13 19:37	14808-79-8	
353.2 Nitrogen, NO2/NO3 pres.	Analytical Method: EPA 353.2							
Nitrogen, NO2 plus NO3	ND	mg/L	0.10	1		01/31/13 16:44		
4500CNE Cyanide, Total	Analytical Method: SM 4500-CN-E							
Cyanide	ND	mg/L	0.0050	1		01/30/13 13:12	57-12-5	
5310C TOC	Analytical Method: SM 5310C							
Total Organic Carbon	ND	mg/L	1.0	1		01/30/13 18:42	7440-44-0	

This report shall not be reproduced, except in full,
without the written consent of Pace Analytical Services, Inc..

Pace Analytical Services, Inc.
9608 Loiret Blvd.
Lenexa, KS 66219
(913)599-5665

ANALYTICAL RESULTS

Project: JANUARY 2013 RICO WATER SAMPLI
Pace Project No.: 60137618

Sample: FB_20130124 **Lab ID: 60137618009** Collected: 01/24/13 12:22 Received: 01/26/13 08:50 Matrix: Water

Parameters	Results	Units	Report Limit	DF	Prepared	Analyzed	CAS No.	Qual
200.7 Potentially Diss. Metals	Analytical Method: EPA 200.7 Preparation Method: EPA 200.7							
Calcium, Dissolved	**98.6J**	ug/L	100	1	01/30/13 15:50	01/31/13 16:42	7440-70-2	B
Magnesium, Dissolved	**11.2J**	ug/L	50.0	1	01/30/13 15:50	01/31/13 16:42	7439-95-4	
Potassium, Dissolved	ND	ug/L	500	1	01/30/13 15:50	01/31/13 16:42	7440-09-7	
Sodium, Dissolved	**492J**	ug/L	500	1	01/30/13 15:50	01/31/13 16:42	7440-23-5	B
200.8 MET ICPMS	Analytical Method: EPA 200.8 Preparation Method: EPA 200.8							
Aluminum	ND	ug/L	4.0	1	01/31/13 10:22	02/05/13 04:19	7429-90-5	
Antimony	ND	ug/L	0.50	1	01/31/13 10:22	02/05/13 04:19	7440-36-0	
Arsenic	ND	ug/L	0.50	1	01/31/13 10:22	02/05/13 04:19	7440-38-2	
Barium	ND	ug/L	0.30	1	01/31/13 10:22	02/05/13 04:19	7440-39-3	
Beryllium	ND	ug/L	0.20	1	01/31/13 10:22	02/05/13 04:19	7440-41-7	
Cadmium	ND	ug/L	0.080	1	01/31/13 10:22	02/05/13 04:19	7440-43-9	
Calcium	ND	ug/L	20.0	1	01/31/13 10:22	02/05/13 04:19	7440-70-2	
Chromium	ND	ug/L	0.50	1	01/31/13 10:22	02/05/13 04:19	7440-47-3	
Cobalt	ND	ug/L	0.50	1	01/31/13 10:22	02/05/13 04:19	7440-48-4	
Copper	**0.53**	ug/L	0.50	1	01/31/13 10:22	02/05/13 04:19	7440-50-8	
Iron	ND	ug/L	50.0	1	01/31/13 10:22	02/05/13 04:19	7439-89-6	
Lead	ND	ug/L	0.10	1	01/31/13 10:22	02/05/13 04:19	7439-92-1	
Magnesium	ND	ug/L	5.0	1	01/31/13 10:22	02/06/13 02:00	7439-95-4	
Manganese	ND	ug/L	0.50	1	01/31/13 10:22	02/05/13 04:19	7439-96-5	
Molybdenum	ND	ug/L	0.50	1	01/31/13 10:22	02/05/13 04:19	7439-98-7	
Nickel	ND	ug/L	0.50	1	01/31/13 10:22	02/05/13 04:19	7440-02-0	
Potassium	ND	ug/L	20.0	1	01/31/13 10:22	02/06/13 02:00	7440-09-7	
Selenium	ND	ug/L	0.50	1	01/31/13 10:22	02/05/13 04:19	7782-49-2	
Silica	ND	ug/L	53.5	1	01/31/13 10:22	02/06/13 02:00	7631-86-9	
Silver	ND	ug/L	0.50	1	01/31/13 10:22	02/05/13 04:19	7440-22-4	
Sodium	**369**	ug/L	50.0	1	01/31/13 10:22	02/05/13 04:19	7440-23-5	
Thallium	ND	ug/L	0.10	1	01/31/13 10:22	02/05/13 04:19	7440-28-0	
Total Hardness by 2340B	ND	ug/L	71.0	1	01/31/13 10:22	02/06/13 02:00		
Vanadium	ND	ug/L	0.10	1	01/31/13 10:22	02/05/13 04:19	7440-62-2	
Zinc	ND	ug/L	5.0	1	01/31/13 10:22	02/05/13 04:19	7440-66-6	
200.8 MET ICPMS, Dissolved	Analytical Method: EPA 200.8 Preparation Method: EPA 200.8							
Aluminum, Dissolved	ND	ug/L	4.0	1	01/31/13 10:25	02/11/13 14:28	7429-90-5	
Antimony, Dissolved	ND	ug/L	0.50	1	01/31/13 10:25	02/11/13 14:28	7440-36-0	
Arsenic, Dissolved	ND	ug/L	0.50	1	01/31/13 10:25	02/11/13 14:28	7440-38-2	
Barium, Dissolved	ND	ug/L	0.30	1	01/31/13 10:25	02/11/13 14:28	7440-39-3	
Beryllium, Dissolved	ND	ug/L	0.20	1	01/31/13 10:25	02/11/13 14:28	7440-41-7	
Cadmium, Dissolved	ND	ug/L	0.080	1	01/31/13 10:25	02/11/13 14:28	7440-43-9	
Calcium, Dissolved	ND	ug/L	20.0	1	01/31/13 10:25	02/11/13 14:28	7440-70-2	
Chromium, Dissolved	ND	ug/L	0.50	1	01/31/13 10:25	02/11/13 14:28	7440-47-3	
Cobalt, Dissolved	ND	ug/L	0.50	1	01/31/13 10:25	02/11/13 14:28	7440-48-4	
Copper, Dissolved	**0.70**	ug/L	0.50	1	01/31/13 10:25	02/11/13 14:28	7440-50-8	
Iron, Dissolved	ND	ug/L	50.0	1	01/31/13 10:25	02/11/13 14:28	7439-89-6	
Lead, Dissolved	ND	ug/L	0.10	1	01/31/13 10:25	02/11/13 14:28	7439-92-1	
Magnesium, Dissolved	ND	ug/L	5.0	1	01/31/13 10:25	02/11/13 14:28	7439-95-4	

This report shall not be reproduced, except in full,
without the written consent of Pace Analytical Services, Inc..

Pace Analytical Services, Inc.
9608 Loiret Blvd.
Lenexa, KS 66219
(913)599-5665

ANALYTICAL RESULTS

Project: JANUARY 2013 RICO WATER SAMPLI
Pace Project No.: 60137618

Sample: FB_20130124 **Lab ID: 60137618009** Collected: 01/24/13 12:22 Received: 01/26/13 08:50 Matrix: Water

Parameters	Results	Units	Report Limit	DF	Prepared	Analyzed	CAS No.	Qual
200.8 MET ICPMS, Dissolved	Analytical Method: EPA 200.8 Preparation Method: EPA 200.8							
Manganese, Dissolved	ND	ug/L	0.50	1	01/31/13 10:25	02/11/13 14:28	7439-96-5	
Molybdenum, Dissolved	ND	ug/L	0.50	1	01/31/13 10:25	02/11/13 14:28	7439-98-7	
Nickel, Dissolved	**0.73**	ug/L	0.50	1	01/31/13 10:25	02/11/13 14:28	7440-02-0	
Potassium, Dissolved	**27.7**	ug/L	20.0	1	01/31/13 10:25	02/11/13 14:28	7440-09-7	
Selenium, Dissolved	ND	ug/L	0.50	1	01/31/13 10:25	02/11/13 14:28	7782-49-2	
Silver, Dissolved	ND	ug/L	0.50	1	01/31/13 10:25	02/11/13 14:28	7440-22-4	
Sodium, Dissolved	**382**	ug/L	50.0	1	01/31/13 10:25	02/11/13 14:28	7440-23-5	
Thallium, Dissolved	ND	ug/L	0.10	1	01/31/13 10:25	02/11/13 14:28	7440-28-0	
Vanadium, Dissolved	ND	ug/L	0.10	1	01/31/13 10:25	02/11/13 14:28	7440-62-2	
Zinc, Dissolved	ND	ug/L	5.0	1	01/31/13 10:25	02/11/13 14:28	7440-66-6	
200.8 Potentially Diss. Metals	Analytical Method: EPA 200.8 Preparation Method: EPA 200.8							
Aluminum, Dissolved	ND	ug/L	50.0	1	01/30/13 15:50	01/31/13 15:34	7429-90-5	
Antimony, Dissolved	ND	ug/L	1.0	1	01/30/13 15:50	01/31/13 15:34	7440-36-0	
Arsenic, Dissolved	ND	ug/L	1.0	1	01/30/13 15:50	01/31/13 15:34	7440-38-2	
Barium, Dissolved	**0.17J**	ug/L	1.0	1	01/30/13 15:50	01/31/13 15:34	7440-39-3	
Beryllium, Dissolved	ND	ug/L	0.50	1	01/30/13 15:50	01/31/13 15:34	7440-41-7	
Cadmium, Dissolved	ND	ug/L	0.50	1	01/30/13 15:50	01/31/13 15:34	7440-43-9	
Chromium, Dissolved	**0.55J**	ug/L	1.0	1	01/30/13 15:50	01/31/13 15:34	7440-47-3	B
Cobalt, Dissolved	ND	ug/L	1.0	1	01/30/13 15:50	01/31/13 15:34	7440-48-4	
Copper, Dissolved	ND	ug/L	1.0	1	01/30/13 15:50	01/31/13 15:34	7440-50-8	
Iron, Dissolved	**7.6J**	ug/L	50.0	1	01/30/13 15:50	01/31/13 15:34	7439-89-6	
Lead, Dissolved	**0.25J**	ug/L	1.0	1	01/30/13 15:50	01/31/13 15:34	7439-92-1	
Manganese, Dissolved	**0.56J**	ug/L	1.0	1	01/30/13 15:50	01/31/13 15:34	7439-96-5	
Molybdenum, Dissolved	ND	ug/L	1.0	1	01/30/13 15:50	01/31/13 15:34	7439-98-7	
Nickel, Dissolved	ND	ug/L	1.0	1	01/30/13 15:50	01/31/13 15:34	7440-02-0	
Selenium, Dissolved	ND	ug/L	1.0	1	01/30/13 15:50	01/31/13 15:34	7782-49-2	
Silver, Dissolved	ND	ug/L	0.50	1	01/30/13 15:50	01/31/13 15:34	7440-22-4	
Thallium, Dissolved	ND	ug/L	1.0	1	01/30/13 15:50	01/31/13 15:34	7440-28-0	
Vanadium, Dissolved	ND	ug/L	1.0	1	01/30/13 15:50	01/31/13 15:34	7440-62-2	
Zinc, Dissolved	**2.9J**	ug/L	10.0	1	01/30/13 15:50	01/31/13 15:34	7440-66-6	B
245.1 Mercury	Analytical Method: EPA 245.1 Preparation Method: EPA 245.1							
Mercury	ND	ug/L	0.20	1	02/07/13 12:29	02/08/13 18:21	7439-97-6	
245.1 Mercury, Dissolved	Analytical Method: EPA 245.1 Preparation Method: EPA 245.1							
Mercury, Dissolved	ND	ug/L	0.20	1	02/06/13 15:39	02/07/13 18:31	7439-97-6	
245.1 Potentially Diss Mercury	Analytical Method: EPA 245.1 Preparation Method: EPA 245.1							
Mercury, Dissolved	ND	ug/L	0.20	1	01/30/13 15:30	01/31/13 09:47	7439-97-6	
2510B Specific Conductance	Analytical Method: SM 2510B							
Specific Conductance	ND	umhos/cm	10.0	1		01/30/13 15:15		
Salinity	Analytical Method: Calculated							
Salinity (as dissolved solids)	ND	mg/L	6.0	1		01/31/13 15:31		

This report shall not be reproduced, except in full,
without the written consent of Pace Analytical Services, Inc..

Pace Analytical Services, Inc.
9608 Loiret Blvd.
Lenexa, KS 66219
(913)599-5665

ANALYTICAL RESULTS

Project: JANUARY 2013 RICO WATER SAMPLI
Pace Project No.: 60137618

Sample: FB_20130124 **Lab ID: 60137618009** Collected: 01/24/13 12:22 Received: 01/26/13 08:50 Matrix: Water

Parameters	Results	Units	Report Limit	DF	Prepared	Analyzed	CAS No.	Qual
Salinity	Analytical Method: Calculated							
Salinity (as seawater)	**0.012**	PSU	0.010	1		01/31/13 15:31		
2320B Alkalinity	Analytical Method: SM 2320B							
Alkalinity,Bicarbonate (CaCO3)	ND	mg/L	20.0	1		01/30/13 13:08		
Alkalinity, Carbonate (CaCO3)	ND	mg/L	20.0	1		01/30/13 13:08		
Alkalinity, Total as CaCO3	ND	mg/L	20.0	1		01/30/13 13:08		
2540C Total Dissolved Solids	Analytical Method: SM 2540C							
Total Dissolved Solids	ND	mg/L	5.0	1		01/31/13 12:27		
2540D Total Suspended Solids	Analytical Method: SM 2540D							
Total Suspended Solids	ND	mg/L	5.0	1		01/29/13 10:47		
4500S2D Sulfide, Total	Analytical Method: SM 4500-S-2 D							
Sulfide, Total	ND	mg/L	0.050	1		01/29/13 14:35	18496-25-8	
300.0 IC Anions 28 Days	Analytical Method: EPA 300.0							
Chloride	ND	mg/L	1.0	1		01/31/13 00:38	16887-00-6	
Sulfate	ND	mg/L	1.0	1		01/31/13 00:38	14808-79-8	
353.2 Nitrogen, NO2/NO3 pres.	Analytical Method: EPA 353.2							
Nitrogen, NO2 plus NO3	ND	mg/L	0.10	1		01/31/13 16:47		
4500CNE Cyanide, Total	Analytical Method: SM 4500-CN-E							
Cyanide	ND	mg/L	0.0050	1		01/30/13 13:12	57-12-5	
5310C TOC	Analytical Method: SM 5310C							
Total Organic Carbon	ND	mg/L	1.0	1		01/30/13 18:56	7440-44-0	

This report shall not be reproduced, except in full,
without the written consent of Pace Analytical Services, Inc..

Pace Analytical Services, Inc.
9608 Loiret Blvd.
Lenexa, KS 66219
(913)599-5665

ANALYTICAL RESULTS

Project: JANUARY 2013 RICO WATER SAMPLI
Pace Project No.: 60137618

Sample: DR-11_20130124 **Lab ID: 60137618010** Collected: 01/24/13 02:13 Received: 01/26/13 08:50 Matrix: Water

Parameters	Results	Units	Report Limit	DF	Prepared	Analyzed	CAS No.	Qual
200.7 Potentially Diss. Metals	Analytical Method: EPA 200.7 Preparation Method: EPA 200.7							
Calcium, Dissolved	**249000**	ug/L	100	1	01/30/13 15:50	01/31/13 16:44	7440-70-2	
Magnesium, Dissolved	**23900**	ug/L	50.0	1	01/30/13 15:50	01/31/13 16:44	7439-95-4	
Potassium, Dissolved	**17600**	ug/L	500	1	01/30/13 15:50	01/31/13 16:44	7440-09-7	
Sodium, Dissolved	**16400**	ug/L	500	1	01/30/13 15:50	01/31/13 16:44	7440-23-5	
200.8 MET ICPMS	Analytical Method: EPA 200.8 Preparation Method: EPA 200.8							
Aluminum	**610**	ug/L	4.0	1	01/31/13 10:22	02/05/13 04:28	7429-90-5	
Antimony	ND	ug/L	0.50	1	01/31/13 10:22	02/05/13 04:28	7440-36-0	
Arsenic	**0.73**	ug/L	0.50	1	01/31/13 10:22	02/05/13 04:28	7440-38-2	
Barium	**37.4**	ug/L	0.30	1	01/31/13 10:22	02/05/13 04:28	7440-39-3	
Beryllium	ND	ug/L	0.20	1	01/31/13 10:22	02/05/13 04:28	7440-41-7	
Cadmium	**2.7**	ug/L	0.080	1	01/31/13 10:22	02/05/13 04:28	7440-43-9	
Calcium	**257000**	ug/L	400	20	01/31/13 10:22	02/05/13 04:32	7440-70-2	
Chromium	**1.8**	ug/L	0.50	1	01/31/13 10:22	02/05/13 04:28	7440-47-3	
Cobalt	**0.65**	ug/L	0.50	1	01/31/13 10:22	02/05/13 04:28	7440-48-4	
Copper	**5.7**	ug/L	0.50	1	01/31/13 10:22	02/05/13 04:28	7440-50-8	
Iron	**1040**	ug/L	50.0	1	01/31/13 10:22	02/05/13 04:28	7439-89-6	
Lead	**6.5**	ug/L	0.10	1	01/31/13 10:22	02/05/13 04:28	7439-92-1	
Magnesium	**26400**	ug/L	100	20	01/31/13 10:22	02/05/13 04:32	7439-95-4	
Manganese	**318**	ug/L	0.50	1	01/31/13 10:22	02/05/13 04:28	7439-96-5	
Molybdenum	**11.1**	ug/L	0.50	1	01/31/13 10:22	02/05/13 04:28	7439-98-7	
Nickel	**1.3**	ug/L	0.50	1	01/31/13 10:22	02/05/13 04:28	7440-02-0	
Potassium	**17700**	ug/L	20.0	1	01/31/13 10:22	02/05/13 04:28	7440-09-7	
Selenium	**1.7**	ug/L	0.50	1	01/31/13 10:22	02/05/13 04:28	7782-49-2	
Silica	**13700**	ug/L	535	10	01/31/13 10:22	02/06/13 02:22	7631-86-9	
Silver	ND	ug/L	0.50	1	01/31/13 10:22	02/05/13 04:28	7440-22-4	
Sodium	**17100**	ug/L	50.0	1	01/31/13 10:22	02/05/13 04:28	7440-23-5	
Thallium	ND	ug/L	0.10	1	01/31/13 10:22	02/05/13 04:28	7440-28-0	
Total Hardness by 2340B	**751000**	ug/L	1420	20	01/31/13 10:22	02/05/13 04:32		
Vanadium	**1.4**	ug/L	0.10	1	01/31/13 10:22	02/05/13 04:28	7440-62-2	
Zinc	**937**	ug/L	100	20	01/31/13 10:22	02/05/13 04:32	7440-66-6	
200.8 MET ICPMS, Dissolved	Analytical Method: EPA 200.8 Preparation Method: EPA 200.8							
Aluminum, Dissolved	**378**	ug/L	4.0	1	01/31/13 10:25	02/11/13 13:58	7429-90-5	
Antimony, Dissolved	ND	ug/L	0.50	1	01/31/13 10:25	02/11/13 13:58	7440-36-0	
Arsenic, Dissolved	ND	ug/L	0.50	1	01/31/13 10:25	02/11/13 13:58	7440-38-2	
Barium, Dissolved	**27.8**	ug/L	0.30	1	01/31/13 10:25	02/11/13 13:58	7440-39-3	
Beryllium, Dissolved	ND	ug/L	0.20	1	01/31/13 10:25	02/11/13 13:58	7440-41-7	
Cadmium, Dissolved	**2.2**	ug/L	0.080	1	01/31/13 10:25	02/11/13 13:58	7440-43-9	
Calcium, Dissolved	**302000**	ug/L	400	20	01/31/13 10:25	02/08/13 22:39	7440-70-2	
Chromium, Dissolved	**0.74**	ug/L	0.50	1	01/31/13 10:25	02/11/13 13:58	7440-47-3	
Cobalt, Dissolved	**0.85**	ug/L	0.50	1	01/31/13 10:25	02/11/13 13:58	7440-48-4	
Copper, Dissolved	**3.7**	ug/L	0.50	1	01/31/13 10:25	02/11/13 13:58	7440-50-8	
Iron, Dissolved	**628**	ug/L	50.0	1	01/31/13 10:25	02/11/13 13:58	7439-89-6	
Lead, Dissolved	**3.6**	ug/L	0.10	1	01/31/13 10:25	02/11/13 13:58	7439-92-1	
Magnesium, Dissolved	**25300**	ug/L	25.0	5	01/31/13 10:25	02/11/13 14:03	7439-95-4	

This report shall not be reproduced, except in full,
without the written consent of Pace Analytical Services, Inc..

Pace Analytical Services, Inc.
9608 Loiret Blvd.
Lenexa, KS 66219
(913)599-5665

ANALYTICAL RESULTS

Project: JANUARY 2013 RICO WATER SAMPLI
Pace Project No.: 60137618

Sample: DR-11_20130124 **Lab ID: 60137618010** Collected: 01/24/13 02:13 Received: 01/26/13 08:50 Matrix: Water

Parameters	Results	Units	Report Limit	DF	Prepared	Analyzed	CAS No.	Qual
200.8 MET ICPMS, Dissolved	Analytical Method: EPA 200.8 Preparation Method: EPA 200.8							
Manganese, Dissolved	**148**	ug/L	0.50	1	01/31/13 10:25	02/11/13 13:58	7439-96-5	
Molybdenum, Dissolved	**10.7**	ug/L	0.50	1	01/31/13 10:25	02/11/13 13:58	7439-98-7	
Nickel, Dissolved	**2.2**	ug/L	0.50	1	01/31/13 10:25	02/11/13 13:58	7440-02-0	
Potassium, Dissolved	**16700**	ug/L	20.0	1	01/31/13 10:25	02/11/13 13:58	7440-09-7	
Selenium, Dissolved	**1.6**	ug/L	0.50	1	01/31/13 10:25	02/11/13 13:58	7782-49-2	
Silver, Dissolved	ND	ug/L	0.50	1	01/31/13 10:25	02/11/13 13:58	7440-22-4	
Sodium, Dissolved	**16800**	ug/L	50.0	1	01/31/13 10:25	02/11/13 13:58	7440-23-5	
Thallium, Dissolved	ND	ug/L	0.10	1	01/31/13 10:25	02/11/13 13:58	7440-28-0	
Vanadium, Dissolved	**0.80**	ug/L	0.10	1	01/31/13 10:25	02/11/13 13:58	7440-62-2	
Zinc, Dissolved	**918**	ug/L	25.0	5	01/31/13 10:25	02/11/13 14:03	7440-66-6	
200.8 Potentially Diss. Metals	Analytical Method: EPA 200.8 Preparation Method: EPA 200.8							
Aluminum, Dissolved	**210**	ug/L	50.0	1	01/30/13 15:50	01/31/13 14:56	7429-90-5	
Antimony, Dissolved	**0.081J**	ug/L	1.0	1	01/30/13 15:50	01/31/13 14:56	7440-36-0	
Arsenic, Dissolved	**0.48J**	ug/L	1.0	1	01/30/13 15:50	01/31/13 14:56	7440-38-2	
Barium, Dissolved	**26.2**	ug/L	1.0	1	01/30/13 15:50	01/31/13 14:56	7440-39-3	
Beryllium, Dissolved	ND	ug/L	0.50	1	01/30/13 15:50	01/31/13 14:56	7440-41-7	
Cadmium, Dissolved	**2.3**	ug/L	0.50	1	01/30/13 15:50	01/31/13 14:56	7440-43-9	
Chromium, Dissolved	**1.1**	ug/L	1.0	1	01/30/13 15:50	01/31/13 14:56	7440-47-3	B
Cobalt, Dissolved	**0.34J**	ug/L	1.0	1	01/30/13 15:50	01/31/13 14:56	7440-48-4	
Copper, Dissolved	**3.3**	ug/L	1.0	1	01/30/13 15:50	01/31/13 14:56	7440-50-8	
Iron, Dissolved	**481**	ug/L	50.0	1	01/30/13 15:50	01/31/13 14:56	7439-89-6	
Lead, Dissolved	**5.7**	ug/L	1.0	1	01/30/13 15:50	01/31/13 14:56	7439-92-1	
Manganese, Dissolved	**160**	ug/L	1.0	1	01/30/13 15:50	01/31/13 14:56	7439-96-5	
Molybdenum, Dissolved	**9.8**	ug/L	1.0	1	01/30/13 15:50	01/31/13 14:56	7439-98-7	
Nickel, Dissolved	ND	ug/L	1.0	1	01/30/13 15:50	01/31/13 14:56	7440-02-0	
Selenium, Dissolved	**1.4**	ug/L	1.0	1	01/30/13 15:50	01/31/13 14:56	7782-49-2	
Silver, Dissolved	ND	ug/L	0.50	1	01/30/13 15:50	01/31/13 14:56	7440-22-4	
Thallium, Dissolved	ND	ug/L	1.0	1	01/30/13 15:50	01/31/13 14:56	7440-28-0	
Vanadium, Dissolved	**0.62J**	ug/L	1.0	1	01/30/13 15:50	01/31/13 14:56	7440-62-2	
Zinc, Dissolved	**767**	ug/L	10.0	1	01/30/13 15:50	01/31/13 14:56	7440-66-6	
245.1 Mercury	Analytical Method: EPA 245.1 Preparation Method: EPA 245.1							
Mercury	ND	ug/L	0.20	1	02/07/13 12:29	02/08/13 18:24	7439-97-6	
245.1 Mercury, Dissolved	Analytical Method: EPA 245.1 Preparation Method: EPA 245.1							
Mercury, Dissolved	ND	ug/L	0.20	1	02/06/13 15:39	02/07/13 18:33	7439-97-6	
245.1 Potentially Diss Mercury	Analytical Method: EPA 245.1 Preparation Method: EPA 245.1							
Mercury, Dissolved	ND	ug/L	0.20	1	01/30/13 15:30	01/31/13 09:49	7439-97-6	
2510B Specific Conductance	Analytical Method: SM 2510B							
Specific Conductance	**1380**	umhos/cm	10.0	1		01/30/13 15:21		
Salinity	Analytical Method: Calculated							
Salinity (as dissolved solids)	**886**	mg/L	6.0	1		01/31/13 15:31		

This report shall not be reproduced, except in full,
without the written consent of Pace Analytical Services, Inc..

Pace Analytical Services, Inc.
9608 Loiret Blvd.
Lenexa, KS 66219
(913)599-5665

ANALYTICAL RESULTS

Project: JANUARY 2013 RICO WATER SAMPLI
Pace Project No.: 60137618

Sample: DR-11_20130124 **Lab ID: 60137618010** Collected: 01/24/13 02:13 Received: 01/26/13 08:50 Matrix: Water

Parameters	Results	Units	Report Limit	DF	Prepared	Analyzed	CAS No.	Qual
Salinity	Analytical Method: Calculated							
Salinity (as seawater)	**0.69**	PSU	0.010	1		01/31/13 15:31		
2320B Alkalinity	Analytical Method: SM 2320B							
Alkalinity,Bicarbonate (CaCO3)	**148**	mg/L	20.0	1		01/30/13 13:12		
Alkalinity, Carbonate (CaCO3)	ND	mg/L	20.0	1		01/30/13 13:12		
Alkalinity, Total as CaCO3	**148**	mg/L	20.0	1		01/30/13 13:12		
2540C Total Dissolved Solids	Analytical Method: SM 2540C							
Total Dissolved Solids	**1140**	mg/L	5.0	1		01/30/13 09:29		
2540D Total Suspended Solids	Analytical Method: SM 2540D							
Total Suspended Solids	**43.0**	mg/L	5.0	1		01/31/13 09:15		
4500S2D Sulfide, Total	Analytical Method: SM 4500-S-2 D							
Sulfide, Total	**0.058**	mg/L	0.050	1		01/29/13 14:35	18496-25-8	
300.0 IC Anions 28 Days	Analytical Method: EPA 300.0							
Chloride	**1.0**	mg/L	1.0	1		01/30/13 19:55	16887-00-6	
Sulfate	**704**	mg/L	50.0	50		01/30/13 20:13	14808-79-8	
353.2 Nitrogen, NO2/NO3 pres.	Analytical Method: EPA 353.2							
Nitrogen, NO2 plus NO3	ND	mg/L	0.10	1		01/31/13 16:48		
4500CNE Cyanide, Total	Analytical Method: SM 4500-CN-E							
Cyanide	ND	mg/L	0.0050	1		01/30/13 13:14	57-12-5	
5310C TOC	Analytical Method: SM 5310C							
Total Organic Carbon	ND	mg/L	1.0	1		01/30/13 19:10	7440-44-0	

This report shall not be reproduced, except in full,
without the written consent of Pace Analytical Services, Inc..

Pace Analytical Services, Inc.
9608 Loiret Blvd.
Lenexa, KS 66219
(913)599-5665

ANALYTICAL RESULTS

Project: JANUARY 2013 RICO WATER SAMPLI
Pace Project No.: 60137618

Sample: DR-7 COMP_20130124 **Lab ID: 60137618011** Collected: 01/24/13 02:25 Received: 01/26/13 08:50 Matrix: Water

Parameters	Results	Units	Report Limit	DF	Prepared	Analyzed	CAS No.	Qual
200.7 Potentially Diss. Metals	Analytical Method: EPA 200.7 Preparation Method: EPA 200.7							
Calcium, Dissolved	**100000**	ug/L	100	1	01/30/13 15:50	01/31/13 16:46	7440-70-2	
Magnesium, Dissolved	**12200**	ug/L	50.0	1	01/30/13 15:50	01/31/13 16:46	7439-95-4	
Potassium, Dissolved	**2970**	ug/L	500	1	01/30/13 15:50	01/31/13 16:46	7440-09-7	
Sodium, Dissolved	**6570**	ug/L	500	1	01/30/13 15:50	01/31/13 16:46	7440-23-5	
200.8 MET ICPMS	Analytical Method: EPA 200.8 Preparation Method: EPA 200.8							
Aluminum	**19.9**	ug/L	4.0	1	01/31/13 10:22	02/05/13 04:37	7429-90-5	
Antimony	ND	ug/L	0.50	1	01/31/13 10:22	02/05/13 04:37	7440-36-0	
Arsenic	**0.76**	ug/L	0.50	1	01/31/13 10:22	02/05/13 04:37	7440-38-2	
Barium	**63.0**	ug/L	0.30	1	01/31/13 10:22	02/05/13 04:37	7440-39-3	
Beryllium	ND	ug/L	0.20	1	01/31/13 10:22	02/05/13 04:37	7440-41-7	
Cadmium	**0.68**	ug/L	0.080	1	01/31/13 10:22	02/05/13 04:37	7440-43-9	
Calcium	**99600**	ug/L	400	20	01/31/13 10:22	02/05/13 04:41	7440-70-2	
Chromium	ND	ug/L	0.50	1	01/31/13 10:22	02/05/13 04:37	7440-47-3	
Cobalt	ND	ug/L	0.50	1	01/31/13 10:22	02/05/13 04:37	7440-48-4	
Copper	**2.0**	ug/L	0.50	1	01/31/13 10:22	02/05/13 04:37	7440-50-8	
Iron	**358**	ug/L	50.0	1	01/31/13 10:22	02/05/13 04:37	7439-89-6	
Lead	**0.24**	ug/L	0.10	1	01/31/13 10:22	02/05/13 04:37	7439-92-1	
Magnesium	**12700**	ug/L	5.0	1	01/31/13 10:22	02/05/13 04:37	7439-95-4	
Manganese	**432**	ug/L	0.50	1	01/31/13 10:22	02/05/13 04:37	7439-96-5	
Molybdenum	**2.7**	ug/L	0.50	1	01/31/13 10:22	02/05/13 04:37	7439-98-7	
Nickel	ND	ug/L	0.50	1	01/31/13 10:22	02/05/13 04:37	7440-02-0	
Potassium	**2800**	ug/L	20.0	1	01/31/13 10:22	02/05/13 04:37	7440-09-7	
Selenium	**0.52**	ug/L	0.50	1	01/31/13 10:22	02/05/13 04:37	7782-49-2	
Silica	**10500**	ug/L	535	10	01/31/13 10:22	02/06/13 02:26	7631-86-9	
Silver	ND	ug/L	0.50	1	01/31/13 10:22	02/05/13 04:37	7440-22-4	
Sodium	**6560**	ug/L	50.0	1	01/31/13 10:22	02/05/13 04:37	7440-23-5	
Thallium	ND	ug/L	0.10	1	01/31/13 10:22	02/05/13 04:37	7440-28-0	
Total Hardness by 2340B	**301000**	ug/L	1420	20	01/31/13 10:22	02/05/13 04:41		
Vanadium	ND	ug/L	0.10	1	01/31/13 10:22	02/05/13 04:37	7440-62-2	
Zinc	**176**	ug/L	5.0	1	01/31/13 10:22	02/05/13 04:37	7440-66-6	
200.8 MET ICPMS, Dissolved	Analytical Method: EPA 200.8 Preparation Method: EPA 200.8							
Aluminum, Dissolved	ND	ug/L	4.0	1	01/31/13 10:25	02/11/13 14:07	7429-90-5	
Antimony, Dissolved	ND	ug/L	0.50	1	01/31/13 10:25	02/11/13 14:07	7440-36-0	
Arsenic, Dissolved	ND	ug/L	0.50	1	01/31/13 10:25	02/11/13 14:07	7440-38-2	
Barium, Dissolved	**59.7**	ug/L	0.30	1	01/31/13 10:25	02/11/13 14:07	7440-39-3	
Beryllium, Dissolved	ND	ug/L	0.20	1	01/31/13 10:25	02/11/13 14:07	7440-41-7	
Cadmium, Dissolved	ND	ug/L	0.080	1	01/31/13 10:25	02/11/13 14:07	7440-43-9	
Calcium, Dissolved	**92400**	ug/L	100	5	01/31/13 10:25	02/11/13 14:12	7440-70-2	
Chromium, Dissolved	ND	ug/L	0.50	1	01/31/13 10:25	02/11/13 14:07	7440-47-3	
Cobalt, Dissolved	ND	ug/L	0.50	1	01/31/13 10:25	02/11/13 14:07	7440-48-4	
Copper, Dissolved	**0.82**	ug/L	0.50	1	01/31/13 10:25	02/11/13 14:07	7440-50-8	
Iron, Dissolved	**144**	ug/L	50.0	1	01/31/13 10:25	02/11/13 14:07	7439-89-6	
Lead, Dissolved	ND	ug/L	0.10	1	01/31/13 10:25	02/11/13 14:07	7439-92-1	
Magnesium, Dissolved	**11900**	ug/L	5.0	1	01/31/13 10:25	02/11/13 14:07	7439-95-4	

This report shall not be reproduced, except in full,
without the written consent of Pace Analytical Services, Inc..

Pace Analytical Services, Inc.
9608 Loiret Blvd.
Lenexa, KS 66219
(913)599-5665

ANALYTICAL RESULTS

Project: JANUARY 2013 RICO WATER SAMPLI
Pace Project No.: 60137618

Sample: DR-7 COMP_20130124 **Lab ID: 60137618011** Collected: 01/24/13 02:25 Received: 01/26/13 08:50 Matrix: Water

Parameters	Results	Units	Report Limit	DF	Prepared	Analyzed	CAS No.	Qual
200.8 MET ICPMS, Dissolved	Analytical Method: EPA 200.8 Preparation Method: EPA 200.8							
Manganese, Dissolved	**404**	ug/L	0.50	1	01/31/13 10:25	02/11/13 14:07	7439-96-5	
Molybdenum, Dissolved	**2.5**	ug/L	0.50	1	01/31/13 10:25	02/11/13 14:07	7439-98-7	
Nickel, Dissolved	**0.61**	ug/L	0.50	1	01/31/13 10:25	02/11/13 14:07	7440-02-0	
Potassium, Dissolved	**2740**	ug/L	20.0	1	01/31/13 10:25	02/11/13 14:07	7440-09-7	
Selenium, Dissolved	ND	ug/L	0.50	1	01/31/13 10:25	02/11/13 14:07	7782-49-2	
Silver, Dissolved	ND	ug/L	0.50	1	01/31/13 10:25	02/11/13 14:07	7440-22-4	
Sodium, Dissolved	**6320**	ug/L	50.0	1	01/31/13 10:25	02/11/13 14:07	7440-23-5	
Thallium, Dissolved	ND	ug/L	0.10	1	01/31/13 10:25	02/11/13 14:07	7440-28-0	
Vanadium, Dissolved	ND	ug/L	0.10	1	01/31/13 10:25	02/11/13 14:07	7440-62-2	
Zinc, Dissolved	**147**	ug/L	5.0	1	01/31/13 10:25	02/11/13 14:07	7440-66-6	
200.8 Potentially Diss. Metals	Analytical Method: EPA 200.8 Preparation Method: EPA 200.8							
Aluminum, Dissolved	**18.6J**	ug/L	50.0	1	01/30/13 15:50	01/31/13 15:00	7429-90-5	
Antimony, Dissolved	**0.10J**	ug/L	1.0	1	01/30/13 15:50	01/31/13 15:00	7440-36-0	
Arsenic, Dissolved	**0.78J**	ug/L	1.0	1	01/30/13 15:50	01/31/13 15:00	7440-38-2	
Barium, Dissolved	**59.6**	ug/L	1.0	1	01/30/13 15:50	01/31/13 15:00	7440-39-3	
Beryllium, Dissolved	**0.12J**	ug/L	0.50	1	01/30/13 15:50	01/31/13 15:00	7440-41-7	
Cadmium, Dissolved	**0.74**	ug/L	0.50	1	01/30/13 15:50	01/31/13 15:00	7440-43-9	
Chromium, Dissolved	**0.80J**	ug/L	1.0	1	01/30/13 15:50	02/04/13 15:52	7440-47-3	B
Cobalt, Dissolved	**0.38J**	ug/L	1.0	1	01/30/13 15:50	01/31/13 15:00	7440-48-4	
Copper, Dissolved	**2.2**	ug/L	1.0	1	01/30/13 15:50	01/31/13 15:00	7440-50-8	
Iron, Dissolved	**399**	ug/L	50.0	1	01/30/13 15:50	01/31/13 15:00	7439-89-6	
Lead, Dissolved	**0.62J**	ug/L	1.0	1	01/30/13 15:50	01/31/13 15:00	7439-92-1	
Manganese, Dissolved	**421**	ug/L	1.0	1	01/30/13 15:50	01/31/13 15:00	7439-96-5	
Molybdenum, Dissolved	**2.7**	ug/L	1.0	1	01/30/13 15:50	01/31/13 15:00	7439-98-7	
Nickel, Dissolved	ND	ug/L	1.0	1	01/30/13 15:50	01/31/13 15:00	7440-02-0	
Selenium, Dissolved	**0.54J**	ug/L	1.0	1	01/30/13 15:50	01/31/13 15:00	7782-49-2	
Silver, Dissolved	ND	ug/L	0.50	1	01/30/13 15:50	01/31/13 15:00	7440-22-4	
Thallium, Dissolved	**0.067J**	ug/L	1.0	1	01/30/13 15:50	01/31/13 15:00	7440-28-0	
Vanadium, Dissolved	**0.28J**	ug/L	1.0	1	01/30/13 15:50	01/31/13 15:00	7440-62-2	
Zinc, Dissolved	**160**	ug/L	10.0	1	01/30/13 15:50	01/31/13 15:00	7440-66-6	
245.1 Mercury	Analytical Method: EPA 245.1 Preparation Method: EPA 245.1							
Mercury	ND	ug/L	0.20	1	02/07/13 12:29	02/08/13 18:31	7439-97-6	
245.1 Mercury, Dissolved	Analytical Method: EPA 245.1 Preparation Method: EPA 245.1							
Mercury, Dissolved	ND	ug/L	0.20	1	02/06/13 15:39	02/07/13 18:35	7439-97-6	
245.1 Potentially Diss Mercury	Analytical Method: EPA 245.1 Preparation Method: EPA 245.1							
Mercury, Dissolved	ND	ug/L	0.20	1	01/30/13 15:30	01/31/13 09:53	7439-97-6	
2510B Specific Conductance	Analytical Method: SM 2510B							
Specific Conductance	**615**	umhos/cm	10.0	1		01/30/13 15:24		
Salinity	Analytical Method: Calculated							
Salinity (as dissolved solids)	**394**	mg/L	6.0	1		01/31/13 15:31		

This report shall not be reproduced, except in full,
without the written consent of Pace Analytical Services, Inc..

Pace Analytical Services, Inc.
9608 Loiret Blvd.
Lenexa, KS 66219
(913)599-5665

ANALYTICAL RESULTS

Project: JANUARY 2013 RICO WATER SAMPLI
Pace Project No.: 60137618

Sample: DR-7 COMP_20130124 **Lab ID: 60137618011** Collected: 01/24/13 02:25 Received: 01/26/13 08:50 Matrix: Water

Parameters	Results	Units	Report Limit	DF	Prepared	Analyzed	CAS No.	Qual
Salinity	Analytical Method: Calculated							
Salinity (as seawater)	**0.29**	PSU	0.010	1		01/31/13 15:31		
2320B Alkalinity	Analytical Method: SM 2320B							
Alkalinity,Bicarbonate (CaCO3)	**151**	mg/L	20.0	1		01/30/13 13:18		
Alkalinity, Carbonate (CaCO3)	ND	mg/L	20.0	1		01/30/13 13:18		
Alkalinity, Total as CaCO3	**151**	mg/L	20.0	1		01/30/13 13:18		
2540C Total Dissolved Solids	Analytical Method: SM 2540C							
Total Dissolved Solids	**418**	mg/L	5.0	1		01/30/13 09:30		
2540D Total Suspended Solids	Analytical Method: SM 2540D							
Total Suspended Solids	ND	mg/L	5.0	1		01/31/13 09:16		
4500S2D Sulfide, Total	Analytical Method: SM 4500-S-2 D							
Sulfide, Total	ND	mg/L	0.050	1		01/29/13 14:35	18496-25-8	
300.0 IC Anions 28 Days	Analytical Method: EPA 300.0							
Chloride	**1.9**	mg/L	1.0	1		01/30/13 21:06	16887-00-6	
Sulfate	**178**	mg/L	20.0	20		01/30/13 21:24	14808-79-8	
353.2 Nitrogen, NO2/NO3 pres.	Analytical Method: EPA 353.2							
Nitrogen, NO2 plus NO3	ND	mg/L	0.10	1		01/31/13 16:49		
4500CNE Cyanide, Total	Analytical Method: SM 4500-CN-E							
Cyanide	**0.0061**	mg/L	0.0050	1		01/30/13 13:40	57-12-5	
5310C TOC	Analytical Method: SM 5310C							
Total Organic Carbon	ND	mg/L	1.0	1		01/31/13 18:10	7440-44-0	

This report shall not be reproduced, except in full,
without the written consent of Pace Analytical Services, Inc..

Pace Analytical Services, Inc.
9608 Loiret Blvd.
Lenexa, KS 66219
(913)599-5665

ANALYTICAL RESULTS

Project: JANUARY 2013 RICO WATER SAMPLI
Pace Project No.: 60137618

Sample: DR-2 COMP_20130124 **Lab ID: 60137618012** Collected: 01/24/13 02:34 Received: 01/26/13 08:50 Matrix: Water

Parameters	Results	Units	Report Limit	DF	Prepared	Analyzed	CAS No.	Qual
200.7 Potentially Diss. Metals	Analytical Method: EPA 200.7 Preparation Method: EPA 200.7							
Calcium, Dissolved	**70300**	ug/L	100	1	01/30/13 15:50	01/31/13 16:48	7440-70-2	
Magnesium, Dissolved	**8920**	ug/L	50.0	1	01/30/13 15:50	01/31/13 16:48	7439-95-4	
Potassium, Dissolved	**1260**	ug/L	500	1	01/30/13 15:50	01/31/13 16:48	7440-09-7	
Sodium, Dissolved	**4200**	ug/L	500	1	01/30/13 15:50	01/31/13 16:48	7440-23-5	
200.8 MET ICPMS	Analytical Method: EPA 200.8 Preparation Method: EPA 200.8							
Aluminum	**8.9**	ug/L	4.0	1	01/31/13 10:22	02/05/13 04:46	7429-90-5	
Antimony	ND	ug/L	0.50	1	01/31/13 10:22	02/05/13 04:46	7440-36-0	
Arsenic	ND	ug/L	0.50	1	01/31/13 10:22	02/05/13 04:46	7440-38-2	
Barium	**69.4**	ug/L	0.30	1	01/31/13 10:22	02/05/13 04:46	7440-39-3	
Beryllium	ND	ug/L	0.20	1	01/31/13 10:22	02/05/13 04:46	7440-41-7	
Cadmium	ND	ug/L	0.080	1	01/31/13 10:22	02/05/13 04:46	7440-43-9	
Calcium	**71100**	ug/L	400	20	01/31/13 10:22	02/05/13 04:50	7440-70-2	
Chromium	ND	ug/L	0.50	1	01/31/13 10:22	02/05/13 04:46	7440-47-3	
Cobalt	ND	ug/L	0.50	1	01/31/13 10:22	02/05/13 04:46	7440-48-4	
Copper	ND	ug/L	0.50	1	01/31/13 10:22	02/05/13 04:46	7440-50-8	
Iron	**85.5**	ug/L	50.0	1	01/31/13 10:22	02/05/13 04:46	7439-89-6	
Lead	ND	ug/L	0.10	1	01/31/13 10:22	02/05/13 04:46	7439-92-1	
Magnesium	**9550**	ug/L	5.0	1	01/31/13 10:22	02/05/13 04:46	7439-95-4	
Manganese	**262**	ug/L	0.50	1	01/31/13 10:22	02/05/13 04:46	7439-96-5	
Molybdenum	**1.2**	ug/L	0.50	1	01/31/13 10:22	02/05/13 04:46	7439-98-7	
Nickel	ND	ug/L	0.50	1	01/31/13 10:22	02/05/13 04:46	7440-02-0	
Potassium	**524**	ug/L	400	20	01/31/13 10:22	02/05/13 04:50	7440-09-7	
Selenium	**0.73**	ug/L	0.50	1	01/31/13 10:22	02/05/13 04:46	7782-49-2	
Silica	**7350**	ug/L	268	5	01/31/13 10:22	02/06/13 02:30	7631-86-9	
Silver	ND	ug/L	0.50	1	01/31/13 10:22	02/05/13 04:46	7440-22-4	
Sodium	**4240**	ug/L	50.0	1	01/31/13 10:22	02/05/13 04:46	7440-23-5	
Thallium	ND	ug/L	0.10	1	01/31/13 10:22	02/05/13 04:46	7440-28-0	
Total Hardness by 2340B	**217000**	ug/L	1420	20	01/31/13 10:22	02/05/13 04:50		
Vanadium	ND	ug/L	0.10	1	01/31/13 10:22	02/05/13 04:46	7440-62-2	
Zinc	**7.6**	ug/L	5.0	1	01/31/13 10:22	02/05/13 04:46	7440-66-6	
200.8 MET ICPMS, Dissolved	Analytical Method: EPA 200.8 Preparation Method: EPA 200.8							
Aluminum, Dissolved	ND	ug/L	4.0	1	01/31/13 10:25	02/11/13 14:32	7429-90-5	
Antimony, Dissolved	ND	ug/L	0.50	1	01/31/13 10:25	02/11/13 14:32	7440-36-0	
Arsenic, Dissolved	ND	ug/L	0.50	1	01/31/13 10:25	02/11/13 14:32	7440-38-2	
Barium, Dissolved	**66.9**	ug/L	0.30	1	01/31/13 10:25	02/11/13 14:32	7440-39-3	
Beryllium, Dissolved	ND	ug/L	0.20	1	01/31/13 10:25	02/11/13 14:32	7440-41-7	
Cadmium, Dissolved	ND	ug/L	0.080	1	01/31/13 10:25	02/11/13 14:32	7440-43-9	
Calcium, Dissolved	**67400**	ug/L	100	5	01/31/13 10:25	02/11/13 14:37	7440-70-2	
Chromium, Dissolved	ND	ug/L	0.50	1	01/31/13 10:25	02/11/13 14:32	7440-47-3	
Cobalt, Dissolved	ND	ug/L	0.50	1	01/31/13 10:25	02/11/13 14:32	7440-48-4	
Copper, Dissolved	**0.76**	ug/L	0.50	1	01/31/13 10:25	02/11/13 14:32	7440-50-8	
Iron, Dissolved	ND	ug/L	50.0	1	01/31/13 10:25	02/11/13 14:32	7439-89-6	
Lead, Dissolved	ND	ug/L	0.10	1	01/31/13 10:25	02/11/13 14:32	7439-92-1	
Magnesium, Dissolved	**9240**	ug/L	5.0	1	01/31/13 10:25	02/11/13 14:32	7439-95-4	

This report shall not be reproduced, except in full,
without the written consent of Pace Analytical Services, Inc..

Pace Analytical Services, Inc.
9608 Loiret Blvd.
Lenexa, KS 66219
(913)599-5665

ANALYTICAL RESULTS

Project: JANUARY 2013 RICO WATER SAMPLI
Pace Project No.: 60137618

Sample: DR-2 COMP_20130124 **Lab ID: 60137618012** Collected: 01/24/13 02:34 Received: 01/26/13 08:50 Matrix: Water

Parameters	Results	Units	Report Limit	DF	Prepared	Analyzed	CAS No.	Qual
200.8 MET ICPMS, Dissolved	Analytical Method: EPA 200.8 Preparation Method: EPA 200.8							
Manganese, Dissolved	**254**	ug/L	0.50	1	01/31/13 10:25	02/11/13 14:32	7439-96-5	
Molybdenum, Dissolved	**1.3**	ug/L	0.50	1	01/31/13 10:25	02/11/13 14:32	7439-98-7	
Nickel, Dissolved	ND	ug/L	0.50	1	01/31/13 10:25	02/11/13 14:32	7440-02-0	
Potassium, Dissolved	**1160**	ug/L	20.0	1	01/31/13 10:25	02/11/13 14:32	7440-09-7	
Selenium, Dissolved	**0.67**	ug/L	0.50	1	01/31/13 10:25	02/11/13 14:32	7782-49-2	
Silver, Dissolved	ND	ug/L	0.50	1	01/31/13 10:25	02/11/13 14:32	7440-22-4	
Sodium, Dissolved	**4210**	ug/L	50.0	1	01/31/13 10:25	02/11/13 14:32	7440-23-5	
Thallium, Dissolved	ND	ug/L	0.10	1	01/31/13 10:25	02/11/13 14:32	7440-28-0	
Vanadium, Dissolved	ND	ug/L	0.10	1	01/31/13 10:25	02/11/13 14:32	7440-62-2	
Zinc, Dissolved	ND	ug/L	5.0	1	01/31/13 10:25	02/11/13 14:32	7440-66-6	
200.8 Potentially Diss. Metals	Analytical Method: EPA 200.8 Preparation Method: EPA 200.8							
Aluminum, Dissolved	**9.8J**	ug/L	50.0	1	01/30/13 15:50	01/31/13 15:04	7429-90-5	
Antimony, Dissolved	**0.053J**	ug/L	1.0	1	01/30/13 15:50	01/31/13 15:04	7440-36-0	
Arsenic, Dissolved	**0.23J**	ug/L	1.0	1	01/30/13 15:50	01/31/13 15:04	7440-38-2	
Barium, Dissolved	**66.4**	ug/L	1.0	1	01/30/13 15:50	01/31/13 15:04	7440-39-3	
Beryllium, Dissolved	ND	ug/L	0.50	1	01/30/13 15:50	01/31/13 15:04	7440-41-7	
Cadmium, Dissolved	ND	ug/L	0.50	1	01/30/13 15:50	01/31/13 15:04	7440-43-9	
Chromium, Dissolved	**0.62J**	ug/L	1.0	1	01/30/13 15:50	01/31/13 15:04	7440-47-3	B
Cobalt, Dissolved	**0.10J**	ug/L	1.0	1	01/30/13 15:50	01/31/13 15:04	7440-48-4	
Copper, Dissolved	**0.45J**	ug/L	1.0	1	01/30/13 15:50	01/31/13 15:04	7440-50-8	
Iron, Dissolved	**100**	ug/L	50.0	1	01/30/13 15:50	01/31/13 15:04	7439-89-6	
Lead, Dissolved	**0.49J**	ug/L	1.0	1	01/30/13 15:50	01/31/13 15:04	7439-92-1	
Manganese, Dissolved	**261**	ug/L	1.0	1	01/30/13 15:50	01/31/13 15:04	7439-96-5	
Molybdenum, Dissolved	**1.3**	ug/L	1.0	1	01/30/13 15:50	01/31/13 15:04	7439-98-7	
Nickel, Dissolved	ND	ug/L	1.0	1	01/30/13 15:50	01/31/13 15:04	7440-02-0	
Selenium, Dissolved	**0.53J**	ug/L	1.0	1	01/30/13 15:50	01/31/13 15:04	7782-49-2	
Silver, Dissolved	ND	ug/L	0.50	1	01/30/13 15:50	01/31/13 15:04	7440-22-4	
Thallium, Dissolved	ND	ug/L	1.0	1	01/30/13 15:50	01/31/13 15:04	7440-28-0	
Vanadium, Dissolved	ND	ug/L	1.0	1	01/30/13 15:50	01/31/13 15:04	7440-62-2	
Zinc, Dissolved	**10.7**	ug/L	10.0	1	01/30/13 15:50	01/31/13 15:04	7440-66-6	B
245.1 Mercury	Analytical Method: EPA 245.1 Preparation Method: EPA 245.1							
Mercury	ND	ug/L	0.20	1	02/07/13 12:29	02/08/13 18:34	7439-97-6	
245.1 Mercury, Dissolved	Analytical Method: EPA 245.1 Preparation Method: EPA 245.1							
Mercury, Dissolved	ND	ug/L	0.20	1	02/06/13 15:39	02/07/13 18:38	7439-97-6	
245.1 Potentially Diss Mercury	Analytical Method: EPA 245.1 Preparation Method: EPA 245.1							
Mercury, Dissolved	ND	ug/L	0.20	1	01/30/13 15:30	01/31/13 09:56	7439-97-6	
2510B Specific Conductance	Analytical Method: SM 2510B							
Specific Conductance	**451**	umhos/cm	10.0	1		01/30/13 15:27		
Salinity	Analytical Method: Calculated							
Salinity (as dissolved solids)	**289**	mg/L	6.0	1		01/31/13 15:31		

This report shall not be reproduced, except in full,
without the written consent of Pace Analytical Services, Inc..

Pace Analytical Services, Inc.
9608 Loiret Blvd.
Lenexa, KS 66219
(913)599-5665

ANALYTICAL RESULTS

Project: JANUARY 2013 RICO WATER SAMPLI
Pace Project No.: 60137618

Sample: DR-2 COMP_20130124 **Lab ID: 60137618012** Collected: 01/24/13 02:34 Received: 01/26/13 08:50 Matrix: Water

Parameters	Results	Units	Report Limit	DF	Prepared	Analyzed	CAS No.	Qual
Salinity	Analytical Method: Calculated							
Salinity (as seawater)	**0.22**	PSU	0.010	1		01/31/13 15:31		
2320B Alkalinity	Analytical Method: SM 2320B							
Alkalinity,Bicarbonate (CaCO3)	**125**	mg/L	20.0	1		01/30/13 13:31		
Alkalinity, Carbonate (CaCO3)	ND	mg/L	20.0	1		01/30/13 13:31		
Alkalinity, Total as CaCO3	**125**	mg/L	20.0	1		01/30/13 13:31		
2540C Total Dissolved Solids	Analytical Method: SM 2540C							
Total Dissolved Solids	**293**	mg/L	5.0	1		01/30/13 09:30		
2540D Total Suspended Solids	Analytical Method: SM 2540D							
Total Suspended Solids	ND	mg/L	5.0	1		01/31/13 09:16		
4500S2D Sulfide, Total	Analytical Method: SM 4500-S-2 D							
Sulfide, Total	ND	mg/L	0.050	1		01/29/13 14:35	18496-25-8	
300.0 IC Anions 28 Days	Analytical Method: EPA 300.0							
Chloride	**1.6**	mg/L	1.0	1		01/30/13 21:41	16887-00-6	
Sulfate	**105**	mg/L	10.0	10		01/30/13 21:59	14808-79-8	
353.2 Nitrogen, NO2/NO3 pres.	Analytical Method: EPA 353.2							
Nitrogen, NO2 plus NO3	ND	mg/L	0.10	1		01/31/13 16:50		
4500CNE Cyanide, Total	Analytical Method: SM 4500-CN-E							
Cyanide	**0.0051**	mg/L	0.0050	1		01/30/13 13:40	57-12-5	
5310C TOC	Analytical Method: SM 5310C							
Total Organic Carbon	ND	mg/L	1.0	1		01/31/13 18:38	7440-44-0	

This report shall not be reproduced, except in full,
without the written consent of Pace Analytical Services, Inc..

Pace Analytical Services, Inc.
9608 Loiret Blvd.
Lenexa, KS 66219
(913)599-5665

ANALYTICAL RESULTS

Project: JANUARY 2013 RICO WATER SAMPLI
Pace Project No.: 60137618

Sample: MW-204_20130124 **Lab ID: 60137618013** Collected: 01/24/13 02:55 Received: 01/26/13 08:50 Matrix: Water

Parameters	Results	Units	Report Limit	DF	Prepared	Analyzed	CAS No.	Qual
200.7 Potentially Diss. Metals	Analytical Method: EPA 200.7 Preparation Method: EPA 200.7							
Calcium, Dissolved	**246000**	ug/L	100	1	01/30/13 15:50	01/31/13 16:50	7440-70-2	
Magnesium, Dissolved	**21100**	ug/L	50.0	1	01/30/13 15:50	01/31/13 16:50	7439-95-4	
Potassium, Dissolved	**2800**	ug/L	500	1	01/30/13 15:50	01/31/13 16:50	7440-09-7	
Sodium, Dissolved	**11200**	ug/L	500	1	01/30/13 15:50	01/31/13 16:50	7440-23-5	
200.8 MET ICPMS	Analytical Method: EPA 200.8 Preparation Method: EPA 200.8							
Aluminum	**29100**	ug/L	80.0	20	01/31/13 10:22	02/05/13 05:14	7429-90-5	
Antimony	**0.54**	ug/L	0.50	1	01/31/13 10:22	02/05/13 05:09	7440-36-0	
Arsenic	**12.2**	ug/L	0.50	1	01/31/13 10:22	02/05/13 05:09	7440-38-2	
Barium	**304**	ug/L	0.30	1	01/31/13 10:22	02/05/13 05:09	7440-39-3	
Beryllium	**1.6**	ug/L	0.20	1	01/31/13 10:22	02/05/13 05:09	7440-41-7	
Cadmium	**7.7**	ug/L	0.080	1	01/31/13 10:22	02/05/13 05:09	7440-43-9	
Calcium	**259000**	ug/L	400	20	01/31/13 10:22	02/05/13 05:14	7440-70-2	
Chromium	**60.8**	ug/L	0.50	1	01/31/13 10:22	02/05/13 05:09	7440-47-3	
Cobalt	**22.0**	ug/L	0.50	1	01/31/13 10:22	02/05/13 05:09	7440-48-4	
Copper	**56.7**	ug/L	0.50	1	01/31/13 10:22	02/05/13 05:09	7440-50-8	
Iron	**43900**	ug/L	1000	20	01/31/13 10:22	02/05/13 05:14	7439-89-6	
Lead	**104**	ug/L	0.10	1	01/31/13 10:22	02/05/13 05:09	7439-92-1	
Magnesium	**45300**	ug/L	100	20	01/31/13 10:22	02/05/13 05:14	7439-95-4	
Manganese	**2150**	ug/L	10.0	20	01/31/13 10:22	02/05/13 05:14	7439-96-5	
Molybdenum	**8.6**	ug/L	0.50	1	01/31/13 10:22	02/05/13 05:09	7439-98-7	
Nickel	**47.8**	ug/L	0.50	1	01/31/13 10:22	02/05/13 05:09	7440-02-0	
Potassium	**6160**	ug/L	20.0	1	01/31/13 10:22	02/05/13 05:09	7440-09-7	
Selenium	**2.7**	ug/L	0.50	1	01/31/13 10:22	02/05/13 05:09	7782-49-2	
Silica	**90900**	ug/L	1070	20	01/31/13 10:22	02/06/13 02:35	7631-86-9	
Silver	ND	ug/L	0.50	1	01/31/13 10:22	02/05/13 05:09	7440-22-4	
Sodium	**11600**	ug/L	50.0	1	01/31/13 10:22	02/05/13 05:09	7440-23-5	
Thallium	**0.45**	ug/L	0.10	1	01/31/13 10:22	02/05/13 05:09	7440-28-0	
Total Hardness by 2340B	**833000**	ug/L	1420	20	01/31/13 10:22	02/05/13 05:14		
Vanadium	**47.7**	ug/L	0.10	1	01/31/13 10:22	02/05/13 05:09	7440-62-2	
Zinc	**286**	ug/L	5.0	1	01/31/13 10:22	02/05/13 05:09	7440-66-6	
200.8 MET ICPMS, Dissolved	Analytical Method: EPA 200.8 Preparation Method: EPA 200.8							
Aluminum, Dissolved	**6850**	ug/L	4.0	1	01/31/13 10:25	02/11/13 14:41	7429-90-5	
Antimony, Dissolved	ND	ug/L	0.50	1	01/31/13 10:25	02/11/13 14:41	7440-36-0	
Arsenic, Dissolved	**2.6**	ug/L	0.50	1	01/31/13 10:25	02/11/13 14:41	7440-38-2	
Barium, Dissolved	**88.2**	ug/L	0.30	1	01/31/13 10:25	02/11/13 14:41	7440-39-3	
Beryllium, Dissolved	**0.53**	ug/L	0.20	1	01/31/13 10:25	02/11/13 14:41	7440-41-7	
Cadmium, Dissolved	**2.6**	ug/L	0.080	1	01/31/13 10:25	02/11/13 14:41	7440-43-9	
Calcium, Dissolved	**268000**	ug/L	400	20	01/31/13 10:25	02/08/13 23:07	7440-70-2	
Chromium, Dissolved	**13.4**	ug/L	0.50	1	01/31/13 10:25	02/11/13 14:41	7440-47-3	
Cobalt, Dissolved	**6.2**	ug/L	0.50	1	01/31/13 10:25	02/11/13 14:41	7440-48-4	
Copper, Dissolved	**13.5**	ug/L	0.50	1	01/31/13 10:25	02/11/13 14:41	7440-50-8	
Iron, Dissolved	**9220**	ug/L	50.0	1	01/31/13 10:25	02/11/13 14:41	7439-89-6	
Lead, Dissolved	**25.5**	ug/L	0.10	1	01/31/13 10:25	02/11/13 14:41	7439-92-1	
Magnesium, Dissolved	**24700**	ug/L	25.0	5	01/31/13 10:25	02/11/13 14:46	7439-95-4	

This report shall not be reproduced, except in full,
without the written consent of Pace Analytical Services, Inc..

Pace Analytical Services, Inc.
9608 Loiret Blvd.
Lenexa, KS 66219
(913)599-5665

ANALYTICAL RESULTS

Project: JANUARY 2013 RICO WATER SAMPLI
Pace Project No.: 60137618

Sample: MW-204_20130124 **Lab ID: 60137618013** Collected: 01/24/13 02:55 Received: 01/26/13 08:50 Matrix: Water

Parameters	Results	Units	Report Limit	DF	Prepared	Analyzed	CAS No.	Qual
200.8 MET ICPMS, Dissolved	Analytical Method: EPA 200.8 Preparation Method: EPA 200.8							
Manganese, Dissolved	**1310**	ug/L	2.5	5	01/31/13 10:25	02/11/13 14:46	7439-96-5	
Molybdenum, Dissolved	**4.4**	ug/L	0.50	1	01/31/13 10:25	02/11/13 14:41	7439-98-7	
Nickel, Dissolved	**14.0**	ug/L	0.50	1	01/31/13 10:25	02/11/13 14:41	7440-02-0	
Potassium, Dissolved	**3120**	ug/L	20.0	1	01/31/13 10:25	02/11/13 14:41	7440-09-7	
Selenium, Dissolved	**0.77**	ug/L	0.50	1	01/31/13 10:25	02/11/13 14:41	7782-49-2	
Silver, Dissolved	ND	ug/L	0.50	1	01/31/13 10:25	02/11/13 14:41	7440-22-4	
Sodium, Dissolved	**10500**	ug/L	50.0	1	01/31/13 10:25	02/11/13 14:41	7440-23-5	
Thallium, Dissolved	**0.14**	ug/L	0.10	1	01/31/13 10:25	02/11/13 14:41	7440-28-0	
Vanadium, Dissolved	**11.2**	ug/L	0.10	1	01/31/13 10:25	02/11/13 14:41	7440-62-2	
Zinc, Dissolved	**71.7**	ug/L	5.0	1	01/31/13 10:25	02/11/13 14:41	7440-66-6	
200.8 Potentially Diss. Metals	Analytical Method: EPA 200.8 Preparation Method: EPA 200.8							
Aluminum, Dissolved	**3370**	ug/L	50.0	1	01/30/13 15:50	01/31/13 15:13	7429-90-5	
Antimony, Dissolved	**0.14J**	ug/L	1.0	1	01/30/13 15:50	01/31/13 15:13	7440-36-0	
Arsenic, Dissolved	**1.6**	ug/L	1.0	1	01/30/13 15:50	01/31/13 15:13	7440-38-2	
Barium, Dissolved	**60.8**	ug/L	1.0	1	01/30/13 15:50	01/31/13 15:13	7440-39-3	
Beryllium, Dissolved	**0.93**	ug/L	0.50	1	01/30/13 15:50	01/31/13 15:13	7440-41-7	
Cadmium, Dissolved	**7.0**	ug/L	0.50	1	01/30/13 15:50	01/31/13 15:13	7440-43-9	
Chromium, Dissolved	**12.8**	ug/L	1.0	1	01/30/13 15:50	01/31/13 15:13	7440-47-3	
Cobalt, Dissolved	**11.1**	ug/L	1.0	1	01/30/13 15:50	01/31/13 15:13	7440-48-4	
Copper, Dissolved	**24.7**	ug/L	1.0	1	01/30/13 15:50	01/31/13 15:13	7440-50-8	
Iron, Dissolved	**8590**	ug/L	50.0	1	01/30/13 15:50	01/31/13 15:13	7439-89-6	
Lead, Dissolved	**64.7**	ug/L	1.0	1	01/30/13 15:50	01/31/13 15:13	7439-92-1	
Manganese, Dissolved	**1680**	ug/L	1.0	1	01/30/13 15:50	01/31/13 15:13	7439-96-5	
Molybdenum, Dissolved	**3.5**	ug/L	1.0	1	01/30/13 15:50	01/31/13 15:13	7439-98-7	
Nickel, Dissolved	**14.5**	ug/L	1.0	1	01/30/13 15:50	01/31/13 15:13	7440-02-0	
Selenium, Dissolved	**1.2**	ug/L	1.0	1	01/30/13 15:50	01/31/13 15:13	7782-49-2	
Silver, Dissolved	**0.10J**	ug/L	0.50	1	01/30/13 15:50	01/31/13 15:13	7440-22-4	
Thallium, Dissolved	**0.17J**	ug/L	1.0	1	01/30/13 15:50	01/31/13 15:13	7440-28-0	
Vanadium, Dissolved	**7.1**	ug/L	1.0	1	01/30/13 15:50	01/31/13 15:13	7440-62-2	
Zinc, Dissolved	**108**	ug/L	10.0	1	01/30/13 15:50	01/31/13 15:13	7440-66-6	
245.1 Mercury	Analytical Method: EPA 245.1 Preparation Method: EPA 245.1							
Mercury	ND	ug/L	0.20	1	02/07/13 12:29	02/08/13 18:36	7439-97-6	
245.1 Mercury, Dissolved	Analytical Method: EPA 245.1 Preparation Method: EPA 245.1							
Mercury, Dissolved	ND	ug/L	0.20	1	02/06/13 15:39	02/07/13 18:45	7439-97-6	
245.1 Potentially Diss Mercury	Analytical Method: EPA 245.1 Preparation Method: EPA 245.1							
Mercury, Dissolved	ND	ug/L	0.20	1	01/30/13 15:30	01/31/13 09:58	7439-97-6	
2510B Specific Conductance	Analytical Method: SM 2510B							
Specific Conductance	**1270**	umhos/cm	10.0	1		01/30/13 15:53		
Salinity	Analytical Method: Calculated							
Salinity (as dissolved solids)	**814**	mg/L	6.0	1		01/31/13 15:31		

This report shall not be reproduced, except in full,
without the written consent of Pace Analytical Services, Inc..

Pace Analytical Services, Inc.
9608 Loiret Blvd.
Lenexa, KS 66219
(913)599-5665

ANALYTICAL RESULTS

Project: JANUARY 2013 RICO WATER SAMPLI
Pace Project No.: 60137618

Sample: MW-204_20130124 **Lab ID: 60137618013** Collected: 01/24/13 02:55 Received: 01/26/13 08:50 Matrix: Water

Parameters	Results	Units	Report Limit	DF	Prepared	Analyzed	CAS No.	Qual
Salinity	Analytical Method: Calculated							
Salinity (as seawater)	**0.63**	PSU	0.010	1		01/31/13 15:31		
2320B Alkalinity	Analytical Method: SM 2320B							
Alkalinity,Bicarbonate (CaCO3)	**132**	mg/L	20.0	1		01/30/13 13:35		
Alkalinity, Carbonate (CaCO3)	ND	mg/L	20.0	1		01/30/13 13:35		
Alkalinity, Total as CaCO3	**132**	mg/L	20.0	1		01/30/13 13:35		
2540C Total Dissolved Solids	Analytical Method: SM 2540C							
Total Dissolved Solids	**1060**	mg/L	5.0	1		01/30/13 09:30		
2540D Total Suspended Solids	Analytical Method: SM 2540D							
Total Suspended Solids	**500**	mg/L	5.0	1		01/31/13 09:16		
4500S2D Sulfide, Total	Analytical Method: SM 4500-S-2 D							
Sulfide, Total	ND	mg/L	0.050	1		01/29/13 14:35	18496-25-8	
300.0 IC Anions 28 Days	Analytical Method: EPA 300.0							
Chloride	ND	mg/L	1.0	1		01/30/13 22:17	16887-00-6	
Sulfate	**639**	mg/L	50.0	50		01/30/13 22:34	14808-79-8	
353.2 Nitrogen, NO2/NO3 pres.	Analytical Method: EPA 353.2							
Nitrogen, NO2 plus NO3	ND	mg/L	0.10	1		01/31/13 16:50		
4500CNE Cyanide, Total	Analytical Method: SM 4500-CN-E							
Cyanide	**0.0051**	mg/L	0.0050	1		01/30/13 13:43	57-12-5	
5310C TOC	Analytical Method: SM 5310C							
Total Organic Carbon	**1.9**	mg/L	1.0	1		01/31/13 19:21	7440-44-0	

This report shall not be reproduced, except in full,
without the written consent of Pace Analytical Services, Inc..

Pace Analytical Services, Inc.
9608 Loiret Blvd.
Lenexa, KS 66219
(913)599-5665

ANALYTICAL RESULTS

Project: JANUARY 2013 RICO WATER SAMPLI
Pace Project No.: 60137618

Sample: MW-102_20130124 **Lab ID: 60137618014** Collected: 01/24/13 03:15 Received: 01/26/13 08:50 Matrix: Water

Parameters	Results	Units	Report Limit	DF	Prepared	Analyzed	CAS No.	Qual
200.7 Potentially Diss. Metals	Analytical Method: EPA 200.7 Preparation Method: EPA 200.7							
Calcium, Dissolved	**199000**	ug/L	100	1	01/30/13 15:50	01/31/13 16:54	7440-70-2	
Magnesium, Dissolved	**20800**	ug/L	50.0	1	01/30/13 15:50	01/31/13 16:54	7439-95-4	
Potassium, Dissolved	**3240**	ug/L	500	1	01/30/13 15:50	01/31/13 16:54	7440-09-7	
Sodium, Dissolved	**6020**	ug/L	500	1	01/30/13 15:50	01/31/13 16:54	7440-23-5	
200.8 MET ICPMS	Analytical Method: EPA 200.8 Preparation Method: EPA 200.8							
Aluminum	**55300**	ug/L	20.0	5	01/31/13 10:22	02/06/13 02:59	7429-90-5	
Antimony	**0.99**	ug/L	0.50	1	01/31/13 10:22	02/05/13 05:18	7440-36-0	
Arsenic	**79.5**	ug/L	0.50	1	01/31/13 10:22	02/05/13 05:18	7440-38-2	
Barium	**447**	ug/L	0.30	1	01/31/13 10:22	02/05/13 05:18	7440-39-3	
Beryllium	**5.3**	ug/L	0.20	1	01/31/13 10:22	02/05/13 05:18	7440-41-7	
Cadmium	**14.0**	ug/L	0.080	1	01/31/13 10:22	02/05/13 05:18	7440-43-9	
Calcium	**239000**	ug/L	400	20	01/31/13 10:22	02/05/13 05:24	7440-70-2	
Chromium	**80.7**	ug/L	0.50	1	01/31/13 10:22	02/05/13 05:18	7440-47-3	
Cobalt	**105**	ug/L	0.50	1	01/31/13 10:22	02/05/13 05:18	7440-48-4	
Copper	**281**	ug/L	0.50	1	01/31/13 10:22	02/05/13 05:18	7440-50-8	
Iron	**93300**	ug/L	250	5	01/31/13 10:22	02/06/13 02:59	7439-89-6	
Lead	**445**	ug/L	0.50	5	01/31/13 10:22	02/06/13 02:59	7439-92-1	
Magnesium	**60300**	ug/L	25.0	5	01/31/13 10:22	02/06/13 02:59	7439-95-4	
Manganese	**12300**	ug/L	50.0	100	01/31/13 10:22	02/06/13 03:08	7439-96-5	
Molybdenum	**29.3**	ug/L	0.50	1	01/31/13 10:22	02/05/13 05:18	7439-98-7	
Nickel	**89.6**	ug/L	0.50	1	01/31/13 10:22	02/05/13 05:18	7440-02-0	
Potassium	**8790**	ug/L	20.0	1	01/31/13 10:22	02/05/13 05:18	7440-09-7	
Selenium	**13.2**	ug/L	0.50	1	01/31/13 10:22	02/05/13 05:18	7782-49-2	
Silica	**135000**	ug/L	5350	100	01/31/13 10:22	02/06/13 03:08	7631-86-9	
Silver	**1.4**	ug/L	0.50	1	01/31/13 10:22	02/05/13 05:18	7440-22-4	
Sodium	**7540**	ug/L	50.0	1	01/31/13 10:22	02/05/13 05:18	7440-23-5	
Thallium	**1.1**	ug/L	0.50	5	01/31/13 10:22	02/06/13 02:59	7440-28-0	
Total Hardness by 2340B	**846000**	ug/L	1420	20	01/31/13 10:22	02/05/13 05:24		
Vanadium	**94.9**	ug/L	0.10	1	01/31/13 10:22	02/05/13 05:18	7440-62-2	
Zinc	**2460**	ug/L	100	20	01/31/13 10:22	02/05/13 05:24	7440-66-6	
200.8 MET ICPMS, Dissolved	Analytical Method: EPA 200.8 Preparation Method: EPA 200.8							
Aluminum, Dissolved	**15.6**	ug/L	4.0	1	01/31/13 10:25	02/11/13 14:50	7429-90-5	
Antimony, Dissolved	ND	ug/L	0.50	1	01/31/13 10:25	02/11/13 14:50	7440-36-0	
Arsenic, Dissolved	ND	ug/L	0.50	1	01/31/13 10:25	02/11/13 14:50	7440-38-2	
Barium, Dissolved	**14.3**	ug/L	0.30	1	01/31/13 10:25	02/11/13 14:50	7440-39-3	
Beryllium, Dissolved	ND	ug/L	0.20	1	01/31/13 10:25	02/11/13 14:50	7440-41-7	
Cadmium, Dissolved	**0.89**	ug/L	0.080	1	01/31/13 10:25	02/11/13 14:50	7440-43-9	
Calcium, Dissolved	**251000**	ug/L	400	20	01/31/13 10:25	02/08/13 23:36	7440-70-2	
Chromium, Dissolved	ND	ug/L	0.50	1	01/31/13 10:25	02/11/13 14:50	7440-47-3	
Cobalt, Dissolved	ND	ug/L	0.50	1	01/31/13 10:25	02/11/13 14:50	7440-48-4	
Copper, Dissolved	**1.3**	ug/L	0.50	1	01/31/13 10:25	02/11/13 14:50	7440-50-8	
Iron, Dissolved	ND	ug/L	50.0	1	01/31/13 10:25	02/11/13 14:50	7439-89-6	
Lead, Dissolved	**0.12**	ug/L	0.10	1	01/31/13 10:25	02/11/13 14:50	7439-92-1	
Magnesium, Dissolved	**19800**	ug/L	5.0	1	01/31/13 10:25	02/11/13 14:50	7439-95-4	

This report shall not be reproduced, except in full,
without the written consent of Pace Analytical Services, Inc..

Pace Analytical Services, Inc.
9608 Loiret Blvd.
Lenexa, KS 66219
(913)599-5665

ANALYTICAL RESULTS

Project: JANUARY 2013 RICO WATER SAMPLI
Pace Project No.: 60137618

Sample: MW-102_20130124 **Lab ID: 60137618014** Collected: 01/24/13 03:15 Received: 01/26/13 08:50 Matrix: Water

Parameters	Results	Units	Report Limit	DF	Prepared	Analyzed	CAS No.	Qual
200.8 MET ICPMS, Dissolved	Analytical Method: EPA 200.8 Preparation Method: EPA 200.8							
Manganese, Dissolved	**190**	ug/L	0.50	1	01/31/13 10:25	02/11/13 14:50	7439-96-5	
Molybdenum, Dissolved	**1.8**	ug/L	0.50	1	01/31/13 10:25	02/11/13 14:50	7439-98-7	
Nickel, Dissolved	**3.8**	ug/L	0.50	1	01/31/13 10:25	02/11/13 14:50	7440-02-0	
Potassium, Dissolved	**2280**	ug/L	20.0	1	01/31/13 10:25	02/11/13 14:50	7440-09-7	
Selenium, Dissolved	**1.8**	ug/L	0.50	1	01/31/13 10:25	02/11/13 14:50	7782-49-2	
Silver, Dissolved	ND	ug/L	0.50	1	01/31/13 10:25	02/11/13 14:50	7440-22-4	
Sodium, Dissolved	**6080**	ug/L	50.0	1	01/31/13 10:25	02/11/13 14:50	7440-23-5	
Thallium, Dissolved	ND	ug/L	0.10	1	01/31/13 10:25	02/11/13 14:50	7440-28-0	
Vanadium, Dissolved	ND	ug/L	0.10	1	01/31/13 10:25	02/11/13 14:50	7440-62-2	
Zinc, Dissolved	**72.1**	ug/L	5.0	1	01/31/13 10:25	02/11/13 14:50	7440-66-6	
200.8 Potentially Diss. Metals	Analytical Method: EPA 200.8 Preparation Method: EPA 200.8							
Aluminum, Dissolved	**10900**	ug/L	50.0	1	01/30/13 15:50	01/31/13 15:17	7429-90-5	
Antimony, Dissolved	**0.13J**	ug/L	1.0	1	01/30/13 15:50	01/31/13 15:17	7440-36-0	
Arsenic, Dissolved	**4.1**	ug/L	1.0	1	01/30/13 15:50	01/31/13 15:17	7440-38-2	
Barium, Dissolved	**89.7**	ug/L	1.0	1	01/30/13 15:50	01/31/13 15:17	7440-39-3	
Beryllium, Dissolved	**4.2**	ug/L	0.50	1	01/30/13 15:50	01/31/13 15:17	7440-41-7	
Cadmium, Dissolved	**10.9**	ug/L	0.50	1	01/30/13 15:50	01/31/13 15:17	7440-43-9	
Chromium, Dissolved	**15.1**	ug/L	1.0	1	01/30/13 15:50	01/31/13 15:17	7440-47-3	
Cobalt, Dissolved	**27.8**	ug/L	1.0	1	01/30/13 15:50	01/31/13 15:17	7440-48-4	
Copper, Dissolved	**126**	ug/L	1.0	1	01/30/13 15:50	01/31/13 15:17	7440-50-8	
Iron, Dissolved	**8030**	ug/L	50.0	1	01/30/13 15:50	01/31/13 15:17	7439-89-6	
Lead, Dissolved	**162**	ug/L	1.0	1	01/30/13 15:50	01/31/13 15:17	7439-92-1	
Manganese, Dissolved	**3570**	ug/L	1.0	1	01/30/13 15:50	01/31/13 15:17	7439-96-5	
Molybdenum, Dissolved	**0.53J**	ug/L	1.0	1	01/30/13 15:50	01/31/13 15:17	7439-98-7	
Nickel, Dissolved	**23.2**	ug/L	1.0	1	01/30/13 15:50	01/31/13 15:17	7440-02-0	
Selenium, Dissolved	**9.5**	ug/L	1.0	1	01/30/13 15:50	01/31/13 15:17	7782-49-2	
Silver, Dissolved	**0.63**	ug/L	0.50	1	01/30/13 15:50	01/31/13 15:17	7440-22-4	
Thallium, Dissolved	**0.039J**	ug/L	1.0	1	01/30/13 15:50	01/31/13 15:17	7440-28-0	
Vanadium, Dissolved	**6.8**	ug/L	1.0	1	01/30/13 15:50	01/31/13 15:17	7440-62-2	
Zinc, Dissolved	**1320**	ug/L	10.0	1	01/30/13 15:50	01/31/13 15:17	7440-66-6	
245.1 Mercury	Analytical Method: EPA 245.1 Preparation Method: EPA 245.1							
Mercury	ND	ug/L	0.20	1	02/07/13 12:29	02/08/13 18:39	7439-97-6	
245.1 Mercury, Dissolved	Analytical Method: EPA 245.1 Preparation Method: EPA 245.1							
Mercury, Dissolved	ND	ug/L	0.20	1	02/06/13 15:39	02/07/13 18:48	7439-97-6	
245.1 Potentially Diss Mercury	Analytical Method: EPA 245.1 Preparation Method: EPA 245.1							
Mercury, Dissolved	ND	ug/L	0.20	1	01/30/13 15:30	01/31/13 10:00	7439-97-6	
2510B Specific Conductance	Analytical Method: SM 2510B							
Specific Conductance	**1180**	umhos/cm	10.0	1		01/30/13 15:56		
Salinity	Analytical Method: Calculated							
Salinity (as dissolved solids)	**753**	mg/L	6.0	1		01/31/13 15:31		

This report shall not be reproduced, except in full,
without the written consent of Pace Analytical Services, Inc..

Pace Analytical Services, Inc.
9608 Loiret Blvd.
Lenexa, KS 66219
(913)599-5665

ANALYTICAL RESULTS

Project: JANUARY 2013 RICO WATER SAMPLI
Pace Project No.: 60137618

Sample: MW-102_20130124 **Lab ID: 60137618014** Collected: 01/24/13 03:15 Received: 01/26/13 08:50 Matrix: Water

Parameters	Results	Units	Report Limit	DF	Prepared	Analyzed	CAS No.	Qual
Salinity	Analytical Method: Calculated							
Salinity (as seawater)	**0.58**	PSU	0.010	1		01/31/13 15:31		
2320B Alkalinity	Analytical Method: SM 2320B							
Alkalinity,Bicarbonate (CaCO3)	**222**	mg/L	20.0	1		01/30/13 13:40		
Alkalinity, Carbonate (CaCO3)	ND	mg/L	20.0	1		01/30/13 13:40		
Alkalinity, Total as CaCO3	**222**	mg/L	20.0	1		01/30/13 13:40		
2540C Total Dissolved Solids	Analytical Method: SM 2540C							
Total Dissolved Solids	**911**	mg/L	5.0	1		01/30/13 09:30		
2540D Total Suspended Solids	Analytical Method: SM 2540D							
Total Suspended Solids	**367**	mg/L	5.0	1		01/31/13 09:16		
4500S2D Sulfide, Total	Analytical Method: SM 4500-S-2 D							
Sulfide, Total	ND	mg/L	0.050	1		01/29/13 14:35	18496-25-8	
300.0 IC Anions 28 Days	Analytical Method: EPA 300.0							
Chloride	**1.0**	mg/L	1.0	1		01/30/13 22:52	16887-00-6	
Sulfate	**477**	mg/L	50.0	50		01/30/13 23:10	14808-79-8	
353.2 Nitrogen, NO2/NO3 pres.	Analytical Method: EPA 353.2							
Nitrogen, NO2 plus NO3	**0.38**	mg/L	0.10	1		01/31/13 16:51		
4500CNE Cyanide, Total	Analytical Method: SM 4500-CN-E							
Cyanide	ND	mg/L	0.0050	1		01/30/13 13:43	57-12-5	
5310C TOC	Analytical Method: SM 5310C							
Total Organic Carbon	**2.5**	mg/L	1.0	1		01/31/13 19:35	7440-44-0	

This report shall not be reproduced, except in full,
without the written consent of Pace Analytical Services, Inc..

Pace Analytical Services, Inc.
9608 Loiret Blvd.
Lenexa, KS 66219
(913)599-5665

ANALYTICAL RESULTS

Project: JANUARY 2013 RICO WATER SAMPLI
Pace Project No.: 60137618

Sample: AT-2_20130124 **Lab ID: 60137618015** Collected: 01/24/13 03:31 Received: 01/26/13 08:50 Matrix: Water

Parameters	Results	Units	Report Limit	DF	Prepared	Analyzed	CAS No.	Qual
200.7 Potentially Diss. Metals	Analytical Method: EPA 200.7 Preparation Method: EPA 200.7							
Calcium, Dissolved	**155000**	ug/L	100	1	01/30/13 15:50	01/31/13 16:59	7440-70-2	
Magnesium, Dissolved	**11500**	ug/L	50.0	1	01/30/13 15:50	01/31/13 16:59	7439-95-4	
Potassium, Dissolved	**5740**	ug/L	500	1	01/30/13 15:50	01/31/13 16:59	7440-09-7	
Sodium, Dissolved	**9620**	ug/L	500	1	01/30/13 15:50	01/31/13 16:59	7440-23-5	
200.8 MET ICPMS	Analytical Method: EPA 200.8 Preparation Method: EPA 200.8							
Aluminum	**5700**	ug/L	4.0	1	01/31/13 10:22	02/05/13 05:28	7429-90-5	
Antimony	**0.55**	ug/L	0.50	1	01/31/13 10:22	02/05/13 05:28	7440-36-0	
Arsenic	**5.0**	ug/L	0.50	1	01/31/13 10:22	02/05/13 05:28	7440-38-2	
Barium	**110**	ug/L	0.30	1	01/31/13 10:22	02/05/13 05:28	7440-39-3	
Beryllium	**0.64**	ug/L	0.20	1	01/31/13 10:22	02/05/13 05:28	7440-41-7	
Cadmium	**1.8**	ug/L	0.080	1	01/31/13 10:22	02/05/13 05:28	7440-43-9	
Calcium	**172000**	ug/L	400	20	01/31/13 10:22	02/05/13 05:33	7440-70-2	
Chromium	**9.3**	ug/L	0.50	1	01/31/13 10:22	02/05/13 05:28	7440-47-3	
Cobalt	**4.0**	ug/L	0.50	1	01/31/13 10:22	02/05/13 05:28	7440-48-4	
Copper	**110**	ug/L	0.50	1	01/31/13 10:22	02/05/13 05:28	7440-50-8	
Iron	**58300**	ug/L	1000	20	01/31/13 10:22	02/05/13 05:33	7439-89-6	
Lead	**57.3**	ug/L	0.10	1	01/31/13 10:22	02/05/13 05:28	7439-92-1	
Magnesium	**16800**	ug/L	5.0	1	01/31/13 10:22	02/05/13 05:28	7439-95-4	
Manganese	**1550**	ug/L	10.0	20	01/31/13 10:22	02/05/13 05:33	7439-96-5	
Molybdenum	**18.1**	ug/L	0.50	1	01/31/13 10:22	02/05/13 05:28	7439-98-7	
Nickel	**9.0**	ug/L	0.50	1	01/31/13 10:22	02/05/13 05:28	7440-02-0	
Potassium	**6800**	ug/L	20.0	1	01/31/13 10:22	02/05/13 05:28	7440-09-7	
Selenium	**0.86**	ug/L	0.50	1	01/31/13 10:22	02/05/13 05:28	7782-49-2	
Silica	**18600**	ug/L	535	10	01/31/13 10:22	02/06/13 02:39	7631-86-9	
Silver	ND	ug/L	0.50	1	01/31/13 10:22	02/05/13 05:28	7440-22-4	
Sodium	**10700**	ug/L	50.0	1	01/31/13 10:22	02/05/13 05:28	7440-23-5	
Thallium	**0.11**	ug/L	0.10	1	01/31/13 10:22	02/05/13 05:28	7440-28-0	
Total Hardness by 2340B	**498000**	ug/L	1420	20	01/31/13 10:22	02/05/13 05:33		
Vanadium	**8.4**	ug/L	0.10	1	01/31/13 10:22	02/05/13 05:28	7440-62-2	
Zinc	**517**	ug/L	100	20	01/31/13 10:22	02/05/13 05:33	7440-66-6	
200.8 MET ICPMS, Dissolved	Analytical Method: EPA 200.8 Preparation Method: EPA 200.8							
Aluminum, Dissolved	**23.1**	ug/L	4.0	1	01/31/13 10:25	02/11/13 14:59	7429-90-5	
Antimony, Dissolved	ND	ug/L	0.50	1	01/31/13 10:25	02/11/13 14:59	7440-36-0	
Arsenic, Dissolved	ND	ug/L	0.50	1	01/31/13 10:25	02/11/13 14:59	7440-38-2	
Barium, Dissolved	**63.2**	ug/L	0.30	1	01/31/13 10:25	02/11/13 14:59	7440-39-3	
Beryllium, Dissolved	ND	ug/L	0.20	1	01/31/13 10:25	02/11/13 14:59	7440-41-7	
Cadmium, Dissolved	ND	ug/L	0.080	1	01/31/13 10:25	02/11/13 14:59	7440-43-9	
Calcium, Dissolved	**182000**	ug/L	400	20	01/31/13 10:25	02/08/13 23:50	7440-70-2	
Chromium, Dissolved	ND	ug/L	0.50	1	01/31/13 10:25	02/11/13 14:59	7440-47-3	
Cobalt, Dissolved	ND	ug/L	0.50	1	01/31/13 10:25	02/11/13 14:59	7440-48-4	
Copper, Dissolved	**1.5**	ug/L	0.50	1	01/31/13 10:25	02/11/13 14:59	7440-50-8	
Iron, Dissolved	**190**	ug/L	50.0	1	01/31/13 10:25	02/11/13 14:59	7439-89-6	
Lead, Dissolved	**0.25**	ug/L	0.10	1	01/31/13 10:25	02/11/13 14:59	7439-92-1	
Magnesium, Dissolved	**11000**	ug/L	5.0	1	01/31/13 10:25	02/11/13 14:59	7439-95-4	

This report shall not be reproduced, except in full,
without the written consent of Pace Analytical Services, Inc..

Pace Analytical Services, Inc.
9608 Loiret Blvd.
Lenexa, KS 66219
(913)599-5665

ANALYTICAL RESULTS

Project: JANUARY 2013 RICO WATER SAMPLI
Pace Project No.: 60137618

Sample: AT-2_20130124 **Lab ID: 60137618015** Collected: 01/24/13 03:31 Received: 01/26/13 08:50 Matrix: Water

Parameters	Results	Units	Report Limit	DF	Prepared	Analyzed	CAS No.	Qual
200.8 MET ICPMS, Dissolved	Analytical Method: EPA 200.8 Preparation Method: EPA 200.8							
Manganese, Dissolved	**288**	ug/L	0.50	1	01/31/13 10:25	02/11/13 14:59	7439-96-5	
Molybdenum, Dissolved	**7.3**	ug/L	0.50	1	01/31/13 10:25	02/11/13 14:59	7439-98-7	
Nickel, Dissolved	**0.87**	ug/L	0.50	1	01/31/13 10:25	02/11/13 14:59	7440-02-0	
Potassium, Dissolved	**5130**	ug/L	20.0	1	01/31/13 10:25	02/11/13 14:59	7440-09-7	
Selenium, Dissolved	ND	ug/L	0.50	1	01/31/13 10:25	02/11/13 14:59	7782-49-2	
Silver, Dissolved	ND	ug/L	0.50	1	01/31/13 10:25	02/11/13 14:59	7440-22-4	
Sodium, Dissolved	**9050**	ug/L	50.0	1	01/31/13 10:25	02/11/13 14:59	7440-23-5	
Thallium, Dissolved	ND	ug/L	0.10	1	01/31/13 10:25	02/11/13 14:59	7440-28-0	
Vanadium, Dissolved	ND	ug/L	0.10	1	01/31/13 10:25	02/11/13 14:59	7440-62-2	
Zinc, Dissolved	**7.1**	ug/L	5.0	1	01/31/13 10:25	02/11/13 14:59	7440-66-6	
200.8 Potentially Diss. Metals	Analytical Method: EPA 200.8 Preparation Method: EPA 200.8							
Aluminum, Dissolved	**1080**	ug/L	50.0	1	01/30/13 15:50	01/31/13 15:21	7429-90-5	
Antimony, Dissolved	**0.097J**	ug/L	1.0	1	01/30/13 15:50	01/31/13 15:21	7440-36-0	
Arsenic, Dissolved	**0.82J**	ug/L	1.0	1	01/30/13 15:50	01/31/13 15:21	7440-38-2	
Barium, Dissolved	**82.7**	ug/L	1.0	1	01/30/13 15:50	01/31/13 15:21	7440-39-3	
Beryllium, Dissolved	**0.46J**	ug/L	0.50	1	01/30/13 15:50	01/31/13 15:21	7440-41-7	
Cadmium, Dissolved	**1.7**	ug/L	0.50	1	01/30/13 15:50	01/31/13 15:21	7440-43-9	
Chromium, Dissolved	**3.0**	ug/L	1.0	1	01/30/13 15:50	01/31/13 15:21	7440-47-3	B
Cobalt, Dissolved	**2.7**	ug/L	1.0	1	01/30/13 15:50	01/31/13 15:21	7440-48-4	
Copper, Dissolved	**66.1**	ug/L	1.0	1	01/30/13 15:50	01/31/13 15:21	7440-50-8	
Iron, Dissolved	**31500**	ug/L	50.0	1	01/30/13 15:50	01/31/13 15:21	7439-89-6	
Lead, Dissolved	**59.6**	ug/L	1.0	1	01/30/13 15:50	01/31/13 15:21	7439-92-1	
Manganese, Dissolved	**1370**	ug/L	1.0	1	01/30/13 15:50	01/31/13 15:21	7439-96-5	
Molybdenum, Dissolved	**3.0**	ug/L	1.0	1	01/30/13 15:50	01/31/13 15:21	7439-98-7	
Nickel, Dissolved	**4.3**	ug/L	1.0	1	01/30/13 15:50	01/31/13 15:21	7440-02-0	
Selenium, Dissolved	**0.55J**	ug/L	1.0	1	01/30/13 15:50	01/31/13 15:21	7782-49-2	
Silver, Dissolved	ND	ug/L	0.50	1	01/30/13 15:50	01/31/13 15:21	7440-22-4	
Thallium, Dissolved	**0.026J**	ug/L	1.0	1	01/30/13 15:50	01/31/13 15:21	7440-28-0	
Vanadium, Dissolved	**1.6**	ug/L	1.0	1	01/30/13 15:50	01/31/13 15:21	7440-62-2	
Zinc, Dissolved	**415**	ug/L	10.0	1	01/30/13 15:50	01/31/13 15:21	7440-66-6	
245.1 Mercury	Analytical Method: EPA 245.1 Preparation Method: EPA 245.1							
Mercury	ND	ug/L	0.20	1	02/07/13 12:29	02/08/13 18:41	7439-97-6	
245.1 Mercury, Dissolved	Analytical Method: EPA 245.1 Preparation Method: EPA 245.1							
Mercury, Dissolved	ND	ug/L	0.20	1	02/06/13 15:39	02/07/13 18:50	7439-97-6	
245.1 Potentially Diss Mercury	Analytical Method: EPA 245.1 Preparation Method: EPA 245.1							
Mercury, Dissolved	ND	ug/L	0.20	1	01/30/13 15:30	01/31/13 10:02	7439-97-6	
2510B Specific Conductance	Analytical Method: SM 2510B							
Specific Conductance	**924**	umhos/cm	10.0	1		01/30/13 15:59		
Salinity	Analytical Method: Calculated							
Salinity (as dissolved solids)	**591**	mg/L	6.0	1		01/31/13 15:31		

This report shall not be reproduced, except in full,
without the written consent of Pace Analytical Services, Inc..

Pace Analytical Services, Inc.
9608 Loiret Blvd.
Lenexa, KS 66219
(913)599-5665

ANALYTICAL RESULTS

Project: JANUARY 2013 RICO WATER SAMPLI
Pace Project No.: 60137618

Sample: AT-2_20130124 **Lab ID: 60137618015** Collected: 01/24/13 03:31 Received: 01/26/13 08:50 Matrix: Water

Parameters	Results	Units	Report Limit	DF	Prepared	Analyzed	CAS No.	Qual
Salinity	Analytical Method: Calculated							
Salinity (as seawater)	**0.45**	PSU	0.010	1		01/31/13 15:31		
2320B Alkalinity	Analytical Method: SM 2320B							
Alkalinity,Bicarbonate (CaCO3)	ND	mg/L	20.0	1		01/30/13 13:44		
Alkalinity, Carbonate (CaCO3)	ND	mg/L	20.0	1		01/30/13 13:44		
Alkalinity, Total as CaCO3	ND	mg/L	20.0	1		01/30/13 13:44		
2540C Total Dissolved Solids	Analytical Method: SM 2540C							
Total Dissolved Solids	**741**	mg/L	5.0	1		01/30/13 09:30		
2540D Total Suspended Solids	Analytical Method: SM 2540D							
Total Suspended Solids	**328**	mg/L	5.0	1		01/31/13 09:16		
4500S2D Sulfide, Total	Analytical Method: SM 4500-S-2 D							
Sulfide, Total	ND	mg/L	0.050	1		01/29/13 14:36	18496-25-8	
300.0 IC Anions 28 Days	Analytical Method: EPA 300.0							
Chloride	**2.0**	mg/L	1.0	1		01/30/13 23:27	16887-00-6	
Sulfate	**507**	mg/L	50.0	50		01/30/13 23:45	14808-79-8	
353.2 Nitrogen, NO2/NO3 pres.	Analytical Method: EPA 353.2							
Nitrogen, NO2 plus NO3	ND	mg/L	0.10	1		01/31/13 16:52		
4500CNE Cyanide, Total	Analytical Method: SM 4500-CN-E							
Cyanide	**0.0059**	mg/L	0.0050	1		01/30/13 13:44	57-12-5	
5310C TOC	Analytical Method: SM 5310C							
Total Organic Carbon	**1.3**	mg/L	1.0	1		01/31/13 19:49	7440-44-0	

This report shall not be reproduced, except in full,
without the written consent of Pace Analytical Services, Inc..

Appendix D

Laboratory QC Results

Pace Analytical Services, Inc.
9608 Loiret Blvd.
Lenexa, KS 66219
(913)599-5665

QUALITY CONTROL DATA

Project: JANUARY 2013 RICO WATER SAMPLI
Pace Project No.: 60137200

QC Batch: MERP/7974 Analysis Method: EPA 245.1
QC Batch Method: EPA 245.1 Analysis Description: 245.1 Mercury
Associated Lab Samples: 60137200001, 60137200002, 60137200003, 60137200004, 60137200005, 60137200006, 60137200007, 60137200008, 60137200009, 60137200010, 60137200011, 60137200012, 60137200013, 60137200014, 60137200015, 60137200016, 60137200017, 60137200018, 60137200019, 60137200020

METHOD BLANK: 1368479 Matrix: Water
Associated Lab Samples: 60137200001, 60137200002, 60137200003, 60137200004, 60137200005, 60137200006, 60137200007, 60137200008, 60137200009, 60137200010, 60137200011, 60137200012, 60137200013, 60137200014, 60137200015, 60137200016, 60137200017, 60137200018, 60137200019, 60137200020

Parameter	Units	Blank Result	Reporting Limit	Analyzed	Qualifiers
Mercury	ug/L	ND	0.20	02/05/13 20:47	

LABORATORY CONTROL SAMPLE: 1368480

Parameter	Units	Spike Conc.	LCS Result	LCS % Rec	% Rec Limits	Qualifiers
Mercury	ug/L	5	5.0	99	85-115	

MATRIX SPIKE & MATRIX SPIKE DUPLICATE: 1373320 1373321

Parameter	Units	60137200002 Result	MS Spike Conc.	MSD Spike Conc.	MS Result	MSD Result	MS % Rec	MSD % Rec	% Rec Limits	RPD	Max RPD	Qual
Mercury	ug/L	ND	5	5	4.6	5.0	91	99	85-115	8	30	

REPORT OF LABORATORY ANALYSIS

This report shall not be reproduced, except in full,
without the written consent of Pace Analytical Services, Inc..

Pace Analytical Services, Inc.
9608 Loiret Blvd.
Lenexa, KS 66219
(913)599-5665

QUALITY CONTROL DATA

Project: JANUARY 2013 RICO WATER SAMPLI
Pace Project No.: 60137200

QC Batch: MERP/7978 Analysis Method: EPA 245.1
QC Batch Method: EPA 245.1 Analysis Description: 245.1 Mercury
Associated Lab Samples: 60137200021, 60137200022, 60137200023, 60137200024

METHOD BLANK: 1369425 Matrix: Water
Associated Lab Samples: 60137200021, 60137200022, 60137200023, 60137200024

Parameter	Units	Blank Result	Reporting Limit	Analyzed	Qualifiers
Mercury	ug/L	ND	0.20	01/28/13 18:06	

LABORATORY CONTROL SAMPLE: 1369426

Parameter	Units	Spike Conc.	LCS Result	LCS % Rec	% Rec Limits	Qualifiers
Mercury	ug/L	5	4.8	96	85-115	

MATRIX SPIKE & MATRIX SPIKE DUPLICATE: 1369664 1369665

Parameter	Units	10218320001 Result	MS Spike Conc.	MSD Spike Conc.	MS Result	MSD Result	MS % Rec	MSD % Rec	% Rec Limits	RPD	Max RPD	Qual
Mercury	ug/L	ND	5	5	4.2	2.8	83	56	85-115	39	30	D6,M1

This report shall not be reproduced, except in full,
without the written consent of Pace Analytical Services, Inc..

Pace Analytical Services, Inc.
9608 Loiret Blvd.
Lenexa, KS 66219
(913)599-5665

QUALITY CONTROL DATA

Project: JANUARY 2013 RICO WATER SAMPLI
Pace Project No.: 60137200

QC Batch: MERP/7972 — Analysis Method: EPA 245.1
QC Batch Method: EPA 245.1 — Analysis Description: 245.1 Mercury - Dissolved

Associated Lab Samples: 60137200001, 60137200002, 60137200003, 60137200004, 60137200005, 60137200006, 60137200007, 60137200008, 60137200009, 60137200010, 60137200011, 60137200012, 60137200013, 60137200014, 60137200015, 60137200016, 60137200017, 60137200018, 60137200019, 60137200020

METHOD BLANK: 1368452 — Matrix: Water

Associated Lab Samples: 60137200001, 60137200002, 60137200003, 60137200004, 60137200005, 60137200006, 60137200007, 60137200008, 60137200009, 60137200010, 60137200011, 60137200012, 60137200013, 60137200014, 60137200015, 60137200016, 60137200017, 60137200018, 60137200019, 60137200020

Parameter	Units	Blank Result	Reporting Limit	Analyzed	Qualifiers
Mercury, Dissolved	ug/L	ND	0.20	01/31/13 15:51	

LABORATORY CONTROL SAMPLE: 1368453

Parameter	Units	Spike Conc.	LCS Result	LCS % Rec	% Rec Limits	Qualifiers
Mercury, Dissolved	ug/L	5	4.7	93	85-115	

MATRIX SPIKE SAMPLE: 1368456

Parameter	Units	60137200020 Result	Spike Conc.	MS Result	MS % Rec	% Rec Limits	Qualifiers
Mercury, Dissolved	ug/L	ND	5	4.8	96	85-115	

This report shall not be reproduced, except in full,
without the written consent of Pace Analytical Services, Inc..

Pace Analytical Services, Inc.
9608 Loiret Blvd.
Lenexa, KS 66219
(913)599-5665

QUALITY CONTROL DATA

Project: JANUARY 2013 RICO WATER SAMPLI
Pace Project No.: 60137200

QC Batch: MERP/7989 Analysis Method: EPA 245.1
QC Batch Method: EPA 245.1 Analysis Description: 245.1 Mercury - Dissolved
Associated Lab Samples: 60137200021, 60137200022, 60137200023, 60137200024

METHOD BLANK: 1370838 Matrix: Water
Associated Lab Samples: 60137200021, 60137200022, 60137200023, 60137200024

Parameter	Units	Blank Result	Reporting Limit	Analyzed	Qualifiers
Mercury, Dissolved	ug/L	ND	0.20	01/30/13 18:10	

LABORATORY CONTROL SAMPLE: 1370839

Parameter	Units	Spike Conc.	LCS Result	LCS % Rec	% Rec Limits	Qualifiers
Mercury, Dissolved	ug/L	5	4.6	91	85-115	

MATRIX SPIKE & MATRIX SPIKE DUPLICATE: 1370960 1370961

Parameter	Units	60137200022 Result	MS Spike Conc.	MSD Spike Conc.	MS Result	MSD Result	MS % Rec	MSD % Rec	% Rec Limits	RPD	Max RPD	Qual
Mercury, Dissolved	ug/L	ND	5	5	3.7	4.1	73	82	85-115	11	20	M1

This report shall not be reproduced, except in full,
without the written consent of Pace Analytical Services, Inc..

Pace Analytical Services, Inc.
9608 Loiret Blvd.
Lenexa, KS 66219
(913)599-5665

QUALITY CONTROL DATA

Project: JANUARY 2013 RICO WATER SAMPLI
Pace Project No.: 60137200

QC Batch: MERP/7035 — Analysis Method: EPA 245.1
QC Batch Method: EPA 245.1 — Analysis Description: 245.1 Mercury, Potentially Dissolved
Associated Lab Samples: 60137200001, 60137200002, 60137200003, 60137200004, 60137200005, 60137200006, 60137200007, 60137200008, 60137200009, 60137200010, 60137200011, 60137200012, 60137200013, 60137200014, 60137200015, 60137200016, 60137200017, 60137200018, 60137200019, 60137200020

METHOD BLANK: 1132474 — Matrix: Water
Associated Lab Samples: 60137200001, 60137200002, 60137200003, 60137200004, 60137200005, 60137200006, 60137200007, 60137200008, 60137200009, 60137200010, 60137200011, 60137200012, 60137200013, 60137200014, 60137200015, 60137200016, 60137200017, 60137200018, 60137200019, 60137200020

Parameter	Units	Blank Result	Reporting Limit	Analyzed	Qualifiers
Mercury, Dissolved	ug/L	ND	0.20	01/29/13 14:51	

LABORATORY CONTROL SAMPLE: 1132475

Parameter	Units	Spike Conc.	LCS Result	LCS % Rec	% Rec Limits	Qualifiers
Mercury, Dissolved	ug/L	5	4.8	97	85-115	

MATRIX SPIKE & MATRIX SPIKE DUPLICATE: 1132476 — 1132477

Parameter	Units	60137200003 Result	MS Spike Conc.	MSD Spike Conc.	MS Result	MSD Result	MS % Rec	MSD % Rec	% Rec Limits	RPD	Max RPD	Qual
Mercury, Dissolved	ug/L	ND	5	5	4.8	4.3	96	86	70-130	11	20	

MATRIX SPIKE & MATRIX SPIKE DUPLICATE: 1132478 — 1132479

Parameter	Units	60137200004 Result	MS Spike Conc.	MSD Spike Conc.	MS Result	MSD Result	MS % Rec	MSD % Rec	% Rec Limits	RPD	Max RPD	Qual
Mercury, Dissolved	ug/L	ND	5	5	4.4	5.0	89	101	70-130	12	20	

This report shall not be reproduced, except in full,
without the written consent of Pace Analytical Services, Inc..

Pace Analytical Services, Inc.
9608 Loiret Blvd.
Lenexa, KS 66219
(913)599-5665

QUALITY CONTROL DATA

Project: JANUARY 2013 RICO WATER SAMPLI
Pace Project No.: 60137200

QC Batch: MERP/7036 | Analysis Method: EPA 245.1
QC Batch Method: EPA 245.1 | Analysis Description: 245.1 Mercury, Potentially Dissolved
Associated Lab Samples: 60137200021, 60137200022, 60137200023, 60137200024

METHOD BLANK: 1132494 | Matrix: Water
Associated Lab Samples: 60137200021, 60137200022, 60137200023, 60137200024

Parameter	Units	Blank Result	Reporting Limit	Analyzed	Qualifiers
Mercury, Dissolved	ug/L	ND	0.20	01/29/13 16:02	

LABORATORY CONTROL SAMPLE: 1132495

Parameter	Units	Spike Conc.	LCS Result	LCS % Rec	% Rec Limits	Qualifiers
Mercury, Dissolved	ug/L	5	5.0	101	85-115	

MATRIX SPIKE & MATRIX SPIKE DUPLICATE: 1132496 1132497

Parameter	Units	60137200023 Result	MS Spike Conc.	MSD Spike Conc.	MS Result	MSD Result	MS % Rec	MSD % Rec	% Rec Limits	RPD	Max RPD	Qual
Mercury, Dissolved	ug/L	ND	5	5	4.7	4.9	95	97	70-130	3	20	

This report shall not be reproduced, except in full,
without the written consent of Pace Analytical Services, Inc..

Pace Analytical Services, Inc.
9608 Loiret Blvd.
Lenexa, KS 66219
(913)599-5665

QUALITY CONTROL DATA

Project: JANUARY 2013 RICO WATER SAMPLI
Pace Project No.: 60137200

QC Batch: MPRP/21301 Analysis Method: EPA 200.7
QC Batch Method: EPA 200.7 Analysis Description: 200.7 Potentially Dissolved Metals
Associated Lab Samples: 60137200001, 60137200002, 60137200003, 60137200004, 60137200005, 60137200006, 60137200007, 60137200008, 60137200009, 60137200010, 60137200011, 60137200012, 60137200013, 60137200014, 60137200015, 60137200016, 60137200017, 60137200018, 60137200019

METHOD BLANK: 1132013 Matrix: Water
Associated Lab Samples: 60137200001, 60137200002, 60137200003, 60137200004, 60137200005, 60137200006, 60137200007, 60137200008, 60137200009, 60137200010, 60137200011, 60137200012, 60137200013, 60137200014, 60137200015, 60137200016, 60137200017, 60137200018, 60137200019

Parameter	Units	Blank Result	Reporting Limit	Analyzed	Qualifiers
Calcium, Dissolved	ug/L	56.7J	100	01/29/13 17:22	
Magnesium, Dissolved	ug/L	33.7J	50.0	01/29/13 17:22	
Potassium, Dissolved	ug/L	ND	500	01/29/13 17:22	
Sodium, Dissolved	ug/L	ND	500	01/29/13 17:22	

LABORATORY CONTROL SAMPLE: 1132014

Parameter	Units	Spike Conc.	LCS Result	LCS % Rec	% Rec Limits	Qualifiers
Calcium, Dissolved	ug/L	10000	9940	99	85-115	
Magnesium, Dissolved	ug/L	10000	10300	103	85-115	
Potassium, Dissolved	ug/L	10000	9800	98	85-115	
Sodium, Dissolved	ug/L	10000	9980	100	85-115	

MATRIX SPIKE & MATRIX SPIKE DUPLICATE: 1132015 1132016

Parameter	Units	60137200002 Result	MS Spike Conc.	MSD Spike Conc.	MS Result	MSD Result	MS % Rec	MSD % Rec	% Rec Limits	RPD	Max RPD	Qual
Calcium, Dissolved	ug/L	566000	20000	20000	590000	590000	122	120	70-130	0	20	
Magnesium, Dissolved	ug/L	56500	20000	20000	76800	76800	102	101	70-130	0	20	
Potassium, Dissolved	ug/L	4900	20000	20000	24400	24400	98	98	70-130	0	20	
Sodium, Dissolved	ug/L	6020	20000	20000	25900	26000	100	100	70-130	0	20	

MATRIX SPIKE SAMPLE: 1132017

Parameter	Units	60137200012 Result	Spike Conc.	MS Result	MS % Rec	% Rec Limits	Qualifiers
Calcium, Dissolved	ug/L	271000	20000	300000	145	70-130	M1
Magnesium, Dissolved	ug/L	41800	20000	62000	101	70-130	
Potassium, Dissolved	ug/L	6100	20000	25700	98	70-130	
Sodium, Dissolved	ug/L	4390	20000	24300	100	70-130	

This report shall not be reproduced, except in full,
without the written consent of Pace Analytical Services, Inc..

Pace Analytical Services, Inc.
9608 Loiret Blvd.
Lenexa, KS 66219
(913)599-5665

QUALITY CONTROL DATA

Project: JANUARY 2013 RICO WATER SAMPLI
Pace Project No.: 60137200

QC Batch: MPRP/21302 Analysis Method: EPA 200.7
QC Batch Method: EPA 200.7 Analysis Description: 200.7 Potentially Dissolved Metals
Associated Lab Samples: 60137200020, 60137200021, 60137200022, 60137200023, 60137200024

METHOD BLANK: 1132018 Matrix: Water
Associated Lab Samples: 60137200020, 60137200021, 60137200022, 60137200023, 60137200024

Parameter	Units	Blank Result	Reporting Limit	Analyzed	Qualifiers
Calcium, Dissolved	ug/L	ND	100	01/29/13 16:50	
Magnesium, Dissolved	ug/L	ND	50.0	01/29/13 16:50	
Potassium, Dissolved	ug/L	ND	500	01/29/13 16:50	
Sodium, Dissolved	ug/L	ND	500	01/29/13 16:50	

LABORATORY CONTROL SAMPLE: 1132019

Parameter	Units	Spike Conc.	LCS Result	LCS % Rec	% Rec Limits	Qualifiers
Calcium, Dissolved	ug/L	10000	9870	99	85-115	
Magnesium, Dissolved	ug/L	10000	10300	103	85-115	
Potassium, Dissolved	ug/L	10000	9810	98	85-115	
Sodium, Dissolved	ug/L	10000	9970	100	85-115	

MATRIX SPIKE & MATRIX SPIKE DUPLICATE: 1132020 1132021

Parameter	Units	60137200022 Result	MS Spike Conc.	MSD Spike Conc.	MS Result	MSD Result	MS % Rec	MSD % Rec	% Rec Limits	RPD	Max RPD	Qual
Calcium, Dissolved	ug/L	233000	20000	20000	249000	253000	81	98	70-130	1	20	
Magnesium, Dissolved	ug/L	24800	20000	20000	44600	45000	99	101	70-130	1	20	
Potassium, Dissolved	ug/L	3780	20000	20000	22800	23100	95	96	70-130	1	20	
Sodium, Dissolved	ug/L	10900	20000	20000	30800	30900	99	100	70-130	1	20	

This report shall not be reproduced, except in full,
without the written consent of Pace Analytical Services, Inc..

Pace Analytical Services, Inc.
9608 Loiret Blvd.
Lenexa, KS 66219
(913)599-5665

QUALITY CONTROL DATA

Project: JANUARY 2013 RICO WATER SAMPLI
Pace Project No.: 60137200

QC Batch: MPRP/37351 Analysis Method: EPA 200.8
QC Batch Method: EPA 200.8 Analysis Description: 200.8 MET
Associated Lab Samples: 60137200001, 60137200002, 60137200003, 60137200004, 60137200005, 60137200006, 60137200007, 60137200008, 60137200009, 60137200010, 60137200011, 60137200012, 60137200013, 60137200014, 60137200015

METHOD BLANK: 1368378 Matrix: Water
Associated Lab Samples: 60137200001, 60137200002, 60137200003, 60137200004, 60137200005, 60137200006, 60137200007, 60137200008, 60137200009, 60137200010, 60137200011, 60137200012, 60137200013, 60137200014, 60137200015

Parameter	Units	Blank Result	Reporting Limit	Analyzed	Qualifiers
Aluminum	ug/L	ND	4.0	01/29/13 23:39	
Antimony	ug/L	ND	0.50	01/29/13 23:39	
Arsenic	ug/L	ND	0.50	01/29/13 23:39	
Barium	ug/L	ND	0.30	01/29/13 23:39	
Beryllium	ug/L	ND	0.20	01/29/13 23:39	
Cadmium	ug/L	ND	0.080	01/29/13 23:39	
Calcium	ug/L	ND	20.0	01/29/13 23:39	
Chromium	ug/L	ND	0.50	01/29/13 23:39	
Cobalt	ug/L	ND	0.50	01/29/13 23:39	
Copper	ug/L	0.83	0.50	01/29/13 23:39	P8
Iron	ug/L	ND	50.0	01/29/13 23:39	
Lead	ug/L	ND	0.10	01/29/13 23:39	
Magnesium	ug/L	ND	5.0	01/29/13 23:39	
Manganese	ug/L	ND	0.50	01/29/13 23:39	
Molybdenum	ug/L	ND	0.50	01/29/13 23:39	
Nickel	ug/L	ND	0.50	01/29/13 23:39	
Potassium	ug/L	ND	20.0	01/29/13 23:39	
Selenium	ug/L	ND	0.50	01/29/13 23:39	
Silica	ug/L	ND	53.5	01/29/13 23:39	
Silver	ug/L	ND	0.50	01/29/13 23:39	
Sodium	ug/L	ND	50.0	01/29/13 23:39	
Thallium	ug/L	ND	0.10	01/29/13 23:39	
Total Hardness by 2340B	ug/L	ND	71.0	01/29/13 23:39	
Vanadium	ug/L	ND	0.10	01/29/13 23:39	
Zinc	ug/L	ND	5.0	01/29/13 23:39	

LABORATORY CONTROL SAMPLE: 1368379

Parameter	Units	Spike Conc.	LCS Result	LCS % Rec	% Rec Limits	Qualifiers
Aluminum	ug/L	80	73.2	92	85-115	
Antimony	ug/L	80	72.5	91	85-115	
Arsenic	ug/L	80	73.4	92	85-115	
Barium	ug/L	80	73.2	92	85-115	
Beryllium	ug/L	80	76.1	95	85-115	
Cadmium	ug/L	80	74.2	93	85-115	
Calcium	ug/L	1000	912	91	85-115	
Chromium	ug/L	80	75.6	94	85-115	
Cobalt	ug/L	80	75.9	95	85-115	

This report shall not be reproduced, except in full,
without the written consent of Pace Analytical Services, Inc..

Pace Analytical Services, Inc.
9608 Loiret Blvd.
Lenexa, KS 66219
(913)599-5665

QUALITY CONTROL DATA

Project: JANUARY 2013 RICO WATER SAMPLI
Pace Project No.: 60137200

LABORATORY CONTROL SAMPLE: 1368379

Parameter	Units	Spike Conc.	LCS Result	LCS % Rec	% Rec Limits	Qualifiers
Copper	ug/L	80	77.2	96	85-115	
Iron	ug/L	1000	958	96	85-115	
Lead	ug/L	80	73.4	92	85-115	
Magnesium	ug/L	1000	908	91	85-115	
Manganese	ug/L	80	74.5	93	85-115	
Molybdenum	ug/L	80	74.6	93	85-115	
Nickel	ug/L	80	78.9	99	85-115	
Potassium	ug/L	1000	918	92	85-115	
Selenium	ug/L	80	74.3	93	85-115	
Silica	ug/L	2140	1920	90	85-115	
Silver	ug/L	80	79.7	100	85-115	
Sodium	ug/L	1000	914	91	85-115	
Thallium	ug/L	80	77.5	97	85-115	
Total Hardness by 2340B	ug/L	6620	6010	91	85-115	
Vanadium	ug/L	80	75.4	94	85-115	
Zinc	ug/L	80	74.9	94	85-115	

MATRIX SPIKE & MATRIX SPIKE DUPLICATE: 1368380 1368381

Parameter	Units	60137200001 Result	MS Spike Conc.	MSD Spike Conc.	MS Result	MSD Result	MS % Rec	MSD % Rec	% Rec Limits	RPD	Max RPD	Qual
Aluminum	ug/L	15100	80	80	23100	23000	10000	9860	70-130	.5	20	M6
Antimony	ug/L	0.64	80	80	48.4	49.0	60	60	70-130	1	20	M6
Arsenic	ug/L	23.6	80	80	99.6	100	95	96	70-130	.7	20	
Barium	ug/L	400	80	80	497	501	120	126	70-130	1	20	
Beryllium	ug/L	1.5	80	80	80.2	83.8	98	103	70-130	4	20	
Cadmium	ug/L	2.9	80	80	83.3	82.2	100	99	70-130	1	20	
Calcium	ug/L	60200	1000	1000	62800	62400	255	210	70-130	.7	20	M6
Chromium	ug/L	15.4	80	80	100	100	106	106	70-130	.5	20	
Cobalt	ug/L	17.3	80	80	100	99.5	103	103	70-130	.5	20	
Copper	ug/L	103	80	80	192	192	111	110	70-130	.1	20	
Iron	ug/L	28400	1000	1000	31200	31800	278	333	70-130	2	20	M6
Lead	ug/L	80.5	80	80	166	169	107	110	70-130	1	20	
Magnesium	ug/L	12900	1000	1000	15200	15300	237	244	70-130	.5	20	M6
Manganese	ug/L	3380	80	80	3450	3580	99	250	70-130	3	20	M6
Molybdenum	ug/L	5.7	80	80	81.9	80.5	95	93	70-130	2	20	
Nickel	ug/L	31.3	80	80	119	119	110	109	70-130	.3	20	
Potassium	ug/L	3960	1000	1000	6660	6500	270	253	70-130	3	20	M6
Selenium	ug/L	3.6	80	80	77.9	77.3	93	92	70-130	.7	20	
Silica	ug/L	53800	2140	2140	81100	81800	1280	1310	70-130	.8	20	M1
Silver	ug/L	1.3	80	80	82.7	81.4	102	100	70-130	2	20	
Sodium	ug/L	3060	1000	1000	4130	4050	107	99	70-130	2	20	
Thallium	ug/L	0.39	80	80	77.0	76.3	96	95	70-130	.9	20	
Total Hardness by 2340B	ug/L	203000	6620	6620	220000	219000	244	231	70-130	.4	20	M1
Vanadium	ug/L	33.8	80	80	124	124	113	113	70-130	.3	20	
Zinc	ug/L	330	80	80	426	758	120	536	70-130	56	20	D6,M6

This report shall not be reproduced, except in full,
without the written consent of Pace Analytical Services, Inc..

Pace Analytical Services, Inc.
9608 Loiret Blvd.
Lenexa, KS 66219
(913)599-5665

QUALITY CONTROL DATA

Project: JANUARY 2013 RICO WATER SAMPLI
Pace Project No.: 60137200

QC Batch: MPRP/37352 Analysis Method: EPA 200.8
QC Batch Method: EPA 200.8 Analysis Description: 200.8 MET
Associated Lab Samples: 60137200016, 60137200017, 60137200018, 60137200019, 60137200020, 60137200021, 60137200022, 60137200023, 60137200024

METHOD BLANK: 1368390 Matrix: Water
Associated Lab Samples: 60137200016, 60137200017, 60137200018, 60137200019, 60137200020, 60137200021, 60137200022, 60137200023, 60137200024

Parameter	Units	Blank Result	Reporting Limit	Analyzed	Qualifiers
Aluminum	ug/L	ND	4.0	01/31/13 16:39	
Antimony	ug/L	ND	0.50	01/31/13 16:39	
Arsenic	ug/L	ND	0.50	01/31/13 16:39	
Barium	ug/L	ND	0.30	01/31/13 16:39	
Beryllium	ug/L	ND	0.20	01/31/13 16:39	
Cadmium	ug/L	ND	0.080	01/31/13 16:39	
Calcium	ug/L	ND	20.0	01/31/13 16:39	
Chromium	ug/L	ND	0.50	01/31/13 16:39	
Cobalt	ug/L	ND	0.50	01/31/13 16:39	
Copper	ug/L	ND	0.50	01/31/13 16:39	
Iron	ug/L	ND	50.0	01/31/13 16:39	
Lead	ug/L	ND	0.10	01/31/13 16:39	
Magnesium	ug/L	ND	5.0	01/31/13 16:39	
Manganese	ug/L	ND	0.50	01/31/13 16:39	
Molybdenum	ug/L	ND	0.50	01/31/13 16:39	
Nickel	ug/L	ND	0.50	01/31/13 16:39	
Potassium	ug/L	ND	20.0	01/31/13 16:39	
Selenium	ug/L	ND	0.50	01/31/13 16:39	
Silica	ug/L	ND	53.5	02/05/13 23:52	
Silver	ug/L	ND	0.50	01/31/13 16:39	
Sodium	ug/L	ND	50.0	01/31/13 16:39	
Thallium	ug/L	ND	0.10	01/31/13 16:39	
Total Hardness by 2340B	ug/L	ND	71.0	01/31/13 16:39	
Vanadium	ug/L	ND	0.10	01/31/13 16:39	
Zinc	ug/L	ND	5.0	01/31/13 16:39	

LABORATORY CONTROL SAMPLE: 1368391

Parameter	Units	Spike Conc.	LCS Result	LCS % Rec	% Rec Limits	Qualifiers
Aluminum	ug/L	80	69.4	87	85-115	
Antimony	ug/L	80	73.0	91	85-115	
Arsenic	ug/L	80	72.5	91	85-115	
Barium	ug/L	80	72.2	90	85-115	
Beryllium	ug/L	80	73.9	92	85-115	
Cadmium	ug/L	80	74.2	93	85-115	
Calcium	ug/L	1000	933	93	85-115	
Chromium	ug/L	80	73.4	92	85-115	
Cobalt	ug/L	80	70.6	88	85-115	
Copper	ug/L	80	74.4	93	85-115	
Iron	ug/L	1000	924	92	85-115	

This report shall not be reproduced, except in full,
without the written consent of Pace Analytical Services, Inc..

Pace Analytical Services, Inc.
9608 Loiret Blvd.
Lenexa, KS 66219
(913)599-5665

QUALITY CONTROL DATA

Project: JANUARY 2013 RICO WATER SAMPLI
Pace Project No.: 60137200

LABORATORY CONTROL SAMPLE: 1368391

Parameter	Units	Spike Conc.	LCS Result	LCS % Rec	% Rec Limits	Qualifiers
Lead	ug/L	80	73.8	92	85-115	
Magnesium	ug/L	1000	959	96	85-115	
Manganese	ug/L	80	73.1	91	85-115	
Molybdenum	ug/L	80	72.3	90	85-115	
Nickel	ug/L	80	72.7	91	85-115	
Potassium	ug/L	1000	913	91	85-115	
Selenium	ug/L	80	71.6	90	85-115	
Silica	ug/L	2140	1970	92	85-115	
Silver	ug/L	80	74.7	93	85-115	
Sodium	ug/L	1000	929	93	85-115	
Thallium	ug/L	80	75.5	94	85-115	
Total Hardness by 2340B	ug/L	6620	6280	95	85-115	
Vanadium	ug/L	80	73.3	92	85-115	
Zinc	ug/L	80	73.3	92	85-115	

MATRIX SPIKE & MATRIX SPIKE DUPLICATE: 1369256 1369257

Parameter	Units	60137200017 Result	MS Spike Conc.	MSD Spike Conc.	MS Result	MSD Result	MS % Rec	MSD % Rec	% Rec Limits	RPD	Max RPD	Qual
Aluminum	ug/L	9350	80	80	12100	11700	3460	2960	70-130	3	20	M6
Antimony	ug/L	0.52	80	80	72.1	72.0	89	89	70-130	.2	20	
Arsenic	ug/L	16.6	80	80	95.1	93.6	98	96	70-130	2	20	
Barium	ug/L	199	80	80	288	277	111	98	70-130	4	20	
Beryllium	ug/L	0.53	80	80	81.8	83.8	102	104	70-130	2	20	
Cadmium	ug/L	2.4	80	80	82.0	81.8	99	99	70-130	.2	20	
Calcium	ug/L	127000	1000	1000	134000	135000	740	810	70-130	.5	20	M6
Chromium	ug/L	14.2	80	80	96.5	94.4	103	100	70-130	2	20	
Cobalt	ug/L	9.5	80	80	87.8	85.8	98	95	70-130	2	20	
Copper	ug/L	83.0	80	80	172	165	111	102	70-130	4	20	
Iron	ug/L	18200	1000	1000	19800	19000	157	81	70-130	4	20	M6
Lead	ug/L	157	80	80	245	241	110	104	70-130	2	20	
Magnesium	ug/L	21300	1000	1000	25500	22400	418	106	70-130	13	20	M6
Manganese	ug/L	2240	80	80	2200	2130	-45	-131	70-130	3	20	M6
Molybdenum	ug/L	2.9	80	80	80.6	79.4	97	96	70-130	2	20	
Nickel	ug/L	12.7	80	80	93.3	92.2	101	99	70-130	1	20	
Potassium	ug/L	4190	1000	1000	6060	5920	187	173	70-130	2	20	M6
Selenium	ug/L	4.9	80	80	79.3	83.8	93	99	70-130	6	20	
Silica	ug/L	43800	2140	2140	63300	52300	908	394	70-130	19	20	M1
Silver	ug/L	1.6	80	80	80.2	79.4	98	97	70-130	1	20	
Sodium	ug/L	3190	1000	1000	4450	4380	126	119	70-130	2	20	
Thallium	ug/L	0.24	80	80	80.2	79.1	100	99	70-130	1	20	
Total Hardness by 2340B	ug/L	404000	6620	6620	440000	429000	540	372	70-130	3	20	M1
Vanadium	ug/L	21.7	80	80	103	105	102	104	70-130	1	20	
Zinc	ug/L	473	80	80	550	549	96	95	70-130	.1	20	

This report shall not be reproduced, except in full,
without the written consent of Pace Analytical Services, Inc..

Pace Analytical Services, Inc.
9608 Loiret Blvd.
Lenexa, KS 66219
(913)599-5665

QUALITY CONTROL DATA

Project: JANUARY 2013 RICO WATER SAMPLI
Pace Project No.: 60137200

QC Batch: MPRP/37358 Analysis Method: EPA 200.8
QC Batch Method: EPA 200.8 Analysis Description: 200.8 MET Dissolved
Associated Lab Samples: 60137200001, 60137200002, 60137200003, 60137200004, 60137200005, 60137200006, 60137200007, 60137200008, 60137200009, 60137200010, 60137200011, 60137200012, 60137200013, 60137200014, 60137200015

METHOD BLANK: 1368431 Matrix: Water
Associated Lab Samples: 60137200001, 60137200002, 60137200003, 60137200004, 60137200005, 60137200006, 60137200007, 60137200008, 60137200009, 60137200010, 60137200011, 60137200012, 60137200013, 60137200014, 60137200015

Parameter	Units	Blank Result	Reporting Limit	Analyzed	Qualifiers
Aluminum, Dissolved	ug/L	ND	4.0	02/01/13 14:42	
Antimony, Dissolved	ug/L	ND	0.50	02/01/13 14:42	
Arsenic, Dissolved	ug/L	ND	0.50	02/01/13 14:42	
Barium, Dissolved	ug/L	ND	0.30	02/01/13 14:42	
Beryllium, Dissolved	ug/L	ND	0.20	02/01/13 14:42	
Cadmium, Dissolved	ug/L	ND	0.080	02/01/13 14:42	
Calcium, Dissolved	ug/L	ND	20.0	02/04/13 12:13	
Chromium, Dissolved	ug/L	ND	0.50	02/01/13 14:42	
Cobalt, Dissolved	ug/L	ND	0.50	02/01/13 14:42	
Copper, Dissolved	ug/L	ND	0.50	02/01/13 14:42	
Iron, Dissolved	ug/L	ND	50.0	02/01/13 14:42	
Lead, Dissolved	ug/L	ND	0.10	02/01/13 14:42	
Magnesium, Dissolved	ug/L	ND	5.0	02/01/13 14:42	
Manganese, Dissolved	ug/L	ND	0.50	02/01/13 14:42	
Molybdenum, Dissolved	ug/L	ND	0.50	02/01/13 14:42	
Nickel, Dissolved	ug/L	ND	0.50	02/01/13 14:42	
Potassium, Dissolved	ug/L	ND	20.0	02/04/13 12:13	
Selenium, Dissolved	ug/L	ND	0.50	02/01/13 14:42	
Silver, Dissolved	ug/L	ND	0.50	02/01/13 14:42	
Sodium, Dissolved	ug/L	ND	50.0	02/01/13 14:42	
Thallium, Dissolved	ug/L	ND	0.10	02/01/13 14:42	
Vanadium, Dissolved	ug/L	ND	0.10	02/01/13 14:42	
Zinc, Dissolved	ug/L	ND	5.0	02/01/13 14:42	

LABORATORY CONTROL SAMPLE: 1368432

Parameter	Units	Spike Conc.	LCS Result	LCS % Rec	% Rec Limits	Qualifiers
Aluminum, Dissolved	ug/L	80	75.5	94	85-115	
Antimony, Dissolved	ug/L	80	73.4	92	85-115	
Arsenic, Dissolved	ug/L	80	73.4	92	85-115	
Barium, Dissolved	ug/L	80	75.7	95	85-115	
Beryllium, Dissolved	ug/L	80	81.8	102	85-115	
Cadmium, Dissolved	ug/L	80	75.3	94	85-115	
Calcium, Dissolved	ug/L	1000	1150	115	85-115	
Chromium, Dissolved	ug/L	80	75.4	94	85-115	
Cobalt, Dissolved	ug/L	80	76.8	96	85-115	
Copper, Dissolved	ug/L	80	77.0	96	85-115	
Iron, Dissolved	ug/L	1000	952	95	85-115	

This report shall not be reproduced, except in full,
without the written consent of Pace Analytical Services, Inc..

Pace Analytical Services, Inc.
9608 Loiret Blvd.
Lenexa, KS 66219
(913)599-5665

QUALITY CONTROL DATA

Project: JANUARY 2013 RICO WATER SAMPLI
Pace Project No.: 60137200

LABORATORY CONTROL SAMPLE: 1368432

Parameter	Units	Spike Conc.	LCS Result	LCS % Rec	% Rec Limits	Qualifiers
Lead, Dissolved	ug/L	80	76.8	96	85-115	
Magnesium, Dissolved	ug/L	1000	944	94	85-115	
Manganese, Dissolved	ug/L	80	76.0	95	85-115	
Molybdenum, Dissolved	ug/L	80	72.1	90	85-115	
Nickel, Dissolved	ug/L	80	75.8	95	85-115	
Potassium, Dissolved	ug/L	1000	929	93	85-115	
Selenium, Dissolved	ug/L	80	76.0	95	85-115	
Silver, Dissolved	ug/L	80	77.2	97	85-115	
Sodium, Dissolved	ug/L	1000	956	96	85-115	
Thallium, Dissolved	ug/L	80	78.2	98	85-115	
Vanadium, Dissolved	ug/L	80	74.6	93	85-115	
Zinc, Dissolved	ug/L	80	74.6	93	85-115	

MATRIX SPIKE & MATRIX SPIKE DUPLICATE: 1368433 1368434

Parameter	Units	60137200001 Result	MS Spike Conc.	MSD Spike Conc.	MS Result	MSD Result	MS % Rec	MSD % Rec	% Rec Limits	RPD	Max RPD	Qual
Aluminum, Dissolved	ug/L	325	80	80	430	427	131	126	70-130	.8	20	M1
Antimony, Dissolved	ug/L	ND	80	80	78.0	77.3	97	97	70-130	.9	20	
Arsenic, Dissolved	ug/L	ND	80	80	79.6	76.0	99	95	70-130	5	20	
Barium, Dissolved	ug/L	64.7	80	80	141	138	95	92	70-130	2	20	
Beryllium, Dissolved	ug/L	ND	80	80	91.0	83.4	114	104	70-130	9	20	
Cadmium, Dissolved	ug/L	ND	80	80	80.4	78.2	100	98	70-130	3	20	
Calcium, Dissolved	ug/L	58000	1000	1000	60100	59700	210	169	70-130	.7	20	M6
Chromium, Dissolved	ug/L	ND	80	80	79.8	78.6	99	98	70-130	2	20	
Cobalt, Dissolved	ug/L	0.89	80	80	81.4	78.4	101	97	70-130	4	20	
Copper, Dissolved	ug/L	2.5	80	80	82.2	80.0	100	97	70-130	3	20	
Iron, Dissolved	ug/L	336	1000	1000	1330	1300	99	96	70-130	2	20	
Lead, Dissolved	ug/L	1.0	80	80	81.8	80.2	101	99	70-130	2	20	
Magnesium, Dissolved	ug/L	7070	1000	1000	7520	7640	45	58	70-130	2	20	M1
Manganese, Dissolved	ug/L	39.4	80	80	117	115	98	94	70-130	2	20	
Molybdenum, Dissolved	ug/L	1.3	80	80	76.8	76.5	94	94	70-130	.3	20	
Nickel, Dissolved	ug/L	1.9	80	80	80.2	78.4	98	96	70-130	2	20	
Potassium, Dissolved	ug/L	791	1000	1000	1720	1660	93	87	70-130	4	20	
Selenium, Dissolved	ug/L	0.56	80	80	82.2	78.6	102	97	70-130	5	20	
Silver, Dissolved	ug/L	ND	80	80	74.8	73.6	93	92	70-130	2	20	
Sodium, Dissolved	ug/L	2780	1000	1000	3600	3600	82	82	70-130	.1	20	
Thallium, Dissolved	ug/L	ND	80	80	82.1	80.2	103	100	70-130	2	20	
Vanadium, Dissolved	ug/L	0.68	80	80	80.0	77.8	99	96	70-130	3	20	
Zinc, Dissolved	ug/L	13.1	80	80	90.4	87.6	97	93	70-130	3	20	

This report shall not be reproduced, except in full,
without the written consent of Pace Analytical Services, Inc..

Pace Analytical Services, Inc.
9608 Loiret Blvd.
Lenexa, KS 66219
(913)599-5665

QUALITY CONTROL DATA

Project: JANUARY 2013 RICO WATER SAMPLI
Pace Project No.: 60137200

QC Batch: MPRP/37359 Analysis Method: EPA 200.8
QC Batch Method: EPA 200.8 Analysis Description: 200.8 MET Dissolved
Associated Lab Samples: 60137200016, 60137200017, 60137200018, 60137200019, 60137200020, 60137200021, 60137200022, 60137200023, 60137200024

METHOD BLANK: 1368445 Matrix: Water
Associated Lab Samples: 60137200016, 60137200017, 60137200018, 60137200019, 60137200020, 60137200021, 60137200022, 60137200023, 60137200024

Parameter	Units	Blank Result	Reporting Limit	Analyzed	Qualifiers
Aluminum, Dissolved	ug/L	ND	4.0	01/31/13 11:44	
Antimony, Dissolved	ug/L	ND	0.50	01/31/13 11:44	
Arsenic, Dissolved	ug/L	ND	0.50	01/31/13 11:44	
Barium, Dissolved	ug/L	ND	0.30	01/31/13 11:44	
Beryllium, Dissolved	ug/L	ND	0.20	01/31/13 11:44	
Cadmium, Dissolved	ug/L	ND	0.080	01/31/13 11:44	
Calcium, Dissolved	ug/L	ND	20.0	01/31/13 11:44	
Chromium, Dissolved	ug/L	ND	0.50	01/31/13 11:44	
Cobalt, Dissolved	ug/L	ND	0.50	01/31/13 11:44	
Copper, Dissolved	ug/L	ND	0.50	01/31/13 11:44	
Iron, Dissolved	ug/L	ND	50.0	01/31/13 11:44	
Lead, Dissolved	ug/L	ND	0.10	01/31/13 11:44	
Magnesium, Dissolved	ug/L	ND	5.0	01/31/13 11:44	
Manganese, Dissolved	ug/L	ND	0.50	01/31/13 11:44	
Molybdenum, Dissolved	ug/L	ND	0.50	01/31/13 11:44	
Nickel, Dissolved	ug/L	ND	0.50	01/31/13 11:44	
Potassium, Dissolved	ug/L	ND	20.0	01/31/13 11:44	
Selenium, Dissolved	ug/L	ND	0.50	01/31/13 11:44	
Silver, Dissolved	ug/L	ND	0.50	01/31/13 11:44	
Sodium, Dissolved	ug/L	ND	50.0	01/31/13 11:44	
Thallium, Dissolved	ug/L	ND	0.10	01/31/13 11:44	
Vanadium, Dissolved	ug/L	ND	0.10	01/31/13 11:44	
Zinc, Dissolved	ug/L	ND	5.0	01/31/13 11:44	

LABORATORY CONTROL SAMPLE: 1368446

Parameter	Units	Spike Conc.	LCS Result	LCS % Rec	% Rec Limits	Qualifiers
Aluminum, Dissolved	ug/L	80	73.9	92	85-115	
Antimony, Dissolved	ug/L	80	78.2	98	85-115	
Arsenic, Dissolved	ug/L	80	76.3	95	85-115	
Barium, Dissolved	ug/L	80	78.6	98	85-115	
Beryllium, Dissolved	ug/L	80	80.2	100	85-115	
Cadmium, Dissolved	ug/L	80	79.5	99	85-115	
Calcium, Dissolved	ug/L	1000	1000	100	85-115	
Chromium, Dissolved	ug/L	80	77.3	97	85-115	
Cobalt, Dissolved	ug/L	80	75.3	94	85-115	
Copper, Dissolved	ug/L	80	77.9	97	85-115	
Iron, Dissolved	ug/L	1000	986	99	85-115	
Lead, Dissolved	ug/L	80	79.6	99	85-115	
Magnesium, Dissolved	ug/L	1000	1060	106	85-115	

This report shall not be reproduced, except in full,
without the written consent of Pace Analytical Services, Inc..

Pace Analytical Services, Inc.
9608 Loiret Blvd.
Lenexa, KS 66219
(913)599-5665

QUALITY CONTROL DATA

Project: JANUARY 2013 RICO WATER SAMPLI
Pace Project No.: 60137200

LABORATORY CONTROL SAMPLE: 1368446

Parameter	Units	Spike Conc.	LCS Result	LCS % Rec	% Rec Limits	Qualifiers
Manganese, Dissolved	ug/L	80	78.3	98	85-115	
Molybdenum, Dissolved	ug/L	80	76.8	96	85-115	
Nickel, Dissolved	ug/L	80	77.4	97	85-115	
Potassium, Dissolved	ug/L	1000	976	98	85-115	
Selenium, Dissolved	ug/L	80	78.2	98	85-115	
Silver, Dissolved	ug/L	80	79.2	99	85-115	
Sodium, Dissolved	ug/L	1000	986	99	85-115	
Thallium, Dissolved	ug/L	80	81.1	101	85-115	
Vanadium, Dissolved	ug/L	80	77.4	97	85-115	
Zinc, Dissolved	ug/L	80	78.6	98	85-115	

MATRIX SPIKE & MATRIX SPIKE DUPLICATE: 1368449 1368450

Parameter	Units	60137200016 Result	MS Spike Conc.	MSD Spike Conc.	MS Result	MSD Result	MS % Rec	MSD % Rec	% Rec Limits	RPD	Max RPD	Qual
Aluminum, Dissolved	ug/L	15000	80	80	16800	16000	2180	1140	70-130	5	20	M6
Antimony, Dissolved	ug/L	ND	80	80	83.2	78.8	104	98	70-130	5	20	
Arsenic, Dissolved	ug/L	242	80	80	393	369	188	159	70-130	6	20	M6
Barium, Dissolved	ug/L	13.8	80	80	98.3	96.0	106	103	70-130	2	20	
Beryllium, Dissolved	ug/L	5.5	80	80	88.7	85.8	104	100	70-130	3	20	
Cadmium, Dissolved	ug/L	84.2	80	80	178	170	117	107	70-130	4	20	
Calcium, Dissolved	ug/L	489000	1000	1000	489000	465000	10	-2360	70-130	5	20	E,M6
Chromium, Dissolved	ug/L	2.2	80	80	87.0	84.0	106	102	70-130	4	20	
Cobalt, Dissolved	ug/L	68.9	80	80	174	166	131	121	70-130	5	20	M6
Copper, Dissolved	ug/L	14.8	80	80	103	99.9	110	106	70-130	3	20	
Iron, Dissolved	ug/L	511000	1000	1000	493000	468000	-1820	-4320	70-130	5	20	E,M6
Lead, Dissolved	ug/L	889	80	80	986	938	122	61	70-130	5	20	M6
Magnesium, Dissolved	ug/L	139000	1000	1000	147000	140000	840	120	70-130	5	20	M6
Manganese, Dissolved	ug/L	27400	80	80	26900	25600	-575	-2160	70-130	5	20	E,M6
Molybdenum, Dissolved	ug/L	0.67	80	80	86.2	84.2	107	104	70-130	2	20	
Nickel, Dissolved	ug/L	135	80	80	268	257	166	153	70-130	4	20	M6
Potassium, Dissolved	ug/L	2910	1000	1000	4140	3960	123	104	70-130	4	20	
Selenium, Dissolved	ug/L	7.1	80	80	93.7	88.2	108	101	70-130	6	20	
Silver, Dissolved	ug/L	ND	80	80	82.0	75.9	102	95	70-130	8	20	
Sodium, Dissolved	ug/L	22800	1000	1000	24900	23500	209	73	70-130	6	20	M6
Thallium, Dissolved	ug/L	0.14	80	80	82.4	79.6	103	99	70-130	3	20	
Vanadium, Dissolved	ug/L	2.1	80	80	88.5	83.7	108	102	70-130	6	20	
Zinc, Dissolved	ug/L	121000	80	80	113000	108000	-10200	-16300	70-130	4	20	E,M6

This report shall not be reproduced, except in full,
without the written consent of Pace Analytical Services, Inc..

Pace Analytical Services, Inc.
9608 Loiret Blvd.
Lenexa, KS 66219
(913)599-5665

QUALITY CONTROL DATA

Project: JANUARY 2013 RICO WATER SAMPLI
Pace Project No.: 60137200

QC Batch: MPRP/21261 Analysis Method: EPA 200.8
QC Batch Method: EPA 200.8 Analysis Description: 200.8 Potentially Dissolved Metals
Associated Lab Samples: 60137200001, 60137200002, 60137200003, 60137200004, 60137200005, 60137200006, 60137200007, 60137200008, 60137200009, 60137200010, 60137200011, 60137200012, 60137200013, 60137200014, 60137200015, 60137200016, 60137200017, 60137200018, 60137200019

METHOD BLANK: 1129426 Matrix: Water
Associated Lab Samples: 60137200001, 60137200002, 60137200003, 60137200004, 60137200005, 60137200006, 60137200007, 60137200008, 60137200009, 60137200010, 60137200011, 60137200012, 60137200013, 60137200014, 60137200015, 60137200016, 60137200017, 60137200018, 60137200019

Parameter	Units	Blank Result	Reporting Limit	Analyzed	Qualifiers
Aluminum, Dissolved	ug/L	ND	50.0	01/25/13 12:26	
Antimony, Dissolved	ug/L	ND	1.0	01/25/13 12:26	
Arsenic, Dissolved	ug/L	ND	1.0	01/25/13 12:26	
Barium, Dissolved	ug/L	0.091J	1.0	01/25/13 12:26	
Beryllium, Dissolved	ug/L	ND	0.50	01/25/13 12:26	
Cadmium, Dissolved	ug/L	ND	0.50	01/25/13 12:26	
Chromium, Dissolved	ug/L	0.47J	1.0	01/25/13 12:26	
Cobalt, Dissolved	ug/L	ND	1.0	01/25/13 12:26	
Copper, Dissolved	ug/L	ND	1.0	01/25/13 12:26	
Iron, Dissolved	ug/L	5.9J	50.0	01/25/13 12:26	
Lead, Dissolved	ug/L	ND	1.0	01/25/13 12:26	
Manganese, Dissolved	ug/L	ND	1.0	01/25/13 12:26	
Molybdenum, Dissolved	ug/L	0.21J	1.0	01/25/13 12:26	
Nickel, Dissolved	ug/L	0.38J	1.0	01/25/13 12:26	
Selenium, Dissolved	ug/L	ND	1.0	01/25/13 12:26	
Silver, Dissolved	ug/L	ND	0.50	01/25/13 12:26	
Thallium, Dissolved	ug/L	ND	1.0	01/25/13 12:26	
Vanadium, Dissolved	ug/L	ND	1.0	01/25/13 12:26	
Zinc, Dissolved	ug/L	4.1J	10.0	01/25/13 12:26	

LABORATORY CONTROL SAMPLE: 1129427

Parameter	Units	Spike Conc.	LCS Result	LCS % Rec	% Rec Limits	Qualifiers
Aluminum, Dissolved	ug/L	1000	1010	101	85-115	
Antimony, Dissolved	ug/L	40	41.6	104	85-115	
Arsenic, Dissolved	ug/L	40	42.5	106	85-115	
Barium, Dissolved	ug/L	40	41.3	103	85-115	
Beryllium, Dissolved	ug/L	40	41.4	104	85-115	
Cadmium, Dissolved	ug/L	40	40.8	102	85-115	
Chromium, Dissolved	ug/L	40	42.4	106	85-115	
Cobalt, Dissolved	ug/L	40	41.8	104	85-115	
Copper, Dissolved	ug/L	40	41.8	104	85-115	
Iron, Dissolved	ug/L	1000	1040	104	85-115	
Lead, Dissolved	ug/L	40	40.9	102	85-115	
Manganese, Dissolved	ug/L	40	41.2	103	85-115	
Molybdenum, Dissolved	ug/L	40	42.2	105	85-115	
Nickel, Dissolved	ug/L	40	42.2	106	85-115	
Selenium, Dissolved	ug/L	40	43.5	109	85-115	

This report shall not be reproduced, except in full,
without the written consent of Pace Analytical Services, Inc..

Pace Analytical Services, Inc.
9608 Loiret Blvd.
Lenexa, KS 66219
(913)599-5665

QUALITY CONTROL DATA

Project: JANUARY 2013 RICO WATER SAMPLI
Pace Project No.: 60137200

LABORATORY CONTROL SAMPLE: 1129427

Parameter	Units	Spike Conc.	LCS Result	LCS % Rec	% Rec Limits	Qualifiers
Silver, Dissolved	ug/L	20	20.4	102	85-115	
Thallium, Dissolved	ug/L	40	39.3	98	85-115	
Vanadium, Dissolved	ug/L	40	42.3	106	85-115	
Zinc, Dissolved	ug/L	100	110	110	85-115	

MATRIX SPIKE & MATRIX SPIKE DUPLICATE: 1129428 1129429

Parameter	Units	60137200001 Result	MS Spike Conc.	MSD Spike Conc.	MS Result	MSD Result	MS % Rec	MSD % Rec	% Rec Limits	RPD	Max RPD	Qual
Aluminum, Dissolved	ug/L	2640	1000	1000	3630	3520	99	88	70-130	3	20	
Antimony, Dissolved	ug/L	0.14J	40	40	40.2	39.9	100	99	70-130	1	20	
Arsenic, Dissolved	ug/L	2.2	40	40	42.5	42.1	101	100	70-130	1	20	
Barium, Dissolved	ug/L	227	40	40	266	257	96	74	70-130	3	20	
Beryllium, Dissolved	ug/L	0.70	40	40	40.5	40.2	100	99	70-130	1	20	
Cadmium, Dissolved	ug/L	2.0	40	40	41.7	41.1	99	98	70-130	1	20	
Chromium, Dissolved	ug/L	2.7	40	40	43.0	42.7	101	100	70-130	1	20	
Cobalt, Dissolved	ug/L	4.9	40	40	44.4	43.7	99	97	70-130	2	20	
Copper, Dissolved	ug/L	45.1	40	40	82.8	81.1	94	90	70-130	2	20	
Iron, Dissolved	ug/L	4200	1000	1000	5180	5040	98	84	70-130	3	20	
Lead, Dissolved	ug/L	30.6	40	40	71.2	69.5	101	97	70-130	2	20	
Manganese, Dissolved	ug/L	1150	40	40	1180	1160	72	8	70-130	2	20	M1
Molybdenum, Dissolved	ug/L	0.51J	40	40	43.2	43.4	107	107	70-130	0	20	
Nickel, Dissolved	ug/L	11.0	40	40	50.0	48.9	97	95	70-130	2	20	
Selenium, Dissolved	ug/L	1.2	40	40	40.3	40.6	98	98	70-130	1	20	
Silver, Dissolved	ug/L	0.71	20	20	20.5	20.1	99	97	70-130	2	20	
Thallium, Dissolved	ug/L	0.046J	40	40	38.8	38.4	97	96	70-130	1	20	
Vanadium, Dissolved	ug/L	4.5	40	40	45.8	45.3	103	102	70-130	1	20	
Zinc, Dissolved	ug/L	136	100	100	234	233	98	97	70-130	1	20	

MATRIX SPIKE SAMPLE: 1129430

Parameter	Units	60137200011 Result	Spike Conc.	MS Result	MS % Rec	% Rec Limits	Qualifiers
Aluminum, Dissolved	ug/L	3890	1000	4190	30	70-130	2e,M1
Antimony, Dissolved	ug/L	0.19J	40	39.7	99	70-130	
Arsenic, Dissolved	ug/L	138	40	156	46	70-130	1e,M1
Barium, Dissolved	ug/L	33.8	40	67.8	85	70-130	
Beryllium, Dissolved	ug/L	1.1	40	36.7	89	70-130	
Cadmium, Dissolved	ug/L	5.2	40	43.0	94	70-130	
Chromium, Dissolved	ug/L	4.8	40	44.3	99	70-130	
Cobalt, Dissolved	ug/L	5.7	40	43.5	94	70-130	
Copper, Dissolved	ug/L	35.6	40	67.5	80	70-130	
Iron, Dissolved	ug/L	33400	1000	29000	-449	70-130	M1
Lead, Dissolved	ug/L	42.0	40	75.8	84	70-130	
Manganese, Dissolved	ug/L	8680	40	7150	-3832	70-130	M6
Molybdenum, Dissolved	ug/L	5.5	40	49.1	109	70-130	

This report shall not be reproduced, except in full,
without the written consent of Pace Analytical Services, Inc..

Pace Analytical Services, Inc.
9608 Loiret Blvd.
Lenexa, KS 66219
(913)599-5665

QUALITY CONTROL DATA

Project: JANUARY 2013 RICO WATER SAMPLI
Pace Project No.: 60137200

MATRIX SPIKE SAMPLE: 1129430

Parameter	Units	60137200011 Result	Spike Conc.	MS Result	MS % Rec	% Rec Limits	Qualifiers
Nickel, Dissolved	ug/L	4.9	40	42.2	93	70-130	
Selenium, Dissolved	ug/L	1.6	40	40.6	98	70-130	
Silver, Dissolved	ug/L	ND	20	18.9	94	70-130	
Thallium, Dissolved	ug/L	ND	40	39.7	99	70-130	
Vanadium, Dissolved	ug/L	8.7	40	48.6	100	70-130	
Zinc, Dissolved	ug/L	1560	100	1410	-148	70-130	M1

This report shall not be reproduced, except in full,
without the written consent of Pace Analytical Services, Inc..

Pace Analytical Services, Inc.
9608 Loiret Blvd.
Lenexa, KS 66219
(913)599-5665

QUALITY CONTROL DATA

Project: JANUARY 2013 RICO WATER SAMPLI
Pace Project No.: 60137200

QC Batch: MPRP/21262 Analysis Method: EPA 200.8
QC Batch Method: EPA 200.8 Analysis Description: 200.8 Potentially Dissolved Metals
Associated Lab Samples: 60137200020, 60137200021, 60137200022, 60137200023, 60137200024

METHOD BLANK: 1129431 Matrix: Water
Associated Lab Samples: 60137200020, 60137200021, 60137200022, 60137200023, 60137200024

Parameter	Units	Blank Result	Reporting Limit	Analyzed	Qualifiers
Aluminum, Dissolved	ug/L	10.4J	50.0	01/25/13 17:00	
Antimony, Dissolved	ug/L	ND	1.0	01/25/13 17:00	
Arsenic, Dissolved	ug/L	ND	1.0	01/25/13 17:00	
Barium, Dissolved	ug/L	0.12J	1.0	01/25/13 17:00	
Beryllium, Dissolved	ug/L	ND	0.50	01/25/13 17:00	
Cadmium, Dissolved	ug/L	ND	0.50	01/25/13 17:00	
Chromium, Dissolved	ug/L	0.45J	1.0	01/28/13 10:47	
Cobalt, Dissolved	ug/L	ND	1.0	01/25/13 17:00	
Copper, Dissolved	ug/L	ND	1.0	01/25/13 17:00	
Iron, Dissolved	ug/L	ND	50.0	01/25/13 17:00	
Lead, Dissolved	ug/L	ND	1.0	01/25/13 17:00	
Manganese, Dissolved	ug/L	ND	1.0	01/25/13 17:00	
Molybdenum, Dissolved	ug/L	ND	1.0	01/25/13 17:00	
Nickel, Dissolved	ug/L	ND	1.0	01/25/13 17:00	
Selenium, Dissolved	ug/L	ND	1.0	01/25/13 17:00	
Silver, Dissolved	ug/L	ND	0.50	01/25/13 17:00	
Thallium, Dissolved	ug/L	ND	1.0	01/25/13 17:00	
Vanadium, Dissolved	ug/L	ND	1.0	01/25/13 17:00	
Zinc, Dissolved	ug/L	3.5J	10.0	01/25/13 17:00	

LABORATORY CONTROL SAMPLE: 1129432

Parameter	Units	Spike Conc.	LCS Result	LCS % Rec	% Rec Limits	Qualifiers
Aluminum, Dissolved	ug/L	1000	980	98	85-115	
Antimony, Dissolved	ug/L	40	40.6	101	85-115	
Arsenic, Dissolved	ug/L	40	41.0	103	85-115	
Barium, Dissolved	ug/L	40	39.8	99	85-115	
Beryllium, Dissolved	ug/L	40	40.8	102	85-115	
Cadmium, Dissolved	ug/L	40	40.3	101	85-115	
Chromium, Dissolved	ug/L	40	40.7	102	85-115	
Cobalt, Dissolved	ug/L	40	39.8	100	85-115	
Copper, Dissolved	ug/L	40	39.9	100	85-115	
Iron, Dissolved	ug/L	1000	1000	100	85-115	
Lead, Dissolved	ug/L	40	39.5	99	85-115	
Manganese, Dissolved	ug/L	40	40.6	102	85-115	
Molybdenum, Dissolved	ug/L	40	40.6	101	85-115	
Nickel, Dissolved	ug/L	40	39.7	99	85-115	
Selenium, Dissolved	ug/L	40	41.0	102	85-115	
Silver, Dissolved	ug/L	20	19.7	99	85-115	
Thallium, Dissolved	ug/L	40	38.0	95	85-115	
Vanadium, Dissolved	ug/L	40	39.8	100	85-115	

This report shall not be reproduced, except in full,
without the written consent of Pace Analytical Services, Inc..

Pace Analytical Services, Inc.
9608 Loiret Blvd.
Lenexa, KS 66219
(913)599-5665

QUALITY CONTROL DATA

Project: JANUARY 2013 RICO WATER SAMPLI
Pace Project No.: 60137200

LABORATORY CONTROL SAMPLE: 1129432

Parameter	Units	Spike Conc.	LCS Result	LCS % Rec	% Rec Limits	Qualifiers
Zinc, Dissolved	ug/L	100	106	106	85-115	

MATRIX SPIKE & MATRIX SPIKE DUPLICATE: 1129433 1129434

Parameter	Units	60137200021 Result	MS Spike Conc.	MSD Spike Conc.	MS Result	MSD Result	MS % Rec	MSD % Rec	% Rec Limits	RPD	Max RPD	Qual
Aluminum, Dissolved	ug/L	8560	1000	1000	9190	9020	64	47	70-130	2	20	M1
Antimony, Dissolved	ug/L	0.17J	40	40	40.0	39.4	99	98	70-130	1	20	
Arsenic, Dissolved	ug/L	6.7	40	40	46.3	46.1	99	99	70-130	0	20	
Barium, Dissolved	ug/L	85.3	40	40	120	119	87	84	70-130	1	20	
Beryllium, Dissolved	ug/L	2.0	40	40	38.2	36.8	90	87	70-130	4	20	
Cadmium, Dissolved	ug/L	32.5	40	40	70.0	68.9	94	91	70-130	2	20	
Chromium, Dissolved	ug/L	18.3	40	40	56.7	55.9	96	94	70-130	1	20	
Cobalt, Dissolved	ug/L	12.0	40	40	48.9	48.2	92	91	70-130	1	20	
Copper, Dissolved	ug/L	128	40	40	161	159	82	77	70-130	1	20	
Iron, Dissolved	ug/L	23100	1000	1000	23400	23000	31	-1	70-130	1	20	M1
Lead, Dissolved	ug/L	188	40	40	224	224	90	89	70-130	0	20	
Manganese, Dissolved	ug/L	1590	40	40	1570	1560	-60	-98	70-130	1	20	M1
Molybdenum, Dissolved	ug/L	5.2	40	40	49.0	48.7	109	109	70-130	1	20	
Nickel, Dissolved	ug/L	18.7	40	40	54.2	53.7	89	88	70-130	1	20	
Selenium, Dissolved	ug/L	2.7	40	40	39.1	38.9	91	91	70-130	1	20	
Silver, Dissolved	ug/L	ND	20	20	18.9	18.8	94	94	70-130	1	20	
Thallium, Dissolved	ug/L	0.35J	40	40	39.8	39.7	99	98	70-130	0	20	
Vanadium, Dissolved	ug/L	25.6	40	40	64.2	62.8	97	93	70-130	2	20	
Zinc, Dissolved	ug/L	1680	100	100	1720	1710	38	26	70-130	1	20	M1

This report shall not be reproduced, except in full,
without the written consent of Pace Analytical Services, Inc..

Pace Analytical Services, Inc.
9608 Loiret Blvd.
Lenexa, KS 66219
(913)599-5665

QUALITY CONTROL DATA

Project: JANUARY 2013 RICO WATER SAMPLI
Pace Project No.: 60137200

QC Batch: MT/11216 | Analysis Method: SM 2510B
QC Batch Method: SM 2510B | Analysis Description: 2510B Specific Conductance

Associated Lab Samples: 60137200001, 60137200002, 60137200003, 60137200004, 60137200005, 60137200006, 60137200007, 60137200008, 60137200009, 60137200010, 60137200011, 60137200012, 60137200013, 60137200014, 60137200015, 60137200016, 60137200017, 60137200018, 60137200019, 60137200020

METHOD BLANK: 1369188 | Matrix: Water

Associated Lab Samples: 60137200001, 60137200002, 60137200003, 60137200004, 60137200005, 60137200006, 60137200007, 60137200008, 60137200009, 60137200010, 60137200011, 60137200012, 60137200013, 60137200014, 60137200015, 60137200016, 60137200017, 60137200018, 60137200019, 60137200020

Parameter	Units	Blank Result	Reporting Limit	Analyzed	Qualifiers
Specific Conductance	umhos/cm	ND	10.0	01/25/13 12:00	

LABORATORY CONTROL SAMPLE: 1369189

Parameter	Units	Spike Conc.	LCS Result	LCS % Rec	% Rec Limits	Qualifiers
Specific Conductance	umhos/cm	1000	1010	101	90-110	

SAMPLE DUPLICATE: 1369190

Parameter	Units	60137200004 Result	Dup Result	RPD	Max RPD	Qualifiers
Specific Conductance	umhos/cm	1310	1270	3	20	

SAMPLE DUPLICATE: 1369191

Parameter	Units	60137200015 Result	Dup Result	RPD	Max RPD	Qualifiers
Specific Conductance	umhos/cm	1630	1650	1	20	

This report shall not be reproduced, except in full,
without the written consent of Pace Analytical Services, Inc..

Pace Analytical Services, Inc.
9608 Loiret Blvd.
Lenexa, KS 66219
(913)599-5665

QUALITY CONTROL DATA

Project: JANUARY 2013 RICO WATER SAMPLI
Pace Project No.: 60137200

QC Batch: MT/11217 Analysis Method: SM 2510B
QC Batch Method: SM 2510B Analysis Description: 2510B Specific Conductance
Associated Lab Samples: 60137200021, 60137200022, 60137200023, 60137200024

METHOD BLANK: 1369192 Matrix: Water
Associated Lab Samples: 60137200021, 60137200022, 60137200023, 60137200024

Parameter	Units	Blank Result	Reporting Limit	Analyzed	Qualifiers
Specific Conductance	umhos/cm	ND	10.0	01/25/13 12:45	

LABORATORY CONTROL SAMPLE: 1369193

Parameter	Units	Spike Conc.	LCS Result	LCS % Rec	% Rec Limits	Qualifiers
Specific Conductance	umhos/cm	1000	983	98	90-110	

SAMPLE DUPLICATE: 1369194

Parameter	Units	60137200023 Result	Dup Result	RPD	Max RPD	Qualifiers
Specific Conductance	umhos/cm	1200	1280	6	20	

This report shall not be reproduced, except in full,
without the written consent of Pace Analytical Services, Inc..

Pace Analytical Services, Inc.
9608 Loiret Blvd.
Lenexa, KS 66219
(913)599-5665

QUALITY CONTROL DATA

Project: JANUARY 2013 RICO WATER SAMPLI
Pace Project No.: 60137200

QC Batch: WET/39365 Analysis Method: SM 2320B
QC Batch Method: SM 2320B Analysis Description: 2320B Alkalinity
Associated Lab Samples: 60137200001, 60137200002, 60137200003, 60137200004, 60137200005, 60137200006, 60137200007, 60137200008, 60137200009, 60137200010, 60137200011, 60137200012, 60137200013, 60137200014, 60137200015, 60137200016, 60137200017

METHOD BLANK: 1129191 Matrix: Water
Associated Lab Samples: 60137200001, 60137200002, 60137200003, 60137200004, 60137200005, 60137200006, 60137200007, 60137200008, 60137200009, 60137200010, 60137200011, 60137200012, 60137200013, 60137200014, 60137200015, 60137200016, 60137200017

Parameter	Units	Blank Result	Reporting Limit	Analyzed	Qualifiers
Alkalinity, Carbonate (CaCO3)	mg/L	ND	20.0	01/23/13 07:46	
Alkalinity, Total as CaCO3	mg/L	ND	20.0	01/23/13 07:46	
Alkalinity,Bicarbonate (CaCO3)	mg/L	ND	20.0	01/23/13 07:46	

LABORATORY CONTROL SAMPLE: 1129192

Parameter	Units	Spike Conc.	LCS Result	LCS % Rec	% Rec Limits	Qualifiers
Alkalinity, Total as CaCO3	mg/L	500	531	106	90-110	

SAMPLE DUPLICATE: 1129193

Parameter	Units	60137124001 Result	Dup Result	RPD	Max RPD	Qualifiers
Alkalinity, Carbonate (CaCO3)	mg/L	ND	ND		10	
Alkalinity, Total as CaCO3	mg/L	337	339	1	10	
Alkalinity,Bicarbonate (CaCO3)	mg/L	337	339	1	10	

SAMPLE DUPLICATE: 1129194

Parameter	Units	60137200008 Result	Dup Result	RPD	Max RPD	Qualifiers
Alkalinity, Carbonate (CaCO3)	mg/L	ND	ND		10	
Alkalinity, Total as CaCO3	mg/L	84.8	89.0	5	10	
Alkalinity,Bicarbonate (CaCO3)	mg/L	84.8	89.0	5	10	

This report shall not be reproduced, except in full,
without the written consent of Pace Analytical Services, Inc..

Pace Analytical Services, Inc.
9608 Loiret Blvd.
Lenexa, KS 66219
(913)599-5665

QUALITY CONTROL DATA

Project: JANUARY 2013 RICO WATER SAMPLI
Pace Project No.: 60137200

QC Batch: WET/39383 Analysis Method: SM 2320B
QC Batch Method: SM 2320B Analysis Description: 2320B Alkalinity
Associated Lab Samples: 60137200018, 60137200019, 60137200020, 60137200021, 60137200022, 60137200023, 60137200024

METHOD BLANK: 1129748 Matrix: Water
Associated Lab Samples: 60137200018, 60137200019, 60137200020, 60137200021, 60137200022, 60137200023, 60137200024

Parameter	Units	Blank Result	Reporting Limit	Analyzed	Qualifiers
Alkalinity, Carbonate (CaCO3)	mg/L	ND	20.0	01/24/13 08:11	
Alkalinity, Total as CaCO3	mg/L	ND	20.0	01/24/13 08:11	
Alkalinity,Bicarbonate (CaCO3)	mg/L	ND	20.0	01/24/13 08:11	

LABORATORY CONTROL SAMPLE: 1129749

Parameter	Units	Spike Conc.	LCS Result	LCS % Rec	% Rec Limits	Qualifiers
Alkalinity, Total as CaCO3	mg/L	500	511	102	90-110	

SAMPLE DUPLICATE: 1129751

Parameter	Units	60137148001 Result	Dup Result	RPD	Max RPD	Qualifiers
Alkalinity, Carbonate (CaCO3)	mg/L	ND	ND		10	
Alkalinity, Total as CaCO3	mg/L	2730	2710	1	10	
Alkalinity,Bicarbonate (CaCO3)	mg/L	2730	2710	1	10	

This report shall not be reproduced, except in full,
without the written consent of Pace Analytical Services, Inc..

Pace Analytical Services, Inc.
9608 Loiret Blvd.
Lenexa, KS 66219
(913)599-5665

QUALITY CONTROL DATA

Project: JANUARY 2013 RICO WATER SAMPLI
Pace Project No.: 60137200

QC Batch: WET/39367 Analysis Method: SM 2540C
QC Batch Method: SM 2540C Analysis Description: 2540C Total Dissolved Solids
Associated Lab Samples: 60137200001, 60137200002, 60137200003, 60137200004, 60137200005, 60137200006

METHOD BLANK: 1129201 Matrix: Water
Associated Lab Samples: 60137200001, 60137200002, 60137200003, 60137200004, 60137200005, 60137200006

Parameter	Units	Blank Result	Reporting Limit	Analyzed	Qualifiers
Total Dissolved Solids	mg/L	ND	5.0	01/22/13 16:04	

SAMPLE DUPLICATE: 1129202

Parameter	Units	60137200001 Result	Dup Result	RPD	Max RPD	Qualifiers
Total Dissolved Solids	mg/L	203	213	5	17	

This report shall not be reproduced, except in full,
without the written consent of Pace Analytical Services, Inc..

Pace Analytical Services, Inc.
9608 Loiret Blvd.
Lenexa, KS 66219
(913)599-5665

QUALITY CONTROL DATA

Project: JANUARY 2013 RICO WATER SAMPLI
Pace Project No.: 60137200

QC Batch: WET/39382 Analysis Method: SM 2540C
QC Batch Method: SM 2540C Analysis Description: 2540C Total Dissolved Solids
Associated Lab Samples: 60137200007, 60137200008, 60137200009, 60137200010, 60137200011, 60137200012, 60137200013, 60137200014, 60137200015, 60137200016, 60137200017, 60137200018, 60137200019, 60137200020, 60137200021, 60137200022, 60137200023, 60137200024

METHOD BLANK: 1129744 Matrix: Water
Associated Lab Samples: 60137200007, 60137200008, 60137200009, 60137200010, 60137200011, 60137200012, 60137200013, 60137200014, 60137200015, 60137200016, 60137200017, 60137200018, 60137200019, 60137200020, 60137200021, 60137200022, 60137200023, 60137200024

Parameter	Units	Blank Result	Reporting Limit	Analyzed	Qualifiers
Total Dissolved Solids	mg/L	ND	5.0	01/23/13 15:23	

SAMPLE DUPLICATE: 1129745

Parameter	Units	60137200007 Result	Dup Result	RPD	Max RPD	Qualifiers
Total Dissolved Solids	mg/L	663	689	4	17	

SAMPLE DUPLICATE: 1129746

Parameter	Units	60137200019 Result	Dup Result	RPD	Max RPD	Qualifiers
Total Dissolved Solids	mg/L	1150	1020	12	17	

This report shall not be reproduced, except in full,
without the written consent of Pace Analytical Services, Inc..

Pace Analytical Services, Inc.
9608 Loiret Blvd.
Lenexa, KS 66219
(913)599-5665

QUALITY CONTROL DATA

Project: JANUARY 2013 RICO WATER SAMPLI
Pace Project No.: 60137200

QC Batch: WET/39368 Analysis Method: SM 2540D
QC Batch Method: SM 2540D Analysis Description: 2540D Total Suspended Solids
Associated Lab Samples: 60137200001, 60137200002, 60137200003, 60137200004, 60137200005, 60137200006, 60137200007, 60137200008, 60137200009, 60137200010, 60137200011, 60137200012, 60137200013, 60137200014, 60137200015, 60137200016

METHOD BLANK: 1129203 Matrix: Water
Associated Lab Samples: 60137200001, 60137200002, 60137200003, 60137200004, 60137200005, 60137200006, 60137200007, 60137200008, 60137200009, 60137200010, 60137200011, 60137200012, 60137200013, 60137200014, 60137200015, 60137200016

Parameter	Units	Blank Result	Reporting Limit	Analyzed	Qualifiers
Total Suspended Solids	mg/L	ND	5.0	01/22/13 16:07	

SAMPLE DUPLICATE: 1129204

Parameter	Units	60137200001 Result	Dup Result	RPD	Max RPD	Qualifiers
Total Suspended Solids	mg/L	1700	1660	2	25	

SAMPLE DUPLICATE: 1129205

Parameter	Units	60137200009 Result	Dup Result	RPD	Max RPD	Qualifiers
Total Suspended Solids	mg/L	314	310	1	25	

This report shall not be reproduced, except in full,
without the written consent of Pace Analytical Services, Inc..

Pace Analytical Services, Inc.
9608 Loiret Blvd.
Lenexa, KS 66219
(913)599-5665

QUALITY CONTROL DATA

Project: JANUARY 2013 RICO WATER SAMPLI
Pace Project No.: 60137200

QC Batch: WET/39381 Analysis Method: SM 2540D
QC Batch Method: SM 2540D Analysis Description: 2540D Total Suspended Solids
Associated Lab Samples: 60137200017, 60137200018, 60137200019, 60137200020, 60137200021, 60137200022, 60137200023, 60137200024

METHOD BLANK: 1129741 Matrix: Water
Associated Lab Samples: 60137200017, 60137200018, 60137200019, 60137200020, 60137200021, 60137200022, 60137200023, 60137200024

Parameter	Units	Blank Result	Reporting Limit	Analyzed	Qualifiers
Total Suspended Solids	mg/L	ND	5.0	01/23/13 15:13	

SAMPLE DUPLICATE: 1129742

Parameter	Units	60137236001 Result	Dup Result	RPD	Max RPD	Qualifiers
Total Suspended Solids	mg/L	22.0	21.0	5	25	

SAMPLE DUPLICATE: 1129743

Parameter	Units	60137200018 Result	Dup Result	RPD	Max RPD	Qualifiers
Total Suspended Solids	mg/L	199	272	31	25	D6

This report shall not be reproduced, except in full,
without the written consent of Pace Analytical Services, Inc..

Pace Analytical Services, Inc.
9608 Loiret Blvd.
Lenexa, KS 66219
(913)599-5665

QUALITY CONTROL DATA

Project: JANUARY 2013 RICO WATER SAMPLI
Pace Project No.: 60137200

QC Batch: WET/39362 Analysis Method: SM 4500-S-2 D
QC Batch Method: SM 4500-S-2 D Analysis Description: 4500S2D Sulfide, Total
Associated Lab Samples: 60137200001, 60137200002, 60137200003, 60137200004, 60137200005, 60137200006, 60137200007, 60137200008, 60137200009, 60137200010, 60137200011, 60137200012, 60137200013, 60137200014, 60137200015, 60137200016, 60137200017, 60137200018, 60137200019, 60137200020

METHOD BLANK: 1129118 Matrix: Water
Associated Lab Samples: 60137200001, 60137200002, 60137200003, 60137200004, 60137200005, 60137200006, 60137200007, 60137200008, 60137200009, 60137200010, 60137200011, 60137200012, 60137200013, 60137200014, 60137200015, 60137200016, 60137200017, 60137200018, 60137200019, 60137200020

Parameter	Units	Blank Result	Reporting Limit	Analyzed	Qualifiers
Sulfide, Total	mg/L	ND	0.050	01/22/13 14:31	

LABORATORY CONTROL SAMPLE: 1129119

Parameter	Units	Spike Conc.	LCS Result	LCS % Rec	% Rec Limits	Qualifiers
Sulfide, Total	mg/L	.5	0.52	104	80-120	

MATRIX SPIKE SAMPLE: 1129120

Parameter	Units	60137200001 Result	Spike Conc.	MS Result	MS % Rec	% Rec Limits	Qualifiers
Sulfide, Total	mg/L	ND	.5	ND	0	75-125	M1

This report shall not be reproduced, except in full,
without the written consent of Pace Analytical Services, Inc..

Pace Analytical Services, Inc.
9608 Loiret Blvd.
Lenexa, KS 66219
(913)599-5665

QUALITY CONTROL DATA

Project: JANUARY 2013 RICO WATER SAMPLI
Pace Project No.: 60137200

QC Batch: WET/39363 Analysis Method: SM 4500-S-2 D
QC Batch Method: SM 4500-S-2 D Analysis Description: 4500S2D Sulfide, Total
Associated Lab Samples: 60137200021, 60137200022, 60137200023, 60137200024

METHOD BLANK: 1129121 Matrix: Water
Associated Lab Samples: 60137200021, 60137200022, 60137200023, 60137200024

Parameter	Units	Blank Result	Reporting Limit	Analyzed	Qualifiers
Sulfide, Total	mg/L	ND	0.050	01/22/13 14:34	

LABORATORY CONTROL SAMPLE: 1129122

Parameter	Units	Spike Conc.	LCS Result	LCS % Rec	% Rec Limits	Qualifiers
Sulfide, Total	mg/L	.5	0.52	104	80-120	

MATRIX SPIKE SAMPLE: 1129123

Parameter	Units	60137200021 Result	Spike Conc.	MS Result	MS % Rec	% Rec Limits	Qualifiers
Sulfide, Total	mg/L	ND	.5	ND	0	75-125	M1

This report shall not be reproduced, except in full,
without the written consent of Pace Analytical Services, Inc..

Pace Analytical Services, Inc.
9608 Loiret Blvd.
Lenexa, KS 66219
(913)599-5665

QUALITY CONTROL DATA

Project: JANUARY 2013 RICO WATER SAMPLI
Pace Project No.: 60137200

QC Batch: WETA/23328 Analysis Method: EPA 300.0
QC Batch Method: EPA 300.0 Analysis Description: 300.0 IC Anions
Associated Lab Samples: 60137200001, 60137200002, 60137200003, 60137200004, 60137200005, 60137200006, 60137200007, 60137200008, 60137200009, 60137200011, 60137200012

METHOD BLANK: 1131848 Matrix: Water
Associated Lab Samples: 60137200001, 60137200002, 60137200003, 60137200004, 60137200005, 60137200006, 60137200007, 60137200008, 60137200009, 60137200011, 60137200012

Parameter	Units	Blank Result	Reporting Limit	Analyzed	Qualifiers
Chloride	mg/L	ND	1.0	01/27/13 14:01	
Sulfate	mg/L	ND	1.0	01/27/13 14:01	

LABORATORY CONTROL SAMPLE: 1131849

Parameter	Units	Spike Conc.	LCS Result	LCS % Rec	% Rec Limits	Qualifiers
Chloride	mg/L	5	4.8	97	90-110	
Sulfate	mg/L	5	4.9	98	90-110	

MATRIX SPIKE SAMPLE: 1131850

Parameter	Units	60137200001 Result	Spike Conc.	MS Result	MS % Rec	% Rec Limits	Qualifiers
Chloride	mg/L	1.3	5	5.6	87	64-118	
Sulfate	mg/L	59.7	25	81.3	86	61-119	

MATRIX SPIKE & MATRIX SPIKE DUPLICATE: 1131851 1131852

Parameter	Units	60137200011 Result	MS Spike Conc.	MSD Spike Conc.	MS Result	MSD Result	MS % Rec	MSD % Rec	% Rec Limits	RPD	Max RPD	Qual
Chloride	mg/L	1.1	5	5	5.5	5.6	88	89	64-118	1	12	
Sulfate	mg/L	760	250	250	989	962	92	81	61-119	3	10	

This report shall not be reproduced, except in full,
without the written consent of Pace Analytical Services, Inc..

Pace Analytical Services, Inc.
9608 Loiret Blvd.
Lenexa, KS 66219
(913)599-5665

QUALITY CONTROL DATA

Project: JANUARY 2013 RICO WATER SAMPLI
Pace Project No.: 60137200

QC Batch: WETA/23343 Analysis Method: EPA 300.0
QC Batch Method: EPA 300.0 Analysis Description: 300.0 IC Anions
Associated Lab Samples: 60137200010, 60137200013, 60137200015, 60137200017, 60137200018, 60137200019, 60137200020, 60137200021, 60137200022, 60137200023, 60137200024

METHOD BLANK: 1131999 Matrix: Water
Associated Lab Samples: 60137200010, 60137200013, 60137200015, 60137200017, 60137200018, 60137200019, 60137200020, 60137200021, 60137200022, 60137200023, 60137200024

Parameter	Units	Blank Result	Reporting Limit	Analyzed	Qualifiers
Chloride	mg/L	ND	1.0	01/28/13 11:17	
Sulfate	mg/L	ND	1.0	01/28/13 11:17	

LABORATORY CONTROL SAMPLE: 1132000

Parameter	Units	Spike Conc.	LCS Result	LCS % Rec	% Rec Limits	Qualifiers
Chloride	mg/L	5	4.9	98	90-110	
Sulfate	mg/L	5	4.9	99	90-110	

MATRIX SPIKE SAMPLE: 1132001

Parameter	Units	60137200010 Result	Spike Conc.	MS Result	MS % Rec	% Rec Limits	Qualifiers
Chloride	mg/L	1.6	5	6.0	87	64-118	
Sulfate	mg/L	1090	500	1500	82	61-119	

MATRIX SPIKE & MATRIX SPIKE DUPLICATE: 1132002 1132003

Parameter	Units	60137200019 Result	MS Spike Conc.	MSD Spike Conc.	MS Result	MSD Result	MS % Rec	MSD % Rec	% Rec Limits	RPD	Max RPD	Qual
Chloride	mg/L	1.1	5	5	5.5	5.6	89	90	64-118	1	12	
Sulfate	mg/L	597	250	250	832	814	94	87	61-119	2	10	

This report shall not be reproduced, except in full,
without the written consent of Pace Analytical Services, Inc..

Pace Analytical Services, Inc.
9608 Loiret Blvd.
Lenexa, KS 66219
(913)599-5665

QUALITY CONTROL DATA

Project: JANUARY 2013 RICO WATER SAMPLI
Pace Project No.: 60137200

QC Batch: WETA/23352 | Analysis Method: EPA 300.0
QC Batch Method: EPA 300.0 | Analysis Description: 300.0 IC Anions
Associated Lab Samples: 60137200014, 60137200016

METHOD BLANK: 1132499 | Matrix: Water
Associated Lab Samples: 60137200014, 60137200016

Parameter	Units	Blank Result	Reporting Limit	Analyzed	Qualifiers
Chloride	mg/L	ND	1.0	01/29/13 11:37	
Sulfate	mg/L	ND	1.0	01/29/13 11:37	

LABORATORY CONTROL SAMPLE: 1132500

Parameter	Units	Spike Conc.	LCS Result	LCS % Rec	% Rec Limits	Qualifiers
Chloride	mg/L	5	5.0	100	90-110	
Sulfate	mg/L	5	5.1	102	90-110	

MATRIX SPIKE SAMPLE: 1132501

Parameter	Units	60137381003 Result	Spike Conc.	MS Result	MS % Rec	% Rec Limits	Qualifiers
Chloride	mg/L	ND	25	25.2	85	64-118	
Sulfate	mg/L	37.7	25	60.4	91	61-119	

MATRIX SPIKE SAMPLE: 1132502

Parameter	Units	60137392006 Result	Spike Conc.	MS Result	MS % Rec	% Rec Limits	Qualifiers
Chloride	mg/L		1000	1210	86	64-118	
Sulfate	mg/L		1000	3430	96	61-119	

This report shall not be reproduced, except in full,
without the written consent of Pace Analytical Services, Inc..

Pace Analytical Services, Inc.
9608 Loiret Blvd.
Lenexa, KS 66219
(913)599-5665

QUALITY CONTROL DATA

Project: JANUARY 2013 RICO WATER SAMPLI
Pace Project No.: 60137200

QC Batch: WETA/23283 Analysis Method: EPA 353.2
QC Batch Method: EPA 353.2 Analysis Description: 353.2 Nitrate + Nitrite, preserved
Associated Lab Samples: 60137200001, 60137200002, 60137200003, 60137200004, 60137200005, 60137200006, 60137200007, 60137200008, 60137200009, 60137200010, 60137200011, 60137200012, 60137200013, 60137200014, 60137200015, 60137200016, 60137200017, 60137200018, 60137200019, 60137200020

METHOD BLANK: 1129364 Matrix: Water
Associated Lab Samples: 60137200001, 60137200002, 60137200003, 60137200004, 60137200005, 60137200006, 60137200007, 60137200008, 60137200009, 60137200010, 60137200011, 60137200012, 60137200013, 60137200014, 60137200015, 60137200016, 60137200017, 60137200018, 60137200019, 60137200020

Parameter	Units	Blank Result	Reporting Limit	Analyzed	Qualifiers
Nitrogen, NO2 plus NO3	mg/L	ND	0.10	01/23/13 11:42	

LABORATORY CONTROL SAMPLE: 1129365

Parameter	Units	Spike Conc.	LCS Result	LCS % Rec	% Rec Limits	Qualifiers
Nitrogen, NO2 plus NO3	mg/L	2	2.1	104	90-110	

MATRIX SPIKE SAMPLE: 1129366

Parameter	Units	60137200001 Result	Spike Conc.	MS Result	MS % Rec	% Rec Limits	Qualifiers
Nitrogen, NO2 plus NO3	mg/L	ND	2	2.1	100	90-110	

MATRIX SPIKE SAMPLE: 1129367

Parameter	Units	60137200008 Result	Spike Conc.	MS Result	MS % Rec	% Rec Limits	Qualifiers
Nitrogen, NO2 plus NO3	mg/L	ND	2	2.0	99	90-110	

SAMPLE DUPLICATE: 1129368

Parameter	Units	60137200011 Result	Dup Result	RPD	Max RPD	Qualifiers
Nitrogen, NO2 plus NO3	mg/L	ND	ND		13	

This report shall not be reproduced, except in full,
without the written consent of Pace Analytical Services, Inc..

Pace Analytical Services, Inc.
9608 Loiret Blvd.
Lenexa, KS 66219
(913)599-5665

QUALITY CONTROL DATA

Project: JANUARY 2013 RICO WATER SAMPLI
Pace Project No.: 60137200

QC Batch: WETA/23284 Analysis Method: EPA 353.2
QC Batch Method: EPA 353.2 Analysis Description: 353.2 Nitrate + Nitrite, preserved
Associated Lab Samples: 60137200021, 60137200022, 60137200023, 60137200024

METHOD BLANK: 1129373 Matrix: Water
Associated Lab Samples: 60137200021, 60137200022, 60137200023, 60137200024

Parameter	Units	Blank Result	Reporting Limit	Analyzed	Qualifiers
Nitrogen, NO2 plus NO3	mg/L	ND	0.10	01/23/13 12:07	

LABORATORY CONTROL SAMPLE: 1129374

Parameter	Units	Spike Conc.	LCS Result	LCS % Rec	% Rec Limits	Qualifiers
Nitrogen, NO2 plus NO3	mg/L	2	2.1	103	90-110	

MATRIX SPIKE SAMPLE: 1129375

Parameter	Units	60137200022 Result	Spike Conc.	MS Result	MS % Rec	% Rec Limits	Qualifiers
Nitrogen, NO2 plus NO3	mg/L	ND	2	2.0	100	90-110	

SAMPLE DUPLICATE: 1129376

Parameter	Units	60137200023 Result	Dup Result	RPD	Max RPD	Qualifiers
Nitrogen, NO2 plus NO3	mg/L	ND	ND		13	

This report shall not be reproduced, except in full,
without the written consent of Pace Analytical Services, Inc..

Pace Analytical Services, Inc.
9608 Loiret Blvd.
Lenexa, KS 66219
(913)599-5665

QUALITY CONTROL DATA

Project: JANUARY 2013 RICO WATER SAMPLI
Pace Project No.: 60137200

QC Batch: WETA/23267 Analysis Method: SM 4500-CN-E
QC Batch Method: SM 4500-CN-E Analysis Description: 4500CNE Cyanide, Total
Associated Lab Samples: 60137200001, 60137200002, 60137200003, 60137200004, 60137200005, 60137200006, 60137200007, 60137200008, 60137200009, 60137200010, 60137200011, 60137200012, 60137200013, 60137200014, 60137200015, 60137200016, 60137200017, 60137200018, 60137200019

METHOD BLANK: 1129289 Matrix: Water
Associated Lab Samples: 60137200001, 60137200002, 60137200003, 60137200004, 60137200005, 60137200006, 60137200007, 60137200008, 60137200009, 60137200010, 60137200011, 60137200012, 60137200013, 60137200014, 60137200015, 60137200016, 60137200017, 60137200018, 60137200019

Parameter	Units	Blank Result	Reporting Limit	Analyzed	Qualifiers
Cyanide	mg/L	ND	0.0050	01/23/13 13:08	

LABORATORY CONTROL SAMPLE: 1129290

Parameter	Units	Spike Conc.	LCS Result	LCS % Rec	% Rec Limits	Qualifiers
Cyanide	mg/L	.1	0.089	89	69-126	

MATRIX SPIKE SAMPLE: 1129291

Parameter	Units	60137200001 Result	Spike Conc.	MS Result	MS % Rec	% Rec Limits	Qualifiers
Cyanide	mg/L	0.018	.1	0.11	88	41-136	

SAMPLE DUPLICATE: 1129292

Parameter	Units	60137200002 Result	Dup Result	RPD	Max RPD	Qualifiers
Cyanide	mg/L	ND	ND		26	

This report shall not be reproduced, except in full,
without the written consent of Pace Analytical Services, Inc..

Pace Analytical Services, Inc.
9608 Loiret Blvd.
Lenexa, KS 66219
(913)599-5665

QUALITY CONTROL DATA

Project: JANUARY 2013 RICO WATER SAMPLI
Pace Project No.: 60137200

QC Batch: WETA/23268 — Analysis Method: SM 4500-CN-E
QC Batch Method: SM 4500-CN-E — Analysis Description: 4500CNE Cyanide, Total
Associated Lab Samples: 60137200020, 60137200021, 60137200022, 60137200023, 60137200024

METHOD BLANK: 1129295 — Matrix: Water
Associated Lab Samples: 60137200020, 60137200021, 60137200022, 60137200023, 60137200024

Parameter	Units	Blank Result	Reporting Limit	Analyzed	Qualifiers
Cyanide	mg/L	ND	0.0050	01/23/13 15:27	

LABORATORY CONTROL SAMPLE: 1129296

Parameter	Units	Spike Conc.	LCS Result	LCS % Rec	% Rec Limits	Qualifiers
Cyanide	mg/L	.1	0.097	97	69-126	

MATRIX SPIKE SAMPLE: 1129297

Parameter	Units	60137200020 Result	Spike Conc.	MS Result	MS % Rec	% Rec Limits	Qualifiers
Cyanide	mg/L	ND	.1	0.089	84	41-136	

SAMPLE DUPLICATE: 1129298

Parameter	Units	60137111010 Result	Dup Result	RPD	Max RPD	Qualifiers
Cyanide	mg/L	0.16	0.17	3	26	

This report shall not be reproduced, except in full,
without the written consent of Pace Analytical Services, Inc..

Pace Analytical Services, Inc.
9608 Loiret Blvd.
Lenexa, KS 66219
(913)599-5665

QUALITY CONTROL DATA

Project: JANUARY 2013 RICO WATER SAMPLI
Pace Project No.: 60137200

QC Batch: WETA/23288 Analysis Method: SM 5310C
QC Batch Method: SM 5310C Analysis Description: 5310C Total Organic Carbon
Associated Lab Samples: 60137200001, 60137200002, 60137200003, 60137200004, 60137200005, 60137200006, 60137200007, 60137200008, 60137200009, 60137200010, 60137200011

METHOD BLANK: 1129820 Matrix: Water
Associated Lab Samples: 60137200005, 60137200006, 60137200007, 60137200008, 60137200009, 60137200010, 60137200011

Parameter	Units	Blank Result	Reporting Limit	Analyzed	Qualifiers
Total Organic Carbon	mg/L	ND	1.0	01/24/13 12:48	

METHOD BLANK: 1131172 Matrix: Water
Associated Lab Samples: 60137200001, 60137200002, 60137200003, 60137200004

Parameter	Units	Blank Result	Reporting Limit	Analyzed	Qualifiers
Total Organic Carbon	mg/L	ND	1.0	01/23/13 17:46	

LABORATORY CONTROL SAMPLE: 1129821

Parameter	Units	Spike Conc.	LCS Result	LCS % Rec	% Rec Limits	Qualifiers
Total Organic Carbon	mg/L	5	4.6	93	80-120	

LABORATORY CONTROL SAMPLE: 1131173

Parameter	Units	Spike Conc.	LCS Result	LCS % Rec	% Rec Limits	Qualifiers
Total Organic Carbon	mg/L	5	4.7	93	80-120	

MATRIX SPIKE SAMPLE: 1129822

Parameter	Units	60137295001 Result	Spike Conc.	MS Result	MS % Rec	% Rec Limits	Qualifiers
Total Organic Carbon	mg/L	1.5	5	6.4	99	80-120	

SAMPLE DUPLICATE: 1129823

Parameter	Units	60137288001 Result	Dup Result	RPD	Max RPD	Qualifiers
Total Organic Carbon	mg/L	381	362	5	25	

This report shall not be reproduced, except in full,
without the written consent of Pace Analytical Services, Inc..

Pace Analytical Services, Inc.
9608 Loiret Blvd.
Lenexa, KS 66219
(913)599-5665

QUALITY CONTROL DATA

Project: JANUARY 2013 RICO WATER SAMPLI
Pace Project No.: 60137200

QC Batch: WETA/23309 Analysis Method: SM 5310C
QC Batch Method: SM 5310C Analysis Description: 5310C Total Organic Carbon
Associated Lab Samples: 60137200012, 60137200013, 60137200014, 60137200015, 60137200016, 60137200017, 60137200018, 60137200019, 60137200020, 60137200021, 60137200022

METHOD BLANK: 1130746 Matrix: Water
Associated Lab Samples: 60137200012, 60137200013, 60137200014, 60137200015, 60137200016, 60137200017, 60137200018, 60137200019, 60137200020, 60137200021, 60137200022

Parameter	Units	Blank Result	Reporting Limit	Analyzed	Qualifiers
Total Organic Carbon	mg/L	ND	1.0	01/25/13 14:04	

LABORATORY CONTROL SAMPLE: 1130747

Parameter	Units	Spike Conc.	LCS Result	LCS % Rec	% Rec Limits	Qualifiers
Total Organic Carbon	mg/L	5	4.8	96	80-120	

MATRIX SPIKE SAMPLE: 1130748

Parameter	Units	60137283001 Result	Spike Conc.	MS Result	MS % Rec	% Rec Limits	Qualifiers
Total Organic Carbon	mg/L	2.6	5	8.4	115	80-120	

SAMPLE DUPLICATE: 1130749

Parameter	Units	60137341001 Result	Dup Result	RPD	Max RPD	Qualifiers
Total Organic Carbon	mg/L	4.5	4.5	2	25	

This report shall not be reproduced, except in full,
without the written consent of Pace Analytical Services, Inc..

Pace Analytical Services, Inc.
9608 Loiret Blvd.
Lenexa, KS 66219
(913)599-5665

QUALITY CONTROL DATA

Project: JANUARY 2013 RICO WATER SAMPLI
Pace Project No.: 60137200

QC Batch: WETA/23336 | Analysis Method: SM 5310C
QC Batch Method: SM 5310C | Analysis Description: 5310C Total Organic Carbon
Associated Lab Samples: 60137200023, 60137200024

METHOD BLANK: 1131949 | Matrix: Water
Associated Lab Samples: 60137200023, 60137200024

Parameter	Units	Blank Result	Reporting Limit	Analyzed	Qualifiers
Total Organic Carbon	mg/L	ND	1.0	01/28/13 12:23	

LABORATORY CONTROL SAMPLE: 1131950

Parameter	Units	Spike Conc.	LCS Result	LCS % Rec	% Rec Limits	Qualifiers
Total Organic Carbon	mg/L	5	4.9	97	80-120	

MATRIX SPIKE SAMPLE: 1131951

Parameter	Units	60137148001 Result	Spike Conc.	MS Result	MS % Rec	% Rec Limits	Qualifiers
Total Organic Carbon	mg/L	184	25	205	82	80-120	

SAMPLE DUPLICATE: 1131952

Parameter	Units	60137331003 Result	Dup Result	RPD	Max RPD	Qualifiers
Total Organic Carbon	mg/L	2.4	2.2	8	25	

This report shall not be reproduced, except in full,
without the written consent of Pace Analytical Services, Inc..

Pace Analytical Services, Inc.
9608 Loiret Blvd.
Lenexa, KS 66219
(913)599-5665

QUALIFIERS

Project: JANUARY 2013 RICO WATER SAMPLI
Pace Project No.: 60137200

DEFINITIONS

DF - Dilution Factor, if reported, represents the factor applied to the reported data due to changes in sample preparation, dilution of the sample aliquot, or moisture content.

ND - Not Detected at or above adjusted reporting limit.

J - Estimated concentration above the adjusted method detection limit and below the adjusted reporting limit.

MDL - Adjusted Method Detection Limit.

PRL - Pace Reporting Limit.

RL - Reporting Limit.

S - Surrogate

1,2-Diphenylhydrazine (8270 listed analyte) decomposes to Azobenzene.

Consistent with EPA guidelines, unrounded data are displayed and have been used to calculate % recovery and RPD values.

LCS(D) - Laboratory Control Sample (Duplicate)

MS(D) - Matrix Spike (Duplicate)

DUP - Sample Duplicate

RPD - Relative Percent Difference

NC - Not Calculable.

SG - Silica Gel - Clean-Up

U - Indicates the compound was analyzed for, but not detected.

N-Nitrosodiphenylamine decomposes and cannot be separated from Diphenylamine using Method 8270. The result reported for each analyte is a combined concentration.

Pace Analytical is TNI accredited. Contact your Pace PM for the current list of accredited analytes.

TNI - The NELAC Institute.

LABORATORIES

PASI-K	Pace Analytical Services - Kansas City
PASI-M	Pace Analytical Services - Minneapolis

ANALYTE QUALIFIERS

1e	Post Digestion Spike Performed - 90.3% Recovery
2e	Post Digestion Spike Performed - 92.4% Recovery
B	Analyte was detected in the associated method blank.
D3	Sample was diluted due to the presence of high levels of non-target analytes or other matrix interference.
D6	The relative percent difference (RPD) between the sample and sample duplicate exceeded laboratory control limits.
E	Analyte concentration exceeded the calibration range. The reported result is estimated.
M1	Matrix spike recovery exceeded QC limits. Batch accepted based on laboratory control sample (LCS) recovery.
M6	Matrix spike and Matrix spike duplicate recovery not evaluated against control limits due to sample dilution.
P8	Analyte was detected in the method blank. All associated samples had concentrations of at least ten times greater than the blank or were below the reporting limit.

This report shall not be reproduced, except in full,
without the written consent of Pace Analytical Services, Inc..

Pace Analytical Services, Inc.
9608 Loiret Blvd.
Lenexa, KS 66219
(913)599-5665

QUALITY CONTROL DATA CROSS REFERENCE TABLE

Project: JANUARY 2013 RICO WATER SAMPLI
Pace Project No.: 60137200

Lab ID	Sample ID	QC Batch Method	QC Batch	Analytical Method	Analytical Batch
60137200001	**GW-1_20130115**	EPA 200.7	MPRP/21301	EPA 200.7	ICP/17181
60137200002	**GW-5_20130115**	EPA 200.7	MPRP/21301	EPA 200.7	ICP/17181
60137200003	**DR-3_20130115**	EPA 200.7	MPRP/21301	EPA 200.7	ICP/17181
60137200004	**DR-8_20130115**	EPA 200.7	MPRP/21301	EPA 200.7	ICP/17181
60137200005	**GW-6_20130115**	EPA 200.7	MPRP/21301	EPA 200.7	ICP/17181
60137200006	**DR-4_20130115**	EPA 200.7	MPRP/21301	EPA 200.7	ICP/17181
60137200007	**MW-1 SHALLOW_20130116**	EPA 200.7	MPRP/21301	EPA 200.7	ICP/17181
60137200008	**MW-1 DEEP_20130116**	EPA 200.7	MPRP/21301	EPA 200.7	ICP/17181
60137200009	**P13-103_20130116**	EPA 200.7	MPRP/21301	EPA 200.7	ICP/17181
60137200010	**P13-102_20130116**	EPA 200.7	MPRP/21301	EPA 200.7	ICP/17181
60137200011	**MW-6 DEEP_20130116**	EPA 200.7	MPRP/21301	EPA 200.7	ICP/17181
60137200012	**DR-10_20130116**	EPA 200.7	MPRP/21301	EPA 200.7	ICP/17181
60137200013	**MW-6 SHALLOW_20130116**	EPA 200.7	MPRP/21301	EPA 200.7	ICP/17181
60137200014	**EB-2_20130116**	EPA 200.7	MPRP/21301	EPA 200.7	ICP/17181
60137200015	**MW-5 DEEP_20130116**	EPA 200.7	MPRP/21301	EPA 200.7	ICP/17181
60137200016	**MW-5 SHALLOW_20130116**	EPA 200.7	MPRP/21301	EPA 200.7	ICP/17181
60137200017	**GW-3_20130117**	EPA 200.7	MPRP/21301	EPA 200.7	ICP/17181
60137200018	**MW-4 SHALLOW_20130117**	EPA 200.7	MPRP/21301	EPA 200.7	ICP/17181
60137200019	**MW-4 DEEP_20130116**	EPA 200.7	MPRP/21301	EPA 200.7	ICP/17181
60137200020	**DR-9_20130116**	EPA 200.7	MPRP/21302	EPA 200.7	ICP/17180
60137200021	**GW-4_20130116**	EPA 200.7	MPRP/21302	EPA 200.7	ICP/17180
60137200022	**MW-3 DEEP_20130116**	EPA 200.7	MPRP/21302	EPA 200.7	ICP/17180
60137200023	**MW-2 DEEP_20130116**	EPA 200.7	MPRP/21302	EPA 200.7	ICP/17180
60137200024	**EB-1_20130116**	EPA 200.7	MPRP/21302	EPA 200.7	ICP/17180
60137200001	**GW-1_20130115**	EPA 200.8	MPRP/37351	EPA 200.8	ICPM/15219
60137200002	**GW-5_20130115**	EPA 200.8	MPRP/37351	EPA 200.8	ICPM/15219
60137200003	**DR-3_20130115**	EPA 200.8	MPRP/37351	EPA 200.8	ICPM/15219
60137200004	**DR-8_20130115**	EPA 200.8	MPRP/37351	EPA 200.8	ICPM/15219
60137200005	**GW-6_20130115**	EPA 200.8	MPRP/37351	EPA 200.8	ICPM/15219
60137200006	**DR-4_20130115**	EPA 200.8	MPRP/37351	EPA 200.8	ICPM/15219
60137200007	**MW-1 SHALLOW_20130116**	EPA 200.8	MPRP/37351	EPA 200.8	ICPM/15219
60137200008	**MW-1 DEEP_20130116**	EPA 200.8	MPRP/37351	EPA 200.8	ICPM/15219
60137200009	**P13-103_20130116**	EPA 200.8	MPRP/37351	EPA 200.8	ICPM/15219
60137200010	**P13-102_20130116**	EPA 200.8	MPRP/37351	EPA 200.8	ICPM/15219
60137200011	**MW-6 DEEP_20130116**	EPA 200.8	MPRP/37351	EPA 200.8	ICPM/15219
60137200012	**DR-10_20130116**	EPA 200.8	MPRP/37351	EPA 200.8	ICPM/15219
60137200013	**MW-6 SHALLOW_20130116**	EPA 200.8	MPRP/37351	EPA 200.8	ICPM/15219
60137200014	**EB-2_20130116**	EPA 200.8	MPRP/37351	EPA 200.8	ICPM/15219
60137200015	**MW-5 DEEP_20130116**	EPA 200.8	MPRP/37351	EPA 200.8	ICPM/15219
60137200016	**MW-5 SHALLOW_20130116**	EPA 200.8	MPRP/37352	EPA 200.8	ICPM/15208
60137200017	**GW-3_20130117**	EPA 200.8	MPRP/37352	EPA 200.8	ICPM/15208
60137200018	**MW-4 SHALLOW_20130117**	EPA 200.8	MPRP/37352	EPA 200.8	ICPM/15208
60137200019	**MW-4 DEEP_20130116**	EPA 200.8	MPRP/37352	EPA 200.8	ICPM/15208
60137200020	**DR-9_20130116**	EPA 200.8	MPRP/37352	EPA 200.8	ICPM/15208
60137200021	**GW-4_20130116**	EPA 200.8	MPRP/37352	EPA 200.8	ICPM/15208
60137200022	**MW-3 DEEP_20130116**	EPA 200.8	MPRP/37352	EPA 200.8	ICPM/15208
60137200023	**MW-2 DEEP_20130116**	EPA 200.8	MPRP/37352	EPA 200.8	ICPM/15208

This report shall not be reproduced, except in full,
without the written consent of Pace Analytical Services, Inc..

Pace Analytical Services, Inc.
9608 Loiret Blvd.
Lenexa, KS 66219
(913)599-5665

QUALITY CONTROL DATA CROSS REFERENCE TABLE

Project: JANUARY 2013 RICO WATER SAMPLI
Pace Project No.: 60137200

Lab ID	Sample ID	QC Batch Method	QC Batch	Analytical Method	Analytical Batch
60137200024	**EB-1_20130116**	EPA 200.8	MPRP/37352	EPA 200.8	ICPM/15208
60137200001	**GW-1_20130115**	EPA 200.8	MPRP/37358	EPA 200.8	ICPM/15205
60137200002	**GW-5_20130115**	EPA 200.8	MPRP/37358	EPA 200.8	ICPM/15205
60137200003	**DR-3_20130115**	EPA 200.8	MPRP/37358	EPA 200.8	ICPM/15205
60137200004	**DR-8_20130115**	EPA 200.8	MPRP/37358	EPA 200.8	ICPM/15205
60137200005	**GW-6_20130115**	EPA 200.8	MPRP/37358	EPA 200.8	ICPM/15205
60137200006	**DR-4_20130115**	EPA 200.8	MPRP/37358	EPA 200.8	ICPM/15205
60137200007	**MW-1 SHALLOW_20130116**	EPA 200.8	MPRP/37358	EPA 200.8	ICPM/15205
60137200008	**MW-1 DEEP_20130116**	EPA 200.8	MPRP/37358	EPA 200.8	ICPM/15205
60137200009	**P13-103_20130116**	EPA 200.8	MPRP/37358	EPA 200.8	ICPM/15205
60137200010	**P13-102_20130116**	EPA 200.8	MPRP/37358	EPA 200.8	ICPM/15205
60137200011	**MW-6 DEEP_20130116**	EPA 200.8	MPRP/37358	EPA 200.8	ICPM/15205
60137200012	**DR-10_20130116**	EPA 200.8	MPRP/37358	EPA 200.8	ICPM/15205
60137200013	**MW-6 SHALLOW_20130116**	EPA 200.8	MPRP/37358	EPA 200.8	ICPM/15205
60137200014	**EB-2_20130116**	EPA 200.8	MPRP/37358	EPA 200.8	ICPM/15205
60137200015	**MW-5 DEEP_20130116**	EPA 200.8	MPRP/37358	EPA 200.8	ICPM/15205
60137200016	**MW-5 SHALLOW_20130116**	EPA 200.8	MPRP/37359	EPA 200.8	ICPM/15202
60137200017	**GW-3_20130117**	EPA 200.8	MPRP/37359	EPA 200.8	ICPM/15202
60137200018	**MW-4 SHALLOW_20130117**	EPA 200.8	MPRP/37359	EPA 200.8	ICPM/15202
60137200019	**MW-4 DEEP_20130116**	EPA 200.8	MPRP/37359	EPA 200.8	ICPM/15202
60137200020	**DR-9_20130116**	EPA 200.8	MPRP/37359	EPA 200.8	ICPM/15202
60137200021	**GW-4_20130116**	EPA 200.8	MPRP/37359	EPA 200.8	ICPM/15202
60137200022	**MW-3 DEEP_20130116**	EPA 200.8	MPRP/37359	EPA 200.8	ICPM/15202
60137200023	**MW-2 DEEP_20130116**	EPA 200.8	MPRP/37359	EPA 200.8	ICPM/15202
60137200024	**EB-1_20130116**	EPA 200.8	MPRP/37359	EPA 200.8	ICPM/15202
60137200001	**GW-1_20130115**	EPA 200.8	MPRP/21261	EPA 200.8	ICPM/1988
60137200002	**GW-5_20130115**	EPA 200.8	MPRP/21261	EPA 200.8	ICPM/1988
60137200003	**DR-3_20130115**	EPA 200.8	MPRP/21261	EPA 200.8	ICPM/1988
60137200004	**DR-8_20130115**	EPA 200.8	MPRP/21261	EPA 200.8	ICPM/1988
60137200005	**GW-6_20130115**	EPA 200.8	MPRP/21261	EPA 200.8	ICPM/1988
60137200006	**DR-4_20130115**	EPA 200.8	MPRP/21261	EPA 200.8	ICPM/1988
60137200007	**MW-1 SHALLOW_20130116**	EPA 200.8	MPRP/21261	EPA 200.8	ICPM/1988
60137200008	**MW-1 DEEP_20130116**	EPA 200.8	MPRP/21261	EPA 200.8	ICPM/1988
60137200009	**P13-103_20130116**	EPA 200.8	MPRP/21261	EPA 200.8	ICPM/1988
60137200010	**P13-102_20130116**	EPA 200.8	MPRP/21261	EPA 200.8	ICPM/1988
60137200011	**MW-6 DEEP_20130116**	EPA 200.8	MPRP/21261	EPA 200.8	ICPM/1988
60137200012	**DR-10_20130116**	EPA 200.8	MPRP/21261	EPA 200.8	ICPM/1988
60137200013	**MW-6 SHALLOW_20130116**	EPA 200.8	MPRP/21261	EPA 200.8	ICPM/1988
60137200014	**EB-2_20130116**	EPA 200.8	MPRP/21261	EPA 200.8	ICPM/1988
60137200015	**MW-5 DEEP_20130116**	EPA 200.8	MPRP/21261	EPA 200.8	ICPM/1988
60137200016	**MW-5 SHALLOW_20130116**	EPA 200.8	MPRP/21261	EPA 200.8	ICPM/1988
60137200017	**GW-3_20130117**	EPA 200.8	MPRP/21261	EPA 200.8	ICPM/1988
60137200018	**MW-4 SHALLOW_20130117**	EPA 200.8	MPRP/21261	EPA 200.8	ICPM/1988
60137200019	**MW-4 DEEP_20130116**	EPA 200.8	MPRP/21261	EPA 200.8	ICPM/1988
60137200020	**DR-9_20130116**	EPA 200.8	MPRP/21262	EPA 200.8	ICPM/1987
60137200021	**GW-4_20130116**	EPA 200.8	MPRP/21262	EPA 200.8	ICPM/1987
60137200022	**MW-3 DEEP_20130116**	EPA 200.8	MPRP/21262	EPA 200.8	ICPM/1987

This report shall not be reproduced, except in full,
without the written consent of Pace Analytical Services, Inc..

Pace Analytical Services, Inc.
9608 Loiret Blvd.
Lenexa, KS 66219
(913)599-5665

QUALITY CONTROL DATA CROSS REFERENCE TABLE

Project: JANUARY 2013 RICO WATER SAMPLI
Pace Project No.: 60137200

Lab ID	Sample ID	QC Batch Method	QC Batch	Analytical Method	Analytical Batch
60137200023	**MW-2 DEEP_20130116**	EPA 200.8	MPRP/21262	EPA 200.8	ICPM/1987
60137200024	**EB-1_20130116**	EPA 200.8	MPRP/21262	EPA 200.8	ICPM/1987
60137200001	**GW-1_20130115**	EPA 245.1	MERP/7974	EPA 245.1	MERC/9017
60137200002	**GW-5_20130115**	EPA 245.1	MERP/7974	EPA 245.1	MERC/9017
60137200003	**DR-3_20130115**	EPA 245.1	MERP/7974	EPA 245.1	MERC/9017
60137200004	**DR-8_20130115**	EPA 245.1	MERP/7974	EPA 245.1	MERC/9017
60137200005	**GW-6_20130115**	EPA 245.1	MERP/7974	EPA 245.1	MERC/9017
60137200006	**DR-4_20130115**	EPA 245.1	MERP/7974	EPA 245.1	MERC/9017
60137200007	**MW-1 SHALLOW_20130116**	EPA 245.1	MERP/7974	EPA 245.1	MERC/9017
60137200008	**MW-1 DEEP_20130116**	EPA 245.1	MERP/7974	EPA 245.1	MERC/9017
60137200009	**P13-103_20130116**	EPA 245.1	MERP/7974	EPA 245.1	MERC/9017
60137200010	**P13-102_20130116**	EPA 245.1	MERP/7974	EPA 245.1	MERC/9017
60137200011	**MW-6 DEEP_20130116**	EPA 245.1	MERP/7974	EPA 245.1	MERC/9017
60137200012	**DR-10_20130116**	EPA 245.1	MERP/7974	EPA 245.1	MERC/9017
60137200013	**MW-6 SHALLOW_20130116**	EPA 245.1	MERP/7974	EPA 245.1	MERC/9017
60137200014	**EB-2_20130116**	EPA 245.1	MERP/7974	EPA 245.1	MERC/9017
60137200015	**MW-5 DEEP_20130116**	EPA 245.1	MERP/7974	EPA 245.1	MERC/9017
60137200016	**MW-5 SHALLOW_20130116**	EPA 245.1	MERP/7974	EPA 245.1	MERC/9017
60137200017	**GW-3_20130117**	EPA 245.1	MERP/7974	EPA 245.1	MERC/9017
60137200018	**MW-4 SHALLOW_20130117**	EPA 245.1	MERP/7974	EPA 245.1	MERC/9017
60137200019	**MW-4 DEEP_20130116**	EPA 245.1	MERP/7974	EPA 245.1	MERC/9017
60137200020	**DR-9_20130116**	EPA 245.1	MERP/7974	EPA 245.1	MERC/9017
60137200021	**GW-4_20130116**	EPA 245.1	MERP/7978	EPA 245.1	MERC/8979
60137200022	**MW-3 DEEP_20130116**	EPA 245.1	MERP/7978	EPA 245.1	MERC/8979
60137200023	**MW-2 DEEP_20130116**	EPA 245.1	MERP/7978	EPA 245.1	MERC/8979
60137200024	**EB-1_20130116**	EPA 245.1	MERP/7978	EPA 245.1	MERC/8979
60137200001	**GW-1_20130115**	EPA 245.1	MERP/7972	EPA 245.1	MERC/8987
60137200002	**GW-5_20130115**	EPA 245.1	MERP/7972	EPA 245.1	MERC/8987
60137200003	**DR-3_20130115**	EPA 245.1	MERP/7972	EPA 245.1	MERC/8987
60137200004	**DR-8_20130115**	EPA 245.1	MERP/7972	EPA 245.1	MERC/8987
60137200005	**GW-6_20130115**	EPA 245.1	MERP/7972	EPA 245.1	MERC/8987
60137200006	**DR-4_20130115**	EPA 245.1	MERP/7972	EPA 245.1	MERC/8987
60137200007	**MW-1 SHALLOW_20130116**	EPA 245.1	MERP/7972	EPA 245.1	MERC/8987
60137200008	**MW-1 DEEP_20130116**	EPA 245.1	MERP/7972	EPA 245.1	MERC/8987
60137200009	**P13-103_20130116**	EPA 245.1	MERP/7972	EPA 245.1	MERC/8987
60137200010	**P13-102_20130116**	EPA 245.1	MERP/7972	EPA 245.1	MERC/8987
60137200011	**MW-6 DEEP_20130116**	EPA 245.1	MERP/7972	EPA 245.1	MERC/8987
60137200012	**DR-10_20130116**	EPA 245.1	MERP/7972	EPA 245.1	MERC/8987
60137200013	**MW-6 SHALLOW_20130116**	EPA 245.1	MERP/7972	EPA 245.1	MERC/8987
60137200014	**EB-2_20130116**	EPA 245.1	MERP/7972	EPA 245.1	MERC/8987
60137200015	**MW-5 DEEP_20130116**	EPA 245.1	MERP/7972	EPA 245.1	MERC/8987
60137200016	**MW-5 SHALLOW_20130116**	EPA 245.1	MERP/7972	EPA 245.1	MERC/8987
60137200017	**GW-3_20130117**	EPA 245.1	MERP/7972	EPA 245.1	MERC/8987
60137200018	**MW-4 SHALLOW_20130117**	EPA 245.1	MERP/7972	EPA 245.1	MERC/8987
60137200019	**MW-4 DEEP_20130116**	EPA 245.1	MERP/7972	EPA 245.1	MERC/8987
60137200020	**DR-9_20130116**	EPA 245.1	MERP/7972	EPA 245.1	MERC/8987
60137200021	**GW-4_20130116**	EPA 245.1	MERP/7989	EPA 245.1	MERC/8992

This report shall not be reproduced, except in full,
without the written consent of Pace Analytical Services, Inc..

Pace Analytical Services, Inc.
9608 Loiret Blvd.
Lenexa, KS 66219
(913)599-5665

QUALITY CONTROL DATA CROSS REFERENCE TABLE

Project: JANUARY 2013 RICO WATER SAMPLI
Pace Project No.: 60137200

Lab ID	Sample ID	QC Batch Method	QC Batch	Analytical Method	Analytical Batch
60137200022	**MW-3 DEEP_20130116**	EPA 245.1	MERP/7989	EPA 245.1	MERC/8992
60137200023	**MW-2 DEEP_20130116**	EPA 245.1	MERP/7989	EPA 245.1	MERC/8992
60137200024	**EB-1_20130116**	EPA 245.1	MERP/7989	EPA 245.1	MERC/8992
60137200001	**GW-1_20130115**	EPA 245.1	MERP/7035	EPA 245.1	MERC/6995
60137200002	**GW-5_20130115**	EPA 245.1	MERP/7035	EPA 245.1	MERC/6995
60137200003	**DR-3_20130115**	EPA 245.1	MERP/7035	EPA 245.1	MERC/6995
60137200004	**DR-8_20130115**	EPA 245.1	MERP/7035	EPA 245.1	MERC/6995
60137200005	**GW-6_20130115**	EPA 245.1	MERP/7035	EPA 245.1	MERC/6995
60137200006	**DR-4_20130115**	EPA 245.1	MERP/7035	EPA 245.1	MERC/6995
60137200007	**MW-1 SHALLOW_20130116**	EPA 245.1	MERP/7035	EPA 245.1	MERC/6995
60137200008	**MW-1 DEEP_20130116**	EPA 245.1	MERP/7035	EPA 245.1	MERC/6995
60137200009	**P13-103_20130116**	EPA 245.1	MERP/7035	EPA 245.1	MERC/6995
60137200010	**P13-102_20130116**	EPA 245.1	MERP/7035	EPA 245.1	MERC/6995
60137200011	**MW-6 DEEP_20130116**	EPA 245.1	MERP/7035	EPA 245.1	MERC/6995
60137200012	**DR-10_20130116**	EPA 245.1	MERP/7035	EPA 245.1	MERC/6995
60137200013	**MW-6 SHALLOW_20130116**	EPA 245.1	MERP/7035	EPA 245.1	MERC/6995
60137200014	**EB-2_20130116**	EPA 245.1	MERP/7035	EPA 245.1	MERC/6995
60137200015	**MW-5 DEEP_20130116**	EPA 245.1	MERP/7035	EPA 245.1	MERC/6995
60137200016	**MW-5 SHALLOW_20130116**	EPA 245.1	MERP/7035	EPA 245.1	MERC/6995
60137200017	**GW-3_20130117**	EPA 245.1	MERP/7035	EPA 245.1	MERC/6995
60137200018	**MW-4 SHALLOW_20130117**	EPA 245.1	MERP/7035	EPA 245.1	MERC/6995
60137200019	**MW-4 DEEP_20130116**	EPA 245.1	MERP/7035	EPA 245.1	MERC/6995
60137200020	**DR-9_20130116**	EPA 245.1	MERP/7035	EPA 245.1	MERC/6995
60137200021	**GW-4_20130116**	EPA 245.1	MERP/7036	EPA 245.1	MERC/6996
60137200022	**MW-3 DEEP_20130116**	EPA 245.1	MERP/7036	EPA 245.1	MERC/6996
60137200023	**MW-2 DEEP_20130116**	EPA 245.1	MERP/7036	EPA 245.1	MERC/6996
60137200024	**EB-1_20130116**	EPA 245.1	MERP/7036	EPA 245.1	MERC/6996
60137200001	**GW-1_20130115**	SM 2510B	MT/11216		
60137200002	**GW-5_20130115**	SM 2510B	MT/11216		
60137200003	**DR-3_20130115**	SM 2510B	MT/11216		
60137200004	**DR-8_20130115**	SM 2510B	MT/11216		
60137200005	**GW-6_20130115**	SM 2510B	MT/11216		
60137200006	**DR-4_20130115**	SM 2510B	MT/11216		
60137200007	**MW-1 SHALLOW_20130116**	SM 2510B	MT/11216		
60137200008	**MW-1 DEEP_20130116**	SM 2510B	MT/11216		
60137200009	**P13-103_20130116**	SM 2510B	MT/11216		
60137200010	**P13-102_20130116**	SM 2510B	MT/11216		
60137200011	**MW-6 DEEP_20130116**	SM 2510B	MT/11216		
60137200012	**DR-10_20130116**	SM 2510B	MT/11216		
60137200013	**MW-6 SHALLOW_20130116**	SM 2510B	MT/11216		
60137200014	**EB-2_20130116**	SM 2510B	MT/11216		
60137200015	**MW-5 DEEP_20130116**	SM 2510B	MT/11216		
60137200016	**MW-5 SHALLOW_20130116**	SM 2510B	MT/11216		
60137200017	**GW-3_20130117**	SM 2510B	MT/11216		
60137200018	**MW-4 SHALLOW_20130117**	SM 2510B	MT/11216		
60137200019	**MW-4 DEEP_20130116**	SM 2510B	MT/11216		
60137200020	**DR-9_20130116**	SM 2510B	MT/11216		

This report shall not be reproduced, except in full,
without the written consent of Pace Analytical Services, Inc..

Pace Analytical Services, Inc.
9608 Loiret Blvd.
Lenexa, KS 66219
(913)599-5665

QUALITY CONTROL DATA CROSS REFERENCE TABLE

Project: JANUARY 2013 RICO WATER SAMPLI
Pace Project No.: 60137200

Lab ID	Sample ID	QC Batch Method	QC Batch	Analytical Method	Analytical Batch
60137200021	**GW-4_20130116**	SM 2510B	MT/11217		
60137200022	**MW-3 DEEP_20130116**	SM 2510B	MT/11217		
60137200023	**MW-2 DEEP_20130116**	SM 2510B	MT/11217		
60137200024	**EB-1_20130116**	SM 2510B	MT/11217		
60137200001	**GW-1_20130115**	Calculated	MT/11219		
60137200002	**GW-5_20130115**	Calculated	MT/11219		
60137200003	**DR-3_20130115**	Calculated	MT/11219		
60137200004	**DR-8_20130115**	Calculated	MT/11219		
60137200005	**GW-6_20130115**	Calculated	MT/11219		
60137200006	**DR-4_20130115**	Calculated	MT/11219		
60137200007	**MW-1 SHALLOW_20130116**	Calculated	MT/11219		
60137200008	**MW-1 DEEP_20130116**	Calculated	MT/11219		
60137200009	**P13-103_20130116**	Calculated	MT/11219		
60137200010	**P13-102_20130116**	Calculated	MT/11219		
60137200011	**MW-6 DEEP_20130116**	Calculated	MT/11219		
60137200012	**DR-10_20130116**	Calculated	MT/11219		
60137200013	**MW-6 SHALLOW_20130116**	Calculated	MT/11219		
60137200014	**EB-2_20130116**	Calculated	MT/11219		
60137200015	**MW-5 DEEP_20130116**	Calculated	MT/11219		
60137200016	**MW-5 SHALLOW_20130116**	Calculated	MT/11219		
60137200017	**GW-3_20130117**	Calculated	MT/11219		
60137200018	**MW-4 SHALLOW_20130117**	Calculated	MT/11219		
60137200019	**MW-4 DEEP_20130116**	Calculated	MT/11219		
60137200020	**DR-9_20130116**	Calculated	MT/11219		
60137200021	**GW-4_20130116**	Calculated	MT/11220		
60137200022	**MW-3 DEEP_20130116**	Calculated	MT/11220		
60137200023	**MW-2 DEEP_20130116**	Calculated	MT/11220		
60137200024	**EB-1_20130116**	Calculated	MT/11220		
60137200001	**GW-1_20130115**	SM 2320B	WET/39365		
60137200002	**GW-5_20130115**	SM 2320B	WET/39365		
60137200003	**DR-3_20130115**	SM 2320B	WET/39365		
60137200004	**DR-8_20130115**	SM 2320B	WET/39365		
60137200005	**GW-6_20130115**	SM 2320B	WET/39365		
60137200006	**DR-4_20130115**	SM 2320B	WET/39365		
60137200007	**MW-1 SHALLOW_20130116**	SM 2320B	WET/39365		
60137200008	**MW-1 DEEP_20130116**	SM 2320B	WET/39365		
60137200009	**P13-103_20130116**	SM 2320B	WET/39365		
60137200010	**P13-102_20130116**	SM 2320B	WET/39365		
60137200011	**MW-6 DEEP_20130116**	SM 2320B	WET/39365		
60137200012	**DR-10_20130116**	SM 2320B	WET/39365		
60137200013	**MW-6 SHALLOW_20130116**	SM 2320B	WET/39365		
60137200014	**EB-2_20130116**	SM 2320B	WET/39365		
60137200015	**MW-5 DEEP_20130116**	SM 2320B	WET/39365		
60137200016	**MW-5 SHALLOW_20130116**	SM 2320B	WET/39365		
60137200017	**GW-3_20130117**	SM 2320B	WET/39365		
60137200018	**MW-4 SHALLOW_20130117**	SM 2320B	WET/39383		
60137200019	**MW-4 DEEP_20130116**	SM 2320B	WET/39383		

This report shall not be reproduced, except in full,
without the written consent of Pace Analytical Services, Inc..

Pace Analytical Services, Inc.
9608 Loiret Blvd.
Lenexa, KS 66219
(913)599-5665

QUALITY CONTROL DATA CROSS REFERENCE TABLE

Project: JANUARY 2013 RICO WATER SAMPLI
Pace Project No.: 60137200

Lab ID	Sample ID	QC Batch Method	QC Batch	Analytical Method	Analytical Batch
60137200020	**DR-9_20130116**	SM 2320B	WET/39383		
60137200021	**GW-4_20130116**	SM 2320B	WET/39383		
60137200022	**MW-3 DEEP_20130116**	SM 2320B	WET/39383		
60137200023	**MW-2 DEEP_20130116**	SM 2320B	WET/39383		
60137200024	**EB-1_20130116**	SM 2320B	WET/39383		
60137200001	**GW-1_20130115**	SM 2540C	WET/39367		
60137200002	**GW-5_20130115**	SM 2540C	WET/39367		
60137200003	**DR-3_20130115**	SM 2540C	WET/39367		
60137200004	**DR-8_20130115**	SM 2540C	WET/39367		
60137200005	**GW-6_20130115**	SM 2540C	WET/39367		
60137200006	**DR-4_20130115**	SM 2540C	WET/39367		
60137200007	**MW-1 SHALLOW_20130116**	SM 2540C	WET/39382		
60137200008	**MW-1 DEEP_20130116**	SM 2540C	WET/39382		
60137200009	**P13-103_20130116**	SM 2540C	WET/39382		
60137200010	**P13-102_20130116**	SM 2540C	WET/39382		
60137200011	**MW-6 DEEP_20130116**	SM 2540C	WET/39382		
60137200012	**DR-10_20130116**	SM 2540C	WET/39382		
60137200013	**MW-6 SHALLOW_20130116**	SM 2540C	WET/39382		
60137200014	**EB-2_20130116**	SM 2540C	WET/39382		
60137200015	**MW-5 DEEP_20130116**	SM 2540C	WET/39382		
60137200016	**MW-5 SHALLOW_20130116**	SM 2540C	WET/39382		
60137200017	**GW-3_20130117**	SM 2540C	WET/39382		
60137200018	**MW-4 SHALLOW_20130117**	SM 2540C	WET/39382		
60137200019	**MW-4 DEEP_20130116**	SM 2540C	WET/39382		
60137200020	**DR-9_20130116**	SM 2540C	WET/39382		
60137200021	**GW-4_20130116**	SM 2540C	WET/39382		
60137200022	**MW-3 DEEP_20130116**	SM 2540C	WET/39382		
60137200023	**MW-2 DEEP_20130116**	SM 2540C	WET/39382		
60137200024	**EB-1_20130116**	SM 2540C	WET/39382		
60137200001	**GW-1_20130115**	SM 2540D	WET/39368		
60137200002	**GW-5_20130115**	SM 2540D	WET/39368		
60137200003	**DR-3_20130115**	SM 2540D	WET/39368		
60137200004	**DR-8_20130115**	SM 2540D	WET/39368		
60137200005	**GW-6_20130115**	SM 2540D	WET/39368		
60137200006	**DR-4_20130115**	SM 2540D	WET/39368		
60137200007	**MW-1 SHALLOW_20130116**	SM 2540D	WET/39368		
60137200008	**MW-1 DEEP_20130116**	SM 2540D	WET/39368		
60137200009	**P13-103_20130116**	SM 2540D	WET/39368		
60137200010	**P13-102_20130116**	SM 2540D	WET/39368		
60137200011	**MW-6 DEEP_20130116**	SM 2540D	WET/39368		
60137200012	**DR-10_20130116**	SM 2540D	WET/39368		
60137200013	**MW-6 SHALLOW_20130116**	SM 2540D	WET/39368		
60137200014	**EB-2_20130116**	SM 2540D	WET/39368		
60137200015	**MW-5 DEEP_20130116**	SM 2540D	WET/39368		
60137200016	**MW-5 SHALLOW_20130116**	SM 2540D	WET/39368		
60137200017	**GW-3_20130117**	SM 2540D	WET/39381		
60137200018	**MW-4 SHALLOW_20130117**	SM 2540D	WET/39381		

This report shall not be reproduced, except in full,
without the written consent of Pace Analytical Services, Inc..

Pace Analytical Services, Inc.
9608 Loiret Blvd.
Lenexa, KS 66219
(913)599-5665

QUALITY CONTROL DATA CROSS REFERENCE TABLE

Project: JANUARY 2013 RICO WATER SAMPLI
Pace Project No.: 60137200

Lab ID	Sample ID	QC Batch Method	QC Batch	Analytical Method	Analytical Batch
60137200019	**MW-4 DEEP_20130116**	SM 2540D	WET/39381		
60137200020	**DR-9_20130116**	SM 2540D	WET/39381		
60137200021	**GW-4_20130116**	SM 2540D	WET/39381		
60137200022	**MW-3 DEEP_20130116**	SM 2540D	WET/39381		
60137200023	**MW-2 DEEP_20130116**	SM 2540D	WET/39381		
60137200024	**EB-1_20130116**	SM 2540D	WET/39381		
60137200001	**GW-1_20130115**	SM 4500-S-2 D	WET/39362		
60137200002	**GW-5_20130115**	SM 4500-S-2 D	WET/39362		
60137200003	**DR-3_20130115**	SM 4500-S-2 D	WET/39362		
60137200004	**DR-8_20130115**	SM 4500-S-2 D	WET/39362		
60137200005	**GW-6_20130115**	SM 4500-S-2 D	WET/39362		
60137200006	**DR-4_20130115**	SM 4500-S-2 D	WET/39362		
60137200007	**MW-1 SHALLOW_20130116**	SM 4500-S-2 D	WET/39362		
60137200008	**MW-1 DEEP_20130116**	SM 4500-S-2 D	WET/39362		
60137200009	**P13-103_20130116**	SM 4500-S-2 D	WET/39362		
60137200010	**P13-102_20130116**	SM 4500-S-2 D	WET/39362		
60137200011	**MW-6 DEEP_20130116**	SM 4500-S-2 D	WET/39362		
60137200012	**DR-10_20130116**	SM 4500-S-2 D	WET/39362		
60137200013	**MW-6 SHALLOW_20130116**	SM 4500-S-2 D	WET/39362		
60137200014	**EB-2_20130116**	SM 4500-S-2 D	WET/39362		
60137200015	**MW-5 DEEP_20130116**	SM 4500-S-2 D	WET/39362		
60137200016	**MW-5 SHALLOW_20130116**	SM 4500-S-2 D	WET/39362		
60137200017	**GW-3_20130117**	SM 4500-S-2 D	WET/39362		
60137200018	**MW-4 SHALLOW_20130117**	SM 4500-S-2 D	WET/39362		
60137200019	**MW-4 DEEP_20130116**	SM 4500-S-2 D	WET/39362		
60137200020	**DR-9_20130116**	SM 4500-S-2 D	WET/39362		
60137200021	**GW-4_20130116**	SM 4500-S-2 D	WET/39363		
60137200022	**MW-3 DEEP_20130116**	SM 4500-S-2 D	WET/39363		
60137200023	**MW-2 DEEP_20130116**	SM 4500-S-2 D	WET/39363		
60137200024	**EB-1_20130116**	SM 4500-S-2 D	WET/39363		
60137200001	**GW-1_20130115**	EPA 300.0	WETA/23328		
60137200002	**GW-5_20130115**	EPA 300.0	WETA/23328		
60137200003	**DR-3_20130115**	EPA 300.0	WETA/23328		
60137200004	**DR-8_20130115**	EPA 300.0	WETA/23328		
60137200005	**GW-6_20130115**	EPA 300.0	WETA/23328		
60137200006	**DR-4_20130115**	EPA 300.0	WETA/23328		
60137200007	**MW-1 SHALLOW_20130116**	EPA 300.0	WETA/23328		
60137200008	**MW-1 DEEP_20130116**	EPA 300.0	WETA/23328		
60137200009	**P13-103_20130116**	EPA 300.0	WETA/23328		
60137200010	**P13-102_20130116**	EPA 300.0	WETA/23343		
60137200011	**MW-6 DEEP_20130116**	EPA 300.0	WETA/23328		
60137200012	**DR-10_20130116**	EPA 300.0	WETA/23328		
60137200013	**MW-6 SHALLOW_20130116**	EPA 300.0	WETA/23343		
60137200014	**EB-2_20130116**	EPA 300.0	WETA/23352		
60137200015	**MW-5 DEEP_20130116**	EPA 300.0	WETA/23343		

This report shall not be reproduced, except in full,
without the written consent of Pace Analytical Services, Inc..

Pace Analytical Services, Inc.
9608 Loiret Blvd.
Lenexa, KS 66219
(913)599-5665

QUALITY CONTROL DATA CROSS REFERENCE TABLE

Project: JANUARY 2013 RICO WATER SAMPLI
Pace Project No.: 60137200

Lab ID	Sample ID	QC Batch Method	QC Batch	Analytical Method	Analytical Batch
60137200016	**MW-5 SHALLOW_20130116**	EPA 300.0	WETA/23352		
60137200017	**GW-3_20130117**	EPA 300.0	WETA/23343		
60137200018	**MW-4 SHALLOW_20130117**	EPA 300.0	WETA/23343		
60137200019	**MW-4 DEEP_20130116**	EPA 300.0	WETA/23343		
60137200020	**DR-9_20130116**	EPA 300.0	WETA/23343		
60137200021	**GW-4_20130116**	EPA 300.0	WETA/23343		
60137200022	**MW-3 DEEP_20130116**	EPA 300.0	WETA/23343		
60137200023	**MW-2 DEEP_20130116**	EPA 300.0	WETA/23343		
60137200024	**EB-1_20130116**	EPA 300.0	WETA/23343		
60137200001	**GW-1_20130115**	EPA 353.2	WETA/23283		
60137200002	**GW-5_20130115**	EPA 353.2	WETA/23283		
60137200003	**DR-3_20130115**	EPA 353.2	WETA/23283		
60137200004	**DR-8_20130115**	EPA 353.2	WETA/23283		
60137200005	**GW-6_20130115**	EPA 353.2	WETA/23283		
60137200006	**DR-4_20130115**	EPA 353.2	WETA/23283		
60137200007	**MW-1 SHALLOW_20130116**	EPA 353.2	WETA/23283		
60137200008	**MW-1 DEEP_20130116**	EPA 353.2	WETA/23283		
60137200009	**P13-103_20130116**	EPA 353.2	WETA/23283		
60137200010	**P13-102_20130116**	EPA 353.2	WETA/23283		
60137200011	**MW-6 DEEP_20130116**	EPA 353.2	WETA/23283		
60137200012	**DR-10_20130116**	EPA 353.2	WETA/23283		
60137200013	**MW-6 SHALLOW_20130116**	EPA 353.2	WETA/23283		
60137200014	**EB-2_20130116**	EPA 353.2	WETA/23283		
60137200015	**MW-5 DEEP_20130116**	EPA 353.2	WETA/23283		
60137200016	**MW-5 SHALLOW_20130116**	EPA 353.2	WETA/23283		
60137200017	**GW-3_20130117**	EPA 353.2	WETA/23283		
60137200018	**MW-4 SHALLOW_20130117**	EPA 353.2	WETA/23283		
60137200019	**MW-4 DEEP_20130116**	EPA 353.2	WETA/23283		
60137200020	**DR-9_20130116**	EPA 353.2	WETA/23283		
60137200021	**GW-4_20130116**	EPA 353.2	WETA/23284		
60137200022	**MW-3 DEEP_20130116**	EPA 353.2	WETA/23284		
60137200023	**MW-2 DEEP_20130116**	EPA 353.2	WETA/23284		
60137200024	**EB-1_20130116**	EPA 353.2	WETA/23284		
60137200001	**GW-1_20130115**	SM 4500-CN-E	WETA/23267		
60137200002	**GW-5_20130115**	SM 4500-CN-E	WETA/23267		
60137200003	**DR-3_20130115**	SM 4500-CN-E	WETA/23267		
60137200004	**DR-8_20130115**	SM 4500-CN-E	WETA/23267		
60137200005	**GW-6_20130115**	SM 4500-CN-E	WETA/23267		
60137200006	**DR-4_20130115**	SM 4500-CN-E	WETA/23267		
60137200007	**MW-1 SHALLOW_20130116**	SM 4500-CN-E	WETA/23267		
60137200008	**MW-1 DEEP_20130116**	SM 4500-CN-E	WETA/23267		
60137200009	**P13-103_20130116**	SM 4500-CN-E	WETA/23267		
60137200010	**P13-102_20130116**	SM 4500-CN-E	WETA/23267		
60137200011	**MW-6 DEEP_20130116**	SM 4500-CN-E	WETA/23267		
60137200012	**DR-10_20130116**	SM 4500-CN-E	WETA/23267		
60137200013	**MW-6 SHALLOW_20130116**	SM 4500-CN-E	WETA/23267		

This report shall not be reproduced, except in full,
without the written consent of Pace Analytical Services, Inc..

Pace Analytical Services, Inc.
9608 Loiret Blvd.
Lenexa, KS 66219
(913)599-5665

QUALITY CONTROL DATA CROSS REFERENCE TABLE

Project: JANUARY 2013 RICO WATER SAMPLI
Pace Project No.: 60137200

Lab ID	Sample ID	QC Batch Method	QC Batch	Analytical Method	Analytical Batch
60137200014	**EB-2_20130116**	SM 4500-CN-E	WETA/23267		
60137200015	**MW-5 DEEP_20130116**	SM 4500-CN-E	WETA/23267		
60137200016	**MW-5 SHALLOW_20130116**	SM 4500-CN-E	WETA/23267		
60137200017	**GW-3_20130117**	SM 4500-CN-E	WETA/23267		
60137200018	**MW-4 SHALLOW_20130117**	SM 4500-CN-E	WETA/23267		
60137200019	**MW-4 DEEP_20130116**	SM 4500-CN-E	WETA/23267		
60137200020	**DR-9_20130116**	SM 4500-CN-E	WETA/23268		
60137200021	**GW-4_20130116**	SM 4500-CN-E	WETA/23268		
60137200022	**MW-3 DEEP_20130116**	SM 4500-CN-E	WETA/23268		
60137200023	**MW-2 DEEP_20130116**	SM 4500-CN-E	WETA/23268		
60137200024	**EB-1_20130116**	SM 4500-CN-E	WETA/23268		
60137200001	**GW-1_20130115**	SM 5310C	WETA/23288		
60137200002	**GW-5_20130115**	SM 5310C	WETA/23288		
60137200003	**DR-3_20130115**	SM 5310C	WETA/23288		
60137200004	**DR-8_20130115**	SM 5310C	WETA/23288		
60137200005	**GW-6_20130115**	SM 5310C	WETA/23288		
60137200006	**DR-4_20130115**	SM 5310C	WETA/23288		
60137200007	**MW-1 SHALLOW_20130116**	SM 5310C	WETA/23288		
60137200008	**MW-1 DEEP_20130116**	SM 5310C	WETA/23288		
60137200009	**P13-103_20130116**	SM 5310C	WETA/23288		
60137200010	**P13-102_20130116**	SM 5310C	WETA/23288		
60137200011	**MW-6 DEEP_20130116**	SM 5310C	WETA/23288		
60137200012	**DR-10_20130116**	SM 5310C	WETA/23309		
60137200013	**MW-6 SHALLOW_20130116**	SM 5310C	WETA/23309		
60137200014	**EB-2_20130116**	SM 5310C	WETA/23309		
60137200015	**MW-5 DEEP_20130116**	SM 5310C	WETA/23309		
60137200016	**MW-5 SHALLOW_20130116**	SM 5310C	WETA/23309		
60137200017	**GW-3_20130117**	SM 5310C	WETA/23309		
60137200018	**MW-4 SHALLOW_20130117**	SM 5310C	WETA/23309		
60137200019	**MW-4 DEEP_20130116**	SM 5310C	WETA/23309		
60137200020	**DR-9_20130116**	SM 5310C	WETA/23309		
60137200021	**GW-4_20130116**	SM 5310C	WETA/23309		
60137200022	**MW-3 DEEP_20130116**	SM 5310C	WETA/23309		
60137200023	**MW-2 DEEP_20130116**	SM 5310C	WETA/23336		
60137200024	**EB-1_20130116**	SM 5310C	WETA/23336		

This report shall not be reproduced, except in full,
without the written consent of Pace Analytical Services, Inc..

Pace Analytical Services, Inc.
9608 Loiret Blvd.
Lenexa, KS 66219
(913)599-5665

QUALITY CONTROL DATA

Project: JANUARY 2013 RICO WATER SAMPLI
Pace Project No.: 60137618

QC Batch: MERP/8014 Analysis Method: EPA 245.1
QC Batch Method: EPA 245.1 Analysis Description: 245.1 Mercury
Associated Lab Samples: 60137618001, 60137618002, 60137618003, 60137618004, 60137618005, 60137618006, 60137618007, 60137618008, 60137618009, 60137618010, 60137618011, 60137618012, 60137618013, 60137618014, 60137618015

METHOD BLANK: 1373156 Matrix: Water
Associated Lab Samples: 60137618001, 60137618002, 60137618003, 60137618004, 60137618005, 60137618006, 60137618007, 60137618008, 60137618009, 60137618010, 60137618011, 60137618012, 60137618013, 60137618014, 60137618015

Parameter	Units	Blank Result	Reporting Limit	Analyzed	Qualifiers
Mercury	ug/L	ND	0.20	02/08/13 17:47	

LABORATORY CONTROL SAMPLE: 1373157

Parameter	Units	Spike Conc.	LCS Result	LCS % Rec	% Rec Limits	Qualifiers
Mercury	ug/L	5	4.5	91	85-115	

MATRIX SPIKE SAMPLE: 1373160

Parameter	Units	10218809003 Result	Spike Conc.	MS Result	MS % Rec	% Rec Limits	Qualifiers
Mercury	ug/L	<0.00020 mg/L	5	5.0	100	85-115	

MATRIX SPIKE & MATRIX SPIKE DUPLICATE: 1374337 1374338

Parameter	Units	60137618002 Result	MS Spike Conc.	MSD Spike Conc.	MS Result	MSD Result	MS % Rec	MSD % Rec	% Rec Limits	RPD	Max RPD	Qual
Mercury	ug/L	ND	5	5	4.8	4.9	96	97	85-115	2	30	

This report shall not be reproduced, except in full,
without the written consent of Pace Analytical Services, Inc..

Pace Analytical Services, Inc.
9608 Loiret Blvd.
Lenexa, KS 66219
(913)599-5665

QUALITY CONTROL DATA

Project: JANUARY 2013 RICO WATER SAMPLI
Pace Project No.: 60137618

QC Batch: MERP/8002 — Analysis Method: EPA 245.1
QC Batch Method: EPA 245.1 — Analysis Description: 245.1 Mercury - Dissolved
Associated Lab Samples: 60137618001, 60137618002, 60137618003, 60137618004, 60137618005, 60137618006, 60137618007, 60137618008, 60137618009, 60137618010, 60137618011, 60137618012, 60137618013, 60137618014, 60137618015

METHOD BLANK: 1372633 — Matrix: Water
Associated Lab Samples: 60137618001, 60137618002, 60137618003, 60137618004, 60137618005, 60137618006, 60137618007, 60137618008, 60137618009, 60137618010, 60137618011, 60137618012, 60137618013, 60137618014, 60137618015

Parameter	Units	Blank Result	Reporting Limit	Analyzed	Qualifiers
Mercury, Dissolved	ug/L	ND	0.20	02/07/13 17:56	

LABORATORY CONTROL SAMPLE: 1372634

Parameter	Units	Spike Conc.	LCS Result	LCS % Rec	% Rec Limits	Qualifiers
Mercury, Dissolved	ug/L	5	4.9	99	85-115	

MATRIX SPIKE & MATRIX SPIKE DUPLICATE: 1372635 1372636

Parameter	Units	60137618001 Result	MS Spike Conc.	MSD Spike Conc.	MS Result	MSD Result	MS % Rec	MSD % Rec	% Rec Limits	RPD	Max RPD	Qual
Mercury, Dissolved	ug/L	ND	5	5	4.4	4.7	88	94	85-115	6	20	

MATRIX SPIKE SAMPLE: 1372637

Parameter	Units	10218812002 Result	Spike Conc.	MS Result	MS % Rec	% Rec Limits	Qualifiers
Mercury, Dissolved	ug/L	<0.00020 mg/L	5	4.9	98	85-115	

This report shall not be reproduced, except in full,
without the written consent of Pace Analytical Services, Inc..

Pace Analytical Services, Inc.
9608 Loiret Blvd.
Lenexa, KS 66219
(913)599-5665

QUALITY CONTROL DATA

Project: JANUARY 2013 RICO WATER SAMPLI
Pace Project No.: 60137618

QC Batch: MERP/7042 — Analysis Method: EPA 245.1
QC Batch Method: EPA 245.1 — Analysis Description: 245.1 Mercury, Potentially Dissolved
Associated Lab Samples: 60137618001, 60137618002, 60137618003, 60137618004, 60137618005, 60137618006, 60137618007, 60137618008, 60137618009, 60137618010, 60137618011, 60137618012, 60137618013, 60137618014, 60137618015

METHOD BLANK: 1133345 — Matrix: Water
Associated Lab Samples: 60137618001, 60137618002, 60137618003, 60137618004, 60137618005, 60137618006, 60137618007, 60137618008, 60137618009, 60137618010, 60137618011, 60137618012, 60137618013, 60137618014, 60137618015

Parameter	Units	Blank Result	Reporting Limit	Analyzed	Qualifiers
Mercury, Dissolved	ug/L	ND	0.20	01/31/13 09:15	

LABORATORY CONTROL SAMPLE: 1133346

Parameter	Units	Spike Conc.	LCS Result	LCS % Rec	% Rec Limits	Qualifiers
Mercury, Dissolved	ug/L	5	5.1	101	85-115	

MATRIX SPIKE & MATRIX SPIKE DUPLICATE: 1133347 1133348

Parameter	Units	60137618001 Result	MS Spike Conc.	MSD Spike Conc.	MS Result	MSD Result	MS % Rec	MSD % Rec	% Rec Limits	RPD	Max RPD	Qual
Mercury, Dissolved	ug/L	ND	5	5	4.8	4.8	96	96	70-130	0	20	

MATRIX SPIKE SAMPLE: 1133349

Parameter	Units	60137618010 Result	Spike Conc.	MS Result	MS % Rec	% Rec Limits	Qualifiers
Mercury, Dissolved	ug/L	ND	5	4.4	89	70-130	

This report shall not be reproduced, except in full,
without the written consent of Pace Analytical Services, Inc..

Pace Analytical Services, Inc.
9608 Loiret Blvd.
Lenexa, KS 66219
(913)599-5665

QUALITY CONTROL DATA

Project: JANUARY 2013 RICO WATER SAMPLI
Pace Project No.: 60137618

QC Batch: MPRP/21345 Analysis Method: EPA 200.7
QC Batch Method: EPA 200.7 Analysis Description: 200.7 Potentially Dissolved Metals
Associated Lab Samples: 60137618001, 60137618002, 60137618003, 60137618004, 60137618005, 60137618006, 60137618007, 60137618008, 60137618009, 60137618010, 60137618011, 60137618012, 60137618013, 60137618014, 60137618015

METHOD BLANK: 1133409 Matrix: Water
Associated Lab Samples: 60137618001, 60137618002, 60137618003, 60137618004, 60137618005, 60137618006, 60137618007, 60137618008, 60137618009, 60137618010, 60137618011, 60137618012, 60137618013, 60137618014, 60137618015

Parameter	Units	Blank Result	Reporting Limit	Analyzed	Qualifiers
Calcium, Dissolved	ug/L	10.2J	100	01/31/13 16:14	
Magnesium, Dissolved	ug/L	ND	50.0	01/31/13 16:14	
Potassium, Dissolved	ug/L	ND	500	01/31/13 16:14	
Sodium, Dissolved	ug/L	88.2J	500	01/31/13 16:14	

LABORATORY CONTROL SAMPLE: 1133410

Parameter	Units	Spike Conc.	LCS Result	LCS % Rec	% Rec Limits	Qualifiers
Calcium, Dissolved	ug/L	10000	10300	103	85-115	
Magnesium, Dissolved	ug/L	10000	10200	102	85-115	
Potassium, Dissolved	ug/L	10000	10500	105	85-115	
Sodium, Dissolved	ug/L	10000	10400	104	85-115	

MATRIX SPIKE & MATRIX SPIKE DUPLICATE: 1133411 1133412

Parameter	Units	60137618003 Result	MS Spike Conc.	MSD Spike Conc.	MS Result	MSD Result	MS % Rec	MSD % Rec	% Rec Limits	RPD	Max RPD	Qual
Calcium, Dissolved	ug/L	264000	10000	10000	262000	268000	-16	40	70-130	2	20	M1
Magnesium, Dissolved	ug/L	22400	10000	10000	30500	31600	81	92	70-130	4	20	
Potassium, Dissolved	ug/L	3480	10000	10000	13900	14000	105	106	70-130	1	20	
Sodium, Dissolved	ug/L	12700	10000	10000	22500	23000	99	103	70-130	2	20	

MATRIX SPIKE SAMPLE: 1133413

Parameter	Units	60137618013 Result	Spike Conc.	MS Result	MS % Rec	% Rec Limits	Qualifiers
Calcium, Dissolved	ug/L	246000	10000	258000	121	70-130	
Magnesium, Dissolved	ug/L	21100	10000	31000	100	70-130	
Potassium, Dissolved	ug/L	2800	10000	13100	103	70-130	
Sodium, Dissolved	ug/L	11200	10000	21500	103	70-130	

This report shall not be reproduced, except in full,
without the written consent of Pace Analytical Services, Inc..

Pace Analytical Services, Inc.
9608 Loiret Blvd.
Lenexa, KS 66219
(913)599-5665

QUALITY CONTROL DATA

Project: JANUARY 2013 RICO WATER SAMPLI
Pace Project No.: 60137618

QC Batch: MPRP/37430 Analysis Method: EPA 200.8
QC Batch Method: EPA 200.8 Analysis Description: 200.8 MET
Associated Lab Samples: 60137618001, 60137618002, 60137618003, 60137618004, 60137618005, 60137618006, 60137618007, 60137618008, 60137618009, 60137618010, 60137618011, 60137618012, 60137618013, 60137618014, 60137618015

METHOD BLANK: 1370632 Matrix: Water
Associated Lab Samples: 60137618001, 60137618002, 60137618003, 60137618004, 60137618005, 60137618006, 60137618007, 60137618008, 60137618009, 60137618010, 60137618011, 60137618012, 60137618013, 60137618014, 60137618015

Parameter	Units	Blank Result	Reporting Limit	Analyzed	Qualifiers
Aluminum	ug/L	ND	4.0	02/05/13 02:12	
Antimony	ug/L	ND	0.50	02/05/13 02:12	
Arsenic	ug/L	ND	0.50	02/05/13 02:12	
Barium	ug/L	ND	0.30	02/05/13 02:12	
Beryllium	ug/L	ND	0.20	02/05/13 02:12	
Cadmium	ug/L	ND	0.080	02/05/13 02:12	
Calcium	ug/L	ND	20.0	02/05/13 02:12	
Chromium	ug/L	ND	0.50	02/05/13 02:12	
Cobalt	ug/L	ND	0.50	02/05/13 02:12	
Copper	ug/L	ND	0.50	02/05/13 02:12	
Iron	ug/L	ND	50.0	02/05/13 02:12	
Lead	ug/L	ND	0.10	02/05/13 02:12	
Magnesium	ug/L	ND	5.0	02/05/13 02:12	
Manganese	ug/L	ND	0.50	02/05/13 02:12	
Molybdenum	ug/L	ND	0.50	02/05/13 02:12	
Nickel	ug/L	ND	0.50	02/05/13 02:12	
Potassium	ug/L	ND	20.0	02/06/13 00:58	
Selenium	ug/L	ND	0.50	02/05/13 02:12	
Silica	ug/L	ND	53.5	02/06/13 00:58	
Silver	ug/L	ND	0.50	02/05/13 02:12	
Sodium	ug/L	ND	50.0	02/05/13 02:12	
Thallium	ug/L	ND	0.10	02/05/13 02:12	
Total Hardness by 2340B	ug/L	ND	71.0	02/05/13 02:12	
Vanadium	ug/L	ND	0.10	02/05/13 02:12	
Zinc	ug/L	ND	5.0	02/05/13 02:12	

LABORATORY CONTROL SAMPLE: 1370633

Parameter	Units	Spike Conc.	LCS Result	LCS % Rec	% Rec Limits	Qualifiers
Aluminum	ug/L	80	85.1	106	85-115	
Antimony	ug/L	80	83.2	104	85-115	
Arsenic	ug/L	80	81.6	102	85-115	
Barium	ug/L	80	82.5	103	85-115	
Beryllium	ug/L	80	86.4	108	85-115	
Cadmium	ug/L	80	84.9	106	85-115	
Calcium	ug/L	1000	1050	105	85-115	
Chromium	ug/L	80	84.8	106	85-115	
Cobalt	ug/L	80	83.6	104	85-115	

This report shall not be reproduced, except in full,
without the written consent of Pace Analytical Services, Inc..

Pace Analytical Services, Inc.
9608 Loiret Blvd.
Lenexa, KS 66219
(913)599-5665

QUALITY CONTROL DATA

Project: JANUARY 2013 RICO WATER SAMPLI
Pace Project No.: 60137618

LABORATORY CONTROL SAMPLE: 1370633

Parameter	Units	Spike Conc.	LCS Result	LCS % Rec	% Rec Limits	Qualifiers
Copper	ug/L	80	87.3	109	85-115	
Iron	ug/L	1000	1070	107	85-115	
Lead	ug/L	80	82.0	103	85-115	
Magnesium	ug/L	1000	1050	105	85-115	
Manganese	ug/L	80	83.6	104	85-115	
Molybdenum	ug/L	80	83.8	105	85-115	
Nickel	ug/L	80	83.8	105	85-115	
Potassium	ug/L	1000	1000	100	85-115	
Selenium	ug/L	80	80.4	101	85-115	
Silica	ug/L	2140	1860	87	85-115	
Silver	ug/L	80	87.4	109	85-115	
Sodium	ug/L	1000	1070	107	85-115	
Thallium	ug/L	80	82.6	103	85-115	
Total Hardness by 2340B	ug/L	6620	6950	105	85-115	
Vanadium	ug/L	80	84.1	105	85-115	
Zinc	ug/L	80	81.2	101	85-115	

MATRIX SPIKE & MATRIX SPIKE DUPLICATE: 1370634 1370635

Parameter	Units	60137618001 Result	MS Spike Conc.	MSD Spike Conc.	MS Result	MSD Result	MS % Rec	MSD % Rec	% Rec Limits	RPD	Max RPD	Qual
Aluminum	ug/L	76.8	80	80	169	162	115	106	70-130	5	20	
Antimony	ug/L	ND	80	80	77.7	77.3	97	96	70-130	.5	20	
Arsenic	ug/L	ND	80	80	74.9	78.5	93	98	70-130	5	20	
Barium	ug/L	19.3	80	80	96.3	96.7	96	97	70-130	.4	20	
Beryllium	ug/L	ND	80	80	78.5	77.4	98	97	70-130	1	20	
Cadmium	ug/L	5.6	80	80	84.3	84.2	98	98	70-130	.08	20	
Calcium	ug/L	246000	1000	1000	267000	262000	2050	1590	70-130	2	20	M6
Chromium	ug/L	ND	80	80	78.8	77.3	98	96	70-130	2	20	
Cobalt	ug/L	2.1	80	80	79.5	80.2	97	98	70-130	.9	20	
Copper	ug/L	16.3	80	80	96.2	96.0	100	100	70-130	.2	20	
Iron	ug/L	1230	1000	1000	2250	2210	103	98	70-130	2	20	
Lead	ug/L	1.6	80	80	78.1	78.0	96	96	70-130	.05	20	
Magnesium	ug/L	21400	1000	1000	23600	23400	225	205	70-130	.8	20	M6
Manganese	ug/L	1530	80	80	1670	1660	180	161	70-130	.9	20	M6
Molybdenum	ug/L	14.9	80	80	91.3	91.3	95	95	70-130	.01	20	
Nickel	ug/L	3.1	80	80	82.5	79.4	99	95	70-130	4	20	
Potassium	ug/L	12600	1000	1000	13100	13100	52	52	70-130	.03	20	M6
Selenium	ug/L	ND	80	80	76.0	73.1	95	91	70-130	4	20	
Silica	ug/L	16200	2140	2140	18500	17900	109	80	70-130	3	20	
Silver	ug/L	ND	80	80	76.8	75.5	96	94	70-130	2	20	
Sodium	ug/L	13000	1000	1000	14600	14500	161	149	70-130	.8	20	M6
Thallium	ug/L	ND	80	80	77.5	77.3	97	97	70-130	.2	20	
Total Hardness by 2340B	ug/L	702000	6620	6620	763000	751000	915	729	70-130	2	20	M6
Vanadium	ug/L	ND	80	80	78.7	76.4	98	95	70-130	3	20	
Zinc	ug/L	1630	80	80	1780	1770	179	174	70-130	.2	20	M6

This report shall not be reproduced, except in full,
without the written consent of Pace Analytical Services, Inc..

Pace Analytical Services, Inc.
9608 Loiret Blvd.
Lenexa, KS 66219
(913)599-5665

QUALITY CONTROL DATA

Project: JANUARY 2013 RICO WATER SAMPLI
Pace Project No.: 60137618

QC Batch: MPRP/37431 Analysis Method: EPA 200.8
QC Batch Method: EPA 200.8 Analysis Description: 200.8 MET Dissolved
Associated Lab Samples: 60137618001, 60137618002, 60137618003, 60137618004, 60137618005, 60137618006, 60137618007, 60137618008, 60137618009, 60137618010, 60137618011, 60137618012, 60137618013, 60137618014, 60137618015

METHOD BLANK: 1370636 Matrix: Water
Associated Lab Samples: 60137618001, 60137618002, 60137618003, 60137618004, 60137618005, 60137618006, 60137618007, 60137618008, 60137618009, 60137618010, 60137618011, 60137618012, 60137618013, 60137618014, 60137618015

Parameter	Units	Blank Result	Reporting Limit	Analyzed	Qualifiers
Aluminum, Dissolved	ug/L	ND	4.0	02/11/13 11:07	
Antimony, Dissolved	ug/L	ND	0.50	02/06/13 05:19	
Arsenic, Dissolved	ug/L	ND	0.50	02/06/13 05:19	
Barium, Dissolved	ug/L	ND	0.30	02/06/13 05:19	
Beryllium, Dissolved	ug/L	ND	0.20	02/06/13 05:19	
Cadmium, Dissolved	ug/L	ND	0.080	02/06/13 05:19	
Calcium, Dissolved	ug/L	ND	20.0	02/11/13 11:07	
Chromium, Dissolved	ug/L	ND	0.50	02/06/13 05:19	
Cobalt, Dissolved	ug/L	ND	0.50	02/06/13 05:19	
Copper, Dissolved	ug/L	ND	0.50	02/11/13 11:07	
Iron, Dissolved	ug/L	ND	50.0	02/06/13 05:19	
Lead, Dissolved	ug/L	ND	0.10	02/06/13 05:19	
Magnesium, Dissolved	ug/L	ND	5.0	02/11/13 11:07	
Manganese, Dissolved	ug/L	ND	0.50	02/06/13 05:19	
Molybdenum, Dissolved	ug/L	ND	0.50	02/06/13 05:19	
Nickel, Dissolved	ug/L	ND	0.50	02/06/13 05:19	
Potassium, Dissolved	ug/L	ND	20.0	02/11/13 11:07	
Selenium, Dissolved	ug/L	ND	0.50	02/06/13 05:19	
Silver, Dissolved	ug/L	ND	0.50	02/06/13 05:19	
Sodium, Dissolved	ug/L	ND	50.0	02/06/13 05:19	
Thallium, Dissolved	ug/L	ND	0.10	02/06/13 05:19	
Vanadium, Dissolved	ug/L	ND	0.10	02/06/13 05:19	
Zinc, Dissolved	ug/L	ND	5.0	02/06/13 05:19	

LABORATORY CONTROL SAMPLE: 1370637

Parameter	Units	Spike Conc.	LCS Result	LCS % Rec	% Rec Limits	Qualifiers
Aluminum, Dissolved	ug/L	80	80.4	101	85-115	
Antimony, Dissolved	ug/L	80	78.2	98	85-115	
Arsenic, Dissolved	ug/L	80	77.4	97	85-115	
Barium, Dissolved	ug/L	80	79.3	99	85-115	
Beryllium, Dissolved	ug/L	80	78.6	98	85-115	
Cadmium, Dissolved	ug/L	80	80.2	100	85-115	
Calcium, Dissolved	ug/L	1000	1000	100	85-115	
Chromium, Dissolved	ug/L	80	80.4	100	85-115	
Cobalt, Dissolved	ug/L	80	78.6	98	85-115	
Copper, Dissolved	ug/L	80	81.8	102	85-115	
Iron, Dissolved	ug/L	1000	1030	103	85-115	

This report shall not be reproduced, except in full,
without the written consent of Pace Analytical Services, Inc..

Pace Analytical Services, Inc.
9608 Loiret Blvd.
Lenexa, KS 66219
(913)599-5665

QUALITY CONTROL DATA

Project: JANUARY 2013 RICO WATER SAMPLI
Pace Project No.: 60137618

LABORATORY CONTROL SAMPLE: 1370637

Parameter	Units	Spike Conc.	LCS Result	LCS % Rec	% Rec Limits	Qualifiers
Lead, Dissolved	ug/L	80	81.1	101	85-115	
Magnesium, Dissolved	ug/L	1000	981	98	85-115	
Manganese, Dissolved	ug/L	80	79.8	100	85-115	
Molybdenum, Dissolved	ug/L	80	76.6	96	85-115	
Nickel, Dissolved	ug/L	80	79.6	99	85-115	
Potassium, Dissolved	ug/L	1000	974	97	85-115	
Selenium, Dissolved	ug/L	80	78.2	98	85-115	
Silver, Dissolved	ug/L	80	80.7	101	85-115	
Sodium, Dissolved	ug/L	1000	1010	101	85-115	
Thallium, Dissolved	ug/L	80	81.4	102	85-115	
Vanadium, Dissolved	ug/L	80	78.9	99	85-115	
Zinc, Dissolved	ug/L	80	80.8	101	85-115	

MATRIX SPIKE & MATRIX SPIKE DUPLICATE: 1370638 1370639

Parameter	Units	60137618001 Result	MS Spike Conc.	MSD Spike Conc.	MS Result	MSD Result	MS % Rec	MSD % Rec	% Rec Limits	RPD	Max RPD	Qual
Aluminum, Dissolved	ug/L	10.6	80	80	94.3	93.3	105	103	70-130	1	20	
Antimony, Dissolved	ug/L	ND	80	80	79.4	79.5	99	99	70-130	.1	20	
Arsenic, Dissolved	ug/L	ND	80	80	78.9	78.9	99	99	70-130	.06	20	
Barium, Dissolved	ug/L	20.1	80	80	96.6	98.9	96	99	70-130	2	20	
Beryllium, Dissolved	ug/L	ND	80	80	81.3	76.9	102	96	70-130	6	20	
Cadmium, Dissolved	ug/L	ND	80	80	82.0	82.0	102	102	70-130	.01	20	
Calcium, Dissolved	ug/L	272000	1000	1000	257000	234000	-1560	-3820	70-130	9	20	M6
Chromium, Dissolved	ug/L	ND	80	80	81.6	80.5	102	101	70-130	1	20	
Cobalt, Dissolved	ug/L	2.1	80	80	83.5	83.2	102	101	70-130	.4	20	
Copper, Dissolved	ug/L	0.58	80	80	82.1	83.1	102	103	70-130	1	20	
Iron, Dissolved	ug/L	224	1000	1000	1260	1260	104	103	70-130	.3	20	
Lead, Dissolved	ug/L	ND	80	80	80.7	80.7	101	101	70-130	0	20	
Magnesium, Dissolved	ug/L	23200	1000	1000	25800	23500	264	30	70-130	9	20	M6
Manganese, Dissolved	ug/L	1650	80	80	1670	1690	16	49	70-130	2	20	M6
Molybdenum, Dissolved	ug/L	15.4	80	80	92.1	92.3	96	96	70-130	.2	20	
Nickel, Dissolved	ug/L	3.4	80	80	80.9	82.6	97	99	70-130	2	20	
Potassium, Dissolved	ug/L	13300	1000	1000	13600	13800	30	50	70-130	1	20	M6
Selenium, Dissolved	ug/L	ND	80	80	79.8	79.3	100	99	70-130	.7	20	
Silver, Dissolved	ug/L	ND	80	80	77.1	76.4	96	96	70-130	.8	20	
Sodium, Dissolved	ug/L	13900	1000	1000	14500	14600	61	71	70-130	.7	20	M6
Thallium, Dissolved	ug/L	ND	80	80	81.2	81.8	101	102	70-130	.7	20	
Vanadium, Dissolved	ug/L	ND	80	80	78.4	81.4	98	102	70-130	4	20	
Zinc, Dissolved	ug/L	1550	80	80	1580	1610	42	76	70-130	2	20	M6

This report shall not be reproduced, except in full,
without the written consent of Pace Analytical Services, Inc..

Pace Analytical Services, Inc.
9608 Loiret Blvd.
Lenexa, KS 66219
(913)599-5665

QUALITY CONTROL DATA

Project: JANUARY 2013 RICO WATER SAMPLI
Pace Project No.: 60137618

QC Batch: MPRP/21346 Analysis Method: EPA 200.8
QC Batch Method: EPA 200.8 Analysis Description: 200.8 Potentially Dissolved Metals
Associated Lab Samples: 60137618001, 60137618002, 60137618003, 60137618004, 60137618005, 60137618006, 60137618007, 60137618008, 60137618009, 60137618010, 60137618011, 60137618012, 60137618013, 60137618014, 60137618015

METHOD BLANK: 1133414 Matrix: Water
Associated Lab Samples: 60137618001, 60137618002, 60137618003, 60137618004, 60137618005, 60137618006, 60137618007, 60137618008, 60137618009, 60137618010, 60137618011, 60137618012, 60137618013, 60137618014, 60137618015

Parameter	Units	Blank Result	Reporting Limit	Analyzed	Qualifiers
Aluminum, Dissolved	ug/L	ND	50.0	02/01/13 11:40	
Antimony, Dissolved	ug/L	ND	1.0	02/01/13 11:40	
Arsenic, Dissolved	ug/L	ND	1.0	02/01/13 11:40	
Barium, Dissolved	ug/L	ND	1.0	02/01/13 11:40	
Beryllium, Dissolved	ug/L	ND	0.50	02/01/13 11:40	
Cadmium, Dissolved	ug/L	ND	0.50	02/01/13 11:40	
Chromium, Dissolved	ug/L	0.43J	1.0	02/04/13 15:40	
Cobalt, Dissolved	ug/L	ND	1.0	02/01/13 11:40	
Copper, Dissolved	ug/L	ND	1.0	02/01/13 11:40	
Iron, Dissolved	ug/L	ND	50.0	02/01/13 11:40	
Lead, Dissolved	ug/L	ND	1.0	02/01/13 11:40	
Manganese, Dissolved	ug/L	ND	1.0	02/01/13 11:40	
Molybdenum, Dissolved	ug/L	ND	1.0	02/01/13 11:40	
Nickel, Dissolved	ug/L	ND	1.0	02/01/13 11:40	
Selenium, Dissolved	ug/L	ND	1.0	02/01/13 11:40	
Silver, Dissolved	ug/L	ND	0.50	02/01/13 11:40	
Thallium, Dissolved	ug/L	ND	1.0	02/01/13 11:40	
Vanadium, Dissolved	ug/L	ND	1.0	02/01/13 11:40	
Zinc, Dissolved	ug/L	2.5J	10.0	02/01/13 11:40	

LABORATORY CONTROL SAMPLE: 1133415

Parameter	Units	Spike Conc.	LCS Result	LCS % Rec	% Rec Limits	Qualifiers
Aluminum, Dissolved	ug/L	1000	996	100	85-115	
Antimony, Dissolved	ug/L	40	40.9	102	85-115	
Arsenic, Dissolved	ug/L	40	41.5	104	85-115	
Barium, Dissolved	ug/L	40	40.0	100	85-115	
Beryllium, Dissolved	ug/L	40	42.3	106	85-115	
Cadmium, Dissolved	ug/L	40	41.4	103	85-115	
Chromium, Dissolved	ug/L	40	41.5	104	85-115	
Cobalt, Dissolved	ug/L	40	41.0	102	85-115	
Copper, Dissolved	ug/L	40	41.8	104	85-115	
Iron, Dissolved	ug/L	1000	1020	102	85-115	
Lead, Dissolved	ug/L	40	39.9	100	85-115	
Manganese, Dissolved	ug/L	40	41.3	103	85-115	
Molybdenum, Dissolved	ug/L	40	40.3	101	85-115	
Nickel, Dissolved	ug/L	40	41.3	103	85-115	
Selenium, Dissolved	ug/L	40	41.6	104	85-115	

This report shall not be reproduced, except in full,
without the written consent of Pace Analytical Services, Inc..

Pace Analytical Services, Inc.
9608 Loiret Blvd.
Lenexa, KS 66219
(913)599-5665

QUALITY CONTROL DATA

Project: JANUARY 2013 RICO WATER SAMPLI
Pace Project No.: 60137618

LABORATORY CONTROL SAMPLE: 1133415

Parameter	Units	Spike Conc.	LCS Result	LCS % Rec	% Rec Limits	Qualifiers
Silver, Dissolved	ug/L	20	20.0	100	85-115	
Thallium, Dissolved	ug/L	40	38.3	96	85-115	
Vanadium, Dissolved	ug/L	40	41.5	104	85-115	
Zinc, Dissolved	ug/L	100	111	111	85-115	

MATRIX SPIKE & MATRIX SPIKE DUPLICATE: 1133416 1133417

Parameter	Units	60137618002 Result	MS Spike Conc.	MSD Spike Conc.	MS Result	MSD Result	MS % Rec	MSD % Rec	% Rec Limits	RPD	Max RPD	Qual
Aluminum, Dissolved	ug/L	1290	1000	1000	2240	2200	95	92	70-130	1	20	
Antimony, Dissolved	ug/L	0.20J	40	40	38.5	38.3	96	95	70-130	1	20	
Arsenic, Dissolved	ug/L	1.8	40	40	41.5	40.5	99	97	70-130	2	20	
Barium, Dissolved	ug/L	51.2	40	40	91.1	88.3	100	93	70-130	3	20	
Beryllium, Dissolved	ug/L	0.17J	40	40	35.3	35.2	88	88	70-130	0	20	
Cadmium, Dissolved	ug/L	4.5	40	40	42.0	41.3	94	92	70-130	2	20	
Chromium, Dissolved	ug/L	4.5	40	40	44.2	42.7	99	96	70-130	3	20	
Cobalt, Dissolved	ug/L	1.9	40	40	40.1	39.3	95	93	70-130	2	20	
Copper, Dissolved	ug/L	20.6	40	40	56.2	55.2	89	87	70-130	2	20	
Iron, Dissolved	ug/L	3020	1000	1000	4070	3970	105	95	70-130	3	20	
Lead, Dissolved	ug/L	30.8	40	40	73.3	71.4	106	102	70-130	3	20	
Manganese, Dissolved	ug/L	986	40	40	1060	1020	194	91	70-130	4	20	M1
Molybdenum, Dissolved	ug/L	2.1	40	40	46.5	45.7	111	109	70-130	2	20	
Nickel, Dissolved	ug/L	3.3	40	40	40.1	39.1	92	90	70-130	2	20	
Selenium, Dissolved	ug/L	1.6	40	40	37.9	37.2	91	89	70-130	2	20	
Silver, Dissolved	ug/L	0.30J	20	20	18.4	18.0	91	88	70-130	3	20	
Thallium, Dissolved	ug/L	ND	40	40	40.2	39.4	100	98	70-130	2	20	
Vanadium, Dissolved	ug/L	2.8	40	40	43.9	42.6	103	100	70-130	3	20	
Zinc, Dissolved	ug/L	1050	100	100	1160	1120	105	72	70-130	3	20	

MATRIX SPIKE SAMPLE: 1133418

Parameter	Units	60137618012 Result	Spike Conc.	MS Result	MS % Rec	% Rec Limits	Qualifiers
Aluminum, Dissolved	ug/L	9.8J	1000	932	92	70-130	
Antimony, Dissolved	ug/L	0.053J	40	39.0	97	70-130	
Arsenic, Dissolved	ug/L	0.23J	40	38.9	97	70-130	
Barium, Dissolved	ug/L	66.4	40	105	96	70-130	
Beryllium, Dissolved	ug/L	ND	40	37.3	93	70-130	
Cadmium, Dissolved	ug/L	ND	40	37.9	95	70-130	
Chromium, Dissolved	ug/L	0.62J	40	40.1	99	70-130	
Cobalt, Dissolved	ug/L	0.10J	40	38.1	95	70-130	
Copper, Dissolved	ug/L	0.45J	40	37.8	93	70-130	
Iron, Dissolved	ug/L	100	1000	1080	98	70-130	
Lead, Dissolved	ug/L	0.49J	40	40.1	99	70-130	
Manganese, Dissolved	ug/L	261	40	298	92	70-130	
Molybdenum, Dissolved	ug/L	1.3	40	43.1	104	70-130	

This report shall not be reproduced, except in full,
without the written consent of Pace Analytical Services, Inc..

Pace Analytical Services, Inc.
9608 Loiret Blvd.
Lenexa, KS 66219
(913)599-5665

QUALITY CONTROL DATA

Project: JANUARY 2013 RICO WATER SAMPLI
Pace Project No.: 60137618

MATRIX SPIKE SAMPLE: 1133418

Parameter	Units	60137618012 Result	Spike Conc.	MS Result	MS % Rec	% Rec Limits	Qualifiers
Nickel, Dissolved	ug/L	ND	40	37.8	94	70-130	
Selenium, Dissolved	ug/L	0.53J	40	36.6	90	70-130	
Silver, Dissolved	ug/L	ND	20	18.9	94	70-130	
Thallium, Dissolved	ug/L	ND	40	38.6	97	70-130	
Vanadium, Dissolved	ug/L	ND	40	40.0	100	70-130	
Zinc, Dissolved	ug/L	10.7	100	104	93	70-130	

This report shall not be reproduced, except in full,
without the written consent of Pace Analytical Services, Inc..

Pace Analytical Services, Inc.
9608 Loiret Blvd.
Lenexa, KS 66219
(913)599-5665

QUALITY CONTROL DATA

Project: JANUARY 2013 RICO WATER SAMPLI
Pace Project No.: 60137618

QC Batch: MT/11242 Analysis Method: SM 2510B
QC Batch Method: SM 2510B Analysis Description: 2510B Specific Conductance
Associated Lab Samples: 60137618001, 60137618002, 60137618003, 60137618004, 60137618005, 60137618006, 60137618007, 60137618008, 60137618009, 60137618010, 60137618011, 60137618012, 60137618013, 60137618014, 60137618015

METHOD BLANK: 1370769 Matrix: Water
Associated Lab Samples: 60137618001, 60137618002, 60137618003, 60137618004, 60137618005, 60137618006, 60137618007, 60137618008, 60137618009, 60137618010, 60137618011, 60137618012, 60137618013, 60137618014, 60137618015

Parameter	Units	Blank Result	Reporting Limit	Analyzed	Qualifiers
Specific Conductance	umhos/cm	ND	10.0	01/30/13 14:40	

LABORATORY CONTROL SAMPLE: 1370770

Parameter	Units	Spike Conc.	LCS Result	LCS % Rec	% Rec Limits	Qualifiers
Specific Conductance	umhos/cm	1000	1020	102	90-110	

SAMPLE DUPLICATE: 1370771

Parameter	Units	60137618003 Result	Dup Result	RPD	Max RPD	Qualifiers
Specific Conductance	umhos/cm	1310	1340	2	20	

SAMPLE DUPLICATE: 1370772

Parameter	Units	60137618009 Result	Dup Result	RPD	Max RPD	Qualifiers
Specific Conductance	umhos/cm	ND	5.5J		20	

This report shall not be reproduced, except in full,
without the written consent of Pace Analytical Services, Inc..

Pace Analytical Services, Inc.
9608 Loiret Blvd.
Lenexa, KS 66219
(913)599-5665

QUALITY CONTROL DATA

Project: JANUARY 2013 RICO WATER SAMPLI
Pace Project No.: 60137618

QC Batch: WET/39475 Analysis Method: SM 2320B
QC Batch Method: SM 2320B Analysis Description: 2320B Alkalinity
Associated Lab Samples: 60137618001, 60137618002, 60137618003, 60137618004, 60137618005, 60137618006, 60137618007, 60137618008, 60137618009, 60137618010, 60137618011, 60137618012, 60137618013, 60137618014, 60137618015

METHOD BLANK: 1132938 Matrix: Water
Associated Lab Samples: 60137618001, 60137618002, 60137618003, 60137618004, 60137618005, 60137618006, 60137618007, 60137618008, 60137618009, 60137618010, 60137618011, 60137618012, 60137618013, 60137618014, 60137618015

Parameter	Units	Blank Result	Reporting Limit	Analyzed	Qualifiers
Alkalinity, Carbonate (CaCO3)	mg/L	ND	20.0	01/30/13 11:48	
Alkalinity, Total as CaCO3	mg/L	ND	20.0	01/30/13 11:48	
Alkalinity,Bicarbonate (CaCO3)	mg/L	ND	20.0	01/30/13 11:48	

LABORATORY CONTROL SAMPLE: 1132939

Parameter	Units	Spike Conc.	LCS Result	LCS % Rec	% Rec Limits	Qualifiers
Alkalinity, Total as CaCO3	mg/L	500	469	94	90-110	

SAMPLE DUPLICATE: 1132940

Parameter	Units	60137669001 Result	Dup Result	RPD	Max RPD	Qualifiers
Alkalinity, Carbonate (CaCO3)	mg/L	ND	ND		10	
Alkalinity, Total as CaCO3	mg/L	124	123	1	10	
Alkalinity,Bicarbonate (CaCO3)	mg/L	124	123	1	10	

SAMPLE DUPLICATE: 1132941

Parameter	Units	60137618004 Result	Dup Result	RPD	Max RPD	Qualifiers
Alkalinity, Carbonate (CaCO3)	mg/L	ND	ND		10	
Alkalinity, Total as CaCO3	mg/L	351	342	2	10	
Alkalinity,Bicarbonate (CaCO3)	mg/L	351	342	2	10	

This report shall not be reproduced, except in full,
without the written consent of Pace Analytical Services, Inc..

Pace Analytical Services, Inc.
9608 Loiret Blvd.
Lenexa, KS 66219
(913)599-5665

QUALITY CONTROL DATA

Project: JANUARY 2013 RICO WATER SAMPLI
Pace Project No.: 60137618

QC Batch: WET/39453 Analysis Method: SM 2540C
QC Batch Method: SM 2540C Analysis Description: 2540C Total Dissolved Solids
Associated Lab Samples: 60137618001, 60137618002, 60137618003, 60137618004, 60137618005

METHOD BLANK: 1132284 Matrix: Water
Associated Lab Samples: 60137618001, 60137618002, 60137618003, 60137618004, 60137618005

Parameter	Units	Blank Result	Reporting Limit	Analyzed	Qualifiers
Total Dissolved Solids	mg/L	ND	5.0	01/29/13 10:26	

SAMPLE DUPLICATE: 1132285

Parameter	Units	60137332002 Result	Dup Result	RPD	Max RPD	Qualifiers
Total Dissolved Solids	mg/L	935	949	2	17	

SAMPLE DUPLICATE: 1132286

Parameter	Units	60137416002 Result	Dup Result	RPD	Max RPD	Qualifiers
Total Dissolved Solids	mg/L	1400	1400	0	17	

This report shall not be reproduced, except in full,
without the written consent of Pace Analytical Services, Inc..

Pace Analytical Services, Inc.
9608 Loiret Blvd.
Lenexa, KS 66219
(913)599-5665

QUALITY CONTROL DATA

Project: JANUARY 2013 RICO WATER SAMPLI
Pace Project No.: 60137618

QC Batch: WET/39462 Analysis Method: SM 2540C
QC Batch Method: SM 2540C Analysis Description: 2540C Total Dissolved Solids
Associated Lab Samples: 60137618006, 60137618007, 60137618008, 60137618010, 60137618011, 60137618012, 60137618013, 60137618014, 60137618015

METHOD BLANK: 1132523 Matrix: Water
Associated Lab Samples: 60137618006, 60137618007, 60137618008, 60137618010, 60137618011, 60137618012, 60137618013, 60137618014, 60137618015

Parameter	Units	Blank Result	Reporting Limit	Analyzed	Qualifiers
Total Dissolved Solids	mg/L	ND	5.0	01/30/13 09:28	

SAMPLE DUPLICATE: 1132524

Parameter	Units	60137618006 Result	Dup Result	RPD	Max RPD	Qualifiers
Total Dissolved Solids	mg/L	482	483	0	17	

SAMPLE DUPLICATE: 1132525

Parameter	Units	60137601005 Result	Dup Result	RPD	Max RPD	Qualifiers
Total Dissolved Solids	mg/L	208	202	3	17	

This report shall not be reproduced, except in full,
without the written consent of Pace Analytical Services, Inc..

Pace Analytical Services, Inc.
9608 Loiret Blvd.
Lenexa, KS 66219
(913)599-5665

QUALITY CONTROL DATA

Project: JANUARY 2013 RICO WATER SAMPLI
Pace Project No.: 60137618

QC Batch: WET/39511 | Analysis Method: SM 2540C
QC Batch Method: SM 2540C | Analysis Description: 2540C Total Dissolved Solids
Associated Lab Samples: 60137618009

METHOD BLANK: 1133929 | Matrix: Water
Associated Lab Samples: 60137618009

Parameter	Units	Blank Result	Reporting Limit	Analyzed	Qualifiers
Total Dissolved Solids	mg/L	ND	5.0	01/31/13 12:26	

SAMPLE DUPLICATE: 1133930

Parameter	Units	60137111001 Result	Dup Result	RPD	Max RPD	Qualifiers
Total Dissolved Solids	mg/L	364	358	2	17	

This report shall not be reproduced, except in full,
without the written consent of Pace Analytical Services, Inc..

Pace Analytical Services, Inc.
9608 Loiret Blvd.
Lenexa, KS 66219
(913)599-5665

QUALITY CONTROL DATA

Project: JANUARY 2013 RICO WATER SAMPLI
Pace Project No.: 60137618

QC Batch: WET/39464 Analysis Method: SM 2540D
QC Batch Method: SM 2540D Analysis Description: 2540D Total Suspended Solids
Associated Lab Samples: 60137618001, 60137618002, 60137618003, 60137618004, 60137618005, 60137618006, 60137618007, 60137618008, 60137618009

METHOD BLANK: 1132537 Matrix: Water
Associated Lab Samples: 60137618001, 60137618002, 60137618003, 60137618004, 60137618005, 60137618006, 60137618007, 60137618008, 60137618009

Parameter	Units	Blank Result	Reporting Limit	Analyzed	Qualifiers
Total Suspended Solids	mg/L	ND	5.0	01/29/13 10:44	

SAMPLE DUPLICATE: 1132538

Parameter	Units	60137504002 Result	Dup Result	RPD	Max RPD	Qualifiers
Total Suspended Solids	mg/L	ND	ND		25	

SAMPLE DUPLICATE: 1132539

Parameter	Units	60137592003 Result	Dup Result	RPD	Max RPD	Qualifiers
Total Suspended Solids	mg/L	ND	ND		25	

This report shall not be reproduced, except in full,
without the written consent of Pace Analytical Services, Inc..

Pace Analytical Services, Inc.
9608 Loiret Blvd.
Lenexa, KS 66219
(913)599-5665

QUALITY CONTROL DATA

Project: JANUARY 2013 RICO WATER SAMPLI
Pace Project No.: 60137618

QC Batch: WET/39495 Analysis Method: SM 2540D
QC Batch Method: SM 2540D Analysis Description: 2540D Total Suspended Solids
Associated Lab Samples: 60137618010, 60137618011, 60137618012, 60137618013, 60137618014, 60137618015

METHOD BLANK: 1133609 Matrix: Water
Associated Lab Samples: 60137618010, 60137618011, 60137618012, 60137618013, 60137618014, 60137618015

Parameter	Units	Blank Result	Reporting Limit	Analyzed	Qualifiers
Total Suspended Solids	mg/L	ND	5.0	01/31/13 09:15	

SAMPLE DUPLICATE: 1133611

Parameter	Units	60137569003 Result	Dup Result	RPD	Max RPD	Qualifiers
Total Suspended Solids	mg/L	3310	3720	12	25	

SAMPLE DUPLICATE: 1133694

Parameter	Units	60137618010 Result	Dup Result	RPD	Max RPD	Qualifiers
Total Suspended Solids	mg/L	43.0	44.0	2	25	

This report shall not be reproduced, except in full,
without the written consent of Pace Analytical Services, Inc..

Pace Analytical Services, Inc.
9608 Loiret Blvd.
Lenexa, KS 66219
(913)599-5665

QUALITY CONTROL DATA

Project: JANUARY 2013 RICO WATER SAMPLI
Pace Project No.: 60137618

QC Batch: WET/39460 — Analysis Method: SM 4500-S-2 D
QC Batch Method: SM 4500-S-2 D — Analysis Description: 4500S2D Sulfide, Total
Associated Lab Samples: 60137618001, 60137618002, 60137618003, 60137618004, 60137618005, 60137618006, 60137618007, 60137618008, 60137618009, 60137618010, 60137618011, 60137618012, 60137618013, 60137618014, 60137618015

METHOD BLANK: 1132491 — Matrix: Water
Associated Lab Samples: 60137618001, 60137618002, 60137618003, 60137618004, 60137618005, 60137618006, 60137618007, 60137618008, 60137618009, 60137618010, 60137618011, 60137618012, 60137618013, 60137618014, 60137618015

Parameter	Units	Blank Result	Reporting Limit	Analyzed	Qualifiers
Sulfide, Total	mg/L	ND	0.050	01/29/13 14:33	

LABORATORY CONTROL SAMPLE: 1132492

Parameter	Units	Spike Conc.	LCS Result	LCS % Rec	% Rec Limits	Qualifiers
Sulfide, Total	mg/L	.5	0.55	110	80-120	

MATRIX SPIKE SAMPLE: 1132493

Parameter	Units	60137618001 Result	Spike Conc.	MS Result	MS % Rec	% Rec Limits	Qualifiers
Sulfide, Total	mg/L	0.074	.5	0.62	110	75-125	

This report shall not be reproduced, except in full,
without the written consent of Pace Analytical Services, Inc..

Pace Analytical Services, Inc.
9608 Loiret Blvd.
Lenexa, KS 66219
(913)599-5665

QUALITY CONTROL DATA

Project: JANUARY 2013 RICO WATER SAMPLI
Pace Project No.: 60137618

QC Batch: WETA/23364 Analysis Method: EPA 300.0
QC Batch Method: EPA 300.0 Analysis Description: 300.0 IC Anions
Associated Lab Samples: 60137618001, 60137618002, 60137618003, 60137618004, 60137618005, 60137618006, 60137618007, 60137618008, 60137618009, 60137618010, 60137618011, 60137618012, 60137618013, 60137618014, 60137618015

METHOD BLANK: 1133021 Matrix: Water
Associated Lab Samples: 60137618001, 60137618002, 60137618003, 60137618004, 60137618005, 60137618006, 60137618007, 60137618008, 60137618009, 60137618010, 60137618011, 60137618012, 60137618013, 60137618014, 60137618015

Parameter	Units	Blank Result	Reporting Limit	Analyzed	Qualifiers
Chloride	mg/L	ND	1.0	01/30/13 11:34	
Sulfate	mg/L	ND	1.0	01/30/13 11:34	

LABORATORY CONTROL SAMPLE: 1133022

Parameter	Units	Spike Conc.	LCS Result	LCS % Rec	% Rec Limits	Qualifiers
Chloride	mg/L	5	4.9	99	90-110	
Sulfate	mg/L	5	5.0	101	90-110	

MATRIX SPIKE SAMPLE: 1133023

Parameter	Units	60137618001 Result	Spike Conc.	MS Result	MS % Rec	% Rec Limits	Qualifiers
Chloride	mg/L	1.1	5	5.4	88	64-118	
Sulfate	mg/L	680	250	906	90	61-119	

MATRIX SPIKE & MATRIX SPIKE DUPLICATE: 1133024 1133025

Parameter	Units	60137618002 Result	MS Spike Conc.	MSD Spike Conc.	MS Result	MSD Result	MS % Rec	MSD % Rec	% Rec Limits	RPD	Max RPD	Qual
Chloride	mg/L	1.1	5	5	5.4	5.4	87	87	64-118	0	12	
Sulfate	mg/L	831	250	250	942	937	45	43	61-119	1	10	M6

This report shall not be reproduced, except in full,
without the written consent of Pace Analytical Services, Inc..

Pace Analytical Services, Inc.
9608 Loiret Blvd.
Lenexa, KS 66219
(913)599-5665

QUALITY CONTROL DATA

Project: JANUARY 2013 RICO WATER SAMPLI
Pace Project No.: 60137618

QC Batch: WETA/23378 Analysis Method: EPA 353.2
QC Batch Method: EPA 353.2 Analysis Description: 353.2 Nitrate + Nitrite, preserved
Associated Lab Samples: 60137618001, 60137618002, 60137618003, 60137618004, 60137618005, 60137618006, 60137618007, 60137618008, 60137618009, 60137618010, 60137618011, 60137618012, 60137618013, 60137618014, 60137618015

METHOD BLANK: 1133617 Matrix: Water
Associated Lab Samples: 60137618001, 60137618002, 60137618003, 60137618004, 60137618005, 60137618006, 60137618007, 60137618008, 60137618009, 60137618010, 60137618011, 60137618012, 60137618013, 60137618014, 60137618015

Parameter	Units	Blank Result	Reporting Limit	Analyzed	Qualifiers
Nitrogen, NO2 plus NO3	mg/L	ND	0.10	01/31/13 16:29	

LABORATORY CONTROL SAMPLE: 1133618

Parameter	Units	Spike Conc.	LCS Result	LCS % Rec	% Rec Limits	Qualifiers
Nitrogen, NO2 plus NO3	mg/L	2	2.0	100	90-110	

MATRIX SPIKE SAMPLE: 1133619

Parameter	Units	60137618001 Result	Spike Conc.	MS Result	MS % Rec	% Rec Limits	Qualifiers
Nitrogen, NO2 plus NO3	mg/L	ND	2	2.0	99	90-110	

MATRIX SPIKE SAMPLE: 1133621

Parameter	Units	60137618003 Result	Spike Conc.	MS Result	MS % Rec	% Rec Limits	Qualifiers
Nitrogen, NO2 plus NO3	mg/L	ND	2	1.9	96	90-110	

SAMPLE DUPLICATE: 1133620

Parameter	Units	60137618002 Result	Dup Result	RPD	Max RPD	Qualifiers
Nitrogen, NO2 plus NO3	mg/L	ND	ND		13	

This report shall not be reproduced, except in full,
without the written consent of Pace Analytical Services, Inc..

Pace Analytical Services, Inc.
9608 Loiret Blvd.
Lenexa, KS 66219
(913)599-5665

QUALITY CONTROL DATA

Project: JANUARY 2013 RICO WATER SAMPLI
Pace Project No.: 60137618

QC Batch: WETA/23357 Analysis Method: SM 4500-CN-E
QC Batch Method: SM 4500-CN-E Analysis Description: 4500CNE Cyanide, Total
Associated Lab Samples: 60137618001, 60137618002, 60137618003, 60137618004, 60137618005, 60137618006, 60137618007, 60137618008, 60137618009, 60137618010, 60137618011, 60137618012, 60137618013, 60137618014, 60137618015

METHOD BLANK: 1132953 Matrix: Water
Associated Lab Samples: 60137618001, 60137618002, 60137618003, 60137618004, 60137618005, 60137618006, 60137618007, 60137618008, 60137618009, 60137618010, 60137618011, 60137618012, 60137618013, 60137618014, 60137618015

Parameter	Units	Blank Result	Reporting Limit	Analyzed	Qualifiers
Cyanide	mg/L	ND	0.0050	01/30/13 12:53	

LABORATORY CONTROL SAMPLE: 1132954

Parameter	Units	Spike Conc.	LCS Result	LCS % Rec	% Rec Limits	Qualifiers
Cyanide	mg/L	.1	0.11	106	69-126	

MATRIX SPIKE SAMPLE: 1132955

Parameter	Units	60137701001 Result	Spike Conc.	MS Result	MS % Rec	% Rec Limits	Qualifiers
Cyanide	mg/L	ND	.1	0.095	95	41-136	

SAMPLE DUPLICATE: 1132956

Parameter	Units	60137602001 Result	Dup Result	RPD	Max RPD	Qualifiers
Cyanide	mg/L	ND	ND		26	

This report shall not be reproduced, except in full,
without the written consent of Pace Analytical Services, Inc..

Pace Analytical Services, Inc.
9608 Loiret Blvd.
Lenexa, KS 66219
(913)599-5665

QUALITY CONTROL DATA

Project: JANUARY 2013 RICO WATER SAMPLI
Pace Project No.: 60137618

QC Batch: WETA/23370 Analysis Method: SM 5310C
QC Batch Method: SM 5310C Analysis Description: 5310C Total Organic Carbon
Associated Lab Samples: 60137618001, 60137618002, 60137618003, 60137618004, 60137618005, 60137618006, 60137618007, 60137618008, 60137618009, 60137618010

METHOD BLANK: 1133065 Matrix: Water
Associated Lab Samples: 60137618001, 60137618002, 60137618003, 60137618004, 60137618005, 60137618006, 60137618007, 60137618008, 60137618009, 60137618010

Parameter	Units	Blank Result	Reporting Limit	Analyzed	Qualifiers
Total Organic Carbon	mg/L	ND	1.0	01/30/13 12:46	

LABORATORY CONTROL SAMPLE: 1133066

Parameter	Units	Spike Conc.	LCS Result	LCS % Rec	% Rec Limits	Qualifiers
Total Organic Carbon	mg/L	5	4.8	96	80-120	

MATRIX SPIKE SAMPLE: 1133067

Parameter	Units	60137669001 Result	Spike Conc.	MS Result	MS % Rec	% Rec Limits	Qualifiers
Total Organic Carbon	mg/L	1.2	5	6.2	101	80-120	

SAMPLE DUPLICATE: 1133068

Parameter	Units	60137669002 Result	Dup Result	RPD	Max RPD	Qualifiers
Total Organic Carbon	mg/L	1.5	1.2	20	25	

This report shall not be reproduced, except in full,
without the written consent of Pace Analytical Services, Inc..

Pace Analytical Services, Inc.
9608 Loiret Blvd.
Lenexa, KS 66219
(913)599-5665

QUALITY CONTROL DATA

Project: JANUARY 2013 RICO WATER SAMPLI
Pace Project No.: 60137618

QC Batch: WETA/23383 Analysis Method: SM 5310C
QC Batch Method: SM 5310C Analysis Description: 5310C Total Organic Carbon
Associated Lab Samples: 60137618011, 60137618012, 60137618013, 60137618014, 60137618015

METHOD BLANK: 1133729 Matrix: Water
Associated Lab Samples: 60137618011, 60137618012, 60137618013, 60137618014, 60137618015

Parameter	Units	Blank Result	Reporting Limit	Analyzed	Qualifiers
Total Organic Carbon	mg/L	ND	1.0	01/31/13 17:13	

LABORATORY CONTROL SAMPLE: 1133730

Parameter	Units	Spike Conc.	LCS Result	LCS % Rec	% Rec Limits	Qualifiers
Total Organic Carbon	mg/L	5	4.9	98	80-120	

MATRIX SPIKE SAMPLE: 1133731

Parameter	Units	60137523001 Result	Spike Conc.	MS Result	MS % Rec	% Rec Limits	Qualifiers
Total Organic Carbon	mg/L	5800	1000	7060	126	80-120	M6

SAMPLE DUPLICATE: 1133732

Parameter	Units	60137618011 Result	Dup Result	RPD	Max RPD	Qualifiers
Total Organic Carbon	mg/L	ND	ND		25	

This report shall not be reproduced, except in full,
without the written consent of Pace Analytical Services, Inc..

Pace Analytical Services, Inc.
9608 Loiret Blvd.
Lenexa, KS 66219
(913)599-5665

QUALIFIERS

Project: JANUARY 2013 RICO WATER SAMPLI
Pace Project No.: 60137618

DEFINITIONS

DF - Dilution Factor, if reported, represents the factor applied to the reported data due to changes in sample preparation, dilution of the sample aliquot, or moisture content.

ND - Not Detected at or above adjusted reporting limit.

J - Estimated concentration above the adjusted method detection limit and below the adjusted reporting limit.

MDL - Adjusted Method Detection Limit.

PRL - Pace Reporting Limit.

RL - Reporting Limit.

S - Surrogate

1,2-Diphenylhydrazine (8270 listed analyte) decomposes to Azobenzene.

Consistent with EPA guidelines, unrounded data are displayed and have been used to calculate % recovery and RPD values.

LCS(D) - Laboratory Control Sample (Duplicate)

MS(D) - Matrix Spike (Duplicate)

DUP - Sample Duplicate

RPD - Relative Percent Difference

NC - Not Calculable.

SG - Silica Gel - Clean-Up

U - Indicates the compound was analyzed for, but not detected.

N-Nitrosodiphenylamine decomposes and cannot be separated from Diphenylamine using Method 8270. The result reported for each analyte is a combined concentration.

Pace Analytical is TNI accredited. Contact your Pace PM for the current list of accredited analytes.

TNI - The NELAC Institute.

LABORATORIES

PASI-K	Pace Analytical Services - Kansas City
PASI-M	Pace Analytical Services - Minneapolis

ANALYTE QUALIFIERS

B	Analyte was detected in the associated method blank.
M1	Matrix spike recovery exceeded QC limits. Batch accepted based on laboratory control sample (LCS) recovery.
M6	Matrix spike and Matrix spike duplicate recovery not evaluated against control limits due to sample dilution.

This report shall not be reproduced, except in full,
without the written consent of Pace Analytical Services, Inc..

Pace Analytical Services, Inc.
9608 Loiret Blvd.
Lenexa, KS 66219
(913)599-5665

QUALITY CONTROL DATA CROSS REFERENCE TABLE

Project: JANUARY 2013 RICO WATER SAMPLI
Pace Project No.: 60137618

Lab ID	Sample ID	QC Batch Method	QC Batch	Analytical Method	Analytical Batch
60137618001	**DR-6_20130124**	EPA 200.7	MPRP/21345	EPA 200.7	ICP/17201
60137618002	**MW-104_20130124**	EPA 200.7	MPRP/21345	EPA 200.7	ICP/17201
60137618003	**CHV-101_20130124**	EPA 200.7	MPRP/21345	EPA 200.7	ICP/17201
60137618004	**MW-103_20130124**	EPA 200.7	MPRP/21345	EPA 200.7	ICP/17201
60137618005	**MW-101_20130124**	EPA 200.7	MPRP/21345	EPA 200.7	ICP/17201
60137618006	**DR-7_20130124**	EPA 200.7	MPRP/21345	EPA 200.7	ICP/17201
60137618007	**DR-5_20130124**	EPA 200.7	MPRP/21345	EPA 200.7	ICP/17201
60137618008	**DR-2_20130124**	EPA 200.7	MPRP/21345	EPA 200.7	ICP/17201
60137618009	**FB_20130124**	EPA 200.7	MPRP/21345	EPA 200.7	ICP/17201
60137618010	**DR-11_20130124**	EPA 200.7	MPRP/21345	EPA 200.7	ICP/17201
60137618011	**DR-7 COMP_20130124**	EPA 200.7	MPRP/21345	EPA 200.7	ICP/17201
60137618012	**DR-2 COMP_20130124**	EPA 200.7	MPRP/21345	EPA 200.7	ICP/17201
60137618013	**MW-204_20130124**	EPA 200.7	MPRP/21345	EPA 200.7	ICP/17201
60137618014	**MW-102_20130124**	EPA 200.7	MPRP/21345	EPA 200.7	ICP/17201
60137618015	**AT-2_20130124**	EPA 200.7	MPRP/21345	EPA 200.7	ICP/17201
60137618001	**DR-6_20130124**	EPA 200.8	MPRP/37430	EPA 200.8	ICPM/15262
60137618002	**MW-104_20130124**	EPA 200.8	MPRP/37430	EPA 200.8	ICPM/15262
60137618003	**CHV-101_20130124**	EPA 200.8	MPRP/37430	EPA 200.8	ICPM/15262
60137618004	**MW-103_20130124**	EPA 200.8	MPRP/37430	EPA 200.8	ICPM/15262
60137618005	**MW-101_20130124**	EPA 200.8	MPRP/37430	EPA 200.8	ICPM/15262
60137618006	**DR-7_20130124**	EPA 200.8	MPRP/37430	EPA 200.8	ICPM/15262
60137618007	**DR-5_20130124**	EPA 200.8	MPRP/37430	EPA 200.8	ICPM/15262
60137618008	**DR-2_20130124**	EPA 200.8	MPRP/37430	EPA 200.8	ICPM/15262
60137618009	**FB_20130124**	EPA 200.8	MPRP/37430	EPA 200.8	ICPM/15262
60137618010	**DR-11_20130124**	EPA 200.8	MPRP/37430	EPA 200.8	ICPM/15262
60137618011	**DR-7 COMP_20130124**	EPA 200.8	MPRP/37430	EPA 200.8	ICPM/15262
60137618012	**DR-2 COMP_20130124**	EPA 200.8	MPRP/37430	EPA 200.8	ICPM/15262
60137618013	**MW-204_20130124**	EPA 200.8	MPRP/37430	EPA 200.8	ICPM/15262
60137618014	**MW-102_20130124**	EPA 200.8	MPRP/37430	EPA 200.8	ICPM/15262
60137618015	**AT-2_20130124**	EPA 200.8	MPRP/37430	EPA 200.8	ICPM/15262
60137618001	**DR-6_20130124**	EPA 200.8	MPRP/37431	EPA 200.8	ICPM/15274
60137618002	**MW-104_20130124**	EPA 200.8	MPRP/37431	EPA 200.8	ICPM/15274
60137618003	**CHV-101_20130124**	EPA 200.8	MPRP/37431	EPA 200.8	ICPM/15274
60137618004	**MW-103_20130124**	EPA 200.8	MPRP/37431	EPA 200.8	ICPM/15274
60137618005	**MW-101_20130124**	EPA 200.8	MPRP/37431	EPA 200.8	ICPM/15274
60137618006	**DR-7_20130124**	EPA 200.8	MPRP/37431	EPA 200.8	ICPM/15274
60137618007	**DR-5_20130124**	EPA 200.8	MPRP/37431	EPA 200.8	ICPM/15274
60137618008	**DR-2_20130124**	EPA 200.8	MPRP/37431	EPA 200.8	ICPM/15274
60137618009	**FB_20130124**	EPA 200.8	MPRP/37431	EPA 200.8	ICPM/15274
60137618010	**DR-11_20130124**	EPA 200.8	MPRP/37431	EPA 200.8	ICPM/15274
60137618011	**DR-7 COMP_20130124**	EPA 200.8	MPRP/37431	EPA 200.8	ICPM/15274
60137618012	**DR-2 COMP_20130124**	EPA 200.8	MPRP/37431	EPA 200.8	ICPM/15274
60137618013	**MW-204_20130124**	EPA 200.8	MPRP/37431	EPA 200.8	ICPM/15274
60137618014	**MW-102_20130124**	EPA 200.8	MPRP/37431	EPA 200.8	ICPM/15274
60137618015	**AT-2_20130124**	EPA 200.8	MPRP/37431	EPA 200.8	ICPM/15274
60137618001	**DR-6_20130124**	EPA 200.8	MPRP/21346	EPA 200.8	ICPM/2006
60137618002	**MW-104_20130124**	EPA 200.8	MPRP/21346	EPA 200.8	ICPM/2006

This report shall not be reproduced, except in full,
without the written consent of Pace Analytical Services, Inc..

Pace Analytical Services, Inc.
9608 Loiret Blvd.
Lenexa, KS 66219
(913)599-5665

QUALITY CONTROL DATA CROSS REFERENCE TABLE

Project: JANUARY 2013 RICO WATER SAMPLI
Pace Project No.: 60137618

Lab ID	Sample ID	QC Batch Method	QC Batch	Analytical Method	Analytical Batch
60137618003	**CHV-101_20130124**	EPA 200.8	MPRP/21346	EPA 200.8	ICPM/2006
60137618004	**MW-103_20130124**	EPA 200.8	MPRP/21346	EPA 200.8	ICPM/2006
60137618005	**MW-101_20130124**	EPA 200.8	MPRP/21346	EPA 200.8	ICPM/2006
60137618006	**DR-7_20130124**	EPA 200.8	MPRP/21346	EPA 200.8	ICPM/2006
60137618007	**DR-5_20130124**	EPA 200.8	MPRP/21346	EPA 200.8	ICPM/2006
60137618008	**DR-2_20130124**	EPA 200.8	MPRP/21346	EPA 200.8	ICPM/2006
60137618009	**FB_20130124**	EPA 200.8	MPRP/21346	EPA 200.8	ICPM/2006
60137618010	**DR-11_20130124**	EPA 200.8	MPRP/21346	EPA 200.8	ICPM/2006
60137618011	**DR-7 COMP_20130124**	EPA 200.8	MPRP/21346	EPA 200.8	ICPM/2006
60137618012	**DR-2 COMP_20130124**	EPA 200.8	MPRP/21346	EPA 200.8	ICPM/2006
60137618013	**MW-204_20130124**	EPA 200.8	MPRP/21346	EPA 200.8	ICPM/2006
60137618014	**MW-102_20130124**	EPA 200.8	MPRP/21346	EPA 200.8	ICPM/2006
60137618015	**AT-2_20130124**	EPA 200.8	MPRP/21346	EPA 200.8	ICPM/2006
60137618001	**DR-6_20130124**	EPA 245.1	MERP/8014	EPA 245.1	MERC/9038
60137618002	**MW-104_20130124**	EPA 245.1	MERP/8014	EPA 245.1	MERC/9038
60137618003	**CHV-101_20130124**	EPA 245.1	MERP/8014	EPA 245.1	MERC/9038
60137618004	**MW-103_20130124**	EPA 245.1	MERP/8014	EPA 245.1	MERC/9038
60137618005	**MW-101_20130124**	EPA 245.1	MERP/8014	EPA 245.1	MERC/9038
60137618006	**DR-7_20130124**	EPA 245.1	MERP/8014	EPA 245.1	MERC/9038
60137618007	**DR-5_20130124**	EPA 245.1	MERP/8014	EPA 245.1	MERC/9038
60137618008	**DR-2_20130124**	EPA 245.1	MERP/8014	EPA 245.1	MERC/9038
60137618009	**FB_20130124**	EPA 245.1	MERP/8014	EPA 245.1	MERC/9038
60137618010	**DR-11_20130124**	EPA 245.1	MERP/8014	EPA 245.1	MERC/9038
60137618011	**DR-7 COMP_20130124**	EPA 245.1	MERP/8014	EPA 245.1	MERC/9038
60137618012	**DR-2 COMP_20130124**	EPA 245.1	MERP/8014	EPA 245.1	MERC/9038
60137618013	**MW-204_20130124**	EPA 245.1	MERP/8014	EPA 245.1	MERC/9038
60137618014	**MW-102_20130124**	EPA 245.1	MERP/8014	EPA 245.1	MERC/9038
60137618015	**AT-2_20130124**	EPA 245.1	MERP/8014	EPA 245.1	MERC/9038
60137618001	**DR-6_20130124**	EPA 245.1	MERP/8002	EPA 245.1	MERC/9028
60137618002	**MW-104_20130124**	EPA 245.1	MERP/8002	EPA 245.1	MERC/9028
60137618003	**CHV-101_20130124**	EPA 245.1	MERP/8002	EPA 245.1	MERC/9028
60137618004	**MW-103_20130124**	EPA 245.1	MERP/8002	EPA 245.1	MERC/9028
60137618005	**MW-101_20130124**	EPA 245.1	MERP/8002	EPA 245.1	MERC/9028
60137618006	**DR-7_20130124**	EPA 245.1	MERP/8002	EPA 245.1	MERC/9028
60137618007	**DR-5_20130124**	EPA 245.1	MERP/8002	EPA 245.1	MERC/9028
60137618008	**DR-2_20130124**	EPA 245.1	MERP/8002	EPA 245.1	MERC/9028
60137618009	**FB_20130124**	EPA 245.1	MERP/8002	EPA 245.1	MERC/9028
60137618010	**DR-11_20130124**	EPA 245.1	MERP/8002	EPA 245.1	MERC/9028
60137618011	**DR-7 COMP_20130124**	EPA 245.1	MERP/8002	EPA 245.1	MERC/9028
60137618012	**DR-2 COMP_20130124**	EPA 245.1	MERP/8002	EPA 245.1	MERC/9028
60137618013	**MW-204_20130124**	EPA 245.1	MERP/8002	EPA 245.1	MERC/9028
60137618014	**MW-102_20130124**	EPA 245.1	MERP/8002	EPA 245.1	MERC/9028
60137618015	**AT-2_20130124**	EPA 245.1	MERP/8002	EPA 245.1	MERC/9028
60137618001	**DR-6_20130124**	EPA 245.1	MERP/7042	EPA 245.1	MERC/7000
60137618002	**MW-104_20130124**	EPA 245.1	MERP/7042	EPA 245.1	MERC/7000
60137618003	**CHV-101_20130124**	EPA 245.1	MERP/7042	EPA 245.1	MERC/7000
60137618004	**MW-103_20130124**	EPA 245.1	MERP/7042	EPA 245.1	MERC/7000

This report shall not be reproduced, except in full,
without the written consent of Pace Analytical Services, Inc..

Pace Analytical Services, Inc.
9608 Loiret Blvd.
Lenexa, KS 66219
(913)599-5665

QUALITY CONTROL DATA CROSS REFERENCE TABLE

Project: JANUARY 2013 RICO WATER SAMPLI
Pace Project No.: 60137618

Lab ID	Sample ID	QC Batch Method	QC Batch	Analytical Method	Analytical Batch
60137618005	**MW-101_20130124**	EPA 245.1	MERP/7042	EPA 245.1	MERC/7000
60137618006	**DR-7_20130124**	EPA 245.1	MERP/7042	EPA 245.1	MERC/7000
60137618007	**DR-5_20130124**	EPA 245.1	MERP/7042	EPA 245.1	MERC/7000
60137618008	**DR-2_20130124**	EPA 245.1	MERP/7042	EPA 245.1	MERC/7000
60137618009	**FB_20130124**	EPA 245.1	MERP/7042	EPA 245.1	MERC/7000
60137618010	**DR-11_20130124**	EPA 245.1	MERP/7042	EPA 245.1	MERC/7000
60137618011	**DR-7 COMP_20130124**	EPA 245.1	MERP/7042	EPA 245.1	MERC/7000
60137618012	**DR-2 COMP_20130124**	EPA 245.1	MERP/7042	EPA 245.1	MERC/7000
60137618013	**MW-204_20130124**	EPA 245.1	MERP/7042	EPA 245.1	MERC/7000
60137618014	**MW-102_20130124**	EPA 245.1	MERP/7042	EPA 245.1	MERC/7000
60137618015	**AT-2_20130124**	EPA 245.1	MERP/7042	EPA 245.1	MERC/7000
60137618001	**DR-6_20130124**	SM 2510B	MT/11242		
60137618002	**MW-104_20130124**	SM 2510B	MT/11242		
60137618003	**CHV-101_20130124**	SM 2510B	MT/11242		
60137618004	**MW-103_20130124**	SM 2510B	MT/11242		
60137618005	**MW-101_20130124**	SM 2510B	MT/11242		
60137618006	**DR-7_20130124**	SM 2510B	MT/11242		
60137618007	**DR-5_20130124**	SM 2510B	MT/11242		
60137618008	**DR-2_20130124**	SM 2510B	MT/11242		
60137618009	**FB_20130124**	SM 2510B	MT/11242		
60137618010	**DR-11_20130124**	SM 2510B	MT/11242		
60137618011	**DR-7 COMP_20130124**	SM 2510B	MT/11242		
60137618012	**DR-2 COMP_20130124**	SM 2510B	MT/11242		
60137618013	**MW-204_20130124**	SM 2510B	MT/11242		
60137618014	**MW-102_20130124**	SM 2510B	MT/11242		
60137618015	**AT-2_20130124**	SM 2510B	MT/11242		
60137618001	**DR-6_20130124**	Calculated	MT/11263		
60137618002	**MW-104_20130124**	Calculated	MT/11263		
60137618003	**CHV-101_20130124**	Calculated	MT/11263		
60137618004	**MW-103_20130124**	Calculated	MT/11263		
60137618005	**MW-101_20130124**	Calculated	MT/11263		
60137618006	**DR-7_20130124**	Calculated	MT/11263		
60137618007	**DR-5_20130124**	Calculated	MT/11263		
60137618008	**DR-2_20130124**	Calculated	MT/11263		
60137618009	**FB_20130124**	Calculated	MT/11263		
60137618010	**DR-11_20130124**	Calculated	MT/11263		
60137618011	**DR-7 COMP_20130124**	Calculated	MT/11263		
60137618012	**DR-2 COMP_20130124**	Calculated	MT/11263		
60137618013	**MW-204_20130124**	Calculated	MT/11263		
60137618014	**MW-102_20130124**	Calculated	MT/11263		
60137618015	**AT-2_20130124**	Calculated	MT/11263		
60137618001	**DR-6_20130124**	SM 2320B	WET/39475		
60137618002	**MW-104_20130124**	SM 2320B	WET/39475		
60137618003	**CHV-101_20130124**	SM 2320B	WET/39475		
60137618004	**MW-103_20130124**	SM 2320B	WET/39475		
60137618005	**MW-101_20130124**	SM 2320B	WET/39475		
60137618006	**DR-7_20130124**	SM 2320B	WET/39475		

This report shall not be reproduced, except in full,
without the written consent of Pace Analytical Services, Inc..

Pace Analytical Services, Inc.
9608 Loiret Blvd.
Lenexa, KS 66219
(913)599-5665

QUALITY CONTROL DATA CROSS REFERENCE TABLE

Project: JANUARY 2013 RICO WATER SAMPLI
Pace Project No.: 60137618

Lab ID	Sample ID	QC Batch Method	QC Batch	Analytical Method	Analytical Batch
60137618007	**DR-5_20130124**	SM 2320B	WET/39475		
60137618008	**DR-2_20130124**	SM 2320B	WET/39475		
60137618009	**FB_20130124**	SM 2320B	WET/39475		
60137618010	**DR-11_20130124**	SM 2320B	WET/39475		
60137618011	**DR-7 COMP_20130124**	SM 2320B	WET/39475		
60137618012	**DR-2 COMP_20130124**	SM 2320B	WET/39475		
60137618013	**MW-204_20130124**	SM 2320B	WET/39475		
60137618014	**MW-102_20130124**	SM 2320B	WET/39475		
60137618015	**AT-2_20130124**	SM 2320B	WET/39475		
60137618001	**DR-6_20130124**	SM 2540C	WET/39453		
60137618002	**MW-104_20130124**	SM 2540C	WET/39453		
60137618003	**CHV-101_20130124**	SM 2540C	WET/39453		
60137618004	**MW-103_20130124**	SM 2540C	WET/39453		
60137618005	**MW-101_20130124**	SM 2540C	WET/39453		
60137618006	**DR-7_20130124**	SM 2540C	WET/39462		
60137618007	**DR-5_20130124**	SM 2540C	WET/39462		
60137618008	**DR-2_20130124**	SM 2540C	WET/39462		
60137618009	**FB_20130124**	SM 2540C	WET/39511		
60137618010	**DR-11_20130124**	SM 2540C	WET/39462		
60137618011	**DR-7 COMP_20130124**	SM 2540C	WET/39462		
60137618012	**DR-2 COMP_20130124**	SM 2540C	WET/39462		
60137618013	**MW-204_20130124**	SM 2540C	WET/39462		
60137618014	**MW-102_20130124**	SM 2540C	WET/39462		
60137618015	**AT-2_20130124**	SM 2540C	WET/39462		
60137618001	**DR-6_20130124**	SM 2540D	WET/39464		
60137618002	**MW-104_20130124**	SM 2540D	WET/39464		
60137618003	**CHV-101_20130124**	SM 2540D	WET/39464		
60137618004	**MW-103_20130124**	SM 2540D	WET/39464		
60137618005	**MW-101_20130124**	SM 2540D	WET/39464		
60137618006	**DR-7_20130124**	SM 2540D	WET/39464		
60137618007	**DR-5_20130124**	SM 2540D	WET/39464		
60137618008	**DR-2_20130124**	SM 2540D	WET/39464		
60137618009	**FB_20130124**	SM 2540D	WET/39464		
60137618010	**DR-11_20130124**	SM 2540D	WET/39495		
60137618011	**DR-7 COMP_20130124**	SM 2540D	WET/39495		
60137618012	**DR-2 COMP_20130124**	SM 2540D	WET/39495		
60137618013	**MW-204_20130124**	SM 2540D	WET/39495		
60137618014	**MW-102_20130124**	SM 2540D	WET/39495		
60137618015	**AT-2_20130124**	SM 2540D	WET/39495		
60137618001	**DR-6_20130124**	SM 4500-S-2 D	WET/39460		
60137618002	**MW-104_20130124**	SM 4500-S-2 D	WET/39460		
60137618003	**CHV-101_20130124**	SM 4500-S-2 D	WET/39460		
60137618004	**MW-103_20130124**	SM 4500-S-2 D	WET/39460		
60137618005	**MW-101_20130124**	SM 4500-S-2 D	WET/39460		
60137618006	**DR-7_20130124**	SM 4500-S-2 D	WET/39460		

This report shall not be reproduced, except in full,
without the written consent of Pace Analytical Services, Inc..

Pace Analytical Services, Inc.
9608 Loiret Blvd.
Lenexa, KS 66219
(913)599-5665

QUALITY CONTROL DATA CROSS REFERENCE TABLE

Project: JANUARY 2013 RICO WATER SAMPLI
Pace Project No.: 60137618

Lab ID	Sample ID	QC Batch Method	QC Batch	Analytical Method	Analytical Batch
60137618007	**DR-5_20130124**	SM 4500-S-2 D	WET/39460		
60137618008	**DR-2_20130124**	SM 4500-S-2 D	WET/39460		
60137618009	**FB_20130124**	SM 4500-S-2 D	WET/39460		
60137618010	**DR-11_20130124**	SM 4500-S-2 D	WET/39460		
60137618011	**DR-7 COMP_20130124**	SM 4500-S-2 D	WET/39460		
60137618012	**DR-2 COMP_20130124**	SM 4500-S-2 D	WET/39460		
60137618013	**MW-204_20130124**	SM 4500-S-2 D	WET/39460		
60137618014	**MW-102_20130124**	SM 4500-S-2 D	WET/39460		
60137618015	**AT-2_20130124**	SM 4500-S-2 D	WET/39460		
60137618001	**DR-6_20130124**	EPA 300.0	WETA/23364		
60137618002	**MW-104_20130124**	EPA 300.0	WETA/23364		
60137618003	**CHV-101_20130124**	EPA 300.0	WETA/23364		
60137618004	**MW-103_20130124**	EPA 300.0	WETA/23364		
60137618005	**MW-101_20130124**	EPA 300.0	WETA/23364		
60137618006	**DR-7_20130124**	EPA 300.0	WETA/23364		
60137618007	**DR-5_20130124**	EPA 300.0	WETA/23364		
60137618008	**DR-2_20130124**	EPA 300.0	WETA/23364		
60137618009	**FB_20130124**	EPA 300.0	WETA/23364		
60137618010	**DR-11_20130124**	EPA 300.0	WETA/23364		
60137618011	**DR-7 COMP_20130124**	EPA 300.0	WETA/23364		
60137618012	**DR-2 COMP_20130124**	EPA 300.0	WETA/23364		
60137618013	**MW-204_20130124**	EPA 300.0	WETA/23364		
60137618014	**MW-102_20130124**	EPA 300.0	WETA/23364		
60137618015	**AT-2_20130124**	EPA 300.0	WETA/23364		
60137618001	**DR-6_20130124**	EPA 353.2	WETA/23378		
60137618002	**MW-104_20130124**	EPA 353.2	WETA/23378		
60137618003	**CHV-101_20130124**	EPA 353.2	WETA/23378		
60137618004	**MW-103_20130124**	EPA 353.2	WETA/23378		
60137618005	**MW-101_20130124**	EPA 353.2	WETA/23378		
60137618006	**DR-7_20130124**	EPA 353.2	WETA/23378		
60137618007	**DR-5_20130124**	EPA 353.2	WETA/23378		
60137618008	**DR-2_20130124**	EPA 353.2	WETA/23378		
60137618009	**FB_20130124**	EPA 353.2	WETA/23378		
60137618010	**DR-11_20130124**	EPA 353.2	WETA/23378		
60137618011	**DR-7 COMP_20130124**	EPA 353.2	WETA/23378		
60137618012	**DR-2 COMP_20130124**	EPA 353.2	WETA/23378		
60137618013	**MW-204_20130124**	EPA 353.2	WETA/23378		
60137618014	**MW-102_20130124**	EPA 353.2	WETA/23378		
60137618015	**AT-2_20130124**	EPA 353.2	WETA/23378		
60137618001	**DR-6_20130124**	SM 4500-CN-E	WETA/23357		
60137618002	**MW-104_20130124**	SM 4500-CN-E	WETA/23357		
60137618003	**CHV-101_20130124**	SM 4500-CN-E	WETA/23357		
60137618004	**MW-103_20130124**	SM 4500-CN-E	WETA/23357		
60137618005	**MW-101_20130124**	SM 4500-CN-E	WETA/23357		
60137618006	**DR-7_20130124**	SM 4500-CN-E	WETA/23357		
60137618007	**DR-5_20130124**	SM 4500-CN-E	WETA/23357		
60137618008	**DR-2_20130124**	SM 4500-CN-E	WETA/23357		

This report shall not be reproduced, except in full,
without the written consent of Pace Analytical Services, Inc..

Pace Analytical Services, Inc.
9608 Loiret Blvd.
Lenexa, KS 66219
(913)599-5665

QUALITY CONTROL DATA CROSS REFERENCE TABLE

Project: JANUARY 2013 RICO WATER SAMPLI
Pace Project No.: 60137618

Lab ID	Sample ID	QC Batch Method	QC Batch	Analytical Method	Analytical Batch
60137618009	**FB_20130124**	SM 4500-CN-E	WETA/23357		
60137618010	**DR-11_20130124**	SM 4500-CN-E	WETA/23357		
60137618011	**DR-7 COMP_20130124**	SM 4500-CN-E	WETA/23357		
60137618012	**DR-2 COMP_20130124**	SM 4500-CN-E	WETA/23357		
60137618013	**MW-204_20130124**	SM 4500-CN-E	WETA/23357		
60137618014	**MW-102_20130124**	SM 4500-CN-E	WETA/23357		
60137618015	**AT-2_20130124**	SM 4500-CN-E	WETA/23357		
60137618001	**DR-6_20130124**	SM 5310C	WETA/23370		
60137618002	**MW-104_20130124**	SM 5310C	WETA/23370		
60137618003	**CHV-101_20130124**	SM 5310C	WETA/23370		
60137618004	**MW-103_20130124**	SM 5310C	WETA/23370		
60137618005	**MW-101_20130124**	SM 5310C	WETA/23370		
60137618006	**DR-7_20130124**	SM 5310C	WETA/23370		
60137618007	**DR-5_20130124**	SM 5310C	WETA/23370		
60137618008	**DR-2_20130124**	SM 5310C	WETA/23370		
60137618009	**FB_20130124**	SM 5310C	WETA/23370		
60137618010	**DR-11_20130124**	SM 5310C	WETA/23370		
60137618011	**DR-7 COMP_20130124**	SM 5310C	WETA/23383		
60137618012	**DR-2 COMP_20130124**	SM 5310C	WETA/23383		
60137618013	**MW-204_20130124**	SM 5310C	WETA/23383		
60137618014	**MW-102_20130124**	SM 5310C	WETA/23383		
60137618015	**AT-2_20130124**	SM 5310C	WETA/23383		

This report shall not be reproduced, except in full,
without the written consent of Pace Analytical Services, Inc..

Appendix E

Flow Cross Sections

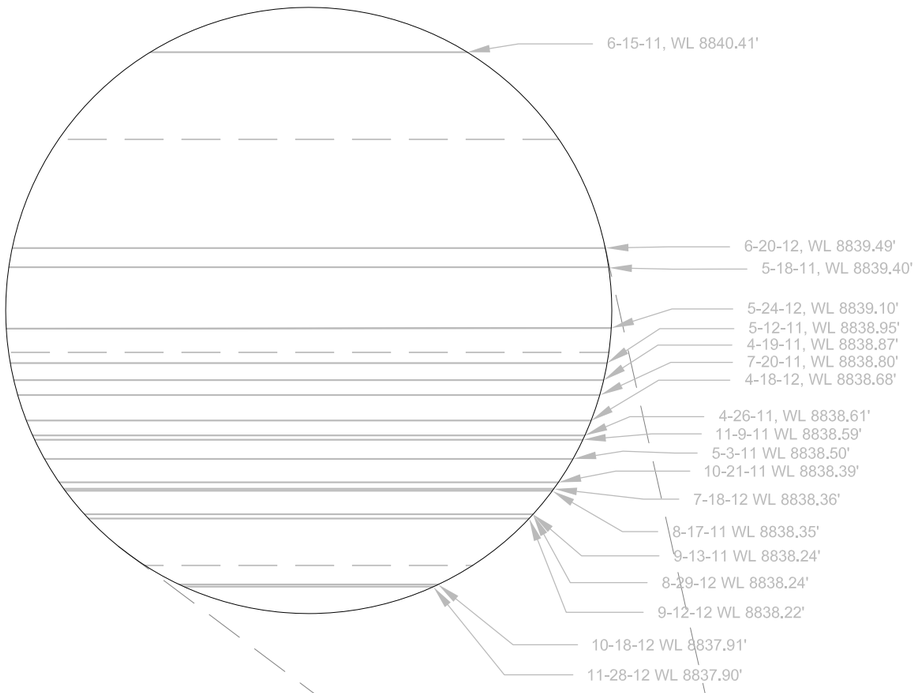

DR-1 CROSS SECTION

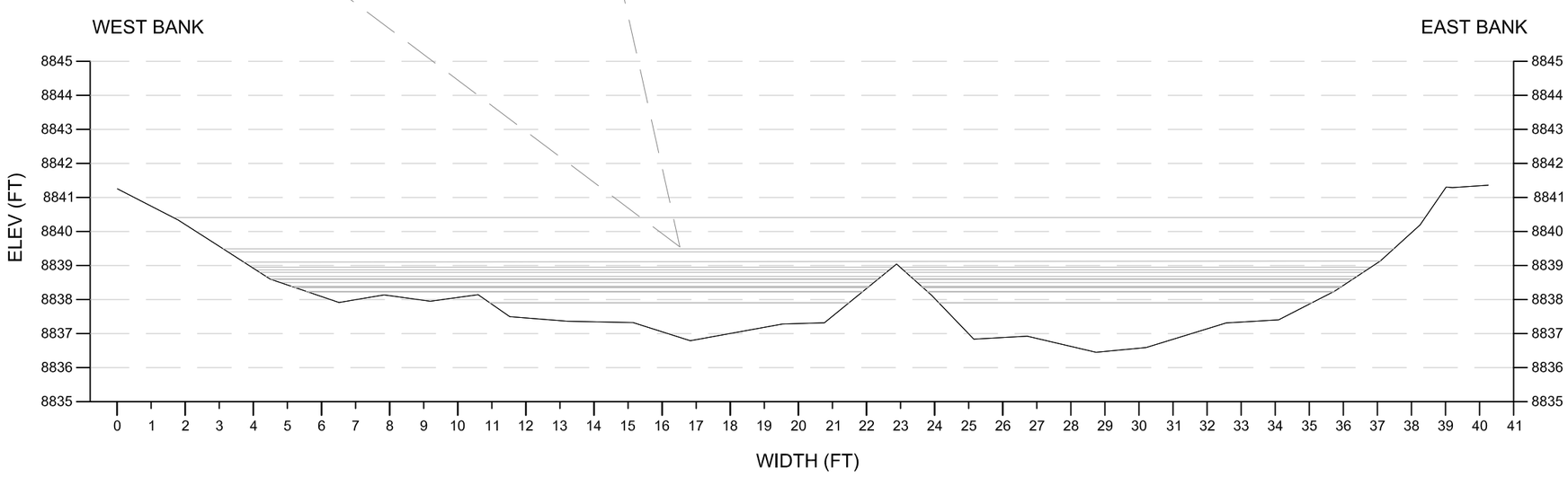

4 **CROSS SECTION AT DR-1**

SCALE - 1" = 4'

THESE PLANS AND SPECIFICATIONS ARE THE PROPERTY OF ANDERSON ENGINEERING COMPANY, INC., 977 WEST 2100 SOUTH, SALT LAKE CITY, UTAH, 84119 AND SHALL NOT BE COPIED, REDUCED, OR REPRODUCED WITHOUT THEIR WRITTEN PERMISSION.

General Notes

NOTE: COULD NOT OBTAIN FLOW DUE TO LARGE ICE SHELF OVER RIVER PREVENTING SAFE ACCESS

Scale in Feet
0 2 4

No.	Revision/Issue	Date

ATLANTIC RICHFIELD COMPANY

ANDERSON
ENGINEERING COMPANY, INC.

DRAWN BY: MAD
ENGINEER: CS, MAD
APPROVED:

RICO SURFACE WATER SAMPLING

DOLORES RIVER CROSS SECTION AT SAMPLING STATION DR-1

RICO, CO

Project
Date 24-JAN-2013
Scale
Figure 4

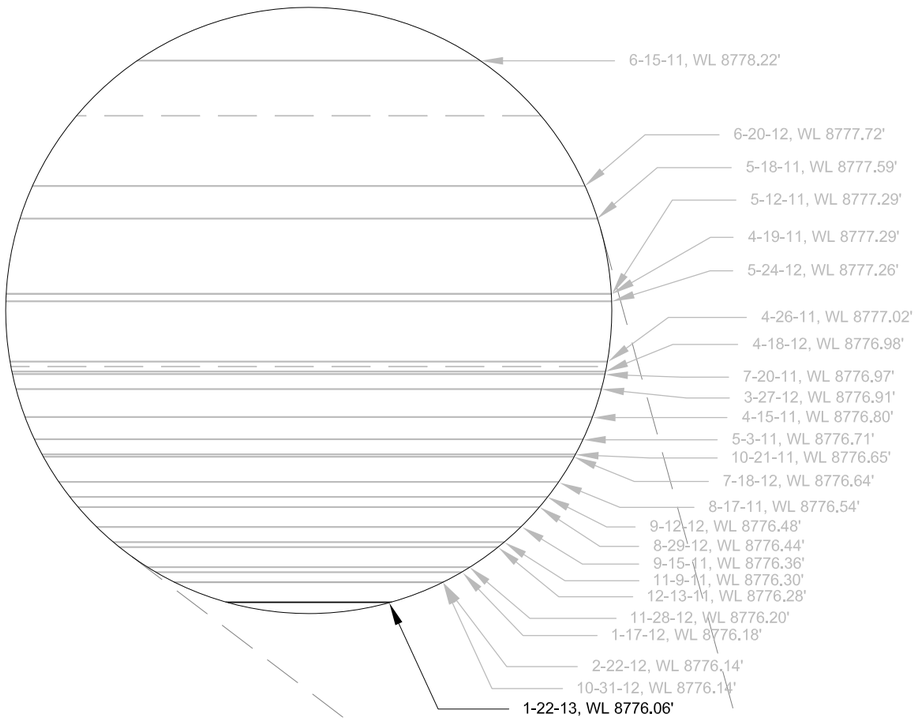

DR-2 CROSS SECTION

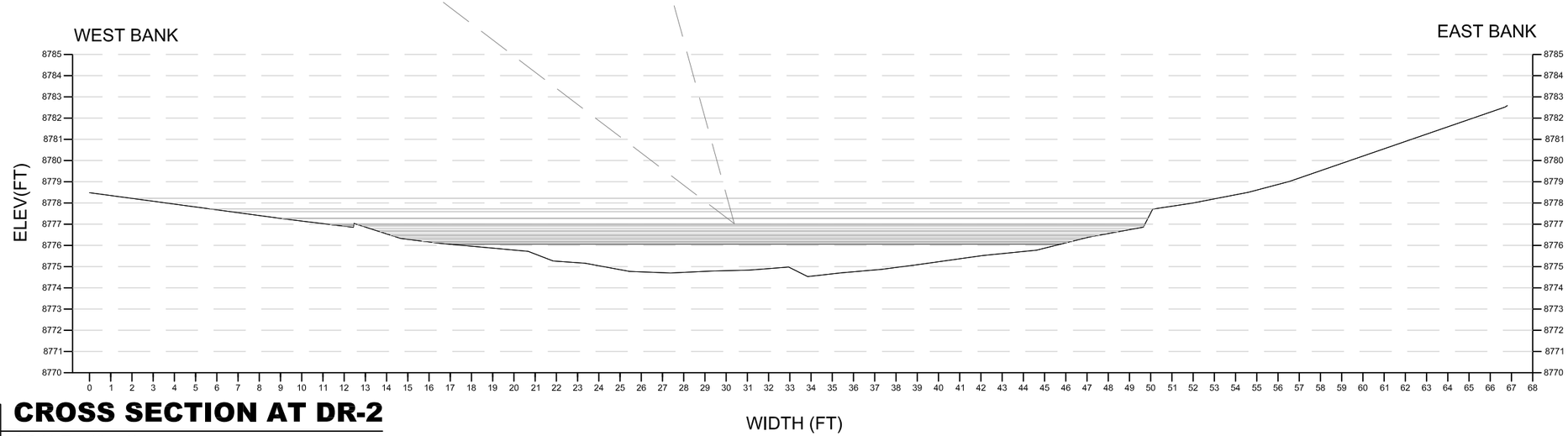

5 **CROSS SECTION AT DR-2**

SCALE - 1" = 6'

General Notes

Scale in Feet
0 3 6

No.	Revision/Issue	Date

ATLANTIC RICHFIELD COMPANY

ANDERSON
ENGINEERING COMPANY, INC.

DRAWN BY: MAD
ENGINEER: CS, MAD
APPROVED:

RICO SURFACE WATER SAMPLING

DOLORES RIVER CROSS SECTION AT SAMPLING STATION DR-2

RICO, CO

Project
Date 22-JAN-2013
Scale
Figure 5

THESE PLANS AND SPECIFICATIONS ARE THE PROPERTY OF ANDERSON ENGINEERING COMPANY, INC., 977 WEST 2100 SOUTH, SALT LAKE CITY, UTAH, 84119 AND SHALL NOT BE COPIED, REDUCED, OR REPRODUCED WITHOUT THEIR WRITTEN PERMISSION.

DR-5 CROSS SECTION

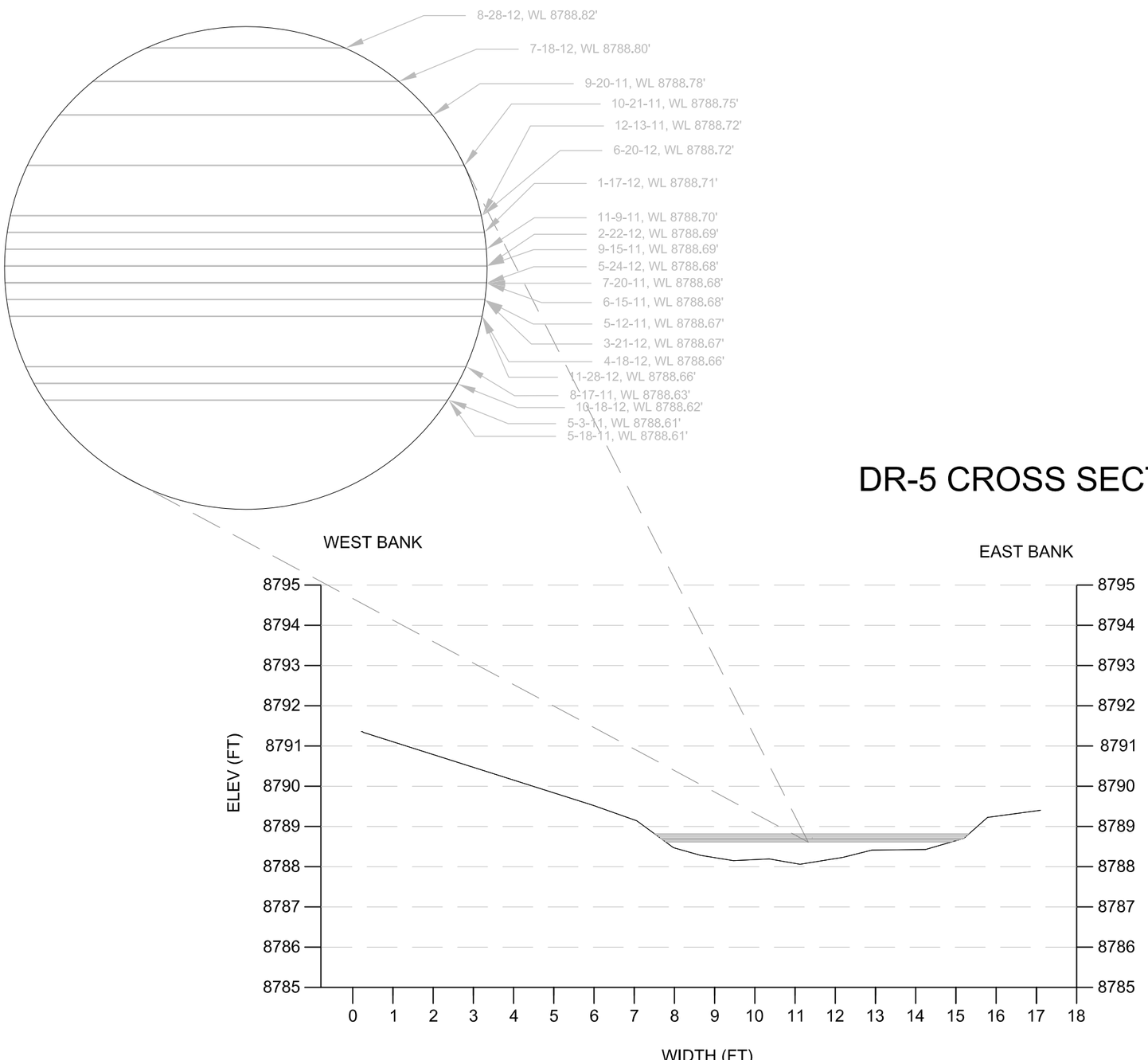

6 **CROSS SECTION AT DR-5**

SCALE - 1" = 3'

General Notes

NOTE: COULD NOT OBTAIN FLOW DUE TO EXCESSIVE SNOW AND ICE AROUND SPILLWAY PREVENTING SAFE ACCESS

Scale in Feet
0 1.5 3

No.	Revision/Issue	Date

ATLANTIC RICHFIELD COMPANY

ANDERSON
ENGINEERING COMPANY, INC.

DRAWN BY: MAD
ENGINEER: CS, MAD
APPROVED:

RICO SURFACE WATER SAMPLING

POND 8 EMBANKMENT CROSS SECTION AT SAMPLING STATION DR-5

RICO, CO

Project
Date 22-JAN-2013
Scale
Figure 6

THESE PLANS AND SPECIFICATIONS ARE THE PROPERTY OF ANDERSON ENGINEERING COMPANY, INC., 977 WEST 2100 SOUTH, SALT LAKE CITY, UTAH, 84119 AND SHALL NOT BE COPIED, REDUCED, OR REPRODUCED WITHOUT THEIR WRITTEN PERMISSION.

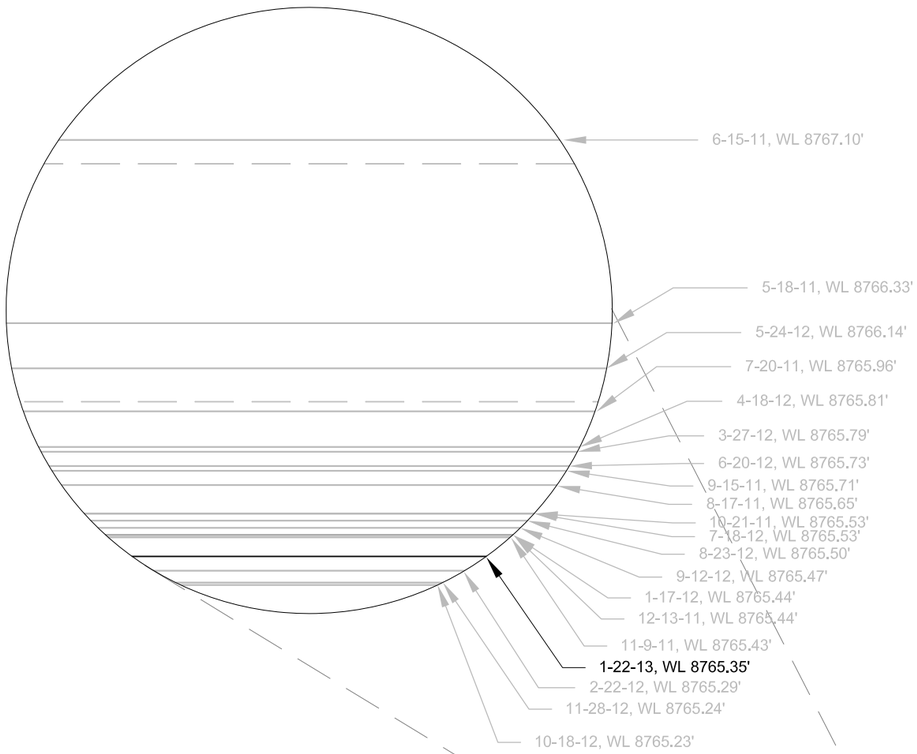

DR-7 CROSS SECTION

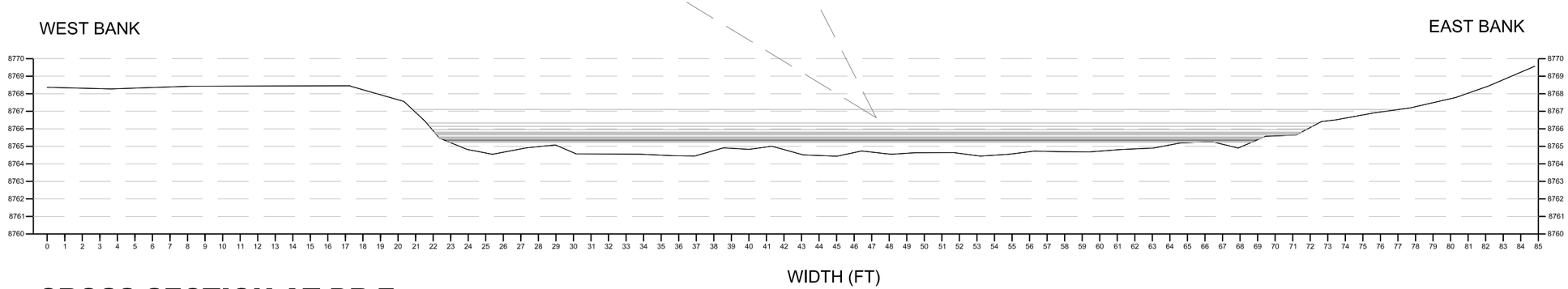

7 CROSS SECTION AT DR-7

SCALE - 1" = 7'

THESE PLANS AND SPECIFICATIONS ARE THE PROPERTY OF ANDERSON ENGINEERING COMPANY, INC., 977 WEST 2100 SOUTH, SALT LAKE CITY, UTAH, 84119 AND SHALL NOT BE COPIED, REDUCED, OR REPRODUCED WITHOUT THEIR WRITTEN PERMISSION.

General Notes

Scale in Feet
0 3.5 7

No.	Revision/Issue	Date

ATLANTIC RICHFIELD COMPANY

ANDERSON
ENGINEERING COMPANY, INC.

DRAWN BY: MAD
ENGINEER: CS, MAD
APPROVED:

RICO SURFACE WATER SAMPLING

DOLORES RIVER CROSS SECTION AT SAMPLING STATION DR-7

RICO, CO

Project
Date 22-JAN-2013
Scale
Figure 7

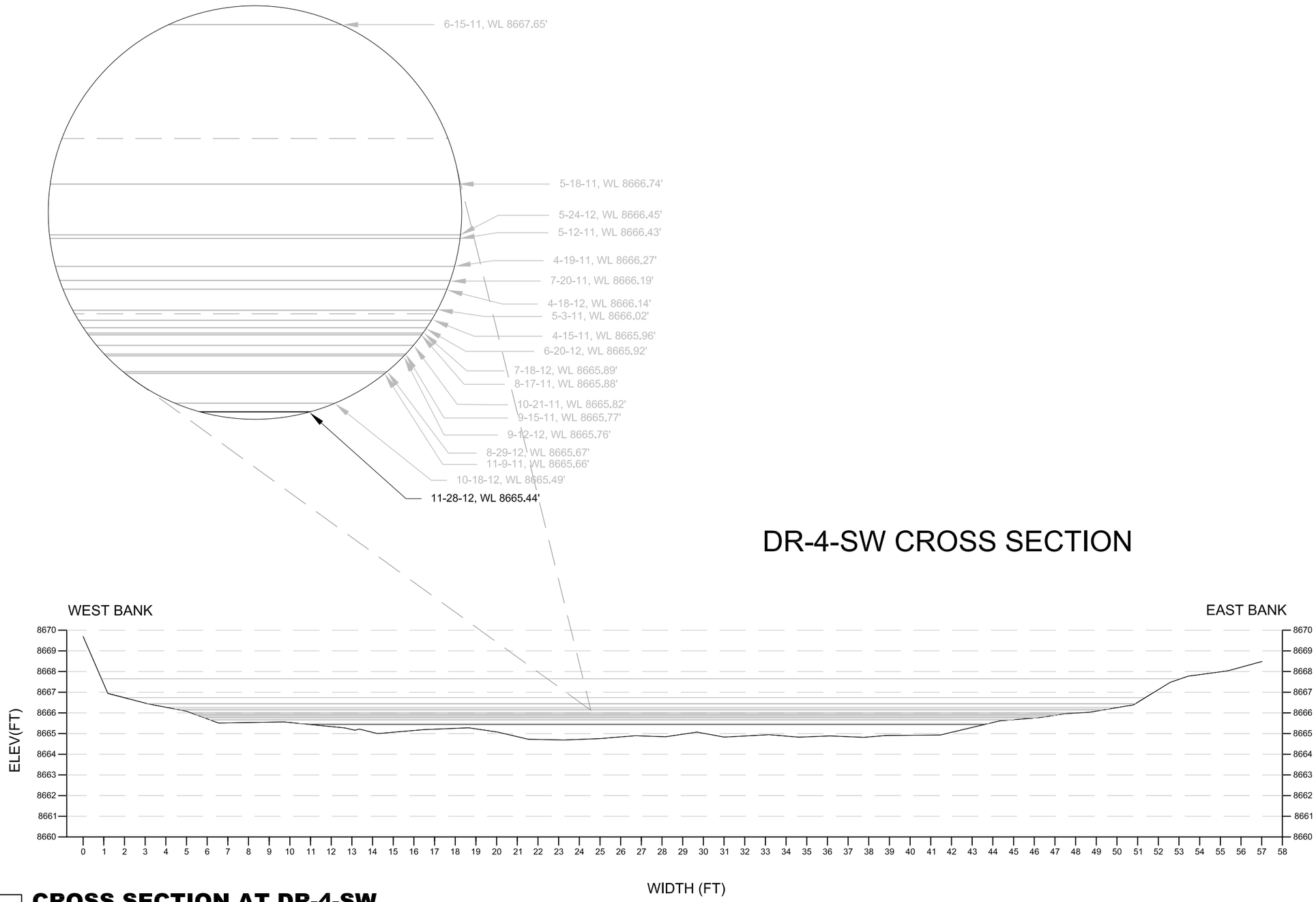

DR-4-SW CROSS SECTION

8 **CROSS SECTION AT DR-4-SW**

SCALE - 1" = 5'

General Notes

NOTE: COULD NOT OBTAIN FLOW DUE TO LARGE ICE SHELF OVER RIVER PREVENTING SAFE ACCESS

Scale in Feet
0 2.5 5

No.	Revision/Issue	Date

ATLANTIC RICHFIELD COMPANY

ANDERSON
ENGINEERING COMPANY, INC.

DRAWN BY: MAD
ENGINEER: CS, MAD
APPROVED:

RICO SURFACE WATER SAMPLING

DOLORES RIVER CROSS SECTION AT SAMPLING STATION DR-4-SW

RICO, CO

Project
Date 28-NOV-2012
Scale
Figure 8

THESE PLANS AND SPECIFICATIONS ARE THE PROPERTY OF ANDERSON ENGINEERING COMPANY, INC., 977 WEST 2100 SOUTH, SALT LAKE CITY, UTAH, 84119 AND SHALL NOT BE COPIED, REDUCED, OR REPRODUCED WITHOUT THEIR WRITTEN PERMISSION.

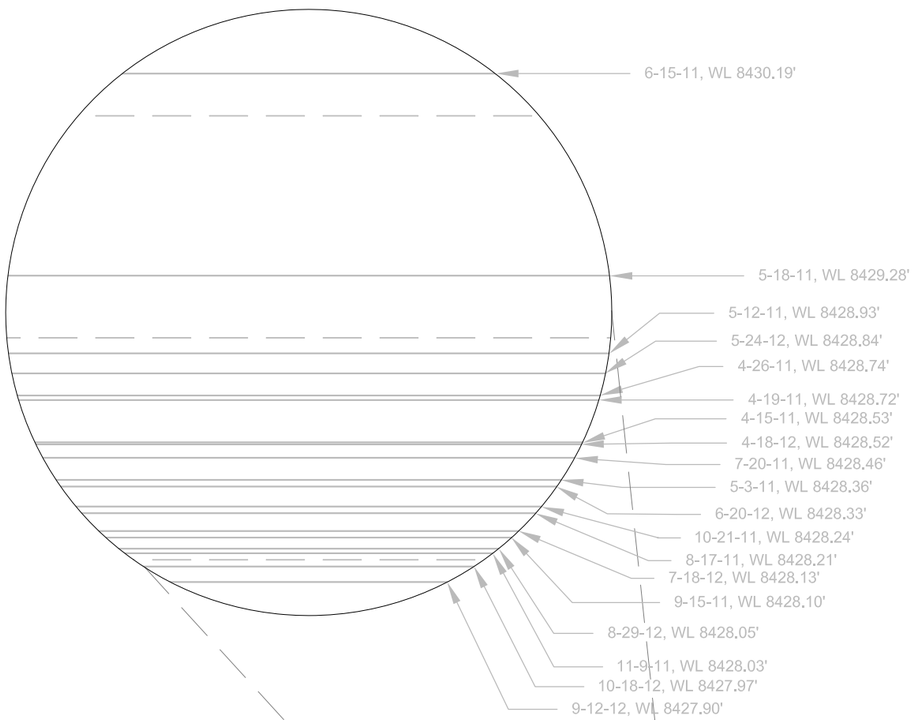

DR-G CROSS SECTION

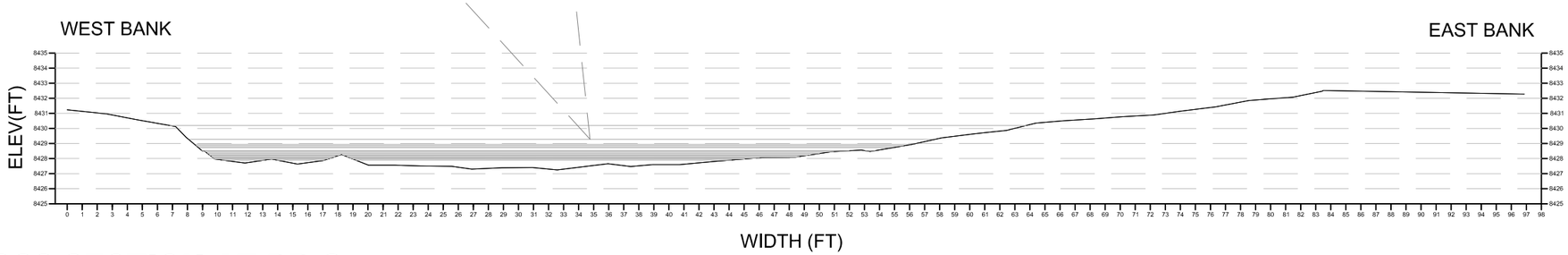

9 CROSS SECTION AT DR-G

SCALE - 1" = 9'

General Notes

NOTE: COULD NOT OBTAIN FLOW DUE TO LARGE ICE SHELF OVER RIVER PREVENTING SAFE ACCESS

Scale in Feet
0 4.5 9

No.	Revision/Issue	Date

ATLANTIC RICHFIELD COMPANY

ANDERSON ENGINEERING COMPANY, INC.

DRAWN BY: MAD
ENGINEER: CS, MAD
APPROVED:

RICO SURFACE WATER SAMPLING

DOLORES RIVER CROSS SECTION AT SAMPLING STATION DR-G

RICO, CO

Project
Date 28-NOV-2012
Scale
Figure 9

THESE PLANS AND SPECIFICATIONS ARE THE PROPERTY OF ANDERSON ENGINEERING COMPANY, INC., 977 WEST 2100 SOUTH, SALT LAKE CITY, UTAH, 84119 AND SHALL NOT BE COPIED, REDUCED, OR REPRODUCED WITHOUT THEIR WRITTEN PERMISSION.

Appendix F

Chain of Custody Records

Pace Analytical
www.pacelabs.com

Sample Condition Upon Receipt
ESI Tech Spec Client

WO#: 60137200
60137200

Client Name: BP Anderson

Optional
Proj Due Date:
Proj Name:

Courier: Fed Ex ☐ UPS ☒ USPS ☐ Client ☐ Commercial ☐ Pace ☐ Other ☐

Tracking #: 1Z733W87Y04714 2714 / 1Z733W87Y04854 7928 / 1Z733W87Y04727 2306 Pace Shipping Label Used? Yes ☐ No ☒

Custody Seal on Cooler/Box Present: Yes ☒ No ☐ Seals intact: Yes ☒ No ☐

Packing Material: Bubble Wrap ☐ Bubble Bags ☐ Foam ☐ None ☐ Other ☒ ZPIC

Thermometer Used: T-112 / T-194 **Type of Ice:** Wet Blue None (circle one) ☐ Samples received on ice, cooling process has begun.

Cooler Temperature: 5-4/5.4/5.8

Date and initials of person examining contents: DW 1/18-13

Temperature should be above freezing to 6°C

Chain of Custody present:	☒Yes ☐No ☐N/A	1.	
Chain of Custody filled out:	☒Yes ☐No ☐N/A	2.	
Chain of Custody relinquished:	☒Yes ☐No ☐N/A	3.	
Sampler name & signature on COC:	☒Yes ☐No ☐N/A	4.	
Samples arrived within holding time:	☒Yes ☐No ☐N/A	5.	
Short Hold Time analyses (<72hr):	☐Yes ☒No ☐N/A	6.	
Rush Turn Around Time requested:	☐Yes ☒No ☐N/A	7.	
Sufficient volume:	☒Yes ☐No ☐N/A	8.	
Correct containers used:	☒Yes ☐No ☐N/A	missing six sample that is mark on the COC	
Pace containers used:	☒Yes ☐No ☐N/A	9.	
Containers intact:	☒Yes ☐No ☐N/A	10.	
Unpreserved 5035A soils frozen w/in 48hrs?	☐Yes ☐No ☒N/A	11.	
Filtered volume received for dissolved tests?	☐Yes ☐No ☒N/A	12.	
Sample labels match COC: Includes date/time/ID/analyses Matrix: WT	☒Yes ☐No ☐N/A	13.	
All containers needing preservation have been checked. All containers needing preservation are found to be in compliance with EPA recommendation.	☒Yes ☐No ☐N/A ☒Yes ☐No ☐N/A	14.	
Exceptions: VOA, coliform, TOC, O&G, WI-DRO (water), Phenolics	☐Yes ☒No	Initial when completed	Lot # of added preservative
Trip Blank present: Pace Trip Blank lot # (if purchased):	☐Yes ☐No ☒N/A	15.	
Headspace in VOA vials (>6mm):	☐Yes ☐No ☒N/A	16.	
Project sampled in USDA Regulated Area:	☐Yes ☐No ☒N/A	17. List State:	

Client Notification/ Resolution: Copy COC to Client? Y / N Field Data Required? Y / N

Person Contacted: Mark DeFriez Date/Time: 1/18/13

Comments/ Resolution: Email - missing sample 37 (HMW) 1/18/13
Email Per Mark - 60137200017 ID should be GW-3-20130116
& change MW-102-20130116 to P13-102-20130116 HMW 1/24/13

Project Manager Review: MW for (HMW) HMW 1/24/13 Date: 1/22/13

Temp Log: Record start and finish times when unpacking cooler, if >20 min, recheck sample temps.	
Start: 1200	Start:
End: 1220	End:
Temp:	Temp:

Pace Analytical
www.pacelabs.com

Sample Condition Upon Receipt
ESI Tech Spec Client

Optional
Proj Due Date:
Proj Name:

Client Name: BP Anderson

Courier: Fed Ex ☐ UPS ☒ USPS ☐ Client ☐ Commercial ☐ Pace ☐ Other ☐

1Z733W87Y048312690

Tracking Number Shipping Label Used? Yes ☐ No ☒

Custody Seals on Cooler/Box Present: Yes ☒ No ☐ Seals intact: Yes ☑ No ☐

Packing Material: Bubble Wrap ☐ Bubble Bags ☑ Foam ☐ None ☐ Other ☑ 2 P/C

Thermometer Used: T-112 / T-194 **Type of Ice:** Wet Blue None ☐ Samples received on ice, cooling process has begun.
(circle one)

Cooler Temperature: 2.6

Temperature should be above freezing to 6°C

Date and initials of person examining contents: RJ 7-19-13

Chain of Custody present:	☑Yes ☐No ☐N/A	1.	
Chain of Custody filled out:	☑Yes ☐No ☐N/A	2.	
Chain of Custody relinquished:	☑Yes ☐No ☐N/A	3.	Received the missing Samples
Sampler name & signature on COC:	☑Yes ☐No ☐N/A	4.	from BP Anderson
Samples arrived within holding time:	☑Yes ☐No ☐N/A	5.	MW4 Deep
Short Hold Time analyses (<72hr):	☐Yes ☑No ☐N/A	6.	DR-9
Rush Turn Around Time requested:	☐Yes ☑No ☐N/A	7.	GW-4
Sufficient volume:	☑Yes ☐No ☐N/A	8.	MW-3Deep
Correct containers used:	☑Yes ☐No ☐N/A		MW-2Deep
Pace containers used:	☑Yes ☐No ☐N/A	9.	EB-1
Containers intact:	☑Yes ☐No ☐N/A	10.	
Unpreserved 5035A soils frozen w/in 48hrs?	☐Yes ☐No ☑N/A	11.	
Filtered volume received for dissolved tests?	☐Yes ☐No ☑N/A	12.	
Sample labels match COC: Includes date/time/ID/analyses Matrix: WT	☑Yes ☐No ☐N/A	13.	
All containers needing preservation have been checked.	☑Yes ☐No ☐N/A		
All containers needing preservation are found to be in compliance with EPA recommendation.	☑Yes ☐No ☐N/A	14.	
Exceptions: VOA, coliform, TOC, O&G, WI-DRO (water), Phenolics	☐Yes ☑No	Initial when completed	Lot # of added preservative
Trip Blank present: Pace Trip Blank lot # (if purchased): _____	☐Yes ☐No ☑N/A	15.	
Headspace in VOA vials (>6mm):	☐Yes ☐No ☑N/A	16.	
Project sampled in USDA Regulated Area:	☐Yes ☐No ☑N/A	17. List State:	

Client Notification/ Resolution: Copy COC to Client? Y / N Field Data Required? Y / N

Person Contacted: _____ Date/Time: _____

Comments/ Resolution: _____

Project Manager Review: _____ Date: _____

Temp Log: Record start and finish times when unpacking cooler, if >20 min, recheck sample temps.

Start: 945	Start:
End: 955	End:
Temp:	Temp:

ANDERSON
ENGINEERING COMPANY INC.

977 West 2100 South
Salt Lake City, UT
84119
(801) 972-6222
FAX (801) 972-6235

CHAIN OF CUSTODY RECORD

COC# _____
Page 1 of 2

Client: BP
Project: January 2013 Rico Water Sampling
AECI Contact Mark DeFriez (801) 234-9583

Lab Name: Pace Analytical Services
Lab Contact: Heather Wilson, (913) 563-1407
Lab Address: 9608 Loiret Blvd.
Lenexa, KS 66219

Matrix Codes
(W) Water
(S) Soil
(L) Liquid

QC: (circle one)
I II III IV

60137200

Field Location	Field Sample ID Number	Date	Time	Matrix	No. of Containers	Total Metals / Hardness / Silica	Potentially Dissolved Metals	Dissolved Metals	Alkalinity / TDS / TSS / Sulfate / Chloride	Cyanide	Salinity	Total Organic Carbon / Nitrate	Sulfide			COMMENTS	
GW-1	1BP3N 1HG35 GW-1_20130115 2BP2N	1/15/2013	2:55 PM	W	8	X	X	X	X	X	X	X	X			1BP3FT 1BP3Z 10.5 1BP3E 12.5 1BP2N	001
GW-5	GW-5_20130115	1/15/2013	3:15 PM	W	8	X	X	X	X	X	X	X	X				002
DR-3	DR-3_20130115	1/15/2013	3:33 PM	W	8	X	X	X	X	X	X	X	X				003
DR-8	DR-8_20130115	1/15/2013	3:43 PM	W	8	X	X	X	X	X	X	X	X				004
GW-6	GW-6_20130115	1/15/2013	3:59 PM	W	8	X	X	X	X	X	X	X	X				005
DR-4	DR-4_20130115	1/15/2013	4:01 PM	W	8	X	X	X	X	X	X	X	X				006
MW-4 DEEP	MW-4 DEEP_20130116	1/16/2013	11:15 AM	W	8	X	X	X	X	X	X	X	X				019
DR-9	DR-9_20130116	1/16/2013	11:35 AM	W	8	X	X	X	X	X	X	X	X				020
GW-4	GW-4_20130116	1/16/2013	11:25 AM	W	8	X	X	X	X	X	X	X	X				021
MW-3 DEEP	MW-3 DEEP_20130116	1/16/2013	11:50 AM	W	8	X	X	X	X	X	X	X	X				022
MW-2 DEEP	MW-2 DEEP_20130116	1/16/2013	12:15 PM	W	8	X	X	X	X	X	X	X	X				023
EB-1	EB-1_20130116	1/16/2013	10:30 AM	W	8	X	X	X	X	X	X	X	X				024
MW-1 SHALLOW	MW-1 SHALLOW_20130116	1/16/2013	12:20 PM	W	8	X	X	X	X	X	X	X	X				007
MW-1 DEEP	MW-1 DEEP_20130116	1/16/2013	1:14 PM	W	8	X	X	X	X	X	X	X	X				008
P13-103	P13-103_20130116	1/16/2013	12:55 PM	W	8	X	X	X	X	X	X	X	X				009
MW-102	MW-102_20130116	1/16/2013	1:18 PM	W	8	X	X	X	X	X	X	X	X				010
MW-6 DEEP	MW-6 DEEP_20130116	1/16/2013	1:50 PM	W	8	X	X	X	X	X	X	X	X				011
DR-10	DR-10_20130116	1/16/2013	2:15 PM	W	8	X	X	X	X	X	X	X	X				012
MW-6 SHALLOW	MW-6 SHALLOW_20130116	1/16/2013	2:14 PM	W	8	X	X	X	X	X	X	X	X				013
EB-2	EB-2_20130116	1/16/2013	2:25 PM	W	8	X	X	X	X	X	X	X	X				014

Relinquished By: *signature*	Date	Time	Received By: *signature*		Time	Special Instructions
	1-17-12	2:00 pm		1/18/13	1020	5.4 / 5.4 / 5.8
Relinquished By: *signature*	Date	Time	Received By: *signature*		Time	
				1/19/13	0830	2.6
Relinquished By: *signature*	Date	Time	Received By: *signature*		Time	
Relinquished By: *signature*	Date	Time	Received By: *signature*		Time	

Mis-entered; should be P13-102

FLD-002

ANDERSON
ENGINEERING COMPANY INC.

977 West 2100 South
Salt Lake City, UT
84119
(801) 972-6222
FAX (801) 972-6235

CHAIN OF CUSTODY RECORD

COC# _____
Page 2 of 2

Client: BP
Project: January 2013 Rico Water Sampling
AECI Contact Mark DeFriez (801) 234-9583

Lab Name: Pace Analytical Services
Lab Contact: Heather Wilson, (913) 563-1407
Lab Address: 9608 Loiret Blvd.
Lenexa, KS 66219

Matrix Codes
(W) Water
(S) Soil
(L) Liquid

QC: (circle one)
I II III IV

60137200

Field Location	Field Sample ID Number	Date	Time	Matrix	No. of Containers	Total Metals / Hardness / Silica	Potentially Dissolved Metals	Dissolved Metals	Alkalinity / TDS / TSS / Sulfate / Chloride	Cyanide	Salinity	Total Organic Carbon / Nitrate	Sulfide			COMMENTS
MW-5 DEEP	1BP3U 1AG3S MW-5 DEEP_20130116 2BP3N/1.5	1/16/2013	3:13 PM	W	8	X	X	X	X	X	X	X	X			1BP3F1.5 1BP3Z10.5 1BP3C12.5 1BP2L 015
MW-5 SHALLOW	MW-5 SHALLOW_20130116	1/16/2013	2:59 PM	W	8	X	X	X	X	X	X	X	X			016
GW-3	GW-3_20130117	1/17/2013	11:56 AM	W	8	X	X	X	X	X	X	X	X			017
MW-4 SHALLOW	MW-4 SHALLOW_20130117	1/17/2013	11:47 AM	W	8	X	X	X	X	X	X	X	X			018

Relinquished By: *signature*	Date	Time	Received By: *signature*		Time	Special Instructions
[signature]	1-17-12	2:00pm	[signature]	1/18/13	1020	5.4 / 5.4 / 5.8
Relinquished By: *signature*	Date	Time	Received By: *signature*		Time	
Relinquished By: *signature*	Date	Time	Received By: *signature*		Time	
Relinquished By: *signature*	Date	Time	Received By: *signature*		Time	

FLD-002

Chain of Custody

Pace Analytical®
www.pacelabs.com

Workorder: 60137200 **Workorder Name:** JANUARY 2013 RICO WATER SAMPLI **Owner Received Date:** 1/18/2013 **Results Requested By:** 1/30/2013

Report To	Subcontract To
Heather Wilson Pace Analytical Services, Inc. 9608 Loiret Blvd. Lenexa, KS 66219 Phone (913)599-5665 Fax (913)599-1759	Pace Analytical Billings MT 602 S 25th Street Billings, MT, MT 591014549 Phone (406) 254-7226

Requested Analysis

10218416

Item	Sample ID	Sample Type	Collect Date/Time	Lab ID	Matrix	Preserved Containers	Salinity	LAB USE ONLY
1	GW-1_20130115	PS	1/15/2013 14:55	60137200001	Water	1	X	001
2	GW-5_20130115	PS	1/15/2013 15:15	60137200002	Water	1	X	002
3	DR-3_20130115	PS	1/15/2013 15:33	60137200003	Water	1	X	003
4	DR-8_20130115	PS	1/15/2013 15:43	60137200004	Water	1	X	004
5	GW-6_20130115	PS	1/15/2013 15:59	60137200005	Water	1	X	005
6	DR-4_20130115	PS	1/15/2013 16:01	60137200006	Water	1	X	006
7	MW-1 SHALLOW_20130116	PS	1/16/2013 12:20	60137200007	Water	1	X	007
8	MW-1 DEEP_20130116	PS	1/16/2013 13:14	60137200008	Water	1	X	008
9	P13-103_20130116	PS	1/16/2013 12:55	60137200009	Water	1	X	009
10	MW-102_20130116	PS	1/16/2013 13:18	60137200010	Water	1	X	010
11	MW-6 DEEP_20130116	PS	1/16/2013 13:50	60137200011	Water	1	X	011
12	DR-10 _20130116	PS	1/16/2013 14:15	60137200012	Water	1	X	012
13	MW-6 SHALLOW_20130116	PS	1/16/2013 14:14	60137200013	Water	1	X	013
14	EB-2_20130116	PS	1/16/2013 14:25	60137200014	Water	1	X	014
15	MW-5 DEEP_20130116	PS	1/16/2013 15:13	60137200015	Water	1	X	015
16	MW-5 SHALLOW_20130116	PS	1/16/2013 14:59	60137200016	Water	1	X	016
17	GW-3_20130117	PS	1/17/2013 11:56	60137200017	Water	1	X	017
18	MW-4 SHALLOW_20130117	PS	1/17/2013 11:47	60137200018	Water	1	X	018
19	MW-4 DEEP_20130116	PS	1/16/2013 11:15	60137200019	Water	1	X	019

Chain of Custody

Pace Analytical®
www.pacelabs.com

Workorder: 60137200 **Workorder Name:** JANUARY 2013 RICO WATER SAMPLI **Owner Received Date:** 1/18/2013 **Results Requested By:** 1/30/2013

Report To	Subcontract To
Heather Wilson Pace Analytical Services, Inc. 9608 Loiret Blvd. Lenexa, KS 66219 Phone (913)599-5665 Fax (913)599-1759	Pace Analytical Billings MT 602 S 25th Street Billings, MT, MT 591014549 Phone (406) 254-7226

Requested Analysis: Salinity

10218416

Item	Sample ID	Sample Type	Collect Date/Time	Lab ID	Matrix	Preserved Containers	Salinity	LAB USE ONLY
20	DR-9_20130116	PS	1/16/2013 11:35	60137200020	Water	1	X	020
21	GW-4_20130116	PS	1/16/2013 11:25	60137200021	Water	1	X	021
22	MW-3 DEEP_20130116	PS	1/16/2013 11:50	60137200022	Water	1	X	022
23	MW-2 DEEP_20130116	PS	1/16/2013 12:15	60137200023	Water	1	X	023
24	EB-1_20130116	PS	1/16/2013 10:30	60137200024	Water	1	X	024

Transfers	Released By	Date/Time	Received By	Date/Time
1	[signature] Pace	1/22/13 1700		
2	Fedex	1/23/13 1315	Norma C Trankle/Pace	1/23/13 1315
3				

Comments

Cooler Temperature on Receipt 1.2 °C **Custody Seal** (Y) or N **Received on Ice** (Y) or N **Samples Intact** (Y) or N

Pace Analytical	Document Name: **Sample Condition Upon Receipt Form**	Document Revised: 14Nov2012 Page 1 of 1
	Document No.: **F-MT-C-184-rev.02**	Issuing Authority: Pace Montana Quality Office

Sample Condition Upon Receipt

Client Name: Pace KS

Project #: WO#: 10218416

10218416

Courier: ☒ Fed Ex ☐ UPS ☐ USPS ☐ Client ☐ Commercial ☐ Pace ☐ Other:

Tracking Number: 5446 8864 8421

Custody Seal on Cooler/Box Present? ☒ Yes ☐ No **Seals Intact?** ☒ Yes ☐ No

Optional: Proj. Due Date: Proj. Name:

Packing Material: ☐ Bubble Wrap ☐ Bubble Bags ☒ None ☐ Other:

Temp Blank? ☒ Yes ☐ No

Thermometer Used: ☒ 1383045 ☐ 135 ☐ NA **Type of Ice:** ☒ Wet ☐ Blue ☐ None ☒ Samples on ice, cooling process has begun

Cooler Temp Read: 1.2

Cooler Temp Corrected: 1.2

Date and Initials of Person Examining Contents: NCT 1/23/13

Biological Tissue Frozen? ☐ Yes ☐ No

Temp should be above freezing to 6°C

				Comments:
Chain of Custody Present?	☒ Yes	☐ No	☐ N/A	1.
Chain of Custody Filled Out?	☒ Yes	☐ No	☐ N/A	2.
Chain of Custody Relinquished?	☒ Yes	☐ No	☐ N/A	3.
Sampler Name and Signature on COC?	☐ Yes	☒ No	☐ N/A	4.
Samples Arrived within Hold Time?	☒ Yes	☐ No	☐ N/A	5.
Short Hold Time Analysis (<72 hr)?	☐ Yes	☒ No	☐ N/A	6.
Rush Turn Around Time Requested?	☐ Yes	☒ No	☐ N/A	7.
Sufficient Volume?	☒ Yes	☐ No	☐ N/A	8.
Correct Containers Used?	☒ Yes	☐ No	☐ N/A	9.
-Pace Containers Used?	☒ Yes	☐ No	☐ N/A	
Containers Intact?	☒ Yes	☐ No	☐ N/A	10.
Filtered Volume Received for Dissolved Tests?	☐ Yes	☐ No	☒ N/A	11.
Sample Labels Match COC? -Includes Date/Time/ID/Analysis Matrix: H_2O	☐ Yes	☒ No	☐ N/A	12. -017, Client label id is GW-3_20130116, but logged in Pace-KS id is GW-3_20130117
All containers needing acid/base preservation have been checked? Noncompliances are noted in 13.	☐ Yes	☐ No	☒ N/A	13. ☐ HNO_3 ☐ H_2SO_4 ☐ NaOH ☐ HCl
All containers needing preservation are found to be in compliance with EPA recommendation? (HNO_3, H_2SO_4, HCl<2; NaOH>12)	☐ Yes	☐ No	☒ N/A	Sample #
Exceptions: VOA, Coliform, TOC, Oil and Grease, WI-DRO (water)	☐ Yes	☒ No		Initial when completed: Lot # of added preservative:
Samples checked for dechlorination?	☐ Yes	☐ No	☒ N/A	14.
Headspace in VOA Vials (>6mm)?	☐ Yes	☐ No	☒ N/A	15.
Trip Blank Present?	☐ Yes	☐ No	☒ N/A	16.
Trip Blank Custody Seals Present?	☐ Yes	☐ No	☒ N/A	
Pace Trip Blank Lot # (if purchased):				

CLIENT NOTIFICATION/RESOLUTION

Field Data Required? ☐ Yes ☐ No

Person Contacted: Date/Time:

Comments/Resolution: -010 client requested changing sample id to P13-102 20130116, per email from HW, NCT 1/24/13

Project Manager Review: Date: 1-24-13

Note: Whenever there is a discrepancy affecting North Carolina compliance samples, a copy of this form will be sent to the North Carolina DEHNR Certification Office (i.e out of hold, incorrect preservative, out of temp, incorrect containers)

Chain of Custody

1021830

Pace Analytical®
www.pacelabs.com

Workorder: 60137200 **Workorder Name:** JANUARY 2013 RICO WATER SAMPLI **Owner Received Date:** 1/18/2013 **Results Requested By:** 1/30/2013

Report To

Heather Wilson
Pace Analytical Services, Inc.
9608 Loiret Blvd.
Lenexa, KS 66219
Phone (913)599-5665
Fax (913)599-1759

Subcontract To

Pace Analytical Minnesota
1700 Elm Street
Suite 200
Minneapolis, MN 55414
Phone (612)607-1700

Item	Sample ID	Sample Type	Collect Date/Time	Lab ID	Matrix	Preserved Containers						200.8Total Metals+Hardness+Silica	200.8 Dissolved Metals	245.1 Total Mercury	245.1 Dissolved Mercury									LAB USE ONLY
1	GW-1_20130115	PS	1/15/2013 14:55	60137200001	Water	1	1					X	X	X	X									
2	GW-5_20130115	PS	1/15/2013 15:15	60137200002	Water	1	1					X	X	X	X									
3	DR-3_20130115	PS	1/15/2013 15:33	60137200003	Water	1	1					X	X	X	X									
4	DR-8_20130115	PS	1/15/2013 15:43	60137200004	Water	1	1					X	X	X	X									
5	GW-6_20130115	PS	1/15/2013 15:59	60137200005	Water	1	1					X	X	X	X									
6	DR-4_20130115	PS	1/15/2013 16:01	60137200006	Water	1	1					X	X	X	X									
7	MW-1 SHALLOW_20130116	PS	1/16/2013 12:20	60137200007	Water	1	1					X	X	X	X									
8	MW-1 DEEP_20130116	PS	1/16/2013 13:14	60137200008	Water	1	1					X	X	X	X									
9	P13-103_20130116	PS	1/16/2013 12:55	60137200009	Water	1	1					X	X	X	X									
10	MW-102_20130116	PS	1/16/2013 13:18	60137200010	Water	1	1					X	X	X	X									
11	MW-6 DEEP_20130116	PS	1/16/2013 13:50	60137200011	Water	1	1					X	X	X	X									
12	DR-10 _20130116	PS	1/16/2013 14:15	60137200012	Water	1	1					X	X	X	X									
13	MW-6 SHALLOW_20130116	PS	1/16/2013 14:14	60137200013	Water	1	1					X	X	X	X									
14	EB-2_20130116	PS	1/16/2013 14:25	60137200014	Water	1	1					X	X	X	X									
15	MW-5 DEEP_20130116	PS	1/16/2013 15:13	60137200015	Water	1	1					X	X	X	X									
16	MW-5 SHALLOW_20130116	PS	1/16/2013 14:59	60137200016	Water	1	1					X	X	X	X									
17	GW-3_20130117	PS	1/17/2013 11:56	60137200017	Water	1	1					X	X	X	X									
18	MW-4 SHALLOW_20130117	PS	1/17/2013 11:47	60137200018	Water	1	1					X	X	X	X									
19	MW-4 DEEP_20130116	PS	1/16/2013 11:15	60137200019	Water	1	1					X	X	X	X									

Chain of Custody

Pace Analytical®
www.pacelabs.com

Workorder: 60137200 **Workorder Name:** JANUARY 2013 RICO WATER SAMPLI **Owner Received Date:** 1/18/2013 **Results Requested By:** 1/30/2013

Report To

Heather Wilson
Pace Analytical Services, Inc.
9608 Loiret Blvd.
Lenexa, KS 66219
Phone (913)599-5665
Fax (913)599-1759

Subcontract To

Pace Analytical Minnesota
1700 Elm Street
Suite 200
Minneapolis, MN 55414
Phone (612)607-1700

Item	Sample ID	Sample Type	Collect Date/Time	Lab ID	Matrix	Preserved Containers						200.8Total Metals+Hardness+Silica	200.8 Dissolved Metals	245.1 Total Mercury	245.1 Dissolved Mercury									LAB USE ONLY
20	DR-9_20130116	PS	1/16/2013 11:35	60137200020	Water	1	1					X	X	X	X									
21	GW-4_20130116	PS	1/16/2013 11:25	60137200021	Water	1	1					X	X	X	X									
22	MW-3 DEEP_20130116	PS	1/16/2013 11:50	60137200022	Water	1	1					X	X	X	X									
23	MW-2 DEEP_20130116	PS	1/16/2013 12:15	60137200023	Water	1	1					X	X	X	X									
24	EB-1_20130116	PS	1/16/2013 10:30	60137200024	Water	1	1					X	X	X	X									

Transfers	Released By	Date/Time	Received By	Date/Time
1	[illegible]	1/22/13 1800	TN / Pace	12313/1005
2				
3				

Comments

Cooler Temperature on Receipt 4.5 °C **Custody Seal** Y or N **Received on Ice** Y or N **Samples Intact** Y or N

TN 12313

Pace Analytical®	Document Name: **Sample Condition Upon Receipt Form**	Document Revised: 13Nov2012 Page 1 of 1
	Document No.: **F-MN-L-213-rev.05**	Issuing Authority: Pace Minnesota Quality Office

Sample Condition Upon Receipt

Client Name: Pace KS

Project #: WO#: 10218330 (10218330)

Courier: ☒ Fed Ex ☐ UPS ☐ USPS ☐ Client ☐ Commercial ☐ Pace ☐ Other:

Tracking Number: 5446 8864 8400

Custody Seal on Cooler/Box Present? ☒ Yes ☐ No **Seals Intact?** ☒ Yes ☐ No

Optional: Proj. Due Date: Proj. Name:

Packing Material: ☐ Bubble Wrap ☐ Bubble Bags ☒ None ☐ Other: **Temp Blank?** ☐ Yes ☒ No

Thermometer Used: ☒ 688A912167504 ☐ 80512447 **Type of Ice:** ☐ Wet ☐ Blue ☒ None ☐ Samples on ice, cooling process has begun

Cooler Temp Read (°C): 4.0 **Cooler Temp Corrected (°C):** 4.5 **Biological Tissue Frozen?** ☐ Yes ☐ No

Temp should be above freezing to 6°C

Date and Initials of Person Examining Contents: 1/23/13 TN

				Comments:
Chain of Custody Present?	☒ Yes	☐ No	☐ N/A	1.
Chain of Custody Filled Out?	☒ Yes	☐ No	☐ N/A	2.
Chain of Custody Relinquished?	☒ Yes	☐ No	☐ N/A	3.
Sampler Name and/or Signature on COC?	☐ Yes	☒ No	☐ N/A	4.
Samples Arrived within Hold Time?	☒ Yes	☐ No	☐ N/A	5.
Short Hold Time Analysis (<72 hr)?	☐ Yes	☒ No	☐ N/A	6.
Rush Turn Around Time Requested?	☐ Yes	☒ No	☐ N/A	7.
Sufficient Volume?	☒ Yes	☐ No	☐ N/A	8.
Correct Containers Used?	☒ Yes	☐ No	☐ N/A	9.
-Pace Containers Used?	☒ Yes	☐ No	☐ N/A	
Containers Intact?	☒ Yes	☐ No	☐ N/A	10.
Filtered Volume Received for Dissolved Tests?	☐ Yes	☐ No	☒ N/A	11.
Sample Labels Match COC? -Includes Date/Time/ID/Analysis Matrix: WT	☒ Yes	☐ No	☐ N/A	12.
All containers needing acid/base preservation have been checked? Noncompliances are noted in 13.	☒ Yes	☐ No	☐ N/A	13. ☒ HNO_3 ☐ H_2SO_4 ☐ NaOH ☐ HCl
All containers needing preservation are found to be in compliance with EPA recommendation? (HNO_3, H_2SO_4, HCl<2; NaOH>12)	☒ Yes	☐ No	☐ N/A	Sample # All 2/2
Exceptions: VOA, Coliform, TOC, Oil and Grease, WI-DRO (water)	☐ Yes	☒ No		Initial when completed: TN Lot # of added preservative:
Headspace in VOA Vials (>6mm)?	☐ Yes	☐ No	☒ N/A	14.
Trip Blank Present?	☐ Yes	☐ No	☒ N/A	15.
Trip Blank Custody Seals Present?	☐ Yes	☐ No	☒ N/A	
Pace Trip Blank Lot # (if purchased):				

CLIENT NOTIFICATION/RESOLUTION **Field Data Required?** ☐ Yes ☐ No

Person Contacted: Date/Time:

Comments/Resolution:

Project Manager Review: **Date:** 1/23/13

Note: Whenever there is a discrepancy affecting North Carolina compliance samples, a copy of this form will be sent to the North Carolina DEHNR Certification Office (i.e out of hold, incorrect preservative, out of temp, incorrect containers)

Pace Analytical
www.pacelabs.com

Sample Condition Upon Receipt
ESI Tech Spec Client

WO#: 60137618
60137618

Optional
Proj Due Date:
Proj Name:

Client Name: BP Anderson

Courier: Fed Ex ☐ UPS ☑ USPS ☐ Client ☐ Commercial ☐ Pace ☐ Other ☐

Tracking #: 1Z 733 W87 Y0 4983 1930/4961 2555/4765 8748 Pace Shipping Label Used? Yes ☐ No ☐

Custody Seal on Cooler/Box Present: Yes ☑ No ☐ Seals intact: Yes ☑ No ☐

Packing Material: Bubble Wrap ☑ Bubble Bags ☑ Foam ☐ None ☐ Other ☐

Thermometer Used: T-112 / T-194 **Type of Ice:** Wet Blue None (circle one) ☐ Samples received on ice, cooling process has begun.

Cooler Temperature: 1.6 1.8 2.4

Temperature should be above freezing to 6°C

Date and initials of person examining contents: 4/26/13

Chain of Custody present:	☑Yes	☐No	☐N/A	1.
Chain of Custody filled out:	☑Yes	☐No	☐N/A	2.
Chain of Custody relinquished:	☑Yes	☐No	☐N/A	3.
Sampler name & signature on COC:	☑Yes	☐No	☐N/A	4.
Samples arrived within holding time:	☑Yes	☐No	☐N/A	5.
Short Hold Time analyses (<72hr):	☐Yes	☑No	☐N/A	6.
Rush Turn Around Time requested:	☐Yes	☑No	☐N/A	7.
Sufficient volume:	☑Yes	☐No	☐N/A	8.
Correct containers used:	☑Yes	☐No	☐N/A	
Pace containers used:	☑Yes	☐No	☐N/A	9.
Containers intact:	☑Yes	☐No	☐N/A	10.
Unpreserved 5035A soils frozen w/in 48hrs?	☐Yes	☐No	☑N/A	11.
Filtered volume received for dissolved tests?	☑Yes	☑No 4/26/13	☐N/A	12.
Sample labels match COC:	☑Yes	☐No	☐N/A	
Includes date/time/ID/analyses Matrix: WT				13.
All containers needing preservation have been checked.	☑Yes	☐No	☐N/A	
All containers needing preservation are found to be in compliance with EPA recommendation.	☑Yes	☐No	☐N/A	14.
Exceptions: VOA, coliform, TOC, O&G, WI-DRO (water), Phenolics	☑Yes	☐No		Initial when completed / Lot # of added preservative
Trip Blank present:	☐Yes	☑No	☐N/A	
Pace Trip Blank lot # (if purchased):				15.
Headspace in VOA vials (>6mm):	☐Yes	☐No	☑N/A	16.
Project sampled in USDA Regulated Area:	☐Yes	☐No	☑N/A	17. List State:

Client Notification/ Resolution: Copy COC to Client? Y / N Field Data Required? Y / N

Person Contacted: _____ Date/Time: _____

Comments/ Resolution: _____

Temp Log: Record start and finish times when unpacking cooler, if >20 min, recheck sample temps.	
Start: 1055	Start:
End: 1115	End:
Temp:	Temp:

Project Manager Review: MW for HMW Date: 1/28/13

ANDERSON
ENGINEERING COMPANY INC.

977 West 2100 South
Salt Lake City, UT
84119
(801) 972-6222
FAX (801) 972-6235

CHAIN OF CUSTODY RECORD

COC# _____
Page 1 of 1

Client: BP
Project: January 2013 Rico Water Sampling
AECI Contact: Mark DeFriez (801) 234-9583

Lab Name: Pace Analytical Services
Lab Contact: Heather Wilson, (913) 563-1407
Lab Address: 9608 Loiret Blvd.
Lenexa, KS 66219

Matrix Codes
(W) Water
(S) Soil
(L) Liquid

QC: (circle one)
I II III IV

60137618

Field Location	Field Sample ID Number	Date	Time	Matrix	No. of Containers	Total Metals / Hardness / Silica	Potentially Dissolved Metals	Dissolved Metals	Alkalinity / TDS / TSS / Sulfate / Chloride	Cyanide	Salinity	Total Organic Carbon / Nitrate	Sulfide			COMMENTS	
DR-6	DR-6_20130124	1/24/2013	9:00 AM	W	8	X	X	X	X	X	X	X	X			8020 8030 AE35 2/3083N 15 8037 15 8082 17 8032	001
MW-104	MW-104_20130124	1/24/2013	10:29 AM	W	8	X	X	X	X	X	X	X	X				002
CHV-101	CHV-101_20130124	1/24/2013	10:55 AM	W	8	X	X	X	X	X	X	X	X				003
MW-103	MW-103_20130124	1/24/2013	11:05 AM	W	8	X	X	X	X	X	X	X	X				004
MW-101	MW-101_20130124	1/24/2013	11:30 AM	W	8	X	X	X	X	X	X	X	X				005
DR-7	DR-7_20130124	1/24/2013	11:48 AM	W	8	X	X	X	X	X	X	X	X				006
DR-5	DR-5_20130124	1/24/2013	11:55 AM	W	8	X	X	X	X	X	X	X	X				007
DR-2	DR-2_20130124	1/24/2013	12:07 PM	W	8	X	X	X	X	X	X	X	X				008
FB	FB_20130124	1/24/2013	12:22 PM	W	8	X	X	X	X	X	X	X	X				009
DR-11	DR-11_20130124	1/24/2013	2:13 AM	W	8	X	X	X	X	X	X	X	X				010
DR-7 COMP	DR-7 COMP_20130124	1/24/2013	2:25 AM	W	8	X	X	X	X	X	X	X	X				011
DR-2 COMP	DR-2 COMP_20130124	1/24/2013	2:34 AM	W	8	X	X	X	X	X	X	X	X				012
MW-204	MW-204_20130124	1/24/2013	2:55 AM	W	8	X	X	X	X	X	X	X	X				013
MW-102	MW-102_20130124	1/24/2013	3:15 AM	W	8	X	X	X	X	X	X	X	X				014
AT-2	AT-2_20130124	1/24/2013	3:31 AM	W	8	X	X	X	X	X	X	X	X				015

Relinquished By: *signature*	Date	Time	Received By: *signature*	DATE	Time	Special Instructions
[signature]	1/25/12	12:30p	[signature]	1/26/13	0850	1.6 1.8 2.4
Relinquished By: *signature*	Date	Time	Received By: *signature*		Time	
Relinquished By: *signature*	Date	Time	Received By: *signature*		Time	
Relinquished By: *signature*	Date	Time	Received By: *signature*		Time	

FLD-002

Chain of Custody

Pace Analytical®
www.pacelabs.com

Workorder: 60137618 **Workorder Name:** JANUARY 2013 RICO WATER SAMPLI **Owner Received Date:** 1/26/2013 **Results Requested By:** 2/11/2013

Report To	Subcontract To
Heather Wilson Pace Analytical Services, Inc. 9608 Loiret Blvd. Lenexa, KS 66219 Phone (913)599-5665 Fax (913)599-1759	Pace Analytical Billings MT 602 S 25th Street Billings, MT, MT 591014549 Phone (406) 254-7226

Requested Analysis

Item	Sample ID	Sample Type	Collect Date/Time	Lab ID	Matrix	Preserved Containers: none	Salinity	LAB USE ONLY (10218762)
1	DR-6_20130124	PS	1/24/2013 09:00	60137618001	Water	1	X	001
2	MW-104_20130124	PS	1/24/2013 10:29	60137618002	Water	1	X	002
3	CHV-101_20130124	PS	1/24/2013 10:55	60137618003	Water	1	X	003
4	MW-103_20130124	PS	1/24/2013 11:05	60137618004	Water	1	X	004
5	MW-101_20130124	PS	1/24/2013 11:30	60137618005	Water	1	X	005
6	DR-7_20130124	PS	1/24/2013 11:48	60137618006	Water	1	X	006
7	DR-5_20130124	PS	1/24/2013 11:55	60137618007	Water	1	X	007
8	DR-2_20130124	PS	1/24/2013 12:07	60137618008	Water	1	X	008
9	FB_20130124	PS	1/24/2013 12:22	60137618009	Water	1	X	009
10	DR-11_20130124	PS	1/24/2013 02:13	60137618010	Water	1	X	010
11	DR-7 COMP_20130124	PS	1/24/2013 02:25	60137618011	Water	1	X	011
12	DR-2 COMP_20130124	PS	1/24/2013 02:34	60137618012	Water	1	X	012
13	MW-204_20130124	PS	1/24/2013 02:55	60137618013	Water	1	X	013
14	MW-102_20130124	PS	1/24/2013 03:15	60137618014	Water	1	X	014
15	AT-2_20130124	PS	1/24/2013 03:31	60137618015	Water	1	X	015

Transfers	Released By	Date/Time	Received By	Date/Time	Comments
1	[illegible]	1/28/13 1700			
2	Fedex	1/29/13 1407	Norma C. Trankle/Pace	1/29/13/1407	
3					

Cooler Temperature on Receipt 0.2°C Custody Seal Y or N Received on Ice Y or N Samples Intact Y or N

Pace Analytical	Document Name: **Sample Condition Upon Receipt Form**	Document Revised: 14Nov2012 Page 1 of 1
	Document No.: **F-MT-C-184-rev.02**	Issuing Authority: Pace Montana Quality Office

Sample Condition Upon Receipt

Client Name: Pace-KS

Project #: WO#: 10218762 (10218762)

Courier: [X] Fed Ex [ ] UPS [ ] USPS [ ] Client [ ] Commercial [ ] Pace [ ] Other:

Tracking Number: 5446 8864 8855

Custody Seal on Cooler/Box Present? [X] Yes [ ] No **Seals Intact?** [ ] Yes [ ] No

Optional: Proj. Due Date: Proj. Name:

Packing Material: [ ] Bubble Wrap [ ] Bubble Bags [ ] None [X] Other: absorbent pad

Temp Blank? [X] Yes [ ] No

Thermometer Used: [X] 1383045 [ ] 135 [ ] NA **Type of Ice:** [X] Wet [ ] Blue [ ] None [X] Samples on ice, cooling process has begun

Cooler Temp Read: 0.2

Cooler Temp Corrected: 0.2

Date and Initials of Person Examining Contents: NCT 1/29/13

Biological Tissue Frozen? [ ] Yes [ ] No

Temp should be above freezing to 6°C

				Comments:
Chain of Custody Present?	[X] Yes	[ ] No	[ ] N/A	1.
Chain of Custody Filled Out?	[X] Yes	[ ] No	[ ] N/A	2.
Chain of Custody Relinquished?	[X] Yes	[ ] No	[ ] N/A	3.
Sampler Name and Signature on COC?	[ ] Yes	[X] No	[ ] N/A	4.
Samples Arrived within Hold Time?	[X] Yes	[ ] No	[ ] N/A	5.
Short Hold Time Analysis (<72 hr)?	[ ] Yes	[X] No	[ ] N/A	6.
Rush Turn Around Time Requested?	[ ] Yes	[X] No	[ ] N/A	7.
Sufficient Volume?	[X] Yes	[ ] No	[ ] N/A	8.
Correct Containers Used?	[X] Yes	[ ] No	[ ] N/A	9.
-Pace Containers Used?	[X] Yes	[ ] No	[ ] N/A	
Containers Intact?	[X] Yes	[ ] No	[ ] N/A	10.
Filtered Volume Received for Dissolved Tests?	[ ] Yes	[ ] No	[X] N/A	11.
Sample Labels Match COC? -Includes Date/Time/ID/Analysis Matrix: H_2O	[X] Yes	[ ] No	[ ] N/A	12.
All containers needing acid/base preservation have been checked? Noncompliances are noted in 13.	[ ] Yes	[ ] No	[X] N/A	13. [ ] HNO_3 [ ] H_2SO_4 [ ] NaOH [ ] HCl Sample #
All containers needing preservation are found to be in compliance with EPA recommendation? (HNO_3, H_2SO_4, HCl<2; NaOH>12)	[ ] Yes	[ ] No	[X] N/A	
Exceptions: VOA, Coliform, TOC, Oil and Grease, WI-DRO (water)	[ ] Yes	[X] No		Initial when completed: Lot # of added preservative:
Samples checked for dechlorination?	[ ] Yes	[ ] No	[X] N/A	14.
Headspace in VOA Vials (>6mm)?	[ ] Yes	[ ] No	[X] N/A	15.
Trip Blank Present?	[ ] Yes	[ ] No	[X] N/A	16.
Trip Blank Custody Seals Present?	[ ] Yes	[ ] No	[X] N/A	
Pace Trip Blank Lot # (if purchased):				

CLIENT NOTIFICATION/RESOLUTION

Field Data Required? [ ] Yes [ ] No

Person Contacted: Date/Time:

Comments/Resolution:

Project Manager Review: Date: 1-30-13

: Whenever there is a discrepancy affecting North Carolina compliance samples, a copy of this form will be sent to the North Carolina DEHNR Certification Office (i.e out of , incorrect preservative, out of temp, incorrect containers)

1150

10218733

Chain of Custody

Pace Analytical®
www.pacelabs.com

Workorder: 60137618 **Workorder Name:** JANUARY 2013 RICO WATER SAMPLI **Owner Received Date:** 1/26/2013 **Results Requested By:** 2/11/2013

Report To	Subcontract To
Heather Wilson Pace Analytical Services, Inc. 9608 Loiret Blvd. Lenexa, KS 66219 Phone (913)599-5665 Fax (913)599-1759	Pace Analytical Minnesota 1700 Elm Street Suite 200 Minneapolis, MN 55414 Phone (612)607-1700

Item	Sample ID	Sample Type	Collect Date/Time	Lab ID	Matrix	Preserved Containers: HNO3						Requested Analysis: 200.8 Total Metals + Silica + Hardness	200.8 Dissolved Metals	245.1 Total Mercury	245.1 Dissolved Mercury									LAB USE ONLY
1	DR-6_20130124	PS	1/24/2013 09:00	60137618001	Water	2						X	X	X	X									
2	MW-104 _20130124	PS	1/24/2013 10:29	60137618002	Water	2						X	X	X	X									
3	CHV-101_20130124	PS	1/24/2013 10:55	60137618003	Water	2						X	X	X	X									
4	MW-103_20130124	PS	1/24/2013 11:05	60137618004	Water	2						X	X	X	X									
5	MW-101_20130124	PS	1/24/2013 11:30	60137618005	Water	2						X	X	X	X									
6	DR-7_20130124	PS	1/24/2013 11:48	60137618006	Water	2						X	X	X	X									
7	DR-5_20130124	PS	1/24/2013 11:55	60137618007	Water	2						X	X	X	X									
8	DR-2_20130124	PS	1/24/2013 12:07	60137618008	Water	2						X	X	X	X									
9	FB_20130124	PS	1/24/2013 12:22	60137618009	Water	2						X	X	X	X									
10	DR-11_20130124	PS	1/24/2013 02:13	60137618010	Water	2						X	X	X	X									
11	DR-7 COMP_20130124	PS	1/24/2013 02:25	60137618011	Water	2						X	X	X	X									
12	DR-2 COMP _20130124	PS	1/24/2013 02:34	60137618012	Water	2						X	X	X	X									
13	MW-204_20130124	PS	1/24/2013 02:55	60137618013	Water	2						X	X	X	X									
14	MW-102_20130124	PS	1/24/2013 03:15	60137618014	Water	2						X	X	X	X									
15	AT-2_20130124	PS	1/24/2013 03:31	60137618015	Water	2						X	X	X	X									

Transfers	Released By	Date/Time	Received By	Date/Time	Comments
1	[illegible]	1/28/13 1700	TN Pace	12913/9:22	
2					
3					

Cooler Temperature on Receipt 10.6 °C Custody Seal Y or N Received on Ice Y or N Samples Intact Y or N

Pace Analytical®	Document Name: **Sample Condition Upon Receipt Form**	Document Revised: 28Jan2013 Page 1 of 1
	Document No.: **F-MN-L-213-rev.06**	Issuing Authority: Pace Minnesota Quality Office

Sample Condition Upon Receipt

Client Name: Pace KS

Project #: WO#: 10218733

10218733

Courier: ☒ Fed Ex ☐ UPS ☐ USPS ☐ Client ☐ Commercial ☐ Pace ☐ Other:

Tracking Number: 5446 8864 8866

Custody Seal on Cooler/Box Present? ☒ Yes ☐ No **Seals Intact?** ☒ Yes ☐ No

Optional: Proj. Due Date: Proj. Name:

Packing Material: ☒ Bubble Wrap ☐ Bubble Bags ☐ None ☐ Other: **Temp Blank?** ☐ Yes ☒ No

Thermom. Used: ☒ B88A912167504 ☐ 80512447 ☐ 72337080 **Type of Ice:** ☐ Wet ☐ Blue ☐ None ☐ Samples on ice, cooling process has begun

Cooler Temp Read (°C): 10.1 **Cooler Temp Corrected (°C):** 10.6 **Biological Tissue Frozen?** ☐ Yes ☐ No

Temp should be above freezing to 6°C **Correction Factor:** +.5 **Date and Initials of Person Examining Contents:** 12913 TN

				Comments:
Chain of Custody Present?	☒ Yes	☐ No	☐ N/A	1.
Chain of Custody Filled Out?	☒ Yes	☐ No	☐ N/A	2.
Chain of Custody Relinquished?	☒ Yes	☐ No	☐ N/A	3.
Sampler Name and/or Signature on COC?	☐ Yes	☒ No	☐ N/A	4.
Samples Arrived within Hold Time?	☒ Yes	☐ No	☐ N/A	5.
Short Hold Time Analysis (<72 hr)?	☐ Yes	☒ No	☐ N/A	6.
Rush Turn Around Time Requested?	☐ Yes	☒ No	☐ N/A	7.
Sufficient Volume?	☒ Yes	☐ No	☐ N/A	8.
Correct Containers Used?	☒ Yes	☐ No	☐ N/A	9.
-Pace Containers Used?	☒ Yes	☐ No	☐ N/A	
Containers Intact?	☒ Yes	☐ No	☐ N/A	10.
Filtered Volume Received for Dissolved Tests?	☐ Yes	☐ No	☒ N/A	11.
Sample Labels Match COC?	☒ Yes	☐ No	☐ N/A	12.
-Includes Date/Time/ID/Analysis Matrix: WT				
All containers needing acid/base preservation have been checked? Noncompliances are noted in 13.	☒ Yes	☐ No	☐ N/A	13. ☒ HNO_3 ☐ H_2SO_4 ☐ NaOH ☐ HCl
All containers needing preservation are found to be in compliance with EPA recommendation? (HNO_3, H_2SO_4, HCl<2; NaOH>12)	☒ Yes	☐ No	☐ N/A	Sample # All 2/2
Exceptions: VOA, Coliform, TOC, Oil and Grease, WI-DRO (water)	☐ Yes	☒ No		Initial when completed: TN Lot # of added preservative:
Headspace in VOA Vials (>6mm)?	☐ Yes	☐ No	☒ N/A	14.
Trip Blank Present?	☐ Yes	☐ No	☒ N/A	15.
Trip Blank Custody Seals Present?	☐ Yes	☐ No	☒ N/A	
Pace Trip Blank Lot # (if purchased):				

CLIENT NOTIFICATION/RESOLUTION **Field Data Required?** ☐ Yes ☐ No

Person Contacted: Date/Time:

Comments/Resolution: Temp ok metals only

Project Manager Review: [signature] **Date:** 1/29/13

Note: Whenever there is a discrepancy affecting North Carolina compliance samples, a copy of this form will be sent to the North Carolina DEHNR Certification Office (i.e out of hold, incorrect preservative, out of temp, incorrect containers)

Pace Analytical	Document Name: Sample Container Count	Document Revised: 22Sept2011 Page 1 of 1
	Document No.: F-MN-C-090-Rev.00	Issuing Authority: Pace Minnesota Quality Office

Client: KS **Project #:** _____

COC ID: _____ **COC Page** _____ of _____

Sample Line Item	DG9H	AG1U	WGFU	JGFU	BP2N	BP2U	BP2S	BP3N	BP3U	BP3S	AG3S	AG1H	VG9M	VG9H	VG9U	Comments
1								2								
2																
3																
4																
5																
6																
7																
8																
9																
10																
11																
12																
13																
14																
15																

Container Codes:

DG9H	40mL HCL amber VOA vial	AF	Air Filter	BP1N	1 liter HNO3 plastic	DG9P	40mL TSP amber vial
AG1U	1liter unpreserved amber glass	AG1H	1 liter HCL amber glass 2	BP1S	1 liter H2SO4 plastic	DG9S	40mL H2SO4 amber vial
WGFU	4oz clear soil jar	AG1S	1 liter H2SO4 amber glass	BP1U	1 liter unpreserved plastic	DG9T	40mL Na Thio amber vial
R	terra core kit	AG1T	1 liter Na Thiosulfate amber glass	BP1Z	1 liter NaOH, Zn, Ac	DG9U	40mL unpreserved **amber** vial
BP2N	500mL HNO3 plastic	AG2N	500mL HNO3 amber glass	BP2A	500mL NaOH, Asc Acid plastic	I	Wipe/Swab
BP2U	500mL unpreserved plastic	AG2S	500mL H2SO4 amber glass	BP2O	500mL NaOH plastic	JGFU	4oz unpreserved amber wide
BP2S	500mL H2SO4 plastic	AG2U	500mL unpreserved amber glass	BP2Z	500mL NaOH, Zn Ac	U	Summa Can
BP3N	250mL HNO3 plastic	AG3U	250mL unpreserved amber glass	BP3A	250mL NaOh, Asc Acid plastic	VG9H	40mL HCL clear vial
BP3U	250mL unpreserved plastic	BG1H	1 liter HCL clear glass	BP3C	250mL NaOH plastic	VG9T	40mL Na Thio. clear vial
BP3S	250mL H2SO4 plastic	BG1S	1 liter H2SO4 clear glass	BP3Z	250mL NaOH, Zn Ac plastic	VG9U	40mL unpreserved **clear** vial
AG3S	250mL H2SO4 glass amber	BG1T	1 liter Na Thiosulfate clear glass	C	Air Cassettes	VSG	Headspace septa vial & HCL
AG1S	1 liter H2SO4 amber glass	BG1U	1 liter unpreserved glass	DG9B	40mL Na Bisulfate amber vial	WGFX	4oz wide jar w/hexane wipe
BP1U	1 liter unpreserved plastic	BP1A	1 liter NaOH, Asc Acid plastic	DG9M	40mL MeOH clear vial	ZPLC	Ziploc Bag

Appendix G

Field Photos

January 2013 Field Photos

Cross Section at Station DR-1

Cross Section at Station DR-7

Cross Section at Station DR-2

Cross Section at Station DR-4-SW

Cross Section at Station DR-5

Appendix H

Field Log Book Records

1/15/13 MONTHLY WATER SAMPLING ROUND - JANUARY - RICO TIM BARBEE JODY GISSEMAN BEN LOOMIS

1230 Hi 9828-0 Calibrated WATER QUALITY METER - OK

1415 GW-1 DTW: 2.64' TOTAL DEPTH 9.75' PURGED 16 BAILER VOLUMES

1455 GW-1 CLOUDY BROWN NO ODOR

464 µS/cm

-43.4 ORP

3.67 DO ppm

7.03 pH

4.65 °C

1515 GW-5 DTW: 22.60' TOTAL DEPTH 24.50' BAILED 5 BAILER VOLUMES THEN COLLECTED SAMPLE.

2853 µS/cm PURPLE BROWN, NO ODOR

-65.1 ORP

0.66 DO ppm

6.47 pH

6.79 °C

1533 DR-3 AND DR-8 SAMPLES COLLECTED AT

DR-3 1449 µS/CM Field Dup SLIGHTLY BROWNISH YELLOW

-63.7 ORP NO ODOR

2.52 DO ppm

6.31 pH

14.08 °C

1/15/13 CONTINUED

1543 DR-8 1448 µS/cm SLIGHTLY
FD for DR-3 -54.7 ORP YELLOWISH
3.05 DO ppm BROWN
6.27 pH NO ODOR
14.91 °C

1538 GW-6 DTW 22.02'
TOTAL DEPTH 26.86' PURGED 11 BAILER

1559 GW-6 2234 µS/cm SILTY
-51.1 ORP DK Purplish
0.21 DO ppm BROWN
Blinking Reading 14.00 pH
6.66 °C

1601 DR-4 1432 µS/cm
-53.7 ORP
5.56 DO ppm
11.44 pH
5.12 °C

CLEAR SLIGHTLY YELLOW
NO ODOR

1/16/13 ST LOUIS MONTHLY WATER SAMPLING

0900 Calibration of HI9828 HANNA water parameter meter. ALL OK

1030 SAMPLED EB-1, PURGED DRY ON 1/15/13 at 1400 REMOVED ~9 BAILER VOLUMES 2419 µS/cm
SLIGHTLY SILTY -92.6 ORP
PURPLISH BROWN 1.55 DO ppm
NO ODOR 6.64 pH
8.31 °C

11:15 MW-4 DEEP DTW 17.15'
TOTAL DEPTH 31.24' PURGED 29
BAILER VOLUMES =
11:33 1721 µS/cm cloudy lt brown
-56.9 ORP no odor
1.14 DO ppm
13.01 pH
8.10 °C

11:35 MW-4 DEEP COLLECTED
FIELD DUP SAMPLE ID DR-9
11:45 1697 µS/cm cloud lt brown
-51.8 ORP no odor
1.16 DO ppm

1/16/13 CONTINUED ST LOUIS SAMPLING.

~~MW-4 DEEP~~ 12.26 pH
DR-9 9.18°C

11:25 GW-4 DTW 11.07'
TOTAL DEPTH 15.15 PURGED 25 BAILER
VOLUMES = SAMPLED

12:03 GW-4 MILK CHOC BROWN, NO ODOR
1260 µS/cm
-111.3 ORP
0.0 DO ppm
8.95 pH
6.44°C

11:50 MW-3D DTW 10.07' TOTAL
DEPTH 23.29' PURGED 25 BAILER
VOLUMES = SAMPLED

12:15 1493 µS/cm Cloudy lt brown
-88.6 ORP no odor
0.12 DO ppm
7.59 pH
8.70 °C

12:20 MW-2DEEP DTW 10.20'
TOTAL DEPTH 23.05' PURGED 28
BAILER VOLUMES AND SAMPLED

1/16/13 CONTINUED

12:35 MW-2 DEEP 1465 µS/cm
slightly lt brown -91.2 ORP
no odor 2.64 DO ppm
7.01 pH
9.38°C

12:20 MW-1 SHALLOW DTW
TOTAL DEPTH
PURGED 7 BAILER VOLUMES
AND SAMPLED

12:43 MW-1S 1434 µS/cm
MILK CHOC BROWN -68.7 ORP
NO ODOR 5.53 DO ppm
6.58 pH
4.50°C

12:43 MW-1D DEEP DTW
TOTAL DEPTH PURGED 30
BAILER VOLUMES AND SAMPLED

13:14 1453 µS/cm MED BROWN
-95.6 ORP NO ODOR
4.11 DO ppm
7.84 pH
6.00 °C

1/16/13 CONT ST LOUIS SAMPLING

12:55 P13-103 DTW 11.11' TOTAL DEPTH 20.33' PURGED 20 BAILER VOLUMES, SAMPLED

13:27 P13-103 1793 µS/CM
LT BROWNISH -83.4 ORP
PURPLE 0.08 DO ppm
NO ODOR ~~7.8~~ 6.40 pH
8.00 °C

13:18 ~~MW~~ P13-102 DTW 10.81' TOTAL DEPTH 35.41 DTW AT SAMPLING 10.73' PURGED 50 BAILER VOLUMES AND SAMPLED

13:40 MW-102 ~~X~~ 2231 µS/CM
LT BROWNISH -74.2 ORP
YELLOW 0.84 DO ppm
NO ODOR 14.00 pH Blinking
8.63° C

13:50 MW-6 DEEP DTW 23.50' TOTAL DEPTH 40.30' PURGED 50 BAILER VOLUMES, SAMPLED AND COLLECTED FIELD DUP DR-10

1/16/13 CONT.

14:07 MW-6DEEP 1823 µS/cm
CLOUDY -106.8 ORP
LT BROWN 0.42 DO ppm
NO ODOR 7.26 pH
10.02°C

14:05 MW-6DEEP FEILD DUP
SAMPLE ID DR-10 1835 µS/cm
CLOUDY LT BROWN -89.0 ORP
NO ODOR 0.42 DO ppm
6.22 pH
9.44 °C

14:14 MW-6 SHALLOW DTW 23.68' TOTAL DEPTH 27.24' PURGED 7 BAILER VOLUMES AND SAMPLED

14:30 MW-6 SHALLOW 2476 µS/cm
MED BROWN -89.7 ORP
NO ODOR 0.51 DO ppm
6.44 pH
9.32°C

14:25 SAMPLED EB-2 DTW @ SAMPLING 17.27' (100% RECHARGED) (1-15 DTW 17.27' TOTAL DEPTH 26.50' BAILER DRY 10 BAILER VOLUMES - Afternoon
THIS IS A SLOW RECHARGING WELL

1/16/13 CONT

14:45 EB-2 3905 µS/cm
MED BROWN -77.6 ORP
NO ODOR 0.11 DO ppm
5.42 pH
10.07 °C

14:59 MW-5 DEEP DTW 17.81'
TOTAL DEPTH 34.20' PURGED
32 BAILER VOLUMES =
AND SAMPLED

15:13 MW-5 DEEP 2123 µS/cm
MED BROWN -91.6 ORP
NO ODOR 0.22 DO ppm
8.02 pH
10.10° C

14:59 MW-5 SHALLOW DTW 16.96'
TOTAL DEPTH 21.02' PURGED 8
BAILER VOLUMES ~2 GAL AND
SAMPLED

15:24 MW-5 SHALLOW 3984 µS/cm
DARK -51.7 ORP
PURPLE 0.30 DO ppm
NO ODOR 14.00 pH Blinking
10.03°C

1/16/13 CONT.

15:10 GW-3 PARTIAL SAMPLE
COLLECTED - BAILED DRY
ON 1/15 14:05 DTW 13.09' TOTAL
DEPTH 15.30' BAILED DRY 1.5
BAILER VOLUMES - Less than 1/2 GAL

15:35 GW-3 839 µS/cm
CLEAR -46.7 ORP
SLIGHTLY 4.14 DO ppm
BROWN 7.81 pH
NO ODOR 6.41° C

ONLY ENOUGH WELL WATER FOR 4
SAMPLE BOTTLES, COLLECTED
Potentially Dissolved Metals
Dissolved Metals
Total Metals, Hardness, Silica,
Salinity. Will collect remaining
samples tomorrow and date all
samples for 1/16/13

1/17/13 ST LOUIS MONTHLY WATER SAMPLING

0900 Calibrate HI 9828 HANNA
Conductivity standard 1413 µS/cm
Reading 1654, Cal OK
pH standards 7.0, 4.0, 10.0
pH Cal OK
ORP Cal Solution Temp 15°C 236.0
ORP Cal OK
DO DI for Cal at 100% - OK
11:30 FINISH INDIVIDUAL PARAMETER METER CAL

11:40 Collected samples at
MW-4 SHALLOW WELL RECOVERS SLOWLY - PURGED ON 1-16 DRY
DTW ~~18.39~~ 17.21' TOTAL DEPTH 17.21'
11:47 MW-4 SHALLOW 1366 µS/cm
LT BROWNISH YELLOW 81.1 ORP
NO ODOR 3.01 DO ppm
14.00 pH Blinking
11.31°C

1/17/13
11:56 GW-3 COLLECTED ONLY ENOUGH SAMPLE WATER FOR sulfide by SM 4500S-2C & TOC by SM, 5310C, Nitrate, Nitrite

1/22/13 Tuesday

Clear 45°

DR-2

BM 4.44

WTR 10.97

Depth: 0.0, 0.20, 0.65, 0.4
0.60, 1.00, 1.15, 1.10
1.10, 1.00, 1.10, 0.50
0.80, 0.85, 1.10, 1.05
1.05, 1.10, 0.95, 0.95, 0.85
0.70, 0.70, 0.65, 0.50, 0.30

V: 0.0, 0.16, 0.32, 0.16
0.0, 0.10, 0.07, 0.66
0.66, 0.77, 0.72, 0.85
0.95, 0.79, 0.68, 0.35
0.38, 0.29, 0.31, 0.20, 0.14
0.08, 0.01, 0.00, 0.00, 0.00

3:11 DR-7

BM 7.52

WTR 11.74

Depth: 0.20, 0.35, 0.30, 0.55
0.55, 0.50, 0.50, .55, 0.55
.55, 0.37, 0.55, 0.30, 0.20
0.70, 0.70, 0.60, 0.70, 0.50
0.27, 0.00, 0.00, 0.30, 0.00
0.15, 0.50, 0.40, 0.40, 0.40
0.10, 0.30, 0.50

V: 0.21, 0.14, 0.27, 0.45
.64, .66, 1.46, 0.75, 0.23
0.30, 0.45, 0.98, 0.67, 0.88
.85, 1.63, 0.42, 1.03, 0.17
0.02, 0.00, 0.00, 0.13, 0.00
1.44, 1.46, 0.14, 1.20, 1.51
0.00, 0.02, 0.04

1/24/13 Thursday Clear 40

1/24/12

900 DR-6

1773 µS/cm
-14.1 ORP
7.22 DO ppm
6.66 pH
2.34 °C

1029 MW-104

1813 µS/cm
-17.4 ORP
3.42 DO ppm
6.75 pH
4.03 °C

1055 CHV-101

1622 µS/cm
-2.3 ORP
2.04 DO ppm
6.32 pH
13.84 °C

1/24/13

1105 MW - 103

2026	µs/cm
-10.9	ORP
0.31	DO ppm
6.04	pH
7.13	°C

1130 MW-101

2212	µs/cm
-16.7	ORP
0.12	DO ppm
6.23	pH
10.44	°C

1148 DR-7

834	µs/cm
-10.6	ORP
6.44	DO ppm
8.04	pH
5.34	°C

1/24/13

1155 DR-5

1625	µs/cm
-6.9	ORP
5.60	DO ppm
7.10	pH
4.36	C

1207 DR-2

562	µs/cm
-8.2	ORP
7.56	DO ppm
7.20	pH
3.68	°C

1222 FB

3	µs/cm
-31.9	ORP
7.69	DO ppm
7.56	pH
9.51	°C

1/24/13

114 DR 2

25' wide

5 con. 5'

East-West

Compartment	µS/cm	ORP	DO ppm	pH	°C
1	581	-11.5	10.31	8.43	2.12
2	559	-12.4	10.25	8.41	1.96
3	563	-12.1	10.40	8.41	1.97
4	587	-11.7	10.22	8.26	2.11
5	651	-11.4	9.36	7.94	2.29

1/24/13

145 DR 7

42' wide

7 con 6'

East-West

Compartment	µS/cm	ORP	DO ppm	pH	°C
1	896	-15.8	10.33	8.03	3.09
2	866	-16.2	10.39	7.91	2.90
3	815	-16.3	10.55	7.84	2.67
4	783	-16.1	10.63	7.77	2.59
5	781	-16.7	9.44	7.65	2.62
6	778	-16.6	10.36	7.56	2.69
7	808	-17.5	9.33	7.44	3.03

1/24/13

2:13 DR-11 ≈ (MW-104)

1759 µs/cm
-14.3 ORP
3.52 DO ppm
7.88 pH
5.61 °C

225 DR-7 Comp

842 µs/cm
-12.1 ORP
6.25 DO ppm
7.22 pH
4.21 °C

234 DR-2 Comp

561 µs/cm
-12.5 ORP
5.93 DO ppm
7.34 pH
4.45 °C

1/24/13

255 MW-204

1577 µs/cm
-15.4 ORP
1.69 DO ppm
6.54 pH
12.34 °C

315 MW-102

1476 µs/cm
-12.9 ORP
1.92 DO ppm
6.75 pH
10.37 °C

331 AT-2

1152 µs/cm
-19.7 ORP
4.27 DO ppm
6.88 pH
15.79 °C

1/24/18

DR-3 manual depth measurement
= 0.60' 11:30 am

DR-6 manual depth measurement
= 0.54 2:15 pm

Appendix I

North Flume OTT PLS Data with Flowrates

Due to excessive winter storm activity, power failures of the equipment at DR-3 occurred throughout January. No useable data was collected during this month.

Appendix J

North Flume Ultrasonic Sensor Data with Flowrates

Due to excessive winter storm activity, power failures of the equipment at DR-3 occurred throughout January. No useable data was collected during this month.

Appendix K

South Flume Orpheus Mini Data with Flowrates

OTT Opheus Mini Data at South Flume, January 2013

Date	Time	Depth from top of flume to water (ft)	Depth of Flume Total (ft)	Depth of Flow (ft)	Flowrate (cfs)	Flowrate (gpm)
1/1/2013	12:00:00 AM	2.02	2.5	0.48	1.01	454.3
1/1/2013	1:00:00 AM	2.02	2.5	0.48	1.01	454.3
1/1/2013	2:00:00 AM	2.02	2.5	0.48	1.01	454.3
1/1/2013	3:00:00 AM	2.03	2.5	0.47	0.98	440.0
1/1/2013	4:00:00 AM	2.02	2.5	0.48	1.01	454.3
1/1/2013	5:00:00 AM	2.03	2.5	0.47	0.98	440.0
1/1/2013	6:00:00 AM	2.03	2.5	0.47	0.98	440.0
1/1/2013	7:00:00 AM	2.03	2.5	0.47	0.98	440.0
1/1/2013	8:00:00 AM	2.03	2.5	0.47	0.98	440.0
1/1/2013	9:00:00 AM	2.03	2.5	0.47	0.98	440.0
1/1/2013	10:00:00 AM	2.03	2.5	0.47	0.98	440.0
1/1/2013	11:00:00 AM	2.03	2.5	0.47	0.98	440.0
1/1/2013	12:00:00 PM	2.03	2.5	0.47	0.98	440.0
1/1/2013	1:00:00 PM	2.03	2.5	0.47	0.98	440.0
1/1/2013	2:00:00 PM	2.03	2.5	0.47	0.98	440.0
1/1/2013	3:00:00 PM	2.03	2.5	0.47	0.98	440.0
1/1/2013	4:00:00 PM	2.03	2.5	0.47	0.98	440.0
1/1/2013	5:00:00 PM	2.03	2.5	0.47	0.98	440.0
1/1/2013	6:00:00 PM	2.03	2.5	0.47	0.98	440.0
1/1/2013	7:00:00 PM	2.03	2.5	0.47	0.98	440.0
1/1/2013	8:00:00 PM	2.03	2.5	0.47	0.98	440.0
1/1/2013	9:00:00 PM	2.03	2.5	0.47	0.98	440.0
1/1/2013	10:00:00 PM	2.03	2.5	0.47	0.98	440.0
1/1/2013	11:00:00 PM	2.03	2.5	0.47	0.98	440.0
1/2/2013	12:00:00 AM	2.03	2.5	0.47	0.98	440.0
1/2/2013	1:00:00 AM	2.03	2.5	0.47	0.98	440.0
1/2/2013	2:00:00 AM	2.03	2.5	0.47	0.98	440.0
1/2/2013	3:00:00 AM	2.03	2.5	0.47	0.98	440.0
1/2/2013	4:00:00 AM	2.03	2.5	0.47	0.98	440.0
1/2/2013	5:00:00 AM	2.03	2.5	0.47	0.98	440.0
1/2/2013	6:00:00 AM	2.03	2.5	0.47	0.98	440.0
1/2/2013	7:00:00 AM	2.03	2.5	0.47	0.98	440.0
1/2/2013	8:00:00 AM	2.03	2.5	0.47	0.98	440.0
1/2/2013	9:00:00 AM	2.03	2.5	0.47	0.98	440.0
1/2/2013	10:00:00 AM	2.03	2.5	0.47	0.98	440.0
1/2/2013	11:00:00 AM	2.03	2.5	0.47	0.98	440.0
1/2/2013	12:00:00 PM	2.03	2.5	0.47	0.98	440.0
1/2/2013	1:00:00 PM	2.03	2.5	0.47	0.98	440.0
1/2/2013	2:00:00 PM	2.03	2.5	0.47	0.98	440.0
1/2/2013	3:00:00 PM	2.03	2.5	0.47	0.98	440.0
1/2/2013	4:00:00 PM	2.03	2.5	0.47	0.98	440.0
1/2/2013	5:00:00 PM	2.03	2.5	0.47	0.98	440.0
1/2/2013	6:00:00 PM	2.03	2.5	0.47	0.98	440.0

1/2/2013	7:00:00 PM	2.03	2.5	0.47	0.98	440.0
1/2/2013	8:00:00 PM	2.03	2.5	0.47	0.98	440.0
1/2/2013	9:00:00 PM	2.03	2.5	0.47	0.98	440.0
1/2/2013	10:00:00 PM	2.03	2.5	0.47	0.98	440.0
1/2/2013	11:00:00 PM	2.03	2.5	0.47	0.98	440.0
1/3/2013	12:00:00 AM	2.03	2.5	0.47	0.98	440.0
1/3/2013	1:00:00 AM	2.03	2.5	0.47	0.98	440.0
1/3/2013	2:00:00 AM	2.03	2.5	0.47	0.98	440.0
1/3/2013	3:00:00 AM	2.03	2.5	0.47	0.98	440.0
1/3/2013	4:00:00 AM	2.03	2.5	0.47	0.98	440.0
1/3/2013	5:00:00 AM	2.03	2.5	0.47	0.98	440.0
1/3/2013	6:00:00 AM	2.03	2.5	0.47	0.98	440.0
1/3/2013	7:00:00 AM	2.03	2.5	0.47	0.98	440.0
1/3/2013	8:00:00 AM	2.03	2.5	0.47	0.98	440.0
1/3/2013	9:00:00 AM	2.03	2.5	0.47	0.98	440.0
1/3/2013	10:00:00 AM	2.03	2.5	0.47	0.98	440.0
1/3/2013	11:00:00 AM	2.03	2.5	0.47	0.98	440.0
1/3/2013	12:00:00 PM	2.03	2.5	0.47	0.98	440.0
1/3/2013	1:00:00 PM	2.03	2.5	0.47	0.98	440.0
1/3/2013	2:00:00 PM	2.03	2.5	0.47	0.98	440.0
1/3/2013	3:00:00 PM	2.03	2.5	0.47	0.98	440.0
1/3/2013	4:00:00 PM	2.03	2.5	0.47	0.98	440.0
1/3/2013	5:00:00 PM	2.03	2.5	0.47	0.98	440.0
1/3/2013	6:00:00 PM	2.03	2.5	0.47	0.98	440.0
1/3/2013	7:00:00 PM	2.03	2.5	0.47	0.98	440.0
1/3/2013	8:00:00 PM	2.02	2.5	0.48	1.01	454.3
1/3/2013	9:00:00 PM	2.02	2.5	0.48	1.01	454.3
1/3/2013	10:00:00 PM	2.02	2.5	0.48	1.01	454.3
1/3/2013	11:00:00 PM	2.02	2.5	0.48	1.01	454.3
1/4/2013	12:00:00 AM	2.02	2.5	0.48	1.01	454.3
1/4/2013	1:00:00 AM	2.02	2.5	0.48	1.01	454.3
1/4/2013	2:00:00 AM	2.02	2.5	0.48	1.01	454.3
1/4/2013	3:00:00 AM	2.03	2.5	0.47	0.98	440.0
1/4/2013	4:00:00 AM	2.03	2.5	0.47	0.98	440.0
1/4/2013	5:00:00 AM	2.02	2.5	0.48	1.01	454.3
1/4/2013	6:00:00 AM	2.03	2.5	0.47	0.98	440.0
1/4/2013	7:00:00 AM	2.02	2.5	0.48	1.01	454.3
1/4/2013	8:00:00 AM	2.03	2.5	0.47	0.98	440.0
1/4/2013	9:00:00 AM	2.03	2.5	0.47	0.98	440.0
1/4/2013	10:00:00 AM	2.03	2.5	0.47	0.98	440.0
1/4/2013	11:00:00 AM	2.03	2.5	0.47	0.98	440.0
1/4/2013	12:00:00 PM	2.03	2.5	0.47	0.98	440.0
1/4/2013	1:00:00 PM	2.03	2.5	0.47	0.98	440.0
1/4/2013	2:00:00 PM	2.03	2.5	0.47	0.98	440.0
1/4/2013	3:00:00 PM	2.03	2.5	0.47	0.98	440.0
1/4/2013	4:00:00 PM	2.03	2.5	0.47	0.98	440.0
1/4/2013	5:00:00 PM	2.03	2.5	0.47	0.98	440.0

1/4/2013	6:00:00 PM	2.02	2.5	0.48	1.01	454.3
1/4/2013	7:00:00 PM	2.02	2.5	0.48	1.01	454.3
1/4/2013	8:00:00 PM	2.02	2.5	0.48	1.01	454.3
1/4/2013	9:00:00 PM	2.02	2.5	0.48	1.01	454.3
1/4/2013	10:00:00 PM	2.02	2.5	0.48	1.01	454.3
1/4/2013	11:00:00 PM	2.02	2.5	0.48	1.01	454.3
1/5/2013	12:00:00 AM	2.02	2.5	0.48	1.01	454.3
1/5/2013	1:00:00 AM	2.02	2.5	0.48	1.01	454.3
1/5/2013	2:00:00 AM	2.03	2.5	0.47	0.98	440.0
1/5/2013	3:00:00 AM	2.02	2.5	0.48	1.01	454.3
1/5/2013	4:00:00 AM	2.03	2.5	0.47	0.98	440.0
1/5/2013	5:00:00 AM	2.03	2.5	0.47	0.98	440.0
1/5/2013	6:00:00 AM	2.02	2.5	0.48	1.01	454.3
1/5/2013	7:00:00 AM	2.02	2.5	0.48	1.01	454.3
1/5/2013	8:00:00 AM	2.02	2.5	0.48	1.01	454.3
1/5/2013	9:00:00 AM	2.02	2.5	0.48	1.01	454.3
1/5/2013	10:00:00 AM	2.03	2.5	0.47	0.98	440.0
1/5/2013	11:00:00 AM	2.03	2.5	0.47	0.98	440.0
1/5/2013	12:00:00 PM	2.03	2.5	0.47	0.98	440.0
1/5/2013	1:00:00 PM	2.03	2.5	0.47	0.98	440.0
1/5/2013	2:00:00 PM	2.03	2.5	0.47	0.98	440.0
1/5/2013	3:00:00 PM	2.03	2.5	0.47	0.98	440.0
1/5/2013	4:00:00 PM	2.03	2.5	0.47	0.98	440.0
1/5/2013	5:00:00 PM	2.03	2.5	0.47	0.98	440.0
1/5/2013	6:00:00 PM	2.02	2.5	0.48	1.01	454.3
1/5/2013	7:00:00 PM	2.02	2.5	0.48	1.01	454.3
1/5/2013	8:00:00 PM	2.02	2.5	0.48	1.01	454.3
1/5/2013	9:00:00 PM	2.02	2.5	0.48	1.01	454.3
1/5/2013	10:00:00 PM	2.02	2.5	0.48	1.01	454.3
1/5/2013	11:00:00 PM	2.02	2.5	0.48	1.01	454.3
1/6/2013	12:00:00 AM	2.02	2.5	0.48	1.01	454.3
1/6/2013	1:00:00 AM	2.03	2.5	0.47	0.98	440.0
1/6/2013	2:00:00 AM	2.02	2.5	0.48	1.01	454.3
1/6/2013	3:00:00 AM	2.02	2.5	0.48	1.01	454.3
1/6/2013	4:00:00 AM	2.03	2.5	0.47	0.98	440.0
1/6/2013	5:00:00 AM	2.03	2.5	0.47	0.98	440.0
1/6/2013	6:00:00 AM	2.02	2.5	0.48	1.01	454.3
1/6/2013	7:00:00 AM	2.02	2.5	0.48	1.01	454.3
1/6/2013	8:00:00 AM	2.03	2.5	0.47	0.98	440.0
1/6/2013	9:00:00 AM	2.03	2.5	0.47	0.98	440.0
1/6/2013	10:00:00 AM	2.03	2.5	0.47	0.98	440.0
1/6/2013	11:00:00 AM	2.03	2.5	0.47	0.98	440.0
1/6/2013	12:00:00 PM	2.03	2.5	0.47	0.98	440.0
1/6/2013	1:00:00 PM	2.03	2.5	0.47	0.98	440.0
1/6/2013	2:00:00 PM	2.03	2.5	0.47	0.98	440.0
1/6/2013	3:00:00 PM	2.03	2.5	0.47	0.98	440.0
1/6/2013	4:00:00 PM	2.03	2.5	0.47	0.98	440.0

1/6/2013	5:00:00 PM	2.03	2.5	0.47	0.98	440.0
1/6/2013	6:00:00 PM	2.03	2.5	0.47	0.98	440.0
1/6/2013	7:00:00 PM	2.03	2.5	0.47	0.98	440.0
1/6/2013	8:00:00 PM	2.03	2.5	0.47	0.98	440.0
1/6/2013	9:00:00 PM	2.03	2.5	0.47	0.98	440.0
1/6/2013	10:00:00 PM	2.02	2.5	0.48	1.01	454.3
1/6/2013	11:00:00 PM	2.02	2.5	0.48	1.01	454.3
1/7/2013	12:00:00 AM	2.02	2.5	0.48	1.01	454.3
1/7/2013	1:00:00 AM	2.02	2.5	0.48	1.01	454.3
1/7/2013	2:00:00 AM	2.02	2.5	0.48	1.01	454.3
1/7/2013	3:00:00 AM	2.02	2.5	0.48	1.01	454.3
1/7/2013	4:00:00 AM	2.02	2.5	0.48	1.01	454.3
1/7/2013	5:00:00 AM	2.02	2.5	0.48	1.01	454.3
1/7/2013	6:00:00 AM	2.02	2.5	0.48	1.01	454.3
1/7/2013	7:00:00 AM	2.02	2.5	0.48	1.01	454.3
1/7/2013	8:00:00 AM	2.03	2.5	0.47	0.98	440.0
1/7/2013	9:00:00 AM	2.03	2.5	0.47	0.98	440.0
1/7/2013	10:00:00 AM	2.03	2.5	0.47	0.98	440.0
1/7/2013	11:00:00 AM	2.03	2.5	0.47	0.98	440.0
1/7/2013	12:00:00 PM	2.03	2.5	0.47	0.98	440.0
1/7/2013	1:00:00 PM	2.03	2.5	0.47	0.98	440.0
1/7/2013	2:00:00 PM	2.03	2.5	0.47	0.98	440.0
1/7/2013	3:00:00 PM	2.03	2.5	0.47	0.98	440.0
1/7/2013	4:00:00 PM	2.03	2.5	0.47	0.98	440.0
1/7/2013	5:00:00 PM	2.03	2.5	0.47	0.98	440.0
1/7/2013	6:00:00 PM	2.02	2.5	0.48	1.01	454.3
1/7/2013	7:00:00 PM	2.03	2.5	0.47	0.98	440.0
1/7/2013	8:00:00 PM	2.02	2.5	0.48	1.01	454.3
1/7/2013	9:00:00 PM	2.02	2.5	0.48	1.01	454.3
1/7/2013	10:00:00 PM	2.02	2.5	0.48	1.01	454.3
1/7/2013	11:00:00 PM	2.02	2.5	0.48	1.01	454.3
1/8/2013	12:00:00 AM	2.02	2.5	0.48	1.01	454.3
1/8/2013	1:00:00 AM	2.02	2.5	0.48	1.01	454.3
1/8/2013	2:00:00 AM	2.02	2.5	0.48	1.01	454.3
1/8/2013	3:00:00 AM	2.03	2.5	0.47	0.98	440.0
1/8/2013	4:00:00 AM	2.02	2.5	0.48	1.01	454.3
1/8/2013	5:00:00 AM	2.03	2.5	0.47	0.98	440.0
1/8/2013	6:00:00 AM	2.03	2.5	0.47	0.98	440.0
1/8/2013	7:00:00 AM	2.02	2.5	0.48	1.01	454.3
1/8/2013	8:00:00 AM	2.03	2.5	0.47	0.98	440.0
1/8/2013	9:00:00 AM	2.03	2.5	0.47	0.98	440.0
1/8/2013	10:00:00 AM	2.03	2.5	0.47	0.98	440.0
1/8/2013	11:00:00 AM	2.03	2.5	0.47	0.98	440.0
1/8/2013	12:00:00 PM	2.03	2.5	0.47	0.98	440.0
1/8/2013	1:00:00 PM	2.03	2.5	0.47	0.98	440.0
1/8/2013	2:00:00 PM	2.03	2.5	0.47	0.98	440.0
1/8/2013	3:00:00 PM	2.04	2.5	0.46	0.95	426.0

1/8/2013	4:00:00 PM	2.03	2.5	0.47	0.98	440.0
1/8/2013	5:00:00 PM	2.03	2.5	0.47	0.98	440.0
1/8/2013	6:00:00 PM	2.02	2.5	0.48	1.01	454.3
1/8/2013	7:00:00 PM	2.02	2.5	0.48	1.01	454.3
1/8/2013	8:00:00 PM	2.02	2.5	0.48	1.01	454.3
1/8/2013	9:00:00 PM	2.02	2.5	0.48	1.01	454.3
1/8/2013	10:00:00 PM	2.02	2.5	0.48	1.01	454.3
1/8/2013	11:00:00 PM	2.03	2.5	0.47	0.98	440.0
1/9/2013	12:00:00 AM	2.02	2.5	0.48	1.01	454.3
1/9/2013	1:00:00 AM	2.02	2.5	0.48	1.01	454.3
1/9/2013	2:00:00 AM	2.03	2.5	0.47	0.98	440.0
1/9/2013	3:00:00 AM	2.02	2.5	0.48	1.01	454.3
1/9/2013	4:00:00 AM	2.03	2.5	0.47	0.98	440.0
1/9/2013	5:00:00 AM	2.02	2.5	0.48	1.01	454.3
1/9/2013	6:00:00 AM	2.02	2.5	0.48	1.01	454.3
1/9/2013	7:00:00 AM	2.02	2.5	0.48	1.01	454.3
1/9/2013	8:00:00 AM	2.02	2.5	0.48	1.01	454.3
1/9/2013	9:00:00 AM	2.03	2.5	0.47	0.98	440.0
1/9/2013	10:00:00 AM	2.03	2.5	0.47	0.98	440.0
1/9/2013	11:00:00 AM	2.03	2.5	0.47	0.98	440.0
1/9/2013	12:00:00 PM	2.03	2.5	0.47	0.98	440.0
1/9/2013	1:00:00 PM	2.03	2.5	0.47	0.98	440.0
1/9/2013	2:00:00 PM	2.03	2.5	0.47	0.98	440.0
1/9/2013	3:00:00 PM	2.03	2.5	0.47	0.98	440.0
1/9/2013	4:00:00 PM	2.03	2.5	0.47	0.98	440.0
1/9/2013	5:00:00 PM	2.03	2.5	0.47	0.98	440.0
1/9/2013	6:00:00 PM	2.02	2.5	0.48	1.01	454.3
1/9/2013	7:00:00 PM	2.02	2.5	0.48	1.01	454.3
1/9/2013	8:00:00 PM	2.02	2.5	0.48	1.01	454.3
1/9/2013	9:00:00 PM	2.02	2.5	0.48	1.01	454.3
1/9/2013	10:00:00 PM	2.02	2.5	0.48	1.01	454.3
1/9/2013	11:00:00 PM	2.02	2.5	0.48	1.01	454.3
1/10/2013	12:00:00 AM	2.02	2.5	0.48	1.01	454.3
1/10/2013	1:00:00 AM	2.02	2.5	0.48	1.01	454.3
1/10/2013	2:00:00 AM	2.02	2.5	0.48	1.01	454.3
1/10/2013	3:00:00 AM	2.02	2.5	0.48	1.01	454.3
1/10/2013	4:00:00 AM	2.02	2.5	0.48	1.01	454.3
1/10/2013	5:00:00 AM	2.03	2.5	0.47	0.98	440.0
1/10/2013	6:00:00 AM	2.03	2.5	0.47	0.98	440.0
1/10/2013	7:00:00 AM	2.03	2.5	0.47	0.98	440.0
1/10/2013	8:00:00 AM	2.03	2.5	0.47	0.98	440.0
1/10/2013	9:00:00 AM	2.03	2.5	0.47	0.98	440.0
1/10/2013	10:00:00 AM	2.03	2.5	0.47	0.98	440.0
1/10/2013	11:00:00 AM	2.03	2.5	0.47	0.98	440.0
1/10/2013	12:00:00 PM	2.03	2.5	0.47	0.98	440.0
1/10/2013	1:00:00 PM	2.03	2.5	0.47	0.98	440.0
1/10/2013	2:00:00 PM	2.03	2.5	0.47	0.98	440.0

1/10/2013	3:00:00 PM	2.03	2.5	0.47	0.98	440.0
1/10/2013	4:00:00 PM	2.03	2.5	0.47	0.98	440.0
1/10/2013	5:00:00 PM	2.03	2.5	0.47	0.98	440.0
1/10/2013	6:00:00 PM	2.03	2.5	0.47	0.98	440.0
1/10/2013	7:00:00 PM	2.03	2.5	0.47	0.98	440.0
1/10/2013	8:00:00 PM	2.02	2.5	0.48	1.01	454.3
1/10/2013	9:00:00 PM	2.02	2.5	0.48	1.01	454.3
1/10/2013	10:00:00 PM	2.02	2.5	0.48	1.01	454.3
1/10/2013	11:00:00 PM	2.02	2.5	0.48	1.01	454.3
1/11/2013	12:00:00 AM	2.01	2.5	0.49	1.04	468.6
1/11/2013	1:00:00 AM	2.02	2.5	0.48	1.01	454.3
1/11/2013	2:00:00 AM	2.01	2.5	0.49	1.04	468.6
1/11/2013	3:00:00 AM	2.01	2.5	0.49	1.04	468.6
1/11/2013	4:00:00 AM	2.02	2.5	0.48	1.01	454.3
1/11/2013	5:00:00 AM	2.0	2.5	0.50	1.08	483.2
1/11/2013	6:00:00 AM	1.99	2.5	0.51	1.11	497.8
1/11/2013	7:00:00 AM	1.99	2.5	0.51	1.11	497.8
1/11/2013	8:00:00 AM	2.0	2.5	0.50	1.08	483.2
1/11/2013	9:00:00 AM	1.99	2.5	0.51	1.11	497.8
1/11/2013	10:00:00 AM	2.0	2.5	0.50	1.08	483.2
1/11/2013	11:00:00 AM	2.0	2.5	0.50	1.08	483.2
1/11/2013	12:00:00 PM	2.0	2.5	0.50	1.08	483.2
1/11/2013	1:00:00 PM	2.0	2.5	0.50	1.08	483.2
1/11/2013	2:00:00 PM	2.0	2.5	0.50	1.08	483.2
1/11/2013	3:00:00 PM	2.01	2.5	0.49	1.04	468.6
1/11/2013	4:00:00 PM	2.01	2.5	0.49	1.04	468.6
1/11/2013	5:00:00 PM	2.01	2.5	0.49	1.04	468.6
1/11/2013	6:00:00 PM	2.01	2.5	0.49	1.04	468.6
1/11/2013	7:00:00 PM	2.01	2.5	0.49	1.04	468.6
1/11/2013	8:00:00 PM	2.01	2.5	0.49	1.04	468.6
1/11/2013	9:00:00 PM	2.01	2.5	0.49	1.04	468.6
1/11/2013	10:00:00 PM	2.02	2.5	0.48	1.01	454.3
1/11/2013	11:00:00 PM	2.01	2.5	0.49	1.04	468.6
1/12/2013	12:00:00 AM	2.02	2.5	0.48	1.01	454.3
1/12/2013	1:00:00 AM	2.01	2.5	0.49	1.04	468.6
1/12/2013	2:00:00 AM	2.01	2.5	0.49	1.04	468.6
1/12/2013	3:00:00 AM	2.02	2.5	0.48	1.01	454.3
1/12/2013	4:00:00 AM	2.02	2.5	0.48	1.01	454.3
1/12/2013	5:00:00 AM	2.02	2.5	0.48	1.01	454.3
1/12/2013	6:00:00 AM	2.02	2.5	0.48	1.01	454.3
1/12/2013	7:00:00 AM	2.02	2.5	0.48	1.01	454.3
1/12/2013	8:00:00 AM	2.02	2.5	0.48	1.01	454.3
1/12/2013	9:00:00 AM	2.02	2.5	0.48	1.01	454.3
1/12/2013	10:00:00 AM	2.02	2.5	0.48	1.01	454.3
1/12/2013	11:00:00 AM	2.02	2.5	0.48	1.01	454.3
1/12/2013	12:00:00 PM	2.02	2.5	0.48	1.01	454.3
1/12/2013	1:00:00 PM	2.02	2.5	0.48	1.01	454.3

1/12/2013	2:00:00 PM	2.02	2.5	0.48	1.01	454.3
1/12/2013	3:00:00 PM	2.02	2.5	0.48	1.01	454.3
1/12/2013	4:00:00 PM	2.02	2.5	0.48	1.01	454.3
1/12/2013	5:00:00 PM	2.02	2.5	0.48	1.01	454.3
1/12/2013	6:00:00 PM	2.02	2.5	0.48	1.01	454.3
1/12/2013	7:00:00 PM	2.02	2.5	0.48	1.01	454.3
1/12/2013	8:00:00 PM	2.02	2.5	0.48	1.01	454.3
1/12/2013	9:00:00 PM	2.02	2.5	0.48	1.01	454.3
1/12/2013	10:00:00 PM	2.02	2.5	0.48	1.01	454.3
1/12/2013	11:00:00 PM	2.02	2.5	0.48	1.01	454.3
1/13/2013	12:00:00 AM	2.02	2.5	0.48	1.01	454.3
1/13/2013	1:00:00 AM	2.02	2.5	0.48	1.01	454.3
1/13/2013	2:00:00 AM	2.02	2.5	0.48	1.01	454.3
1/13/2013	3:00:00 AM	2.03	2.5	0.47	0.98	440.0
1/13/2013	4:00:00 AM	2.02	2.5	0.48	1.01	454.3
1/13/2013	5:00:00 AM	2.03	2.5	0.47	0.98	440.0
1/13/2013	6:00:00 AM	2.02	2.5	0.48	1.01	454.3
1/13/2013	7:00:00 AM	2.03	2.5	0.47	0.98	440.0
1/13/2013	8:00:00 AM	2.03	2.5	0.47	0.98	440.0
1/13/2013	9:00:00 AM	2.02	2.5	0.48	1.01	454.3
1/13/2013	10:00:00 AM	2.03	2.5	0.47	0.98	440.0
1/13/2013	11:00:00 AM	2.03	2.5	0.47	0.98	440.0
1/13/2013	12:00:00 PM	2.03	2.5	0.47	0.98	440.0
1/13/2013	1:00:00 PM	2.02	2.5	0.48	1.01	454.3
1/13/2013	2:00:00 PM	2.02	2.5	0.48	1.01	454.3
1/13/2013	3:00:00 PM	2.03	2.5	0.47	0.98	440.0
1/13/2013	4:00:00 PM	2.02	2.5	0.48	1.01	454.3
1/13/2013	5:00:00 PM	2.02	2.5	0.48	1.01	454.3
1/13/2013	6:00:00 PM	2.02	2.5	0.48	1.01	454.3
1/13/2013	7:00:00 PM	2.02	2.5	0.48	1.01	454.3
1/13/2013	8:00:00 PM	2.02	2.5	0.48	1.01	454.3
1/13/2013	9:00:00 PM	2.02	2.5	0.48	1.01	454.3
1/13/2013	10:00:00 PM	2.02	2.5	0.48	1.01	454.3
1/13/2013	11:00:00 PM	2.02	2.5	0.48	1.01	454.3
1/14/2013	12:00:00 AM	2.02	2.5	0.48	1.01	454.3
1/14/2013	1:00:00 AM	2.02	2.5	0.48	1.01	454.3
1/14/2013	2:00:00 AM	2.02	2.5	0.48	1.01	454.3
1/14/2013	3:00:00 AM	2.02	2.5	0.48	1.01	454.3
1/14/2013	4:00:00 AM	2.02	2.5	0.48	1.01	454.3
1/14/2013	5:00:00 AM	2.02	2.5	0.48	1.01	454.3
1/14/2013	6:00:00 AM	2.03	2.5	0.47	0.98	440.0
1/14/2013	7:00:00 AM	2.03	2.5	0.47	0.98	440.0
1/14/2013	8:00:00 AM	2.03	2.5	0.47	0.98	440.0
1/14/2013	9:00:00 AM	2.03	2.5	0.47	0.98	440.0
1/14/2013	10:00:00 AM	2.03	2.5	0.47	0.98	440.0
1/14/2013	11:00:00 AM	2.03	2.5	0.47	0.98	440.0
1/14/2013	12:00:00 PM	2.03	2.5	0.47	0.98	440.0

1/14/2013	1:00:00 PM	2.03	2.5	0.47	0.98	440.0
1/14/2013	2:00:00 PM	2.03	2.5	0.47	0.98	440.0
1/14/2013	3:00:00 PM	2.03	2.5	0.47	0.98	440.0
1/14/2013	4:00:00 PM	2.03	2.5	0.47	0.98	440.0
1/14/2013	5:00:00 PM	2.02	2.5	0.48	1.01	454.3
1/14/2013	6:00:00 PM	2.02	2.5	0.48	1.01	454.3
1/14/2013	7:00:00 PM	2.02	2.5	0.48	1.01	454.3
1/14/2013	8:00:00 PM	2.02	2.5	0.48	1.01	454.3
1/14/2013	9:00:00 PM	2.02	2.5	0.48	1.01	454.3
1/14/2013	10:00:00 PM	2.02	2.5	0.48	1.01	454.3
1/14/2013	11:00:00 PM	2.03	2.5	0.47	0.98	440.0
1/15/2013	12:00:00 AM	2.03	2.5	0.47	0.98	440.0
1/15/2013	1:00:00 AM	2.03	2.5	0.47	0.98	440.0
1/15/2013	2:00:00 AM	2.03	2.5	0.47	0.98	440.0
1/15/2013	3:00:00 AM	2.03	2.5	0.47	0.98	440.0
1/15/2013	4:00:00 AM	2.03	2.5	0.47	0.98	440.0
1/15/2013	5:00:00 AM	2.04	2.5	0.46	0.95	426.0
1/15/2013	6:00:00 AM	2.03	2.5	0.47	0.98	440.0
1/15/2013	7:00:00 AM	2.04	2.5	0.46	0.95	426.0
1/15/2013	8:00:00 AM	2.04	2.5	0.46	0.95	426.0
1/15/2013	9:00:00 AM	2.04	2.5	0.46	0.95	426.0
1/15/2013	10:00:00 AM	2.04	2.5	0.46	0.95	426.0
1/15/2013	11:00:00 AM	2.04	2.5	0.46	0.95	426.0
1/15/2013	12:00:00 PM	2.04	2.5	0.46	0.95	426.0
1/15/2013	1:00:00 PM	2.04	2.5	0.46	0.95	426.0
1/15/2013	2:00:00 PM	2.04	2.5	0.46	0.95	426.0
1/15/2013	3:00:00 PM	2.04	2.5	0.46	0.95	426.0
1/15/2013	4:00:00 PM	2.04	2.5	0.46	0.95	426.0
1/15/2013	5:00:00 PM	2.04	2.5	0.46	0.95	426.0
1/15/2013	6:00:00 PM	2.04	2.5	0.46	0.95	426.0
1/15/2013	7:00:00 PM	2.04	2.5	0.46	0.95	426.0
1/15/2013	8:00:00 PM	2.03	2.5	0.47	0.98	440.0
1/15/2013	9:00:00 PM	2.03	2.5	0.47	0.98	440.0
1/15/2013	10:00:00 PM	2.02	2.5	0.48	1.01	454.3
1/15/2013	11:00:00 PM	2.03	2.5	0.47	0.98	440.0
1/16/2013	12:00:00 AM	2.02	2.5	0.48	1.01	454.3
1/16/2013	1:00:00 AM	2.03	2.5	0.47	0.98	440.0
1/16/2013	2:00:00 AM	2.03	2.5	0.47	0.98	440.0
1/16/2013	3:00:00 AM	2.03	2.5	0.47	0.98	440.0
1/16/2013	4:00:00 AM	2.03	2.5	0.47	0.98	440.0
1/16/2013	5:00:00 AM	2.03	2.5	0.47	0.98	440.0
1/16/2013	6:00:00 AM	2.03	2.5	0.47	0.98	440.0
1/16/2013	7:00:00 AM	2.03	2.5	0.47	0.98	440.0
1/16/2013	8:00:00 AM	2.03	2.5	0.47	0.98	440.0
1/16/2013	9:00:00 AM	2.03	2.5	0.47	0.98	440.0
1/16/2013	10:00:00 AM	2.03	2.5	0.47	0.98	440.0
1/16/2013	11:00:00 AM	2.03	2.5	0.47	0.98	440.0

1/16/2013	12:00:00 PM	2.03	2.5	0.47	0.98	440.0
1/16/2013	1:00:00 PM	2.03	2.5	0.47	0.98	440.0
1/16/2013	2:00:00 PM	2.03	2.5	0.47	0.98	440.0
1/16/2013	3:00:00 PM	2.03	2.5	0.47	0.98	440.0
1/16/2013	4:00:00 PM	2.03	2.5	0.47	0.98	440.0
1/16/2013	5:00:00 PM	2.03	2.5	0.47	0.98	440.0
1/16/2013	6:00:00 PM	2.02	2.5	0.48	1.01	454.3
1/16/2013	7:00:00 PM	2.02	2.5	0.48	1.01	454.3
1/16/2013	8:00:00 PM	2.02	2.5	0.48	1.01	454.3
1/16/2013	9:00:00 PM	2.02	2.5	0.48	1.01	454.3
1/16/2013	10:00:00 PM	2.02	2.5	0.48	1.01	454.3
1/16/2013	11:00:00 PM	2.02	2.5	0.48	1.01	454.3
1/17/2013	12:00:00 AM	2.02	2.5	0.48	1.01	454.3
1/17/2013	1:00:00 AM	2.02	2.5	0.48	1.01	454.3
1/17/2013	2:00:00 AM	2.02	2.5	0.48	1.01	454.3
1/17/2013	3:00:00 AM	2.02	2.5	0.48	1.01	454.3
1/17/2013	4:00:00 AM	2.02	2.5	0.48	1.01	454.3
1/17/2013	5:00:00 AM	2.02	2.5	0.48	1.01	454.3
1/17/2013	6:00:00 AM	2.02	2.5	0.48	1.01	454.3
1/17/2013	7:00:00 AM	2.02	2.5	0.48	1.01	454.3
1/17/2013	8:00:00 AM	2.02	2.5	0.48	1.01	454.3
1/17/2013	9:00:00 AM	2.02	2.5	0.48	1.01	454.3
1/17/2013	10:00:00 AM	2.03	2.5	0.47	0.98	440.0
1/17/2013	11:00:00 AM	2.03	2.5	0.47	0.98	440.0
1/17/2013	12:00:00 PM	2.03	2.5	0.47	0.98	440.0
1/17/2013	1:00:00 PM	2.03	2.5	0.47	0.98	440.0
1/17/2013	2:00:00 PM	2.03	2.5	0.47	0.98	440.0
1/17/2013	3:00:00 PM	2.03	2.5	0.47	0.98	440.0
1/17/2013	4:00:00 PM	2.03	2.5	0.47	0.98	440.0
1/17/2013	5:00:00 PM	2.03	2.5	0.47	0.98	440.0
1/17/2013	6:00:00 PM	2.03	2.5	0.47	0.98	440.0
1/17/2013	7:00:00 PM	2.02	2.5	0.48	1.01	454.3
1/17/2013	8:00:00 PM	2.02	2.5	0.48	1.01	454.3
1/17/2013	9:00:00 PM	2.02	2.5	0.48	1.01	454.3
1/17/2013	10:00:00 PM	2.02	2.5	0.48	1.01	454.3
1/17/2013	11:00:00 PM	2.02	2.5	0.48	1.01	454.3
1/18/2013	12:00:00 AM	2.02	2.5	0.48	1.01	454.3
1/18/2013	1:00:00 AM	2.02	2.5	0.48	1.01	454.3
1/18/2013	2:00:00 AM	2.02	2.5	0.48	1.01	454.3
1/18/2013	3:00:00 AM	2.03	2.5	0.47	0.98	440.0
1/18/2013	4:00:00 AM	2.02	2.5	0.48	1.01	454.3
1/18/2013	5:00:00 AM	2.02	2.5	0.48	1.01	454.3
1/18/2013	6:00:00 AM	2.02	2.5	0.48	1.01	454.3
1/18/2013	7:00:00 AM	2.02	2.5	0.48	1.01	454.3
1/18/2013	8:00:00 AM	2.02	2.5	0.48	1.01	454.3
1/18/2013	9:00:00 AM	2.02	2.5	0.48	1.01	454.3
1/18/2013	10:00:00 AM	2.02	2.5	0.48	1.01	454.3

1/18/2013	11:00:00 AM	2.03	2.5	0.47	0.98	440.0
1/18/2013	12:00:00 PM	2.03	2.5	0.47	0.98	440.0
1/18/2013	1:00:00 PM	2.03	2.5	0.47	0.98	440.0
1/18/2013	2:00:00 PM	2.03	2.5	0.47	0.98	440.0
1/18/2013	3:00:00 PM	2.03	2.5	0.47	0.98	440.0
1/18/2013	4:00:00 PM	2.03	2.5	0.47	0.98	440.0
1/18/2013	5:00:00 PM	2.03	2.5	0.47	0.98	440.0
1/18/2013	6:00:00 PM	2.03	2.5	0.47	0.98	440.0
1/18/2013	7:00:00 PM	2.02	2.5	0.48	1.01	454.3
1/18/2013	8:00:00 PM	2.02	2.5	0.48	1.01	454.3
1/18/2013	9:00:00 PM	2.02	2.5	0.48	1.01	454.3
1/18/2013	10:00:00 PM	1.97	2.5	0.53	1.18	527.6
1/18/2013	11:00:00 PM	2.02	2.5	0.48	1.01	454.3
1/19/2013	12:00:00 AM	2.02	2.5	0.48	1.01	454.3
1/19/2013	1:00:00 AM	2.02	2.5	0.48	1.01	454.3
1/19/2013	2:00:00 AM	2.02	2.5	0.48	1.01	454.3
1/19/2013	3:00:00 AM	2.02	2.5	0.48	1.01	454.3
1/19/2013	4:00:00 AM	2.02	2.5	0.48	1.01	454.3
1/19/2013	5:00:00 AM	2.02	2.5	0.48	1.01	454.3
1/19/2013	6:00:00 AM	2.02	2.5	0.48	1.01	454.3
1/19/2013	7:00:00 AM	2.02	2.5	0.48	1.01	454.3
1/19/2013	8:00:00 AM	2.02	2.5	0.48	1.01	454.3
1/19/2013	9:00:00 AM	2.02	2.5	0.48	1.01	454.3
1/19/2013	10:00:00 AM	2.03	2.5	0.47	0.98	440.0
1/19/2013	11:00:00 AM	2.03	2.5	0.47	0.98	440.0
1/19/2013	12:00:00 PM	2.03	2.5	0.47	0.98	440.0
1/19/2013	1:00:00 PM	2.04	2.5	0.46	0.95	426.0
1/19/2013	2:00:00 PM	2.04	2.5	0.46	0.95	426.0
1/19/2013	3:00:00 PM	2.04	2.5	0.46	0.95	426.0
1/19/2013	4:00:00 PM	2.03	2.5	0.47	0.98	440.0
1/19/2013	5:00:00 PM	2.03	2.5	0.47	0.98	440.0
1/19/2013	6:00:00 PM	2.03	2.5	0.47	0.98	440.0
1/19/2013	7:00:00 PM	2.02	2.5	0.48	1.01	454.3
1/19/2013	8:00:00 PM	2.02	2.5	0.48	1.01	454.3
1/19/2013	9:00:00 PM	2.02	2.5	0.48	1.01	454.3
1/19/2013	10:00:00 PM	2.02	2.5	0.48	1.01	454.3
1/19/2013	11:00:00 PM	2.02	2.5	0.48	1.01	454.3
1/20/2013	12:00:00 AM	2.02	2.5	0.48	1.01	454.3
1/20/2013	1:00:00 AM	2.02	2.5	0.48	1.01	454.3
1/20/2013	2:00:00 AM	2.02	2.5	0.48	1.01	454.3
1/20/2013	3:00:00 AM	2.02	2.5	0.48	1.01	454.3
1/20/2013	4:00:00 AM	2.02	2.5	0.48	1.01	454.3
1/20/2013	5:00:00 AM	2.02	2.5	0.48	1.01	454.3
1/20/2013	6:00:00 AM	2.03	2.5	0.47	0.98	440.0
1/20/2013	7:00:00 AM	2.03	2.5	0.47	0.98	440.0
1/20/2013	8:00:00 AM	2.03	2.5	0.47	0.98	440.0
1/20/2013	9:00:00 AM	2.03	2.5	0.47	0.98	440.0

1/20/2013	10:00:00 AM	2.03	2.5	0.47	0.98	440.0
1/20/2013	11:00:00 AM	2.03	2.5	0.47	0.98	440.0
1/20/2013	12:00:00 PM	2.03	2.5	0.47	0.98	440.0
1/20/2013	1:00:00 PM	2.04	2.5	0.46	0.95	426.0
1/20/2013	2:00:00 PM	2.04	2.5	0.46	0.95	426.0
1/20/2013	3:00:00 PM	2.04	2.5	0.46	0.95	426.0
1/20/2013	4:00:00 PM	2.03	2.5	0.47	0.98	440.0
1/20/2013	5:00:00 PM	2.03	2.5	0.47	0.98	440.0
1/20/2013	6:00:00 PM	2.02	2.5	0.48	1.01	454.3
1/20/2013	7:00:00 PM	2.02	2.5	0.48	1.01	454.3
1/20/2013	8:00:00 PM	2.02	2.5	0.48	1.01	454.3
1/20/2013	9:00:00 PM	2.02	2.5	0.48	1.01	454.3
1/20/2013	10:00:00 PM	2.02	2.5	0.48	1.01	454.3
1/20/2013	11:00:00 PM	2.03	2.5	0.47	0.98	440.0
1/21/2013	12:00:00 AM	2.03	2.5	0.47	0.98	440.0
1/21/2013	1:00:00 AM	2.03	2.5	0.47	0.98	440.0
1/21/2013	2:00:00 AM	2.02	2.5	0.48	1.01	454.3
1/21/2013	3:00:00 AM	2.03	2.5	0.47	0.98	440.0
1/21/2013	4:00:00 AM	2.03	2.5	0.47	0.98	440.0
1/21/2013	5:00:00 AM	2.02	2.5	0.48	1.01	454.3
1/21/2013	6:00:00 AM	2.03	2.5	0.47	0.98	440.0
1/21/2013	7:00:00 AM	2.03	2.5	0.47	0.98	440.0
1/21/2013	8:00:00 AM	2.03	2.5	0.47	0.98	440.0
1/21/2013	9:00:00 AM	2.03	2.5	0.47	0.98	440.0
1/21/2013	10:00:00 AM	2.03	2.5	0.47	0.98	440.0
1/21/2013	11:00:00 AM	2.03	2.5	0.47	0.98	440.0
1/21/2013	12:00:00 PM	2.04	2.5	0.46	0.95	426.0
1/21/2013	1:00:00 PM	2.03	2.5	0.47	0.98	440.0
1/21/2013	2:00:00 PM	2.04	2.5	0.46	0.95	426.0
1/21/2013	3:00:00 PM	2.04	2.5	0.46	0.95	426.0
1/21/2013	4:00:00 PM	2.04	2.5	0.46	0.95	426.0
1/21/2013	5:00:00 PM	2.03	2.5	0.47	0.98	440.0
1/21/2013	6:00:00 PM	2.03	2.5	0.47	0.98	440.0
1/21/2013	7:00:00 PM	2.02	2.5	0.48	1.01	454.3
1/21/2013	8:00:00 PM	2.03	2.5	0.47	0.98	440.0
1/21/2013	9:00:00 PM	2.02	2.5	0.48	1.01	454.3
1/21/2013	10:00:00 PM	2.02	2.5	0.48	1.01	454.3
1/21/2013	11:00:00 PM	2.02	2.5	0.48	1.01	454.3
1/22/2013	12:00:00 AM	2.02	2.5	0.48	1.01	454.3
1/22/2013	1:00:00 AM	2.03	2.5	0.47	0.98	440.0
1/22/2013	2:00:00 AM	2.02	2.5	0.48	1.01	454.3
1/22/2013	3:00:00 AM	2.02	2.5	0.48	1.01	454.3
1/22/2013	4:00:00 AM	2.03	2.5	0.47	0.98	440.0
1/22/2013	5:00:00 AM	2.02	2.5	0.48	1.01	454.3
1/22/2013	6:00:00 AM	2.03	2.5	0.47	0.98	440.0
1/22/2013	7:00:00 AM	2.03	2.5	0.47	0.98	440.0
1/22/2013	8:00:00 AM	2.03	2.5	0.47	0.98	440.0

1/22/2013	9:00:00 AM	2.03	2.5	0.47	0.98	440.0
1/22/2013	10:00:00 AM	2.03	2.5	0.47	0.98	440.0
1/22/2013	11:00:00 AM	2.03	2.5	0.47	0.98	440.0
1/22/2013	12:00:00 PM	2.04	2.5	0.46	0.95	426.0
1/22/2013	1:00:00 PM	2.04	2.5	0.46	0.95	426.0
1/22/2013	2:00:00 PM	2.04	2.5	0.46	0.95	426.0
1/22/2013	3:00:00 PM	2.04	2.5	0.46	0.95	426.0
1/22/2013	4:00:00 PM	2.03	2.5	0.47	0.98	440.0
1/22/2013	5:00:00 PM	2.03	2.5	0.47	0.98	440.0
1/22/2013	6:00:00 PM	2.03	2.5	0.47	0.98	440.0
1/22/2013	7:00:00 PM	2.02	2.5	0.48	1.01	454.3
1/22/2013	8:00:00 PM	2.02	2.5	0.48	1.01	454.3
1/22/2013	9:00:00 PM	2.02	2.5	0.48	1.01	454.3
1/22/2013	10:00:00 PM	2.02	2.5	0.48	1.01	454.3
1/22/2013	11:00:00 PM	2.02	2.5	0.48	1.01	454.3
1/23/2013	12:00:00 AM	2.02	2.5	0.48	1.01	454.3
1/23/2013	1:00:00 AM	2.03	2.5	0.47	0.98	440.0
1/23/2013	2:00:00 AM	2.02	2.5	0.48	1.01	454.3
1/23/2013	3:00:00 AM	2.03	2.5	0.47	0.98	440.0
1/23/2013	4:00:00 AM	2.03	2.5	0.47	0.98	440.0
1/23/2013	5:00:00 AM	2.03	2.5	0.47	0.98	440.0
1/23/2013	6:00:00 AM	2.03	2.5	0.47	0.98	440.0
1/23/2013	7:00:00 AM	2.03	2.5	0.47	0.98	440.0
1/23/2013	8:00:00 AM	2.03	2.5	0.47	0.98	440.0
1/23/2013	9:00:00 AM	2.03	2.5	0.47	0.98	440.0
1/23/2013	10:00:00 AM	2.03	2.5	0.47	0.98	440.0
1/23/2013	11:00:00 AM	2.03	2.5	0.47	0.98	440.0
1/23/2013	12:00:00 PM	2.04	2.5	0.46	0.95	426.0
1/23/2013	1:00:00 PM	2.04	2.5	0.46	0.95	426.0
1/23/2013	2:00:00 PM	2.04	2.5	0.46	0.95	426.0
1/23/2013	3:00:00 PM	2.04	2.5	0.46	0.95	426.0
1/23/2013	4:00:00 PM	2.04	2.5	0.46	0.95	426.0
1/23/2013	5:00:00 PM	2.03	2.5	0.47	0.98	440.0
1/23/2013	6:00:00 PM	2.03	2.5	0.47	0.98	440.0
1/23/2013	7:00:00 PM	2.03	2.5	0.47	0.98	440.0
1/23/2013	8:00:00 PM	2.02	2.5	0.48	1.01	454.3
1/23/2013	9:00:00 PM	2.02	2.5	0.48	1.01	454.3
1/23/2013	10:00:00 PM	2.02	2.5	0.48	1.01	454.3
1/23/2013	11:00:00 PM	2.02	2.5	0.48	1.01	454.3
1/24/2013	12:00:00 AM	2.02	2.5	0.48	1.01	454.3
1/24/2013	1:00:00 AM	2.02	2.5	0.48	1.01	454.3
1/24/2013	2:00:00 AM	2.03	2.5	0.47	0.98	440.0
1/24/2013	3:00:00 AM	2.03	2.5	0.47	0.98	440.0
1/24/2013	4:00:00 AM	2.02	2.5	0.48	1.01	454.3
1/24/2013	5:00:00 AM	2.03	2.5	0.47	0.98	440.0
1/24/2013	6:00:00 AM	2.03	2.5	0.47	0.98	440.0
1/24/2013	7:00:00 AM	2.03	2.5	0.47	0.98	440.0

1/24/2013	8:00:00 AM	2.03	2.5	0.47	0.98	440.0
1/24/2013	9:00:00 AM	2.04	2.5	0.46	0.95	426.0
1/24/2013	10:00:00 AM	2.03	2.5	0.47	0.98	440.0
1/24/2013	11:00:00 AM	2.03	2.5	0.47	0.98	440.0
1/24/2013	12:00:00 PM	2.04	2.5	0.46	0.95	426.0
1/24/2013	1:00:00 PM	2.03	2.5	0.47	0.98	440.0
1/24/2013	2:00:00 PM	2.04	2.5	0.46	0.95	426.0
1/24/2013	3:00:00 PM	2.03	2.5	0.47	0.98	440.0
1/24/2013	4:00:00 PM	2.03	2.5	0.47	0.98	440.0
1/24/2013	5:00:00 PM	2.03	2.5	0.47	0.98	440.0
1/24/2013	6:00:00 PM	2.03	2.5	0.47	0.98	440.0
1/24/2013	7:00:00 PM	2.03	2.5	0.47	0.98	440.0
1/24/2013	8:00:00 PM	2.02	2.5	0.48	1.01	454.3
1/24/2013	9:00:00 PM	2.03	2.5	0.47	0.98	440.0
1/24/2013	10:00:00 PM	2.03	2.5	0.47	0.98	440.0
1/24/2013	11:00:00 PM	2.03	2.5	0.47	0.98	440.0
1/25/2013	12:00:00 AM	2.02	2.5	0.48	1.01	454.3
1/25/2013	1:00:00 AM	2.02	2.5	0.48	1.01	454.3
1/25/2013	2:00:00 AM	2.02	2.5	0.48	1.01	454.3
1/25/2013	3:00:00 AM	2.02	2.5	0.48	1.01	454.3
1/25/2013	4:00:00 AM	2.02	2.5	0.48	1.01	454.3
1/25/2013	5:00:00 AM	2.02	2.5	0.48	1.01	454.3
1/25/2013	6:00:00 AM	2.03	2.5	0.47	0.98	440.0
1/25/2013	7:00:00 AM	2.03	2.5	0.47	0.98	440.0
1/25/2013	8:00:00 AM	2.03	2.5	0.47	0.98	440.0
1/25/2013	9:00:00 AM	2.02	2.5	0.48	1.01	454.3
1/25/2013	10:00:00 AM	2.03	2.5	0.47	0.98	440.0
1/25/2013	11:00:00 AM	2.02	2.5	0.48	1.01	454.3
1/25/2013	12:00:00 PM	2.02	2.5	0.48	1.01	454.3
1/25/2013	1:00:00 PM	2.02	2.5	0.48	1.01	454.3
1/25/2013	2:00:00 PM	2.02	2.5	0.48	1.01	454.3
1/25/2013	3:00:00 PM	2.02	2.5	0.48	1.01	454.3
1/25/2013	4:00:00 PM	2.02	2.5	0.48	1.01	454.3
1/25/2013	5:00:00 PM	2.02	2.5	0.48	1.01	454.3
1/25/2013	6:00:00 PM	2.02	2.5	0.48	1.01	454.3
1/25/2013	7:00:00 PM	2.02	2.5	0.48	1.01	454.3
1/25/2013	8:00:00 PM	2.02	2.5	0.48	1.01	454.3
1/25/2013	9:00:00 PM	2.02	2.5	0.48	1.01	454.3
1/25/2013	10:00:00 PM	2.02	2.5	0.48	1.01	454.3
1/25/2013	11:00:00 PM	2.02	2.5	0.48	1.01	454.3
1/26/2013	12:00:00 AM	2.02	2.5	0.48	1.01	454.3
1/26/2013	1:00:00 AM	2.02	2.5	0.48	1.01	454.3
1/26/2013	2:00:00 AM	2.02	2.5	0.48	1.01	454.3
1/26/2013	3:00:00 AM	2.02	2.5	0.48	1.01	454.3
1/26/2013	4:00:00 AM	2.03	2.5	0.47	0.98	440.0
1/26/2013	5:00:00 AM	2.02	2.5	0.48	1.01	454.3
1/26/2013	6:00:00 AM	2.03	2.5	0.47	0.98	440.0

1/26/2013	7:00:00 AM	2.02	2.5	0.48	1.01	454.3
1/26/2013	8:00:00 AM	2.02	2.5	0.48	1.01	454.3
1/26/2013	9:00:00 AM	2.02	2.5	0.48	1.01	454.3
1/26/2013	10:00:00 AM	2.01	2.5	0.49	1.04	468.6
1/26/2013	11:00:00 AM	2.0	2.5	0.50	1.08	483.2
1/26/2013	12:00:00 PM	2.0	2.5	0.50	1.08	483.2
1/26/2013	1:00:00 PM	1.99	2.5	0.51	1.11	497.8
1/26/2013	2:00:00 PM	1.98	2.5	0.52	1.14	512.6
1/26/2013	3:00:00 PM	1.97	2.5	0.53	1.18	527.6
1/26/2013	4:00:00 PM	1.95	2.5	0.55	1.24	558.0
1/26/2013	5:00:00 PM	1.94	2.5	0.56	1.28	573.4
1/26/2013	6:00:00 PM	1.92	2.5	0.58	1.35	604.6
1/26/2013	7:00:00 PM	1.9	2.5	0.60	1.42	636.4
1/26/2013	8:00:00 PM	1.89	2.5	0.61	1.45	652.4
1/26/2013	9:00:00 PM	1.89	2.5	0.61	1.45	652.4
1/26/2013	10:00:00 PM	1.89	2.5	0.61	1.45	652.4
1/26/2013	11:00:00 PM	1.88	2.5	0.62	1.49	668.7
1/27/2013	12:00:00 AM	1.89	2.5	0.61	1.45	652.4
1/27/2013	1:00:00 AM	1.89	2.5	0.61	1.45	652.4
1/27/2013	2:00:00 AM	1.9	2.5	0.60	1.42	636.4
1/27/2013	3:00:00 AM	1.91	2.5	0.59	1.38	620.4
1/27/2013	4:00:00 AM	1.92	2.5	0.58	1.35	604.6
1/27/2013	5:00:00 AM	1.93	2.5	0.57	1.31	588.9
1/27/2013	6:00:00 AM	1.94	2.5	0.56	1.28	573.4
1/27/2013	7:00:00 AM	1.95	2.5	0.55	1.24	558.0
1/27/2013	8:00:00 AM	1.96	2.5	0.54	1.21	542.7
1/27/2013	9:00:00 AM	1.96	2.5	0.54	1.21	542.7
1/27/2013	10:00:00 AM	1.98	2.5	0.52	1.14	512.6
1/27/2013	11:00:00 AM	1.98	2.5	0.52	1.14	512.6
1/27/2013	12:00:00 PM	1.98	2.5	0.52	1.14	512.6
1/27/2013	1:00:00 PM	1.98	2.5	0.52	1.14	512.6
1/27/2013	2:00:00 PM	1.99	2.5	0.51	1.11	497.8
1/27/2013	3:00:00 PM	1.99	2.5	0.51	1.11	497.8
1/27/2013	4:00:00 PM	2.0	2.5	0.50	1.08	483.2
1/27/2013	5:00:00 PM	2.0	2.5	0.50	1.08	483.2
1/27/2013	6:00:00 PM	2.0	2.5	0.50	1.08	483.2
1/27/2013	7:00:00 PM	2.0	2.5	0.50	1.08	483.2
1/27/2013	8:00:00 PM	2.0	2.5	0.50	1.08	483.2
1/27/2013	9:00:00 PM	2.01	2.5	0.49	1.04	468.6
1/27/2013	10:00:00 PM	2.01	2.5	0.49	1.04	468.6
1/27/2013	11:00:00 PM	2.01	2.5	0.49	1.04	468.6
1/28/2013	12:00:00 AM	1.99	2.5	0.51	1.11	497.8
1/28/2013	1:00:00 AM	1.99	2.5	0.51	1.11	497.8
1/28/2013	2:00:00 AM	2.0	2.5	0.50	1.08	483.2
1/28/2013	3:00:00 AM	2.0	2.5	0.50	1.08	483.2
1/28/2013	4:00:00 AM	1.99	2.5	0.51	1.11	497.8
1/28/2013	5:00:00 AM	1.98	2.5	0.52	1.14	512.6

1/28/2013	6:00:00 AM	1.97	2.5	0.53	1.18	527.6
1/28/2013	7:00:00 AM	1.97	2.5	0.53	1.18	527.6
1/28/2013	8:00:00 AM	1.96	2.5	0.54	1.21	542.7
1/28/2013	9:00:00 AM	1.96	2.5	0.54	1.21	542.7
1/28/2013	10:00:00 AM	1.96	2.5	0.54	1.21	542.7
1/28/2013	11:00:00 AM	1.96	2.5	0.54	1.21	542.7
1/28/2013	12:00:00 PM	1.96	2.5	0.54	1.21	542.7
1/28/2013	1:00:00 PM	1.96	2.5	0.54	1.21	542.7
1/28/2013	2:00:00 PM	1.97	2.5	0.53	1.18	527.6
1/28/2013	3:00:00 PM	1.97	2.5	0.53	1.18	527.6
1/28/2013	4:00:00 PM	1.97	2.5	0.53	1.18	527.6
1/28/2013	5:00:00 PM	1.97	2.5	0.53	1.18	527.6
1/28/2013	6:00:00 PM	1.97	2.5	0.53	1.18	527.6
1/28/2013	7:00:00 PM	1.98	2.5	0.52	1.14	512.6
1/28/2013	8:00:00 PM	1.98	2.5	0.52	1.14	512.6
1/28/2013	9:00:00 PM	1.99	2.5	0.51	1.11	497.8
1/28/2013	10:00:00 PM	1.98	2.5	0.52	1.14	512.6
1/28/2013	11:00:00 PM	1.99	2.5	0.51	1.11	497.8
1/29/2013	12:00:00 AM	1.99	2.5	0.51	1.11	497.8
1/29/2013	1:00:00 AM	1.99	2.5	0.51	1.11	497.8
1/29/2013	2:00:00 AM	2.0	2.5	0.50	1.08	483.2
1/29/2013	3:00:00 AM	2.0	2.5	0.50	1.08	483.2
1/29/2013	4:00:00 AM	2.0	2.5	0.50	1.08	483.2
1/29/2013	5:00:00 AM	2.0	2.5	0.50	1.08	483.2
1/29/2013	6:00:00 AM	2.0	2.5	0.50	1.08	483.2
1/29/2013	7:00:00 AM	2.01	2.5	0.49	1.04	468.6
1/29/2013	8:00:00 AM	2.01	2.5	0.49	1.04	468.6
1/29/2013	9:00:00 AM	2.01	2.5	0.49	1.04	468.6
1/29/2013	10:00:00 AM	2.01	2.5	0.49	1.04	468.6
1/29/2013	11:00:00 AM	2.02	2.5	0.48	1.01	454.3
1/29/2013	12:00:00 PM	2.02	2.5	0.48	1.01	454.3
1/29/2013	1:00:00 PM	2.0	2.5	0.50	1.08	483.2
1/29/2013	2:00:00 PM	2.01	2.5	0.49	1.04	468.6
1/29/2013	3:00:00 PM	2.01	2.5	0.49	1.04	468.6
1/29/2013	4:00:00 PM	2.02	2.5	0.48	1.01	454.3
1/29/2013	5:00:00 PM	2.02	2.5	0.48	1.01	454.3
1/29/2013	6:00:00 PM	2.02	2.5	0.48	1.01	454.3
1/29/2013	7:00:00 PM	2.02	2.5	0.48	1.01	454.3
1/29/2013	8:00:00 PM	2.01	2.5	0.49	1.04	468.6
1/29/2013	9:00:00 PM	2.02	2.5	0.48	1.01	454.3
1/29/2013	10:00:00 PM	2.02	2.5	0.48	1.01	454.3
1/29/2013	11:00:00 PM	2.01	2.5	0.49	1.04	468.6
1/30/2013	12:00:00 AM	2.02	2.5	0.48	1.01	454.3
1/30/2013	1:00:00 AM	2.02	2.5	0.48	1.01	454.3
1/30/2013	2:00:00 AM	2.03	2.5	0.47	0.98	440.0
1/30/2013	3:00:00 AM	2.02	2.5	0.48	1.01	454.3
1/30/2013	4:00:00 AM	2.02	2.5	0.48	1.01	454.3

1/30/2013	5:00:00 AM	2.02	2.5	0.48	1.01	454.3
1/30/2013	6:00:00 AM	2.02	2.5	0.48	1.01	454.3
1/30/2013	7:00:00 AM	2.02	2.5	0.48	1.01	454.3
1/30/2013	8:00:00 AM	2.03	2.5	0.47	0.98	440.0
1/30/2013	9:00:00 AM	2.03	2.5	0.47	0.98	440.0
1/30/2013	10:00:00 AM	2.03	2.5	0.47	0.98	440.0
1/30/2013	11:00:00 AM	2.03	2.5	0.47	0.98	440.0
1/30/2013	12:00:00 PM	2.03	2.5	0.47	0.98	440.0
1/30/2013	1:00:00 PM	2.03	2.5	0.47	0.98	440.0
1/30/2013	2:00:00 PM	2.03	2.5	0.47	0.98	440.0
1/30/2013	3:00:00 PM	2.03	2.5	0.47	0.98	440.0
1/30/2013	4:00:00 PM	2.02	2.5	0.48	1.01	454.3
1/30/2013	5:00:00 PM	2.02	2.5	0.48	1.01	454.3
1/30/2013	6:00:00 PM	2.02	2.5	0.48	1.01	454.3
1/30/2013	7:00:00 PM	2.02	2.5	0.48	1.01	454.3
1/30/2013	8:00:00 PM	2.02	2.5	0.48	1.01	454.3
1/30/2013	9:00:00 PM	2.02	2.5	0.48	1.01	454.3
1/30/2013	10:00:00 PM	2.02	2.5	0.48	1.01	454.3
1/30/2013	11:00:00 PM	2.02	2.5	0.48	1.01	454.3
1/31/2013	12:00:00 AM	2.02	2.5	0.48	1.01	454.3
1/31/2013	1:00:00 AM	2.02	2.5	0.48	1.01	454.3
1/31/2013	2:00:00 AM	2.02	2.5	0.48	1.01	454.3
1/31/2013	3:00:00 AM	2.02	2.5	0.48	1.01	454.3
1/31/2013	4:00:00 AM	2.02	2.5	0.48	1.01	454.3
1/31/2013	5:00:00 AM	2.02	2.5	0.48	1.01	454.3
1/31/2013	6:00:00 AM	2.02	2.5	0.48	1.01	454.3
1/31/2013	7:00:00 AM	2.02	2.5	0.48	1.01	454.3
1/31/2013	8:00:00 AM	2.02	2.5	0.48	1.01	454.3
1/31/2013	9:00:00 AM	2.02	2.5	0.48	1.01	454.3
1/31/2013	10:00:00 AM	2.02	2.5	0.48	1.01	454.3
1/31/2013	11:00:00 AM	2.02	2.5	0.48	1.01	454.3
1/31/2013	12:00:00 PM	2.02	2.5	0.48	1.01	454.3
1/31/2013	1:00:00 PM	2.02	2.5	0.48	1.01	454.3
1/31/2013	2:00:00 PM	2.02	2.5	0.48	1.01	454.3
1/31/2013	3:00:00 PM	2.02	2.5	0.48	1.01	454.3
1/31/2013	4:00:00 PM	2.02	2.5	0.48	1.01	454.3
1/31/2013	5:00:00 PM	2.02	2.5	0.48	1.01	454.3
1/31/2013	6:00:00 PM	2.02	2.5	0.48	1.01	454.3
1/31/2013	7:00:00 PM	2.03	2.5	0.47	0.98	440.0
1/31/2013	8:00:00 PM	2.03	2.5	0.47	0.98	440.0
1/31/2013	9:00:00 PM	2.02	2.5	0.48	1.01	454.3
1/31/2013	10:00:00 PM	2.03	2.5	0.47	0.98	440.0
1/31/2013	11:00:00 PM	2.03	2.5	0.47	0.98	440.0

Appendix L

Technical Standard Operating Procedure – Collection of Cross-Channel Surface Water Samples

TABLE OF CONTENTS

1.0 PURPOSE ..... Page 2

2.0 SCOPE ..... Page 2

3.0 REQUIREMENTS ..... Page 2

3.1 Health and Safety ..... Page 2

4.0 REFERENCES ..... Page 2

5.0 DEFINITIONS ..... Page 3

6.0 RESPONSIBILITIES ..... Page 3

7.0 EQUIPMENT ..... Page 3

8.0 PROCEDURE ..... Page 3

8.1 General Procedures for Collection of Cross-Channel Water Samples ..... Page 3

8.2 Collection of Independent Samples in each Compartment ..... Page 4

8.3 Collection of a Composite Sample ..... Page 5

8.4 Dividing a Sample to Individual Analyte Bottles ..... Page 6

9.0 DOCUMENTATION/VERIFICATION ..... Page 6

Figure 1 ..... Page 7

1.0 PURPOSE

This standard operating procedure (SOP) describes the requirements and process for collecting surface water samples from multiple locations across the channel of a wadeable stream. Collecting multiple samples along a transect perpendicular to the stream flow will provide information on the homogeneity of water chemistry across the channel (if samples are analyzed independently) or will provide a representative sample of stream water chemistry (if individual samples are composited before analysis). This procedure can be used wherever it is possible to wade completely across the channel. Where the water is too deep for wading, these procedures maybe modified to be used from a stable boat. Samples collected using this method may be analyzed on-site or transported to a laboratory. Proper preservation techniques may vary depending on the target analytes. Site-specific deviations from this SOP must be approved by the AECI Project Manager or the Client Project Manager prior to initiation of the sampling activity.

2.0 SCOPE

Surface water sampling is applicable to most study sites with surface drainages directly on the site or that are located hydraulically downgradient from such drainages.

3.0 REQUIREMENTS

Factors that may affect the ability to collect cross-channel samples include channel width, water depth, water velocity, channel bed stability and composition of the substrata. For successful completion of this procedure, a site must be safely accessible by sampling personnel access to the entire width of the stream channel must be possible. Ultra clean methods shall be followed for sampling activities.

3.1 Health and Safety

Stream substrata, or bed material, can be highly variable, even within a small stream section, and may pose a risk to those working in the stream. Large rocks with significant algal growth can be slick and those pose a fall risk. Rocks and sand can shift when weight is applied to them. Sharp rocks, sticks and artificial debris (broken bottles, metals, barbed wire) can puncture boots and skin. Before wading into a new area of the stream, examine the area visually, if possible, and use one foot to gently probe and stream bottom for suitable footing. If necessary, use a wading staff for stability.

PPE: Waders, nitrile or similar gloves.

Operational or safety issues associated with this procedure shall be reported to the on-site supervisor, AECI Project Manager, SH&E Coordinator, or their designees for resolution. Employees and contractors are required to stop work when they believe work conditions are unsafe.

4.0 REFERENCES

USGS. 1999. *National Field Manual for the Collection of Water-Quality Data, Chapter A4. Collection of Water Samples*.

USEPA. *Water: Monitoring and Assessment*. Chapter 5 Water Quality Conditions. (website)

USEPA. 1999. Rapid *Bioassessment Protocols for use in Wadeable Streams and Rivers*. EPA 841-B-99-002.

USEPA. 1996. *Sampling Ambient Water for Trace Metals at EPA Water Quality Criteria Levels.* EPA Method 1669. Office of Water, Engineering and Analysis Division, Washington, DC.
USGS. 1985. *Study and Interpretation of the Chemical Characteristics of Natural Water*. USGS Water Supply Paper 2254.

5.0 DEFINITIONS

Environmental Sample – Low concentration sample typically collected offsite and not requiring DOT hazardous waste labeling as a high hazard sample.

Clean Hands – All operations involving contact with the sample bottle and transfer of the sample from the sample collection device to the sample bottle are handled by the individual designated as "clean hands."

Dirty Hands – All operations involving preparation of the sampler (except the sample container itself), operation of any machinery and all other activities that do not involve direct contact with the sample, shall be performed by the individual designated as "dirty hands."

6.0 RESPONSIBILITIES

Project Manager

The Project Manager (PM) is responsible for the selection of the appropriate methodology, technique and field procedure for conducting the sampling.

Field Project Leader

The Field Project Leader (FPL) may be an AECI employee or contractor who is responsible for overseeing the sampling activities. The FPL is also responsible for making on-site decisions as to slight shifts in the cross-channel sampling location in order to ensure a safe working environment and that representative samples will be collected. The FPL provides oversight for all work performed and verification that the activity satisfies the requirements of this SOP and the Project Plan.

7.0 EQUIPMENT

1. Sampling bottles (certified clean and pre-treated with preservatives, if necessary)
2. Large (~2 L to 5 gallon) mixing bottles (e.g., a clean cubitainer)
3. Decontamination equipment and supplies
4. Nitrile gloves
5. Shoulder-length gloves
6. Peristaltic sump, clean tubing and 0.45 µm inline filters, or
7. 60 cc syringes and 0.45 µm syringe filters
8. Labels
9. Sharpies® or other indelible markers
10. 100-foot tape measure or rope with accurately-marked intervals
11. ≥ 3 foot rebar or wooden stakes
12. Orange plastic flagging
13. Hammer

8.0 PROCEDURE

8.1 General Procedures for Collection of Cross-Channel Water Samples

- Determine whether the multiple samples collected across the channel will be composited into a single sample, or analyzed independently. If the latter, then sufficient volume must be collected at each site for all analyses.
- Acquire the necessary number and type of sample containers for all samples. A "sample" (composite or multiple individual samples) will consist of five (5) bottles, including two 250-mL acidified (to ≤ 2 pH with nitric acid) high density polyethylene (HDPE) bottles (one non-filtered for total metals and hardness analysis, and one filtered (0.45 µm) for dissolved metals analysis), one 250-mL HPDE bottle with NaOH (for cyanide analysis), one 250-mL HDPE bottle (unpreserved) for salinity, and one 500-mL HDPE bottle (unpreserved) for the remaining inorganic analyses.
- Upon arrival at the site, one member of the sampling shall be designated as "dirty hands" and a second member shall be designated as "clean hands."
- The cross-channel samples shall follow the general USGS procedure of equal-width-increment (EWI) sampling. Each stream section to be sampled will be of approximately equal width.
- If samples are to be collected at multiple transects, begin work at the furthest downstream location.
- Select the sampling transect location. One person shall stand at the edge of one bank of the stream holding the tape or rope and a second person shall carry the end of the tape or rope across the stream. As much as possible, minimize disturbance of the stream bottom and limit the area of travel to a narrow corridor. Samples shall always be collected upstream of the disturbed area.
- With the tape or rope as taut as possible, secure the tape/rope to stakes on each bank.
- Determine the number of sampling compartments (sections). See Figure 1 of this SOP and follow this general guidance:
    - Small stream (≤25 ft in width): 4-6 compartments
    - Intermediate stream (>25 – 50 ft in width): 6-12 compartments
    - Large stream (>50 ft in width): ≥ 12 compartments
- Stream features should also be used in determining the number of compartments. IT may be appropriate to place different features (pools, runs, ripples, eddies) into separate compartments. A seemingly homogenous reach (e.g., a consistent run) will probably require fewer compartments.
- Using the hammer, drive a stake into the stream bed marking the center of the compartment. Tie an orange flag at the top of each stake to make them more visible.

8.2 Collection of Independent Samples in each Compartment

- One of the unpreserved sample bottles may be used to collect water from the stream at each staked location, or a separate container may be used. As 1500 mL are needed for all analyses, a 2 L collection bottle would be adequate for collecting the individual compartment samples (new bottle for each compartment).
- Don clean gloves. Nitrile gloves are acceptable, however, for deeper water wear clean, shoulder-length gloves.
- Approach the location from the downstream side. Once in position, wait approximately 30 seconds (or longer if needed) for any disturbed fine sediment to be carried downstream.

- At the midpoint of the compartment, where the stake is located, rinse the bottle three times with stream water. Just upstream of the stake, place the sampling bottle into the water, gently lowering it through the water column. The mouth of the bottle should be facing generally upstream, but the bottle should be angled upward at ~20-45° to allow air to escape as the bottle fills. Do not touch the bottom of the stream, as that may disturb sediment. Raise the bottle slowly back up through the water column. The bottle should be full when it is lifted from the water.
- Securely replace the bottle cap and hand the filled bottle to another staff member (or place it on a rock or other location where it will not be carried downstream). Each bottle should be appropriately marked with the correct compartment number.
- Go to the next compartment, again approaching from the downstream side, and repeat the collection process.
- Divide the sample into the appropriate preserved and unpreserved bottles (see Section 8.4 of this SOP).

8.3 Collection of a Composite Sample

- Before collecting samples for analysis, determine in which compartment a sample bottle will fill the fastest when lowered and raised through the water column (e.g., 1 minute, 30 seconds, etc.). This will be the Transit time. Use this same Transit time at all compartments, even if a bottle is not completely filled when brought back to the surface.
- As 1500 mL are needed for all analyses, a 1 L collection bottle should be adequate for collecting the individual compartment samples, which will be mixed as a composite sample before being subdivided for analyses. Use a new bottle for each compartment.
- Don clean gloves. Nitrile gloves are acceptable, however, for deeper water wear clean, shoulder-length gloves.
- Approach the location from the downstream side. Once in position, wait approximately 30 seconds (or longer if needed) for any disturbed fine sediment to be carried downstream.
- At the midpoint of the compartment, where the stake is located, rinse the bottle three times with stream water. Just upstream of the stake, gently lower and raise the sampling bottle into the water within the pre-determined Transit time. The mouth of the bottle should be facing generally upstream, but the bottle should be angled upward at ~20-45° to allow air to escape as the bottle fills. Do not touch the bottom of the stream, as that may disturb sediment. The bottle may not be completely full when it is lifted from the water.
- Securely replace the bottle cap and hand the filled bottle to another staff member (or place it on a rock or other location where it will not be carried downstream). Each bottle should be appropriately marked with the correct compartment number.
- Go to the next compartment, again approaching from the downstream side, and repeat the collection process.

- When all compartment samples have been collected, mix each by vigorously inverting them no less than three times, and immediately emptying them into the large mixing bottle. Make sure the mixing bottle is large enough to contain the water collected.
- Cap the mixing bottle and homogenize the composite sample by vigorously and repeatedly swirling and inverting the bottle for no less than one minute.
- Divide the sample into the appropriate preserved and unpreserved bottles (see Section 8.4 of this SOP). Some sample may remain in the mixing bottle.

8.4 Dividing a Sample to Individual Analyte Bottles

- Fill all containers, <u>except</u> the one for dissolved metals, with the raw water sample, either the individual compartment samples, or the composite.
- <u>Do not</u> overfill the bottles that already contain preservative.
- For the dissolved metals sample, filter 250 mL of the raw water sample using a 1) peristaltic pump equipped with new, disposable tubing and a new, 0.45 µm filter, or 2) new, 60 cc syringe and 0.45 µm filter syringes.
- If using a pump, tubing and filter, place the intake tube into the raw sample and the outlet tube into the 250 mL sample bottle with preservative. Activate the pump and filter enough water to fill the sample bottle, without overfilling.
- If using a syringe and syringe filters, draw approximately 60 cc of the raw water sample into the syringe <u>before</u> the filter is attached. Attach the filter and depress the plunger while holding the syringe filter outlet over the preserved sample bottle. It may be necessary to stop and replace the filter if the raw water contains a high level of solids.
- Make sure all sample bottles are securely capped and labeled.

9.0 DOCUMENTATION/VERIFICATION

A record of field activities, including the number and type of samples collected, shall be recorded on field data sheets or in a field log. The log shall be reviewed by the FPL to verify the accuracy of the data.
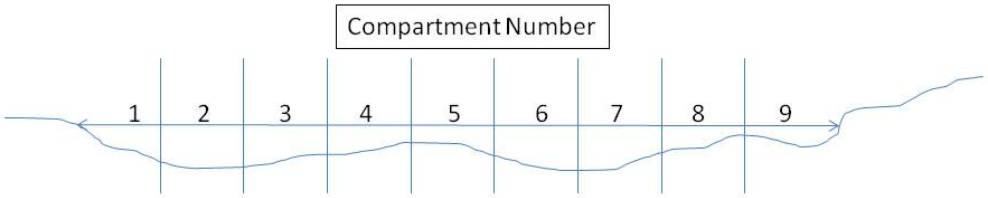
Figure 1. Example of the general placement of the cross-channel sampling compartments for the equal-width-increment (EWI) sampling procedure.