1290068

Rico Surface Water Sampling
Supplemental Surface Water Quality Monitoring
Rico, Colorado
Data Summary Report

Prepared for:
Atlantic Richfield Company
4 Centerpointe Drive
La Palma, CA 90623

Prepared by:

ANDERSON
ENGINEERING COMPANY INC.

977 West 2100 South
Salt Lake City, UT 84119
(801) 972-6222

July 2012

Table of Contents

1.0 Introduction 2
2.0 Field Sampling 2
2.1 Sampling Frequency 2
2.2 Water Quality and Flow Measurement Sampling Locations 2
2.3 Sampling Station Descriptions 4
3.0 Sampling and Analysis Parameters and Methods 5
4.0 Flow Measurement Methods 8
5.0 Analytical Results 9
6.0 Quality Control 9
6.1 Field QC 9
6.2 Laboratory QC 10

List of Figures

Figure 1 St. Louis Ponds Sampling Locations
Figure 1a Sampling Locations South of Rico
Figure 2 Locations of Monitoring Wells
Figure 3 Dolores River Cross Section at Sampling Station DR-1
Figure 4 Pond 8 Embankment Cross Section at Sampling Station DR-5
Figure 5 Dolores River Cross Section at Sampling Station DR-2
Figure 6 Dolores River Cross Section at Sampling Station DR-7
Figure 7 Dolores River Cross Section at Sampling Station DR-4-SW
Figure 8 Dolores River Cross Section at Sampling Station DR-G

List of Tables

Table 1 Sampling Location Summary
Table 2 Analytical Procedures Summary
Table 3 Sampling Field Data and Station Information Summary
Table 4A Surface Water Sampling Analytical Sampling Results Summary
Table 4B Groundwater Sampling Analytical Sampling Results Summary
Table 5 Duplicate of DR-3, Relative Percent Difference (RPD)

List of Appendices

Appendix A Sampling Location Maps
Appendix B Data Tables
Appendix C Project Narrative and Laboratory Analytical Reports
Appendix D Laboratory QC Results
Appendix E Flow Cross Sections
Appendix F Chain of Custody Records
Appendix G Field Photos
Appendix H Field Log Book Records
Appendix I North Flume OTT PLS Transducer Data with Flowrates
Appendix J South Flume OTT Orpheus Mini Data with Flowrates

Rico, Colorado
Surface Water Sampling Report
July 2012 Sampling Event

1.0 Introduction

In accordance with the Rico Sampling and Analysis Plan for Supplemental Surface Water Quality Monitoring at Rico, CO prepared by AECOM, dated November 2010, the surface water sampling event was completed on July 17th – 18th, 2012. Sampling was completed by Anderson Engineering Co. Inc., by technicians who are familiar with the Rico sites and the BP Control of Work Management System. Surface water samples were collected from prescribed locations within the St. Louis settling pond system and at the system discharge (DR-6) to the Dolores River (collectively referred to as the St. Louis pond system), and previously sampled locations along the Dolores River above, at and below the St. Louis pond system. Figure 1 and Figure 1a (see Appendix A) illustrate the location of the various surface water sampling stations along the Dolores River and in the St. Louis pond system. Figure 2 in Appendix A illustrates the locations of the twenty monitoring wells sampled monthly. Sample results have been summarized and laboratory analytical results are attached with quality control documentation.

During the week of July 9th, 2012 the Blaine Base Flow Test was conducted. This test consisted of pumping water from the Blaine tunnel into surge tanks and then the water was pumped into the 517 tunnel. Base line samples and subsequent sampling of the St. Louis discharge were collected during this time and reported under a separate document.

2.0 Field Sampling

2.1 Sampling Frequency

The sampling period represented by this sampling event is for the month of July of 2012. Sampling will be performed on a monthly basis until at least December of 2012.

2.2 Water Quality and Flow Measurement Sampling Locations

Surface water samples were collected from the locations described on Table 1 and shown on Figure 1 and Figure 1a in Appendix A. In the fall of 2011, twelve (12) new monitoring wells were drilled in the vicinity of the recently constructed interim drying facility. Beginning November 2011, those wells were sampled and will continue to be sampled monthly along with the other sampling locations mentioned. Additionally, eight (8) historic groundwater wells are sampled every month. Figure 2 in Appendix A illustrates the locations of all groundwater wells sampled monthly, and they are described in Table 1.

The Dolores River was sampled above the St. Louis pond system, and below the adit outfalls downstream of the reclaimed Silver Swan Mine area. The river was also sampled at the USGS gaging station downstream of the Silver Swan site.

TABLE 1 - Sample Location Summary

SITE ID	SITE DESCRIPTION
DR-4-SW	Dolores River below Silver Swan
DR-1	Dolores River above St. Louis settling pond system
DR-2	Dolores River immediately above the St. Louis settling pond system outfall
DR-3	St. Louis tunnel discharge at adit
DR-4	Discharge of Pond 15
DR-5	Discharge of Pond 8
DR-6	St. Louis settling pond system outfall to the Dolores River
DR-7	Dolores River below St. Louis settling pond system outfall
DR-G	Dolores River at USGS gaging station #09165000
GW-1	Located on the north end of the site, approximately a quarter mile north of the northern edge of Pond 18.
GW-3	Located approximately 200 feet north of the northern edge of pond 18, and approximately 60 feet west of the main access road.
GW-4	Located on the western flood dike of Pond 18, approximately midway along the dike.
GW-5	Located on the northern edge of the former Pond 17 area, or on the northern dike of the newly constructed drying cell 1.
GW-6	Located on the middle of the former Pond 17 area, or on the western edge of the south dike of the newly constructed drying cell 1.
GW-7	Located on the eastern edge of the access road directly across from the former Pond 17, or directly across from the newly constructed drying cell 2.
EB-1	Located on the northern edge of the former Pond 17 area, or on the northern dike of the newly constructed drying cell 1. It is within ten feet of GW-5.
EB-2	Located on the southern portion of the former Pond 16 area, or on the western edge of the south dike of the newly constructed drying cell 3.
MW-1 Shallow MW-1 Deep	Both wells are located about 4 feet apart on the western embankment of Pond 13 at the division between Pond 11 and Pond 12.
MW-2 Shallow MW-2 Deep	Both wells are located about 4 feet apart on the western flood embankment of Pond 12, about mid-way along the pond.
MW-3 Shallow MW-3 Deep	Both wells are located about 4 feet apart on the western flood embankment of Pond 15, on the southern half of the embankment.
MW-4 Shallow MW-4 Deep	Both wells are located about 4 feet apart on the southern embankment of Pond 13, approximately 60 west of the main east access road.
MW-5 Shallow MW-5 Deep	Both wells are located about 4 feet apart on the western dike of drying cell 3 (refer to Figure 2).
MW-6 Shallow MW-6 Deep	Both wells are located about 4 feet apart on northern embankment of Pond 13, approximately 75 feet west of the main east access road

2.3 Sampling Station Descriptions

The sampling requirements and stations are described in detail below, as well as the conditions at each station for this sampling period:

DR-1. Dolores River above St. Louis settling ponds system. The sampling/flow measurement location is on the Dolores River approximately 50 feet upstream of the Rico Ranger Station. Flow measurement was collected by flowmeter.

DR-2. Dolores River immediately above the St. Louis settling pond system outfall. Sampling/flow measurement location is on the Dolores just above the 002 discharge outfall, and upstream of the hot tub discharge. The site is located directly adjacent to the thermal discharge which supplies the hot tub. Flow measurement was collected by flowmeter.

DR-3. St. Louis tunnel discharge at adit entrance. Sampling location is at the inlet of the flume, just before the throat. Flow measurement by an installed 9" flume and water level measurement devices at the sampling location.

DR-4. Discharge of Pond 15. Flow measurement was collected by flowmeter.

DR-5. Discharge of Pond 8. Due to the shallow water and multiple paths, accurate flow measurements could not be determined for this sampling location and period. Leakage was estimated by water balance. Flows estimated by water balance and water level reading.

DR-6. St. Louis settling ponds system outfall to the Dolores River (Outfall 002). Flow measurement by installed 9" flume.

DR-7. Dolores River below St. Louis settling ponds system outfall. Sampling/flow measurement location is located just off the entrance road to the St. Louis ponds site where the Dolores River is adjacent to the entrance road. The site is located approximately 75 feet downstream from a large bend in the river that first brings the Dolores adjacent to the entrance road. Flow measurements were collected by flowmeter.

DR-4-SW. Dolores River below Silver Swan. Sampling/flow measurement location is on the Dolores River below the Silver Swan site just downstream of a bend in the river and below a cemetery on the east bank. Flow measurements were collected by flowmeter.

DR-G. Located at the USGS gauging station #09165000. Flow measurements were collected by flowmeter.

Monitoring Wells. All monitoring wells were sampled by use of a bailer, and field measurements were taken at the time of sampling. Depth measurements were also taken at this time. For the July 2012 sampling period, MW-2 Shallow had less than 1" of water and could not be sampled, and MW-3 Shallow was dry. GW-6 was not sampled due to an old bailer that is lodged in the well at approximately 25 feet. Efforts have been made to remove it, and will continue to be made until the issue is resolved.

3.0 Sampling and Analysis Parameters and Methods

All samples were collected as grab samples. Samples were collected from well-mixed locations, which are representative of conditions within the flow stream. Lab-certified plastic bottles were used to collect sample water for analyses. Clean hands, dirty hands procedures were followed throughout the sampling. For quality control purposes, one duplicate sample and one field blank were included with the water samples being submitted to the laboratory for analysis.

Lab-certified plastic bottles were used to collect all water samples. Sample water was first collected in clean plastic jugs, and within 10 minutes, placed in the sampling bottles. The following sample bottles were used for collection and analysis (all samples collected without filtration unless otherwise indicated):

- One (1) 500mL HDPE bottle, unpreserved, for alkalinity, Total Dissolved Solids (TDS), Total Suspended Solids (TSS), chloride and sulfate analysis
- One (1) 250mL HDPE bottle, unpreserved, for salinity analysis
- One (1) 250mL HDPE bottle, unpreserved, for silica analysis
- One (1) 250mL HDPE bottle, preserved with HNO_3, for total metals and water hardness analysis
- One (1) 250mL HDPE bottle, preserved with HNO_3, for dissolved metals analysis. This sample is filtered in the field through a 0.45µm filter.
- One (1) 250mL HDPE bottle, preserved with HNO_3, for potentially dissolved metals analysis
- One (1) 250 mL HDPE bottle, preserved with NaOH and Zn Acetate, for sulfide analysis.
- One (1) 250 mL HDPE bottle, preserved with NaOH, for cyanide analysis
- One (1) 250 mL amber glass bottle, preserved with H_2SO_4, for Total Organic Carbon (TOC) and nitrate analysis

Field parameters were measured at the time of sample collection. Field measurement data for temperature and electrical conductivity were recorded using a Hanna Instruments HI 9828 Multiparameter Meter, and results were logged in the field log book. Weather parameters including temperature and precipitation were obtained and documented in the Daily Toolbox Meeting Record. For July 2012, dissolved oxygen could not be obtained due to a malfunction of both the Hanna Instruments HI 9828 Multiparameter Meter and the EXTECH Instruments DO610 ExStik II DO/pH/Conductivity kit. Values for pH and ORP were collected through laboratory analysis.

All sample bottles were labeled to identify sample number, date and time of collection, type of analysis, and appropriate preservative. In addition, sample analysis/chain of custody forms were completed and processed at the time of sample collection. Original chain of custody forms are signed, dated, and placed in the sample container prior to sealing the container for shipment.

Water samples were kept in cooled containers and sent to the analytical laboratory. Samples were submitted to Pace Analytical Laboratories in Lenexa, Kansas for analysis by analytical procedures listed on Table 2. Analysis was performed according to methods specified in 40 CFR, Part 136 or other methods

approved by the EPA. Laboratory methods and reporting limits for all parameters are presented in Table 2. Laboratory results and supporting documentation including quality assurance results are contained in the Appendix C and Appendix D of this report. Results are summarized in Table 4A and Table 4B in Appendix B of this report.

TABLE 2 - Analytical Procedures Summary

PARAMETER	DETECTION LIMIT (MDL)	METHOD
FIELD PARAMETERS		
Dissolved Oxygen (ppm)	+/- 2% Full Scale	SM 4500-OG
Electrical Conductivity (mS/cm)	+/- 2% full scale	EPA 120.1
Temperature (°C)	+/- 1° C	Standard Method 2550
ORP (Oxidation Reduction Potential, mV)	+/- 1.0 mV	Ag/AgCl Probe
pH (Standard pH Units)	+/- 0.01 pH	EPA 150.2
NON-METALS		
Alkalinity (mg/L as $CaCO_3$)	RL – 20 mg/L	SM 2320B
Chloride (mg/L)	RL – 1.0 mg/L	EPA 300.0
Cyanide (μg/L as CN)	RL – 0.005 mg/L	SM 4500-CN-E
Hardness (mg/L as $CaCO_3$)	RL – 0.5 mg/L	SM 2340B
Nitrate (mg/L)	RL – 0.25 mg/L	EPA 353.2
Salinity (mg/L as dissolved solids)	RL – 6 mg/L	SM 2510B (calculated)
Silica	0.1 mg/L	EPA 200.8
Sulfate (mg/L as SO4)	RL – 1 mg/L	EPA 300.0
Sulfides (mg/L)	0.05 mg/L	4500-S-2 D
Total Dissolved Solids (mg/L as TDS)	RL – 5.0 mg/L	SM 2540C
Total Organic Carbon (mg/L)	0.5 mg/L	SM 5310C
Total Suspended Solids (mg/L as TSS)	RL – 5.0 mg/L	SM 2540D
TOTAL, DISSOLVED, AND POTENTIALLY DISSOLVED METALS		
Aluminum (μg/L as Al)	2 μg/L	EPA 200.8
Antimony (μg/L as Sb)	0.07 μg/L	EPA 200.8
Arsenic (μg/L as As)	0.09 μg/L	EPA 200.8
Barium (μg/L as Ba)	0.08 μg/L	EPA 200.8
Beryllium (μg/L as Be)	0.02 μg/L	EPA 200.8
Cadmium (μg/L as Cd)	0.03 μg/L	EPA 200.8
Calcium (μg/L as Ca)	10 μg/L	EPA 200.8
Chromium (ug/l as Cr)	0.10 ug/L	EPA 200.8
Cobalt (ug/l as Co)	0.25 ug/L	EPA 200.8
Copper (μg/L as Cu)	0.07 μg/L	EPA 200.8
Iron (μg/L as Fe)	4.67 μg/L	EPA 200.8
Lead (μg/L as Pb)	0.05 μg/L	EPA 200.8
Magnesium (μg/L as Mg)	2.5 μg/L	EPA 200.8
Manganese (μg/L as Mn)	0.17 μg/L	EPA 200.8
Mercury (μg/L as Hg)	0.049 μg/L	EPA 245.1
Molybdenum (μg/L as Mo)	0.12 ug/L	EPA 200.8
Nickel (μg/L as Ni)	0.07 μg/L	EPA 200.8
Potassium (μg/L as K)	10 μg/L	EPA 200.8
Selenium (ug/l as Se)	0.22 ug/L	EPA 200.8
Silver (ug/L as Ag)	0.25 ug/L	EPA 200.8
Sodium (μg/L as Na)	25 μg/L	EPA 200.8
Thallium (μg/L as Tl)	0.05 ug/L	EPA 200.8
Vanadium (μg/L as V)	0.05 ug/L	EPA 200.8
Zinc (μg/L as Zn)	2.5 μg/L	EPA 200.8

4.0 Flow Measurement Methods

Flows were measured at the river sampling locations where accessible. Flow measurements were not collected at areas where ice and snow buildup or high, fast flows prohibited safe access. The flow measurements obtained this sampling period are described in Section 2.3. Flowrates were measured for sampling locations DR-1. DR-2, DR-3, DR-4, DR-5, DR-6, DR-7, DR-4-SW, and DR-G. Refer to Figures 3 through 8 in Appendix E for these cross sections. The flowrates are presented on Table 3 in Appendix B.

Flow velocity measurements collected during this sampling event were taken by use of a Global Water Flow Probe FP211 portable flow meter at stations DR-1, DR-2, DR-4, DR-7, DR-4-SW, and DR-G using the six-tenths-depth method. This method uses the velocity at six-tenths of the depth as the mean velocity. This method is generally reliable between depths from 0.3 feet to 2.5 feet. Stream sections were selected with the desired characteristics of parallel flows, smooth streambed with minimal obstructions, a straight channel, and a flat streambed. The stream section, perpendicular to the flow was measured in feet. The width of the section was determined and divided into several sub-sections. Flow measurements of velocity (by the six-tenths-depth method) and water depth were measured at each vertical section using the Global Water Flow Probe FP211. The flow meter was set to the 3 second fixed period average mode. A minimum of three velocity readings were recorded at each vertical section. Flows were calculated for each stream section using the water depth, horizontal distance, and averaged velocity data.

The St. Louis tunnel flow (DR-3) and St. Louis pond discharge (DR-6) currently have Parshall flumes installed. Flow measurements can be determined at these flumes when the depth of flow is known at a particular point. In order to continuously monitor and measure the depth of flow, depth measurement devices were installed on May 11th, 2011 and May 12th, 2011 at both the north and south flumes. An STI Ultrasonic IRU-5180 automated water level detector was installed at the north Parshall flume. In order to obtain further flow data, an OTT PLS submersible pressure transducer was installed at the north flume in December 2011. In January 2012, it was decided that the OTT PLS would be used exclusively at the north flume to report flow data, and that the ultrasonic meter would remain only as a backup flow measurement system. This was due in large part to the stability and uniformity observed in the data from the OTT PLS, as opposed to the ultrasonic meter, which exhibited greater instability and variability in the readings that the OTT PLS. The south flume has a submersible pressure transducer called the OTT Orpheus Mini. It records deviations from a pre-programmed depth of air space from the top edge of the flume down to the water level. Knowing then the total depth of the flume, the depth of flow can be determined. The post processed data for the OTT PLS and the OTT Orpheus Mini for the month of July, 2012 is given in Appendix I and Appendix J, respectively.

5.0 Analytical Results

The results of the laboratory analysis are summarized on Table 4A and Table 4B in Appendix B. The data is organized by sample location. The Pace lab reports for these results are contained in Appendix C.

For July 2012, no laboratory analysis for chloride was completed due to a miscommunication and misinterpretation of the chain of custody. See page 1 of the project narrative and analytical results in Appendix C for an explanation. Additionally, nitrate was not analyzed for stations GW-3, MW-5 Shallow, MW-5 Deep, MW-6 Shallow, and MW-6 Deep due to internal miscommunication within Pace labs. A full explanation of the problem can be found on page 194 of the laboratory QC results section in Appendix D.

6.0 Quality Control

In addition to the standard laboratory Quality Control (QC), field QC samples for this sampling event included a field duplicate and a Field Blank (FB).

6.1 Field QC

A field duplicate water sample was collected from sample location DR-3. During sample collection, the duplicate sample bottles were filled simultaneously from the discharge stream of water. The duplicate sample was submitted to the analytical laboratory with the label of DR-8, so as to serve as a "blind duplicate."

Table 5 compares the analytical results for total metals portion from DR-3 and DR-8 and presents the Relative Percent Difference (RPD). The RPD for aqueous samples should be +/- 20%. All comparative values were within +/-20% with the exception of lead.

TABLE 5 – Relative Percent Difference (RPD) of Total Metals Portion Between DR-3 and Duplicate Sample DR-8

Analyte (Total)	DR-3 (µg/L)	DR-8 (µg/L) Duplicate of DR-3	RPD (%)
Aluminum	218	209	-4.22
Antimony	<0.50	<0.50	-
Arsenic	<0.50	<0.50	-
Barium	19.6	18.8	-4.17
Beryllium	0.59	0.55	-7.02
Cadmium	23.7	22.8	-3.87
Calcium	239000	235000	-1.69
Chromium	<0.50	0.63	-
Cobalt	3.1	3.1	0.00
Copper	47.4	46.1	-2.78
Iron	3510	3410	-2.89
Lead	1.6	1.1	-37.04
Magnesium	20500	20200	-1.47
Manganese	2200	2120	-3.70
Mercury	<0.20	<0.20	-
Molybdenum	14.4	13.7	-4.98
Nickel	5.7	5.5	-3.57

Potassium	1660	1630	-1.82
Selenium	<0.50	<0.50	-
Silver	<0.50	<0.50	-
Sodium	10900	10700	-1.85
Thallium	<0.10	<0.10	-
Vanadium	<0.10	<0.10	-
Zinc	4620	4580	-0.87
Alkalinity (mg/L)	87.4	89.3	2.15
Chloride (mg/L)			-
Cyanide	<0.0050	0.024	-
Hardness	680000	670000	-1.48
Nitrate (mg/L)	<0.10	<0.10	-
Salinity (mg/L)	788	803	1.89
Silica	16500	16000	-3.08
Sulfate (mg/L)	670	655	-2.26
Sulfide (mg/L)	<0.050	<0.050	-
TDS (mg/L)	1030	1020	-0.98
TOC (mg/L)	<0.50	<0.50	-
TSS (mg/L)	<5.0	<5.0	-

A Field Blank (FB) was collected by analyzing a bottle of distilled water in the field in the same manner as any other sample. The FB was analyzed for the same constituents as the other samples. The FB had concentrations below the reporting limit for all metals except for total sodium, dissolved calcium, dissolved magnesium, and dissolved sodium. The pH was slightly below neutral, the Electrical Conductivity (EC) was zero, it showed a non-detectable level of alkalinity, and a non-detectable level of TDS.

6.2 Laboratory QC

The laboratory control sample (LCS), method blank, matrix spike, and matrix spike duplicate sample results were all within the established limits of concentration, percent recovery, and relative percent difference, with several minor exceptions. Please refer to the Laboratory QC Results in Appendix D for exceptions and for a full QC report.

Appendix A

Sampling Location Maps

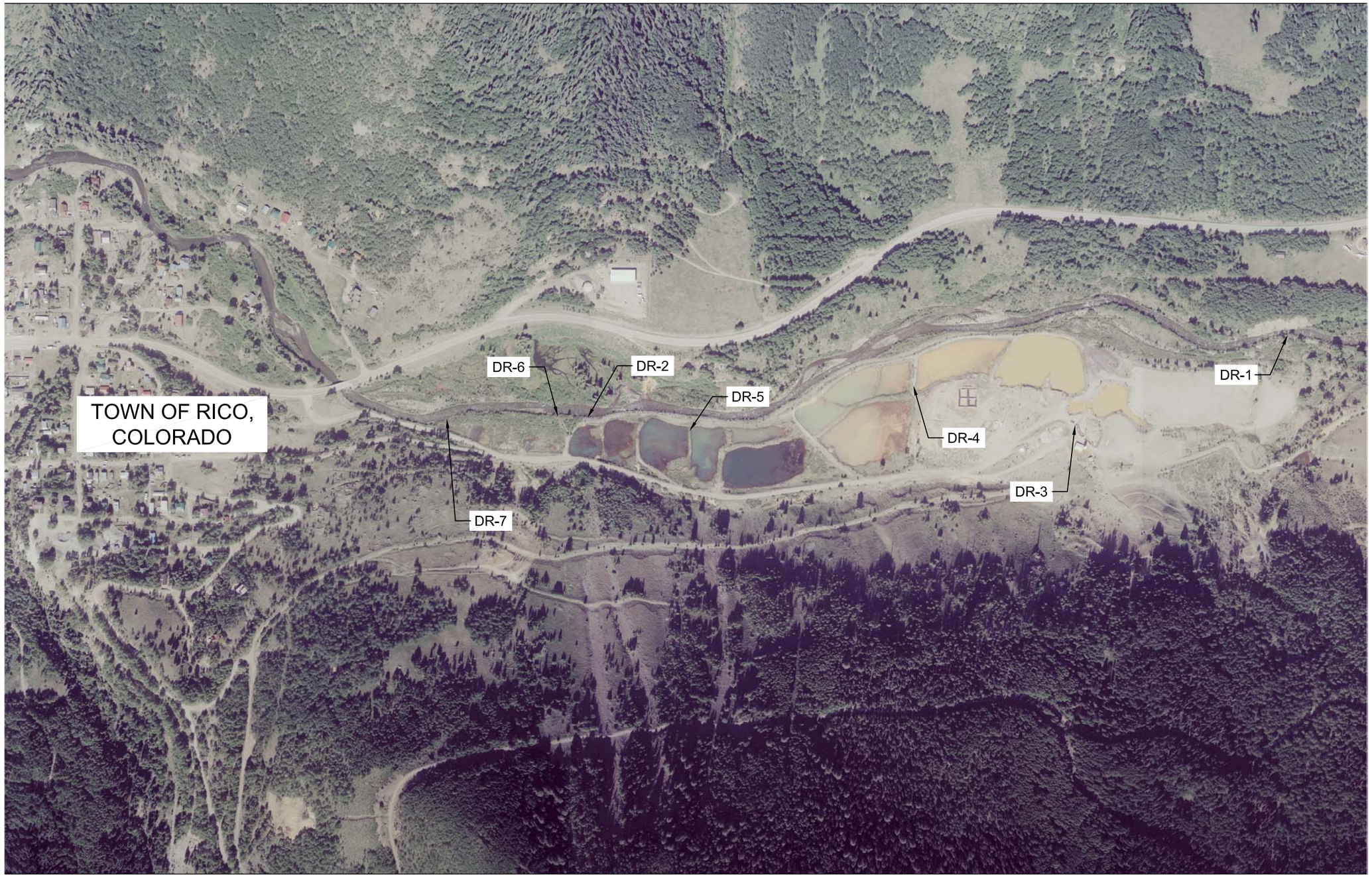

01 **ST LOUIS PONDS SAMPLING LOCAITONS**

SCALE - 1" = 500'

THESE PLANS AND SPECIFICATIONS ARE THE PROPERTY OF ANDERSON ENGINEERING COMPANY, INC., 977 WEST 2100 SOUTH, SALT LAKE CITY, UTAH, 84119 AND SHALL NOT BE COPIED, REDUCED, OR REPRODUCED WITHOUT THEIR WRITTEN PERMISSION.

General Notes

SCALE IN FEET
0 250 500

No.	Revision/Issue	Date

BP / ARCO

ANDERSON
ENGINEERING COMPANY, INC.
977 WEST 2100 SOUTH
SALT LAKE CITY, UTAH 84119
(801) 972-6222

RICO SURFACE WATER SAMOPLING

ST. LOIUS PONDS AREA SAMPLING LOCATIONS

RICO, COLORADO

DRAWN BY:	MAD
ENGINEER:	MAD
APPROVED:	CES

Project	Sheet
Date 5-Apr-12	1
Scale 1" = 500'	

C:\Users\Mark\Documents\RICO\Surface Water Sampling\Sample Collection sites.dwg

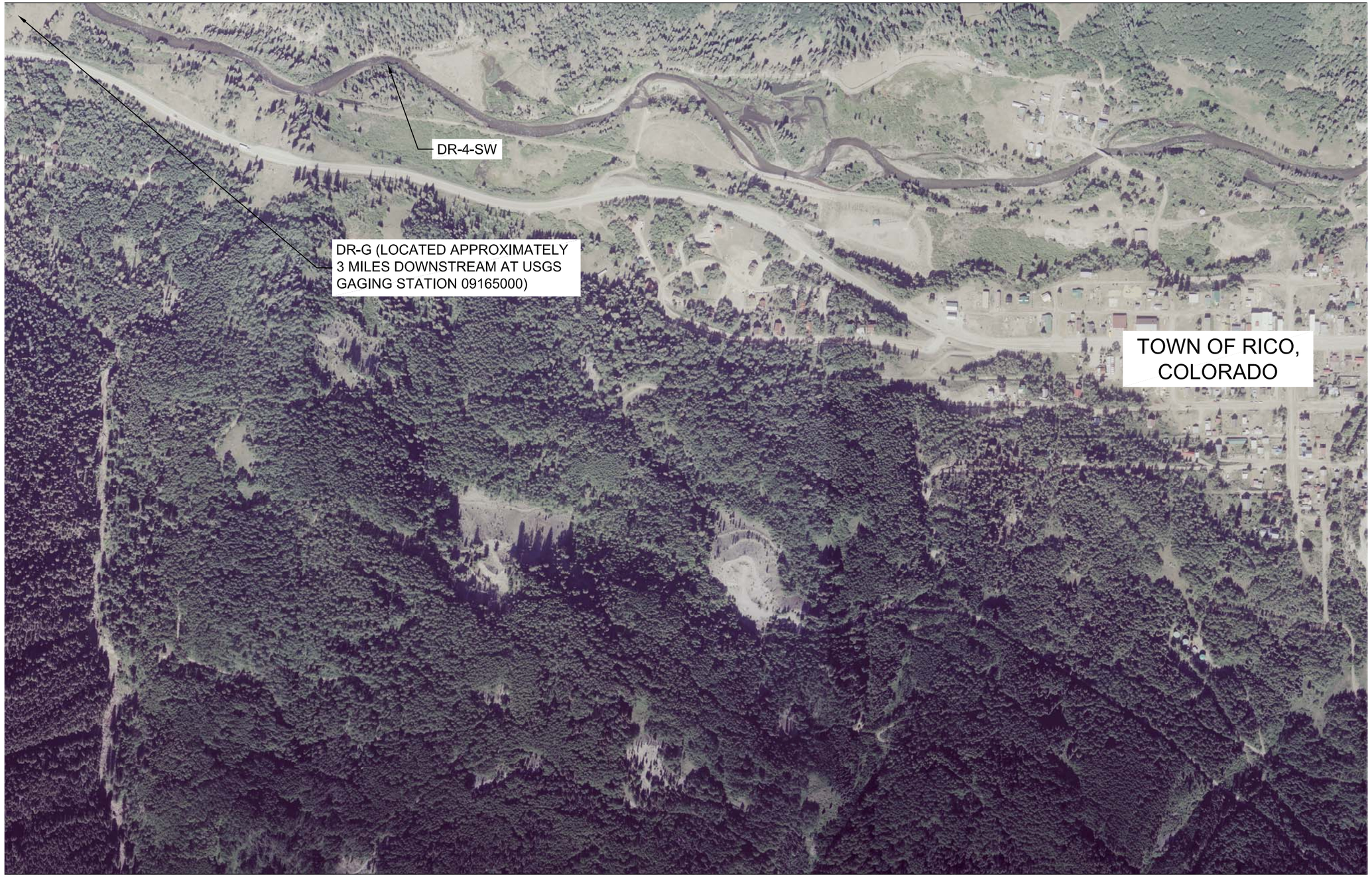

1a **SAMPLING LOCATION SOUTH OF RICO, CO**

SCALE - 1" = 500'

THESE PLANS AND SPECIFICATIONS ARE THE PROPERTY OF ANDERSON ENGINEERING COMPANY, INC., 977 WEST 2100 SOUTH, SALT LAKE CITY, UTAH, 84119 AND SHALL NOT BE COPIED, REDUCED, OR REPRODUCED WITHOUT THEIR WRITTEN PERMISSION.

General Notes

SCALE IN FEET
0 250 500

No.	Revision/Issue	Date

BP / ARCO

ANDERSON
ENGINEERING COMPANY, INC.
977 WEST 2100 SOUTH
SALT LAKE CITY, UTAH 84119
(801) 972-6222

RICO SURFACE WATER SAMOPLING

SAMPLING LOCATIONS SOUTH OF RICO, CO

RICO, COLORADO

DRAWN BY:	MAD
ENGINEER:	MAD
APPROVED:	CES

Project	Sheet 1a
Date 5-Apr-12	
Scale 1" = 500'	

C:\Users\Mark\Documents\RICO\Surface Water Sampling\Sample Collection sites.dwg

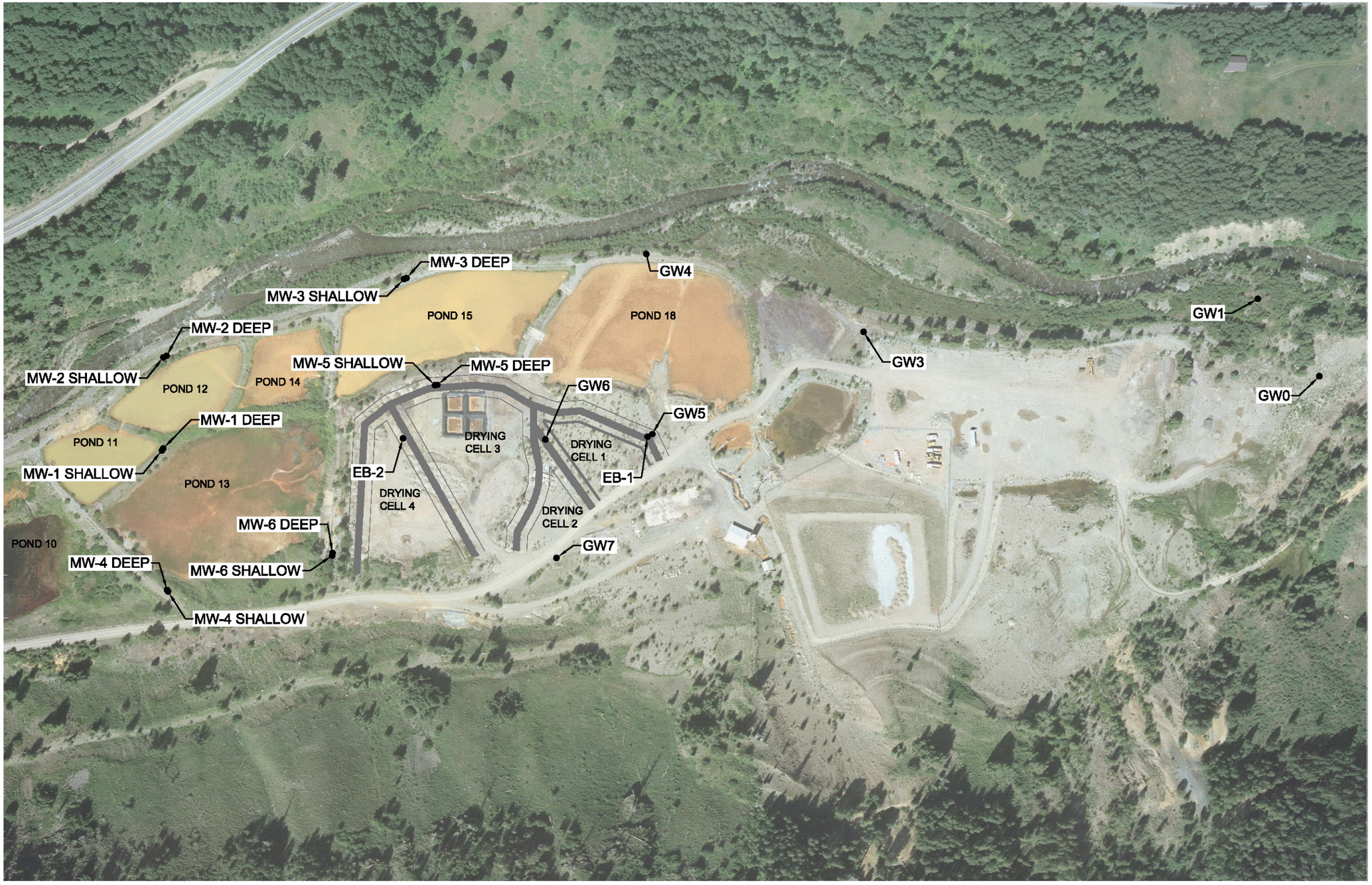

02 MONITORING WELL LOCATIONS

SCALE - 1" = 200'

THESE PLANS AND SPECIFICATIONS ARE THE PROPERTY OF ANDERSON ENGINEERING COMPANY, INC., 977 WEST 2100 SOUTH, SALT LAKE CITY, UTAH, 84119 AND SHALL NOT BE COPIED, REDUCED, OR REPRODUCED WITHOUT THEIR WRITTEN PERMISSION.

General Notes

N

SCALE IN FEET
0 100 200

No.	Revision/Issue	Date

BP / ARCO

ANDERSON
ENGINEERING COMPANY, INC.
977 WEST 2100 SOUTH
SALT LAKE CITY, UTAH 84119
(801) 972-6222

RICO GW WELL MONITORING

MONITORING WELL LOCATIONS

RICO
COLORADO

DRAWN BY:	MAD
ENGINEER:	MAD
APPROVED:	CES

Project	Sheet 2
Date 11-Jun-12	
Scale 1" = 200'	

C:\Users\Work\Documents\X200\GW well locations\Alt Current monitoring wells.dwg

Appendix B

Data Tables

TABLE 3 - Sampling Field Data and Station Information Summary, July 2012

			Field Measurements							GPS Location (Colorado State Plane NAD83)		Flow Data			Comments
Sample Location	Date of Sample Collection	Field Technicians	pH	Temp (°C)	EC (mS/cm)	Dissolved Oxygen (ppm)	Oxydation Reduction Potential (ORP, mV)	Well Casing Elevation (ft)	Well Water Elevation (ft)	Northing	Easting	Stream Cross section area (ft^2)	Flowrate cfs	Flowrate gpm	
DR-1	7/17/2012	M. DeFriez, T. Barbee	8.20	19.50	0.253	CNO	141.0	NA	NA	1389970.4600	2267573.6490	24.6	39.3	17638	Cross section on the Dolores River above St. Louis settling pond system (approximately 800 ft north of the northern edge of Pond 18). Flow measurement by flowmeter.
DR-2	7/17/2012	M. DeFriez, T. Barbee	8.20	18.06	0.266	CNO	127.0	NA	NA	1386660.9610	2267971.4630	33.6	38.5	17279	Cross section on the Dolores River, approximately 150 ft north of system outfall. Flow measurement by flowmeter.
DR-3	7/17/2012	M. DeFriez, T. Barbee	7.40	21.39	1.281	CNO	152.0	NA	NA	1388963.0808	2268004.6974	NA	1.36	610	St Louis adit discharge. Flow measurement by installed Parshall Flume. Water level by installed STI Ultrasonic IRU-5180 water level meter and an OTT PLS submersible pressure transducer.
DR-4	7/17/2012	M. DeFriez, T. Barbee	7.90	17.78	1.264	CNO	148.0	NA	NA	1388153.6284	2267799.1579	NA	1.22	548	Pond 15 discharge. Flow measurement by flowmeter.
DR-5	7/17/2012	M. DeFriez, T. Barbee	8.00	20.00	1.249	CNO	145.0	NA	NA	1387273.4503	2268024.8524	NA	1.15	516	Pond 8 was discharging at multiple small locations as well as the spillway. Due to the shallow water and multiple paths, accurate flow measurements could not be determined for this sampling location and period. Leakage was estimated by water balance. Flows estimated by water balance and water level reading.
DR-6	7/17/2012	M. DeFriez, T. Barbee	7.70	21.00	1.328	CNO	147.0	NA	NA	1386431.4984	2267964.5711	NA	1.11	498	Outfall to Dolores River. Flow measurement by installed Parshall Flume. Water level by OTT Orpheus Mini submersible pressure transducer.
DR-7	7/17/2012	M. DeFriez, T. Barbee	7.42	17.00	0.417	CNO	129.0	NA	NA	1385880.1050	2267983.4510	25.3	38.5	17279	Cross section on the Dolores River, approximately 500 ft below St. Louis settling pond system outfall. Flow measurement by flowmeter.
DR-8	7/17/2012	M. DeFriez, T. Barbee	7.40	21.39	1.281	CNO	144.0	NA	NA	1388963.0808	2268004.6974	NA	NA	NA	DR-8 is a duplicate sample of DR-3 (or a location of sampler's choosing). See comments for DR-3.
DR-4-SW	7/17/2012	M. DeFriez, T. Barbee	7.77	16.39	0.349	CNO	118.0	NA	NA	1379176.1190	2266285.0850	25.1	47.7	21408	Cross section on the Dolores River approximately 100 below the Silver Swan site. Flow measurement by flowmeter.
DR-G	7/17/2012	M. DeFriez, T. Barbee	8.10	15.00	0.341	CNO	111.0	NA	NA	1364029.7850	2258752.9060	27.2	53.4	23966	Cross section on the Dolores River at USGS gauging station #09165000, approximately 3.5 miles downstream of the Silver Swan site. Flow measurement by flowmeter.
FB	7/17/2012	M. DeFriez, T. Barbee	6.40	26.56	0.000	CNO	63.9	NA	NA	N/A	N/A	NA	NA	NA	Field blank
GW-1	7/17/2012	M. DeFriez, T. Barbee	7.90	20.28	0.306	CNO	112.0	8840.13	8838.08	1390006.0210	2267642.6870	NA	NA	NA	Located on the north end of the site, approximately a quarter mile north of the northern edge of Pond 18.
GW-3	7/17/2012	M. DeFriez, T. Barbee	7.60	14.11	0.857	CNO	133.0	8836.68	8822.89	1389221.9930	2267708.3940	NA	NA	NA	Located approximately 200 feet north of the northern edge of pond 18, and approximately 60 feet west of the main access road.
GW-4	7/17/2012	M. DeFriez, T. Barbee	7.40	19.56	0.922	CNO	132.0	8826.79	8815.91	1388790.0720	2267553.5420	NA	NA	NA	Located on the western flood dike of Pond 18, approximately midway along the dike.
GW-5	7/17/2012	M. DeFriez, T. Barbee	7.10	17.56	2.16	CNO	152	8839.52	8817.95	1388802.0650	2267911.8020	NA	NA	NA	Located on the northern edge of the former Pond 17 area, or on the northern dike of the newly constructed drying cell 1.
GW-6	7/17/2012	NA	5.80	16.00	2.390	CNO	110.0	8837.45	CNO	1388589.3950	2267922.5090	NA	NA	NA	Located on the middle of the former Pond 17 area, or on the western edge of the south dike of the newly constructed drying cell 1. Could not obtain sample due to obstruction near bottom of well.
GW-7	7/17/2012	M. DeFriez, T. Barbee	7.00	16.67	1.376	CNO	71.7	8840.00	8817.42	1388611.4370	2268158.0170	NA	NA	NA	GW-7 Located on the eastern edge of the access road directly across from the former Pond 17, or directly across from the newly constructed drying cell 2.
EB-1	7/17/2012	M. DeFriez, T. Barbee	7.20	16.00	2.31	CNO	87.9	8839.86	8817.96	1388792.4420	2267916.9080	NA	NA	NA	Located on the northern edge of the former Pond 17 area, or on the northern dike of the newly constructed drying cell 1. It is within ten feet of GW-5.
EB-2	7/17/2012	M. DeFriez, T. Barbee	5.30	16.17	4.69	CNO	139.0	8829.84	8813.24	1388306.1480	2267920.2500	NA	NA	NA	Located on the southern portion of the former Pond 16 area, or on the western edge of the south dike of the newly constructed drying cell 3.
MW-1 SHALLOW	7/17/2012	M. DeFriez, T. Barbee	7.4	15.28	1.289	CNO	81.1	8810.87	8804.48	1387826.7470	2267944.5160	NA	NA	NA	Both wells are located about 4 feet apart on the western embankment of Pond 13 at the division between Pond 11 and Pond 12.
MW-1 DEEP	7/17/2012	M. DeFriez, T. Barbee	7.7	15.78	1.204	CNO	107.0	8810.85	8801.86	1387829.4070	2267940.5680	NA	NA	NA	
MW-2 SHALLOW	NA	M. DeFriez, T. Barbee	DRY WELL					8810.23	NA	1387829.7580	2267759.0810	NA	NA	NA	Both wells are located about 4 feet apart on the western flood embankment of Pond 12, about mid-way along the pond. MW-2 SHALLOW had less than one inch of water.
MW-2 DEEP	7/17/2012	M. DeFriez, T. Barbee	7.60	13.28	1.336	CNO	82.0	8810.21	8800.20	1387836.0950	2267756.0910	NA	NA	NA	
MW-3 SHALLOW	NA	M. DeFriez, T. Barbee	DRY WELL					8819.57	NA	1388308.0910	2267603.5420	NA	NA	NA	Bothe wells are located about 4 feet apart on the western flood embankment of Pond 15, on the southern half of the embankment. MW-3 SHALLOW was dry.
MW-3 DEEP	7/17/2012	M. DeFriez, T. Barbee	7.5	17.67	1.299	CNO	82.4	8819.72	8809.65	1388313.2060	2267601.6050	NA	NA	NA	
MW-4 SHALLOW	7/17/2012	M. DeFriez, T. Barbee	7.20	11.89	1.480	CNO	249.0	8816.83	8799.99	1387836.9670	2268221.9370	NA	NA	NA	Both wells are located about 4 feet apart on the southern embankment of Pond 13, approximately 60 west of the main east access road.
MW-4 DEEP	7/18/2012	M. DeFriez, T. Barbee	6.80	12.51	1.616	CNO	262.0	8816.77	8799.95	1387839.1320	2268224.8950	NA	NA	NA	
MW-5 SHALLOW	7/18/2012	M. DeFriez, T. Barbee	3.40	12.17	3.62	CNO	436	8830.95	8815.05	1388369.7050	2267814.3980	NA	NA	NA	Both wells are located about 4 feet apart on the western dike of drying cell 3 (refer to Figure 2).
MW-5 DEEP	7/18/2012	M. DeFriez, T. Barbee	6.10	14.00	2.48	CNO	46.0	8830.73	8813.57	1388374.5740	2267813.8150	NA	NA	NA	
MW-6 SHALLOW	7/18/2012	M. DeFriez, T. Barbee	6.40	11.78	1.928	CNO	73.8	8830.58	8807.62	1388166.1000	2268148.1000	NA	NA	NA	Both wells are located about 4 feet apart on northern embankment of Pond 13, approximately 75 feet west of the main east access road.
MW-6 DEEP	7/18/2012	M. DeFriez, T. Barbee	6.80	12.78	1.391	CNO	67.8	8830.11	8807.21	1388165.5290	2268153.3270	NA	NA	NA	

ANDERSON
ENGINEERING COMPANY INC.

TABLE 4A - Surface Water Analytical Sampling Results Summary, July 2012

			Metals (µg/L)																								Non-Metals (mg/L, unless otherwise indicated)											
Field Sample ID	Date Collected	Fraction	Aluminum	Antimony	Arsenic	Barium	Beryllium	Cadmium	Calcium	Chromium	Cobalt	Copper	Iron	Lead	Magnesium	Manganese	Mercury	Molybdenum	Nickel	Potassium	Selenium	Silver	Sodium	Thallium	Vanadium	Zinc	Alkalinity	Chloride	Cyanide	Hardness (µg/L as CaCO3)	Nitrate	Salinity	Silica	Sulfate	Sulfide	TDS	TOC	TSS
DR-1	7/17/12	Total	30.8	<0.50	<0.50	61.1	<0.20	<0.080	34700	<0.50	<0.50	0.56	<50.0	<0.10	5180	9.8	<0.20	0.90	<0.50	660	<0.50	<0.50	2120	<0.10	0.18	<5.0	74.1	-	0.0063	108000	<0.10	151	6080	37.2	<0.050	140	1.5	<5.0
		Dissolved	10.6	<0.50	<0.50	62.9	<0.20	<0.080	38900	<0.50	<0.50	1.1	<50.0	<0.10	5070	9.2	<0.20	0.89	2.5	617	<0.50	<0.50	1960	<0.10	0.19	<5.0												
		Potentially Dissolved	<50.0	0.10J	0.44J	63.6	<0.50	<0.50	32800	0.57J	0.51J	3.5	<50.0	27.8	4820	10.8	<0.20	0.96J	0.94J	518	0.36J	<0.50	1920	0.091J	<1.0	26.1												
DR-2	7/17/12	Total	40.1	<0.50	<0.50	60.7	<0.20	<0.080	40400	<0.50	<0.50	0.61	63.0	0.10	5730	66.3	<0.20	1.0	<0.50	718	0.53	<0.50	2360	<0.10	0.21	<5.0	76.0	-	<0.0050	124000	<0.10	171	6590	48.3	<0.050	161	1.5	<5.0
		Dissolved	43.3	<0.50	<0.50	64.5	<0.20	<0.080	46700	<0.50	<0.50	1.2	<50.0	<0.10	5670	64.1	<0.20	0.96	3.2	689	<0.50	<0.50	2210	<0.10	0.15	5.0												
		Potentially Dissolved	<50.0	0.085J	0.36J	60.7	<0.50	<0.50	35700	1.8	0.088J	1.3	93.6	4.5	4910	63.0	<0.20	1.0	2.1	502	<1.0	<0.50	1950	0.095J	<1.0	<10.0												
DR-3	7/17/12	Total	218	<0.50	<0.50	19.6	0.59	23.7	239000	<0.50	3.1	47.4	3510	1.6	20500	2200	<0.20	14.4	5.7	1660	<0.50	<0.50	10900	<0.10	<0.10	4620	87.4	-	<0.0050	680000	<0.10	788	16500	670	<0.050	1030	<0.50	<5.0
		Dissolved	40.5	<0.50	<0.50	20.7	0.43	24.9	261000	<0.50	3.2	8.9	696	<0.10	20300	2110	<0.20	13.4	7.7	1590	<0.50	<0.50	10200	<0.10	<0.10	4480												
		Potentially Dissolved	194	0.24J	0.42J	19.6	0.54	24.6	221000	1.7	3.0	51.8	3200	2.9	19000	2050	<0.20	14.3	2.7	1360	<1.0	<0.50	10000	0.15J	<1.0	4550												
DR-4	7/17/12	Total	131	<0.50	<0.50	18.8	0.42	21.6	237000	<0.50	3.0	28.4	2020	0.62	20300	2080	<0.20	13.7	5.5	1650	<0.50	<0.50	10800	<0.10	<0.10	4300	89.3	-	<0.0050	675000	<0.10	794	15800	713	<0.050	1020	<0.50	<5.0
		Dissolved	13.0	<0.50	<0.50	20.7	<0.20	21.6	261000	<0.50	3.1	2.3	<50.0	<0.10	20500	2050	<0.20	13.4	5.6	1600	<0.50	<0.50	10300	<0.10	<0.10	3690												
		Potentially Dissolved	114	0.25J	0.36J	20.6	0.37J	23.5	225000	1.2	3.1	39.0	1980	27.6	19300	2080	<0.20	12.7	3.6	1350	<1.0	<0.50	10200	0.075J	<1.0	4200												
DR-5	7/17/12	Total	65.0	<0.50	<0.50	19.2	0.20	19.0	248000	<0.50	2.7	14.6	1050	0.41	21200	1940	<0.20	13.0	5.1	1870	<0.50	<0.50	11200	<0.10	<0.10	3720	93.1	-	0.034	707000	<0.10	794	16000	660	<0.050	1030	<0.50	<5.0
		Dissolved	<4.0	<0.50	<0.50	20.1	<0.20	19.6	269000	<0.50	2.7	1.8	<50.0	<0.10	21400	1920	<0.20	12.4	5.3	1780	<0.50	<0.50	10600	<0.10	<0.10	3240												
		Potentially Dissolved	53.5	0.20J	0.26J	18.4	0.17J	19.7	241000	0.90J	2.5	17.3	994	1.0	21300	1840	<0.20	11.8	2.0	1700	<1.0	<0.50	11000	0.056J	<1.0	3420												
DR-6	7/17/12	Total	20.2	<0.50	<0.50	19.2	<0.20	14.5	251000	<0.50	1.9	4.7	391	0.35	23200	1610	<0.20	11.3	4.4	2630	<0.50	<0.50	13100	<0.10	<0.10	2890	116	-	0.013	723000	<0.10	833	17700	685	<0.050	1060	<0.50	<5.0
		Dissolved	<4.0	<0.50	<0.50	20.1	<0.20	15.5	264000	<0.50	1.9	1.0	<50.0	<0.10	22700	1550	<0.20	11.1	4.3	2420	<0.50	<0.50	12300	<0.10	<0.10	2710												
		Potentially Dissolved	<50.0	0.17J	0.26J	19.0	0.084J	14.6	229000	1.4	1.8	7.3	369	1.8	21600	1530	<0.20	9.8	1.4	2210	<1.0	<0.50	12200	0.052J	<1.0	2800												
DR-7	7/17/12	Total	32.7	<0.50	0.88	56.5	<0.20	0.80	59400	<0.50	<0.50	0.89	132	<0.10	8060	171	<0.20	1.6	0.51	1330	<0.50	<0.50	4190	<0.10	0.14	166	93.1	-	<0.0050	182000	<0.10	253	8930	93.2	<0.050	244	1.5	<5.0
		Dissolved	8.2	<0.50	0.60	60.4	<0.20	0.91	68000	<0.50	<0.50	1.1	<50.0	<0.10	8210	174	<0.20	1.6	2.9	1300	<0.50	<0.50	4030	<0.10	0.15	166												
		Potentially Dissolved	<50.0	0.072J	0.66J	53.0	<0.50	0.86	55200	0.75J	0.15J	1.2	125	0.49J	7280	159	<0.20	1.5	<1.0	1080	<1.0	<0.50	3620	<1.0	<1.0	163												
DR-8	7/17/12	Total	209	<0.50	<0.50	18.8	0.55	22.8	235000	0.63	3.1	46.1	3410	1.1	20200	2120	<0.20	13.7	5.5	1630	<0.50	<0.50	10700	<0.10	<0.10	4580	89.3	-	0.024	670000	<0.10	803	16000	655	<0.050	1020	<0.50	<5.0
		Dissolved	90.3	<0.50	<0.50	21.3	0.48	25.0	264000	0.54	3.2	9.0	707	<0.10	20700	2160	<0.20	13.5	5.7	1620	<0.50	<0.50	10500	<0.10	<0.10	4630												
		Potentially Dissolved	184	0.23J	0.45J	18.4	0.52	22.7	232000	<1.0	2.9	47.3	3120	9.0	19700	2000	<0.20	13.4	2.4	1450	<1.0	<0.50	10300	0.058J	<1.0	4350												
DR-4-SW	7/17/12	Total	30.4	<0.50	0.57	58.2	<0.20	0.50	49900	<0.50	<0.50	0.85	89.8	0.27	6830	104	<0.20	1.1	<0.50	945	<0.50	<0.50	3030	<0.10	0.14	94.9	89.3	-	0.012	153000	<0.10	210	7630	67.3	<0.050	202	1.5	6.0
		Dissolved	12.0	<0.50	<0.50	62.3	<0.20	0.50	57800	<0.50	<0.50	1.4	<50.0	0.13	6820	105	<0.20	1.1	2.9	900	<0.50	<0.50	2880	<0.10	0.13	93.0												
		Potentially Dissolved	75.8	0.065J	0.39J	59.4	<0.50	0.54	49500	0.83J	0.11J	1.4	85.3	0.42J	6480	104	<0.20	1.3	<1.0	792	<1.0	<0.50	2730	<1.0	<1.0	89.3												
DR-G	7/17/12	Total	29.8	<0.50	<0.50	66.6	<0.20	0.30	47300	<0.50	<0.50	0.86	55.4	0.20	6310	43.1	<0.20	0.97	<0.50	837	<0.50	<0.50	2790	<0.10	0.23	63.1	93.1	-	0.0085	144000	<0.10	208	7060	57.4	<0.050	198	1.5	<5.0
		Dissolved	7.6	<0.50	<0.50	74.0	<0.20	0.29	56400	<0.50	<0.50	1.1	<50.0	<0.10	6550	41.6	<0.20	0.95	2.2	840	<0.50	<0.50	2810	<0.10	0.17	51.0												
		Potentially Dissolved	<50.0	0.070J	0.39J	71.2	<0.50	0.37J	43100	1.6	0.059J	1.3	64.1	2.2	5720	45.1	<0.20	1.1	<1.0	713	<1.0	<0.50	2580	<1.0	<1.0	66.0												
FB	7/17/12	Total	<4.0	<0.50	<0.50	<0.30	<0.20	<0.080	<20.0	<0.50	<0.50	<0.50	<50.0	<0.10	<5.0	<0.50	<0.20	<0.50	<0.50	<20.0	<0.50	<0.50	408	<0.10	<0.10	<5.0	<20.0	-	<0.0050	<71.0	<0.10	<6.0	<53.5	<1.0	<0.050	<5.0	<0.50	<5.0
		Dissolved	<4.0	<0.50	<0.50	<0.30	<0.20	<0.080	20.6	<0.50	<0.50	<0.50	<50.0	<0.10	6.0	<0.50	<0.20	<0.50	<0.50	<20.0	<0.50	<0.50	404	<0.10	<0.10	<5.0												
		Potentially Dissolved	<50.0	<1.0	<1.0	0.26J	<0.50	<0.50	14.0J	0.54J	<1.0	1.3	<50.0	0.14J	<50.0	<1.0	<0.20	<1.0	<1.0	<500	<1.0	<0.50	279J	<1.0	<1.0	3.5J												

ANDERSON
ENGINEERING COMPANY INC.

TABLE 4B - Groundwater Analytical Sampling Results Summary, July 2012

			Metals (µg/L)																								Non-Metals (mg/L, unless otherwise indicated)											
Field Sample ID	Date Collected	Fraction	Aluminum	Antimony	Arsenic	Barium	Beryllium	Cadmium	Calcium	Chromium	Cobalt	Copper	Iron	Lead	Magnesium	Manganese	Mercury	Molybdenum	Nickel	Potassium	Selenium	Silver	Sodium	Thallium	Vanadium	Zinc	Alkalinity	Chloride	Cyanide	Hardness (µg/L as CaCO3)	Nitrate	Salinity	Silica	Sulfate	Sulfide	TDS	TOC	TSS
GW-1	7/17/12	Total	1530	<0.50	2.3	81.8	<0.20	0.17	46300	1.6	1.4	8.8	2330	9.0	5850	254	<0.20	1.4	2.2	1200	<0.50	<0.50	2210	<0.10	2.9	25.8	98.8	-	0.0061	140000	<0.10	181	12700	41.6	0.070	166	0.84	153
		Dissolved	6.2	<0.50	<0.50	58.2	<0.20	<0.080	51100	<0.50	<0.50	0.72	<50.0	<0.10	5350	0.79	<0.20	1.3	<0.50	689	<0.50	<0.50	2040	<0.10	<0.10	<5.0												
		Potentially Dissolved	569	0.13J	1.2	93.8	0.13J	0.39J	46300	1.8	1.6	12.9	1240	12.9	5340	315	<0.20	0.45J	4.0	696	0.42J	0.22J	2020	<1.0	1.5	26.5												
GW-3	7/17/12	Total	4760	<0.50	7.3	86.3	0.24	1.9	151000	6.1	3.5	32.0	7990	68.2	21200	1410	<0.20	1.6	5.7	3860	3.6	0.68	3430	0.15	8.8	268	196	-	<0.0050	464000		560	30100	278	0.47	587	1.2	332
		Dissolved	9.0	<0.50	<0.50	17.2	<0.20	0.29	172000	1.2	<0.50	0.86	<50.0	<0.10	19400	95.5	<0.20	<0.50	0.78	2820	2.3	<0.50	3120	<0.10	<0.10	43.1												
		Potentially Dissolved	5200	0.38J	9.1	105	0.58	3.8	146000	8.7	7.5	94.6	11700	147	19400	2020	<0.20	0.28J	7.9	3090	3.7	1.6	2870	0.047J	7.7	666												
GW-4	7/17/12	Total	10300	<0.50	6.9	146	1.1	13.1	177000	14.8	7.9	77.4	18500	85.7	24400	959	<0.20	7.9	14.4	3660	1.1	<0.50	5340	0.32	21.6	826	175	-	<0.0050	543000	<0.10	584	41400	334	0.33	663	1.3	1260
		Dissolved	6.1	<0.50	0.75	33.7	<0.20	0.13	178000	<0.50	0.76	0.57	1240	<0.10	19300	551	<0.20	11.3	2.8	1740	<0.50	<0.50	4790	<0.10	0.20	24.6												
		Potentially Dissolved	5820	0.095J	4.6	92.0	0.95	14.0	164000	13.6	7.4	83.2	13700	85.6	20700	912	<0.20	5.6	10.7	2150	1.1	<0.50	4480	0.25J	14.2	754												
GW-5	7/17/12	Total	5110	1.4	320	44.0	0.64	48.0	439000	4.4	25.2	697	53000	9210	50400	10600	<0.20	15.8	30.5	6870	2.1	28.5	6460	1.0	7.3	20200	127	-	<0.0050	1300000	<0.10	1390	57300	1190	<0.050	1870	<0.50	978
		Dissolved	7.9	<0.50	45.9	12.9	<0.20	0.54	491000	<0.50	16.0	0.56	9730	4.9	47400	8920	<0.20	6.5	20.5	5510	<0.50	<0.50	6080	<0.10	<0.10	11400												
		Potentially Dissolved	4420	0.81J	326	7.9	0.66	56.3	413000	3.9	22.1	502	43500	6050	47500	9700	<0.20	9.0	23.0	5660	1.0	0.51	6040	0.64J	5.7	20300												
GW-6	7/17/12	Total	1140	<0.50	146	49.1	0.80	2.2	345000	<5.0	2.7	19.8	159000	267	78000	20400	<0.20	11.4	2.6	24200	0.72	0.66	2820	<0.10	1.8	1350	<20.0	-	<0.0050	1180000	<0.10	1480	32100	1430	0.10	2240	<0.50	101
		Dissolved	77.0	<0.50	130	45.8	0.68	0.74	421000	<0.50	2.1	<0.50	155000	1.5	83500	39800	<0.20	11.2	1.8	22500	<0.50	<0.50	2710	<0.10	<0.10	1200												
		Potentially Dissolved	570	0.33J	131	43.0	0.71	2.1	346000	2.0	2.6	21.5	145000	271	78000	20200	<0.20	10.2	<1.0	23200	0.37J	0.063J	2750	0.031J	0.75J	1330												
GW-7	7/17/12	Total	5800	<0.50	6.8	20.0	0.89	4.2	286000	5.2	2.2	102	15600	497	27400	98.5	<0.20	1.9	6.2	3190	5.0	0.72	7520	0.17	3.6	584	262	-	<0.0050	827000	0.50	891	20300	567	<0.050	1070	0.84	361
		Dissolved	141	<0.50	<0.50	12.9	<0.20	3.5	297000	0.56	0.84	6.5	198	9.0	25900	42.5	<0.20	1.1	4.8	2530	1.7	<0.50	7260	<0.10	<0.10	242												
		Potentially Dissolved	7220	0.22J	5.8	18.0	1.3	4.9	264000	6.6	2.7	164	20700	796	25700	105	<0.20	1.2	4.0	2800	4.3	0.67	7030	0.19J	1.1	715												
EB-1	7/17/12	Total	520	<0.50	9.5	16.1	0.30	1.2	534000	<0.50	6.6	19.4	10600	38.5	32600	5210	<0.20	15.4	6.6	6840	<0.50	<0.50	7480	<0.10	0.58	1830	198	-	<0.0050	1470000	<0.10	1460	28200	1270	<0.050	2100	<0.50	50.0
		Dissolved	12.4	<0.50	3.9	15.4	<0.20	0.38	571000	<0.50	6.7	<0.50	7460	<0.10	33400	5240	<0.20	15.8	6.5	6640	<0.50	<0.50	7590	<0.10	<0.10	1640												
		Potentially Dissolved	315	0.16J	8.3	15.8	0.28J	1.6	522000	1.4	6.3	26.7	10200	43.1	33200	5100	<0.20	14.6	1.2	6320	<1.0	<0.50	7730	<1.0	<1.0	1940												
EB-2	7/17/12	Total	23100	<1.0	117	11.5	8.3	2.5	404000	<50.0	101	28.2	857000	292	192000	43600	<0.20	1.6	144	16900	1.9	<1.0	7190	<0.20	0.57	79100	<20.0	-	0.0052	1800000	<0.10	2690	41500	3530	<0.050	5210	<0.50	117
		Dissolved	26900	<2.5	18.1	11.1	12.3	1.4	631000	<2.5	137	<2.5	1200000	4.2	279000	43100	<0.20	<2.5	205	18100	2.6	<2.5	8400	<0.50	<0.50	78500												
		Potentially Dissolved	20700	0.25J	127	10.1	7.1	2.5	369000	3.1	103	36.2	718000	306	178000	38900	<0.20	1.6	150	15100	1.6	0.084J	6840	<1.0	<1.0	70600												
MW-1 SHALLOW	7/17/12	Total	22300	0.62	21.3	312	1.7	2.0	258000	20.5	15.4	83.0	33400	160	30200	1460	<0.20	12.3	19.5	6390	12.3	1.9	11000	0.57	30.8	367	89.3	-	<0.0050	768000	<0.10	785	97000	661	0.092	1050	<0.50	636
		Dissolved	263	<0.50	<0.50	27.6	<0.20	0.34	266000	0.86	<0.50	2.1	355	1.9	20900	21.3	<0.20	8.3	2.9	2060	7.0	<0.50	10800	<0.10	0.46	38.9												
		Potentially Dissolved	4190	0.24J	3.9	60.4	0.99	2.2	237000	6.2	9.6	41.6	6480	114	21200	1050	<0.20	2.3	6.1	2090	7.5	1.2	10200	0.095J	5.6	259												
MW-1 DEEP	7/17/12	Total	284	0.81	1.3	21.6	<0.20	2.4	233000	2.1	<0.50	7.2	110	16.9	18200	47.2	<0.20	10.4	1.5	6980	11.6	<0.50	16200	<0.10	0.84	899	93.1	-	<0.0050	657000	<0.10	738	15600	541	<0.050	959	0.81	12.0
		Dissolved	<4.0	<0.50	<0.50	17.6	<0.20	2.1	238000	0.81	<0.50	1.4	<50.0	<0.10	19800	10.2	<0.20	10.1	<0.50	7310	10.7	<0.50	17200	<0.10	0.31	759												
		Potentially Dissolved	121	0.72J	1.4	19.7	<0.50	2.3	196000	3.9	0.20J	8.8	573	14.0	16900	46.7	<0.20	9.4	<1.0	6200	10.1	<0.50	14300	0.15J	<1.0	810												
MW-2 SHALLOW	7/17/12	Total	DRY WELL																																			
		Dissolved																																				
		Potentially Dissolved																																				
MW-2 DEEP	7/17/12	Total	156	<0.50	<0.50	14.8	<0.20	0.80	264000	0.70	<0.50	1.6	338	3.5	21700	9.6	<0.20	5.6	0.80	1920	1.7	<0.50	11100	<0.10	0.24	26.3	81.7	-	0.012	748000	<0.10	830	11400	676	<0.050	1080	<0.50	9.0
		Dissolved	<4.0	<0.50	<0.50	12.1	<0.20	0.74	264000	0.58	<0.50	<0.50	<50.0	<0.10	23400	1.7	<0.20	5.4	<0.50	1840	1.8	<0.50	11400	<0.10	<0.10	16.2												
		Potentially Dissolved	60.3	0.17J	0.33J	13.3	<0.50	0.78	237000	1.2	0.060J	2.6	235	3.9	21800	11.0	<0.20	5.2	<2.0	1760	1.6	<0.50	10600	0.15J	<1.0	27.4												
MW-3 SHALLOW	7/17/12	Total	DRY WELL																																			
		Dissolved																																				
		Potentially Dissolved																																				
MW-3 DEEP	7/17/12	Total	330	<0.50	1.2	24.2	<0.20	0.51	266000	0.84	0.93	4.6	2120	5.8	25300	1160	<0.20	12.9	1.3	2380	<0.50	<0.50	12500	<0.10	0.64	108	91.2	-	<0.0050	769000	<0.10	808	13500	660	<0.050	1030	<0.50	8.0
		Dissolved	4.1	<0.50	<0.50	16.5	<0.20	<0.080	251000	<0.50	0.69	<0.50	630	<0.10	24400	1100	<0.20	11.8	0.59	2180	<0.50	<0.50	12700	<0.10	<0.10	52.4												
		Potentially Dissolved	113	0.15J	0.90J	19.7	<0.50	0.42J	218000	1.1	0.73J	4.0	1720	6.1	22200	1050	<0.20	11.0	<2.0	1980	<1.0	<0.50	11100	0.070J	<1.0	95.0												
MW-4 SHALLOW	7/17/12	Total	5840	<0.50	5.7	108	1.2	2.3	297000	8.0	10.9	65.5	7410	120	31300	1140	<0.20	1.5	7.8	4350	27.3	<0.50	6980	0.12	7.8	369	353	-	<0.0050	872000	1.0	898	32000	442	0.51	1070	0.93	781
		Dissolved	54.0	<0.50	<0.50	62.8	<0.20	1.3	293000	<0.50	1.0	2.3	<50.0	0.49	30200	455	<0.20	2.1	5.1	3630	24.7	<0.50	7440	<0.10	0.13	135												
		Potentially Dissolved	4230	0.19J	3.7	87.3	0.95	2.3	250000	8.8	8.4	60.0	6300	120	27800	942	<0.20	1.3	4.3	3620	21.9	0.22J	6390	0.12J	5.9	345												
MW-4 DEEP	7/18/12	Total	1600	<0.50	3.5	36.8	0.27	3.1	313000	2.3	1.9	19.4	2950	14.6	35100	317	<0.20	3.1	2.9	2700	37.7	<0.50	5550	<0.10	3.0	434	380	-	0.011	926000	0.12	956	21100	518	0.087	1170	<0.50	50.0
		Dissolved	44.9	<0.50	<0.50	17.1	<0.20	2.4	321000	<0.50	<0.50	3.8	<50.0	<0.10	36000	25.6	<0.20	2.0	0.77	2390	37.6	<0.50	5910	<0.10	<0.10	382												
		Potentially Dissolved	626	0.25J	2.6	24.8	0.20J	3.0	288000	2.2	1.3	18.7	1730	13.2	33800	203	<0.20	1.2	<1.0	2350	30.0	0.17J	5580	<1.0	1.2	425												
MW-5 SHALLOW	7/18/12	Total	54600	0.77	149	262	7.6	233	504000	9.1	91.2	260	390000	1550	120000	22900	<0.20	2.1	159	4410	8.4	3.8	9510	0.56	14.8	81100	<20.0	-	<0.0050	1750000	-	2440	136000	3870	<0.050	4240	<0.50	594
		Dissolved	41700	<0.50	122	12.2	7.0	216	491000	<10.0	90.4	61.0	369000	501	125000	22700	<0.20	<0.50	159	1980	3.1	<0.50	9570	0.33	2.9	73200												
		Potentially Dissolved	37700	0.25J	131	18.8	6.8	231	433000	6.8	87.8	290	348000	1540	112000	20900	<0.20	0.73J	154	1890	3.9	<0.50	7760	0.67J	6.4	67900												
MW-5 DEEP	7/18/12	Total	1330	<0.50	461	14.4	2.7	0.24	410000	0.74	14.9	4.6	132000	11.2	76400	16100	<0.20	15.1	17.5	10900	0.77	<0.50	6990	<0.10	0.28	15800	28.5	-	<0.0050	1340000	-	1520	27000	1750	<0.050	2320	<0.50	80.0
		Dissolved	1140	<0.50	197	11.4	2.7	<0.080	412000	<5.0	14.8	<0.50	138000	<0.10	80400	16100	<0.20	14.2	14.8	11300	<0.50	<0.50	7420	<0.10	<0.10	15000												
		Potentially Dissolved	1080	0.35J	401	13.3	2.3	0.70	371000	2.0	13.5	23.5	124000	65.3	73600	15100	<0.20	14.0	12.3	9340	0.40J	<0.50	5960	0.098J	<1.0	29100												
MW-6 SHALLOW	7/18/12	Total	31900	0.80	111	239	2.2	17.8	363000	24.1	15.3	146	81300	229	58900	6620	<0.20	9.4	29.3	16800	5.8	1.2	3960	0.74	34.8	3990	95.0	-	<0.0050	1150000	-	1110	127000	891	0.59	1530	0.83	1440
		Dissolved	954	<0.50	35.0	15.9	0.94	0.13	340000	<5.0	3.3	0.62	47600	0.37	49900	6010	<0.20	4.3	4.1	12000	<0.50	<0.50	3940	<0.10	<0.10	625												
		Potentially Dissolved	12500	0.17J	93.2	38.7	1.6	23.1	310000	9.4	12.7	111	63000	318	47700	6100	<0.20	2.5	16.5	10500	1.4	<0.50	4020	0.50J	12.4	5110												
MW-6 DEEP	7/18/12	Total	680	1.5	118	24.1	0.65	0.70	285000	1.5	2.8	8.1	20900	22.4	36500	6990	<0.20	6.0	4.8	6120	3.9	<0.50	5920	<0.10	0.72	639	184	-	<0.0050	862000	-	874	18200	588	<0.050	1120	0.65	68.0
		Dissolved	240	<0.50	6.5	16.3	0.52	0.34	278000	<0.50	2.6	0.90	9940	<0.10	37500	6730	<0.20	4.9	5.1	5910	1.1	<0.50	6130	<0.10	<0.10	464												
		Potentially Dissolved	461	1.2	108	19.7	0.53	0.73	226000	1.4	2.6	8.8	20100	22.3	31400	6290	<0.20	5.5	3.0	5200	3.2	<0.50	5370	<1.0	<1.0	616												

Appendix C

Project Narrative and Laboratory Analytical Reports

Pace Analytical Services, Inc.
9608 Loiret Blvd.
Lenexa, KS 66219
(913)599-5665

September 19, 2012

Mark DeFriez
Anderson Engineering Company I
977 W 2100 S.
Salt Lake City, UT 84119

RE: Project: July 2012 Rico Water Sampling
Pace Project No.: 60125518

Revised Report 10/2/12_rev.1
Explanation Letter for missing nitrates

Dear Mark DeFriez:

Enclosed are the analytical results for sample(s) received by the laboratory on July 19, 2012. The results relate only to the samples included in this report. Results reported herein conform to the most current TNI standards and the laboratory's Quality Assurance Manual, where applicable, unless otherwise noted in the body of the report.

The 300.0 Chloride analysis was missed on this project due to the chain not clearly being marked. The missing Chloride was noticed after the samples had gone out of hold and the containers were disposed of. Please see page 194 for an explanation of the missing nitrate results. If you have any questions concerning this report, please feel free to contact me.

Sincerely,

Heather Wilson

heather.wilson@pacelabs.com
Project Manager

Enclosures

This report shall not be reproduced, except in full,
without the written consent of Pace Analytical Services, Inc..

Pace Analytical Services, Inc.
9608 Loiret Blvd.
Lenexa, KS 66219
(913)599-5665

CERTIFICATIONS

Project: July 2012 Rico Water Sampling
Pace Project No.: 60125518

Minnesota Certification IDs
1700 Elm Street SE Suite 200, Minneapolis, MN 55414
A2LA Certification #: 2926.01
Alaska Certification #: UST-078
Alaska Certification #MN00064
Arizona Certification #: AZ-0014
Arkansas Certification #: 88-0680
California Certification #: 01155CA
Colorado Certification #Pace
Connecticut Certification #: PH-0256
EPA Region 8 Certification #: Pace
Florida/NELAP Certification #: E87605
Georgia Certification #: 959
Hawaii Certification #Pace
Idaho Certification #: MN00064
Illinois Certification #: 200011
Kansas Certification #: E-10167
Louisiana Certification #: 03086
Louisiana Certification #: LA080009
Maine Certification #: 2007029
Maryland Certification #: 322
Michigan DEQ Certification #: 9909
Minnesota Certification #: 027-053-137
Mississippi Certification #: Pace
Montana Certification #: MT CERT0092
Nevada Certification #: MN_00064
Nebraska Certification #: Pace
New Jersey Certification #: MN-002
New York Certification #: 11647
North Carolina Certification #: 530
North Dakota Certification #: R-036
North Dakota Certification #: R-036A
Ohio VAP Certification #: CL101
Oklahoma Certification #: 9507
Oregon Certification #: MN200001
Oregon Certification #: MN300001
Pennsylvania Certification #: 68-00563
Puerto Rico Certification
Tennessee Certification #: 02818
Texas Certification #: T104704192
Utah Certification #: MN00064
Virginia/DCLS Certification #: 002521
Virginia/VELAP Certification #: 460163
Washington Certification #: C754
West Virginia Certification #: 382
Wisconsin Certification #: 999407970

Montana Certification IDs
602 South 25th Street, Billings, MT 59101
EPA Region 8 Certification #: 8TMS-Q
Idaho Certification #: MT00012
Montana Certification #: MT CERT0040
NVLAP Certification #: 101292-0
Minnesota Dept of Health Certification #: 030-999-442

Green Bay Certification IDs
1241 Bellevue Street, Green Bay, WI 54302
Florida/NELAP Certification #: E87948
Illinois Certification #: 200050
Kentucky Certification #: 82
Louisiana Certification #: 04168
Minnesota Certification #: 055-999-334
New York Certification #: 11888
North Carolina Certification #: 503
North Dakota Certification #: R-150
South Carolina Certification #: 83006001
US Dept of Agriculture #: S-76505
Wisconsin Certification #: 405132750

Kansas Certification IDs
9608 Loiret Boulevard, Lenexa, KS 66219
A2LA Certification #: 2456.01
Arkansas Certification #: 12-019-0
Illinois Certification #: 002885
Iowa Certification #: 118
Kansas/NELAP Certification #: E-10116
Louisiana Certification #: 03055
Nevada Certification #: KS000212008A
Oklahoma Certification #: 9205/9935
Texas Certification #: T104704407-12-3
Utah Certification #: KS000212012-2

This report shall not be reproduced, except in full,
without the written consent of Pace Analytical Services, Inc..

Pace Analytical Services, Inc.
9608 Loiret Blvd.
Lenexa, KS 66219
(913)599-5665

SAMPLE SUMMARY

Project: July 2012 Rico Water Sampling
Pace Project No.: 60125518

Lab ID	Sample ID	Matrix	Date Collected	Date Received
60125518001	**DR-1**	Water	07/17/12 14:45	07/19/12 10:20
60125518002	**DR-2**	Water	07/17/12 14:40	07/19/12 10:20
60125518003	**DR-3**	Water	07/17/12 14:00	07/19/12 10:20
60125518004	**DR-4**	Water	07/17/12 15:00	07/19/12 10:20
60125518005	**DR-5**	Water	07/17/12 12:30	07/19/12 10:20
60125518006	**DR-6**	Water	07/17/12 12:50	07/19/12 10:20
60125518007	**DR-7**	Water	07/17/12 12:00	07/19/12 10:20
60125518008	**DR-8**	Water	07/17/12 14:25	07/19/12 10:20
60125518009	**DR-4-SW**	Water	07/17/12 11:40	07/19/12 10:20
60125518010	**DR-G**	Water	07/17/12 11:20	07/19/12 10:20
60125518011	**FB**	Water	07/17/12 14:10	07/19/12 10:20
60125518012	**GW-1**	Water	07/17/12 14:55	07/19/12 10:20
60125518013	**GW-3**	Water	07/17/12 15:40	07/19/12 10:20
60125518014	**GW-4**	Water	07/17/12 15:20	07/19/12 10:20
60125518015	**GW-5**	Water	07/17/12 15:50	07/19/12 10:20
60125518016	**GW-6**	Water	07/17/12 16:30	07/19/12 10:20
60125518017	**GW-7**	Water	07/17/12 16:05	07/19/12 10:20
60125518018	**EB-1**	Water	07/17/12 15:55	07/19/12 10:20
60125518019	**EB-2**	Water	07/17/12 16:45	07/19/12 10:20
60125518020	**MW-1 SHALLOW**	Water	07/17/12 08:30	07/19/12 10:20
60125518021	**MW-1 DEEP**	Water	07/17/12 08:30	07/19/12 10:20
60125518022	**MW-2 DEEP**	Water	07/17/12 08:45	07/19/12 10:20
60125518023	**MW-3 DEEP**	Water	07/17/12 09:30	07/19/12 10:20
60125518024	**MW-4 SHALLOW**	Water	07/17/12 10:00	07/19/12 10:20
60125518025	**MW-4 DEEP**	Water	07/18/12 09:00	07/19/12 10:20
60125518026	**MW-5 SHALLOW**	Water	07/18/12 10:20	07/19/12 10:20
60125518027	**MW-5 DEEP**	Water	07/18/12 11:00	07/19/12 10:20
60125518028	**MW-6 SHALLOW**	Water	07/18/12 10:40	07/19/12 10:20
60125518029	**MW-6 DEEP**	Water	07/18/12 11:10	07/19/12 10:20

This report shall not be reproduced, except in full,
without the written consent of Pace Analytical Services, Inc..

Pace Analytical Services, Inc.
9608 Loiret Blvd.
Lenexa, KS 66219
(913)599-5665

SAMPLE ANALYTE COUNT

Project: July 2012 Rico Water Sampling
Pace Project No.: 60125518

Lab ID	Sample ID	Method	Analysts	Analytes Reported	Laboratory
60125518001	**DR-1**	EPA 200.7	SMW	4	PASI-K
		EPA 200.8	RR1	25	PASI-M
		EPA 200.8	RJS	23	PASI-M
		EPA 200.8	JGP	19	PASI-K
		EPA 245.1	TEM	1	PASI-M
		EPA 245.1	TEM	1	PASI-M
		EPA 245.1	TJT	1	PASI-K
		SM 2510B	WT1	1	
		Calculated	WT1	2	
		SM 2320B	PWH	3	PASI-K
		SM 2540C	NDL	1	PASI-K
		SM 2540D	NDL	1	PASI-K
		SM 4500-H+B	NDL	1	PASI-K
		SM 4500-S-2 D	NDL	1	PASI-K
		SM 2580B	SRM1	1	PASI-K
		EPA 300.0	OL	1	PASI-K
		EPA 353.2	NDL	1	PASI-K
		SM 4500-CN-E	AJM	1	PASI-K
		SM 5310C	TJJ	1	PASI-G
60125518002	**DR-2**	EPA 200.7	SMW	4	PASI-K
		EPA 200.8	RR1	25	PASI-M
		EPA 200.8	RJS	23	PASI-M
		EPA 200.8	JGP	19	PASI-K
		EPA 245.1	TEM	1	PASI-M
		EPA 245.1	TEM	1	PASI-M
		EPA 245.1	TJT	1	PASI-K
		SM 2510B	WT1	1	
		Calculated	WT1	2	
		SM 2320B	PWH	3	PASI-K
		SM 2540C	NDL	1	PASI-K
		SM 2540D	NDL	1	PASI-K
		SM 4500-H+B	NDL	1	PASI-K
		SM 4500-S-2 D	NDL	1	PASI-K
		SM 2580B	SRM1	1	PASI-K
		EPA 300.0	OL	1	PASI-K
		EPA 353.2	NDL	1	PASI-K
		SM 4500-CN-E	AJM	1	PASI-K

This report shall not be reproduced, except in full,
without the written consent of Pace Analytical Services, Inc..

Pace Analytical Services, Inc.
9608 Loiret Blvd.
Lenexa, KS 66219
(913)599-5665

SAMPLE ANALYTE COUNT

Project: July 2012 Rico Water Sampling
Pace Project No.: 60125518

Lab ID	Sample ID	Method	Analysts	Analytes Reported	Laboratory
		SM 5310C	TJJ	1	PASI-G
60125518003	**DR-3**	EPA 200.7	SMW	4	PASI-K
		EPA 200.8	RR1	25	PASI-M
		EPA 200.8	RJS	23	PASI-M
		EPA 200.8	JGP	19	PASI-K
		EPA 245.1	TEM	1	PASI-M
		EPA 245.1	TEM	1	PASI-M
		EPA 245.1	TJT	1	PASI-K
		SM 2510B	WT1	1	
		Calculated	WT1	2	
		SM 2320B	PWH	3	PASI-K
		SM 2540C	NDL	1	PASI-K
		SM 2540D	NDL	1	PASI-K
		SM 4500-H+B	NDL	1	PASI-K
		SM 4500-S-2 D	NDL	1	PASI-K
		SM 2580B	SRM1	1	PASI-K
		EPA 300.0	OL	1	PASI-K
		EPA 353.2	NDL	1	PASI-K
		SM 4500-CN-E	AJM	1	PASI-K
		SM 5310C	TJJ	1	PASI-G
60125518004	**DR-4**	EPA 200.7	SMW	4	PASI-K
		EPA 200.8	RR1	25	PASI-M
		EPA 200.8	RJS	23	PASI-M
		EPA 200.8	JGP	19	PASI-K
		EPA 245.1	TEM	1	PASI-M
		EPA 245.1	TEM	1	PASI-M
		EPA 245.1	TJT	1	PASI-K
		SM 2510B	WT1	1	
		Calculated	WT1	2	
		SM 2320B	PWH	3	PASI-K
		SM 2540C	NDL	1	PASI-K
		SM 2540D	NDL	1	PASI-K
		SM 4500-H+B	NDL	1	PASI-K
		SM 4500-S-2 D	NDL	1	PASI-K
		SM 2580B	SRM1	1	PASI-K
		EPA 300.0	OL	1	PASI-K
		EPA 353.2	NDL	1	PASI-K

This report shall not be reproduced, except in full,
without the written consent of Pace Analytical Services, Inc..

Pace Analytical Services, Inc.
9608 Loiret Blvd.
Lenexa, KS 66219
(913)599-5665

SAMPLE ANALYTE COUNT

Project: July 2012 Rico Water Sampling
Pace Project No.: 60125518

Lab ID	Sample ID	Method	Analysts	Analytes Reported	Laboratory
		SM 4500-CN-E	AJM	1	PASI-K
		SM 5310C	TJJ	1	PASI-G
60125518005	**DR-5**	EPA 200.7	SMW	4	PASI-K
		EPA 200.8	RR1	25	PASI-M
		EPA 200.8	RJS	23	PASI-M
		EPA 200.8	JGP	19	PASI-K
		EPA 245.1	TEM	1	PASI-M
		EPA 245.1	TEM	1	PASI-M
		EPA 245.1	TJT	1	PASI-K
		SM 2510B	WT1	1	
		Calculated	WT1	2	
		SM 2320B	PWH	3	PASI-K
		SM 2540C	NDL	1	PASI-K
		SM 2540D	NDL	1	PASI-K
		SM 4500-H+B	NDL	1	PASI-K
		SM 4500-S-2 D	NDL	1	PASI-K
		SM 2580B	SRM1	1	PASI-K
		EPA 300.0	OL	1	PASI-K
		EPA 353.2	NDL	1	PASI-K
		SM 4500-CN-E	AJM	1	PASI-K
		SM 5310C	TJJ	1	PASI-G
60125518006	**DR-6**	EPA 200.7	SMW	4	PASI-K
		EPA 200.8	RR1	25	PASI-M
		EPA 200.8	RJS	23	PASI-M
		EPA 200.8	JGP	19	PASI-K
		EPA 245.1	TEM	1	PASI-M
		EPA 245.1	TEM	1	PASI-M
		EPA 245.1	TJT	1	PASI-K
		SM 2510B	WT1	1	
		Calculated	WT1	2	
		SM 2320B	PWH	3	PASI-K
		SM 2540C	NDL	1	PASI-K
		SM 2540D	NDL	1	PASI-K
		SM 4500-H+B	NDL	1	PASI-K
		SM 4500-S-2 D	NDL	1	PASI-K
		SM 2580B	SRM1	1	PASI-K
		EPA 300.0	OL	1	PASI-K

This report shall not be reproduced, except in full,
without the written consent of Pace Analytical Services, Inc..

Pace Analytical Services, Inc.
9608 Loiret Blvd.
Lenexa, KS 66219
(913)599-5665

SAMPLE ANALYTE COUNT

Project: July 2012 Rico Water Sampling
Pace Project No.: 60125518

Lab ID	Sample ID	Method	Analysts	Analytes Reported	Laboratory
		EPA 353.2	NDL	1	PASI-K
		SM 4500-CN-E	AJM	1	PASI-K
		SM 5310C	TJJ	1	PASI-G
60125518007	**DR-7**	EPA 200.7	SMW	4	PASI-K
		EPA 200.8	RR1	25	PASI-M
		EPA 200.8	RJS	23	PASI-M
		EPA 200.8	JGP	19	PASI-K
		EPA 245.1	TEM	1	PASI-M
		EPA 245.1	TEM	1	PASI-M
		EPA 245.1	TJT	1	PASI-K
		SM 2510B	WT1	1	
		Calculated	WT1	2	
		SM 2320B	PWH	3	PASI-K
		SM 2540C	NDL	1	PASI-K
		SM 2540D	NDL	1	PASI-K
		SM 4500-S-2 D	NDL	1	PASI-K
		SM 2580B	SRM1	1	PASI-K
		EPA 300.0	OL	1	PASI-K
		EPA 353.2	NDL	1	PASI-K
		SM 4500-CN-E	AJM	1	PASI-K
		SM 5310C	TJJ	1	PASI-G
60125518008	**DR-8**	EPA 200.7	SMW	4	PASI-K
		EPA 200.8	RR1	25	PASI-M
		EPA 200.8	RJS	23	PASI-M
		EPA 200.8	JGP	19	PASI-K
		EPA 245.1	TEM	1	PASI-M
		EPA 245.1	TEM	1	PASI-M
		EPA 245.1	TJT	1	PASI-K
		SM 2510B	WT1	1	
		Calculated	WT1	2	
		SM 2320B	PWH	3	PASI-K
		SM 2540C	NDL	1	PASI-K
		SM 2540D	NDL	1	PASI-K
		SM 4500-H+B	NDL	1	PASI-K
		SM 4500-S-2 D	NDL	1	PASI-K
		SM 2580B	SRM1	1	PASI-K
		EPA 300.0	OL	1	PASI-K

This report shall not be reproduced, except in full,
without the written consent of Pace Analytical Services, Inc..

Pace Analytical Services, Inc.
9608 Loiret Blvd.
Lenexa, KS 66219
(913)599-5665

SAMPLE ANALYTE COUNT

Project: July 2012 Rico Water Sampling
Pace Project No.: 60125518

Lab ID	Sample ID	Method	Analysts	Analytes Reported	Laboratory
		EPA 353.2	NDL	1	PASI-K
		SM 4500-CN-E	AJM	1	PASI-K
		SM 5310C	TJJ	1	PASI-G
60125518009	**DR-4-SW**	EPA 200.7	SMW	4	PASI-K
		EPA 200.8	RR1	25	PASI-M
		EPA 200.8	RJS	23	PASI-M
		EPA 200.8	JGP	19	PASI-K
		EPA 245.1	TEM	1	PASI-M
		EPA 245.1	TEM	1	PASI-M
		EPA 245.1	TJT	1	PASI-K
		SM 2510B	WT1	1	
		Calculated	WT1	2	
		SM 2320B	PWH	3	PASI-K
		SM 2540C	NDL	1	PASI-K
		SM 2540D	NDL	1	PASI-K
		SM 4500-S-2 D	NDL	1	PASI-K
		SM 2580B	SRM1	1	PASI-K
		EPA 300.0	OL	1	PASI-K
		EPA 353.2	NDL	1	PASI-K
		SM 4500-CN-E	AJM	1	PASI-K
		SM 5310C	TJJ	1	PASI-G
60125518010	**DR-G**	EPA 200.7	SMW	4	PASI-K
		EPA 200.8	RR1	25	PASI-M
		EPA 200.8	RJS	23	PASI-M
		EPA 200.8	JGP	19	PASI-K
		EPA 245.1	TEM	1	PASI-M
		EPA 245.1	TEM	1	PASI-M
		EPA 245.1	TJT	1	PASI-K
		SM 2510B	WT1	1	
		Calculated	WT1	2	
		SM 2320B	PWH	3	PASI-K
		SM 2540C	NDL	1	PASI-K
		SM 2540D	NDL	1	PASI-K
		SM 4500-S-2 D	NDL	1	PASI-K
		SM 2580B	SRM1	1	PASI-K
		EPA 300.0	OL	1	PASI-K
		EPA 353.2	NDL	1	PASI-K

This report shall not be reproduced, except in full,
without the written consent of Pace Analytical Services, Inc..

Pace Analytical Services, Inc.
9608 Loiret Blvd.
Lenexa, KS 66219
(913)599-5665

SAMPLE ANALYTE COUNT

Project: July 2012 Rico Water Sampling
Pace Project No.: 60125518

Lab ID	Sample ID	Method	Analysts	Analytes Reported	Laboratory
		SM 4500-CN-E	AJM	1	PASI-K
		SM 5310C	TJJ	1	PASI-G
60125518011	**FB**	EPA 200.7	SMW	4	PASI-K
		EPA 200.8	RR1	25	PASI-M
		EPA 200.8	RJS	23	PASI-M
		EPA 200.8	JGP	19	PASI-K
		EPA 245.1	TEM	1	PASI-M
		EPA 245.1	TEM	1	PASI-M
		EPA 245.1	TJT	1	PASI-K
		SM 2510B	WT1	1	
		Calculated	WT1	2	
		SM 2320B	PWH	3	PASI-K
		SM 2540C	NDL	1	PASI-K
		SM 2540D	NDL	1	PASI-K
		SM 4500-H+B	NDL	1	PASI-K
		SM 4500-S-2 D	NDL	1	PASI-K
		SM 2580B	SRM1	1	PASI-K
		EPA 300.0	OL	1	PASI-K
		EPA 353.2	NDL	1	PASI-K
		SM 4500-CN-E	AJM	1	PASI-K
		SM 5310C	TJJ	1	PASI-G
60125518012	**GW-1**	EPA 200.7	SMW	4	PASI-K
		EPA 200.8	RR1	25	PASI-M
		EPA 200.8	RJS	23	PASI-M
		EPA 200.8	JGP	19	PASI-K
		EPA 245.1	TEM	1	PASI-M
		EPA 245.1	TEM	1	PASI-M
		EPA 245.1	TJT	1	PASI-K
		SM 2510B	WT1	1	
		Calculated	WT1	2	
		SM 2320B	PWH	3	PASI-K
		SM 2540C	NDL	1	PASI-K
		SM 2540D	NDL	1	PASI-K
		SM 4500-H+B	NDL	1	PASI-K
		SM 4500-S-2 D	NDL	1	PASI-K
		SM 2580B	SRM1	1	PASI-K
		EPA 300.0	OL	1	PASI-K

This report shall not be reproduced, except in full,
without the written consent of Pace Analytical Services, Inc..

Pace Analytical Services, Inc.
9608 Loiret Blvd.
Lenexa, KS 66219
(913)599-5665

SAMPLE ANALYTE COUNT

Project: July 2012 Rico Water Sampling
Pace Project No.: 60125518

Lab ID	Sample ID	Method	Analysts	Analytes Reported	Laboratory
		EPA 353.2	NDL	1	PASI-K
		SM 4500-CN-E	AJM	1	PASI-K
		SM 5310C	TJJ	1	PASI-G
60125518013	**GW-3**	EPA 200.7	SMW	4	PASI-K
		EPA 200.8	RR1	25	PASI-M
		EPA 200.8	RJS	23	PASI-M
		EPA 200.8	JGP	19	PASI-K
		EPA 245.1	TEM	1	PASI-M
		EPA 245.1	TEM	1	PASI-M
		EPA 245.1	TJT	1	PASI-K
		SM 2510B	WT1	1	
		Calculated	WT1	2	
		SM 2320B	PWH	3	PASI-K
		SM 2540C	NDL	1	PASI-K
		SM 2540D	NDL	1	PASI-K
		SM 4500-H+B	NDL	1	PASI-K
		SM 4500-S-2 D	NDL	1	PASI-K
		SM 2580B	SRM1	1	PASI-K
		EPA 300.0	OL	1	PASI-K
		SM 4500-CN-E	AJM	1	PASI-K
		SM 5310C	TJJ	1	PASI-G
60125518014	**GW-4**	EPA 200.7	SMW	4	PASI-K
		EPA 200.8	RR1	25	PASI-M
		EPA 200.8	RJS	23	PASI-M
		EPA 200.8	JGP	19	PASI-K
		EPA 245.1	TEM	1	PASI-M
		EPA 245.1	TEM	1	PASI-M
		EPA 245.1	TJT	1	PASI-K
		SM 2510B	WT1	1	
		Calculated	WT1	2	
		SM 2320B	PWH	3	PASI-K
		SM 2540C	NDL	1	PASI-K
		SM 2540D	NDL	1	PASI-K
		SM 4500-H+B	NDL	1	PASI-K
		SM 4500-S-2 D	NDL	1	PASI-K
		SM 2580B	SRM1	1	PASI-K
		EPA 300.0	OL	1	PASI-K

This report shall not be reproduced, except in full,
without the written consent of Pace Analytical Services, Inc..

Pace Analytical Services, Inc.
9608 Loiret Blvd.
Lenexa, KS 66219
(913)599-5665

SAMPLE ANALYTE COUNT

Project: July 2012 Rico Water Sampling
Pace Project No.: 60125518

Lab ID	Sample ID	Method	Analysts	Analytes Reported	Laboratory
		EPA 353.2	NDL	1	PASI-K
		SM 4500-CN-E	AJM	1	PASI-K
		SM 5310C	TJJ	1	PASI-G
60125518015	**GW-5**	EPA 200.7	SMW	4	PASI-K
		EPA 200.8	RR1	25	PASI-M
		EPA 200.8	RJS	23	PASI-M
		EPA 200.8	JGP	19	PASI-K
		EPA 245.1	TEM	1	PASI-M
		EPA 245.1	TEM	1	PASI-M
		EPA 245.1	TJT	1	PASI-K
		SM 2510B	WT1	1	
		Calculated	WT1	2	
		SM 2320B	PWH	3	PASI-K
		SM 2540C	NDL	1	PASI-K
		SM 2540D	NDL	1	PASI-K
		SM 4500-H+B	NDL	1	PASI-K
		SM 4500-S-2 D	NDL	1	PASI-K
		SM 2580B	SRM1	1	PASI-K
		EPA 300.0	OL	1	PASI-K
		EPA 353.2	NDL	1	PASI-K
		SM 4500-CN-E	AJM	1	PASI-K
		SM 5310C	TJJ	1	PASI-G
60125518016	**GW-6**	EPA 200.7	SMW	4	PASI-K
		EPA 200.8	RR1	25	PASI-M
		EPA 200.8	RJS	23	PASI-M
		EPA 200.8	JGP	19	PASI-K
		EPA 245.1	TEM	1	PASI-M
		EPA 245.1	TEM	1	PASI-M
		EPA 245.1	TJT	1	PASI-K
		SM 2510B	WT1	1	
		Calculated	WT1	2	
		SM 2320B	PWH	3	PASI-K
		SM 2540C	NDL	1	PASI-K
		SM 2540D	NDL	1	PASI-K
		SM 4500-H+B	NDL	1	PASI-K
		SM 4500-S-2 D	NDL	1	PASI-K
		SM 2580B	SRM1	1	PASI-K

This report shall not be reproduced, except in full,
without the written consent of Pace Analytical Services, Inc..

Pace Analytical Services, Inc.
9608 Loiret Blvd.
Lenexa, KS 66219
(913)599-5665

SAMPLE ANALYTE COUNT

Project: July 2012 Rico Water Sampling
Pace Project No.: 60125518

Lab ID	Sample ID	Method	Analysts	Analytes Reported	Laboratory
		EPA 300.0	OL	1	PASI-K
		EPA 353.2	NDL	1	PASI-K
		SM 4500-CN-E	AJM	1	PASI-K
		SM 5310C	TJJ	1	PASI-G
60125518017	**GW-7**	EPA 200.7	SMW	4	PASI-K
		EPA 200.8	RR1	25	PASI-M
		EPA 200.8	RJS	23	PASI-M
		EPA 200.8	JGP	19	PASI-K
		EPA 245.1	TEM	1	PASI-M
		EPA 245.1	TEM	1	PASI-M
		EPA 245.1	TJT	1	PASI-K
		SM 2510B	WT1	1	
		Calculated	WT1	2	
		SM 2320B	PWH	3	PASI-K
		SM 2540C	NDL	1	PASI-K
		SM 2540D	NDL	1	PASI-K
		SM 4500-H+B	NDL	1	PASI-K
		SM 4500-S-2 D	NDL	1	PASI-K
		SM 2580B	SRM1	1	PASI-K
		EPA 300.0	OL	1	PASI-K
		EPA 353.2	NDL	1	PASI-K
		SM 4500-CN-E	AJM	1	PASI-K
		SM 5310C	TJJ	1	PASI-G
60125518018	**EB-1**	EPA 200.7	SMW	4	PASI-K
		EPA 200.8	RR1	25	PASI-M
		EPA 200.8	RJS	23	PASI-M
		EPA 200.8	JGP	19	PASI-K
		EPA 245.1	TEM	1	PASI-M
		EPA 245.1	TEM	1	PASI-M
		EPA 245.1	TJT	1	PASI-K
		SM 2510B	WT1	1	
		Calculated	WT1	2	
		SM 2320B	PWH	3	PASI-K
		SM 2540C	NDL	1	PASI-K
		SM 2540D	NDL	1	PASI-K
		SM 4500-H+B	NDL	1	PASI-K
		SM 4500-S-2 D	NDL	1	PASI-K

This report shall not be reproduced, except in full,
without the written consent of Pace Analytical Services, Inc..

Pace Analytical Services, Inc.
9608 Loiret Blvd.
Lenexa, KS 66219
(913)599-5665

SAMPLE ANALYTE COUNT

Project: July 2012 Rico Water Sampling
Pace Project No.: 60125518

Lab ID	Sample ID	Method	Analysts	Analytes Reported	Laboratory
		SM 2580B	SRM1	1	PASI-K
		EPA 300.0	OL	1	PASI-K
		EPA 353.2	NDL	1	PASI-K
		SM 4500-CN-E	AJM	1	PASI-K
		SM 5310C	TJJ	1	PASI-G
60125518019	**EB-2**	EPA 200.7	SMW	4	PASI-K
		EPA 200.8	RR1	25	PASI-M
		EPA 200.8	RJS	23	PASI-M
		EPA 200.8	JGP	19	PASI-K
		EPA 245.1	TEM	1	PASI-M
		EPA 245.1	TEM	1	PASI-M
		EPA 245.1	TJT	1	PASI-K
		SM 2510B	WT1	1	
		Calculated	WT1	2	
		SM 2320B	PWH	3	PASI-K
		SM 2540C	NDL	1	PASI-K
		SM 2540D	NDL	1	PASI-K
		SM 4500-H+B	NDL	1	PASI-K
		SM 4500-S-2 D	NDL	1	PASI-K
		SM 2580B	SRM1	1	PASI-K
		EPA 300.0	OL	1	PASI-K
		EPA 353.2	NDL	1	PASI-K
		SM 4500-CN-E	AJM	1	PASI-K
		SM 5310C	TJJ	1	PASI-G
60125518020	**MW-1 SHALLOW**	EPA 200.7	SMW	4	PASI-K
		EPA 200.8	RR1	25	PASI-M
		EPA 200.8	RJS	23	PASI-M
		EPA 200.8	JGP	19	PASI-K
		EPA 245.1	TEM	1	PASI-M
		EPA 245.1	TEM	1	PASI-M
		EPA 245.1	TJT	1	PASI-K
		SM 2510B	WT1	1	
		Calculated	WT1	2	
		SM 2320B	PWH	3	PASI-K
		SM 2540C	NDL	1	PASI-K
		SM 2540D	NDL	1	PASI-K
		SM 4500-H+B	NDL	1	PASI-K

This report shall not be reproduced, except in full,
without the written consent of Pace Analytical Services, Inc..

Pace Analytical Services, Inc.
9608 Loiret Blvd.
Lenexa, KS 66219
(913)599-5665

SAMPLE ANALYTE COUNT

Project: July 2012 Rico Water Sampling
Pace Project No.: 60125518

Lab ID	Sample ID	Method	Analysts	Analytes Reported	Laboratory
		SM 4500-S-2 D	NDL	1	PASI-K
		SM 2580B	SRM1	1	PASI-K
		EPA 300.0	OL	1	PASI-K
		EPA 353.2	NDL	1	PASI-K
		SM 4500-CN-E	AJM	1	PASI-K
		SM 5310C	TJJ	1	PASI-G
60125518021	**MW-1 DEEP**	EPA 200.7	SMW	4	PASI-K
		EPA 200.8	AJM	25	PASI-M
		EPA 200.8	RR1	23	PASI-M
		EPA 200.8	JGP	19	PASI-K
		EPA 245.1	TEM	1	PASI-M
		EPA 245.1	TEM	1	PASI-M
		EPA 245.1	SMW	1	PASI-K
		SM 2510B	WT1	1	
		Calculated	WT1	2	
		SM 2320B	PWH	3	PASI-K
		SM 2540C	NDL	1	PASI-K
		SM 2540D	NDL	1	PASI-K
		SM 4500-H+B	NDL	1	PASI-K
		SM 4500-S-2 D	NDL	1	PASI-K
		SM 2580B	SRM1	1	PASI-K
		EPA 300.0	OL	1	PASI-K
		EPA 353.2	NDL	1	PASI-K
		SM 4500-CN-E	AJM	1	PASI-K
		SM 5310C	TJJ	1	PASI-G
60125518022	**MW-2 DEEP**	EPA 200.7	SMW	4	PASI-K
		EPA 200.8	AJM	25	PASI-M
		EPA 200.8	RR1	23	PASI-M
		EPA 200.8	JGP	19	PASI-K
		EPA 245.1	TEM	1	PASI-M
		EPA 245.1	TEM	1	PASI-M
		EPA 245.1	SMW	1	PASI-K
		SM 2510B	WT1	1	
		Calculated	WT1	2	
		SM 2320B	PWH	3	PASI-K
		SM 2540C	NDL	1	PASI-K
		SM 2540D	NDL	1	PASI-K

This report shall not be reproduced, except in full,
without the written consent of Pace Analytical Services, Inc..

Pace Analytical Services, Inc.
9608 Loiret Blvd.
Lenexa, KS 66219
(913)599-5665

SAMPLE ANALYTE COUNT

Project: July 2012 Rico Water Sampling
Pace Project No.: 60125518

Lab ID	Sample ID	Method	Analysts	Analytes Reported	Laboratory
		SM 4500-H+B	NDL	1	PASI-K
		SM 4500-S-2 D	NDL	1	PASI-K
		SM 2580B	SRM1	1	PASI-K
		EPA 300.0	OL	1	PASI-K
		EPA 353.2	NDL	1	PASI-K
		SM 4500-CN-E	AJM	1	PASI-K
		SM 5310C	TJJ	1	PASI-G
60125518023	**MW-3 DEEP**	EPA 200.7	SMW	4	PASI-K
		EPA 200.8	AJM	25	PASI-M
		EPA 200.8	RR1	23	PASI-M
		EPA 200.8	JGP	19	PASI-K
		EPA 245.1	TEM	1	PASI-M
		EPA 245.1	TEM	1	PASI-M
		EPA 245.1	SMW	1	PASI-K
		SM 2510B	WT1	1	
		Calculated	WT1	2	
		SM 2320B	PWH	3	PASI-K
		SM 2540C	NDL	1	PASI-K
		SM 2540D	NDL	1	PASI-K
		SM 4500-H+B	NDL	1	PASI-K
		SM 4500-S-2 D	NDL	1	PASI-K
		SM 2580B	SRM1	1	PASI-K
		EPA 300.0	OL	1	PASI-K
		EPA 353.2	NDL	1	PASI-K
		SM 4500-CN-E	AJM	1	PASI-K
		SM 5310C	TJJ	1	PASI-G
60125518024	**MW-4 SHALLOW**	EPA 200.7	SMW	4	PASI-K
		EPA 200.8	AJM, RR1	25	PASI-M
		EPA 200.8	RR1	23	PASI-M
		EPA 200.8	JGP	19	PASI-K
		EPA 245.1	TEM	1	PASI-M
		EPA 245.1	TEM	1	PASI-M
		EPA 245.1	SMW	1	PASI-K
		SM 2510B	WT1	1	
		Calculated	WT1	2	
		SM 2320B	PWH	3	PASI-K
		SM 2540C	NDL	1	PASI-K

This report shall not be reproduced, except in full,
without the written consent of Pace Analytical Services, Inc..

Pace Analytical Services, Inc.
9608 Loiret Blvd.
Lenexa, KS 66219
(913)599-5665

SAMPLE ANALYTE COUNT

Project: July 2012 Rico Water Sampling
Pace Project No.: 60125518

Lab ID	Sample ID	Method	Analysts	Analytes Reported	Laboratory
		SM 2540D	NDL	1	PASI-K
		SM 4500-H+B	SRM1	1	PASI-K
		SM 4500-S-2 D	NDL	1	PASI-K
		SM 2580B	SRM1	1	PASI-K
		EPA 300.0	OL	1	PASI-K
		EPA 353.2	NDL	1	PASI-K
		SM 4500-CN-E	AJM	1	PASI-K
		SM 5310C	TJJ	1	PASI-G
60125518025	**MW-4 DEEP**	EPA 200.7	SMW	4	PASI-K
		EPA 200.8	AJM, RR1	25	PASI-M
		EPA 200.8	RR1	23	PASI-M
		EPA 200.8	JGP	19	PASI-K
		EPA 245.1	TEM	1	PASI-M
		EPA 245.1	TEM	1	PASI-M
		EPA 245.1	SMW	1	PASI-K
		SM 2510B	WT1	1	
		Calculated	WT1	2	
		SM 2320B	PWH	3	PASI-K
		SM 2540C	NDL	1	PASI-K
		SM 2540D	JML	1	PASI-K
		SM 4500-H+B	NDL	1	PASI-K
		SM 4500-S-2 D	NDL	1	PASI-K
		SM 2580B	SRM1	1	PASI-K
		EPA 300.0	OL	1	PASI-K
		EPA 353.2	NDL	1	PASI-K
		SM 4500-CN-E	AJM	1	PASI-K
		SM 5310C	TJJ	1	PASI-G
60125518026	**MW-5 SHALLOW**	EPA 200.7	SMW	4	PASI-K
		EPA 200.8	AJM, RR1	25	PASI-M
		EPA 200.8	RR1	23	PASI-M
		EPA 200.8	JGP	19	PASI-K
		EPA 245.1	TEM	1	PASI-M
		EPA 245.1	TEM	1	PASI-M
		EPA 245.1	SMW	1	PASI-K
		SM 2510B	WT1	1	
		Calculated	WT1	2	
		SM 2320B	PWH	3	PASI-K

This report shall not be reproduced, except in full,
without the written consent of Pace Analytical Services, Inc..

Pace Analytical Services, Inc.
9608 Loiret Blvd.
Lenexa, KS 66219
(913)599-5665

SAMPLE ANALYTE COUNT

Project: July 2012 Rico Water Sampling
Pace Project No.: 60125518

Lab ID	Sample ID	Method	Analysts	Analytes Reported	Laboratory
		SM 2540C	NDL	1	PASI-K
		SM 2540D	JML	1	PASI-K
		SM 4500-H+B	NDL	1	PASI-K
		SM 4500-S-2 D	NDL	1	PASI-K
		SM 2580B	SRM1	1	PASI-K
		EPA 300.0	OL	1	PASI-K
		SM 4500-CN-E	AJM	1	PASI-K
		SM 5310C	TJJ	1	PASI-G
60125518027	**MW-5 DEEP**	EPA 200.7	SMW	4	PASI-K
		EPA 200.8	AJM, RR1	25	PASI-M
		EPA 200.8	RR1	23	PASI-M
		EPA 200.8	JGP	19	PASI-K
		EPA 245.1	TEM	1	PASI-M
		EPA 245.1	TEM	1	PASI-M
		EPA 245.1	SMW	1	PASI-K
		SM 2510B	WT1	1	
		Calculated	WT1	2	
		SM 2320B	PWH	3	PASI-K
		SM 2540C	NDL	1	PASI-K
		SM 2540D	JML	1	PASI-K
		SM 4500-H+B	NDL	1	PASI-K
		SM 4500-S-2 D	NDL	1	PASI-K
		SM 2580B	SRM1	1	PASI-K
		EPA 300.0	OL	1	PASI-K
		SM 4500-CN-E	AJM	1	PASI-K
		SM 5310C	TJJ	1	PASI-G
60125518028	**MW-6 SHALLOW**	EPA 200.7	SMW	4	PASI-K
		EPA 200.8	AJM, RR1	25	PASI-M
		EPA 200.8	RR1	23	PASI-M
		EPA 200.8	JGP	19	PASI-K
		EPA 245.1	TEM	1	PASI-M
		EPA 245.1	TEM	1	PASI-M
		EPA 245.1	SMW	1	PASI-K
		SM 2510B	WT1	1	
		Calculated	WT1	2	
		SM 2320B	PWH	3	PASI-K
		SM 2540C	NDL	1	PASI-K

This report shall not be reproduced, except in full,
without the written consent of Pace Analytical Services, Inc..

Pace Analytical Services, Inc.
9608 Loiret Blvd.
Lenexa, KS 66219
(913)599-5665

SAMPLE ANALYTE COUNT

Project: July 2012 Rico Water Sampling
Pace Project No.: 60125518

Lab ID	Sample ID	Method	Analysts	Analytes Reported	Laboratory
		SM 2540D	JML	1	PASI-K
		SM 4500-H+B	NDL	1	PASI-K
		SM 4500-S-2 D	NDL	1	PASI-K
		SM 2580B	SRM1	1	PASI-K
		EPA 300.0	OL	1	PASI-K
		SM 4500-CN-E	AJM	1	PASI-K
		SM 5310C	TJJ	1	PASI-G
60125518029	**MW-6 DEEP**	EPA 200.7	SMW	4	PASI-K
		EPA 200.8	AJM, RR1	25	PASI-M
		EPA 200.8	RR1	23	PASI-M
		EPA 200.8	JGP	19	PASI-K
		EPA 245.1	TEM	1	PASI-M
		EPA 245.1	TEM	1	PASI-M
		EPA 245.1	SMW	1	PASI-K
		SM 2510B	WT1	1	
		Calculated	WT1	2	
		SM 2320B	PWH	3	PASI-K
		SM 2540C	NDL	1	PASI-K
		SM 2540D	JML	1	PASI-K
		SM 4500-H+B	NDL	1	PASI-K
		SM 4500-S-2 D	NDL	1	PASI-K
		SM 2580B	SRM1	1	PASI-K
		EPA 300.0	OL	1	PASI-K
		SM 4500-CN-E	AJM	1	PASI-K
		SM 5310C	TJJ	1	PASI-G

This report shall not be reproduced, except in full,
without the written consent of Pace Analytical Services, Inc..

Pace Analytical Services, Inc.
9608 Loiret Blvd.
Lenexa, KS 66219
(913)599-5665

PROJECT NARRATIVE

Project: July 2012 Rico Water Sampling
Pace Project No.: 60125518

Method: **EPA 200.7**
Description: 200.7 Potentially Diss. Metals
Client: BP Anderson Engineering Company Inc.
Date: September 19, 2012

General Information:
29 samples were analyzed for EPA 200.7. All samples were received in acceptable condition with any exceptions noted below.

Hold Time:
The samples were analyzed within the method required hold times with any exceptions noted below.

Sample Preparation:
The samples were prepared in accordance with EPA 200.7 with any exceptions noted below.

Initial Calibrations (including MS Tune as applicable):
All criteria were within method requirements with any exceptions noted below.

Continuing Calibration:
All criteria were within method requirements with any exceptions noted below.

Method Blank:
All analytes were below the report limit in the method blank with any exceptions noted below.

Laboratory Control Spike:
All laboratory control spike compounds were within QC limits with any exceptions noted below.

Matrix Spikes:
All percent recoveries and relative percent differences (RPDs) were within acceptance criteria with any exceptions noted below.

QC Batch: MPRP/18864

A matrix spike and matrix spike duplicate (MS/MSD) were performed on the following sample(s): 60125518022

M1: Matrix spike recovery exceeded QC limits. Batch accepted based on laboratory control sample (LCS) recovery.

- MS (Lab ID: 1035056)
  - Calcium, Dissolved
- MSD (Lab ID: 1035057)
  - Calcium, Dissolved

QC Batch: MPRP/18863

A matrix spike and matrix spike duplicate (MS/MSD) were performed on the following sample(s): 60125518003,60125518004

M1: Matrix spike recovery exceeded QC limits. Batch accepted based on laboratory control sample (LCS) recovery.

- MS (Lab ID: 1035049)
  - Calcium, Dissolved
- MS (Lab ID: 1035051)
  - Calcium, Dissolved
- MSD (Lab ID: 1035050)
  - Calcium, Dissolved

Additional Comments:

This report shall not be reproduced, except in full,
without the written consent of Pace Analytical Services, Inc..

Pace Analytical Services, Inc.
9608 Loiret Blvd.
Lenexa, KS 66219
(913)599-5665

PROJECT NARRATIVE

Project: July 2012 Rico Water Sampling
Pace Project No.: 60125518

Method: **EPA 200.8**
Description: 200.8 MET ICPMS
Client: BP Anderson Engineering Company Inc.
Date: September 19, 2012

General Information:
29 samples were analyzed for EPA 200.8. All samples were received in acceptable condition with any exceptions noted below.

Hold Time:
The samples were analyzed within the method required hold times with any exceptions noted below.

Initial Calibrations (including MS Tune as applicable):
All criteria were within method requirements with any exceptions noted below.

Continuing Calibration:
All criteria were within method requirements with any exceptions noted below.

Internal Standards:
All internal standards were within QC limits with any exceptions noted below.

Method Blank:
All analytes were below the report limit in the method blank with any exceptions noted below.

Laboratory Control Spike:
All laboratory control spike compounds were within QC limits with any exceptions noted below.

Matrix Spikes:
All percent recoveries and relative percent differences (RPDs) were within acceptance criteria with any exceptions noted below.

QC Batch: ICPM/34002

A matrix spike and matrix spike duplicate (MS/MSD) were performed on the following sample(s): 10199707001,92125128001

M1: Matrix spike recovery exceeded QC limits. Batch accepted based on laboratory control sample (LCS) recovery.

- MS (Lab ID: 1248831)
  - Aluminum
  - Silver
  - Sodium

Additional Comments:

Analyte Comments:

QC Batch: ICPM/34002

E: Analyte concentration exceeded the calibration range. The reported result is estimated.

- MS (Lab ID: 1248829)
  - Sodium
- MSD (Lab ID: 1248830)
  - Sodium

This report shall not be reproduced, except in full,
without the written consent of Pace Analytical Services, Inc..

Pace Analytical Services, Inc.
9608 Loiret Blvd.
Lenexa, KS 66219
(913)599-5665

PROJECT NARRATIVE

Project: July 2012 Rico Water Sampling
Pace Project No.: 60125518

Method: **EPA 200.8**
Description: 200.8 MET ICPMS, Dissolved
Client: BP Anderson Engineering Company Inc.
Date: September 19, 2012

General Information:
29 samples were analyzed for EPA 200.8. All samples were received in acceptable condition with any exceptions noted below.

Hold Time:
The samples were analyzed within the method required hold times with any exceptions noted below.

Initial Calibrations (including MS Tune as applicable):
All criteria were within method requirements with any exceptions noted below.

Continuing Calibration:
All criteria were within method requirements with any exceptions noted below.

QC Batch: ICPM/33998

CH: The continuing calibration for this compound is outside of Pace Analytical acceptance limits. The results may be biased high.

- EB-1 (Lab ID: 60125518018)
  - Thallium, Dissolved
- EB-2 (Lab ID: 60125518019)
  - Thallium, Dissolved
- FB (Lab ID: 60125518011)
  - Thallium, Dissolved
- GW-7 (Lab ID: 60125518017)
  - Thallium, Dissolved
- MS (Lab ID: 1248813)
  - Thallium, Dissolved
- MW-1 SHALLOW (Lab ID: 60125518020)
  - Thallium, Dissolved

Internal Standards:
All internal standards were within QC limits with any exceptions noted below.

Method Blank:
All analytes were below the report limit in the method blank with any exceptions noted below.

Laboratory Control Spike:
All laboratory control spike compounds were within QC limits with any exceptions noted below.

Matrix Spikes:
All percent recoveries and relative percent differences (RPDs) were within acceptance criteria with any exceptions noted below.

QC Batch: ICPM/33998

A matrix spike and matrix spike duplicate (MS/MSD) were performed on the following sample(s): 60125518002,60125518011

M1: Matrix spike recovery exceeded QC limits. Batch accepted based on laboratory control sample (LCS) recovery.

- MS (Lab ID: 1249215)
  - Calcium, Dissolved
- MSD (Lab ID: 1249216)

This report shall not be reproduced, except in full,
without the written consent of Pace Analytical Services, Inc..

Pace Analytical Services, Inc.
9608 Loiret Blvd.
Lenexa, KS 66219
(913)599-5665

PROJECT NARRATIVE

Project: July 2012 Rico Water Sampling
Pace Project No.: 60125518

Method: **EPA 200.8**
Description: 200.8 MET ICPMS, Dissolved
Client: BP Anderson Engineering Company Inc.
Date: September 19, 2012

QC Batch: ICPM/33998

A matrix spike and matrix spike duplicate (MS/MSD) were performed on the following sample(s): 60125518002,60125518011

M1: Matrix spike recovery exceeded QC limits. Batch accepted based on laboratory control sample (LCS) recovery.

- Calcium, Dissolved
- Magnesium, Dissolved

Additional Comments:

Analyte Comments:

QC Batch: ICPM/33998

D3: Sample was diluted due to the presence of high levels of non-target analytes or other matrix interference.

- EB-2 (Lab ID: 60125518019)
  - Silver, Dissolved
  - Chromium, Dissolved
  - Copper, Dissolved
  - Molybdenum, Dissolved
  - Antimony, Dissolved
  - Thallium, Dissolved
  - Vanadium, Dissolved

QC Batch: ICPM/34022

D4: Sample was diluted due to the presence of high levels of target analytes.

- MW-5 DEEP (Lab ID: 60125518027)
  - Chromium, Dissolved
- MW-5 SHALLOW (Lab ID: 60125518026)
  - Chromium, Dissolved
- MW-6 SHALLOW (Lab ID: 60125518028)
  - Chromium, Dissolved

E: Analyte concentration exceeded the calibration range. The reported result is estimated.

- MS (Lab ID: 1249106)
  - Calcium, Dissolved
- MSD (Lab ID: 1249107)
  - Calcium, Dissolved

This report shall not be reproduced, except in full,
without the written consent of Pace Analytical Services, Inc..

Pace Analytical Services, Inc.
9608 Loiret Blvd.
Lenexa, KS 66219
(913)599-5665

PROJECT NARRATIVE

Project: July 2012 Rico Water Sampling
Pace Project No.: 60125518

Method: **EPA 200.8**
Description: 200.8 Potentially Diss. Metals
Client: BP Anderson Engineering Company Inc.
Date: September 19, 2012

General Information:
29 samples were analyzed for EPA 200.8. All samples were received in acceptable condition with any exceptions noted below.

Hold Time:
The samples were analyzed within the method required hold times with any exceptions noted below.

Sample Preparation:
The samples were prepared in accordance with EPA 200.8 with any exceptions noted below.

Initial Calibrations (including MS Tune as applicable):
All criteria were within method requirements with any exceptions noted below.

Continuing Calibration:
All criteria were within method requirements with any exceptions noted below.

Internal Standards:
All internal standards were within QC limits with any exceptions noted below.

Method Blank:
All analytes were below the report limit in the method blank with any exceptions noted below.

Laboratory Control Spike:
All laboratory control spike compounds were within QC limits with any exceptions noted below.

Matrix Spikes:
All percent recoveries and relative percent differences (RPDs) were within acceptance criteria with any exceptions noted below.

QC Batch: MPRP/18912

A matrix spike and matrix spike duplicate (MS/MSD) were performed on the following sample(s): 60125518024

M1: Matrix spike recovery exceeded QC limits. Batch accepted based on laboratory control sample (LCS) recovery.

- MS (Lab ID: 1037249)
  - Zinc, Dissolved

QC Batch: MPRP/18910

A matrix spike and matrix spike duplicate (MS/MSD) were performed on the following sample(s): 60125518007,60125518014

M1: Matrix spike recovery exceeded QC limits. Batch accepted based on laboratory control sample (LCS) recovery.

- MS (Lab ID: 1037251)
  - Zinc, Dissolved

Duplicate Sample:
All duplicate sample results were within method acceptance criteria with any exceptions noted below.

Additional Comments:

This report shall not be reproduced, except in full,
without the written consent of Pace Analytical Services, Inc..

Pace Analytical Services, Inc.
9608 Loiret Blvd.
Lenexa, KS 66219
(913)599-5665

PROJECT NARRATIVE

Project: July 2012 Rico Water Sampling
Pace Project No.: 60125518

Method: **EPA 200.8**
Description: 200.8 Potentially Diss. Metals
Client: BP Anderson Engineering Company Inc.
Date: September 19, 2012

Analyte Comments:

QC Batch: MPRP/18861

B: Analyte was detected in the associated method blank.

- DR-8 (Lab ID: 60125518008)
  - Zinc, Dissolved

QC Batch: MPRP/18862

D3: Sample was diluted due to the presence of high levels of non-target analytes or other matrix interference.

- MW-2 DEEP (Lab ID: 60125518022)
  - Nickel, Dissolved
- MW-3 DEEP (Lab ID: 60125518023)
  - Nickel, Dissolved

This report shall not be reproduced, except in full,
without the written consent of Pace Analytical Services, Inc..

Pace Analytical Services, Inc.
9608 Loiret Blvd.
Lenexa, KS 66219
(913)599-5665

PROJECT NARRATIVE

Project: July 2012 Rico Water Sampling
Pace Project No.: 60125518

Method: **EPA 245.1**
Description: 245.1 Mercury
Client: BP Anderson Engineering Company Inc.
Date: September 19, 2012

General Information:
29 samples were analyzed for EPA 245.1. All samples were received in acceptable condition with any exceptions noted below.

Hold Time:
The samples were analyzed within the method required hold times with any exceptions noted below.

Initial Calibrations (including MS Tune as applicable):
All criteria were within method requirements with any exceptions noted below.

Continuing Calibration:
All criteria were within method requirements with any exceptions noted below.

Method Blank:
All analytes were below the report limit in the method blank with any exceptions noted below.

Laboratory Control Spike:
All laboratory control spike compounds were within QC limits with any exceptions noted below.

Matrix Spikes:
All percent recoveries and relative percent differences (RPDs) were within acceptance criteria with any exceptions noted below.

QC Batch: MERC/7201

A matrix spike and matrix spike duplicate (MS/MSD) were performed on the following sample(s): 60125518021

D6: The relative percent difference (RPD) between the sample and sample duplicate exceeded laboratory control limits.
- MSD (Lab ID: 1248926)
  - Mercury

M1: Matrix spike recovery exceeded QC limits. Batch accepted based on laboratory control sample (LCS) recovery.
- MS (Lab ID: 1248925)
  - Mercury

Additional Comments:

This report shall not be reproduced, except in full,
without the written consent of Pace Analytical Services, Inc..

Pace Analytical Services, Inc.
9608 Loiret Blvd.
Lenexa, KS 66219
(913)599-5665

PROJECT NARRATIVE

Project: July 2012 Rico Water Sampling
Pace Project No.: 60125518

Method: **EPA 245.1**
Description: 245.1 Mercury, Dissolved
Client: BP Anderson Engineering Company Inc.
Date: September 19, 2012

General Information:
29 samples were analyzed for EPA 245.1. All samples were received in acceptable condition with any exceptions noted below.

Hold Time:
The samples were analyzed within the method required hold times with any exceptions noted below.

Initial Calibrations (including MS Tune as applicable):
All criteria were within method requirements with any exceptions noted below.

Continuing Calibration:
All criteria were within method requirements with any exceptions noted below.

Method Blank:
All analytes were below the report limit in the method blank with any exceptions noted below.

Laboratory Control Spike:
All laboratory control spike compounds were within QC limits with any exceptions noted below.

Matrix Spikes:
All percent recoveries and relative percent differences (RPDs) were within acceptance criteria with any exceptions noted below.

QC Batch: MERC/7204

A matrix spike and matrix spike duplicate (MS/MSD) were performed on the following sample(s): 60125518021

M1: Matrix spike recovery exceeded QC limits. Batch accepted based on laboratory control sample (LCS) recovery.

- MS (Lab ID: 1249033)
  - Mercury, Dissolved

Additional Comments:

This report shall not be reproduced, except in full,
without the written consent of Pace Analytical Services, Inc..

Pace Analytical Services, Inc.
9608 Loiret Blvd.
Lenexa, KS 66219
(913)599-5665

PROJECT NARRATIVE

Project: July 2012 Rico Water Sampling
Pace Project No.: 60125518

Method: **EPA 245.1**
Description: 245.1 Potentially Diss Mercury
Client: BP Anderson Engineering Company Inc.
Date: September 19, 2012

General Information:
29 samples were analyzed for EPA 245.1. All samples were received in acceptable condition with any exceptions noted below.

Hold Time:
The samples were analyzed within the method required hold times with any exceptions noted below.

Sample Preparation:
The samples were prepared in accordance with EPA 245.1 with any exceptions noted below.

Initial Calibrations (including MS Tune as applicable):
All criteria were within method requirements with any exceptions noted below.

Continuing Calibration:
All criteria were within method requirements with any exceptions noted below.

Method Blank:
All analytes were below the report limit in the method blank with any exceptions noted below.

Laboratory Control Spike:
All laboratory control spike compounds were within QC limits with any exceptions noted below.

Matrix Spikes:
All percent recoveries and relative percent differences (RPDs) were within acceptance criteria with any exceptions noted below.

Duplicate Sample:
All duplicate sample results were within method acceptance criteria with any exceptions noted below.

Additional Comments:

This report shall not be reproduced, except in full,
without the written consent of Pace Analytical Services, Inc..

Pace Analytical Services, Inc.
9608 Loiret Blvd.
Lenexa, KS 66219
(913)599-5665

PROJECT NARRATIVE

Project: July 2012 Rico Water Sampling
Pace Project No.: 60125518

Method: **SM 2510B**
Description: 2510B Specific Conductance
Client: BP Anderson Engineering Company Inc.
Date: September 19, 2012

General Information:
29 samples were analyzed for SM 2510B. All samples were received in acceptable condition with any exceptions noted below.

Hold Time:
The samples were analyzed within the method required hold times with any exceptions noted below.

Initial Calibrations (including MS Tune as applicable):
All criteria were within method requirements with any exceptions noted below.

Continuing Calibration:
All criteria were within method requirements with any exceptions noted below.

Internal Standards:
All internal standards were within QC limits with any exceptions noted below.

Surrogates:
All surrogates were within QC limits with any exceptions noted below.

Method Blank:
All analytes were below the report limit in the method blank with any exceptions noted below.

Laboratory Control Spike:
All laboratory control spike compounds were within QC limits with any exceptions noted below.

Matrix Spikes:
All percent recoveries and relative percent differences (RPDs) were within acceptance criteria with any exceptions noted below.

Duplicate Sample:
All duplicate sample results were within method acceptance criteria with any exceptions noted below.

Additional Comments:

This report shall not be reproduced, except in full,
without the written consent of Pace Analytical Services, Inc..

Pace Analytical Services, Inc.
9608 Loiret Blvd.
Lenexa, KS 66219
(913)599-5665

PROJECT NARRATIVE

Project: July 2012 Rico Water Sampling
Pace Project No.: 60125518

Method: **Calculated**
Description: Salinity
Client: BP Anderson Engineering Company Inc.
Date: September 19, 2012

General Information:
29 samples were analyzed for Calculated. All samples were received in acceptable condition with any exceptions noted below.

Hold Time:
The samples were analyzed within the method required hold times with any exceptions noted below.

Initial Calibrations (including MS Tune as applicable):
All criteria were within method requirements with any exceptions noted below.

Continuing Calibration:
All criteria were within method requirements with any exceptions noted below.

Internal Standards:
All internal standards were within QC limits with any exceptions noted below.

Surrogates:
All surrogates were within QC limits with any exceptions noted below.

Method Blank:
All analytes were below the report limit in the method blank with any exceptions noted below.

Laboratory Control Spike:
All laboratory control spike compounds were within QC limits with any exceptions noted below.

Matrix Spikes:
All percent recoveries and relative percent differences (RPDs) were within acceptance criteria with any exceptions noted below.

Additional Comments:

This report shall not be reproduced, except in full,
without the written consent of Pace Analytical Services, Inc..

Pace Analytical Services, Inc.
9608 Loiret Blvd.
Lenexa, KS 66219
(913)599-5665

PROJECT NARRATIVE

Project: July 2012 Rico Water Sampling
Pace Project No.: 60125518

Method: **SM 2320B**
Description: 2320B Alkalinity
Client: BP Anderson Engineering Company Inc.
Date: September 19, 2012

General Information:
29 samples were analyzed for SM 2320B. All samples were received in acceptable condition with any exceptions noted below.

Hold Time:
The samples were analyzed within the method required hold times with any exceptions noted below.

Method Blank:
All analytes were below the report limit in the method blank with any exceptions noted below.

Laboratory Control Spike:
All laboratory control spike compounds were within QC limits with any exceptions noted below.

Matrix Spikes:
All percent recoveries and relative percent differences (RPDs) were within acceptance criteria with any exceptions noted below.

Duplicate Sample:
All duplicate sample results were within method acceptance criteria with any exceptions noted below.

Additional Comments:

This report shall not be reproduced, except in full,
without the written consent of Pace Analytical Services, Inc..

Pace Analytical Services, Inc.
9608 Loiret Blvd.
Lenexa, KS 66219
(913)599-5665

PROJECT NARRATIVE

Project: July 2012 Rico Water Sampling
Pace Project No.: 60125518

Method: **SM 2540C**
Description: 2540C Total Dissolved Solids
Client: BP Anderson Engineering Company Inc.
Date: September 19, 2012

General Information:
29 samples were analyzed for SM 2540C. All samples were received in acceptable condition with any exceptions noted below.

Hold Time:
The samples were analyzed within the method required hold times with any exceptions noted below.

Method Blank:
All analytes were below the report limit in the method blank with any exceptions noted below.

Laboratory Control Spike:
All laboratory control spike compounds were within QC limits with any exceptions noted below.

Matrix Spikes:
All percent recoveries and relative percent differences (RPDs) were within acceptance criteria with any exceptions noted below.

Duplicate Sample:
All duplicate sample results were within method acceptance criteria with any exceptions noted below.

Additional Comments:

This report shall not be reproduced, except in full,
without the written consent of Pace Analytical Services, Inc..

Pace Analytical Services, Inc.
9608 Loiret Blvd.
Lenexa, KS 66219
(913)599-5665

PROJECT NARRATIVE

Project: July 2012 Rico Water Sampling
Pace Project No.: 60125518

Method: **SM 2540D**
Description: 2540D Total Suspended Solids
Client: BP Anderson Engineering Company Inc.
Date: September 19, 2012

General Information:
29 samples were analyzed for SM 2540D. All samples were received in acceptable condition with any exceptions noted below.

Hold Time:
The samples were analyzed within the method required hold times with any exceptions noted below.

Method Blank:
All analytes were below the report limit in the method blank with any exceptions noted below.

Laboratory Control Spike:
All laboratory control spike compounds were within QC limits with any exceptions noted below.

Matrix Spikes:
All percent recoveries and relative percent differences (RPDs) were within acceptance criteria with any exceptions noted below.

Duplicate Sample:
All duplicate sample results were within method acceptance criteria with any exceptions noted below.

QC Batch: WET/36162

D6: The relative percent difference (RPD) between the sample and sample duplicate exceeded laboratory control limits.

- DUP (Lab ID: 1032295)
  - Total Suspended Solids

QC Batch: WET/36218

D6: The relative percent difference (RPD) between the sample and sample duplicate exceeded laboratory control limits.

- DUP (Lab ID: 1034216)
  - Total Suspended Solids

Additional Comments:

This report shall not be reproduced, except in full,
without the written consent of Pace Analytical Services, Inc..

Pace Analytical Services, Inc.
9608 Loiret Blvd.
Lenexa, KS 66219
(913)599-5665

PROJECT NARRATIVE

Project: July 2012 Rico Water Sampling
Pace Project No.: 60125518

Method: **SM 4500-H+B**
Description: 4500H+ pH, Electrometric
Client: BP Anderson Engineering Company Inc.
Date: September 19, 2012

General Information:
26 samples were analyzed for SM 4500-H+B. All samples were received in acceptable condition with any exceptions noted below.

Hold Time:
The samples were analyzed within the method required hold times with any exceptions noted below.

H6: Analysis initiated outside of the 15 minute EPA recommended holding time.
- DR-1 (Lab ID: 60125518001)
- DR-2 (Lab ID: 60125518002)
- DR-3 (Lab ID: 60125518003)
- DR-4 (Lab ID: 60125518004)
- DR-5 (Lab ID: 60125518005)
- DR-6 (Lab ID: 60125518006)
- DR-8 (Lab ID: 60125518008)
- EB-1 (Lab ID: 60125518018)
- EB-2 (Lab ID: 60125518019)
- FB (Lab ID: 60125518011)
- GW-1 (Lab ID: 60125518012)
- GW-3 (Lab ID: 60125518013)
- GW-4 (Lab ID: 60125518014)
- GW-5 (Lab ID: 60125518015)
- GW-6 (Lab ID: 60125518016)
- GW-7 (Lab ID: 60125518017)
- MW-1 DEEP (Lab ID: 60125518021)
- MW-1 SHALLOW (Lab ID: 60125518020)
- MW-2 DEEP (Lab ID: 60125518022)
- MW-3 DEEP (Lab ID: 60125518023)
- MW-4 DEEP (Lab ID: 60125518025)
- MW-4 SHALLOW (Lab ID: 60125518024)
- MW-5 DEEP (Lab ID: 60125518027)
- MW-5 SHALLOW (Lab ID: 60125518026)
- MW-6 DEEP (Lab ID: 60125518029)
- MW-6 SHALLOW (Lab ID: 60125518028)

Method Blank:
All analytes were below the report limit in the method blank with any exceptions noted below.

Laboratory Control Spike:
All laboratory control spike compounds were within QC limits with any exceptions noted below.

Matrix Spikes:
All percent recoveries and relative percent differences (RPDs) were within acceptance criteria with any exceptions noted below.

Duplicate Sample:
All duplicate sample results were within method acceptance criteria with any exceptions noted below.

This report shall not be reproduced, except in full,
without the written consent of Pace Analytical Services, Inc..

Pace Analytical Services, Inc.
9608 Loiret Blvd.
Lenexa, KS 66219
(913)599-5665

PROJECT NARRATIVE

Project: July 2012 Rico Water Sampling
Pace Project No.: 60125518

Method: **SM 4500-H+B**
Description: 4500H+ pH, Electrometric
Client: BP Anderson Engineering Company Inc.
Date: September 19, 2012

Additional Comments:

This report shall not be reproduced, except in full,
without the written consent of Pace Analytical Services, Inc..

Pace Analytical Services, Inc.
9608 Loiret Blvd.
Lenexa, KS 66219
(913)599-5665

PROJECT NARRATIVE

Project: July 2012 Rico Water Sampling
Pace Project No.: 60125518

Method: **SM 4500-S-2 D**
Description: 4500S2D Sulfide, Total
Client: BP Anderson Engineering Company Inc.
Date: September 19, 2012

General Information:
29 samples were analyzed for SM 4500-S-2 D. All samples were received in acceptable condition with any exceptions noted below.

Hold Time:
The samples were analyzed within the method required hold times with any exceptions noted below.

Method Blank:
All analytes were below the report limit in the method blank with any exceptions noted below.

Laboratory Control Spike:
All laboratory control spike compounds were within QC limits with any exceptions noted below.

Matrix Spikes:
All percent recoveries and relative percent differences (RPDs) were within acceptance criteria with any exceptions noted below.

Duplicate Sample:
All duplicate sample results were within method acceptance criteria with any exceptions noted below.

Additional Comments:

This report shall not be reproduced, except in full,
without the written consent of Pace Analytical Services, Inc..

Pace Analytical Services, Inc.
9608 Loiret Blvd.
Lenexa, KS 66219
(913)599-5665

PROJECT NARRATIVE

Project: July 2012 Rico Water Sampling
Pace Project No.: 60125518

Method: **SM 2580B**
Description: Oxidation/Reduction Potential
Client: BP Anderson Engineering Company Inc.
Date: September 19, 2012

General Information:
29 samples were analyzed for SM 2580B. All samples were received in acceptable condition with any exceptions noted below.

Hold Time:
The samples were analyzed within the method required hold times with any exceptions noted below.

Method Blank:
All analytes were below the report limit in the method blank with any exceptions noted below.

Laboratory Control Spike:
All laboratory control spike compounds were within QC limits with any exceptions noted below.

Matrix Spikes:
All percent recoveries and relative percent differences (RPDs) were within acceptance criteria with any exceptions noted below.

Duplicate Sample:
All duplicate sample results were within method acceptance criteria with any exceptions noted below.

Additional Comments:

This report shall not be reproduced, except in full,
without the written consent of Pace Analytical Services, Inc..

Pace Analytical Services, Inc.
9608 Loiret Blvd.
Lenexa, KS 66219
(913)599-5665

PROJECT NARRATIVE

Project: July 2012 Rico Water Sampling
Pace Project No.: 60125518

Method: **EPA 300.0**
Description: 300.0 IC Anions 28 Days
Client: BP Anderson Engineering Company Inc.
Date: September 19, 2012

General Information:
29 samples were analyzed for EPA 300.0. All samples were received in acceptable condition with any exceptions noted below.

Hold Time:
The samples were analyzed within the method required hold times with any exceptions noted below.

Initial Calibrations (including MS Tune as applicable):
All criteria were within method requirements with any exceptions noted below.

Continuing Calibration:
All criteria were within method requirements with any exceptions noted below.

Method Blank:
All analytes were below the report limit in the method blank with any exceptions noted below.

Laboratory Control Spike:
All laboratory control spike compounds were within QC limits with any exceptions noted below.

Matrix Spikes:
All percent recoveries and relative percent differences (RPDs) were within acceptance criteria with any exceptions noted below.

Additional Comments:

This report shall not be reproduced, except in full,
without the written consent of Pace Analytical Services, Inc..

Pace Analytical Services, Inc.
9608 Loiret Blvd.
Lenexa, KS 66219
(913)599-5665

PROJECT NARRATIVE

Project: July 2012 Rico Water Sampling
Pace Project No.: 60125518

Method: **EPA 353.2**
Description: 353.2 Nitrogen, NO2/NO3 pres.
Client: BP Anderson Engineering Company Inc.
Date: September 19, 2012

General Information:
24 samples were analyzed for EPA 353.2. All samples were received in acceptable condition with any exceptions noted below.

Hold Time:
The samples were analyzed within the method required hold times with any exceptions noted below.

Initial Calibrations (including MS Tune as applicable):
All criteria were within method requirements with any exceptions noted below.

Continuing Calibration:
All criteria were within method requirements with any exceptions noted below.

Method Blank:
All analytes were below the report limit in the method blank with any exceptions noted below.

Laboratory Control Spike:
All laboratory control spike compounds were within QC limits with any exceptions noted below.

Matrix Spikes:
All percent recoveries and relative percent differences (RPDs) were within acceptance criteria with any exceptions noted below.

Duplicate Sample:
All duplicate sample results were within method acceptance criteria with any exceptions noted below.

Additional Comments:

This report shall not be reproduced, except in full,
without the written consent of Pace Analytical Services, Inc..

Pace Analytical Services, Inc.
9608 Loiret Blvd.
Lenexa, KS 66219
(913)599-5665

PROJECT NARRATIVE

Project: July 2012 Rico Water Sampling
Pace Project No.: 60125518

Method: **SM 4500-CN-E**
Description: 4500CNE Cyanide, Total
Client: BP Anderson Engineering Company Inc.
Date: September 19, 2012

General Information:
29 samples were analyzed for SM 4500-CN-E. All samples were received in acceptable condition with any exceptions noted below.

Hold Time:
The samples were analyzed within the method required hold times with any exceptions noted below.

Initial Calibrations (including MS Tune as applicable):
All criteria were within method requirements with any exceptions noted below.

Continuing Calibration:
All criteria were within method requirements with any exceptions noted below.

Method Blank:
All analytes were below the report limit in the method blank with any exceptions noted below.

Laboratory Control Spike:
All laboratory control spike compounds were within QC limits with any exceptions noted below.

Matrix Spikes:
All percent recoveries and relative percent differences (RPDs) were within acceptance criteria with any exceptions noted below.

Duplicate Sample:
All duplicate sample results were within method acceptance criteria with any exceptions noted below.

Additional Comments:

This report shall not be reproduced, except in full,
without the written consent of Pace Analytical Services, Inc..

Pace Analytical Services, Inc.
9608 Loiret Blvd.
Lenexa, KS 66219
(913)599-5665

PROJECT NARRATIVE

Project: July 2012 Rico Water Sampling
Pace Project No.: 60125518

Method: **SM 5310C**
Description: 5310C TOC
Client: BP Anderson Engineering Company Inc.
Date: September 19, 2012

General Information:
29 samples were analyzed for SM 5310C. All samples were received in acceptable condition with any exceptions noted below.

Hold Time:
The samples were analyzed within the method required hold times with any exceptions noted below.

Initial Calibrations (including MS Tune as applicable):
All criteria were within method requirements with any exceptions noted below.

Continuing Calibration:
All criteria were within method requirements with any exceptions noted below.

Method Blank:
All analytes were below the report limit in the method blank with any exceptions noted below.

Laboratory Control Spike:
All laboratory control spike compounds were within QC limits with any exceptions noted below.

Matrix Spikes:
All percent recoveries and relative percent differences (RPDs) were within acceptance criteria with any exceptions noted below.

Additional Comments:

This data package has been reviewed for quality and completeness and is approved for release.

This report shall not be reproduced, except in full,
without the written consent of Pace Analytical Services, Inc..

Pace Analytical Services, Inc.
9608 Loiret Blvd.
Lenexa, KS 66219
(913)599-5665

ANALYTICAL RESULTS

Project: July 2012 Rico Water Sampling
Pace Project No.: 60125518

Sample: DR-1 **Lab ID: 60125518001** Collected: 07/17/12 14:45 Received: 07/19/12 10:20 Matrix: Water

Parameters	Results	Units	Report Limit	DF	Prepared	Analyzed	CAS No.	Qual
200.7 Potentially Diss. Metals	Analytical Method: EPA 200.7 Preparation Method: EPA 200.7							
Calcium, Dissolved	**32800**	ug/L	500	5	07/26/12 10:00	07/27/12 13:36	7440-70-2	
Magnesium, Dissolved	**4820**	ug/L	250	5	07/26/12 10:00	07/27/12 13:36	7439-95-4	
Potassium, Dissolved	**518**	ug/L	500	1	07/26/12 10:00	07/30/12 11:49	7440-09-7	
Sodium, Dissolved	**1920**	ug/L	500	1	07/26/12 10:00	07/30/12 11:49	7440-23-5	
200.8 MET ICPMS	Analytical Method: EPA 200.8							
Aluminum	**30.8**	ug/L	4.0	1	07/25/12 17:09	08/29/12 02:48	7429-90-5	
Antimony	ND	ug/L	0.50	1	07/25/12 17:09	08/29/12 02:48	7440-36-0	
Arsenic	ND	ug/L	0.50	1	07/25/12 17:09	08/29/12 02:48	7440-38-2	
Barium	**61.1**	ug/L	0.30	1	07/25/12 17:09	08/29/12 02:48	7440-39-3	
Beryllium	ND	ug/L	0.20	1	07/25/12 17:09	08/29/12 02:48	7440-41-7	
Cadmium	ND	ug/L	0.080	1	07/25/12 17:09	08/29/12 02:48	7440-43-9	
Calcium	**34700**	ug/L	100	5	07/25/12 17:09	08/29/12 02:54	7440-70-2	M6
Chromium	ND	ug/L	0.50	1	07/25/12 17:09	08/29/12 02:48	7440-47-3	
Cobalt	ND	ug/L	0.50	1	07/25/12 17:09	08/29/12 02:48	7440-48-4	
Copper	**0.56**	ug/L	0.50	1	07/25/12 17:09	08/29/12 02:48	7440-50-8	
Iron	ND	ug/L	50.0	1	07/25/12 17:09	08/29/12 02:48	7439-89-6	
Lead	ND	ug/L	0.10	1	07/25/12 17:09	08/29/12 02:48	7439-92-1	
Magnesium	**5180**	ug/L	5.0	1	07/25/12 17:09	08/29/12 02:48	7439-95-4	
Manganese	**9.8**	ug/L	0.50	1	07/25/12 17:09	08/29/12 02:48	7439-96-5	
Molybdenum	**0.90**	ug/L	0.50	1	07/25/12 17:09	08/29/12 02:48	7439-98-7	
Nickel	ND	ug/L	0.50	1	07/25/12 17:09	08/30/12 21:31	7440-02-0	
Potassium	**660**	ug/L	20.0	1	07/25/12 17:09	08/29/12 02:48	7440-09-7	
Selenium	ND	ug/L	0.50	1	07/25/12 17:09	08/29/12 02:48	7782-49-2	
Silica	**6080**	ug/L	268	5	07/25/12 17:09	08/30/12 21:37	7631-86-9	
Silver	ND	ug/L	0.50	1	07/25/12 17:09	08/29/12 02:48	7440-22-4	
Sodium	**2120**	ug/L	50.0	1	07/25/12 17:09	08/29/12 02:48	7440-23-5	
Thallium	ND	ug/L	0.10	1	07/25/12 17:09	08/29/12 02:48	7440-28-0	
Total Hardness by 2340B	**108000**	ug/L	355	5	07/25/12 17:09	08/29/12 02:54		
Vanadium	**0.18**	ug/L	0.10	1	07/25/12 17:09	08/29/12 02:48	7440-62-2	
Zinc	ND	ug/L	5.0	1	07/25/12 17:09	08/29/12 02:48	7440-66-6	
200.8 MET ICPMS, Dissolved	Analytical Method: EPA 200.8							
Aluminum, Dissolved	**10.6**	ug/L	4.0	1	07/26/12 10:58	08/28/12 01:28	7429-90-5	
Antimony, Dissolved	ND	ug/L	0.50	1	07/26/12 10:58	08/28/12 01:28	7440-36-0	
Arsenic, Dissolved	ND	ug/L	0.50	1	07/26/12 10:58	08/28/12 01:28	7440-38-2	
Barium, Dissolved	**62.9**	ug/L	0.30	1	07/26/12 10:58	08/28/12 01:28	7440-39-3	
Beryllium, Dissolved	ND	ug/L	0.20	1	07/26/12 10:58	08/28/12 01:28	7440-41-7	
Cadmium, Dissolved	ND	ug/L	0.080	1	07/26/12 10:58	08/28/12 01:28	7440-43-9	
Calcium, Dissolved	**38900**	ug/L	100	5	07/26/12 10:58	08/28/12 01:32	7440-70-2	
Chromium, Dissolved	ND	ug/L	0.50	1	07/26/12 10:58	08/28/12 01:28	7440-47-3	
Cobalt, Dissolved	ND	ug/L	0.50	1	07/26/12 10:58	08/28/12 01:28	7440-48-4	
Copper, Dissolved	**1.1**	ug/L	0.50	1	07/26/12 10:58	08/28/12 01:28	7440-50-8	
Iron, Dissolved	ND	ug/L	50.0	1	07/26/12 10:58	08/28/12 01:28	7439-89-6	
Lead, Dissolved	ND	ug/L	0.10	1	07/26/12 10:58	08/28/12 01:28	7439-92-1	
Magnesium, Dissolved	**5070**	ug/L	5.0	1	07/26/12 10:58	08/28/12 01:28	7439-95-4	

This report shall not be reproduced, except in full,
without the written consent of Pace Analytical Services, Inc..

Pace Analytical Services, Inc.
9608 Loiret Blvd.
Lenexa, KS 66219
(913)599-5665

ANALYTICAL RESULTS

Project: July 2012 Rico Water Sampling
Pace Project No.: 60125518

Sample: DR-1 **Lab ID: 60125518001** Collected: 07/17/12 14:45 Received: 07/19/12 10:20 Matrix: Water

Parameters	Results	Units	Report Limit	DF	Prepared	Analyzed	CAS No.	Qual
200.8 MET ICPMS, Dissolved	Analytical Method: EPA 200.8							
Manganese, Dissolved	**9.2**	ug/L	0.50	1	07/26/12 10:58	08/28/12 01:28	7439-96-5	
Molybdenum, Dissolved	**0.89**	ug/L	0.50	1	07/26/12 10:58	08/28/12 01:28	7439-98-7	
Nickel, Dissolved	**2.5**	ug/L	0.50	1	07/26/12 10:58	08/28/12 01:28	7440-02-0	
Potassium, Dissolved	**617**	ug/L	20.0	1	07/26/12 10:58	08/28/12 01:28	7440-09-7	
Selenium, Dissolved	ND	ug/L	0.50	1	07/26/12 10:58	08/28/12 01:28	7782-49-2	
Silver, Dissolved	ND	ug/L	0.50	1	07/26/12 10:58	08/28/12 01:28	7440-22-4	
Sodium, Dissolved	**1960**	ug/L	50.0	1	07/26/12 10:58	08/28/12 01:28	7440-23-5	
Thallium, Dissolved	ND	ug/L	0.10	1	07/26/12 10:58	08/28/12 01:28	7440-28-0	
Vanadium, Dissolved	**0.19**	ug/L	0.10	1	07/26/12 10:58	08/28/12 01:28	7440-62-2	
Zinc, Dissolved	ND	ug/L	5.0	1	07/26/12 10:58	08/28/12 01:28	7440-66-6	
200.8 Potentially Diss. Metals	Analytical Method: EPA 200.8 Preparation Method: EPA 200.8							
Aluminum, Dissolved	ND	ug/L	50.0	1	07/26/12 09:45	07/27/12 11:05	7429-90-5	
Antimony, Dissolved	**0.10J**	ug/L	1.0	1	07/26/12 09:45	07/27/12 11:05	7440-36-0	
Arsenic, Dissolved	**0.44J**	ug/L	1.0	1	07/26/12 09:45	07/27/12 11:05	7440-38-2	
Barium, Dissolved	**63.6**	ug/L	1.0	1	07/26/12 09:45	07/27/12 11:05	7440-39-3	
Beryllium, Dissolved	ND	ug/L	0.50	1	07/26/12 09:45	07/27/12 11:05	7440-41-7	
Cadmium, Dissolved	ND	ug/L	0.50	1	07/26/12 09:45	07/27/12 11:05	7440-43-9	
Chromium, Dissolved	**0.57J**	ug/L	1.0	1	07/26/12 09:45	07/27/12 11:05	7440-47-3	
Cobalt, Dissolved	**0.51J**	ug/L	1.0	1	07/26/12 09:45	07/27/12 11:05	7440-48-4	
Copper, Dissolved	**3.5**	ug/L	1.0	1	07/26/12 09:45	07/30/12 11:46	7440-50-8	
Iron, Dissolved	ND	ug/L	50.0	1	07/26/12 09:45	07/27/12 11:05	7439-89-6	
Lead, Dissolved	**27.8**	ug/L	1.0	1	07/26/12 09:45	07/27/12 11:05	7439-92-1	
Manganese, Dissolved	**10.8**	ug/L	1.0	1	07/26/12 09:45	07/27/12 11:05	7439-96-5	
Molybdenum, Dissolved	**0.96J**	ug/L	1.0	1	07/26/12 09:45	07/27/12 11:05	7439-98-7	
Nickel, Dissolved	**0.94J**	ug/L	1.0	1	07/26/12 09:45	07/27/12 11:05	7440-02-0	
Selenium, Dissolved	**0.36J**	ug/L	1.0	1	07/26/12 09:45	07/27/12 11:05	7782-49-2	
Silver, Dissolved	ND	ug/L	0.50	1	07/26/12 09:45	07/27/12 11:05	7440-22-4	
Thallium, Dissolved	**0.091J**	ug/L	1.0	1	07/26/12 09:45	07/27/12 11:05	7440-28-0	
Vanadium, Dissolved	ND	ug/L	1.0	1	07/26/12 09:45	07/27/12 11:05	7440-62-2	
Zinc, Dissolved	**26.1**	ug/L	10.0	1	07/30/12 16:00	07/31/12 10:38	7440-66-6	
245.1 Mercury	Analytical Method: EPA 245.1							
Mercury	ND	ug/L	0.20	1	07/25/12 00:00	07/26/12 12:39	7439-97-6	
245.1 Mercury, Dissolved	Analytical Method: EPA 245.1							
Mercury, Dissolved	ND	ug/L	0.20	1	07/25/12 00:00	07/26/12 14:06	7439-97-6	
245.1 Potentially Diss Mercury	Analytical Method: EPA 245.1 Preparation Method: EPA 245.1							
Mercury, Dissolved	ND	ug/L	0.20	1	07/24/12 16:30	07/26/12 11:52	7439-97-6	
2510B Specific Conductance	Analytical Method: SM 2510B							
Specific Conductance	**235**	umhos/cm	10.0	1		07/27/12 11:21		
Salinity	Analytical Method: Calculated							
Salinity (as dissolved solids)	**151**	mg/L	6.0	1		07/30/12 11:08		

This report shall not be reproduced, except in full,
without the written consent of Pace Analytical Services, Inc..

Pace Analytical Services, Inc.
9608 Loiret Blvd.
Lenexa, KS 66219
(913)599-5665

ANALYTICAL RESULTS

Project: July 2012 Rico Water Sampling
Pace Project No.: 60125518

Sample: DR-1 **Lab ID: 60125518001** Collected: 07/17/12 14:45 Received: 07/19/12 10:20 Matrix: Water

Parameters	Results	Units	Report Limit	DF	Prepared	Analyzed	CAS No.	Qual
Salinity	Analytical Method: Calculated							
Salinity (as seawater)	**0.11**	PSU	0.010	1		07/30/12 11:08		
2320B Alkalinity	Analytical Method: SM 2320B							
Alkalinity,Bicarbonate (CaCO3)	**74.1**	mg/L	20.0	1		07/25/12 11:00		
Alkalinity, Carbonate (CaCO3)	ND	mg/L	20.0	1		07/25/12 11:00		
Alkalinity, Total as CaCO3	**74.1**	mg/L	20.0	1		07/25/12 11:00		
2540C Total Dissolved Solids	Analytical Method: SM 2540C							
Total Dissolved Solids	**140**	mg/L	5.0	1		07/20/12 10:49		
2540D Total Suspended Solids	Analytical Method: SM 2540D							
Total Suspended Solids	ND	mg/L	5.0	1		07/20/12 08:44		
4500H+ pH, Electrometric	Analytical Method: SM 4500-H+B							
pH at 25 Degrees C	**8.2**	Std. Units	0.10	1		07/20/12 13:29		H6
4500S2D Sulfide, Total	Analytical Method: SM 4500-S-2 D							
Sulfide, Total	ND	mg/L	0.050	1		07/24/12 11:35	18496-25-8	
Oxidation/Reduction Potential	Analytical Method: SM 2580B							
Oxidation/Reduction Potential	**141**	mV	1.0	1		07/24/12 11:30		
300.0 IC Anions 28 Days	Analytical Method: EPA 300.0							
Sulfate	**37.2**	mg/L	5.0	5		07/27/12 17:56	14808-79-8	
353.2 Nitrogen, NO2/NO3 pres.	Analytical Method: EPA 353.2							
Nitrogen, NO2 plus NO3	ND	mg/L	0.10	1		07/25/12 13:50		
4500CNE Cyanide, Total	Analytical Method: SM 4500-CN-E							
Cyanide	**0.0063**	mg/L	0.0050	1		07/24/12 10:49	57-12-5	
5310C TOC	Analytical Method: SM 5310C							
Total Organic Carbon	**1.5**	mg/L	0.50	1		07/30/12 15:37	7440-44-0	

This report shall not be reproduced, except in full,
without the written consent of Pace Analytical Services, Inc..

Pace Analytical Services, Inc.
9608 Loiret Blvd.
Lenexa, KS 66219
(913)599-5665

ANALYTICAL RESULTS

Project: July 2012 Rico Water Sampling
Pace Project No.: 60125518

Sample: DR-2 **Lab ID: 60125518002** Collected: 07/17/12 14:40 Received: 07/19/12 10:20 Matrix: Water

Parameters	Results	Units	Report Limit	DF	Prepared	Analyzed	CAS No.	Qual
200.7 Potentially Diss. Metals	Analytical Method: EPA 200.7 Preparation Method: EPA 200.7							
Calcium, Dissolved	**35700**	ug/L	500	5	07/26/12 10:00	07/27/12 13:39	7440-70-2	
Magnesium, Dissolved	**4910**	ug/L	250	5	07/26/12 10:00	07/27/12 13:39	7439-95-4	
Potassium, Dissolved	**502**	ug/L	500	1	07/26/12 10:00	07/30/12 11:51	7440-09-7	
Sodium, Dissolved	**1950**	ug/L	500	1	07/26/12 10:00	07/30/12 11:51	7440-23-5	
200.8 MET ICPMS	Analytical Method: EPA 200.8							
Aluminum	**40.1**	ug/L	4.0	1	07/25/12 17:09	08/29/12 03:39	7429-90-5	
Antimony	ND	ug/L	0.50	1	07/25/12 17:09	08/29/12 03:39	7440-36-0	
Arsenic	ND	ug/L	0.50	1	07/25/12 17:09	08/29/12 03:39	7440-38-2	
Barium	**60.7**	ug/L	0.30	1	07/25/12 17:09	08/29/12 03:39	7440-39-3	
Beryllium	ND	ug/L	0.20	1	07/25/12 17:09	08/29/12 03:39	7440-41-7	
Cadmium	ND	ug/L	0.080	1	07/25/12 17:09	08/29/12 03:39	7440-43-9	
Calcium	**40400**	ug/L	200	10	07/25/12 17:09	08/29/12 03:45	7440-70-2	
Chromium	ND	ug/L	0.50	1	07/25/12 17:09	08/29/12 03:39	7440-47-3	
Cobalt	ND	ug/L	0.50	1	07/25/12 17:09	08/29/12 03:39	7440-48-4	
Copper	**0.61**	ug/L	0.50	1	07/25/12 17:09	08/29/12 03:39	7440-50-8	
Iron	**63.0**	ug/L	50.0	1	07/25/12 17:09	08/29/12 03:39	7439-89-6	
Lead	**0.10**	ug/L	0.10	1	07/25/12 17:09	08/29/12 03:39	7439-92-1	
Magnesium	**5730**	ug/L	5.0	1	07/25/12 17:09	08/29/12 03:39	7439-95-4	
Manganese	**66.3**	ug/L	0.50	1	07/25/12 17:09	08/29/12 03:39	7439-96-5	
Molybdenum	**1.0**	ug/L	0.50	1	07/25/12 17:09	08/29/12 03:39	7439-98-7	
Nickel	ND	ug/L	0.50	1	07/25/12 17:09	08/30/12 21:55	7440-02-0	
Potassium	**718**	ug/L	20.0	1	07/25/12 17:09	08/29/12 03:39	7440-09-7	
Selenium	**0.53**	ug/L	0.50	1	07/25/12 17:09	08/29/12 03:39	7782-49-2	
Silica	**6590**	ug/L	268	5	07/25/12 17:09	08/30/12 22:01	7631-86-9	
Silver	ND	ug/L	0.50	1	07/25/12 17:09	08/29/12 03:39	7440-22-4	
Sodium	**2360**	ug/L	50.0	1	07/25/12 17:09	08/29/12 03:39	7440-23-5	
Thallium	ND	ug/L	0.10	1	07/25/12 17:09	08/29/12 03:39	7440-28-0	
Total Hardness by 2340B	**124000**	ug/L	710	10	07/25/12 17:09	08/29/12 03:45		
Vanadium	**0.21**	ug/L	0.10	1	07/25/12 17:09	08/29/12 03:39	7440-62-2	
Zinc	ND	ug/L	5.0	1	07/25/12 17:09	08/29/12 03:39	7440-66-6	
200.8 MET ICPMS, Dissolved	Analytical Method: EPA 200.8							
Aluminum, Dissolved	**43.3**	ug/L	4.0	1	07/26/12 10:58	08/28/12 00:52	7429-90-5	
Antimony, Dissolved	ND	ug/L	0.50	1	07/26/12 10:58	08/28/12 00:52	7440-36-0	
Arsenic, Dissolved	ND	ug/L	0.50	1	07/26/12 10:58	08/28/12 00:52	7440-38-2	
Barium, Dissolved	**64.5**	ug/L	0.30	1	07/26/12 10:58	08/28/12 00:52	7440-39-3	
Beryllium, Dissolved	ND	ug/L	0.20	1	07/26/12 10:58	08/28/12 00:52	7440-41-7	
Cadmium, Dissolved	ND	ug/L	0.080	1	07/26/12 10:58	08/28/12 00:52	7440-43-9	
Calcium, Dissolved	**46700**	ug/L	100	5	07/26/12 10:58	08/28/12 01:05	7440-70-2	M1
Chromium, Dissolved	ND	ug/L	0.50	1	07/26/12 10:58	08/28/12 00:52	7440-47-3	
Cobalt, Dissolved	ND	ug/L	0.50	1	07/26/12 10:58	08/28/12 00:52	7440-48-4	
Copper, Dissolved	**1.2**	ug/L	0.50	1	07/26/12 10:58	08/28/12 00:52	7440-50-8	
Iron, Dissolved	ND	ug/L	50.0	1	07/26/12 10:58	08/28/12 00:52	7439-89-6	
Lead, Dissolved	ND	ug/L	0.10	1	07/26/12 10:58	08/28/12 00:52	7439-92-1	
Magnesium, Dissolved	**5670**	ug/L	5.0	1	07/26/12 10:58	08/28/12 00:52	7439-95-4	M1

This report shall not be reproduced, except in full,
without the written consent of Pace Analytical Services, Inc..

Pace Analytical Services, Inc.
9608 Loiret Blvd.
Lenexa, KS 66219
(913)599-5665

ANALYTICAL RESULTS

Project: July 2012 Rico Water Sampling
Pace Project No.: 60125518

Sample: DR-2 **Lab ID: 60125518002** Collected: 07/17/12 14:40 Received: 07/19/12 10:20 Matrix: Water

Parameters	Results	Units	Report Limit	DF	Prepared	Analyzed	CAS No.	Qual
200.8 MET ICPMS, Dissolved	Analytical Method: EPA 200.8							
Manganese, Dissolved	**64.1**	ug/L	0.50	1	07/26/12 10:58	08/28/12 00:52	7439-96-5	
Molybdenum, Dissolved	**0.96**	ug/L	0.50	1	07/26/12 10:58	08/28/12 00:52	7439-98-7	
Nickel, Dissolved	**3.2**	ug/L	0.50	1	07/26/12 10:58	08/28/12 00:52	7440-02-0	
Potassium, Dissolved	**689**	ug/L	20.0	1	07/26/12 10:58	08/28/12 00:52	7440-09-7	
Selenium, Dissolved	ND	ug/L	0.50	1	07/26/12 10:58	08/28/12 00:52	7782-49-2	
Silver, Dissolved	ND	ug/L	0.50	1	07/26/12 10:58	08/28/12 00:52	7440-22-4	
Sodium, Dissolved	**2210**	ug/L	50.0	1	07/26/12 10:58	08/28/12 00:52	7440-23-5	
Thallium, Dissolved	ND	ug/L	0.10	1	07/26/12 10:58	08/28/12 00:52	7440-28-0	
Vanadium, Dissolved	**0.15**	ug/L	0.10	1	07/26/12 10:58	08/28/12 00:52	7440-62-2	
Zinc, Dissolved	**5.0**	ug/L	5.0	1	07/26/12 10:58	08/28/12 00:52	7440-66-6	
200.8 Potentially Diss. Metals	Analytical Method: EPA 200.8 Preparation Method: EPA 200.8							
Aluminum, Dissolved	ND	ug/L	50.0	1	07/26/12 09:45	07/27/12 11:22	7429-90-5	
Antimony, Dissolved	**0.085J**	ug/L	1.0	1	07/26/12 09:45	07/27/12 11:22	7440-36-0	
Arsenic, Dissolved	**0.36J**	ug/L	1.0	1	07/26/12 09:45	07/27/12 11:22	7440-38-2	
Barium, Dissolved	**60.7**	ug/L	1.0	1	07/26/12 09:45	07/27/12 11:22	7440-39-3	
Beryllium, Dissolved	ND	ug/L	0.50	1	07/26/12 09:45	07/27/12 11:22	7440-41-7	
Cadmium, Dissolved	ND	ug/L	0.50	1	07/26/12 09:45	07/27/12 11:22	7440-43-9	
Chromium, Dissolved	**1.8**	ug/L	1.0	1	07/26/12 09:45	07/27/12 11:22	7440-47-3	
Cobalt, Dissolved	**0.088J**	ug/L	1.0	1	07/26/12 09:45	07/27/12 11:22	7440-48-4	
Copper, Dissolved	**1.3**	ug/L	1.0	1	07/26/12 09:45	07/30/12 11:58	7440-50-8	
Iron, Dissolved	**93.6**	ug/L	50.0	1	07/26/12 09:45	07/27/12 11:22	7439-89-6	
Lead, Dissolved	**4.5**	ug/L	1.0	1	07/26/12 09:45	07/27/12 11:22	7439-92-1	
Manganese, Dissolved	**63.0**	ug/L	1.0	1	07/26/12 09:45	07/27/12 11:22	7439-96-5	
Molybdenum, Dissolved	**1.0**	ug/L	1.0	1	07/26/12 09:45	07/27/12 11:22	7439-98-7	
Nickel, Dissolved	**2.1**	ug/L	1.0	1	07/26/12 09:45	07/27/12 11:22	7440-02-0	
Selenium, Dissolved	ND	ug/L	1.0	1	07/26/12 09:45	07/27/12 11:22	7782-49-2	
Silver, Dissolved	ND	ug/L	0.50	1	07/26/12 09:45	07/27/12 11:22	7440-22-4	
Thallium, Dissolved	**0.095J**	ug/L	1.0	1	07/26/12 09:45	07/27/12 11:22	7440-28-0	
Vanadium, Dissolved	ND	ug/L	1.0	1	07/26/12 09:45	07/27/12 11:22	7440-62-2	
Zinc, Dissolved	ND	ug/L	10.0	1	07/30/12 16:00	07/31/12 10:41	7440-66-6	
245.1 Mercury	Analytical Method: EPA 245.1							
Mercury	ND	ug/L	0.20	1	07/25/12 00:00	07/26/12 12:47	7439-97-6	
245.1 Mercury, Dissolved	Analytical Method: EPA 245.1							
Mercury, Dissolved	ND	ug/L	0.20	1	07/25/12 00:00	07/26/12 14:13	7439-97-6	
245.1 Potentially Diss Mercury	Analytical Method: EPA 245.1 Preparation Method: EPA 245.1							
Mercury, Dissolved	ND	ug/L	0.20	1	07/24/12 16:30	07/26/12 11:55	7439-97-6	
2510B Specific Conductance	Analytical Method: SM 2510B							
Specific Conductance	**268**	umhos/cm	10.0	1		07/27/12 11:27		
Salinity	Analytical Method: Calculated							
Salinity (as dissolved solids)	**171**	mg/L	6.0	1		07/30/12 11:08		

This report shall not be reproduced, except in full,
without the written consent of Pace Analytical Services, Inc..

Pace Analytical Services, Inc.
9608 Loiret Blvd.
Lenexa, KS 66219
(913)599-5665

ANALYTICAL RESULTS

Project: July 2012 Rico Water Sampling
Pace Project No.: 60125518

Sample: DR-2 **Lab ID: 60125518002** Collected: 07/17/12 14:40 Received: 07/19/12 10:20 Matrix: Water

Parameters	Results	Units	Report Limit	DF	Prepared	Analyzed	CAS No.	Qual
Salinity	Analytical Method: Calculated							
Salinity (as seawater)	**0.13**	PSU	0.010	1		07/30/12 11:08		
2320B Alkalinity	Analytical Method: SM 2320B							
Alkalinity,Bicarbonate (CaCO3)	**76.0**	mg/L	20.0	1		07/30/12 09:00		
Alkalinity, Carbonate (CaCO3)	ND	mg/L	20.0	1		07/30/12 09:00		
Alkalinity, Total as CaCO3	**76.0**	mg/L	20.0	1		07/30/12 09:00		
2540C Total Dissolved Solids	Analytical Method: SM 2540C							
Total Dissolved Solids	**161**	mg/L	5.0	1		07/20/12 10:49		
2540D Total Suspended Solids	Analytical Method: SM 2540D							
Total Suspended Solids	ND	mg/L	5.0	1		07/20/12 08:44		
4500H+ pH, Electrometric	Analytical Method: SM 4500-H+B							
pH at 25 Degrees C	**8.2**	Std. Units	0.10	1		07/20/12 13:29		H6
4500S2D Sulfide, Total	Analytical Method: SM 4500-S-2 D							
Sulfide, Total	ND	mg/L	0.050	1		07/24/12 11:38	18496-25-8	
Oxidation/Reduction Potential	Analytical Method: SM 2580B							
Oxidation/Reduction Potential	**127**	mV	1.0	1		07/24/12 11:30		
300.0 IC Anions 28 Days	Analytical Method: EPA 300.0							
Sulfate	**48.3**	mg/L	5.0	5		07/27/12 18:48	14808-79-8	
353.2 Nitrogen, NO2/NO3 pres.	Analytical Method: EPA 353.2							
Nitrogen, NO2 plus NO3	ND	mg/L	0.10	1		07/25/12 13:51		
4500CNE Cyanide, Total	Analytical Method: SM 4500-CN-E							
Cyanide	ND	mg/L	0.0050	1		07/24/12 10:50	57-12-5	
5310C TOC	Analytical Method: SM 5310C							
Total Organic Carbon	**1.5**	mg/L	0.50	1		07/30/12 16:49	7440-44-0	

This report shall not be reproduced, except in full,
without the written consent of Pace Analytical Services, Inc..

Pace Analytical Services, Inc.
9608 Loiret Blvd.
Lenexa, KS 66219
(913)599-5665

ANALYTICAL RESULTS

Project: July 2012 Rico Water Sampling
Pace Project No.: 60125518

Sample: DR-3 **Lab ID: 60125518003** Collected: 07/17/12 14:00 Received: 07/19/12 10:20 Matrix: Water

Parameters	Results	Units	Report Limit	DF	Prepared	Analyzed	CAS No.	Qual
200.7 Potentially Diss. Metals	Analytical Method: EPA 200.7 Preparation Method: EPA 200.7							
Calcium, Dissolved	**221000**	ug/L	500	5	07/26/12 10:00	07/27/12 13:41	7440-70-2	M1
Magnesium, Dissolved	**19000**	ug/L	250	5	07/26/12 10:00	07/27/12 13:41	7439-95-4	
Potassium, Dissolved	**1360**	ug/L	1000	2	07/26/12 10:00	07/30/12 11:53	7440-09-7	
Sodium, Dissolved	**10000**	ug/L	2500	5	07/26/12 10:00	07/27/12 13:41	7440-23-5	
200.8 MET ICPMS	Analytical Method: EPA 200.8							
Aluminum	**218**	ug/L	4.0	1	07/25/12 17:09	08/29/12 04:02	7429-90-5	
Antimony	ND	ug/L	0.50	1	07/25/12 17:09	08/29/12 04:02	7440-36-0	
Arsenic	ND	ug/L	0.50	1	07/25/12 17:09	08/29/12 04:02	7440-38-2	
Barium	**19.6**	ug/L	0.30	1	07/25/12 17:09	08/29/12 04:02	7440-39-3	
Beryllium	**0.59**	ug/L	0.20	1	07/25/12 17:09	08/29/12 04:02	7440-41-7	
Cadmium	**23.7**	ug/L	0.080	1	07/25/12 17:09	08/29/12 04:02	7440-43-9	
Calcium	**239000**	ug/L	2000	100	07/25/12 17:09	08/29/12 04:12	7440-70-2	
Chromium	ND	ug/L	0.50	1	07/25/12 17:09	08/29/12 04:02	7440-47-3	
Cobalt	**3.1**	ug/L	0.50	1	07/25/12 17:09	08/29/12 04:02	7440-48-4	
Copper	**47.4**	ug/L	0.50	1	07/25/12 17:09	08/29/12 04:02	7440-50-8	
Iron	**3510**	ug/L	50.0	1	07/25/12 17:09	08/29/12 04:02	7439-89-6	
Lead	**1.6**	ug/L	0.10	1	07/25/12 17:09	08/29/12 04:02	7439-92-1	
Magnesium	**20500**	ug/L	5.0	1	07/25/12 17:09	08/29/12 04:02	7439-95-4	
Manganese	**2200**	ug/L	5.0	10	07/25/12 17:09	08/29/12 04:07	7439-96-5	
Molybdenum	**14.4**	ug/L	0.50	1	07/25/12 17:09	08/29/12 04:02	7439-98-7	
Nickel	**5.7**	ug/L	0.50	1	07/25/12 17:09	08/29/12 04:02	7440-02-0	
Potassium	**1660**	ug/L	20.0	1	07/25/12 17:09	08/29/12 04:02	7440-09-7	
Selenium	ND	ug/L	0.50	1	07/25/12 17:09	08/29/12 04:02	7782-49-2	
Silica	**16500**	ug/L	535	10	07/25/12 17:09	08/30/12 22:06	7631-86-9	
Silver	ND	ug/L	0.50	1	07/25/12 17:09	08/29/12 04:02	7440-22-4	
Sodium	**10900**	ug/L	50.0	1	07/25/12 17:09	08/29/12 04:02	7440-23-5	
Thallium	ND	ug/L	0.10	1	07/25/12 17:09	08/29/12 04:02	7440-28-0	
Total Hardness by 2340B	**680000**	ug/L	7100	100	07/25/12 17:09	08/29/12 04:12		
Vanadium	ND	ug/L	0.10	1	07/25/12 17:09	08/29/12 04:02	7440-62-2	
Zinc	**4620**	ug/L	500	100	07/25/12 17:09	08/29/12 04:12	7440-66-6	
200.8 MET ICPMS, Dissolved	Analytical Method: EPA 200.8							
Aluminum, Dissolved	**40.5**	ug/L	4.0	1	07/26/12 10:58	08/28/12 01:36	7429-90-5	
Antimony, Dissolved	ND	ug/L	0.50	1	07/26/12 10:58	08/28/12 01:36	7440-36-0	
Arsenic, Dissolved	ND	ug/L	0.50	1	07/26/12 10:58	08/28/12 01:36	7440-38-2	
Barium, Dissolved	**20.7**	ug/L	0.30	1	07/26/12 10:58	08/28/12 01:36	7440-39-3	
Beryllium, Dissolved	**0.43**	ug/L	0.20	1	07/26/12 10:58	08/28/12 01:36	7440-41-7	
Cadmium, Dissolved	**24.9**	ug/L	0.080	1	07/26/12 10:58	08/28/12 01:36	7440-43-9	
Calcium, Dissolved	**261000**	ug/L	400	20	07/26/12 10:58	08/28/12 01:40	7440-70-2	
Chromium, Dissolved	ND	ug/L	0.50	1	07/26/12 10:58	08/28/12 01:36	7440-47-3	
Cobalt, Dissolved	**3.2**	ug/L	0.50	1	07/26/12 10:58	08/28/12 01:36	7440-48-4	
Copper, Dissolved	**8.9**	ug/L	0.50	1	07/26/12 10:58	08/28/12 01:36	7440-50-8	
Iron, Dissolved	**696**	ug/L	50.0	1	07/26/12 10:58	08/28/12 01:36	7439-89-6	
Lead, Dissolved	ND	ug/L	0.10	1	07/26/12 10:58	08/28/12 01:36	7439-92-1	
Magnesium, Dissolved	**20300**	ug/L	5.0	1	07/26/12 10:58	08/28/12 01:36	7439-95-4	

This report shall not be reproduced, except in full,
without the written consent of Pace Analytical Services, Inc..

Pace Analytical Services, Inc.
9608 Loiret Blvd.
Lenexa, KS 66219
(913)599-5665

ANALYTICAL RESULTS

Project: July 2012 Rico Water Sampling
Pace Project No.: 60125518

Sample: DR-3 **Lab ID: 60125518003** Collected: 07/17/12 14:00 Received: 07/19/12 10:20 Matrix: Water

Parameters	Results	Units	Report Limit	DF	Prepared	Analyzed	CAS No.	Qual
200.8 MET ICPMS, Dissolved	Analytical Method: EPA 200.8							
Manganese, Dissolved	**2110**	ug/L	10.0	20	07/26/12 10:58	08/28/12 01:40	7439-96-5	
Molybdenum, Dissolved	**13.4**	ug/L	0.50	1	07/26/12 10:58	08/28/12 01:36	7439-98-7	
Nickel, Dissolved	**7.7**	ug/L	0.50	1	07/26/12 10:58	08/28/12 01:36	7440-02-0	
Potassium, Dissolved	**1590**	ug/L	20.0	1	07/26/12 10:58	08/28/12 01:36	7440-09-7	
Selenium, Dissolved	ND	ug/L	0.50	1	07/26/12 10:58	08/28/12 01:36	7782-49-2	
Silver, Dissolved	ND	ug/L	0.50	1	07/26/12 10:58	08/28/12 01:36	7440-22-4	
Sodium, Dissolved	**10200**	ug/L	50.0	1	07/26/12 10:58	08/28/12 01:36	7440-23-5	
Thallium, Dissolved	ND	ug/L	0.10	1	07/26/12 10:58	08/28/12 01:36	7440-28-0	
Vanadium, Dissolved	ND	ug/L	0.10	1	07/26/12 10:58	08/28/12 01:36	7440-62-2	
Zinc, Dissolved	**4480**	ug/L	100	20	07/26/12 10:58	08/28/12 01:40	7440-66-6	
200.8 Potentially Diss. Metals	Analytical Method: EPA 200.8 Preparation Method: EPA 200.8							
Aluminum, Dissolved	**194**	ug/L	50.0	1	07/26/12 09:45	07/27/12 11:30	7429-90-5	
Antimony, Dissolved	**0.24J**	ug/L	1.0	1	07/26/12 09:45	07/27/12 11:30	7440-36-0	
Arsenic, Dissolved	**0.42J**	ug/L	1.0	1	07/26/12 09:45	07/27/12 11:30	7440-38-2	
Barium, Dissolved	**19.6**	ug/L	5.0	5	07/26/12 09:45	07/26/12 17:15	7440-39-3	
Beryllium, Dissolved	**0.54**	ug/L	0.50	1	07/26/12 09:45	07/27/12 11:30	7440-41-7	
Cadmium, Dissolved	**24.6**	ug/L	2.5	5	07/26/12 09:45	07/26/12 17:15	7440-43-9	
Chromium, Dissolved	**1.7**	ug/L	1.0	1	07/26/12 09:45	07/27/12 11:30	7440-47-3	
Cobalt, Dissolved	**3.0**	ug/L	1.0	1	07/26/12 09:45	07/27/12 11:30	7440-48-4	
Copper, Dissolved	**51.8**	ug/L	5.0	5	07/26/12 09:45	07/26/12 17:15	7440-50-8	
Iron, Dissolved	**3200**	ug/L	250	5	07/26/12 09:45	07/26/12 17:15	7439-89-6	
Lead, Dissolved	**2.9**	ug/L	1.0	1	07/26/12 09:45	07/27/12 11:30	7439-92-1	
Manganese, Dissolved	**2050**	ug/L	5.0	5	07/26/12 09:45	07/26/12 17:15	7439-96-5	
Molybdenum, Dissolved	**14.3**	ug/L	5.0	5	07/26/12 09:45	07/26/12 17:15	7439-98-7	
Nickel, Dissolved	**2.7**	ug/L	1.0	1	07/26/12 09:45	07/27/12 11:30	7440-02-0	
Selenium, Dissolved	ND	ug/L	1.0	1	07/26/12 09:45	07/27/12 11:30	7782-49-2	
Silver, Dissolved	ND	ug/L	0.50	1	07/26/12 09:45	07/27/12 11:30	7440-22-4	
Thallium, Dissolved	**0.15J**	ug/L	1.0	1	07/26/12 09:45	07/27/12 11:30	7440-28-0	
Vanadium, Dissolved	ND	ug/L	1.0	1	07/26/12 09:45	07/27/12 11:30	7440-62-2	
Zinc, Dissolved	**4550**	ug/L	833	50	07/30/12 16:00	07/31/12 10:44	7440-66-6	
245.1 Mercury	Analytical Method: EPA 245.1							
Mercury	ND	ug/L	0.20	1	07/25/12 07:18	07/26/12 12:49	7439-97-6	
245.1 Mercury, Dissolved	Analytical Method: EPA 245.1							
Mercury, Dissolved	ND	ug/L	0.20	1	07/25/12 07:21	07/26/12 14:20	7439-97-6	
245.1 Potentially Diss Mercury	Analytical Method: EPA 245.1 Preparation Method: EPA 245.1							
Mercury, Dissolved	ND	ug/L	0.20	1	07/24/12 16:30	07/26/12 11:57	7439-97-6	
2510B Specific Conductance	Analytical Method: SM 2510B							
Specific Conductance	**1230**	umhos/cm	10.0	1		07/27/12 11:29		
Salinity	Analytical Method: Calculated							
Salinity (as dissolved solids)	**788**	mg/L	6.0	1		07/30/12 11:08		

This report shall not be reproduced, except in full,
without the written consent of Pace Analytical Services, Inc..

Pace Analytical Services, Inc.
9608 Loiret Blvd.
Lenexa, KS 66219
(913)599-5665

ANALYTICAL RESULTS

Project: July 2012 Rico Water Sampling
Pace Project No.: 60125518

Sample: DR-3 **Lab ID: 60125518003** Collected: 07/17/12 14:00 Received: 07/19/12 10:20 Matrix: Water

Parameters	Results	Units	Report Limit	DF	Prepared	Analyzed	CAS No.	Qual
Salinity	Analytical Method: Calculated							
Salinity (as seawater)	**0.61**	PSU	0.010	1		07/30/12 11:08		
2320B Alkalinity	Analytical Method: SM 2320B							
Alkalinity,Bicarbonate (CaCO3)	**87.4**	mg/L	20.0	1		07/30/12 09:00		
Alkalinity, Carbonate (CaCO3)	ND	mg/L	20.0	1		07/30/12 09:00		
Alkalinity, Total as CaCO3	**87.4**	mg/L	20.0	1		07/30/12 09:00		
2540C Total Dissolved Solids	Analytical Method: SM 2540C							
Total Dissolved Solids	**1030**	mg/L	5.0	1		07/20/12 10:49		
2540D Total Suspended Solids	Analytical Method: SM 2540D							
Total Suspended Solids	ND	mg/L	5.0	1		07/20/12 08:45		
4500H+ pH, Electrometric	Analytical Method: SM 4500-H+B							
pH at 25 Degrees C	**7.4**	Std. Units	0.10	1		07/20/12 13:29		H6
4500S2D Sulfide, Total	Analytical Method: SM 4500-S-2 D							
Sulfide, Total	ND	mg/L	0.050	1		07/24/12 11:39	18496-25-8	
Oxidation/Reduction Potential	Analytical Method: SM 2580B							
Oxidation/Reduction Potential	**152**	mV	1.0	1		07/24/12 11:30		
300.0 IC Anions 28 Days	Analytical Method: EPA 300.0							
Sulfate	**670**	mg/L	50.0	50		07/27/12 19:06	14808-79-8	
353.2 Nitrogen, NO2/NO3 pres.	Analytical Method: EPA 353.2							
Nitrogen, NO2 plus NO3	ND	mg/L	0.10	1		07/25/12 13:52		
4500CNE Cyanide, Total	Analytical Method: SM 4500-CN-E							
Cyanide	ND	mg/L	0.0050	1		07/24/12 10:54	57-12-5	
5310C TOC	Analytical Method: SM 5310C							
Total Organic Carbon	ND	mg/L	0.50	1		07/30/12 17:07	7440-44-0	

This report shall not be reproduced, except in full,
without the written consent of Pace Analytical Services, Inc..

Pace Analytical Services, Inc.
9608 Loiret Blvd.
Lenexa, KS 66219
(913)599-5665

ANALYTICAL RESULTS

Project: July 2012 Rico Water Sampling
Pace Project No.: 60125518

Sample: DR-4 **Lab ID: 60125518004** Collected: 07/17/12 15:00 Received: 07/19/12 10:20 Matrix: Water

Parameters	Results	Units	Report Limit	DF	Prepared	Analyzed	CAS No.	Qual
200.7 Potentially Diss. Metals	Analytical Method: EPA 200.7 Preparation Method: EPA 200.7							
Calcium, Dissolved	**225000**	ug/L	500	5	07/26/12 10:00	07/27/12 13:47	7440-70-2	M1
Magnesium, Dissolved	**19300**	ug/L	250	5	07/26/12 10:00	07/27/12 13:47	7439-95-4	
Potassium, Dissolved	**1350**	ug/L	1000	2	07/26/12 10:00	07/30/12 11:56	7440-09-7	
Sodium, Dissolved	**10200**	ug/L	2500	5	07/26/12 10:00	07/27/12 13:47	7440-23-5	
200.8 MET ICPMS	Analytical Method: EPA 200.8							
Aluminum	**131**	ug/L	4.0	1	07/25/12 17:09	08/29/12 04:36	7429-90-5	
Antimony	ND	ug/L	0.50	1	07/25/12 17:09	08/29/12 04:36	7440-36-0	
Arsenic	ND	ug/L	0.50	1	07/25/12 17:09	08/29/12 04:36	7440-38-2	
Barium	**18.8**	ug/L	0.30	1	07/25/12 17:09	08/29/12 04:36	7440-39-3	
Beryllium	**0.42**	ug/L	0.20	1	07/25/12 17:09	08/29/12 04:36	7440-41-7	
Cadmium	**21.6**	ug/L	0.080	1	07/25/12 17:09	08/29/12 04:36	7440-43-9	
Calcium	**237000**	ug/L	2000	100	07/25/12 17:09	08/29/12 04:47	7440-70-2	
Chromium	ND	ug/L	0.50	1	07/25/12 17:09	08/29/12 04:36	7440-47-3	
Cobalt	**3.0**	ug/L	0.50	1	07/25/12 17:09	08/29/12 04:36	7440-48-4	
Copper	**28.4**	ug/L	0.50	1	07/25/12 17:09	08/29/12 04:36	7440-50-8	
Iron	**2020**	ug/L	50.0	1	07/25/12 17:09	08/29/12 04:36	7439-89-6	
Lead	**0.62**	ug/L	0.10	1	07/25/12 17:09	08/29/12 04:36	7439-92-1	
Magnesium	**20300**	ug/L	5.0	1	07/25/12 17:09	08/29/12 04:36	7439-95-4	
Manganese	**2080**	ug/L	5.0	10	07/25/12 17:09	08/29/12 04:41	7439-96-5	
Molybdenum	**13.7**	ug/L	0.50	1	07/25/12 17:09	08/29/12 04:36	7439-98-7	
Nickel	**5.5**	ug/L	0.50	1	07/25/12 17:09	08/29/12 04:36	7440-02-0	
Potassium	**1650**	ug/L	20.0	1	07/25/12 17:09	08/29/12 04:36	7440-09-7	
Selenium	ND	ug/L	0.50	1	07/25/12 17:09	08/29/12 04:36	7782-49-2	
Silica	**15800**	ug/L	535	10	07/25/12 17:09	08/30/12 22:12	7631-86-9	
Silver	ND	ug/L	0.50	1	07/25/12 17:09	08/29/12 04:36	7440-22-4	
Sodium	**10800**	ug/L	50.0	1	07/25/12 17:09	08/29/12 04:36	7440-23-5	
Thallium	ND	ug/L	0.10	1	07/25/12 17:09	08/29/12 04:36	7440-28-0	
Total Hardness by 2340B	**675000**	ug/L	7100	100	07/25/12 17:09	08/29/12 04:47		
Vanadium	ND	ug/L	0.10	1	07/25/12 17:09	08/29/12 04:36	7440-62-2	
Zinc	**4300**	ug/L	50.0	10	07/25/12 17:09	08/29/12 04:41	7440-66-6	
200.8 MET ICPMS, Dissolved	Analytical Method: EPA 200.8							
Aluminum, Dissolved	**13.0**	ug/L	4.0	1	07/26/12 10:58	08/28/12 01:44	7429-90-5	
Antimony, Dissolved	ND	ug/L	0.50	1	07/26/12 10:58	08/28/12 01:44	7440-36-0	
Arsenic, Dissolved	ND	ug/L	0.50	1	07/26/12 10:58	08/28/12 01:44	7440-38-2	
Barium, Dissolved	**20.7**	ug/L	0.30	1	07/26/12 10:58	08/28/12 01:44	7440-39-3	
Beryllium, Dissolved	ND	ug/L	0.20	1	07/26/12 10:58	08/28/12 01:44	7440-41-7	
Cadmium, Dissolved	**21.6**	ug/L	0.080	1	07/26/12 10:58	08/28/12 01:44	7440-43-9	
Calcium, Dissolved	**261000**	ug/L	400	20	07/26/12 10:58	08/28/12 01:48	7440-70-2	
Chromium, Dissolved	ND	ug/L	0.50	1	07/26/12 10:58	08/28/12 01:44	7440-47-3	
Cobalt, Dissolved	**3.1**	ug/L	0.50	1	07/26/12 10:58	08/28/12 01:44	7440-48-4	
Copper, Dissolved	**2.3**	ug/L	0.50	1	07/26/12 10:58	08/28/12 01:44	7440-50-8	
Iron, Dissolved	ND	ug/L	50.0	1	07/26/12 10:58	08/28/12 01:44	7439-89-6	
Lead, Dissolved	ND	ug/L	0.10	1	07/26/12 10:58	08/28/12 01:44	7439-92-1	
Magnesium, Dissolved	**20500**	ug/L	5.0	1	07/26/12 10:58	08/28/12 01:44	7439-95-4	

This report shall not be reproduced, except in full,
without the written consent of Pace Analytical Services, Inc..

Pace Analytical Services, Inc.
9608 Loiret Blvd.
Lenexa, KS 66219
(913)599-5665

ANALYTICAL RESULTS

Project: July 2012 Rico Water Sampling
Pace Project No.: 60125518

Sample: DR-4 **Lab ID: 60125518004** Collected: 07/17/12 15:00 Received: 07/19/12 10:20 Matrix: Water

Parameters	Results	Units	Report Limit	DF	Prepared	Analyzed	CAS No.	Qual
200.8 MET ICPMS, Dissolved	Analytical Method: EPA 200.8							
Manganese, Dissolved	**2050**	ug/L	10.0	20	07/26/12 10:58	08/28/12 01:48	7439-96-5	
Molybdenum, Dissolved	**13.4**	ug/L	0.50	1	07/26/12 10:58	08/28/12 01:44	7439-98-7	
Nickel, Dissolved	**5.6**	ug/L	0.50	1	07/26/12 10:58	08/28/12 01:44	7440-02-0	
Potassium, Dissolved	**1600**	ug/L	20.0	1	07/26/12 10:58	08/28/12 01:44	7440-09-7	
Selenium, Dissolved	ND	ug/L	0.50	1	07/26/12 10:58	08/28/12 01:44	7782-49-2	
Silver, Dissolved	ND	ug/L	0.50	1	07/26/12 10:58	08/28/12 01:44	7440-22-4	
Sodium, Dissolved	**10300**	ug/L	50.0	1	07/26/12 10:58	08/28/12 01:44	7440-23-5	
Thallium, Dissolved	ND	ug/L	0.10	1	07/26/12 10:58	08/28/12 01:44	7440-28-0	
Vanadium, Dissolved	ND	ug/L	0.10	1	07/26/12 10:58	08/28/12 01:44	7440-62-2	
Zinc, Dissolved	**3690**	ug/L	100	20	07/26/12 10:58	08/28/12 01:48	7440-66-6	
200.8 Potentially Diss. Metals	Analytical Method: EPA 200.8 Preparation Method: EPA 200.8							
Aluminum, Dissolved	**114**	ug/L	50.0	1	07/26/12 09:45	07/27/12 11:35	7429-90-5	
Antimony, Dissolved	**0.25J**	ug/L	1.0	1	07/26/12 09:45	07/27/12 11:35	7440-36-0	
Arsenic, Dissolved	**0.36J**	ug/L	1.0	1	07/26/12 09:45	07/27/12 11:35	7440-38-2	
Barium, Dissolved	**20.6**	ug/L	5.0	5	07/26/12 09:45	07/26/12 17:19	7440-39-3	
Beryllium, Dissolved	**0.37J**	ug/L	0.50	1	07/26/12 09:45	07/27/12 11:35	7440-41-7	
Cadmium, Dissolved	**23.5**	ug/L	2.5	5	07/26/12 09:45	07/26/12 17:19	7440-43-9	
Chromium, Dissolved	**1.2**	ug/L	1.0	1	07/26/12 09:45	07/27/12 11:35	7440-47-3	
Cobalt, Dissolved	**3.1**	ug/L	1.0	1	07/26/12 09:45	07/27/12 11:35	7440-48-4	
Copper, Dissolved	**39.0**	ug/L	5.0	5	07/26/12 09:45	07/26/12 17:19	7440-50-8	
Iron, Dissolved	**1980**	ug/L	250	5	07/26/12 09:45	07/26/12 17:19	7439-89-6	
Lead, Dissolved	**27.6**	ug/L	1.0	1	07/26/12 09:45	07/27/12 11:35	7439-92-1	
Manganese, Dissolved	**2080**	ug/L	5.0	5	07/26/12 09:45	07/26/12 17:19	7439-96-5	
Molybdenum, Dissolved	**12.7**	ug/L	5.0	5	07/26/12 09:45	07/26/12 17:19	7439-98-7	
Nickel, Dissolved	**3.6**	ug/L	1.0	1	07/26/12 09:45	07/27/12 11:35	7440-02-0	
Selenium, Dissolved	ND	ug/L	1.0	1	07/26/12 09:45	07/27/12 11:35	7782-49-2	
Silver, Dissolved	ND	ug/L	0.50	1	07/26/12 09:45	07/27/12 11:35	7440-22-4	
Thallium, Dissolved	**0.075J**	ug/L	1.0	1	07/26/12 09:45	07/27/12 11:35	7440-28-0	
Vanadium, Dissolved	ND	ug/L	1.0	1	07/26/12 09:45	07/27/12 11:35	7440-62-2	
Zinc, Dissolved	**4200**	ug/L	500	50	07/30/12 16:00	07/31/12 10:46	7440-66-6	
245.1 Mercury	Analytical Method: EPA 245.1							
Mercury	ND	ug/L	0.20	1	07/25/12 00:00	07/26/12 12:57	7439-97-6	
245.1 Mercury, Dissolved	Analytical Method: EPA 245.1							
Mercury, Dissolved	ND	ug/L	0.20	1	07/25/12 00:00	07/26/12 14:23	7439-97-6	
245.1 Potentially Diss Mercury	Analytical Method: EPA 245.1 Preparation Method: EPA 245.1							
Mercury, Dissolved	ND	ug/L	0.20	1	07/24/12 16:30	07/26/12 12:03	7439-97-6	
2510B Specific Conductance	Analytical Method: SM 2510B							
Specific Conductance	**1240**	umhos/cm	10.0	1		07/27/12 11:31		
Salinity	Analytical Method: Calculated							
Salinity (as dissolved solids)	**794**	mg/L	6.0	1		07/30/12 11:08		

This report shall not be reproduced, except in full,
without the written consent of Pace Analytical Services, Inc..

Pace Analytical Services, Inc.
9608 Loiret Blvd.
Lenexa, KS 66219
(913)599-5665

ANALYTICAL RESULTS

Project: July 2012 Rico Water Sampling
Pace Project No.: 60125518

Sample: DR-4 **Lab ID: 60125518004** Collected: 07/17/12 15:00 Received: 07/19/12 10:20 Matrix: Water

Parameters	Results	Units	Report Limit	DF	Prepared	Analyzed	CAS No.	Qual
Salinity	Analytical Method: Calculated							
Salinity (as seawater)	**0.62**	PSU	0.010	1		07/30/12 11:08		
2320B Alkalinity	Analytical Method: SM 2320B							
Alkalinity,Bicarbonate (CaCO3)	**89.3**	mg/L	20.0	1		07/30/12 09:00		
Alkalinity, Carbonate (CaCO3)	ND	mg/L	20.0	1		07/30/12 09:00		
Alkalinity, Total as CaCO3	**89.3**	mg/L	20.0	1		07/30/12 09:00		
2540C Total Dissolved Solids	Analytical Method: SM 2540C							
Total Dissolved Solids	**1020**	mg/L	5.0	1		07/20/12 10:50		
2540D Total Suspended Solids	Analytical Method: SM 2540D							
Total Suspended Solids	ND	mg/L	5.0	1		07/20/12 08:45		
4500H+ pH, Electrometric	Analytical Method: SM 4500-H+B							
pH at 25 Degrees C	**7.9**	Std. Units	0.10	1		07/20/12 13:29		H6
4500S2D Sulfide, Total	Analytical Method: SM 4500-S-2 D							
Sulfide, Total	ND	mg/L	0.050	1		07/24/12 11:43	18496-25-8	
Oxidation/Reduction Potential	Analytical Method: SM 2580B							
Oxidation/Reduction Potential	**148**	mV	1.0	1		07/24/12 11:30		
300.0 IC Anions 28 Days	Analytical Method: EPA 300.0							
Sulfate	**713**	mg/L	50.0	50		07/27/12 19:58	14808-79-8	
353.2 Nitrogen, NO2/NO3 pres.	Analytical Method: EPA 353.2							
Nitrogen, NO2 plus NO3	ND	mg/L	0.10	1		07/25/12 13:53		
4500CNE Cyanide, Total	Analytical Method: SM 4500-CN-E							
Cyanide	ND	mg/L	0.0050	1		07/24/12 10:55	57-12-5	
5310C TOC	Analytical Method: SM 5310C							
Total Organic Carbon	ND	mg/L	0.50	1		07/30/12 17:24	7440-44-0	

This report shall not be reproduced, except in full,
without the written consent of Pace Analytical Services, Inc..

Pace Analytical Services, Inc.
9608 Loiret Blvd.
Lenexa, KS 66219
(913)599-5665

ANALYTICAL RESULTS

Project: July 2012 Rico Water Sampling
Pace Project No.: 60125518

Sample: DR-5 **Lab ID: 60125518005** Collected: 07/17/12 12:30 Received: 07/19/12 10:20 Matrix: Water

Parameters	Results	Units	Report Limit	DF	Prepared	Analyzed	CAS No.	Qual
200.7 Potentially Diss. Metals	Analytical Method: EPA 200.7 Preparation Method: EPA 200.7							
Calcium, Dissolved	**241000**	ug/L	500	5	07/26/12 10:00	07/27/12 13:51	7440-70-2	
Magnesium, Dissolved	**21300**	ug/L	250	5	07/26/12 10:00	07/27/12 13:51	7439-95-4	
Potassium, Dissolved	**1700**	ug/L	1000	2	07/26/12 10:00	07/30/12 11:58	7440-09-7	
Sodium, Dissolved	**11000**	ug/L	2500	5	07/26/12 10:00	07/27/12 13:51	7440-23-5	
200.8 MET ICPMS	Analytical Method: EPA 200.8							
Aluminum	**65.0**	ug/L	4.0	1	07/25/12 17:09	08/29/12 04:58	7429-90-5	
Antimony	ND	ug/L	0.50	1	07/25/12 17:09	08/29/12 04:58	7440-36-0	
Arsenic	ND	ug/L	0.50	1	07/25/12 17:09	08/29/12 04:58	7440-38-2	
Barium	**19.2**	ug/L	0.30	1	07/25/12 17:09	08/29/12 04:58	7440-39-3	
Beryllium	**0.20**	ug/L	0.20	1	07/25/12 17:09	08/29/12 04:58	7440-41-7	
Cadmium	**19.0**	ug/L	0.080	1	07/25/12 17:09	08/29/12 04:58	7440-43-9	
Calcium	**248000**	ug/L	2000	100	07/25/12 17:09	08/29/12 05:09	7440-70-2	
Chromium	ND	ug/L	0.50	1	07/25/12 17:09	08/29/12 04:58	7440-47-3	
Cobalt	**2.7**	ug/L	0.50	1	07/25/12 17:09	08/29/12 04:58	7440-48-4	
Copper	**14.6**	ug/L	0.50	1	07/25/12 17:09	08/29/12 04:58	7440-50-8	
Iron	**1050**	ug/L	50.0	1	07/25/12 17:09	08/29/12 04:58	7439-89-6	
Lead	**0.41**	ug/L	0.10	1	07/25/12 17:09	08/29/12 04:58	7439-92-1	
Magnesium	**21200**	ug/L	5.0	1	07/25/12 17:09	08/29/12 04:58	7439-95-4	
Manganese	**1940**	ug/L	5.0	10	07/25/12 17:09	08/29/12 05:03	7439-96-5	
Molybdenum	**13.0**	ug/L	0.50	1	07/25/12 17:09	08/29/12 04:58	7439-98-7	
Nickel	**5.1**	ug/L	0.50	1	07/25/12 17:09	08/29/12 04:58	7440-02-0	
Potassium	**1870**	ug/L	20.0	1	07/25/12 17:09	08/29/12 04:58	7440-09-7	
Selenium	ND	ug/L	0.50	1	07/25/12 17:09	08/29/12 04:58	7782-49-2	
Silica	**16000**	ug/L	535	10	07/25/12 17:09	08/30/12 22:31	7631-86-9	
Silver	ND	ug/L	0.50	1	07/25/12 17:09	08/29/12 04:58	7440-22-4	
Sodium	**11200**	ug/L	50.0	1	07/25/12 17:09	08/29/12 04:58	7440-23-5	
Thallium	ND	ug/L	0.10	1	07/25/12 17:09	08/29/12 04:58	7440-28-0	
Total Hardness by 2340B	**707000**	ug/L	7100	100	07/25/12 17:09	08/29/12 05:09		
Vanadium	ND	ug/L	0.10	1	07/25/12 17:09	08/29/12 04:58	7440-62-2	
Zinc	**3720**	ug/L	50.0	10	07/25/12 17:09	08/29/12 05:03	7440-66-6	
200.8 MET ICPMS, Dissolved	Analytical Method: EPA 200.8							
Aluminum, Dissolved	ND	ug/L	4.0	1	07/26/12 10:58	08/28/12 01:53	7429-90-5	
Antimony, Dissolved	ND	ug/L	0.50	1	07/26/12 10:58	08/28/12 01:53	7440-36-0	
Arsenic, Dissolved	ND	ug/L	0.50	1	07/26/12 10:58	08/28/12 01:53	7440-38-2	
Barium, Dissolved	**20.1**	ug/L	0.30	1	07/26/12 10:58	08/28/12 01:53	7440-39-3	
Beryllium, Dissolved	ND	ug/L	0.20	1	07/26/12 10:58	08/28/12 01:53	7440-41-7	
Cadmium, Dissolved	**19.6**	ug/L	0.080	1	07/26/12 10:58	08/28/12 01:53	7440-43-9	
Calcium, Dissolved	**269000**	ug/L	400	20	07/26/12 10:58	08/28/12 01:57	7440-70-2	
Chromium, Dissolved	ND	ug/L	0.50	1	07/26/12 10:58	08/28/12 01:53	7440-47-3	
Cobalt, Dissolved	**2.7**	ug/L	0.50	1	07/26/12 10:58	08/28/12 01:53	7440-48-4	
Copper, Dissolved	**1.8**	ug/L	0.50	1	07/26/12 10:58	08/28/12 01:53	7440-50-8	
Iron, Dissolved	ND	ug/L	50.0	1	07/26/12 10:58	08/28/12 01:53	7439-89-6	
Lead, Dissolved	ND	ug/L	0.10	1	07/26/12 10:58	08/28/12 01:53	7439-92-1	
Magnesium, Dissolved	**21400**	ug/L	5.0	1	07/26/12 10:58	08/28/12 01:53	7439-95-4	

This report shall not be reproduced, except in full,
without the written consent of Pace Analytical Services, Inc..

Pace Analytical Services, Inc.
9608 Loiret Blvd.
Lenexa, KS 66219
(913)599-5665

ANALYTICAL RESULTS

Project: July 2012 Rico Water Sampling
Pace Project No.: 60125518

Sample: DR-5 **Lab ID: 60125518005** Collected: 07/17/12 12:30 Received: 07/19/12 10:20 Matrix: Water

Parameters	Results	Units	Report Limit	DF	Prepared	Analyzed	CAS No.	Qual
200.8 MET ICPMS, Dissolved	Analytical Method: EPA 200.8							
Manganese, Dissolved	**1920**	ug/L	10.0	20	07/26/12 10:58	08/28/12 01:57	7439-96-5	
Molybdenum, Dissolved	**12.4**	ug/L	0.50	1	07/26/12 10:58	08/28/12 01:53	7439-98-7	
Nickel, Dissolved	**5.3**	ug/L	0.50	1	07/26/12 10:58	08/28/12 01:53	7440-02-0	
Potassium, Dissolved	**1780**	ug/L	20.0	1	07/26/12 10:58	08/28/12 01:53	7440-09-7	
Selenium, Dissolved	ND	ug/L	0.50	1	07/26/12 10:58	08/28/12 01:53	7782-49-2	
Silver, Dissolved	ND	ug/L	0.50	1	07/26/12 10:58	08/28/12 01:53	7440-22-4	
Sodium, Dissolved	**10600**	ug/L	50.0	1	07/26/12 10:58	08/28/12 01:53	7440-23-5	
Thallium, Dissolved	ND	ug/L	0.10	1	07/26/12 10:58	08/28/12 01:53	7440-28-0	
Vanadium, Dissolved	ND	ug/L	0.10	1	07/26/12 10:58	08/28/12 01:53	7440-62-2	
Zinc, Dissolved	**3240**	ug/L	100	20	07/26/12 10:58	08/28/12 01:57	7440-66-6	
200.8 Potentially Diss. Metals	Analytical Method: EPA 200.8 Preparation Method: EPA 200.8							
Aluminum, Dissolved	**53.5**	ug/L	50.0	1	07/26/12 09:45	07/27/12 11:51	7429-90-5	
Antimony, Dissolved	**0.20J**	ug/L	1.0	1	07/26/12 09:45	07/27/12 11:51	7440-36-0	
Arsenic, Dissolved	**0.26J**	ug/L	1.0	1	07/26/12 09:45	07/27/12 11:51	7440-38-2	
Barium, Dissolved	**18.4**	ug/L	5.0	5	07/26/12 09:45	07/26/12 17:36	7440-39-3	
Beryllium, Dissolved	**0.17J**	ug/L	0.50	1	07/26/12 09:45	07/27/12 11:51	7440-41-7	
Cadmium, Dissolved	**19.7**	ug/L	2.5	5	07/26/12 09:45	07/26/12 17:36	7440-43-9	
Chromium, Dissolved	**0.90J**	ug/L	1.0	1	07/26/12 09:45	07/27/12 11:51	7440-47-3	
Cobalt, Dissolved	**2.5**	ug/L	1.0	1	07/26/12 09:45	07/27/12 11:51	7440-48-4	
Copper, Dissolved	**17.3**	ug/L	5.0	5	07/26/12 09:45	07/26/12 17:36	7440-50-8	
Iron, Dissolved	**994**	ug/L	250	5	07/26/12 09:45	07/26/12 17:36	7439-89-6	
Lead, Dissolved	**1.0**	ug/L	1.0	1	07/26/12 09:45	07/27/12 11:51	7439-92-1	
Manganese, Dissolved	**1840**	ug/L	5.0	5	07/26/12 09:45	07/26/12 17:36	7439-96-5	
Molybdenum, Dissolved	**11.8**	ug/L	5.0	5	07/26/12 09:45	07/26/12 17:36	7439-98-7	
Nickel, Dissolved	**2.0**	ug/L	1.0	1	07/26/12 09:45	07/27/12 11:51	7440-02-0	
Selenium, Dissolved	ND	ug/L	1.0	1	07/26/12 09:45	07/27/12 11:51	7782-49-2	
Silver, Dissolved	ND	ug/L	0.50	1	07/26/12 09:45	07/27/12 11:51	7440-22-4	
Thallium, Dissolved	**0.056J**	ug/L	1.0	1	07/26/12 09:45	07/27/12 11:51	7440-28-0	
Vanadium, Dissolved	ND	ug/L	1.0	1	07/26/12 09:45	07/27/12 11:51	7440-62-2	
Zinc, Dissolved	**3420**	ug/L	500	50	07/30/12 16:00	07/31/12 10:49	7440-66-6	
245.1 Mercury	Analytical Method: EPA 245.1							
Mercury	ND	ug/L	0.20	1	07/25/12 00:00	07/26/12 12:59	7439-97-6	
245.1 Mercury, Dissolved	Analytical Method: EPA 245.1							
Mercury, Dissolved	ND	ug/L	0.20	1	07/25/12 00:00	07/26/12 14:25	7439-97-6	
245.1 Potentially Diss Mercury	Analytical Method: EPA 245.1 Preparation Method: EPA 245.1							
Mercury, Dissolved	ND	ug/L	0.20	1	07/24/12 16:30	07/26/12 12:06	7439-97-6	
2510B Specific Conductance	Analytical Method: SM 2510B							
Specific Conductance	**1240**	umhos/cm	10.0	1		07/27/12 11:37		
Salinity	Analytical Method: Calculated							
Salinity (as dissolved solids)	**794**	mg/L	6.0	1		07/30/12 11:08		

This report shall not be reproduced, except in full,
without the written consent of Pace Analytical Services, Inc..

Pace Analytical Services, Inc.
9608 Loiret Blvd.
Lenexa, KS 66219
(913)599-5665

ANALYTICAL RESULTS

Project: July 2012 Rico Water Sampling
Pace Project No.: 60125518

Sample: DR-5 **Lab ID: 60125518005** Collected: 07/17/12 12:30 Received: 07/19/12 10:20 Matrix: Water

Parameters	Results	Units	Report Limit	DF	Prepared	Analyzed	CAS No.	Qual
Salinity	Analytical Method: Calculated							
Salinity (as seawater)	**0.62**	PSU	0.010	1		07/30/12 11:08		
2320B Alkalinity	Analytical Method: SM 2320B							
Alkalinity,Bicarbonate (CaCO3)	**93.1**	mg/L	20.0	1		07/30/12 09:00		
Alkalinity, Carbonate (CaCO3)	ND	mg/L	20.0	1		07/30/12 09:00		
Alkalinity, Total as CaCO3	**93.1**	mg/L	20.0	1		07/30/12 09:00		
2540C Total Dissolved Solids	Analytical Method: SM 2540C							
Total Dissolved Solids	**1030**	mg/L	5.0	1		07/20/12 10:50		
2540D Total Suspended Solids	Analytical Method: SM 2540D							
Total Suspended Solids	ND	mg/L	5.0	1		07/20/12 08:45		
4500H+ pH, Electrometric	Analytical Method: SM 4500-H+B							
pH at 25 Degrees C	**8.0**	Std. Units	0.10	1		07/20/12 13:29		H6
4500S2D Sulfide, Total	Analytical Method: SM 4500-S-2 D							
Sulfide, Total	ND	mg/L	0.050	1		07/24/12 11:43	18496-25-8	
Oxidation/Reduction Potential	Analytical Method: SM 2580B							
Oxidation/Reduction Potential	**145**	mV	1.0	1		07/24/12 11:30		
300.0 IC Anions 28 Days	Analytical Method: EPA 300.0							
Sulfate	**660**	mg/L	50.0	50		07/27/12 20:15	14808-79-8	
353.2 Nitrogen, NO2/NO3 pres.	Analytical Method: EPA 353.2							
Nitrogen, NO2 plus NO3	ND	mg/L	0.10	1		07/25/12 13:53		
4500CNE Cyanide, Total	Analytical Method: SM 4500-CN-E							
Cyanide	**0.034**	mg/L	0.0050	1		07/24/12 10:57	57-12-5	
5310C TOC	Analytical Method: SM 5310C							
Total Organic Carbon	ND	mg/L	0.50	1		07/30/12 17:42	7440-44-0	

This report shall not be reproduced, except in full,
without the written consent of Pace Analytical Services, Inc..

Pace Analytical Services, Inc.
9608 Loiret Blvd.
Lenexa, KS 66219
(913)599-5665

ANALYTICAL RESULTS

Project: July 2012 Rico Water Sampling
Pace Project No.: 60125518

Sample: DR-6 **Lab ID: 60125518006** Collected: 07/17/12 12:50 Received: 07/19/12 10:20 Matrix: Water

Parameters	Results	Units	Report Limit	DF	Prepared	Analyzed	CAS No.	Qual
200.7 Potentially Diss. Metals	Analytical Method: EPA 200.7 Preparation Method: EPA 200.7							
Calcium, Dissolved	**229000**	ug/L	500	5	07/26/12 10:00	07/27/12 13:58	7440-70-2	
Magnesium, Dissolved	**21600**	ug/L	250	5	07/26/12 10:00	07/27/12 13:58	7439-95-4	
Potassium, Dissolved	**2210**	ug/L	1000	2	07/26/12 10:00	07/30/12 12:00	7440-09-7	
Sodium, Dissolved	**12200**	ug/L	2500	5	07/26/12 10:00	07/27/12 13:58	7440-23-5	
200.8 MET ICPMS	Analytical Method: EPA 200.8							
Aluminum	**20.2**	ug/L	4.0	1	07/25/12 17:09	08/29/12 05:32	7429-90-5	
Antimony	ND	ug/L	0.50	1	07/25/12 17:09	08/29/12 05:32	7440-36-0	
Arsenic	ND	ug/L	0.50	1	07/25/12 17:09	08/29/12 05:32	7440-38-2	
Barium	**19.2**	ug/L	0.30	1	07/25/12 17:09	08/29/12 05:32	7440-39-3	
Beryllium	ND	ug/L	0.20	1	07/25/12 17:09	08/29/12 05:32	7440-41-7	
Cadmium	**14.5**	ug/L	0.080	1	07/25/12 17:09	08/29/12 05:32	7440-43-9	
Calcium	**251000**	ug/L	2000	100	07/25/12 17:09	08/29/12 05:43	7440-70-2	
Chromium	ND	ug/L	0.50	1	07/25/12 17:09	08/29/12 05:32	7440-47-3	
Cobalt	**1.9**	ug/L	0.50	1	07/25/12 17:09	08/29/12 05:32	7440-48-4	
Copper	**4.7**	ug/L	0.50	1	07/25/12 17:09	08/29/12 05:32	7440-50-8	
Iron	**391**	ug/L	50.0	1	07/25/12 17:09	08/29/12 05:32	7439-89-6	
Lead	**0.35**	ug/L	0.10	1	07/25/12 17:09	08/29/12 05:32	7439-92-1	
Magnesium	**23200**	ug/L	50.0	10	07/25/12 17:09	08/29/12 05:37	7439-95-4	
Manganese	**1610**	ug/L	5.0	10	07/25/12 17:09	08/29/12 05:37	7439-96-5	
Molybdenum	**11.3**	ug/L	0.50	1	07/25/12 17:09	08/29/12 05:32	7439-98-7	
Nickel	**4.4**	ug/L	0.50	1	07/25/12 17:09	08/29/12 05:32	7440-02-0	
Potassium	**2630**	ug/L	20.0	1	07/25/12 17:09	08/29/12 05:32	7440-09-7	
Selenium	ND	ug/L	0.50	1	07/25/12 17:09	08/29/12 05:32	7782-49-2	
Silica	**17700**	ug/L	535	10	07/25/12 17:09	08/30/12 22:37	7631-86-9	
Silver	ND	ug/L	0.50	1	07/25/12 17:09	08/29/12 05:32	7440-22-4	
Sodium	**13100**	ug/L	50.0	1	07/25/12 17:09	08/29/12 05:32	7440-23-5	
Thallium	ND	ug/L	0.10	1	07/25/12 17:09	08/29/12 05:32	7440-28-0	
Total Hardness by 2340B	**723000**	ug/L	7100	100	07/25/12 17:09	08/29/12 05:43		
Vanadium	ND	ug/L	0.10	1	07/25/12 17:09	08/29/12 05:32	7440-62-2	
Zinc	**2890**	ug/L	50.0	10	07/25/12 17:09	08/29/12 05:37	7440-66-6	
200.8 MET ICPMS, Dissolved	Analytical Method: EPA 200.8							
Aluminum, Dissolved	ND	ug/L	4.0	1	07/26/12 10:58	08/28/12 02:10	7429-90-5	
Antimony, Dissolved	ND	ug/L	0.50	1	07/26/12 10:58	08/28/12 02:10	7440-36-0	
Arsenic, Dissolved	ND	ug/L	0.50	1	07/26/12 10:58	08/28/12 02:10	7440-38-2	
Barium, Dissolved	**20.1**	ug/L	0.30	1	07/26/12 10:58	08/28/12 02:10	7440-39-3	
Beryllium, Dissolved	ND	ug/L	0.20	1	07/26/12 10:58	08/28/12 02:10	7440-41-7	
Cadmium, Dissolved	**15.5**	ug/L	0.080	1	07/26/12 10:58	08/28/12 02:10	7440-43-9	
Calcium, Dissolved	**264000**	ug/L	400	20	07/26/12 10:58	08/28/12 02:14	7440-70-2	
Chromium, Dissolved	ND	ug/L	0.50	1	07/26/12 10:58	08/28/12 02:10	7440-47-3	
Cobalt, Dissolved	**1.9**	ug/L	0.50	1	07/26/12 10:58	08/28/12 02:10	7440-48-4	
Copper, Dissolved	**1.0**	ug/L	0.50	1	07/26/12 10:58	08/28/12 02:10	7440-50-8	
Iron, Dissolved	ND	ug/L	50.0	1	07/26/12 10:58	08/28/12 02:10	7439-89-6	
Lead, Dissolved	ND	ug/L	0.10	1	07/26/12 10:58	08/28/12 02:10	7439-92-1	
Magnesium, Dissolved	**22700**	ug/L	100	20	07/26/12 10:58	08/28/12 02:14	7439-95-4	

This report shall not be reproduced, except in full,
without the written consent of Pace Analytical Services, Inc..

Pace Analytical Services, Inc.
9608 Loiret Blvd.
Lenexa, KS 66219
(913)599-5665

ANALYTICAL RESULTS

Project: July 2012 Rico Water Sampling
Pace Project No.: 60125518

Sample: DR-6 **Lab ID: 60125518006** Collected: 07/17/12 12:50 Received: 07/19/12 10:20 Matrix: Water

Parameters	Results	Units	Report Limit	DF	Prepared	Analyzed	CAS No.	Qual
200.8 MET ICPMS, Dissolved	Analytical Method: EPA 200.8							
Manganese, Dissolved	**1550**	ug/L	10.0	20	07/26/12 10:58	08/28/12 02:14	7439-96-5	
Molybdenum, Dissolved	**11.1**	ug/L	0.50	1	07/26/12 10:58	08/28/12 02:10	7439-98-7	
Nickel, Dissolved	**4.3**	ug/L	0.50	1	07/26/12 10:58	08/28/12 02:10	7440-02-0	
Potassium, Dissolved	**2420**	ug/L	20.0	1	07/26/12 10:58	08/28/12 02:10	7440-09-7	
Selenium, Dissolved	ND	ug/L	0.50	1	07/26/12 10:58	08/28/12 02:10	7782-49-2	
Silver, Dissolved	ND	ug/L	0.50	1	07/26/12 10:58	08/28/12 02:10	7440-22-4	
Sodium, Dissolved	**12300**	ug/L	50.0	1	07/26/12 10:58	08/28/12 02:10	7440-23-5	
Thallium, Dissolved	ND	ug/L	0.10	1	07/26/12 10:58	08/28/12 02:10	7440-28-0	
Vanadium, Dissolved	ND	ug/L	0.10	1	07/26/12 10:58	08/28/12 02:10	7440-62-2	
Zinc, Dissolved	**2710**	ug/L	100	20	07/26/12 10:58	08/28/12 02:14	7440-66-6	
200.8 Potentially Diss. Metals	Analytical Method: EPA 200.8 Preparation Method: EPA 200.8							
Aluminum, Dissolved	ND	ug/L	50.0	1	07/26/12 09:45	07/27/12 11:56	7429-90-5	
Antimony, Dissolved	**0.17J**	ug/L	1.0	1	07/26/12 09:45	07/27/12 11:56	7440-36-0	
Arsenic, Dissolved	**0.26J**	ug/L	1.0	1	07/26/12 09:45	07/27/12 11:56	7440-38-2	
Barium, Dissolved	**19.0**	ug/L	5.0	5	07/26/12 09:45	07/26/12 17:40	7440-39-3	
Beryllium, Dissolved	**0.084J**	ug/L	0.50	1	07/26/12 09:45	07/27/12 11:56	7440-41-7	
Cadmium, Dissolved	**14.6**	ug/L	2.5	5	07/26/12 09:45	07/26/12 17:40	7440-43-9	
Chromium, Dissolved	**1.4**	ug/L	1.0	1	07/26/12 09:45	07/27/12 11:56	7440-47-3	
Cobalt, Dissolved	**1.8**	ug/L	1.0	1	07/26/12 09:45	07/27/12 11:56	7440-48-4	
Copper, Dissolved	**7.3**	ug/L	5.0	5	07/26/12 09:45	07/26/12 17:40	7440-50-8	
Iron, Dissolved	**369**	ug/L	250	5	07/26/12 09:45	07/26/12 17:40	7439-89-6	
Lead, Dissolved	**1.8**	ug/L	1.0	1	07/26/12 09:45	07/27/12 11:56	7439-92-1	
Manganese, Dissolved	**1530**	ug/L	5.0	5	07/26/12 09:45	07/26/12 17:40	7439-96-5	
Molybdenum, Dissolved	**9.8**	ug/L	5.0	5	07/26/12 09:45	07/26/12 17:40	7439-98-7	
Nickel, Dissolved	**1.4**	ug/L	1.0	1	07/26/12 09:45	07/27/12 11:56	7440-02-0	
Selenium, Dissolved	ND	ug/L	1.0	1	07/26/12 09:45	07/27/12 11:56	7782-49-2	
Silver, Dissolved	ND	ug/L	0.50	1	07/26/12 09:45	07/27/12 11:56	7440-22-4	
Thallium, Dissolved	**0.052J**	ug/L	1.0	1	07/26/12 09:45	07/27/12 11:56	7440-28-0	
Vanadium, Dissolved	ND	ug/L	1.0	1	07/26/12 09:45	07/27/12 11:56	7440-62-2	
Zinc, Dissolved	**2800**	ug/L	500	50	07/30/12 16:00	07/31/12 10:52	7440-66-6	
245.1 Mercury	Analytical Method: EPA 245.1							
Mercury	ND	ug/L	0.20	1	07/25/12 00:00	07/26/12 13:02	7439-97-6	
245.1 Mercury, Dissolved	Analytical Method: EPA 245.1							
Mercury, Dissolved	ND	ug/L	0.20	1	07/25/12 00:00	07/26/12 14:28	7439-97-6	
245.1 Potentially Diss Mercury	Analytical Method: EPA 245.1 Preparation Method: EPA 245.1							
Mercury, Dissolved	ND	ug/L	0.20	1	07/24/12 16:30	07/26/12 12:08	7439-97-6	
2510B Specific Conductance	Analytical Method: SM 2510B							
Specific Conductance	**1300**	umhos/cm	10.0	1		07/27/12 11:39		
Salinity	Analytical Method: Calculated							
Salinity (as dissolved solids)	**833**	mg/L	6.0	1		07/30/12 11:08		

This report shall not be reproduced, except in full,
without the written consent of Pace Analytical Services, Inc..

Pace Analytical Services, Inc.
9608 Loiret Blvd.
Lenexa, KS 66219
(913)599-5665

ANALYTICAL RESULTS

Project: July 2012 Rico Water Sampling
Pace Project No.: 60125518

Sample: DR-6 **Lab ID: 60125518006** Collected: 07/17/12 12:50 Received: 07/19/12 10:20 Matrix: Water

Parameters	Results	Units	Report Limit	DF	Prepared	Analyzed	CAS No.	Qual
Salinity	Analytical Method: Calculated							
Salinity (as seawater)	**0.65**	PSU	0.010	1		07/30/12 11:08		
2320B Alkalinity	Analytical Method: SM 2320B							
Alkalinity,Bicarbonate (CaCO3)	**116**	mg/L	20.0	1		07/30/12 09:00		
Alkalinity, Carbonate (CaCO3)	ND	mg/L	20.0	1		07/30/12 09:00		
Alkalinity, Total as CaCO3	**116**	mg/L	20.0	1		07/30/12 09:00		
2540C Total Dissolved Solids	Analytical Method: SM 2540C							
Total Dissolved Solids	**1060**	mg/L	5.0	1		07/20/12 10:50		
2540D Total Suspended Solids	Analytical Method: SM 2540D							
Total Suspended Solids	ND	mg/L	5.0	1		07/20/12 08:45		
4500H+ pH, Electrometric	Analytical Method: SM 4500-H+B							
pH at 25 Degrees C	**7.7**	Std. Units	0.10	1		07/20/12 13:29		H6
4500S2D Sulfide, Total	Analytical Method: SM 4500-S-2 D							
Sulfide, Total	ND	mg/L	0.050	1		07/24/12 11:43	18496-25-8	
Oxidation/Reduction Potential	Analytical Method: SM 2580B							
Oxidation/Reduction Potential	**147**	mV	1.0	1		07/24/12 11:30		
300.0 IC Anions 28 Days	Analytical Method: EPA 300.0							
Sulfate	**685**	mg/L	50.0	50		07/27/12 20:33	14808-79-8	
353.2 Nitrogen, NO2/NO3 pres.	Analytical Method: EPA 353.2							
Nitrogen, NO2 plus NO3	ND	mg/L	0.10	1		07/25/12 13:54		
4500CNE Cyanide, Total	Analytical Method: SM 4500-CN-E							
Cyanide	**0.013**	mg/L	0.0050	1		07/24/12 10:58	57-12-5	
5310C TOC	Analytical Method: SM 5310C							
Total Organic Carbon	ND	mg/L	0.50	1		07/30/12 18:00	7440-44-0	

This report shall not be reproduced, except in full,
without the written consent of Pace Analytical Services, Inc..

Pace Analytical Services, Inc.
9608 Loiret Blvd.
Lenexa, KS 66219
(913)599-5665

ANALYTICAL RESULTS

Project: July 2012 Rico Water Sampling
Pace Project No.: 60125518

Sample: DR-7 **Lab ID: 60125518007** Collected: 07/17/12 12:00 Received: 07/19/12 10:20 Matrix: Water

Parameters	Results	Units	Report Limit	DF	Prepared	Analyzed	CAS No.	Qual
200.7 Potentially Diss. Metals	Analytical Method: EPA 200.7 Preparation Method: EPA 200.7							
Calcium, Dissolved	**55200**	ug/L	500	5	07/26/12 10:00	07/27/12 14:00	7440-70-2	
Magnesium, Dissolved	**7280**	ug/L	250	5	07/26/12 10:00	07/27/12 14:00	7439-95-4	
Potassium, Dissolved	**1080**	ug/L	500	1	07/26/12 10:00	07/30/12 12:02	7440-09-7	
Sodium, Dissolved	**3620**	ug/L	2500	5	07/26/12 10:00	07/27/12 14:00	7440-23-5	
200.8 MET ICPMS	Analytical Method: EPA 200.8							
Aluminum	**32.7**	ug/L	4.0	1	07/25/12 17:09	08/29/12 05:54	7429-90-5	
Antimony	ND	ug/L	0.50	1	07/25/12 17:09	08/29/12 05:54	7440-36-0	
Arsenic	**0.88**	ug/L	0.50	1	07/25/12 17:09	08/29/12 05:54	7440-38-2	
Barium	**56.5**	ug/L	0.30	1	07/25/12 17:09	08/29/12 05:54	7440-39-3	
Beryllium	ND	ug/L	0.20	1	07/25/12 17:09	08/29/12 05:54	7440-41-7	
Cadmium	**0.80**	ug/L	0.080	1	07/25/12 17:09	08/29/12 05:54	7440-43-9	
Calcium	**59400**	ug/L	200	10	07/25/12 17:09	08/29/12 05:59	7440-70-2	
Chromium	ND	ug/L	0.50	1	07/25/12 17:09	08/29/12 05:54	7440-47-3	
Cobalt	ND	ug/L	0.50	1	07/25/12 17:09	08/29/12 05:54	7440-48-4	
Copper	**0.89**	ug/L	0.50	1	07/25/12 17:09	08/29/12 05:54	7440-50-8	
Iron	**132**	ug/L	50.0	1	07/25/12 17:09	08/29/12 05:54	7439-89-6	
Lead	ND	ug/L	0.10	1	07/25/12 17:09	08/29/12 05:54	7439-92-1	
Magnesium	**8060**	ug/L	5.0	1	07/25/12 17:09	08/29/12 05:54	7439-95-4	
Manganese	**171**	ug/L	0.50	1	07/25/12 17:09	08/29/12 05:54	7439-96-5	
Molybdenum	**1.6**	ug/L	0.50	1	07/25/12 17:09	08/29/12 05:54	7439-98-7	
Nickel	**0.51**	ug/L	0.50	1	07/25/12 17:09	08/30/12 22:42	7440-02-0	
Potassium	**1330**	ug/L	20.0	1	07/25/12 17:09	08/29/12 05:54	7440-09-7	
Selenium	ND	ug/L	0.50	1	07/25/12 17:09	08/29/12 05:54	7782-49-2	
Silica	**8930**	ug/L	268	5	07/25/12 17:09	08/30/12 22:48	7631-86-9	
Silver	ND	ug/L	0.50	1	07/25/12 17:09	08/29/12 05:54	7440-22-4	
Sodium	**4190**	ug/L	50.0	1	07/25/12 17:09	08/29/12 05:54	7440-23-5	
Thallium	ND	ug/L	0.10	1	07/25/12 17:09	08/29/12 05:54	7440-28-0	
Total Hardness by 2340B	**182000**	ug/L	710	10	07/25/12 17:09	08/29/12 05:59		
Vanadium	**0.14**	ug/L	0.10	1	07/25/12 17:09	08/29/12 05:54	7440-62-2	
Zinc	**166**	ug/L	5.0	1	07/25/12 17:09	08/29/12 05:54	7440-66-6	
200.8 MET ICPMS, Dissolved	Analytical Method: EPA 200.8							
Aluminum, Dissolved	**8.2**	ug/L	4.0	1	07/26/12 10:58	08/28/12 02:18	7429-90-5	
Antimony, Dissolved	ND	ug/L	0.50	1	07/26/12 10:58	08/28/12 02:18	7440-36-0	
Arsenic, Dissolved	**0.60**	ug/L	0.50	1	07/26/12 10:58	08/28/12 02:18	7440-38-2	
Barium, Dissolved	**60.4**	ug/L	0.30	1	07/26/12 10:58	08/28/12 02:18	7440-39-3	
Beryllium, Dissolved	ND	ug/L	0.20	1	07/26/12 10:58	08/28/12 02:18	7440-41-7	
Cadmium, Dissolved	**0.91**	ug/L	0.080	1	07/26/12 10:58	08/28/12 02:18	7440-43-9	
Calcium, Dissolved	**68000**	ug/L	100	5	07/26/12 10:58	08/28/12 02:22	7440-70-2	
Chromium, Dissolved	ND	ug/L	0.50	1	07/26/12 10:58	08/28/12 02:18	7440-47-3	
Cobalt, Dissolved	ND	ug/L	0.50	1	07/26/12 10:58	08/28/12 02:18	7440-48-4	
Copper, Dissolved	**1.1**	ug/L	0.50	1	07/26/12 10:58	08/28/12 02:18	7440-50-8	
Iron, Dissolved	ND	ug/L	50.0	1	07/26/12 10:58	08/28/12 02:18	7439-89-6	
Lead, Dissolved	ND	ug/L	0.10	1	07/26/12 10:58	08/28/12 02:18	7439-92-1	
Magnesium, Dissolved	**8210**	ug/L	5.0	1	07/26/12 10:58	08/28/12 02:18	7439-95-4	

This report shall not be reproduced, except in full,
without the written consent of Pace Analytical Services, Inc..

Pace Analytical Services, Inc.
9608 Loiret Blvd.
Lenexa, KS 66219
(913)599-5665

ANALYTICAL RESULTS

Project: July 2012 Rico Water Sampling
Pace Project No.: 60125518

Sample: DR-7 **Lab ID: 60125518007** Collected: 07/17/12 12:00 Received: 07/19/12 10:20 Matrix: Water

Parameters	Results	Units	Report Limit	DF	Prepared	Analyzed	CAS No.	Qual
200.8 MET ICPMS, Dissolved	Analytical Method: EPA 200.8							
Manganese, Dissolved	**174**	ug/L	0.50	1	07/26/12 10:58	08/28/12 02:18	7439-96-5	
Molybdenum, Dissolved	**1.6**	ug/L	0.50	1	07/26/12 10:58	08/28/12 02:18	7439-98-7	
Nickel, Dissolved	**2.9**	ug/L	0.50	1	07/26/12 10:58	08/28/12 02:18	7440-02-0	
Potassium, Dissolved	**1300**	ug/L	20.0	1	07/26/12 10:58	08/28/12 02:18	7440-09-7	
Selenium, Dissolved	ND	ug/L	0.50	1	07/26/12 10:58	08/28/12 02:18	7782-49-2	
Silver, Dissolved	ND	ug/L	0.50	1	07/26/12 10:58	08/28/12 02:18	7440-22-4	
Sodium, Dissolved	**4030**	ug/L	50.0	1	07/26/12 10:58	08/28/12 02:18	7440-23-5	
Thallium, Dissolved	ND	ug/L	0.10	1	07/26/12 10:58	08/28/12 02:18	7440-28-0	
Vanadium, Dissolved	**0.15**	ug/L	0.10	1	07/26/12 10:58	08/28/12 02:18	7440-62-2	
Zinc, Dissolved	**166**	ug/L	5.0	1	07/26/12 10:58	08/28/12 02:18	7440-66-6	
200.8 Potentially Diss. Metals	Analytical Method: EPA 200.8 Preparation Method: EPA 200.8							
Aluminum, Dissolved	ND	ug/L	50.0	1	07/26/12 09:45	07/27/12 12:00	7429-90-5	
Antimony, Dissolved	**0.072J**	ug/L	1.0	1	07/26/12 09:45	07/27/12 12:00	7440-36-0	
Arsenic, Dissolved	**0.66J**	ug/L	1.0	1	07/26/12 09:45	07/27/12 12:00	7440-38-2	
Barium, Dissolved	**53.0**	ug/L	5.0	5	07/26/12 09:45	07/26/12 17:45	7440-39-3	
Beryllium, Dissolved	ND	ug/L	0.50	1	07/26/12 09:45	07/27/12 12:00	7440-41-7	
Cadmium, Dissolved	**0.86**	ug/L	0.50	1	07/26/12 09:45	07/27/12 12:00	7440-43-9	
Chromium, Dissolved	**0.75J**	ug/L	1.0	1	07/26/12 09:45	07/27/12 12:00	7440-47-3	
Cobalt, Dissolved	**0.15J**	ug/L	1.0	1	07/26/12 09:45	07/27/12 12:00	7440-48-4	
Copper, Dissolved	**1.2**	ug/L	1.0	1	07/26/12 09:45	07/30/12 12:04	7440-50-8	
Iron, Dissolved	**125**	ug/L	50.0	1	07/26/12 09:45	07/27/12 12:00	7439-89-6	
Lead, Dissolved	**0.49J**	ug/L	1.0	1	07/26/12 09:45	07/27/12 12:00	7439-92-1	
Manganese, Dissolved	**159**	ug/L	5.0	5	07/26/12 09:45	07/26/12 17:45	7439-96-5	
Molybdenum, Dissolved	**1.5**	ug/L	1.0	1	07/26/12 09:45	07/27/12 12:00	7439-98-7	
Nickel, Dissolved	ND	ug/L	1.0	1	07/26/12 09:45	07/27/12 12:00	7440-02-0	
Selenium, Dissolved	ND	ug/L	1.0	1	07/26/12 09:45	07/27/12 12:00	7782-49-2	
Silver, Dissolved	ND	ug/L	0.50	1	07/26/12 09:45	07/27/12 12:00	7440-22-4	
Thallium, Dissolved	ND	ug/L	1.0	1	07/26/12 09:45	07/27/12 12:00	7440-28-0	
Vanadium, Dissolved	ND	ug/L	1.0	1	07/26/12 09:45	07/27/12 12:00	7440-62-2	
Zinc, Dissolved	**163**	ug/L	50.0	5	07/30/12 16:00	07/31/12 10:55	7440-66-6	M1
245.1 Mercury	Analytical Method: EPA 245.1							
Mercury	ND	ug/L	0.20	1	07/25/12 00:00	07/26/12 13:04	7439-97-6	
245.1 Mercury, Dissolved	Analytical Method: EPA 245.1							
Mercury, Dissolved	ND	ug/L	0.20	1	07/25/12 00:00	07/26/12 14:30	7439-97-6	
245.1 Potentially Diss Mercury	Analytical Method: EPA 245.1 Preparation Method: EPA 245.1							
Mercury, Dissolved	ND	ug/L	0.20	1	07/24/12 16:30	07/26/12 12:18	7439-97-6	
2510B Specific Conductance	Analytical Method: SM 2510B							
Specific Conductance	**395**	umhos/cm	10.0	1		07/27/12 11:42		
Salinity	Analytical Method: Calculated							
Salinity (as dissolved solids)	**253**	mg/L	6.0	1		07/30/12 11:08		

This report shall not be reproduced, except in full,
without the written consent of Pace Analytical Services, Inc..

Pace Analytical Services, Inc.
9608 Loiret Blvd.
Lenexa, KS 66219
(913)599-5665

ANALYTICAL RESULTS

Project: July 2012 Rico Water Sampling
Pace Project No.: 60125518

Sample: DR-7 **Lab ID: 60125518007** Collected: 07/17/12 12:00 Received: 07/19/12 10:20 Matrix: Water

Parameters	Results	Units	Report Limit	DF	Prepared	Analyzed	CAS No.	Qual
Salinity	Analytical Method: Calculated							
Salinity (as seawater)	**0.19**	PSU	0.010	1		07/30/12 11:08		
2320B Alkalinity	Analytical Method: SM 2320B							
Alkalinity,Bicarbonate (CaCO3)	**93.1**	mg/L	20.0	1		07/30/12 09:00		
Alkalinity, Carbonate (CaCO3)	ND	mg/L	20.0	1		07/30/12 09:00		
Alkalinity, Total as CaCO3	**93.1**	mg/L	20.0	1		07/30/12 09:00		
2540C Total Dissolved Solids	Analytical Method: SM 2540C							
Total Dissolved Solids	**244**	mg/L	5.0	1		07/20/12 10:50		
2540D Total Suspended Solids	Analytical Method: SM 2540D							
Total Suspended Solids	ND	mg/L	5.0	1		07/20/12 08:45		
4500S2D Sulfide, Total	Analytical Method: SM 4500-S-2 D							
Sulfide, Total	ND	mg/L	0.050	1		07/24/12 11:43	18496-25-8	
Oxidation/Reduction Potential	Analytical Method: SM 2580B							
Oxidation/Reduction Potential	**129**	mV	1.0	1		07/24/12 11:30		
300.0 IC Anions 28 Days	Analytical Method: EPA 300.0							
Sulfate	**93.2**	mg/L	10.0	10		07/27/12 20:50	14808-79-8	
353.2 Nitrogen, NO2/NO3 pres.	Analytical Method: EPA 353.2							
Nitrogen, NO2 plus NO3	ND	mg/L	0.10	1		07/25/12 13:55		
4500CNE Cyanide, Total	Analytical Method: SM 4500-CN-E							
Cyanide	ND	mg/L	0.0050	1		07/24/12 10:59	57-12-5	
5310C TOC	Analytical Method: SM 5310C							
Total Organic Carbon	**1.5**	mg/L	0.50	1		07/30/12 18:18	7440-44-0	

This report shall not be reproduced, except in full,
without the written consent of Pace Analytical Services, Inc..

Pace Analytical Services, Inc.
9608 Loiret Blvd.
Lenexa, KS 66219
(913)599-5665

ANALYTICAL RESULTS

Project: July 2012 Rico Water Sampling
Pace Project No.: 60125518

Sample: DR-8 **Lab ID: 60125518008** Collected: 07/17/12 14:25 Received: 07/19/12 10:20 Matrix: Water

Parameters	Results	Units	Report Limit	DF	Prepared	Analyzed	CAS No.	Qual
200.7 Potentially Diss. Metals	Analytical Method: EPA 200.7 Preparation Method: EPA 200.7							
Calcium, Dissolved	**232000**	ug/L	500	5	07/26/12 10:00	07/27/12 14:02	7440-70-2	
Magnesium, Dissolved	**19700**	ug/L	250	5	07/26/12 10:00	07/27/12 14:02	7439-95-4	
Potassium, Dissolved	**1450**	ug/L	1000	2	07/26/12 10:00	07/30/12 12:04	7440-09-7	
Sodium, Dissolved	**10300**	ug/L	2500	5	07/26/12 10:00	07/27/12 14:02	7440-23-5	
200.8 MET ICPMS	Analytical Method: EPA 200.8							
Aluminum	**209**	ug/L	4.0	1	07/25/12 17:09	08/29/12 06:28	7429-90-5	
Antimony	ND	ug/L	0.50	1	07/25/12 17:09	08/29/12 06:28	7440-36-0	
Arsenic	ND	ug/L	0.50	1	07/25/12 17:09	08/29/12 06:28	7440-38-2	
Barium	**18.8**	ug/L	0.30	1	07/25/12 17:09	08/29/12 06:28	7440-39-3	
Beryllium	**0.55**	ug/L	0.20	1	07/25/12 17:09	08/29/12 06:28	7440-41-7	
Cadmium	**22.8**	ug/L	0.080	1	07/25/12 17:09	08/29/12 06:28	7440-43-9	
Calcium	**235000**	ug/L	2000	100	07/25/12 17:09	08/29/12 06:39	7440-70-2	
Chromium	**0.63**	ug/L	0.50	1	07/25/12 17:09	08/29/12 06:28	7440-47-3	
Cobalt	**3.1**	ug/L	0.50	1	07/25/12 17:09	08/29/12 06:28	7440-48-4	
Copper	**46.1**	ug/L	0.50	1	07/25/12 17:09	08/29/12 06:28	7440-50-8	
Iron	**3410**	ug/L	50.0	1	07/25/12 17:09	08/29/12 06:28	7439-89-6	
Lead	**1.1**	ug/L	0.10	1	07/25/12 17:09	08/29/12 06:28	7439-92-1	
Magnesium	**20200**	ug/L	5.0	1	07/25/12 17:09	08/29/12 06:28	7439-95-4	
Manganese	**2120**	ug/L	5.0	10	07/25/12 17:09	08/29/12 06:33	7439-96-5	
Molybdenum	**13.7**	ug/L	0.50	1	07/25/12 17:09	08/29/12 06:28	7439-98-7	
Nickel	**5.5**	ug/L	0.50	1	07/25/12 17:09	08/29/12 06:28	7440-02-0	
Potassium	**1630**	ug/L	20.0	1	07/25/12 17:09	08/29/12 06:28	7440-09-7	
Selenium	ND	ug/L	0.50	1	07/25/12 17:09	08/29/12 06:28	7782-49-2	
Silica	**16000**	ug/L	535	10	07/25/12 17:09	08/30/12 22:54	7631-86-9	
Silver	ND	ug/L	0.50	1	07/25/12 17:09	08/29/12 06:28	7440-22-4	
Sodium	**10700**	ug/L	50.0	1	07/25/12 17:09	08/29/12 06:28	7440-23-5	
Thallium	ND	ug/L	0.10	1	07/25/12 17:09	08/29/12 06:28	7440-28-0	
Total Hardness by 2340B	**670000**	ug/L	7100	100	07/25/12 17:09	08/29/12 06:39		
Vanadium	ND	ug/L	0.10	1	07/25/12 17:09	08/29/12 06:28	7440-62-2	
Zinc	**4580**	ug/L	500	100	07/25/12 17:09	08/29/12 06:39	7440-66-6	
200.8 MET ICPMS, Dissolved	Analytical Method: EPA 200.8							
Aluminum, Dissolved	**90.3**	ug/L	4.0	1	07/26/12 10:58	08/28/12 02:26	7429-90-5	
Antimony, Dissolved	ND	ug/L	0.50	1	07/26/12 10:58	08/28/12 02:26	7440-36-0	
Arsenic, Dissolved	ND	ug/L	0.50	1	07/26/12 10:58	08/28/12 02:26	7440-38-2	
Barium, Dissolved	**21.3**	ug/L	0.30	1	07/26/12 10:58	08/28/12 02:26	7440-39-3	
Beryllium, Dissolved	**0.48**	ug/L	0.20	1	07/26/12 10:58	08/28/12 02:26	7440-41-7	
Cadmium, Dissolved	**25.0**	ug/L	0.080	1	07/26/12 10:58	08/28/12 02:26	7440-43-9	
Calcium, Dissolved	**264000**	ug/L	400	20	07/26/12 10:58	08/28/12 02:30	7440-70-2	
Chromium, Dissolved	**0.54**	ug/L	0.50	1	07/26/12 10:58	08/28/12 02:26	7440-47-3	
Cobalt, Dissolved	**3.2**	ug/L	0.50	1	07/26/12 10:58	08/28/12 02:26	7440-48-4	
Copper, Dissolved	**9.0**	ug/L	0.50	1	07/26/12 10:58	08/28/12 02:26	7440-50-8	
Iron, Dissolved	**707**	ug/L	50.0	1	07/26/12 10:58	08/28/12 02:26	7439-89-6	
Lead, Dissolved	ND	ug/L	0.10	1	07/26/12 10:58	08/28/12 02:26	7439-92-1	
Magnesium, Dissolved	**20700**	ug/L	5.0	1	07/26/12 10:58	08/28/12 02:26	7439-95-4	

This report shall not be reproduced, except in full,
without the written consent of Pace Analytical Services, Inc..

Pace Analytical Services, Inc.
9608 Loiret Blvd.
Lenexa, KS 66219
(913)599-5665

ANALYTICAL RESULTS

Project: July 2012 Rico Water Sampling
Pace Project No.: 60125518

Sample: DR-8 **Lab ID: 60125518008** Collected: 07/17/12 14:25 Received: 07/19/12 10:20 Matrix: Water

Parameters	Results	Units	Report Limit	DF	Prepared	Analyzed	CAS No.	Qual
200.8 MET ICPMS, Dissolved	Analytical Method: EPA 200.8							
Manganese, Dissolved	**2160**	ug/L	10.0	20	07/26/12 10:58	08/28/12 02:30	7439-96-5	
Molybdenum, Dissolved	**13.5**	ug/L	0.50	1	07/26/12 10:58	08/28/12 02:26	7439-98-7	
Nickel, Dissolved	**5.7**	ug/L	0.50	1	07/26/12 10:58	08/28/12 02:26	7440-02-0	
Potassium, Dissolved	**1620**	ug/L	20.0	1	07/26/12 10:58	08/28/12 02:26	7440-09-7	
Selenium, Dissolved	ND	ug/L	0.50	1	07/26/12 10:58	08/28/12 02:26	7782-49-2	
Silver, Dissolved	ND	ug/L	0.50	1	07/26/12 10:58	08/28/12 02:26	7440-22-4	
Sodium, Dissolved	**10500**	ug/L	50.0	1	07/26/12 10:58	08/28/12 02:26	7440-23-5	
Thallium, Dissolved	ND	ug/L	0.10	1	07/26/12 10:58	08/28/12 02:26	7440-28-0	
Vanadium, Dissolved	ND	ug/L	0.10	1	07/26/12 10:58	08/28/12 02:26	7440-62-2	
Zinc, Dissolved	**4630**	ug/L	100	20	07/26/12 10:58	08/28/12 02:30	7440-66-6	
200.8 Potentially Diss. Metals	Analytical Method: EPA 200.8 Preparation Method: EPA 200.8							
Aluminum, Dissolved	**184**	ug/L	50.0	1	07/26/12 09:45	07/27/12 12:04	7429-90-5	
Antimony, Dissolved	**0.23J**	ug/L	1.0	1	07/26/12 09:45	07/27/12 12:04	7440-36-0	
Arsenic, Dissolved	**0.45J**	ug/L	1.0	1	07/26/12 09:45	07/27/12 12:04	7440-38-2	
Barium, Dissolved	**18.4**	ug/L	5.0	5	07/26/12 09:45	07/26/12 17:49	7440-39-3	
Beryllium, Dissolved	**0.52**	ug/L	0.50	1	07/26/12 09:45	07/27/12 12:04	7440-41-7	
Cadmium, Dissolved	**22.7**	ug/L	2.5	5	07/26/12 09:45	07/26/12 17:49	7440-43-9	
Chromium, Dissolved	ND	ug/L	1.0	1	07/26/12 09:45	07/27/12 12:04	7440-47-3	
Cobalt, Dissolved	**2.9**	ug/L	1.0	1	07/26/12 09:45	07/27/12 12:04	7440-48-4	
Copper, Dissolved	**47.3**	ug/L	5.0	5	07/26/12 09:45	07/26/12 17:49	7440-50-8	
Iron, Dissolved	**3120**	ug/L	250	5	07/26/12 09:45	07/26/12 17:49	7439-89-6	
Lead, Dissolved	**9.0**	ug/L	1.0	1	07/26/12 09:45	07/27/12 12:04	7439-92-1	
Manganese, Dissolved	**2000**	ug/L	5.0	5	07/26/12 09:45	07/26/12 17:49	7439-96-5	
Molybdenum, Dissolved	**13.4**	ug/L	1.0	1	07/26/12 09:45	07/27/12 12:04	7439-98-7	
Nickel, Dissolved	**2.4**	ug/L	1.0	1	07/26/12 09:45	07/27/12 12:04	7440-02-0	
Selenium, Dissolved	ND	ug/L	1.0	1	07/26/12 09:45	07/27/12 12:04	7782-49-2	
Silver, Dissolved	ND	ug/L	0.50	1	07/26/12 09:45	07/27/12 12:04	7440-22-4	
Thallium, Dissolved	**0.058J**	ug/L	1.0	1	07/26/12 09:45	07/27/12 12:04	7440-28-0	
Vanadium, Dissolved	ND	ug/L	1.0	1	07/26/12 09:45	07/27/12 12:04	7440-62-2	
Zinc, Dissolved	**4350**	ug/L	50.0	5	07/26/12 09:45	07/26/12 17:49	7440-66-6	B,L1
245.1 Mercury	Analytical Method: EPA 245.1							
Mercury	ND	ug/L	0.20	1	07/25/12 00:00	07/26/12 13:07	7439-97-6	
245.1 Mercury, Dissolved	Analytical Method: EPA 245.1							
Mercury, Dissolved	ND	ug/L	0.20	1	07/25/12 00:00	07/26/12 14:33	7439-97-6	
245.1 Potentially Diss Mercury	Analytical Method: EPA 245.1 Preparation Method: EPA 245.1							
Mercury, Dissolved	ND	ug/L	0.20	1	07/24/12 16:30	07/26/12 12:21	7439-97-6	
2510B Specific Conductance	Analytical Method: SM 2510B							
Specific Conductance	**1250**	umhos/cm	10.0	1		07/27/12 11:44		
Salinity	Analytical Method: Calculated							
Salinity (as dissolved solids)	**803**	mg/L	6.0	1		07/30/12 11:08		

This report shall not be reproduced, except in full,
without the written consent of Pace Analytical Services, Inc..

Pace Analytical Services, Inc.
9608 Loiret Blvd.
Lenexa, KS 66219
(913)599-5665

ANALYTICAL RESULTS

Project: July 2012 Rico Water Sampling
Pace Project No.: 60125518

Sample: DR-8 **Lab ID: 60125518008** Collected: 07/17/12 14:25 Received: 07/19/12 10:20 Matrix: Water

Parameters	Results	Units	Report Limit	DF	Prepared	Analyzed	CAS No.	Qual
Salinity	Analytical Method: Calculated							
Salinity (as seawater)	**0.62**	PSU	0.010	1		07/30/12 11:08		
2320B Alkalinity	Analytical Method: SM 2320B							
Alkalinity,Bicarbonate (CaCO3)	**89.3**	mg/L	20.0	1		07/30/12 09:00		
Alkalinity, Carbonate (CaCO3)	ND	mg/L	20.0	1		07/30/12 09:00		
Alkalinity, Total as CaCO3	**89.3**	mg/L	20.0	1		07/30/12 09:00		
2540C Total Dissolved Solids	Analytical Method: SM 2540C							
Total Dissolved Solids	**1020**	mg/L	5.0	1		07/20/12 10:50		
2540D Total Suspended Solids	Analytical Method: SM 2540D							
Total Suspended Solids	ND	mg/L	5.0	1		07/20/12 08:45		
4500H+ pH, Electrometric	Analytical Method: SM 4500-H+B							
pH at 25 Degrees C	**7.4**	Std. Units	0.10	1		07/20/12 13:29		H6
4500S2D Sulfide, Total	Analytical Method: SM 4500-S-2 D							
Sulfide, Total	ND	mg/L	0.050	1		07/24/12 11:43	18496-25-8	
Oxidation/Reduction Potential	Analytical Method: SM 2580B							
Oxidation/Reduction Potential	**144**	mV	1.0	1		07/24/12 11:30		
300.0 IC Anions 28 Days	Analytical Method: EPA 300.0							
Sulfate	**655**	mg/L	50.0	50		07/27/12 21:08	14808-79-8	
353.2 Nitrogen, NO2/NO3 pres.	Analytical Method: EPA 353.2							
Nitrogen, NO2 plus NO3	ND	mg/L	0.10	1		07/27/12 11:21		
4500CNE Cyanide, Total	Analytical Method: SM 4500-CN-E							
Cyanide	**0.024**	mg/L	0.0050	1		07/24/12 10:59	57-12-5	
5310C TOC	Analytical Method: SM 5310C							
Total Organic Carbon	ND	mg/L	0.50	1		07/30/12 18:35	7440-44-0	

This report shall not be reproduced, except in full,
without the written consent of Pace Analytical Services, Inc..

Pace Analytical Services, Inc.
9608 Loiret Blvd.
Lenexa, KS 66219
(913)599-5665

ANALYTICAL RESULTS

Project: July 2012 Rico Water Sampling
Pace Project No.: 60125518

Sample: DR-4-SW **Lab ID: 60125518009** Collected: 07/17/12 11:40 Received: 07/19/12 10:20 Matrix: Water

Parameters	Results	Units	Report Limit	DF	Prepared	Analyzed	CAS No.	Qual
200.7 Potentially Diss. Metals	Analytical Method: EPA 200.7 Preparation Method: EPA 200.7							
Calcium, Dissolved	**49500**	ug/L	500	5	07/26/12 10:00	07/27/12 14:04	7440-70-2	
Magnesium, Dissolved	**6480**	ug/L	250	5	07/26/12 10:00	07/27/12 14:04	7439-95-4	
Potassium, Dissolved	**792**	ug/L	500	1	07/26/12 10:00	07/30/12 12:06	7440-09-7	
Sodium, Dissolved	**2730**	ug/L	2500	5	07/26/12 10:00	07/27/12 14:04	7440-23-5	
200.8 MET ICPMS	Analytical Method: EPA 200.8							
Aluminum	**30.4**	ug/L	4.0	1	07/25/12 17:09	08/29/12 06:50	7429-90-5	
Antimony	ND	ug/L	0.50	1	07/25/12 17:09	08/29/12 06:50	7440-36-0	
Arsenic	**0.57**	ug/L	0.50	1	07/25/12 17:09	08/29/12 06:50	7440-38-2	
Barium	**58.2**	ug/L	0.30	1	07/25/12 17:09	08/29/12 06:50	7440-39-3	
Beryllium	ND	ug/L	0.20	1	07/25/12 17:09	08/29/12 06:50	7440-41-7	
Cadmium	**0.50**	ug/L	0.080	1	07/25/12 17:09	08/29/12 06:50	7440-43-9	
Calcium	**49900**	ug/L	200	10	07/25/12 17:09	08/29/12 06:56	7440-70-2	
Chromium	ND	ug/L	0.50	1	07/25/12 17:09	08/29/12 06:50	7440-47-3	
Cobalt	ND	ug/L	0.50	1	07/25/12 17:09	08/29/12 06:50	7440-48-4	
Copper	**0.85**	ug/L	0.50	1	07/25/12 17:09	08/29/12 06:50	7440-50-8	
Iron	**89.8**	ug/L	50.0	1	07/25/12 17:09	08/29/12 06:50	7439-89-6	
Lead	**0.27**	ug/L	0.10	1	07/25/12 17:09	08/29/12 06:50	7439-92-1	
Magnesium	**6830**	ug/L	5.0	1	07/25/12 17:09	08/29/12 06:50	7439-95-4	
Manganese	**104**	ug/L	0.50	1	07/25/12 17:09	08/29/12 06:50	7439-96-5	
Molybdenum	**1.1**	ug/L	0.50	1	07/25/12 17:09	08/29/12 06:50	7439-98-7	
Nickel	ND	ug/L	0.50	1	07/25/12 17:09	08/30/12 23:00	7440-02-0	
Potassium	**945**	ug/L	20.0	1	07/25/12 17:09	08/29/12 06:50	7440-09-7	
Selenium	ND	ug/L	0.50	1	07/25/12 17:09	08/29/12 06:50	7782-49-2	
Silica	**7630**	ug/L	268	5	07/25/12 17:09	08/30/12 23:05	7631-86-9	
Silver	ND	ug/L	0.50	1	07/25/12 17:09	08/29/12 06:50	7440-22-4	
Sodium	**3030**	ug/L	50.0	1	07/25/12 17:09	08/29/12 06:50	7440-23-5	
Thallium	ND	ug/L	0.10	1	07/25/12 17:09	08/29/12 06:50	7440-28-0	
Total Hardness by 2340B	**153000**	ug/L	710	10	07/25/12 17:09	08/29/12 06:56		
Vanadium	**0.14**	ug/L	0.10	1	07/25/12 17:09	08/29/12 06:50	7440-62-2	
Zinc	**94.9**	ug/L	5.0	1	07/25/12 17:09	08/29/12 06:50	7440-66-6	
200.8 MET ICPMS, Dissolved	Analytical Method: EPA 200.8							
Aluminum, Dissolved	**12.0**	ug/L	4.0	1	07/26/12 10:58	08/28/12 02:34	7429-90-5	
Antimony, Dissolved	ND	ug/L	0.50	1	07/26/12 10:58	08/28/12 02:34	7440-36-0	
Arsenic, Dissolved	ND	ug/L	0.50	1	07/26/12 10:58	08/28/12 02:34	7440-38-2	
Barium, Dissolved	**62.3**	ug/L	0.30	1	07/26/12 10:58	08/28/12 02:34	7440-39-3	
Beryllium, Dissolved	ND	ug/L	0.20	1	07/26/12 10:58	08/28/12 02:34	7440-41-7	
Cadmium, Dissolved	**0.50**	ug/L	0.080	1	07/26/12 10:58	08/28/12 02:34	7440-43-9	
Calcium, Dissolved	**57800**	ug/L	100	5	07/26/12 10:58	08/28/12 02:38	7440-70-2	
Chromium, Dissolved	ND	ug/L	0.50	1	07/26/12 10:58	08/28/12 02:34	7440-47-3	
Cobalt, Dissolved	ND	ug/L	0.50	1	07/26/12 10:58	08/28/12 02:34	7440-48-4	
Copper, Dissolved	**1.4**	ug/L	0.50	1	07/26/12 10:58	08/28/12 02:34	7440-50-8	
Iron, Dissolved	ND	ug/L	50.0	1	07/26/12 10:58	08/28/12 02:34	7439-89-6	
Lead, Dissolved	**0.13**	ug/L	0.10	1	07/26/12 10:58	08/28/12 02:34	7439-92-1	
Magnesium, Dissolved	**6820**	ug/L	5.0	1	07/26/12 10:58	08/28/12 02:34	7439-95-4	

This report shall not be reproduced, except in full,
without the written consent of Pace Analytical Services, Inc..

Pace Analytical Services, Inc.
9608 Loiret Blvd.
Lenexa, KS 66219
(913)599-5665

ANALYTICAL RESULTS

Project: July 2012 Rico Water Sampling
Pace Project No.: 60125518

Sample: DR-4-SW **Lab ID: 60125518009** Collected: 07/17/12 11:40 Received: 07/19/12 10:20 Matrix: Water

Parameters	Results	Units	Report Limit	DF	Prepared	Analyzed	CAS No.	Qual
200.8 MET ICPMS, Dissolved	Analytical Method: EPA 200.8							
Manganese, Dissolved	**105**	ug/L	0.50	1	07/26/12 10:58	08/28/12 02:34	7439-96-5	
Molybdenum, Dissolved	**1.1**	ug/L	0.50	1	07/26/12 10:58	08/28/12 02:34	7439-98-7	
Nickel, Dissolved	**2.9**	ug/L	0.50	1	07/26/12 10:58	08/28/12 02:34	7440-02-0	
Potassium, Dissolved	**900**	ug/L	20.0	1	07/26/12 10:58	08/28/12 02:34	7440-09-7	
Selenium, Dissolved	ND	ug/L	0.50	1	07/26/12 10:58	08/28/12 02:34	7782-49-2	
Silver, Dissolved	ND	ug/L	0.50	1	07/26/12 10:58	08/28/12 02:34	7440-22-4	
Sodium, Dissolved	**2880**	ug/L	50.0	1	07/26/12 10:58	08/28/12 02:34	7440-23-5	
Thallium, Dissolved	ND	ug/L	0.10	1	07/26/12 10:58	08/28/12 02:34	7440-28-0	
Vanadium, Dissolved	**0.13**	ug/L	0.10	1	07/26/12 10:58	08/28/12 02:34	7440-62-2	
Zinc, Dissolved	**93.0**	ug/L	5.0	1	07/26/12 10:58	08/28/12 02:34	7440-66-6	
200.8 Potentially Diss. Metals	Analytical Method: EPA 200.8 Preparation Method: EPA 200.8							
Aluminum, Dissolved	**75.8**	ug/L	50.0	1	07/26/12 09:45	07/27/12 12:08	7429-90-5	
Antimony, Dissolved	**0.065J**	ug/L	1.0	1	07/26/12 09:45	07/27/12 12:08	7440-36-0	
Arsenic, Dissolved	**0.39J**	ug/L	1.0	1	07/26/12 09:45	07/27/12 12:08	7440-38-2	
Barium, Dissolved	**59.4**	ug/L	5.0	5	07/26/12 09:45	07/26/12 17:53	7440-39-3	
Beryllium, Dissolved	ND	ug/L	0.50	1	07/26/12 09:45	07/27/12 12:08	7440-41-7	
Cadmium, Dissolved	**0.54**	ug/L	0.50	1	07/26/12 09:45	07/27/12 12:08	7440-43-9	
Chromium, Dissolved	**0.83J**	ug/L	1.0	1	07/26/12 09:45	07/27/12 12:08	7440-47-3	
Cobalt, Dissolved	**0.11J**	ug/L	1.0	1	07/26/12 09:45	07/27/12 12:08	7440-48-4	
Copper, Dissolved	**1.4**	ug/L	1.0	1	07/26/12 09:45	07/30/12 12:06	7440-50-8	
Iron, Dissolved	**85.3**	ug/L	50.0	1	07/26/12 09:45	07/27/12 12:08	7439-89-6	
Lead, Dissolved	**0.42J**	ug/L	1.0	1	07/26/12 09:45	07/27/12 12:08	7439-92-1	
Manganese, Dissolved	**104**	ug/L	5.0	5	07/26/12 09:45	07/26/12 17:53	7439-96-5	
Molybdenum, Dissolved	**1.3**	ug/L	1.0	1	07/26/12 09:45	07/27/12 12:08	7439-98-7	
Nickel, Dissolved	ND	ug/L	1.0	1	07/26/12 09:45	07/27/12 12:08	7440-02-0	
Selenium, Dissolved	ND	ug/L	1.0	1	07/26/12 09:45	07/27/12 12:08	7782-49-2	
Silver, Dissolved	ND	ug/L	0.50	1	07/26/12 09:45	07/27/12 12:08	7440-22-4	
Thallium, Dissolved	ND	ug/L	1.0	1	07/26/12 09:45	07/27/12 12:08	7440-28-0	
Vanadium, Dissolved	ND	ug/L	1.0	1	07/26/12 09:45	07/27/12 12:08	7440-62-2	
Zinc, Dissolved	**89.3**	ug/L	10.0	1	07/30/12 16:00	07/31/12 11:12	7440-66-6	
245.1 Mercury	Analytical Method: EPA 245.1							
Mercury	ND	ug/L	0.20	1	07/25/12 00:00	07/26/12 13:14	7439-97-6	
245.1 Mercury, Dissolved	Analytical Method: EPA 245.1							
Mercury, Dissolved	ND	ug/L	0.20	1	07/25/12 00:00	07/26/12 14:40	7439-97-6	
245.1 Potentially Diss Mercury	Analytical Method: EPA 245.1 Preparation Method: EPA 245.1							
Mercury, Dissolved	ND	ug/L	0.20	1	07/24/12 16:30	07/26/12 12:23	7439-97-6	
2510B Specific Conductance	Analytical Method: SM 2510B							
Specific Conductance	**328**	umhos/cm	10.0	1		07/27/12 11:45		
Salinity	Analytical Method: Calculated							
Salinity (as dissolved solids)	**210**	mg/L	6.0	1		07/30/12 11:08		

This report shall not be reproduced, except in full,
without the written consent of Pace Analytical Services, Inc..

Pace Analytical Services, Inc.
9608 Loiret Blvd.
Lenexa, KS 66219
(913)599-5665

ANALYTICAL RESULTS

Project: July 2012 Rico Water Sampling
Pace Project No.: 60125518

Sample: DR-4-SW **Lab ID: 60125518009** Collected: 07/17/12 11:40 Received: 07/19/12 10:20 Matrix: Water

Parameters	Results	Units	Report Limit	DF	Prepared	Analyzed	CAS No.	Qual
Salinity	Analytical Method: Calculated							
Salinity (as seawater)	**0.16**	PSU	0.010	1		07/30/12 11:08		
2320B Alkalinity	Analytical Method: SM 2320B							
Alkalinity,Bicarbonate (CaCO3)	**89.3**	mg/L	20.0	1		07/30/12 09:00		
Alkalinity, Carbonate (CaCO3)	ND	mg/L	20.0	1		07/30/12 09:00		
Alkalinity, Total as CaCO3	**89.3**	mg/L	20.0	1		07/30/12 09:00		
2540C Total Dissolved Solids	Analytical Method: SM 2540C							
Total Dissolved Solids	**202**	mg/L	5.0	1		07/20/12 10:51		
2540D Total Suspended Solids	Analytical Method: SM 2540D							
Total Suspended Solids	**6.0**	mg/L	5.0	1		07/20/12 08:46		
4500S2D Sulfide, Total	Analytical Method: SM 4500-S-2 D							
Sulfide, Total	ND	mg/L	0.050	1		07/24/12 11:45	18496-25-8	
Oxidation/Reduction Potential	Analytical Method: SM 2580B							
Oxidation/Reduction Potential	**118**	mV	1.0	1		07/24/12 11:30		
300.0 IC Anions 28 Days	Analytical Method: EPA 300.0							
Sulfate	**67.3**	mg/L	10.0	10		07/27/12 21:25	14808-79-8	
353.2 Nitrogen, NO2/NO3 pres.	Analytical Method: EPA 353.2							
Nitrogen, NO2 plus NO3	ND	mg/L	0.10	1		07/27/12 11:22		
4500CNE Cyanide, Total	Analytical Method: SM 4500-CN-E							
Cyanide	**0.012**	mg/L	0.0050	1		07/24/12 11:02	57-12-5	
5310C TOC	Analytical Method: SM 5310C							
Total Organic Carbon	**1.5**	mg/L	0.50	1		07/30/12 18:53	7440-44-0	

This report shall not be reproduced, except in full,
without the written consent of Pace Analytical Services, Inc..

Pace Analytical Services, Inc.
9608 Loiret Blvd.
Lenexa, KS 66219
(913)599-5665

ANALYTICAL RESULTS

Project: July 2012 Rico Water Sampling
Pace Project No.: 60125518

Sample: DR-G **Lab ID: 60125518010** Collected: 07/17/12 11:20 Received: 07/19/12 10:20 Matrix: Water

Parameters	Results	Units	Report Limit	DF	Prepared	Analyzed	CAS No.	Qual
200.7 Potentially Diss. Metals	Analytical Method: EPA 200.7 Preparation Method: EPA 200.7							
Calcium, Dissolved	**43100**	ug/L	500	5	07/26/12 10:00	07/27/12 14:06	7440-70-2	
Magnesium, Dissolved	**5720**	ug/L	250	5	07/26/12 10:00	07/27/12 14:06	7439-95-4	
Potassium, Dissolved	**713**	ug/L	500	1	07/26/12 10:00	07/30/12 12:13	7440-09-7	
Sodium, Dissolved	**2580**	ug/L	500	1	07/26/12 10:00	07/30/12 12:13	7440-23-5	
200.8 MET ICPMS	Analytical Method: EPA 200.8							
Aluminum	**29.8**	ug/L	4.0	1	07/25/12 17:09	08/29/12 07:24	7429-90-5	
Antimony	ND	ug/L	0.50	1	07/25/12 17:09	08/29/12 07:24	7440-36-0	
Arsenic	ND	ug/L	0.50	1	07/25/12 17:09	08/29/12 07:24	7440-38-2	
Barium	**66.6**	ug/L	0.30	1	07/25/12 17:09	08/29/12 07:24	7440-39-3	
Beryllium	ND	ug/L	0.20	1	07/25/12 17:09	08/29/12 07:24	7440-41-7	
Cadmium	**0.30**	ug/L	0.080	1	07/25/12 17:09	08/29/12 07:24	7440-43-9	
Calcium	**47300**	ug/L	200	10	07/25/12 17:09	08/29/12 07:30	7440-70-2	
Chromium	ND	ug/L	0.50	1	07/25/12 17:09	08/29/12 07:24	7440-47-3	
Cobalt	ND	ug/L	0.50	1	07/25/12 17:09	08/29/12 07:24	7440-48-4	
Copper	**0.86**	ug/L	0.50	1	07/25/12 17:09	08/29/12 07:24	7440-50-8	
Iron	**55.4**	ug/L	50.0	1	07/25/12 17:09	08/29/12 07:24	7439-89-6	
Lead	**0.20**	ug/L	0.10	1	07/25/12 17:09	08/29/12 07:24	7439-92-1	
Magnesium	**6310**	ug/L	5.0	1	07/25/12 17:09	08/29/12 07:24	7439-95-4	
Manganese	**43.1**	ug/L	0.50	1	07/25/12 17:09	08/29/12 07:24	7439-96-5	
Molybdenum	**0.97**	ug/L	0.50	1	07/25/12 17:09	08/29/12 07:24	7439-98-7	
Nickel	ND	ug/L	0.50	1	07/25/12 17:09	08/30/12 23:11	7440-02-0	
Potassium	**837**	ug/L	20.0	1	07/25/12 17:09	08/29/12 07:24	7440-09-7	
Selenium	ND	ug/L	0.50	1	07/25/12 17:09	08/29/12 07:24	7782-49-2	
Silica	**7060**	ug/L	268	5	07/25/12 17:09	08/30/12 23:17	7631-86-9	
Silver	ND	ug/L	0.50	1	07/25/12 17:09	08/29/12 07:24	7440-22-4	
Sodium	**2790**	ug/L	50.0	1	07/25/12 17:09	08/29/12 07:24	7440-23-5	
Thallium	ND	ug/L	0.10	1	07/25/12 17:09	08/29/12 07:24	7440-28-0	
Total Hardness by 2340B	**144000**	ug/L	710	10	07/25/12 17:09	08/29/12 07:30		
Vanadium	**0.23**	ug/L	0.10	1	07/25/12 17:09	08/29/12 07:24	7440-62-2	
Zinc	**63.1**	ug/L	5.0	1	07/25/12 17:09	08/29/12 07:24	7440-66-6	
200.8 MET ICPMS, Dissolved	Analytical Method: EPA 200.8							
Aluminum, Dissolved	**7.6**	ug/L	4.0	1	07/26/12 10:58	08/28/12 02:42	7429-90-5	
Antimony, Dissolved	ND	ug/L	0.50	1	07/26/12 10:58	08/28/12 02:42	7440-36-0	
Arsenic, Dissolved	ND	ug/L	0.50	1	07/26/12 10:58	08/28/12 02:42	7440-38-2	
Barium, Dissolved	**74.0**	ug/L	0.30	1	07/26/12 10:58	08/28/12 02:42	7440-39-3	
Beryllium, Dissolved	ND	ug/L	0.20	1	07/26/12 10:58	08/28/12 02:42	7440-41-7	
Cadmium, Dissolved	**0.29**	ug/L	0.080	1	07/26/12 10:58	08/28/12 02:42	7440-43-9	
Calcium, Dissolved	**56400**	ug/L	100	5	07/26/12 10:58	08/28/12 02:47	7440-70-2	
Chromium, Dissolved	ND	ug/L	0.50	1	07/26/12 10:58	08/28/12 02:42	7440-47-3	
Cobalt, Dissolved	ND	ug/L	0.50	1	07/26/12 10:58	08/28/12 02:42	7440-48-4	
Copper, Dissolved	**1.1**	ug/L	0.50	1	07/26/12 10:58	08/28/12 02:42	7440-50-8	
Iron, Dissolved	ND	ug/L	50.0	1	07/26/12 10:58	08/28/12 02:42	7439-89-6	
Lead, Dissolved	ND	ug/L	0.10	1	07/26/12 10:58	08/28/12 02:42	7439-92-1	
Magnesium, Dissolved	**6550**	ug/L	5.0	1	07/26/12 10:58	08/28/12 02:42	7439-95-4	

This report shall not be reproduced, except in full,
without the written consent of Pace Analytical Services, Inc..

Pace Analytical Services, Inc.
9608 Loiret Blvd.
Lenexa, KS 66219
(913)599-5665

ANALYTICAL RESULTS

Project: July 2012 Rico Water Sampling
Pace Project No.: 60125518

Sample: DR-G **Lab ID: 60125518010** Collected: 07/17/12 11:20 Received: 07/19/12 10:20 Matrix: Water

Parameters	Results	Units	Report Limit	DF	Prepared	Analyzed	CAS No.	Qual
200.8 MET ICPMS, Dissolved	Analytical Method: EPA 200.8							
Manganese, Dissolved	**41.6**	ug/L	0.50	1	07/26/12 10:58	08/28/12 02:42	7439-96-5	
Molybdenum, Dissolved	**0.95**	ug/L	0.50	1	07/26/12 10:58	08/28/12 02:42	7439-98-7	
Nickel, Dissolved	**2.2**	ug/L	0.50	1	07/26/12 10:58	08/28/12 02:42	7440-02-0	
Potassium, Dissolved	**840**	ug/L	20.0	1	07/26/12 10:58	08/28/12 02:42	7440-09-7	
Selenium, Dissolved	ND	ug/L	0.50	1	07/26/12 10:58	08/28/12 02:42	7782-49-2	
Silver, Dissolved	ND	ug/L	0.50	1	07/26/12 10:58	08/28/12 02:42	7440-22-4	
Sodium, Dissolved	**2810**	ug/L	50.0	1	07/26/12 10:58	08/28/12 02:42	7440-23-5	
Thallium, Dissolved	ND	ug/L	0.10	1	07/26/12 10:58	08/28/12 02:42	7440-28-0	
Vanadium, Dissolved	**0.17**	ug/L	0.10	1	07/26/12 10:58	08/28/12 02:42	7440-62-2	
Zinc, Dissolved	**51.0**	ug/L	5.0	1	07/26/12 10:58	08/28/12 02:42	7440-66-6	
200.8 Potentially Diss. Metals	Analytical Method: EPA 200.8 Preparation Method: EPA 200.8							
Aluminum, Dissolved	ND	ug/L	50.0	1	07/26/12 09:45	07/27/12 12:12	7429-90-5	
Antimony, Dissolved	**0.070J**	ug/L	1.0	1	07/26/12 09:45	07/27/12 12:12	7440-36-0	
Arsenic, Dissolved	**0.39J**	ug/L	1.0	1	07/26/12 09:45	07/27/12 12:12	7440-38-2	
Barium, Dissolved	**71.2**	ug/L	5.0	5	07/26/12 09:45	07/26/12 17:57	7440-39-3	
Beryllium, Dissolved	ND	ug/L	0.50	1	07/26/12 09:45	07/27/12 12:12	7440-41-7	
Cadmium, Dissolved	**0.37J**	ug/L	0.50	1	07/26/12 09:45	07/27/12 12:12	7440-43-9	
Chromium, Dissolved	**1.6**	ug/L	1.0	1	07/26/12 09:45	07/27/12 12:12	7440-47-3	
Cobalt, Dissolved	**0.059J**	ug/L	1.0	1	07/26/12 09:45	07/27/12 12:12	7440-48-4	
Copper, Dissolved	**1.3**	ug/L	1.0	1	07/26/12 09:45	07/30/12 12:09	7440-50-8	
Iron, Dissolved	**64.1**	ug/L	50.0	1	07/26/12 09:45	07/27/12 12:12	7439-89-6	
Lead, Dissolved	**2.2**	ug/L	1.0	1	07/26/12 09:45	07/27/12 12:12	7439-92-1	
Manganese, Dissolved	**45.1**	ug/L	5.0	5	07/26/12 09:45	07/26/12 17:57	7439-96-5	
Molybdenum, Dissolved	**1.1**	ug/L	1.0	1	07/26/12 09:45	07/27/12 12:12	7439-98-7	
Nickel, Dissolved	ND	ug/L	1.0	1	07/26/12 09:45	07/27/12 12:12	7440-02-0	
Selenium, Dissolved	ND	ug/L	1.0	1	07/26/12 09:45	07/27/12 12:12	7782-49-2	
Silver, Dissolved	ND	ug/L	0.50	1	07/26/12 09:45	07/27/12 12:12	7440-22-4	
Thallium, Dissolved	ND	ug/L	1.0	1	07/26/12 09:45	07/27/12 12:12	7440-28-0	
Vanadium, Dissolved	ND	ug/L	1.0	1	07/26/12 09:45	07/27/12 12:12	7440-62-2	
Zinc, Dissolved	**66.0**	ug/L	10.0	1	07/30/12 16:00	07/31/12 11:15	7440-66-6	
245.1 Mercury	Analytical Method: EPA 245.1							
Mercury	ND	ug/L	0.20	1	07/25/12 00:00	07/26/12 13:16	7439-97-6	
245.1 Mercury, Dissolved	Analytical Method: EPA 245.1							
Mercury, Dissolved	ND	ug/L	0.20	1	07/25/12 00:00	07/26/12 14:42	7439-97-6	
245.1 Potentially Diss Mercury	Analytical Method: EPA 245.1 Preparation Method: EPA 245.1							
Mercury, Dissolved	ND	ug/L	0.20	1	07/24/12 16:30	07/26/12 12:27	7439-97-6	
2510B Specific Conductance	Analytical Method: SM 2510B							
Specific Conductance	**325**	umhos/cm	10.0	1		07/27/12 11:46		
Salinity	Analytical Method: Calculated							
Salinity (as dissolved solids)	**208**	mg/L	6.0	1		07/30/12 11:08		

This report shall not be reproduced, except in full,
without the written consent of Pace Analytical Services, Inc..

Pace Analytical Services, Inc.
9608 Loiret Blvd.
Lenexa, KS 66219
(913)599-5665

ANALYTICAL RESULTS

Project: July 2012 Rico Water Sampling
Pace Project No.: 60125518

Sample: DR-G **Lab ID: 60125518010** Collected: 07/17/12 11:20 Received: 07/19/12 10:20 Matrix: Water

Parameters	Results	Units	Report Limit	DF	Prepared	Analyzed	CAS No.	Qual
Salinity	Analytical Method: Calculated							
Salinity (as seawater)	**0.16**	PSU	0.010	1		07/30/12 11:08		
2320B Alkalinity	Analytical Method: SM 2320B							
Alkalinity,Bicarbonate (CaCO3)	**93.1**	mg/L	20.0	1		07/30/12 09:00		
Alkalinity, Carbonate (CaCO3)	ND	mg/L	20.0	1		07/30/12 09:00		
Alkalinity, Total as CaCO3	**93.1**	mg/L	20.0	1		07/30/12 09:00		
2540C Total Dissolved Solids	Analytical Method: SM 2540C							
Total Dissolved Solids	**198**	mg/L	5.0	1		07/20/12 10:51		
2540D Total Suspended Solids	Analytical Method: SM 2540D							
Total Suspended Solids	ND	mg/L	5.0	1		07/20/12 08:46		
4500S2D Sulfide, Total	Analytical Method: SM 4500-S-2 D							
Sulfide, Total	ND	mg/L	0.050	1		07/24/12 11:45	18496-25-8	
Oxidation/Reduction Potential	Analytical Method: SM 2580B							
Oxidation/Reduction Potential	**111**	mV	1.0	1		07/24/12 11:30		
300.0 IC Anions 28 Days	Analytical Method: EPA 300.0							
Sulfate	**57.4**	mg/L	10.0	10		07/27/12 21:42	14808-79-8	
353.2 Nitrogen, NO2/NO3 pres.	Analytical Method: EPA 353.2							
Nitrogen, NO2 plus NO3	ND	mg/L	0.10	1		07/27/12 11:24		
4500CNE Cyanide, Total	Analytical Method: SM 4500-CN-E							
Cyanide	**0.0085**	mg/L	0.0050	1		07/24/12 11:02	57-12-5	
5310C TOC	Analytical Method: SM 5310C							
Total Organic Carbon	**1.5**	mg/L	0.50	1		07/30/12 19:11	7440-44-0	

This report shall not be reproduced, except in full,
without the written consent of Pace Analytical Services, Inc..

Pace Analytical Services, Inc.
9608 Loiret Blvd.
Lenexa, KS 66219
(913)599-5665

ANALYTICAL RESULTS

Project: July 2012 Rico Water Sampling
Pace Project No.: 60125518

Sample: FB **Lab ID: 60125518011** Collected: 07/17/12 14:10 Received: 07/19/12 10:20 Matrix: Water

Parameters	Results	Units	Report Limit	DF	Prepared	Analyzed	CAS No.	Qual
200.7 Potentially Diss. Metals	Analytical Method: EPA 200.7 Preparation Method: EPA 200.7							
Calcium, Dissolved	**14.0J**	ug/L	100	1	07/26/12 10:00	07/30/12 11:47	7440-70-2	
Magnesium, Dissolved	ND	ug/L	50.0	1	07/26/12 10:00	07/30/12 11:47	7439-95-4	
Potassium, Dissolved	ND	ug/L	500	1	07/26/12 10:00	07/30/12 11:47	7440-09-7	
Sodium, Dissolved	**279J**	ug/L	500	1	07/26/12 10:00	07/30/12 11:47	7440-23-5	
200.8 MET ICPMS	Analytical Method: EPA 200.8							
Aluminum	ND	ug/L	4.0	1	07/25/12 17:09	08/29/12 07:46	7429-90-5	
Antimony	ND	ug/L	0.50	1	07/25/12 17:09	08/29/12 07:46	7440-36-0	
Arsenic	ND	ug/L	0.50	1	07/25/12 17:09	08/29/12 07:46	7440-38-2	
Barium	ND	ug/L	0.30	1	07/25/12 17:09	08/29/12 07:46	7440-39-3	
Beryllium	ND	ug/L	0.20	1	07/25/12 17:09	08/29/12 07:46	7440-41-7	
Cadmium	ND	ug/L	0.080	1	07/25/12 17:09	08/29/12 07:46	7440-43-9	
Calcium	ND	ug/L	20.0	1	07/25/12 17:09	08/29/12 07:46	7440-70-2	
Chromium	ND	ug/L	0.50	1	07/25/12 17:09	08/29/12 07:46	7440-47-3	
Cobalt	ND	ug/L	0.50	1	07/25/12 17:09	08/29/12 07:46	7440-48-4	
Copper	ND	ug/L	0.50	1	07/25/12 17:09	08/29/12 07:46	7440-50-8	
Iron	ND	ug/L	50.0	1	07/25/12 17:09	08/29/12 07:46	7439-89-6	
Lead	ND	ug/L	0.10	1	07/25/12 17:09	08/29/12 07:46	7439-92-1	
Magnesium	ND	ug/L	5.0	1	07/25/12 17:09	08/29/12 07:46	7439-95-4	
Manganese	ND	ug/L	0.50	1	07/25/12 17:09	08/29/12 07:46	7439-96-5	
Molybdenum	ND	ug/L	0.50	1	07/25/12 17:09	08/29/12 07:46	7439-98-7	
Nickel	ND	ug/L	0.50	1	07/25/12 17:09	08/29/12 07:46	7440-02-0	
Potassium	ND	ug/L	20.0	1	07/25/12 17:09	08/29/12 07:46	7440-09-7	
Selenium	ND	ug/L	0.50	1	07/25/12 17:09	08/29/12 07:46	7782-49-2	
Silica	ND	ug/L	53.5	1	07/25/12 17:09	08/30/12 23:23	7631-86-9	
Silver	ND	ug/L	0.50	1	07/25/12 17:09	08/29/12 07:46	7440-22-4	
Sodium	**408**	ug/L	50.0	1	07/25/12 17:09	08/29/12 07:46	7440-23-5	
Thallium	ND	ug/L	0.10	1	07/25/12 17:09	08/29/12 07:46	7440-28-0	
Total Hardness by 2340B	ND	ug/L	71.0	1	07/25/12 17:09	08/29/12 07:46		
Vanadium	ND	ug/L	0.10	1	07/25/12 17:09	08/29/12 07:46	7440-62-2	
Zinc	ND	ug/L	5.0	1	07/25/12 17:09	08/29/12 07:46	7440-66-6	
200.8 MET ICPMS, Dissolved	Analytical Method: EPA 200.8							
Aluminum, Dissolved	ND	ug/L	4.0	1	07/26/12 10:58	08/28/12 04:32	7429-90-5	
Antimony, Dissolved	ND	ug/L	0.50	1	07/26/12 10:58	08/28/12 04:32	7440-36-0	
Arsenic, Dissolved	ND	ug/L	0.50	1	07/26/12 10:58	08/28/12 04:32	7440-38-2	
Barium, Dissolved	ND	ug/L	0.30	1	07/26/12 10:58	08/28/12 04:32	7440-39-3	
Beryllium, Dissolved	ND	ug/L	0.20	1	07/26/12 10:58	08/28/12 04:32	7440-41-7	
Cadmium, Dissolved	ND	ug/L	0.080	1	07/26/12 10:58	08/28/12 04:32	7440-43-9	
Calcium, Dissolved	**20.6**	ug/L	20.0	1	07/26/12 10:58	08/28/12 04:32	7440-70-2	
Chromium, Dissolved	ND	ug/L	0.50	1	07/26/12 10:58	08/28/12 04:32	7440-47-3	
Cobalt, Dissolved	ND	ug/L	0.50	1	07/26/12 10:58	08/28/12 04:32	7440-48-4	
Copper, Dissolved	ND	ug/L	0.50	1	07/26/12 10:58	08/28/12 04:32	7440-50-8	
Iron, Dissolved	ND	ug/L	50.0	1	07/26/12 10:58	08/28/12 04:32	7439-89-6	
Lead, Dissolved	ND	ug/L	0.10	1	07/26/12 10:58	08/28/12 04:32	7439-92-1	
Magnesium, Dissolved	**6.0**	ug/L	5.0	1	07/26/12 10:58	08/28/12 04:32	7439-95-4	

This report shall not be reproduced, except in full,
without the written consent of Pace Analytical Services, Inc..

Pace Analytical Services, Inc.
9608 Loiret Blvd.
Lenexa, KS 66219
(913)599-5665

ANALYTICAL RESULTS

Project: July 2012 Rico Water Sampling
Pace Project No.: 60125518

Sample: FB **Lab ID: 60125518011** Collected: 07/17/12 14:10 Received: 07/19/12 10:20 Matrix: Water

Parameters	Results	Units	Report Limit	DF	Prepared	Analyzed	CAS No.	Qual
200.8 MET ICPMS, Dissolved	Analytical Method: EPA 200.8							
Manganese, Dissolved	ND	ug/L	0.50	1	07/26/12 10:58	08/28/12 04:32	7439-96-5	
Molybdenum, Dissolved	ND	ug/L	0.50	1	07/26/12 10:58	08/28/12 04:32	7439-98-7	
Nickel, Dissolved	ND	ug/L	0.50	1	07/26/12 10:58	08/28/12 04:32	7440-02-0	
Potassium, Dissolved	ND	ug/L	20.0	1	07/26/12 10:58	08/28/12 04:32	7440-09-7	
Selenium, Dissolved	ND	ug/L	0.50	1	07/26/12 10:58	08/28/12 04:32	7782-49-2	
Silver, Dissolved	ND	ug/L	0.50	1	07/26/12 10:58	08/28/12 04:32	7440-22-4	
Sodium, Dissolved	**404**	ug/L	50.0	1	07/26/12 10:58	08/28/12 04:32	7440-23-5	
Thallium, Dissolved	ND	ug/L	0.10	1	07/26/12 10:58	08/28/12 04:32	7440-28-0	CH
Vanadium, Dissolved	ND	ug/L	0.10	1	07/26/12 10:58	08/28/12 04:32	7440-62-2	
Zinc, Dissolved	ND	ug/L	5.0	1	07/26/12 10:58	08/28/12 04:32	7440-66-6	
200.8 Potentially Diss. Metals	Analytical Method: EPA 200.8 Preparation Method: EPA 200.8							
Aluminum, Dissolved	ND	ug/L	50.0	1	07/26/12 09:45	07/26/12 17:32	7429-90-5	
Antimony, Dissolved	ND	ug/L	1.0	1	07/26/12 09:45	07/26/12 17:32	7440-36-0	
Arsenic, Dissolved	ND	ug/L	1.0	1	07/26/12 09:45	07/26/12 17:32	7440-38-2	
Barium, Dissolved	**0.26J**	ug/L	1.0	1	07/26/12 09:45	07/26/12 17:32	7440-39-3	
Beryllium, Dissolved	ND	ug/L	0.50	1	07/26/12 09:45	07/26/12 17:32	7440-41-7	
Cadmium, Dissolved	ND	ug/L	0.50	1	07/26/12 09:45	07/26/12 17:32	7440-43-9	
Chromium, Dissolved	**0.54J**	ug/L	1.0	1	07/26/12 09:45	07/26/12 17:32	7440-47-3	
Cobalt, Dissolved	ND	ug/L	1.0	1	07/26/12 09:45	07/26/12 17:32	7440-48-4	
Copper, Dissolved	**1.3**	ug/L	1.0	1	07/26/12 09:45	07/26/12 17:32	7440-50-8	
Iron, Dissolved	ND	ug/L	50.0	1	07/26/12 09:45	07/26/12 17:32	7439-89-6	
Lead, Dissolved	**0.14J**	ug/L	1.0	1	07/26/12 09:45	07/26/12 17:32	7439-92-1	
Manganese, Dissolved	ND	ug/L	1.0	1	07/26/12 09:45	07/26/12 17:32	7439-96-5	
Molybdenum, Dissolved	ND	ug/L	1.0	1	07/26/12 09:45	07/26/12 17:32	7439-98-7	
Nickel, Dissolved	ND	ug/L	1.0	1	07/26/12 09:45	07/27/12 11:47	7440-02-0	
Selenium, Dissolved	ND	ug/L	1.0	1	07/26/12 09:45	07/26/12 17:32	7782-49-2	
Silver, Dissolved	ND	ug/L	0.50	1	07/26/12 09:45	07/26/12 17:32	7440-22-4	
Thallium, Dissolved	ND	ug/L	1.0	1	07/26/12 09:45	07/26/12 17:32	7440-28-0	
Vanadium, Dissolved	ND	ug/L	1.0	1	07/26/12 09:45	07/26/12 17:32	7440-62-2	
Zinc, Dissolved	**3.5J**	ug/L	10.0	1	07/30/12 16:00	07/31/12 10:35	7440-66-6	
245.1 Mercury	Analytical Method: EPA 245.1							
Mercury	ND	ug/L	0.20	1	07/25/12 00:00	07/26/12 13:19	7439-97-6	
245.1 Mercury, Dissolved	Analytical Method: EPA 245.1							
Mercury, Dissolved	ND	ug/L	0.20	1	07/25/12 00:00	07/26/12 14:45	7439-97-6	
245.1 Potentially Diss Mercury	Analytical Method: EPA 245.1 Preparation Method: EPA 245.1							
Mercury, Dissolved	ND	ug/L	0.20	1	07/24/12 16:30	07/26/12 12:29	7439-97-6	
2510B Specific Conductance	Analytical Method: SM 2510B							
Specific Conductance	ND	umhos/cm	10.0	1		07/27/12 11:49		
Salinity	Analytical Method: Calculated							
Salinity (as dissolved solids)	ND	mg/L	6.0	1		07/30/12 11:08		

This report shall not be reproduced, except in full,
without the written consent of Pace Analytical Services, Inc..

Pace Analytical Services, Inc.
9608 Loiret Blvd.
Lenexa, KS 66219
(913)599-5665

ANALYTICAL RESULTS

Project: July 2012 Rico Water Sampling
Pace Project No.: 60125518

Sample: FB **Lab ID: 60125518011** Collected: 07/17/12 14:10 Received: 07/19/12 10:20 Matrix: Water

Parameters	Results	Units	Report Limit	DF	Prepared	Analyzed	CAS No.	Qual
Salinity	Analytical Method: Calculated							
Salinity (as seawater)	**0.012**	PSU	0.010	1		07/30/12 11:08		
2320B Alkalinity	Analytical Method: SM 2320B							
Alkalinity,Bicarbonate (CaCO3)	ND	mg/L	20.0	1		07/30/12 09:00		
Alkalinity, Carbonate (CaCO3)	ND	mg/L	20.0	1		07/30/12 09:00		
Alkalinity, Total as CaCO3	ND	mg/L	20.0	1		07/30/12 09:00		
2540C Total Dissolved Solids	Analytical Method: SM 2540C							
Total Dissolved Solids	ND	mg/L	5.0	1		07/20/12 10:51		
2540D Total Suspended Solids	Analytical Method: SM 2540D							
Total Suspended Solids	ND	mg/L	5.0	1		07/20/12 08:46		
4500H+ pH, Electrometric	Analytical Method: SM 4500-H+B							
pH at 25 Degrees C	**6.4**	Std. Units	0.10	1		07/20/12 13:29		H6
4500S2D Sulfide, Total	Analytical Method: SM 4500-S-2 D							
Sulfide, Total	ND	mg/L	0.050	1		07/24/12 11:45	18496-25-8	
Oxidation/Reduction Potential	Analytical Method: SM 2580B							
Oxidation/Reduction Potential	**63.9**	mV	1.0	1		07/24/12 11:30		
300.0 IC Anions 28 Days	Analytical Method: EPA 300.0							
Sulfate	ND	mg/L	1.0	1		07/27/12 22:17	14808-79-8	
353.2 Nitrogen, NO2/NO3 pres.	Analytical Method: EPA 353.2							
Nitrogen, NO2 plus NO3	ND	mg/L	0.10	1		07/27/12 11:25		
4500CNE Cyanide, Total	Analytical Method: SM 4500-CN-E							
Cyanide	ND	mg/L	0.0050	1		07/24/12 11:03	57-12-5	
5310C TOC	Analytical Method: SM 5310C							
Total Organic Carbon	ND	mg/L	0.50	1		07/30/12 19:47	7440-44-0	

This report shall not be reproduced, except in full,
without the written consent of Pace Analytical Services, Inc..

Pace Analytical Services, Inc.
9608 Loiret Blvd.
Lenexa, KS 66219
(913)599-5665

ANALYTICAL RESULTS

Project: July 2012 Rico Water Sampling
Pace Project No.: 60125518

Sample: GW-1 **Lab ID: 60125518012** Collected: 07/17/12 14:55 Received: 07/19/12 10:20 Matrix: Water

Parameters	Results	Units	Report Limit	DF	Prepared	Analyzed	CAS No.	Qual
200.7 Potentially Diss. Metals	Analytical Method: EPA 200.7 Preparation Method: EPA 200.7							
Calcium, Dissolved	**46300**	ug/L	500	5	07/26/12 10:00	07/27/12 14:10	7440-70-2	
Magnesium, Dissolved	**5340**	ug/L	250	5	07/26/12 10:00	07/27/12 14:10	7439-95-4	
Potassium, Dissolved	**696**	ug/L	500	1	07/26/12 10:00	07/30/12 12:15	7440-09-7	
Sodium, Dissolved	**2020**	ug/L	500	1	07/26/12 10:00	07/30/12 12:15	7440-23-5	
200.8 MET ICPMS	Analytical Method: EPA 200.8							
Aluminum	**1530**	ug/L	4.0	1	07/25/12 17:09	08/29/12 08:20	7429-90-5	M6
Antimony	ND	ug/L	0.50	1	07/25/12 17:09	08/29/12 08:20	7440-36-0	
Arsenic	**2.3**	ug/L	0.50	1	07/25/12 17:09	08/29/12 08:20	7440-38-2	
Barium	**81.8**	ug/L	0.30	1	07/25/12 17:09	08/29/12 08:20	7440-39-3	
Beryllium	ND	ug/L	0.20	1	07/25/12 17:09	08/29/12 08:20	7440-41-7	
Cadmium	**0.17**	ug/L	0.080	1	07/25/12 17:09	08/29/12 08:20	7440-43-9	
Calcium	**46300**	ug/L	200	10	07/25/12 17:09	08/29/12 08:26	7440-70-2	
Chromium	**1.6**	ug/L	0.50	1	07/25/12 17:09	08/29/12 08:20	7440-47-3	
Cobalt	**1.4**	ug/L	0.50	1	07/25/12 17:09	08/29/12 08:20	7440-48-4	
Copper	**8.8**	ug/L	0.50	1	07/25/12 17:09	08/29/12 08:20	7440-50-8	
Iron	**2330**	ug/L	50.0	1	07/25/12 17:09	08/29/12 08:20	7439-89-6	M6
Lead	**9.0**	ug/L	0.10	1	07/25/12 17:09	08/29/12 08:20	7439-92-1	
Magnesium	**5850**	ug/L	5.0	1	07/25/12 17:09	08/29/12 08:20	7439-95-4	
Manganese	**254**	ug/L	0.50	1	07/25/12 17:09	08/29/12 08:20	7439-96-5	M6
Molybdenum	**1.4**	ug/L	0.50	1	07/25/12 17:09	08/29/12 08:20	7439-98-7	
Nickel	**2.2**	ug/L	0.50	1	07/25/12 17:09	08/29/12 08:20	7440-02-0	
Potassium	**1200**	ug/L	20.0	1	07/25/12 17:09	08/29/12 08:20	7440-09-7	M6
Selenium	ND	ug/L	0.50	1	07/25/12 17:09	08/29/12 08:20	7782-49-2	
Silica	**12700**	ug/L	535	10	07/25/12 17:09	08/30/12 23:41	7631-86-9	
Silver	ND	ug/L	0.50	1	07/25/12 17:09	08/29/12 08:20	7440-22-4	
Sodium	**2210**	ug/L	50.0	1	07/25/12 17:09	08/29/12 08:20	7440-23-5	
Thallium	ND	ug/L	0.10	1	07/25/12 17:09	08/29/12 08:20	7440-28-0	
Total Hardness by 2340B	**140000**	ug/L	710	10	07/25/12 17:09	08/29/12 08:26		
Vanadium	**2.9**	ug/L	0.10	1	07/25/12 17:09	08/29/12 08:20	7440-62-2	
Zinc	**25.8**	ug/L	5.0	1	07/25/12 17:09	08/29/12 08:20	7440-66-6	
200.8 MET ICPMS, Dissolved	Analytical Method: EPA 200.8							
Aluminum, Dissolved	**6.2**	ug/L	4.0	1	07/26/12 10:58	08/28/12 03:00	7429-90-5	
Antimony, Dissolved	ND	ug/L	0.50	1	07/26/12 10:58	08/28/12 03:00	7440-36-0	
Arsenic, Dissolved	ND	ug/L	0.50	1	07/26/12 10:58	08/28/12 03:00	7440-38-2	
Barium, Dissolved	**58.2**	ug/L	0.30	1	07/26/12 10:58	08/28/12 03:00	7440-39-3	
Beryllium, Dissolved	ND	ug/L	0.20	1	07/26/12 10:58	08/28/12 03:00	7440-41-7	
Cadmium, Dissolved	ND	ug/L	0.080	1	07/26/12 10:58	08/28/12 03:00	7440-43-9	
Calcium, Dissolved	**51100**	ug/L	400	20	07/26/12 10:58	08/28/12 03:04	7440-70-2	
Chromium, Dissolved	ND	ug/L	0.50	1	07/26/12 10:58	08/28/12 03:00	7440-47-3	
Cobalt, Dissolved	ND	ug/L	0.50	1	07/26/12 10:58	08/28/12 03:00	7440-48-4	
Copper, Dissolved	**0.72**	ug/L	0.50	1	07/26/12 10:58	08/28/12 03:00	7440-50-8	
Iron, Dissolved	ND	ug/L	50.0	1	07/26/12 10:58	08/28/12 03:00	7439-89-6	
Lead, Dissolved	ND	ug/L	0.10	1	07/26/12 10:58	08/28/12 03:00	7439-92-1	
Magnesium, Dissolved	**5350**	ug/L	5.0	1	07/26/12 10:58	08/28/12 03:00	7439-95-4	

This report shall not be reproduced, except in full,
without the written consent of Pace Analytical Services, Inc..

Pace Analytical Services, Inc.
9608 Loiret Blvd.
Lenexa, KS 66219
(913)599-5665

ANALYTICAL RESULTS

Project: July 2012 Rico Water Sampling
Pace Project No.: 60125518

Sample: GW-1 **Lab ID: 60125518012** Collected: 07/17/12 14:55 Received: 07/19/12 10:20 Matrix: Water

Parameters	Results	Units	Report Limit	DF	Prepared	Analyzed	CAS No.	Qual
200.8 MET ICPMS, Dissolved	Analytical Method: EPA 200.8							
Manganese, Dissolved	**0.79**	ug/L	0.50	1	07/26/12 10:58	08/28/12 03:00	7439-96-5	
Molybdenum, Dissolved	**1.3**	ug/L	0.50	1	07/26/12 10:58	08/28/12 03:00	7439-98-7	
Nickel, Dissolved	ND	ug/L	0.50	1	07/26/12 10:58	08/28/12 03:00	7440-02-0	
Potassium, Dissolved	**689**	ug/L	20.0	1	07/26/12 10:58	08/28/12 03:00	7440-09-7	
Selenium, Dissolved	ND	ug/L	0.50	1	07/26/12 10:58	08/28/12 03:00	7782-49-2	
Silver, Dissolved	ND	ug/L	0.50	1	07/26/12 10:58	08/28/12 03:00	7440-22-4	
Sodium, Dissolved	**2040**	ug/L	50.0	1	07/26/12 10:58	08/28/12 03:00	7440-23-5	
Thallium, Dissolved	ND	ug/L	0.10	1	07/26/12 10:58	08/28/12 03:00	7440-28-0	
Vanadium, Dissolved	ND	ug/L	0.10	1	07/26/12 10:58	08/28/12 03:00	7440-62-2	
Zinc, Dissolved	ND	ug/L	5.0	1	07/26/12 10:58	08/28/12 03:00	7440-66-6	
200.8 Potentially Diss. Metals	Analytical Method: EPA 200.8 Preparation Method: EPA 200.8							
Aluminum, Dissolved	**569**	ug/L	50.0	1	07/26/12 09:45	07/27/12 12:16	7429-90-5	
Antimony, Dissolved	**0.13J**	ug/L	1.0	1	07/26/12 09:45	07/27/12 12:16	7440-36-0	
Arsenic, Dissolved	**1.2**	ug/L	1.0	1	07/26/12 09:45	07/27/12 12:16	7440-38-2	
Barium, Dissolved	**93.8**	ug/L	5.0	5	07/26/12 09:45	07/26/12 18:01	7440-39-3	
Beryllium, Dissolved	**0.13J**	ug/L	0.50	1	07/26/12 09:45	07/27/12 12:16	7440-41-7	
Cadmium, Dissolved	**0.39J**	ug/L	0.50	1	07/26/12 09:45	07/27/12 12:16	7440-43-9	
Chromium, Dissolved	**1.8**	ug/L	1.0	1	07/26/12 09:45	07/27/12 12:16	7440-47-3	
Cobalt, Dissolved	**1.6**	ug/L	1.0	1	07/26/12 09:45	07/27/12 12:16	7440-48-4	
Copper, Dissolved	**12.9**	ug/L	5.0	5	07/26/12 09:45	07/26/12 18:01	7440-50-8	
Iron, Dissolved	**1240**	ug/L	250	5	07/26/12 09:45	07/26/12 18:01	7439-89-6	
Lead, Dissolved	**12.9**	ug/L	1.0	1	07/26/12 09:45	07/27/12 12:16	7439-92-1	
Manganese, Dissolved	**315**	ug/L	5.0	5	07/26/12 09:45	07/26/12 18:01	7439-96-5	
Molybdenum, Dissolved	**0.45J**	ug/L	1.0	1	07/26/12 09:45	07/27/12 12:16	7439-98-7	
Nickel, Dissolved	**4.0**	ug/L	1.0	1	07/26/12 09:45	07/27/12 12:16	7440-02-0	
Selenium, Dissolved	**0.42J**	ug/L	1.0	1	07/26/12 09:45	07/27/12 12:16	7782-49-2	
Silver, Dissolved	**0.22J**	ug/L	0.50	1	07/26/12 09:45	07/27/12 12:16	7440-22-4	
Thallium, Dissolved	ND	ug/L	1.0	1	07/26/12 09:45	07/27/12 12:16	7440-28-0	
Vanadium, Dissolved	**1.5**	ug/L	1.0	1	07/26/12 09:45	07/27/12 12:16	7440-62-2	
Zinc, Dissolved	**26.5**	ug/L	10.0	1	07/30/12 16:00	07/31/12 11:17	7440-66-6	
245.1 Mercury	Analytical Method: EPA 245.1							
Mercury	ND	ug/L	0.20	1	07/25/12 00:00	07/26/12 13:21	7439-97-6	
245.1 Mercury, Dissolved	Analytical Method: EPA 245.1							
Mercury, Dissolved	ND	ug/L	0.20	1	07/25/12 00:00	07/26/12 14:47	7439-97-6	
245.1 Potentially Diss Mercury	Analytical Method: EPA 245.1 Preparation Method: EPA 245.1							
Mercury, Dissolved	ND	ug/L	0.20	1	07/24/12 16:30	07/26/12 12:32	7439-97-6	
2510B Specific Conductance	Analytical Method: SM 2510B							
Specific Conductance	**283**	umhos/cm	10.0	1		07/27/12 11:51		
Salinity	Analytical Method: Calculated							
Salinity (as dissolved solids)	**181**	mg/L	6.0	1		07/30/12 11:08		

This report shall not be reproduced, except in full,
without the written consent of Pace Analytical Services, Inc..

Pace Analytical Services, Inc.
9608 Loiret Blvd.
Lenexa, KS 66219
(913)599-5665

ANALYTICAL RESULTS

Project: July 2012 Rico Water Sampling
Pace Project No.: 60125518

Sample: GW-1 **Lab ID: 60125518012** Collected: 07/17/12 14:55 Received: 07/19/12 10:20 Matrix: Water

Parameters	Results	Units	Report Limit	DF	Prepared	Analyzed	CAS No.	Qual
Salinity	Analytical Method: Calculated							
Salinity (as seawater)	**0.14**	PSU	0.010	1		07/30/12 11:08		
2320B Alkalinity	Analytical Method: SM 2320B							
Alkalinity,Bicarbonate (CaCO3)	**98.8**	mg/L	20.0	1		07/30/12 09:00		
Alkalinity, Carbonate (CaCO3)	ND	mg/L	20.0	1		07/30/12 09:00		
Alkalinity, Total as CaCO3	**98.8**	mg/L	20.0	1		07/30/12 09:00		
2540C Total Dissolved Solids	Analytical Method: SM 2540C							
Total Dissolved Solids	**166**	mg/L	5.0	1		07/20/12 10:51		
2540D Total Suspended Solids	Analytical Method: SM 2540D							
Total Suspended Solids	**153**	mg/L	5.0	1		07/20/12 08:46		
4500H+ pH, Electrometric	Analytical Method: SM 4500-H+B							
pH at 25 Degrees C	**7.9**	Std. Units	0.10	1		07/20/12 13:29		H6
4500S2D Sulfide, Total	Analytical Method: SM 4500-S-2 D							
Sulfide, Total	**0.070**	mg/L	0.050	1		07/24/12 11:45	18496-25-8	
Oxidation/Reduction Potential	Analytical Method: SM 2580B							
Oxidation/Reduction Potential	**112**	mV	1.0	1		07/24/12 11:30		
300.0 IC Anions 28 Days	Analytical Method: EPA 300.0							
Sulfate	**41.6**	mg/L	5.0	5		07/27/12 22:35	14808-79-8	
353.2 Nitrogen, NO2/NO3 pres.	Analytical Method: EPA 353.2							
Nitrogen, NO2 plus NO3	ND	mg/L	0.10	1		07/27/12 11:26		
4500CNE Cyanide, Total	Analytical Method: SM 4500-CN-E							
Cyanide	**0.0061**	mg/L	0.0050	1		07/24/12 11:06	57-12-5	
5310C TOC	Analytical Method: SM 5310C							
Total Organic Carbon	**0.84**	mg/L	0.50	1		07/30/12 20:05	7440-44-0	

This report shall not be reproduced, except in full,
without the written consent of Pace Analytical Services, Inc..

Pace Analytical Services, Inc.
9608 Loiret Blvd.
Lenexa, KS 66219
(913)599-5665

ANALYTICAL RESULTS

Project: July 2012 Rico Water Sampling
Pace Project No.: 60125518

Sample: GW-3 **Lab ID: 60125518013** Collected: 07/17/12 15:40 Received: 07/19/12 10:20 Matrix: Water

Parameters	Results	Units	Report Limit	DF	Prepared	Analyzed	CAS No.	Qual
200.7 Potentially Diss. Metals	Analytical Method: EPA 200.7 Preparation Method: EPA 200.7							
Calcium, Dissolved	**146000**	ug/L	500	5	07/26/12 10:00	07/27/12 14:13	7440-70-2	
Magnesium, Dissolved	**19400**	ug/L	250	5	07/26/12 10:00	07/27/12 14:13	7439-95-4	
Potassium, Dissolved	**3090**	ug/L	2500	5	07/26/12 10:00	07/27/12 14:13	7440-09-7	
Sodium, Dissolved	**2870**	ug/L	2500	5	07/26/12 10:00	07/27/12 14:13	7440-23-5	
200.8 MET ICPMS	Analytical Method: EPA 200.8							
Aluminum	**4760**	ug/L	4.0	1	07/25/12 17:09	08/29/12 08:49	7429-90-5	
Antimony	ND	ug/L	0.50	1	07/25/12 17:09	08/29/12 08:49	7440-36-0	
Arsenic	**7.3**	ug/L	0.50	1	07/25/12 17:09	08/29/12 08:49	7440-38-2	
Barium	**86.3**	ug/L	0.30	1	07/25/12 17:09	08/29/12 08:49	7440-39-3	
Beryllium	**0.24**	ug/L	0.20	1	07/25/12 17:09	08/29/12 08:49	7440-41-7	
Cadmium	**1.9**	ug/L	0.080	1	07/25/12 17:09	08/29/12 08:49	7440-43-9	
Calcium	**151000**	ug/L	200	10	07/25/12 17:09	08/29/12 08:55	7440-70-2	
Chromium	**6.1**	ug/L	0.50	1	07/25/12 17:09	08/29/12 08:49	7440-47-3	
Cobalt	**3.5**	ug/L	0.50	1	07/25/12 17:09	08/29/12 08:49	7440-48-4	
Copper	**32.0**	ug/L	0.50	1	07/25/12 17:09	08/29/12 08:49	7440-50-8	
Iron	**7990**	ug/L	50.0	1	07/25/12 17:09	08/29/12 08:49	7439-89-6	
Lead	**68.2**	ug/L	0.10	1	07/25/12 17:09	08/29/12 08:49	7439-92-1	
Magnesium	**21200**	ug/L	5.0	1	07/25/12 17:09	08/29/12 08:49	7439-95-4	
Manganese	**1410**	ug/L	5.0	10	07/25/12 17:09	08/29/12 08:55	7439-96-5	
Molybdenum	**1.6**	ug/L	0.50	1	07/25/12 17:09	08/29/12 08:49	7439-98-7	
Nickel	**5.7**	ug/L	0.50	1	07/25/12 17:09	08/29/12 08:49	7440-02-0	
Potassium	**3860**	ug/L	20.0	1	07/25/12 17:09	08/29/12 08:49	7440-09-7	
Selenium	**3.6**	ug/L	0.50	1	07/25/12 17:09	08/29/12 08:49	7782-49-2	
Silica	**30100**	ug/L	1070	20	07/25/12 17:09	08/30/12 23:53	7631-86-9	
Silver	**0.68**	ug/L	0.50	1	07/25/12 17:09	08/29/12 08:49	7440-22-4	
Sodium	**3430**	ug/L	50.0	1	07/25/12 17:09	08/29/12 08:49	7440-23-5	
Thallium	**0.15**	ug/L	0.10	1	07/25/12 17:09	08/29/12 08:49	7440-28-0	
Total Hardness by 2340B	**464000**	ug/L	710	10	07/25/12 17:09	08/29/12 08:55		
Vanadium	**8.8**	ug/L	0.10	1	07/25/12 17:09	08/29/12 08:49	7440-62-2	
Zinc	**268**	ug/L	5.0	1	07/25/12 17:09	08/29/12 08:49	7440-66-6	
200.8 MET ICPMS, Dissolved	Analytical Method: EPA 200.8							
Aluminum, Dissolved	**9.0**	ug/L	4.0	1	07/26/12 10:58	08/28/12 03:08	7429-90-5	
Antimony, Dissolved	ND	ug/L	0.50	1	07/26/12 10:58	08/28/12 03:08	7440-36-0	
Arsenic, Dissolved	ND	ug/L	0.50	1	07/26/12 10:58	08/28/12 03:08	7440-38-2	
Barium, Dissolved	**17.2**	ug/L	0.30	1	07/26/12 10:58	08/28/12 03:08	7440-39-3	
Beryllium, Dissolved	ND	ug/L	0.20	1	07/26/12 10:58	08/28/12 03:08	7440-41-7	
Cadmium, Dissolved	**0.29**	ug/L	0.080	1	07/26/12 10:58	08/28/12 03:08	7440-43-9	
Calcium, Dissolved	**172000**	ug/L	400	20	07/26/12 10:58	08/28/12 03:12	7440-70-2	
Chromium, Dissolved	**1.2**	ug/L	0.50	1	07/26/12 10:58	08/28/12 03:08	7440-47-3	
Cobalt, Dissolved	ND	ug/L	0.50	1	07/26/12 10:58	08/28/12 03:08	7440-48-4	
Copper, Dissolved	**0.86**	ug/L	0.50	1	07/26/12 10:58	08/28/12 03:08	7440-50-8	
Iron, Dissolved	ND	ug/L	50.0	1	07/26/12 10:58	08/28/12 03:08	7439-89-6	
Lead, Dissolved	ND	ug/L	0.10	1	07/26/12 10:58	08/28/12 03:08	7439-92-1	
Magnesium, Dissolved	**19400**	ug/L	5.0	1	07/26/12 10:58	08/28/12 03:08	7439-95-4	

This report shall not be reproduced, except in full,
without the written consent of Pace Analytical Services, Inc..

Pace Analytical Services, Inc.
9608 Loiret Blvd.
Lenexa, KS 66219
(913)599-5665

ANALYTICAL RESULTS

Project: July 2012 Rico Water Sampling
Pace Project No.: 60125518

Sample: GW-3 **Lab ID: 60125518013** Collected: 07/17/12 15:40 Received: 07/19/12 10:20 Matrix: Water

Parameters	Results	Units	Report Limit	DF	Prepared	Analyzed	CAS No.	Qual
200.8 MET ICPMS, Dissolved	Analytical Method: EPA 200.8							
Manganese, Dissolved	**95.5**	ug/L	0.50	1	07/26/12 10:58	08/28/12 03:08	7439-96-5	
Molybdenum, Dissolved	ND	ug/L	0.50	1	07/26/12 10:58	08/28/12 03:08	7439-98-7	
Nickel, Dissolved	**0.78**	ug/L	0.50	1	07/26/12 10:58	08/28/12 03:08	7440-02-0	
Potassium, Dissolved	**2820**	ug/L	20.0	1	07/26/12 10:58	08/28/12 03:08	7440-09-7	
Selenium, Dissolved	**2.3**	ug/L	0.50	1	07/26/12 10:58	08/28/12 03:08	7782-49-2	
Silver, Dissolved	ND	ug/L	0.50	1	07/26/12 10:58	08/28/12 03:08	7440-22-4	
Sodium, Dissolved	**3120**	ug/L	50.0	1	07/26/12 10:58	08/28/12 03:08	7440-23-5	
Thallium, Dissolved	ND	ug/L	0.10	1	07/26/12 10:58	08/28/12 03:08	7440-28-0	
Vanadium, Dissolved	ND	ug/L	0.10	1	07/26/12 10:58	08/28/12 03:08	7440-62-2	
Zinc, Dissolved	**43.1**	ug/L	5.0	1	07/26/12 10:58	08/28/12 03:08	7440-66-6	
200.8 Potentially Diss. Metals	Analytical Method: EPA 200.8 Preparation Method: EPA 200.8							
Aluminum, Dissolved	**5200**	ug/L	250	5	07/26/12 09:45	07/26/12 18:05	7429-90-5	
Antimony, Dissolved	**0.38J**	ug/L	1.0	1	07/26/12 09:45	07/27/12 12:20	7440-36-0	
Arsenic, Dissolved	**9.1**	ug/L	5.0	5	07/26/12 09:45	07/26/12 18:05	7440-38-2	
Barium, Dissolved	**105**	ug/L	5.0	5	07/26/12 09:45	07/26/12 18:05	7440-39-3	
Beryllium, Dissolved	**0.58**	ug/L	0.50	1	07/26/12 09:45	07/27/12 12:20	7440-41-7	
Cadmium, Dissolved	**3.8**	ug/L	0.50	1	07/26/12 09:45	07/27/12 12:20	7440-43-9	
Chromium, Dissolved	**8.7**	ug/L	5.0	5	07/26/12 09:45	07/26/12 18:05	7440-47-3	
Cobalt, Dissolved	**7.5**	ug/L	5.0	5	07/26/12 09:45	07/26/12 18:05	7440-48-4	
Copper, Dissolved	**94.6**	ug/L	1.0	1	07/26/12 09:45	07/30/12 12:18	7440-50-8	
Iron, Dissolved	**11700**	ug/L	250	5	07/26/12 09:45	07/26/12 18:05	7439-89-6	
Lead, Dissolved	**147**	ug/L	5.0	5	07/26/12 09:45	07/26/12 18:05	7439-92-1	
Manganese, Dissolved	**2020**	ug/L	5.0	5	07/26/12 09:45	07/26/12 18:05	7439-96-5	
Molybdenum, Dissolved	**0.28J**	ug/L	1.0	1	07/26/12 09:45	07/27/12 12:20	7439-98-7	
Nickel, Dissolved	**7.9**	ug/L	1.0	1	07/26/12 09:45	07/27/12 12:20	7440-02-0	
Selenium, Dissolved	**3.7**	ug/L	1.0	1	07/26/12 09:45	07/27/12 12:20	7782-49-2	
Silver, Dissolved	**1.6**	ug/L	0.50	1	07/26/12 09:45	07/27/12 12:20	7440-22-4	
Thallium, Dissolved	**0.047J**	ug/L	1.0	1	07/26/12 09:45	07/27/12 12:20	7440-28-0	
Vanadium, Dissolved	**7.7**	ug/L	5.0	5	07/26/12 09:45	07/26/12 18:05	7440-62-2	
Zinc, Dissolved	**666**	ug/L	100	10	07/30/12 16:00	07/31/12 11:20	7440-66-6	
245.1 Mercury	Analytical Method: EPA 245.1							
Mercury	ND	ug/L	0.20	1	07/25/12 00:00	07/26/12 13:24	7439-97-6	
245.1 Mercury, Dissolved	Analytical Method: EPA 245.1							
Mercury, Dissolved	ND	ug/L	0.20	1	07/25/12 00:00	07/26/12 14:50	7439-97-6	
245.1 Potentially Diss Mercury	Analytical Method: EPA 245.1 Preparation Method: EPA 245.1							
Mercury, Dissolved	ND	ug/L	0.20	1	07/24/12 16:30	07/26/12 12:34	7439-97-6	
2510B Specific Conductance	Analytical Method: SM 2510B							
Specific Conductance	**876**	umhos/cm	10.0	1		07/27/12 11:54		
Salinity	Analytical Method: Calculated							
Salinity (as dissolved solids)	**560**	mg/L	6.0	1		07/30/12 11:08		

This report shall not be reproduced, except in full,
without the written consent of Pace Analytical Services, Inc..

Pace Analytical Services, Inc.
9608 Loiret Blvd.
Lenexa, KS 66219
(913)599-5665

ANALYTICAL RESULTS

Project: July 2012 Rico Water Sampling
Pace Project No.: 60125518

Sample: GW-3 **Lab ID: 60125518013** Collected: 07/17/12 15:40 Received: 07/19/12 10:20 Matrix: Water

Parameters	Results	Units	Report Limit	DF	Prepared	Analyzed	CAS No.	Qual
Salinity	Analytical Method: Calculated							
Salinity (as seawater)	**0.43**	PSU	0.010	1		07/30/12 11:08		
2320B Alkalinity	Analytical Method: SM 2320B							
Alkalinity,Bicarbonate (CaCO3)	**196**	mg/L	20.0	1		07/30/12 09:00		
Alkalinity, Carbonate (CaCO3)	ND	mg/L	20.0	1		07/30/12 09:00		
Alkalinity, Total as CaCO3	**196**	mg/L	20.0	1		07/30/12 09:00		
2540C Total Dissolved Solids	Analytical Method: SM 2540C							
Total Dissolved Solids	**587**	mg/L	5.0	1		07/20/12 10:52		
2540D Total Suspended Solids	Analytical Method: SM 2540D							
Total Suspended Solids	**332**	mg/L	5.0	1		07/20/12 08:47		
4500H+ pH, Electrometric	Analytical Method: SM 4500-H+B							
pH at 25 Degrees C	**7.6**	Std. Units	0.10	1		07/20/12 13:29		H6
4500S2D Sulfide, Total	Analytical Method: SM 4500-S-2 D							
Sulfide, Total	**0.47**	mg/L	0.050	1		07/24/12 11:53	18496-25-8	
Oxidation/Reduction Potential	Analytical Method: SM 2580B							
Oxidation/Reduction Potential	**133**	mV	1.0	1		07/24/12 11:30		
300.0 IC Anions 28 Days	Analytical Method: EPA 300.0							
Sulfate	**278**	mg/L	50.0	50		07/27/12 23:27	14808-79-8	
4500CNE Cyanide, Total	Analytical Method: SM 4500-CN-E							
Cyanide	ND	mg/L	0.0050	1		07/24/12 11:07	57-12-5	
5310C TOC	Analytical Method: SM 5310C							
Total Organic Carbon	**1.2**	mg/L	0.50	1		07/30/12 20:22	7440-44-0	

This report shall not be reproduced, except in full,
without the written consent of Pace Analytical Services, Inc..

Pace Analytical Services, Inc.
9608 Loiret Blvd.
Lenexa, KS 66219
(913)599-5665

ANALYTICAL RESULTS

Project: July 2012 Rico Water Sampling
Pace Project No.: 60125518

Sample: GW-4 **Lab ID: 60125518014** Collected: 07/17/12 15:20 Received: 07/19/12 10:20 Matrix: Water

Parameters	Results	Units	Report Limit	DF	Prepared	Analyzed	CAS No.	Qual
200.7 Potentially Diss. Metals	Analytical Method: EPA 200.7 Preparation Method: EPA 200.7							
Calcium, Dissolved	**164000**	ug/L	500	5	07/26/12 10:00	07/27/12 14:15	7440-70-2	
Magnesium, Dissolved	**20700**	ug/L	250	5	07/26/12 10:00	07/27/12 14:15	7439-95-4	
Potassium, Dissolved	**2150**	ug/L	1000	2	07/26/12 10:00	07/30/12 12:17	7440-09-7	
Sodium, Dissolved	**4480**	ug/L	2500	5	07/26/12 10:00	07/27/12 14:15	7440-23-5	
200.8 MET ICPMS	Analytical Method: EPA 200.8							
Aluminum	**10300**	ug/L	4.0	1	07/25/12 17:09	08/29/12 09:23	7429-90-5	
Antimony	ND	ug/L	0.50	1	07/25/12 17:09	08/29/12 09:23	7440-36-0	
Arsenic	**6.9**	ug/L	0.50	1	07/25/12 17:09	08/29/12 09:23	7440-38-2	
Barium	**146**	ug/L	0.30	1	07/25/12 17:09	08/29/12 09:23	7440-39-3	
Beryllium	**1.1**	ug/L	0.20	1	07/25/12 17:09	08/29/12 09:23	7440-41-7	
Cadmium	**13.1**	ug/L	0.080	1	07/25/12 17:09	08/29/12 09:23	7440-43-9	
Calcium	**177000**	ug/L	200	10	07/25/12 17:09	08/29/12 09:29	7440-70-2	
Chromium	**14.8**	ug/L	0.50	1	07/25/12 17:09	08/29/12 09:23	7440-47-3	
Cobalt	**7.9**	ug/L	0.50	1	07/25/12 17:09	08/29/12 09:23	7440-48-4	
Copper	**77.4**	ug/L	0.50	1	07/25/12 17:09	08/29/12 09:23	7440-50-8	
Iron	**18500**	ug/L	50.0	1	07/25/12 17:09	08/29/12 09:23	7439-89-6	
Lead	**85.7**	ug/L	0.10	1	07/25/12 17:09	08/29/12 09:23	7439-92-1	
Magnesium	**24400**	ug/L	50.0	10	07/25/12 17:09	08/29/12 09:29	7439-95-4	
Manganese	**959**	ug/L	5.0	10	07/25/12 17:09	08/29/12 09:29	7439-96-5	
Molybdenum	**7.9**	ug/L	0.50	1	07/25/12 17:09	08/29/12 09:23	7439-98-7	
Nickel	**14.4**	ug/L	0.50	1	07/25/12 17:09	08/29/12 09:23	7440-02-0	
Potassium	**3660**	ug/L	20.0	1	07/25/12 17:09	08/29/12 09:23	7440-09-7	
Selenium	**1.1**	ug/L	0.50	1	07/25/12 17:09	08/29/12 09:23	7782-49-2	
Silica	**41400**	ug/L	1070	20	07/25/12 17:09	08/30/12 23:59	7631-86-9	
Silver	ND	ug/L	0.50	1	07/25/12 17:09	08/29/12 09:23	7440-22-4	
Sodium	**5340**	ug/L	50.0	1	07/25/12 17:09	08/29/12 09:23	7440-23-5	
Thallium	**0.32**	ug/L	0.10	1	07/25/12 17:09	08/29/12 09:23	7440-28-0	
Total Hardness by 2340B	**543000**	ug/L	710	10	07/25/12 17:09	08/29/12 09:29		
Vanadium	**21.6**	ug/L	0.10	1	07/25/12 17:09	08/29/12 09:23	7440-62-2	
Zinc	**826**	ug/L	50.0	10	07/25/12 17:09	08/29/12 09:29	7440-66-6	
200.8 MET ICPMS, Dissolved	Analytical Method: EPA 200.8							
Aluminum, Dissolved	**6.1**	ug/L	4.0	1	07/26/12 10:58	08/28/12 03:16	7429-90-5	
Antimony, Dissolved	ND	ug/L	0.50	1	07/26/12 10:58	08/28/12 03:16	7440-36-0	
Arsenic, Dissolved	**0.75**	ug/L	0.50	1	07/26/12 10:58	08/28/12 03:16	7440-38-2	
Barium, Dissolved	**33.7**	ug/L	0.30	1	07/26/12 10:58	08/28/12 03:16	7440-39-3	
Beryllium, Dissolved	ND	ug/L	0.20	1	07/26/12 10:58	08/28/12 03:16	7440-41-7	
Cadmium, Dissolved	**0.13**	ug/L	0.080	1	07/26/12 10:58	08/28/12 03:16	7440-43-9	
Calcium, Dissolved	**178000**	ug/L	400	20	07/26/12 10:58	08/28/12 03:20	7440-70-2	
Chromium, Dissolved	ND	ug/L	0.50	1	07/26/12 10:58	08/28/12 03:16	7440-47-3	
Cobalt, Dissolved	**0.76**	ug/L	0.50	1	07/26/12 10:58	08/28/12 03:16	7440-48-4	
Copper, Dissolved	**0.57**	ug/L	0.50	1	07/26/12 10:58	08/28/12 03:16	7440-50-8	
Iron, Dissolved	**1240**	ug/L	50.0	1	07/26/12 10:58	08/28/12 03:16	7439-89-6	
Lead, Dissolved	ND	ug/L	0.10	1	07/26/12 10:58	08/28/12 03:16	7439-92-1	
Magnesium, Dissolved	**19300**	ug/L	5.0	1	07/26/12 10:58	08/28/12 03:16	7439-95-4	

This report shall not be reproduced, except in full,
without the written consent of Pace Analytical Services, Inc..

Pace Analytical Services, Inc.
9608 Loiret Blvd.
Lenexa, KS 66219
(913)599-5665

ANALYTICAL RESULTS

Project: July 2012 Rico Water Sampling
Pace Project No.: 60125518

Sample: GW-4 **Lab ID: 60125518014** Collected: 07/17/12 15:20 Received: 07/19/12 10:20 Matrix: Water

Parameters	Results	Units	Report Limit	DF	Prepared	Analyzed	CAS No.	Qual
200.8 MET ICPMS, Dissolved	Analytical Method: EPA 200.8							
Manganese, Dissolved	**551**	ug/L	10.0	20	07/26/12 10:58	08/28/12 03:20	7439-96-5	
Molybdenum, Dissolved	**11.3**	ug/L	0.50	1	07/26/12 10:58	08/28/12 03:16	7439-98-7	
Nickel, Dissolved	**2.8**	ug/L	0.50	1	07/26/12 10:58	08/28/12 03:16	7440-02-0	
Potassium, Dissolved	**1740**	ug/L	20.0	1	07/26/12 10:58	08/28/12 03:16	7440-09-7	
Selenium, Dissolved	ND	ug/L	0.50	1	07/26/12 10:58	08/28/12 03:16	7782-49-2	
Silver, Dissolved	ND	ug/L	0.50	1	07/26/12 10:58	08/28/12 03:16	7440-22-4	
Sodium, Dissolved	**4790**	ug/L	50.0	1	07/26/12 10:58	08/28/12 03:16	7440-23-5	
Thallium, Dissolved	ND	ug/L	0.10	1	07/26/12 10:58	08/28/12 03:16	7440-28-0	
Vanadium, Dissolved	**0.20**	ug/L	0.10	1	07/26/12 10:58	08/28/12 03:16	7440-62-2	
Zinc, Dissolved	**24.6**	ug/L	5.0	1	07/26/12 10:58	08/28/12 03:16	7440-66-6	
200.8 Potentially Diss. Metals	Analytical Method: EPA 200.8 Preparation Method: EPA 200.8							
Aluminum, Dissolved	**5820**	ug/L	250	5	07/26/12 09:45	07/26/12 18:09	7429-90-5	
Antimony, Dissolved	**0.095J**	ug/L	1.0	1	07/26/12 09:45	07/27/12 12:25	7440-36-0	
Arsenic, Dissolved	**4.6**	ug/L	1.0	1	07/26/12 09:45	07/27/12 12:25	7440-38-2	
Barium, Dissolved	**92.0**	ug/L	5.0	5	07/26/12 09:45	07/26/12 18:09	7440-39-3	
Beryllium, Dissolved	**0.95**	ug/L	0.50	1	07/26/12 09:45	07/27/12 12:25	7440-41-7	
Cadmium, Dissolved	**14.0**	ug/L	2.5	5	07/26/12 09:45	07/26/12 18:09	7440-43-9	
Chromium, Dissolved	**13.6**	ug/L	5.0	5	07/26/12 09:45	07/26/12 18:09	7440-47-3	
Cobalt, Dissolved	**7.4**	ug/L	5.0	5	07/26/12 09:45	07/26/12 18:09	7440-48-4	
Copper, Dissolved	**83.2**	ug/L	5.0	5	07/26/12 09:45	07/26/12 18:09	7440-50-8	
Iron, Dissolved	**13700**	ug/L	250	5	07/26/12 09:45	07/26/12 18:09	7439-89-6	
Lead, Dissolved	**85.6**	ug/L	5.0	5	07/26/12 09:45	07/26/12 18:09	7439-92-1	
Manganese, Dissolved	**912**	ug/L	5.0	5	07/26/12 09:45	07/26/12 18:09	7439-96-5	
Molybdenum, Dissolved	**5.6**	ug/L	1.0	1	07/26/12 09:45	07/27/12 12:25	7439-98-7	
Nickel, Dissolved	**10.7**	ug/L	1.0	1	07/26/12 09:45	07/27/12 12:25	7440-02-0	
Selenium, Dissolved	**1.1**	ug/L	1.0	1	07/26/12 09:45	07/27/12 12:25	7782-49-2	
Silver, Dissolved	ND	ug/L	0.50	1	07/26/12 09:45	07/27/12 12:25	7440-22-4	
Thallium, Dissolved	**0.25J**	ug/L	1.0	1	07/26/12 09:45	07/27/12 12:25	7440-28-0	
Vanadium, Dissolved	**14.2**	ug/L	5.0	5	07/26/12 09:45	07/26/12 18:09	7440-62-2	
Zinc, Dissolved	**754**	ug/L	100	10	07/30/12 16:00	07/31/12 11:23	7440-66-6	
245.1 Mercury	Analytical Method: EPA 245.1							
Mercury	ND	ug/L	0.20	1	07/25/12 00:00	07/26/12 13:31	7439-97-6	
245.1 Mercury, Dissolved	Analytical Method: EPA 245.1							
Mercury, Dissolved	ND	ug/L	0.20	1	07/25/12 00:00	07/26/12 14:57	7439-97-6	
245.1 Potentially Diss Mercury	Analytical Method: EPA 245.1 Preparation Method: EPA 245.1							
Mercury, Dissolved	ND	ug/L	0.20	1	07/24/12 16:30	07/26/12 12:36	7439-97-6	
2510B Specific Conductance	Analytical Method: SM 2510B							
Specific Conductance	**912**	umhos/cm	10.0	1		07/27/12 12:01		
Salinity	Analytical Method: Calculated							
Salinity (as dissolved solids)	**584**	mg/L	6.0	1		07/30/12 11:08		

This report shall not be reproduced, except in full,
without the written consent of Pace Analytical Services, Inc..

Pace Analytical Services, Inc.
9608 Loiret Blvd.
Lenexa, KS 66219
(913)599-5665

ANALYTICAL RESULTS

Project: July 2012 Rico Water Sampling
Pace Project No.: 60125518

Sample: GW-4 **Lab ID: 60125518014** Collected: 07/17/12 15:20 Received: 07/19/12 10:20 Matrix: Water

Parameters	Results	Units	Report Limit	DF	Prepared	Analyzed	CAS No.	Qual
Salinity	Analytical Method: Calculated							
Salinity (as seawater)	**0.45**	PSU	0.010	1		07/30/12 11:08		
2320B Alkalinity	Analytical Method: SM 2320B							
Alkalinity,Bicarbonate (CaCO3)	**175**	mg/L	20.0	1		07/30/12 09:00		
Alkalinity, Carbonate (CaCO3)	ND	mg/L	20.0	1		07/30/12 09:00		
Alkalinity, Total as CaCO3	**175**	mg/L	20.0	1		07/30/12 09:00		
2540C Total Dissolved Solids	Analytical Method: SM 2540C							
Total Dissolved Solids	**663**	mg/L	5.0	1		07/20/12 10:52		
2540D Total Suspended Solids	Analytical Method: SM 2540D							
Total Suspended Solids	**1260**	mg/L	5.0	1		07/20/12 08:47		
4500H+ pH, Electrometric	Analytical Method: SM 4500-H+B							
pH at 25 Degrees C	**7.4**	Std. Units	0.10	1		07/20/12 13:29		H6
4500S2D Sulfide, Total	Analytical Method: SM 4500-S-2 D							
Sulfide, Total	**0.33**	mg/L	0.050	1		07/24/12 11:57	18496-25-8	
Oxidation/Reduction Potential	Analytical Method: SM 2580B							
Oxidation/Reduction Potential	**132**	mV	1.0	1		07/24/12 11:30		
300.0 IC Anions 28 Days	Analytical Method: EPA 300.0							
Sulfate	**334**	mg/L	50.0	50		07/27/12 23:44	14808-79-8	
353.2 Nitrogen, NO2/NO3 pres.	Analytical Method: EPA 353.2							
Nitrogen, NO2 plus NO3	ND	mg/L	0.10	1		07/27/12 11:29		
4500CNE Cyanide, Total	Analytical Method: SM 4500-CN-E							
Cyanide	ND	mg/L	0.0050	1		07/24/12 11:07	57-12-5	
5310C TOC	Analytical Method: SM 5310C							
Total Organic Carbon	**1.3**	mg/L	0.50	1		07/30/12 20:40	7440-44-0	

This report shall not be reproduced, except in full,
without the written consent of Pace Analytical Services, Inc..

Pace Analytical Services, Inc.
9608 Loiret Blvd.
Lenexa, KS 66219
(913)599-5665

ANALYTICAL RESULTS

Project: July 2012 Rico Water Sampling
Pace Project No.: 60125518

Sample: GW-5 **Lab ID: 60125518015** Collected: 07/17/12 15:50 Received: 07/19/12 10:20 Matrix: Water

Parameters	Results	Units	Report Limit	DF	Prepared	Analyzed	CAS No.	Qual
200.7 Potentially Diss. Metals	Analytical Method: EPA 200.7 Preparation Method: EPA 200.7							
Calcium, Dissolved	**413000**	ug/L	500	5	07/26/12 10:00	07/27/12 14:17	7440-70-2	
Magnesium, Dissolved	**47500**	ug/L	250	5	07/26/12 10:00	07/27/12 14:17	7439-95-4	
Potassium, Dissolved	**5660**	ug/L	2500	5	07/26/12 10:00	07/27/12 14:17	7440-09-7	
Sodium, Dissolved	**6040**	ug/L	2500	5	07/26/12 10:00	07/27/12 14:17	7440-23-5	
200.8 MET ICPMS	Analytical Method: EPA 200.8							
Aluminum	**5110**	ug/L	4.0	1	07/25/12 17:09	08/29/12 09:46	7429-90-5	
Antimony	**1.4**	ug/L	0.50	1	07/25/12 17:09	08/29/12 09:46	7440-36-0	
Arsenic	**320**	ug/L	0.50	1	07/25/12 17:09	08/29/12 09:46	7440-38-2	
Barium	**44.0**	ug/L	0.30	1	07/25/12 17:09	08/29/12 09:46	7440-39-3	
Beryllium	**0.64**	ug/L	0.20	1	07/25/12 17:09	08/29/12 09:46	7440-41-7	
Cadmium	**48.0**	ug/L	0.080	1	07/25/12 17:09	08/29/12 09:46	7440-43-9	
Calcium	**439000**	ug/L	2000	100	07/25/12 17:09	08/29/12 09:57	7440-70-2	
Chromium	**4.4**	ug/L	0.50	1	07/25/12 17:09	08/29/12 09:46	7440-47-3	
Cobalt	**25.2**	ug/L	0.50	1	07/25/12 17:09	08/29/12 09:46	7440-48-4	
Copper	**697**	ug/L	5.0	10	07/25/12 17:09	08/29/12 09:52	7440-50-8	
Iron	**53000**	ug/L	500	10	07/25/12 17:09	08/29/12 09:52	7439-89-6	
Lead	**9210**	ug/L	10.0	100	07/25/12 17:09	08/29/12 09:57	7439-92-1	
Magnesium	**50400**	ug/L	50.0	10	07/25/12 17:09	08/29/12 09:52	7439-95-4	
Manganese	**10600**	ug/L	50.0	100	07/25/12 17:09	08/29/12 09:57	7439-96-5	
Molybdenum	**15.8**	ug/L	0.50	1	07/25/12 17:09	08/29/12 09:46	7439-98-7	
Nickel	**30.5**	ug/L	0.50	1	07/25/12 17:09	08/29/12 09:46	7440-02-0	
Potassium	**6870**	ug/L	20.0	1	07/25/12 17:09	08/29/12 09:46	7440-09-7	
Selenium	**2.1**	ug/L	0.50	1	07/25/12 17:09	08/29/12 09:46	7782-49-2	
Silica	**57300**	ug/L	2680	50	07/25/12 17:09	08/31/12 00:05	7631-86-9	
Silver	**28.5**	ug/L	0.50	1	07/25/12 17:09	08/29/12 09:46	7440-22-4	
Sodium	**6460**	ug/L	50.0	1	07/25/12 17:09	08/29/12 09:46	7440-23-5	
Thallium	**1.0**	ug/L	0.10	1	07/25/12 17:09	08/29/12 09:46	7440-28-0	
Total Hardness by 2340B	**1300000**	ug/L	7100	100	07/25/12 17:09	08/29/12 09:57		
Vanadium	**7.3**	ug/L	0.10	1	07/25/12 17:09	08/29/12 09:46	7440-62-2	
Zinc	**20200**	ug/L	500	100	07/25/12 17:09	08/29/12 09:57	7440-66-6	
200.8 MET ICPMS, Dissolved	Analytical Method: EPA 200.8							
Aluminum, Dissolved	**7.9**	ug/L	4.0	1	07/26/12 10:58	08/28/12 03:24	7429-90-5	
Antimony, Dissolved	ND	ug/L	0.50	1	07/26/12 10:58	08/28/12 03:24	7440-36-0	
Arsenic, Dissolved	**45.9**	ug/L	0.50	1	07/26/12 10:58	08/28/12 03:24	7440-38-2	
Barium, Dissolved	**12.9**	ug/L	0.30	1	07/26/12 10:58	08/28/12 03:24	7440-39-3	
Beryllium, Dissolved	ND	ug/L	0.20	1	07/26/12 10:58	08/28/12 03:24	7440-41-7	
Cadmium, Dissolved	**0.54**	ug/L	0.080	1	07/26/12 10:58	08/28/12 03:24	7440-43-9	
Calcium, Dissolved	**491000**	ug/L	2000	100	07/26/12 10:58	08/29/12 12:23	7440-70-2	
Chromium, Dissolved	ND	ug/L	0.50	1	07/26/12 10:58	08/28/12 03:24	7440-47-3	
Cobalt, Dissolved	**16.0**	ug/L	0.50	1	07/26/12 10:58	08/28/12 03:24	7440-48-4	
Copper, Dissolved	**0.56**	ug/L	0.50	1	07/26/12 10:58	08/28/12 03:24	7440-50-8	
Iron, Dissolved	**9730**	ug/L	50.0	1	07/26/12 10:58	08/28/12 03:24	7439-89-6	
Lead, Dissolved	**4.9**	ug/L	0.10	1	07/26/12 10:58	08/28/12 03:24	7439-92-1	
Magnesium, Dissolved	**47400**	ug/L	100	20	07/26/12 10:58	08/28/12 03:28	7439-95-4	

This report shall not be reproduced, except in full,
without the written consent of Pace Analytical Services, Inc..

Pace Analytical Services, Inc.
9608 Loiret Blvd.
Lenexa, KS 66219
(913)599-5665

ANALYTICAL RESULTS

Project: July 2012 Rico Water Sampling
Pace Project No.: 60125518

Sample: GW-5 **Lab ID: 60125518015** Collected: 07/17/12 15:50 Received: 07/19/12 10:20 Matrix: Water

Parameters	Results	Units	Report Limit	DF	Prepared	Analyzed	CAS No.	Qual
200.8 MET ICPMS, Dissolved	Analytical Method: EPA 200.8							
Manganese, Dissolved	**8920**	ug/L	10.0	20	07/26/12 10:58	08/28/12 03:28	7439-96-5	
Molybdenum, Dissolved	**6.5**	ug/L	0.50	1	07/26/12 10:58	08/28/12 03:24	7439-98-7	
Nickel, Dissolved	**20.5**	ug/L	0.50	1	07/26/12 10:58	08/28/12 03:24	7440-02-0	
Potassium, Dissolved	**5510**	ug/L	20.0	1	07/26/12 10:58	08/28/12 03:24	7440-09-7	
Selenium, Dissolved	ND	ug/L	0.50	1	07/26/12 10:58	08/28/12 03:24	7782-49-2	
Silver, Dissolved	ND	ug/L	0.50	1	07/26/12 10:58	08/28/12 03:24	7440-22-4	
Sodium, Dissolved	**6080**	ug/L	50.0	1	07/26/12 10:58	08/28/12 03:24	7440-23-5	
Thallium, Dissolved	ND	ug/L	0.10	1	07/26/12 10:58	08/28/12 03:24	7440-28-0	
Vanadium, Dissolved	ND	ug/L	0.10	1	07/26/12 10:58	08/28/12 03:24	7440-62-2	
Zinc, Dissolved	**11400**	ug/L	500	100	07/26/12 10:58	08/29/12 12:23	7440-66-6	
200.8 Potentially Diss. Metals	Analytical Method: EPA 200.8 Preparation Method: EPA 200.8							
Aluminum, Dissolved	**4420**	ug/L	250	5	07/26/12 09:45	07/26/12 18:22	7429-90-5	
Antimony, Dissolved	**0.81J**	ug/L	1.0	1	07/26/12 09:45	07/27/12 12:37	7440-36-0	
Arsenic, Dissolved	**326**	ug/L	5.0	5	07/26/12 09:45	07/26/12 18:22	7440-38-2	
Barium, Dissolved	**7.9**	ug/L	5.0	5	07/26/12 09:45	07/26/12 18:22	7440-39-3	
Beryllium, Dissolved	**0.66**	ug/L	0.50	1	07/26/12 09:45	07/27/12 12:37	7440-41-7	
Cadmium, Dissolved	**56.3**	ug/L	2.5	5	07/26/12 09:45	07/26/12 18:22	7440-43-9	
Chromium, Dissolved	**3.9**	ug/L	1.0	1	07/26/12 09:45	07/27/12 12:37	7440-47-3	
Cobalt, Dissolved	**22.1**	ug/L	5.0	5	07/26/12 09:45	07/26/12 18:22	7440-48-4	
Copper, Dissolved	**502**	ug/L	5.0	5	07/26/12 09:45	07/26/12 18:22	7440-50-8	
Iron, Dissolved	**43500**	ug/L	250	5	07/26/12 09:45	07/26/12 18:22	7439-89-6	
Lead, Dissolved	**6050**	ug/L	50.0	50	07/26/12 09:45	07/27/12 12:41	7439-92-1	
Manganese, Dissolved	**9700**	ug/L	5.0	5	07/26/12 09:45	07/26/12 18:22	7439-96-5	
Molybdenum, Dissolved	**9.0**	ug/L	1.0	1	07/26/12 09:45	07/27/12 12:37	7439-98-7	
Nickel, Dissolved	**23.0**	ug/L	1.0	1	07/26/12 09:45	07/27/12 12:37	7440-02-0	
Selenium, Dissolved	**1.0**	ug/L	1.0	1	07/26/12 09:45	07/27/12 12:37	7782-49-2	
Silver, Dissolved	**0.51**	ug/L	0.50	1	07/26/12 09:45	07/27/12 12:37	7440-22-4	
Thallium, Dissolved	**0.64J**	ug/L	1.0	1	07/26/12 09:45	07/27/12 12:37	7440-28-0	
Vanadium, Dissolved	**5.7**	ug/L	5.0	5	07/26/12 09:45	07/26/12 18:22	7440-62-2	
Zinc, Dissolved	**20300**	ug/L	2000	200	07/30/12 16:00	07/31/12 11:29	7440-66-6	
245.1 Mercury	Analytical Method: EPA 245.1							
Mercury	ND	ug/L	0.20	1	07/25/12 00:00	07/26/12 13:34	7439-97-6	
245.1 Mercury, Dissolved	Analytical Method: EPA 245.1							
Mercury, Dissolved	ND	ug/L	0.20	1	07/25/12 00:00	07/26/12 15:00	7439-97-6	
245.1 Potentially Diss Mercury	Analytical Method: EPA 245.1 Preparation Method: EPA 245.1							
Mercury, Dissolved	ND	ug/L	0.20	1	07/24/12 16:30	07/26/12 12:38	7439-97-6	
2510B Specific Conductance	Analytical Method: SM 2510B							
Specific Conductance	**2170**	umhos/cm	10.0	1		07/27/12 12:02		
Salinity	Analytical Method: Calculated							
Salinity (as dissolved solids)	**1390**	mg/L	6.0	1		07/30/12 11:08		

This report shall not be reproduced, except in full,
without the written consent of Pace Analytical Services, Inc..

Pace Analytical Services, Inc.
9608 Loiret Blvd.
Lenexa, KS 66219
(913)599-5665

ANALYTICAL RESULTS

Project: July 2012 Rico Water Sampling
Pace Project No.: 60125518

Sample: GW-5 **Lab ID: 60125518015** Collected: 07/17/12 15:50 Received: 07/19/12 10:20 Matrix: Water

Parameters	Results	Units	Report Limit	DF	Prepared	Analyzed	CAS No.	Qual
Salinity	Analytical Method: Calculated							
Salinity (as seawater)	**1.1**	PSU	0.010	1		07/30/12 11:08		
2320B Alkalinity	Analytical Method: SM 2320B							
Alkalinity,Bicarbonate (CaCO3)	**127**	mg/L	20.0	1		07/30/12 09:00		
Alkalinity, Carbonate (CaCO3)	ND	mg/L	20.0	1		07/30/12 09:00		
Alkalinity, Total as CaCO3	**127**	mg/L	20.0	1		07/30/12 09:00		
2540C Total Dissolved Solids	Analytical Method: SM 2540C							
Total Dissolved Solids	**1870**	mg/L	5.0	1		07/20/12 10:52		
2540D Total Suspended Solids	Analytical Method: SM 2540D							
Total Suspended Solids	**978**	mg/L	5.0	1		07/20/12 08:47		
4500H+ pH, Electrometric	Analytical Method: SM 4500-H+B							
pH at 25 Degrees C	**7.1**	Std. Units	0.10	1		07/20/12 13:29		H6
4500S2D Sulfide, Total	Analytical Method: SM 4500-S-2 D							
Sulfide, Total	ND	mg/L	0.050	1		07/24/12 11:58	18496-25-8	
Oxidation/Reduction Potential	Analytical Method: SM 2580B							
Oxidation/Reduction Potential	**152**	mV	1.0	1		07/24/12 11:30		
300.0 IC Anions 28 Days	Analytical Method: EPA 300.0							
Sulfate	**1190**	mg/L	100	100		07/28/12 00:02	14808-79-8	
353.2 Nitrogen, NO2/NO3 pres.	Analytical Method: EPA 353.2							
Nitrogen, NO2 plus NO3	ND	mg/L	0.10	1		07/27/12 11:30		
4500CNE Cyanide, Total	Analytical Method: SM 4500-CN-E							
Cyanide	ND	mg/L	0.0050	1		07/24/12 11:10	57-12-5	
5310C TOC	Analytical Method: SM 5310C							
Total Organic Carbon	ND	mg/L	0.50	1		07/30/12 20:58	7440-44-0	

This report shall not be reproduced, except in full,
without the written consent of Pace Analytical Services, Inc..

Pace Analytical Services, Inc.
9608 Loiret Blvd.
Lenexa, KS 66219
(913)599-5665

ANALYTICAL RESULTS

Project: July 2012 Rico Water Sampling
Pace Project No.: 60125518

Sample: GW-6 **Lab ID: 60125518016** Collected: 07/17/12 16:30 Received: 07/19/12 10:20 Matrix: Water

Parameters	Results	Units	Report Limit	DF	Prepared	Analyzed	CAS No.	Qual
200.7 Potentially Diss. Metals	Analytical Method: EPA 200.7 Preparation Method: EPA 200.7							
Calcium, Dissolved	**346000**	ug/L	500	5	07/26/12 10:00	07/27/12 14:23	7440-70-2	
Magnesium, Dissolved	**78000**	ug/L	250	5	07/26/12 10:00	07/27/12 14:23	7439-95-4	
Potassium, Dissolved	**23200**	ug/L	2500	5	07/26/12 10:00	07/27/12 14:23	7440-09-7	
Sodium, Dissolved	**2750**	ug/L	2500	5	07/26/12 10:00	07/27/12 14:23	7440-23-5	
200.8 MET ICPMS	Analytical Method: EPA 200.8							
Aluminum	**1140**	ug/L	4.0	1	07/25/12 17:09	08/29/12 10:21	7429-90-5	
Antimony	ND	ug/L	0.50	1	07/25/12 17:09	08/29/12 10:21	7440-36-0	
Arsenic	**146**	ug/L	0.50	1	07/25/12 17:09	08/29/12 10:21	7440-38-2	
Barium	**49.1**	ug/L	0.30	1	07/25/12 17:09	08/29/12 10:21	7440-39-3	
Beryllium	**0.80**	ug/L	0.20	1	07/25/12 17:09	08/29/12 10:21	7440-41-7	
Cadmium	**2.2**	ug/L	0.080	1	07/25/12 17:09	08/29/12 10:21	7440-43-9	
Calcium	**345000**	ug/L	2000	100	07/25/12 17:09	08/29/12 10:32	7440-70-2	
Chromium	ND	ug/L	5.0	10	07/25/12 17:09	08/29/12 10:26	7440-47-3	
Cobalt	**2.7**	ug/L	0.50	1	07/25/12 17:09	08/29/12 10:21	7440-48-4	
Copper	**19.8**	ug/L	0.50	1	07/25/12 17:09	08/29/12 10:21	7440-50-8	
Iron	**159000**	ug/L	500	10	07/25/12 17:09	08/29/12 10:26	7439-89-6	
Lead	**267**	ug/L	0.10	1	07/25/12 17:09	08/29/12 10:21	7439-92-1	
Magnesium	**78000**	ug/L	50.0	10	07/25/12 17:09	08/29/12 10:26	7439-95-4	
Manganese	**20400**	ug/L	50.0	100	07/25/12 17:09	08/29/12 10:32	7439-96-5	
Molybdenum	**11.4**	ug/L	0.50	1	07/25/12 17:09	08/29/12 10:21	7439-98-7	
Nickel	**2.6**	ug/L	0.50	1	07/25/12 17:09	08/29/12 10:21	7440-02-0	
Potassium	**24200**	ug/L	200	10	07/25/12 17:09	08/29/12 10:26	7440-09-7	
Selenium	**0.72**	ug/L	0.50	1	07/25/12 17:09	08/29/12 10:21	7782-49-2	
Silica	**32100**	ug/L	1070	20	07/25/12 17:09	08/31/12 00:11	7631-86-9	
Silver	**0.66**	ug/L	0.50	1	07/25/12 17:09	08/29/12 10:21	7440-22-4	
Sodium	**2820**	ug/L	50.0	1	07/25/12 17:09	08/29/12 10:21	7440-23-5	
Thallium	ND	ug/L	0.10	1	07/25/12 17:09	08/29/12 10:21	7440-28-0	
Total Hardness by 2340B	**1180000**	ug/L	7100	100	07/25/12 17:09	08/29/12 10:32		
Vanadium	**1.8**	ug/L	0.10	1	07/25/12 17:09	08/29/12 10:21	7440-62-2	
Zinc	**1350**	ug/L	50.0	10	07/25/12 17:09	08/29/12 10:26	7440-66-6	
200.8 MET ICPMS, Dissolved	Analytical Method: EPA 200.8							
Aluminum, Dissolved	**77.0**	ug/L	4.0	1	07/26/12 10:58	08/28/12 03:32	7429-90-5	
Antimony, Dissolved	ND	ug/L	0.50	1	07/26/12 10:58	08/28/12 03:32	7440-36-0	
Arsenic, Dissolved	**130**	ug/L	0.50	1	07/26/12 10:58	08/28/12 03:32	7440-38-2	
Barium, Dissolved	**45.8**	ug/L	0.30	1	07/26/12 10:58	08/28/12 03:32	7440-39-3	
Beryllium, Dissolved	**0.68**	ug/L	0.20	1	07/26/12 10:58	08/28/12 03:32	7440-41-7	
Cadmium, Dissolved	**0.74**	ug/L	0.080	1	07/26/12 10:58	08/28/12 03:32	7440-43-9	
Calcium, Dissolved	**421000**	ug/L	400	20	07/26/12 10:58	08/28/12 03:36	7440-70-2	
Chromium, Dissolved	ND	ug/L	0.50	1	07/26/12 10:58	08/28/12 03:32	7440-47-3	
Cobalt, Dissolved	**2.1**	ug/L	0.50	1	07/26/12 10:58	08/28/12 03:32	7440-48-4	
Copper, Dissolved	ND	ug/L	0.50	1	07/26/12 10:58	08/28/12 03:32	7440-50-8	
Iron, Dissolved	**155000**	ug/L	1000	20	07/26/12 10:58	08/28/12 03:36	7439-89-6	
Lead, Dissolved	**1.5**	ug/L	0.10	1	07/26/12 10:58	08/28/12 03:32	7439-92-1	
Magnesium, Dissolved	**83500**	ug/L	100	20	07/26/12 10:58	08/28/12 03:36	7439-95-4	

This report shall not be reproduced, except in full,
without the written consent of Pace Analytical Services, Inc..

Pace Analytical Services, Inc.
9608 Loiret Blvd.
Lenexa, KS 66219
(913)599-5665

ANALYTICAL RESULTS

Project: July 2012 Rico Water Sampling
Pace Project No.: 60125518

Sample: GW-6 **Lab ID: 60125518016** Collected: 07/17/12 16:30 Received: 07/19/12 10:20 Matrix: Water

Parameters	Results	Units	Report Limit	DF	Prepared	Analyzed	CAS No.	Qual
200.8 MET ICPMS, Dissolved	Analytical Method: EPA 200.8							
Manganese, Dissolved	**39800**	ug/L	100	200	07/26/12 10:58	08/28/12 16:55	7439-96-5	
Molybdenum, Dissolved	**11.2**	ug/L	0.50	1	07/26/12 10:58	08/28/12 03:32	7439-98-7	
Nickel, Dissolved	**1.8**	ug/L	0.50	1	07/26/12 10:58	08/28/12 03:32	7440-02-0	
Potassium, Dissolved	**22500**	ug/L	400	20	07/26/12 10:58	08/28/12 03:36	7440-09-7	
Selenium, Dissolved	ND	ug/L	0.50	1	07/26/12 10:58	08/28/12 03:32	7782-49-2	
Silver, Dissolved	ND	ug/L	0.50	1	07/26/12 10:58	08/28/12 03:32	7440-22-4	
Sodium, Dissolved	**2710**	ug/L	50.0	1	07/26/12 10:58	08/28/12 03:32	7440-23-5	
Thallium, Dissolved	ND	ug/L	0.10	1	07/26/12 10:58	08/28/12 03:32	7440-28-0	
Vanadium, Dissolved	ND	ug/L	0.10	1	07/26/12 10:58	08/28/12 03:32	7440-62-2	
Zinc, Dissolved	**1200**	ug/L	100	20	07/26/12 10:58	08/28/12 03:36	7440-66-6	
200.8 Potentially Diss. Metals	Analytical Method: EPA 200.8 Preparation Method: EPA 200.8							
Aluminum, Dissolved	**570**	ug/L	250	5	07/26/12 09:45	07/26/12 18:26	7429-90-5	
Antimony, Dissolved	**0.33J**	ug/L	1.0	1	07/26/12 09:45	07/27/12 12:46	7440-36-0	
Arsenic, Dissolved	**131**	ug/L	5.0	5	07/26/12 09:45	07/26/12 18:26	7440-38-2	
Barium, Dissolved	**43.0**	ug/L	5.0	5	07/26/12 09:45	07/26/12 18:26	7440-39-3	
Beryllium, Dissolved	**0.71**	ug/L	0.50	1	07/26/12 09:45	07/27/12 12:46	7440-41-7	
Cadmium, Dissolved	**2.1**	ug/L	0.50	1	07/26/12 09:45	07/27/12 12:46	7440-43-9	
Chromium, Dissolved	**2.0**	ug/L	1.0	1	07/26/12 09:45	07/27/12 12:46	7440-47-3	
Cobalt, Dissolved	**2.6**	ug/L	1.0	1	07/26/12 09:45	07/27/12 12:46	7440-48-4	
Copper, Dissolved	**21.5**	ug/L	5.0	5	07/26/12 09:45	07/26/12 18:26	7440-50-8	
Iron, Dissolved	**145000**	ug/L	250	5	07/26/12 09:45	07/26/12 18:26	7439-89-6	
Lead, Dissolved	**271**	ug/L	5.0	5	07/26/12 09:45	07/26/12 18:26	7439-92-1	
Manganese, Dissolved	**20200**	ug/L	5.0	5	07/26/12 09:45	07/26/12 18:26	7439-96-5	
Molybdenum, Dissolved	**10.2**	ug/L	1.0	1	07/26/12 09:45	07/27/12 12:46	7439-98-7	
Nickel, Dissolved	ND	ug/L	1.0	1	07/26/12 09:45	07/27/12 12:46	7440-02-0	
Selenium, Dissolved	**0.37J**	ug/L	1.0	1	07/26/12 09:45	07/27/12 12:46	7782-49-2	
Silver, Dissolved	**0.063J**	ug/L	0.50	1	07/26/12 09:45	07/27/12 12:46	7440-22-4	
Thallium, Dissolved	**0.031J**	ug/L	1.0	1	07/26/12 09:45	07/27/12 12:46	7440-28-0	
Vanadium, Dissolved	**0.75J**	ug/L	1.0	1	07/26/12 09:45	07/27/12 12:46	7440-62-2	
Zinc, Dissolved	**1330**	ug/L	100	10	07/30/12 16:00	07/31/12 11:40	7440-66-6	
245.1 Mercury	Analytical Method: EPA 245.1							
Mercury	ND	ug/L	0.20	1	07/25/12 00:00	07/26/12 13:36	7439-97-6	
245.1 Mercury, Dissolved	Analytical Method: EPA 245.1							
Mercury, Dissolved	ND	ug/L	0.20	1	07/25/12 00:00	07/26/12 15:02	7439-97-6	
245.1 Potentially Diss Mercury	Analytical Method: EPA 245.1 Preparation Method: EPA 245.1							
Mercury, Dissolved	ND	ug/L	0.20	1	07/24/12 16:30	07/26/12 12:45	7439-97-6	
2510B Specific Conductance	Analytical Method: SM 2510B							
Specific Conductance	**2310**	umhos/cm	10.0	1		07/27/12 12:05		
Salinity	Analytical Method: Calculated							
Salinity (as dissolved solids)	**1480**	mg/L	6.0	1		07/30/12 11:08		

This report shall not be reproduced, except in full,
without the written consent of Pace Analytical Services, Inc..

Pace Analytical Services, Inc.
9608 Loiret Blvd.
Lenexa, KS 66219
(913)599-5665

ANALYTICAL RESULTS

Project: July 2012 Rico Water Sampling
Pace Project No.: 60125518

Sample: GW-6 **Lab ID: 60125518016** Collected: 07/17/12 16:30 Received: 07/19/12 10:20 Matrix: Water

Parameters	Results	Units	Report Limit	DF	Prepared	Analyzed	CAS No.	Qual
Salinity	Analytical Method: Calculated							
Salinity (as seawater)	**1.2**	PSU	0.010	1		07/30/12 11:08		
2320B Alkalinity	Analytical Method: SM 2320B							
Alkalinity,Bicarbonate (CaCO3)	ND	mg/L	20.0	1		07/30/12 09:00		
Alkalinity, Carbonate (CaCO3)	ND	mg/L	20.0	1		07/30/12 09:00		
Alkalinity, Total as CaCO3	ND	mg/L	20.0	1		07/30/12 09:00		
2540C Total Dissolved Solids	Analytical Method: SM 2540C							
Total Dissolved Solids	**2240**	mg/L	5.0	1		07/20/12 10:52		
2540D Total Suspended Solids	Analytical Method: SM 2540D							
Total Suspended Solids	**101**	mg/L	5.0	1		07/20/12 08:47		
4500H+ pH, Electrometric	Analytical Method: SM 4500-H+B							
pH at 25 Degrees C	**5.8**	Std. Units	0.10	1		07/20/12 14:12		H6
4500S2D Sulfide, Total	Analytical Method: SM 4500-S-2 D							
Sulfide, Total	**0.10**	mg/L	0.050	1		07/24/12 11:59	18496-25-8	
Oxidation/Reduction Potential	Analytical Method: SM 2580B							
Oxidation/Reduction Potential	**110**	mV	1.0	1		07/24/12 11:30		
300.0 IC Anions 28 Days	Analytical Method: EPA 300.0							
Sulfate	**1430**	mg/L	100	100		07/28/12 00:19	14808-79-8	
353.2 Nitrogen, NO2/NO3 pres.	Analytical Method: EPA 353.2							
Nitrogen, NO2 plus NO3	ND	mg/L	0.10	1		07/27/12 11:31		
4500CNE Cyanide, Total	Analytical Method: SM 4500-CN-E							
Cyanide	ND	mg/L	0.0050	1		07/24/12 11:10	57-12-5	
5310C TOC	Analytical Method: SM 5310C							
Total Organic Carbon	ND	mg/L	0.50	1		07/30/12 21:16	7440-44-0	

This report shall not be reproduced, except in full,
without the written consent of Pace Analytical Services, Inc..

Pace Analytical Services, Inc.
9608 Loiret Blvd.
Lenexa, KS 66219
(913)599-5665

ANALYTICAL RESULTS

Project: July 2012 Rico Water Sampling
Pace Project No.: 60125518

Sample: GW-7 **Lab ID: 60125518017** Collected: 07/17/12 16:05 Received: 07/19/12 10:20 Matrix: Water

Parameters	Results	Units	Report Limit	DF	Prepared	Analyzed	CAS No.	Qual
200.7 Potentially Diss. Metals	Analytical Method: EPA 200.7 Preparation Method: EPA 200.7							
Calcium, Dissolved	**264000**	ug/L	500	5	07/26/12 10:00	07/27/12 14:25	7440-70-2	
Magnesium, Dissolved	**25700**	ug/L	250	5	07/26/12 10:00	07/27/12 14:25	7439-95-4	
Potassium, Dissolved	**2800**	ug/L	2500	5	07/26/12 10:00	07/27/12 14:25	7440-09-7	
Sodium, Dissolved	**7030**	ug/L	2500	5	07/26/12 10:00	07/27/12 14:25	7440-23-5	
200.8 MET ICPMS	Analytical Method: EPA 200.8							
Aluminum	**5800**	ug/L	4.0	1	07/25/12 17:09	08/29/12 10:43	7429-90-5	
Antimony	ND	ug/L	0.50	1	07/25/12 17:09	08/29/12 10:43	7440-36-0	
Arsenic	**6.8**	ug/L	0.50	1	07/25/12 17:09	08/29/12 10:43	7440-38-2	
Barium	**20.0**	ug/L	0.30	1	07/25/12 17:09	08/29/12 10:43	7440-39-3	
Beryllium	**0.89**	ug/L	0.20	1	07/25/12 17:09	08/29/12 10:43	7440-41-7	
Cadmium	**4.2**	ug/L	0.080	1	07/25/12 17:09	08/29/12 10:43	7440-43-9	
Calcium	**286000**	ug/L	2000	100	07/25/12 17:09	08/29/12 10:54	7440-70-2	
Chromium	**5.2**	ug/L	0.50	1	07/25/12 17:09	08/29/12 10:43	7440-47-3	
Cobalt	**2.2**	ug/L	0.50	1	07/25/12 17:09	08/29/12 10:43	7440-48-4	
Copper	**102**	ug/L	0.50	1	07/25/12 17:09	08/29/12 10:43	7440-50-8	
Iron	**15600**	ug/L	50.0	1	07/25/12 17:09	08/29/12 10:43	7439-89-6	
Lead	**497**	ug/L	1.0	10	07/25/12 17:09	08/29/12 10:48	7439-92-1	
Magnesium	**27400**	ug/L	50.0	10	07/25/12 17:09	08/29/12 10:48	7439-95-4	
Manganese	**98.5**	ug/L	0.50	1	07/25/12 17:09	08/29/12 10:43	7439-96-5	
Molybdenum	**1.9**	ug/L	0.50	1	07/25/12 17:09	08/29/12 10:43	7439-98-7	
Nickel	**6.2**	ug/L	0.50	1	07/25/12 17:09	08/29/12 10:43	7440-02-0	
Potassium	**3190**	ug/L	20.0	1	07/25/12 17:09	08/29/12 10:43	7440-09-7	
Selenium	**5.0**	ug/L	0.50	1	07/25/12 17:09	08/29/12 10:43	7782-49-2	
Silica	**20300**	ug/L	535	10	07/25/12 17:09	08/31/12 00:16	7631-86-9	
Silver	**0.72**	ug/L	0.50	1	07/25/12 17:09	08/29/12 10:43	7440-22-4	
Sodium	**7520**	ug/L	50.0	1	07/25/12 17:09	08/29/12 10:43	7440-23-5	
Thallium	**0.17**	ug/L	0.10	1	07/25/12 17:09	08/29/12 10:43	7440-28-0	
Total Hardness by 2340B	**827000**	ug/L	7100	100	07/25/12 17:09	08/29/12 10:54		
Vanadium	**3.6**	ug/L	0.10	1	07/25/12 17:09	08/29/12 10:43	7440-62-2	
Zinc	**584**	ug/L	50.0	10	07/25/12 17:09	08/29/12 10:48	7440-66-6	
200.8 MET ICPMS, Dissolved	Analytical Method: EPA 200.8							
Aluminum, Dissolved	**141**	ug/L	4.0	1	07/26/12 10:58	08/28/12 03:50	7429-90-5	
Antimony, Dissolved	ND	ug/L	0.50	1	07/26/12 10:58	08/28/12 03:50	7440-36-0	
Arsenic, Dissolved	ND	ug/L	0.50	1	07/26/12 10:58	08/28/12 03:50	7440-38-2	
Barium, Dissolved	**12.9**	ug/L	0.30	1	07/26/12 10:58	08/28/12 03:50	7440-39-3	
Beryllium, Dissolved	ND	ug/L	0.20	1	07/26/12 10:58	08/28/12 03:50	7440-41-7	
Cadmium, Dissolved	**3.5**	ug/L	0.080	1	07/26/12 10:58	08/28/12 03:50	7440-43-9	
Calcium, Dissolved	**297000**	ug/L	400	20	07/26/12 10:58	08/28/12 03:54	7440-70-2	
Chromium, Dissolved	**0.56**	ug/L	0.50	1	07/26/12 10:58	08/28/12 03:50	7440-47-3	
Cobalt, Dissolved	**0.84**	ug/L	0.50	1	07/26/12 10:58	08/28/12 03:50	7440-48-4	
Copper, Dissolved	**6.5**	ug/L	0.50	1	07/26/12 10:58	08/28/12 03:50	7440-50-8	
Iron, Dissolved	**198**	ug/L	50.0	1	07/26/12 10:58	08/28/12 03:50	7439-89-6	
Lead, Dissolved	**9.0**	ug/L	0.10	1	07/26/12 10:58	08/28/12 03:50	7439-92-1	
Magnesium, Dissolved	**25900**	ug/L	100	20	07/26/12 10:58	08/28/12 03:54	7439-95-4	

This report shall not be reproduced, except in full,
without the written consent of Pace Analytical Services, Inc..

Pace Analytical Services, Inc.
9608 Loiret Blvd.
Lenexa, KS 66219
(913)599-5665

ANALYTICAL RESULTS

Project: July 2012 Rico Water Sampling
Pace Project No.: 60125518

Sample: GW-7 **Lab ID: 60125518017** Collected: 07/17/12 16:05 Received: 07/19/12 10:20 Matrix: Water

Parameters	Results	Units	Report Limit	DF	Prepared	Analyzed	CAS No.	Qual
200.8 MET ICPMS, Dissolved	Analytical Method: EPA 200.8							
Manganese, Dissolved	**42.5**	ug/L	0.50	1	07/26/12 10:58	08/28/12 03:50	7439-96-5	
Molybdenum, Dissolved	**1.1**	ug/L	0.50	1	07/26/12 10:58	08/28/12 03:50	7439-98-7	
Nickel, Dissolved	**4.8**	ug/L	0.50	1	07/26/12 10:58	08/28/12 03:50	7440-02-0	
Potassium, Dissolved	**2530**	ug/L	20.0	1	07/26/12 10:58	08/28/12 03:50	7440-09-7	
Selenium, Dissolved	**1.7**	ug/L	0.50	1	07/26/12 10:58	08/28/12 03:50	7782-49-2	
Silver, Dissolved	ND	ug/L	0.50	1	07/26/12 10:58	08/28/12 03:50	7440-22-4	
Sodium, Dissolved	**7260**	ug/L	50.0	1	07/26/12 10:58	08/28/12 03:50	7440-23-5	
Thallium, Dissolved	ND	ug/L	0.10	1	07/26/12 10:58	08/28/12 03:50	7440-28-0	CH
Vanadium, Dissolved	ND	ug/L	0.10	1	07/26/12 10:58	08/28/12 03:50	7440-62-2	
Zinc, Dissolved	**242**	ug/L	5.0	1	07/26/12 10:58	08/28/12 03:50	7440-66-6	
200.8 Potentially Diss. Metals	Analytical Method: EPA 200.8 Preparation Method: EPA 200.8							
Aluminum, Dissolved	**7220**	ug/L	250	5	07/26/12 09:45	07/26/12 18:30	7429-90-5	
Antimony, Dissolved	**0.22J**	ug/L	1.0	1	07/26/12 09:45	07/27/12 12:50	7440-36-0	
Arsenic, Dissolved	**5.8**	ug/L	1.0	1	07/26/12 09:45	07/27/12 12:50	7440-38-2	
Barium, Dissolved	**18.0**	ug/L	5.0	5	07/26/12 09:45	07/26/12 18:30	7440-39-3	
Beryllium, Dissolved	**1.3**	ug/L	0.50	1	07/26/12 09:45	07/27/12 12:50	7440-41-7	
Cadmium, Dissolved	**4.9**	ug/L	0.50	1	07/26/12 09:45	07/27/12 12:50	7440-43-9	
Chromium, Dissolved	**6.6**	ug/L	5.0	5	07/26/12 09:45	07/26/12 18:30	7440-47-3	
Cobalt, Dissolved	**2.7**	ug/L	1.0	1	07/26/12 09:45	07/27/12 12:50	7440-48-4	
Copper, Dissolved	**164**	ug/L	5.0	5	07/26/12 09:45	07/26/12 18:30	7440-50-8	
Iron, Dissolved	**20700**	ug/L	250	5	07/26/12 09:45	07/26/12 18:30	7439-89-6	
Lead, Dissolved	**796**	ug/L	5.0	5	07/26/12 09:45	07/26/12 18:30	7439-92-1	
Manganese, Dissolved	**105**	ug/L	5.0	5	07/26/12 09:45	07/26/12 18:30	7439-96-5	
Molybdenum, Dissolved	**1.2**	ug/L	1.0	1	07/26/12 09:45	07/27/12 12:50	7439-98-7	
Nickel, Dissolved	**4.0**	ug/L	1.0	1	07/26/12 09:45	07/27/12 12:50	7440-02-0	
Selenium, Dissolved	**4.3**	ug/L	1.0	1	07/26/12 09:45	07/27/12 12:50	7782-49-2	
Silver, Dissolved	**0.67**	ug/L	0.50	1	07/26/12 09:45	07/27/12 12:50	7440-22-4	
Thallium, Dissolved	**0.19J**	ug/L	1.0	1	07/26/12 09:45	07/27/12 12:50	7440-28-0	
Vanadium, Dissolved	**1.1**	ug/L	1.0	1	07/26/12 09:45	07/27/12 12:50	7440-62-2	
Zinc, Dissolved	**715**	ug/L	100	10	07/30/12 16:00	07/31/12 11:43	7440-66-6	
245.1 Mercury	Analytical Method: EPA 245.1							
Mercury	ND	ug/L	0.20	1	07/25/12 00:00	07/26/12 13:43	7439-97-6	
245.1 Mercury, Dissolved	Analytical Method: EPA 245.1							
Mercury, Dissolved	ND	ug/L	0.20	1	07/25/12 00:00	07/26/12 15:05	7439-97-6	
245.1 Potentially Diss Mercury	Analytical Method: EPA 245.1 Preparation Method: EPA 245.1							
Mercury, Dissolved	ND	ug/L	0.20	1	07/24/12 16:30	07/26/12 12:47	7439-97-6	
2510B Specific Conductance	Analytical Method: SM 2510B							
Specific Conductance	**1390**	umhos/cm	10.0	1		07/27/12 12:07		
Salinity	Analytical Method: Calculated							
Salinity (as dissolved solids)	**891**	mg/L	6.0	1		07/30/12 11:08		

This report shall not be reproduced, except in full,
without the written consent of Pace Analytical Services, Inc..

Pace Analytical Services, Inc.
9608 Loiret Blvd.
Lenexa, KS 66219
(913)599-5665

ANALYTICAL RESULTS

Project: July 2012 Rico Water Sampling
Pace Project No.: 60125518

Sample: GW-7 **Lab ID: 60125518017** Collected: 07/17/12 16:05 Received: 07/19/12 10:20 Matrix: Water

Parameters	Results	Units	Report Limit	DF	Prepared	Analyzed	CAS No.	Qual
Salinity	Analytical Method: Calculated							
Salinity (as seawater)	**0.70**	PSU	0.010	1		07/30/12 11:08		
2320B Alkalinity	Analytical Method: SM 2320B							
Alkalinity,Bicarbonate (CaCO3)	**262**	mg/L	20.0	1		07/30/12 09:00		
Alkalinity, Carbonate (CaCO3)	ND	mg/L	20.0	1		07/30/12 09:00		
Alkalinity, Total as CaCO3	**262**	mg/L	20.0	1		07/30/12 09:00		
2540C Total Dissolved Solids	Analytical Method: SM 2540C							
Total Dissolved Solids	**1070**	mg/L	5.0	1		07/20/12 10:52		
2540D Total Suspended Solids	Analytical Method: SM 2540D							
Total Suspended Solids	**361**	mg/L	5.0	1		07/20/12 08:47		
4500H+ pH, Electrometric	Analytical Method: SM 4500-H+B							
pH at 25 Degrees C	**7.0**	Std. Units	0.10	1		07/20/12 14:12		H6
4500S2D Sulfide, Total	Analytical Method: SM 4500-S-2 D							
Sulfide, Total	ND	mg/L	0.050	1		07/24/12 12:02	18496-25-8	
Oxidation/Reduction Potential	Analytical Method: SM 2580B							
Oxidation/Reduction Potential	**71.7**	mV	1.0	1		07/24/12 11:30		
300.0 IC Anions 28 Days	Analytical Method: EPA 300.0							
Sulfate	**567**	mg/L	50.0	50		07/28/12 00:36	14808-79-8	
353.2 Nitrogen, NO2/NO3 pres.	Analytical Method: EPA 353.2							
Nitrogen, NO2 plus NO3	**0.50**	mg/L	0.10	1		07/27/12 11:32		
4500CNE Cyanide, Total	Analytical Method: SM 4500-CN-E							
Cyanide	ND	mg/L	0.0050	1		07/24/12 11:11	57-12-5	
5310C TOC	Analytical Method: SM 5310C							
Total Organic Carbon	**0.84**	mg/L	0.50	1		07/30/12 22:09	7440-44-0	

This report shall not be reproduced, except in full,
without the written consent of Pace Analytical Services, Inc..

Pace Analytical Services, Inc.
9608 Loiret Blvd.
Lenexa, KS 66219
(913)599-5665

ANALYTICAL RESULTS

Project: July 2012 Rico Water Sampling
Pace Project No.: 60125518

Sample: EB-1 **Lab ID: 60125518018** Collected: 07/17/12 15:55 Received: 07/19/12 10:20 Matrix: Water

Parameters	Results	Units	Report Limit	DF	Prepared	Analyzed	CAS No.	Qual
200.7 Potentially Diss. Metals	Analytical Method: EPA 200.7 Preparation Method: EPA 200.7							
Calcium, Dissolved	**522000**	ug/L	500	5	07/26/12 10:00	07/27/12 14:28	7440-70-2	
Magnesium, Dissolved	**33200**	ug/L	250	5	07/26/12 10:00	07/27/12 14:28	7439-95-4	
Potassium, Dissolved	**6320**	ug/L	2500	5	07/26/12 10:00	07/27/12 14:28	7440-09-7	
Sodium, Dissolved	**7730**	ug/L	2500	5	07/26/12 10:00	07/27/12 14:28	7440-23-5	
200.8 MET ICPMS	Analytical Method: EPA 200.8							
Aluminum	**520**	ug/L	4.0	1	07/25/12 17:09	08/29/12 11:17	7429-90-5	
Antimony	ND	ug/L	0.50	1	07/25/12 17:09	08/29/12 11:17	7440-36-0	
Arsenic	**9.5**	ug/L	0.50	1	07/25/12 17:09	08/29/12 11:17	7440-38-2	
Barium	**16.1**	ug/L	0.30	1	07/25/12 17:09	08/29/12 11:17	7440-39-3	
Beryllium	**0.30**	ug/L	0.20	1	07/25/12 17:09	08/29/12 11:17	7440-41-7	
Cadmium	**1.2**	ug/L	0.080	1	07/25/12 17:09	08/29/12 11:17	7440-43-9	
Calcium	**534000**	ug/L	2000	100	07/25/12 17:09	08/29/12 11:28	7440-70-2	
Chromium	ND	ug/L	0.50	1	07/25/12 17:09	08/29/12 11:17	7440-47-3	
Cobalt	**6.6**	ug/L	0.50	1	07/25/12 17:09	08/29/12 11:17	7440-48-4	
Copper	**19.4**	ug/L	0.50	1	07/25/12 17:09	08/29/12 11:17	7440-50-8	
Iron	**10600**	ug/L	50.0	1	07/25/12 17:09	08/29/12 11:17	7439-89-6	
Lead	**38.5**	ug/L	0.10	1	07/25/12 17:09	08/29/12 11:17	7439-92-1	
Magnesium	**32600**	ug/L	50.0	10	07/25/12 17:09	08/29/12 11:23	7439-95-4	
Manganese	**5210**	ug/L	50.0	100	07/25/12 17:09	08/29/12 11:28	7439-96-5	
Molybdenum	**15.4**	ug/L	0.50	1	07/25/12 17:09	08/29/12 11:17	7439-98-7	
Nickel	**6.6**	ug/L	0.50	1	07/25/12 17:09	08/29/12 11:17	7440-02-0	
Potassium	**6840**	ug/L	20.0	1	07/25/12 17:09	08/29/12 11:17	7440-09-7	
Selenium	ND	ug/L	0.50	1	07/25/12 17:09	08/29/12 11:17	7782-49-2	
Silica	**28200**	ug/L	1070	20	07/25/12 17:09	08/31/12 00:22	7631-86-9	
Silver	ND	ug/L	0.50	1	07/25/12 17:09	08/29/12 11:17	7440-22-4	
Sodium	**7480**	ug/L	50.0	1	07/25/12 17:09	08/29/12 11:17	7440-23-5	
Thallium	ND	ug/L	0.10	1	07/25/12 17:09	08/29/12 11:17	7440-28-0	
Total Hardness by 2340B	**1470000**	ug/L	7100	100	07/25/12 17:09	08/29/12 11:28		
Vanadium	**0.58**	ug/L	0.10	1	07/25/12 17:09	08/29/12 11:17	7440-62-2	
Zinc	**1830**	ug/L	50.0	10	07/25/12 17:09	08/29/12 11:23	7440-66-6	
200.8 MET ICPMS, Dissolved	Analytical Method: EPA 200.8							
Aluminum, Dissolved	**12.4**	ug/L	4.0	1	07/26/12 10:58	08/28/12 03:58	7429-90-5	
Antimony, Dissolved	ND	ug/L	0.50	1	07/26/12 10:58	08/28/12 03:58	7440-36-0	
Arsenic, Dissolved	**3.9**	ug/L	0.50	1	07/26/12 10:58	08/28/12 03:58	7440-38-2	
Barium, Dissolved	**15.4**	ug/L	0.30	1	07/26/12 10:58	08/28/12 03:58	7440-39-3	
Beryllium, Dissolved	ND	ug/L	0.20	1	07/26/12 10:58	08/28/12 03:58	7440-41-7	
Cadmium, Dissolved	**0.38**	ug/L	0.080	1	07/26/12 10:58	08/28/12 03:58	7440-43-9	
Calcium, Dissolved	**571000**	ug/L	1000	50	07/26/12 10:58	08/29/12 12:27	7440-70-2	
Chromium, Dissolved	ND	ug/L	0.50	1	07/26/12 10:58	08/28/12 03:58	7440-47-3	
Cobalt, Dissolved	**6.7**	ug/L	0.50	1	07/26/12 10:58	08/28/12 03:58	7440-48-4	
Copper, Dissolved	ND	ug/L	0.50	1	07/26/12 10:58	08/28/12 03:58	7440-50-8	
Iron, Dissolved	**7460**	ug/L	50.0	1	07/26/12 10:58	08/28/12 03:58	7439-89-6	
Lead, Dissolved	ND	ug/L	0.10	1	07/26/12 10:58	08/28/12 03:58	7439-92-1	
Magnesium, Dissolved	**33400**	ug/L	100	20	07/26/12 10:58	08/28/12 04:02	7439-95-4	

This report shall not be reproduced, except in full,
without the written consent of Pace Analytical Services, Inc..

Pace Analytical Services, Inc.
9608 Loiret Blvd.
Lenexa, KS 66219
(913)599-5665

ANALYTICAL RESULTS

Project: July 2012 Rico Water Sampling
Pace Project No.: 60125518

Sample: EB-1 **Lab ID: 60125518018** Collected: 07/17/12 15:55 Received: 07/19/12 10:20 Matrix: Water

Parameters	Results	Units	Report Limit	DF	Prepared	Analyzed	CAS No.	Qual
200.8 MET ICPMS, Dissolved	Analytical Method: EPA 200.8							
Manganese, Dissolved	**5240**	ug/L	10.0	20	07/26/12 10:58	08/28/12 04:02	7439-96-5	
Molybdenum, Dissolved	**15.8**	ug/L	0.50	1	07/26/12 10:58	08/28/12 03:58	7439-98-7	
Nickel, Dissolved	**6.5**	ug/L	0.50	1	07/26/12 10:58	08/28/12 03:58	7440-02-0	
Potassium, Dissolved	**6640**	ug/L	20.0	1	07/26/12 10:58	08/28/12 03:58	7440-09-7	
Selenium, Dissolved	ND	ug/L	0.50	1	07/26/12 10:58	08/28/12 03:58	7782-49-2	
Silver, Dissolved	ND	ug/L	0.50	1	07/26/12 10:58	08/28/12 03:58	7440-22-4	
Sodium, Dissolved	**7590**	ug/L	50.0	1	07/26/12 10:58	08/28/12 03:58	7440-23-5	
Thallium, Dissolved	ND	ug/L	0.10	1	07/26/12 10:58	08/28/12 03:58	7440-28-0	CH
Vanadium, Dissolved	ND	ug/L	0.10	1	07/26/12 10:58	08/28/12 03:58	7440-62-2	
Zinc, Dissolved	**1640**	ug/L	100	20	07/26/12 10:58	08/28/12 04:02	7440-66-6	
200.8 Potentially Diss. Metals	Analytical Method: EPA 200.8 Preparation Method: EPA 200.8							
Aluminum, Dissolved	**315**	ug/L	50.0	1	07/26/12 09:45	07/27/12 12:54	7429-90-5	
Antimony, Dissolved	**0.16J**	ug/L	1.0	1	07/26/12 09:45	07/27/12 12:54	7440-36-0	
Arsenic, Dissolved	**8.3**	ug/L	5.0	5	07/26/12 09:45	07/26/12 18:35	7440-38-2	
Barium, Dissolved	**15.8**	ug/L	5.0	5	07/26/12 09:45	07/26/12 18:35	7440-39-3	
Beryllium, Dissolved	**0.28J**	ug/L	0.50	1	07/26/12 09:45	07/27/12 12:54	7440-41-7	
Cadmium, Dissolved	**1.6**	ug/L	0.50	1	07/26/12 09:45	07/27/12 12:54	7440-43-9	
Chromium, Dissolved	**1.4**	ug/L	1.0	1	07/26/12 09:45	07/27/12 12:54	7440-47-3	
Cobalt, Dissolved	**6.3**	ug/L	5.0	5	07/26/12 09:45	07/26/12 18:35	7440-48-4	
Copper, Dissolved	**26.7**	ug/L	5.0	5	07/26/12 09:45	07/26/12 18:35	7440-50-8	
Iron, Dissolved	**10200**	ug/L	250	5	07/26/12 09:45	07/26/12 18:35	7439-89-6	
Lead, Dissolved	**43.1**	ug/L	5.0	5	07/26/12 09:45	07/26/12 18:35	7439-92-1	
Manganese, Dissolved	**5100**	ug/L	5.0	5	07/26/12 09:45	07/26/12 18:35	7439-96-5	
Molybdenum, Dissolved	**14.6**	ug/L	1.0	1	07/26/12 09:45	07/27/12 12:54	7439-98-7	
Nickel, Dissolved	**1.2**	ug/L	1.0	1	07/26/12 09:45	07/27/12 12:54	7440-02-0	
Selenium, Dissolved	ND	ug/L	1.0	1	07/26/12 09:45	07/27/12 12:54	7782-49-2	
Silver, Dissolved	ND	ug/L	0.50	1	07/26/12 09:45	07/27/12 12:54	7440-22-4	
Thallium, Dissolved	ND	ug/L	1.0	1	07/26/12 09:45	07/27/12 12:54	7440-28-0	
Vanadium, Dissolved	ND	ug/L	1.0	1	07/26/12 09:45	07/27/12 12:54	7440-62-2	
Zinc, Dissolved	**1940**	ug/L	500	50	07/30/12 16:00	07/31/12 11:46	7440-66-6	
245.1 Mercury	Analytical Method: EPA 245.1							
Mercury	ND	ug/L	0.20	1	07/25/12 00:00	07/26/12 13:46	7439-97-6	
245.1 Mercury, Dissolved	Analytical Method: EPA 245.1							
Mercury, Dissolved	ND	ug/L	0.20	1	07/25/12 00:00	07/26/12 15:12	7439-97-6	
245.1 Potentially Diss Mercury	Analytical Method: EPA 245.1 Preparation Method: EPA 245.1							
Mercury, Dissolved	ND	ug/L	0.20	1	07/24/12 16:30	07/26/12 12:49	7439-97-6	
2510B Specific Conductance	Analytical Method: SM 2510B							
Specific Conductance	**2280**	umhos/cm	10.0	1		07/27/12 12:08		
Salinity	Analytical Method: Calculated							
Salinity (as dissolved solids)	**1460**	mg/L	6.0	1		07/30/12 11:08		

This report shall not be reproduced, except in full,
without the written consent of Pace Analytical Services, Inc..

Pace Analytical Services, Inc.
9608 Loiret Blvd.
Lenexa, KS 66219
(913)599-5665

ANALYTICAL RESULTS

Project: July 2012 Rico Water Sampling
Pace Project No.: 60125518

Sample: EB-1 **Lab ID: 60125518018** Collected: 07/17/12 15:55 Received: 07/19/12 10:20 Matrix: Water

Parameters	Results	Units	Report Limit	DF	Prepared	Analyzed	CAS No.	Qual
Salinity	Analytical Method: Calculated							
Salinity (as seawater)	**1.2**	PSU	0.010	1		07/30/12 11:08		
2320B Alkalinity	Analytical Method: SM 2320B							
Alkalinity,Bicarbonate (CaCO3)	**198**	mg/L	20.0	1		07/30/12 09:00		
Alkalinity, Carbonate (CaCO3)	ND	mg/L	20.0	1		07/30/12 09:00		
Alkalinity, Total as CaCO3	**198**	mg/L	20.0	1		07/30/12 09:00		
2540C Total Dissolved Solids	Analytical Method: SM 2540C							
Total Dissolved Solids	**2100**	mg/L	5.0	1		07/20/12 10:52		
2540D Total Suspended Solids	Analytical Method: SM 2540D							
Total Suspended Solids	**50.0**	mg/L	5.0	1		07/20/12 08:48		
4500H+ pH, Electrometric	Analytical Method: SM 4500-H+B							
pH at 25 Degrees C	**7.2**	Std. Units	0.10	1		07/20/12 13:29		H6
4500S2D Sulfide, Total	Analytical Method: SM 4500-S-2 D							
Sulfide, Total	ND	mg/L	0.050	1		07/24/12 12:04	18496-25-8	
Oxidation/Reduction Potential	Analytical Method: SM 2580B							
Oxidation/Reduction Potential	**87.9**	mV	1.0	1		07/24/12 11:30		
300.0 IC Anions 28 Days	Analytical Method: EPA 300.0							
Sulfate	**1270**	mg/L	100	100		07/28/12 00:54	14808-79-8	
353.2 Nitrogen, NO2/NO3 pres.	Analytical Method: EPA 353.2							
Nitrogen, NO2 plus NO3	ND	mg/L	0.10	1		07/27/12 11:33		
4500CNE Cyanide, Total	Analytical Method: SM 4500-CN-E							
Cyanide	ND	mg/L	0.0050	1		07/25/12 17:43	57-12-5	
5310C TOC	Analytical Method: SM 5310C							
Total Organic Carbon	ND	mg/L	0.50	1		07/30/12 23:21	7440-44-0	

This report shall not be reproduced, except in full,
without the written consent of Pace Analytical Services, Inc..

Pace Analytical Services, Inc.
9608 Loiret Blvd.
Lenexa, KS 66219
(913)599-5665

ANALYTICAL RESULTS

Project: July 2012 Rico Water Sampling
Pace Project No.: 60125518

Sample: EB-2 **Lab ID: 60125518019** Collected: 07/17/12 16:45 Received: 07/19/12 10:20 Matrix: Water

Parameters	Results	Units	Report Limit	DF	Prepared	Analyzed	CAS No.	Qual
200.7 Potentially Diss. Metals	Analytical Method: EPA 200.7 Preparation Method: EPA 200.7							
Calcium, Dissolved	**369000**	ug/L	500	5	07/26/12 10:00	07/27/12 14:30	7440-70-2	
Magnesium, Dissolved	**178000**	ug/L	250	5	07/26/12 10:00	07/27/12 14:30	7439-95-4	
Potassium, Dissolved	**15100**	ug/L	2500	5	07/26/12 10:00	07/27/12 14:30	7440-09-7	
Sodium, Dissolved	**6840**	ug/L	2500	5	07/26/12 10:00	07/27/12 14:30	7440-23-5	
200.8 MET ICPMS	Analytical Method: EPA 200.8							
Aluminum	**23100**	ug/L	8.0	2	07/25/12 17:09	08/29/12 11:39	7429-90-5	
Antimony	ND	ug/L	1.0	2	07/25/12 17:09	08/29/12 11:39	7440-36-0	
Arsenic	**117**	ug/L	1.0	2	07/25/12 17:09	08/29/12 11:39	7440-38-2	
Barium	**11.5**	ug/L	0.60	2	07/25/12 17:09	08/29/12 11:39	7440-39-3	
Beryllium	**8.3**	ug/L	0.40	2	07/25/12 17:09	08/29/12 11:39	7440-41-7	
Cadmium	**2.5**	ug/L	0.16	2	07/25/12 17:09	08/29/12 11:39	7440-43-9	
Calcium	**404000**	ug/L	2000	100	07/25/12 17:09	08/29/12 11:56	7440-70-2	
Chromium	ND	ug/L	50.0	100	07/25/12 17:09	08/29/12 11:56	7440-47-3	
Cobalt	**101**	ug/L	1.0	2	07/25/12 17:09	08/29/12 11:39	7440-48-4	
Copper	**28.2**	ug/L	1.0	2	07/25/12 17:09	08/29/12 11:39	7440-50-8	
Iron	**857000**	ug/L	5000	100	07/25/12 17:09	08/29/12 11:56	7439-89-6	
Lead	**292**	ug/L	0.20	2	07/25/12 17:09	08/29/12 11:39	7439-92-1	
Magnesium	**192000**	ug/L	50.0	10	07/25/12 17:09	08/29/12 11:51	7439-95-4	
Manganese	**43600**	ug/L	50.0	100	07/25/12 17:09	08/29/12 11:56	7439-96-5	
Molybdenum	**1.6**	ug/L	1.0	2	07/25/12 17:09	08/29/12 11:39	7439-98-7	
Nickel	**144**	ug/L	1.0	2	07/25/12 17:09	08/29/12 11:39	7440-02-0	
Potassium	**16900**	ug/L	40.0	2	07/25/12 17:09	08/29/12 11:39	7440-09-7	
Selenium	**1.9**	ug/L	1.0	2	07/25/12 17:09	08/29/12 11:39	7782-49-2	
Silica	**41500**	ug/L	1070	20	07/25/12 17:09	08/31/12 00:28	7631-86-9	
Silver	ND	ug/L	1.0	2	07/25/12 17:09	08/29/12 11:39	7440-22-4	
Sodium	**7190**	ug/L	100	2	07/25/12 17:09	08/29/12 11:39	7440-23-5	
Thallium	ND	ug/L	0.20	2	07/25/12 17:09	08/29/12 11:39	7440-28-0	
Total Hardness by 2340B	**1800000**	ug/L	7100	100	07/25/12 17:09	08/29/12 11:56		
Vanadium	**0.57**	ug/L	0.20	2	07/25/12 17:09	08/29/12 11:39	7440-62-2	
Zinc	**79100**	ug/L	5000	1000	07/25/12 17:09	08/29/12 12:02	7440-66-6	
200.8 MET ICPMS, Dissolved	Analytical Method: EPA 200.8							
Aluminum, Dissolved	**26900**	ug/L	20.0	5	07/26/12 10:58	08/28/12 04:06	7429-90-5	
Antimony, Dissolved	ND	ug/L	2.5	5	07/26/12 10:58	08/28/12 04:06	7440-36-0	D3
Arsenic, Dissolved	**18.1**	ug/L	2.5	5	07/26/12 10:58	08/28/12 04:06	7440-38-2	
Barium, Dissolved	**11.1**	ug/L	1.5	5	07/26/12 10:58	08/28/12 04:06	7440-39-3	
Beryllium, Dissolved	**12.3**	ug/L	1.0	5	07/26/12 10:58	08/28/12 04:06	7440-41-7	
Cadmium, Dissolved	**1.4**	ug/L	0.40	5	07/26/12 10:58	08/28/12 04:06	7440-43-9	
Calcium, Dissolved	**631000**	ug/L	2000	100	07/26/12 10:58	08/28/12 04:10	7440-70-2	
Chromium, Dissolved	ND	ug/L	2.5	5	07/26/12 10:58	08/28/12 04:06	7440-47-3	D3
Cobalt, Dissolved	**137**	ug/L	2.5	5	07/26/12 10:58	08/28/12 04:06	7440-48-4	
Copper, Dissolved	ND	ug/L	2.5	5	07/26/12 10:58	08/28/12 04:06	7440-50-8	D3
Iron, Dissolved	**1200000**	ug/L	5000	100	07/26/12 10:58	08/28/12 04:10	7439-89-6	
Lead, Dissolved	**4.2**	ug/L	0.50	5	07/26/12 10:58	08/28/12 04:06	7439-92-1	
Magnesium, Dissolved	**279000**	ug/L	500	100	07/26/12 10:58	08/28/12 04:10	7439-95-4	

This report shall not be reproduced, except in full,
without the written consent of Pace Analytical Services, Inc..

Pace Analytical Services, Inc.
9608 Loiret Blvd.
Lenexa, KS 66219
(913)599-5665

ANALYTICAL RESULTS

Project: July 2012 Rico Water Sampling
Pace Project No.: 60125518

Sample: EB-2 **Lab ID: 60125518019** Collected: 07/17/12 16:45 Received: 07/19/12 10:20 Matrix: Water

Parameters	Results	Units	Report Limit	DF	Prepared	Analyzed	CAS No.	Qual
200.8 MET ICPMS, Dissolved	Analytical Method: EPA 200.8							
Manganese, Dissolved	**43100**	ug/L	500	1000	07/26/12 10:58	08/28/12 17:13	7439-96-5	
Molybdenum, Dissolved	ND	ug/L	2.5	5	07/26/12 10:58	08/28/12 04:06	7439-98-7	D3
Nickel, Dissolved	**205**	ug/L	2.5	5	07/26/12 10:58	08/28/12 04:06	7440-02-0	
Potassium, Dissolved	**18100**	ug/L	100	5	07/26/12 10:58	08/28/12 04:06	7440-09-7	
Selenium, Dissolved	**2.6**	ug/L	2.5	5	07/26/12 10:58	08/28/12 04:06	7782-49-2	
Silver, Dissolved	ND	ug/L	2.5	5	07/26/12 10:58	08/28/12 04:06	7440-22-4	D3
Sodium, Dissolved	**8400**	ug/L	250	5	07/26/12 10:58	08/28/12 04:06	7440-23-5	
Thallium, Dissolved	ND	ug/L	0.50	5	07/26/12 10:58	08/28/12 04:06	7440-28-0	CH,D3
Vanadium, Dissolved	ND	ug/L	0.50	5	07/26/12 10:58	08/28/12 04:06	7440-62-2	D3
Zinc, Dissolved	**78500**	ug/L	5000	1000	07/26/12 10:58	08/28/12 17:13	7440-66-6	
200.8 Potentially Diss. Metals	Analytical Method: EPA 200.8 Preparation Method: EPA 200.8							
Aluminum, Dissolved	**20700**	ug/L	500	10	07/26/12 09:45	07/27/12 13:02	7429-90-5	
Antimony, Dissolved	**0.25J**	ug/L	1.0	1	07/26/12 09:45	07/27/12 15:20	7440-36-0	
Arsenic, Dissolved	**127**	ug/L	10.0	10	07/26/12 09:45	07/27/12 13:02	7440-38-2	
Barium, Dissolved	**10.1**	ug/L	1.0	1	07/26/12 09:45	07/27/12 15:20	7440-39-3	
Beryllium, Dissolved	**7.1**	ug/L	0.50	1	07/26/12 09:45	07/27/12 15:20	7440-41-7	
Cadmium, Dissolved	**2.5**	ug/L	0.50	1	07/26/12 09:45	07/27/12 15:20	7440-43-9	
Chromium, Dissolved	**3.1**	ug/L	1.0	1	07/26/12 09:45	07/27/12 15:20	7440-47-3	
Cobalt, Dissolved	**103**	ug/L	10.0	10	07/26/12 09:45	07/27/12 13:02	7440-48-4	
Copper, Dissolved	**36.2**	ug/L	10.0	10	07/26/12 09:45	07/30/12 12:26	7440-50-8	
Iron, Dissolved	**718000**	ug/L	10000	200	07/26/12 09:45	07/26/12 18:39	7439-89-6	
Lead, Dissolved	**306**	ug/L	200	200	07/26/12 09:45	07/26/12 18:39	7439-92-1	
Manganese, Dissolved	**38900**	ug/L	200	200	07/26/12 09:45	07/26/12 18:39	7439-96-5	
Molybdenum, Dissolved	**1.6**	ug/L	1.0	1	07/26/12 09:45	07/27/12 15:20	7439-98-7	
Nickel, Dissolved	**150**	ug/L	10.0	10	07/26/12 09:45	07/27/12 13:02	7440-02-0	
Selenium, Dissolved	**1.6**	ug/L	1.0	1	07/26/12 09:45	07/27/12 15:20	7782-49-2	
Silver, Dissolved	**0.084J**	ug/L	0.50	1	07/26/12 09:45	07/27/12 15:20	7440-22-4	
Thallium, Dissolved	ND	ug/L	1.0	1	07/26/12 09:45	07/27/12 15:20	7440-28-0	
Vanadium, Dissolved	ND	ug/L	1.0	1	07/26/12 09:45	07/27/12 15:20	7440-62-2	
Zinc, Dissolved	**70600**	ug/L	4000	200	07/30/12 16:00	07/31/12 11:48	7440-66-6	
245.1 Mercury	Analytical Method: EPA 245.1							
Mercury	ND	ug/L	0.20	1	07/25/12 00:00	07/26/12 13:48	7439-97-6	
245.1 Mercury, Dissolved	Analytical Method: EPA 245.1							
Mercury, Dissolved	ND	ug/L	0.20	1	07/25/12 00:00	07/26/12 15:14	7439-97-6	
245.1 Potentially Diss Mercury	Analytical Method: EPA 245.1 Preparation Method: EPA 245.1							
Mercury, Dissolved	ND	ug/L	0.20	1	07/24/12 16:30	07/26/12 12:52	7439-97-6	
2510B Specific Conductance	Analytical Method: SM 2510B							
Specific Conductance	**4210**	umhos/cm	10.0	1		07/27/12 12:09		
Salinity	Analytical Method: Calculated							
Salinity (as dissolved solids)	**2690**	mg/L	6.0	1		07/30/12 11:08		

This report shall not be reproduced, except in full,
without the written consent of Pace Analytical Services, Inc..

Pace Analytical Services, Inc.
9608 Loiret Blvd.
Lenexa, KS 66219
(913)599-5665

ANALYTICAL RESULTS

Project: July 2012 Rico Water Sampling
Pace Project No.: 60125518

Sample: EB-2 **Lab ID: 60125518019** Collected: 07/17/12 16:45 Received: 07/19/12 10:20 Matrix: Water

Parameters	Results	Units	Report Limit	DF	Prepared	Analyzed	CAS No.	Qual
Salinity	Analytical Method: Calculated							
Salinity (as seawater)	**2.2**	PSU	0.010	1		07/30/12 11:08		
2320B Alkalinity	Analytical Method: SM 2320B							
Alkalinity,Bicarbonate (CaCO3)	ND	mg/L	20.0	1		07/30/12 09:00		
Alkalinity, Carbonate (CaCO3)	ND	mg/L	20.0	1		07/30/12 09:00		
Alkalinity, Total as CaCO3	ND	mg/L	20.0	1		07/30/12 09:00		
2540C Total Dissolved Solids	Analytical Method: SM 2540C							
Total Dissolved Solids	**5210**	mg/L	5.0	1		07/20/12 10:53		
2540D Total Suspended Solids	Analytical Method: SM 2540D							
Total Suspended Solids	**117**	mg/L	5.0	1		07/20/12 08:48		
4500H+ pH, Electrometric	Analytical Method: SM 4500-H+B							
pH at 25 Degrees C	**5.3**	Std. Units	0.10	1		07/20/12 14:12		H6
4500S2D Sulfide, Total	Analytical Method: SM 4500-S-2 D							
Sulfide, Total	ND	mg/L	0.050	1		07/24/12 12:05	18496-25-8	
Oxidation/Reduction Potential	Analytical Method: SM 2580B							
Oxidation/Reduction Potential	**139**	mV	1.0	1		07/24/12 11:30		
300.0 IC Anions 28 Days	Analytical Method: EPA 300.0							
Sulfate	**3530**	mg/L	500	500		07/28/12 01:11	14808-79-8	
353.2 Nitrogen, NO2/NO3 pres.	Analytical Method: EPA 353.2							
Nitrogen, NO2 plus NO3	ND	mg/L	0.10	1		07/27/12 11:34		
4500CNE Cyanide, Total	Analytical Method: SM 4500-CN-E							
Cyanide	**0.0052**	mg/L	0.0050	1		07/25/12 17:46	57-12-5	
5310C TOC	Analytical Method: SM 5310C							
Total Organic Carbon	ND	mg/L	0.50	1		07/31/12 00:14	7440-44-0	

This report shall not be reproduced, except in full,
without the written consent of Pace Analytical Services, Inc..

Pace Analytical Services, Inc.
9608 Loiret Blvd.
Lenexa, KS 66219
(913)599-5665

ANALYTICAL RESULTS

Project: July 2012 Rico Water Sampling
Pace Project No.: 60125518

Sample: MW-1 SHALLOW **Lab ID: 60125518020** Collected: 07/17/12 08:30 Received: 07/19/12 10:20 Matrix: Water

Parameters	Results	Units	Report Limit	DF	Prepared	Analyzed	CAS No.	Qual
200.7 Potentially Diss. Metals	Analytical Method: EPA 200.7 Preparation Method: EPA 200.7							
Calcium, Dissolved	**237000**	ug/L	500	5	07/26/12 10:00	07/27/12 14:32	7440-70-2	
Magnesium, Dissolved	**21200**	ug/L	250	5	07/26/12 10:00	07/27/12 14:32	7439-95-4	
Potassium, Dissolved	**2090**	ug/L	1000	2	07/26/12 10:00	07/30/12 12:19	7440-09-7	
Sodium, Dissolved	**10200**	ug/L	2500	5	07/26/12 10:00	07/27/12 14:32	7440-23-5	
200.8 MET ICPMS	Analytical Method: EPA 200.8							
Aluminum	**22300**	ug/L	4.0	1	07/25/12 17:09	08/29/12 12:19	7429-90-5	
Antimony	**0.62**	ug/L	0.50	1	07/25/12 17:09	08/29/12 12:19	7440-36-0	
Arsenic	**21.3**	ug/L	0.50	1	07/25/12 17:09	08/29/12 12:19	7440-38-2	
Barium	**312**	ug/L	0.30	1	07/25/12 17:09	08/29/12 12:19	7440-39-3	
Beryllium	**1.7**	ug/L	0.20	1	07/25/12 17:09	08/29/12 12:19	7440-41-7	
Cadmium	**2.0**	ug/L	0.080	1	07/25/12 17:09	08/29/12 12:19	7440-43-9	
Calcium	**258000**	ug/L	2000	100	07/25/12 17:09	08/29/12 12:30	7440-70-2	
Chromium	**20.5**	ug/L	0.50	1	07/25/12 17:09	08/29/12 12:19	7440-47-3	
Cobalt	**15.4**	ug/L	0.50	1	07/25/12 17:09	08/29/12 12:19	7440-48-4	
Copper	**83.0**	ug/L	0.50	1	07/25/12 17:09	08/29/12 12:19	7440-50-8	
Iron	**33400**	ug/L	500	10	07/25/12 17:09	08/29/12 12:25	7439-89-6	
Lead	**160**	ug/L	0.10	1	07/25/12 17:09	08/29/12 12:19	7439-92-1	
Magnesium	**30200**	ug/L	50.0	10	07/25/12 17:09	08/29/12 12:25	7439-95-4	
Manganese	**1460**	ug/L	5.0	10	07/25/12 17:09	08/29/12 12:25	7439-96-5	
Molybdenum	**12.3**	ug/L	0.50	1	07/25/12 17:09	08/29/12 12:19	7439-98-7	
Nickel	**19.5**	ug/L	0.50	1	07/25/12 17:09	08/29/12 12:19	7440-02-0	
Potassium	**6390**	ug/L	20.0	1	07/25/12 17:09	08/29/12 12:19	7440-09-7	
Selenium	**12.3**	ug/L	0.50	1	07/25/12 17:09	08/29/12 12:19	7782-49-2	
Silica	**97000**	ug/L	2680	50	07/25/12 17:09	08/31/12 00:34	7631-86-9	
Silver	**1.9**	ug/L	0.50	1	07/25/12 17:09	08/29/12 12:19	7440-22-4	
Sodium	**11000**	ug/L	50.0	1	07/25/12 17:09	08/29/12 12:19	7440-23-5	
Thallium	**0.57**	ug/L	0.10	1	07/25/12 17:09	08/29/12 12:19	7440-28-0	
Total Hardness by 2340B	**768000**	ug/L	7100	100	07/25/12 17:09	08/29/12 12:30		
Vanadium	**30.8**	ug/L	0.10	1	07/25/12 17:09	08/29/12 12:19	7440-62-2	
Zinc	**367**	ug/L	5.0	1	07/25/12 17:09	08/29/12 12:19	7440-66-6	
200.8 MET ICPMS, Dissolved	Analytical Method: EPA 200.8							
Aluminum, Dissolved	**263**	ug/L	4.0	1	07/26/12 10:58	08/28/12 04:14	7429-90-5	
Antimony, Dissolved	ND	ug/L	0.50	1	07/26/12 10:58	08/28/12 04:14	7440-36-0	
Arsenic, Dissolved	ND	ug/L	0.50	1	07/26/12 10:58	08/28/12 04:14	7440-38-2	
Barium, Dissolved	**27.6**	ug/L	0.30	1	07/26/12 10:58	08/28/12 04:14	7440-39-3	
Beryllium, Dissolved	ND	ug/L	0.20	1	07/26/12 10:58	08/28/12 04:14	7440-41-7	
Cadmium, Dissolved	**0.34**	ug/L	0.080	1	07/26/12 10:58	08/28/12 04:14	7440-43-9	
Calcium, Dissolved	**266000**	ug/L	400	20	07/26/12 10:58	08/29/12 12:32	7440-70-2	
Chromium, Dissolved	**0.86**	ug/L	0.50	1	07/26/12 10:58	08/28/12 04:14	7440-47-3	
Cobalt, Dissolved	ND	ug/L	0.50	1	07/26/12 10:58	08/28/12 04:14	7440-48-4	
Copper, Dissolved	**2.1**	ug/L	0.50	1	07/26/12 10:58	08/28/12 04:14	7440-50-8	
Iron, Dissolved	**355**	ug/L	50.0	1	07/26/12 10:58	08/28/12 04:14	7439-89-6	
Lead, Dissolved	**1.9**	ug/L	0.10	1	07/26/12 10:58	08/28/12 04:14	7439-92-1	
Magnesium, Dissolved	**20900**	ug/L	5.0	1	07/26/12 10:58	08/28/12 04:14	7439-95-4	

This report shall not be reproduced, except in full,
without the written consent of Pace Analytical Services, Inc..

Pace Analytical Services, Inc.
9608 Loiret Blvd.
Lenexa, KS 66219
(913)599-5665

ANALYTICAL RESULTS

Project: July 2012 Rico Water Sampling
Pace Project No.: 60125518

Sample: MW-1 SHALLOW **Lab ID: 60125518020** Collected: 07/17/12 08:30 Received: 07/19/12 10:20 Matrix: Water

Parameters	Results	Units	Report Limit	DF	Prepared	Analyzed	CAS No.	Qual
200.8 MET ICPMS, Dissolved	Analytical Method: EPA 200.8							
Manganese, Dissolved	**21.3**	ug/L	0.50	1	07/26/12 10:58	08/28/12 04:14	7439-96-5	
Molybdenum, Dissolved	**8.3**	ug/L	0.50	1	07/26/12 10:58	08/28/12 04:14	7439-98-7	
Nickel, Dissolved	**2.9**	ug/L	0.50	1	07/26/12 10:58	08/28/12 04:14	7440-02-0	
Potassium, Dissolved	**2060**	ug/L	20.0	1	07/26/12 10:58	08/28/12 04:14	7440-09-7	
Selenium, Dissolved	**7.0**	ug/L	0.50	1	07/26/12 10:58	08/28/12 04:14	7782-49-2	
Silver, Dissolved	ND	ug/L	0.50	1	07/26/12 10:58	08/28/12 04:14	7440-22-4	
Sodium, Dissolved	**10800**	ug/L	50.0	1	07/26/12 10:58	08/28/12 04:14	7440-23-5	
Thallium, Dissolved	ND	ug/L	0.10	1	07/26/12 10:58	08/28/12 04:14	7440-28-0	CH
Vanadium, Dissolved	**0.46**	ug/L	0.10	1	07/26/12 10:58	08/28/12 04:14	7440-62-2	
Zinc, Dissolved	**38.9**	ug/L	5.0	1	07/26/12 10:58	08/28/12 04:14	7440-66-6	
200.8 Potentially Diss. Metals	Analytical Method: EPA 200.8 Preparation Method: EPA 200.8							
Aluminum, Dissolved	**4190**	ug/L	250	5	07/26/12 09:45	07/26/12 18:43	7429-90-5	
Antimony, Dissolved	**0.24J**	ug/L	1.0	1	07/26/12 09:45	07/27/12 12:58	7440-36-0	
Arsenic, Dissolved	**3.9**	ug/L	1.0	1	07/26/12 09:45	07/27/12 12:58	7440-38-2	
Barium, Dissolved	**60.4**	ug/L	5.0	5	07/26/12 09:45	07/26/12 18:43	7440-39-3	
Beryllium, Dissolved	**0.99**	ug/L	0.50	1	07/26/12 09:45	07/27/12 12:58	7440-41-7	
Cadmium, Dissolved	**2.2**	ug/L	0.50	1	07/26/12 09:45	07/27/12 12:58	7440-43-9	
Chromium, Dissolved	**6.2**	ug/L	5.0	5	07/26/12 09:45	07/26/12 18:43	7440-47-3	
Cobalt, Dissolved	**9.6**	ug/L	5.0	5	07/26/12 09:45	07/26/12 18:43	7440-48-4	
Copper, Dissolved	**41.6**	ug/L	5.0	5	07/26/12 09:45	07/26/12 18:43	7440-50-8	
Iron, Dissolved	**6480**	ug/L	250	5	07/26/12 09:45	07/26/12 18:43	7439-89-6	
Lead, Dissolved	**114**	ug/L	5.0	5	07/26/12 09:45	07/26/12 18:43	7439-92-1	
Manganese, Dissolved	**1050**	ug/L	5.0	5	07/26/12 09:45	07/26/12 18:43	7439-96-5	
Molybdenum, Dissolved	**2.3**	ug/L	1.0	1	07/26/12 09:45	07/27/12 12:58	7439-98-7	
Nickel, Dissolved	**6.1**	ug/L	1.0	1	07/26/12 09:45	07/27/12 12:58	7440-02-0	
Selenium, Dissolved	**7.5**	ug/L	1.0	1	07/26/12 09:45	07/27/12 12:58	7782-49-2	
Silver, Dissolved	**1.2**	ug/L	0.50	1	07/26/12 09:45	07/27/12 12:58	7440-22-4	
Thallium, Dissolved	**0.095J**	ug/L	1.0	1	07/26/12 09:45	07/27/12 12:58	7440-28-0	
Vanadium, Dissolved	**5.6**	ug/L	5.0	5	07/26/12 09:45	07/26/12 18:43	7440-62-2	
Zinc, Dissolved	**259**	ug/L	20.0	2	07/30/12 16:00	07/31/12 11:51	7440-66-6	
245.1 Mercury	Analytical Method: EPA 245.1							
Mercury	ND	ug/L	0.20	1	07/25/12 00:00	07/26/12 13:51	7439-97-6	
245.1 Mercury, Dissolved	Analytical Method: EPA 245.1							
Mercury, Dissolved	ND	ug/L	0.20	1	07/25/12 00:00	07/26/12 15:17	7439-97-6	
245.1 Potentially Diss Mercury	Analytical Method: EPA 245.1 Preparation Method: EPA 245.1							
Mercury, Dissolved	ND	ug/L	0.20	1	07/24/12 16:30	07/26/12 12:54	7439-97-6	
2510B Specific Conductance	Analytical Method: SM 2510B							
Specific Conductance	**1230**	umhos/cm	10.0	1		07/27/12 12:10		
Salinity	Analytical Method: Calculated							
Salinity (as dissolved solids)	**785**	mg/L	6.0	1		07/30/12 11:08		

This report shall not be reproduced, except in full,
without the written consent of Pace Analytical Services, Inc..

Pace Analytical Services, Inc.
9608 Loiret Blvd.
Lenexa, KS 66219
(913)599-5665

ANALYTICAL RESULTS

Project: July 2012 Rico Water Sampling
Pace Project No.: 60125518

Sample: MW-1 SHALLOW **Lab ID: 60125518020** Collected: 07/17/12 08:30 Received: 07/19/12 10:20 Matrix: Water

Parameters	Results	Units	Report Limit	DF	Prepared	Analyzed	CAS No.	Qual
Salinity	Analytical Method: Calculated							
Salinity (as seawater)	**0.61**	PSU	0.010	1		07/30/12 11:08		
2320B Alkalinity	Analytical Method: SM 2320B							
Alkalinity,Bicarbonate (CaCO3)	**89.3**	mg/L	20.0	1		07/30/12 09:00		
Alkalinity, Carbonate (CaCO3)	ND	mg/L	20.0	1		07/30/12 09:00		
Alkalinity, Total as CaCO3	**89.3**	mg/L	20.0	1		07/30/12 09:00		
2540C Total Dissolved Solids	Analytical Method: SM 2540C							
Total Dissolved Solids	**1050**	mg/L	5.0	1		07/20/12 10:53		
2540D Total Suspended Solids	Analytical Method: SM 2540D							
Total Suspended Solids	**636**	mg/L	5.0	1		07/20/12 08:48		
4500H+ pH, Electrometric	Analytical Method: SM 4500-H+B							
pH at 25 Degrees C	**7.4**	Std. Units	0.10	1		07/20/12 13:29		H6
4500S2D Sulfide, Total	Analytical Method: SM 4500-S-2 D							
Sulfide, Total	**0.092**	mg/L	0.050	1		07/24/12 12:09	18496-25-8	
Oxidation/Reduction Potential	Analytical Method: SM 2580B							
Oxidation/Reduction Potential	**81.1**	mV	1.0	1		07/24/12 11:30		
300.0 IC Anions 28 Days	Analytical Method: EPA 300.0							
Sulfate	**661**	mg/L	50.0	50		07/28/12 01:29	14808-79-8	
353.2 Nitrogen, NO2/NO3 pres.	Analytical Method: EPA 353.2							
Nitrogen, NO2 plus NO3	ND	mg/L	0.10	1		07/27/12 11:35		
4500CNE Cyanide, Total	Analytical Method: SM 4500-CN-E							
Cyanide	ND	mg/L	0.0050	1		07/25/12 17:46	57-12-5	
5310C TOC	Analytical Method: SM 5310C							
Total Organic Carbon	ND	mg/L	0.50	1		07/31/12 00:32	7440-44-0	

This report shall not be reproduced, except in full,
without the written consent of Pace Analytical Services, Inc..

Pace Analytical Services, Inc.
9608 Loiret Blvd.
Lenexa, KS 66219
(913)599-5665

ANALYTICAL RESULTS

Project: July 2012 Rico Water Sampling
Pace Project No.: 60125518

Sample: MW-1 DEEP **Lab ID: 60125518021** Collected: 07/17/12 08:30 Received: 07/19/12 10:20 Matrix: Water

Parameters	Results	Units	Report Limit	DF	Prepared	Analyzed	CAS No.	Qual
200.7 Potentially Diss. Metals	Analytical Method: EPA 200.7 Preparation Method: EPA 200.7							
Calcium, Dissolved	**196000**	ug/L	100	1	07/26/12 10:00	07/30/12 13:01	7440-70-2	
Magnesium, Dissolved	**16900**	ug/L	50.0	1	07/26/12 10:00	07/30/12 13:01	7439-95-4	
Potassium, Dissolved	**6200**	ug/L	500	1	07/26/12 10:00	07/30/12 13:01	7440-09-7	
Sodium, Dissolved	**14300**	ug/L	500	1	07/26/12 10:00	07/30/12 13:01	7440-23-5	
200.8 MET ICPMS	Analytical Method: EPA 200.8							
Aluminum	**284**	ug/L	4.0	1	07/25/12 17:11	08/19/12 15:43	7429-90-5	
Antimony	**0.81**	ug/L	0.50	1	07/25/12 17:11	08/19/12 15:43	7440-36-0	
Arsenic	**1.3**	ug/L	0.50	1	07/25/12 17:11	08/19/12 15:43	7440-38-2	
Barium	**21.6**	ug/L	0.30	1	07/25/12 17:11	08/19/12 15:43	7440-39-3	
Beryllium	ND	ug/L	0.20	1	07/25/12 17:11	08/19/12 15:43	7440-41-7	
Cadmium	**2.4**	ug/L	0.080	1	07/25/12 17:11	08/19/12 15:43	7440-43-9	
Calcium	**233000**	ug/L	2000	100	07/25/12 17:11	08/19/12 15:53	7440-70-2	
Chromium	**2.1**	ug/L	0.50	1	07/25/12 17:11	08/19/12 15:43	7440-47-3	
Cobalt	ND	ug/L	0.50	1	07/25/12 17:11	08/19/12 15:43	7440-48-4	
Copper	**7.2**	ug/L	0.50	1	07/25/12 17:11	08/19/12 15:43	7440-50-8	
Iron	**1050**	ug/L	50.0	1	07/25/12 17:11	08/19/12 15:43	7439-89-6	
Lead	**16.9**	ug/L	0.10	1	07/25/12 17:11	08/19/12 15:43	7439-92-1	
Magnesium	**18200**	ug/L	5.0	1	07/25/12 17:11	08/19/12 15:43	7439-95-4	
Manganese	**47.2**	ug/L	0.50	1	07/25/12 17:11	08/19/12 15:43	7439-96-5	
Molybdenum	**10.4**	ug/L	0.50	1	07/25/12 17:11	08/19/12 15:43	7439-98-7	
Nickel	**1.5**	ug/L	0.50	1	07/25/12 17:11	08/19/12 15:43	7440-02-0	
Potassium	**6980**	ug/L	20.0	1	07/25/12 17:11	08/19/12 15:43	7440-09-7	
Selenium	**11.6**	ug/L	0.50	1	07/25/12 17:11	08/19/12 15:43	7782-49-2	
Silica	**15600**	ug/L	535	10	07/25/12 17:11	08/19/12 15:48	7631-86-9	
Silver	ND	ug/L	0.50	1	07/25/12 17:11	08/19/12 15:43	7440-22-4	
Sodium	**16200**	ug/L	50.0	1	07/25/12 17:11	08/19/12 15:43	7440-23-5	
Thallium	ND	ug/L	0.10	1	07/25/12 17:11	08/19/12 15:43	7440-28-0	
Total Hardness by 2340B	**657000**	ug/L	7100	100	07/25/12 17:11	08/19/12 15:53		
Vanadium	**0.84**	ug/L	0.10	1	07/25/12 17:11	08/19/12 15:43	7440-62-2	
Zinc	**899**	ug/L	50.0	10	07/25/12 17:11	08/19/12 15:48	7440-66-6	
200.8 MET ICPMS, Dissolved	Analytical Method: EPA 200.8							
Aluminum, Dissolved	ND	ug/L	4.0	1	07/26/12 11:07	08/25/12 22:02	7429-90-5	
Antimony, Dissolved	ND	ug/L	0.50	1	07/26/12 11:07	08/25/12 22:02	7440-36-0	
Arsenic, Dissolved	ND	ug/L	0.50	1	07/26/12 11:07	08/25/12 22:02	7440-38-2	
Barium, Dissolved	**17.6**	ug/L	0.30	1	07/26/12 11:07	08/25/12 22:02	7440-39-3	
Beryllium, Dissolved	ND	ug/L	0.20	1	07/26/12 11:07	08/29/12 00:34	7440-41-7	
Cadmium, Dissolved	**2.1**	ug/L	0.080	1	07/26/12 11:07	08/25/12 22:02	7440-43-9	
Calcium, Dissolved	**238000**	ug/L	2000	100	07/26/12 11:07	08/25/12 22:12	7440-70-2	
Chromium, Dissolved	**0.81**	ug/L	0.50	1	07/26/12 11:07	08/25/12 22:02	7440-47-3	
Cobalt, Dissolved	ND	ug/L	0.50	1	07/26/12 11:07	08/25/12 22:02	7440-48-4	
Copper, Dissolved	**1.4**	ug/L	0.50	1	07/26/12 11:07	08/25/12 22:02	7440-50-8	
Iron, Dissolved	ND	ug/L	50.0	1	07/26/12 11:07	08/25/12 22:02	7439-89-6	
Lead, Dissolved	ND	ug/L	0.10	1	07/26/12 11:07	08/25/12 22:02	7439-92-1	
Magnesium, Dissolved	**19800**	ug/L	5.0	1	07/26/12 11:07	08/25/12 22:02	7439-95-4	

This report shall not be reproduced, except in full,
without the written consent of Pace Analytical Services, Inc..

Pace Analytical Services, Inc.
9608 Loiret Blvd.
Lenexa, KS 66219
(913)599-5665

ANALYTICAL RESULTS

Project: July 2012 Rico Water Sampling
Pace Project No.: 60125518

Sample: MW-1 DEEP **Lab ID: 60125518021** Collected: 07/17/12 08:30 Received: 07/19/12 10:20 Matrix: Water

Parameters	Results	Units	Report Limit	DF	Prepared	Analyzed	CAS No.	Qual
200.8 MET ICPMS, Dissolved	Analytical Method: EPA 200.8							
Manganese, Dissolved	**10.2**	ug/L	0.50	1	07/26/12 11:07	08/25/12 22:02	7439-96-5	
Molybdenum, Dissolved	**10.1**	ug/L	0.50	1	07/26/12 11:07	08/25/12 22:02	7439-98-7	
Nickel, Dissolved	ND	ug/L	0.50	1	07/26/12 11:07	08/25/12 22:02	7440-02-0	
Potassium, Dissolved	**7310**	ug/L	20.0	1	07/26/12 11:07	08/25/12 22:02	7440-09-7	
Selenium, Dissolved	**10.7**	ug/L	0.50	1	07/26/12 11:07	08/25/12 22:02	7782-49-2	
Silver, Dissolved	ND	ug/L	0.50	1	07/26/12 11:07	08/25/12 22:02	7440-22-4	
Sodium, Dissolved	**17200**	ug/L	50.0	1	07/26/12 11:07	08/25/12 22:02	7440-23-5	
Thallium, Dissolved	ND	ug/L	0.10	1	07/26/12 11:07	08/29/12 00:34	7440-28-0	
Vanadium, Dissolved	**0.31**	ug/L	0.10	1	07/26/12 11:07	08/25/12 22:02	7440-62-2	
Zinc, Dissolved	**759**	ug/L	50.0	10	07/26/12 11:07	08/25/12 22:07	7440-66-6	
200.8 Potentially Diss. Metals	Analytical Method: EPA 200.8 Preparation Method: EPA 200.8							
Aluminum, Dissolved	**121**	ug/L	50.0	1	07/26/12 09:45	07/27/12 13:44	7429-90-5	
Antimony, Dissolved	**0.72J**	ug/L	1.0	1	07/26/12 09:45	07/27/12 13:44	7440-36-0	
Arsenic, Dissolved	**1.4**	ug/L	1.0	1	07/26/12 09:45	07/27/12 13:44	7440-38-2	
Barium, Dissolved	**19.7**	ug/L	5.0	5	07/26/12 09:45	07/26/12 19:25	7440-39-3	
Beryllium, Dissolved	ND	ug/L	0.50	1	07/26/12 09:45	07/27/12 13:44	7440-41-7	
Cadmium, Dissolved	**2.3**	ug/L	0.50	1	07/26/12 09:45	07/27/12 13:44	7440-43-9	
Chromium, Dissolved	**3.9**	ug/L	1.0	1	07/26/12 09:45	07/27/12 13:44	7440-47-3	
Cobalt, Dissolved	**0.20J**	ug/L	1.0	1	07/26/12 09:45	07/27/12 13:44	7440-48-4	
Copper, Dissolved	**8.8**	ug/L	5.0	5	07/26/12 09:45	07/26/12 19:25	7440-50-8	
Iron, Dissolved	**573**	ug/L	250	5	07/26/12 09:45	07/26/12 19:25	7439-89-6	
Lead, Dissolved	**14.0**	ug/L	5.0	5	07/26/12 09:45	07/26/12 19:25	7439-92-1	
Manganese, Dissolved	**46.7**	ug/L	5.0	5	07/26/12 09:45	07/26/12 19:25	7439-96-5	
Molybdenum, Dissolved	**9.4**	ug/L	1.0	1	07/26/12 09:45	07/27/12 13:44	7439-98-7	
Nickel, Dissolved	ND	ug/L	1.0	1	07/26/12 09:45	07/27/12 13:44	7440-02-0	
Selenium, Dissolved	**10.1**	ug/L	1.0	1	07/26/12 09:45	07/27/12 13:44	7782-49-2	
Silver, Dissolved	ND	ug/L	0.50	1	07/26/12 09:45	07/27/12 13:44	7440-22-4	
Thallium, Dissolved	**0.15J**	ug/L	1.0	1	07/26/12 09:45	07/27/12 13:44	7440-28-0	
Vanadium, Dissolved	ND	ug/L	1.0	1	07/26/12 09:45	07/27/12 13:44	7440-62-2	
Zinc, Dissolved	**810**	ug/L	50.0	5	07/30/12 16:00	07/31/12 12:05	7440-66-6	
245.1 Mercury	Analytical Method: EPA 245.1							
Mercury	ND	ug/L	0.20	1	07/25/12 00:00	07/26/12 12:03	7439-97-6	M1
245.1 Mercury, Dissolved	Analytical Method: EPA 245.1							
Mercury, Dissolved	ND	ug/L	0.20	1	07/25/12 00:00	07/26/12 11:16	7439-97-6	M1
245.1 Potentially Diss Mercury	Analytical Method: EPA 245.1 Preparation Method: EPA 245.1							
Mercury, Dissolved	ND	ug/L	0.20	1	07/31/12 16:30	08/02/12 14:32	7439-97-6	
2510B Specific Conductance	Analytical Method: SM 2510B							
Specific Conductance	**1150**	umhos/cm	10.0	1		07/27/12 12:19		
Salinity	Analytical Method: Calculated							
Salinity (as dissolved solids)	**738**	mg/L	6.0	1		08/02/12 12:55		

This report shall not be reproduced, except in full,
without the written consent of Pace Analytical Services, Inc..

Pace Analytical Services, Inc.
9608 Loiret Blvd.
Lenexa, KS 66219
(913)599-5665

ANALYTICAL RESULTS

Project: July 2012 Rico Water Sampling
Pace Project No.: 60125518

Sample: MW-1 DEEP **Lab ID: 60125518021** Collected: 07/17/12 08:30 Received: 07/19/12 10:20 Matrix: Water

Parameters	Results	Units	Report Limit	DF	Prepared	Analyzed	CAS No.	Qual
Salinity	Analytical Method: Calculated							
Salinity (as seawater)	**0.57**	PSU	0.010	1		08/02/12 12:55		
2320B Alkalinity	Analytical Method: SM 2320B							
Alkalinity,Bicarbonate (CaCO3)	**93.1**	mg/L	20.0	1		07/30/12 09:00		
Alkalinity, Carbonate (CaCO3)	ND	mg/L	20.0	1		07/30/12 09:00		
Alkalinity, Total as CaCO3	**93.1**	mg/L	20.0	1		07/30/12 09:00		
2540C Total Dissolved Solids	Analytical Method: SM 2540C							
Total Dissolved Solids	**959**	mg/L	5.0	1		07/20/12 10:53		
2540D Total Suspended Solids	Analytical Method: SM 2540D							
Total Suspended Solids	**12.0**	mg/L	5.0	1		07/20/12 08:48		
4500H+ pH, Electrometric	Analytical Method: SM 4500-H+B							
pH at 25 Degrees C	**7.7**	Std. Units	0.10	1		07/20/12 13:29		H6
4500S2D Sulfide, Total	Analytical Method: SM 4500-S-2 D							
Sulfide, Total	ND	mg/L	0.050	1		07/24/12 16:51	18496-25-8	
Oxidation/Reduction Potential	Analytical Method: SM 2580B							
Oxidation/Reduction Potential	**107**	mV	1.0	1		07/24/12 11:30		
300.0 IC Anions 28 Days	Analytical Method: EPA 300.0							
Sulfate	**541**	mg/L	50.0	50		07/27/12 20:25	14808-79-8	M6
353.2 Nitrogen, NO2/NO3 pres.	Analytical Method: EPA 353.2							
Nitrogen, NO2 plus NO3	ND	mg/L	0.10	1		07/27/12 11:36		
4500CNE Cyanide, Total	Analytical Method: SM 4500-CN-E							
Cyanide	ND	mg/L	0.0050	1		07/25/12 17:50	57-12-5	
5310C TOC	Analytical Method: SM 5310C							
Total Organic Carbon	**0.81**	mg/L	0.50	1		07/31/12 00:49	7440-44-0	

This report shall not be reproduced, except in full,
without the written consent of Pace Analytical Services, Inc..

Pace Analytical Services, Inc.
9608 Loiret Blvd.
Lenexa, KS 66219
(913)599-5665

ANALYTICAL RESULTS

Project: July 2012 Rico Water Sampling
Pace Project No.: 60125518

Sample: MW-2 DEEP **Lab ID: 60125518022** Collected: 07/17/12 08:45 Received: 07/19/12 10:20 Matrix: Water

Parameters	Results	Units	Report Limit	DF	Prepared	Analyzed	CAS No.	Qual
200.7 Potentially Diss. Metals	Analytical Method: EPA 200.7 Preparation Method: EPA 200.7							
Calcium, Dissolved	**237000**	ug/L	100	1	07/26/12 10:00	07/30/12 13:05	7440-70-2	M1
Magnesium, Dissolved	**21800**	ug/L	50.0	1	07/26/12 10:00	07/30/12 13:05	7439-95-4	
Potassium, Dissolved	**1760**	ug/L	500	1	07/26/12 10:00	07/30/12 13:05	7440-09-7	
Sodium, Dissolved	**10600**	ug/L	500	1	07/26/12 10:00	07/30/12 13:05	7440-23-5	
200.8 MET ICPMS	Analytical Method: EPA 200.8							
Aluminum	**156**	ug/L	4.0	1	07/25/12 17:11	08/19/12 16:03	7429-90-5	
Antimony	ND	ug/L	0.50	1	07/25/12 17:11	08/19/12 16:03	7440-36-0	
Arsenic	ND	ug/L	0.50	1	07/25/12 17:11	08/19/12 16:03	7440-38-2	
Barium	**14.8**	ug/L	0.30	1	07/25/12 17:11	08/19/12 16:03	7440-39-3	
Beryllium	ND	ug/L	0.20	1	07/25/12 17:11	08/19/12 16:03	7440-41-7	
Cadmium	**0.80**	ug/L	0.080	1	07/25/12 17:11	08/19/12 16:03	7440-43-9	
Calcium	**264000**	ug/L	2000	100	07/25/12 17:11	08/19/12 16:13	7440-70-2	
Chromium	**0.70**	ug/L	0.50	1	07/25/12 17:11	08/19/12 16:03	7440-47-3	
Cobalt	ND	ug/L	0.50	1	07/25/12 17:11	08/19/12 16:03	7440-48-4	
Copper	**1.6**	ug/L	0.50	1	07/25/12 17:11	08/19/12 16:03	7440-50-8	
Iron	**338**	ug/L	50.0	1	07/25/12 17:11	08/19/12 16:03	7439-89-6	
Lead	**3.5**	ug/L	0.10	1	07/25/12 17:11	08/19/12 16:03	7439-92-1	
Magnesium	**21700**	ug/L	5.0	1	07/25/12 17:11	08/19/12 16:03	7439-95-4	
Manganese	**9.6**	ug/L	0.50	1	07/25/12 17:11	08/19/12 16:03	7439-96-5	
Molybdenum	**5.6**	ug/L	0.50	1	07/25/12 17:11	08/19/12 16:03	7439-98-7	
Nickel	**0.80**	ug/L	0.50	1	07/25/12 17:11	08/19/12 16:03	7440-02-0	
Potassium	**1920**	ug/L	20.0	1	07/25/12 17:11	08/19/12 16:03	7440-09-7	
Selenium	**1.7**	ug/L	0.50	1	07/25/12 17:11	08/19/12 16:03	7782-49-2	
Silica	**11400**	ug/L	535	10	07/25/12 17:11	08/19/12 16:08	7631-86-9	
Silver	ND	ug/L	0.50	1	07/25/12 17:11	08/19/12 16:03	7440-22-4	
Sodium	**11100**	ug/L	50.0	1	07/25/12 17:11	08/19/12 16:03	7440-23-5	
Thallium	ND	ug/L	0.10	1	07/25/12 17:11	08/19/12 16:03	7440-28-0	
Total Hardness by 2340B	**748000**	ug/L	7100	100	07/25/12 17:11	08/19/12 16:13		
Vanadium	**0.24**	ug/L	0.10	1	07/25/12 17:11	08/19/12 16:03	7440-62-2	
Zinc	**26.3**	ug/L	5.0	1	07/25/12 17:11	08/19/12 16:03	7440-66-6	
200.8 MET ICPMS, Dissolved	Analytical Method: EPA 200.8							
Aluminum, Dissolved	ND	ug/L	4.0	1	07/26/12 11:07	08/25/12 22:18	7429-90-5	
Antimony, Dissolved	ND	ug/L	0.50	1	07/26/12 11:07	08/25/12 22:18	7440-36-0	
Arsenic, Dissolved	ND	ug/L	0.50	1	07/26/12 11:07	08/25/12 22:18	7440-38-2	
Barium, Dissolved	**12.1**	ug/L	0.30	1	07/26/12 11:07	08/25/12 22:18	7440-39-3	
Beryllium, Dissolved	ND	ug/L	0.20	1	07/26/12 11:07	08/29/12 00:40	7440-41-7	
Cadmium, Dissolved	**0.74**	ug/L	0.080	1	07/26/12 11:07	08/25/12 22:18	7440-43-9	
Calcium, Dissolved	**264000**	ug/L	2000	100	07/26/12 11:07	08/25/12 22:33	7440-70-2	M6
Chromium, Dissolved	**0.58**	ug/L	0.50	1	07/26/12 11:07	08/25/12 22:18	7440-47-3	
Cobalt, Dissolved	ND	ug/L	0.50	1	07/26/12 11:07	08/25/12 22:18	7440-48-4	
Copper, Dissolved	ND	ug/L	0.50	1	07/26/12 11:07	08/25/12 22:18	7440-50-8	
Iron, Dissolved	ND	ug/L	50.0	1	07/26/12 11:07	08/25/12 22:18	7439-89-6	
Lead, Dissolved	ND	ug/L	0.10	1	07/26/12 11:07	08/25/12 22:18	7439-92-1	
Magnesium, Dissolved	**23400**	ug/L	25.0	5	07/26/12 11:07	08/25/12 22:23	7439-95-4	M6

This report shall not be reproduced, except in full,
without the written consent of Pace Analytical Services, Inc..

Pace Analytical Services, Inc.
9608 Loiret Blvd.
Lenexa, KS 66219
(913)599-5665

ANALYTICAL RESULTS

Project: July 2012 Rico Water Sampling
Pace Project No.: 60125518

Sample: MW-2 DEEP **Lab ID: 60125518022** Collected: 07/17/12 08:45 Received: 07/19/12 10:20 Matrix: Water

Parameters	Results	Units	Report Limit	DF	Prepared	Analyzed	CAS No.	Qual
200.8 MET ICPMS, Dissolved	Analytical Method: EPA 200.8							
Manganese, Dissolved	**1.7**	ug/L	0.50	1	07/26/12 11:07	08/25/12 22:18	7439-96-5	
Molybdenum, Dissolved	**5.4**	ug/L	0.50	1	07/26/12 11:07	08/25/12 22:18	7439-98-7	
Nickel, Dissolved	ND	ug/L	0.50	1	07/26/12 11:07	08/25/12 22:18	7440-02-0	
Potassium, Dissolved	**1840**	ug/L	20.0	1	07/26/12 11:07	08/25/12 22:18	7440-09-7	
Selenium, Dissolved	**1.8**	ug/L	0.50	1	07/26/12 11:07	08/25/12 22:18	7782-49-2	
Silver, Dissolved	ND	ug/L	0.50	1	07/26/12 11:07	08/25/12 22:18	7440-22-4	
Sodium, Dissolved	**11400**	ug/L	50.0	1	07/26/12 11:07	08/25/12 22:18	7440-23-5	M6
Thallium, Dissolved	ND	ug/L	0.10	1	07/26/12 11:07	08/29/12 00:40	7440-28-0	
Vanadium, Dissolved	ND	ug/L	0.10	1	07/26/12 11:07	08/25/12 22:18	7440-62-2	
Zinc, Dissolved	**16.2**	ug/L	5.0	1	07/26/12 11:07	08/25/12 22:18	7440-66-6	
200.8 Potentially Diss. Metals	Analytical Method: EPA 200.8 Preparation Method: EPA 200.8							
Aluminum, Dissolved	**60.3**	ug/L	50.0	1	07/26/12 09:45	07/27/12 14:01	7429-90-5	
Antimony, Dissolved	**0.17J**	ug/L	1.0	1	07/26/12 09:45	07/27/12 14:01	7440-36-0	
Arsenic, Dissolved	**0.33J**	ug/L	1.0	1	07/26/12 09:45	07/27/12 14:01	7440-38-2	
Barium, Dissolved	**13.3**	ug/L	1.0	1	07/26/12 09:45	07/27/12 14:01	7440-39-3	
Beryllium, Dissolved	ND	ug/L	0.50	1	07/26/12 09:45	07/27/12 14:01	7440-41-7	
Cadmium, Dissolved	**0.78**	ug/L	0.50	1	07/26/12 09:45	07/27/12 14:01	7440-43-9	
Chromium, Dissolved	**1.2**	ug/L	1.0	1	07/26/12 09:45	07/27/12 14:01	7440-47-3	
Cobalt, Dissolved	**0.060J**	ug/L	1.0	1	07/26/12 09:45	07/27/12 14:01	7440-48-4	
Copper, Dissolved	**2.6**	ug/L	1.0	1	07/26/12 09:45	07/30/12 12:21	7440-50-8	
Iron, Dissolved	**235**	ug/L	50.0	1	07/26/12 09:45	07/27/12 14:01	7439-89-6	
Lead, Dissolved	**3.9**	ug/L	1.0	1	07/26/12 09:45	07/27/12 14:01	7439-92-1	
Manganese, Dissolved	**11.0**	ug/L	1.0	1	07/26/12 09:45	07/27/12 14:01	7439-96-5	
Molybdenum, Dissolved	**5.2**	ug/L	1.0	1	07/26/12 09:45	07/27/12 14:01	7439-98-7	
Nickel, Dissolved	ND	ug/L	2.0	2	07/26/12 09:45	07/30/12 13:15	7440-02-0	D3
Selenium, Dissolved	**1.6**	ug/L	1.0	1	07/26/12 09:45	07/27/12 14:01	7782-49-2	
Silver, Dissolved	ND	ug/L	0.50	1	07/26/12 09:45	07/27/12 14:01	7440-22-4	
Thallium, Dissolved	**0.15J**	ug/L	1.0	1	07/26/12 09:45	07/27/12 14:01	7440-28-0	
Vanadium, Dissolved	ND	ug/L	1.0	1	07/26/12 09:45	07/27/12 14:01	7440-62-2	
Zinc, Dissolved	**27.4**	ug/L	10.0	1	07/30/12 16:00	07/31/12 12:08	7440-66-6	
245.1 Mercury	Analytical Method: EPA 245.1							
Mercury	ND	ug/L	0.20	1	07/25/12 00:00	07/26/12 12:10	7439-97-6	
245.1 Mercury, Dissolved	Analytical Method: EPA 245.1							
Mercury, Dissolved	ND	ug/L	0.20	1	07/25/12 00:00	07/26/12 11:29	7439-97-6	
245.1 Potentially Diss Mercury	Analytical Method: EPA 245.1 Preparation Method: EPA 245.1							
Mercury, Dissolved	ND	ug/L	0.20	1	07/31/12 16:30	08/02/12 14:34	7439-97-6	
2510B Specific Conductance	Analytical Method: SM 2510B							
Specific Conductance	**1300**	umhos/cm	10.0	1		07/27/12 12:20		
Salinity	Analytical Method: Calculated							
Salinity (as dissolved solids)	**830**	mg/L	6.0	1		08/02/12 12:55		

This report shall not be reproduced, except in full,
without the written consent of Pace Analytical Services, Inc..

Pace Analytical Services, Inc.
9608 Loiret Blvd.
Lenexa, KS 66219
(913)599-5665

ANALYTICAL RESULTS

Project: July 2012 Rico Water Sampling
Pace Project No.: 60125518

Sample: MW-2 DEEP **Lab ID: 60125518022** Collected: 07/17/12 08:45 Received: 07/19/12 10:20 Matrix: Water

Parameters	Results	Units	Report Limit	DF	Prepared	Analyzed	CAS No.	Qual
Salinity	Analytical Method: Calculated							
Salinity (as seawater)	**0.65**	PSU	0.010	1		08/02/12 12:55		
2320B Alkalinity	Analytical Method: SM 2320B							
Alkalinity,Bicarbonate (CaCO3)	**81.7**	mg/L	20.0	1		07/31/12 16:00		
Alkalinity, Carbonate (CaCO3)	ND	mg/L	20.0	1		07/31/12 16:00		
Alkalinity, Total as CaCO3	**81.7**	mg/L	20.0	1		07/31/12 16:00		
2540C Total Dissolved Solids	Analytical Method: SM 2540C							
Total Dissolved Solids	**1080**	mg/L	5.0	1		07/20/12 10:54		
2540D Total Suspended Solids	Analytical Method: SM 2540D							
Total Suspended Solids	**9.0**	mg/L	5.0	1		07/20/12 08:48		
4500H+ pH, Electrometric	Analytical Method: SM 4500-H+B							
pH at 25 Degrees C	**7.6**	Std. Units	0.10	1		07/20/12 13:29		H6
4500S2D Sulfide, Total	Analytical Method: SM 4500-S-2 D							
Sulfide, Total	ND	mg/L	0.050	1		07/24/12 16:51	18496-25-8	
Oxidation/Reduction Potential	Analytical Method: SM 2580B							
Oxidation/Reduction Potential	**82.0**	mV	1.0	1		07/24/12 11:30		
300.0 IC Anions 28 Days	Analytical Method: EPA 300.0							
Sulfate	**676**	mg/L	50.0	50		07/28/12 13:31	14808-79-8	
353.2 Nitrogen, NO2/NO3 pres.	Analytical Method: EPA 353.2							
Nitrogen, NO2 plus NO3	ND	mg/L	0.10	1		07/27/12 11:39		
4500CNE Cyanide, Total	Analytical Method: SM 4500-CN-E							
Cyanide	**0.012**	mg/L	0.0050	1		07/25/12 17:52	57-12-5	
5310C TOC	Analytical Method: SM 5310C							
Total Organic Carbon	ND	mg/L	0.50	1		07/31/12 01:07	7440-44-0	

This report shall not be reproduced, except in full,
without the written consent of Pace Analytical Services, Inc..

Pace Analytical Services, Inc.
9608 Loiret Blvd.
Lenexa, KS 66219
(913)599-5665

ANALYTICAL RESULTS

Project: July 2012 Rico Water Sampling
Pace Project No.: 60125518

Sample: MW-3 DEEP **Lab ID: 60125518023** Collected: 07/17/12 09:30 Received: 07/19/12 10:20 Matrix: Water

Parameters	Results	Units	Report Limit	DF	Prepared	Analyzed	CAS No.	Qual
200.7 Potentially Diss. Metals	Analytical Method: EPA 200.7 Preparation Method: EPA 200.7							
Calcium, Dissolved	**218000**	ug/L	100	1	07/26/12 10:00	07/30/12 13:11	7440-70-2	
Magnesium, Dissolved	**22200**	ug/L	50.0	1	07/26/12 10:00	07/30/12 13:11	7439-95-4	
Potassium, Dissolved	**1980**	ug/L	500	1	07/26/12 10:00	07/30/12 13:11	7440-09-7	
Sodium, Dissolved	**11100**	ug/L	500	1	07/26/12 10:00	07/30/12 13:11	7440-23-5	
200.8 MET ICPMS	Analytical Method: EPA 200.8							
Aluminum	**330**	ug/L	4.0	1	07/25/12 17:11	08/19/12 16:40	7429-90-5	
Antimony	ND	ug/L	0.50	1	07/25/12 17:11	08/19/12 16:40	7440-36-0	
Arsenic	**1.2**	ug/L	0.50	1	07/25/12 17:11	08/19/12 16:40	7440-38-2	
Barium	**24.2**	ug/L	0.30	1	07/25/12 17:11	08/19/12 16:40	7440-39-3	
Beryllium	ND	ug/L	0.20	1	07/25/12 17:11	08/19/12 16:40	7440-41-7	
Cadmium	**0.51**	ug/L	0.080	1	07/25/12 17:11	08/19/12 16:40	7440-43-9	
Calcium	**266000**	ug/L	2000	100	07/25/12 17:11	08/19/12 16:50	7440-70-2	
Chromium	**0.84**	ug/L	0.50	1	07/25/12 17:11	08/19/12 16:40	7440-47-3	
Cobalt	**0.93**	ug/L	0.50	1	07/25/12 17:11	08/19/12 16:40	7440-48-4	
Copper	**4.6**	ug/L	0.50	1	07/25/12 17:11	08/19/12 16:40	7440-50-8	
Iron	**2120**	ug/L	50.0	1	07/25/12 17:11	08/19/12 16:40	7439-89-6	
Lead	**5.8**	ug/L	0.10	1	07/25/12 17:11	08/19/12 16:40	7439-92-1	
Magnesium	**25300**	ug/L	50.0	10	07/25/12 17:11	08/19/12 16:45	7439-95-4	
Manganese	**1160**	ug/L	5.0	10	07/25/12 17:11	08/19/12 16:45	7439-96-5	
Molybdenum	**12.9**	ug/L	0.50	1	07/25/12 17:11	08/19/12 16:40	7439-98-7	
Nickel	**1.3**	ug/L	0.50	1	07/25/12 17:11	08/19/12 16:40	7440-02-0	
Potassium	**2380**	ug/L	20.0	1	07/25/12 17:11	08/19/12 16:40	7440-09-7	
Selenium	ND	ug/L	0.50	1	07/25/12 17:11	08/19/12 16:40	7782-49-2	
Silica	**13500**	ug/L	535	10	07/25/12 17:11	08/19/12 16:45	7631-86-9	
Silver	ND	ug/L	0.50	1	07/25/12 17:11	08/19/12 16:40	7440-22-4	
Sodium	**12500**	ug/L	50.0	1	07/25/12 17:11	08/19/12 16:40	7440-23-5	
Thallium	ND	ug/L	0.10	1	07/25/12 17:11	08/19/12 16:40	7440-28-0	
Total Hardness by 2340B	**769000**	ug/L	7100	100	07/25/12 17:11	08/19/12 16:50		
Vanadium	**0.64**	ug/L	0.10	1	07/25/12 17:11	08/19/12 16:40	7440-62-2	
Zinc	**108**	ug/L	5.0	1	07/25/12 17:11	08/19/12 16:40	7440-66-6	
200.8 MET ICPMS, Dissolved	Analytical Method: EPA 200.8							
Aluminum, Dissolved	**4.1**	ug/L	4.0	1	07/26/12 11:07	08/25/12 22:59	7429-90-5	
Antimony, Dissolved	ND	ug/L	0.50	1	07/26/12 11:07	08/25/12 22:59	7440-36-0	
Arsenic, Dissolved	ND	ug/L	0.50	1	07/26/12 11:07	08/25/12 22:59	7440-38-2	
Barium, Dissolved	**16.5**	ug/L	0.30	1	07/26/12 11:07	08/25/12 22:59	7440-39-3	
Beryllium, Dissolved	ND	ug/L	0.20	1	07/26/12 11:07	08/29/12 00:57	7440-41-7	
Cadmium, Dissolved	ND	ug/L	0.080	1	07/26/12 11:07	08/25/12 22:59	7440-43-9	
Calcium, Dissolved	**251000**	ug/L	2000	100	07/26/12 11:07	08/25/12 23:09	7440-70-2	
Chromium, Dissolved	ND	ug/L	0.50	1	07/26/12 11:07	08/25/12 22:59	7440-47-3	
Cobalt, Dissolved	**0.69**	ug/L	0.50	1	07/26/12 11:07	08/25/12 22:59	7440-48-4	
Copper, Dissolved	ND	ug/L	0.50	1	07/26/12 11:07	08/25/12 22:59	7440-50-8	
Iron, Dissolved	**630**	ug/L	50.0	1	07/26/12 11:07	08/25/12 22:59	7439-89-6	
Lead, Dissolved	ND	ug/L	0.10	1	07/26/12 11:07	08/25/12 22:59	7439-92-1	
Magnesium, Dissolved	**24400**	ug/L	25.0	5	07/26/12 11:07	08/29/12 01:02	7439-95-4	

This report shall not be reproduced, except in full,
without the written consent of Pace Analytical Services, Inc..

Pace Analytical Services, Inc.
9608 Loiret Blvd.
Lenexa, KS 66219
(913)599-5665

ANALYTICAL RESULTS

Project: July 2012 Rico Water Sampling
Pace Project No.: 60125518

Sample: MW-3 DEEP **Lab ID: 60125518023** Collected: 07/17/12 09:30 Received: 07/19/12 10:20 Matrix: Water

Parameters	Results	Units	Report Limit	DF	Prepared	Analyzed	CAS No.	Qual
200.8 MET ICPMS, Dissolved	Analytical Method: EPA 200.8							
Manganese, Dissolved	**1100**	ug/L	5.0	10	07/26/12 11:07	08/25/12 23:04	7439-96-5	
Molybdenum, Dissolved	**11.8**	ug/L	0.50	1	07/26/12 11:07	08/25/12 22:59	7439-98-7	
Nickel, Dissolved	**0.59**	ug/L	0.50	1	07/26/12 11:07	08/25/12 22:59	7440-02-0	
Potassium, Dissolved	**2180**	ug/L	20.0	1	07/26/12 11:07	08/25/12 22:59	7440-09-7	
Selenium, Dissolved	ND	ug/L	0.50	1	07/26/12 11:07	08/25/12 22:59	7782-49-2	
Silver, Dissolved	ND	ug/L	0.50	1	07/26/12 11:07	08/25/12 22:59	7440-22-4	
Sodium, Dissolved	**12700**	ug/L	50.0	1	07/26/12 11:07	08/25/12 22:59	7440-23-5	
Thallium, Dissolved	ND	ug/L	0.10	1	07/26/12 11:07	08/29/12 00:57	7440-28-0	
Vanadium, Dissolved	ND	ug/L	0.10	1	07/26/12 11:07	08/25/12 22:59	7440-62-2	
Zinc, Dissolved	**52.4**	ug/L	5.0	1	07/26/12 11:07	08/25/12 22:59	7440-66-6	
200.8 Potentially Diss. Metals	Analytical Method: EPA 200.8 Preparation Method: EPA 200.8							
Aluminum, Dissolved	**113**	ug/L	50.0	1	07/26/12 09:45	07/27/12 14:05	7429-90-5	
Antimony, Dissolved	**0.15J**	ug/L	1.0	1	07/26/12 09:45	07/27/12 14:05	7440-36-0	
Arsenic, Dissolved	**0.90J**	ug/L	1.0	1	07/26/12 09:45	07/27/12 14:05	7440-38-2	
Barium, Dissolved	**19.7**	ug/L	5.0	5	07/26/12 09:45	07/26/12 19:46	7440-39-3	
Beryllium, Dissolved	ND	ug/L	0.50	1	07/26/12 09:45	07/27/12 14:05	7440-41-7	
Cadmium, Dissolved	**0.42J**	ug/L	0.50	1	07/26/12 09:45	07/27/12 14:05	7440-43-9	
Chromium, Dissolved	**1.1**	ug/L	1.0	1	07/26/12 09:45	07/27/12 14:05	7440-47-3	
Cobalt, Dissolved	**0.73J**	ug/L	1.0	1	07/26/12 09:45	07/27/12 14:05	7440-48-4	
Copper, Dissolved	**4.0**	ug/L	1.0	1	07/26/12 09:45	07/30/12 12:24	7440-50-8	
Iron, Dissolved	**1720**	ug/L	250	5	07/26/12 09:45	07/26/12 19:46	7439-89-6	
Lead, Dissolved	**6.1**	ug/L	5.0	5	07/26/12 09:45	07/26/12 19:46	7439-92-1	
Manganese, Dissolved	**1050**	ug/L	5.0	5	07/26/12 09:45	07/26/12 19:46	7439-96-5	
Molybdenum, Dissolved	**11.0**	ug/L	1.0	1	07/26/12 09:45	07/27/12 14:05	7439-98-7	
Nickel, Dissolved	ND	ug/L	2.0	2	07/26/12 09:45	07/30/12 13:18	7440-02-0	D3
Selenium, Dissolved	ND	ug/L	1.0	1	07/26/12 09:45	07/27/12 14:05	7782-49-2	
Silver, Dissolved	ND	ug/L	0.50	1	07/26/12 09:45	07/27/12 14:05	7440-22-4	
Thallium, Dissolved	**0.070J**	ug/L	1.0	1	07/26/12 09:45	07/27/12 14:05	7440-28-0	
Vanadium, Dissolved	ND	ug/L	1.0	1	07/26/12 09:45	07/27/12 14:05	7440-62-2	
Zinc, Dissolved	**95.0**	ug/L	20.0	2	07/30/12 16:00	07/31/12 12:11	7440-66-6	
245.1 Mercury	Analytical Method: EPA 245.1							
Mercury	ND	ug/L	0.20	1	07/25/12 00:00	07/26/12 12:12	7439-97-6	
245.1 Mercury, Dissolved	Analytical Method: EPA 245.1							
Mercury, Dissolved	ND	ug/L	0.20	1	07/25/12 00:00	07/26/12 11:35	7439-97-6	
245.1 Potentially Diss Mercury	Analytical Method: EPA 245.1 Preparation Method: EPA 245.1							
Mercury, Dissolved	ND	ug/L	0.20	1	07/31/12 16:30	08/02/12 14:36	7439-97-6	
2510B Specific Conductance	Analytical Method: SM 2510B							
Specific Conductance	**1260**	umhos/cm	10.0	1		07/27/12 12:22		
Salinity	Analytical Method: Calculated							
Salinity (as dissolved solids)	**808**	mg/L	6.0	1		08/02/12 12:55		

This report shall not be reproduced, except in full,
without the written consent of Pace Analytical Services, Inc..

Pace Analytical Services, Inc.
9608 Loiret Blvd.
Lenexa, KS 66219
(913)599-5665

ANALYTICAL RESULTS

Project: July 2012 Rico Water Sampling
Pace Project No.: 60125518

Sample: MW-3 DEEP **Lab ID: 60125518023** Collected: 07/17/12 09:30 Received: 07/19/12 10:20 Matrix: Water

Parameters	Results	Units	Report Limit	DF	Prepared	Analyzed	CAS No.	Qual
Salinity	Analytical Method: Calculated							
Salinity (as seawater)	**0.63**	PSU	0.010	1		08/02/12 12:55		
2320B Alkalinity	Analytical Method: SM 2320B							
Alkalinity,Bicarbonate (CaCO3)	**91.2**	mg/L	20.0	1		07/31/12 16:00		
Alkalinity, Carbonate (CaCO3)	ND	mg/L	20.0	1		07/31/12 16:00		
Alkalinity, Total as CaCO3	**91.2**	mg/L	20.0	1		07/31/12 16:00		
2540C Total Dissolved Solids	Analytical Method: SM 2540C							
Total Dissolved Solids	**1030**	mg/L	5.0	1		07/20/12 10:54		
2540D Total Suspended Solids	Analytical Method: SM 2540D							
Total Suspended Solids	**8.0**	mg/L	5.0	1		07/20/12 08:49		
4500H+ pH, Electrometric	Analytical Method: SM 4500-H+B							
pH at 25 Degrees C	**7.5**	Std. Units	0.10	1		07/20/12 13:29		H6
4500S2D Sulfide, Total	Analytical Method: SM 4500-S-2 D							
Sulfide, Total	ND	mg/L	0.050	1		07/24/12 16:57	18496-25-8	
Oxidation/Reduction Potential	Analytical Method: SM 2580B							
Oxidation/Reduction Potential	**82.4**	mV	1.0	1		07/24/12 11:30		
300.0 IC Anions 28 Days	Analytical Method: EPA 300.0							
Sulfate	**660**	mg/L	50.0	50		07/28/12 13:49	14808-79-8	
353.2 Nitrogen, NO2/NO3 pres.	Analytical Method: EPA 353.2							
Nitrogen, NO2 plus NO3	ND	mg/L	0.10	1		07/27/12 11:40		
4500CNE Cyanide, Total	Analytical Method: SM 4500-CN-E							
Cyanide	ND	mg/L	0.0050	1		07/25/12 17:54	57-12-5	
5310C TOC	Analytical Method: SM 5310C							
Total Organic Carbon	ND	mg/L	0.50	1		07/31/12 01:25	7440-44-0	

This report shall not be reproduced, except in full,
without the written consent of Pace Analytical Services, Inc..

Pace Analytical Services, Inc.
9608 Loiret Blvd.
Lenexa, KS 66219
(913)599-5665

ANALYTICAL RESULTS

Project: July 2012 Rico Water Sampling
Pace Project No.: 60125518

Sample: MW-4 SHALLOW **Lab ID: 60125518024** Collected: 07/17/12 10:00 Received: 07/19/12 10:20 Matrix: Water

Parameters	Results	Units	Report Limit	DF	Prepared	Analyzed	CAS No.	Qual
200.7 Potentially Diss. Metals	Analytical Method: EPA 200.7 Preparation Method: EPA 200.7							
Calcium, Dissolved	**250000**	ug/L	100	1	07/26/12 10:00	07/30/12 13:14	7440-70-2	
Magnesium, Dissolved	**27800**	ug/L	50.0	1	07/26/12 10:00	07/30/12 13:14	7439-95-4	
Potassium, Dissolved	**3620**	ug/L	500	1	07/26/12 10:00	07/30/12 13:14	7440-09-7	
Sodium, Dissolved	**6390**	ug/L	500	1	07/26/12 10:00	07/30/12 13:14	7440-23-5	
200.8 MET ICPMS	Analytical Method: EPA 200.8							
Aluminum	**5840**	ug/L	4.0	1	07/25/12 17:11	08/19/12 17:00	7429-90-5	
Antimony	ND	ug/L	0.50	1	07/25/12 17:11	08/19/12 17:00	7440-36-0	
Arsenic	**5.7**	ug/L	0.50	1	07/25/12 17:11	08/19/12 17:00	7440-38-2	
Barium	**108**	ug/L	0.30	1	07/25/12 17:11	08/19/12 17:00	7440-39-3	
Beryllium	**1.2**	ug/L	0.20	1	07/25/12 17:11	08/21/12 18:17	7440-41-7	
Cadmium	**2.3**	ug/L	0.080	1	07/25/12 17:11	08/19/12 17:00	7440-43-9	
Calcium	**297000**	ug/L	2000	100	07/25/12 17:11	08/19/12 17:10	7440-70-2	
Chromium	**8.0**	ug/L	0.50	1	07/25/12 17:11	08/19/12 17:00	7440-47-3	
Cobalt	**10.9**	ug/L	0.50	1	07/25/12 17:11	08/19/12 17:00	7440-48-4	
Copper	**65.5**	ug/L	0.50	1	07/25/12 17:11	08/19/12 17:00	7440-50-8	
Iron	**7410**	ug/L	50.0	1	07/25/12 17:11	08/19/12 17:00	7439-89-6	
Lead	**120**	ug/L	0.10	1	07/25/12 17:11	08/19/12 17:00	7439-92-1	
Magnesium	**31300**	ug/L	50.0	10	07/25/12 17:11	08/19/12 17:05	7439-95-4	
Manganese	**1140**	ug/L	5.0	10	07/25/12 17:11	08/19/12 17:05	7439-96-5	
Molybdenum	**1.5**	ug/L	0.50	1	07/25/12 17:11	08/19/12 17:00	7439-98-7	
Nickel	**7.8**	ug/L	0.50	1	07/25/12 17:11	08/19/12 17:00	7440-02-0	
Potassium	**4350**	ug/L	20.0	1	07/25/12 17:11	08/19/12 17:00	7440-09-7	
Selenium	**27.3**	ug/L	0.50	1	07/25/12 17:11	08/19/12 17:00	7782-49-2	
Silica	**32000**	ug/L	535	10	07/25/12 17:11	08/19/12 17:05	7631-86-9	
Silver	ND	ug/L	0.50	1	07/25/12 17:11	08/19/12 17:00	7440-22-4	
Sodium	**6980**	ug/L	50.0	1	07/25/12 17:11	08/19/12 17:00	7440-23-5	
Thallium	**0.12**	ug/L	0.10	1	07/25/12 17:11	08/19/12 17:00	7440-28-0	
Total Hardness by 2340B	**872000**	ug/L	7100	100	07/25/12 17:11	08/19/12 17:10		
Vanadium	**7.8**	ug/L	0.10	1	07/25/12 17:11	08/19/12 17:00	7440-62-2	
Zinc	**369**	ug/L	5.0	1	07/25/12 17:11	08/19/12 17:00	7440-66-6	
200.8 MET ICPMS, Dissolved	Analytical Method: EPA 200.8							
Aluminum, Dissolved	**54.0**	ug/L	4.0	1	07/26/12 11:07	08/25/12 23:14	7429-90-5	
Antimony, Dissolved	ND	ug/L	0.50	1	07/26/12 11:07	08/25/12 23:14	7440-36-0	
Arsenic, Dissolved	ND	ug/L	0.50	1	07/26/12 11:07	08/25/12 23:14	7440-38-2	
Barium, Dissolved	**62.8**	ug/L	0.30	1	07/26/12 11:07	08/25/12 23:14	7440-39-3	
Beryllium, Dissolved	ND	ug/L	0.20	1	07/26/12 11:07	08/29/12 01:19	7440-41-7	
Cadmium, Dissolved	**1.3**	ug/L	0.080	1	07/26/12 11:07	08/25/12 23:14	7440-43-9	
Calcium, Dissolved	**293000**	ug/L	2000	100	07/26/12 11:07	08/25/12 23:25	7440-70-2	
Chromium, Dissolved	ND	ug/L	0.50	1	07/26/12 11:07	08/25/12 23:14	7440-47-3	
Cobalt, Dissolved	**1.0**	ug/L	0.50	1	07/26/12 11:07	08/25/12 23:14	7440-48-4	
Copper, Dissolved	**2.3**	ug/L	0.50	1	07/26/12 11:07	08/25/12 23:14	7440-50-8	
Iron, Dissolved	ND	ug/L	50.0	1	07/26/12 11:07	08/25/12 23:14	7439-89-6	
Lead, Dissolved	**0.49**	ug/L	0.10	1	07/26/12 11:07	08/25/12 23:14	7439-92-1	
Magnesium, Dissolved	**30200**	ug/L	50.0	10	07/26/12 11:07	08/25/12 23:19	7439-95-4	

This report shall not be reproduced, except in full,
without the written consent of Pace Analytical Services, Inc..

Pace Analytical Services, Inc.
9608 Loiret Blvd.
Lenexa, KS 66219
(913)599-5665

ANALYTICAL RESULTS

Project: July 2012 Rico Water Sampling
Pace Project No.: 60125518

Sample: MW-4 SHALLOW **Lab ID: 60125518024** Collected: 07/17/12 10:00 Received: 07/19/12 10:20 Matrix: Water

Parameters	Results	Units	Report Limit	DF	Prepared	Analyzed	CAS No.	Qual
200.8 MET ICPMS, Dissolved	Analytical Method: EPA 200.8							
Manganese, Dissolved	**455**	ug/L	5.0	10	07/26/12 11:07	08/25/12 23:19	7439-96-5	
Molybdenum, Dissolved	**2.1**	ug/L	0.50	1	07/26/12 11:07	08/29/12 01:19	7439-98-7	
Nickel, Dissolved	**5.1**	ug/L	0.50	1	07/26/12 11:07	08/25/12 23:14	7440-02-0	
Potassium, Dissolved	**3630**	ug/L	20.0	1	07/26/12 11:07	08/25/12 23:14	7440-09-7	
Selenium, Dissolved	**24.7**	ug/L	0.50	1	07/26/12 11:07	08/25/12 23:14	7782-49-2	
Silver, Dissolved	ND	ug/L	0.50	1	07/26/12 11:07	08/25/12 23:14	7440-22-4	
Sodium, Dissolved	**7440**	ug/L	50.0	1	07/26/12 11:07	08/25/12 23:14	7440-23-5	
Thallium, Dissolved	ND	ug/L	0.10	1	07/26/12 11:07	08/25/12 23:14	7440-28-0	
Vanadium, Dissolved	**0.13**	ug/L	0.10	1	07/26/12 11:07	08/25/12 23:14	7440-62-2	
Zinc, Dissolved	**135**	ug/L	5.0	1	07/26/12 11:07	08/25/12 23:14	7440-66-6	
200.8 Potentially Diss. Metals	Analytical Method: EPA 200.8 Preparation Method: EPA 200.8							
Aluminum, Dissolved	**4230**	ug/L	250	5	07/26/12 09:45	07/26/12 19:50	7429-90-5	
Antimony, Dissolved	**0.19J**	ug/L	1.0	1	07/26/12 09:45	07/27/12 14:09	7440-36-0	
Arsenic, Dissolved	**3.7**	ug/L	1.0	1	07/26/12 09:45	07/27/12 14:09	7440-38-2	
Barium, Dissolved	**87.3**	ug/L	5.0	5	07/26/12 09:45	07/26/12 19:50	7440-39-3	
Beryllium, Dissolved	**0.95**	ug/L	0.50	1	07/26/12 09:45	07/27/12 14:09	7440-41-7	
Cadmium, Dissolved	**2.3**	ug/L	0.50	1	07/26/12 09:45	07/27/12 14:09	7440-43-9	
Chromium, Dissolved	**8.8**	ug/L	5.0	5	07/26/12 09:45	07/26/12 19:50	7440-47-3	
Cobalt, Dissolved	**8.4**	ug/L	5.0	5	07/26/12 09:45	07/26/12 19:50	7440-48-4	
Copper, Dissolved	**60.0**	ug/L	5.0	5	07/26/12 09:45	07/26/12 19:50	7440-50-8	
Iron, Dissolved	**6300**	ug/L	250	5	07/26/12 09:45	07/26/12 19:50	7439-89-6	
Lead, Dissolved	**120**	ug/L	1.0	1	07/26/12 09:45	07/27/12 14:09	7439-92-1	
Manganese, Dissolved	**942**	ug/L	5.0	5	07/26/12 09:45	07/26/12 19:50	7439-96-5	
Molybdenum, Dissolved	**1.3**	ug/L	1.0	1	07/26/12 09:45	07/27/12 14:09	7439-98-7	
Nickel, Dissolved	**4.3**	ug/L	1.0	1	07/26/12 09:45	07/27/12 14:09	7440-02-0	
Selenium, Dissolved	**21.9**	ug/L	5.0	5	07/26/12 09:45	07/26/12 19:50	7782-49-2	
Silver, Dissolved	**0.22J**	ug/L	0.50	1	07/26/12 09:45	07/27/12 14:09	7440-22-4	
Thallium, Dissolved	**0.12J**	ug/L	1.0	1	07/26/12 09:45	07/27/12 14:09	7440-28-0	
Vanadium, Dissolved	**5.9**	ug/L	1.0	1	07/26/12 09:45	07/27/12 14:09	7440-62-2	
Zinc, Dissolved	**345**	ug/L	50.0	5	07/30/12 16:00	07/31/12 12:14	7440-66-6	M1
245.1 Mercury	Analytical Method: EPA 245.1							
Mercury	ND	ug/L	0.20	1	07/25/12 00:00	07/26/12 12:18	7439-97-6	
245.1 Mercury, Dissolved	Analytical Method: EPA 245.1							
Mercury, Dissolved	ND	ug/L	0.20	1	07/25/12 00:00	07/26/12 11:37	7439-97-6	
245.1 Potentially Diss Mercury	Analytical Method: EPA 245.1 Preparation Method: EPA 245.1							
Mercury, Dissolved	ND	ug/L	0.20	1	07/31/12 16:30	08/02/12 14:37	7439-97-6	
2510B Specific Conductance	Analytical Method: SM 2510B							
Specific Conductance	**1400**	umhos/cm	10.0	1		07/27/12 12:23		
Salinity	Analytical Method: Calculated							
Salinity (as dissolved solids)	**898**	mg/L	6.0	1		08/02/12 12:55		

This report shall not be reproduced, except in full,
without the written consent of Pace Analytical Services, Inc..

Pace Analytical Services, Inc.
9608 Loiret Blvd.
Lenexa, KS 66219
(913)599-5665

ANALYTICAL RESULTS

Project: July 2012 Rico Water Sampling
Pace Project No.: 60125518

Sample: MW-4 SHALLOW **Lab ID: 60125518024** Collected: 07/17/12 10:00 Received: 07/19/12 10:20 Matrix: Water

Parameters	Results	Units	Report Limit	DF	Prepared	Analyzed	CAS No.	Qual
Salinity	Analytical Method: Calculated							
Salinity (as seawater)	**0.70**	PSU	0.010	1		08/02/12 12:55		
2320B Alkalinity	Analytical Method: SM 2320B							
Alkalinity,Bicarbonate (CaCO3)	**353**	mg/L	20.0	1		07/31/12 16:00		
Alkalinity, Carbonate (CaCO3)	ND	mg/L	20.0	1		07/31/12 16:00		
Alkalinity, Total as CaCO3	**353**	mg/L	20.0	1		07/31/12 16:00		
2540C Total Dissolved Solids	Analytical Method: SM 2540C							
Total Dissolved Solids	**1070**	mg/L	5.0	1		07/20/12 10:54		
2540D Total Suspended Solids	Analytical Method: SM 2540D							
Total Suspended Solids	**781**	mg/L	5.0	1		07/20/12 08:49		
4500H+ pH, Electrometric	Analytical Method: SM 4500-H+B							
pH at 25 Degrees C	**7.2**	Std. Units	0.10	1		07/23/12 15:00		H6
4500S2D Sulfide, Total	Analytical Method: SM 4500-S-2 D							
Sulfide, Total	**0.51**	mg/L	0.050	1		07/24/12 17:00	18496-25-8	
Oxidation/Reduction Potential	Analytical Method: SM 2580B							
Oxidation/Reduction Potential	**249**	mV	1.0	1		07/24/12 11:30		
300.0 IC Anions 28 Days	Analytical Method: EPA 300.0							
Sulfate	**442**	mg/L	50.0	50		07/28/12 14:06	14808-79-8	
353.2 Nitrogen, NO2/NO3 pres.	Analytical Method: EPA 353.2							
Nitrogen, NO2 plus NO3	**1.0**	mg/L	0.10	1		07/27/12 11:40		
4500CNE Cyanide, Total	Analytical Method: SM 4500-CN-E							
Cyanide	ND	mg/L	0.0050	1		07/25/12 17:55	57-12-5	
5310C TOC	Analytical Method: SM 5310C							
Total Organic Carbon	**0.93**	mg/L	0.50	1		07/31/12 01:43	7440-44-0	

This report shall not be reproduced, except in full,
without the written consent of Pace Analytical Services, Inc..

Pace Analytical Services, Inc.
9608 Loiret Blvd.
Lenexa, KS 66219
(913)599-5665

ANALYTICAL RESULTS

Project: July 2012 Rico Water Sampling
Pace Project No.: 60125518

Sample: MW-4 DEEP **Lab ID: 60125518025** Collected: 07/18/12 09:00 Received: 07/19/12 10:20 Matrix: Water

Parameters	Results	Units	Report Limit	DF	Prepared	Analyzed	CAS No.	Qual
200.7 Potentially Diss. Metals	Analytical Method: EPA 200.7 Preparation Method: EPA 200.7							
Calcium, Dissolved	**288000**	ug/L	100	1	07/26/12 10:00	07/30/12 13:16	7440-70-2	
Magnesium, Dissolved	**33800**	ug/L	50.0	1	07/26/12 10:00	07/30/12 13:16	7439-95-4	
Potassium, Dissolved	**2350**	ug/L	500	1	07/26/12 10:00	07/30/12 13:16	7440-09-7	
Sodium, Dissolved	**5580**	ug/L	500	1	07/26/12 10:00	07/30/12 13:16	7440-23-5	
200.8 MET ICPMS	Analytical Method: EPA 200.8							
Aluminum	**1600**	ug/L	4.0	1	07/25/12 17:11	08/19/12 17:37	7429-90-5	
Antimony	ND	ug/L	0.50	1	07/25/12 17:11	08/19/12 17:37	7440-36-0	
Arsenic	**3.5**	ug/L	0.50	1	07/25/12 17:11	08/19/12 17:37	7440-38-2	
Barium	**36.8**	ug/L	0.30	1	07/25/12 17:11	08/19/12 17:37	7440-39-3	
Beryllium	**0.27**	ug/L	0.20	1	07/25/12 17:11	08/21/12 18:22	7440-41-7	
Cadmium	**3.1**	ug/L	0.080	1	07/25/12 17:11	08/19/12 17:37	7440-43-9	
Calcium	**313000**	ug/L	2000	100	07/25/12 17:11	08/19/12 17:47	7440-70-2	
Chromium	**2.3**	ug/L	0.50	1	07/25/12 17:11	08/19/12 17:37	7440-47-3	
Cobalt	**1.9**	ug/L	0.50	1	07/25/12 17:11	08/19/12 17:37	7440-48-4	
Copper	**19.4**	ug/L	0.50	1	07/25/12 17:11	08/19/12 17:37	7440-50-8	
Iron	**2950**	ug/L	50.0	1	07/25/12 17:11	08/19/12 17:37	7439-89-6	
Lead	**14.6**	ug/L	0.10	1	07/25/12 17:11	08/19/12 17:37	7439-92-1	
Magnesium	**35100**	ug/L	50.0	10	07/25/12 17:11	08/19/12 17:42	7439-95-4	
Manganese	**317**	ug/L	0.50	1	07/25/12 17:11	08/19/12 17:37	7439-96-5	
Molybdenum	**3.1**	ug/L	0.50	1	07/25/12 17:11	08/19/12 17:37	7439-98-7	
Nickel	**2.9**	ug/L	0.50	1	07/25/12 17:11	08/19/12 17:37	7440-02-0	
Potassium	**2700**	ug/L	20.0	1	07/25/12 17:11	08/19/12 17:37	7440-09-7	
Selenium	**37.7**	ug/L	0.50	1	07/25/12 17:11	08/19/12 17:37	7782-49-2	
Silica	**21100**	ug/L	535	10	07/25/12 17:11	08/19/12 17:42	7631-86-9	
Silver	ND	ug/L	0.50	1	07/25/12 17:11	08/19/12 17:37	7440-22-4	
Sodium	**5550**	ug/L	50.0	1	07/25/12 17:11	08/19/12 17:37	7440-23-5	
Thallium	ND	ug/L	0.10	1	07/25/12 17:11	08/19/12 17:37	7440-28-0	
Total Hardness by 2340B	**926000**	ug/L	7100	100	07/25/12 17:11	08/19/12 17:47		
Vanadium	**3.0**	ug/L	0.10	1	07/25/12 17:11	08/19/12 17:37	7440-62-2	
Zinc	**434**	ug/L	5.0	1	07/25/12 17:11	08/19/12 17:37	7440-66-6	
200.8 MET ICPMS, Dissolved	Analytical Method: EPA 200.8							
Aluminum, Dissolved	**44.9**	ug/L	4.0	1	07/26/12 11:07	08/25/12 23:40	7429-90-5	
Antimony, Dissolved	ND	ug/L	0.50	1	07/26/12 11:07	08/25/12 23:40	7440-36-0	
Arsenic, Dissolved	ND	ug/L	0.50	1	07/26/12 11:07	08/25/12 23:40	7440-38-2	
Barium, Dissolved	**17.1**	ug/L	0.30	1	07/26/12 11:07	08/25/12 23:40	7440-39-3	
Beryllium, Dissolved	ND	ug/L	0.20	1	07/26/12 11:07	08/29/12 01:25	7440-41-7	
Cadmium, Dissolved	**2.4**	ug/L	0.080	1	07/26/12 11:07	08/25/12 23:40	7440-43-9	
Calcium, Dissolved	**321000**	ug/L	2000	100	07/26/12 11:07	08/25/12 23:51	7440-70-2	
Chromium, Dissolved	ND	ug/L	0.50	1	07/26/12 11:07	08/25/12 23:40	7440-47-3	
Cobalt, Dissolved	ND	ug/L	0.50	1	07/26/12 11:07	08/25/12 23:40	7440-48-4	
Copper, Dissolved	**3.8**	ug/L	0.50	1	07/26/12 11:07	08/25/12 23:40	7440-50-8	
Iron, Dissolved	ND	ug/L	50.0	1	07/26/12 11:07	08/25/12 23:40	7439-89-6	
Lead, Dissolved	ND	ug/L	0.10	1	07/26/12 11:07	08/25/12 23:40	7439-92-1	
Magnesium, Dissolved	**36000**	ug/L	50.0	10	07/26/12 11:07	08/25/12 23:45	7439-95-4	

This report shall not be reproduced, except in full,
without the written consent of Pace Analytical Services, Inc..

Pace Analytical Services, Inc.
9608 Loiret Blvd.
Lenexa, KS 66219
(913)599-5665

ANALYTICAL RESULTS

Project: July 2012 Rico Water Sampling
Pace Project No.: 60125518

Sample: MW-4 DEEP **Lab ID: 60125518025** Collected: 07/18/12 09:00 Received: 07/19/12 10:20 Matrix: Water

Parameters	Results	Units	Report Limit	DF	Prepared	Analyzed	CAS No.	Qual
200.8 MET ICPMS, Dissolved	Analytical Method: EPA 200.8							
Manganese, Dissolved	**25.6**	ug/L	0.50	1	07/26/12 11:07	08/25/12 23:40	7439-96-5	
Molybdenum, Dissolved	**2.0**	ug/L	0.50	1	07/26/12 11:07	08/29/12 01:25	7439-98-7	
Nickel, Dissolved	**0.77**	ug/L	0.50	1	07/26/12 11:07	08/25/12 23:40	7440-02-0	
Potassium, Dissolved	**2390**	ug/L	20.0	1	07/26/12 11:07	08/25/12 23:40	7440-09-7	
Selenium, Dissolved	**37.6**	ug/L	0.50	1	07/26/12 11:07	08/25/12 23:40	7782-49-2	
Silver, Dissolved	ND	ug/L	0.50	1	07/26/12 11:07	08/25/12 23:40	7440-22-4	
Sodium, Dissolved	**5910**	ug/L	50.0	1	07/26/12 11:07	08/25/12 23:40	7440-23-5	
Thallium, Dissolved	ND	ug/L	0.10	1	07/26/12 11:07	08/25/12 23:40	7440-28-0	
Vanadium, Dissolved	ND	ug/L	0.10	1	07/26/12 11:07	08/25/12 23:40	7440-62-2	
Zinc, Dissolved	**382**	ug/L	5.0	1	07/26/12 11:07	08/25/12 23:40	7440-66-6	
200.8 Potentially Diss. Metals	Analytical Method: EPA 200.8 Preparation Method: EPA 200.8							
Aluminum, Dissolved	**626**	ug/L	250	5	07/26/12 09:45	07/26/12 19:54	7429-90-5	
Antimony, Dissolved	**0.25J**	ug/L	1.0	1	07/26/12 09:45	07/27/12 14:13	7440-36-0	
Arsenic, Dissolved	**2.6**	ug/L	1.0	1	07/26/12 09:45	07/27/12 14:13	7440-38-2	
Barium, Dissolved	**24.8**	ug/L	5.0	5	07/26/12 09:45	07/26/12 19:54	7440-39-3	
Beryllium, Dissolved	**0.20J**	ug/L	0.50	1	07/26/12 09:45	07/27/12 14:13	7440-41-7	
Cadmium, Dissolved	**3.0**	ug/L	0.50	1	07/26/12 09:45	07/27/12 14:13	7440-43-9	
Chromium, Dissolved	**2.2**	ug/L	1.0	1	07/26/12 09:45	07/27/12 14:13	7440-47-3	
Cobalt, Dissolved	**1.3**	ug/L	1.0	1	07/26/12 09:45	07/27/12 14:13	7440-48-4	
Copper, Dissolved	**18.7**	ug/L	5.0	5	07/26/12 09:45	07/26/12 19:54	7440-50-8	
Iron, Dissolved	**1730**	ug/L	250	5	07/26/12 09:45	07/26/12 19:54	7439-89-6	
Lead, Dissolved	**13.2**	ug/L	5.0	5	07/26/12 09:45	07/26/12 19:54	7439-92-1	
Manganese, Dissolved	**203**	ug/L	5.0	5	07/26/12 09:45	07/26/12 19:54	7439-96-5	
Molybdenum, Dissolved	**1.2**	ug/L	1.0	1	07/26/12 09:45	07/27/12 14:13	7439-98-7	
Nickel, Dissolved	ND	ug/L	1.0	1	07/26/12 09:45	07/27/12 14:13	7440-02-0	
Selenium, Dissolved	**30.0**	ug/L	5.0	5	07/26/12 09:45	07/26/12 19:54	7782-49-2	
Silver, Dissolved	**0.17J**	ug/L	0.50	1	07/26/12 09:45	07/27/12 14:13	7440-22-4	
Thallium, Dissolved	ND	ug/L	1.0	1	07/26/12 09:45	07/27/12 14:13	7440-28-0	
Vanadium, Dissolved	**1.2**	ug/L	1.0	1	07/26/12 09:45	07/27/12 14:13	7440-62-2	
Zinc, Dissolved	**425**	ug/L	50.0	5	07/30/12 16:00	07/31/12 12:22	7440-66-6	
245.1 Mercury	Analytical Method: EPA 245.1							
Mercury	ND	ug/L	0.20	1	07/25/12 00:00	07/26/12 12:21	7439-97-6	
245.1 Mercury, Dissolved	Analytical Method: EPA 245.1							
Mercury, Dissolved	ND	ug/L	0.20	1	07/25/12 00:00	07/26/12 11:40	7439-97-6	
245.1 Potentially Diss Mercury	Analytical Method: EPA 245.1 Preparation Method: EPA 245.1							
Mercury, Dissolved	ND	ug/L	0.20	1	07/31/12 16:30	08/02/12 14:39	7439-97-6	
2510B Specific Conductance	Analytical Method: SM 2510B							
Specific Conductance	**1490**	umhos/cm	10.0	1		07/27/12 12:25		
Salinity	Analytical Method: Calculated							
Salinity (as dissolved solids)	**956**	mg/L	6.0	1		08/02/12 12:55		

This report shall not be reproduced, except in full,
without the written consent of Pace Analytical Services, Inc..

Pace Analytical Services, Inc.
9608 Loiret Blvd.
Lenexa, KS 66219
(913)599-5665

ANALYTICAL RESULTS

Project: July 2012 Rico Water Sampling
Pace Project No.: 60125518

Sample: MW-4 DEEP **Lab ID: 60125518025** Collected: 07/18/12 09:00 Received: 07/19/12 10:20 Matrix: Water

Parameters	Results	Units	Report Limit	DF	Prepared	Analyzed	CAS No.	Qual
Salinity	Analytical Method: Calculated							
Salinity (as seawater)	**0.75**	PSU	0.010	1		08/02/12 12:55		
2320B Alkalinity	Analytical Method: SM 2320B							
Alkalinity,Bicarbonate (CaCO3)	**380**	mg/L	20.0	1		07/31/12 16:00		
Alkalinity, Carbonate (CaCO3)	ND	mg/L	20.0	1		07/31/12 16:00		
Alkalinity, Total as CaCO3	**380**	mg/L	20.0	1		07/31/12 16:00		
2540C Total Dissolved Solids	Analytical Method: SM 2540C							
Total Dissolved Solids	**1170**	mg/L	5.0	1		07/20/12 10:55		
2540D Total Suspended Solids	Analytical Method: SM 2540D							
Total Suspended Solids	**50.0**	mg/L	5.0	1		07/24/12 15:09		
4500H+ pH, Electrometric	Analytical Method: SM 4500-H+B							
pH at 25 Degrees C	**6.8**	Std. Units	0.10	1		07/20/12 14:12		H6
4500S2D Sulfide, Total	Analytical Method: SM 4500-S-2 D							
Sulfide, Total	**0.087**	mg/L	0.050	1		07/24/12 17:02	18496-25-8	
Oxidation/Reduction Potential	Analytical Method: SM 2580B							
Oxidation/Reduction Potential	**262**	mV	1.0	1		07/24/12 11:30		
300.0 IC Anions 28 Days	Analytical Method: EPA 300.0							
Sulfate	**518**	mg/L	50.0	50		07/28/12 14:23	14808-79-8	
353.2 Nitrogen, NO2/NO3 pres.	Analytical Method: EPA 353.2							
Nitrogen, NO2 plus NO3	**0.12**	mg/L	0.10	1		07/27/12 11:41		
4500CNE Cyanide, Total	Analytical Method: SM 4500-CN-E							
Cyanide	**0.011**	mg/L	0.0050	1		07/25/12 17:55	57-12-5	
5310C TOC	Analytical Method: SM 5310C							
Total Organic Carbon	ND	mg/L	0.50	1		07/31/12 02:19	7440-44-0	

This report shall not be reproduced, except in full,
without the written consent of Pace Analytical Services, Inc..

Pace Analytical Services, Inc.
9608 Loiret Blvd.
Lenexa, KS 66219
(913)599-5665

ANALYTICAL RESULTS

Project: July 2012 Rico Water Sampling
Pace Project No.: 60125518

Sample: MW-5 SHALLOW **Lab ID: 60125518026** Collected: 07/18/12 10:20 Received: 07/19/12 10:20 Matrix: Water

Parameters	Results	Units	Report Limit	DF	Prepared	Analyzed	CAS No.	Qual
200.7 Potentially Diss. Metals	Analytical Method: EPA 200.7 Preparation Method: EPA 200.7							
Calcium, Dissolved	**433000**	ug/L	500	5	07/26/12 10:00	07/30/12 13:22	7440-70-2	
Magnesium, Dissolved	**112000**	ug/L	250	5	07/26/12 10:00	07/30/12 13:22	7439-95-4	
Potassium, Dissolved	**1890**	ug/L	1000	2	07/26/12 10:00	07/30/12 13:31	7440-09-7	
Sodium, Dissolved	**7760**	ug/L	2500	5	07/26/12 10:00	07/30/12 13:22	7440-23-5	
200.8 MET ICPMS	Analytical Method: EPA 200.8							
Aluminum	**54600**	ug/L	40.0	10	07/25/12 17:11	08/19/12 18:07	7429-90-5	
Antimony	**0.77**	ug/L	0.50	1	07/25/12 17:11	08/19/12 17:57	7440-36-0	
Arsenic	**149**	ug/L	0.50	1	07/25/12 17:11	08/19/12 17:57	7440-38-2	
Barium	**262**	ug/L	0.30	1	07/25/12 17:11	08/19/12 17:57	7440-39-3	
Beryllium	**7.6**	ug/L	0.20	1	07/25/12 17:11	08/21/12 18:38	7440-41-7	
Cadmium	**233**	ug/L	0.080	1	07/25/12 17:11	08/19/12 17:57	7440-43-9	
Calcium	**504000**	ug/L	2000	100	07/25/12 17:11	08/19/12 18:12	7440-70-2	
Chromium	**9.1**	ug/L	0.50	1	07/25/12 17:11	08/19/12 17:57	7440-47-3	
Cobalt	**91.2**	ug/L	0.50	1	07/25/12 17:11	08/19/12 17:57	7440-48-4	
Copper	**260**	ug/L	0.50	1	07/25/12 17:11	08/19/12 17:57	7440-50-8	
Iron	**390000**	ug/L	5000	100	07/25/12 17:11	08/19/12 18:12	7439-89-6	
Lead	**1550**	ug/L	1.0	10	07/25/12 17:11	08/19/12 18:07	7439-92-1	
Magnesium	**120000**	ug/L	50.0	10	07/25/12 17:11	08/19/12 18:07	7439-95-4	
Manganese	**22900**	ug/L	50.0	100	07/25/12 17:11	08/19/12 18:12	7439-96-5	
Molybdenum	**2.1**	ug/L	0.50	1	07/25/12 17:11	08/19/12 17:57	7439-98-7	
Nickel	**159**	ug/L	0.50	1	07/25/12 17:11	08/19/12 17:57	7440-02-0	
Potassium	**4410**	ug/L	20.0	1	07/25/12 17:11	08/19/12 17:57	7440-09-7	
Selenium	**8.4**	ug/L	0.50	1	07/25/12 17:11	08/19/12 17:57	7782-49-2	
Silica	**136000**	ug/L	5350	100	07/25/12 17:11	08/19/12 18:12	7631-86-9	
Silver	**3.8**	ug/L	0.50	1	07/25/12 17:11	08/19/12 17:57	7440-22-4	
Sodium	**9510**	ug/L	50.0	1	07/25/12 17:11	08/19/12 17:57	7440-23-5	
Thallium	**0.56**	ug/L	0.10	1	07/25/12 17:11	08/19/12 17:57	7440-28-0	
Total Hardness by 2340B	**1750000**	ug/L	7100	100	07/25/12 17:11	08/19/12 18:12		
Vanadium	**14.8**	ug/L	0.10	1	07/25/12 17:11	08/19/12 17:57	7440-62-2	
Zinc	**81100**	ug/L	5000	1000	07/25/12 17:11	08/19/12 18:17	7440-66-6	
200.8 MET ICPMS, Dissolved	Analytical Method: EPA 200.8							
Aluminum, Dissolved	**41700**	ug/L	40.0	10	07/26/12 11:07	08/26/12 00:01	7429-90-5	
Antimony, Dissolved	ND	ug/L	0.50	1	07/26/12 11:07	08/25/12 23:56	7440-36-0	
Arsenic, Dissolved	**122**	ug/L	0.50	1	07/26/12 11:07	08/25/12 23:56	7440-38-2	
Barium, Dissolved	**12.2**	ug/L	0.30	1	07/26/12 11:07	08/25/12 23:56	7440-39-3	
Beryllium, Dissolved	**7.0**	ug/L	0.20	1	07/26/12 11:07	08/29/12 01:30	7440-41-7	
Cadmium, Dissolved	**216**	ug/L	0.080	1	07/26/12 11:07	08/25/12 23:56	7440-43-9	
Calcium, Dissolved	**491000**	ug/L	2000	100	07/26/12 11:07	08/26/12 00:06	7440-70-2	
Chromium, Dissolved	ND	ug/L	10.0	20	07/26/12 11:07	08/29/12 02:03	7440-47-3	D4
Cobalt, Dissolved	**90.4**	ug/L	0.50	1	07/26/12 11:07	08/25/12 23:56	7440-48-4	
Copper, Dissolved	**61.0**	ug/L	0.50	1	07/26/12 11:07	08/25/12 23:56	7440-50-8	
Iron, Dissolved	**369000**	ug/L	5000	100	07/26/12 11:07	08/26/12 00:06	7439-89-6	
Lead, Dissolved	**501**	ug/L	1.0	10	07/26/12 11:07	08/26/12 00:01	7439-92-1	
Magnesium, Dissolved	**125000**	ug/L	50.0	10	07/26/12 11:07	08/26/12 00:01	7439-95-4	

This report shall not be reproduced, except in full,
without the written consent of Pace Analytical Services, Inc..

Pace Analytical Services, Inc.
9608 Loiret Blvd.
Lenexa, KS 66219
(913)599-5665

ANALYTICAL RESULTS

Project: July 2012 Rico Water Sampling
Pace Project No.: 60125518

Sample: MW-5 SHALLOW **Lab ID: 60125518026** Collected: 07/18/12 10:20 Received: 07/19/12 10:20 Matrix: Water

Parameters	Results	Units	Report Limit	DF	Prepared	Analyzed	CAS No.	Qual
200.8 MET ICPMS, Dissolved	Analytical Method: EPA 200.8							
Manganese, Dissolved	**22700**	ug/L	50.0	100	07/26/12 11:07	08/26/12 00:06	7439-96-5	
Molybdenum, Dissolved	ND	ug/L	0.50	1	07/26/12 11:07	08/25/12 23:56	7439-98-7	
Nickel, Dissolved	**159**	ug/L	0.50	1	07/26/12 11:07	08/25/12 23:56	7440-02-0	
Potassium, Dissolved	**1980**	ug/L	20.0	1	07/26/12 11:07	08/25/12 23:56	7440-09-7	
Selenium, Dissolved	**3.1**	ug/L	0.50	1	07/26/12 11:07	08/25/12 23:56	7782-49-2	
Silver, Dissolved	ND	ug/L	0.50	1	07/26/12 11:07	08/25/12 23:56	7440-22-4	
Sodium, Dissolved	**9570**	ug/L	50.0	1	07/26/12 11:07	08/25/12 23:56	7440-23-5	
Thallium, Dissolved	**0.33**	ug/L	0.10	1	07/26/12 11:07	08/29/12 01:30	7440-28-0	
Vanadium, Dissolved	**2.9**	ug/L	0.10	1	07/26/12 11:07	08/25/12 23:56	7440-62-2	
Zinc, Dissolved	**73200**	ug/L	5000	1000	07/26/12 11:07	08/29/12 02:09	7440-66-6	
200.8 Potentially Diss. Metals	Analytical Method: EPA 200.8 Preparation Method: EPA 200.8							
Aluminum, Dissolved	**37700**	ug/L	10000	200	07/26/12 09:45	07/26/12 20:06	7429-90-5	
Antimony, Dissolved	**0.25J**	ug/L	1.0	1	07/26/12 09:45	07/27/12 15:24	7440-36-0	
Arsenic, Dissolved	**131**	ug/L	10.0	10	07/26/12 09:45	07/27/12 14:26	7440-38-2	
Barium, Dissolved	**18.8**	ug/L	10.0	10	07/26/12 09:45	07/27/12 14:26	7440-39-3	
Beryllium, Dissolved	**6.8**	ug/L	0.50	1	07/26/12 09:45	07/27/12 15:24	7440-41-7	
Cadmium, Dissolved	**231**	ug/L	100	200	07/26/12 09:45	07/26/12 20:06	7440-43-9	
Chromium, Dissolved	**6.8**	ug/L	1.0	1	07/26/12 09:45	07/27/12 15:24	7440-47-3	
Cobalt, Dissolved	**87.8**	ug/L	1.0	1	07/26/12 09:45	07/27/12 15:24	7440-48-4	
Copper, Dissolved	**290**	ug/L	200	200	07/26/12 09:45	07/26/12 20:06	7440-50-8	
Iron, Dissolved	**348000**	ug/L	10000	200	07/26/12 09:45	07/26/12 20:06	7439-89-6	
Lead, Dissolved	**1540**	ug/L	200	200	07/26/12 09:45	07/26/12 20:06	7439-92-1	
Manganese, Dissolved	**20900**	ug/L	200	200	07/26/12 09:45	07/26/12 20:06	7439-96-5	
Molybdenum, Dissolved	**0.73J**	ug/L	1.0	1	07/26/12 09:45	07/27/12 15:24	7439-98-7	
Nickel, Dissolved	**154**	ug/L	1.0	1	07/26/12 09:45	07/27/12 15:24	7440-02-0	
Selenium, Dissolved	**3.9**	ug/L	1.0	1	07/26/12 09:45	07/27/12 15:24	7782-49-2	
Silver, Dissolved	ND	ug/L	0.50	1	07/26/12 09:45	07/27/12 15:24	7440-22-4	
Thallium, Dissolved	**0.67J**	ug/L	1.0	1	07/26/12 09:45	07/27/12 15:24	7440-28-0	
Vanadium, Dissolved	**6.4**	ug/L	1.0	1	07/26/12 09:45	07/27/12 15:24	7440-62-2	
Zinc, Dissolved	**67900**	ug/L	2000	200	07/30/12 16:00	07/31/12 12:25	7440-66-6	
245.1 Mercury	Analytical Method: EPA 245.1							
Mercury	ND	ug/L	0.20	1	07/25/12 00:00	07/26/12 12:23	7439-97-6	
245.1 Mercury, Dissolved	Analytical Method: EPA 245.1							
Mercury, Dissolved	ND	ug/L	0.20	1	07/25/12 00:00	07/26/12 11:46	7439-97-6	
245.1 Potentially Diss Mercury	Analytical Method: EPA 245.1 Preparation Method: EPA 245.1							
Mercury, Dissolved	ND	ug/L	0.20	1	07/31/12 16:30	08/02/12 14:40	7439-97-6	
2510B Specific Conductance	Analytical Method: SM 2510B							
Specific Conductance	**3820**	umhos/cm	10.0	1		07/27/12 12:26		
Salinity	Analytical Method: Calculated							
Salinity (as dissolved solids)	**2440**	mg/L	6.0	1		08/02/12 12:55		

This report shall not be reproduced, except in full,
without the written consent of Pace Analytical Services, Inc..

Pace Analytical Services, Inc.
9608 Loiret Blvd.
Lenexa, KS 66219
(913)599-5665

ANALYTICAL RESULTS

Project: July 2012 Rico Water Sampling
Pace Project No.: 60125518

Sample: MW-5 SHALLOW **Lab ID: 60125518026** Collected: 07/18/12 10:20 Received: 07/19/12 10:20 Matrix: Water

Parameters	Results	Units	Report Limit	DF	Prepared	Analyzed	CAS No.	Qual
Salinity	Analytical Method: Calculated							
Salinity (as seawater)	**2.0**	PSU	0.010	1		08/02/12 12:55		
2320B Alkalinity	Analytical Method: SM 2320B							
Alkalinity,Bicarbonate (CaCO3)	ND	mg/L	20.0	1		07/31/12 16:00		
Alkalinity, Carbonate (CaCO3)	ND	mg/L	20.0	1		07/31/12 16:00		
Alkalinity, Total as CaCO3	ND	mg/L	20.0	1		07/31/12 16:00		
2540C Total Dissolved Solids	Analytical Method: SM 2540C							
Total Dissolved Solids	**4240**	mg/L	5.0	1		07/20/12 10:55		
2540D Total Suspended Solids	Analytical Method: SM 2540D							
Total Suspended Solids	**594**	mg/L	5.0	1		07/24/12 15:09		
4500H+ pH, Electrometric	Analytical Method: SM 4500-H+B							
pH at 25 Degrees C	**3.4**	Std. Units	0.10	1		07/20/12 14:12		H6
4500S2D Sulfide, Total	Analytical Method: SM 4500-S-2 D							
Sulfide, Total	ND	mg/L	0.050	1		07/24/12 17:02	18496-25-8	
Oxidation/Reduction Potential	Analytical Method: SM 2580B							
Oxidation/Reduction Potential	**436**	mV	1.0	1		07/24/12 11:30		
300.0 IC Anions 28 Days	Analytical Method: EPA 300.0							
Sulfate	**3870**	mg/L	500	500		07/30/12 14:21	14808-79-8	
4500CNE Cyanide, Total	Analytical Method: SM 4500-CN-E							
Cyanide	ND	mg/L	0.0050	1		07/25/12 17:56	57-12-5	
5310C TOC	Analytical Method: SM 5310C							
Total Organic Carbon	ND	mg/L	0.50	1		07/31/12 02:37	7440-44-0	

This report shall not be reproduced, except in full,
without the written consent of Pace Analytical Services, Inc..

Pace Analytical Services, Inc.
9608 Loiret Blvd.
Lenexa, KS 66219
(913)599-5665

ANALYTICAL RESULTS

Project: July 2012 Rico Water Sampling
Pace Project No.: 60125518

Sample: MW-5 DEEP **Lab ID: 60125518027** Collected: 07/18/12 11:00 Received: 07/19/12 10:20 Matrix: Water

Parameters	Results	Units	Report Limit	DF	Prepared	Analyzed	CAS No.	Qual
200.7 Potentially Diss. Metals	Analytical Method: EPA 200.7 Preparation Method: EPA 200.7							
Calcium, Dissolved	**371000**	ug/L	500	5	07/26/12 10:00	07/30/12 13:24	7440-70-2	
Magnesium, Dissolved	**73600**	ug/L	250	5	07/26/12 10:00	07/30/12 13:24	7439-95-4	
Potassium, Dissolved	**9340**	ug/L	2500	5	07/26/12 10:00	07/30/12 13:24	7440-09-7	
Sodium, Dissolved	**5960**	ug/L	2500	5	07/26/12 10:00	07/30/12 13:24	7440-23-5	
200.8 MET ICPMS	Analytical Method: EPA 200.8							
Aluminum	**1330**	ug/L	4.0	1	07/25/12 17:11	08/19/12 18:38	7429-90-5	
Antimony	ND	ug/L	0.50	1	07/25/12 17:11	08/19/12 18:38	7440-36-0	
Arsenic	**461**	ug/L	5.0	10	07/25/12 17:11	08/19/12 18:43	7440-38-2	
Barium	**14.4**	ug/L	0.30	1	07/25/12 17:11	08/19/12 18:38	7440-39-3	
Beryllium	**2.7**	ug/L	0.20	1	07/25/12 17:11	08/21/12 18:49	7440-41-7	
Cadmium	**0.24**	ug/L	0.080	1	07/25/12 17:11	08/19/12 18:38	7440-43-9	
Calcium	**410000**	ug/L	2000	100	07/25/12 17:11	08/19/12 18:49	7440-70-2	
Chromium	**0.74**	ug/L	0.50	1	07/25/12 17:11	08/19/12 18:38	7440-47-3	
Cobalt	**14.9**	ug/L	0.50	1	07/25/12 17:11	08/19/12 18:38	7440-48-4	
Copper	**4.6**	ug/L	0.50	1	07/25/12 17:11	08/19/12 18:38	7440-50-8	
Iron	**132000**	ug/L	500	10	07/25/12 17:11	08/19/12 18:43	7439-89-6	
Lead	**11.2**	ug/L	0.10	1	07/25/12 17:11	08/19/12 18:38	7439-92-1	
Magnesium	**76400**	ug/L	50.0	10	07/25/12 17:11	08/19/12 18:43	7439-95-4	
Manganese	**16100**	ug/L	50.0	100	07/25/12 17:11	08/19/12 18:49	7439-96-5	
Molybdenum	**15.1**	ug/L	0.50	1	07/25/12 17:11	08/19/12 18:38	7439-98-7	
Nickel	**17.5**	ug/L	0.50	1	07/25/12 17:11	08/19/12 18:38	7440-02-0	
Potassium	**10900**	ug/L	20.0	1	07/25/12 17:11	08/19/12 18:38	7440-09-7	
Selenium	**0.77**	ug/L	0.50	1	07/25/12 17:11	08/19/12 18:38	7782-49-2	
Silica	**27000**	ug/L	535	10	07/25/12 17:11	08/19/12 18:43	7631-86-9	
Silver	ND	ug/L	0.50	1	07/25/12 17:11	08/19/12 18:38	7440-22-4	
Sodium	**6990**	ug/L	50.0	1	07/25/12 17:11	08/19/12 18:38	7440-23-5	
Thallium	ND	ug/L	0.10	1	07/25/12 17:11	08/19/12 18:38	7440-28-0	
Total Hardness by 2340B	**1340000**	ug/L	7100	100	07/25/12 17:11	08/19/12 18:49		
Vanadium	**0.28**	ug/L	0.10	1	07/25/12 17:11	08/19/12 18:38	7440-62-2	
Zinc	**15800**	ug/L	500	100	07/25/12 17:11	08/19/12 18:49	7440-66-6	
200.8 MET ICPMS, Dissolved	Analytical Method: EPA 200.8							
Aluminum, Dissolved	**1140**	ug/L	4.0	1	07/26/12 11:07	08/26/12 00:11	7429-90-5	
Antimony, Dissolved	ND	ug/L	0.50	1	07/26/12 11:07	08/26/12 00:11	7440-36-0	
Arsenic, Dissolved	**197**	ug/L	0.50	1	07/26/12 11:07	08/26/12 00:11	7440-38-2	
Barium, Dissolved	**11.4**	ug/L	0.30	1	07/26/12 11:07	08/26/12 00:11	7440-39-3	
Beryllium, Dissolved	**2.7**	ug/L	0.20	1	07/26/12 11:07	08/29/12 01:47	7440-41-7	
Cadmium, Dissolved	ND	ug/L	0.080	1	07/26/12 11:07	08/26/12 00:11	7440-43-9	
Calcium, Dissolved	**412000**	ug/L	2000	100	07/26/12 11:07	08/26/12 00:21	7440-70-2	
Chromium, Dissolved	ND	ug/L	5.0	10	07/26/12 11:07	08/26/12 00:16	7440-47-3	D4
Cobalt, Dissolved	**14.8**	ug/L	0.50	1	07/26/12 11:07	08/26/12 00:11	7440-48-4	
Copper, Dissolved	ND	ug/L	0.50	1	07/26/12 11:07	08/26/12 00:11	7440-50-8	
Iron, Dissolved	**138000**	ug/L	500	10	07/26/12 11:07	08/26/12 00:16	7439-89-6	
Lead, Dissolved	ND	ug/L	0.10	1	07/26/12 11:07	08/26/12 00:11	7439-92-1	
Magnesium, Dissolved	**80400**	ug/L	50.0	10	07/26/12 11:07	08/26/12 00:16	7439-95-4	

This report shall not be reproduced, except in full,
without the written consent of Pace Analytical Services, Inc..

Pace Analytical Services, Inc.
9608 Loiret Blvd.
Lenexa, KS 66219
(913)599-5665

ANALYTICAL RESULTS

Project: July 2012 Rico Water Sampling
Pace Project No.: 60125518

Sample: MW-5 DEEP **Lab ID: 60125518027** Collected: 07/18/12 11:00 Received: 07/19/12 10:20 Matrix: Water

Parameters	Results	Units	Report Limit	DF	Prepared	Analyzed	CAS No.	Qual
200.8 MET ICPMS, Dissolved	Analytical Method: EPA 200.8							
Manganese, Dissolved	**16100**	ug/L	50.0	100	07/26/12 11:07	08/26/12 00:21	7439-96-5	
Molybdenum, Dissolved	**14.2**	ug/L	0.50	1	07/26/12 11:07	08/26/12 00:11	7439-98-7	
Nickel, Dissolved	**14.8**	ug/L	0.50	1	07/26/12 11:07	08/26/12 00:11	7440-02-0	
Potassium, Dissolved	**11300**	ug/L	20.0	1	07/26/12 11:07	08/26/12 00:11	7440-09-7	
Selenium, Dissolved	ND	ug/L	0.50	1	07/26/12 11:07	08/26/12 00:11	7782-49-2	
Silver, Dissolved	ND	ug/L	0.50	1	07/26/12 11:07	08/26/12 00:11	7440-22-4	
Sodium, Dissolved	**7420**	ug/L	50.0	1	07/26/12 11:07	08/26/12 00:11	7440-23-5	
Thallium, Dissolved	ND	ug/L	0.10	1	07/26/12 11:07	08/29/12 01:47	7440-28-0	
Vanadium, Dissolved	ND	ug/L	0.10	1	07/26/12 11:07	08/26/12 00:11	7440-62-2	
Zinc, Dissolved	**15000**	ug/L	500	100	07/26/12 11:07	08/26/12 00:21	7440-66-6	
200.8 Potentially Diss. Metals	Analytical Method: EPA 200.8 Preparation Method: EPA 200.8							
Aluminum, Dissolved	**1080**	ug/L	250	5	07/26/12 09:45	07/26/12 20:11	7429-90-5	
Antimony, Dissolved	**0.35J**	ug/L	1.0	1	07/26/12 09:45	07/27/12 14:30	7440-36-0	
Arsenic, Dissolved	**401**	ug/L	5.0	5	07/26/12 09:45	07/26/12 20:11	7440-38-2	
Barium, Dissolved	**13.3**	ug/L	5.0	5	07/26/12 09:45	07/26/12 20:11	7440-39-3	
Beryllium, Dissolved	**2.3**	ug/L	0.50	1	07/26/12 09:45	07/27/12 14:30	7440-41-7	
Cadmium, Dissolved	**0.70**	ug/L	0.50	1	07/26/12 09:45	07/27/12 14:30	7440-43-9	
Chromium, Dissolved	**2.0**	ug/L	1.0	1	07/26/12 09:45	07/27/12 14:30	7440-47-3	
Cobalt, Dissolved	**13.5**	ug/L	5.0	5	07/26/12 09:45	07/26/12 20:11	7440-48-4	
Copper, Dissolved	**23.5**	ug/L	5.0	5	07/26/12 09:45	07/26/12 20:11	7440-50-8	
Iron, Dissolved	**124000**	ug/L	250	5	07/26/12 09:45	07/26/12 20:11	7439-89-6	
Lead, Dissolved	**65.3**	ug/L	5.0	5	07/26/12 09:45	07/26/12 20:11	7439-92-1	
Manganese, Dissolved	**15100**	ug/L	5.0	5	07/26/12 09:45	07/26/12 20:11	7439-96-5	
Molybdenum, Dissolved	**14.0**	ug/L	1.0	1	07/26/12 09:45	07/27/12 14:30	7439-98-7	
Nickel, Dissolved	**12.3**	ug/L	1.0	1	07/26/12 09:45	07/27/12 14:30	7440-02-0	
Selenium, Dissolved	**0.40J**	ug/L	1.0	1	07/26/12 09:45	07/27/12 14:30	7782-49-2	
Silver, Dissolved	ND	ug/L	0.50	1	07/26/12 09:45	07/27/12 14:30	7440-22-4	
Thallium, Dissolved	**0.098J**	ug/L	1.0	1	07/26/12 09:45	07/27/12 14:30	7440-28-0	
Vanadium, Dissolved	ND	ug/L	1.0	1	07/26/12 09:45	07/27/12 14:30	7440-62-2	
Zinc, Dissolved	**29100**	ug/L	1000	100	07/30/12 16:00	07/31/12 12:34	7440-66-6	
245.1 Mercury	Analytical Method: EPA 245.1							
Mercury	ND	ug/L	0.20	1	07/25/12 00:00	07/26/12 12:25	7439-97-6	
245.1 Mercury, Dissolved	Analytical Method: EPA 245.1							
Mercury, Dissolved	ND	ug/L	0.20	1	07/25/12 00:00	07/26/12 11:48	7439-97-6	
245.1 Potentially Diss Mercury	Analytical Method: EPA 245.1 Preparation Method: EPA 245.1							
Mercury, Dissolved	ND	ug/L	0.20	1	07/31/12 16:30	08/02/12 14:45	7439-97-6	
2510B Specific Conductance	Analytical Method: SM 2510B							
Specific Conductance	**2370**	umhos/cm	10.0	1		07/27/12 12:27		
Salinity	Analytical Method: Calculated							
Salinity (as dissolved solids)	**1520**	mg/L	6.0	1		08/02/12 12:55		

This report shall not be reproduced, except in full,
without the written consent of Pace Analytical Services, Inc..

Pace Analytical Services, Inc.
9608 Loiret Blvd.
Lenexa, KS 66219
(913)599-5665

ANALYTICAL RESULTS

Project: July 2012 Rico Water Sampling
Pace Project No.: 60125518

Sample: MW-5 DEEP **Lab ID: 60125518027** Collected: 07/18/12 11:00 Received: 07/19/12 10:20 Matrix: Water

Parameters	Results	Units	Report Limit	DF	Prepared	Analyzed	CAS No.	Qual
Salinity	Analytical Method: Calculated							
Salinity (as seawater)	**1.2**	PSU	0.010	1		08/02/12 12:55		
2320B Alkalinity	Analytical Method: SM 2320B							
Alkalinity,Bicarbonate (CaCO3)	**28.5**	mg/L	20.0	1		07/31/12 16:00		
Alkalinity, Carbonate (CaCO3)	ND	mg/L	20.0	1		07/31/12 16:00		
Alkalinity, Total as CaCO3	**28.5**	mg/L	20.0	1		07/31/12 16:00		
2540C Total Dissolved Solids	Analytical Method: SM 2540C							
Total Dissolved Solids	**2320**	mg/L	5.0	1		07/20/12 10:55		
2540D Total Suspended Solids	Analytical Method: SM 2540D							
Total Suspended Solids	**80.0**	mg/L	5.0	1		07/24/12 15:09		
4500H+ pH, Electrometric	Analytical Method: SM 4500-H+B							
pH at 25 Degrees C	**6.1**	Std. Units	0.10	1		07/20/12 14:12		H6
4500S2D Sulfide, Total	Analytical Method: SM 4500-S-2 D							
Sulfide, Total	ND	mg/L	0.050	1		07/24/12 17:03	18496-25-8	
Oxidation/Reduction Potential	Analytical Method: SM 2580B							
Oxidation/Reduction Potential	**46.0**	mV	1.0	1		07/24/12 11:30		
300.0 IC Anions 28 Days	Analytical Method: EPA 300.0							
Sulfate	**1750**	mg/L	100	100		07/28/12 14:58	14808-79-8	
4500CNE Cyanide, Total	Analytical Method: SM 4500-CN-E							
Cyanide	ND	mg/L	0.0050	1		07/25/12 17:58	57-12-5	
5310C TOC	Analytical Method: SM 5310C							
Total Organic Carbon	ND	mg/L	0.50	1		07/31/12 02:54	7440-44-0	

This report shall not be reproduced, except in full,
without the written consent of Pace Analytical Services, Inc..

Pace Analytical Services, Inc.
9608 Loiret Blvd.
Lenexa, KS 66219
(913)599-5665

ANALYTICAL RESULTS

Project: July 2012 Rico Water Sampling
Pace Project No.: 60125518

Sample: MW-6 SHALLOW **Lab ID: 60125518028** Collected: 07/18/12 10:40 Received: 07/19/12 10:20 Matrix: Water

Parameters	Results	Units	Report Limit	DF	Prepared	Analyzed	CAS No.	Qual
200.7 Potentially Diss. Metals	Analytical Method: EPA 200.7 Preparation Method: EPA 200.7							
Calcium, Dissolved	**310000**	ug/L	500	5	07/26/12 10:00	07/30/12 13:26	7440-70-2	
Magnesium, Dissolved	**47700**	ug/L	250	5	07/26/12 10:00	07/30/12 13:26	7439-95-4	
Potassium, Dissolved	**10500**	ug/L	2500	5	07/26/12 10:00	07/30/12 13:26	7440-09-7	
Sodium, Dissolved	**4020**	ug/L	2500	5	07/26/12 10:00	07/30/12 13:26	7440-23-5	
200.8 MET ICPMS	Analytical Method: EPA 200.8							
Aluminum	**31900**	ug/L	40.0	10	07/25/12 17:11	08/19/12 19:04	7429-90-5	
Antimony	**0.80**	ug/L	0.50	1	07/25/12 17:11	08/19/12 18:59	7440-36-0	
Arsenic	**111**	ug/L	0.50	1	07/25/12 17:11	08/19/12 18:59	7440-38-2	
Barium	**239**	ug/L	0.30	1	07/25/12 17:11	08/19/12 18:59	7440-39-3	
Beryllium	**2.2**	ug/L	0.20	1	07/25/12 17:11	08/21/12 18:54	7440-41-7	
Cadmium	**17.8**	ug/L	0.080	1	07/25/12 17:11	08/19/12 18:59	7440-43-9	
Calcium	**363000**	ug/L	2000	100	07/25/12 17:11	08/19/12 19:09	7440-70-2	
Chromium	**24.1**	ug/L	0.50	1	07/25/12 17:11	08/19/12 18:59	7440-47-3	
Cobalt	**15.3**	ug/L	0.50	1	07/25/12 17:11	08/19/12 18:59	7440-48-4	
Copper	**146**	ug/L	0.50	1	07/25/12 17:11	08/19/12 18:59	7440-50-8	
Iron	**81300**	ug/L	500	10	07/25/12 17:11	08/19/12 19:04	7439-89-6	
Lead	**229**	ug/L	0.10	1	07/25/12 17:11	08/19/12 18:59	7439-92-1	
Magnesium	**58900**	ug/L	50.0	10	07/25/12 17:11	08/19/12 19:04	7439-95-4	
Manganese	**6620**	ug/L	50.0	100	07/25/12 17:11	08/19/12 19:09	7439-96-5	
Molybdenum	**9.4**	ug/L	0.50	1	07/25/12 17:11	08/19/12 18:59	7439-98-7	
Nickel	**29.3**	ug/L	0.50	1	07/25/12 17:11	08/19/12 18:59	7440-02-0	
Potassium	**16800**	ug/L	20.0	1	07/25/12 17:11	08/19/12 18:59	7440-09-7	
Selenium	**5.8**	ug/L	0.50	1	07/25/12 17:11	08/19/12 18:59	7782-49-2	
Silica	**127000**	ug/L	5350	100	07/25/12 17:11	08/19/12 19:09	7631-86-9	
Silver	**1.2**	ug/L	0.50	1	07/25/12 17:11	08/19/12 18:59	7440-22-4	
Sodium	**3960**	ug/L	50.0	1	07/25/12 17:11	08/19/12 18:59	7440-23-5	
Thallium	**0.74**	ug/L	0.10	1	07/25/12 17:11	08/19/12 18:59	7440-28-0	
Total Hardness by 2340B	**1150000**	ug/L	7100	100	07/25/12 17:11	08/19/12 19:09		
Vanadium	**34.8**	ug/L	0.10	1	07/25/12 17:11	08/19/12 18:59	7440-62-2	
Zinc	**3990**	ug/L	50.0	10	07/25/12 17:11	08/19/12 19:04	7440-66-6	
200.8 MET ICPMS, Dissolved	Analytical Method: EPA 200.8							
Aluminum, Dissolved	**954**	ug/L	4.0	1	07/26/12 11:07	08/26/12 00:37	7429-90-5	
Antimony, Dissolved	ND	ug/L	0.50	1	07/26/12 11:07	08/26/12 00:37	7440-36-0	
Arsenic, Dissolved	**35.0**	ug/L	0.50	1	07/26/12 11:07	08/26/12 00:37	7440-38-2	
Barium, Dissolved	**15.9**	ug/L	0.30	1	07/26/12 11:07	08/26/12 00:37	7440-39-3	
Beryllium, Dissolved	**0.94**	ug/L	0.20	1	07/26/12 11:07	08/29/12 01:52	7440-41-7	
Cadmium, Dissolved	**0.13**	ug/L	0.080	1	07/26/12 11:07	08/26/12 00:37	7440-43-9	
Calcium, Dissolved	**340000**	ug/L	2000	100	07/26/12 11:07	08/26/12 00:47	7440-70-2	
Chromium, Dissolved	ND	ug/L	5.0	10	07/26/12 11:07	08/26/12 00:42	7440-47-3	D4
Cobalt, Dissolved	**3.3**	ug/L	0.50	1	07/26/12 11:07	08/26/12 00:37	7440-48-4	
Copper, Dissolved	**0.62**	ug/L	0.50	1	07/26/12 11:07	08/26/12 00:37	7440-50-8	
Iron, Dissolved	**47600**	ug/L	500	10	07/26/12 11:07	08/26/12 00:42	7439-89-6	
Lead, Dissolved	**0.37**	ug/L	0.10	1	07/26/12 11:07	08/26/12 00:37	7439-92-1	
Magnesium, Dissolved	**49900**	ug/L	50.0	10	07/26/12 11:07	08/26/12 00:42	7439-95-4	

This report shall not be reproduced, except in full,
without the written consent of Pace Analytical Services, Inc..

Pace Analytical Services, Inc.
9608 Loiret Blvd.
Lenexa, KS 66219
(913)599-5665

ANALYTICAL RESULTS

Project: July 2012 Rico Water Sampling
Pace Project No.: 60125518

Sample: MW-6 SHALLOW **Lab ID: 60125518028** Collected: 07/18/12 10:40 Received: 07/19/12 10:20 Matrix: Water

Parameters	Results	Units	Report Limit	DF	Prepared	Analyzed	CAS No.	Qual
200.8 MET ICPMS, Dissolved	Analytical Method: EPA 200.8							
Manganese, Dissolved	**6010**	ug/L	50.0	100	07/26/12 11:07	08/26/12 00:47	7439-96-5	
Molybdenum, Dissolved	**4.3**	ug/L	0.50	1	07/26/12 11:07	08/26/12 00:37	7439-98-7	
Nickel, Dissolved	**4.1**	ug/L	0.50	1	07/26/12 11:07	08/26/12 00:37	7440-02-0	
Potassium, Dissolved	**12000**	ug/L	20.0	1	07/26/12 11:07	08/26/12 00:37	7440-09-7	
Selenium, Dissolved	ND	ug/L	0.50	1	07/26/12 11:07	08/26/12 00:37	7782-49-2	
Silver, Dissolved	ND	ug/L	0.50	1	07/26/12 11:07	08/26/12 00:37	7440-22-4	
Sodium, Dissolved	**3940**	ug/L	50.0	1	07/26/12 11:07	08/26/12 00:37	7440-23-5	
Thallium, Dissolved	ND	ug/L	0.10	1	07/26/12 11:07	08/29/12 01:52	7440-28-0	
Vanadium, Dissolved	ND	ug/L	0.10	1	07/26/12 11:07	08/26/12 00:37	7440-62-2	
Zinc, Dissolved	**625**	ug/L	50.0	10	07/26/12 11:07	08/26/12 00:42	7440-66-6	
200.8 Potentially Diss. Metals	Analytical Method: EPA 200.8 Preparation Method: EPA 200.8							
Aluminum, Dissolved	**12500**	ug/L	250	5	07/26/12 09:45	07/26/12 20:15	7429-90-5	
Antimony, Dissolved	**0.17J**	ug/L	1.0	1	07/26/12 09:45	07/27/12 14:38	7440-36-0	
Arsenic, Dissolved	**93.2**	ug/L	1.0	1	07/26/12 09:45	07/27/12 14:38	7440-38-2	
Barium, Dissolved	**38.7**	ug/L	5.0	5	07/26/12 09:45	07/26/12 20:15	7440-39-3	
Beryllium, Dissolved	**1.6**	ug/L	0.50	1	07/26/12 09:45	07/27/12 14:38	7440-41-7	
Cadmium, Dissolved	**23.1**	ug/L	2.5	5	07/26/12 09:45	07/26/12 20:15	7440-43-9	
Chromium, Dissolved	**9.4**	ug/L	5.0	5	07/26/12 09:45	07/26/12 20:15	7440-47-3	
Cobalt, Dissolved	**12.7**	ug/L	5.0	5	07/26/12 09:45	07/26/12 20:15	7440-48-4	
Copper, Dissolved	**111**	ug/L	5.0	5	07/26/12 09:45	07/26/12 20:15	7440-50-8	
Iron, Dissolved	**63000**	ug/L	250	5	07/26/12 09:45	07/26/12 20:15	7439-89-6	
Lead, Dissolved	**318**	ug/L	5.0	5	07/26/12 09:45	07/26/12 20:15	7439-92-1	
Manganese, Dissolved	**6100**	ug/L	5.0	5	07/26/12 09:45	07/26/12 20:15	7439-96-5	
Molybdenum, Dissolved	**2.5**	ug/L	1.0	1	07/26/12 09:45	07/27/12 14:38	7439-98-7	
Nickel, Dissolved	**16.5**	ug/L	1.0	1	07/26/12 09:45	07/27/12 14:38	7440-02-0	
Selenium, Dissolved	**1.4**	ug/L	1.0	1	07/26/12 09:45	07/27/12 14:38	7782-49-2	
Silver, Dissolved	ND	ug/L	0.50	1	07/26/12 09:45	07/27/12 14:38	7440-22-4	
Thallium, Dissolved	**0.50J**	ug/L	1.0	1	07/26/12 09:45	07/27/12 14:38	7440-28-0	
Vanadium, Dissolved	**12.4**	ug/L	5.0	5	07/26/12 09:45	07/26/12 20:15	7440-62-2	
Zinc, Dissolved	**5110**	ug/L	500	50	07/30/12 16:00	07/31/12 12:39	7440-66-6	
245.1 Mercury	Analytical Method: EPA 245.1							
Mercury	ND	ug/L	0.20	1	07/25/12 00:00	07/26/12 12:27	7439-97-6	
245.1 Mercury, Dissolved	Analytical Method: EPA 245.1							
Mercury, Dissolved	ND	ug/L	0.20	1	07/25/12 00:00	07/26/12 11:50	7439-97-6	
245.1 Potentially Diss Mercury	Analytical Method: EPA 245.1 Preparation Method: EPA 245.1							
Mercury, Dissolved	ND	ug/L	0.20	1	07/31/12 16:30	08/02/12 14:46	7439-97-6	
2510B Specific Conductance	Analytical Method: SM 2510B							
Specific Conductance	**1740**	umhos/cm	10.0	1		07/27/12 12:28		
Salinity	Analytical Method: Calculated							
Salinity (as dissolved solids)	**1110**	mg/L	6.0	1		08/02/12 12:55		

This report shall not be reproduced, except in full,
without the written consent of Pace Analytical Services, Inc..

Pace Analytical Services, Inc.
9608 Loiret Blvd.
Lenexa, KS 66219
(913)599-5665

ANALYTICAL RESULTS

Project: July 2012 Rico Water Sampling
Pace Project No.: 60125518

Sample: MW-6 SHALLOW **Lab ID: 60125518028** Collected: 07/18/12 10:40 Received: 07/19/12 10:20 Matrix: Water

Parameters	Results	Units	Report Limit	DF	Prepared	Analyzed	CAS No.	Qual
Salinity	Analytical Method: Calculated							
Salinity (as seawater)	**0.88**	PSU	0.010	1		08/02/12 12:55		
2320B Alkalinity	Analytical Method: SM 2320B							
Alkalinity,Bicarbonate (CaCO3)	**95.0**	mg/L	20.0	1		07/31/12 16:00		
Alkalinity, Carbonate (CaCO3)	ND	mg/L	20.0	1		07/31/12 16:00		
Alkalinity, Total as CaCO3	**95.0**	mg/L	20.0	1		07/31/12 16:00		
2540C Total Dissolved Solids	Analytical Method: SM 2540C							
Total Dissolved Solids	**1530**	mg/L	5.0	1		07/20/12 10:55		
2540D Total Suspended Solids	Analytical Method: SM 2540D							
Total Suspended Solids	**1440**	mg/L	5.0	1		07/24/12 15:09		
4500H+ pH, Electrometric	Analytical Method: SM 4500-H+B							
pH at 25 Degrees C	**6.4**	Std. Units	0.10	1		07/20/12 14:12		H6
4500S2D Sulfide, Total	Analytical Method: SM 4500-S-2 D							
Sulfide, Total	**0.59**	mg/L	0.050	1		07/24/12 17:03	18496-25-8	
Oxidation/Reduction Potential	Analytical Method: SM 2580B							
Oxidation/Reduction Potential	**73.8**	mV	1.0	1		07/24/12 11:30		
300.0 IC Anions 28 Days	Analytical Method: EPA 300.0							
Sulfate	**891**	mg/L	100	100		07/28/12 15:16	14808-79-8	
4500CNE Cyanide, Total	Analytical Method: SM 4500-CN-E							
Cyanide	ND	mg/L	0.0050	1		07/25/12 17:59	57-12-5	
5310C TOC	Analytical Method: SM 5310C							
Total Organic Carbon	**0.83**	mg/L	0.50	1		07/31/12 03:12	7440-44-0	

This report shall not be reproduced, except in full,
without the written consent of Pace Analytical Services, Inc..

Pace Analytical Services, Inc.
9608 Loiret Blvd.
Lenexa, KS 66219
(913)599-5665

ANALYTICAL RESULTS

Project: July 2012 Rico Water Sampling
Pace Project No.: 60125518

Sample: MW-6 DEEP **Lab ID: 60125518029** Collected: 07/18/12 11:10 Received: 07/19/12 10:20 Matrix: Water

Parameters	Results	Units	Report Limit	DF	Prepared	Analyzed	CAS No.	Qual
200.7 Potentially Diss. Metals	Analytical Method: EPA 200.7 Preparation Method: EPA 200.7							
Calcium, Dissolved	**226000**	ug/L	100	1	07/26/12 10:00	07/30/12 13:28	7440-70-2	
Magnesium, Dissolved	**31400**	ug/L	50.0	1	07/26/12 10:00	07/30/12 13:28	7439-95-4	
Potassium, Dissolved	**5200**	ug/L	500	1	07/26/12 10:00	07/30/12 13:28	7440-09-7	
Sodium, Dissolved	**5370**	ug/L	500	1	07/26/12 10:00	07/30/12 13:28	7440-23-5	
200.8 MET ICPMS	Analytical Method: EPA 200.8							
Aluminum	**680**	ug/L	4.0	1	07/25/12 17:11	08/19/12 19:35	7429-90-5	
Antimony	**1.5**	ug/L	0.50	1	07/25/12 17:11	08/19/12 19:35	7440-36-0	
Arsenic	**118**	ug/L	0.50	1	07/25/12 17:11	08/19/12 19:35	7440-38-2	
Barium	**24.1**	ug/L	0.30	1	07/25/12 17:11	08/19/12 19:35	7440-39-3	
Beryllium	**0.65**	ug/L	0.20	1	07/25/12 17:11	08/21/12 19:00	7440-41-7	
Cadmium	**0.70**	ug/L	0.080	1	07/25/12 17:11	08/19/12 19:35	7440-43-9	
Calcium	**285000**	ug/L	2000	100	07/25/12 17:11	08/19/12 19:46	7440-70-2	
Chromium	**1.5**	ug/L	0.50	1	07/25/12 17:11	08/19/12 19:35	7440-47-3	
Cobalt	**2.8**	ug/L	0.50	1	07/25/12 17:11	08/19/12 19:35	7440-48-4	
Copper	**8.1**	ug/L	0.50	1	07/25/12 17:11	08/19/12 19:35	7440-50-8	
Iron	**20900**	ug/L	50.0	1	07/25/12 17:11	08/19/12 19:35	7439-89-6	
Lead	**22.4**	ug/L	0.10	1	07/25/12 17:11	08/19/12 19:35	7439-92-1	
Magnesium	**36500**	ug/L	50.0	10	07/25/12 17:11	08/19/12 19:40	7439-95-4	
Manganese	**6990**	ug/L	50.0	100	07/25/12 17:11	08/19/12 19:46	7439-96-5	
Molybdenum	**6.0**	ug/L	0.50	1	07/25/12 17:11	08/19/12 19:35	7439-98-7	
Nickel	**4.8**	ug/L	0.50	1	07/25/12 17:11	08/19/12 19:35	7440-02-0	
Potassium	**6120**	ug/L	20.0	1	07/25/12 17:11	08/19/12 19:35	7440-09-7	
Selenium	**3.9**	ug/L	0.50	1	07/25/12 17:11	08/19/12 19:35	7782-49-2	
Silica	**18200**	ug/L	535	10	07/25/12 17:11	08/19/12 19:40	7631-86-9	
Silver	ND	ug/L	0.50	1	07/25/12 17:11	08/19/12 19:35	7440-22-4	
Sodium	**5920**	ug/L	50.0	1	07/25/12 17:11	08/19/12 19:35	7440-23-5	
Thallium	ND	ug/L	0.10	1	07/25/12 17:11	08/19/12 19:35	7440-28-0	
Total Hardness by 2340B	**862000**	ug/L	7100	100	07/25/12 17:11	08/19/12 19:46		
Vanadium	**0.72**	ug/L	0.10	1	07/25/12 17:11	08/19/12 19:35	7440-62-2	
Zinc	**639**	ug/L	50.0	10	07/25/12 17:11	08/19/12 19:40	7440-66-6	
200.8 MET ICPMS, Dissolved	Analytical Method: EPA 200.8							
Aluminum, Dissolved	**240**	ug/L	4.0	1	07/26/12 11:07	08/26/12 00:52	7429-90-5	
Antimony, Dissolved	ND	ug/L	0.50	1	07/26/12 11:07	08/26/12 00:52	7440-36-0	
Arsenic, Dissolved	**6.5**	ug/L	0.50	1	07/26/12 11:07	08/26/12 00:52	7440-38-2	
Barium, Dissolved	**16.3**	ug/L	0.30	1	07/26/12 11:07	08/26/12 00:52	7440-39-3	
Beryllium, Dissolved	**0.52**	ug/L	0.20	1	07/26/12 11:07	08/29/12 01:58	7440-41-7	
Cadmium, Dissolved	**0.34**	ug/L	0.080	1	07/26/12 11:07	08/26/12 00:52	7440-43-9	
Calcium, Dissolved	**278000**	ug/L	2000	100	07/26/12 11:07	08/26/12 01:03	7440-70-2	
Chromium, Dissolved	ND	ug/L	0.50	1	07/26/12 11:07	08/26/12 00:52	7440-47-3	
Cobalt, Dissolved	**2.6**	ug/L	0.50	1	07/26/12 11:07	08/26/12 00:52	7440-48-4	
Copper, Dissolved	**0.90**	ug/L	0.50	1	07/26/12 11:07	08/26/12 00:52	7440-50-8	
Iron, Dissolved	**9940**	ug/L	50.0	1	07/26/12 11:07	08/26/12 00:52	7439-89-6	
Lead, Dissolved	ND	ug/L	0.10	1	07/26/12 11:07	08/26/12 00:52	7439-92-1	
Magnesium, Dissolved	**37500**	ug/L	50.0	10	07/26/12 11:07	08/26/12 00:58	7439-95-4	

This report shall not be reproduced, except in full,
without the written consent of Pace Analytical Services, Inc..

Pace Analytical Services, Inc.
9608 Loiret Blvd.
Lenexa, KS 66219
(913)599-5665

ANALYTICAL RESULTS

Project: July 2012 Rico Water Sampling
Pace Project No.: 60125518

Sample: MW-6 DEEP **Lab ID: 60125518029** Collected: 07/18/12 11:10 Received: 07/19/12 10:20 Matrix: Water

Parameters	Results	Units	Report Limit	DF	Prepared	Analyzed	CAS No.	Qual
200.8 MET ICPMS, Dissolved	Analytical Method: EPA 200.8							
Manganese, Dissolved	**6730**	ug/L	50.0	100	07/26/12 11:07	08/26/12 01:03	7439-96-5	
Molybdenum, Dissolved	**4.9**	ug/L	0.50	1	07/26/12 11:07	08/26/12 00:52	7439-98-7	
Nickel, Dissolved	**5.1**	ug/L	0.50	1	07/26/12 11:07	08/26/12 00:52	7440-02-0	
Potassium, Dissolved	**5910**	ug/L	20.0	1	07/26/12 11:07	08/26/12 00:52	7440-09-7	
Selenium, Dissolved	**1.1**	ug/L	0.50	1	07/26/12 11:07	08/26/12 00:52	7782-49-2	
Silver, Dissolved	ND	ug/L	0.50	1	07/26/12 11:07	08/26/12 00:52	7440-22-4	
Sodium, Dissolved	**6130**	ug/L	50.0	1	07/26/12 11:07	08/26/12 00:52	7440-23-5	
Thallium, Dissolved	ND	ug/L	0.10	1	07/26/12 11:07	08/26/12 00:52	7440-28-0	
Vanadium, Dissolved	ND	ug/L	0.10	1	07/26/12 11:07	08/26/12 00:52	7440-62-2	
Zinc, Dissolved	**464**	ug/L	50.0	10	07/26/12 11:07	08/26/12 00:58	7440-66-6	
200.8 Potentially Diss. Metals	Analytical Method: EPA 200.8 Preparation Method: EPA 200.8							
Aluminum, Dissolved	**461**	ug/L	50.0	1	07/26/12 09:45	07/27/12 14:34	7429-90-5	
Antimony, Dissolved	**1.2**	ug/L	1.0	1	07/26/12 09:45	07/27/12 14:34	7440-36-0	
Arsenic, Dissolved	**108**	ug/L	5.0	5	07/26/12 09:45	07/26/12 20:19	7440-38-2	
Barium, Dissolved	**19.7**	ug/L	5.0	5	07/26/12 09:45	07/26/12 20:19	7440-39-3	
Beryllium, Dissolved	**0.53**	ug/L	0.50	1	07/26/12 09:45	07/27/12 14:34	7440-41-7	
Cadmium, Dissolved	**0.73**	ug/L	0.50	1	07/26/12 09:45	07/27/12 14:34	7440-43-9	
Chromium, Dissolved	**1.4**	ug/L	1.0	1	07/26/12 09:45	07/27/12 14:34	7440-47-3	
Cobalt, Dissolved	**2.6**	ug/L	1.0	1	07/26/12 09:45	07/27/12 14:34	7440-48-4	
Copper, Dissolved	**8.8**	ug/L	5.0	5	07/26/12 09:45	07/26/12 20:19	7440-50-8	
Iron, Dissolved	**20100**	ug/L	250	5	07/26/12 09:45	07/26/12 20:19	7439-89-6	
Lead, Dissolved	**22.3**	ug/L	5.0	5	07/26/12 09:45	07/26/12 20:19	7439-92-1	
Manganese, Dissolved	**6290**	ug/L	5.0	5	07/26/12 09:45	07/26/12 20:19	7439-96-5	
Molybdenum, Dissolved	**5.5**	ug/L	1.0	1	07/26/12 09:45	07/27/12 14:34	7439-98-7	
Nickel, Dissolved	**3.0**	ug/L	1.0	1	07/26/12 09:45	07/27/12 14:34	7440-02-0	
Selenium, Dissolved	**3.2**	ug/L	1.0	1	07/26/12 09:45	07/27/12 14:34	7782-49-2	
Silver, Dissolved	ND	ug/L	0.50	1	07/26/12 09:45	07/27/12 14:34	7440-22-4	
Thallium, Dissolved	ND	ug/L	1.0	1	07/26/12 09:45	07/27/12 14:34	7440-28-0	
Vanadium, Dissolved	ND	ug/L	1.0	1	07/26/12 09:45	07/27/12 14:34	7440-62-2	
Zinc, Dissolved	**616**	ug/L	50.0	5	07/30/12 16:00	07/31/12 12:42	7440-66-6	
245.1 Mercury	Analytical Method: EPA 245.1							
Mercury	ND	ug/L	0.20	1	07/25/12 00:00	07/26/12 12:29	7439-97-6	
245.1 Mercury, Dissolved	Analytical Method: EPA 245.1							
Mercury, Dissolved	ND	ug/L	0.20	1	07/25/12 00:00	07/26/12 11:53	7439-97-6	
245.1 Potentially Diss Mercury	Analytical Method: EPA 245.1 Preparation Method: EPA 245.1							
Mercury, Dissolved	ND	ug/L	0.20	1	07/31/12 16:30	08/02/12 14:47	7439-97-6	
2510B Specific Conductance	Analytical Method: SM 2510B							
Specific Conductance	**1370**	umhos/cm	10.0	1		07/27/12 12:31		
Salinity	Analytical Method: Calculated							
Salinity (as dissolved solids)	**874**	mg/L	6.0	1		08/02/12 12:55		

REPORT OF LABORATORY ANALYSIS

This report shall not be reproduced, except in full,
without the written consent of Pace Analytical Services, Inc..

Pace Analytical Services, Inc.
9608 Loiret Blvd.
Lenexa, KS 66219
(913)599-5665

ANALYTICAL RESULTS

Project: July 2012 Rico Water Sampling
Pace Project No.: 60125518

Sample: MW-6 DEEP **Lab ID: 60125518029** Collected: 07/18/12 11:10 Received: 07/19/12 10:20 Matrix: Water

Parameters	Results	Units	Report Limit	DF	Prepared	Analyzed	CAS No.	Qual
Salinity	Analytical Method: Calculated							
Salinity (as seawater)	**0.68**	PSU	0.010	1		08/02/12 12:55		
2320B Alkalinity	Analytical Method: SM 2320B							
Alkalinity,Bicarbonate (CaCO3)	**184**	mg/L	20.0	1		07/31/12 16:00		
Alkalinity, Carbonate (CaCO3)	ND	mg/L	20.0	1		07/31/12 16:00		
Alkalinity, Total as CaCO3	**184**	mg/L	20.0	1		07/31/12 16:00		
2540C Total Dissolved Solids	Analytical Method: SM 2540C							
Total Dissolved Solids	**1120**	mg/L	5.0	1		07/20/12 10:55		
2540D Total Suspended Solids	Analytical Method: SM 2540D							
Total Suspended Solids	**68.0**	mg/L	5.0	1		07/24/12 15:09		
4500H+ pH, Electrometric	Analytical Method: SM 4500-H+B							
pH at 25 Degrees C	**6.8**	Std. Units	0.10	1		07/20/12 14:12		H6
4500S2D Sulfide, Total	Analytical Method: SM 4500-S-2 D							
Sulfide, Total	ND	mg/L	0.050	1		07/24/12 17:03	18496-25-8	
Oxidation/Reduction Potential	Analytical Method: SM 2580B							
Oxidation/Reduction Potential	**67.8**	mV	1.0	1		07/24/12 11:30		
300.0 IC Anions 28 Days	Analytical Method: EPA 300.0							
Sulfate	**588**	mg/L	50.0	50		07/28/12 15:33	14808-79-8	
4500CNE Cyanide, Total	Analytical Method: SM 4500-CN-E							
Cyanide	ND	mg/L	0.0050	1		07/25/12 18:00	57-12-5	
5310C TOC	Analytical Method: SM 5310C							
Total Organic Carbon	**0.65**	mg/L	0.50	1		07/31/12 03:30	7440-44-0	

This report shall not be reproduced, except in full,
without the written consent of Pace Analytical Services, Inc..

Appendix D

Laboratory QC Results

Pace Analytical Services, Inc.
9608 Loiret Blvd.
Lenexa, KS 66219
(913)599-5665

QUALITY CONTROL DATA

Project: July 2012 Rico Water Sampling
Pace Project No.: 60125518

QC Batch: ICPM/34001 Analysis Method: EPA 200.8
QC Batch Method: EPA 200.8 Analysis Description: 200.8 MET
Associated Lab Samples: 60125518001, 60125518002, 60125518003, 60125518004, 60125518005, 60125518006, 60125518007, 60125518008, 60125518009, 60125518010, 60125518011, 60125518012, 60125518013, 60125518014, 60125518015, 60125518016, 60125518017, 60125518018, 60125518019, 60125518020

METHOD BLANK: 1248822 Matrix: Water
Associated Lab Samples: 60125518001, 60125518002, 60125518003, 60125518004, 60125518005, 60125518006, 60125518007, 60125518008, 60125518009, 60125518010, 60125518011, 60125518012, 60125518013, 60125518014, 60125518015, 60125518016, 60125518017, 60125518018, 60125518019, 60125518020

Parameter	Units	Blank Result	Reporting Limit	Analyzed	Qualifiers
Aluminum	ug/L	ND	4.0	08/29/12 02:37	
Antimony	ug/L	ND	0.50	08/29/12 02:37	
Arsenic	ug/L	ND	0.50	08/29/12 02:37	
Barium	ug/L	ND	0.30	08/29/12 02:37	
Beryllium	ug/L	ND	0.20	08/29/12 02:37	
Cadmium	ug/L	ND	0.080	08/29/12 02:37	
Calcium	ug/L	ND	20.0	08/29/12 02:37	
Chromium	ug/L	ND	0.50	08/29/12 02:37	
Cobalt	ug/L	ND	0.50	08/29/12 02:37	
Copper	ug/L	ND	0.50	08/29/12 02:37	
Iron	ug/L	ND	50.0	08/29/12 02:37	
Lead	ug/L	ND	0.10	08/29/12 02:37	
Magnesium	ug/L	ND	5.0	08/29/12 02:37	
Manganese	ug/L	ND	0.50	08/29/12 02:37	
Molybdenum	ug/L	ND	0.50	08/29/12 02:37	
Nickel	ug/L	ND	0.50	08/29/12 02:37	
Potassium	ug/L	ND	20.0	08/29/12 02:37	
Selenium	ug/L	ND	0.50	08/29/12 02:37	
Silica	ug/L	ND	53.5	08/30/12 21:19	
Silver	ug/L	ND	0.50	08/29/12 02:37	
Sodium	ug/L	ND	50.0	08/29/12 02:37	
Thallium	ug/L	ND	0.10	08/29/12 02:37	
Total Hardness by 2340B	ug/L	ND	71.0	08/29/12 02:37	
Vanadium	ug/L	ND	0.10	08/29/12 02:37	
Zinc	ug/L	ND	5.0	08/29/12 02:37	

LABORATORY CONTROL SAMPLE: 1248823

Parameter	Units	Spike Conc.	LCS Result	LCS % Rec	% Rec Limits	Qualifiers
Aluminum	ug/L	80	89.7	112	85-115	
Antimony	ug/L	80	75.2	94	85-115	
Arsenic	ug/L	80	81.9	102	85-115	
Barium	ug/L	80	75.6	95	85-115	
Beryllium	ug/L	80	79.2	99	85-115	
Cadmium	ug/L	80	75.5	94	85-115	
Calcium	ug/L	1000	1030	103	85-115	
Chromium	ug/L	80	79.4	99	85-115	
Cobalt	ug/L	80	81.0	101	85-115	

This report shall not be reproduced, except in full,
without the written consent of Pace Analytical Services, Inc..

Pace Analytical Services, Inc.
9608 Loiret Blvd.
Lenexa, KS 66219
(913)599-5665

QUALITY CONTROL DATA

Project: July 2012 Rico Water Sampling
Pace Project No.: 60125518

LABORATORY CONTROL SAMPLE: 1248823

Parameter	Units	Spike Conc.	LCS Result	LCS % Rec	% Rec Limits	Qualifiers
Copper	ug/L	80	83.1	104	85-115	
Iron	ug/L	1000	1030	103	85-115	
Lead	ug/L	80	83.5	104	85-115	
Magnesium	ug/L	1000	1010	101	85-115	
Manganese	ug/L	80	78.7	98	85-115	
Molybdenum	ug/L	80	82.8	103	85-115	
Nickel	ug/L	80	82.6	103	85-115	
Potassium	ug/L	1000	1040	104	85-115	
Selenium	ug/L	80	81.5	102	85-115	
Silica	ug/L	2140	2190	102	85-115	
Silver	ug/L	80	80.5	101	85-115	
Sodium	ug/L	1000	1020	102	85-115	
Thallium	ug/L	80	86.2	108	85-115	
Total Hardness by 2340B	ug/L	6620	6750	102	85-115	
Vanadium	ug/L	80	78.6	98	85-115	
Zinc	ug/L	80	81.6	102	85-115	

MATRIX SPIKE & MATRIX SPIKE DUPLICATE: 1248824 1248825

Parameter	Units	60125518001 Result	MS Spike Conc.	MSD Spike Conc.	MS Result	MSD Result	MS % Rec	MSD % Rec	% Rec Limits	RPD	Max RPD	Qual
Aluminum	ug/L	30.8	80	80	129	132	123	127	70-130	2	20	
Antimony	ug/L	ND	80	80	74.0	71.3	92	89	70-130	4	20	
Arsenic	ug/L	ND	80	80	83.1	81.8	103	102	70-130	1	20	
Barium	ug/L	61.1	80	80	132	129	88	85	70-130	2	20	
Beryllium	ug/L	ND	80	80	77.5	77.6	97	97	70-130	.06	20	
Cadmium	ug/L	ND	80	80	72.6	71.4	91	89	70-130	2	20	
Calcium	ug/L	34700	1000	1000	35200	35900	48	116	70-130	2	20	M6
Chromium	ug/L	ND	80	80	76.3	78.1	95	97	70-130	2	20	
Cobalt	ug/L	ND	80	80	78.0	77.8	97	97	70-130	.3	20	
Copper	ug/L	0.56	80	80	79.3	79.0	98	98	70-130	.3	20	
Iron	ug/L	ND	1000	1000	1040	1040	99	99	70-130	0	20	
Lead	ug/L	ND	80	80	78.2	78.2	98	98	70-130	.04	20	
Magnesium	ug/L	5180	1000	1000	6160	6230	98	105	70-130	1	20	
Manganese	ug/L	9.8	80	80	87.9	88.1	98	98	70-130	.2	20	
Molybdenum	ug/L	0.90	80	80	81.7	79.9	101	99	70-130	2	20	
Nickel	ug/L	ND	80	80	81.2	79.2	101	99	70-130	3	20	
Potassium	ug/L	660	1000	1000	1690	1730	103	107	70-130	2	20	
Selenium	ug/L	ND	80	80	81.8	80.5	102	100	70-130	2	20	
Silica	ug/L	6080	2140	2140	8360	8470	107	112	70-130	1	20	
Silver	ug/L	ND	80	80	74.1	74.4	92	93	70-130	.4	20	
Sodium	ug/L	2120	1000	1000	3040	3040	91	92	70-130	.2	20	
Thallium	ug/L	ND	80	80	79.5	78.4	99	98	70-130	1	20	
Total Hardness by 2340B	ug/L	108000	6620	6620	113000	115000	79	109	70-130	2	20	
Vanadium	ug/L	0.18	80	80	76.0	77.1	95	96	70-130	1	20	
Zinc	ug/L	ND	80	80	80.7	80.1	98	97	70-130	.7	20	

This report shall not be reproduced, except in full,
without the written consent of Pace Analytical Services, Inc..

Pace Analytical Services, Inc.
9608 Loiret Blvd.
Lenexa, KS 66219
(913)599-5665

QUALITY CONTROL DATA

Project: July 2012 Rico Water Sampling
Pace Project No.: 60125518

MATRIX SPIKE SAMPLE: 1248826

Parameter	Units	60125518012 Result	Spike Conc.	MS Result	MS % Rec	% Rec Limits	Qualifiers
Aluminum	ug/L	1530	80	3500	2460	70-130	M6
Antimony	ug/L	ND	80	71.0	88	70-130	
Arsenic	ug/L	2.3	80	85.7	104	70-130	
Barium	ug/L	81.8	80	160	97	70-130	
Beryllium	ug/L	ND	80	80.4	100	70-130	
Cadmium	ug/L	0.17	80	72.9	91	70-130	
Calcium	ug/L	46300	1000	47500	115	70-130	
Chromium	ug/L	1.6	80	79.4	97	70-130	
Cobalt	ug/L	1.4	80	78.2	96	70-130	
Copper	ug/L	8.8	80	87.6	98	70-130	
Iron	ug/L	2330	1000	4330	200	70-130	M6
Lead	ug/L	9.0	80	90.1	101	70-130	
Magnesium	ug/L	5850	1000	6910	106	70-130	
Manganese	ug/L	254	80	370	146	70-130	M6
Molybdenum	ug/L	1.4	80	80.3	99	70-130	
Nickel	ug/L	2.2	80	79.5	97	70-130	
Potassium	ug/L	1200	1000	2690	149	70-130	M6
Selenium	ug/L	ND	80	80.5	100	70-130	
Silica	ug/L	12700	2140	22800	470	70-130	M6
Silver	ug/L	ND	80	73.4	92	70-130	
Sodium	ug/L	2210	1000	3190	98	70-130	
Thallium	ug/L	ND	80	80.0	100	70-130	
Total Hardness by 2340B	ug/L	140000	6620	147000	110	70-130	
Vanadium	ug/L	2.9	80	83.3	100	70-130	
Zinc	ug/L	25.8	80	108	103	70-130	

This report shall not be reproduced, except in full,
without the written consent of Pace Analytical Services, Inc..

Pace Analytical Services, Inc.
9608 Loiret Blvd.
Lenexa, KS 66219
(913)599-5665

QUALITY CONTROL DATA

Project: July 2012 Rico Water Sampling
Pace Project No.: 60125518

QC Batch: ICPM/34002 Analysis Method: EPA 200.8
QC Batch Method: EPA 200.8 Analysis Description: 200.8 MET
Associated Lab Samples: 60125518021, 60125518022, 60125518023, 60125518024, 60125518025, 60125518026, 60125518027, 60125518028, 60125518029

METHOD BLANK: 1248827 Matrix: Water
Associated Lab Samples: 60125518021, 60125518022, 60125518023, 60125518024, 60125518025, 60125518026, 60125518027, 60125518028, 60125518029

Parameter	Units	Blank Result	Reporting Limit	Analyzed	Qualifiers
Aluminum	ug/L	ND	4.0	08/19/12 14:35	
Antimony	ug/L	ND	0.50	08/19/12 14:35	
Arsenic	ug/L	ND	0.50	08/19/12 14:35	
Barium	ug/L	ND	0.30	08/19/12 14:35	
Beryllium	ug/L	ND	0.20	08/19/12 14:35	
Cadmium	ug/L	ND	0.080	08/19/12 14:35	
Calcium	ug/L	ND	20.0	08/19/12 14:35	
Chromium	ug/L	ND	0.50	08/19/12 14:35	
Cobalt	ug/L	ND	0.50	08/19/12 14:35	
Copper	ug/L	ND	0.50	08/19/12 14:35	
Iron	ug/L	ND	50.0	08/19/12 14:35	
Lead	ug/L	ND	0.10	08/19/12 14:35	
Magnesium	ug/L	ND	5.0	08/19/12 14:35	
Manganese	ug/L	ND	0.50	08/19/12 14:35	
Molybdenum	ug/L	ND	0.50	08/19/12 14:35	
Nickel	ug/L	ND	0.50	08/19/12 14:35	
Potassium	ug/L	ND	20.0	08/19/12 14:35	
Selenium	ug/L	ND	0.50	08/19/12 14:35	
Silica	ug/L	ND	53.5	08/19/12 14:35	
Silver	ug/L	ND	0.50	08/19/12 14:35	
Sodium	ug/L	ND	50.0	08/19/12 14:35	
Thallium	ug/L	ND	0.10	08/19/12 14:35	
Total Hardness by 2340B	ug/L	ND	71.0	08/19/12 14:35	
Vanadium	ug/L	ND	0.10	08/19/12 14:35	
Zinc	ug/L	ND	5.0	08/19/12 14:35	

LABORATORY CONTROL SAMPLE: 1248828

Parameter	Units	Spike Conc.	LCS Result	LCS % Rec	% Rec Limits	Qualifiers
Aluminum	ug/L	80	85.7	107	85-115	
Antimony	ug/L	80	81.2	102	85-115	
Arsenic	ug/L	80	82.6	103	85-115	
Barium	ug/L	80	82.8	104	85-115	
Beryllium	ug/L	80	83.7	105	85-115	
Cadmium	ug/L	80	83.4	104	85-115	
Calcium	ug/L	1000	1130	113	85-115	
Chromium	ug/L	80	83.9	105	85-115	
Cobalt	ug/L	80	82.4	103	85-115	
Copper	ug/L	80	86.7	108	85-115	
Iron	ug/L	1000	1040	104	85-115	

This report shall not be reproduced, except in full,
without the written consent of Pace Analytical Services, Inc..

Pace Analytical Services, Inc.
9608 Loiret Blvd.
Lenexa, KS 66219
(913)599-5665

QUALITY CONTROL DATA

Project: July 2012 Rico Water Sampling
Pace Project No.: 60125518

LABORATORY CONTROL SAMPLE: 1248828

Parameter	Units	Spike Conc.	LCS Result	LCS % Rec	% Rec Limits	Qualifiers
Lead	ug/L	80	85.8	107	85-115	
Magnesium	ug/L	1000	1060	106	85-115	
Manganese	ug/L	80	84.1	105	85-115	
Molybdenum	ug/L	80	80.7	101	85-115	
Nickel	ug/L	80	84.5	106	85-115	
Potassium	ug/L	1000	1060	106	85-115	
Selenium	ug/L	80	83.6	104	85-115	
Silica	ug/L	2140	2180	102	85-115	
Silver	ug/L	80	86.8	108	85-115	
Sodium	ug/L	1000	1100	110	85-115	
Thallium	ug/L	80	86.5	108	85-115	
Total Hardness by 2340B	ug/L	6620	7160	108	85-115	
Vanadium	ug/L	80	82.3	103	85-115	
Zinc	ug/L	80	84.6	106	85-115	

MATRIX SPIKE & MATRIX SPIKE DUPLICATE: 1248829 1248830

Parameter	Units	10199707001 Result	MS Spike Conc.	MSD Spike Conc.	MS Result	MSD Result	MS % Rec	MSD % Rec	% Rec Limits	RPD	Max RPD	Qual
Aluminum	ug/L		80	80	130	130	111	111	70-130	.08	20	
Antimony	ug/L		80	80	79.4	79.2	99	99	70-130	.3	20	
Arsenic	ug/L	0.68	80	80	81.1	83.4	101	103	70-130	3	20	
Barium	ug/L	12.6	80	80	91.7	93.7	99	101	70-130	2	20	
Beryllium	ug/L		80	80	79.0	76.8	99	96	70-130	3	20	
Cadmium	ug/L		80	80	80.0	79.4	100	99	70-130	.8	20	
Calcium	ug/L	98900	1000	1000	104000	104000	494	504	70-130	.1	20	M6
Chromium	ug/L		80	80	78.0	78.4	97	98	70-130	.6	20	
Cobalt	ug/L		80	80	78.4	78.1	98	97	70-130	.3	20	
Copper	ug/L		80	80	170	165	140	134	70-130	3	20	M6
Iron	ug/L		1000	1000	1010	1020	98	99	70-130	1	20	
Lead	ug/L		80	80	86.8	86.9	96	97	70-130	.2	20	
Magnesium	ug/L		1000	1000	37300	37400	224	237	70-130	.3	20	M6
Manganese	ug/L		80	80	121	123	101	104	70-130	2	20	
Molybdenum	ug/L		80	80	97.5	97.0	103	102	70-130	.5	20	
Nickel	ug/L		80	80	82.8	80.8	101	99	70-130	3	20	
Potassium	ug/L		1000	1000	5460	5510	134	139	70-130	1	20	M6
Selenium	ug/L		80	80	103	104	99	99	70-130	.4	20	
Silica	ug/L		2140	2140	16900	16900	214	215	70-130	.1	20	
Silver	ug/L		80	80	34.3	34.0	43	43	70-130	.7	20	M6
Sodium	ug/L	639000	1000	1000	629000	629000	-990	-1030	70-130	.06	20	E,M6
Thallium	ug/L		80	80	75.8	76.2	95	95	70-130	.5	20	
Total Hardness by 2340B	ug/L	391000	6620	6620	413000	414000	326	338	70-130	.2	20	
Vanadium	ug/L		80	80	81.2	82.7	99	101	70-130	2	20	
Zinc	ug/L		80	80	232	229	119	115	70-130	1	20	

This report shall not be reproduced, except in full,
without the written consent of Pace Analytical Services, Inc..

Pace Analytical Services, Inc.
9608 Loiret Blvd.
Lenexa, KS 66219
(913)599-5665

QUALITY CONTROL DATA

Project: July 2012 Rico Water Sampling
Pace Project No.: 60125518

MATRIX SPIKE SAMPLE: 1248831

Parameter	Units	92125128001 Result	Spike Conc.	MS Result	MS % Rec	% Rec Limits	Qualifiers
Aluminum	ug/L	40.7	80	186	181	70-130	M1
Antimony	ug/L	1.0	80	83.0	102	70-130	
Arsenic	ug/L	14.8	80	98.8	105	70-130	
Barium	ug/L	53.8	80	136	103	70-130	
Beryllium	ug/L	ND	80	79.4	99	70-130	
Cadmium	ug/L	ND	80	82.0	102	70-130	
Calcium	ug/L	10000	1000	11300	125	70-130	
Chromium	ug/L	ND	80	82.2	102	70-130	
Cobalt	ug/L	ND	80	80.6	100	70-130	
Copper	ug/L	8.1	80	93.0	106	70-130	
Iron	ug/L	168	1000	1200	104	70-130	
Lead	ug/L	ND	80	82.6	103	70-130	
Magnesium	ug/L	5700	1000	6880	118	70-130	
Manganese	ug/L	101	80	187	108	70-130	
Molybdenum	ug/L	21.3	80	102	101	70-130	
Nickel	ug/L	2.8	80	86.6	105	70-130	
Potassium	ug/L	6750	1000	7760	101	70-130	
Selenium	ug/L	2.3	80	87.2	106	70-130	
Silica	ug/L	1800	2140	4450	124	70-130	
Silver	ug/L	ND	80	22.2	28	70-130	M1
Sodium	ug/L	54400	1000	56500	215	70-130	M1
Thallium	ug/L	0.13	80	82.0	102	70-130	
Total Hardness by 2340B	ug/L	48500	6620	56500	120	70-130	
Vanadium	ug/L	8.3	80	91.1	104	70-130	
Zinc	ug/L	8.9	80	95.6	108	70-130	

This report shall not be reproduced, except in full,
without the written consent of Pace Analytical Services, Inc..

Pace Analytical Services, Inc.
9608 Loiret Blvd.
Lenexa, KS 66219
(913)599-5665

QUALITY CONTROL DATA

Project: July 2012 Rico Water Sampling
Pace Project No.: 60125518

QC Batch: ICPM/33998 Analysis Method: EPA 200.8
QC Batch Method: EPA 200.8 Analysis Description: 200.8 MET Dissolved
Associated Lab Samples: 60125518001, 60125518002, 60125518003, 60125518004, 60125518005, 60125518006, 60125518007, 60125518008, 60125518009, 60125518010, 60125518011, 60125518012, 60125518013, 60125518014, 60125518015, 60125518016, 60125518017, 60125518018, 60125518019, 60125518020

METHOD BLANK: 1248809 Matrix: Water
Associated Lab Samples: 60125518001, 60125518002, 60125518003, 60125518004, 60125518005, 60125518006, 60125518007, 60125518008, 60125518009, 60125518010, 60125518011, 60125518012, 60125518013, 60125518014, 60125518015, 60125518016, 60125518017, 60125518018, 60125518019, 60125518020

Parameter	Units	Blank Result	Reporting Limit	Analyzed	Qualifiers
Aluminum, Dissolved	ug/L	ND	4.0	08/28/12 01:19	
Antimony, Dissolved	ug/L	ND	0.50	08/28/12 01:19	
Arsenic, Dissolved	ug/L	ND	0.50	08/28/12 01:19	
Barium, Dissolved	ug/L	ND	0.30	08/28/12 01:19	
Beryllium, Dissolved	ug/L	ND	0.20	08/28/12 01:19	
Cadmium, Dissolved	ug/L	ND	0.080	08/28/12 01:19	
Calcium, Dissolved	ug/L	ND	20.0	08/28/12 01:19	
Chromium, Dissolved	ug/L	ND	0.50	08/28/12 01:19	
Cobalt, Dissolved	ug/L	ND	0.50	08/28/12 01:19	
Copper, Dissolved	ug/L	ND	0.50	08/28/12 01:19	
Iron, Dissolved	ug/L	ND	50.0	08/28/12 01:19	
Lead, Dissolved	ug/L	ND	0.10	08/28/12 01:19	
Magnesium, Dissolved	ug/L	ND	5.0	08/28/12 01:19	
Manganese, Dissolved	ug/L	ND	0.50	08/28/12 01:19	
Molybdenum, Dissolved	ug/L	ND	0.50	08/28/12 01:19	
Nickel, Dissolved	ug/L	ND	0.50	08/28/12 01:19	
Potassium, Dissolved	ug/L	ND	20.0	08/28/12 01:19	
Selenium, Dissolved	ug/L	ND	0.50	08/28/12 01:19	
Silver, Dissolved	ug/L	ND	0.50	08/28/12 01:19	
Sodium, Dissolved	ug/L	ND	50.0	08/28/12 01:19	
Thallium, Dissolved	ug/L	ND	0.10	08/28/12 01:19	
Vanadium, Dissolved	ug/L	ND	0.10	08/28/12 01:19	
Zinc, Dissolved	ug/L	ND	5.0	08/28/12 01:19	

LABORATORY CONTROL SAMPLE: 1248810

Parameter	Units	Spike Conc.	LCS Result	LCS % Rec	% Rec Limits	Qualifiers
Aluminum, Dissolved	ug/L	80	77.8	97	85-115	
Antimony, Dissolved	ug/L	80	76.3	95	85-115	
Arsenic, Dissolved	ug/L	80	77.9	97	85-115	
Barium, Dissolved	ug/L	80	78.1	98	85-115	
Beryllium, Dissolved	ug/L	80	80.1	100	85-115	
Cadmium, Dissolved	ug/L	80	79.5	99	85-115	
Calcium, Dissolved	ug/L	1000	969	97	85-115	
Chromium, Dissolved	ug/L	80	77.9	97	85-115	
Cobalt, Dissolved	ug/L	80	78.7	98	85-115	
Copper, Dissolved	ug/L	80	78.0	97	85-115	
Iron, Dissolved	ug/L	1000	968	97	85-115	

This report shall not be reproduced, except in full,
without the written consent of Pace Analytical Services, Inc..

Pace Analytical Services, Inc.
9608 Loiret Blvd.
Lenexa, KS 66219
(913)599-5665

QUALITY CONTROL DATA

Project: July 2012 Rico Water Sampling
Pace Project No.: 60125518

LABORATORY CONTROL SAMPLE: 1248810

Parameter	Units	Spike Conc.	LCS Result	LCS % Rec	% Rec Limits	Qualifiers
Lead, Dissolved	ug/L	80	77.7	97	85-115	
Magnesium, Dissolved	ug/L	1000	982	98	85-115	
Manganese, Dissolved	ug/L	80	78.3	98	85-115	
Molybdenum, Dissolved	ug/L	80	78.4	98	85-115	
Nickel, Dissolved	ug/L	80	81.5	102	85-115	
Potassium, Dissolved	ug/L	1000	951	95	85-115	
Selenium, Dissolved	ug/L	80	78.3	98	85-115	
Silver, Dissolved	ug/L	80	80.6	101	85-115	
Sodium, Dissolved	ug/L	1000	937	94	85-115	
Thallium, Dissolved	ug/L	80	81.2	102	85-115	
Vanadium, Dissolved	ug/L	80	78.1	98	85-115	
Zinc, Dissolved	ug/L	80	79.5	99	85-115	

MATRIX SPIKE SAMPLE: 1248813

Parameter	Units	60125518011 Result	Spike Conc.	MS Result	MS % Rec	% Rec Limits	Qualifiers
Aluminum, Dissolved	ug/L	ND	80	86.4	106	70-130	
Antimony, Dissolved	ug/L	ND	80	77.7	97	70-130	
Arsenic, Dissolved	ug/L	ND	80	78.3	98	70-130	
Barium, Dissolved	ug/L	ND	80	79.3	99	70-130	
Beryllium, Dissolved	ug/L	ND	80	82.8	104	70-130	
Cadmium, Dissolved	ug/L	ND	80	81.3	102	70-130	
Calcium, Dissolved	ug/L	20.6	1000	944	92	70-130	
Chromium, Dissolved	ug/L	ND	80	79.4	99	70-130	
Cobalt, Dissolved	ug/L	ND	80	81.4	102	70-130	
Copper, Dissolved	ug/L	ND	80	79.1	99	70-130	
Iron, Dissolved	ug/L	ND	1000	996	99	70-130	
Lead, Dissolved	ug/L	ND	80	81.8	102	70-130	
Magnesium, Dissolved	ug/L	6.0	1000	992	99	70-130	
Manganese, Dissolved	ug/L	ND	80	81.6	102	70-130	
Molybdenum, Dissolved	ug/L	ND	80	78.6	98	70-130	
Nickel, Dissolved	ug/L	ND	80	83.2	104	70-130	
Potassium, Dissolved	ug/L	ND	1000	964	96	70-130	
Selenium, Dissolved	ug/L	ND	80	81.3	102	70-130	
Silver, Dissolved	ug/L	ND	80	79.0	99	70-130	
Sodium, Dissolved	ug/L	404	1000	1370	96	70-130	
Thallium, Dissolved	ug/L	ND	80	80.2	100	70-130	CH
Vanadium, Dissolved	ug/L	ND	80	79.1	99	70-130	
Zinc, Dissolved	ug/L	ND	80	83.3	102	70-130	

MATRIX SPIKE & MATRIX SPIKE DUPLICATE: 1249215 1249216

Parameter	Units	60125518002 Result	MS Spike Conc.	MSD Spike Conc.	MS Result	MSD Result	MS % Rec	MSD % Rec	% Rec Limits	RPD	Max RPD	Qual
Aluminum, Dissolved	ug/L	43.3	80	80	126	118	103	93	70-130	7	20	

This report shall not be reproduced, except in full,
without the written consent of Pace Analytical Services, Inc..

Pace Analytical Services, Inc.
9608 Loiret Blvd.
Lenexa, KS 66219
(913)599-5665

QUALITY CONTROL DATA

Project: July 2012 Rico Water Sampling
Pace Project No.: 60125518

MATRIX SPIKE & MATRIX SPIKE DUPLICATE: 1249215 1249216

Parameter	Units	60125518002 Result	MS Spike Conc.	MSD Spike Conc.	MS Result	MSD Result	MS % Rec	MSD % Rec	% Rec Limits	RPD	Max RPD	Qual
Antimony, Dissolved	ug/L	ND	80	80	76.9	73.8	96	92	70-130	4	20	
Arsenic, Dissolved	ug/L	ND	80	80	80.0	77.0	100	96	70-130	4	20	
Barium, Dissolved	ug/L	64.5	80	80	138	134	92	87	70-130	3	20	
Beryllium, Dissolved	ug/L	ND	80	80	75.4	74.2	94	93	70-130	1	20	
Cadmium, Dissolved	ug/L	ND	80	80	81.4	77.0	102	96	70-130	5	20	
Calcium, Dissolved	ug/L	46700	1000	1000	46600	44600	-12	-212	70-130	4	20	M1
Chromium, Dissolved	ug/L	ND	80	80	79.4	75.6	99	94	70-130	5	20	
Cobalt, Dissolved	ug/L	ND	80	80	80.0	77.7	100	97	70-130	3	20	
Copper, Dissolved	ug/L	1.2	80	80	79.6	77.6	98	96	70-130	3	20	
Iron, Dissolved	ug/L	ND	1000	1000	990	936	97	92	70-130	6	20	
Lead, Dissolved	ug/L	ND	80	80	78.5	75.6	98	94	70-130	4	20	
Magnesium, Dissolved	ug/L	5670	1000	1000	6540	6300	87	63	70-130	4	20	M1
Manganese, Dissolved	ug/L	64.1	80	80	142	136	97	90	70-130	4	20	
Molybdenum, Dissolved	ug/L	0.96	80	80	81.6	76.8	101	95	70-130	6	20	
Nickel, Dissolved	ug/L	3.2	80	80	86.0	82.9	104	100	70-130	4	20	
Potassium, Dissolved	ug/L	689	1000	1000	1660	1600	97	91	70-130	4	20	
Selenium, Dissolved	ug/L	ND	80	80	80.4	76.4	100	95	70-130	5	20	
Silver, Dissolved	ug/L	ND	80	80	79.4	77.8	99	97	70-130	2	20	
Sodium, Dissolved	ug/L	2210	1000	1000	3130	3020	92	81	70-130	4	20	
Thallium, Dissolved	ug/L	ND	80	80	77.0	75.0	96	94	70-130	3	20	
Vanadium, Dissolved	ug/L	0.15	80	80	79.4	76.5	99	95	70-130	4	20	
Zinc, Dissolved	ug/L	5.0	80	80	84.4	80.6	99	94	70-130	5	20	

This report shall not be reproduced, except in full,
without the written consent of Pace Analytical Services, Inc..

Pace Analytical Services, Inc.
9608 Loiret Blvd.
Lenexa, KS 66219
(913)599-5665

QUALITY CONTROL DATA

Project: July 2012 Rico Water Sampling
Pace Project No.: 60125518

QC Batch: ICPM/34022 Analysis Method: EPA 200.8
QC Batch Method: EPA 200.8 Analysis Description: 200.8 MET Dissolved
Associated Lab Samples: 60125518021, 60125518022, 60125518023, 60125518024, 60125518025, 60125518026, 60125518027, 60125518028, 60125518029

METHOD BLANK: 1249104 Matrix: Water
Associated Lab Samples: 60125518021, 60125518022, 60125518023, 60125518024, 60125518025, 60125518026, 60125518027, 60125518028, 60125518029

Parameter	Units	Blank Result	Reporting Limit	Analyzed	Qualifiers
Aluminum, Dissolved	ug/L	ND	4.0	08/25/12 21:51	
Antimony, Dissolved	ug/L	ND	0.50	08/25/12 21:51	
Arsenic, Dissolved	ug/L	ND	0.50	08/25/12 21:51	
Barium, Dissolved	ug/L	ND	0.30	08/25/12 21:51	
Beryllium, Dissolved	ug/L	ND	0.20	08/29/12 00:23	
Cadmium, Dissolved	ug/L	ND	0.080	08/25/12 21:51	
Calcium, Dissolved	ug/L	ND	20.0	08/25/12 21:51	
Chromium, Dissolved	ug/L	ND	0.50	08/25/12 21:51	
Cobalt, Dissolved	ug/L	ND	0.50	08/25/12 21:51	
Copper, Dissolved	ug/L	ND	0.50	08/25/12 21:51	
Iron, Dissolved	ug/L	ND	50.0	08/25/12 21:51	
Lead, Dissolved	ug/L	ND	0.10	08/25/12 21:51	
Magnesium, Dissolved	ug/L	ND	5.0	08/25/12 21:51	
Manganese, Dissolved	ug/L	ND	0.50	08/25/12 21:51	
Molybdenum, Dissolved	ug/L	ND	0.50	08/25/12 21:51	
Nickel, Dissolved	ug/L	ND	0.50	08/25/12 21:51	
Potassium, Dissolved	ug/L	ND	20.0	08/25/12 21:51	
Selenium, Dissolved	ug/L	ND	0.50	08/25/12 21:51	
Silver, Dissolved	ug/L	ND	0.50	08/25/12 21:51	
Sodium, Dissolved	ug/L	ND	50.0	08/25/12 21:51	
Thallium, Dissolved	ug/L	ND	0.10	08/25/12 21:51	
Vanadium, Dissolved	ug/L	ND	0.10	08/25/12 21:51	
Zinc, Dissolved	ug/L	ND	5.0	08/25/12 21:51	

LABORATORY CONTROL SAMPLE: 1249105

Parameter	Units	Spike Conc.	LCS Result	LCS % Rec	% Rec Limits	Qualifiers
Aluminum, Dissolved	ug/L	80	81.6	102	85-115	
Antimony, Dissolved	ug/L	80	77.5	97	85-115	
Arsenic, Dissolved	ug/L	80	80.4	101	85-115	
Barium, Dissolved	ug/L	80	79.8	100	85-115	
Beryllium, Dissolved	ug/L	80	81.1	101	85-115	
Cadmium, Dissolved	ug/L	80	78.4	98	85-115	
Calcium, Dissolved	ug/L	1000	1020	102	85-115	
Chromium, Dissolved	ug/L	80	81.9	102	85-115	
Cobalt, Dissolved	ug/L	80	82.5	103	85-115	
Copper, Dissolved	ug/L	80	84.2	105	85-115	
Iron, Dissolved	ug/L	1000	999	100	85-115	
Lead, Dissolved	ug/L	80	85.6	107	85-115	
Magnesium, Dissolved	ug/L	1000	1070	107	85-115	

This report shall not be reproduced, except in full,
without the written consent of Pace Analytical Services, Inc..

Pace Analytical Services, Inc.
9608 Loiret Blvd.
Lenexa, KS 66219
(913)599-5665

QUALITY CONTROL DATA

Project: July 2012 Rico Water Sampling
Pace Project No.: 60125518

LABORATORY CONTROL SAMPLE: 1249105

Parameter	Units	Spike Conc.	LCS Result	LCS % Rec	% Rec Limits	Qualifiers
Manganese, Dissolved	ug/L	80	82.9	104	85-115	
Molybdenum, Dissolved	ug/L	80	78.5	98	85-115	
Nickel, Dissolved	ug/L	80	85.0	106	85-115	
Potassium, Dissolved	ug/L	1000	1000	100	85-115	
Selenium, Dissolved	ug/L	80	80.8	101	85-115	
Silver, Dissolved	ug/L	80	84.0	105	85-115	
Sodium, Dissolved	ug/L	1000	1050	105	85-115	
Thallium, Dissolved	ug/L	80	87.5	109	85-115	
Vanadium, Dissolved	ug/L	80	81.2	102	85-115	
Zinc, Dissolved	ug/L	80	82.0	102	85-115	

MATRIX SPIKE & MATRIX SPIKE DUPLICATE: 1249106 1249107

Parameter	Units	60125518022 Result	MS Spike Conc.	MSD Spike Conc.	MS Result	MSD Result	MS % Rec	MSD % Rec	% Rec Limits	RPD	Max RPD	Qual
Aluminum, Dissolved	ug/L	ND	80	80	80.8	79.8	96	95	70-130	1	20	
Antimony, Dissolved	ug/L	ND	80	80	75.0	73.8	94	92	70-130	2	20	
Arsenic, Dissolved	ug/L	ND	80	80	77.6	75.8	97	95	70-130	2	20	
Barium, Dissolved	ug/L	12.1	80	80	89.7	88.7	97	96	70-130	1	20	
Beryllium, Dissolved	ug/L	ND	80	80	79.1	78.0	99	97	70-130	1	20	
Cadmium, Dissolved	ug/L	0.74	80	80	76.7	74.6	95	92	70-130	3	20	
Calcium, Dissolved	ug/L	264000	1000	1000	263000	262000	-60	-170	70-130	.4	20	E,M6
Chromium, Dissolved	ug/L	0.58	80	80	80.6	77.6	100	96	70-130	4	20	
Cobalt, Dissolved	ug/L	ND	80	80	77.6	76.7	97	96	70-130	1	20	
Copper, Dissolved	ug/L	ND	80	80	76.6	78.1	96	97	70-130	2	20	
Iron, Dissolved	ug/L	ND	1000	1000	983	976	98	97	70-130	.7	20	
Lead, Dissolved	ug/L	ND	80	80	78.7	77.9	98	97	70-130	1	20	
Magnesium, Dissolved	ug/L	23400	1000	1000	23900	24100	50	68	70-130	.8	20	M6
Manganese, Dissolved	ug/L	1.7	80	80	80.1	79.5	98	97	70-130	.7	20	
Molybdenum, Dissolved	ug/L	5.4	80	80	85.5	81.2	100	95	70-130	5	20	
Nickel, Dissolved	ug/L	ND	80	80	79.5	78.4	99	98	70-130	1	20	
Potassium, Dissolved	ug/L	1840	1000	1000	2750	2720	91	88	70-130	1	20	
Selenium, Dissolved	ug/L	1.8	80	80	77.2	76.5	94	93	70-130	.9	20	
Silver, Dissolved	ug/L	ND	80	80	77.1	76.6	96	96	70-130	.7	20	
Sodium, Dissolved	ug/L	11400	1000	1000	12000	11900	57	45	70-130	1	20	M6
Thallium, Dissolved	ug/L	ND	80	80	79.1	77.8	99	97	70-130	2	20	
Vanadium, Dissolved	ug/L	ND	80	80	81.4	77.4	102	97	70-130	5	20	
Zinc, Dissolved	ug/L	16.2	80	80	91.1	92.9	94	96	70-130	2	20	

This report shall not be reproduced, except in full,
without the written consent of Pace Analytical Services, Inc..

Pace Analytical Services, Inc.
9608 Loiret Blvd.
Lenexa, KS 66219
(913)599-5665

QUALITY CONTROL DATA

Project: July 2012 Rico Water Sampling
Pace Project No.: 60125518

QC Batch: MERC/7200 Analysis Method: EPA 245.1
QC Batch Method: EPA 245.1 Analysis Description: 245.1 Mercury
Associated Lab Samples: 60125518001, 60125518002, 60125518003, 60125518004, 60125518005, 60125518006, 60125518007, 60125518008, 60125518009, 60125518010, 60125518011, 60125518012, 60125518013, 60125518014, 60125518015, 60125518016, 60125518017, 60125518018, 60125518019, 60125518020

METHOD BLANK: 1248918 Matrix: Water
Associated Lab Samples: 60125518001, 60125518002, 60125518003, 60125518004, 60125518005, 60125518006, 60125518007, 60125518008, 60125518009, 60125518010, 60125518011, 60125518012, 60125518013, 60125518014, 60125518015, 60125518016, 60125518017, 60125518018, 60125518019, 60125518020

Parameter	Units	Blank Result	Reporting Limit	Analyzed	Qualifiers
Mercury	ug/L	ND	0.20	07/26/12 12:35	

LABORATORY CONTROL SAMPLE: 1248919

Parameter	Units	Spike Conc.	LCS Result	LCS % Rec	% Rec Limits	Qualifiers
Mercury	ug/L	5	5.1	103	85-115	

MATRIX SPIKE & MATRIX SPIKE DUPLICATE: 1248920 1248921

Parameter	Units	60125518001 Result	MS Spike Conc.	MSD Spike Conc.	MS Result	MSD Result	MS % Rec	MSD % Rec	% Rec Limits	RPD	Max RPD	Qual
Mercury	ug/L	ND	5	5	4.9	4.8	98	95	85-115	3	30	

MATRIX SPIKE SAMPLE: 1248922

Parameter	Units	60125518020 Result	Spike Conc.	MS Result	MS % Rec	% Rec Limits	Qualifiers
Mercury	ug/L	ND	5	4.8	97	85-115	

This report shall not be reproduced, except in full,
without the written consent of Pace Analytical Services, Inc..

Pace Analytical Services, Inc.
9608 Loiret Blvd.
Lenexa, KS 66219
(913)599-5665

QUALITY CONTROL DATA

Project: July 2012 Rico Water Sampling
Pace Project No.: 60125518

QC Batch: MERC/7201 — Analysis Method: EPA 245.1
QC Batch Method: EPA 245.1 — Analysis Description: 245.1 Mercury
Associated Lab Samples: 60125518021, 60125518022, 60125518023, 60125518024, 60125518025, 60125518026, 60125518027, 60125518028, 60125518029

METHOD BLANK: 1248923 — Matrix: Water
Associated Lab Samples: 60125518021, 60125518022, 60125518023, 60125518024, 60125518025, 60125518026, 60125518027, 60125518028, 60125518029

Parameter	Units	Blank Result	Reporting Limit	Analyzed	Qualifiers
Mercury	ug/L	ND	0.20	07/26/12 11:59	

LABORATORY CONTROL SAMPLE: 1248924

Parameter	Units	Spike Conc.	LCS Result	LCS % Rec	% Rec Limits	Qualifiers
Mercury	ug/L	5	5.4	108	85-115	

MATRIX SPIKE & MATRIX SPIKE DUPLICATE: 1248925 1248926

Parameter	Units	60125518021 Result	MS Spike Conc.	MSD Spike Conc.	MS Result	MSD Result	MS % Rec	MSD % Rec	% Rec Limits	RPD	Max RPD	Qual
Mercury	ug/L	ND	5	5	2.9	4.4	57	88	85-115	42	30	D6,M1

This report shall not be reproduced, except in full,
without the written consent of Pace Analytical Services, Inc..

Pace Analytical Services, Inc.
9608 Loiret Blvd.
Lenexa, KS 66219
(913)599-5665

QUALITY CONTROL DATA

Project: July 2012 Rico Water Sampling
Pace Project No.: 60125518

QC Batch: MERC/7203 Analysis Method: EPA 245.1
QC Batch Method: EPA 245.1 Analysis Description: 245.1 Mercury - Dissolved
Associated Lab Samples: 60125518001, 60125518002, 60125518003, 60125518004, 60125518005, 60125518006, 60125518007, 60125518008, 60125518009, 60125518010, 60125518011, 60125518012, 60125518013, 60125518014, 60125518015, 60125518016, 60125518017, 60125518018, 60125518019, 60125518020

METHOD BLANK: 1249011 Matrix: Water
Associated Lab Samples: 60125518001, 60125518002, 60125518003, 60125518004, 60125518005, 60125518006, 60125518007, 60125518008, 60125518009, 60125518010, 60125518011, 60125518012, 60125518013, 60125518014, 60125518015, 60125518016, 60125518017, 60125518018, 60125518019, 60125518020

Parameter	Units	Blank Result	Reporting Limit	Analyzed	Qualifiers
Mercury, Dissolved	ug/L	ND	0.20	07/26/12 14:01	

LABORATORY CONTROL SAMPLE: 1249012

Parameter	Units	Spike Conc.	LCS Result	LCS % Rec	% Rec Limits	Qualifiers
Mercury, Dissolved	ug/L	5	4.9	97	85-115	

MATRIX SPIKE & MATRIX SPIKE DUPLICATE: 1249013 1249014

Parameter	Units	60125518001 Result	MS Spike Conc.	MSD Spike Conc.	MS Result	MSD Result	MS % Rec	MSD % Rec	% Rec Limits	RPD	Max RPD	Qual
Mercury, Dissolved	ug/L	ND	5	5	4.9	4.4	98	88	85-115	11	20	

MATRIX SPIKE SAMPLE: 1249015

Parameter	Units	60125518020 Result	Spike Conc.	MS Result	MS % Rec	% Rec Limits	Qualifiers
Mercury, Dissolved	ug/L	ND	5	4.5	90	85-115	

This report shall not be reproduced, except in full,
without the written consent of Pace Analytical Services, Inc..

Pace Analytical Services, Inc.
9608 Loiret Blvd.
Lenexa, KS 66219
(913)599-5665

QUALITY CONTROL DATA

Project: July 2012 Rico Water Sampling
Pace Project No.: 60125518

QC Batch: MERC/7204 — Analysis Method: EPA 245.1
QC Batch Method: EPA 245.1 — Analysis Description: 245.1 Mercury - Dissolved
Associated Lab Samples: 60125518021, 60125518022, 60125518023, 60125518024, 60125518025, 60125518026, 60125518027, 60125518028, 60125518029

METHOD BLANK: 1249031 — Matrix: Water
Associated Lab Samples: 60125518021, 60125518022, 60125518023, 60125518024, 60125518025, 60125518026, 60125518027, 60125518028, 60125518029

Parameter	Units	Blank Result	Reporting Limit	Analyzed	Qualifiers
Mercury, Dissolved	ug/L	ND	0.20	07/26/12 10:55	

LABORATORY CONTROL SAMPLE: 1249032

Parameter	Units	Spike Conc.	LCS Result	LCS % Rec	% Rec Limits	Qualifiers
Mercury, Dissolved	ug/L	5	4.8	96	85-115	

MATRIX SPIKE & MATRIX SPIKE DUPLICATE: 1249033 1249034

Parameter	Units	60125518021 Result	MS Spike Conc.	MSD Spike Conc.	MS Result	MSD Result	MS % Rec	MSD % Rec	% Rec Limits	RPD	Max RPD	Qual
Mercury, Dissolved	ug/L	ND	5	5	5.9	5.3	117	106	85-115	10	20	M1

This report shall not be reproduced, except in full,
without the written consent of Pace Analytical Services, Inc..

Pace Analytical Services, Inc.
9608 Loiret Blvd.
Lenexa, KS 66219
(913)599-5665

QUALITY CONTROL DATA

Project: July 2012 Rico Water Sampling
Pace Project No.: 60125518

QC Batch: MERP/6480 — Analysis Method: EPA 245.1
QC Batch Method: EPA 245.1 — Analysis Description: 245.1 Mercury, Potentially Dissolved
Associated Lab Samples: 60125518001, 60125518002, 60125518003, 60125518004, 60125518005, 60125518006, 60125518007, 60125518008, 60125518009, 60125518010, 60125518011, 60125518012, 60125518013, 60125518014, 60125518015, 60125518016, 60125518017, 60125518018, 60125518019, 60125518020

METHOD BLANK: 1034151 — Matrix: Water
Associated Lab Samples: 60125518001, 60125518002, 60125518003, 60125518004, 60125518005, 60125518006, 60125518007, 60125518008, 60125518009, 60125518010, 60125518011, 60125518012, 60125518013, 60125518014, 60125518015, 60125518016, 60125518017, 60125518018, 60125518019, 60125518020

Parameter	Units	Blank Result	Reporting Limit	Analyzed	Qualifiers
Mercury, Dissolved	ug/L	ND	0.20	07/26/12 11:48	

LABORATORY CONTROL SAMPLE: 1034152

Parameter	Units	Spike Conc.	LCS Result	LCS % Rec	% Rec Limits	Qualifiers
Mercury, Dissolved	ug/L	5	4.3	86	85-115	

MATRIX SPIKE & MATRIX SPIKE DUPLICATE: 1034153 1034154

Parameter	Units	60125518003 Result	MS Spike Conc.	MSD Spike Conc.	MS Result	MSD Result	MS % Rec	MSD % Rec	% Rec Limits	RPD	Max RPD	Qual
Mercury, Dissolved	ug/L	ND	5	5	4.3	4.5	86	90	70-130	5	20	

MATRIX SPIKE SAMPLE: 1034155

Parameter	Units	60125518009 Result	Spike Conc.	MS Result	MS % Rec	% Rec Limits	Qualifiers
Mercury, Dissolved	ug/L	ND	5	4.3	85	70-130	

This report shall not be reproduced, except in full,
without the written consent of Pace Analytical Services, Inc..

Pace Analytical Services, Inc.
9608 Loiret Blvd.
Lenexa, KS 66219
(913)599-5665

QUALITY CONTROL DATA

Project: July 2012 Rico Water Sampling
Pace Project No.: 60125518

QC Batch: MERP/6481 | Analysis Method: EPA 245.1
QC Batch Method: EPA 245.1 | Analysis Description: 245.1 Mercury, Potentially Dissolved
Associated Lab Samples: 60125518021, 60125518022, 60125518023, 60125518024, 60125518025, 60125518026, 60125518027, 60125518028, 60125518029

METHOD BLANK: 1034159 | Matrix: Water
Associated Lab Samples: 60125518021, 60125518022, 60125518023, 60125518024, 60125518025, 60125518026, 60125518027, 60125518028, 60125518029

Parameter	Units	Blank Result	Reporting Limit	Analyzed	Qualifiers
Mercury, Dissolved	ug/L	ND	0.20	08/02/12 14:26	

LABORATORY CONTROL SAMPLE: 1034160

Parameter	Units	Spike Conc.	LCS Result	LCS % Rec	% Rec Limits	Qualifiers
Mercury, Dissolved	ug/L	5	5.6	111	85-115	

MATRIX SPIKE SAMPLE: 1034161

Parameter	Units	60125518029 Result	Spike Conc.	MS Result	MS % Rec	% Rec Limits	Qualifiers
Mercury, Dissolved	ug/L	ND	5	5.0	99	70-130	

SAMPLE DUPLICATE: 1037490

Parameter	Units	60125518028 Result	Dup Result	RPD	Max RPD	Qualifiers
Mercury, Dissolved	ug/L	ND	ND		20	

This report shall not be reproduced, except in full,
without the written consent of Pace Analytical Services, Inc..

Pace Analytical Services, Inc.
9608 Loiret Blvd.
Lenexa, KS 66219
(913)599-5665

QUALITY CONTROL DATA

Project: July 2012 Rico Water Sampling
Pace Project No.: 60125518

QC Batch: MPRP/18863 Analysis Method: EPA 200.7
QC Batch Method: EPA 200.7 Analysis Description: 200.7 Potentially Dissolved Metals
Associated Lab Samples: 60125518001, 60125518002, 60125518003, 60125518004, 60125518005, 60125518006, 60125518007, 60125518008, 60125518009, 60125518010, 60125518011, 60125518012, 60125518013, 60125518014, 60125518015, 60125518016, 60125518017, 60125518018, 60125518019, 60125518020

METHOD BLANK: 1035047 Matrix: Water
Associated Lab Samples: 60125518001, 60125518002, 60125518003, 60125518004, 60125518005, 60125518006, 60125518007, 60125518008, 60125518009, 60125518010, 60125518011, 60125518012, 60125518013, 60125518014, 60125518015, 60125518016, 60125518017, 60125518018, 60125518019, 60125518020

Parameter	Units	Blank Result	Reporting Limit	Analyzed	Qualifiers
Calcium, Dissolved	ug/L	ND	100	07/27/12 13:32	
Magnesium, Dissolved	ug/L	ND	50.0	07/27/12 13:32	
Potassium, Dissolved	ug/L	ND	500	07/27/12 13:32	
Sodium, Dissolved	ug/L	ND	500	07/27/12 13:32	

LABORATORY CONTROL SAMPLE: 1035048

Parameter	Units	Spike Conc.	LCS Result	LCS % Rec	% Rec Limits	Qualifiers
Calcium, Dissolved	ug/L	10000	9520	95	85-115	
Magnesium, Dissolved	ug/L	10000	9660	97	85-115	
Potassium, Dissolved	ug/L	10000	9750	97	85-115	
Sodium, Dissolved	ug/L	10000	9910	99	85-115	

MATRIX SPIKE & MATRIX SPIKE DUPLICATE: 1035049 1035050

Parameter	Units	60125518003 Result	MS Spike Conc.	MSD Spike Conc.	MS Result	MSD Result	MS % Rec	MSD % Rec	% Rec Limits	RPD	Max RPD	Qual
Calcium, Dissolved	ug/L	221000	10000	10000	235000	237000	142	168	70-130	1	20	M1
Magnesium, Dissolved	ug/L	19000	10000	10000	29200	29300	102	103	70-130	0	20	
Potassium, Dissolved	ug/L	1360	10000	10000	11400	11400	101	100	70-130	0	20	
Sodium, Dissolved	ug/L	10000	10000	10000	20300	20300	103	103	70-130	0	20	

MATRIX SPIKE SAMPLE: 1035051

Parameter	Units	60125518004 Result	Spike Conc.	MS Result	MS % Rec	% Rec Limits	Qualifiers
Calcium, Dissolved	ug/L	225000	10000	231000	59	70-130	M1
Magnesium, Dissolved	ug/L	19300	10000	29000	98	70-130	
Potassium, Dissolved	ug/L	1350	10000	11600	102	70-130	
Sodium, Dissolved	ug/L	10200	10000	20400	102	70-130	

This report shall not be reproduced, except in full,
without the written consent of Pace Analytical Services, Inc..

Pace Analytical Services, Inc.
9608 Loiret Blvd.
Lenexa, KS 66219
(913)599-5665

QUALITY CONTROL DATA

Project: July 2012 Rico Water Sampling
Pace Project No.: 60125518

QC Batch: MPRP/18864 | Analysis Method: EPA 200.7
QC Batch Method: EPA 200.7 | Analysis Description: 200.7 Potentially Dissolved Metals
Associated Lab Samples: 60125518021, 60125518022, 60125518023, 60125518024, 60125518025, 60125518026, 60125518027, 60125518028, 60125518029

METHOD BLANK: 1035054 | Matrix: Water
Associated Lab Samples: 60125518021, 60125518022, 60125518023, 60125518024, 60125518025, 60125518026, 60125518027, 60125518028, 60125518029

Parameter	Units	Blank Result	Reporting Limit	Analyzed	Qualifiers
Calcium, Dissolved	ug/L	ND	100	07/30/12 12:57	
Magnesium, Dissolved	ug/L	ND	50.0	07/30/12 12:57	
Potassium, Dissolved	ug/L	ND	500	07/30/12 12:57	
Sodium, Dissolved	ug/L	ND	500	07/30/12 12:57	

LABORATORY CONTROL SAMPLE: 1035055

Parameter	Units	Spike Conc.	LCS Result	LCS % Rec	% Rec Limits	Qualifiers
Calcium, Dissolved	ug/L	10000	9480	95	85-115	
Magnesium, Dissolved	ug/L	10000	9510	95	85-115	
Potassium, Dissolved	ug/L	10000	9420	94	85-115	
Sodium, Dissolved	ug/L	10000	9680	97	85-115	

MATRIX SPIKE & MATRIX SPIKE DUPLICATE: 1035056 1035057

Parameter	Units	60125518022 Result	MS Spike Conc.	MSD Spike Conc.	MS Result	MSD Result	MS % Rec	MSD % Rec	% Rec Limits	RPD	Max RPD	Qual
Calcium, Dissolved	ug/L	237000	10000	10000	232000	240000	-53	31	70-130	4	20	M1
Magnesium, Dissolved	ug/L	21800	10000	10000	29800	30300	80	85	70-130	2	20	
Potassium, Dissolved	ug/L	1760	10000	10000	11500	11400	98	97	70-130	1	20	
Sodium, Dissolved	ug/L	10600	10000	10000	20200	20300	96	98	70-130	1	20	

This report shall not be reproduced, except in full,
without the written consent of Pace Analytical Services, Inc..

Pace Analytical Services, Inc.
9608 Loiret Blvd.
Lenexa, KS 66219
(913)599-5665

QUALITY CONTROL DATA

Project: July 2012 Rico Water Sampling
Pace Project No.: 60125518

QC Batch: MPRP/18861 Analysis Method: EPA 200.8
QC Batch Method: EPA 200.8 Analysis Description: 200.8 Potentially Dissolved Metals
Associated Lab Samples: 60125518001, 60125518002, 60125518003, 60125518004, 60125518005, 60125518006, 60125518007, 60125518008, 60125518009, 60125518010, 60125518011, 60125518012, 60125518013, 60125518014, 60125518015, 60125518016, 60125518017, 60125518018, 60125518019, 60125518020

METHOD BLANK: 1035035 Matrix: Water
Associated Lab Samples: 60125518001, 60125518002, 60125518003, 60125518004, 60125518005, 60125518006, 60125518007, 60125518008, 60125518009, 60125518010, 60125518011, 60125518012, 60125518013, 60125518014, 60125518015, 60125518016, 60125518017, 60125518018, 60125518019, 60125518020

Parameter	Units	Blank Result	Reporting Limit	Analyzed	Qualifiers
Aluminum, Dissolved	ug/L	ND	50.0	07/26/12 16:42	
Antimony, Dissolved	ug/L	ND	1.0	07/26/12 16:42	
Arsenic, Dissolved	ug/L	ND	1.0	07/26/12 16:42	
Barium, Dissolved	ug/L	ND	1.0	07/26/12 16:42	
Beryllium, Dissolved	ug/L	ND	0.50	07/26/12 16:42	
Cadmium, Dissolved	ug/L	ND	0.50	07/26/12 16:42	
Chromium, Dissolved	ug/L	0.12J	1.0	07/26/12 16:42	
Cobalt, Dissolved	ug/L	ND	1.0	07/26/12 16:42	
Copper, Dissolved	ug/L	ND	1.0	07/26/12 16:42	
Iron, Dissolved	ug/L	ND	50.0	07/26/12 16:42	
Lead, Dissolved	ug/L	ND	1.0	07/26/12 16:42	
Manganese, Dissolved	ug/L	ND	1.0	07/26/12 16:42	
Molybdenum, Dissolved	ug/L	ND	1.0	07/26/12 16:42	
Nickel, Dissolved	ug/L	ND	1.0	07/27/12 10:57	
Selenium, Dissolved	ug/L	ND	1.0	07/26/12 16:42	
Silver, Dissolved	ug/L	ND	0.50	07/26/12 16:42	
Thallium, Dissolved	ug/L	ND	1.0	07/26/12 16:42	
Vanadium, Dissolved	ug/L	ND	1.0	07/26/12 16:42	

LABORATORY CONTROL SAMPLE: 1035036

Parameter	Units	Spike Conc.	LCS Result	LCS % Rec	% Rec Limits	Qualifiers
Aluminum, Dissolved	ug/L	1000	1000	100	85-115	
Antimony, Dissolved	ug/L	40	40.3	101	85-115	
Arsenic, Dissolved	ug/L	40	40.7	102	85-115	
Barium, Dissolved	ug/L	40	40.4	101	85-115	
Beryllium, Dissolved	ug/L	40	42.1	105	85-115	
Cadmium, Dissolved	ug/L	40	40.4	101	85-115	
Chromium, Dissolved	ug/L	40	41.3	103	85-115	
Cobalt, Dissolved	ug/L	40	39.9	100	85-115	
Copper, Dissolved	ug/L	40	41.2	103	85-115	
Iron, Dissolved	ug/L	1000	1030	103	85-115	
Lead, Dissolved	ug/L	40	40.8	102	85-115	
Manganese, Dissolved	ug/L	40	40.6	101	85-115	
Molybdenum, Dissolved	ug/L	40	40.6	102	85-115	
Nickel, Dissolved	ug/L	40	41.0	103	85-115	
Selenium, Dissolved	ug/L	40	40.0	100	85-115	
Silver, Dissolved	ug/L	20	20.1	100	85-115	

This report shall not be reproduced, except in full,
without the written consent of Pace Analytical Services, Inc..

Pace Analytical Services, Inc.
9608 Loiret Blvd.
Lenexa, KS 66219
(913)599-5665

QUALITY CONTROL DATA

Project: July 2012 Rico Water Sampling
Pace Project No.: 60125518

LABORATORY CONTROL SAMPLE: 1035036

Parameter	Units	Spike Conc.	LCS Result	LCS % Rec	% Rec Limits	Qualifiers
Thallium, Dissolved	ug/L	40	39.0	98	85-115	
Vanadium, Dissolved	ug/L	40	40.7	102	85-115	

MATRIX SPIKE & MATRIX SPIKE DUPLICATE: 1035037 1035038

Parameter	Units	60125518001 Result	MS Spike Conc.	MSD Spike Conc.	MS Result	MSD Result	MS % Rec	MSD % Rec	% Rec Limits	RPD	Max RPD	Qual
Aluminum, Dissolved	ug/L	ND	1000	1000	1020	980	100	96	70-130	4	20	
Antimony, Dissolved	ug/L	0.10J	40	40	41.3	40.0	103	100	70-130	3	20	
Arsenic, Dissolved	ug/L	0.44J	40	40	42.0	40.5	104	100	70-130	4	20	
Barium, Dissolved	ug/L	63.6	40	40	108	102	110	95	70-130	6	20	
Beryllium, Dissolved	ug/L	ND	40	40	40.5	39.1	101	98	70-130	3	20	
Cadmium, Dissolved	ug/L	ND	40	40	41.1	39.8	103	99	70-130	3	20	
Chromium, Dissolved	ug/L	0.57J	40	40	41.5	40.4	102	100	70-130	3	20	
Cobalt, Dissolved	ug/L	0.51J	40	40	40.4	39.2	100	97	70-130	3	20	
Copper, Dissolved	ug/L	3.5	40	40	42.2	40.2	97	92	70-130	5	20	
Iron, Dissolved	ug/L	ND	1000	1000	1060	1040	101	99	70-130	2	20	
Lead, Dissolved	ug/L	27.8	40	40	68.7	66.0	102	96	70-130	4	20	
Manganese, Dissolved	ug/L	10.8	40	40	51.7	50.0	102	98	70-130	3	20	
Molybdenum, Dissolved	ug/L	0.96J	40	40	42.9	42.0	105	103	70-130	2	20	
Nickel, Dissolved	ug/L	0.94J	40	40	40.7	39.6	99	97	70-130	3	20	
Selenium, Dissolved	ug/L	0.36J	40	40	39.9	39.2	99	97	70-130	2	20	
Silver, Dissolved	ug/L	ND	20	20	20.2	19.8	101	99	70-130	2	20	
Thallium, Dissolved	ug/L	0.091J	40	40	38.4	37.7	96	94	70-130	2	20	
Vanadium, Dissolved	ug/L	ND	40	40	40.8	40.2	102	100	70-130	2	20	

MATRIX SPIKE SAMPLE: 1035042

Parameter	Units	60125518002 Result	Spike Conc.	MS Result	MS % Rec	% Rec Limits	Qualifiers
Aluminum, Dissolved	ug/L	ND	1000	1030	101	70-130	
Antimony, Dissolved	ug/L	0.085J	40	41.6	104	70-130	
Arsenic, Dissolved	ug/L	0.36J	40	42.3	105	70-130	
Barium, Dissolved	ug/L	60.7	40	103	105	70-130	
Beryllium, Dissolved	ug/L	ND	40	41.2	103	70-130	
Cadmium, Dissolved	ug/L	ND	40	41.1	103	70-130	
Chromium, Dissolved	ug/L	1.8	40	42.9	103	70-130	
Copper, Dissolved	ug/L	1.3	40	40.8	99	70-130	
Iron, Dissolved	ug/L	93.6	1000	1100	101	70-130	
Lead, Dissolved	ug/L	4.5	40	46.0	104	70-130	
Manganese, Dissolved	ug/L	63.0	40	107	110	70-130	
Molybdenum, Dissolved	ug/L	1.0	40	44.2	108	70-130	
Nickel, Dissolved	ug/L	2.1	40	40.8	97	70-130	
Selenium, Dissolved	ug/L	ND	40	41.6	103	70-130	
Silver, Dissolved	ug/L	ND	20	20.4	102	70-130	
Thallium, Dissolved	ug/L	0.095J	40	39.5	98	70-130	

This report shall not be reproduced, except in full,
without the written consent of Pace Analytical Services, Inc..

Pace Analytical Services, Inc.
9608 Loiret Blvd.
Lenexa, KS 66219
(913)599-5665

QUALITY CONTROL DATA

Project: July 2012 Rico Water Sampling
Pace Project No.: 60125518

MATRIX SPIKE SAMPLE: 1035042

Parameter	Units	60125518002 Result	Spike Conc.	MS Result	MS % Rec	% Rec Limits	Qualifiers
Vanadium, Dissolved	ug/L	ND	40	40.9	102	70-130	

This report shall not be reproduced, except in full,
without the written consent of Pace Analytical Services, Inc..

Pace Analytical Services, Inc.
9608 Loiret Blvd.
Lenexa, KS 66219
(913)599-5665

QUALITY CONTROL DATA

Project: July 2012 Rico Water Sampling
Pace Project No.: 60125518

QC Batch: MPRP/18862 | Analysis Method: EPA 200.8
QC Batch Method: EPA 200.8 | Analysis Description: 200.8 Potentially Dissolved Metals
Associated Lab Samples: 60125518021, 60125518022, 60125518023, 60125518024, 60125518025, 60125518026, 60125518027, 60125518028, 60125518029

METHOD BLANK: 1035043 | Matrix: Water
Associated Lab Samples: 60125518021, 60125518022, 60125518023, 60125518024, 60125518025, 60125518026, 60125518027, 60125518028, 60125518029

Parameter	Units	Blank Result	Reporting Limit	Analyzed	Qualifiers
Aluminum, Dissolved	ug/L	ND	50.0	07/26/12 19:16	
Antimony, Dissolved	ug/L	ND	1.0	07/26/12 19:16	
Arsenic, Dissolved	ug/L	ND	1.0	07/26/12 19:16	
Barium, Dissolved	ug/L	ND	1.0	07/26/12 19:16	
Beryllium, Dissolved	ug/L	ND	0.50	07/26/12 19:16	
Cadmium, Dissolved	ug/L	ND	0.50	07/26/12 19:16	
Chromium, Dissolved	ug/L	ND	1.0	07/30/12 11:44	
Cobalt, Dissolved	ug/L	ND	1.0	07/26/12 19:16	
Copper, Dissolved	ug/L	ND	1.0	07/30/12 11:44	
Iron, Dissolved	ug/L	ND	50.0	07/26/12 19:16	
Lead, Dissolved	ug/L	ND	1.0	07/26/12 19:16	
Manganese, Dissolved	ug/L	ND	1.0	07/26/12 19:16	
Molybdenum, Dissolved	ug/L	ND	1.0	07/26/12 19:16	
Nickel, Dissolved	ug/L	0.44J	1.0	07/27/12 13:36	
Selenium, Dissolved	ug/L	ND	1.0	07/26/12 19:16	
Silver, Dissolved	ug/L	ND	0.50	07/26/12 19:16	
Thallium, Dissolved	ug/L	ND	1.0	07/26/12 19:16	
Vanadium, Dissolved	ug/L	ND	1.0	07/27/12 13:36	

LABORATORY CONTROL SAMPLE: 1035044

Parameter	Units	Spike Conc.	LCS Result	LCS % Rec	% Rec Limits	Qualifiers
Aluminum, Dissolved	ug/L	1000	984	98	85-115	
Antimony, Dissolved	ug/L	40	40.4	101	85-115	
Arsenic, Dissolved	ug/L	40	40.9	102	85-115	
Barium, Dissolved	ug/L	40	39.6	99	85-115	
Beryllium, Dissolved	ug/L	40	40.9	102	85-115	
Cadmium, Dissolved	ug/L	40	39.9	100	85-115	
Chromium, Dissolved	ug/L	40	41.2	103	85-115	
Cobalt, Dissolved	ug/L	40	40.1	100	85-115	
Copper, Dissolved	ug/L	40	41.2	103	85-115	
Iron, Dissolved	ug/L	1000	1010	101	85-115	
Lead, Dissolved	ug/L	40	41.4	104	85-115	
Manganese, Dissolved	ug/L	40	40.4	101	85-115	
Molybdenum, Dissolved	ug/L	40	40.4	101	85-115	
Nickel, Dissolved	ug/L	40	40.6	101	85-115	
Selenium, Dissolved	ug/L	40	40.7	102	85-115	
Silver, Dissolved	ug/L	20	20.1	100	85-115	
Thallium, Dissolved	ug/L	40	39.2	98	85-115	
Vanadium, Dissolved	ug/L	40	41.2	103	85-115	

This report shall not be reproduced, except in full,
without the written consent of Pace Analytical Services, Inc..

Pace Analytical Services, Inc.
9608 Loiret Blvd.
Lenexa, KS 66219
(913)599-5665

QUALITY CONTROL DATA

Project: July 2012 Rico Water Sampling
Pace Project No.: 60125518

MATRIX SPIKE & MATRIX SPIKE DUPLICATE: 1035045 1035046

Parameter	Units	60125518021 Result	MS Spike Conc.	MSD Spike Conc.	MS Result	MSD Result	MS % Rec	MSD % Rec	% Rec Limits	RPD	Max RPD	Qual
Aluminum, Dissolved	ug/L	121	1000	1000	1020	1050	90	93	70-130	3	20	
Antimony, Dissolved	ug/L	0.72J	40	40	40.5	42.4	100	104	70-130	5	20	
Arsenic, Dissolved	ug/L	1.4	40	40	42.0	42.2	102	102	70-130	0	20	
Barium, Dissolved	ug/L	19.7	40	40	56.5	56.0	92	91	70-130	1	20	
Beryllium, Dissolved	ug/L	ND	40	40	34.4	35.0	86	87	70-130	2	20	
Cadmium, Dissolved	ug/L	2.3	40	40	42.3	42.8	100	101	70-130	1	20	
Chromium, Dissolved	ug/L	3.9	40	40	42.5	43.4	96	99	70-130	2	20	
Cobalt, Dissolved	ug/L	0.20J	40	40	38.4	38.9	96	97	70-130	1	20	
Copper, Dissolved	ug/L	8.8	40	40	45.2	47.5	91	97	70-130	5	20	
Iron, Dissolved	ug/L	573	1000	1000	1490	1520	92	95	70-130	2	20	
Lead, Dissolved	ug/L	14.0	40	40	51.1	52.4	93	96	70-130	2	20	
Manganese, Dissolved	ug/L	46.7	40	40	81.0	82.6	86	90	70-130	2	20	
Molybdenum, Dissolved	ug/L	9.4	40	40	48.7	50.0	98	101	70-130	3	20	
Nickel, Dissolved	ug/L	ND	40	40	37.6	37.4	94	94	70-130	1	20	
Selenium, Dissolved	ug/L	10.1	40	40	47.3	49.6	93	99	70-130	5	20	
Silver, Dissolved	ug/L	ND	20	20	19.0	19.6	95	98	70-130	3	20	
Thallium, Dissolved	ug/L	0.15J	40	40	37.0	37.8	92	94	70-130	2	20	
Vanadium, Dissolved	ug/L	ND	40	40	40.0	40.2	100	100	70-130	0	20	

This report shall not be reproduced, except in full,
without the written consent of Pace Analytical Services, Inc..

Pace Analytical Services, Inc.
9608 Loiret Blvd.
Lenexa, KS 66219
(913)599-5665

QUALITY CONTROL DATA

Project: July 2012 Rico Water Sampling
Pace Project No.: 60125518

QC Batch: MPRP/18910 | Analysis Method: EPA 200.8
QC Batch Method: EPA 200.8 | Analysis Description: 200.8 Potentially Dissolved Metals
Associated Lab Samples: 60125518001, 60125518002, 60125518003, 60125518004, 60125518005, 60125518006, 60125518007, 60125518008, 60125518009, 60125518010, 60125518011, 60125518012, 60125518013, 60125518014, 60125518015, 60125518016, 60125518017, 60125518018, 60125518019, 60125518020

METHOD BLANK: 1037228 | Matrix: Water
Associated Lab Samples: 60125518001, 60125518002, 60125518003, 60125518004, 60125518005, 60125518006, 60125518007, 60125518008, 60125518009, 60125518010, 60125518011, 60125518012, 60125518013, 60125518014, 60125518015, 60125518016, 60125518017, 60125518018, 60125518019, 60125518020

Parameter	Units	Blank Result	Reporting Limit	Analyzed	Qualifiers
Zinc, Dissolved	ug/L	ND	10.0	07/31/12 10:29	

LABORATORY CONTROL SAMPLE: 1037229

Parameter	Units	Spike Conc.	LCS Result	LCS % Rec	% Rec Limits	Qualifiers
Zinc, Dissolved	ug/L	40	39.8	100	85-115	

MATRIX SPIKE SAMPLE: 1037251

Parameter	Units	60125518007 Result	Spike Conc.	MS Result	MS % Rec	% Rec Limits	Qualifiers
Zinc, Dissolved	ug/L	163	40	219	142	70-130	M1

MATRIX SPIKE SAMPLE: 1037252

Parameter	Units	60125518014 Result	Spike Conc.	MS Result	MS % Rec	% Rec Limits	Qualifiers
Zinc, Dissolved	ug/L	754	40	794	99	70-130	

SAMPLE DUPLICATE: 1037253

Parameter	Units	60125518015 Result	Dup Result	RPD	Max RPD	Qualifiers
Zinc, Dissolved	ug/L	20300	21000	3	20	

This report shall not be reproduced, except in full,
without the written consent of Pace Analytical Services, Inc..

Pace Analytical Services, Inc.
9608 Loiret Blvd.
Lenexa, KS 66219
(913)599-5665

QUALITY CONTROL DATA

Project: July 2012 Rico Water Sampling
Pace Project No.: 60125518

QC Batch: MPRP/18912 | Analysis Method: EPA 200.8
QC Batch Method: EPA 200.8 | Analysis Description: 200.8 Potentially Dissolved Metals
Associated Lab Samples: 60125518021, 60125518022, 60125518023, 60125518024, 60125518025, 60125518026, 60125518027, 60125518028, 60125518029

METHOD BLANK: 1037232 | Matrix: Water
Associated Lab Samples: 60125518021, 60125518022, 60125518023, 60125518024, 60125518025, 60125518026, 60125518027, 60125518028, 60125518029

Parameter	Units	Blank Result	Reporting Limit	Analyzed	Qualifiers
Zinc, Dissolved	ug/L	ND	10.0	07/31/12 12:00	

LABORATORY CONTROL SAMPLE: 1037233

Parameter	Units	Spike Conc.	LCS Result	LCS % Rec	% Rec Limits	Qualifiers
Zinc, Dissolved	ug/L	40	39.2	98	85-115	

MATRIX SPIKE SAMPLE: 1037249

Parameter	Units	60125518024 Result	Spike Conc.	MS Result	MS % Rec	% Rec Limits	Qualifiers
Zinc, Dissolved	ug/L	345	80	380	44	70-130	M1

SAMPLE DUPLICATE: 1037250

Parameter	Units	60125518027 Result	Dup Result	RPD	Max RPD	Qualifiers
Zinc, Dissolved	ug/L	29100	28900	1	20	

This report shall not be reproduced, except in full,
without the written consent of Pace Analytical Services, Inc..

Pace Analytical Services, Inc.
9608 Loiret Blvd.
Lenexa, KS 66219
(913)599-5665

QUALITY CONTROL DATA

Project: July 2012 Rico Water Sampling
Pace Project No.: 60125518

QC Batch: MT/9565 | Analysis Method: SM 2510B
QC Batch Method: SM 2510B | Analysis Description: 2510B Specific Conductance

Associated Lab Samples: 60125518001, 60125518002, 60125518003, 60125518004, 60125518005, 60125518006, 60125518007, 60125518008, 60125518009, 60125518010, 60125518011, 60125518012, 60125518013, 60125518014, 60125518015, 60125518016, 60125518017, 60125518018, 60125518019, 60125518020

METHOD BLANK: 1251573 | Matrix: Water

Associated Lab Samples: 60125518001, 60125518002, 60125518003, 60125518004, 60125518005, 60125518006, 60125518007, 60125518008, 60125518009, 60125518010, 60125518011, 60125518012, 60125518013, 60125518014, 60125518015, 60125518016, 60125518017, 60125518018, 60125518019, 60125518020

Parameter	Units	Blank Result	Reporting Limit	Analyzed	Qualifiers
Specific Conductance	umhos/cm	ND	10.0	07/27/12 11:16	

LABORATORY CONTROL SAMPLE: 1251574

Parameter	Units	Spike Conc.	LCS Result	LCS % Rec	% Rec Limits	Qualifiers
Specific Conductance	umhos/cm	1000	1040	104	90-110	

SAMPLE DUPLICATE: 1251575

Parameter	Units	60125518001 Result	Dup Result	RPD	Max RPD	Qualifiers
Specific Conductance	umhos/cm	235	230	2	20	

SAMPLE DUPLICATE: 1251576

Parameter	Units	60125518010 Result	Dup Result	RPD	Max RPD	Qualifiers
Specific Conductance	umhos/cm	325	319	2	20	

This report shall not be reproduced, except in full,
without the written consent of Pace Analytical Services, Inc..

Pace Analytical Services, Inc.
9608 Loiret Blvd.
Lenexa, KS 66219
(913)599-5665

QUALITY CONTROL DATA

Project: July 2012 Rico Water Sampling
Pace Project No.: 60125518

QC Batch: MT/9566 | Analysis Method: SM 2510B
QC Batch Method: SM 2510B | Analysis Description: 2510B Specific Conductance
Associated Lab Samples: 60125518021, 60125518022, 60125518023, 60125518024, 60125518025, 60125518026, 60125518027, 60125518028, 60125518029

METHOD BLANK: 1251577 | Matrix: Water
Associated Lab Samples: 60125518021, 60125518022, 60125518023, 60125518024, 60125518025, 60125518026, 60125518027, 60125518028, 60125518029

Parameter	Units	Blank Result	Reporting Limit	Analyzed	Qualifiers
Specific Conductance	umhos/cm	ND	10.0	07/27/12 12:11	

LABORATORY CONTROL SAMPLE: 1251578

Parameter	Units	Spike Conc.	LCS Result	LCS % Rec	% Rec Limits	Qualifiers
Specific Conductance	umhos/cm	1000	1010	101	90-110	

SAMPLE DUPLICATE: 1251579

Parameter	Units	10200241001 Result	Dup Result	RPD	Max RPD	Qualifiers
Specific Conductance	umhos/cm	1970	2010	2	20	

SAMPLE DUPLICATE: 1251580

Parameter	Units	60125518029 Result	Dup Result	RPD	Max RPD	Qualifiers
Specific Conductance	umhos/cm	1370	1340	2	20	

This report shall not be reproduced, except in full,
without the written consent of Pace Analytical Services, Inc..

Pace Analytical Services, Inc.
9608 Loiret Blvd.
Lenexa, KS 66219
(913)599-5665

QUALITY CONTROL DATA

Project: July 2012 Rico Water Sampling
Pace Project No.: 60125518

QC Batch: WET/36227 | Analysis Method: SM 2320B
QC Batch Method: SM 2320B | Analysis Description: 2320B Alkalinity
Associated Lab Samples: 60125518001

METHOD BLANK: 1034353 | Matrix: Water
Associated Lab Samples: 60125518001

Parameter	Units	Blank Result	Reporting Limit	Analyzed	Qualifiers
Alkalinity, Carbonate (CaCO3)	mg/L	ND	20.0	07/25/12 11:00	
Alkalinity, Total as CaCO3	mg/L	ND	20.0	07/25/12 11:00	
Alkalinity,Bicarbonate (CaCO3)	mg/L	ND	20.0	07/25/12 11:00	

LABORATORY CONTROL SAMPLE: 1034354

Parameter	Units	Spike Conc.	LCS Result	LCS % Rec	% Rec Limits	Qualifiers
Alkalinity, Total as CaCO3	mg/L	500	483	97	90-110	

SAMPLE DUPLICATE: 1034355

Parameter	Units	60125276005 Result	Dup Result	RPD	Max RPD	Qualifiers
Alkalinity, Carbonate (CaCO3)	mg/L	ND	ND		24	
Alkalinity, Total as CaCO3	mg/L	4090	4090	0	9	
Alkalinity,Bicarbonate (CaCO3)	mg/L	4090	4090	0	9	

SAMPLE DUPLICATE: 1034356

Parameter	Units	60125560005 Result	Dup Result	RPD	Max RPD	Qualifiers
Alkalinity, Carbonate (CaCO3)	mg/L	ND	ND		24	
Alkalinity, Total as CaCO3	mg/L	19.0J	19J		9	
Alkalinity,Bicarbonate (CaCO3)	mg/L	19.0J	19J		9	

This report shall not be reproduced, except in full,
without the written consent of Pace Analytical Services, Inc..

Pace Analytical Services, Inc.
9608 Loiret Blvd.
Lenexa, KS 66219
(913)599-5665

QUALITY CONTROL DATA

Project: July 2012 Rico Water Sampling
Pace Project No.: 60125518

QC Batch: WET/36265 Analysis Method: SM 2320B
QC Batch Method: SM 2320B Analysis Description: 2320B Alkalinity
Associated Lab Samples: 60125518002, 60125518003, 60125518004, 60125518005, 60125518006, 60125518007, 60125518008, 60125518009, 60125518010, 60125518011, 60125518012, 60125518013, 60125518014, 60125518015, 60125518016, 60125518017, 60125518018, 60125518019, 60125518020, 60125518021

METHOD BLANK: 1035747 Matrix: Water
Associated Lab Samples: 60125518002, 60125518003, 60125518004, 60125518005, 60125518006, 60125518007, 60125518008, 60125518009, 60125518010, 60125518011, 60125518012, 60125518013, 60125518014, 60125518015, 60125518016, 60125518017, 60125518018, 60125518019, 60125518020, 60125518021

Parameter	Units	Blank Result	Reporting Limit	Analyzed	Qualifiers
Alkalinity, Carbonate (CaCO3)	mg/L	ND	20.0	07/30/12 09:00	
Alkalinity, Total as CaCO3	mg/L	ND	20.0	07/30/12 09:00	
Alkalinity,Bicarbonate (CaCO3)	mg/L	ND	20.0	07/30/12 09:00	

LABORATORY CONTROL SAMPLE: 1035748

Parameter	Units	Spike Conc.	LCS Result	LCS % Rec	% Rec Limits	Qualifiers
Alkalinity, Total as CaCO3	mg/L	500	484	97	90-110	

SAMPLE DUPLICATE: 1035749

Parameter	Units	60125518003 Result	Dup Result	RPD	Max RPD	Qualifiers
Alkalinity, Carbonate (CaCO3)	mg/L	ND	ND		24	
Alkalinity, Total as CaCO3	mg/L	87.4	87.4	0	9	
Alkalinity,Bicarbonate (CaCO3)	mg/L	87.4	87.4	0	9	

SAMPLE DUPLICATE: 1035750

Parameter	Units	60125518010 Result	Dup Result	RPD	Max RPD	Qualifiers
Alkalinity, Carbonate (CaCO3)	mg/L	ND	ND		24	
Alkalinity, Total as CaCO3	mg/L	93.1	95.0	2	9	
Alkalinity,Bicarbonate (CaCO3)	mg/L	93.1	95.0	2	9	

This report shall not be reproduced, except in full,
without the written consent of Pace Analytical Services, Inc..

Pace Analytical Services, Inc.
9608 Loiret Blvd.
Lenexa, KS 66219
(913)599-5665

QUALITY CONTROL DATA

Project: July 2012 Rico Water Sampling
Pace Project No.: 60125518

QC Batch: WET/36322 Analysis Method: SM 2320B
QC Batch Method: SM 2320B Analysis Description: 2320B Alkalinity
Associated Lab Samples: 60125518022, 60125518023, 60125518024, 60125518025, 60125518026, 60125518027, 60125518028, 60125518029

METHOD BLANK: 1037312 Matrix: Water
Associated Lab Samples: 60125518022, 60125518023, 60125518024, 60125518025, 60125518026, 60125518027, 60125518028, 60125518029

Parameter	Units	Blank Result	Reporting Limit	Analyzed	Qualifiers
Alkalinity, Carbonate (CaCO3)	mg/L	ND	20.0	07/31/12 16:00	
Alkalinity, Total as CaCO3	mg/L	ND	20.0	07/31/12 16:00	
Alkalinity,Bicarbonate (CaCO3)	mg/L	ND	20.0	07/31/12 16:00	

LABORATORY CONTROL SAMPLE: 1037313

Parameter	Units	Spike Conc.	LCS Result	LCS % Rec	% Rec Limits	Qualifiers
Alkalinity, Total as CaCO3	mg/L	500	484	97	90-110	

SAMPLE DUPLICATE: 1037314

Parameter	Units	60125518023 Result	Dup Result	RPD	Max RPD	Qualifiers
Alkalinity, Carbonate (CaCO3)	mg/L	ND	ND		24	
Alkalinity, Total as CaCO3	mg/L	91.2	93.1	2	9	
Alkalinity,Bicarbonate (CaCO3)	mg/L	91.2	93.1	2	9	

SAMPLE DUPLICATE: 1037315

Parameter	Units	60125698001 Result	Dup Result	RPD	Max RPD	Qualifiers
Alkalinity, Carbonate (CaCO3)	mg/L	ND	ND		24	
Alkalinity, Total as CaCO3	mg/L	304	306	1	9	
Alkalinity,Bicarbonate (CaCO3)	mg/L	304	306	1	9	

This report shall not be reproduced, except in full,
without the written consent of Pace Analytical Services, Inc..

Pace Analytical Services, Inc.
9608 Loiret Blvd.
Lenexa, KS 66219
(913)599-5665

QUALITY CONTROL DATA

Project: July 2012 Rico Water Sampling
Pace Project No.: 60125518

QC Batch: WET/36164 Analysis Method: SM 2540C
QC Batch Method: SM 2540C Analysis Description: 2540C Total Dissolved Solids
Associated Lab Samples: 60125518001, 60125518002, 60125518003, 60125518004, 60125518005, 60125518006, 60125518007, 60125518008, 60125518009, 60125518010, 60125518011, 60125518012, 60125518013, 60125518014, 60125518015, 60125518016, 60125518017, 60125518018, 60125518019, 60125518020

METHOD BLANK: 1032300 Matrix: Water
Associated Lab Samples: 60125518001, 60125518002, 60125518003, 60125518004, 60125518005, 60125518006, 60125518007, 60125518008, 60125518009, 60125518010, 60125518011, 60125518012, 60125518013, 60125518014, 60125518015, 60125518016, 60125518017, 60125518018, 60125518019, 60125518020

Parameter	Units	Blank Result	Reporting Limit	Analyzed	Qualifiers
Total Dissolved Solids	mg/L	ND	5.0	07/20/12 10:49	

SAMPLE DUPLICATE: 1032301

Parameter	Units	60125518001 Result	Dup Result	RPD	Max RPD	Qualifiers
Total Dissolved Solids	mg/L	140	138	1	17	

SAMPLE DUPLICATE: 1032302

Parameter	Units	60125518011 Result	Dup Result	RPD	Max RPD	Qualifiers
Total Dissolved Solids	mg/L	ND	ND		17	

This report shall not be reproduced, except in full,
without the written consent of Pace Analytical Services, Inc..

Pace Analytical Services, Inc.
9608 Loiret Blvd.
Lenexa, KS 66219
(913)599-5665

QUALITY CONTROL DATA

Project: July 2012 Rico Water Sampling
Pace Project No.: 60125518

QC Batch: WET/36165 Analysis Method: SM 2540C
QC Batch Method: SM 2540C Analysis Description: 2540C Total Dissolved Solids
Associated Lab Samples: 60125518021, 60125518022, 60125518023, 60125518024, 60125518025, 60125518026, 60125518027, 60125518028, 60125518029

METHOD BLANK: 1032304 Matrix: Water
Associated Lab Samples: 60125518021, 60125518022, 60125518023, 60125518024, 60125518025, 60125518026, 60125518027, 60125518028, 60125518029

Parameter	Units	Blank Result	Reporting Limit	Analyzed	Qualifiers
Total Dissolved Solids	mg/L	ND	5.0	07/20/12 10:53	

SAMPLE DUPLICATE: 1032305

Parameter	Units	60125518021 Result	Dup Result	RPD	Max RPD	Qualifiers
Total Dissolved Solids	mg/L	959	961	0	17	

This report shall not be reproduced, except in full,
without the written consent of Pace Analytical Services, Inc..

Pace Analytical Services, Inc.
9608 Loiret Blvd.
Lenexa, KS 66219
(913)599-5665

QUALITY CONTROL DATA

Project: July 2012 Rico Water Sampling
Pace Project No.: 60125518

QC Batch: WET/36162 Analysis Method: SM 2540D
QC Batch Method: SM 2540D Analysis Description: 2540D Total Suspended Solids
Associated Lab Samples: 60125518001, 60125518002, 60125518003, 60125518004, 60125518005, 60125518006, 60125518007, 60125518008, 60125518009, 60125518010, 60125518011

METHOD BLANK: 1032294 Matrix: Water
Associated Lab Samples: 60125518001, 60125518002, 60125518003, 60125518004, 60125518005, 60125518006, 60125518007, 60125518008, 60125518009, 60125518010, 60125518011

Parameter	Units	Blank Result	Reporting Limit	Analyzed	Qualifiers
Total Suspended Solids	mg/L	ND	5.0	07/20/12 08:41	

SAMPLE DUPLICATE: 1032295

Parameter	Units	60125408001 Result	Dup Result	RPD	Max RPD	Qualifiers
Total Suspended Solids	mg/L	8.0	11.0	32	25	D6

SAMPLE DUPLICATE: 1032296

Parameter	Units	60125518002 Result	Dup Result	RPD	Max RPD	Qualifiers
Total Suspended Solids	mg/L	ND	ND		25	

This report shall not be reproduced, except in full,
without the written consent of Pace Analytical Services, Inc..

Pace Analytical Services, Inc.
9608 Loiret Blvd.
Lenexa, KS 66219
(913)599-5665

QUALITY CONTROL DATA

Project: July 2012 Rico Water Sampling
Pace Project No.: 60125518

QC Batch: WET/36163 Analysis Method: SM 2540D
QC Batch Method: SM 2540D Analysis Description: 2540D Total Suspended Solids
Associated Lab Samples: 60125518012, 60125518013, 60125518014, 60125518015, 60125518016, 60125518017, 60125518018, 60125518019, 60125518020, 60125518021, 60125518022, 60125518023, 60125518024

METHOD BLANK: 1032297 Matrix: Water
Associated Lab Samples: 60125518012, 60125518013, 60125518014, 60125518015, 60125518016, 60125518017, 60125518018, 60125518019, 60125518020, 60125518021, 60125518022, 60125518023, 60125518024

Parameter	Units	Blank Result	Reporting Limit	Analyzed	Qualifiers
Total Suspended Solids	mg/L	ND	5.0	07/20/12 08:46	

SAMPLE DUPLICATE: 1032298

Parameter	Units	60125518012 Result	Dup Result	RPD	Max RPD	Qualifiers
Total Suspended Solids	mg/L	153	162	6	25	

SAMPLE DUPLICATE: 1032299

Parameter	Units	60125518022 Result	Dup Result	RPD	Max RPD	Qualifiers
Total Suspended Solids	mg/L	9.0	8.0	12	25	

This report shall not be reproduced, except in full,
without the written consent of Pace Analytical Services, Inc..

Pace Analytical Services, Inc.
9608 Loiret Blvd.
Lenexa, KS 66219
(913)599-5665

QUALITY CONTROL DATA

Project: July 2012 Rico Water Sampling
Pace Project No.: 60125518

QC Batch: WET/36218 Analysis Method: SM 2540D
QC Batch Method: SM 2540D Analysis Description: 2540D Total Suspended Solids
Associated Lab Samples: 60125518025, 60125518026, 60125518027, 60125518028, 60125518029

METHOD BLANK: 1034214 Matrix: Water
Associated Lab Samples: 60125518025, 60125518026, 60125518027, 60125518028, 60125518029

Parameter	Units	Blank Result	Reporting Limit	Analyzed	Qualifiers
Total Suspended Solids	mg/L	ND	5.0	07/24/12 15:06	

SAMPLE DUPLICATE: 1034215

Parameter	Units	60125455001 Result	Dup Result	RPD	Max RPD	Qualifiers
Total Suspended Solids	mg/L	430	414	4	25	

SAMPLE DUPLICATE: 1034216

Parameter	Units	60125508006 Result	Dup Result	RPD	Max RPD	Qualifiers
Total Suspended Solids	mg/L	7.0	5.0	33	25	D6

This report shall not be reproduced, except in full,
without the written consent of Pace Analytical Services, Inc..

Pace Analytical Services, Inc.
9608 Loiret Blvd.
Lenexa, KS 66219
(913)599-5665

QUALITY CONTROL DATA

Project: July 2012 Rico Water Sampling
Pace Project No.: 60125518

QC Batch: WET/36169 | Analysis Method: SM 4500-H+B
QC Batch Method: SM 4500-H+B | Analysis Description: 4500H+B pH
Associated Lab Samples: 60125518001, 60125518002, 60125518003, 60125518004, 60125518005, 60125518006, 60125518008, 60125518011, 60125518012, 60125518013, 60125518014, 60125518015, 60125518018, 60125518020, 60125518021, 60125518022, 60125518023

SAMPLE DUPLICATE: 1032448

Parameter	Units	60125518020 Result	Dup Result	RPD	Max RPD	Qualifiers
pH at 25 Degrees C	Std. Units	7.4	7.4	0	5	H6

This report shall not be reproduced, except in full,
without the written consent of Pace Analytical Services, Inc..

Pace Analytical Services, Inc.
9608 Loiret Blvd.
Lenexa, KS 66219
(913)599-5665

QUALITY CONTROL DATA

Project: July 2012 Rico Water Sampling
Pace Project No.: 60125518

QC Batch: WET/36170 Analysis Method: SM 4500-H+B
QC Batch Method: SM 4500-H+B Analysis Description: 4500H+B pH
Associated Lab Samples: 60125518016, 60125518017, 60125518019, 60125518025, 60125518026, 60125518027, 60125518028, 60125518029

SAMPLE DUPLICATE: 1032449

Parameter	Units	60125518017 Result	Dup Result	RPD	Max RPD	Qualifiers
pH at 25 Degrees C	Std. Units	7.0	7.0	0	5	H6

This report shall not be reproduced, except in full,
without the written consent of Pace Analytical Services, Inc..

Pace Analytical Services, Inc.
9608 Loiret Blvd.
Lenexa, KS 66219
(913)599-5665

QUALITY CONTROL DATA

Project: July 2012 Rico Water Sampling
Pace Project No.: 60125518

QC Batch: WET/36173
QC Batch Method: SM 4500-H+B
Analysis Method: SM 4500-H+B
Analysis Description: 4500H+B pH
Associated Lab Samples: 60125518024

SAMPLE DUPLICATE: 1033050

Parameter	Units	60125044001 Result	Dup Result	RPD	Max RPD	Qualifiers
pH at 25 Degrees C	Std. Units	8.0	8.0	0	5	H6

This report shall not be reproduced, except in full,
without the written consent of Pace Analytical Services, Inc..

Pace Analytical Services, Inc.
9608 Loiret Blvd.
Lenexa, KS 66219
(913)599-5665

QUALITY CONTROL DATA

Project: July 2012 Rico Water Sampling
Pace Project No.: 60125518

QC Batch: WET/36198 | Analysis Method: SM 4500-S-2 D
QC Batch Method: SM 4500-S-2 D | Analysis Description: 4500S2D Sulfide, Total

Associated Lab Samples: 60125518001, 60125518002, 60125518003, 60125518004, 60125518005, 60125518006, 60125518007, 60125518008, 60125518009, 60125518010, 60125518011, 60125518012, 60125518013, 60125518014, 60125518015, 60125518016, 60125518017, 60125518018, 60125518019, 60125518020

METHOD BLANK: 1033843 | Matrix: Water

Associated Lab Samples: 60125518001, 60125518002, 60125518003, 60125518004, 60125518005, 60125518006, 60125518007, 60125518008, 60125518009, 60125518010, 60125518011, 60125518012, 60125518013, 60125518014, 60125518015, 60125518016, 60125518017, 60125518018, 60125518019, 60125518020

Parameter	Units	Blank Result	Reporting Limit	Analyzed	Qualifiers
Sulfide, Total	mg/L	ND	0.050	07/24/12 11:32	

LABORATORY CONTROL SAMPLE: 1033844

Parameter	Units	Spike Conc.	LCS Result	LCS % Rec	% Rec Limits	Qualifiers
Sulfide, Total	mg/L	.5	0.47	95	80-120	

MATRIX SPIKE SAMPLE: 1033845

Parameter	Units	60125518001 Result	Spike Conc.	MS Result	MS % Rec	% Rec Limits	Qualifiers
Sulfide, Total	mg/L	ND	.5	0.58	113	75-125	

SAMPLE DUPLICATE: 1033846

Parameter	Units	60125518002 Result	Dup Result	RPD	Max RPD	Qualifiers
Sulfide, Total	mg/L	ND	ND		20	

SAMPLE DUPLICATE: 1033847

Parameter	Units	60125518010 Result	Dup Result	RPD	Max RPD	Qualifiers
Sulfide, Total	mg/L	ND	ND		20	

This report shall not be reproduced, except in full,
without the written consent of Pace Analytical Services, Inc..

Pace Analytical Services, Inc.
9608 Loiret Blvd.
Lenexa, KS 66219
(913)599-5665

QUALITY CONTROL DATA

Project: July 2012 Rico Water Sampling
Pace Project No.: 60125518

QC Batch: WET/36200 | Analysis Method: SM 4500-S-2 D
QC Batch Method: SM 4500-S-2 D | Analysis Description: 4500S2D Sulfide, Total
Associated Lab Samples: 60125518021, 60125518022, 60125518023, 60125518024, 60125518025, 60125518026, 60125518027, 60125518028, 60125518029

METHOD BLANK: 1033848 | Matrix: Water
Associated Lab Samples: 60125518021, 60125518022, 60125518023, 60125518024, 60125518025, 60125518026, 60125518027, 60125518028, 60125518029

Parameter	Units	Blank Result	Reporting Limit	Analyzed	Qualifiers
Sulfide, Total	mg/L	ND	0.050	07/24/12 16:41	

LABORATORY CONTROL SAMPLE: 1033849

Parameter	Units	Spike Conc.	LCS Result	LCS % Rec	% Rec Limits	Qualifiers
Sulfide, Total	mg/L	.5	0.47	94	80-120	

MATRIX SPIKE SAMPLE: 1033850

Parameter	Units	60125518021 Result	Spike Conc.	MS Result	MS % Rec	% Rec Limits	Qualifiers
Sulfide, Total	mg/L	ND	.5	0.43	82	75-125	

SAMPLE DUPLICATE: 1033851

Parameter	Units	60125518022 Result	Dup Result	RPD	Max RPD	Qualifiers
Sulfide, Total	mg/L	ND	ND		20	

SAMPLE DUPLICATE: 1033852

Parameter	Units	60125518029 Result	Dup Result	RPD	Max RPD	Qualifiers
Sulfide, Total	mg/L	ND	ND		20	

This report shall not be reproduced, except in full,
without the written consent of Pace Analytical Services, Inc..

Pace Analytical Services, Inc.
9608 Loiret Blvd.
Lenexa, KS 66219
(913)599-5665

QUALITY CONTROL DATA

Project: July 2012 Rico Water Sampling
Pace Project No.: 60125518

QC Batch: WET/36206 | Analysis Method: SM 2580B
QC Batch Method: SM 2580B | Analysis Description: Oxidation/Reduction Potential

Associated Lab Samples: 60125518001, 60125518002, 60125518003, 60125518004, 60125518005, 60125518006, 60125518007, 60125518008, 60125518009, 60125518010, 60125518011, 60125518012, 60125518013, 60125518014, 60125518015, 60125518016, 60125518017, 60125518018, 60125518019, 60125518020

SAMPLE DUPLICATE: 1033975

Parameter	Units	60125518001 Result	Dup Result	RPD	Max RPD	Qualifiers
Oxidation/Reduction Potential	mV	141	136	4	10	

This report shall not be reproduced, except in full,
without the written consent of Pace Analytical Services, Inc..

Pace Analytical Services, Inc.
9608 Loiret Blvd.
Lenexa, KS 66219
(913)599-5665

QUALITY CONTROL DATA

Project: July 2012 Rico Water Sampling
Pace Project No.: 60125518

QC Batch: WET/36207 | Analysis Method: SM 2580B
QC Batch Method: SM 2580B | Analysis Description: Oxidation/Reduction Potential
Associated Lab Samples: 60125518021, 60125518022, 60125518023, 60125518024, 60125518025, 60125518026, 60125518027, 60125518028, 60125518029

SAMPLE DUPLICATE: 1033983

Parameter	Units	60125518021 Result	Dup Result	RPD	Max RPD	Qualifiers
Oxidation/Reduction Potential	mV	107	106	1	10	

This report shall not be reproduced, except in full,
without the written consent of Pace Analytical Services, Inc..

Pace Analytical Services, Inc.
9608 Loiret Blvd.
Lenexa, KS 66219
(913)599-5665

QUALITY CONTROL DATA

Project: July 2012 Rico Water Sampling
Pace Project No.: 60125518

QC Batch: WETA/21059 Analysis Method: EPA 300.0
QC Batch Method: EPA 300.0 Analysis Description: 300.0 IC Anions
Associated Lab Samples: 60125518001, 60125518002, 60125518003, 60125518004, 60125518005, 60125518006, 60125518007, 60125518008, 60125518009, 60125518010, 60125518011, 60125518012, 60125518013, 60125518014, 60125518015, 60125518016, 60125518017, 60125518018, 60125518019, 60125518020

METHOD BLANK: 1035998 Matrix: Water
Associated Lab Samples: 60125518001, 60125518002, 60125518003, 60125518004, 60125518005, 60125518006, 60125518007, 60125518008, 60125518009, 60125518010, 60125518011, 60125518012, 60125518013, 60125518014, 60125518015, 60125518016, 60125518017, 60125518018, 60125518019, 60125518020

Parameter	Units	Blank Result	Reporting Limit	Analyzed	Qualifiers
Sulfate	mg/L	ND	1.0	07/27/12 17:21	

LABORATORY CONTROL SAMPLE: 1035999

Parameter	Units	Spike Conc.	LCS Result	LCS % Rec	% Rec Limits	Qualifiers
Sulfate	mg/L	5	5.2	103	90-110	

MATRIX SPIKE & MATRIX SPIKE DUPLICATE: 1036000 1036001

Parameter	Units	60125518001 Result	MS Spike Conc.	MSD Spike Conc.	MS Result	MSD Result	MS % Rec	MSD % Rec	% Rec Limits	RPD	Max RPD	Qual
Sulfate	mg/L	37.2	25	25	62.8	61.9	102	99	61-119	1	10	

MATRIX SPIKE SAMPLE: 1036002

Parameter	Units	60125518010 Result	Spike Conc.	MS Result	MS % Rec	% Rec Limits	Qualifiers
Sulfate	mg/L	57.4	50	110	105	61-119	

This report shall not be reproduced, except in full,
without the written consent of Pace Analytical Services, Inc..

Pace Analytical Services, Inc.
9608 Loiret Blvd.
Lenexa, KS 66219
(913)599-5665

QUALITY CONTROL DATA

Project: July 2012 Rico Water Sampling
Pace Project No.: 60125518

QC Batch: WETA/21060 Analysis Method: EPA 300.0
QC Batch Method: EPA 300.0 Analysis Description: 300.0 IC Anions
Associated Lab Samples: 60125518021, 60125518022, 60125518023, 60125518024, 60125518025, 60125518026, 60125518027, 60125518028, 60125518029

METHOD BLANK: 1036008 Matrix: Water
Associated Lab Samples: 60125518027, 60125518028, 60125518029

Parameter	Units	Blank Result	Reporting Limit	Analyzed	Qualifiers
Sulfate	mg/L	ND	1.0	07/27/12 19:50	

METHOD BLANK: 1036789 Matrix: Water
Associated Lab Samples: 60125518021, 60125518022, 60125518023, 60125518024, 60125518025

Parameter	Units	Blank Result	Reporting Limit	Analyzed	Qualifiers
Sulfate	mg/L	ND	1.0	07/28/12 12:22	

METHOD BLANK: 1037570 Matrix: Water
Associated Lab Samples: 60125518026

Parameter	Units	Blank Result	Reporting Limit	Analyzed	Qualifiers
Sulfate	mg/L	ND	1.0	07/30/12 13:45	

LABORATORY CONTROL SAMPLE: 1036009

Parameter	Units	Spike Conc.	LCS Result	LCS % Rec	% Rec Limits	Qualifiers
Sulfate	mg/L	5	5.3	106	90-110	

LABORATORY CONTROL SAMPLE: 1036790

Parameter	Units	Spike Conc.	LCS Result	LCS % Rec	% Rec Limits	Qualifiers
Sulfate	mg/L	5	5.0	99	90-110	

LABORATORY CONTROL SAMPLE: 1037571

Parameter	Units	Spike Conc.	LCS Result	LCS % Rec	% Rec Limits	Qualifiers
Sulfate	mg/L	5	5.2	105	90-110	

This report shall not be reproduced, except in full,
without the written consent of Pace Analytical Services, Inc..

Pace Analytical Services, Inc.
9608 Loiret Blvd.
Lenexa, KS 66219
(913)599-5665

QUALITY CONTROL DATA

Project: July 2012 Rico Water Sampling
Pace Project No.: 60125518

MATRIX SPIKE & MATRIX SPIKE DUPLICATE: 1036010 1036011

Parameter	Units	60125518021 Result	MS Spike Conc.	MSD Spike Conc.	MS Result	MSD Result	MS % Rec	MSD % Rec	% Rec Limits	RPD	Max RPD	Qual
Sulfate	mg/L	541	250	250	895	834	141	117	61-119	7	10	M6

MATRIX SPIKE SAMPLE: 1036012

Parameter	Units	60125526001 Result	Spike Conc.	MS Result	MS % Rec	% Rec Limits	Qualifiers
Sulfate	mg/L	ND	500	581	99	61-119	

This report shall not be reproduced, except in full,
without the written consent of Pace Analytical Services, Inc..

Pace Analytical Services, Inc.
9608 Loiret Blvd.
Lenexa, KS 66219
(913)599-5665

QUALITY CONTROL DATA

Project: July 2012 Rico Water Sampling
Pace Project No.: 60125518

QC Batch: WETA/21015 Analysis Method: EPA 353.2
QC Batch Method: EPA 353.2 Analysis Description: 353.2 Nitrate + Nitrite, preserved
Associated Lab Samples: 60125518001, 60125518002, 60125518003, 60125518004, 60125518005, 60125518006, 60125518007

METHOD BLANK: 1034490 Matrix: Water
Associated Lab Samples: 60125518001, 60125518002, 60125518003, 60125518004, 60125518005, 60125518006, 60125518007

Parameter	Units	Blank Result	Reporting Limit	Analyzed	Qualifiers
Nitrogen, NO2 plus NO3	mg/L	ND	0.10	07/25/12 13:31	

LABORATORY CONTROL SAMPLE: 1034491

Parameter	Units	Spike Conc.	LCS Result	LCS % Rec	% Rec Limits	Qualifiers
Nitrogen, NO2 plus NO3	mg/L	2	2.1	103	90-110	

MATRIX SPIKE SAMPLE: 1034492

Parameter	Units	60125260001 Result	Spike Conc.	MS Result	MS % Rec	% Rec Limits	Qualifiers
Nitrogen, NO2 plus NO3	mg/L	ND	2	2.2	110	90-110	

MATRIX SPIKE SAMPLE: 1034494

Parameter	Units	60125304003 Result	Spike Conc.	MS Result	MS % Rec	% Rec Limits	Qualifiers
Nitrogen, NO2 plus NO3	mg/L	120	100	226	105	90-110	M6

SAMPLE DUPLICATE: 1034493

Parameter	Units	60125364001 Result	Dup Result	RPD	Max RPD	Qualifiers
Nitrogen, NO2 plus NO3	mg/L	ND	ND		13	

This report shall not be reproduced, except in full,
without the written consent of Pace Analytical Services, Inc..

Pace Analytical Services, Inc.
9608 Loiret Blvd.
Lenexa, KS 66219
(913)599-5665

QUALITY CONTROL DATA

Project: July 2012 Rico Water Sampling
Pace Project No.: 60125518

QC Batch: WETA/21051 Analysis Method: EPA 353.2
QC Batch Method: EPA 353.2 Analysis Description: 353.2 Nitrate + Nitrite, preserved
Associated Lab Samples: 60125518008, 60125518009, 60125518010, 60125518011, 60125518012, 60125518014, 60125518015, 60125518016, 60125518017, 60125518018, 60125518019, 60125518020, 60125518021, 60125518022, 60125518023, 60125518024, 60125518025

METHOD BLANK: 1035845 Matrix: Water
Associated Lab Samples: 60125518008, 60125518009, 60125518010, 60125518011, 60125518012, 60125518014, 60125518015, 60125518016, 60125518017, 60125518018, 60125518019, 60125518020, 60125518021, 60125518022, 60125518023, 60125518024, 60125518025

Parameter	Units	Blank Result	Reporting Limit	Analyzed	Qualifiers
Nitrogen, NO2 plus NO3	mg/L	ND	0.10	07/27/12 11:18	

LABORATORY CONTROL SAMPLE: 1035846

Parameter	Units	Spike Conc.	LCS Result	LCS % Rec	% Rec Limits	Qualifiers
Nitrogen, NO2 plus NO3	mg/L	2	2.1	106	90-110	

MATRIX SPIKE SAMPLE: 1035847

Parameter	Units	60125518008 Result	Spike Conc.	MS Result	MS % Rec	% Rec Limits	Qualifiers
Nitrogen, NO2 plus NO3	mg/L	ND	2	2.2	109	90-110	

MATRIX SPIKE SAMPLE: 1035849

Parameter	Units	60125518017 Result	Spike Conc.	MS Result	MS % Rec	% Rec Limits	Qualifiers
Nitrogen, NO2 plus NO3	mg/L	0.50	2	2.5	102	90-110	

SAMPLE DUPLICATE: 1035848

Parameter	Units	60125518009 Result	Dup Result	RPD	Max RPD	Qualifiers
Nitrogen, NO2 plus NO3	mg/L	ND	.027J		13	

This report shall not be reproduced, except in full,
without the written consent of Pace Analytical Services, Inc..

Pace Analytical Services, Inc.
9608 Loiret Blvd.
Lenexa, KS 66219
(913)599-5665

QUALITY CONTROL DATA

Project: July 2012 Rico Water Sampling
Pace Project No.: 60125518

QC Batch: WETA/20995 Analysis Method: SM 4500-CN-E
QC Batch Method: SM 4500-CN-E Analysis Description: 4500CNE Cyanide, Total
Associated Lab Samples: 60125518001, 60125518002, 60125518003, 60125518004, 60125518005, 60125518006, 60125518007, 60125518008, 60125518009, 60125518010, 60125518011, 60125518012, 60125518013, 60125518014, 60125518015, 60125518016, 60125518017

METHOD BLANK: 1033570 Matrix: Water
Associated Lab Samples: 60125518001, 60125518002, 60125518003, 60125518004, 60125518005, 60125518006, 60125518007, 60125518008, 60125518009, 60125518010, 60125518011, 60125518012, 60125518013, 60125518014, 60125518015, 60125518016, 60125518017

Parameter	Units	Blank Result	Reporting Limit	Analyzed	Qualifiers
Cyanide	mg/L	ND	0.0050	07/24/12 10:42	

LABORATORY CONTROL SAMPLE: 1033571

Parameter	Units	Spike Conc.	LCS Result	LCS % Rec	% Rec Limits	Qualifiers
Cyanide	mg/L	.1	0.11	115	69-126	

MATRIX SPIKE SAMPLE: 1033572

Parameter	Units	60125518001 Result	Spike Conc.	MS Result	MS % Rec	% Rec Limits	Qualifiers
Cyanide	mg/L	0.0063	.1	0.11	103	41-136	

SAMPLE DUPLICATE: 1033573

Parameter	Units	60125518002 Result	Dup Result	RPD	Max RPD	Qualifiers
Cyanide	mg/L	ND	.0033J		26	

This report shall not be reproduced, except in full,
without the written consent of Pace Analytical Services, Inc..

Pace Analytical Services, Inc.
9608 Loiret Blvd.
Lenexa, KS 66219
(913)599-5665

QUALITY CONTROL DATA

Project: July 2012 Rico Water Sampling
Pace Project No.: 60125518

QC Batch: WETA/21011 | Analysis Method: SM 4500-CN-E
QC Batch Method: SM 4500-CN-E | Analysis Description: 4500CNE Cyanide, Total
Associated Lab Samples: 60125518018, 60125518019, 60125518020, 60125518021, 60125518022, 60125518023, 60125518024, 60125518025, 60125518026, 60125518027, 60125518028, 60125518029

METHOD BLANK: 1034433 | Matrix: Water
Associated Lab Samples: 60125518018, 60125518019, 60125518020, 60125518021, 60125518022, 60125518023, 60125518024, 60125518025, 60125518026, 60125518027, 60125518028, 60125518029

Parameter	Units	Blank Result	Reporting Limit	Analyzed	Qualifiers
Cyanide	mg/L	ND	0.0050	07/25/12 17:39	

LABORATORY CONTROL SAMPLE: 1034434

Parameter	Units	Spike Conc.	LCS Result	LCS % Rec	% Rec Limits	Qualifiers
Cyanide	mg/L	.1	0.098	98	69-126	

MATRIX SPIKE SAMPLE: 1034435

Parameter	Units	60125518020 Result	Spike Conc.	MS Result	MS % Rec	% Rec Limits	Qualifiers
Cyanide	mg/L	ND	.1	0.10	102	41-136	

SAMPLE DUPLICATE: 1034436

Parameter	Units	60125518021 Result	Dup Result	RPD	Max RPD	Qualifiers
Cyanide	mg/L	ND	0.012		26	

This report shall not be reproduced, except in full,
without the written consent of Pace Analytical Services, Inc..

Pace Analytical Services, Inc.
9608 Loiret Blvd.
Lenexa, KS 66219
(913)599-5665

QUALITY CONTROL DATA

Project: July 2012 Rico Water Sampling
Pace Project No.: 60125518

QC Batch: WETA/13406 Analysis Method: SM 5310C
QC Batch Method: SM 5310C Analysis Description: 5310C Total Organic Carbon
Associated Lab Samples: 60125518001, 60125518002, 60125518003, 60125518004, 60125518005, 60125518006, 60125518007, 60125518008, 60125518009, 60125518010, 60125518011, 60125518012, 60125518013, 60125518014, 60125518015, 60125518016

METHOD BLANK: 642830 Matrix: Water
Associated Lab Samples: 60125518001, 60125518002, 60125518003, 60125518004, 60125518005, 60125518006, 60125518007, 60125518008, 60125518009, 60125518010, 60125518011, 60125518012, 60125518013, 60125518014, 60125518015, 60125518016

Parameter	Units	Blank Result	Reporting Limit	Analyzed	Qualifiers
Total Organic Carbon	mg/L	ND	0.50	07/30/12 12:19	

LABORATORY CONTROL SAMPLE: 642831

Parameter	Units	Spike Conc.	LCS Result	LCS % Rec	% Rec Limits	Qualifiers
Total Organic Carbon	mg/L	2.5	2.7	107	80-120	

MATRIX SPIKE & MATRIX SPIKE DUPLICATE: 642832 642833

Parameter	Units	60125317001 Result	MS Spike Conc.	MSD Spike Conc.	MS Result	MSD Result	MS % Rec	MSD % Rec	% Rec Limits	RPD	Max RPD	Qual
Total Organic Carbon	mg/L	0.83	2.5	2.5	3.3	3.3	97	99	80-120	1	20	

MATRIX SPIKE & MATRIX SPIKE DUPLICATE: 642834 642835

Parameter	Units	60125518001 Result	MS Spike Conc.	MSD Spike Conc.	MS Result	MSD Result	MS % Rec	MSD % Rec	% Rec Limits	RPD	Max RPD	Qual
Total Organic Carbon	mg/L	1.5	2.5	2.5	4.2	4.3	109	110	80-120	1	20	

This report shall not be reproduced, except in full,
without the written consent of Pace Analytical Services, Inc..

Pace Analytical Services, Inc.
9608 Loiret Blvd.
Lenexa, KS 66219
(913)599-5665

QUALITY CONTROL DATA

Project: July 2012 Rico Water Sampling
Pace Project No.: 60125518

QC Batch: WETA/13435 Analysis Method: SM 5310C
QC Batch Method: SM 5310C Analysis Description: 5310C Total Organic Carbon
Associated Lab Samples: 60125518017, 60125518018, 60125518019, 60125518020, 60125518021, 60125518022, 60125518023, 60125518024, 60125518025, 60125518026, 60125518027, 60125518028, 60125518029

METHOD BLANK: 644013 Matrix: Water
Associated Lab Samples: 60125518017, 60125518018, 60125518019, 60125518020, 60125518021, 60125518022, 60125518023, 60125518024, 60125518025, 60125518026, 60125518027, 60125518028, 60125518029

Parameter	Units	Blank Result	Reporting Limit	Analyzed	Qualifiers
Total Organic Carbon	mg/L	ND	0.50	07/30/12 21:34	

LABORATORY CONTROL SAMPLE: 644014

Parameter	Units	Spike Conc.	LCS Result	LCS % Rec	% Rec Limits	Qualifiers
Total Organic Carbon	mg/L	2.5	2.6	104	80-120	

MATRIX SPIKE & MATRIX SPIKE DUPLICATE: 644015 644016

Parameter	Units	60125518017 Result	MS Spike Conc.	MSD Spike Conc.	MS Result	MSD Result	MS % Rec	MSD % Rec	% Rec Limits	RPD	Max RPD	Qual
Total Organic Carbon	mg/L	0.84	2.5	2.5	3.1	3.2	92	93	80-120	1	20	

MATRIX SPIKE & MATRIX SPIKE DUPLICATE: 644017 644018

Parameter	Units	60125518018 Result	MS Spike Conc.	MSD Spike Conc.	MS Result	MSD Result	MS % Rec	MSD % Rec	% Rec Limits	RPD	Max RPD	Qual
Total Organic Carbon	mg/L	ND	2.5	2.5	3.0	3.1	105	109	80-120	3	20	

This report shall not be reproduced, except in full,
without the written consent of Pace Analytical Services, Inc..

Pace Analytical Services, Inc.
9608 Loiret Blvd.
Lenexa, KS 66219
(913)599-5665

QUALIFIERS

Project: July 2012 Rico Water Sampling
Pace Project No.: 60125518

DEFINITIONS

DF - Dilution Factor, if reported, represents the factor applied to the reported data due to changes in sample preparation, dilution of the sample aliquot, or moisture content.

ND - Not Detected at or above adjusted reporting limit.

J - Estimated concentration above the adjusted method detection limit and below the adjusted reporting limit.

MDL - Adjusted Method Detection Limit.

PRL - Pace Reporting Limit.

RL - Reporting Limit.

S - Surrogate

1,2-Diphenylhydrazine (8270 listed analyte) decomposes to Azobenzene.

Consistent with EPA guidelines, unrounded data are displayed and have been used to calculate % recovery and RPD values.

LCS(D) - Laboratory Control Sample (Duplicate)

MS(D) - Matrix Spike (Duplicate)

DUP - Sample Duplicate

RPD - Relative Percent Difference

NC - Not Calculable.

SG - Silica Gel - Clean-Up

U - Indicates the compound was analyzed for, but not detected.

N-Nitrosodiphenylamine decomposes and cannot be separated from Diphenylamine using Method 8270. The result reported for each analyte is a combined concentration.

Pace Analytical is TNI accredited. Contact your Pace PM for the current list of accredited analytes.

TNI - The NELAC Institute.

LABORATORIES

PASI-G	Pace Analytical Services - Green Bay
PASI-K	Pace Analytical Services - Kansas City
PASI-M	Pace Analytical Services - Minneapolis

ANALYTE QUALIFIERS

B	Analyte was detected in the associated method blank.
CH	The continuing calibration for this compound is outside of Pace Analytical acceptance limits. The results may be biased high.
D3	Sample was diluted due to the presence of high levels of non-target analytes or other matrix interference.
D4	Sample was diluted due to the presence of high levels of target analytes.
D6	The relative percent difference (RPD) between the sample and sample duplicate exceeded laboratory control limits.
E	Analyte concentration exceeded the calibration range. The reported result is estimated.
H6	Analysis initiated outside of the 15 minute EPA recommended holding time.
L1	Analyte recovery in the laboratory control sample (LCS) was above QC limits. Results for this analyte in associated samples may be biased high.
M1	Matrix spike recovery exceeded QC limits. Batch accepted based on laboratory control sample (LCS) recovery.
M6	Matrix spike and Matrix spike duplicate recovery not evaluated against control limits due to sample dilution.

This report shall not be reproduced, except in full,
without the written consent of Pace Analytical Services, Inc..

Pace Analytical Services, Inc.
9608 Loiret Blvd.
Lenexa, KS 66219
(913)599-5665

QUALITY CONTROL DATA CROSS REFERENCE TABLE

Project: July 2012 Rico Water Sampling
Pace Project No.: 60125518

Lab ID	Sample ID	QC Batch Method	QC Batch	Analytical Method	Analytical Batch
60125518001	**DR-1**	EPA 200.7	MPRP/18863	EPA 200.7	ICP/15702
60125518002	**DR-2**	EPA 200.7	MPRP/18863	EPA 200.7	ICP/15702
60125518003	**DR-3**	EPA 200.7	MPRP/18863	EPA 200.7	ICP/15702
60125518004	**DR-4**	EPA 200.7	MPRP/18863	EPA 200.7	ICP/15702
60125518005	**DR-5**	EPA 200.7	MPRP/18863	EPA 200.7	ICP/15702
60125518006	**DR-6**	EPA 200.7	MPRP/18863	EPA 200.7	ICP/15702
60125518007	**DR-7**	EPA 200.7	MPRP/18863	EPA 200.7	ICP/15702
60125518008	**DR-8**	EPA 200.7	MPRP/18863	EPA 200.7	ICP/15702
60125518009	**DR-4-SW**	EPA 200.7	MPRP/18863	EPA 200.7	ICP/15702
60125518010	**DR-G**	EPA 200.7	MPRP/18863	EPA 200.7	ICP/15702
60125518011	**FB**	EPA 200.7	MPRP/18863	EPA 200.7	ICP/15702
60125518012	**GW-1**	EPA 200.7	MPRP/18863	EPA 200.7	ICP/15702
60125518013	**GW-3**	EPA 200.7	MPRP/18863	EPA 200.7	ICP/15702
60125518014	**GW-4**	EPA 200.7	MPRP/18863	EPA 200.7	ICP/15702
60125518015	**GW-5**	EPA 200.7	MPRP/18863	EPA 200.7	ICP/15702
60125518016	**GW-6**	EPA 200.7	MPRP/18863	EPA 200.7	ICP/15702
60125518017	**GW-7**	EPA 200.7	MPRP/18863	EPA 200.7	ICP/15702
60125518018	**EB-1**	EPA 200.7	MPRP/18863	EPA 200.7	ICP/15702
60125518019	**EB-2**	EPA 200.7	MPRP/18863	EPA 200.7	ICP/15702
60125518020	**MW-1 SHALLOW**	EPA 200.7	MPRP/18863	EPA 200.7	ICP/15702
60125518021	**MW-1 DEEP**	EPA 200.7	MPRP/18864	EPA 200.7	ICP/15701
60125518022	**MW-2 DEEP**	EPA 200.7	MPRP/18864	EPA 200.7	ICP/15701
60125518023	**MW-3 DEEP**	EPA 200.7	MPRP/18864	EPA 200.7	ICP/15701
60125518024	**MW-4 SHALLOW**	EPA 200.7	MPRP/18864	EPA 200.7	ICP/15701
60125518025	**MW-4 DEEP**	EPA 200.7	MPRP/18864	EPA 200.7	ICP/15701
60125518026	**MW-5 SHALLOW**	EPA 200.7	MPRP/18864	EPA 200.7	ICP/15701
60125518027	**MW-5 DEEP**	EPA 200.7	MPRP/18864	EPA 200.7	ICP/15701
60125518028	**MW-6 SHALLOW**	EPA 200.7	MPRP/18864	EPA 200.7	ICP/15701
60125518029	**MW-6 DEEP**	EPA 200.7	MPRP/18864	EPA 200.7	ICP/15701
60125518001	**DR-1**	EPA 200.8	ICPM/34001	EPA 200.8	ICPM/13505
60125518002	**DR-2**	EPA 200.8	ICPM/34001	EPA 200.8	ICPM/13505
60125518003	**DR-3**	EPA 200.8	ICPM/34001	EPA 200.8	ICPM/13505
60125518004	**DR-4**	EPA 200.8	ICPM/34001	EPA 200.8	ICPM/13505
60125518005	**DR-5**	EPA 200.8	ICPM/34001	EPA 200.8	ICPM/13505
60125518006	**DR-6**	EPA 200.8	ICPM/34001	EPA 200.8	ICPM/13505
60125518007	**DR-7**	EPA 200.8	ICPM/34001	EPA 200.8	ICPM/13505
60125518008	**DR-8**	EPA 200.8	ICPM/34001	EPA 200.8	ICPM/13505
60125518009	**DR-4-SW**	EPA 200.8	ICPM/34001	EPA 200.8	ICPM/13505
60125518010	**DR-G**	EPA 200.8	ICPM/34001	EPA 200.8	ICPM/13505
60125518011	**FB**	EPA 200.8	ICPM/34001	EPA 200.8	ICPM/13505
60125518012	**GW-1**	EPA 200.8	ICPM/34001	EPA 200.8	ICPM/13505
60125518013	**GW-3**	EPA 200.8	ICPM/34001	EPA 200.8	ICPM/13505
60125518014	**GW-4**	EPA 200.8	ICPM/34001	EPA 200.8	ICPM/13505
60125518015	**GW-5**	EPA 200.8	ICPM/34001	EPA 200.8	ICPM/13505
60125518016	**GW-6**	EPA 200.8	ICPM/34001	EPA 200.8	ICPM/13505
60125518017	**GW-7**	EPA 200.8	ICPM/34001	EPA 200.8	ICPM/13505
60125518018	**EB-1**	EPA 200.8	ICPM/34001	EPA 200.8	ICPM/13505
60125518019	**EB-2**	EPA 200.8	ICPM/34001	EPA 200.8	ICPM/13505

This report shall not be reproduced, except in full,
without the written consent of Pace Analytical Services, Inc..

Pace Analytical Services, Inc.
9608 Loiret Blvd.
Lenexa, KS 66219
(913)599-5665

QUALITY CONTROL DATA CROSS REFERENCE TABLE

Project: July 2012 Rico Water Sampling
Pace Project No.: 60125518

Lab ID	Sample ID	QC Batch Method	QC Batch	Analytical Method	Analytical Batch
60125518020	**MW-1 SHALLOW**	EPA 200.8	ICPM/34001	EPA 200.8	ICPM/13505
60125518021	**MW-1 DEEP**	EPA 200.8	ICPM/34002	EPA 200.8	ICPM/13408
60125518022	**MW-2 DEEP**	EPA 200.8	ICPM/34002	EPA 200.8	ICPM/13408
60125518023	**MW-3 DEEP**	EPA 200.8	ICPM/34002	EPA 200.8	ICPM/13408
60125518024	**MW-4 SHALLOW**	EPA 200.8	ICPM/34002	EPA 200.8	ICPM/13408
60125518025	**MW-4 DEEP**	EPA 200.8	ICPM/34002	EPA 200.8	ICPM/13408
60125518026	**MW-5 SHALLOW**	EPA 200.8	ICPM/34002	EPA 200.8	ICPM/13408
60125518027	**MW-5 DEEP**	EPA 200.8	ICPM/34002	EPA 200.8	ICPM/13408
60125518028	**MW-6 SHALLOW**	EPA 200.8	ICPM/34002	EPA 200.8	ICPM/13408
60125518029	**MW-6 DEEP**	EPA 200.8	ICPM/34002	EPA 200.8	ICPM/13408
60125518001	**DR-1**	EPA 200.8	ICPM/33998	EPA 200.8	ICPM/13487
60125518002	**DR-2**	EPA 200.8	ICPM/33998	EPA 200.8	ICPM/13487
60125518003	**DR-3**	EPA 200.8	ICPM/33998	EPA 200.8	ICPM/13487
60125518004	**DR-4**	EPA 200.8	ICPM/33998	EPA 200.8	ICPM/13487
60125518005	**DR-5**	EPA 200.8	ICPM/33998	EPA 200.8	ICPM/13487
60125518006	**DR-6**	EPA 200.8	ICPM/33998	EPA 200.8	ICPM/13487
60125518007	**DR-7**	EPA 200.8	ICPM/33998	EPA 200.8	ICPM/13487
60125518008	**DR-8**	EPA 200.8	ICPM/33998	EPA 200.8	ICPM/13487
60125518009	**DR-4-SW**	EPA 200.8	ICPM/33998	EPA 200.8	ICPM/13487
60125518010	**DR-G**	EPA 200.8	ICPM/33998	EPA 200.8	ICPM/13487
60125518011	**FB**	EPA 200.8	ICPM/33998	EPA 200.8	ICPM/13487
60125518012	**GW-1**	EPA 200.8	ICPM/33998	EPA 200.8	ICPM/13487
60125518013	**GW-3**	EPA 200.8	ICPM/33998	EPA 200.8	ICPM/13487
60125518014	**GW-4**	EPA 200.8	ICPM/33998	EPA 200.8	ICPM/13487
60125518015	**GW-5**	EPA 200.8	ICPM/33998	EPA 200.8	ICPM/13487
60125518016	**GW-6**	EPA 200.8	ICPM/33998	EPA 200.8	ICPM/13487
60125518017	**GW-7**	EPA 200.8	ICPM/33998	EPA 200.8	ICPM/13487
60125518018	**EB-1**	EPA 200.8	ICPM/33998	EPA 200.8	ICPM/13487
60125518019	**EB-2**	EPA 200.8	ICPM/33998	EPA 200.8	ICPM/13487
60125518020	**MW-1 SHALLOW**	EPA 200.8	ICPM/33998	EPA 200.8	ICPM/13487
60125518021	**MW-1 DEEP**	EPA 200.8	ICPM/34022	EPA 200.8	ICPM/13506
60125518022	**MW-2 DEEP**	EPA 200.8	ICPM/34022	EPA 200.8	ICPM/13506
60125518023	**MW-3 DEEP**	EPA 200.8	ICPM/34022	EPA 200.8	ICPM/13506
60125518024	**MW-4 SHALLOW**	EPA 200.8	ICPM/34022	EPA 200.8	ICPM/13506
60125518025	**MW-4 DEEP**	EPA 200.8	ICPM/34022	EPA 200.8	ICPM/13506
60125518026	**MW-5 SHALLOW**	EPA 200.8	ICPM/34022	EPA 200.8	ICPM/13506
60125518027	**MW-5 DEEP**	EPA 200.8	ICPM/34022	EPA 200.8	ICPM/13506
60125518028	**MW-6 SHALLOW**	EPA 200.8	ICPM/34022	EPA 200.8	ICPM/13506
60125518029	**MW-6 DEEP**	EPA 200.8	ICPM/34022	EPA 200.8	ICPM/13506
60125518001	**DR-1**	EPA 200.8	MPRP/18861	EPA 200.8	ICPM/1521
60125518001	**DR-1**	EPA 200.8	MPRP/18910	EPA 200.8	ICPM/1524
60125518002	**DR-2**	EPA 200.8	MPRP/18861	EPA 200.8	ICPM/1521
60125518002	**DR-2**	EPA 200.8	MPRP/18910	EPA 200.8	ICPM/1524
60125518003	**DR-3**	EPA 200.8	MPRP/18861	EPA 200.8	ICPM/1521

This report shall not be reproduced, except in full,
without the written consent of Pace Analytical Services, Inc..

Pace Analytical Services, Inc.
9608 Loiret Blvd.
Lenexa, KS 66219
(913)599-5665

QUALITY CONTROL DATA CROSS REFERENCE TABLE

Project: July 2012 Rico Water Sampling
Pace Project No.: 60125518

Lab ID	Sample ID	QC Batch Method	QC Batch	Analytical Method	Analytical Batch
60125518003	**DR-3**	EPA 200.8	MPRP/18910	EPA 200.8	ICPM/1524
60125518004	**DR-4**	EPA 200.8	MPRP/18861	EPA 200.8	ICPM/1521
60125518004	**DR-4**	EPA 200.8	MPRP/18910	EPA 200.8	ICPM/1524
60125518005	**DR-5**	EPA 200.8	MPRP/18861	EPA 200.8	ICPM/1521
60125518005	**DR-5**	EPA 200.8	MPRP/18910	EPA 200.8	ICPM/1524
60125518006	**DR-6**	EPA 200.8	MPRP/18861	EPA 200.8	ICPM/1521
60125518006	**DR-6**	EPA 200.8	MPRP/18910	EPA 200.8	ICPM/1524
60125518007	**DR-7**	EPA 200.8	MPRP/18861	EPA 200.8	ICPM/1521
60125518007	**DR-7**	EPA 200.8	MPRP/18910	EPA 200.8	ICPM/1524
60125518008	**DR-8**	EPA 200.8	MPRP/18861	EPA 200.8	ICPM/1521
60125518008	**DR-8**	EPA 200.8	MPRP/18910	EPA 200.8	ICPM/1524
60125518009	**DR-4-SW**	EPA 200.8	MPRP/18861	EPA 200.8	ICPM/1521
60125518009	**DR-4-SW**	EPA 200.8	MPRP/18910	EPA 200.8	ICPM/1524
60125518010	**DR-G**	EPA 200.8	MPRP/18861	EPA 200.8	ICPM/1521
60125518010	**DR-G**	EPA 200.8	MPRP/18910	EPA 200.8	ICPM/1524
60125518011	**FB**	EPA 200.8	MPRP/18861	EPA 200.8	ICPM/1521
60125518011	**FB**	EPA 200.8	MPRP/18910	EPA 200.8	ICPM/1524
60125518012	**GW-1**	EPA 200.8	MPRP/18861	EPA 200.8	ICPM/1521
60125518012	**GW-1**	EPA 200.8	MPRP/18910	EPA 200.8	ICPM/1524
60125518013	**GW-3**	EPA 200.8	MPRP/18861	EPA 200.8	ICPM/1521
60125518013	**GW-3**	EPA 200.8	MPRP/18910	EPA 200.8	ICPM/1524
60125518014	**GW-4**	EPA 200.8	MPRP/18861	EPA 200.8	ICPM/1521
60125518014	**GW-4**	EPA 200.8	MPRP/18910	EPA 200.8	ICPM/1524
60125518015	**GW-5**	EPA 200.8	MPRP/18861	EPA 200.8	ICPM/1521
60125518015	**GW-5**	EPA 200.8	MPRP/18910	EPA 200.8	ICPM/1524
60125518016	**GW-6**	EPA 200.8	MPRP/18861	EPA 200.8	ICPM/1521
60125518016	**GW-6**	EPA 200.8	MPRP/18910	EPA 200.8	ICPM/1524
60125518017	**GW-7**	EPA 200.8	MPRP/18861	EPA 200.8	ICPM/1521
60125518017	**GW-7**	EPA 200.8	MPRP/18910	EPA 200.8	ICPM/1524
60125518018	**EB-1**	EPA 200.8	MPRP/18861	EPA 200.8	ICPM/1521
60125518018	**EB-1**	EPA 200.8	MPRP/18910	EPA 200.8	ICPM/1524
60125518019	**EB-2**	EPA 200.8	MPRP/18861	EPA 200.8	ICPM/1521
60125518019	**EB-2**	EPA 200.8	MPRP/18910	EPA 200.8	ICPM/1524

This report shall not be reproduced, except in full,
without the written consent of Pace Analytical Services, Inc..

Pace Analytical Services, Inc.
9608 Loiret Blvd.
Lenexa, KS 66219
(913)599-5665

QUALITY CONTROL DATA CROSS REFERENCE TABLE

Project: July 2012 Rico Water Sampling
Pace Project No.: 60125518

Lab ID	Sample ID	QC Batch Method	QC Batch	Analytical Method	Analytical Batch
60125518020	**MW-1 SHALLOW**	EPA 200.8	MPRP/18861	EPA 200.8	ICPM/1521
60125518020	**MW-1 SHALLOW**	EPA 200.8	MPRP/18910	EPA 200.8	ICPM/1524
60125518021	**MW-1 DEEP**	EPA 200.8	MPRP/18862	EPA 200.8	ICPM/1522
60125518021	**MW-1 DEEP**	EPA 200.8	MPRP/18912	EPA 200.8	ICPM/1523
60125518022	**MW-2 DEEP**	EPA 200.8	MPRP/18862	EPA 200.8	ICPM/1522
60125518022	**MW-2 DEEP**	EPA 200.8	MPRP/18912	EPA 200.8	ICPM/1523
60125518023	**MW-3 DEEP**	EPA 200.8	MPRP/18862	EPA 200.8	ICPM/1522
60125518023	**MW-3 DEEP**	EPA 200.8	MPRP/18912	EPA 200.8	ICPM/1523
60125518024	**MW-4 SHALLOW**	EPA 200.8	MPRP/18862	EPA 200.8	ICPM/1522
60125518024	**MW-4 SHALLOW**	EPA 200.8	MPRP/18912	EPA 200.8	ICPM/1523
60125518025	**MW-4 DEEP**	EPA 200.8	MPRP/18862	EPA 200.8	ICPM/1522
60125518025	**MW-4 DEEP**	EPA 200.8	MPRP/18912	EPA 200.8	ICPM/1523
60125518026	**MW-5 SHALLOW**	EPA 200.8	MPRP/18862	EPA 200.8	ICPM/1522
60125518026	**MW-5 SHALLOW**	EPA 200.8	MPRP/18912	EPA 200.8	ICPM/1523
60125518027	**MW-5 DEEP**	EPA 200.8	MPRP/18862	EPA 200.8	ICPM/1522
60125518027	**MW-5 DEEP**	EPA 200.8	MPRP/18912	EPA 200.8	ICPM/1523
60125518028	**MW-6 SHALLOW**	EPA 200.8	MPRP/18862	EPA 200.8	ICPM/1522
60125518028	**MW-6 SHALLOW**	EPA 200.8	MPRP/18912	EPA 200.8	ICPM/1523
60125518029	**MW-6 DEEP**	EPA 200.8	MPRP/18862	EPA 200.8	ICPM/1522
60125518029	**MW-6 DEEP**	EPA 200.8	MPRP/18912	EPA 200.8	ICPM/1523
60125518001	**DR-1**	EPA 245.1	MERC/7200	EPA 245.1	MERC/7994
60125518002	**DR-2**	EPA 245.1	MERC/7200	EPA 245.1	MERC/7994
60125518003	**DR-3**	EPA 245.1	MERC/7200	EPA 245.1	MERC/7994
60125518004	**DR-4**	EPA 245.1	MERC/7200	EPA 245.1	MERC/7994
60125518005	**DR-5**	EPA 245.1	MERC/7200	EPA 245.1	MERC/7994
60125518006	**DR-6**	EPA 245.1	MERC/7200	EPA 245.1	MERC/7994
60125518007	**DR-7**	EPA 245.1	MERC/7200	EPA 245.1	MERC/7994
60125518008	**DR-8**	EPA 245.1	MERC/7200	EPA 245.1	MERC/7994
60125518009	**DR-4-SW**	EPA 245.1	MERC/7200	EPA 245.1	MERC/7994
60125518010	**DR-G**	EPA 245.1	MERC/7200	EPA 245.1	MERC/7994
60125518011	**FB**	EPA 245.1	MERC/7200	EPA 245.1	MERC/7994
60125518012	**GW-1**	EPA 245.1	MERC/7200	EPA 245.1	MERC/7994
60125518013	**GW-3**	EPA 245.1	MERC/7200	EPA 245.1	MERC/7994
60125518014	**GW-4**	EPA 245.1	MERC/7200	EPA 245.1	MERC/7994
60125518015	**GW-5**	EPA 245.1	MERC/7200	EPA 245.1	MERC/7994
60125518016	**GW-6**	EPA 245.1	MERC/7200	EPA 245.1	MERC/7994
60125518017	**GW-7**	EPA 245.1	MERC/7200	EPA 245.1	MERC/7994
60125518018	**EB-1**	EPA 245.1	MERC/7200	EPA 245.1	MERC/7994

This report shall not be reproduced, except in full,
without the written consent of Pace Analytical Services, Inc..

Pace Analytical Services, Inc.
9608 Loiret Blvd.
Lenexa, KS 66219
(913)599-5665

QUALITY CONTROL DATA CROSS REFERENCE TABLE

Project: July 2012 Rico Water Sampling
Pace Project No.: 60125518

Lab ID	Sample ID	QC Batch Method	QC Batch	Analytical Method	Analytical Batch
60125518019	**EB-2**	EPA 245.1	MERC/7200	EPA 245.1	MERC/7994
60125518020	**MW-1 SHALLOW**	EPA 245.1	MERC/7200	EPA 245.1	MERC/7994
60125518021	**MW-1 DEEP**	EPA 245.1	MERC/7201	EPA 245.1	MERC/7991
60125518022	**MW-2 DEEP**	EPA 245.1	MERC/7201	EPA 245.1	MERC/7991
60125518023	**MW-3 DEEP**	EPA 245.1	MERC/7201	EPA 245.1	MERC/7991
60125518024	**MW-4 SHALLOW**	EPA 245.1	MERC/7201	EPA 245.1	MERC/7991
60125518025	**MW-4 DEEP**	EPA 245.1	MERC/7201	EPA 245.1	MERC/7991
60125518026	**MW-5 SHALLOW**	EPA 245.1	MERC/7201	EPA 245.1	MERC/7991
60125518027	**MW-5 DEEP**	EPA 245.1	MERC/7201	EPA 245.1	MERC/7991
60125518028	**MW-6 SHALLOW**	EPA 245.1	MERC/7201	EPA 245.1	MERC/7991
60125518029	**MW-6 DEEP**	EPA 245.1	MERC/7201	EPA 245.1	MERC/7991
60125518001	**DR-1**	EPA 245.1	MERC/7203	EPA 245.1	MERC/7995
60125518002	**DR-2**	EPA 245.1	MERC/7203	EPA 245.1	MERC/7995
60125518003	**DR-3**	EPA 245.1	MERC/7203	EPA 245.1	MERC/7995
60125518004	**DR-4**	EPA 245.1	MERC/7203	EPA 245.1	MERC/7995
60125518005	**DR-5**	EPA 245.1	MERC/7203	EPA 245.1	MERC/7995
60125518006	**DR-6**	EPA 245.1	MERC/7203	EPA 245.1	MERC/7995
60125518007	**DR-7**	EPA 245.1	MERC/7203	EPA 245.1	MERC/7995
60125518008	**DR-8**	EPA 245.1	MERC/7203	EPA 245.1	MERC/7995
60125518009	**DR-4-SW**	EPA 245.1	MERC/7203	EPA 245.1	MERC/7995
60125518010	**DR-G**	EPA 245.1	MERC/7203	EPA 245.1	MERC/7995
60125518011	**FB**	EPA 245.1	MERC/7203	EPA 245.1	MERC/7995
60125518012	**GW-1**	EPA 245.1	MERC/7203	EPA 245.1	MERC/7995
60125518013	**GW-3**	EPA 245.1	MERC/7203	EPA 245.1	MERC/7995
60125518014	**GW-4**	EPA 245.1	MERC/7203	EPA 245.1	MERC/7995
60125518015	**GW-5**	EPA 245.1	MERC/7203	EPA 245.1	MERC/7995
60125518016	**GW-6**	EPA 245.1	MERC/7203	EPA 245.1	MERC/7995
60125518017	**GW-7**	EPA 245.1	MERC/7203	EPA 245.1	MERC/7995
60125518018	**EB-1**	EPA 245.1	MERC/7203	EPA 245.1	MERC/7995
60125518019	**EB-2**	EPA 245.1	MERC/7203	EPA 245.1	MERC/7995
60125518020	**MW-1 SHALLOW**	EPA 245.1	MERC/7203	EPA 245.1	MERC/7995
60125518021	**MW-1 DEEP**	EPA 245.1	MERC/7204	EPA 245.1	MERC/7990
60125518022	**MW-2 DEEP**	EPA 245.1	MERC/7204	EPA 245.1	MERC/7990
60125518023	**MW-3 DEEP**	EPA 245.1	MERC/7204	EPA 245.1	MERC/7990
60125518024	**MW-4 SHALLOW**	EPA 245.1	MERC/7204	EPA 245.1	MERC/7990
60125518025	**MW-4 DEEP**	EPA 245.1	MERC/7204	EPA 245.1	MERC/7990
60125518026	**MW-5 SHALLOW**	EPA 245.1	MERC/7204	EPA 245.1	MERC/7990
60125518027	**MW-5 DEEP**	EPA 245.1	MERC/7204	EPA 245.1	MERC/7990
60125518028	**MW-6 SHALLOW**	EPA 245.1	MERC/7204	EPA 245.1	MERC/7990
60125518029	**MW-6 DEEP**	EPA 245.1	MERC/7204	EPA 245.1	MERC/7990
60125518001	**DR-1**	EPA 245.1	MERP/6480	EPA 245.1	MERC/6438
60125518002	**DR-2**	EPA 245.1	MERP/6480	EPA 245.1	MERC/6438
60125518003	**DR-3**	EPA 245.1	MERP/6480	EPA 245.1	MERC/6438
60125518004	**DR-4**	EPA 245.1	MERP/6480	EPA 245.1	MERC/6438
60125518005	**DR-5**	EPA 245.1	MERP/6480	EPA 245.1	MERC/6438
60125518006	**DR-6**	EPA 245.1	MERP/6480	EPA 245.1	MERC/6438
60125518007	**DR-7**	EPA 245.1	MERP/6480	EPA 245.1	MERC/6438

This report shall not be reproduced, except in full,
without the written consent of Pace Analytical Services, Inc..

Pace Analytical Services, Inc.
9608 Loiret Blvd.
Lenexa, KS 66219
(913)599-5665

QUALITY CONTROL DATA CROSS REFERENCE TABLE

Project: July 2012 Rico Water Sampling
Pace Project No.: 60125518

Lab ID	Sample ID	QC Batch Method	QC Batch	Analytical Method	Analytical Batch
60125518008	**DR-8**	EPA 245.1	MERP/6480	EPA 245.1	MERC/6438
60125518009	**DR-4-SW**	EPA 245.1	MERP/6480	EPA 245.1	MERC/6438
60125518010	**DR-G**	EPA 245.1	MERP/6480	EPA 245.1	MERC/6438
60125518011	**FB**	EPA 245.1	MERP/6480	EPA 245.1	MERC/6438
60125518012	**GW-1**	EPA 245.1	MERP/6480	EPA 245.1	MERC/6438
60125518013	**GW-3**	EPA 245.1	MERP/6480	EPA 245.1	MERC/6438
60125518014	**GW-4**	EPA 245.1	MERP/6480	EPA 245.1	MERC/6438
60125518015	**GW-5**	EPA 245.1	MERP/6480	EPA 245.1	MERC/6438
60125518016	**GW-6**	EPA 245.1	MERP/6480	EPA 245.1	MERC/6438
60125518017	**GW-7**	EPA 245.1	MERP/6480	EPA 245.1	MERC/6438
60125518018	**EB-1**	EPA 245.1	MERP/6480	EPA 245.1	MERC/6438
60125518019	**EB-2**	EPA 245.1	MERP/6480	EPA 245.1	MERC/6438
60125518020	**MW-1 SHALLOW**	EPA 245.1	MERP/6480	EPA 245.1	MERC/6438
60125518021	**MW-1 DEEP**	EPA 245.1	MERP/6481	EPA 245.1	MERC/6439
60125518022	**MW-2 DEEP**	EPA 245.1	MERP/6481	EPA 245.1	MERC/6439
60125518023	**MW-3 DEEP**	EPA 245.1	MERP/6481	EPA 245.1	MERC/6439
60125518024	**MW-4 SHALLOW**	EPA 245.1	MERP/6481	EPA 245.1	MERC/6439
60125518025	**MW-4 DEEP**	EPA 245.1	MERP/6481	EPA 245.1	MERC/6439
60125518026	**MW-5 SHALLOW**	EPA 245.1	MERP/6481	EPA 245.1	MERC/6439
60125518027	**MW-5 DEEP**	EPA 245.1	MERP/6481	EPA 245.1	MERC/6439
60125518028	**MW-6 SHALLOW**	EPA 245.1	MERP/6481	EPA 245.1	MERC/6439
60125518029	**MW-6 DEEP**	EPA 245.1	MERP/6481	EPA 245.1	MERC/6439
60125518001	**DR-1**	SM 2510B	MT/9565		
60125518002	**DR-2**	SM 2510B	MT/9565		
60125518003	**DR-3**	SM 2510B	MT/9565		
60125518004	**DR-4**	SM 2510B	MT/9565		
60125518005	**DR-5**	SM 2510B	MT/9565		
60125518006	**DR-6**	SM 2510B	MT/9565		
60125518007	**DR-7**	SM 2510B	MT/9565		
60125518008	**DR-8**	SM 2510B	MT/9565		
60125518009	**DR-4-SW**	SM 2510B	MT/9565		
60125518010	**DR-G**	SM 2510B	MT/9565		
60125518011	**FB**	SM 2510B	MT/9565		
60125518012	**GW-1**	SM 2510B	MT/9565		
60125518013	**GW-3**	SM 2510B	MT/9565		
60125518014	**GW-4**	SM 2510B	MT/9565		
60125518015	**GW-5**	SM 2510B	MT/9565		
60125518016	**GW-6**	SM 2510B	MT/9565		
60125518017	**GW-7**	SM 2510B	MT/9565		
60125518018	**EB-1**	SM 2510B	MT/9565		
60125518019	**EB-2**	SM 2510B	MT/9565		
60125518020	**MW-1 SHALLOW**	SM 2510B	MT/9565		
60125518021	**MW-1 DEEP**	SM 2510B	MT/9566		
60125518022	**MW-2 DEEP**	SM 2510B	MT/9566		
60125518023	**MW-3 DEEP**	SM 2510B	MT/9566		
60125518024	**MW-4 SHALLOW**	SM 2510B	MT/9566		
60125518025	**MW-4 DEEP**	SM 2510B	MT/9566		

This report shall not be reproduced, except in full,
without the written consent of Pace Analytical Services, Inc..

Pace Analytical Services, Inc.
9608 Loiret Blvd.
Lenexa, KS 66219
(913)599-5665

QUALITY CONTROL DATA CROSS REFERENCE TABLE

Project: July 2012 Rico Water Sampling
Pace Project No.: 60125518

Lab ID	Sample ID	QC Batch Method	QC Batch	Analytical Method	Analytical Batch
60125518026	**MW-5 SHALLOW**	SM 2510B	MT/9566		
60125518027	**MW-5 DEEP**	SM 2510B	MT/9566		
60125518028	**MW-6 SHALLOW**	SM 2510B	MT/9566		
60125518029	**MW-6 DEEP**	SM 2510B	MT/9566		
60125518001	**DR-1**	Calculated	MT/9568		
60125518002	**DR-2**	Calculated	MT/9568		
60125518003	**DR-3**	Calculated	MT/9568		
60125518004	**DR-4**	Calculated	MT/9568		
60125518005	**DR-5**	Calculated	MT/9568		
60125518006	**DR-6**	Calculated	MT/9568		
60125518007	**DR-7**	Calculated	MT/9568		
60125518008	**DR-8**	Calculated	MT/9568		
60125518009	**DR-4-SW**	Calculated	MT/9568		
60125518010	**DR-G**	Calculated	MT/9568		
60125518011	**FB**	Calculated	MT/9568		
60125518012	**GW-1**	Calculated	MT/9568		
60125518013	**GW-3**	Calculated	MT/9568		
60125518014	**GW-4**	Calculated	MT/9568		
60125518015	**GW-5**	Calculated	MT/9568		
60125518016	**GW-6**	Calculated	MT/9568		
60125518017	**GW-7**	Calculated	MT/9568		
60125518018	**EB-1**	Calculated	MT/9568		
60125518019	**EB-2**	Calculated	MT/9568		
60125518020	**MW-1 SHALLOW**	Calculated	MT/9568		
60125518021	**MW-1 DEEP**	Calculated	MT/9569		
60125518022	**MW-2 DEEP**	Calculated	MT/9569		
60125518023	**MW-3 DEEP**	Calculated	MT/9569		
60125518024	**MW-4 SHALLOW**	Calculated	MT/9569		
60125518025	**MW-4 DEEP**	Calculated	MT/9569		
60125518026	**MW-5 SHALLOW**	Calculated	MT/9569		
60125518027	**MW-5 DEEP**	Calculated	MT/9569		
60125518028	**MW-6 SHALLOW**	Calculated	MT/9569		
60125518029	**MW-6 DEEP**	Calculated	MT/9569		
60125518001	**DR-1**	SM 2320B	WET/36227		
60125518002	**DR-2**	SM 2320B	WET/36265		
60125518003	**DR-3**	SM 2320B	WET/36265		
60125518004	**DR-4**	SM 2320B	WET/36265		
60125518005	**DR-5**	SM 2320B	WET/36265		
60125518006	**DR-6**	SM 2320B	WET/36265		
60125518007	**DR-7**	SM 2320B	WET/36265		
60125518008	**DR-8**	SM 2320B	WET/36265		
60125518009	**DR-4-SW**	SM 2320B	WET/36265		
60125518010	**DR-G**	SM 2320B	WET/36265		
60125518011	**FB**	SM 2320B	WET/36265		
60125518012	**GW-1**	SM 2320B	WET/36265		
60125518013	**GW-3**	SM 2320B	WET/36265		
60125518014	**GW-4**	SM 2320B	WET/36265		

This report shall not be reproduced, except in full,
without the written consent of Pace Analytical Services, Inc..

Pace Analytical Services, Inc.
9608 Loiret Blvd.
Lenexa, KS 66219
(913)599-5665

QUALITY CONTROL DATA CROSS REFERENCE TABLE

Project: July 2012 Rico Water Sampling
Pace Project No.: 60125518

Lab ID	Sample ID	QC Batch Method	QC Batch	Analytical Method	Analytical Batch
60125518015	**GW-5**	SM 2320B	WET/36265		
60125518016	**GW-6**	SM 2320B	WET/36265		
60125518017	**GW-7**	SM 2320B	WET/36265		
60125518018	**EB-1**	SM 2320B	WET/36265		
60125518019	**EB-2**	SM 2320B	WET/36265		
60125518020	**MW-1 SHALLOW**	SM 2320B	WET/36265		
60125518021	**MW-1 DEEP**	SM 2320B	WET/36265		
60125518022	**MW-2 DEEP**	SM 2320B	WET/36322		
60125518023	**MW-3 DEEP**	SM 2320B	WET/36322		
60125518024	**MW-4 SHALLOW**	SM 2320B	WET/36322		
60125518025	**MW-4 DEEP**	SM 2320B	WET/36322		
60125518026	**MW-5 SHALLOW**	SM 2320B	WET/36322		
60125518027	**MW-5 DEEP**	SM 2320B	WET/36322		
60125518028	**MW-6 SHALLOW**	SM 2320B	WET/36322		
60125518029	**MW-6 DEEP**	SM 2320B	WET/36322		
60125518001	**DR-1**	SM 2540C	WET/36164		
60125518002	**DR-2**	SM 2540C	WET/36164		
60125518003	**DR-3**	SM 2540C	WET/36164		
60125518004	**DR-4**	SM 2540C	WET/36164		
60125518005	**DR-5**	SM 2540C	WET/36164		
60125518006	**DR-6**	SM 2540C	WET/36164		
60125518007	**DR-7**	SM 2540C	WET/36164		
60125518008	**DR-8**	SM 2540C	WET/36164		
60125518009	**DR-4-SW**	SM 2540C	WET/36164		
60125518010	**DR-G**	SM 2540C	WET/36164		
60125518011	**FB**	SM 2540C	WET/36164		
60125518012	**GW-1**	SM 2540C	WET/36164		
60125518013	**GW-3**	SM 2540C	WET/36164		
60125518014	**GW-4**	SM 2540C	WET/36164		
60125518015	**GW-5**	SM 2540C	WET/36164		
60125518016	**GW-6**	SM 2540C	WET/36164		
60125518017	**GW-7**	SM 2540C	WET/36164		
60125518018	**EB-1**	SM 2540C	WET/36164		
60125518019	**EB-2**	SM 2540C	WET/36164		
60125518020	**MW-1 SHALLOW**	SM 2540C	WET/36164		
60125518021	**MW-1 DEEP**	SM 2540C	WET/36165		
60125518022	**MW-2 DEEP**	SM 2540C	WET/36165		
60125518023	**MW-3 DEEP**	SM 2540C	WET/36165		
60125518024	**MW-4 SHALLOW**	SM 2540C	WET/36165		
60125518025	**MW-4 DEEP**	SM 2540C	WET/36165		
60125518026	**MW-5 SHALLOW**	SM 2540C	WET/36165		
60125518027	**MW-5 DEEP**	SM 2540C	WET/36165		
60125518028	**MW-6 SHALLOW**	SM 2540C	WET/36165		
60125518029	**MW-6 DEEP**	SM 2540C	WET/36165		
60125518001	**DR-1**	SM 2540D	WET/36162		
60125518002	**DR-2**	SM 2540D	WET/36162		
60125518003	**DR-3**	SM 2540D	WET/36162		

This report shall not be reproduced, except in full,
without the written consent of Pace Analytical Services, Inc..

Pace Analytical Services, Inc.
9608 Loiret Blvd.
Lenexa, KS 66219
(913)599-5665

QUALITY CONTROL DATA CROSS REFERENCE TABLE

Project: July 2012 Rico Water Sampling
Pace Project No.: 60125518

Lab ID	Sample ID	QC Batch Method	QC Batch	Analytical Method	Analytical Batch
60125518004	**DR-4**	SM 2540D	WET/36162		
60125518005	**DR-5**	SM 2540D	WET/36162		
60125518006	**DR-6**	SM 2540D	WET/36162		
60125518007	**DR-7**	SM 2540D	WET/36162		
60125518008	**DR-8**	SM 2540D	WET/36162		
60125518009	**DR-4-SW**	SM 2540D	WET/36162		
60125518010	**DR-G**	SM 2540D	WET/36162		
60125518011	**FB**	SM 2540D	WET/36162		
60125518012	**GW-1**	SM 2540D	WET/36163		
60125518013	**GW-3**	SM 2540D	WET/36163		
60125518014	**GW-4**	SM 2540D	WET/36163		
60125518015	**GW-5**	SM 2540D	WET/36163		
60125518016	**GW-6**	SM 2540D	WET/36163		
60125518017	**GW-7**	SM 2540D	WET/36163		
60125518018	**EB-1**	SM 2540D	WET/36163		
60125518019	**EB-2**	SM 2540D	WET/36163		
60125518020	**MW-1 SHALLOW**	SM 2540D	WET/36163		
60125518021	**MW-1 DEEP**	SM 2540D	WET/36163		
60125518022	**MW-2 DEEP**	SM 2540D	WET/36163		
60125518023	**MW-3 DEEP**	SM 2540D	WET/36163		
60125518024	**MW-4 SHALLOW**	SM 2540D	WET/36163		
60125518025	**MW-4 DEEP**	SM 2540D	WET/36218		
60125518026	**MW-5 SHALLOW**	SM 2540D	WET/36218		
60125518027	**MW-5 DEEP**	SM 2540D	WET/36218		
60125518028	**MW-6 SHALLOW**	SM 2540D	WET/36218		
60125518029	**MW-6 DEEP**	SM 2540D	WET/36218		
60125518001	**DR-1**	SM 4500-H+B	WET/36169		
60125518002	**DR-2**	SM 4500-H+B	WET/36169		
60125518003	**DR-3**	SM 4500-H+B	WET/36169		
60125518004	**DR-4**	SM 4500-H+B	WET/36169		
60125518005	**DR-5**	SM 4500-H+B	WET/36169		
60125518006	**DR-6**	SM 4500-H+B	WET/36169		
60125518008	**DR-8**	SM 4500-H+B	WET/36169		
60125518011	**FB**	SM 4500-H+B	WET/36169		
60125518012	**GW-1**	SM 4500-H+B	WET/36169		
60125518013	**GW-3**	SM 4500-H+B	WET/36169		
60125518014	**GW-4**	SM 4500-H+B	WET/36169		
60125518015	**GW-5**	SM 4500-H+B	WET/36169		
60125518016	**GW-6**	SM 4500-H+B	WET/36170		
60125518017	**GW-7**	SM 4500-H+B	WET/36170		
60125518018	**EB-1**	SM 4500-H+B	WET/36169		
60125518019	**EB-2**	SM 4500-H+B	WET/36170		
60125518020	**MW-1 SHALLOW**	SM 4500-H+B	WET/36169		
60125518021	**MW-1 DEEP**	SM 4500-H+B	WET/36169		
60125518022	**MW-2 DEEP**	SM 4500-H+B	WET/36169		

This report shall not be reproduced, except in full,
without the written consent of Pace Analytical Services, Inc..

Pace Analytical Services, Inc.
9608 Loiret Blvd.
Lenexa, KS 66219
(913)599-5665

QUALITY CONTROL DATA CROSS REFERENCE TABLE

Project: July 2012 Rico Water Sampling
Pace Project No.: 60125518

Lab ID	Sample ID	QC Batch Method	QC Batch	Analytical Method	Analytical Batch
60125518023	**MW-3 DEEP**	SM 4500-H+B	WET/36169		
60125518024	**MW-4 SHALLOW**	SM 4500-H+B	WET/36173		
60125518025	**MW-4 DEEP**	SM 4500-H+B	WET/36170		
60125518026	**MW-5 SHALLOW**	SM 4500-H+B	WET/36170		
60125518027	**MW-5 DEEP**	SM 4500-H+B	WET/36170		
60125518028	**MW-6 SHALLOW**	SM 4500-H+B	WET/36170		
60125518029	**MW-6 DEEP**	SM 4500-H+B	WET/36170		
60125518001	**DR-1**	SM 4500-S-2 D	WET/36198		
60125518002	**DR-2**	SM 4500-S-2 D	WET/36198		
60125518003	**DR-3**	SM 4500-S-2 D	WET/36198		
60125518004	**DR-4**	SM 4500-S-2 D	WET/36198		
60125518005	**DR-5**	SM 4500-S-2 D	WET/36198		
60125518006	**DR-6**	SM 4500-S-2 D	WET/36198		
60125518007	**DR-7**	SM 4500-S-2 D	WET/36198		
60125518008	**DR-8**	SM 4500-S-2 D	WET/36198		
60125518009	**DR-4-SW**	SM 4500-S-2 D	WET/36198		
60125518010	**DR-G**	SM 4500-S-2 D	WET/36198		
60125518011	**FB**	SM 4500-S-2 D	WET/36198		
60125518012	**GW-1**	SM 4500-S-2 D	WET/36198		
60125518013	**GW-3**	SM 4500-S-2 D	WET/36198		
60125518014	**GW-4**	SM 4500-S-2 D	WET/36198		
60125518015	**GW-5**	SM 4500-S-2 D	WET/36198		
60125518016	**GW-6**	SM 4500-S-2 D	WET/36198		
60125518017	**GW-7**	SM 4500-S-2 D	WET/36198		
60125518018	**EB-1**	SM 4500-S-2 D	WET/36198		
60125518019	**EB-2**	SM 4500-S-2 D	WET/36198		
60125518020	**MW-1 SHALLOW**	SM 4500-S-2 D	WET/36198		
60125518021	**MW-1 DEEP**	SM 4500-S-2 D	WET/36200		
60125518022	**MW-2 DEEP**	SM 4500-S-2 D	WET/36200		
60125518023	**MW-3 DEEP**	SM 4500-S-2 D	WET/36200		
60125518024	**MW-4 SHALLOW**	SM 4500-S-2 D	WET/36200		
60125518025	**MW-4 DEEP**	SM 4500-S-2 D	WET/36200		
60125518026	**MW-5 SHALLOW**	SM 4500-S-2 D	WET/36200		
60125518027	**MW-5 DEEP**	SM 4500-S-2 D	WET/36200		
60125518028	**MW-6 SHALLOW**	SM 4500-S-2 D	WET/36200		
60125518029	**MW-6 DEEP**	SM 4500-S-2 D	WET/36200		
60125518001	**DR-1**	SM 2580B	WET/36206		
60125518002	**DR-2**	SM 2580B	WET/36206		
60125518003	**DR-3**	SM 2580B	WET/36206		
60125518004	**DR-4**	SM 2580B	WET/36206		
60125518005	**DR-5**	SM 2580B	WET/36206		
60125518006	**DR-6**	SM 2580B	WET/36206		
60125518007	**DR-7**	SM 2580B	WET/36206		
60125518008	**DR-8**	SM 2580B	WET/36206		
60125518009	**DR-4-SW**	SM 2580B	WET/36206		
60125518010	**DR-G**	SM 2580B	WET/36206		

This report shall not be reproduced, except in full,
without the written consent of Pace Analytical Services, Inc..

Pace Analytical Services, Inc.
9608 Loiret Blvd.
Lenexa, KS 66219
(913)599-5665

QUALITY CONTROL DATA CROSS REFERENCE TABLE

Project: July 2012 Rico Water Sampling
Pace Project No.: 60125518

Lab ID	Sample ID	QC Batch Method	QC Batch	Analytical Method	Analytical Batch
60125518011	**FB**	SM 2580B	WET/36206		
60125518012	**GW-1**	SM 2580B	WET/36206		
60125518013	**GW-3**	SM 2580B	WET/36206		
60125518014	**GW-4**	SM 2580B	WET/36206		
60125518015	**GW-5**	SM 2580B	WET/36206		
60125518016	**GW-6**	SM 2580B	WET/36206		
60125518017	**GW-7**	SM 2580B	WET/36206		
60125518018	**EB-1**	SM 2580B	WET/36206		
60125518019	**EB-2**	SM 2580B	WET/36206		
60125518020	**MW-1 SHALLOW**	SM 2580B	WET/36206		
60125518021	**MW-1 DEEP**	SM 2580B	WET/36207		
60125518022	**MW-2 DEEP**	SM 2580B	WET/36207		
60125518023	**MW-3 DEEP**	SM 2580B	WET/36207		
60125518024	**MW-4 SHALLOW**	SM 2580B	WET/36207		
60125518025	**MW-4 DEEP**	SM 2580B	WET/36207		
60125518026	**MW-5 SHALLOW**	SM 2580B	WET/36207		
60125518027	**MW-5 DEEP**	SM 2580B	WET/36207		
60125518028	**MW-6 SHALLOW**	SM 2580B	WET/36207		
60125518029	**MW-6 DEEP**	SM 2580B	WET/36207		
60125518001	**DR-1**	EPA 300.0	WETA/21059		
60125518002	**DR-2**	EPA 300.0	WETA/21059		
60125518003	**DR-3**	EPA 300.0	WETA/21059		
60125518004	**DR-4**	EPA 300.0	WETA/21059		
60125518005	**DR-5**	EPA 300.0	WETA/21059		
60125518006	**DR-6**	EPA 300.0	WETA/21059		
60125518007	**DR-7**	EPA 300.0	WETA/21059		
60125518008	**DR-8**	EPA 300.0	WETA/21059		
60125518009	**DR-4-SW**	EPA 300.0	WETA/21059		
60125518010	**DR-G**	EPA 300.0	WETA/21059		
60125518011	**FB**	EPA 300.0	WETA/21059		
60125518012	**GW-1**	EPA 300.0	WETA/21059		
60125518013	**GW-3**	EPA 300.0	WETA/21059		
60125518014	**GW-4**	EPA 300.0	WETA/21059		
60125518015	**GW-5**	EPA 300.0	WETA/21059		
60125518016	**GW-6**	EPA 300.0	WETA/21059		
60125518017	**GW-7**	EPA 300.0	WETA/21059		
60125518018	**EB-1**	EPA 300.0	WETA/21059		
60125518019	**EB-2**	EPA 300.0	WETA/21059		
60125518020	**MW-1 SHALLOW**	EPA 300.0	WETA/21059		
60125518021	**MW-1 DEEP**	EPA 300.0	WETA/21060		
60125518022	**MW-2 DEEP**	EPA 300.0	WETA/21060		
60125518023	**MW-3 DEEP**	EPA 300.0	WETA/21060		
60125518024	**MW-4 SHALLOW**	EPA 300.0	WETA/21060		
60125518025	**MW-4 DEEP**	EPA 300.0	WETA/21060		
60125518026	**MW-5 SHALLOW**	EPA 300.0	WETA/21060		
60125518027	**MW-5 DEEP**	EPA 300.0	WETA/21060		
60125518028	**MW-6 SHALLOW**	EPA 300.0	WETA/21060		

This report shall not be reproduced, except in full,
without the written consent of Pace Analytical Services, Inc..

Pace Analytical Services, Inc.
9608 Loiret Blvd.
Lenexa, KS 66219
(913)599-5665

QUALITY CONTROL DATA CROSS REFERENCE TABLE

Project: July 2012 Rico Water Sampling
Pace Project No.: 60125518

Lab ID	Sample ID	QC Batch Method	QC Batch	Analytical Method	Analytical Batch
60125518029	**MW-6 DEEP**	EPA 300.0	WETA/21060		
60125518001	**DR-1**	EPA 353.2	WETA/21015		
60125518002	**DR-2**	EPA 353.2	WETA/21015		
60125518003	**DR-3**	EPA 353.2	WETA/21015		
60125518004	**DR-4**	EPA 353.2	WETA/21015		
60125518005	**DR-5**	EPA 353.2	WETA/21015		
60125518006	**DR-6**	EPA 353.2	WETA/21015		
60125518007	**DR-7**	EPA 353.2	WETA/21015		
60125518008	**DR-8**	EPA 353.2	WETA/21051		
60125518009	**DR-4-SW**	EPA 353.2	WETA/21051		
60125518010	**DR-G**	EPA 353.2	WETA/21051		
60125518011	**FB**	EPA 353.2	WETA/21051		
60125518012	**GW-1**	EPA 353.2	WETA/21051		
60125518014	**GW-4**	EPA 353.2	WETA/21051		
60125518015	**GW-5**	EPA 353.2	WETA/21051		
60125518016	**GW-6**	EPA 353.2	WETA/21051		
60125518017	**GW-7**	EPA 353.2	WETA/21051		
60125518018	**EB-1**	EPA 353.2	WETA/21051		
60125518019	**EB-2**	EPA 353.2	WETA/21051		
60125518020	**MW-1 SHALLOW**	EPA 353.2	WETA/21051		
60125518021	**MW-1 DEEP**	EPA 353.2	WETA/21051		
60125518022	**MW-2 DEEP**	EPA 353.2	WETA/21051		
60125518023	**MW-3 DEEP**	EPA 353.2	WETA/21051		
60125518024	**MW-4 SHALLOW**	EPA 353.2	WETA/21051		
60125518025	**MW-4 DEEP**	EPA 353.2	WETA/21051		
60125518001	**DR-1**	SM 4500-CN-E	WETA/20995		
60125518002	**DR-2**	SM 4500-CN-E	WETA/20995		
60125518003	**DR-3**	SM 4500-CN-E	WETA/20995		
60125518004	**DR-4**	SM 4500-CN-E	WETA/20995		
60125518005	**DR-5**	SM 4500-CN-E	WETA/20995		
60125518006	**DR-6**	SM 4500-CN-E	WETA/20995		
60125518007	**DR-7**	SM 4500-CN-E	WETA/20995		
60125518008	**DR-8**	SM 4500-CN-E	WETA/20995		
60125518009	**DR-4-SW**	SM 4500-CN-E	WETA/20995		
60125518010	**DR-G**	SM 4500-CN-E	WETA/20995		
60125518011	**FB**	SM 4500-CN-E	WETA/20995		
60125518012	**GW-1**	SM 4500-CN-E	WETA/20995		
60125518013	**GW-3**	SM 4500-CN-E	WETA/20995		
60125518014	**GW-4**	SM 4500-CN-E	WETA/20995		
60125518015	**GW-5**	SM 4500-CN-E	WETA/20995		
60125518016	**GW-6**	SM 4500-CN-E	WETA/20995		
60125518017	**GW-7**	SM 4500-CN-E	WETA/20995		
60125518018	**EB-1**	SM 4500-CN-E	WETA/21011		
60125518019	**EB-2**	SM 4500-CN-E	WETA/21011		
60125518020	**MW-1 SHALLOW**	SM 4500-CN-E	WETA/21011		
60125518021	**MW-1 DEEP**	SM 4500-CN-E	WETA/21011		
60125518022	**MW-2 DEEP**	SM 4500-CN-E	WETA/21011		

This report shall not be reproduced, except in full,
without the written consent of Pace Analytical Services, Inc..

Pace Analytical Services, Inc.
9608 Loiret Blvd.
Lenexa, KS 66219
(913)599-5665

QUALITY CONTROL DATA CROSS REFERENCE TABLE

Project: July 2012 Rico Water Sampling
Pace Project No.: 60125518

Lab ID	Sample ID	QC Batch Method	QC Batch	Analytical Method	Analytical Batch
60125518023	**MW-3 DEEP**	SM 4500-CN-E	WETA/21011		
60125518024	**MW-4 SHALLOW**	SM 4500-CN-E	WETA/21011		
60125518025	**MW-4 DEEP**	SM 4500-CN-E	WETA/21011		
60125518026	**MW-5 SHALLOW**	SM 4500-CN-E	WETA/21011		
60125518027	**MW-5 DEEP**	SM 4500-CN-E	WETA/21011		
60125518028	**MW-6 SHALLOW**	SM 4500-CN-E	WETA/21011		
60125518029	**MW-6 DEEP**	SM 4500-CN-E	WETA/21011		
60125518001	**DR-1**	SM 5310C	WETA/13406		
60125518002	**DR-2**	SM 5310C	WETA/13406		
60125518003	**DR-3**	SM 5310C	WETA/13406		
60125518004	**DR-4**	SM 5310C	WETA/13406		
60125518005	**DR-5**	SM 5310C	WETA/13406		
60125518006	**DR-6**	SM 5310C	WETA/13406		
60125518007	**DR-7**	SM 5310C	WETA/13406		
60125518008	**DR-8**	SM 5310C	WETA/13406		
60125518009	**DR-4-SW**	SM 5310C	WETA/13406		
60125518010	**DR-G**	SM 5310C	WETA/13406		
60125518011	**FB**	SM 5310C	WETA/13406		
60125518012	**GW-1**	SM 5310C	WETA/13406		
60125518013	**GW-3**	SM 5310C	WETA/13406		
60125518014	**GW-4**	SM 5310C	WETA/13406		
60125518015	**GW-5**	SM 5310C	WETA/13406		
60125518016	**GW-6**	SM 5310C	WETA/13406		
60125518017	**GW-7**	SM 5310C	WETA/13435		
60125518018	**EB-1**	SM 5310C	WETA/13435		
60125518019	**EB-2**	SM 5310C	WETA/13435		
60125518020	**MW-1 SHALLOW**	SM 5310C	WETA/13435		
60125518021	**MW-1 DEEP**	SM 5310C	WETA/13435		
60125518022	**MW-2 DEEP**	SM 5310C	WETA/13435		
60125518023	**MW-3 DEEP**	SM 5310C	WETA/13435		
60125518024	**MW-4 SHALLOW**	SM 5310C	WETA/13435		
60125518025	**MW-4 DEEP**	SM 5310C	WETA/13435		
60125518026	**MW-5 SHALLOW**	SM 5310C	WETA/13435		
60125518027	**MW-5 DEEP**	SM 5310C	WETA/13435		
60125518028	**MW-6 SHALLOW**	SM 5310C	WETA/13435		
60125518029	**MW-6 DEEP**	SM 5310C	WETA/13435		

This report shall not be reproduced, except in full,
without the written consent of Pace Analytical Services, Inc..

Pace Analytical Services, Inc.
1241 Bellevue Street, Suite 9
Green Bay, WI 54302
Phone: 920-469-2436
Fax: 920-469-8827

October 1, 2012

Heather Wilson
Project Manager
Pace Analytical Services, Inc - Kansas
9608 Loiret Blvd
Lenexa, KS 66219

Dear Ms. Wilson,

On July 21, 2012, Pace Analytical Services, Inc – Green Bay received samples for the analysis of Total Organic Carbon (TOC) via Standard Method 5310C from the Pace Analytical Services, Inc – Kansas facility. On July 30, 2012 Pace-KS requested the Pace-GB laboratory to additionally analyze for NO3+NO2 by EPA Method 353.2 using remaining volume from the preserved TOC container. The samples were logged into the Laboratory Information Management System (EP) on July 30, 2012; however, while reviewing projects approaching the report due date, the Pace-GB project manager canceled the scheduled analysis for EPA 353.2, since it did not appear on the inter-regional work order and chain-of-custody received in Pace-GB. The laboratory issued the final report to Pace-KS on August 2, 2012. On September 28, 2012 Pace-GB was notified of the overlooked analysis. Samples are disposed 30 days after the final report is issued, and are therefore unable to be analyzed outside of hold time.

The investigations have been documented in the laboratory's corrective action database for tracking. The corrective actions generated from this investigation will receive formal documentation and follow up by the Quality Department. The information will be used to develop continuous improvement.

We sincerely apologize for the inconvenience this has caused and look forward to supporting your testing needs. If you have any questions or comments, please do not hesitate to contact me at (920) 469-2436 or via E-mail at Kate.Grams@pacelabs.com.

Sincerely,

Kate E. Grams

Kate E. Grams
Quality Manager
Pace Analytical Services, Inc. – Green Bay Laboratory

Appendix E

Flow Cross Sections

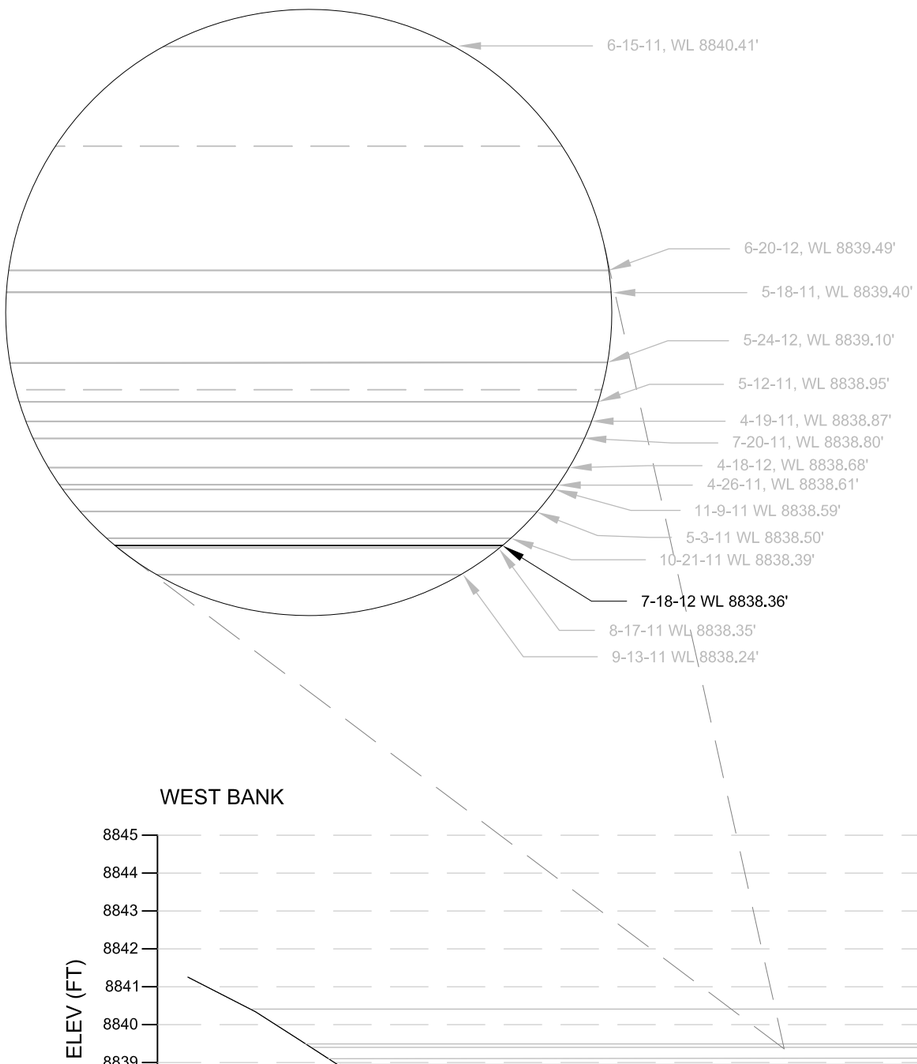

DR-1 CROSS SECTION

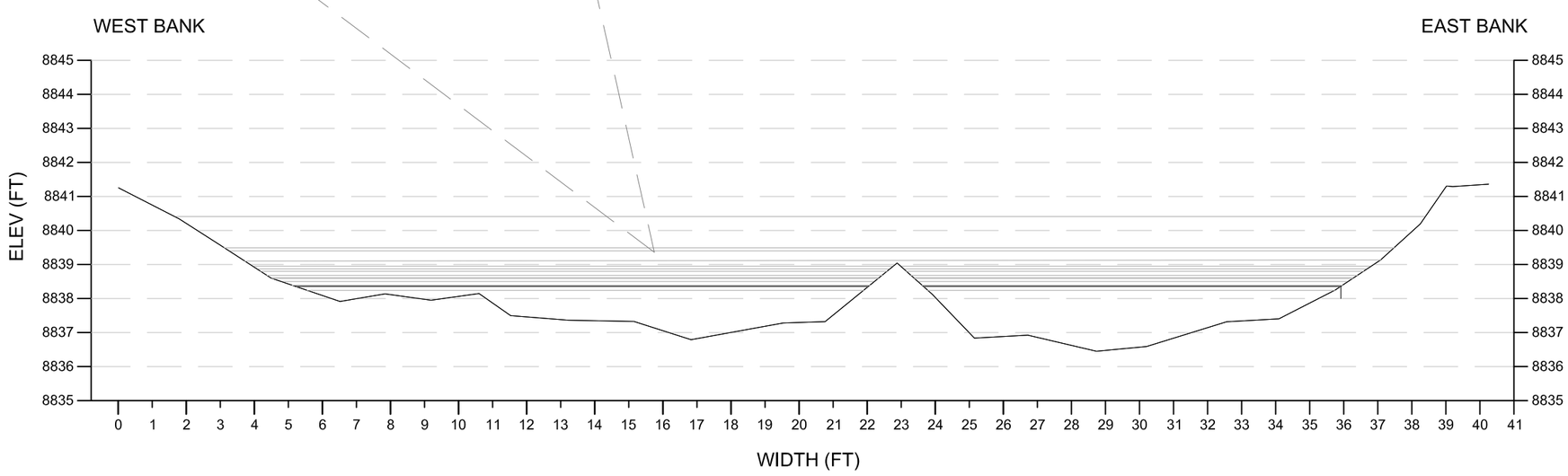

3 CROSS SECTION AT DR-1

SCALE - 1" = 4'

THESE PLANS AND SPECIFICATIONS ARE THE PROPERTY OF ANDERSON ENGINEERING COMPANY, INC., 977 WEST 2100 SOUTH, SALT LAKE CITY, UTAH, 84119 AND SHALL NOT BE COPIED, REDUCED, OR REPRODUCED WITHOUT THEIR WRITTEN PERMISSION.

General Notes

Scale in Feet
0 2 4

No.	Revision/Issue	Date

ATLANTIC RICHFIELD COMPANY

ANDERSON
ENGINEERING COMPANY, INC.

DRAWN BY: MAD
ENGINEER: CS, MAD
APPROVED:

RICO SURFACE WATER SAMPLING

DOLORES RIVER CROSS SECTION AT SAMPLING STATION DR-1

RICO, CO

Project
Date 18-JUL-2012
Scale
Figure 3

DR-5 CROSS SECTION

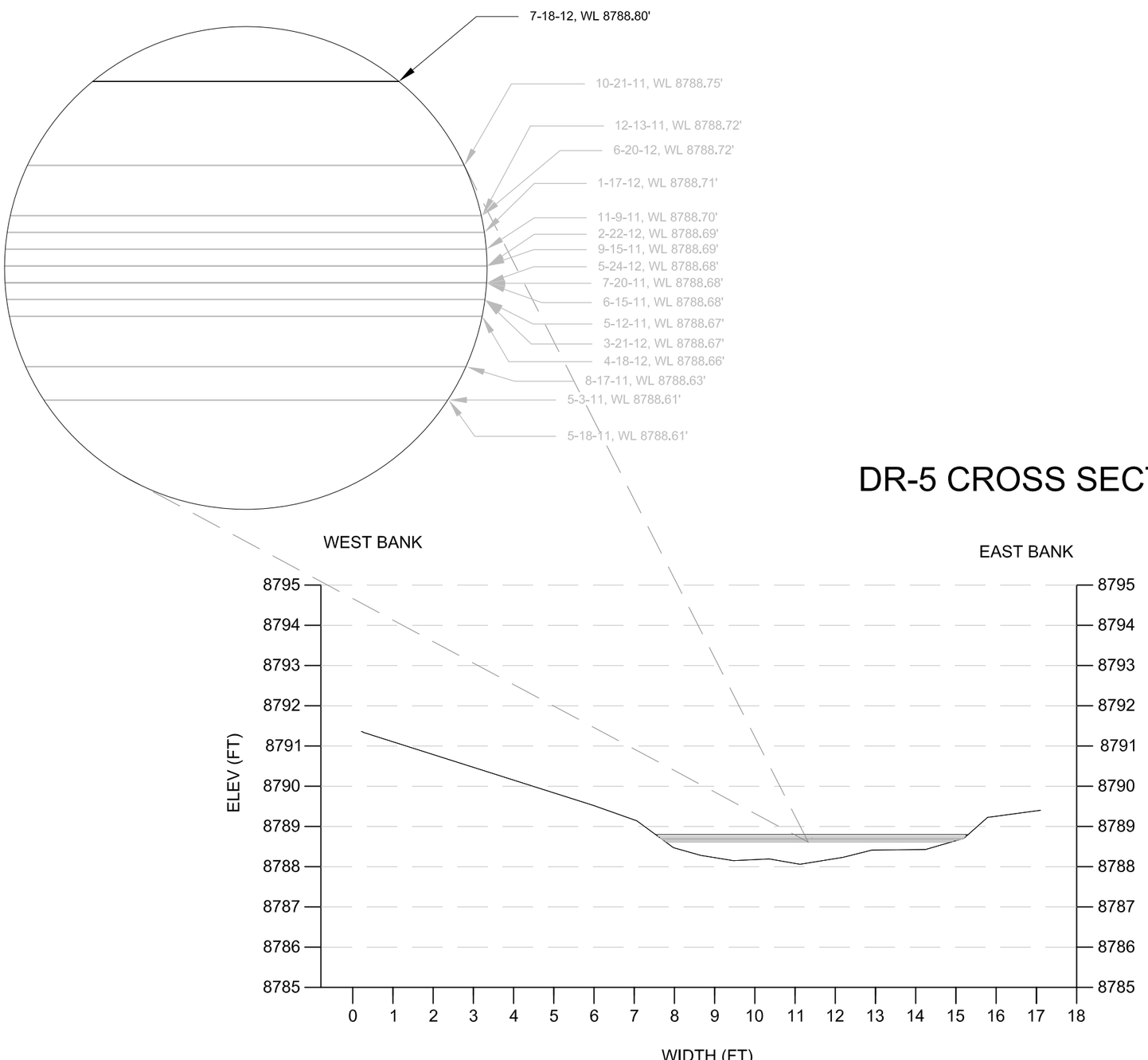

4 **CROSS SECTION AT DR-5**

SCALE - 1" = 3'

General Notes

Scale in Feet
0 1.5 3

No.	Revision/Issue	Date

ATLANTIC RICHFIELD COMPANY

ANDERSON
ENGINEERING COMPANY, INC.

DRAWN BY: MAD
ENGINEER: CS, MAD
APPROVED:

RICO SURFACE WATER SAMPLING

POND 8 EMBANKMENT CROSS SECTION AT SAMPLING STATION DR-5

RICO, CO

Project
Date 18-JUL-2012
Scale
Figure 4

THESE PLANS AND SPECIFICATIONS ARE THE PROPERTY OF ANDERSON ENGINEERING COMPANY, INC., 977 WEST 2100 SOUTH, SALT LAKE CITY, UTAH, 84119 AND SHALL NOT BE COPIED, REDUCED, OR REPRODUCED WITHOUT THEIR WRITTEN PERMISSION.

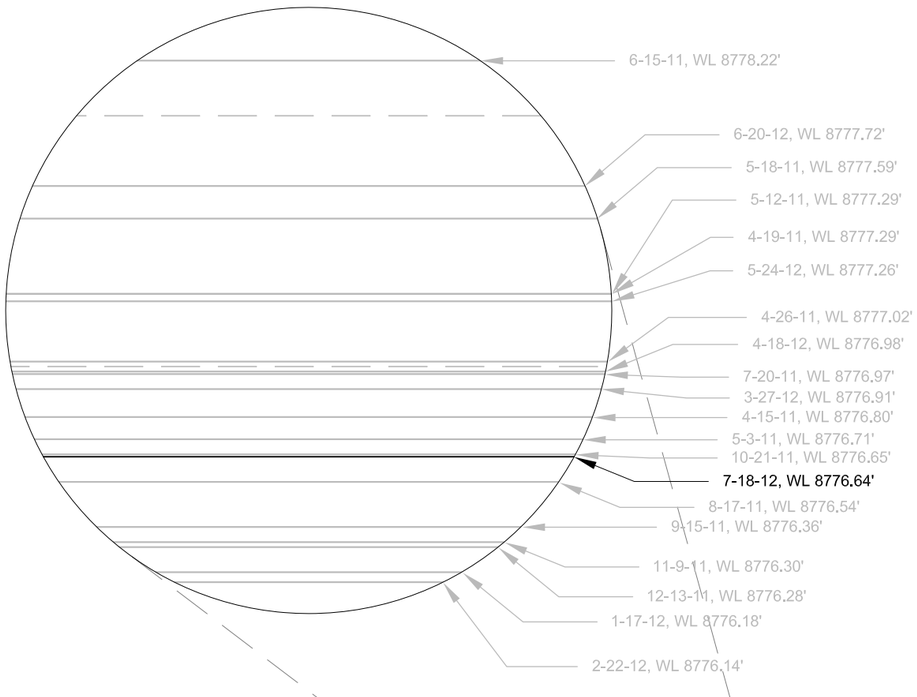

DR-2 CROSS SECTION

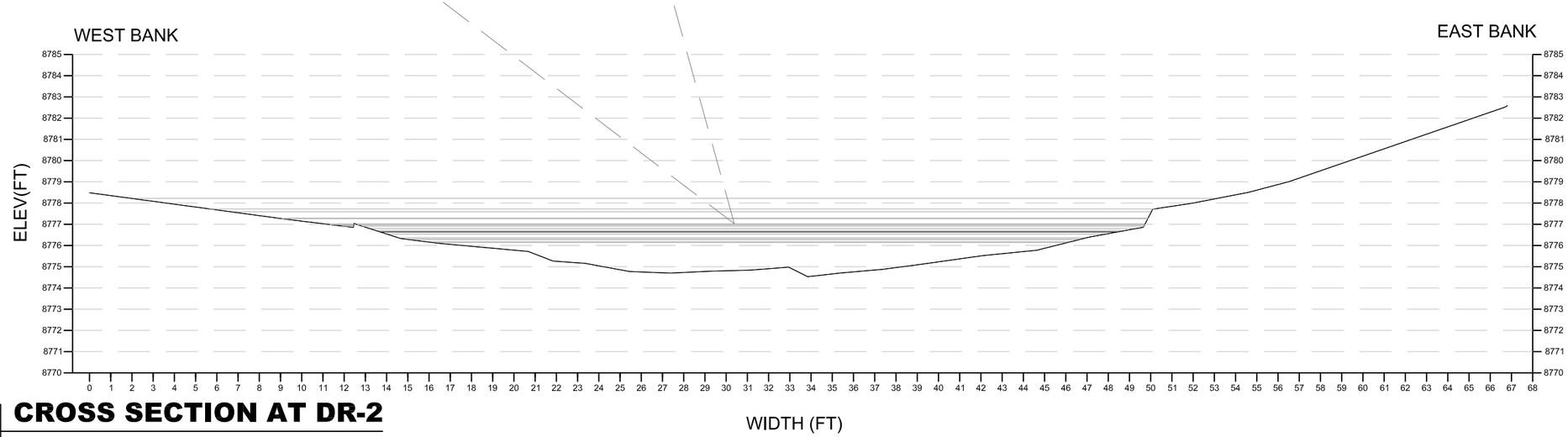

5 **CROSS SECTION AT DR-2**

SCALE - 1" = 6'

THESE PLANS AND SPECIFICATIONS ARE THE PROPERTY OF ANDERSON ENGINEERING COMPANY, INC., 977 WEST 2100 SOUTH, SALT LAKE CITY, UTAH, 84119 AND SHALL NOT BE COPIED, REDUCED, OR REPRODUCED WITHOUT THEIR WRITTEN PERMISSION.

General Notes

Scale in Feet

0 3 6

No.	Revision/Issue	Date

ATLANTIC RICHFIELD COMPANY

ANDERSON
ENGINEERING COMPANY, INC.

DRAWN BY: MAD
ENGINEER: CS, MAD
APPROVED:

RICO SURFACE WATER SAMPLING

DOLORES RIVER CROSS SECTION AT SAMPLING STATION DR-2

RICO, CO

Project
Date 18-JUL-2012
Scale
Figure 5

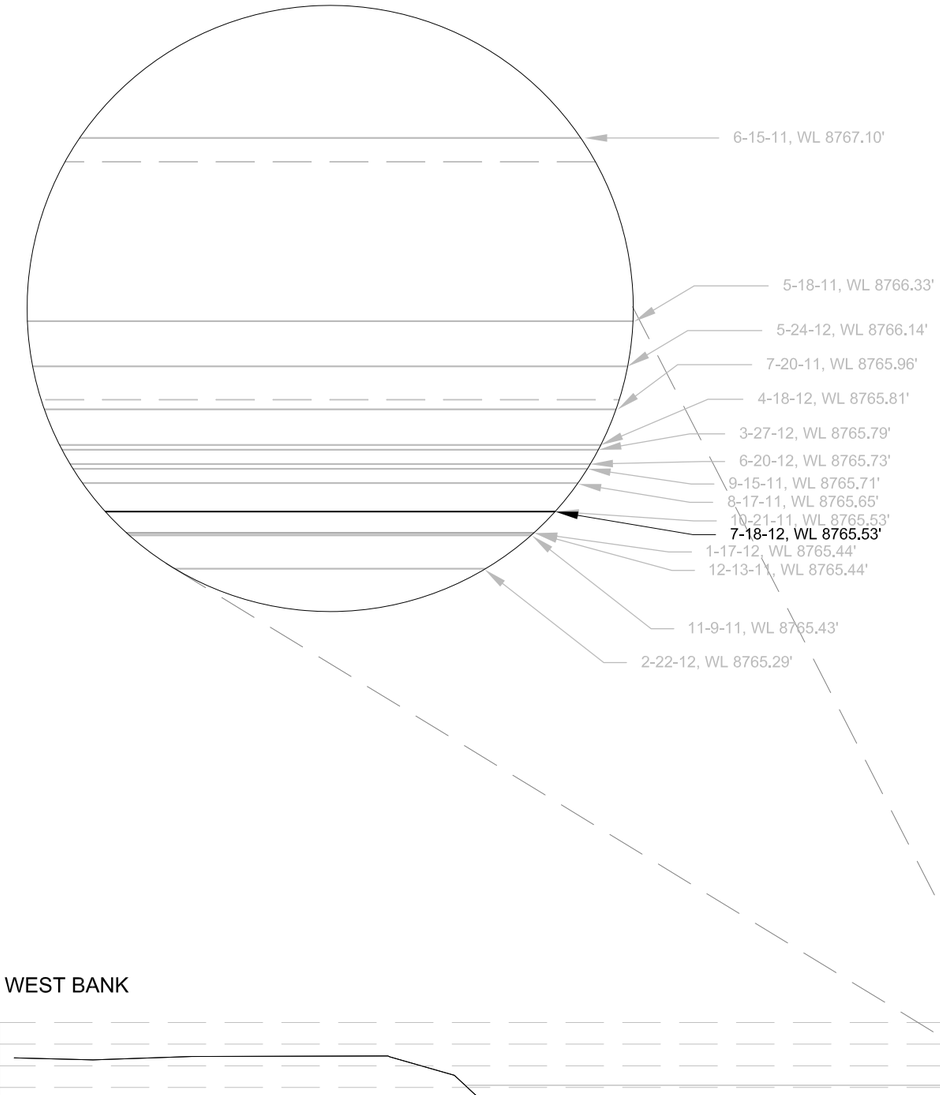

DR-7 CROSS SECTION

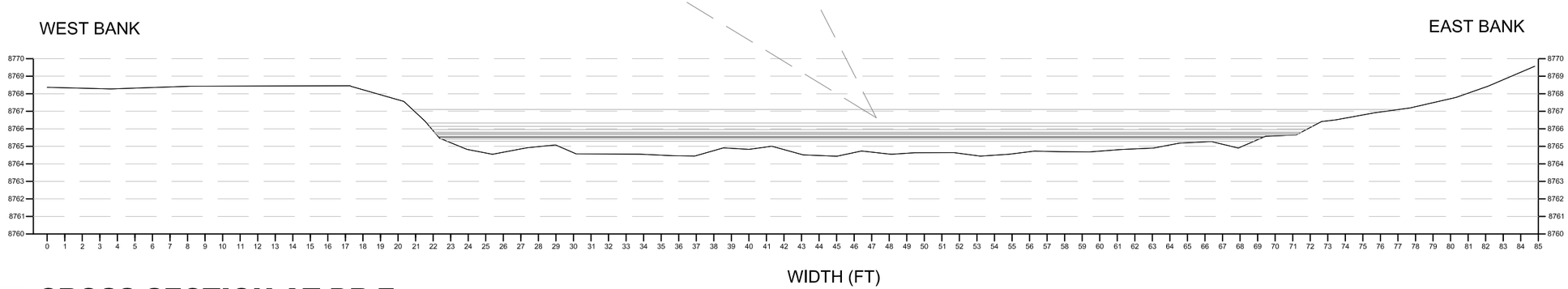

6 CROSS SECTION AT DR-7

SCALE - 1" = 7'

THESE PLANS AND SPECIFICATIONS ARE THE PROPERTY OF ANDERSON ENGINEERING COMPANY, INC., 977 WEST 2100 SOUTH, SALT LAKE CITY, UTAH, 84119 AND SHALL NOT BE COPIED, REDUCED, OR REPRODUCED WITHOUT THEIR WRITTEN PERMISSION.

General Notes

Scale in Feet
0 3.5 7

No.	Revision/Issue	Date

ATLANTIC RICHFIELD COMPANY

ANDERSON
ENGINEERING COMPANY, INC.

DRAWN BY: MAD
ENGINEER: CS, MAD
APPROVED:

RICO SURFACE WATER SAMPLING

DOLORES RIVER CROSS SECTION AT SAMPLING STATION DR-7

RICO, CO

Project
Date 18-JUL-2012
Scale
Figure 6

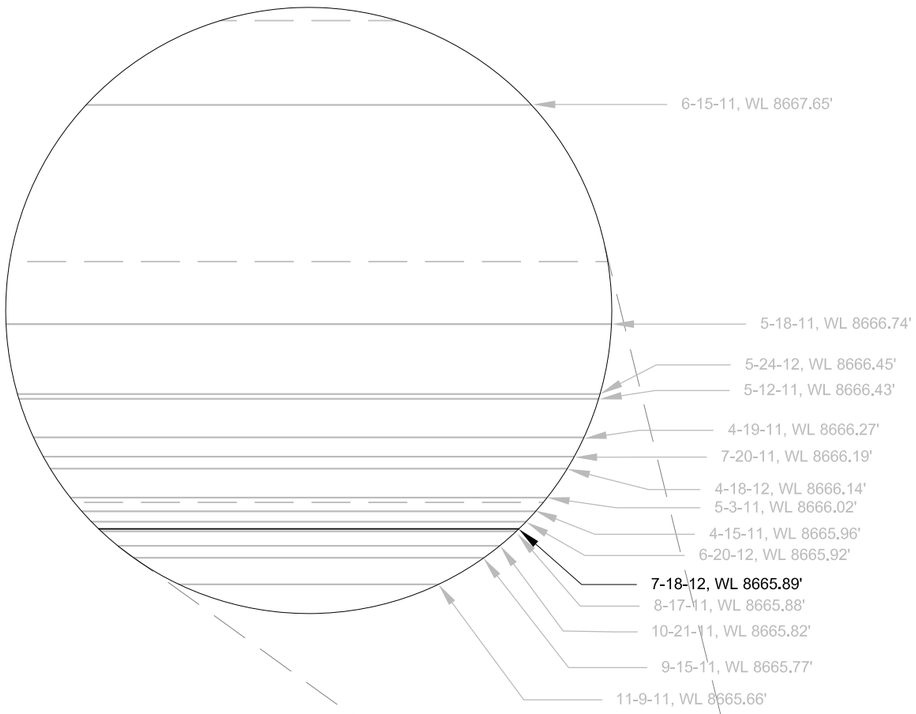

DR-4-SW CROSS SECTION

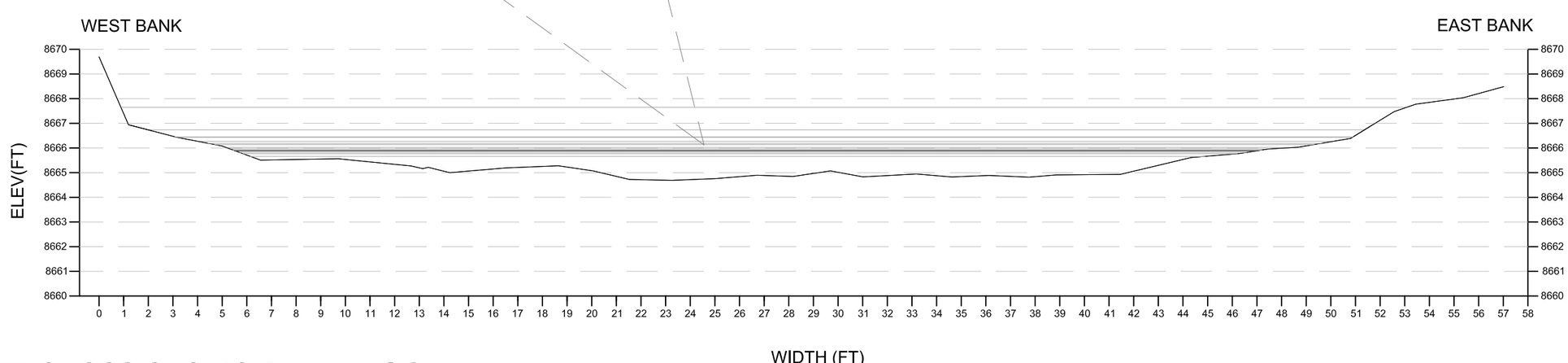

7 **CROSS SECTION AT DR-4-SW**

SCALE - 1" = 5'

THESE PLANS AND SPECIFICATIONS ARE THE PROPERTY OF ANDERSON ENGINEERING COMPANY, INC., 977 WEST 2100 SOUTH, SALT LAKE CITY, UTAH, 84119 AND SHALL NOT BE COPIED, REDUCED, OR REPRODUCED WITHOUT THEIR WRITTEN PERMISSION.

General Notes

Scale in Feet

0 2.5 5

No.	Revision/Issue	Date

ATLANTIC RICHFIELD COMPANY

ANDERSON ENGINEERING COMPANY, INC.

DRAWN BY: MAD

ENGINEER: CS, MAD

APPROVED:

RICO SURFACE WATER SAMPLING

DOLORES RIVER CROSS SECTION AT SAMPLING STATION DR-4-SW

RICO, CO

Project

Date 18-JUL-2012

Scale

Figure 7

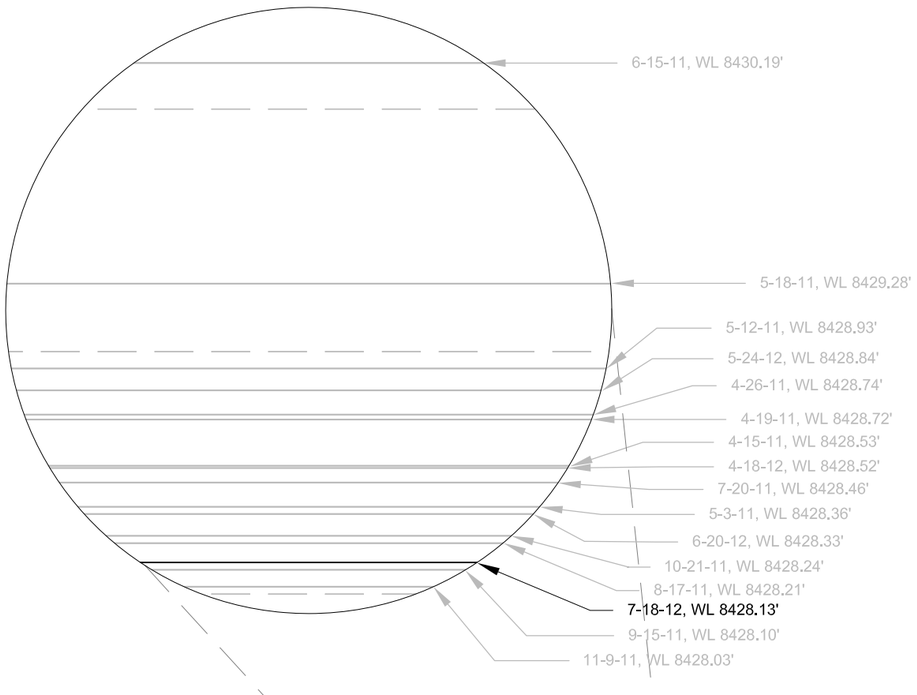

DR-G CROSS SECTION

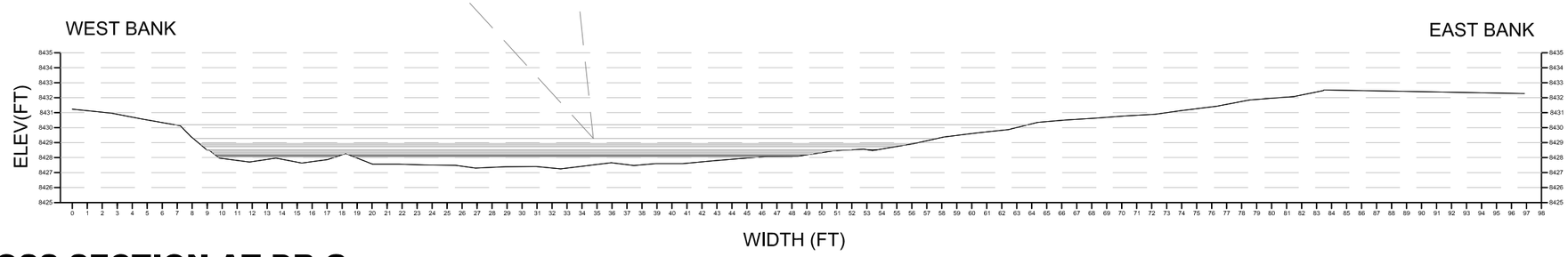

8 CROSS SECTION AT DR-G

SCALE - 1" = 9'

THESE PLANS AND SPECIFICATIONS ARE THE PROPERTY OF ANDERSON ENGINEERING COMPANY, INC., 977 WEST 2100 SOUTH, SALT LAKE CITY, UTAH, 84119 AND SHALL NOT BE COPIED, REDUCED, OR REPRODUCED WITHOUT THEIR WRITTEN PERMISSION.

General Notes

Scale in Feet
0 4.5 9

No.	Revision/Issue	Date

ATLANTIC RICHFIELD COMPANY

ANDERSON
ENGINEERING COMPANY, INC.

DRAWN BY: MAD
ENGINEER: CS, MAD
APPROVED:

RICO SURFACE WATER SAMPLING

DOLORES RIVER CROSS SECTION AT SAMPLING STATION DR-G

RICO, CO

Project
Date 18-JUL-2012
Scale
Figure 8

Appendix F

Chain of Custody Records

ANDERSON
ENGINEERING COMPANY INC.

977 West 2100 South
Salt Lake City, UT 84119
(801) 972-6222
FAX (801) 972-6235

CHAIN OF CUSTODY RECORD

COC# 60125518
Page 1 of 2

Project: July 2012 Rico Water Sampling

Contact: Mark DeFriez (801) 234-9583

Matrix Codes
(W) Water
(S) Soil
(L) Liquid

QC: (circle one)
I II III IV

Field Location	Field Sample ID Number	Date	Time	Matrix	No. of Containers	Total Metals / Hardness	Potentially Dissolved Metal	Dissolved Metals	Alkalinity / TDS / TSS / Sulfate/	Cyanide	Salinity	Silica	Total Organic Carbon	Nitrate	Total Organic Carbon / Nitrate	pH	Sulfide	Oxidation Reduction Potential (ORP)	COMMENTS
DR-1	1BP2U 2BP2U 2BP3N 1BP3F DR-1_20120717 1BP3S 1BP3C 1BP3T	7/17/2012	2:45 PM	W	10	X	X	X	X	X	X	X	X	X		X	X	X	Chloride to be added to Alkalinity bottle (not indicated on bottle label) 1AG3S 001
DR-2	DR-2_20120717	7/17/2012	12:40 PM	W	10	X	X	X	X	X	X	X	X	X		X	X	X	Chloride to be added to Alkalinity bottle (not indicated on bottle label) 002
DR-3	DR-3_20120717	7/17/2012	2:00 PM	W	10	X	X	X	X	X	X	X	X	X		X	X	X	Chloride to be added to Alkalinity bottle (not indicated on bottle label) 003
DR-4	DR-4_20120717	7/17/2012	3:00 PM	W	10	X	X	X	X	X	X	X	X	X		X	X	X	Chloride to be added to Alkalinity bottle (not indicated on bottle label) 004
DR-5	DR-5_20120717	7/17/2012	12:30 PM	W	10	X	X	X	X	X	X	X	X	X		X	X	X	Chloride to be added to Alkalinity bottle (not indicated on bottle label) 005
DR-6	DR-6_20120717	7/17/2012	12:50 PM	W	10	X	X	X	X	X	X	X	X	X		X	X	X	Chloride to be added to Alkalinity bottle (not indicated on bottle label) 006
DR-7	DR-7_20120717	7/17/2012	12:00 PM	W	10	X	X	X	X	X	X	X	X	X			X	X	Chloride to be added to Alkalinity bottle (not indicated on bottle label) 007
DR-8	DR-8_20120717	7/17/2012	2:25 PM	W	10	X	X	X	X	X	X	X	X	X		X	X	X	Chloride to be added to Alkalinity bottle (not indicated on bottle label) 008
DR-4-SW	DR-4-SW_20120717	7/17/2012	11:40 AM	W	10	X	X	X	X	X	X	X	X	X			X	X	Chloride to be added to Alkalinity bottle (not indicated on bottle label) 009
DR-G	DR-G_20120717	7/17/2012	11:20 AM	W	10	X	X	X	X	X	X	X	X	X			X	X	Chloride to be added to Alkalinity bottle (not indicated on bottle label) 010
FB	FB_20120717	7/17/2012	2:10 PM	W	10	X	X	X	X	X	X	X	X	X		X	X	X	Chloride to be added to Alkalinity bottle (not indicated on bottle label) 011
GW-1	GW-1_20120717	7/17/2012	2:55 PM	W	10	X	X	X	X	X	X	X	X	X		X	X	X	Chloride to be added to Alkalinity bottle (not indicated on bottle label) 012
GW-3	GW-3_20120717	7/17/2012	3:40 PM	W	9	X	X	X	X	X	X	X			X	X	X	X	Chloride to be added to Alkalinity bottle (not indicated on bottle label) 013
GW-4	GW-4_20120717	7/17/2012	3:20 PM	W	10	X	X	X	X	X	X	X	X	X		X	X	X	Chloride to be added to Alkalinity bottle (not indicated on bottle label) 014
GW-5	GW-5_20120717	7/17/2012	3:50 PM	W	10	X	X	X	X	X	X	X	X	X		X	X	X	Chloride to be added to Alkalinity bottle (not indicated on bottle label) 015
GW-6	GW-6_20120717	7/17/2012	4:30 PM	W	10	X	X	X	X	X	X	X	X	X		X	X	X	Chloride to be added to Alkalinity bottle (not indicated on bottle label) 016
GW-7	GW-7_20120717	7/17/2012	4:05 PM	W	10	X	X	X	X	X	X	X	X	X		X	X	X	Chloride to be added to Alkalinity bottle (not indicated on bottle label) 017
EB-1	EB-1_20120717	7/17/2012	3:55 PM	W	10	X	X	X	X	X	X	X	X	X		X	X	X	Chloride to be added to Alkalinity bottle (not indicated on bottle label) 018
EB-2	EB-2_20120717	7/17/2012	4:45 PM	W	10	X	X	X	X	X	X	X	X	X		X	X	X	Chloride to be added to Alkalinity bottle (not indicated on bottle label) 019
MW-1 SHALLOW	MW-1 SHALLOW_20120717	7/17/2012	8:30 AM	W	10	X	X	X	X	X	X	X	X	X		X	X	X	Chloride to be added to Alkalinity bottle (not indicated on bottle label) 020

Relinquished By: *signature*	Date	Time	Received By: *signature*	Date	Time	Special Instructions
[signature]	7/18/12	11:30 a	[signature]	7-19-12	1020	
Relinquished By: *signature*	Date	Time	Received By: *signature*	Date	Time	
Relinquished By: *signature*	Date	Time	Received By: *signature*	Date	Time	
Relinquished By: *signature*	Date	Time	Received By: *signature*	Date	Time	

FLD-002

ANDERSON
ENGINEERING COMPANY INC.

977 West 2100 South
Salt Lake City, UT 84119
(801) 972-6222
FAX (801) 972-6235

CHAIN OF CUSTODY RECORD

COC# 60125518
Page 2 of 2

Project: July 2012 Rico Water Sampling

Contact: Mark DeFriez (801) 234-9583

Matrix Codes
(W) Water
(S) Soil
(L) Liquid

QC: (circle one)
I II III IV

Field Location	Field Sample ID Number	Date	Time	Matrix	No. of Containers	Total Metals / Hardness	Potentially Dissolved Metal	Dissolved Metals	Alkalinity / TDS / TSS / Sulfate/	Cyanide	Salinity	Silica	Total Organic Carbon	Nitrate	Total Organic Carbon / Nitrate	pH	Sulfide	Oxidation Reduction Potential (ORP)	COMMENTS	
MW-1 DEEP	MW-1 DEEP_20120717	7/17/2012	8:30 AM	W	10	X	X	X	X	X	X	X	X	X		X	X	X	Chloride to be added to Alkalinity bottle (not indicated on bottle label	021
MW-2 DEEP	MW-2 DEEP_20120717	7/17/2012	8:45 AM	W	10	X	X	X	X	X	X	X	X	X		X	X	X	Chloride to be added to Alkalinity bottle (not indicated on bottle label	022
MW-3 DEEP	MW-3 DEEP_20120717	7/17/2012	9:30 AM	W	10	X	X	X	X	X	X	X	X	X		X	X	X	Chloride to be added to Alkalinity bottle (not indicated on bottle label	023
MW-4 SHALLOW	MW-4 SHALLOW_20120717	7/17/2012	10:00 AM	W	10	X	X	X	X	X	X	X	X	X		X	X	X	Chloride to be added to Alkalinity bottle (not indicated on bottle label	024
MW-4 DEEP	MW-4 DEEP_20120718	7/18/2012	9:00 AM	W	10	X	X	X	X	X	X	X	X	X		X	X	X	Chloride to be added to Alkalinity bottle (not indicated on bottle label	025
MW-5 SHALLOW	MW-5 SHALLOW_20120718	7/18/2012	10:20 AM	W	9	X	X	X	X	X	X	X			X	X	X	X	Chloride to be added to Alkalinity bottle (not indicated on bottle label	026
MW-5 DEEP	MW-5 DEEP_20120718	7/18/2012	11:00 AM	W	9	X	X	X	X	X	X	X			X	X	X	X	Chloride to be added to Alkalinity bottle (not indicated on bottle label	027
MW-6 SHALLOW	MW-6 SHALLOW_20120718	7/18/2012	10:40 AM	W	9	X	X	X	X	X	X	X			X	X	X	X	Chloride to be added to Alkalinity bottle (not indicated on bottle label	028
MW-6 DEEP	MW-6 DEEP_20120718	7/18/2012	11:10 AM	W	9	X	X	X	X	X	X	X			X	X	X	X	Chloride to be added to Alkalinity bottle (not indicated on bottle label	029

Relinquished By: *signature*	Date	Time	Received By: *signature*	Date	Time	Special Instructions
[signature]	7/18/12	11:30a	[signature]	7-19-12	1020	
Relinquished By: *signature*	Date	Time	Received By: *signature*	Date	Time	
Relinquished By: *signature*	Date	Time	Received By: *signature*	Date	Time	
Relinquished By: *signature*	Date	Time	Received By: *signature*	Date	Time	

FLD-002

Pace Analytical®
www.pacelabs.com

Sample Condition Upon Receipt – ESI Tech Specs

Client Name: BP Anderson Project #: 60125518

Courier: Fed Ex ☐ UPS ☑ USPS ☐ Client ☐ Commercial ☐ Pace ☐ Other ☐ _____

Optional
Proj Due Date: 7/31
Proj Name: July Rio

Tracking #: See Comments Pace Shipping Label Used? Yes ☑ No ☐

Custody Seal on Cooler/Box Present: Yes ☑ No ☐ Seals intact: Yes ☑ No ☐

Packing Material: Bubble Wrap ☐ Bubble Bags ☑ Foam ☐ None ☐ Other ☑ ZPLC

Thermometer Used: T-191 / T-194 **Type of Ice:** (Wet) Blue None ☐ Samples received on ice, cooling process has begun.
(circle one)

Cooler Temperature: 4.4, 5.1, 5.5, 4.9, 5.1, 4.9, 5.5, 0.5

Date and initials of person examining contents: 7-19-12 BA

Temperature should be above freezing to 6°C

Chain of Custody present:	☑Yes ☐No ☐N/A	1.	1Z733W8784474519 52
Chain of Custody filled out:	☑Yes ☐No ☐N/A	2.	449806397
Chain of Custody relinquished:	☑Yes ☐No ☐N/A	3.	447491570
Sampler name & signature on COC:	☐Yes ☑No ☐N/A	4.	448589624
Samples arrived within holding time:	☑Yes ☐No ☐N/A	5.	448924369
Short Hold Time analyses (<72hr):	☑Yes ☐No ☐N/A	6. pH	448949637
Rush Turn Around Time requested:	☐Yes ☑No ☐N/A	7.	449402000
Sufficient volume:	☑Yes ☐No ☐N/A	8.	449297581
Correct containers used:	☑Yes ☐No ☐N/A		
-Pace containers used:	☑Yes ☐No ☐N/A	9.	
Containers intact:	☑Yes ☐No ☐N/A	10.	
Unpreserved 5035A soils frozen w/in 48hrs?	☐Yes ☐No ☑N/A	11.	
Filtered volume received for dissolved tests?	☑Yes ☐No ☐N/A	12.	
Sample labels match COC: -Includes date/time/ID/analyses Matrix: WT	☑Yes ☐No ☐N/A	13.	
All containers needing preservation have been checked.	☑Yes ☐No ☐N/A		
All containers needing preservation are found to be in compliance with EPA recommendation.	☐Yes ☑No ☐N/A	14. 1 Sulfide for sample EB2 was adjusted.	
Exceptions: VOA, coliform, (TOC) O&G, WI-DRO (water), Phenolics	☑Yes ☐No	Initial when completed BA	Lot # of added preservative 12423
Trip Blank present:	☐Yes ☐No ☑N/A		
Pace Trip Blank lot # (if purchased): _____		15.	
Headspace in VOA vials (>6mm):	☐Yes ☐No ☑N/A		
		16.	
Project sampled in USDA Regulated Area:	☐Yes ☐No ☑N/A	17. List State:	

Client Notification/ Resolution: Copy COC to Client? Y / (N) Field Data Required? Y / N

Person Contacted: _____ Date/Time: _____

Comments/ Resolution: _____

Temp Log: Record start and finish times when unpacking cooler, if >20 min, recheck sample temps.

Start: 1330	Start: 1410
End: 1350	End: 1420
Temp: 5.0	Temp: 5.6

Project Manager Review: [signature] Date: 7/19/12

Note: Whenever there is a discrepancy affecting North Carolina compliance samples, a copy of this form will be sent to the NCDENR Certification Office (i.e out of hold, incorrect preservative, out of temp, incorrect containers).

F-KS-C-004-Rev.0, 02February2011

Chain of Custody

Pace Analytical®
www.pacelabs.com

Workorder: 60125518 **Workorder Name:** July 2012 Rico Water Sampling **Owner Received Date:** 7/19/2012 **Results Requested By:** 7/31/2012

Report To	Subcontract To
Heather Wilson Pace Analytical Services, Inc. 9608 Loiret Blvd. Lenexa, KS 66219 Phone (913)599-5665 Fax (913)599-1759	Pace Analytical Billings MT 602 S 25th Street Billings, MT, MT 591014549 Phone (406) 254-7226

10199908

Item	Sample ID	Sample Type	Collect Date/Time	Lab ID	Matrix	Preserved Containers: none	Requested Analysis: Salinity	LAB USE ONLY
1	DR-1	PS	7/17/2012 14:45	60125518001	Water	1	X	001
2	DR-2	PS	7/17/2012 14:40	60125518002	Water	1	X	002
3	DR-3	PS	7/17/2012 14:00	60125518003	Water	1	X	003
4	DR-4	PS	7/17/2012 15:00	60125518004	Water	1	X	004
5	DR-5	PS	7/17/2012 12:30	60125518005	Water	1	X	005
6	DR-6	PS	7/17/2012 12:50	60125518006	Water	1	X	006
7	DR-7	PS	7/17/2012 12:00	60125518007	Water	1	X	007
8	DR-8	PS	7/17/2012 14:25	60125518008	Water	1	X	008
9	DR-4-SW	PS	7/17/2012 11:40	60125518009	Water	1	X	009
10	DR-G	PS	7/17/2012 11:20	60125518010	Water	1	X	010
11	FB	PS	7/17/2012 14:10	60125518011	Water	1	X	011
12	GW-1	PS	7/17/2012 14:55	60125518012	Water	1	X	012
13	GW-3	PS	7/17/2012 15:40	60125518013	Water	1	X	013
14	GW-4	PS	7/17/2012 15:20	60125518014	Water	1	X	014
15	GW-5	PS	7/17/2012 15:50	60125518015	Water	1	X	015
16	GW-6	PS	7/17/2012 16:30	60125518016	Water	1	X	016
17	GW-7	PS	7/17/2012 16:05	60125518017	Water	1	X	017
18	EB-1	PS	7/17/2012 15:55	60125518018	Water	1	X	018
19	EB-2	PS	7/17/2012 16:45	60125518019	Water	1	X	019

Chain of Custody

Pace Analytical®
www.pacelabs.com

Workorder: 60125518 **Workorder Name:** July 2012 Rico Water Sampling **Owner Received Date:** 7/19/2012 **Results Requested By:** 7/31/2012

Report To	Subcontract To
Heather Wilson Pace Analytical Services, Inc. 9608 Loiret Blvd. Lenexa, KS 66219 Phone (913)599-5665 Fax (913)599-1759	Pace Analytical Billings MT 602 S 25th Street Billings, MT, MT 591014549 Phone (406) 254-7226

Item	Sample ID	Sample Type	Collect Date/Time	Lab ID	Matrix	Preserved Containers: none						Requested Analysis: Salinity												10199908 LAB USE ONLY
20	MW-1 SHALLOW	PS	7/17/2012 08:30	60125518020	Water	1						X												020
21	MW-1 DEEP	PS	7/17/2012 08:30	60125518021	Water	1						X												021
22	MW-2 DEEP	PS	7/17/2012 08:45	60125518022	Water	1						X												022
23	MW-3 DEEP	PS	7/17/2012 09:30	60125518023	Water	1						X												023
24	MW-4 SHALLOW	PS	7/17/2012 10:00	60125518024	Water	1						X												024
25	MW-4 DEEP	PS	7/18/2012 09:00	60125518025	Water	1						X												025
26	MW-5 SHALLOW	PS	7/18/2012 10:20	60125518026	Water	1						X												026
27	MW-5 DEEP	PS	7/18/2012 11:00	60125518027	Water	1						X												027
28	MW-6 SHALLOW	PS	7/18/2012 10:40	60125518028	Water	1						X												028
29	MW-6 DEEP	PS	7/18/2012 11:10	60125518029	Water	1						X												029

Transfers	Released By	Date/Time	Received By	Date/Time
1	[illegible] / Pace	7/20/12 17:00		
2	Fedex	7/24/12 09:10	Norma C. Trankle / Pace	7/24/12 09:10
3				

Comments

Cooler Temperature on Receipt 0.2 °C **Custody Seal** Y or N **Received on Ice** Y or N **Samples Intact** Y or N

Pace Analytical®	Document Name: Sample Condition Upon Receipt Form	Revised Date: 01Nov2011 Page 1 of 1
	Document Number: F-MT-C-184 Rev.00	Issuing Authority: Pace Minnesota Quality Office

Sample Condition Upon Receipt

Client Name: Pace-KS Project #: 10199908

Courier: [X] Fed Ex [ ] UPS [ ] USPS [ ] Client [ ] Commercial [ ] Pace Other _____

Tracking #: 535642316178.

Custody Seal on Cooler/Box Present: [X] yes [ ] no Seals intact: [X] yes [ ] no

Packing Material: [ ] Bubble Wrap [ ] Bubble Bags [X] None [ ] Other _____ Temp Blank: Yes X No ___

Thermometer Used 1383045 or 135 Type of Ice: (Wet) Blue None [X] Samples on ice, cooling process has begun

Cooler Temperature 0.2 Biological Tissue is Frozen: Yes No

Date and Initials of person examining contents: NCT 7/24/12

Temp should be above freezing to 6°C.

		Comments:
Chain of Custody Present:	[X] Yes [ ] No [ ] N/A	1.
Chain of Custody Filled Out:	[X] Yes [ ] No [ ] N/A	2.
Chain of Custody Relinquished:	[X] Yes [ ] No [ ] N/A	3.
Sampler Name & Signature on COC:	[ ] Yes [X] No [ ] N/A	4.
Samples Arrived within Hold Time:	[X] Yes [ ] No [ ] N/A	5.
Short Hold Time Analysis (<72hr):	[ ] Yes [X] No [ ] N/A	6.
Rush Turn Around Time Requested:	[ ] Yes [X] No [ ] N/A	7.
Sufficient Volume:	[X] Yes [ ] No [ ] N/A	8.
Correct Containers Used:	[X] Yes [ ] No [ ] N/A	9.
-Pace Containers Used:	[X] Yes [ ] No [ ] N/A	
Containers Intact:	[X] Yes [ ] No [ ] N/A	10.
Filtered volume received for Dissolved tests	[ ] Yes [ ] No [X] N/A	11.
Sample Labels match COC:	[X] Yes [ ] No [ ] N/A	12. -021, MW-1 DEEP from KS has original altre id of MW-2 DEEP, the same as -022
-Includes date/time/ID/Analysis Matrix: H_2O		
All containers needing acid/base preservation have been checked. Noncompliance are noted in 13.	[ ] Yes [ ] No [X] N/A	13. [ ] HNO3 [ ] H2SO4 [ ] NaOH [ ] HCl
All containers needing preservation are found to be in compliance with EPA recommendation.	[ ] Yes [ ] No [X] N/A	Samp #
Exceptions: VOA,Coliform, TOC, Oil and Grease, WI-DRO (water)	[ ] Yes [X] No	Initial when completed / Lot # of added preservative
Samples checked for dechlorination:	[ ] Yes [ ] No [X] N/A	14.
Headspace in VOA Vials (>6mm):	[ ] Yes [ ] No [X] N/A	15.
Trip Blank Present:	[ ] Yes [ ] No [X] N/A	16.
Trip Blank Custody Seals Present	[ ] Yes [ ] No [X] N/A	
Pace Trip Blank Lot # (if purchased):		

Client Notification/ Resolution: Field Data Required? Y / N

Person Contacted: _____ Date/Time: _____

Comments/ Resolution: _____

Project Manager Review: [signature] Date: 7-25-12

Note: Whenever there is a discrepancy affecting North Carolina compliance samples, a copy of this form will be sent to the North Carolina DEHNR Certification Office (i.e out of hold, incorrect preservative, out of temp, incorrect containers)

Chain of Custody

Pace Analytical®
www.pacelabs.com

Workorder: 60125518 **Workorder Name:** July 2012 Rico Water Sampling **Owner Received Date:** 7/19/2012 **Results Requested By:** 7/31/2012

Report To

Heather Wilson
Pace Analytical Services, Inc.
9608 Loiret Blvd.
Lenexa, KS 66219
Phone (913)599-5665
Fax (913)599-1759

Subcontract To

Pace Analytical Minnesota
1700 Elm Street
Suite 200
Minneapolis, MN 55414
Phone (612)607-1700

Item	Sample ID	Sample Type	Collect Date/Time	Lab ID	Matrix	Preserved Containers: HNO3	HNO3					Requested Analysis: 200.8 Total Metals + Hardness + Hg + Silica	200.8 Dissolved metals + Hg											LAB USE ONLY
1	DR-1	PS	7/17/2012 14:45	60125518001	Water	1	1					X	X											
2	DR-2	PS	7/17/2012 14:40	60125518002	Water	1	1					X	X											
3	DR-3	PS	7/17/2012 14:00	60125518003	Water	1	1					X	X											
4	DR-4	PS	7/17/2012 15:00	60125518004	Water	1	1					X	X											
5	DR-5	PS	7/17/2012 12:30	60125518005	Water	1	1					X	X											
6	DR-6	PS	7/17/2012 12:50	60125518006	Water	1	1					X	X											
7	DR-7	PS	7/17/2012 12:00	60125518007	Water	1	1					X	X											
8	DR-8	PS	7/17/2012 14:25	60125518008	Water	1	1					X	X											
9	DR-4-SW	PS	7/17/2012 11:40	60125518009	Water	1	1					X	X											
10	DR-G	PS	7/17/2012 11:20	60125518010	Water	1	1					X	X											
11	FB	PS	7/17/2012 14:10	60125518011	Water	1	1					X	X											
12	GW-1	PS	7/17/2012 14:55	60125518012	Water	1	1					X	X											
13	GW-3	PS	7/17/2012 15:40	60125518013	Water	1	1					X	X											
14	GW-4	PS	7/17/2012 15:20	60125518014	Water	1	1					X	X											
15	GW-5	PS	7/17/2012 15:50	60125518015	Water	1	1					X	X											
16	GW-6	PS	7/17/2012 16:30	60125518016	Water	1	1					X	X											
17	GW-7	PS	7/17/2012 16:05	60125518017	Water	1	1					X	X											
18	EB-1	PS	7/17/2012 15:55	60125518018	Water	1	1					X	X											
19	EB-2	PS	7/17/2012 16:45	60125518019	Water	1	1					X	X											

Chain of Custody

Pace Analytical®
www.pacelabs.com

Workorder: 60125518 **Workorder Name:** July 2012 Rico Water Sampling **Owner Received Date:** 7/19/2012 **Results Requested By:** 7/31/2012

Report To	Subcontract To
Heather Wilson Pace Analytical Services, Inc. 9608 Loiret Blvd. Lenexa, KS 66219 Phone (913)599-5665 Fax (913)599-1759	Pace Analytical Minnesota 1700 Elm Street Suite 200 Minneapolis, MN 55414 Phone (612)607-1700

Item	Sample ID	Sample Type	Collect Date/Time	Lab ID	Matrix	Preserved Containers: HNO3	HNO3					Requested Analysis: 200.8 Total Metals + Hardness + Hg + Silica	200.8 Dissolved metals + Hg											LAB USE ONLY
20	MW-1 SHALLOW	PS	7/17/2012 08:30	60125518020	Water	1	1					X	X											
21	MW-1 DEEP	PS	7/17/2012 08:30	60125518021	Water	1	1					X	X											
22	MW-2 DEEP	PS	7/17/2012 08:45	60125518022	Water	1	1					X	X											
23	MW-3 DEEP	PS	7/17/2012 09:30	60125518023	Water	1	1					X	X											
24	MW-4 SHALLOW	PS	7/17/2012 10:00	60125518024	Water	1	1					X	X											
25	MW-4 DEEP	PS	7/18/2012 09:00	60125518025	Water	1	1					X	X											
26	MW-5 SHALLOW	PS	7/18/2012 10:20	60125518026	Water	1	1					X	X											
27	MW-5 DEEP	PS	7/18/2012 11:00	60125518027	Water	1	1					X	X											
28	MW-6 SHALLOW	PS	7/18/2012 10:40	60125518028	Water	1	1					X	X											
29	MW-6 DEEP	PS	7/18/2012 11:10	60125518029	Water	1	1					X	X											

Transfers	Released By	Date/Time	Received By	Date/Time
1	[illegible]	7/13/12 1700	[illegible] PACE	7/24/12 10:10
2				
3				

Comments: use profile 26985

Cooler Temperature on Receipt 25.2 °C **Custody Seal** Y or (N) **Received on Ice** Y or (N) **Samples Intact** (Y) or N

Pace Analytical	Document Name: **Sample Condition Upon Receipt Form**	Document Revised: 19Jun2012 Page 1 of 1
	Document No.: F-MN-L-213-rev.03	Issuing Authority: Pace Minnesota Quality Office

Sample Condition Upon Receipt

Client Name: Pace KS

Project #: WO#: 10199806

10199806

Courier: ☑ Fed Ex ☐ UPS ☐ USPS ☐ Client ☐ Commercial ☐ Pace ☐ Other:

Tracking Number: 8004 7032 2592

Custody Seal on Cooler/Box Present? ☐ Yes ☑ No **Seals Intact?** ☐ Yes ☐ No

Optional: Proj. Due Date: Proj. Name:

Packing Material: ☑ Bubble Wrap ☐ Bubble Bags ☐ None ☐ Other: **Temp Blank?** ☑ Yes ☐ No

Thermometer Used: ☐ 80344042 ☑ 80512447 **Type of Ice:** ☐ Wet ☐ Blue ☑ None ☐ Samples on ice, cooling process has begun

Cooler Temperature: 2.52 **Biological Tissue Frozen?** ☐ Yes ☑ No **Date and Initials of Person Examining Contents:** M 7/24/12

Temp should be above freezing to 6°C

				Comments:
Chain of Custody Present?	☑ Yes	☐ No	☐ N/A	1.
Chain of Custody Filled Out?	☑ Yes	☐ No	☐ N/A	2.
Chain of Custody Relinquished?	☑ Yes	☐ No	☐ N/A	3.
Sampler Name and Signature on COC?	☐ Yes	☑ No	☐ N/A	4.
Samples Arrived within Hold Time?	☑ Yes	☐ No	☐ N/A	5.
Short Hold Time Analysis (<72 hr)?	☐ Yes	☑ No	☐ N/A	6.
Rush Turn Around Time Requested?	☑ Yes	☐ No	☐ N/A	7. 7/31/12
Sufficient Volume?	☑ Yes	☐ No	☐ N/A	8.
Correct Containers Used?	☑ Yes	☐ No	☐ N/A	9.
-Pace Containers Used?	☑ Yes	☐ No	☐ N/A	
Containers Intact?	☑ Yes	☐ No	☐ N/A	10.
Filtered Volume Received for Dissolved Tests?	☑ Yes	☐ No	☐ N/A	11.
Sample Labels Match COC? -Includes Date/Time/ID/Analysis Matrix: WT	☑ Yes	☐ No	☐ N/A	12.
All containers needing acid/base preservation have been checked? Noncompliances are noted in 13.	☑ Yes	☐ No	☐ N/A	13. ☑ HNO_3 ☐ H_2SO_4 ☐ NaOH ☐ HCl
All containers needing preservation are found to be in compliance with EPA recommendation? (HNO_3, H_2SO_4, HCl<2; NaOH>12)	☑ Yes	☐ No	☐ N/A	Sample # 001-024 2/2
Exceptions: VOA, Coliform, TOC, Oil and Grease, WI-DRO (water)	☐ Yes	☑ No		Initial when completed: AL Lot # of added preservative:
Headspace in VOA Vials (>6mm)?	☐ Yes	☐ No	☑ N/A	14.
Trip Blank Present?	☐ Yes	☐ No	☑ N/A	15.
Trip Blank Custody Seals Present?	☐ Yes	☐ No	☑ N/A	
Pace Trip Blank Lot # (if purchased):				

CLIENT NOTIFICATION/RESOLUTION **Field Data Required?** ☐ Yes ☐ No

Person Contacted: Date/Time:

Comments/Resolution: Temp ok metals only.

Project Manager Review: Date: 7/25/12.

Note: Whenever there is a discrepancy affecting North Carolina compliance samples, a copy of this form will be sent to the North Carolina DEHNR Certification Office (i.e out of hold, incorrect preservative, out of temp, incorrect containers)

Appendix G

Field Photos

July 2012 Field Photos

Cross Section at Station DR-1

Cross Section at Station DR-5

Cross Section at Station DR-2

Cross Section at Station DR-7

July 2012 Field Photos

Cross Section at Station DR-4-SW

Cross Section at Station DR-G

Appendix H

Field Log Book Records

7-17-12

Sample	~~Loc~~ Depth	date/time
DR-1		7/17 2:45pm
DR-2		7/17 at 12:40pm
DR-3		7/17 at 2:20 pm
DR-4		
DR-5		7/17 At 12:30pm
DR-6		7/17 at 12:50pm
~~DR-7~~ DR-8		~~7/17 at 12:00pm~~ 2:25p
~~DR-8~~ DR-7		7/17 ~~7/17 at 12:00 pm~~ 12:00pm
DR-4-SW		7/17 at 11:40 am
DR-G		7/17 at 11:20 am
FB		7/17 at 2:10pm
GW-1	1.05	7/17 at 2:55pm
GW-3	13.99	7/17 at 3:40pm
GW-4	10.88	7/17 3:20pm
GW-5	21.57	7/17 3:50pm
GW-6	CNO	7/17 4:30 pm
GW-7	22.58	7/17
EB-1	21.90	7/17 3:55 pm
EB-2	16.60'	7/17 4:45pm

7-17-12

pH	T (°F)	EC (µS)	DO (ppm)
CNO	67.1	253	CNO
CNO	64.5	266	CNO
CNO	70.5	1281	CNO
CNO	64.0	1264	CNO
CNO	68.0	1249	CNO
CNO	69.8	1328	CNO
See DR-3			
7.42	62.6	417	CNO
7.77	61.5	349	CNO
8.10	59.0	341	CNO
CNO	79.8	0.0	CNO
CNO	68.5	366	CNO
CNO	57.4	857	CNO
CNO	67.2	922	CNO
CNO	63.6	2.16mS	CNO
CNO	60.8	2.39mS	CNO
CNO	62.0	1.376mS	CNO
CNO	60.8	2.31mS	CNO
CNO	61.1	4.69mS	CNO

7-18-12

Station	Depth	date	/Time	pH	T	EC	DO
MW-1D	8.99	7/17	8:30am	CNO	60.4	1204	CNO
MW-1S	6.39	7/17	8:30am	CNO	59.5	1289	CNO
MW-2D	10.01	7/17	8:45am	CNO	55.9	1336	CNO
MW-2S	DRY	~~7/17~~	~~9:30am~~	DRY			
MW-3D	10.07	7/17	9:30am	CNO	63.8	1299	CNO
MW-3S	DRY	DRY		DRY			
MW-4D	16.82	7/18/12	9:00am	CNO	54.5	1616	CNO
MW-4S	16.84	7/17	10:00am	CNO	53.4	1480	CNO
MW-5D	17.16	7/18	11:00am	CNO	57.2	2.48	CNO
MW-5S	15.40	7/18	10:20am	CNO	53.9	3.62mS	CNO
MW-6S	22.96	7/18	10:40am	CNO	53.2	1928	CNO
MW-6D	22.90	7/18	11:10am	CNO	55.0	1391	CNO

7-18-12

DR-1

BM EL ~~5.61~~ 5.50

WL EL ~~8.24~~ 8.50

D			V		
.35	Ø.5	Ø.85	1.7	Ø.5	1.3
Ø.8	Ø.9	Ø.85	2.8	1.8	1.5
1.55	1.6	1.65	3.6	3.2	3.2
1.3	1.4	1.Ø5	1.6	1.1	Ø.9
1.25	1.25	1.1	1.9	2.7	1.3
1.4	1.6	1.4	Ø.5	Ø.9	1.Ø
Ø.75	Ø.95	Ø.6	Ø.5	Ø.3	Ø.2
Ø.5	Ø.4	Ø.4	Ø.2	Ø.1	Ø.1
Ø.2			Ø.1		

7-18-12

DR-2

BM EL ~~5.12~~ 4.87

WL EL ~~10.41~~ 10.82

D			V		
Ø.2	Ø.6	Ø.67	Ø.1	Ø.1	Ø.4
Ø.96	~~Ø.4~~ Ø.72	Ø1.Ø	Ø.4	Ø.6	Ø.9
Ø.75	~~Ø.9Ø~~ 1.4	1.6	Ø.9Ø	Ø.6	Ø.8
1.6	1.65	1.45	Ø.9	Ø.9	1.6
1.55	1.55	1.6Ø	2.3	2.1	1.5
1.6	1.7	1.7	1.8	1.Ø	1.5
1.75	1.6	1.5	1.7	1.1	1.3
1.4	Ø.85	1.15	Ø.8	1.6	1.Ø
Ø.96	Ø.85	Ø.45	Ø.6Ø	Ø.4Ø	1.Ø
Ø.45	Ø.2Ø	Ø.15	Ø.8Ø	Ø.1	Ø.1

Pond 5 ~~8.36'~~ 8.26'

Pond 6 ~~6.40~~ 6.33'

7-18-12

DR-1A

BM EL ~~6.86~~ 6.70'

WL EL ~~11.75'~~ 9.27'

D			V		
0.35	0.65	0.06	0.3	0.6	2.6
0.7	0.7	0.8	1.5	1.9	0.6
0.85	0.95	1.2	1.9	3.2	3.0
1.1	0.9	0.75	3.0	1.6	3.0
0.65	0.75	0.75	1.9	2.1	1.9
0.85	0.90	0.75	1.4	1.0	1.3
0.50	0.55	0.75	0.80	1.1	1.3
0.85	0.85	0.90	2.1	0.90	2.1
0.70	0.65	0.55	2.1	0.80	2.7
0.75	0.65	0.40	1.7	1.2	2.8
0.65	0.45	0.30	2.3	1.1	0.80

7-18-12

DR-2A

BM EL ~~4.43~~ 4.31

WL EL L: ~~10.32~~ 10.44' WL EL V: ~~4.62~~ 4.69'

D			V		
0.35	0.30	0.30	0.4	1.2	1.3
0.40	0.30	0	1.2	0.9	0
0	0	0	0	0	0
0	0	0	0	0	0
0	0.25	0	0	0.1	0
0.35	0.35	0.30	0.4	0.2	0.7
0.25	0.35	0.65	1.1	0.8	2.3
0.75	0.70	0.65	1.0	1.7	2.6
0.55	0.60	0.75	3.3	2.9	2.6
0.90	0.75	0.70	1.5	1.7	1.8
0.55	~~2.8~~ 0.60	0.90	2.8	1.3	3.0
0.11	1.2	1.25	3.3	2.8	3.0
1.15	0.85	0.80	1.3	1.2	1.6
0.85	0.75	0.70	0.4	2.3	1.7
0.55	0.45	0.50	2.8	1.7	0.6
0.30	0.15		0.1	0.1	

7-18-12

DR-3A

BM EL ~~5.05~~ 4.21'

WL EL ~~4.88~~ 10.11'

D			V		
0.25	0.28	0.45	0.2	0.4	0.45
0.35	0.48	0.50	1.1	0.6	0.5
0.55	0.75	0.55	0.6	0.6	2.4
0.80	0.80	0.70	1.4	1.3	1.6
0.75	0.85	0.95	1.1	2.6	1.9
0.80	1.1	1.0	3.0	1.5	0.9
0.8	1.0	0.95	2.3	2.5	2.3
0.85	0.70	0.95	2.8	1.8	2.1
0.85	0.75	0.7	3.4	3.0	3.1
0.60	0.85	0.80	2.0	1.8	1.9
0.65	0.90	0.58	0.80	0.6	0.80
0.25	0.35	0.20	0.60	1.3	0.50

7-18-12

DR-7

BM EL ~~5.56~~ 5.42'

WL EL ~~4.25~~ 9.46'

D			V		
0.45	0.28	0.4	0.1	0.2	0.9
0.40	0.6	0.8	0.7	1.3	0.9
0.44	0.84	0.85	0.7	0.7	1.6
0.9	0.75	0.75	1.3	3.0	2.7
0.55	0.55	0.75	2.6	2.7	1.8
0.65	0.65	0.90	1.3	2.5	1.9
1.25	1.05	1.05	1.7	1.7	1.9
0.90	0.7	0.65	1.9	1.5	1.0
0.60	0.55	0.70	2.0	1.9	1.1
0.70	0.75	0.40	1.7	1.1	2.0
0.65	0.80	0.45	0.4	2.5	2.5
0.45	0.60	0.70	0.4	0.5	0.6
0.75			0.6		

7-18-12

DR-5

BM EL ~~5.44~~ 5.66'

WL EL (Pond 8): ~~8.03~~ 8.22'

Pond 7: ~~5.44~~ ~~11.34~~ 11.62'

DR-4

Upper pipe 18" Ø

depth 0.20'

velocity 7.3 ft/s

Lower pipe 18" Ø

depth 0.12'

velocity 3.0 ft/s

7-18-12

DR-3

manual depth measurement

1' 10 3/4" from top of flume

2.5' - 1' 10 3/4" = 0.60

DR-6

manual depth measurement

21 5/8" from top of flume to water

2.5' - (21 5/8" / 12) = 0.70'

7-18-12

DR-4-SW

BM EL ~~6.20~~ NO 6.20'

WL EL ~~6.80~~ 8.80'

D			V		
0.25	0.25	0.95	0.8	0.6	1.9
0.65	0.85	1.0	2.3	1.5	2.7
1.05	0.85	0.90	2.0	2.1	2.5
0.95	0.75	0.35	2.1	1.9	1.6
0.85	0.95	1.0	1.2	2.2	1.5
~~0.95~~					
1.0	1.0	0.95	2.1	2.3	3.0
1.0	0.75	0.85	2.1	1.3	0.8
0.95	0.80	0.75	2.6	1.5	2.8
0.70	0.55	0.90	1.5	1.8	1.7
0.35	0.35	0.60	3.8	2.0	2.5
0.28	0.60	0.25	2.0	0.60	0.8
0.20	0.50	0.20	0.4	0.4	0.2

7-18-12

DR-G

BM EL ~~4.73~~ 4.72'

WL EL ~~8.54~~ 8.87'

D			V		
0.25	0.3	0.45	0.10	0.2	0.8
0.50	0.60	0.55	0.5	0.9	0.8
0.70	0.80	0.85	1.3	1.3	2.3
1.0	1.0	0.95	0.9	0.7	1.9
1.05	1.05	0.55	2.3	3.1	3.7
1.35	~~2.5~~ 1.15	1.0	2.5	1.9	3.2
0.9	1.25	0.55	3.0	~~1.5~~ 3.1	3.1
1.2	0.95	0.6	3.0	1.7	2.3
1.1	0.95	0.7	2.7	2.8	2.5
1.05	0.6	0.7	0.9	1.3	0.7
0.6	0.65	0.45	1.7	1.5	1.9
0.55	0.25		0.8	0.8	

Appendix I

North Flume OTT PLS Data with Flowrates

OTT PLS Data at North Flume, July 2012

Date, Time	Depth Reading (ft)	Flowrate (cfs)	Flowrate (gpm)
7/1/2012 0:00	0.59	1.38	620.4
7/1/2012 1:00	0.58	1.35	604.6
7/1/2012 2:00	0.58	1.35	604.6
7/1/2012 3:00	0.59	1.38	620.4
7/1/2012 4:00	0.59	1.38	620.4
7/1/2012 5:00	0.59	1.38	620.4
7/1/2012 6:00	0.59	1.38	620.4
7/1/2012 7:00	0.59	1.38	620.4
7/1/2012 8:00	0.59	1.38	620.4
7/1/2012 9:00	0.59	1.38	620.4
7/1/2012 10:00	0.59	1.38	620.4
7/1/2012 11:00	0.59	1.38	620.4
7/1/2012 12:00	0.59	1.38	620.4
7/1/2012 13:00	0.58	1.35	604.6
7/1/2012 14:00	0.58	1.35	604.6
7/1/2012 15:00	0.58	1.35	604.6
7/1/2012 16:00	0.59	1.38	620.4
7/1/2012 17:00	0.58	1.35	604.6
7/1/2012 18:00	0.58	1.35	604.6
7/1/2012 19:00	0.58	1.35	604.6
7/1/2012 20:00	0.58	1.35	604.6
7/1/2012 21:00	0.59	1.38	620.4
7/1/2012 22:00	0.58	1.35	604.6
7/1/2012 23:00	0.58	1.35	604.6
7/2/2012 0:00	0.58	1.35	604.6
7/2/2012 1:00	0.58	1.35	604.6
7/2/2012 2:00	0.58	1.35	604.6
7/2/2012 3:00	0.59	1.38	620.4
7/2/2012 4:00	0.58	1.35	604.6
7/2/2012 5:00	0.59	1.38	620.4
7/2/2012 6:00	0.58	1.35	604.6
7/2/2012 7:00	0.58	1.35	604.6
7/2/2012 8:00	0.58	1.35	604.6
7/2/2012 9:00	0.59	1.38	620.4
7/2/2012 10:00	0.59	1.38	620.4
7/2/2012 11:00	0.59	1.38	620.4
7/2/2012 12:00	0.58	1.35	604.6
7/2/2012 13:00	0.59	1.38	620.4
7/2/2012 14:00	0.58	1.35	604.6
7/2/2012 15:00	0.59	1.38	620.4
7/2/2012 16:00	0.59	1.38	620.4
7/2/2012 17:00	0.58	1.35	604.6

7/2/2012 18:00	0.58	1.35	604.6
7/2/2012 19:00	0.58	1.35	604.6
7/2/2012 20:00	0.59	1.38	620.4
7/2/2012 21:00	0.58	1.35	604.6
7/2/2012 22:00	0.59	1.38	620.4
7/2/2012 23:00	0.58	1.35	604.6
7/3/2012 0:00	0.59	1.38	620.4
7/3/2012 1:00	0.58	1.35	604.6
7/3/2012 2:00	0.59	1.38	620.4
7/3/2012 3:00	0.59	1.38	620.4
7/3/2012 4:00	0.59	1.38	620.4
7/3/2012 5:00	0.59	1.38	620.4
7/3/2012 6:00	0.59	1.38	620.4
7/3/2012 7:00	0.59	1.38	620.4
7/3/2012 8:00	0.59	1.38	620.4
7/3/2012 9:00	0.59	1.38	620.4
7/3/2012 10:00	0.59	1.38	620.4
7/3/2012 11:00	0.59	1.38	620.4
7/3/2012 12:00	0.58	1.35	604.6
7/3/2012 13:00	0.59	1.38	620.4
7/3/2012 14:00	0.59	1.38	620.4
7/3/2012 15:00	0.59	1.38	620.4
7/3/2012 16:00	0.59	1.38	620.4
7/3/2012 17:00	0.59	1.38	620.4
7/3/2012 18:00	0.59	1.38	620.4
7/3/2012 19:00	0.59	1.38	620.4
7/3/2012 20:00	0.59	1.38	620.4
7/3/2012 21:00	0.59	1.38	620.4
7/3/2012 22:00	0.59	1.38	620.4
7/3/2012 23:00	0.59	1.38	620.4
7/4/2012 0:00	0.58	1.35	604.6
7/4/2012 1:00	0.59	1.38	620.4
7/4/2012 2:00	0.59	1.38	620.4
7/4/2012 3:00	0.59	1.38	620.4
7/4/2012 4:00	0.59	1.38	620.4
7/4/2012 5:00	0.59	1.38	620.4
7/4/2012 6:00	0.58	1.35	604.6
7/4/2012 7:00	0.59	1.38	620.4
7/4/2012 8:00	0.59	1.38	620.4
7/4/2012 9:00	0.59	1.38	620.4
7/4/2012 10:00	0.59	1.38	620.4
7/4/2012 11:00	0.59	1.38	620.4
7/4/2012 12:00	0.59	1.38	620.4
7/4/2012 13:00	0.58	1.35	604.6
7/4/2012 14:00	0.59	1.38	620.4
7/4/2012 15:00	0.58	1.35	604.6
7/4/2012 16:00	0.59	1.38	620.4

7/4/2012 17:00	0.58	1.35	604.6
7/4/2012 18:00	0.59	1.38	620.4
7/4/2012 19:00	0.59	1.38	620.4
7/4/2012 20:00	0.59	1.38	620.4
7/4/2012 21:00	0.59	1.38	620.4
7/4/2012 22:00	0.59	1.38	620.4
7/4/2012 23:00	0.59	1.38	620.4
7/5/2012 0:00	0.58	1.35	604.6
7/5/2012 1:00	0.59	1.38	620.4
7/5/2012 2:00	0.59	1.38	620.4
7/5/2012 3:00	0.59	1.38	620.4
7/5/2012 4:00	0.59	1.38	620.4
7/5/2012 5:00	0.59	1.38	620.4
7/5/2012 6:00	0.59	1.38	620.4
7/5/2012 7:00	0.59	1.38	620.4
7/5/2012 8:00	0.59	1.38	620.4
7/5/2012 9:00	0.59	1.38	620.4
7/5/2012 10:00	0.59	1.38	620.4
7/5/2012 11:00	0.59	1.38	620.4
7/5/2012 12:00	0.59	1.38	620.4
7/5/2012 13:00	0.59	1.38	620.4
7/5/2012 14:00	0.58	1.35	604.6
7/5/2012 15:00	0.58	1.35	604.6
7/5/2012 16:00	0.58	1.35	604.6
7/5/2012 17:00	0.59	1.38	620.4
7/5/2012 18:00	0.58	1.35	604.6
7/5/2012 19:00	0.58	1.35	604.6
7/5/2012 20:00	0.58	1.35	604.6
7/5/2012 21:00	0.58	1.35	604.6
7/5/2012 22:00	0.59	1.38	620.4
7/5/2012 23:00	0.59	1.38	620.4
7/6/2012 0:00	0.59	1.38	620.4
7/6/2012 1:00	0.59	1.38	620.4
7/6/2012 2:00	0.59	1.38	620.4
7/6/2012 3:00	0.59	1.38	620.4
7/6/2012 4:00	0.59	1.38	620.4
7/6/2012 5:00	0.59	1.38	620.4
7/6/2012 6:00	0.58	1.35	604.6
7/6/2012 7:00	0.58	1.35	604.6
7/6/2012 8:00	0.59	1.38	620.4
7/6/2012 9:00	0.59	1.38	620.4
7/6/2012 10:00	0.59	1.38	620.4
7/6/2012 11:00	0.59	1.38	620.4
7/6/2012 12:00	0.58	1.35	604.6
7/6/2012 13:00	0.59	1.38	620.4
7/6/2012 14:00	0.58	1.35	604.6
7/6/2012 15:00	0.58	1.35	604.6

7/6/2012 16:00	0.59	1.38	620.4
7/6/2012 17:00	0.59	1.38	620.4
7/6/2012 18:00	0.58	1.35	604.6
7/6/2012 19:00	0.58	1.35	604.6
7/6/2012 20:00	0.58	1.35	604.6
7/6/2012 21:00	0.59	1.38	620.4
7/6/2012 22:00	0.59	1.38	620.4
7/6/2012 23:00	0.59	1.38	620.4
7/7/2012 0:00	0.59	1.38	620.4
7/7/2012 1:00	0.59	1.38	620.4
7/7/2012 2:00	0.59	1.38	620.4
7/7/2012 3:00	0.58	1.35	604.6
7/7/2012 4:00	0.59	1.38	620.4
7/7/2012 5:00	0.58	1.35	604.6
7/7/2012 6:00	0.59	1.38	620.4
7/7/2012 7:00	0.58	1.35	604.6
7/7/2012 8:00	0.59	1.38	620.4
7/7/2012 9:00	0.58	1.35	604.6
7/7/2012 10:00	0.59	1.38	620.4
7/7/2012 11:00	0.59	1.38	620.4
7/7/2012 12:00	0.59	1.38	620.4
7/7/2012 13:00	0.59	1.38	620.4
7/7/2012 14:00	0.59	1.38	620.4
7/7/2012 15:00	0.59	1.38	620.4
7/7/2012 16:00	0.58	1.35	604.6
7/7/2012 17:00	0.59	1.38	620.4
7/7/2012 18:00	0.59	1.38	620.4
7/7/2012 19:00	0.58	1.35	604.6
7/7/2012 20:00	0.59	1.38	620.4
7/7/2012 21:00	0.59	1.38	620.4
7/7/2012 22:00	0.59	1.38	620.4
7/7/2012 23:00	0.59	1.38	620.4
7/8/2012 0:00	0.58	1.35	604.6
7/8/2012 1:00	0.59	1.38	620.4
7/8/2012 2:00	0.59	1.38	620.4
7/8/2012 3:00	0.58	1.35	604.6
7/8/2012 4:00	0.58	1.35	604.6
7/8/2012 5:00	0.59	1.38	620.4
7/8/2012 6:00	0.58	1.35	604.6
7/8/2012 7:00	0.58	1.35	604.6
7/8/2012 8:00	0.59	1.38	620.4
7/8/2012 9:00	0.59	1.38	620.4
7/8/2012 10:00	0.59	1.38	620.4
7/8/2012 11:00	0.59	1.38	620.4
7/8/2012 12:00	0.58	1.35	604.6
7/8/2012 13:00	0.59	1.38	620.4
7/8/2012 14:00	0.59	1.38	620.4

7/8/2012 15:00	0.59	1.38	620.4
7/8/2012 16:00	0.59	1.38	620.4
7/8/2012 17:00	0.58	1.35	604.6
7/8/2012 18:00	0.59	1.38	620.4
7/8/2012 19:00	0.59	1.38	620.4
7/8/2012 20:00	0.58	1.35	604.6
7/8/2012 21:00	0.59	1.38	620.4
7/8/2012 22:00	0.58	1.35	604.6
7/8/2012 23:00	0.58	1.35	604.6
7/9/2012 0:00	0.59	1.38	620.4
7/9/2012 1:00	0.59	1.38	620.4
7/9/2012 2:00	0.59	1.38	620.4
7/9/2012 3:00	0.59	1.38	620.4
7/9/2012 4:00	0.58	1.35	604.6
7/9/2012 5:00	0.58	1.35	604.6
7/9/2012 6:00	0.58	1.35	604.6
7/9/2012 7:00	0.59	1.38	620.4
7/9/2012 8:00	0.59	1.38	620.4
7/9/2012 9:00	0.58	1.35	604.6
7/9/2012 10:00	0.58	1.35	604.6
7/9/2012 11:00	0.58	1.35	604.6
7/9/2012 12:00	0.58	1.35	604.6
7/9/2012 13:00	0.58	1.35	604.6
7/9/2012 14:00	0.58	1.35	604.6
7/9/2012 15:00	0.59	1.38	620.4
7/9/2012 16:00	0.58	1.35	604.6
7/9/2012 17:00	0.58	1.35	604.6
7/9/2012 18:00	0.59	1.38	620.4
7/9/2012 19:00	0.59	1.38	620.4
7/9/2012 20:00	0.58	1.35	604.6
7/9/2012 21:00	0.58	1.35	604.6
7/9/2012 22:00	0.58	1.35	604.6
7/9/2012 23:00	0.58	1.35	604.6
7/10/2012 0:00	0.59	1.38	620.4
7/10/2012 1:00	0.58	1.35	604.6
7/10/2012 2:00	0.59	1.38	620.4
7/10/2012 3:00	0.58	1.35	604.6
7/10/2012 4:00	0.59	1.38	620.4
7/10/2012 5:00	0.58	1.35	604.6
7/10/2012 6:00	0.58	1.35	604.6
7/10/2012 7:00	0.59	1.38	620.4
7/10/2012 8:00	0.58	1.35	604.6
7/10/2012 9:00	0.58	1.35	604.6
7/10/2012 10:00	0.59	1.38	620.4
7/10/2012 11:00	0.58	1.35	604.6
7/10/2012 12:00	0.59	1.38	620.4
7/10/2012 13:00	0.59	1.38	620.4

7/10/2012 14:00	0.58	1.35	604.6
7/10/2012 15:00	0.58	1.35	604.6
7/10/2012 16:00	0.59	1.38	620.4
7/10/2012 17:00	0.59	1.38	620.4
7/10/2012 18:00	0.58	1.35	604.6
7/10/2012 19:00	0.58	1.35	604.6
7/10/2012 20:00	0.58	1.35	604.6
7/10/2012 21:00	0.58	1.35	604.6
7/10/2012 22:00	0.59	1.38	620.4
7/10/2012 23:00	0.59	1.38	620.4
7/11/2012 0:00	0.58	1.35	604.6
7/11/2012 1:00	0.59	1.38	620.4
7/11/2012 2:00	0.58	1.35	604.6
7/11/2012 3:00	0.58	1.35	604.6
7/11/2012 4:00	0.58	1.35	604.6
7/11/2012 5:00	0.58	1.35	604.6
7/11/2012 6:00	0.58	1.35	604.6
7/11/2012 7:00	0.58	1.35	604.6
7/11/2012 8:00	0.59	1.38	620.4
7/11/2012 9:00	0.58	1.35	604.6
7/11/2012 10:00	0.59	1.38	620.4
7/11/2012 11:00	0.58	1.35	604.6
7/11/2012 12:00	0.58	1.35	604.6
7/11/2012 13:00	0.59	1.38	620.4
7/11/2012 14:00	0.58	1.35	604.6
7/11/2012 15:00	0.59	1.38	620.4
7/11/2012 16:00	0.59	1.38	620.4
7/11/2012 17:00	0.58	1.35	604.6
7/11/2012 18:00	0.59	1.38	620.4
7/11/2012 19:00	0.59	1.38	620.4
7/11/2012 20:00	0.59	1.38	620.4
7/11/2012 21:00	0.59	1.38	620.4
7/11/2012 22:00	0.59	1.38	620.4
7/11/2012 23:00	0.59	1.38	620.4
7/12/2012 0:00	0.59	1.38	620.4
7/12/2012 1:00	0.58	1.35	604.6
7/12/2012 2:00	0.59	1.38	620.4
7/12/2012 3:00	0.59	1.38	620.4
7/12/2012 4:00	0.58	1.35	604.6
7/12/2012 5:00	0.58	1.35	604.6
7/12/2012 6:00	0.59	1.38	620.4
7/12/2012 7:00	0.59	1.38	620.4
7/12/2012 8:00	0.58	1.35	604.6
7/12/2012 9:00	0.59	1.38	620.4
7/12/2012 10:00	0.58	1.35	604.6
7/12/2012 11:00	0.59	1.38	620.4
7/12/2012 12:00	0.59	1.38	620.4

7/12/2012 13:00	0.58	1.35	604.6
7/12/2012 14:00	0.58	1.35	604.6
7/12/2012 15:00	0.59	1.38	620.4
7/12/2012 16:00	0.59	1.38	620.4
7/12/2012 17:00	0.58	1.35	604.6
7/12/2012 18:00	0.59	1.38	620.4
7/12/2012 19:00	0.58	1.35	604.6
7/12/2012 20:00	0.58	1.35	604.6
7/12/2012 21:00	0.58	1.35	604.6
7/12/2012 22:00	0.58	1.35	604.6
7/12/2012 23:00	0.58	1.35	604.6
7/13/2012 0:00	0.58	1.35	604.6
7/13/2012 1:00	0.58	1.35	604.6
7/13/2012 2:00	0.58	1.35	604.6
7/13/2012 3:00	0.58	1.35	604.6
7/13/2012 4:00	0.59	1.38	620.4
7/13/2012 5:00	0.58	1.35	604.6
7/13/2012 6:00	0.59	1.38	620.4
7/13/2012 7:00	0.58	1.35	604.6
7/13/2012 8:00	0.58	1.35	604.6
7/13/2012 9:00	0.58	1.35	604.6
7/13/2012 10:00	0.59	1.38	620.4
7/13/2012 11:00	0.59	1.38	620.4
7/13/2012 12:00	0.58	1.35	604.6
7/13/2012 13:00	0.58	1.35	604.6
7/13/2012 14:00	0.59	1.38	620.4
7/13/2012 15:00	0.58	1.35	604.6
7/13/2012 16:00	0.59	1.38	620.4
7/13/2012 17:00	0.59	1.38	620.4
7/13/2012 18:00	0.59	1.38	620.4
7/13/2012 19:00	0.59	1.38	620.4
7/13/2012 20:00	0.59	1.38	620.4
7/13/2012 21:00	0.59	1.38	620.4
7/13/2012 22:00	0.59	1.38	620.4
7/13/2012 23:00	0.58	1.35	604.6
7/14/2012 0:00	0.59	1.38	620.4
7/14/2012 1:00	0.58	1.35	604.6
7/14/2012 2:00	0.58	1.35	604.6
7/14/2012 3:00	0.58	1.35	604.6
7/14/2012 4:00	0.58	1.35	604.6
7/14/2012 5:00	0.59	1.38	620.4
7/14/2012 6:00	0.59	1.38	620.4
7/14/2012 7:00	0.58	1.35	604.6
7/14/2012 8:00	0.59	1.38	620.4
7/14/2012 9:00	0.58	1.35	604.6
7/14/2012 10:00	0.59	1.38	620.4
7/14/2012 11:00	0.58	1.35	604.6

7/14/2012 12:00	0.59	1.38	620.4
7/14/2012 13:00	0.58	1.35	604.6
7/14/2012 14:00	0.58	1.35	604.6
7/14/2012 15:00	0.58	1.35	604.6
7/14/2012 16:00	0.58	1.35	604.6
7/14/2012 17:00	0.58	1.35	604.6
7/14/2012 18:00	0.59	1.38	620.4
7/14/2012 19:00	0.58	1.35	604.6
7/14/2012 20:00	0.58	1.35	604.6
7/14/2012 21:00	0.58	1.35	604.6
7/14/2012 22:00	0.58	1.35	604.6
7/14/2012 23:00	0.58	1.35	604.6
7/15/2012 0:00	0.58	1.35	604.6
7/15/2012 1:00	0.58	1.35	604.6
7/15/2012 2:00	0.58	1.35	604.6
7/15/2012 3:00	0.58	1.35	604.6
7/15/2012 4:00	0.58	1.35	604.6
7/15/2012 5:00	0.59	1.38	620.4
7/15/2012 6:00	0.58	1.35	604.6
7/15/2012 7:00	0.59	1.38	620.4
7/15/2012 8:00	0.58	1.35	604.6
7/15/2012 9:00	0.58	1.35	604.6
7/15/2012 10:00	0.58	1.35	604.6
7/15/2012 11:00	0.58	1.35	604.6
7/15/2012 12:00	0.58	1.35	604.6
7/15/2012 13:00	0.58	1.35	604.6
7/15/2012 14:00	0.58	1.35	604.6
7/15/2012 15:00	0.59	1.38	620.4
7/15/2012 16:00	0.58	1.35	604.6
7/15/2012 17:00	0.58	1.35	604.6
7/15/2012 18:00	0.58	1.35	604.6
7/15/2012 19:00	0.58	1.35	604.6
7/15/2012 20:00	0.59	1.38	620.4
7/15/2012 21:00	0.58	1.35	604.6
7/15/2012 22:00	0.58	1.35	604.6
7/15/2012 23:00	0.58	1.35	604.6
7/16/2012 0:00	0.58	1.35	604.6
7/16/2012 1:00	0.59	1.38	620.4
7/16/2012 2:00	0.58	1.35	604.6
7/16/2012 3:00	0.58	1.35	604.6
7/16/2012 4:00	0.58	1.35	604.6
7/16/2012 5:00	0.59	1.38	620.4
7/16/2012 6:00	0.58	1.35	604.6
7/16/2012 7:00	0.58	1.35	604.6
7/16/2012 8:00	0.58	1.35	604.6
7/16/2012 9:00	0.58	1.35	604.6
7/16/2012 10:00	0.58	1.35	604.6

7/16/2012 11:00	0.58	1.35	604.6
7/16/2012 12:00	0.58	1.35	604.6
7/16/2012 13:00	0.58	1.35	604.6
7/16/2012 14:00	0.59	1.38	620.4
7/16/2012 15:00	0.58	1.35	604.6
7/16/2012 16:00	0.58	1.35	604.6
7/16/2012 17:00	0.58	1.35	604.6
7/16/2012 18:00	0.58	1.35	604.6
7/16/2012 19:00	0.58	1.35	604.6
7/16/2012 20:00	0.59	1.38	620.4
7/16/2012 21:00	0.58	1.35	604.6
7/16/2012 22:00	0.58	1.35	604.6
7/16/2012 23:00	0.58	1.35	604.6
7/17/2012 0:00	0.58	1.35	604.6
7/17/2012 1:00	0.58	1.35	604.6
7/17/2012 2:00	0.58	1.35	604.6
7/17/2012 3:00	0.58	1.35	604.6
7/17/2012 4:00	0.58	1.35	604.6
7/17/2012 5:00	0.58	1.35	604.6
7/17/2012 6:00	0.58	1.35	604.6
7/17/2012 7:00	0.58	1.35	604.6
7/17/2012 8:00	0.58	1.35	604.6
7/17/2012 9:00	0.58	1.35	604.6
7/17/2012 10:00	0.59	1.38	620.4
7/17/2012 11:00	0.58	1.35	604.6
7/17/2012 12:00	0.58	1.35	604.6
7/17/2012 13:00	0.58	1.35	604.6
7/17/2012 14:00	0.59	1.38	620.4
7/17/2012 15:00	0.59	1.38	620.4
7/17/2012 16:00	0.58	1.35	604.6
7/17/2012 17:00	0.59	1.38	620.4
7/17/2012 18:00	0.59	1.38	620.4
7/17/2012 19:00	0.59	1.38	620.4
7/17/2012 20:00	0.59	1.38	620.4
7/17/2012 21:00	0.59	1.38	620.4
7/17/2012 22:00	0.59	1.38	620.4
7/17/2012 23:00	0.59	1.38	620.4
7/18/2012 0:00	0.58	1.35	604.6
7/18/2012 1:00	0.59	1.38	620.4
7/18/2012 2:00	0.59	1.38	620.4
7/18/2012 3:00	0.58	1.35	604.6
7/18/2012 4:00	0.58	1.35	604.6
7/18/2012 5:00	0.58	1.35	604.6
7/18/2012 6:00	0.58	1.35	604.6
7/18/2012 7:00	0.58	1.35	604.6
7/18/2012 8:00	0.59	1.38	620.4
7/18/2012 9:00	0.59	1.38	620.4

7/18/2012 10:00	0.58	1.35	604.6
7/18/2012 11:00	0.58	1.35	604.6
7/18/2012 12:00	0.59	1.38	620.4
7/18/2012 13:00	0.58	1.35	604.6
7/18/2012 14:00	0.58	1.35	604.6
7/18/2012 15:00	0.58	1.35	604.6
7/18/2012 16:00	0.59	1.38	620.4
7/18/2012 17:00	0.58	1.35	604.6
7/18/2012 18:00	0.58	1.35	604.6
7/18/2012 19:00	0.59	1.38	620.4
7/18/2012 20:00	0.58	1.35	604.6
7/18/2012 21:00	0.58	1.35	604.6
7/18/2012 22:00	0.59	1.38	620.4
7/18/2012 23:00	0.59	1.38	620.4
7/19/2012 0:00	0.58	1.35	604.6
7/19/2012 1:00	0.59	1.38	620.4
7/19/2012 2:00	0.59	1.38	620.4
7/19/2012 3:00	0.58	1.35	604.6
7/19/2012 4:00	0.58	1.35	604.6
7/19/2012 5:00	0.58	1.35	604.6
7/19/2012 6:00	0.58	1.35	604.6
7/19/2012 7:00	0.58	1.35	604.6
7/19/2012 8:00	0.58	1.35	604.6
7/19/2012 9:00	0.58	1.35	604.6
7/19/2012 10:00	0.58	1.35	604.6
7/19/2012 11:00	0.58	1.35	604.6
7/19/2012 12:00	0.58	1.35	604.6
7/19/2012 13:00	0.58	1.35	604.6
7/19/2012 14:00	0.6	1.42	636.4
7/19/2012 15:00	0.6	1.42	636.4
7/19/2012 16:00	0.6	1.42	636.4
7/19/2012 17:00	0.6	1.42	636.4
7/19/2012 18:00	0.6	1.42	636.4
7/19/2012 19:00	0.6	1.42	636.4
7/19/2012 20:00	0.61	1.45	652.4
7/19/2012 21:00	0.6	1.42	636.4
7/19/2012 22:00	0.6	1.42	636.4
7/19/2012 23:00	0.6	1.42	636.4
7/20/2012 0:00	0.6	1.42	636.4
7/20/2012 1:00	0.6	1.42	636.4
7/20/2012 2:00	0.6	1.42	636.4
7/20/2012 3:00	0.6	1.42	636.4
7/20/2012 4:00	0.6	1.42	636.4
7/20/2012 5:00	0.6	1.42	636.4
7/20/2012 6:00	0.6	1.42	636.4
7/20/2012 7:00	0.6	1.42	636.4
7/20/2012 8:00	0.6	1.42	636.4

7/20/2012 9:00	0.6	1.42	636.4
7/20/2012 10:00	0.6	1.42	636.4
7/20/2012 11:00	0.6	1.42	636.4
7/20/2012 12:00	0.6	1.42	636.4
7/20/2012 13:00	0.6	1.42	636.4
7/20/2012 14:00	0.6	1.42	636.4
7/20/2012 15:00	0.6	1.42	636.4
7/20/2012 16:00	0.6	1.42	636.4
7/20/2012 17:00	0.6	1.42	636.4
7/20/2012 18:00	0.6	1.42	636.4
7/20/2012 19:00	0.6	1.42	636.4
7/20/2012 20:00	0.6	1.42	636.4
7/20/2012 21:00	0.6	1.42	636.4
7/20/2012 22:00	0.6	1.42	636.4
7/20/2012 23:00	0.6	1.42	636.4
7/21/2012 0:00	0.6	1.42	636.4
7/21/2012 1:00	0.6	1.42	636.4
7/21/2012 2:00	0.6	1.42	636.4
7/21/2012 3:00	0.6	1.42	636.4
7/21/2012 4:00	0.6	1.42	636.4
7/21/2012 5:00	0.6	1.42	636.4
7/21/2012 6:00	0.6	1.42	636.4
7/21/2012 7:00	0.6	1.42	636.4
7/21/2012 8:00	0.6	1.42	636.4
7/21/2012 9:00	0.6	1.42	636.4
7/21/2012 10:00	0.6	1.42	636.4
7/21/2012 11:00	0.6	1.42	636.4
7/21/2012 12:00	0.6	1.42	636.4
7/21/2012 13:00	0.6	1.42	636.4
7/21/2012 14:00	0.6	1.42	636.4
7/21/2012 15:00	0.6	1.42	636.4
7/21/2012 16:00	0.6	1.42	636.4
7/21/2012 17:00	0.6	1.42	636.4
7/21/2012 18:00	0.6	1.42	636.4
7/21/2012 19:00	0.6	1.42	636.4
7/21/2012 20:00	0.6	1.42	636.4
7/21/2012 21:00	0.6	1.42	636.4
7/21/2012 22:00	0.6	1.42	636.4
7/21/2012 23:00	0.6	1.42	636.4
7/22/2012 0:00	0.6	1.42	636.4
7/22/2012 1:00	0.6	1.42	636.4
7/22/2012 2:00	0.6	1.42	636.4
7/22/2012 3:00	0.6	1.42	636.4
7/22/2012 4:00	0.6	1.42	636.4
7/22/2012 5:00	0.6	1.42	636.4
7/22/2012 6:00	0.6	1.42	636.4
7/22/2012 7:00	0.6	1.42	636.4

7/22/2012 8:00	0.6	1.42	636.4
7/22/2012 9:00	0.6	1.42	636.4
7/22/2012 10:00	0.6	1.42	636.4
7/22/2012 11:00	0.6	1.42	636.4
7/22/2012 12:00	0.6	1.42	636.4
7/22/2012 13:00	0.6	1.42	636.4
7/22/2012 14:00	0.6	1.42	636.4
7/22/2012 15:00	0.6	1.42	636.4
7/22/2012 16:00	0.6	1.42	636.4
7/22/2012 17:00	0.6	1.42	636.4
7/22/2012 18:00	0.6	1.42	636.4
7/22/2012 19:00	0.6	1.42	636.4
7/22/2012 20:00	0.6	1.42	636.4
7/22/2012 21:00	0.6	1.42	636.4
7/22/2012 22:00	0.6	1.42	636.4
7/22/2012 23:00	0.6	1.42	636.4
7/23/2012 0:00	0.6	1.42	636.4
7/23/2012 1:00	0.6	1.42	636.4
7/23/2012 2:00	0.6	1.42	636.4
7/23/2012 3:00	0.6	1.42	636.4
7/23/2012 4:00	0.6	1.42	636.4
7/23/2012 5:00	0.6	1.42	636.4
7/23/2012 6:00	0.6	1.42	636.4
7/23/2012 7:00	0.6	1.42	636.4
7/23/2012 8:00	0.6	1.42	636.4
7/23/2012 9:00	0.6	1.42	636.4
7/23/2012 10:00	0.6	1.42	636.4
7/23/2012 11:00	0.6	1.42	636.4
7/23/2012 12:00	0.6	1.42	636.4
7/23/2012 13:00	0.6	1.42	636.4
7/23/2012 14:00	0.6	1.42	636.4
7/23/2012 15:00	0.6	1.42	636.4
7/23/2012 16:00	0.6	1.42	636.4
7/23/2012 17:00	0.6	1.42	636.4
7/23/2012 18:00	0.6	1.42	636.4
7/23/2012 19:00	0.6	1.42	636.4
7/23/2012 20:00	0.6	1.42	636.4
7/23/2012 21:00	0.6	1.42	636.4
7/23/2012 22:00	0.6	1.42	636.4
7/23/2012 23:00	0.6	1.42	636.4
7/24/2012 0:00	0.6	1.42	636.4
7/24/2012 1:00	0.6	1.42	636.4
7/24/2012 2:00	0.6	1.42	636.4
7/24/2012 3:00	0.6	1.42	636.4
7/24/2012 4:00	0.6	1.42	636.4
7/24/2012 5:00	0.6	1.42	636.4
7/24/2012 6:00	0.6	1.42	636.4

7/24/2012 7:00	0.6	1.42	636.4
7/24/2012 8:00	0.6	1.42	636.4
7/24/2012 9:00	0.6	1.42	636.4
7/24/2012 10:00	0.6	1.42	636.4
7/24/2012 11:00	0.6	1.42	636.4
7/24/2012 12:00	0.6	1.42	636.4
7/24/2012 13:00	0.6	1.42	636.4
7/24/2012 14:00	0.6	1.42	636.4
7/24/2012 15:00	0.6	1.42	636.4
7/24/2012 16:00	0.64	1.56	701.5
7/24/2012 17:00	0.62	1.49	668.7
7/24/2012 18:00	0.6	1.42	636.4
7/24/2012 19:00	0.6	1.42	636.4
7/24/2012 20:00	0.6	1.42	636.4
7/24/2012 21:00	0.6	1.42	636.4
7/24/2012 22:00	0.6	1.42	636.4
7/24/2012 23:00	0.6	1.42	636.4
7/25/2012 0:00	0.6	1.42	636.4
7/25/2012 1:00	0.6	1.42	636.4
7/25/2012 2:00	0.6	1.42	636.4
7/25/2012 3:00	0.6	1.42	636.4
7/25/2012 4:00	0.6	1.42	636.4
7/25/2012 5:00	0.6	1.42	636.4
7/25/2012 6:00	0.6	1.42	636.4
7/25/2012 7:00	0.6	1.42	636.4
7/25/2012 8:00	0.59	1.38	620.4
7/25/2012 9:00	0.6	1.42	636.4
7/25/2012 10:00	0.6	1.42	636.4
7/25/2012 11:00	0.6	1.42	636.4
7/25/2012 12:00	0.6	1.42	636.4
7/25/2012 13:00	0.6	1.42	636.4
7/25/2012 14:00	0.59	1.38	620.4
7/25/2012 15:00	0.6	1.42	636.4
7/25/2012 16:00	0.6	1.42	636.4
7/25/2012 17:00	0.6	1.42	636.4
7/25/2012 18:00	0.6	1.42	636.4
7/25/2012 19:00	0.6	1.42	636.4
7/25/2012 20:00	0.6	1.42	636.4
7/25/2012 21:00	0.6	1.42	636.4
7/25/2012 22:00	0.6	1.42	636.4
7/25/2012 23:00	0.6	1.42	636.4
7/26/2012 0:00	0.6	1.42	636.4
7/26/2012 1:00	0.6	1.42	636.4
7/26/2012 2:00	0.6	1.42	636.4
7/26/2012 3:00	0.6	1.42	636.4
7/26/2012 4:00	0.6	1.42	636.4
7/26/2012 5:00	0.6	1.42	636.4

7/26/2012 6:00	0.6	1.42	636.4
7/26/2012 7:00	0.6	1.42	636.4
7/26/2012 8:00	0.6	1.42	636.4
7/26/2012 9:00	0.6	1.42	636.4
7/26/2012 10:00	0.59	1.38	620.4
7/26/2012 11:00	0.6	1.42	636.4
7/26/2012 12:00	0.59	1.38	620.4
7/26/2012 13:00	0.59	1.38	620.4
7/26/2012 14:00	0.6	1.42	636.4
7/26/2012 15:00	0.6	1.42	636.4
7/26/2012 16:00	0.6	1.42	636.4
7/26/2012 17:00	0.59	1.38	620.4
7/26/2012 18:00	0.6	1.42	636.4
7/26/2012 19:00	0.6	1.42	636.4
7/26/2012 20:00	0.6	1.42	636.4
7/26/2012 21:00	0.59	1.38	620.4
7/26/2012 22:00	0.6	1.42	636.4
7/26/2012 23:00	0.6	1.42	636.4
7/27/2012 0:00	0.59	1.38	620.4
7/27/2012 1:00	0.59	1.38	620.4
7/27/2012 2:00	0.59	1.38	620.4
7/27/2012 3:00	0.6	1.42	636.4
7/27/2012 4:00	0.6	1.42	636.4
7/27/2012 5:00	0.6	1.42	636.4
7/27/2012 6:00	0.59	1.38	620.4
7/27/2012 7:00	0.59	1.38	620.4
7/27/2012 8:00	0.59	1.38	620.4
7/27/2012 9:00	0.59	1.38	620.4
7/27/2012 10:00	0.59	1.38	620.4
7/27/2012 11:00	0.59	1.38	620.4
7/27/2012 12:00	0.6	1.42	636.4
7/27/2012 13:00	0.59	1.38	620.4
7/27/2012 14:00	0.59	1.38	620.4
7/27/2012 15:00	0.6	1.42	636.4
7/27/2012 16:00	0.6	1.42	636.4
7/27/2012 17:00	0.59	1.38	620.4
7/27/2012 18:00	0.6	1.42	636.4
7/27/2012 19:00	0.59	1.38	620.4
7/27/2012 20:00	0.6	1.42	636.4
7/27/2012 21:00	0.6	1.42	636.4
7/27/2012 22:00	0.6	1.42	636.4
7/27/2012 23:00	0.59	1.38	620.4
7/28/2012 0:00	0.59	1.38	620.4
7/28/2012 1:00	0.59	1.38	620.4
7/28/2012 2:00	0.59	1.38	620.4
7/28/2012 3:00	0.59	1.38	620.4
7/28/2012 4:00	0.59	1.38	620.4

7/28/2012 5:00	0.6	1.42	636.4
7/28/2012 6:00	0.6	1.42	636.4
7/28/2012 7:00	0.59	1.38	620.4
7/28/2012 8:00	0.6	1.42	636.4
7/28/2012 9:00	0.6	1.42	636.4
7/28/2012 10:00	0.6	1.42	636.4
7/28/2012 11:00	0.59	1.38	620.4
7/28/2012 12:00	0.6	1.42	636.4
7/28/2012 13:00	0.6	1.42	636.4
7/28/2012 14:00	0.6	1.42	636.4
7/28/2012 15:00	0.6	1.42	636.4
7/28/2012 16:00	0.59	1.38	620.4
7/28/2012 17:00	0.6	1.42	636.4
7/28/2012 18:00	0.59	1.38	620.4
7/28/2012 19:00	0.59	1.38	620.4
7/28/2012 20:00	0.59	1.38	620.4
7/28/2012 21:00	0.59	1.38	620.4
7/28/2012 22:00	0.6	1.42	636.4
7/28/2012 23:00	0.6	1.42	636.4
7/29/2012 0:00	0.6	1.42	636.4
7/29/2012 1:00	0.59	1.38	620.4
7/29/2012 2:00	0.6	1.42	636.4
7/29/2012 3:00	0.6	1.42	636.4
7/29/2012 4:00	0.59	1.38	620.4
7/29/2012 5:00	0.6	1.42	636.4
7/29/2012 6:00	0.6	1.42	636.4
7/29/2012 7:00	0.6	1.42	636.4
7/29/2012 8:00	0.6	1.42	636.4
7/29/2012 9:00	0.6	1.42	636.4
7/29/2012 10:00	0.6	1.42	636.4
7/29/2012 11:00	0.6	1.42	636.4
7/29/2012 12:00	0.6	1.42	636.4
7/29/2012 13:00	0.6	1.42	636.4
7/29/2012 14:00	0.59	1.38	620.4
7/29/2012 15:00	0.6	1.42	636.4
7/29/2012 16:00	0.6	1.42	636.4
7/29/2012 17:00	0.6	1.42	636.4
7/29/2012 18:00	0.6	1.42	636.4
7/29/2012 19:00	0.59	1.38	620.4
7/29/2012 20:00	0.59	1.38	620.4
7/29/2012 21:00	0.59	1.38	620.4
7/29/2012 22:00	0.6	1.42	636.4
7/29/2012 23:00	0.6	1.42	636.4
7/30/2012 0:00	0.59	1.38	620.4
7/30/2012 1:00	0.6	1.42	636.4
7/30/2012 2:00	0.59	1.38	620.4
7/30/2012 3:00	0.6	1.42	636.4

7/30/2012 4:00	0.59	1.38	620.4
7/30/2012 5:00	0.6	1.42	636.4
7/30/2012 6:00	0.6	1.42	636.4
7/30/2012 7:00	0.6	1.42	636.4
7/30/2012 8:00	0.6	1.42	636.4
7/30/2012 9:00	0.59	1.38	620.4
7/30/2012 10:00	0.6	1.42	636.4
7/30/2012 11:00	0.59	1.38	620.4
7/30/2012 12:00	0.59	1.38	620.4
7/30/2012 13:00	0.59	1.38	620.4
7/30/2012 14:00	0.59	1.38	620.4
7/30/2012 15:00	0.6	1.42	636.4
7/30/2012 16:00	0.59	1.38	620.4
7/30/2012 17:00	0.59	1.38	620.4
7/30/2012 18:00	0.59	1.38	620.4
7/30/2012 19:00	0.6	1.42	636.4
7/30/2012 20:00	0.6	1.42	636.4
7/30/2012 21:00	0.6	1.42	636.4
7/30/2012 22:00	0.6	1.42	636.4
7/30/2012 23:00	0.6	1.42	636.4
7/31/2012 0:00	0.59	1.38	620.4
7/31/2012 1:00	0.6	1.42	636.4
7/31/2012 2:00	0.59	1.38	620.4
7/31/2012 3:00	0.6	1.42	636.4
7/31/2012 4:00	0.59	1.38	620.4
7/31/2012 5:00	0.6	1.42	636.4
7/31/2012 6:00	0.59	1.38	620.4
7/31/2012 7:00	0.59	1.38	620.4
7/31/2012 8:00	0.6	1.42	636.4
7/31/2012 9:00	0.59	1.38	620.4
7/31/2012 10:00	0.6	1.42	636.4
7/31/2012 11:00	0.6	1.42	636.4
7/31/2012 12:00	0.6	1.42	636.4
7/31/2012 13:00	0.6	1.42	636.4
7/31/2012 14:00	0.59	1.38	620.4
7/31/2012 15:00	0.6	1.42	636.4
7/31/2012 16:00	0.6	1.42	636.4
7/31/2012 17:00	0.6	1.42	636.4
7/31/2012 18:00	0.6	1.42	636.4
7/31/2012 19:00	0.59	1.38	620.4
7/31/2012 20:00	0.6	1.42	636.4
7/31/2012 21:00	0.59	1.38	620.4
7/31/2012 22:00	0.6	1.42	636.4
7/31/2012 23:00	0.59	1.38	620.4

Appendix J

South Flume Orpheus Mini Data with Flowrates

OTT Opheus Mini Data at South Flume, July 2012

Date	Time	Depth from top of flume to water (ft)	Depth of Flume Total (ft)	Depth of Flow (ft)	Flowrate (cfs)	Flowrate (gpm)
7/1/2012	12:00:00 AM	2.00	2.5	0.50	1.08	483.2
7/1/2012	1:00:00 AM	2.00	2.5	0.50	1.08	483.2
7/1/2012	2:00:00 AM	2.00	2.5	0.50	1.08	483.2
7/1/2012	3:00:00 AM	2.00	2.5	0.50	1.08	483.2
7/1/2012	4:00:00 AM	2.00	2.5	0.50	1.08	483.2
7/1/2012	5:00:00 AM	2.00	2.5	0.50	1.08	483.2
7/1/2012	6:00:00 AM	1.99	2.5	0.51	1.11	497.8
7/1/2012	7:00:00 AM	2.00	2.5	0.50	1.08	483.2
7/1/2012	8:00:00 AM	2.00	2.5	0.50	1.08	483.2
7/1/2012	9:00:00 AM	2.00	2.5	0.50	1.08	483.2
7/1/2012	10:00:00 AM	2.00	2.5	0.50	1.08	483.2
7/1/2012	11:00:00 AM	2.00	2.5	0.50	1.08	483.2
7/1/2012	12:00:00 PM	1.99	2.5	0.51	1.11	497.8
7/1/2012	1:00:00 PM	1.99	2.5	0.51	1.11	497.8
7/1/2012	2:00:00 PM	2.00	2.5	0.50	1.08	483.2
7/1/2012	3:00:00 PM	2.00	2.5	0.50	1.08	483.2
7/1/2012	4:00:00 PM	2.00	2.5	0.50	1.08	483.2
7/1/2012	5:00:00 PM	2.00	2.5	0.50	1.08	483.2
7/1/2012	6:00:00 PM	2.00	2.5	0.50	1.08	483.2
7/1/2012	7:00:00 PM	2.00	2.5	0.50	1.08	483.2
7/1/2012	8:00:00 PM	2.00	2.5	0.50	1.08	483.2
7/1/2012	9:00:00 PM	2.00	2.5	0.50	1.08	483.2
7/1/2012	10:00:00 PM	2.00	2.5	0.50	1.08	483.2
7/1/2012	11:00:00 PM	2.00	2.5	0.50	1.08	483.2
7/2/2012	12:00:00 AM	2.00	2.5	0.50	1.08	483.2
7/2/2012	1:00:00 AM	2.00	2.5	0.50	1.08	483.2
7/2/2012	2:00:00 AM	2.00	2.5	0.50	1.08	483.2
7/2/2012	3:00:00 AM	2.00	2.5	0.50	1.08	483.2
7/2/2012	4:00:00 AM	2.00	2.5	0.50	1.08	483.2
7/2/2012	5:00:00 AM	2.00	2.5	0.50	1.08	483.2
7/2/2012	6:00:00 AM	2.00	2.5	0.50	1.08	483.2
7/2/2012	7:00:00 AM	2.00	2.5	0.50	1.08	483.2
7/2/2012	8:00:00 AM	2.00	2.5	0.50	1.08	483.2
7/2/2012	9:00:00 AM	2.00	2.5	0.50	1.08	483.2
7/2/2012	10:00:00 AM	1.99	2.5	0.51	1.11	497.8
7/2/2012	11:00:00 AM	1.99	2.5	0.51	1.11	497.8
7/2/2012	12:00:00 PM	1.99	2.5	0.51	1.11	497.8
7/2/2012	1:00:00 PM	2.00	2.5	0.50	1.08	483.2
7/2/2012	2:00:00 PM	1.99	2.5	0.51	1.11	497.8
7/2/2012	3:00:00 PM	2.00	2.5	0.50	1.08	483.2
7/2/2012	4:00:00 PM	2.00	2.5	0.50	1.08	483.2
7/2/2012	5:00:00 PM	2.00	2.5	0.50	1.08	483.2
7/2/2012	6:00:00 PM	2.00	2.5	0.50	1.08	483.2

7/2/2012	7:00:00 PM	2.00	2.5	0.50	1.08	483.2
7/2/2012	8:00:00 PM	2.00	2.5	0.50	1.08	483.2
7/2/2012	9:00:00 PM	2.00	2.5	0.50	1.08	483.2
7/2/2012	10:00:00 PM	1.99	2.5	0.51	1.11	497.8
7/2/2012	11:00:00 PM	2.00	2.5	0.50	1.08	483.2
7/3/2012	12:00:00 AM	1.99	2.5	0.51	1.11	497.8
7/3/2012	1:00:00 AM	1.99	2.5	0.51	1.11	497.8
7/3/2012	2:00:00 AM	2.00	2.5	0.50	1.08	483.2
7/3/2012	3:00:00 AM	1.99	2.5	0.51	1.11	497.8
7/3/2012	4:00:00 AM	2.00	2.5	0.50	1.08	483.2
7/3/2012	5:00:00 AM	1.99	2.5	0.51	1.11	497.8
7/3/2012	6:00:00 AM	1.99	2.5	0.51	1.11	497.8
7/3/2012	7:00:00 AM	1.99	2.5	0.51	1.11	497.8
7/3/2012	8:00:00 AM	1.99	2.5	0.51	1.11	497.8
7/3/2012	9:00:00 AM	1.99	2.5	0.51	1.11	497.8
7/3/2012	10:00:00 AM	1.99	2.5	0.51	1.11	497.8
7/3/2012	11:00:00 AM	1.99	2.5	0.51	1.11	497.8
7/3/2012	12:00:00 PM	1.99	2.5	0.51	1.11	497.8
7/3/2012	1:00:00 PM	1.99	2.5	0.51	1.11	497.8
7/3/2012	2:00:00 PM	1.99	2.5	0.51	1.11	497.8
7/3/2012	3:00:00 PM	1.99	2.5	0.51	1.11	497.8
7/3/2012	4:00:00 PM	1.99	2.5	0.51	1.11	497.8
7/3/2012	5:00:00 PM	1.99	2.5	0.51	1.11	497.8
7/3/2012	6:00:00 PM	1.99	2.5	0.51	1.11	497.8
7/3/2012	7:00:00 PM	1.99	2.5	0.51	1.11	497.8
7/3/2012	8:00:00 PM	1.99	2.5	0.51	1.11	497.8
7/3/2012	9:00:00 PM	1.99	2.5	0.51	1.11	497.8
7/3/2012	10:00:00 PM	1.99	2.5	0.51	1.11	497.8
7/3/2012	11:00:00 PM	1.99	2.5	0.51	1.11	497.8
7/4/2012	12:00:00 AM	1.99	2.5	0.51	1.11	497.8
7/4/2012	1:00:00 AM	1.99	2.5	0.51	1.11	497.8
7/4/2012	2:00:00 AM	1.99	2.5	0.51	1.11	497.8
7/4/2012	3:00:00 AM	1.99	2.5	0.51	1.11	497.8
7/4/2012	4:00:00 AM	1.99	2.5	0.51	1.11	497.8
7/4/2012	5:00:00 AM	1.99	2.5	0.51	1.11	497.8
7/4/2012	6:00:00 AM	1.99	2.5	0.51	1.11	497.8
7/4/2012	7:00:00 AM	1.99	2.5	0.51	1.11	497.8
7/4/2012	8:00:00 AM	1.99	2.5	0.51	1.11	497.8
7/4/2012	9:00:00 AM	1.99	2.5	0.51	1.11	497.8
7/4/2012	10:00:00 AM	1.99	2.5	0.51	1.11	497.8
7/4/2012	11:00:00 AM	1.99	2.5	0.51	1.11	497.8
7/4/2012	12:00:00 PM	1.99	2.5	0.51	1.11	497.8
7/4/2012	1:00:00 PM	2.00	2.5	0.50	1.08	483.2
7/4/2012	2:00:00 PM	1.99	2.5	0.51	1.11	497.8
7/4/2012	3:00:00 PM	1.99	2.5	0.51	1.11	497.8
7/4/2012	4:00:00 PM	1.99	2.5	0.51	1.11	497.8
7/4/2012	5:00:00 PM	1.99	2.5	0.51	1.11	497.8

7/4/2012	6:00:00 PM	1.99	2.5	0.51	1.11	497.8
7/4/2012	7:00:00 PM	1.99	2.5	0.51	1.11	497.8
7/4/2012	8:00:00 PM	1.99	2.5	0.51	1.11	497.8
7/4/2012	9:00:00 PM	1.99	2.5	0.51	1.11	497.8
7/4/2012	10:00:00 PM	1.99	2.5	0.51	1.11	497.8
7/4/2012	11:00:00 PM	1.99	2.5	0.51	1.11	497.8
7/5/2012	12:00:00 AM	1.99	2.5	0.51	1.11	497.8
7/5/2012	1:00:00 AM	1.99	2.5	0.51	1.11	497.8
7/5/2012	2:00:00 AM	1.99	2.5	0.51	1.11	497.8
7/5/2012	3:00:00 AM	1.98	2.5	0.52	1.14	512.6
7/5/2012	4:00:00 AM	1.98	2.5	0.52	1.14	512.6
7/5/2012	5:00:00 AM	1.98	2.5	0.52	1.14	512.6
7/5/2012	6:00:00 AM	1.99	2.5	0.51	1.11	497.8
7/5/2012	7:00:00 AM	1.98	2.5	0.52	1.14	512.6
7/5/2012	8:00:00 AM	1.98	2.5	0.52	1.14	512.6
7/5/2012	9:00:00 AM	1.98	2.5	0.52	1.14	512.6
7/5/2012	10:00:00 AM	1.98	2.5	0.52	1.14	512.6
7/5/2012	11:00:00 AM	1.98	2.5	0.52	1.14	512.6
7/5/2012	12:00:00 PM	1.98	2.5	0.52	1.14	512.6
7/5/2012	1:00:00 PM	1.99	2.5	0.51	1.11	497.8
7/5/2012	2:00:00 PM	1.98	2.5	0.52	1.14	512.6
7/5/2012	3:00:00 PM	1.98	2.5	0.52	1.14	512.6
7/5/2012	4:00:00 PM	1.95	2.5	0.55	1.24	558.0
7/5/2012	5:00:00 PM	1.95	2.5	0.55	1.24	558.0
7/5/2012	6:00:00 PM	1.95	2.5	0.55	1.24	558.0
7/5/2012	7:00:00 PM	1.94	2.5	0.56	1.28	573.4
7/5/2012	8:00:00 PM	1.94	2.5	0.56	1.28	573.4
7/5/2012	9:00:00 PM	1.94	2.5	0.56	1.28	573.4
7/5/2012	10:00:00 PM	1.94	2.5	0.56	1.28	573.4
7/5/2012	11:00:00 PM	1.95	2.5	0.55	1.24	558.0
7/6/2012	12:00:00 AM	1.95	2.5	0.55	1.24	558.0
7/6/2012	1:00:00 AM	1.96	2.5	0.54	1.21	542.7
7/6/2012	2:00:00 AM	1.96	2.5	0.54	1.21	542.7
7/6/2012	3:00:00 AM	1.96	2.5	0.54	1.21	542.7
7/6/2012	4:00:00 AM	1.96	2.5	0.54	1.21	542.7
7/6/2012	5:00:00 AM	1.96	2.5	0.54	1.21	542.7
7/6/2012	6:00:00 AM	1.97	2.5	0.53	1.18	527.6
7/6/2012	7:00:00 AM	1.97	2.5	0.53	1.18	527.6
7/6/2012	8:00:00 AM	1.97	2.5	0.53	1.18	527.6
7/6/2012	9:00:00 AM	1.97	2.5	0.53	1.18	527.6
7/6/2012	10:00:00 AM	1.98	2.5	0.52	1.14	512.6
7/6/2012	11:00:00 AM	1.98	2.5	0.52	1.14	512.6
7/6/2012	12:00:00 PM	1.98	2.5	0.52	1.14	512.6
7/6/2012	1:00:00 PM	1.98	2.5	0.52	1.14	512.6
7/6/2012	2:00:00 PM	1.98	2.5	0.52	1.14	512.6
7/6/2012	3:00:00 PM	1.98	2.5	0.52	1.14	512.6
7/6/2012	4:00:00 PM	1.99	2.5	0.51	1.11	497.8

7/6/2012	5:00:00 PM	1.99	2.5	0.51	1.11	497.8
7/6/2012	6:00:00 PM	1.99	2.5	0.51	1.11	497.8
7/6/2012	7:00:00 PM	1.99	2.5	0.51	1.11	497.8
7/6/2012	8:00:00 PM	1.99	2.5	0.51	1.11	497.8
7/6/2012	9:00:00 PM	1.99	2.5	0.51	1.11	497.8
7/6/2012	10:00:00 PM	1.99	2.5	0.51	1.11	497.8
7/6/2012	11:00:00 PM	1.99	2.5	0.51	1.11	497.8
7/7/2012	12:00:00 AM	1.99	2.5	0.51	1.11	497.8
7/7/2012	1:00:00 AM	1.99	2.5	0.51	1.11	497.8
7/7/2012	2:00:00 AM	1.98	2.5	0.52	1.14	512.6
7/7/2012	3:00:00 AM	1.98	2.5	0.52	1.14	512.6
7/7/2012	4:00:00 AM	1.98	2.5	0.52	1.14	512.6
7/7/2012	5:00:00 AM	1.98	2.5	0.52	1.14	512.6
7/7/2012	6:00:00 AM	1.98	2.5	0.52	1.14	512.6
7/7/2012	7:00:00 AM	1.98	2.5	0.52	1.14	512.6
7/7/2012	8:00:00 AM	1.98	2.5	0.52	1.14	512.6
7/7/2012	9:00:00 AM	1.98	2.5	0.52	1.14	512.6
7/7/2012	10:00:00 AM	1.98	2.5	0.52	1.14	512.6
7/7/2012	11:00:00 AM	1.97	2.5	0.53	1.18	527.6
7/7/2012	12:00:00 PM	1.97	2.5	0.53	1.18	527.6
7/7/2012	1:00:00 PM	1.97	2.5	0.53	1.18	527.6
7/7/2012	2:00:00 PM	1.96	2.5	0.54	1.21	542.7
7/7/2012	3:00:00 PM	1.97	2.5	0.53	1.18	527.6
7/7/2012	4:00:00 PM	1.97	2.5	0.53	1.18	527.6
7/7/2012	5:00:00 PM	1.97	2.5	0.53	1.18	527.6
7/7/2012	6:00:00 PM	1.96	2.5	0.54	1.21	542.7
7/7/2012	7:00:00 PM	1.96	2.5	0.54	1.21	542.7
7/7/2012	8:00:00 PM	1.93	2.5	0.57	1.31	588.9
7/7/2012	9:00:00 PM	1.91	2.5	0.59	1.38	620.4
7/7/2012	10:00:00 PM	1.90	2.5	0.60	1.42	636.4
7/7/2012	11:00:00 PM	1.91	2.5	0.59	1.38	620.4
7/8/2012	12:00:00 AM	1.91	2.5	0.59	1.38	620.4
7/8/2012	1:00:00 AM	1.91	2.5	0.59	1.38	620.4
7/8/2012	2:00:00 AM	1.92	2.5	0.58	1.35	604.6
7/8/2012	3:00:00 AM	1.93	2.5	0.57	1.31	588.9
7/8/2012	4:00:00 AM	1.93	2.5	0.57	1.31	588.9
7/8/2012	5:00:00 AM	1.94	2.5	0.56	1.28	573.4
7/8/2012	6:00:00 AM	1.94	2.5	0.56	1.28	573.4
7/8/2012	7:00:00 AM	1.95	2.5	0.55	1.24	558.0
7/8/2012	8:00:00 AM	1.96	2.5	0.54	1.21	542.7
7/8/2012	9:00:00 AM	1.96	2.5	0.54	1.21	542.7
7/8/2012	10:00:00 AM	1.96	2.5	0.54	1.21	542.7
7/8/2012	11:00:00 AM	1.97	2.5	0.53	1.18	527.6
7/8/2012	12:00:00 PM	1.97	2.5	0.53	1.18	527.6
7/8/2012	1:00:00 PM	1.96	2.5	0.54	1.21	542.7
7/8/2012	2:00:00 PM	1.96	2.5	0.54	1.21	542.7
7/8/2012	3:00:00 PM	1.96	2.5	0.54	1.21	542.7

7/8/2012	4:00:00 PM	1.96	2.5	0.54	1.21	542.7
7/8/2012	5:00:00 PM	1.95	2.5	0.55	1.24	558.0
7/8/2012	6:00:00 PM	1.94	2.5	0.56	1.28	573.4
7/8/2012	7:00:00 PM	1.94	2.5	0.56	1.28	573.4
7/8/2012	8:00:00 PM	1.93	2.5	0.57	1.31	588.9
7/8/2012	9:00:00 PM	1.94	2.5	0.56	1.28	573.4
7/8/2012	10:00:00 PM	1.94	2.5	0.56	1.28	573.4
7/8/2012	11:00:00 PM	1.95	2.5	0.55	1.24	558.0
7/9/2012	12:00:00 AM	1.95	2.5	0.55	1.24	558.0
7/9/2012	1:00:00 AM	1.95	2.5	0.55	1.24	558.0
7/9/2012	2:00:00 AM	1.95	2.5	0.55	1.24	558.0
7/9/2012	3:00:00 AM	1.96	2.5	0.54	1.21	542.7
7/9/2012	4:00:00 AM	1.96	2.5	0.54	1.21	542.7
7/9/2012	5:00:00 AM	1.96	2.5	0.54	1.21	542.7
7/9/2012	6:00:00 AM	1.96	2.5	0.54	1.21	542.7
7/9/2012	7:00:00 AM	1.97	2.5	0.53	1.18	527.6
7/9/2012	8:00:00 AM	1.97	2.5	0.53	1.18	527.6
7/9/2012	9:00:00 AM	1.97	2.5	0.53	1.18	527.6
7/9/2012	10:00:00 AM	1.97	2.5	0.53	1.18	527.6
7/9/2012	11:00:00 AM	1.97	2.5	0.53	1.18	527.6
7/9/2012	12:00:00 PM	1.97	2.5	0.53	1.18	527.6
7/9/2012	1:00:00 PM	1.98	2.5	0.52	1.14	512.6
7/9/2012	2:00:00 PM	1.98	2.5	0.52	1.14	512.6
7/9/2012	3:00:00 PM	1.98	2.5	0.52	1.14	512.6
7/9/2012	4:00:00 PM	1.99	2.5	0.51	1.11	497.8
7/9/2012	5:00:00 PM	1.99	2.5	0.51	1.11	497.8
7/9/2012	6:00:00 PM	1.99	2.5	0.51	1.11	497.8
7/9/2012	7:00:00 PM	2.00	2.5	0.50	1.08	483.2
7/9/2012	8:00:00 PM	2.00	2.5	0.50	1.08	483.2
7/9/2012	9:00:00 PM	2.00	2.5	0.50	1.08	483.2
7/9/2012	10:00:00 PM	2.00	2.5	0.50	1.08	483.2
7/9/2012	11:00:00 PM	1.99	2.5	0.51	1.11	497.8
7/10/2012	12:00:00 AM	2.00	2.5	0.50	1.08	483.2
7/10/2012	1:00:00 AM	2.00	2.5	0.50	1.08	483.2
7/10/2012	2:00:00 AM	2.00	2.5	0.50	1.08	483.2
7/10/2012	3:00:00 AM	1.99	2.5	0.51	1.11	497.8
7/10/2012	4:00:00 AM	2.00	2.5	0.50	1.08	483.2
7/10/2012	5:00:00 AM	1.99	2.5	0.51	1.11	497.8
7/10/2012	6:00:00 AM	1.99	2.5	0.51	1.11	497.8
7/10/2012	7:00:00 AM	1.99	2.5	0.51	1.11	497.8
7/10/2012	8:00:00 AM	1.99	2.5	0.51	1.11	497.8
7/10/2012	9:00:00 AM	1.99	2.5	0.51	1.11	497.8
7/10/2012	10:00:00 AM	1.99	2.5	0.51	1.11	497.8
7/10/2012	11:00:00 AM	1.99	2.5	0.51	1.11	497.8
7/10/2012	12:00:00 PM	1.99	2.5	0.51	1.11	497.8
7/10/2012	1:00:00 PM	1.98	2.5	0.52	1.14	512.6
7/10/2012	2:00:00 PM	2.00	2.5	0.50	1.08	483.2

7/10/2012	3:00:00 PM	1.99	2.5	0.51	1.11	497.8
7/10/2012	4:00:00 PM	1.99	2.5	0.51	1.11	497.8
7/10/2012	5:00:00 PM	1.99	2.5	0.51	1.11	497.8
7/10/2012	6:00:00 PM	2.00	2.5	0.50	1.08	483.2
7/10/2012	7:00:00 PM	2.00	2.5	0.50	1.08	483.2
7/10/2012	8:00:00 PM	2.00	2.5	0.50	1.08	483.2
7/10/2012	9:00:00 PM	2.00	2.5	0.50	1.08	483.2
7/10/2012	10:00:00 PM	2.00	2.5	0.50	1.08	483.2
7/10/2012	11:00:00 PM	2.00	2.5	0.50	1.08	483.2
7/11/2012	12:00:00 AM	2.00	2.5	0.50	1.08	483.2
7/11/2012	1:00:00 AM	2.00	2.5	0.50	1.08	483.2
7/11/2012	2:00:00 AM	1.99	2.5	0.51	1.11	497.8
7/11/2012	3:00:00 AM	1.99	2.5	0.51	1.11	497.8
7/11/2012	4:00:00 AM	1.99	2.5	0.51	1.11	497.8
7/11/2012	5:00:00 AM	1.99	2.5	0.51	1.11	497.8
7/11/2012	6:00:00 AM	1.99	2.5	0.51	1.11	497.8
7/11/2012	7:00:00 AM	1.99	2.5	0.51	1.11	497.8
7/11/2012	8:00:00 AM	1.99	2.5	0.51	1.11	497.8
7/11/2012	9:00:00 AM	1.99	2.5	0.51	1.11	497.8
7/11/2012	10:00:00 AM	1.99	2.5	0.51	1.11	497.8
7/11/2012	11:00:00 AM	1.99	2.5	0.51	1.11	497.8
7/11/2012	12:00:00 PM	1.98	2.5	0.52	1.14	512.6
7/11/2012	1:00:00 PM	1.99	2.5	0.51	1.11	497.8
7/11/2012	2:00:00 PM	1.99	2.5	0.51	1.11	497.8
7/11/2012	3:00:00 PM	1.99	2.5	0.51	1.11	497.8
7/11/2012	4:00:00 PM	2.00	2.5	0.50	1.08	483.2
7/11/2012	5:00:00 PM	2.00	2.5	0.50	1.08	483.2
7/11/2012	6:00:00 PM	2.00	2.5	0.50	1.08	483.2
7/11/2012	7:00:00 PM	2.00	2.5	0.50	1.08	483.2
7/11/2012	8:00:00 PM	2.00	2.5	0.50	1.08	483.2
7/11/2012	9:00:00 PM	2.00	2.5	0.50	1.08	483.2
7/11/2012	10:00:00 PM	2.00	2.5	0.50	1.08	483.2
7/11/2012	11:00:00 PM	1.99	2.5	0.51	1.11	497.8
7/12/2012	12:00:00 AM	2.00	2.5	0.50	1.08	483.2
7/12/2012	1:00:00 AM	1.99	2.5	0.51	1.11	497.8
7/12/2012	2:00:00 AM	1.99	2.5	0.51	1.11	497.8
7/12/2012	3:00:00 AM	1.99	2.5	0.51	1.11	497.8
7/12/2012	4:00:00 AM	1.99	2.5	0.51	1.11	497.8
7/12/2012	5:00:00 AM	1.99	2.5	0.51	1.11	497.8
7/12/2012	6:00:00 AM	1.99	2.5	0.51	1.11	497.8
7/12/2012	7:00:00 AM	1.98	2.5	0.52	1.14	512.6
7/12/2012	8:00:00 AM	1.98	2.5	0.52	1.14	512.6
7/12/2012	9:00:00 AM	1.99	2.5	0.51	1.11	497.8
7/12/2012	10:00:00 AM	1.98	2.5	0.52	1.14	512.6
7/12/2012	11:00:00 AM	1.98	2.5	0.52	1.14	512.6
7/12/2012	12:00:00 PM	1.98	2.5	0.52	1.14	512.6
7/12/2012	1:00:00 PM	1.98	2.5	0.52	1.14	512.6

7/12/2012	2:00:00 PM	1.98	2.5	0.52	1.14	512.6
7/12/2012	3:00:00 PM	1.98	2.5	0.52	1.14	512.6
7/12/2012	4:00:00 PM	1.98	2.5	0.52	1.14	512.6
7/12/2012	5:00:00 PM	1.98	2.5	0.52	1.14	512.6
7/12/2012	6:00:00 PM	1.98	2.5	0.52	1.14	512.6
7/12/2012	7:00:00 PM	1.98	2.5	0.52	1.14	512.6
7/12/2012	8:00:00 PM	1.98	2.5	0.52	1.14	512.6
7/12/2012	9:00:00 PM	1.98	2.5	0.52	1.14	512.6
7/12/2012	10:00:00 PM	1.98	2.5	0.52	1.14	512.6
7/12/2012	11:00:00 PM	1.98	2.5	0.52	1.14	512.6
7/13/2012	12:00:00 AM	1.98	2.5	0.52	1.14	512.6
7/13/2012	1:00:00 AM	1.98	2.5	0.52	1.14	512.6
7/13/2012	2:00:00 AM	1.98	2.5	0.52	1.14	512.6
7/13/2012	3:00:00 AM	1.98	2.5	0.52	1.14	512.6
7/13/2012	4:00:00 AM	1.98	2.5	0.52	1.14	512.6
7/13/2012	5:00:00 AM	1.98	2.5	0.52	1.14	512.6
7/13/2012	6:00:00 AM	1.98	2.5	0.52	1.14	512.6
7/13/2012	7:00:00 AM	1.98	2.5	0.52	1.14	512.6
7/13/2012	8:00:00 AM	1.98	2.5	0.52	1.14	512.6
7/13/2012	9:00:00 AM	1.98	2.5	0.52	1.14	512.6
7/13/2012	10:00:00 AM	1.98	2.5	0.52	1.14	512.6
7/13/2012	11:00:00 AM	1.98	2.5	0.52	1.14	512.6
7/13/2012	12:00:00 PM	1.98	2.5	0.52	1.14	512.6
7/13/2012	1:00:00 PM	1.98	2.5	0.52	1.14	512.6
7/13/2012	2:00:00 PM	1.98	2.5	0.52	1.14	512.6
7/13/2012	3:00:00 PM	1.99	2.5	0.51	1.11	497.8
7/13/2012	4:00:00 PM	1.92	2.5	0.58	1.35	604.6
7/13/2012	5:00:00 PM	1.87	2.5	0.63	1.53	685.0
7/13/2012	6:00:00 PM	1.86	2.5	0.64	1.56	701.5
7/13/2012	7:00:00 PM	1.80	2.5	0.70	1.79	803.2
7/13/2012	8:00:00 PM	1.78	2.5	0.72	1.87	838.1
7/13/2012	9:00:00 PM	1.80	2.5	0.70	1.79	803.2
7/13/2012	10:00:00 PM	1.82	2.5	0.68	1.71	768.8
7/13/2012	11:00:00 PM	1.83	2.5	0.67	1.68	751.8
7/14/2012	12:00:00 AM	1.84	2.5	0.66	1.64	734.9
7/14/2012	1:00:00 AM	1.86	2.5	0.64	1.56	701.5
7/14/2012	2:00:00 AM	1.88	2.5	0.62	1.49	668.7
7/14/2012	3:00:00 AM	1.90	2.5	0.60	1.42	636.4
7/14/2012	4:00:00 AM	1.91	2.5	0.59	1.38	620.4
7/14/2012	5:00:00 AM	1.91	2.5	0.59	1.38	620.4
7/14/2012	6:00:00 AM	1.92	2.5	0.58	1.35	604.6
7/14/2012	7:00:00 AM	1.94	2.5	0.56	1.28	573.4
7/14/2012	8:00:00 AM	1.94	2.5	0.56	1.28	573.4
7/14/2012	9:00:00 AM	1.95	2.5	0.55	1.24	558.0
7/14/2012	10:00:00 AM	1.95	2.5	0.55	1.24	558.0
7/14/2012	11:00:00 AM	1.96	2.5	0.54	1.21	542.7
7/14/2012	12:00:00 PM	1.96	2.5	0.54	1.21	542.7

7/14/2012	1:00:00 PM	1.96	2.5	0.54	1.21	542.7
7/14/2012	2:00:00 PM	1.96	2.5	0.54	1.21	542.7
7/14/2012	3:00:00 PM	1.95	2.5	0.55	1.24	558.0
7/14/2012	4:00:00 PM	1.94	2.5	0.56	1.28	573.4
7/14/2012	5:00:00 PM	1.94	2.5	0.56	1.28	573.4
7/14/2012	6:00:00 PM	1.95	2.5	0.55	1.24	558.0
7/14/2012	7:00:00 PM	1.95	2.5	0.55	1.24	558.0
7/14/2012	8:00:00 PM	1.96	2.5	0.54	1.21	542.7
7/14/2012	9:00:00 PM	1.96	2.5	0.54	1.21	542.7
7/14/2012	10:00:00 PM	1.96	2.5	0.54	1.21	542.7
7/14/2012	11:00:00 PM	1.96	2.5	0.54	1.21	542.7
7/15/2012	12:00:00 AM	1.97	2.5	0.53	1.18	527.6
7/15/2012	1:00:00 AM	1.97	2.5	0.53	1.18	527.6
7/15/2012	2:00:00 AM	1.97	2.5	0.53	1.18	527.6
7/15/2012	3:00:00 AM	1.97	2.5	0.53	1.18	527.6
7/15/2012	4:00:00 AM	1.98	2.5	0.52	1.14	512.6
7/15/2012	5:00:00 AM	1.97	2.5	0.53	1.18	527.6
7/15/2012	6:00:00 AM	1.98	2.5	0.52	1.14	512.6
7/15/2012	7:00:00 AM	1.98	2.5	0.52	1.14	512.6
7/15/2012	8:00:00 AM	1.98	2.5	0.52	1.14	512.6
7/15/2012	9:00:00 AM	1.98	2.5	0.52	1.14	512.6
7/15/2012	10:00:00 AM	1.98	2.5	0.52	1.14	512.6
7/15/2012	11:00:00 AM	1.98	2.5	0.52	1.14	512.6
7/15/2012	12:00:00 PM	1.97	2.5	0.53	1.18	527.6
7/15/2012	1:00:00 PM	1.97	2.5	0.53	1.18	527.6
7/15/2012	2:00:00 PM	1.97	2.5	0.53	1.18	527.6
7/15/2012	3:00:00 PM	1.98	2.5	0.52	1.14	512.6
7/15/2012	4:00:00 PM	1.97	2.5	0.53	1.18	527.6
7/15/2012	5:00:00 PM	1.97	2.5	0.53	1.18	527.6
7/15/2012	6:00:00 PM	1.98	2.5	0.52	1.14	512.6
7/15/2012	7:00:00 PM	1.98	2.5	0.52	1.14	512.6
7/15/2012	8:00:00 PM	1.98	2.5	0.52	1.14	512.6
7/15/2012	9:00:00 PM	1.98	2.5	0.52	1.14	512.6
7/15/2012	10:00:00 PM	1.98	2.5	0.52	1.14	512.6
7/15/2012	11:00:00 PM	1.98	2.5	0.52	1.14	512.6
7/16/2012	12:00:00 AM	1.98	2.5	0.52	1.14	512.6
7/16/2012	1:00:00 AM	1.98	2.5	0.52	1.14	512.6
7/16/2012	2:00:00 AM	1.98	2.5	0.52	1.14	512.6
7/16/2012	3:00:00 AM	1.98	2.5	0.52	1.14	512.6
7/16/2012	4:00:00 AM	1.98	2.5	0.52	1.14	512.6
7/16/2012	5:00:00 AM	1.98	2.5	0.52	1.14	512.6
7/16/2012	6:00:00 AM	1.98	2.5	0.52	1.14	512.6
7/16/2012	7:00:00 AM	1.98	2.5	0.52	1.14	512.6
7/16/2012	8:00:00 AM	1.97	2.5	0.53	1.18	527.6
7/16/2012	9:00:00 AM	1.98	2.5	0.52	1.14	512.6
7/16/2012	10:00:00 AM	1.98	2.5	0.52	1.14	512.6
7/16/2012	11:00:00 AM	1.98	2.5	0.52	1.14	512.6

7/16/2012	12:00:00 PM	1.98	2.5	0.52	1.14	512.6
7/16/2012	1:00:00 PM	1.97	2.5	0.53	1.18	527.6
7/16/2012	2:00:00 PM	1.98	2.5	0.52	1.14	512.6
7/16/2012	3:00:00 PM	1.98	2.5	0.52	1.14	512.6
7/16/2012	4:00:00 PM	1.94	2.5	0.56	1.28	573.4
7/16/2012	5:00:00 PM	1.93	2.5	0.57	1.31	588.9
7/16/2012	6:00:00 PM	1.93	2.5	0.57	1.31	588.9
7/16/2012	7:00:00 PM	1.93	2.5	0.57	1.31	588.9
7/16/2012	8:00:00 PM	1.94	2.5	0.56	1.28	573.4
7/16/2012	9:00:00 PM	1.95	2.5	0.55	1.24	558.0
7/16/2012	10:00:00 PM	1.95	2.5	0.55	1.24	558.0
7/16/2012	11:00:00 PM	1.95	2.5	0.55	1.24	558.0
7/17/2012	12:00:00 AM	1.95	2.5	0.55	1.24	558.0
7/17/2012	1:00:00 AM	1.96	2.5	0.54	1.21	542.7
7/17/2012	2:00:00 AM	1.96	2.5	0.54	1.21	542.7
7/17/2012	3:00:00 AM	1.97	2.5	0.53	1.18	527.6
7/17/2012	4:00:00 AM	1.97	2.5	0.53	1.18	527.6
7/17/2012	5:00:00 AM	1.97	2.5	0.53	1.18	527.6
7/17/2012	6:00:00 AM	1.97	2.5	0.53	1.18	527.6
7/17/2012	7:00:00 AM	1.97	2.5	0.53	1.18	527.6
7/17/2012	8:00:00 AM	1.97	2.5	0.53	1.18	527.6
7/17/2012	9:00:00 AM	1.97	2.5	0.53	1.18	527.6
7/17/2012	10:00:00 AM	1.98	2.5	0.52	1.14	512.6
7/17/2012	11:00:00 AM	1.97	2.5	0.53	1.18	527.6
7/17/2012	12:00:00 PM	1.98	2.5	0.52	1.14	512.6
7/17/2012	1:00:00 PM	1.98	2.5	0.52	1.14	512.6
7/17/2012	2:00:00 PM	1.98	2.5	0.52	1.14	512.6
7/17/2012	3:00:00 PM	1.98	2.5	0.52	1.14	512.6
7/17/2012	4:00:00 PM	1.98	2.5	0.52	1.14	512.6
7/17/2012	5:00:00 PM	1.98	2.5	0.52	1.14	512.6
7/17/2012	6:00:00 PM	1.99	2.5	0.51	1.11	497.8
7/17/2012	7:00:00 PM	1.98	2.5	0.52	1.14	512.6
7/17/2012	8:00:00 PM	1.99	2.5	0.51	1.11	497.8
7/17/2012	9:00:00 PM	1.99	2.5	0.51	1.11	497.8
7/17/2012	10:00:00 PM	1.99	2.5	0.51	1.11	497.8
7/17/2012	11:00:00 PM	1.99	2.5	0.51	1.11	497.8
7/18/2012	12:00:00 AM	1.99	2.5	0.51	1.11	497.8
7/18/2012	1:00:00 AM	1.99	2.5	0.51	1.11	497.8
7/18/2012	2:00:00 AM	1.99	2.5	0.51	1.11	497.8
7/18/2012	3:00:00 AM	1.99	2.5	0.51	1.11	497.8
7/18/2012	4:00:00 AM	1.99	2.5	0.51	1.11	497.8
7/18/2012	5:00:00 AM	1.99	2.5	0.51	1.11	497.8
7/18/2012	6:00:00 AM	1.99	2.5	0.51	1.11	497.8
7/18/2012	7:00:00 AM	1.99	2.5	0.51	1.11	497.8
7/18/2012	8:00:00 AM	1.99	2.5	0.51	1.11	497.8
7/18/2012	9:00:00 AM	1.99	2.5	0.51	1.11	497.8
7/18/2012	10:00:00 AM	1.98	2.5	0.52	1.14	512.6

7/18/2012	11:00:00 AM	1.98	2.5	0.52	1.14	512.6
7/18/2012	12:00:00 PM	1.99	2.5	0.51	1.11	497.8
7/18/2012	1:00:00 PM	1.99	2.5	0.51	1.11	497.8
7/18/2012	2:00:00 PM	1.98	2.5	0.52	1.14	512.6
7/18/2012	3:00:00 PM	1.99	2.5	0.51	1.11	497.8
7/18/2012	4:00:00 PM	1.99	2.5	0.51	1.11	497.8
7/18/2012	5:00:00 PM	1.99	2.5	0.51	1.11	497.8
7/18/2012	6:00:00 PM	1.99	2.5	0.51	1.11	497.8
7/18/2012	7:00:00 PM	1.99	2.5	0.51	1.11	497.8
7/18/2012	8:00:00 PM	1.99	2.5	0.51	1.11	497.8
7/18/2012	9:00:00 PM	1.99	2.5	0.51	1.11	497.8
7/18/2012	10:00:00 PM	1.99	2.5	0.51	1.11	497.8
7/18/2012	11:00:00 PM	1.99	2.5	0.51	1.11	497.8
7/19/2012	12:00:00 AM	1.99	2.5	0.51	1.11	497.8
7/19/2012	1:00:00 AM	1.99	2.5	0.51	1.11	497.8
7/19/2012	2:00:00 AM	1.99	2.5	0.51	1.11	497.8
7/19/2012	3:00:00 AM	1.98	2.5	0.52	1.14	512.6
7/19/2012	4:00:00 AM	1.99	2.5	0.51	1.11	497.8
7/19/2012	5:00:00 AM	1.98	2.5	0.52	1.14	512.6
7/19/2012	6:00:00 AM	1.99	2.5	0.51	1.11	497.8
7/19/2012	7:00:00 AM	1.99	2.5	0.51	1.11	497.8
7/19/2012	8:00:00 AM	1.99	2.5	0.51	1.11	497.8
7/19/2012	9:00:00 AM	1.98	2.5	0.52	1.14	512.6
7/19/2012	10:00:00 AM	1.98	2.5	0.52	1.14	512.6
7/19/2012	11:00:00 AM	1.99	2.5	0.51	1.11	497.8
7/19/2012	12:00:00 PM	1.98	2.5	0.52	1.14	512.6
7/19/2012	1:00:00 PM	1.98	2.5	0.52	1.14	512.6
7/19/2012	2:00:00 PM	1.99	2.5	0.51	1.11	497.8
7/19/2012	3:00:00 PM	1.99	2.5	0.51	1.11	497.8
7/19/2012	4:00:00 PM	1.99	2.5	0.51	1.11	497.8
7/19/2012	5:00:00 PM	2.00	2.5	0.50	1.08	483.2
7/19/2012	6:00:00 PM	1.99	2.5	0.51	1.11	497.8
7/19/2012	7:00:00 PM	2.00	2.5	0.50	1.08	483.2
7/19/2012	8:00:00 PM	1.96	2.5	0.54	1.21	542.7
7/19/2012	9:00:00 PM	1.92	2.5	0.58	1.35	604.6
7/19/2012	10:00:00 PM	1.91	2.5	0.59	1.38	620.4
7/19/2012	11:00:00 PM	1.91	2.5	0.59	1.38	620.4
7/20/2012	12:00:00 AM	1.90	2.5	0.60	1.42	636.4
7/20/2012	1:00:00 AM	1.91	2.5	0.59	1.38	620.4
7/20/2012	2:00:00 AM	1.91	2.5	0.59	1.38	620.4
7/20/2012	3:00:00 AM	1.92	2.5	0.58	1.35	604.6
7/20/2012	4:00:00 AM	1.92	2.5	0.58	1.35	604.6
7/20/2012	5:00:00 AM	1.92	2.5	0.58	1.35	604.6
7/20/2012	6:00:00 AM	1.93	2.5	0.57	1.31	588.9
7/20/2012	7:00:00 AM	1.94	2.5	0.56	1.28	573.4
7/20/2012	8:00:00 AM	1.94	2.5	0.56	1.28	573.4
7/20/2012	9:00:00 AM	1.95	2.5	0.55	1.24	558.0

7/20/2012	10:00:00 AM	1.96	2.5	0.54	1.21	542.7
7/20/2012	11:00:00 AM	1.96	2.5	0.54	1.21	542.7
7/20/2012	12:00:00 PM	1.96	2.5	0.54	1.21	542.7
7/20/2012	1:00:00 PM	1.97	2.5	0.53	1.18	527.6
7/20/2012	2:00:00 PM	1.97	2.5	0.53	1.18	527.6
7/20/2012	3:00:00 PM	1.97	2.5	0.53	1.18	527.6
7/20/2012	4:00:00 PM	1.98	2.5	0.52	1.14	512.6
7/20/2012	5:00:00 PM	1.98	2.5	0.52	1.14	512.6
7/20/2012	6:00:00 PM	1.98	2.5	0.52	1.14	512.6
7/20/2012	7:00:00 PM	1.98	2.5	0.52	1.14	512.6
7/20/2012	8:00:00 PM	1.99	2.5	0.51	1.11	497.8
7/20/2012	9:00:00 PM	1.99	2.5	0.51	1.11	497.8
7/20/2012	10:00:00 PM	1.99	2.5	0.51	1.11	497.8
7/20/2012	11:00:00 PM	2.00	2.5	0.50	1.08	483.2
7/21/2012	12:00:00 AM	1.99	2.5	0.51	1.11	497.8
7/21/2012	1:00:00 AM	1.99	2.5	0.51	1.11	497.8
7/21/2012	2:00:00 AM	1.99	2.5	0.51	1.11	497.8
7/21/2012	3:00:00 AM	1.99	2.5	0.51	1.11	497.8
7/21/2012	4:00:00 AM	1.99	2.5	0.51	1.11	497.8
7/21/2012	5:00:00 AM	1.98	2.5	0.52	1.14	512.6
7/21/2012	6:00:00 AM	1.98	2.5	0.52	1.14	512.6
7/21/2012	7:00:00 AM	1.99	2.5	0.51	1.11	497.8
7/21/2012	8:00:00 AM	1.99	2.5	0.51	1.11	497.8
7/21/2012	9:00:00 AM	1.99	2.5	0.51	1.11	497.8
7/21/2012	10:00:00 AM	1.99	2.5	0.51	1.11	497.8
7/21/2012	11:00:00 AM	1.99	2.5	0.51	1.11	497.8
7/21/2012	12:00:00 PM	1.99	2.5	0.51	1.11	497.8
7/21/2012	1:00:00 PM	1.98	2.5	0.52	1.14	512.6
7/21/2012	2:00:00 PM	1.99	2.5	0.51	1.11	497.8
7/21/2012	3:00:00 PM	1.98	2.5	0.52	1.14	512.6
7/21/2012	4:00:00 PM	1.99	2.5	0.51	1.11	497.8
7/21/2012	5:00:00 PM	1.98	2.5	0.52	1.14	512.6
7/21/2012	6:00:00 PM	1.98	2.5	0.52	1.14	512.6
7/21/2012	7:00:00 PM	1.97	2.5	0.53	1.18	527.6
7/21/2012	8:00:00 PM	1.97	2.5	0.53	1.18	527.6
7/21/2012	9:00:00 PM	1.97	2.5	0.53	1.18	527.6
7/21/2012	10:00:00 PM	1.97	2.5	0.53	1.18	527.6
7/21/2012	11:00:00 PM	1.97	2.5	0.53	1.18	527.6
7/22/2012	12:00:00 AM	1.98	2.5	0.52	1.14	512.6
7/22/2012	1:00:00 AM	1.97	2.5	0.53	1.18	527.6
7/22/2012	2:00:00 AM	1.98	2.5	0.52	1.14	512.6
7/22/2012	3:00:00 AM	1.98	2.5	0.52	1.14	512.6
7/22/2012	4:00:00 AM	1.98	2.5	0.52	1.14	512.6
7/22/2012	5:00:00 AM	1.98	2.5	0.52	1.14	512.6
7/22/2012	6:00:00 AM	1.98	2.5	0.52	1.14	512.6
7/22/2012	7:00:00 AM	1.98	2.5	0.52	1.14	512.6
7/22/2012	8:00:00 AM	1.98	2.5	0.52	1.14	512.6

7/22/2012	9:00:00 AM	1.98	2.5	0.52	1.14	512.6
7/22/2012	10:00:00 AM	1.98	2.5	0.52	1.14	512.6
7/22/2012	11:00:00 AM	1.98	2.5	0.52	1.14	512.6
7/22/2012	12:00:00 PM	1.98	2.5	0.52	1.14	512.6
7/22/2012	1:00:00 PM	1.98	2.5	0.52	1.14	512.6
7/22/2012	2:00:00 PM	1.98	2.5	0.52	1.14	512.6
7/22/2012	3:00:00 PM	1.99	2.5	0.51	1.11	497.8
7/22/2012	4:00:00 PM	1.99	2.5	0.51	1.11	497.8
7/22/2012	5:00:00 PM	1.99	2.5	0.51	1.11	497.8
7/22/2012	6:00:00 PM	1.99	2.5	0.51	1.11	497.8
7/22/2012	7:00:00 PM	1.99	2.5	0.51	1.11	497.8
7/22/2012	8:00:00 PM	1.99	2.5	0.51	1.11	497.8
7/22/2012	9:00:00 PM	2.00	2.5	0.50	1.08	483.2
7/22/2012	10:00:00 PM	2.00	2.5	0.50	1.08	483.2
7/22/2012	11:00:00 PM	1.99	2.5	0.51	1.11	497.8
7/23/2012	12:00:00 AM	2.00	2.5	0.50	1.08	483.2
7/23/2012	1:00:00 AM	2.00	2.5	0.50	1.08	483.2
7/23/2012	2:00:00 AM	1.99	2.5	0.51	1.11	497.8
7/23/2012	3:00:00 AM	2.00	2.5	0.50	1.08	483.2
7/23/2012	4:00:00 AM	1.99	2.5	0.51	1.11	497.8
7/23/2012	5:00:00 AM	1.99	2.5	0.51	1.11	497.8
7/23/2012	6:00:00 AM	1.99	2.5	0.51	1.11	497.8
7/23/2012	7:00:00 AM	1.99	2.5	0.51	1.11	497.8
7/23/2012	8:00:00 AM	1.99	2.5	0.51	1.11	497.8
7/23/2012	9:00:00 AM	1.99	2.5	0.51	1.11	497.8
7/23/2012	10:00:00 AM	1.99	2.5	0.51	1.11	497.8
7/23/2012	11:00:00 AM	1.99	2.5	0.51	1.11	497.8
7/23/2012	12:00:00 PM	1.99	2.5	0.51	1.11	497.8
7/23/2012	1:00:00 PM	1.99	2.5	0.51	1.11	497.8
7/23/2012	2:00:00 PM	1.99	2.5	0.51	1.11	497.8
7/23/2012	3:00:00 PM	1.99	2.5	0.51	1.11	497.8
7/23/2012	4:00:00 PM	1.99	2.5	0.51	1.11	497.8
7/23/2012	5:00:00 PM	1.99	2.5	0.51	1.11	497.8
7/23/2012	6:00:00 PM	1.98	2.5	0.52	1.14	512.6
7/23/2012	7:00:00 PM	1.97	2.5	0.53	1.18	527.6
7/23/2012	8:00:00 PM	1.97	2.5	0.53	1.18	527.6
7/23/2012	9:00:00 PM	1.96	2.5	0.54	1.21	542.7
7/23/2012	10:00:00 PM	1.94	2.5	0.56	1.28	573.4
7/23/2012	11:00:00 PM	1.93	2.5	0.57	1.31	588.9
7/24/2012	12:00:00 AM	1.93	2.5	0.57	1.31	588.9
7/24/2012	1:00:00 AM	1.93	2.5	0.57	1.31	588.9
7/24/2012	2:00:00 AM	1.93	2.5	0.57	1.31	588.9
7/24/2012	3:00:00 AM	1.95	2.5	0.55	1.24	558.0
7/24/2012	4:00:00 AM	1.95	2.5	0.55	1.24	558.0
7/24/2012	5:00:00 AM	1.95	2.5	0.55	1.24	558.0
7/24/2012	6:00:00 AM	1.96	2.5	0.54	1.21	542.7
7/24/2012	7:00:00 AM	1.96	2.5	0.54	1.21	542.7

7/24/2012	8:00:00 AM	1.96	2.5	0.54	1.21	542.7
7/24/2012	9:00:00 AM	1.97	2.5	0.53	1.18	527.6
7/24/2012	10:00:00 AM	1.96	2.5	0.54	1.21	542.7
7/24/2012	11:00:00 AM	1.97	2.5	0.53	1.18	527.6
7/24/2012	12:00:00 PM	1.97	2.5	0.53	1.18	527.6
7/24/2012	1:00:00 PM	1.97	2.5	0.53	1.18	527.6
7/24/2012	2:00:00 PM	1.97	2.5	0.53	1.18	527.6
7/24/2012	3:00:00 PM	1.97	2.5	0.53	1.18	527.6
7/24/2012	4:00:00 PM	1.89	2.5	0.61	1.45	652.4
7/24/2012	5:00:00 PM	1.51	2.5	0.99	3.02	1356.0
7/24/2012	6:00:00 PM	1.40	2.5	1.10	3.54	1589.9
7/24/2012	7:00:00 PM	1.45	2.5	1.05	3.30	1482.0
7/24/2012	8:00:00 PM	1.52	2.5	0.98	2.98	1335.3
7/24/2012	9:00:00 PM	1.58	2.5	0.92	2.70	1213.8
7/24/2012	10:00:00 PM	1.63	2.5	0.87	2.49	1115.5
7/24/2012	11:00:00 PM	1.67	2.5	0.83	2.31	1038.9
7/25/2012	12:00:00 AM	1.71	2.5	0.79	2.15	964.2
7/25/2012	1:00:00 AM	1.75	2.5	0.75	1.99	891.5
7/25/2012	2:00:00 AM	1.77	2.5	0.73	1.91	855.8
7/25/2012	3:00:00 AM	1.79	2.5	0.71	1.83	820.6
7/25/2012	4:00:00 AM	1.81	2.5	0.69	1.75	785.9
7/25/2012	5:00:00 AM	1.83	2.5	0.67	1.68	751.8
7/25/2012	6:00:00 AM	1.85	2.5	0.65	1.60	718.1
7/25/2012	7:00:00 AM	1.86	2.5	0.64	1.56	701.5
7/25/2012	8:00:00 AM	1.87	2.5	0.63	1.53	685.0
7/25/2012	9:00:00 AM	1.88	2.5	0.62	1.49	668.7
7/25/2012	10:00:00 AM	1.89	2.5	0.61	1.45	652.4
7/25/2012	11:00:00 AM	1.91	2.5	0.59	1.38	620.4
7/25/2012	12:00:00 PM	1.91	2.5	0.59	1.38	620.4
7/25/2012	1:00:00 PM	1.92	2.5	0.58	1.35	604.6
7/25/2012	2:00:00 PM	1.92	2.5	0.58	1.35	604.6
7/25/2012	3:00:00 PM	1.91	2.5	0.59	1.38	620.4
7/25/2012	4:00:00 PM	1.91	2.5	0.59	1.38	620.4
7/25/2012	5:00:00 PM	1.92	2.5	0.58	1.35	604.6
7/25/2012	6:00:00 PM	1.93	2.5	0.57	1.31	588.9
7/25/2012	7:00:00 PM	1.93	2.5	0.57	1.31	588.9
7/25/2012	8:00:00 PM	1.94	2.5	0.56	1.28	573.4
7/25/2012	9:00:00 PM	1.94	2.5	0.56	1.28	573.4
7/25/2012	10:00:00 PM	1.95	2.5	0.55	1.24	558.0
7/25/2012	11:00:00 PM	1.95	2.5	0.55	1.24	558.0
7/26/2012	12:00:00 AM	1.96	2.5	0.54	1.21	542.7
7/26/2012	1:00:00 AM	1.96	2.5	0.54	1.21	542.7
7/26/2012	2:00:00 AM	1.96	2.5	0.54	1.21	542.7
7/26/2012	3:00:00 AM	1.96	2.5	0.54	1.21	542.7
7/26/2012	4:00:00 AM	1.96	2.5	0.54	1.21	542.7
7/26/2012	5:00:00 AM	1.96	2.5	0.54	1.21	542.7
7/26/2012	6:00:00 AM	1.97	2.5	0.53	1.18	527.6

7/26/2012	7:00:00 AM	1.97	2.5	0.53	1.18	527.6
7/26/2012	8:00:00 AM	1.97	2.5	0.53	1.18	527.6
7/26/2012	9:00:00 AM	1.97	2.5	0.53	1.18	527.6
7/26/2012	10:00:00 AM	1.97	2.5	0.53	1.18	527.6
7/26/2012	11:00:00 AM	1.97	2.5	0.53	1.18	527.6
7/26/2012	12:00:00 PM	1.97	2.5	0.53	1.18	527.6
7/26/2012	1:00:00 PM	1.97	2.5	0.53	1.18	527.6
7/26/2012	2:00:00 PM	1.97	2.5	0.53	1.18	527.6
7/26/2012	3:00:00 PM	1.98	2.5	0.52	1.14	512.6
7/26/2012	4:00:00 PM	1.98	2.5	0.52	1.14	512.6
7/26/2012	5:00:00 PM	1.98	2.5	0.52	1.14	512.6
7/26/2012	6:00:00 PM	1.98	2.5	0.52	1.14	512.6
7/26/2012	7:00:00 PM	1.98	2.5	0.52	1.14	512.6
7/26/2012	8:00:00 PM	1.98	2.5	0.52	1.14	512.6
7/26/2012	9:00:00 PM	1.98	2.5	0.52	1.14	512.6
7/26/2012	10:00:00 PM	1.98	2.5	0.52	1.14	512.6
7/26/2012	11:00:00 PM	1.98	2.5	0.52	1.14	512.6
7/27/2012	12:00:00 AM	1.99	2.5	0.51	1.11	497.8
7/27/2012	1:00:00 AM	1.99	2.5	0.51	1.11	497.8
7/27/2012	2:00:00 AM	1.99	2.5	0.51	1.11	497.8
7/27/2012	3:00:00 AM	1.98	2.5	0.52	1.14	512.6
7/27/2012	4:00:00 AM	1.98	2.5	0.52	1.14	512.6
7/27/2012	5:00:00 AM	1.99	2.5	0.51	1.11	497.8
7/27/2012	6:00:00 AM	1.98	2.5	0.52	1.14	512.6
7/27/2012	7:00:00 AM	1.98	2.5	0.52	1.14	512.6
7/27/2012	8:00:00 AM	1.98	2.5	0.52	1.14	512.6
7/27/2012	9:00:00 AM	1.99	2.5	0.51	1.11	497.8
7/27/2012	10:00:00 AM	1.98	2.5	0.52	1.14	512.6
7/27/2012	11:00:00 AM	1.98	2.5	0.52	1.14	512.6
7/27/2012	12:00:00 PM	1.98	2.5	0.52	1.14	512.6
7/27/2012	1:00:00 PM	1.98	2.5	0.52	1.14	512.6
7/27/2012	2:00:00 PM	1.99	2.5	0.51	1.11	497.8
7/27/2012	3:00:00 PM	1.99	2.5	0.51	1.11	497.8
7/27/2012	4:00:00 PM	1.99	2.5	0.51	1.11	497.8
7/27/2012	5:00:00 PM	1.98	2.5	0.52	1.14	512.6
7/27/2012	6:00:00 PM	1.99	2.5	0.51	1.11	497.8
7/27/2012	7:00:00 PM	1.98	2.5	0.52	1.14	512.6
7/27/2012	8:00:00 PM	1.97	2.5	0.53	1.18	527.6
7/27/2012	9:00:00 PM	1.97	2.5	0.53	1.18	527.6
7/27/2012	10:00:00 PM	1.97	2.5	0.53	1.18	527.6
7/27/2012	11:00:00 PM	1.98	2.5	0.52	1.14	512.6
7/28/2012	12:00:00 AM	1.97	2.5	0.53	1.18	527.6
7/28/2012	1:00:00 AM	1.98	2.5	0.52	1.14	512.6
7/28/2012	2:00:00 AM	1.97	2.5	0.53	1.18	527.6
7/28/2012	3:00:00 AM	1.97	2.5	0.53	1.18	527.6
7/28/2012	4:00:00 AM	1.96	2.5	0.54	1.21	542.7
7/28/2012	5:00:00 AM	1.96	2.5	0.54	1.21	542.7

7/28/2012	6:00:00 AM	1.96	2.5	0.54	1.21	542.7
7/28/2012	7:00:00 AM	1.96	2.5	0.54	1.21	542.7
7/28/2012	8:00:00 AM	1.96	2.5	0.54	1.21	542.7
7/28/2012	9:00:00 AM	1.97	2.5	0.53	1.18	527.6
7/28/2012	10:00:00 AM	1.97	2.5	0.53	1.18	527.6
7/28/2012	11:00:00 AM	1.97	2.5	0.53	1.18	527.6
7/28/2012	12:00:00 PM	1.97	2.5	0.53	1.18	527.6
7/28/2012	1:00:00 PM	1.97	2.5	0.53	1.18	527.6
7/28/2012	2:00:00 PM	1.97	2.5	0.53	1.18	527.6
7/28/2012	3:00:00 PM	1.97	2.5	0.53	1.18	527.6
7/28/2012	4:00:00 PM	1.97	2.5	0.53	1.18	527.6
7/28/2012	5:00:00 PM	1.98	2.5	0.52	1.14	512.6
7/28/2012	6:00:00 PM	1.98	2.5	0.52	1.14	512.6
7/28/2012	7:00:00 PM	1.98	2.5	0.52	1.14	512.6
7/28/2012	8:00:00 PM	1.98	2.5	0.52	1.14	512.6
7/28/2012	9:00:00 PM	1.99	2.5	0.51	1.11	497.8
7/28/2012	10:00:00 PM	1.98	2.5	0.52	1.14	512.6
7/28/2012	11:00:00 PM	1.98	2.5	0.52	1.14	512.6
7/29/2012	12:00:00 AM	1.98	2.5	0.52	1.14	512.6
7/29/2012	1:00:00 AM	1.98	2.5	0.52	1.14	512.6
7/29/2012	2:00:00 AM	1.98	2.5	0.52	1.14	512.6
7/29/2012	3:00:00 AM	1.98	2.5	0.52	1.14	512.6
7/29/2012	4:00:00 AM	1.98	2.5	0.52	1.14	512.6
7/29/2012	5:00:00 AM	1.98	2.5	0.52	1.14	512.6
7/29/2012	6:00:00 AM	1.98	2.5	0.52	1.14	512.6
7/29/2012	7:00:00 AM	1.98	2.5	0.52	1.14	512.6
7/29/2012	8:00:00 AM	1.98	2.5	0.52	1.14	512.6
7/29/2012	9:00:00 AM	1.98	2.5	0.52	1.14	512.6
7/29/2012	10:00:00 AM	1.98	2.5	0.52	1.14	512.6
7/29/2012	11:00:00 AM	1.98	2.5	0.52	1.14	512.6
7/29/2012	12:00:00 PM	1.97	2.5	0.53	1.18	527.6
7/29/2012	1:00:00 PM	1.96	2.5	0.54	1.21	542.7
7/29/2012	2:00:00 PM	1.95	2.5	0.55	1.24	558.0
7/29/2012	3:00:00 PM	1.95	2.5	0.55	1.24	558.0
7/29/2012	4:00:00 PM	1.95	2.5	0.55	1.24	558.0
7/29/2012	5:00:00 PM	1.95	2.5	0.55	1.24	558.0
7/29/2012	6:00:00 PM	1.96	2.5	0.54	1.21	542.7
7/29/2012	7:00:00 PM	1.96	2.5	0.54	1.21	542.7
7/29/2012	8:00:00 PM	1.97	2.5	0.53	1.18	527.6
7/29/2012	9:00:00 PM	1.97	2.5	0.53	1.18	527.6
7/29/2012	10:00:00 PM	1.97	2.5	0.53	1.18	527.6
7/29/2012	11:00:00 PM	1.98	2.5	0.52	1.14	512.6
7/30/2012	12:00:00 AM	1.98	2.5	0.52	1.14	512.6
7/30/2012	1:00:00 AM	1.98	2.5	0.52	1.14	512.6
7/30/2012	2:00:00 AM	1.99	2.5	0.51	1.11	497.8
7/30/2012	3:00:00 AM	1.99	2.5	0.51	1.11	497.8
7/30/2012	4:00:00 AM	1.99	2.5	0.51	1.11	497.8

7/30/2012	5:00:00 AM	1.98	2.5	0.52	1.14	512.6
7/30/2012	6:00:00 AM	1.99	2.5	0.51	1.11	497.8
7/30/2012	7:00:00 AM	1.99	2.5	0.51	1.11	497.8
7/30/2012	8:00:00 AM	1.99	2.5	0.51	1.11	497.8
7/30/2012	9:00:00 AM	1.99	2.5	0.51	1.11	497.8
7/30/2012	10:00:00 AM	1.99	2.5	0.51	1.11	497.8
7/30/2012	11:00:00 AM	1.99	2.5	0.51	1.11	497.8
7/30/2012	12:00:00 PM	1.99	2.5	0.51	1.11	497.8
7/30/2012	1:00:00 PM	1.99	2.5	0.51	1.11	497.8
7/30/2012	2:00:00 PM	1.99	2.5	0.51	1.11	497.8
7/30/2012	3:00:00 PM	1.99	2.5	0.51	1.11	497.8
7/30/2012	4:00:00 PM	1.99	2.5	0.51	1.11	497.8
7/30/2012	5:00:00 PM	1.99	2.5	0.51	1.11	497.8
7/30/2012	6:00:00 PM	1.99	2.5	0.51	1.11	497.8
7/30/2012	7:00:00 PM	1.99	2.5	0.51	1.11	497.8
7/30/2012	8:00:00 PM	1.99	2.5	0.51	1.11	497.8
7/30/2012	9:00:00 PM	1.99	2.5	0.51	1.11	497.8
7/30/2012	10:00:00 PM	1.99	2.5	0.51	1.11	497.8
7/30/2012	11:00:00 PM	1.99	2.5	0.51	1.11	497.8
7/31/2012	12:00:00 AM	1.99	2.5	0.51	1.11	497.8
7/31/2012	1:00:00 AM	1.99	2.5	0.51	1.11	497.8
7/31/2012	2:00:00 AM	1.99	2.5	0.51	1.11	497.8
7/31/2012	3:00:00 AM	1.99	2.5	0.51	1.11	497.8
7/31/2012	4:00:00 AM	1.99	2.5	0.51	1.11	497.8
7/31/2012	5:00:00 AM	1.99	2.5	0.51	1.11	497.8
7/31/2012	6:00:00 AM	1.99	2.5	0.51	1.11	497.8
7/31/2012	7:00:00 AM	1.99	2.5	0.51	1.11	497.8
7/31/2012	8:00:00 AM	1.99	2.5	0.51	1.11	497.8
7/31/2012	9:00:00 AM	1.99	2.5	0.51	1.11	497.8
7/31/2012	10:00:00 AM	1.99	2.5	0.51	1.11	497.8
7/31/2012	11:00:00 AM	1.99	2.5	0.51	1.11	497.8
7/31/2012	12:00:00 PM	1.99	2.5	0.51	1.11	497.8
7/31/2012	1:00:00 PM	1.99	2.5	0.51	1.11	497.8
7/31/2012	2:00:00 PM	1.99	2.5	0.51	1.11	497.8
7/31/2012	3:00:00 PM	1.99	2.5	0.51	1.11	497.8
7/31/2012	4:00:00 PM	1.99	2.5	0.51	1.11	497.8
7/31/2012	5:00:00 PM	1.99	2.5	0.51	1.11	497.8
7/31/2012	6:00:00 PM	1.99	2.5	0.51	1.11	497.8
7/31/2012	7:00:00 PM	2.00	2.5	0.50	1.08	483.2
7/31/2012	8:00:00 PM	1.99	2.5	0.51	1.11	497.8
7/31/2012	9:00:00 PM	1.99	2.5	0.51	1.11	497.8
7/31/2012	10:00:00 PM	1.98	2.5	0.52	1.14	512.6
7/31/2012	11:00:00 PM	1.99	2.5	0.51	1.11	497.8