1290061

Rico Surface Water Sampling
Supplemental Surface Water Quality Monitoring
Rico, Colorado
Data Summary Report

Prepared for:
Atlantic Richfield Company
4 Centerpointe Drive
La Palma, CA 90623

Prepared by:

ANDERSON
ENGINEERING COMPANY INC.

977 West 2100 South
Salt Lake City, UT 84119
(801) 972-6222

December 2011

Table of Contents

1.0 Introduction 1
2.0 Field Sampling 1
2.1 Sampling Frequency 1
2.2 Water Quality and Flow Measurement Sampling Locations 1
2.3 Sampling Station Descriptions 2
3.0 Sampling and Analysis Parameters and Methods 3
4.0 Flow Measurement Methods 6
5.0 Analytical Results 7
6.0 Quality Control 7
6.1 Field QC 7
6.2 Laboratory QC 8

List of Figures

Figure 1 Surface Water Sampling Locations
Figure 2 St Louis Pond Area Sampling Locations
Figure 3 Dolores River Cross Section at Sampling Station DR-1
Figure 4 Pond 8 Embankment Cross Section at Sampling Station DR-5
Figure 5 Dolores River Cross Section at Sampling Station DR-2
Figure 6 Dolores River Cross Section at Sampling Station DR-7
Figure 7 Dolores River Cross Section at Sampling Station DR-4-SW
Figure 8 Dolores River Cross Section at Sampling Station DR-G
Figure 9 Locations of Monitoring Wells

List of Tables

Table 1 Sampling Location Summary
Table 2 Analytical Procedures Summary
Table 3 Sampling Field Data and Station Information Summary
Table 4 Analytical Sampling Results Summary
Table 4a Analytical Sampling Results Summary – Monitoring Wells
Table 5 Duplicate of DR-3, Relative Percent Difference (RPD)

List of Appendices

Appendix A Sampling Location Maps
Appendix B Data Tables
Appendix C Project Narrative and Laboratory Analytical Reports
Appendix D Laboratory QC Results
Appendix E Flow Cross Sections
Appendix F Chain of Custody Records
Appendix G Field Photos
Appendix H Field Log Book Records
Appendix I North Flume Ultrasonic Meter Data with Flowrates
Appendix J South Flume Orpheus Mini Data with Flowrates
Appendix K North Flume OTT PLS Transducer Data with Flowrates

Rico, Colorado
Surface Water Sampling Report
December 2011 Sampling Event

1.0 Introduction

In accordance with the Rico Sampling and Analysis Plan for Supplemental Surface Water Quality Monitoring at Rico, CO prepared by AECOM, dated November 2010, the surface water sampling event was completed on December 13th – 14th, 2011. Sampling was completed by Anderson Engineering Co. Inc., by technicians who are familiar with the Rico sites and the BP Control of Work Management System. Surface water samples were collected from prescribed locations within the St. Louis settling pond system and at the system discharge (002) to the Dolores River (collectively referred to as the St. Louis pond system), and previously sampled locations along the Dolores River above, at and below the St. Louis pond system. Figure 1 and Figure 2 (see Appendix A) illustrate the location of the various sampling stations along the Dolores River and in the St. Louis pond system. Figure 9 in Appendix A illustrates the locations of the twelve monitoring wells being sampled. Sample results are summarized and laboratory analytical results are attached with quality control documentation.

2.0 Field Sampling

2.1 Sampling Frequency

The sampling period represented by this sampling event is for the month of December of 2011. Sampling will be performed on a monthly basis until at least April of 2012

2.2 Water Quality and Flow Measurement Sampling Locations

Samples were collected from the locations described on Table 1 and shown on Figure 1 and Figure 2 in Appendix A. In the fall of 2011, twelve (12) new monitoring wells were drilled in the vicinity of the recently constructed solids drying cells. Beginning November 2011, those wells were sampled and will continue to be sampled monthly along with the other sampling locations mentioned. Figure 9 in Appendix A illustrates the locations of these wells, and they are described in Table 1.

The Dolores River was sampled above the St. Louis pond system, and below the adit outfalls downstream of the reclaimed Silver Swan Mine area. The river was also sampled at the USGS gaging station downstream of the Silver Swan site.

TABLE 1 - Sample Location Summary

SITE ID	SITE DESCRIPTION
DR-4-SW	Dolores River below Silver Swan
DR-1	Dolores River above St. Louis settling pond system
DR-2	Dolores River immediately above the St. Louis settling pond system outfall

DR-3	St. Louis tunnel discharge at adit
DR-4	Discharge of Pond 15
DR-5	Discharge of Pond 8
DR-6	St. Louis settling pond system outfall to the Dolores River
DR-7	Dolores River below St. Louis settling pond system outfall
DR-G	Dolores River at USGS gaging station #09165000
MW-1 Shallow MW-1 Deep	Both wells are located about 4 feet apart on the western embankment of Pond 13 at the division between Pond 11 and Pond 12.
MW-2 Shallow MW-2 Deep	Both wells are located about 4 feet apart on the western flood embankment of Pond 12, about mid-way along the pond.
MW-3 Shallow MW-3 Deep	Both wells are located about 4 feet apart on the western flood embankment of Pond 15, on the southern half of the embankment.
MW-4 Shallow MW-4 Deep	Both wells are located about 4 feet apart on the southern embankment of Pond 13, approximately 60 west of the main east access road.
MW-5 Shallow MW-5 Deep	Both wells are located about 4 feet apart on the western dike of drying cell 3 (refer to Figure 9).
MW-6 Shallow MW-6 Deep	Both wells are located about 4 feet apart on northern embankment of Pond 13, approximately 75 feet west of the main east access road

2.3 Sampling Station Descriptions

The sampling requirements and stations are described in detail below:

DR-1. Dolores River above St. Louis settling ponds system. The sampling/flow measurement location is on the Dolores River approximately 50 feet upstream of the Rico Ranger Station. Flow measurements could not be obtained due to excessive ice built up in the river.

DR-2. Dolores River immediately above the St. Louis settling pond system outfall. Sampling/flow measurement location is on the Dolores just above the 002 discharge outfall, and upstream of the hot tub discharge. The site is located directly adjacent to the thermal discharge which supplies the hot tub. Flow measurement was collected by flowmeter.

DR-3. St. Louis tunnel discharge at adit entrance. Sampling location is at the inlet of the flume, just before the throat. Flow measurement by an installed 9" flume at the sampling location.

DR-4. Discharge of Pond 15. Flow measurement determined by water balance.

DR-5. Discharge of Pond 8. Flow measurement determined by water balance and water level reading.

DR-6. St. Louis settling ponds system outfall to the Dolores River (Outfall 002). Flow measurement by installed 9" flume.

DR-7. Dolores River below St. Louis settling ponds system outfall. Sampling/flow measurement location is located just off the entrance road to the St. Louis ponds site where the Dolores River is adjacent to the entrance road. The site is located approximately 75 feet downstream from a large bend in the river that first brings the Dolores adjacent to the entrance road. Flow measurements were collected by flowmeter.

DR-4-SW. Dolores River below Silver Swan. Sampling/flow measurement location is on the Dolores River below the Silver Swan site just downstream of a bend in the river and below a cemetery on the east bank. Flow measurements could not be obtained due to excessive ice built up in the river.

DR-G. Located at the USGS gauging station #09165000. Flow measurements could not be obtained due to excessive ice built up in the river.

Monitoring Wells. All monitoring wells were sampled by use of a bailer, and field measurements were taken at the time of sampling. Depth measurements were also taken at this time. For December 2011, MW-2 Shallow and MW-3 Shallow were dry.

3.0 Sampling and Analysis Parameters and Methods

All samples were collected as grab samples. Samples were collected from well-mixed locations, which are representative of conditions within the flow stream. Lab-certified plastic bottles were used to collect sample water for analyses. Clean hands, dirty hands procedures were followed throughout the sampling. For quality control purposes, one duplicate sample and one field blank were included with the water samples being submitted to the laboratory for analysis.

Lab-certified plastic bottles were used to collect all water samples. Sample water was first collected in clean plastic jugs, and within 10 minutes, placed in the sampling bottles. A 500 mL HDPE bottle was used to collect a sample for alkalinity, TDS, TSS, and sulfate analyses. A 250 mL HDPE bottle was used to collect a sample for salinity analysis. Sample water for dissolved metals analysis and potentially dissolved metals analysis was filtered through a 0.45µm filter into a 250 mL sample bottle containing nitric acid preservative. Sample water for total recoverable metals analysis and water hardness was collected without filtration in a 250 mL HDPE sample bottle containing nitric acid preservative. Sample water for cyanide analysis was collected without filtration into a 250 mL HDPE sample bottle containing sodium hydroxide preservative.

Field parameters were measured at the time of sample collection. Field measurement data for pH, temperature, conductivity, and dissolved oxygen were recorded using an EXTECH Instruments DO610 ExStik II DO/pH/Conductivity kit, and results were logged in the field log book. The field instrument was calibrated prior to use with equipment calibration and maintenance standard solutions and consistent with manufacturer's instructions. Weather parameters including temperature and precipitation were obtained and documented in the Journey Assessment. Due to a problem with the EXTECH instruments, DO and pH could not be obtained in the field for this sampling period. The laboratory performed the

pH tests, and those have been reported in the results in Appendix B. Equipment will be restored to working condition before the next sampling round.

All sample bottles were labeled to identify sample number, date and time of collection, type of analysis, and appropriate preservative. In addition, sample analysis/chain of custody forms were completed and processed at the time of sample collection. Original chain of custody forms are signed, dated, and placed in the sample container prior to sealing the container for shipment.

Water samples were kept in cooled containers and sent to the analytical laboratory. Samples were submitted to Pace Analytical Laboratories in Lenexa, Kansas for analysis by analytical procedures listed on Table 2. Analysis was performed according to methods specified in 40 CFR, Part 136 or other methods approved by the EPA. Laboratory methods and reporting limits for all parameters are presented in Table 2. Laboratory results and supporting documentation including quality assurance results are contained in the Appendix C and Appendix D of this report.

TABLE 2 - Analytical Procedures Summary

Parameter	Detection Limit (MDL)	Method
Field Parameters		
pH (s.u.)	+/- 0.01 pH	EPA 150.2
Temperature (°C)	+/- 1°C	Standard Method 2550
Conductivity (µmhos/cm)	+/- 2% Full Scale	EPA 120.1
Dissolved Oxygen	+/- 2% Full Scale	SM 4500-OG
Non-Metals		
Alkalinity (mg/L as $CaCO_3$)	RL – 20 mg/L	EPA 310.1
Hardness (mg/L as $CaCO_3$)	RL – 0.5 mg/L	SM 2340 B
Total Dissolved Solids (mg/L as TDS)	RL – 5.0 mg/L	SM 2540C
Total Suspended Solids (mg/L as TSS)	RL – 5.0 mg/L	SM 2540D
Cyanide (µg/L as CN)	RL – 0.005 mg/L	EPA 335.4
Salinity	RL – 6 mg/L	SM 2510B (calculated)
Sulfate (mg/L as SO4)	RL – 1 mg/L	EPA 300.0
Total and Dissolved Metals		
Aluminum (µg/L as Al)	2 µg/L	EPA 200.8
Antimony (µg/L as Sb)	0.07 µg/L	EPA 200.8
Arsenic (µg/L as As)	0.09 µg/L	EPA 200.8
Barium (µg/L as Ba)	0.08 µg/L	EPA 200.8
Beryllium (µg/L as Be)	0.02 µg/L	EPA 200.8
Cadmium (µg/L as Cd)	0.03 µg/L	EPA 200.8
Calcium (µg/L as Ca)	10 µg/L	EPA 200.8
Chromium (ug/l as Cr)	0.25 ug/L	EPA 200.8
Copper (µg/L as Cu)	0.07 µg/L	EPA 200.8
Iron (µg/L as Fe)	4.67 µg/L	EPA 200.8
Lead (µg/L as Pb)	0.05 µg/L	EPA 200.8
Magnesium (µg/L as Mg)	2.5 µg/L	EPA 200.8
Manganese (µg/L as Mn)	0.17 µg/L	EPA 200.8
Mercury (µg/L as Hg)	0.049 µg/L	EPA 245.1
Nickel (µg/L as Ni)	0.07 µg/L	EPA 200.8
Potassium (µg/L as K)	10 µg/L	EPA 200.8
Selenium (ug/l as Se)	0.22 ug/L	EPA 200.8
Silver (ug/L as Ag)	0.25 ug/L	EPA 200.8
Sodium (µg/L as Na)	25 µg/L	EPA 200.8
Thallium (µg/L as Tl)	0.05 ug/L	EPA 200.8
Vanadium (µg/L as V)	0.05 ug/L	EPA 200.8
Zinc (µg/L as Zn)	2.5 µg/L	EPA 200.8

4.0 Flow Measurement Methods

Flows were measured at the river sampling locations where accessible. Flow Measurements were not collected at areas where ice and snow buildup prohibited safe access. The flow measurements obtained this sampling period are described in Section 2.3. Flow velocity was measured for sampling locations DR-2, DR-3, DR-5, DR-6, and DR-7. Cross-sectional areas were obtained at river sample locations DR-2 and DR-7 and at the discharge spillway of pond 8 (DR-5). Ice buildup at pond spillways may have influenced water levels. Refer to Figures 3 through 8 in Appendix E for these cross sections. The flowrates are presented on Table 3 in Appendix B.

Flowrates collected during this sampling event were taken by use of a Global Water Flow Probe FP211 portable flow meter using the six-tenths-depth method. This method uses the velocity at six-tenths of the depth as the mean velocity. This method is generally reliable between depths from 0.3 feet to 2.5 feet. Stream sections were selected with the desired characteristics of parallel flows, smooth streambed with minimal obstructions, a straight channel, and a flat streambed. The stream section, perpendicular to the flow was measured in feet. The width of the section was determined and divided into several vertical sections. Flow measurements of velocity (by the six-tenths-depth method) and water depth were measured at each vertical section using the Global Water Flow Probe FP211. The flow meter was set to the 3 second fixed period average mode. A minimum of three velocity readings were recorded at each vertical section. Flows were calculated for each stream section using the water depth, horizontal distance, and averaged velocity data.

The St. Louis tunnel flow (DR-3) and St. Louis pond discharge (DR-6) currently have Parshall flumes installed. Flow measurements can be determined at these flumes when the depth of flow is known at a particular point. In order to continuously monitor and measure the depth of flow, depth measurement devices were installed on May 11th, 2011 and May 12th, 2011 at both the north and south flumes. An STI Ultrasonic IRU-5180 automated water level detector was installed at the north Parshall flume. It is suspended over the flow stream and measures the distance from the sensor to the water surface using ultrasonic sound waves. It then uses that value to determine the depth of flow, and reports it. The south flume has a submersible pressure transducer called the OTT Orpheus Mini. It records deviations from a pre-programmed depth of air space from the top edge of the flume down to the water level. Knowing then the total depth of the flume, the depth of flow can be determined. The post processed data for these two devices for the month of December, 2011 is given in Appendix I and Appendix J.

It has been observed that the flow at the north Parshall flume (DR-3) have recorded readings with some variability. Actions have been taken to reduce turbulent flow entering the flume by laying the liner as flat as possible. Additionally, the manufacturer has provided guidance for data error correction that has been implemented. In order to obtain accurate data, an OTT PLS pressure transducer water flow measurement device has been installed and was programmed to begin taking readings during this sampling period. Data from this device is included in Appendix K. Comparisons between the OTT PLS and the

STI Ultrasonic IRU-5180 meter will be included in the monthly sampling reports starting in January of 2012. Initial comparisons indicate a difference in flow measurements greater than the expected error. The discrepancy(ies) in calculated flows are being investigated and the results of that evaluation, together with any mitigations determined appropriate (if any), will be reported upon completion of the evaluation.

5.0 Analytical Results

The results of the laboratory analysis are summarized on Table 4 and Table 4a in Appendix B. The data is organized by sample location. The reports for the laboratory results are contained in Appendix C.

6.0 Quality Control

In addition to the standard laboratory Quality Control (QC), field QC samples for this sampling event included a field duplicate and a Field Blank (FB).

6.1 Field QC

A field duplicate water sample was collected from sample location DR-3. During sample collection, the duplicate sample bottles were filled simultaneously from the discharge stream of water. The duplicate sample was submitted to the analytical laboratory with the label of DR-8, so as to serve as a "blind duplicate."

Table 5 compares the analytical results from DR-3 and DR-8 and presents the Relative Percent Difference (RPD). The RPD for aqueous samples should be +/-20%. All comparative values were within +/-20% with the exception of Calcium.

TABLE 5 – Relative Percent Difference (RPD) of Total Metals Portion Between DR-3 and Duplicate Sample DR-8

Analyte (Total)	DR-3 (µg/L)	DR-8 (µg/L) Duplicate of DR-3	RPD (%)
Aluminum	272	275	1.10
Arsenic	<0.50	<0.50	0.00
Barium	19.4	19.3	-0.52
Cadmium	17.0	17	0.00
Calcium	237000	189000	-22.54
Chromium	0.52	<0.50	0.00
Copper	39.0	39.0	0.00
Iron	6560	6340	-3.41
Lead	2.3	2.2	-4.44
Magnesium	18600	18800	1.07
Manganese	2310	2480	7.10
Mercury	<0.20	<0.20	0.00
Nickel	5.5	5.4	-1.83
Potassium	1530	1590	3.85
Selenium	<0.50	<0.50	0.00
Silver	<0.50	<0.50	0.00
Sodium	9430	9620	1.99

Thallium	<0.10	<0.10	0.00
Vanadium	<0.10	<0.10	0.00
Zinc	3480	3750	7.47
Alkalinity (mg/L)	96.0	96.0	0.00
Hardness	669000	550000	-19.52
TDS (mg/L)	939	948	0.95
TSS (mg/L)	14.0	14.0	0.00
Cyanide	<0.0050	<0.0050	0.00
Salinity (mg/L)	702	735	4.59
Sulfate (mg/L)	528	563	6.42

A Field Blank (FB) was collected by pouring distilled water through the filtering manifold after the first day of sampling and decontaminating the equipment. The FB was analyzed for the same constituents as the other samples. The FB had below detectable concentrations for all metals except total calcium, total potassium, dissolved barium, dissolved potassium, and dissolved sodium. The pH was a little below neutral, the Electrical Conductivity (EC) was low, and it showed a non-detectable level of alkalinity.

6.2 Laboratory QC

The laboratory control sample (LCS), method blank, matrix spike, and matrix spike duplicate sample results were all within the established limits of concentration, percent recovery, and relative percent difference, with several minor exceptions under the following:

- The relative percent difference (RPD) between the ample and the sample duplicate exceeded laboratory control limits for the matrix spike / matrix spike duplicate for mercury (dissolved).
- The Matrix Spike and Matrix Spike Duplicate recovery were not evaluated against control limits due to sample dilution for aluminum, aluminum (dissolved), barium, calcium, calcium (dissolved), iron (dissolved), magnesium, magnesium (dissolved), manganese (dissolved), silver, sodium (dissolved), potassium, potassium (dissolved), and zinc (dissolved).
- The analyte concentration exceeded the calibration range for sodium, calcium (dissolved), manganese (dissolved), and zinc (dissolved). The result is estimated.
- The continuing calibration for the method blank for iron, silver (dissolved), the laboratory control sample for silver (dissolved), the matrix spike sample for silver (dissolved), and the matrix spike / matrix spike duplicate for silver, and lead (dissolved) is outside of Pace Analytical acceptance limits. The results may be biased high.
- Matrix spike recovery exceeded QC limits for calcium, calcium (dissolved), magnesium, magnesium (dissolved), potassium, potassium (dissolved), sodium, and sodium (dissolved). Batch accepted based on laboratory control sample (LCS) recovery.
- For pH, analysis initiated more than 15 minutes after sample collection.

For the full QC report from Pace Labs, please refer to Appendix D.

Appendix A

Sampling Location Maps

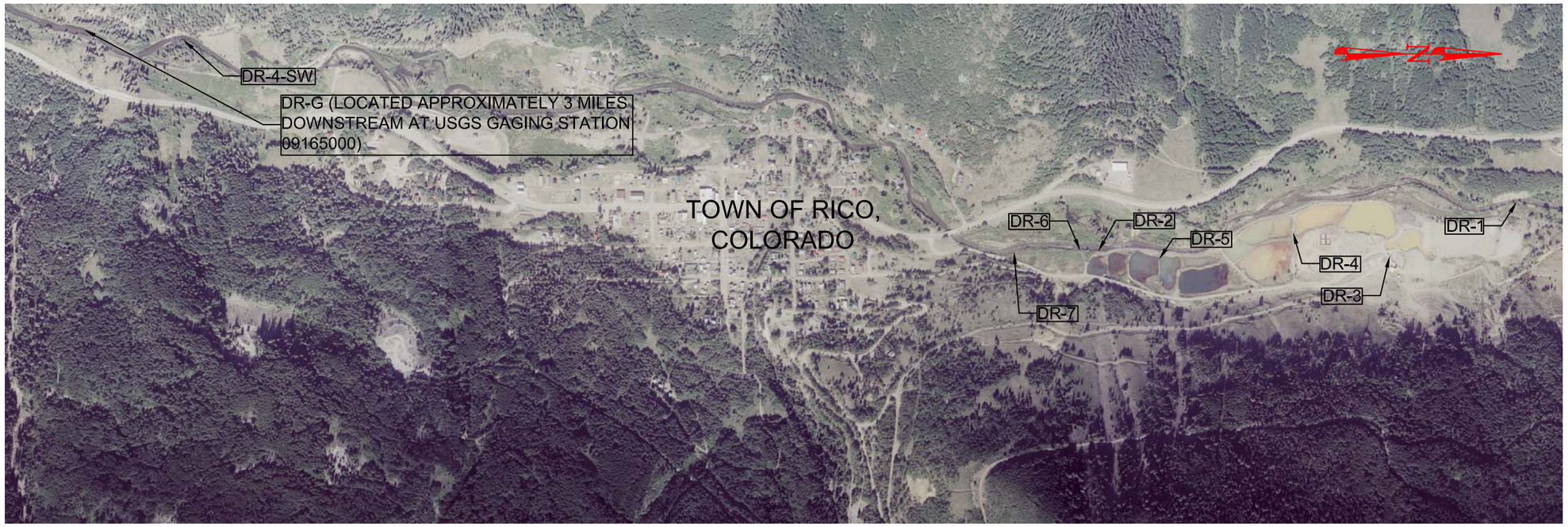

General Notes

Scale in Feet
0 500 1000

No.	Revision/Issue	Date

ATLANTIC RICHFIELD COMPANY

ANDERSON
ENGINEERING COMPANY, INC.

DRAWN BY: MAD
ENGINEER: CS, MAD
APPROVED:

RICO SURFACE WATER SAMPLING

SURFACE WATER SAMPLING LOCATIONS

RICO, CO

Project	Figure
Date 09-FEB-2011	1
Scale 1" = 1000'	

THESE PLANS AND SPECIFICATIONS ARE THE PROPERTY OF ANDERSON ENGINEERING COMPANY, INC., 977 WEST 2100 SOUTH, SALT LAKE CITY, UTAH, 84119 AND SHALL NOT BE COPIED, REDUCED, OR REPRODUCED WITHOUT THEIR WRITTEN PERMISSION.

General Notes

Scale in Feet
0 175 350

No.	Revision/Issue	Date

ATLANTIC RICHFIELD COMPANY

ANDERSON
ENGINEERING COMPANY, INC.

DRAWN BY: MAD
ENGINEER: CS, MAD
APPROVED:

RICO SURFACE WATER SAMPLING

ST. LOUIS POND AREA SAMPLING LOCATIONS

RICO, CO

Project	Figure
Date 09-FEB-2011	2
Scale 1" = 350'	

THESE PLANS AND SPECIFICATIONS ARE THE PROPERTY OF ANDERSON ENGINEERING COMPANY, INC., 977 WEST 2100 SOUTH, SALT LAKE CITY, UTAH, 84119 AND SHALL NOT BE COPIED, REDUCED, OR REPRODUCED WITHOUT THEIR WRITTEN PERMISSION.

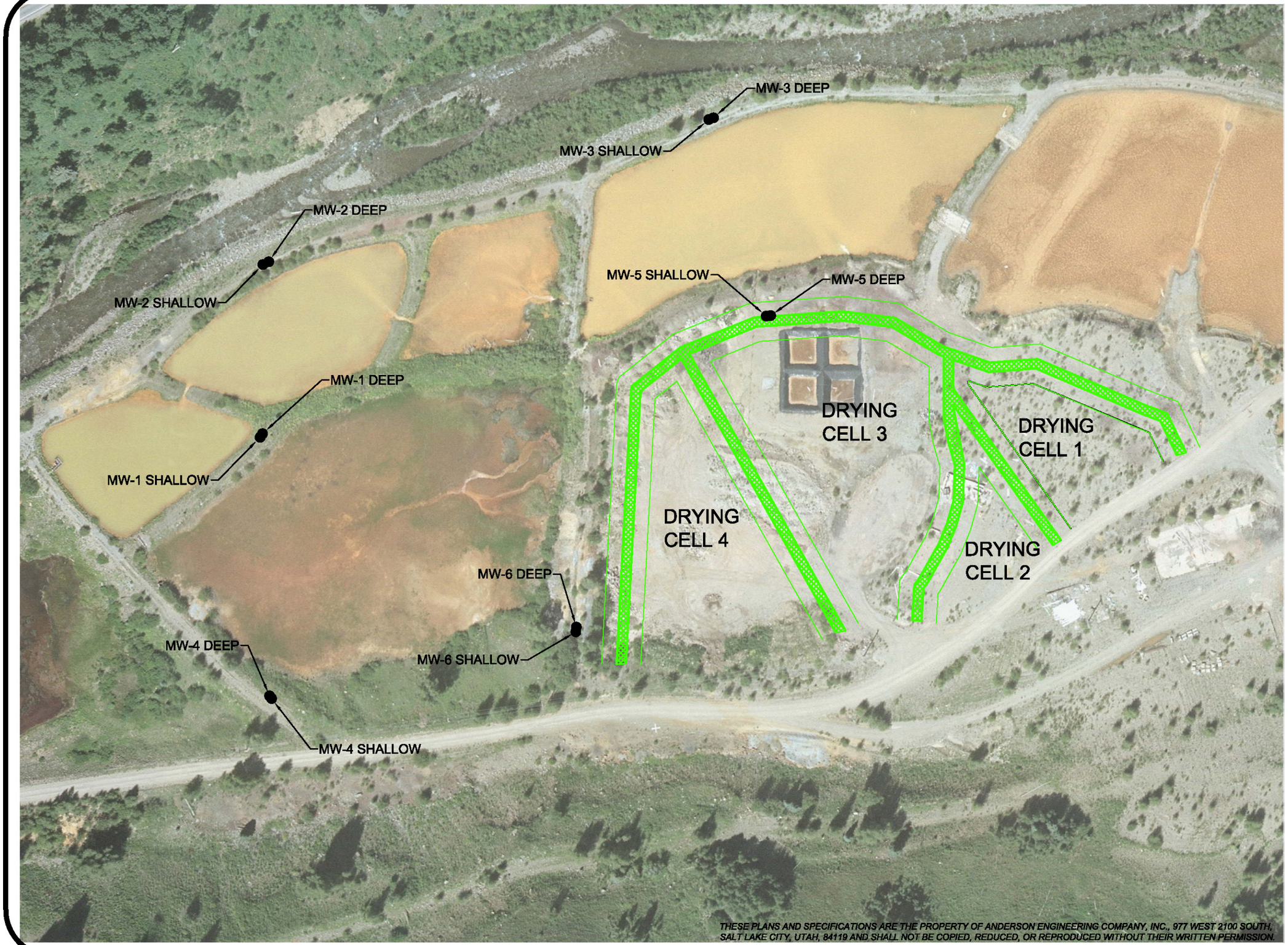

THESE PLANS AND SPECIFICATIONS ARE THE PROPERTY OF ANDERSON ENGINEERING COMPANY, INC., 977 WEST 2100 SOUTH, SALT LAKE CITY, UTAH, 84119 AND SHALL NOT BE COPIED, REDUCED, OR REPRODUCED WITHOUT THEIR WRITTEN PERMISSION.

General Notes

SCALE IN FEET
0 50 100

No.	Revision/Issue	Date

BP / ARCO

ANDERSON
ENGINEERING COMPANY, INC.
977 WEST 2100 SOUTH
SALT LAKE CITY, UTAH 84119
(801) 972-6222

RICO GW WELL MONITORING

MONITORING WELL LOCATIONS

RICO
COLORADO

DRAWN BY:	MAD
ENGINEER:	MAD
APPROVED:	CES

Project	Sheet 9
Date 22-Dec-11	
Scale 1" = 100'	

C:\Users\Mark\Documents\RICO\Surface Water Sampling\Site well location map.dwg

Appendix B

Data Tables

TABLE 3 - Sampling Field Data and Station Information Summary

	Field Measurements				GPS Location (Colorado State Plane NAD83)						
Sample Location	pH	Temp (°C)	EC (mS/cm)	Dissolved Oxygen (ppm)	Northing	Easting	Date	By	Stream Cross section area (ft^2)	Flowrate (cfs)	**Comments**
DR-1	8.10	4.1	0.275	CNO	1389970.4600	2267573.6490	12/13/2011	M. DeFriez, D. Smith	CNO	CNO	Cross section on the Dolores River above St. Louis settling pond system (approximately 800 ft north of the northern edge of Pond 18). Flow measurement could not be obtained due to ice shelf over water.
DR-2	7.90	6	0.328	CNO	1386660.9610	2267971.4630	12/13/2011	M. DeFriez, D. Smith	32.2	19.6	Cross section on the Dolores River, approximately 150 ft north of system outfall. Flow measurement by flow meter.
DR-3	7.00	12	1.275	CNO	1388963.0808	2268004.6974	12/13/2011	M. DeFriez, D. Smith	NA	1.53	St Louis adit discharge. Flow measurement by installed Parshall Flume.
DR-4	7.7	12.0	1.200	CNO	1388153.6284	2267799.1579	12/13/2011	M. DeFriez, D. Smith	NA	1.48	Pond 15 discharge. Flow measurement by flow meter.
DR-5	7.6	3.3	1.184	CNO	1387273.4503	2268024.8524	12/13/2011	M. DeFriez, D. Smith	NA	1.39	Pond 8 was discharging at multiple small locations as well as the spillway. Flow velocity measurements were collected at the spillway. Due to the shallow water and multiple paths, accurate flow measurements could not be determined for this sampling location and period. Leakage was estimated by water balance. Flow measurements were take at spillway by flow meter.
DR-6	7.30	1.8	1.235	CNO	1386431.4984	2267964.5711	12/13/2011	M. DeFriez, D. Smith	NA	1.33	Outfall to Dolores River. Flow measurement by installed Parshall Flume.
DR-7	7.20	1.9	0.530	CNO	1385880.1050	2267983.4510	12/13/2011	M. DeFriez, D. Smith	32.5	31.8	Cross section on the Dolores River, approximately 500 ft below St. Louis settling pond system outfall. Flow measurement by flow meter.
DR-8	7.00	12	1.275	CNO	1388963.0808	2268004.6974	12/13/2011	M. DeFriez, D. Smith	NA	1.53	DR-8 is a duplicate sample of DR-3 (or a location of sampler's choosing). See comments for DR-3.
DR-4-SW	7.5	2	0.475	CNO	1379176.1190	2266285.0850	12/13/2011	M. DeFriez, D. Smith	CNO	CNO	Cross section on the Dolores River approximately 100 below the Silver Swan site. Flow measurement could not be obtained due to ice shelf over water.
DR-G	8.00	1.9	0.435	CNO	1364029.7850	2258752.9060	12/13/2011	M. DeFriez, D. Smith	CNO	CNO	Cross section on the Dolores River at USGS gauging station #09165000, approximately 3.5 miles downstream of the Silver Swan site. Flow measurement could not be obtained due to ice shelf over water.
FB	6.00	9.8	0.0	CNO	N/A	N/A	12/13/2011	M. DeFriez, D. Smith	NA	NA	Field blank
MW-1 SHALLOW	CNO	8.7	1.087	CNO	1387826.7470	2267944.5160	12/14/2011	M. DeFriez, D. Smith	NA	NA	Both wells are located about 4 feet apart on the western embankment of Pond 13 at the division between Pond 11 and Pond 12.
MW-1 DEEP	CNO	5.6	1.065	CNO	1387829.4070	2267940.5680	12/14/2011	M. DeFriez, D. Smith	NA	NA	
MW-2 SHALLOW	DRY	DRY	DRY	DRY	1387829.7580	2267759.0810	12/14/2011	M. DeFriez, D. Smith	NA	NA	Both wells are located about 4 feet apart on the western flood embankment of Pond 12, about mid-way along the pond. MW-2 SHALLOW was dry
MW-2 DEEP	CNO	15.4	1.026	CNO	1387836.0950	2267756.0910	12/14/2011	M. DeFriez, D. Smith	NA	NA	
MW-3 SHALLOW	DRY	DRY	DRY	DRY	1388308.0910	2267603.5420	12/14/2011	M. DeFriez, D. Smith	NA	NA	Bothe wells are located about 4 feet apart on the western flood embankment of Pond 15, on the southern half of the embankment. MW-3 SHALLOW was dry.
MW-3 DEEP	7.1	14.2	1.083	CNO	1388313.2060	2267601.6050	12/14/2011	M. DeFriez, D. Smith	NA	NA	
MW-4 SHALLOW	6.8	7.6	1.32	CNO	1387836.9670	2268221.9370	12/14/2011	M. DeFriez, D. Smith	NA	NA	Both wells are located about 4 feet apart on the southern embankment of Pond 13, approximately 60 west of the main east access road.
MW-4 DEEP	6.7	6.7	1.45	CNO	1387839.1320	2268224.8950	12/14/2011	M. DeFriez, D. Smith	NA	NA	
MW-5 SHALLOW	5.7	8.8	2.26	CNO	1388369.7050	2267814.3980	12/14/2011	M. DeFriez, D. Smith	NA	NA	Both wells are located about 4 feet apart on the western dike of drying cell 3 (refer to Figure 9).
MW-5 DEEP	6.4	10	2.13	CNO	1388374.5740	2267813.8150	12/14/2011	M. DeFriez, D. Smith	NA	NA	
MW-6 SHALLOW	6.4	13.5	1.975	CNO	1388166.1000	2268148.1000	12/14/2011	M. DeFriez, D. Smith	NA	NA	Both wells are located about 4 feet apart on northern embankment of Pond 13, approximately 75 feet west of the main east access road
MW-6 DEEP	6.6	15.4	1.27	CNO	1388165.5290	2268153.3270	12/14/2011	M. DeFriez, D. Smith	NA	NA	

ANDERSON
ENGINEERING COMPANY INC.

TABLE 4 - Analytical Sampling Results Summary December 2011

			Metals (µg/L)																					Non-Metals (mg/L, unless otherwise indicated)							Field Parameters		
DR-1: Delores River above St. Louis settling pond system																																	
Field Sample ID	**Date Collected**	**Fraction**	**Aluminum**	**Antimony**	**Arsenic**	**Barium**	**Beryllium**	**Cadmium**	**Calcium**	**Chromium**	**Copper**	**Iron**	**Lead**	**Magnesium**	**Manganese**	**Mercury**	**Nickel**	**Potassium**	**Selenium**	**Silver**	**Sodium**	**Thallium**	**Vanadium**	**Zinc**	**Alkalinity**	**Hardness (µg/L as CaCO3)**	**TDS**	**TSS**	**Cyanide**	**Salinity**	**Sulfate**	**pH**	**Temperature (°C)**	**Conductivity (mS/cm)**	**Dissolved Oxygen (ppm)**
DR-1	12/13/11	Total	20.3	-	<0.50	66.9	-	<0.080	47500	0.53	<0.50	<50.0	0.10	6220	16.1	<0.20	<0.50	586	0.57	<0.50	2600	<0.10	0.13	<5.0	100	144000	113	<5.0	<0.0050	176	47.0	8.1	4.1	0.275	CNO
DR-1 D	12/13/11	Dissolved	6.3	-	<0.50	67.7	-	<0.080	49400	0.52	0.78	<50.0	<0.10	6440	15.5	<0.20	<0.50	664	<0.50	<0.50	2950	<0.10	<0.10	<5.0											
DR-2: Delores River immediately above the St. Louis settling pond system outfall																																	
Field Sample ID	**Date Collected**	**Fraction**	**Aluminum**	**Antimony**	**Arsenic**	**Barium**	**Beryllium**	**Cadmium**	**Calcium**	**Chromium**	**Copper**	**Iron**	**Lead**	**Magnesium**	**Manganese**	**Mercury**	**Nickel**	**Potassium**	**Selenium**	**Silver**	**Sodium**	**Thallium**	**Vanadium**	**Zinc**	**Alkalinity**	**Hardness (µg/L as CaCO3)**	**TDS**	**TSS**	**Cyanide**	**Salinity**	**Sulfate**	**pH**	**Temperature (°C)**	**Conductivity (mS/cm)**	**Dissolved Oxygen (ppm)**
DR-2	12/13/11	Total	15.0	-	<0.50	65.5	-	<0.080	60400	<0.50	<0.50	<50.0	<0.10	7060	158	<0.20	<0.50	704	<0.50	<0.50	2900	<0.10	<0.10	5.9	102	180000	181	5.0	<0.0050	208	70.9	7.9	6.0	0.328	CNO
DR-2 D	12/13/11	Dissolved	5.6	-	<0.50	66.7	-	<0.080	55300	0.55	<0.50	<50.0	<0.10	7400	159	<0.20	0.66	800	0.54	<0.50	3230	<0.10	<0.10	6.7											
DR-3: St. Louis tunnel discharge at adit																																	
Field Sample ID	**Date Collected**	**Fraction**	**Aluminum**	**Antimony**	**Arsenic**	**Barium**	**Beryllium**	**Cadmium**	**Calcium**	**Chromium**	**Copper**	**Iron**	**Lead**	**Magnesium**	**Manganese**	**Mercury**	**Nickel**	**Potassium**	**Selenium**	**Silver**	**Sodium**	**Thallium**	**Vanadium**	**Zinc**	**Alkalinity**	**Hardness (µg/L as CaCO3)**	**TDS**	**TSS**	**Cyanide**	**Salinity**	**Sulfate**	**pH**	**Temperature (°C)**	**Conductivity (mS/cm)**	**Dissolved Oxygen (ppm)**
DR-3	12/13/11	Total	272	-	<0.50	19.4	-	17.0	237000	0.52	39.0	6560	2.3	18600	2310	<0.20	5.5	1530	<0.50	<0.50	9430	<0.10	<0.10	3480	96.0	669000	939	14.0	<0.0050	702	528	7.0	12.0	1.275	CNO
DR-3 D	12/13/11	Dissolved	45.1	-	<0.50	20.5	-	17.5	242000	0.70	7.1	3320	<0.10	19500	2280	<0.20	6.1	1670	<0.50	<0.50	11000	<0.10	<0.10	3500											
DR-4: Discharge of Pond 15																																	
Field Sample ID	**Date Collected**	**Fraction**	**Aluminum**	**Antimony**	**Arsenic**	**Barium**	**Beryllium**	**Cadmium**	**Calcium**	**Chromium**	**Copper**	**Iron**	**Lead**	**Magnesium**	**Manganese**	**Mercury**	**Nickel**	**Potassium**	**Selenium**	**Silver**	**Sodium**	**Thallium**	**Vanadium**	**Zinc**	**Alkalinity**	**Hardness (µg/L as CaCO3)**	**TDS**	**TSS**	**Cyanide**	**Salinity**	**Sulfate**	**pH**	**Temperature (°C)**	**Conductivity (mS/cm)**	**Dissolved Oxygen (ppm)**
DR-4	12/13/11	Total	164	-	<0.50	19.6	-	16.0	248000	<0.50	24.2	4420	1.3	18800	2390	<0.20	5.6	1590	<0.50	<0.50	9600	<0.10	<0.10	3420	98.0	698000	947	9.0	<0.0050	725	540	7.7	12.0	1.200	CNO
DR-4 D	12/13/11	Dissolved	7.0	-	<0.50	19.2	-	13.6	224000	<0.50	2.4	<50.0	0.28	19400	2110	<0.20	5.8	1730	<0.50	<0.50	10800	<0.10	<0.10	2660											
DR-5: Discharge of Pond 8																																	
Field Sample ID	**Date Collected**	**Fraction**	**Aluminum**	**Antimony**	**Arsenic**	**Barium**	**Beryllium**	**Cadmium**	**Calcium**	**Chromium**	**Copper**	**Iron**	**Lead**	**Magnesium**	**Manganese**	**Mercury**	**Nickel**	**Potassium**	**Selenium**	**Silver**	**Sodium**	**Thallium**	**Vanadium**	**Zinc**	**Alkalinity**	**Hardness (µg/L as CaCO3)**	**TDS**	**TSS**	**Cyanide**	**Salinity**	**Sulfate**	**pH**	**Temperature (°C)**	**Conductivity (mS/cm)**	**Dissolved Oxygen (ppm)**
DR-5	12/13/11	Total	97.1	-	<0.50	18.3	-	14.3	192000	<0.50	16.1	2660	0.75	19200	2340	<0.20	5.2	1660	<0.50	<0.50	9640	<0.10	<0.10	3150	102	558000	912	7.0	<0.0050	728	532	7.6	3.3	1.184	CNO
DR-5 D	12/13/11	Dissolved	5.3	-	<0.50	17.9	-	12.1	235000	<0.50	0.78	<50.0	<0.10	18600	2050	<0.20	5.3	1660	<0.50	<0.50	9660	<0.10	<0.10	2610											
DR-6: St. Louis settling pond system outfall to the Delores River (Outfall 002)																																	
Field Sample ID	**Date Collected**	**Fraction**	**Aluminum**	**Antimony**	**Arsenic**	**Barium**	**Beryllium**	**Cadmium**	**Calcium**	**Chromium**	**Copper**	**Iron**	**Lead**	**Magnesium**	**Manganese**	**Mercury**	**Nickel**	**Potassium**	**Selenium**	**Silver**	**Sodium**	**Thallium**	**Vanadium**	**Zinc**	**Alkalinity**	**Hardness (µg/L as CaCO3)**	**TDS**	**TSS**	**Cyanide**	**Salinity**	**Sulfate**	**pH**	**Temperature (°C)**	**Conductivity (mS/cm)**	**Dissolved Oxygen (ppm)**
DR-6	12/13/11	Total	82.8	-	<0.50	19.0	-	13.0	199000	<0.50	13.6	1860	0.89	21100	2010	<0.20	5.3	2190	<0.50	<0.50	11700	<0.10	<0.10	3160	126	585000	956	<5.0	<0.0050	753	531	7.3	1.8	1.235	CNO
DR-6 D	12/13/11	Dissolved	6.4	-	<0.50	20.0	-	12.8	243000	<0.50	1.2	79.0	<0.10	21600	1940	<0.20	5.2	2390	<0.50	<0.50	13400	<0.10	<0.10	2620											
DR-7: Delores River below St. Louis settling pond system outfall																																	
Field Sample ID	**Date Collected**	**Fraction**	**Aluminum**	**Antimony**	**Arsenic**	**Barium**	**Beryllium**	**Cadmium**	**Calcium**	**Chromium**	**Copper**	**Iron**	**Lead**	**Magnesium**	**Manganese**	**Mercury**	**Nickel**	**Potassium**	**Selenium**	**Silver**	**Sodium**	**Thallium**	**Vanadium**	**Zinc**	**Alkalinity**	**Hardness (µg/L as CaCO3)**	**TDS**	**TSS**	**Cyanide**	**Salinity**	**Sulfate**	**pH**	**Temperature (°C)**	**Conductivity (mS/cm)**	**Dissolved Oxygen (ppm)**
DR-7	12/13/11	Total	19.9	-	0.77	60.2	-	1.4	98900	<0.50	1.6	339	0.11	11100	381	<0.20	0.74	1640	<0.50	<0.50	5680	<0.10	<0.10	291	130	293000	328	<5.0	<0.0050	320	150	7.2	1.9	0.530	CNO
DR-7 D	12/13/11	Dissolved	5.1	-	0.66	55.0	-	1.1	62600	<0.50	0.63	104	<0.10	10500	346	<0.20	1.0	1520	<0.50	<0.50	5580	<0.10	<0.10	240											
DR-8: St. Louis tunnel discharge at adit (Duplicate of DR-3)																																	
Field Sample ID	**Date Collected**	**Fraction**	**Aluminum**	**Antimony**	**Arsenic**	**Barium**	**Beryllium**	**Cadmium**	**Calcium**	**Chromium**	**Copper**	**Iron**	**Lead**	**Magnesium**	**Manganese**	**Mercury**	**Nickel**	**Potassium**	**Selenium**	**Silver**	**Sodium**	**Thallium**	**Vanadium**	**Zinc**	**Alkalinity**	**Hardness (µg/L as CaCO3)**	**TDS**	**TSS**	**Cyanide**	**Salinity**	**Sulfate**	**pH**	**Temperature (°C)**	**Conductivity (mS/cm)**	**Dissolved Oxygen (ppm)**
DR-8	12/13/11	Total	275	-	<0.50	19.3	-	17.0	189000	<0.50	39.0	6340	2.2	18800	2480	<0.20	5.4	1590	<0.50	<0.50	9620	<0.10	<0.10	3750	96.0	550000	948	14.0	<0.0050	735	563	7.0	12.0	1.275	CNO
DR-8 D	12/13/11	Dissolved	39.1	-	<0.50	18.9	-	16.6	243000	<0.50	6.7	3130	<0.10	19200	2290	<0.20	5.8	1650	<0.50	<0.50	10400	<0.10	<0.10	3570											
DR-4-SW: Delores River below Silver Swan																																	
Field Sample ID	**Date Collected**	**Fraction**	**Aluminum**	**Antimony**	**Arsenic**	**Barium**	**Beryllium**	**Cadmium**	**Calcium**	**Chromium**	**Copper**	**Iron**	**Lead**	**Magnesium**	**Manganese**	**Mercury**	**Nickel**	**Potassium**	**Selenium**	**Silver**	**Sodium**	**Thallium**	**Vanadium**	**Zinc**	**Alkalinity**	**Hardness (µg/L as CaCO3)**	**TDS**	**TSS**	**Cyanide**	**Salinity**	**Sulfate**	**pH**	**Temperature (°C)**	**Conductivity (mS/cm)**	**Dissolved Oxygen (ppm)**
DR-4-SW	12/13/11	Total	26.6	-	<0.50	62.1	-	1.2	84900	<0.50	1.2	182	0.29	9970	311	<0.20	0.76	1300	<0.50	<0.50	4570	<0.10	<0.10	244	132	253000	302	<5.0	<0.0050	304	121	7.5	2.0	0.475	CNO
DR-4-SW D	12/13/11	Dissolved	10.8	-	<0.50	66.0	-	1.2	83300	<0.50	0.88	73.9	<0.10	10900	326	<0.20	1.1	1440	<0.50	<0.50	5230	<0.10	<0.10	261											
DR-G: Delores River at USGS gaging station #09165000																																	
Field Sample ID	**Date Collected**	**Fraction**	**Aluminum**	**Antimony**	**Arsenic**	**Barium**	**Beryllium**	**Cadmium**	**Calcium**	**Chromium**	**Copper**	**Iron**	**Lead**	**Magnesium**	**Manganese**	**Mercury**	**Nickel**	**Potassium**	**Selenium**	**Silver**	**Sodium**	**Thallium**	**Vanadium**	**Zinc**	**Alkalinity**	**Hardness (µg/L as CaCO3)**	**TDS**	**TSS**	**Cyanide**	**Salinity**	**Sulfate**	**pH**	**Temperature (°C)**	**Conductivity (mS/cm)**	**Dissolved Oxygen (ppm)**
DR-G	12/13/11	Total	17.5	-	<0.50	78.1	-	0.78	84400	<0.50	0.72	82.4	0.19	9660	182	<0.20	0.60	1160	<0.50	<0.50	4270	<0.10	0.12	180	134	250000	270	<5.0	<0.0050	283	106	8.0	1.9	0.435	CNO
DR-G D	12/13/11	Dissolved	6.4	-	<0.50	82.6	-	0.82	78000	<0.50	0.87	<50.0	<0.10	10500	188	<0.20	0.72	1300	<0.50	<0.50	4880	<0.10	<0.10	194											
FB: Field Blank																																	
Field Sample ID	**Date Collected**	**Fraction**	**Aluminum**	**Antimony**	**Arsenic**	**Barium**	**Beryllium**	**Cadmium**	**Calcium**	**Chromium**	**Copper**	**Iron**	**Lead**	**Magnesium**	**Manganese**	**Mercury**	**Nickel**	**Potassium**	**Selenium**	**Silver**	**Sodium**	**Thallium**	**Vanadium**	**Zinc**	**Alkalinity**	**Hardness (µg/L as CaCO3)**	**TDS**	**TSS**	**Cyanide**	**Salinity**	**Sulfate**	**pH**	**Temperature (°C)**	**Conductivity (mS/cm)**	**Dissolved Oxygen (ppm)**
FB	12/13/11	Total	<4.0	-	<0.50	<0.30	-	<0.080	27.5	<0.50	<0.50	<50.0	<0.10	<5.0	<0.50	<0.20	<0.50	28.3	<0.50	<0.50	<50.0	<0.10	<0.10	<5.0	<20.0	86.6	6.0	<5.0	<0.0050	<6.0	<1.0	6.0	9.8	0.0171	CNO
FB D	12/13/11	Dissolved	<4.0	-	<0.50	0.36	-	<0.080	<20.0	<0.50	<0.50	<50.0	<0.10	<5.0	<0.50	<0.20	<0.50	45.8	<0.50	<0.50	63.3	<0.10	<0.10	<5.0											

ANDERSON
ENGINEERING COMPANY INC.

TABLE 4a - Monitoring Well Analytical Sampling Results Summary December 2011

			Metals (µg/L)																					Non-Metals (mg/L, unless otherwise indicated)								Field Parameters		
MW-1 SHALLOW	DEPTH: 6.31'																																	
Field Sample ID	**Date Collected**	**Fraction**	**Aluminum**	**Antimony**	**Arsenic**	**Barium**	**Beryllium**	**Cadmium**	**Calcium**	**Chromium**	**Copper**	**Iron**	**Lead**	**Magnesium**	**Manganese**	**Mercury**	**Nickel**	**Potassium**	**Selenium**	**Silver**	**Sodium**	**Thallium**	**Vanadium**	**Zinc**	**Alkalinity**	**Hardness (µg/L as CaCO3)**	**TDS**	**TSS**	**Cyanide**	**Salinity**	**Sulfate**	**pH**	**Temperature (°C)**	**Conductivity (mS/cm)**	**Dissolved Oxygen (ppm)**
MW-1 SHALLOW	12/14/11	Total	1140	<0.50	1.1	39.5	<0.20	0.21	226000	2.2	4.0	1490	9.0	21300	85.7	<0.20	0.98	1640	11.7	<0.50	9040	<0.10	1.9	29.3	92.0	653000	829	104	<0.0050	730	537	CNO	8.7	1.087	CNO
MW-1 SHALLOW Dissolved	12/14/11	Dissolved	5.3	<0.50	<0.50	22.0	-	0.11	229000	<0.50	0.54	<50.0	<0.10	19400	2.1	<0.20	<0.50	1310	10.9	<0.50	8750	<0.10	<0.10	14.4											
MW-1 DEEP	DEPTH: 8.99'																																	
Field Sample ID	**Date Collected**	**Fraction**	**Aluminum**	**Antimony**	**Arsenic**	**Barium**	**Beryllium**	**Cadmium**	**Calcium**	**Chromium**	**Copper**	**Iron**	**Lead**	**Magnesium**	**Manganese**	**Mercury**	**Nickel**	**Potassium**	**Selenium**	**Silver**	**Sodium**	**Thallium**	**Vanadium**	**Zinc**	**Alkalinity**	**Hardness (µg/L as CaCO3)**	**TDS**	**TSS**	**Cyanide**	**Salinity**	**Sulfate**	**pH**	**Temperature (°C)**	**Conductivity (mS/cm)**	**Dissolved Oxygen (ppm)**
MW-1 DEEP	12/14/11	Total	38.4	<0.50	0.58	16.4	<0.20	2.3	230000	0.64	1.5	78.8	1.9	19900	11.6	<0.20	0.69	1420	9.0	<0.50	10600	<0.10	0.13	379	92.0	657000	917	<5.0	<0.0050	723	523	CNO	5.6	1.065	CNO
MW-1 DEEP Dissolved	12/14/11	Dissolved	4.3	<0.50	<0.50	17.3	-	2.3	226000	<0.50	1.3	<50.0	0.12	19600	5.7	<0.20	0.66	1440	8.7	<0.50	9860	<0.10	<0.10	380											
MW-2 SHALLOW	DEPTH: NA																																	
Field Sample ID	**Date Collected**	**Fraction**	**Aluminum**	**Antimony**	**Arsenic**	**Barium**	**Beryllium**	**Cadmium**	**Calcium**	**Chromium**	**Copper**	**Iron**	**Lead**	**Magnesium**	**Manganese**	**Mercury**	**Nickel**	**Potassium**	**Selenium**	**Silver**	**Sodium**	**Thallium**	**Vanadium**	**Zinc**	**Alkalinity**	**Hardness (µg/L as CaCO3)**	**TDS**	**TSS**	**Cyanide**	**Salinity**	**Sulfate**	**pH**	**Temperature (°C)**	**Conductivity (mS/cm)**	**Dissolved Oxygen (ppm)**
MW-2 SHALLOW	12/14/11	Total																																
MW-2 SHALLOW Dissolved	12/14/11	Dissolved																			**WELL WAS DRY**													
MW-2 DEEP	DEPTH: 10.16'																																	
Field Sample ID	**Date Collected**	**Fraction**	**Aluminum**	**Antimony**	**Arsenic**	**Barium**	**Beryllium**	**Cadmium**	**Calcium**	**Chromium**	**Copper**	**Iron**	**Lead**	**Magnesium**	**Manganese**	**Mercury**	**Nickel**	**Potassium**	**Selenium**	**Silver**	**Sodium**	**Thallium**	**Vanadium**	**Zinc**	**Alkalinity**	**Hardness (µg/L as CaCO3)**	**TDS**	**TSS**	**Cyanide**	**Salinity**	**Sulfate**	**pH**	**Temperature (°C)**	**Conductivity (mS/cm)**	**Dissolved Oxygen (ppm)**
MW-2 DEEP	12/14/11	Total	936	<0.50	0.81	24.8	<0.20	1.4	225000	1.9	3.6	1350	6.8	20600	33.2	<0.20	0.81	2140	1.5	<0.50	10400	<0.10	1.3	36.1	90.0	645000	924	<5.0	0.0051	696	572	CNO	15.4	1.026	CNO
MW-2 DEEP Dissolved	12/14/11	Dissolved	7.9	<0.50	<0.50	13.9	-	1.3	239000	<0.50	1.2	<50.0	<0.10	20100	8.9	<0.20	0.66	1910	1.4	<0.50	9680	<0.10	<0.10	22.4											
MW-3 SHALLOW	DEPTH: NA																																	
Field Sample ID	**Date Collected**	**Fraction**	**Aluminum**	**Antimony**	**Arsenic**	**Barium**	**Beryllium**	**Cadmium**	**Calcium**	**Chromium**	**Copper**	**Iron**	**Lead**	**Magnesium**	**Manganese**	**Mercury**	**Nickel**	**Potassium**	**Selenium**	**Silver**	**Sodium**	**Thallium**	**Vanadium**	**Zinc**	**Alkalinity**	**Hardness (µg/L as CaCO3)**	**TDS**	**TSS**	**Cyanide**	**Salinity**	**Sulfate**	**pH**	**Temperature (°C)**	**Conductivity (mS/cm)**	**Dissolved Oxygen (ppm)**
MW-3 SHALLOW	12/14/11	Total																																
MW-3 SHALLOW Dissolved	12/14/11	Dissolved																			**WELL WAS DRY**													
MW-3 DEEP	DEPTH: 10.37'																																	
Field Sample ID	**Date Collected**	**Fraction**	**Aluminum**	**Antimony**	**Arsenic**	**Barium**	**Beryllium**	**Cadmium**	**Calcium**	**Chromium**	**Copper**	**Iron**	**Lead**	**Magnesium**	**Manganese**	**Mercury**	**Nickel**	**Potassium**	**Selenium**	**Silver**	**Sodium**	**Thallium**	**Vanadium**	**Zinc**	**Alkalinity**	**Hardness (µg/L as CaCO3)**	**TDS**	**TSS**	**Cyanide**	**Salinity**	**Sulfate**	**pH**	**Temperature (°C)**	**Conductivity (mS/cm)**	**Dissolved Oxygen (ppm)**
MW-3 DEEP	12/14/11	Total	790	-	7.2	31.1	-	0.49	235000	1.7	4.8	22100	7.8	23000	1410	<0.20	0.90	2440	<0.50	<0.50	10900	<0.10	1.9	134	92.0	681000	953	83.0	<0.0050	755	589	7.1	14.2	1.083	CNO
MW-3 DEEP Dissolved	12/14/11	Dissolved	6.9	-	0.54	18.0	-	<0.080	248000	<0.50	0.55	895	<0.10	23900	1450	<0.20	<0.50	2230	<0.50	<0.50	10100	<0.10	<0.10	37.5											
MW-4 SHALLOW	DEPTH: 16.95'																																	
Field Sample ID	**Date Collected**	**Fraction**	**Aluminum**	**Antimony**	**Arsenic**	**Barium**	**Beryllium**	**Cadmium**	**Calcium**	**Chromium**	**Copper**	**Iron**	**Lead**	**Magnesium**	**Manganese**	**Mercury**	**Nickel**	**Potassium**	**Selenium**	**Silver**	**Sodium**	**Thallium**	**Vanadium**	**Zinc**	**Alkalinity**	**Hardness (µg/L as CaCO3)**	**TDS**	**TSS**	**Cyanide**	**Salinity**	**Sulfate**	**pH**	**Temperature (°C)**	**Conductivity (mS/cm)**	**Dissolved Oxygen (ppm)**
MW-4 SHALLOW	12/14/11	Total	26600	-	18.1	620	-	3.0	283000	24.5	130	30900	121	35900	5860	<0.20	25.9	9730	9.3	2.8	15800	0.59	34.0	436	366	855000	921	1750	<0.0050	950	382	6.8	7.6	1.320	CNO
MW-4 SHALLOW Dissolved	12/14/11	Dissolved	16.7	-	0.56	103	-	0.77	256000	0.58	1.7	58.7	0.40	27900	4880	<0.20	6.3	5580	6.4	<0.50	16700	<0.10	0.17	77.8											
MW-4 DEEP	DEPTH: 16.88'																																	
Field Sample ID	**Date Collected**	**Fraction**	**Aluminum**	**Antimony**	**Arsenic**	**Barium**	**Beryllium**	**Cadmium**	**Calcium**	**Chromium**	**Copper**	**Iron**	**Lead**	**Magnesium**	**Manganese**	**Mercury**	**Nickel**	**Potassium**	**Selenium**	**Silver**	**Sodium**	**Thallium**	**Vanadium**	**Zinc**	**Alkalinity**	**Hardness (µg/L as CaCO3)**	**TDS**	**TSS**	**Cyanide**	**Salinity**	**Sulfate**	**pH**	**Temperature (°C)**	**Conductivity (mS/cm)**	**Dissolved Oxygen (ppm)**
MW-4 DEEP	12/14/11	Total	575	-	1.0	24.0	-	2.5	234000	1.1	7.5	934	5.0	35000	143	<0.20	1.4	2540	23.3	<0.50	5320	<0.10	1.1	367	412	728000	1100	14.0	0.0065	901	441	6.7	6.7	1.450	CNO
MW-4 DEEP Dissolved	12/14/11	Dissolved	55.3	-	<0.50	20.2	-	2.8	326000	<0.50	4.8	<50.0	<0.10	36300	77.5	<0.20	1.2	2540	23.6	<0.50	5880	<0.10	<0.10	405											
MW-5 SHALLOW	DEPTH: 16.19'																																	
Field Sample ID	**Date Collected**	**Fraction**	**Aluminum**	**Antimony**	**Arsenic**	**Barium**	**Beryllium**	**Cadmium**	**Calcium**	**Chromium**	**Copper**	**Iron**	**Lead**	**Magnesium**	**Manganese**	**Mercury**	**Nickel**	**Potassium**	**Selenium**	**Silver**	**Sodium**	**Thallium**	**Vanadium**	**Zinc**	**Alkalinity**	**Hardness (µg/L as CaCO3)**	**TDS**	**TSS**	**Cyanide**	**Salinity**	**Sulfate**	**pH**	**Temperature (°C)**	**Conductivity (mS/cm)**	**Dissolved Oxygen (ppm)**
MW-5 SHALLOW	12/14/11	Total	1880	-	53.7	41.8	-	7.4	343000	1.0	1.9	103000	36.8	25100	12700	<0.20	53.7	5120	1.5	<0.50	5470	0.27	0.96	11400	<20.0	961000	2440	61.0	<0.0050	1430	1620	5.7	8.8	2.260	CNO
MW-5 SHALLOW Dissolved	12/14/11	Dissolved	1140	-	47.6	23.8	-	6.4	384000	0.50	0.54	103000	18.2	26500	12200	<0.20	56.9	5000	1.2	<0.50	5290	0.25	<0.10	10800											
MW-5 DEEP	DEPTH: 17.33'																																	
Field Sample ID	**Date Collected**	**Fraction**	**Aluminum**	**Antimony**	**Arsenic**	**Barium**	**Beryllium**	**Cadmium**	**Calcium**	**Chromium**	**Copper**	**Iron**	**Lead**	**Magnesium**	**Manganese**	**Mercury**	**Nickel**	**Potassium**	**Selenium**	**Silver**	**Sodium**	**Thallium**	**Vanadium**	**Zinc**	**Alkalinity**	**Hardness (µg/L as CaCO3)**	**TDS**	**TSS**	**Cyanide**	**Salinity**	**Sulfate**	**pH**	**Temperature (°C)**	**Conductivity (mS/cm)**	**Dissolved Oxygen (ppm)**
MW-5 DEEP	12/14/11	Total	1290	-	166	21.9	-	<0.080	382000	0.79	1.4	136000	11.1	73400	15100	<0.20	20.1	9180	<0.50	<0.50	8920	<0.10	0.10	18500	<20.0	1260000	2180	40.0	<0.0050	1420	1410	6.4	10.0	2.130	CNO
MW-5 DEEP Dissolved	12/14/11	Dissolved	1280	-	170	23.2	-	<0.080	393000	0.50	<0.50	138000	0.13	73000	15600	<0.20	19.9	9360	<0.50	<0.50	8990	<0.10	<0.10	19200											
MW-6 SHALLOW	DEPTH: 23.23'																																	
Field Sample ID	**Date Collected**	**Fraction**	**Aluminum**	**Antimony**	**Arsenic**	**Barium**	**Beryllium**	**Cadmium**	**Calcium**	**Chromium**	**Copper**	**Iron**	**Lead**	**Magnesium**	**Manganese**	**Mercury**	**Nickel**	**Potassium**	**Selenium**	**Silver**	**Sodium**	**Thallium**	**Vanadium**	**Zinc**	**Alkalinity**	**Hardness (µg/L as CaCO3)**	**TDS**	**TSS**	**Cyanide**	**Salinity**	**Sulfate**	**pH**	**Temperature (°C)**	**Conductivity (mS/cm)**	**Dissolved Oxygen (ppm)**
MW-6 SHALLOW	12/14/11	Total	19000	-	72.6	212	-	3.7	397000	12.1	46.6	80700	77.2	62600	7070	<0.20	11.3	16600	2.3	0.53	4870	0.45	20.5	1440	64.0	1250000	1920	2220	<0.0050	1240	532	6.4	13.5	1.975	CNO
MW-6 SHALLOW Dissolved	12/14/11	Dissolved	1100	-	47.1	20.1	-	<0.080	410000	<0.50	<0.50	62800	0.13	59000	7200	<0.20	3.3	12600	<0.50	<0.50	4040	<0.10	<0.10	893											
MW-6 DEEP	DEPTH: 23.16'																																	
Field Sample ID	**Date Collected**	**Fraction**	**Aluminum**	**Antimony**	**Arsenic**	**Barium**	**Beryllium**	**Cadmium**	**Calcium**	**Chromium**	**Copper**	**Iron**	**Lead**	**Magnesium**	**Manganese**	**Mercury**	**Nickel**	**Potassium**	**Selenium**	**Silver**	**Sodium**	**Thallium**	**Vanadium**	**Zinc**	**Alkalinity**	**Hardness (µg/L as CaCO3)**	**TDS**	**TSS**	**Cyanide**	**Salinity**	**Sulfate**	**pH**	**Temperature (°C)**	**Conductivity (mS/cm)**	**Dissolved Oxygen (ppm)**
MW-6 DEEP	12/14/11	Total	586	-	18.0	22.6	-	0.16	267000	1.1	1.8	21000	5.0	38800	9500	<0.20	2.1	7150	<0.50	<0.50	5790	<0.10	0.23	309	152	826000	1200	40.0	<0.0050	912	630	6.6	15.4	1.270	CNO
MW-6 DEEP Dissolved	12/14/11	Dissolved	474	-	17.3	22.1	-	<0.080	274000	<0.50	0.84	20200	<0.10	38700	9820	<0.20	1.9	7130	<0.50	<0.50	5700	<0.10	<0.10	289											

ANDERSON
ENGINEERING COMPANY INC.

Appendix C

Project Narrative and Laboratory Analytical Reports

Pace Analytical Services, Inc.
9608 Loiret Blvd.
Lenexa, KS 66219
(913)599-5665

January 09, 2012

Mark DeFriez
Anderson Engineering Company I
977 W 2100 S.
Salt Lake City, UT 84119

RE: Project: RICO WATER SAMPLING DEC 2011
Pace Project No.: 60112290

Dear Mark DeFriez:
Enclosed are the analytical results for sample(s) received by the laboratory on December 16, 2011. The results relate only to the samples included in this report. Results reported herein conform to the most current TNI standards and the laboratory's Quality Assurance Manual, where applicable, unless otherwise noted in the body of the report.

If you have any questions concerning this report, please feel free to contact me.

Sincerely,

Heather M. Wilson

Heather Wilson for
Colleen Clyne
colleen.clyne@pacelabs.com
Project Manager

Enclosures

This report shall not be reproduced, except in full,
without the written consent of Pace Analytical Services, Inc..

Pace Analytical Services, Inc.
9608 Loiret Blvd.
Lenexa, KS 66219
(913)599-5665

CERTIFICATIONS

Project: RICO WATER SAMPLING DEC 2011
Pace Project No.: 60112290

Minnesota Certification IDs
1700 Elm Street SE Suite 200, Minneapolis, MN 55414
A2LA Certification #: 2926.01
Alaska Certification #: UST-078
Alaska Certification #MN00064
Arizona Certification #: AZ-0014
Arkansas Certification #: 88-0680
California Certification #: 01155CA
EPA Region 8 Certification #: Pace
Florida/NELAP Certification #: E87605
Georgia Certification #: 959
Idaho Certification #: MN00064
Illinois Certification #: 200011
Iowa Certification #: 368
Kansas Certification #: E-10167
Louisiana Certification #: 03086
Louisiana Certification #: LA080009
Maine Certification #: 2007029
Maryland Certification #: 322
Michigan DEQ Certification #: 9909
Minnesota Certification #: 027-053-137
Mississippi Certification #: Pace
Montana Certification #: MT CERT0092
Nebraska Certification #: Pace
Nevada Certification #: MN_00064
New Jersey Certification #: MN-002
New Mexico Certification #: Pace
New York Certification #: 11647
North Carolina Certification #: 530
North Dakota Certification #: R-036
North Dakota Certification #: R-036A
Ohio VAP Certification #: CL101
Oklahoma Certification #: D9921
Oklahoma Certification #: 9507
Oregon Certification #: MN200001
Pennsylvania Certification #: 68-00563
Puerto Rico Certification
Tennessee Certification #: 02818
Texas Certification #: T104704192
Washington Certification #: C754
Wisconsin Certification #: 999407970

Montana Certification IDs
602 South 25th Street, Billings, MT 59101
EPA Region 8 Certification #: 8TMS-Q
Idaho Certification #: MT00012
Montana Certification #: MT CERT0040
NVLAP Certification #: 101292-0
Minnesota Dept of Health Certification #: 030-999-442

Kansas Certification IDs
9608 Loiret Boulevard, Lenexa, KS 66219
A2LA Certification #: 2456.01
Arkansas Certification #: 05-008-0
Illinois Certification #: 001191
Iowa Certification #: 118
Kansas/NELAP Certification #: E-10116
Louisiana Certification #: 03055
Nevada Certification #: KS000212008A
Oklahoma Certification #: 9205/9935
Texas Certification #: T104704407-08-TX
Utah Certification #: 9135995665

This report shall not be reproduced, except in full,
without the written consent of Pace Analytical Services, Inc..

Pace Analytical Services, Inc.
9608 Loiret Blvd.
Lenexa, KS 66219
(913)599-5665

SAMPLE SUMMARY

Project: RICO WATER SAMPLING DEC 2011
Pace Project No.: 60112290

Lab ID	Sample ID	Matrix	Date Collected	Date Received
60112290001	**DR-1**	Water	12/13/11 08:00	12/16/11 09:00
60112290002	**DR-2**	Water	12/13/11 08:00	12/16/11 09:00
60112290003	**DR-3**	Water	12/13/11 08:00	12/16/11 09:00
60112290004	**DR-4**	Water	12/13/11 08:00	12/16/11 09:00
60112290005	**DR-5**	Water	12/13/11 08:00	12/16/11 09:00
60112290006	**DR-6**	Water	12/13/11 08:00	12/16/11 09:00
60112290007	**DR-7**	Water	12/13/11 08:00	12/16/11 09:00
60112290008	**DR-8**	Water	12/13/11 08:00	12/16/11 09:00
60112290009	**DR-4-SW**	Water	12/13/11 08:00	12/16/11 09:00
60112290010	**DR-G**	Water	12/13/11 08:00	12/16/11 09:00
60112290011	**FB**	Water	12/13/11 08:00	12/16/11 09:00
60112290012	**GW-3**	Water	12/14/11 08:00	12/16/11 09:00
60112290013	**GW-4**	Water	12/14/11 08:00	12/16/11 09:00
60112290014	**GW-5**	Water	12/14/11 08:00	12/16/11 09:00
60112290015	**GW-7**	Water	12/14/11 08:00	12/16/11 09:00
60112290016	**EB-1**	Water	12/14/11 08:00	12/16/11 09:00
60112290017	**EB-2**	Water	12/14/11 08:00	12/16/11 09:00
60112290018	**MW-4 SHALLOW**	Water	12/14/11 08:00	12/16/11 09:00
60112290019	**MW-4 DEEP**	Water	12/14/11 08:00	12/16/11 09:00
60112290020	**MW-5 SHALLOW**	Water	12/14/11 08:00	12/16/11 09:00
60112290021	**MW-5 DEEP**	Water	12/14/11 08:00	12/16/11 09:00
60112290022	**MW-6 SHALLOW**	Water	12/14/11 08:00	12/16/11 09:00
60112290023	**MW-6 DEEP**	Water	12/14/11 08:00	12/16/11 09:00
60112290024	**MW-3 DEEP**	Water	12/14/11 08:00	12/16/11 09:00

This report shall not be reproduced, except in full,
without the written consent of Pace Analytical Services, Inc..

Pace Analytical Services, Inc.
9608 Loiret Blvd.
Lenexa, KS 66219
(913)599-5665

SAMPLE ANALYTE COUNT

Project: RICO WATER SAMPLING DEC 2011
Pace Project No.: 60112290

Lab ID	Sample ID	Method	Analysts	Analytes Reported	Laboratory
60112290001	**DR-1**	EPA 200.8	RJS	20	PASI-M
		EPA 200.8	RJS	19	PASI-M
		EPA 245.1	TEM	1	PASI-M
		EPA 245.1	TEM	1	PASI-M
		SM 2510B	DW2	1	
		Calculated	DW2	2	
		SM 2320B	AJM	3	PASI-K
		SM 2540C	BGM	1	PASI-K
		SM 2540D	BGM	1	PASI-K
		SM 4500-H+B	OL	1	PASI-K
		EPA 300.0	JML	1	PASI-K
		SM 4500-CN-E	SRM1	1	PASI-K
60112290002	**DR-2**	EPA 200.8	RJS	20	PASI-M
		EPA 200.8	RJS	19	PASI-M
		EPA 245.1	TEM	1	PASI-M
		EPA 245.1	TEM	1	PASI-M
		SM 2510B	DW2	1	
		Calculated	DW2	2	
		SM 2320B	AJM	3	PASI-K
		SM 2540C	BGM	1	PASI-K
		SM 2540D	BGM	1	PASI-K
		SM 4500-H+B	OL	1	PASI-K
		EPA 300.0	JML	1	PASI-K
		SM 4500-CN-E	SRM1	1	PASI-K
60112290003	**DR-3**	EPA 200.8	RJS	20	PASI-M
		EPA 200.8	RJS	19	PASI-M
		EPA 245.1	TEM	1	PASI-M
		EPA 245.1	TEM	1	PASI-M
		SM 2510B	DW2	1	
		Calculated	DW2	2	
		SM 2320B	AJM	3	PASI-K
		SM 2540C	BGM	1	PASI-K
		SM 2540D	BGM	1	PASI-K
		SM 4500-H+B	OL	1	PASI-K
		EPA 300.0	JML	1	PASI-K
		SM 4500-CN-E	SRM1	1	PASI-K
60112290004	**DR-4**	EPA 200.8	RJS	20	PASI-M

This report shall not be reproduced, except in full,
without the written consent of Pace Analytical Services, Inc..

Pace Analytical Services, Inc.
9608 Loiret Blvd.
Lenexa, KS 66219
(913)599-5665

SAMPLE ANALYTE COUNT

Project: RICO WATER SAMPLING DEC 2011
Pace Project No.: 60112290

Lab ID	Sample ID	Method	Analysts	Analytes Reported	Laboratory
		EPA 200.8	RJS	19	PASI-M
		EPA 245.1	TEM	1	PASI-M
		EPA 245.1	TEM	1	PASI-M
		SM 2510B	DW2	1	
		Calculated	DW2	2	
		SM 2320B	AJM	3	PASI-K
		SM 2540C	BGM	1	PASI-K
		SM 2540D	BGM	1	PASI-K
		SM 4500-H+B	OL	1	PASI-K
		EPA 300.0	JML	1	PASI-K
		SM 4500-CN-E	SRM1	1	PASI-K
60112290005	**DR-5**	EPA 200.8	RJS	20	PASI-M
		EPA 200.8	RJS	19	PASI-M
		EPA 245.1	TEM	1	PASI-M
		EPA 245.1	TEM	1	PASI-M
		SM 2510B	DW2	1	
		Calculated	DW2	2	
		SM 2320B	AJM	3	PASI-K
		SM 2540C	BGM	1	PASI-K
		SM 2540D	BGM	1	PASI-K
		SM 4500-H+B	OL	1	PASI-K
		EPA 300.0	JML	1	PASI-K
		SM 4500-CN-E	SRM1	1	PASI-K
60112290006	**DR-6**	EPA 200.8	RJS	20	PASI-M
		EPA 200.8	RJS	19	PASI-M
		EPA 245.1	TEM	1	PASI-M
		EPA 245.1	TEM	1	PASI-M
		SM 2510B	DW2	1	
		Calculated	DW2	2	
		SM 2320B	AJM	3	PASI-K
		SM 2540C	BGM	1	PASI-K
		SM 2540D	BGM	1	PASI-K
		SM 4500-H+B	OL	1	PASI-K
		EPA 300.0	JML	1	PASI-K
		SM 4500-CN-E	SRM1	1	PASI-K
60112290007	**DR-7**	EPA 200.8	RJS	20	PASI-M
		EPA 200.8	RJS	19	PASI-M

This report shall not be reproduced, except in full,
without the written consent of Pace Analytical Services, Inc..

Pace Analytical Services, Inc.
9608 Loiret Blvd.
Lenexa, KS 66219
(913)599-5665

SAMPLE ANALYTE COUNT

Project: RICO WATER SAMPLING DEC 2011
Pace Project No.: 60112290

Lab ID	Sample ID	Method	Analysts	Analytes Reported	Laboratory
		EPA 245.1	TEM	1	PASI-M
		EPA 245.1	TEM	1	PASI-M
		SM 2510B	DW2	1	
		Calculated	DW2	2	
		SM 2320B	AJM	3	PASI-K
		SM 2540C	BGM	1	PASI-K
		SM 2540D	BGM	1	PASI-K
		SM 4500-H+B	OL	1	PASI-K
		EPA 300.0	JML	1	PASI-K
		SM 4500-CN-E	SRM1	1	PASI-K
60112290008	**DR-8**	EPA 200.8	RJS	20	PASI-M
		EPA 200.8	RJS	19	PASI-M
		EPA 245.1	TEM	1	PASI-M
		EPA 245.1	TEM	1	PASI-M
		SM 2510B	DW2	1	
		Calculated	DW2	2	
		SM 2320B	AJM	3	PASI-K
		SM 2540C	BGM	1	PASI-K
		SM 2540D	BGM	1	PASI-K
		SM 4500-H+B	OL	1	PASI-K
		EPA 300.0	JML	1	PASI-K
		SM 4500-CN-E	SRM1	1	PASI-K
60112290009	**DR-4-SW**	EPA 200.8	RJS	20	PASI-M
		EPA 200.8	RJS	19	PASI-M
		EPA 245.1	TEM	1	PASI-M
		EPA 245.1	TEM	1	PASI-M
		SM 2510B	DW2	1	
		Calculated	DW2	2	
		SM 2320B	AJM	3	PASI-K
		SM 2540C	BGM	1	PASI-K
		SM 2540D	BGM	1	PASI-K
		SM 4500-H+B	OL	1	PASI-K
		EPA 300.0	JML	1	PASI-K
		SM 4500-CN-E	SRM1	1	PASI-K
60112290010	**DR-G**	EPA 200.8	RJS	20	PASI-M
		EPA 200.8	RJS	19	PASI-M
		EPA 245.1	TEM	1	PASI-M

This report shall not be reproduced, except in full,
without the written consent of Pace Analytical Services, Inc..

Pace Analytical Services, Inc.
9608 Loiret Blvd.
Lenexa, KS 66219
(913)599-5665

SAMPLE ANALYTE COUNT

Project: RICO WATER SAMPLING DEC 2011
Pace Project No.: 60112290

Lab ID	Sample ID	Method	Analysts	Analytes Reported	Laboratory
		EPA 245.1	TEM	1	PASI-M
		SM 2510B	DW2	1	
		Calculated	DW2	2	
		SM 2320B	AJM	3	PASI-K
		SM 2540C	BGM	1	PASI-K
		SM 2540D	BGM	1	PASI-K
		SM 4500-H+B	OL	1	PASI-K
		EPA 300.0	JML	1	PASI-K
		SM 4500-CN-E	SRM1	1	PASI-K
60112290011	**FB**	EPA 200.8	RJS	20	PASI-M
		EPA 200.8	RJS	19	PASI-M
		EPA 245.1	TEM	1	PASI-M
		EPA 245.1	TEM	1	PASI-M
		SM 2510B	DW2	1	
		Calculated	DW2	2	
		SM 2320B	AJM	3	PASI-K
		SM 2540C	BGM	1	PASI-K
		SM 2540D	BGM	1	PASI-K
		SM 4500-H+B	OL	1	PASI-K
		EPA 300.0	JML	1	PASI-K
		SM 4500-CN-E	SRM1	1	PASI-K
60112290012	**GW-3**	EPA 200.8	RJS	20	PASI-M
		EPA 200.8	RJS	19	PASI-M
		EPA 245.1	TEM	1	PASI-M
		EPA 245.1	TEM	1	PASI-M
		SM 2510B	DW2	1	
		Calculated	DW2	2	
		SM 2320B	AJM	3	PASI-K
		SM 2540C	BGM	1	PASI-K
		SM 2540D	BGM	1	PASI-K
		SM 4500-H+B	OL	1	PASI-K
		EPA 300.0	JML	1	PASI-K
		SM 4500-CN-E	SRM1	1	PASI-K
60112290013	**GW-4**	EPA 200.8	RJS	20	PASI-M
		EPA 200.8	RJS	19	PASI-M
		EPA 245.1	TEM	1	PASI-M
		EPA 245.1	TEM	1	PASI-M

This report shall not be reproduced, except in full,
without the written consent of Pace Analytical Services, Inc..

Pace Analytical Services, Inc.
9608 Loiret Blvd.
Lenexa, KS 66219
(913)599-5665

SAMPLE ANALYTE COUNT

Project: RICO WATER SAMPLING DEC 2011
Pace Project No.: 60112290

Lab ID	Sample ID	Method	Analysts	Analytes Reported	Laboratory
		SM 2510B	DW2	1	
		Calculated	DW2	2	
		SM 2320B	AJM	3	PASI-K
		SM 2540C	BGM	1	PASI-K
		SM 2540D	BGM	1	PASI-K
		SM 4500-H+B	OL	1	PASI-K
		EPA 300.0	JML	1	PASI-K
		SM 4500-CN-E	SRM1	1	PASI-K
60112290014	**GW-5**	EPA 200.8	RJS	20	PASI-M
		EPA 200.8	RJS	19	PASI-M
		EPA 245.1	TEM	1	PASI-M
		EPA 245.1	TEM	1	PASI-M
		SM 2510B	DW2	1	
		Calculated	DW2	2	
		SM 2320B	AJM	3	PASI-K
		SM 2540C	BGM	1	PASI-K
		SM 2540D	BGM	1	PASI-K
		SM 4500-H+B	OL	1	PASI-K
		EPA 300.0	JML	1	PASI-K
		SM 4500-CN-E	SRM1	1	PASI-K
60112290015	**GW-7**	EPA 200.8	RJS	20	PASI-M
		EPA 200.8	RJS	19	PASI-M
		EPA 245.1	TEM	1	PASI-M
		EPA 245.1	TEM	1	PASI-M
		SM 2510B	DW2	1	
		Calculated	DW2	2	
		SM 2320B	AJM	3	PASI-K
		SM 2540C	BGM	1	PASI-K
		SM 2540D	BGM	1	PASI-K
		SM 4500-H+B	OL	1	PASI-K
		EPA 300.0	JML	1	PASI-K
		SM 4500-CN-E	SRM1	1	PASI-K
60112290016	**EB-1**	EPA 200.8	RJS	20	PASI-M
		EPA 200.8	RJS	19	PASI-M
		EPA 245.1	TEM	1	PASI-M
		EPA 245.1	TEM	1	PASI-M
		SM 2510B	DW2	1	

This report shall not be reproduced, except in full,
without the written consent of Pace Analytical Services, Inc..

Pace Analytical Services, Inc.
9608 Loiret Blvd.
Lenexa, KS 66219
(913)599-5665

SAMPLE ANALYTE COUNT

Project: RICO WATER SAMPLING DEC 2011
Pace Project No.: 60112290

Lab ID	Sample ID	Method	Analysts	Analytes Reported	Laboratory
		Calculated	DW2	2	
		SM 2320B	AJM	3	PASI-K
		SM 2540C	BGM	1	PASI-K
		SM 2540D	BGM	1	PASI-K
		SM 4500-H+B	OL	1	PASI-K
		EPA 300.0	JML	1	PASI-K
		SM 4500-CN-E	SRM1	1	PASI-K
60112290017	**EB-2**	EPA 200.8	RJS	20	PASI-M
		EPA 200.8	RJS	19	PASI-M
		EPA 245.1	TEM	1	PASI-M
		EPA 245.1	TEM	1	PASI-M
		SM 2510B	DW2	1	
		Calculated	DW2	2	
		SM 2320B	AJM	3	PASI-K
		SM 2540C	BGM	1	PASI-K
		SM 2540D	BGM	1	PASI-K
		SM 4500-H+B	OL	1	PASI-K
		EPA 300.0	JML	1	PASI-K
		SM 4500-CN-E	SRM1	1	PASI-K
60112290018	**MW-4 SHALLOW**	EPA 200.8	RJS	20	PASI-M
		EPA 200.8	RJS	19	PASI-M
		EPA 245.1	TEM	1	PASI-M
		EPA 245.1	TEM	1	PASI-M
		SM 2510B	DW2	1	
		Calculated	DW2	2	
		SM 2320B	AJM	3	PASI-K
		SM 2540C	BGM	1	PASI-K
		SM 2540D	BGM	1	PASI-K
		SM 4500-H+B	OL	1	PASI-K
		EPA 300.0	JML	1	PASI-K
		SM 4500-CN-E	SRM1	1	PASI-K
60112290019	**MW-4 DEEP**	EPA 200.8	RJS	20	PASI-M
		EPA 200.8	RJS	19	PASI-M
		EPA 245.1	TEM	1	PASI-M
		EPA 245.1	TEM	1	PASI-M
		SM 2510B	DW2	1	
		Calculated	DW2	2	

This report shall not be reproduced, except in full,
without the written consent of Pace Analytical Services, Inc..

Pace Analytical Services, Inc.
9608 Loiret Blvd.
Lenexa, KS 66219
(913)599-5665

SAMPLE ANALYTE COUNT

Project: RICO WATER SAMPLING DEC 2011
Pace Project No.: 60112290

Lab ID	Sample ID	Method	Analysts	Analytes Reported	Laboratory
		SM 2320B	AJM	3	PASI-K
		SM 2540C	BGM	1	PASI-K
		SM 2540D	BGM	1	PASI-K
		SM 4500-H+B	OL	1	PASI-K
		EPA 300.0	JML	1	PASI-K
		SM 4500-CN-E	SRM1	1	PASI-K
60112290020	**MW-5 SHALLOW**	EPA 200.8	RJS	20	PASI-M
		EPA 200.8	RJS	19	PASI-M
		EPA 245.1	TEM	1	PASI-M
		EPA 245.1	TEM	1	PASI-M
		SM 2510B	DW2	1	
		Calculated	DW2	2	
		SM 2320B	AJM	3	PASI-K
		SM 2540C	BGM	1	PASI-K
		SM 2540D	BGM	1	PASI-K
		SM 4500-H+B	OL	1	PASI-K
		EPA 300.0	JML	1	PASI-K
		SM 4500-CN-E	SRM1	1	PASI-K
60112290021	**MW-5 DEEP**	EPA 200.8	RJS	20	PASI-M
		EPA 200.8	RJS	19	PASI-M
		EPA 245.1	TEM	1	PASI-M
		EPA 245.1	TEM	1	PASI-M
		SM 2510B	SR1	1	
		Calculated	SR1	2	
		SM 2320B	AJM	3	PASI-K
		SM 2540C	BGM	1	PASI-K
		SM 2540D	BGM	1	PASI-K
		SM 4500-H+B	OL	1	PASI-K
		EPA 300.0	JML	1	PASI-K
		SM 4500-CN-E	SRM1	1	PASI-K
60112290022	**MW-6 SHALLOW**	EPA 200.8	RJS	20	PASI-M
		EPA 200.8	RJS	19	PASI-M
		EPA 245.1	TEM	1	PASI-M
		EPA 245.1	TEM	1	PASI-M
		SM 2510B	SR1	1	
		Calculated	SR1	2	
		SM 2320B	AJM	3	PASI-K

This report shall not be reproduced, except in full,
without the written consent of Pace Analytical Services, Inc..

Pace Analytical Services, Inc.
9608 Loiret Blvd.
Lenexa, KS 66219
(913)599-5665

SAMPLE ANALYTE COUNT

Project: RICO WATER SAMPLING DEC 2011
Pace Project No.: 60112290

Lab ID	Sample ID	Method	Analysts	Analytes Reported	Laboratory
		SM 2540C	BGM	1	PASI-K
		SM 2540D	BGM	1	PASI-K
		SM 4500-H+B	OL	1	PASI-K
		EPA 300.0	JML	1	PASI-K
		SM 4500-CN-E	SRM1	1	PASI-K
60112290023	**MW-6 DEEP**	EPA 200.8	RJS	20	PASI-M
		EPA 200.8	RJS	19	PASI-M
		EPA 245.1	TEM	1	PASI-M
		EPA 245.1	TEM	1	PASI-M
		SM 2510B	SR1	1	
		Calculated	SR1	2	
		SM 2320B	AJM	3	PASI-K
		SM 2540C	BGM	1	PASI-K
		SM 2540D	BGM	1	PASI-K
		SM 4500-H+B	OL	1	PASI-K
		EPA 300.0	JML	1	PASI-K
		SM 4500-CN-E	SRM1	1	PASI-K
60112290024	**MW-3 DEEP**	EPA 200.8	RJS	20	PASI-M
		EPA 200.8	RJS	19	PASI-M
		EPA 245.1	TEM	1	PASI-M
		EPA 245.1	TEM	1	PASI-M
		SM 2510B	SR1	1	
		Calculated	SR1	2	
		SM 2320B	AJM	3	PASI-K
		SM 2540C	BGM	1	PASI-K
		SM 2540D	BGM	1	PASI-K
		SM 4500-H+B	OL	1	PASI-K
		EPA 300.0	JML	1	PASI-K
		SM 4500-CN-E	SRM1	1	PASI-K

This report shall not be reproduced, except in full,
without the written consent of Pace Analytical Services, Inc..

Pace Analytical Services, Inc.
9608 Loiret Blvd.
Lenexa, KS 66219
(913)599-5665

PROJECT NARRATIVE

Project: RICO WATER SAMPLING DEC 2011
Pace Project No.: 60112290

Method: **EPA 200.8**
Description: 200.8 MET ICPMS
Client: BP Anderson Engineering Company Inc.
Date: January 09, 2012

General Information:
24 samples were analyzed for EPA 200.8. All samples were received in acceptable condition with any exceptions noted below.

Hold Time:
The samples were analyzed within the method required hold times with any exceptions noted below.

Initial Calibrations (including MS Tune as applicable):
All criteria were within method requirements with any exceptions noted below.

Continuing Calibration:
All criteria were within method requirements with any exceptions noted below.

QC Batch: ICPM/30353

CH: The continuing calibration for this compound is outside of Pace Analytical acceptance limits. The results may be biased high.

- BLANK (Lab ID: 1118735)
  - Iron
- DR-1 (Lab ID: 60112290001)
  - Iron
- DR-2 (Lab ID: 60112290002)
  - Iron

QC Batch: ICPM/30378

CH: The continuing calibration for this compound is outside of Pace Analytical acceptance limits. The results may be biased high.

- MS (Lab ID: 1120038)
  - Silver
- MSD (Lab ID: 1120039)
  - Silver
- MW-3 DEEP (Lab ID: 60112290024)
  - Silver
- MW-5 DEEP (Lab ID: 60112290021)
  - Silver
- MW-6 DEEP (Lab ID: 60112290023)
  - Silver

Internal Standards:
All internal standards were within QC limits with any exceptions noted below.

Method Blank:
All analytes were below the report limit in the method blank with any exceptions noted below.

Laboratory Control Spike:
All laboratory control spike compounds were within QC limits with any exceptions noted below.

Matrix Spikes:
All percent recoveries and relative percent differences (RPDs) were within acceptance criteria with any exceptions noted below.

This report shall not be reproduced, except in full,
without the written consent of Pace Analytical Services, Inc..

Pace Analytical Services, Inc.
9608 Loiret Blvd.
Lenexa, KS 66219
(913)599-5665

PROJECT NARRATIVE

Project: RICO WATER SAMPLING DEC 2011
Pace Project No.: 60112290

Method: **EPA 200.8**
Description: 200.8 MET ICPMS
Client: BP Anderson Engineering Company Inc.
Date: January 09, 2012

QC Batch: ICPM/30378

A matrix spike and matrix spike duplicate (MS/MSD) were performed on the following sample(s): 10178932001,10179022001

M1: Matrix spike recovery exceeded QC limits. Batch accepted based on laboratory control sample (LCS) recovery.

- MS (Lab ID: 1120040)
  - Calcium
  - Magnesium
  - Potassium
  - Sodium

Duplicate Sample:
All duplicate sample results were within method acceptance criteria with any exceptions noted below.

Additional Comments:

Analyte Comments:

QC Batch: ICPM/30378

E: Analyte concentration exceeded the calibration range. The reported result is estimated.

- MS (Lab ID: 1120038)
  - Sodium
- MSD (Lab ID: 1120039)
  - Sodium

This report shall not be reproduced, except in full,
without the written consent of Pace Analytical Services, Inc..

Pace Analytical Services, Inc.
9608 Loiret Blvd.
Lenexa, KS 66219
(913)599-5665

PROJECT NARRATIVE

Project: RICO WATER SAMPLING DEC 2011
Pace Project No.: 60112290

Method: **EPA 200.8**
Description: 200.8 MET ICPMS, Dissolved
Client: BP Anderson Engineering Company Inc.
Date: January 09, 2012

General Information:
24 samples were analyzed for EPA 200.8. All samples were received in acceptable condition with any exceptions noted below.

Hold Time:
The samples were analyzed within the method required hold times with any exceptions noted below.

Initial Calibrations (including MS Tune as applicable):
All criteria were within method requirements with any exceptions noted below.

Continuing Calibration:
All criteria were within method requirements with any exceptions noted below.

QC Batch: ICPM/30350

CH: The continuing calibration for this compound is outside of Pace Analytical acceptance limits. The results may be biased high.

- BLANK (Lab ID: 1118720)
  - Silver, Dissolved
- LCS (Lab ID: 1118721)
  - Silver, Dissolved
- MS (Lab ID: 1118724)
  - Silver, Dissolved
- MW-3 DEEP (Lab ID: 60112290024)
  - Silver, Dissolved
- MW-5 DEEP (Lab ID: 60112290021)
  - Silver, Dissolved
- MW-6 DEEP (Lab ID: 60112290023)
  - Silver, Dissolved
- MW-6 SHALLOW (Lab ID: 60112290022)
  - Silver, Dissolved

QC Batch: ICPM/30351

CH: The continuing calibration for this compound is outside of Pace Analytical acceptance limits. The results may be biased high.

- BLANK (Lab ID: 1118725)
  - Silver, Dissolved
- DR-4 (Lab ID: 60112290004)
  - Arsenic, Dissolved
- DR-4-SW (Lab ID: 60112290009)
  - Arsenic, Dissolved
- DR-5 (Lab ID: 60112290005)
  - Arsenic, Dissolved
- DR-6 (Lab ID: 60112290006)
  - Arsenic, Dissolved
- DR-7 (Lab ID: 60112290007)
  - Silver, Dissolved
- DR-8 (Lab ID: 60112290008)
  - Arsenic, Dissolved

This report shall not be reproduced, except in full,
without the written consent of Pace Analytical Services, Inc..

Pace Analytical Services, Inc.
9608 Loiret Blvd.
Lenexa, KS 66219
(913)599-5665

PROJECT NARRATIVE

Project: RICO WATER SAMPLING DEC 2011
Pace Project No.: 60112290

Method: **EPA 200.8**
Description: 200.8 MET ICPMS, Dissolved
Client: BP Anderson Engineering Company Inc.
Date: January 09, 2012

QC Batch: ICPM/30351

CH: The continuing calibration for this compound is outside of Pace Analytical acceptance limits. The results may be biased high.

- DR-G (Lab ID: 60112290010)
  - Arsenic, Dissolved
- EB-1 (Lab ID: 60112290016)
  - Silver, Dissolved
- EB-2 (Lab ID: 60112290017)
  - Silver, Dissolved
- FB (Lab ID: 60112290011)
  - Arsenic, Dissolved
- GW-3 (Lab ID: 60112290012)
  - Arsenic, Dissolved
- GW-4 (Lab ID: 60112290013)
  - Silver, Dissolved
- GW-5 (Lab ID: 60112290014)
  - Silver, Dissolved
- GW-7 (Lab ID: 60112290015)
  - Arsenic, Dissolved
  - Silver, Dissolved
- MS (Lab ID: 1118729)
  - Silver, Dissolved
- MW-4 DEEP (Lab ID: 60112290019)
  - Arsenic, Dissolved
  - Silver, Dissolved
  - Vanadium, Dissolved
- MW-4 SHALLOW (Lab ID: 60112290018)
  - Silver, Dissolved
- MW-5 SHALLOW (Lab ID: 60112290020)
  - Silver, Dissolved
  - Vanadium, Dissolved

Internal Standards:
All internal standards were within QC limits with any exceptions noted below.

Method Blank:
All analytes were below the report limit in the method blank with any exceptions noted below.

Laboratory Control Spike:
All laboratory control spike compounds were within QC limits with any exceptions noted below.

Matrix Spikes:
All percent recoveries and relative percent differences (RPDs) were within acceptance criteria with any exceptions noted below.

This report shall not be reproduced, except in full,
without the written consent of Pace Analytical Services, Inc..

Pace Analytical Services, Inc.
9608 Loiret Blvd.
Lenexa, KS 66219
(913)599-5665

PROJECT NARRATIVE

Project: RICO WATER SAMPLING DEC 2011
Pace Project No.: 60112290

Method: **EPA 200.8**
Description: 200.8 MET ICPMS, Dissolved
Client: BP Anderson Engineering Company Inc.
Date: January 09, 2012

QC Batch: ICPM/30350

A matrix spike and matrix spike duplicate (MS/MSD) were performed on the following sample(s): 10178696001,60112290021

M1: Matrix spike recovery exceeded QC limits. Batch accepted based on laboratory control sample (LCS) recovery.

- MS (Lab ID: 1118916)
  - Calcium, Dissolved
  - Magnesium, Dissolved
  - Sodium, Dissolved
- MSD (Lab ID: 1118917)
  - Potassium, Dissolved

Duplicate Sample:
All duplicate sample results were within method acceptance criteria with any exceptions noted below.

Additional Comments:

Analyte Comments:

QC Batch: ICPM/30350

E: Analyte concentration exceeded the calibration range. The reported result is estimated.

- MS (Lab ID: 1118724)
  - Calcium, Dissolved
  - Manganese, Dissolved
  - Zinc, Dissolved
  - Calcium, Dissolved
- MSD (Lab ID: 1118917)
  - Calcium, Dissolved

QC Batch: ICPM/30351

D3: Sample was diluted due to the presence of high levels of non-target analytes or other matrix interference.

- EB-2 (Lab ID: 60112290017)
  - Silver, Dissolved
  - Chromium, Dissolved
  - Copper, Dissolved
  - Thallium, Dissolved
  - Vanadium, Dissolved

This report shall not be reproduced, except in full,
without the written consent of Pace Analytical Services, Inc..

Pace Analytical Services, Inc.
9608 Loiret Blvd.
Lenexa, KS 66219
(913)599-5665

PROJECT NARRATIVE

Project: RICO WATER SAMPLING DEC 2011
Pace Project No.: 60112290

Method: **EPA 245.1**
Description: 245.1 Mercury
Client: BP Anderson Engineering Company Inc.
Date: January 09, 2012

General Information:
24 samples were analyzed for EPA 245.1. All samples were received in acceptable condition with any exceptions noted below.

Hold Time:
The samples were analyzed within the method required hold times with any exceptions noted below.

Initial Calibrations (including MS Tune as applicable):
All criteria were within method requirements with any exceptions noted below.

Continuing Calibration:
All criteria were within method requirements with any exceptions noted below.

Method Blank:
All analytes were below the report limit in the method blank with any exceptions noted below.

Laboratory Control Spike:
All laboratory control spike compounds were within QC limits with any exceptions noted below.

Matrix Spikes:
All percent recoveries and relative percent differences (RPDs) were within acceptance criteria with any exceptions noted below.

Duplicate Sample:
All duplicate sample results were within method acceptance criteria with any exceptions noted below.

Additional Comments:

This report shall not be reproduced, except in full,
without the written consent of Pace Analytical Services, Inc..

Pace Analytical Services, Inc.
9608 Loiret Blvd.
Lenexa, KS 66219
(913)599-5665

PROJECT NARRATIVE

Project: RICO WATER SAMPLING DEC 2011
Pace Project No.: 60112290

Method: **EPA 245.1**
Description: 245.1 Mercury, Dissolved
Client: BP Anderson Engineering Company Inc.
Date: January 09, 2012

General Information:
24 samples were analyzed for EPA 245.1. All samples were received in acceptable condition with any exceptions noted below.

Hold Time:
The samples were analyzed within the method required hold times with any exceptions noted below.

Initial Calibrations (including MS Tune as applicable):
All criteria were within method requirements with any exceptions noted below.

Continuing Calibration:
All criteria were within method requirements with any exceptions noted below.

Method Blank:
All analytes were below the report limit in the method blank with any exceptions noted below.

Laboratory Control Spike:
All laboratory control spike compounds were within QC limits with any exceptions noted below.

Matrix Spikes:
All percent recoveries and relative percent differences (RPDs) were within acceptance criteria with any exceptions noted below.

QC Batch: MERC/6316

A matrix spike and matrix spike duplicate (MS/MSD) were performed on the following sample(s): 60112423001

M1: Matrix spike recovery exceeded QC limits. Batch accepted based on laboratory control sample (LCS) recovery.

- MS (Lab ID: 1119091)
  - Mercury, Dissolved
- MSD (Lab ID: 1119092)
  - Mercury, Dissolved

Duplicate Sample:
All duplicate sample results were within method acceptance criteria with any exceptions noted below.

Additional Comments:

This report shall not be reproduced, except in full,
without the written consent of Pace Analytical Services, Inc..

Pace Analytical Services, Inc.
9608 Loiret Blvd.
Lenexa, KS 66219
(913)599-5665

PROJECT NARRATIVE

Project: RICO WATER SAMPLING DEC 2011
Pace Project No.: 60112290

Method: **SM 2510B**
Description: 2510B Specific Conductance
Client: BP Anderson Engineering Company Inc.
Date: January 09, 2012

General Information:
24 samples were analyzed for SM 2510B. All samples were received in acceptable condition with any exceptions noted below.

Hold Time:
The samples were analyzed within the method required hold times with any exceptions noted below.

Initial Calibrations (including MS Tune as applicable):
All criteria were within method requirements with any exceptions noted below.

Continuing Calibration:
All criteria were within method requirements with any exceptions noted below.

Internal Standards:
All internal standards were within QC limits with any exceptions noted below.

Surrogates:
All surrogates were within QC limits with any exceptions noted below.

Method Blank:
All analytes were below the report limit in the method blank with any exceptions noted below.

Laboratory Control Spike:
All laboratory control spike compounds were within QC limits with any exceptions noted below.

Matrix Spikes:
All percent recoveries and relative percent differences (RPDs) were within acceptance criteria with any exceptions noted below.

Duplicate Sample:
All duplicate sample results were within method acceptance criteria with any exceptions noted below.

Additional Comments:

This report shall not be reproduced, except in full,
without the written consent of Pace Analytical Services, Inc..

Pace Analytical Services, Inc.
9608 Loiret Blvd.
Lenexa, KS 66219
(913)599-5665

PROJECT NARRATIVE

Project: RICO WATER SAMPLING DEC 2011
Pace Project No.: 60112290

Method: **Calculated**
Description: Salinity
Client: BP Anderson Engineering Company Inc.
Date: January 09, 2012

General Information:
24 samples were analyzed for Calculated. All samples were received in acceptable condition with any exceptions noted below.

Hold Time:
The samples were analyzed within the method required hold times with any exceptions noted below.

Initial Calibrations (including MS Tune as applicable):
All criteria were within method requirements with any exceptions noted below.

Continuing Calibration:
All criteria were within method requirements with any exceptions noted below.

Internal Standards:
All internal standards were within QC limits with any exceptions noted below.

Surrogates:
All surrogates were within QC limits with any exceptions noted below.

Method Blank:
All analytes were below the report limit in the method blank with any exceptions noted below.

Laboratory Control Spike:
All laboratory control spike compounds were within QC limits with any exceptions noted below.

Matrix Spikes:
All percent recoveries and relative percent differences (RPDs) were within acceptance criteria with any exceptions noted below.

Duplicate Sample:
All duplicate sample results were within method acceptance criteria with any exceptions noted below.

Additional Comments:

This report shall not be reproduced, except in full,
without the written consent of Pace Analytical Services, Inc..

Pace Analytical Services, Inc.
9608 Loiret Blvd.
Lenexa, KS 66219
(913)599-5665

PROJECT NARRATIVE

Project: RICO WATER SAMPLING DEC 2011
Pace Project No.: 60112290

Method: **SM 2320B**
Description: 2320B Alkalinity
Client: BP Anderson Engineering Company Inc.
Date: January 09, 2012

General Information:
24 samples were analyzed for SM 2320B. All samples were received in acceptable condition with any exceptions noted below.

Hold Time:
The samples were analyzed within the method required hold times with any exceptions noted below.

Method Blank:
All analytes were below the report limit in the method blank with any exceptions noted below.

Laboratory Control Spike:
All laboratory control spike compounds were within QC limits with any exceptions noted below.

Matrix Spikes:
All percent recoveries and relative percent differences (RPDs) were within acceptance criteria with any exceptions noted below.

Duplicate Sample:
All duplicate sample results were within method acceptance criteria with any exceptions noted below.

Additional Comments:

This report shall not be reproduced, except in full,
without the written consent of Pace Analytical Services, Inc..

Pace Analytical Services, Inc.
9608 Loiret Blvd.
Lenexa, KS 66219
(913)599-5665

PROJECT NARRATIVE

Project: RICO WATER SAMPLING DEC 2011
Pace Project No.: 60112290

Method: **SM 2540C**
Description: 2540C Total Dissolved Solids
Client: BP Anderson Engineering Company Inc.
Date: January 09, 2012

General Information:
24 samples were analyzed for SM 2540C. All samples were received in acceptable condition with any exceptions noted below.

Hold Time:
The samples were analyzed within the method required hold times with any exceptions noted below.

Method Blank:
All analytes were below the report limit in the method blank with any exceptions noted below.

Laboratory Control Spike:
All laboratory control spike compounds were within QC limits with any exceptions noted below.

Matrix Spikes:
All percent recoveries and relative percent differences (RPDs) were within acceptance criteria with any exceptions noted below.

Duplicate Sample:
All duplicate sample results were within method acceptance criteria with any exceptions noted below.

Additional Comments:

This report shall not be reproduced, except in full,
without the written consent of Pace Analytical Services, Inc..

Pace Analytical Services, Inc.
9608 Loiret Blvd.
Lenexa, KS 66219
(913)599-5665

PROJECT NARRATIVE

Project: RICO WATER SAMPLING DEC 2011
Pace Project No.: 60112290

Method: **SM 2540D**
Description: 2540D Total Suspended Solids
Client: BP Anderson Engineering Company Inc.
Date: January 09, 2012

General Information:
24 samples were analyzed for SM 2540D. All samples were received in acceptable condition with any exceptions noted below.

Hold Time:
The samples were analyzed within the method required hold times with any exceptions noted below.

Method Blank:
All analytes were below the report limit in the method blank with any exceptions noted below.

Laboratory Control Spike:
All laboratory control spike compounds were within QC limits with any exceptions noted below.

Matrix Spikes:
All percent recoveries and relative percent differences (RPDs) were within acceptance criteria with any exceptions noted below.

Duplicate Sample:
All duplicate sample results were within method acceptance criteria with any exceptions noted below.

Additional Comments:

This report shall not be reproduced, except in full,
without the written consent of Pace Analytical Services, Inc..

Pace Analytical Services, Inc.
9608 Loiret Blvd.
Lenexa, KS 66219
(913)599-5665

PROJECT NARRATIVE

Project: RICO WATER SAMPLING DEC 2011
Pace Project No.: 60112290

Method: **SM 4500-H+B**
Description: 4500H+ pH, Electrometric
Client: BP Anderson Engineering Company Inc.
Date: January 09, 2012

General Information:
24 samples were analyzed for SM 4500-H+B. All samples were received in acceptable condition with any exceptions noted below.

Hold Time:
The samples were analyzed within the method required hold times with any exceptions noted below.

H6: Analysis initiated more than 15 minutes after sample collection.
- DR-1 (Lab ID: 60112290001)
- DR-2 (Lab ID: 60112290002)
- DR-3 (Lab ID: 60112290003)
- DR-4 (Lab ID: 60112290004)
- DR-4-SW (Lab ID: 60112290009)
- DR-5 (Lab ID: 60112290005)
- DR-6 (Lab ID: 60112290006)
- DR-7 (Lab ID: 60112290007)
- DR-8 (Lab ID: 60112290008)
- DR-G (Lab ID: 60112290010)
- EB-1 (Lab ID: 60112290016)
- EB-2 (Lab ID: 60112290017)
- FB (Lab ID: 60112290011)
- GW-3 (Lab ID: 60112290012)
- GW-4 (Lab ID: 60112290013)
- GW-5 (Lab ID: 60112290014)
- GW-7 (Lab ID: 60112290015)
- MW-3 DEEP (Lab ID: 60112290024)
- MW-4 DEEP (Lab ID: 60112290019)
- MW-4 SHALLOW (Lab ID: 60112290018)
- MW-5 DEEP (Lab ID: 60112290021)
- MW-5 SHALLOW (Lab ID: 60112290020)
- MW-6 DEEP (Lab ID: 60112290023)
- MW-6 SHALLOW (Lab ID: 60112290022)

Method Blank:
All analytes were below the report limit in the method blank with any exceptions noted below.

Laboratory Control Spike:
All laboratory control spike compounds were within QC limits with any exceptions noted below.

Matrix Spikes:
All percent recoveries and relative percent differences (RPDs) were within acceptance criteria with any exceptions noted below.

Duplicate Sample:
All duplicate sample results were within method acceptance criteria with any exceptions noted below.

Additional Comments:

This report shall not be reproduced, except in full,
without the written consent of Pace Analytical Services, Inc..

Pace Analytical Services, Inc.
9608 Loiret Blvd.
Lenexa, KS 66219
(913)599-5665

PROJECT NARRATIVE

Project: RICO WATER SAMPLING DEC 2011
Pace Project No.: 60112290

Method: **EPA 300.0**
Description: 300.0 IC Anions 28 Days
Client: BP Anderson Engineering Company Inc.
Date: January 09, 2012

General Information:
24 samples were analyzed for EPA 300.0. All samples were received in acceptable condition with any exceptions noted below.

Hold Time:
The samples were analyzed within the method required hold times with any exceptions noted below.

Initial Calibrations (including MS Tune as applicable):
All criteria were within method requirements with any exceptions noted below.

Continuing Calibration:
All criteria were within method requirements with any exceptions noted below.

Method Blank:
All analytes were below the report limit in the method blank with any exceptions noted below.

Laboratory Control Spike:
All laboratory control spike compounds were within QC limits with any exceptions noted below.

Matrix Spikes:
All percent recoveries and relative percent differences (RPDs) were within acceptance criteria with any exceptions noted below.

Duplicate Sample:
All duplicate sample results were within method acceptance criteria with any exceptions noted below.

Additional Comments:

This report shall not be reproduced, except in full,
without the written consent of Pace Analytical Services, Inc..

Pace Analytical Services, Inc.
9608 Loiret Blvd.
Lenexa, KS 66219
(913)599-5665

PROJECT NARRATIVE

Project: RICO WATER SAMPLING DEC 2011
Pace Project No.: 60112290

Method: **SM 4500-CN-E**
Description: 4500CNE Cyanide, Total
Client: BP Anderson Engineering Company Inc.
Date: January 09, 2012

General Information:
24 samples were analyzed for SM 4500-CN-E. All samples were received in acceptable condition with any exceptions noted below.

Hold Time:
The samples were analyzed within the method required hold times with any exceptions noted below.

Initial Calibrations (including MS Tune as applicable):
All criteria were within method requirements with any exceptions noted below.

Continuing Calibration:
All criteria were within method requirements with any exceptions noted below.

Method Blank:
All analytes were below the report limit in the method blank with any exceptions noted below.

Laboratory Control Spike:
All laboratory control spike compounds were within QC limits with any exceptions noted below.

Matrix Spikes:
All percent recoveries and relative percent differences (RPDs) were within acceptance criteria with any exceptions noted below.

Duplicate Sample:
All duplicate sample results were within method acceptance criteria with any exceptions noted below.

Additional Comments:

This data package has been reviewed for quality and completeness and is approved for release.

This report shall not be reproduced, except in full,
without the written consent of Pace Analytical Services, Inc..

Pace Analytical Services, Inc.
9608 Loiret Blvd.
Lenexa, KS 66219
(913)599-5665

ANALYTICAL RESULTS

Project: RICO WATER SAMPLING DEC 2011
Pace Project No.: 60112290

Sample: DR-1 **Lab ID: 60112290001** Collected: 12/13/11 08:00 Received: 12/16/11 09:00 Matrix: Water

Parameters	Results	Units	Report Limit	DF	Prepared	Analyzed	CAS No.	Qual
200.8 MET ICPMS	Analytical Method: EPA 200.8							
Aluminum	**20.3**	ug/L	4.0	1	12/22/11 07:49	12/31/11 04:10	7429-90-5	M6
Arsenic	ND	ug/L	0.50	1	12/22/11 07:49	12/31/11 04:10	7440-38-2	
Barium	**66.9**	ug/L	0.30	1	12/22/11 07:49	12/31/11 04:10	7440-39-3	M6
Cadmium	ND	ug/L	0.080	1	12/22/11 07:49	12/31/11 04:10	7440-43-9	
Calcium	**47500**	ug/L	200	10	12/22/11 07:49	12/31/11 04:24	7440-70-2	M6
Chromium	**0.53**	ug/L	0.50	1	12/22/11 07:49	12/31/11 04:10	7440-47-3	
Copper	ND	ug/L	0.50	1	12/22/11 07:49	12/31/11 04:10	7440-50-8	
Iron	ND	ug/L	50.0	1	12/22/11 07:49	12/31/11 04:10	7439-89-6	CH
Lead	**0.10**	ug/L	0.10	1	12/22/11 07:49	12/31/11 04:10	7439-92-1	
Magnesium	**6220**	ug/L	5.0	1	12/22/11 07:49	12/31/11 04:10	7439-95-4	M6
Manganese	**16.1**	ug/L	0.50	1	12/22/11 07:49	12/31/11 04:10	7439-96-5	
Nickel	ND	ug/L	0.50	1	12/22/11 07:49	12/31/11 04:10	7440-02-0	
Potassium	**586**	ug/L	20.0	1	12/22/11 07:49	12/31/11 04:10	7440-09-7	
Selenium	**0.57**	ug/L	0.50	1	12/22/11 07:49	12/31/11 04:10	7782-49-2	
Silver	ND	ug/L	0.50	1	12/22/11 07:49	12/31/11 04:10	7440-22-4	M6
Sodium	**2600**	ug/L	50.0	1	12/22/11 07:49	12/31/11 04:10	7440-23-5	M6
Thallium	ND	ug/L	0.10	1	12/22/11 07:49	12/31/11 04:10	7440-28-0	
Total Hardness by 2340B	**144000**	ug/L	710	10	12/22/11 07:49	12/31/11 04:24		
Vanadium	**0.13**	ug/L	0.10	1	12/22/11 07:49	12/31/11 04:10	7440-62-2	
Zinc	ND	ug/L	5.0	1	12/22/11 07:49	12/31/11 04:10	7440-66-6	
200.8 MET ICPMS, Dissolved	Analytical Method: EPA 200.8							
Aluminum, Dissolved	**6.3**	ug/L	4.0	1	12/22/11 07:57	12/30/11 15:44	7429-90-5	
Arsenic, Dissolved	ND	ug/L	0.50	1	12/22/11 07:57	12/30/11 15:44	7440-38-2	
Barium, Dissolved	**67.7**	ug/L	0.30	1	12/22/11 07:57	12/30/11 15:44	7440-39-3	
Cadmium, Dissolved	ND	ug/L	0.080	1	12/22/11 07:57	12/30/11 15:44	7440-43-9	
Calcium, Dissolved	**49400**	ug/L	400	20	12/22/11 07:57	12/30/11 15:58	7440-70-2	M6
Chromium, Dissolved	**0.52**	ug/L	0.50	1	12/22/11 07:57	12/30/11 15:44	7440-47-3	
Copper, Dissolved	**0.78**	ug/L	0.50	1	12/22/11 07:57	12/30/11 15:44	7440-50-8	
Iron, Dissolved	ND	ug/L	50.0	1	12/22/11 07:57	12/30/11 15:44	7439-89-6	
Lead, Dissolved	ND	ug/L	0.10	1	12/22/11 07:57	12/30/11 15:44	7439-92-1	
Magnesium, Dissolved	**6440**	ug/L	5.0	1	12/22/11 07:57	12/30/11 15:44	7439-95-4	
Manganese, Dissolved	**15.5**	ug/L	0.50	1	12/22/11 07:57	12/30/11 15:44	7439-96-5	
Nickel, Dissolved	ND	ug/L	0.50	1	12/22/11 07:57	12/30/11 15:44	7440-02-0	
Potassium, Dissolved	**664**	ug/L	20.0	1	12/22/11 07:57	12/30/11 15:44	7440-09-7	
Selenium, Dissolved	ND	ug/L	0.50	1	12/22/11 07:57	12/30/11 15:44	7782-49-2	
Silver, Dissolved	ND	ug/L	0.50	1	12/22/11 07:57	12/30/11 15:44	7440-22-4	
Sodium, Dissolved	**2950**	ug/L	50.0	1	12/22/11 07:57	12/30/11 15:44	7440-23-5	
Thallium, Dissolved	ND	ug/L	0.10	1	12/22/11 07:57	12/30/11 15:44	7440-28-0	
Vanadium, Dissolved	ND	ug/L	0.10	1	12/22/11 07:57	12/30/11 15:44	7440-62-2	
Zinc, Dissolved	ND	ug/L	5.0	1	12/22/11 07:57	12/30/11 15:44	7440-66-6	
245.1 Mercury	Analytical Method: EPA 245.1							
Mercury	ND	ug/L	0.20	1	12/21/11 07:09	12/22/11 12:59	7439-97-6	

This report shall not be reproduced, except in full,
without the written consent of Pace Analytical Services, Inc..

Pace Analytical Services, Inc.
9608 Loiret Blvd.
Lenexa, KS 66219
(913)599-5665

ANALYTICAL RESULTS

Project: RICO WATER SAMPLING DEC 2011
Pace Project No.: 60112290

Sample: DR-1 **Lab ID: 60112290001** Collected: 12/13/11 08:00 Received: 12/16/11 09:00 Matrix: Water

Parameters	Results	Units	Report Limit	DF	Prepared	Analyzed	CAS No.	Qual
245.1 Mercury, Dissolved	Analytical Method: EPA 245.1							
Mercury, Dissolved	ND	ug/L	0.20	1	12/21/11 12:14	12/23/11 08:59	7439-97-6	
2510B Specific Conductance	Analytical Method: SM 2510B							
Specific Conductance	**274**	umhos/cm	10.0	1		12/22/11 10:51		
Salinity	Analytical Method: Calculated							
Salinity (as dissolved solids)	**176**	mg/L	6.0	1		12/27/11 11:31		
Salinity (as seawater)	**0.13**	PSU	0.010	1		12/27/11 11:31		
2320B Alkalinity	Analytical Method: SM 2320B							
Alkalinity,Bicarbonate (CaCO3)	**100**	mg/L	20.0	1		12/27/11 12:30		
Alkalinity, Carbonate (CaCO3)	ND	mg/L	20.0	1		12/27/11 12:30		
Alkalinity, Total as CaCO3	**100**	mg/L	20.0	1		12/27/11 12:30		
2540C Total Dissolved Solids	Analytical Method: SM 2540C							
Total Dissolved Solids	**113**	mg/L	5.0	1		12/19/11 13:37		
2540D Total Suspended Solids	Analytical Method: SM 2540D							
Total Suspended Solids	ND	mg/L	5.0	1		12/20/11 07:44		
4500H+ pH, Electrometric	Analytical Method: SM 4500-H+B							
pH at 25 Degrees C	**8.1**	Std. Units	0.10	1		12/16/11 17:45		H6
300.0 IC Anions 28 Days	Analytical Method: EPA 300.0							
Sulfate	**47.0**	mg/L	5.0	5		12/28/11 23:03	14808-79-8	
4500CNE Cyanide, Total	Analytical Method: SM 4500-CN-E							
Cyanide	ND	mg/L	0.0050	1		12/21/11 17:11	57-12-5	

This report shall not be reproduced, except in full,
without the written consent of Pace Analytical Services, Inc..

Pace Analytical Services, Inc.
9608 Loiret Blvd.
Lenexa, KS 66219
(913)599-5665

ANALYTICAL RESULTS

Project: RICO WATER SAMPLING DEC 2011
Pace Project No.: 60112290

Sample: DR-2 **Lab ID: 60112290002** Collected: 12/13/11 08:00 Received: 12/16/11 09:00 Matrix: Water

Parameters	Results	Units	Report Limit	DF	Prepared	Analyzed	CAS No.	Qual
200.8 MET ICPMS	Analytical Method: EPA 200.8							
Aluminum	**15.0**	ug/L	4.0	1	12/22/11 07:49	12/31/11 04:29	7429-90-5	
Arsenic	ND	ug/L	0.50	1	12/22/11 07:49	12/31/11 04:29	7440-38-2	
Barium	**65.5**	ug/L	0.30	1	12/22/11 07:49	12/31/11 04:29	7440-39-3	
Cadmium	ND	ug/L	0.080	1	12/22/11 07:49	12/31/11 04:29	7440-43-9	
Calcium	**60400**	ug/L	200	10	12/22/11 07:49	12/31/11 04:33	7440-70-2	
Chromium	ND	ug/L	0.50	1	12/22/11 07:49	12/31/11 04:29	7440-47-3	
Copper	ND	ug/L	0.50	1	12/22/11 07:49	12/31/11 04:29	7440-50-8	
Iron	ND	ug/L	50.0	1	12/22/11 07:49	12/31/11 04:29	7439-89-6	CH
Lead	ND	ug/L	0.10	1	12/22/11 07:49	12/31/11 04:29	7439-92-1	
Magnesium	**7060**	ug/L	5.0	1	12/22/11 07:49	12/31/11 04:29	7439-95-4	
Manganese	**158**	ug/L	0.50	1	12/22/11 07:49	12/31/11 04:29	7439-96-5	
Nickel	ND	ug/L	0.50	1	12/22/11 07:49	12/31/11 04:29	7440-02-0	
Potassium	**704**	ug/L	20.0	1	12/22/11 07:49	12/31/11 04:29	7440-09-7	
Selenium	ND	ug/L	0.50	1	12/22/11 07:49	12/31/11 04:29	7782-49-2	
Silver	ND	ug/L	0.50	1	12/22/11 07:49	12/31/11 04:29	7440-22-4	
Sodium	**2900**	ug/L	50.0	1	12/22/11 07:49	12/31/11 04:29	7440-23-5	
Thallium	ND	ug/L	0.10	1	12/22/11 07:49	12/31/11 04:29	7440-28-0	
Total Hardness by 2340B	**180000**	ug/L	710	10	12/22/11 07:49	12/31/11 04:33		
Vanadium	ND	ug/L	0.10	1	12/22/11 07:49	12/31/11 04:29	7440-62-2	
Zinc	**5.9**	ug/L	5.0	1	12/22/11 07:49	12/31/11 04:29	7440-66-6	
200.8 MET ICPMS, Dissolved	Analytical Method: EPA 200.8							
Aluminum, Dissolved	**5.6**	ug/L	4.0	1	12/22/11 07:57	12/30/11 16:02	7429-90-5	
Arsenic, Dissolved	ND	ug/L	0.50	1	12/22/11 07:57	12/30/11 16:02	7440-38-2	
Barium, Dissolved	**66.7**	ug/L	0.30	1	12/22/11 07:57	12/30/11 16:02	7440-39-3	
Cadmium, Dissolved	ND	ug/L	0.080	1	12/22/11 07:57	12/30/11 16:02	7440-43-9	
Calcium, Dissolved	**55300**	ug/L	400	20	12/22/11 07:57	12/30/11 16:07	7440-70-2	
Chromium, Dissolved	**0.55**	ug/L	0.50	1	12/22/11 07:57	12/30/11 16:02	7440-47-3	
Copper, Dissolved	ND	ug/L	0.50	1	12/22/11 07:57	12/30/11 16:02	7440-50-8	
Iron, Dissolved	ND	ug/L	50.0	1	12/22/11 07:57	12/30/11 16:02	7439-89-6	
Lead, Dissolved	ND	ug/L	0.10	1	12/22/11 07:57	12/30/11 16:02	7439-92-1	
Magnesium, Dissolved	**7400**	ug/L	5.0	1	12/22/11 07:57	12/30/11 16:02	7439-95-4	
Manganese, Dissolved	**159**	ug/L	0.50	1	12/22/11 07:57	12/30/11 16:02	7439-96-5	
Nickel, Dissolved	**0.66**	ug/L	0.50	1	12/22/11 07:57	12/30/11 16:02	7440-02-0	
Potassium, Dissolved	**800**	ug/L	20.0	1	12/22/11 07:57	12/30/11 16:02	7440-09-7	
Selenium, Dissolved	**0.54**	ug/L	0.50	1	12/22/11 07:57	12/30/11 16:02	7782-49-2	
Silver, Dissolved	ND	ug/L	0.50	1	12/22/11 07:57	12/30/11 16:02	7440-22-4	
Sodium, Dissolved	**3230**	ug/L	50.0	1	12/22/11 07:57	12/30/11 16:02	7440-23-5	
Thallium, Dissolved	ND	ug/L	0.10	1	12/22/11 07:57	12/30/11 16:02	7440-28-0	
Vanadium, Dissolved	ND	ug/L	0.10	1	12/22/11 07:57	12/30/11 16:02	7440-62-2	
Zinc, Dissolved	**6.7**	ug/L	5.0	1	12/22/11 07:57	12/30/11 16:02	7440-66-6	
245.1 Mercury	Analytical Method: EPA 245.1							
Mercury	ND	ug/L	0.20	1	12/21/11 07:10	12/22/11 13:06	7439-97-6	

This report shall not be reproduced, except in full,
without the written consent of Pace Analytical Services, Inc..

Pace Analytical Services, Inc.
9608 Loiret Blvd.
Lenexa, KS 66219
(913)599-5665

ANALYTICAL RESULTS

Project: RICO WATER SAMPLING DEC 2011
Pace Project No.: 60112290

Sample: DR-2 **Lab ID: 60112290002** Collected: 12/13/11 08:00 Received: 12/16/11 09:00 Matrix: Water

Parameters	Results	Units	Report Limit	DF	Prepared	Analyzed	CAS No.	Qual
245.1 Mercury, Dissolved	Analytical Method: EPA 245.1							
Mercury, Dissolved	ND	ug/L	0.20	1	12/21/11 12:14	12/23/11 09:05	7439-97-6	
2510B Specific Conductance	Analytical Method: SM 2510B							
Specific Conductance	**326**	umhos/cm	10.0	1		12/22/11 10:51		
Salinity	Analytical Method: Calculated							
Salinity (as dissolved solids)	**208**	mg/L	6.0	1		12/27/11 11:31		
Salinity (as seawater)	**0.16**	PSU	0.010	1		12/27/11 11:31		
2320B Alkalinity	Analytical Method: SM 2320B							
Alkalinity,Bicarbonate (CaCO3)	**102**	mg/L	20.0	1		12/27/11 12:30		
Alkalinity, Carbonate (CaCO3)	ND	mg/L	20.0	1		12/27/11 12:30		
Alkalinity, Total as CaCO3	**102**	mg/L	20.0	1		12/27/11 12:30		
2540C Total Dissolved Solids	Analytical Method: SM 2540C							
Total Dissolved Solids	**181**	mg/L	5.0	1		12/19/11 13:38		
2540D Total Suspended Solids	Analytical Method: SM 2540D							
Total Suspended Solids	**5.0**	mg/L	5.0	1		12/20/11 07:45		
4500H+ pH, Electrometric	Analytical Method: SM 4500-H+B							
pH at 25 Degrees C	**7.9**	Std. Units	0.10	1		12/16/11 17:45		H6
300.0 IC Anions 28 Days	Analytical Method: EPA 300.0							
Sulfate	**70.9**	mg/L	5.0	5		12/29/11 07:29	14808-79-8	
4500CNE Cyanide, Total	Analytical Method: SM 4500-CN-E							
Cyanide	ND	mg/L	0.0050	1		12/21/11 17:14	57-12-5	

This report shall not be reproduced, except in full,
without the written consent of Pace Analytical Services, Inc..

Pace Analytical Services, Inc.
9608 Loiret Blvd.
Lenexa, KS 66219
(913)599-5665

ANALYTICAL RESULTS

Project: RICO WATER SAMPLING DEC 2011
Pace Project No.: 60112290

Sample: DR-3 **Lab ID: 60112290003** Collected: 12/13/11 08:00 Received: 12/16/11 09:00 Matrix: Water

Parameters	Results	Units	Report Limit	DF	Prepared	Analyzed	CAS No.	Qual
200.8 MET ICPMS	Analytical Method: EPA 200.8							
Aluminum	**272**	ug/L	4.0	1	12/22/11 07:49	12/31/11 04:47	7429-90-5	
Arsenic	ND	ug/L	0.50	1	12/22/11 07:49	12/31/11 04:47	7440-38-2	
Barium	**19.4**	ug/L	0.30	1	12/22/11 07:49	12/31/11 04:47	7440-39-3	
Cadmium	**17.0**	ug/L	0.080	1	12/22/11 07:49	12/31/11 04:47	7440-43-9	
Calcium	**237000**	ug/L	200	10	12/22/11 07:49	12/31/11 04:52	7440-70-2	
Chromium	**0.52**	ug/L	0.50	1	12/22/11 07:49	12/31/11 04:47	7440-47-3	
Copper	**39.0**	ug/L	0.50	1	12/22/11 07:49	12/31/11 04:47	7440-50-8	
Iron	**6560**	ug/L	250	5	12/22/11 07:49	01/03/12 14:15	7439-89-6	
Lead	**2.3**	ug/L	0.10	1	12/22/11 07:49	12/31/11 04:47	7439-92-1	
Magnesium	**18600**	ug/L	5.0	1	12/22/11 07:49	12/31/11 04:47	7439-95-4	
Manganese	**2310**	ug/L	5.0	10	12/22/11 07:49	12/31/11 04:52	7439-96-5	
Nickel	**5.5**	ug/L	0.50	1	12/22/11 07:49	12/31/11 04:47	7440-02-0	
Potassium	**1530**	ug/L	20.0	1	12/22/11 07:49	12/31/11 04:47	7440-09-7	
Selenium	ND	ug/L	0.50	1	12/22/11 07:49	12/31/11 04:47	7782-49-2	
Silver	ND	ug/L	0.50	1	12/22/11 07:49	12/31/11 04:47	7440-22-4	
Sodium	**9430**	ug/L	50.0	1	12/22/11 07:49	12/31/11 04:47	7440-23-5	
Thallium	ND	ug/L	0.10	1	12/22/11 07:49	12/31/11 04:47	7440-28-0	
Total Hardness by 2340B	**669000**	ug/L	710	10	12/22/11 07:49	12/31/11 04:52		
Vanadium	ND	ug/L	0.10	1	12/22/11 07:49	12/31/11 04:47	7440-62-2	
Zinc	**3480**	ug/L	50.0	10	12/22/11 07:49	12/31/11 04:52	7440-66-6	
200.8 MET ICPMS, Dissolved	Analytical Method: EPA 200.8							
Aluminum, Dissolved	**45.1**	ug/L	4.0	1	12/22/11 07:57	12/30/11 16:12	7429-90-5	
Arsenic, Dissolved	ND	ug/L	0.50	1	12/22/11 07:57	12/30/11 16:12	7440-38-2	
Barium, Dissolved	**20.5**	ug/L	0.30	1	12/22/11 07:57	12/30/11 16:12	7440-39-3	
Cadmium, Dissolved	**17.5**	ug/L	0.080	1	12/22/11 07:57	12/30/11 16:12	7440-43-9	
Calcium, Dissolved	**242000**	ug/L	400	20	12/22/11 07:57	12/30/11 16:16	7440-70-2	
Chromium, Dissolved	**0.70**	ug/L	0.50	1	12/22/11 07:57	12/30/11 16:12	7440-47-3	
Copper, Dissolved	**7.1**	ug/L	0.50	1	12/22/11 07:57	12/30/11 16:12	7440-50-8	
Iron, Dissolved	**3320**	ug/L	50.0	1	12/22/11 07:57	12/30/11 16:12	7439-89-6	
Lead, Dissolved	ND	ug/L	0.10	1	12/22/11 07:57	12/30/11 16:12	7439-92-1	
Magnesium, Dissolved	**19500**	ug/L	5.0	1	12/22/11 07:57	12/30/11 16:12	7439-95-4	
Manganese, Dissolved	**2280**	ug/L	10.0	20	12/22/11 07:57	12/30/11 16:16	7439-96-5	
Nickel, Dissolved	**6.1**	ug/L	0.50	1	12/22/11 07:57	12/30/11 16:12	7440-02-0	
Potassium, Dissolved	**1670**	ug/L	20.0	1	12/22/11 07:57	12/30/11 16:12	7440-09-7	
Selenium, Dissolved	ND	ug/L	0.50	1	12/22/11 07:57	12/30/11 16:12	7782-49-2	
Silver, Dissolved	ND	ug/L	0.50	1	12/22/11 07:57	12/30/11 16:12	7440-22-4	
Sodium, Dissolved	**11000**	ug/L	50.0	1	12/22/11 07:57	12/30/11 16:12	7440-23-5	
Thallium, Dissolved	ND	ug/L	0.10	1	12/22/11 07:57	12/30/11 16:12	7440-28-0	
Vanadium, Dissolved	ND	ug/L	0.10	1	12/22/11 07:57	12/30/11 16:12	7440-62-2	
Zinc, Dissolved	**3500**	ug/L	100	20	12/22/11 07:57	12/30/11 16:16	7440-66-6	
245.1 Mercury	Analytical Method: EPA 245.1							
Mercury	ND	ug/L	0.20	1	12/21/11 12:12	12/22/11 13:08	7439-97-6	

This report shall not be reproduced, except in full,
without the written consent of Pace Analytical Services, Inc..

Pace Analytical Services, Inc.
9608 Loiret Blvd.
Lenexa, KS 66219
(913)599-5665

ANALYTICAL RESULTS

Project: RICO WATER SAMPLING DEC 2011
Pace Project No.: 60112290

Sample: DR-3 **Lab ID: 60112290003** Collected: 12/13/11 08:00 Received: 12/16/11 09:00 Matrix: Water

Parameters	Results	Units	Report Limit	DF	Prepared	Analyzed	CAS No.	Qual
245.1 Mercury, Dissolved	Analytical Method: EPA 245.1							
Mercury, Dissolved	ND	ug/L	0.20	1	12/21/11 12:14	12/23/11 09:07	7439-97-6	
2510B Specific Conductance	Analytical Method: SM 2510B							
Specific Conductance	**1100**	umhos/cm	10.0	1		12/22/11 10:51		
Salinity	Analytical Method: Calculated							
Salinity (as dissolved solids)	**702**	mg/L	6.0	1		12/27/11 11:31		
Salinity (as seawater)	**0.54**	PSU	0.010	1		12/27/11 11:31		
2320B Alkalinity	Analytical Method: SM 2320B							
Alkalinity,Bicarbonate (CaCO3)	**96.0**	mg/L	20.0	1		12/27/11 12:30		
Alkalinity, Carbonate (CaCO3)	ND	mg/L	20.0	1		12/27/11 12:30		
Alkalinity, Total as CaCO3	**96.0**	mg/L	20.0	1		12/27/11 12:30		
2540C Total Dissolved Solids	Analytical Method: SM 2540C							
Total Dissolved Solids	**939**	mg/L	5.0	1		12/19/11 13:38		
2540D Total Suspended Solids	Analytical Method: SM 2540D							
Total Suspended Solids	**14.0**	mg/L	5.0	1		12/20/11 07:45		
4500H+ pH, Electrometric	Analytical Method: SM 4500-H+B							
pH at 25 Degrees C	**7.0**	Std. Units	0.10	1		12/16/11 17:45		H6
300.0 IC Anions 28 Days	Analytical Method: EPA 300.0							
Sulfate	**528**	mg/L	50.0	50		12/29/11 07:45	14808-79-8	
4500CNE Cyanide, Total	Analytical Method: SM 4500-CN-E							
Cyanide	ND	mg/L	0.0050	1		12/21/11 17:18	57-12-5	

This report shall not be reproduced, except in full,
without the written consent of Pace Analytical Services, Inc..

Pace Analytical Services, Inc.
9608 Loiret Blvd.
Lenexa, KS 66219
(913)599-5665

ANALYTICAL RESULTS

Project: RICO WATER SAMPLING DEC 2011
Pace Project No.: 60112290

Sample: DR-4 **Lab ID: 60112290004** Collected: 12/13/11 08:00 Received: 12/16/11 09:00 Matrix: Water

Parameters	Results	Units	Report Limit	DF	Prepared	Analyzed	CAS No.	Qual
200.8 MET ICPMS	Analytical Method: EPA 200.8							
Aluminum	**164**	ug/L	4.0	1	12/22/11 07:49	12/31/11 04:57	7429-90-5	
Arsenic	ND	ug/L	0.50	1	12/22/11 07:49	12/31/11 04:57	7440-38-2	
Barium	**19.6**	ug/L	0.30	1	12/22/11 07:49	12/31/11 04:57	7440-39-3	
Cadmium	**16.0**	ug/L	0.080	1	12/22/11 07:49	12/31/11 04:57	7440-43-9	
Calcium	**248000**	ug/L	200	10	12/22/11 07:49	12/31/11 05:01	7440-70-2	
Chromium	ND	ug/L	0.50	1	12/22/11 07:49	12/31/11 04:57	7440-47-3	
Copper	**24.2**	ug/L	0.50	1	12/22/11 07:49	12/31/11 04:57	7440-50-8	
Iron	**4420**	ug/L	250	5	12/22/11 07:49	01/03/12 14:20	7439-89-6	
Lead	**1.3**	ug/L	0.10	1	12/22/11 07:49	12/31/11 04:57	7439-92-1	
Magnesium	**18800**	ug/L	5.0	1	12/22/11 07:49	12/31/11 04:57	7439-95-4	
Manganese	**2390**	ug/L	5.0	10	12/22/11 07:49	12/31/11 05:01	7439-96-5	
Nickel	**5.6**	ug/L	0.50	1	12/22/11 07:49	12/31/11 04:57	7440-02-0	
Potassium	**1590**	ug/L	20.0	1	12/22/11 07:49	12/31/11 04:57	7440-09-7	
Selenium	ND	ug/L	0.50	1	12/22/11 07:49	12/31/11 04:57	7782-49-2	
Silver	ND	ug/L	0.50	1	12/22/11 07:49	12/31/11 04:57	7440-22-4	
Sodium	**9600**	ug/L	50.0	1	12/22/11 07:49	12/31/11 04:57	7440-23-5	
Thallium	ND	ug/L	0.10	1	12/22/11 07:49	12/31/11 04:57	7440-28-0	
Total Hardness by 2340B	**698000**	ug/L	710	10	12/22/11 07:49	12/31/11 05:01		
Vanadium	ND	ug/L	0.10	1	12/22/11 07:49	12/31/11 04:57	7440-62-2	
Zinc	**3420**	ug/L	50.0	10	12/22/11 07:49	12/31/11 05:01	7440-66-6	
200.8 MET ICPMS, Dissolved	Analytical Method: EPA 200.8							
Aluminum, Dissolved	**7.0**	ug/L	4.0	1	12/22/11 07:57	12/30/11 16:30	7429-90-5	
Arsenic, Dissolved	ND	ug/L	0.50	1	12/22/11 07:57	12/30/11 16:30	7440-38-2	CH
Barium, Dissolved	**19.2**	ug/L	0.30	1	12/22/11 07:57	12/30/11 16:30	7440-39-3	
Cadmium, Dissolved	**13.6**	ug/L	0.080	1	12/22/11 07:57	12/30/11 16:30	7440-43-9	
Calcium, Dissolved	**224000**	ug/L	400	20	12/22/11 07:57	12/30/11 16:35	7440-70-2	
Chromium, Dissolved	ND	ug/L	0.50	1	12/22/11 07:57	12/30/11 16:30	7440-47-3	
Copper, Dissolved	**2.4**	ug/L	0.50	1	12/22/11 07:57	12/30/11 16:30	7440-50-8	
Iron, Dissolved	ND	ug/L	50.0	1	12/22/11 07:57	12/30/11 16:30	7439-89-6	
Lead, Dissolved	**0.28**	ug/L	0.10	1	12/22/11 07:57	12/30/11 16:30	7439-92-1	
Magnesium, Dissolved	**19400**	ug/L	5.0	1	12/22/11 07:57	12/30/11 16:30	7439-95-4	
Manganese, Dissolved	**2110**	ug/L	10.0	20	12/22/11 07:57	12/30/11 16:35	7439-96-5	
Nickel, Dissolved	**5.8**	ug/L	0.50	1	12/22/11 07:57	12/30/11 16:30	7440-02-0	
Potassium, Dissolved	**1730**	ug/L	20.0	1	12/22/11 07:57	12/30/11 16:30	7440-09-7	
Selenium, Dissolved	ND	ug/L	0.50	1	12/22/11 07:57	12/30/11 16:30	7782-49-2	
Silver, Dissolved	ND	ug/L	0.50	1	12/22/11 07:57	12/30/11 16:30	7440-22-4	
Sodium, Dissolved	**10800**	ug/L	50.0	1	12/22/11 07:57	12/30/11 16:30	7440-23-5	
Thallium, Dissolved	ND	ug/L	0.10	1	12/22/11 07:57	12/30/11 16:30	7440-28-0	
Vanadium, Dissolved	ND	ug/L	0.10	1	12/22/11 07:57	12/30/11 16:30	7440-62-2	
Zinc, Dissolved	**2660**	ug/L	100	20	12/22/11 07:57	12/30/11 16:35	7440-66-6	
245.1 Mercury	Analytical Method: EPA 245.1							
Mercury	ND	ug/L	0.20	1	12/21/11 12:12	12/22/11 13:14	7439-97-6	

This report shall not be reproduced, except in full,
without the written consent of Pace Analytical Services, Inc..

Pace Analytical Services, Inc.
9608 Loiret Blvd.
Lenexa, KS 66219
(913)599-5665

ANALYTICAL RESULTS

Project: RICO WATER SAMPLING DEC 2011
Pace Project No.: 60112290

Sample: DR-4 **Lab ID: 60112290004** Collected: 12/13/11 08:00 Received: 12/16/11 09:00 Matrix: Water

Parameters	Results	Units	Report Limit	DF	Prepared	Analyzed	CAS No.	Qual
245.1 Mercury, Dissolved	Analytical Method: EPA 245.1							
Mercury, Dissolved	ND	ug/L	0.20	1	12/21/11 12:14	12/23/11 09:14	7439-97-6	
2510B Specific Conductance	Analytical Method: SM 2510B							
Specific Conductance	**1130**	umhos/cm	10.0	1		12/22/11 10:51		
Salinity	Analytical Method: Calculated							
Salinity (as dissolved solids)	**725**	mg/L	6.0	1		12/27/11 11:31		
Salinity (as seawater)	**0.56**	PSU	0.010	1		12/27/11 11:31		
2320B Alkalinity	Analytical Method: SM 2320B							
Alkalinity,Bicarbonate (CaCO3)	**98.0**	mg/L	20.0	1		12/27/11 12:30		
Alkalinity, Carbonate (CaCO3)	ND	mg/L	20.0	1		12/27/11 12:30		
Alkalinity, Total as CaCO3	**98.0**	mg/L	20.0	1		12/27/11 12:30		
2540C Total Dissolved Solids	Analytical Method: SM 2540C							
Total Dissolved Solids	**947**	mg/L	5.0	1		12/19/11 13:38		
2540D Total Suspended Solids	Analytical Method: SM 2540D							
Total Suspended Solids	**9.0**	mg/L	5.0	1		12/20/11 07:46		
4500H+ pH, Electrometric	Analytical Method: SM 4500-H+B							
pH at 25 Degrees C	**7.7**	Std. Units	0.10	1		12/16/11 17:45		H6
300.0 IC Anions 28 Days	Analytical Method: EPA 300.0							
Sulfate	**540**	mg/L	50.0	50		12/29/11 08:00	14808-79-8	
4500CNE Cyanide, Total	Analytical Method: SM 4500-CN-E							
Cyanide	ND	mg/L	0.0050	1		12/21/11 17:18	57-12-5	

This report shall not be reproduced, except in full,
without the written consent of Pace Analytical Services, Inc..

Pace Analytical Services, Inc.
9608 Loiret Blvd.
Lenexa, KS 66219
(913)599-5665

ANALYTICAL RESULTS

Project: RICO WATER SAMPLING DEC 2011
Pace Project No.: 60112290

Sample: DR-5 **Lab ID: 60112290005** Collected: 12/13/11 08:00 Received: 12/16/11 09:00 Matrix: Water

Parameters	Results	Units	Report Limit	DF	Prepared	Analyzed	CAS No.	Qual
200.8 MET ICPMS	Analytical Method: EPA 200.8							
Aluminum	**97.1**	ug/L	4.0	1	12/22/11 07:49	12/31/11 05:06	7429-90-5	
Arsenic	ND	ug/L	0.50	1	12/22/11 07:49	12/31/11 05:06	7440-38-2	
Barium	**18.3**	ug/L	0.30	1	12/22/11 07:49	12/31/11 05:06	7440-39-3	
Cadmium	**14.3**	ug/L	0.080	1	12/22/11 07:49	12/31/11 05:06	7440-43-9	
Calcium	**192000**	ug/L	500	25	12/22/11 07:49	01/03/12 14:30	7440-70-2	
Chromium	ND	ug/L	0.50	1	12/22/11 07:49	12/31/11 05:06	7440-47-3	
Copper	**16.1**	ug/L	0.50	1	12/22/11 07:49	12/31/11 05:06	7440-50-8	
Iron	**2660**	ug/L	250	5	12/22/11 07:49	01/03/12 14:25	7439-89-6	
Lead	**0.75**	ug/L	0.10	1	12/22/11 07:49	12/31/11 05:06	7439-92-1	
Magnesium	**19200**	ug/L	5.0	1	12/22/11 07:49	12/31/11 05:06	7439-95-4	
Manganese	**2340**	ug/L	5.0	10	12/22/11 07:49	12/31/11 05:11	7439-96-5	
Nickel	**5.2**	ug/L	0.50	1	12/22/11 07:49	12/31/11 05:06	7440-02-0	
Potassium	**1660**	ug/L	20.0	1	12/22/11 07:49	12/31/11 05:06	7440-09-7	
Selenium	ND	ug/L	0.50	1	12/22/11 07:49	12/31/11 05:06	7782-49-2	
Silver	ND	ug/L	0.50	1	12/22/11 07:49	12/31/11 05:06	7440-22-4	
Sodium	**9640**	ug/L	50.0	1	12/22/11 07:49	12/31/11 05:06	7440-23-5	
Thallium	ND	ug/L	0.10	1	12/22/11 07:49	12/31/11 05:06	7440-28-0	
Total Hardness by 2340B	**558000**	ug/L	1780	25	12/22/11 07:49	01/03/12 14:30		
Vanadium	ND	ug/L	0.10	1	12/22/11 07:49	12/31/11 05:06	7440-62-2	
Zinc	**3150**	ug/L	50.0	10	12/22/11 07:49	12/31/11 05:11	7440-66-6	
200.8 MET ICPMS, Dissolved	Analytical Method: EPA 200.8							
Aluminum, Dissolved	**5.3**	ug/L	4.0	1	12/22/11 07:57	12/30/11 16:40	7429-90-5	
Arsenic, Dissolved	ND	ug/L	0.50	1	12/22/11 07:57	12/30/11 16:40	7440-38-2	CH
Barium, Dissolved	**17.9**	ug/L	0.30	1	12/22/11 07:57	12/30/11 16:40	7440-39-3	
Cadmium, Dissolved	**12.1**	ug/L	0.080	1	12/22/11 07:57	12/30/11 16:40	7440-43-9	
Calcium, Dissolved	**235000**	ug/L	400	20	12/22/11 07:57	12/30/11 16:44	7440-70-2	
Chromium, Dissolved	ND	ug/L	0.50	1	12/22/11 07:57	12/30/11 16:40	7440-47-3	
Copper, Dissolved	**0.78**	ug/L	0.50	1	12/22/11 07:57	12/30/11 16:40	7440-50-8	
Iron, Dissolved	ND	ug/L	50.0	1	12/22/11 07:57	12/30/11 16:40	7439-89-6	
Lead, Dissolved	ND	ug/L	0.10	1	12/22/11 07:57	12/30/11 16:40	7439-92-1	
Magnesium, Dissolved	**18600**	ug/L	5.0	1	12/22/11 07:57	12/30/11 16:40	7439-95-4	
Manganese, Dissolved	**2050**	ug/L	10.0	20	12/22/11 07:57	12/30/11 16:44	7439-96-5	
Nickel, Dissolved	**5.3**	ug/L	0.50	1	12/22/11 07:57	12/30/11 16:40	7440-02-0	
Potassium, Dissolved	**1660**	ug/L	20.0	1	12/22/11 07:57	12/30/11 16:40	7440-09-7	
Selenium, Dissolved	ND	ug/L	0.50	1	12/22/11 07:57	12/30/11 16:40	7782-49-2	
Silver, Dissolved	ND	ug/L	0.50	1	12/22/11 07:57	12/30/11 16:40	7440-22-4	
Sodium, Dissolved	**9660**	ug/L	50.0	1	12/22/11 07:57	12/30/11 16:40	7440-23-5	
Thallium, Dissolved	ND	ug/L	0.10	1	12/22/11 07:57	12/30/11 16:40	7440-28-0	
Vanadium, Dissolved	ND	ug/L	0.10	1	12/22/11 07:57	12/30/11 16:40	7440-62-2	
Zinc, Dissolved	**2610**	ug/L	100	20	12/22/11 07:57	12/30/11 16:44	7440-66-6	
245.1 Mercury	Analytical Method: EPA 245.1							
Mercury	ND	ug/L	0.20	1	12/21/11 12:12	12/22/11 13:16	7439-97-6	

This report shall not be reproduced, except in full,
without the written consent of Pace Analytical Services, Inc..

Pace Analytical Services, Inc.
9608 Loiret Blvd.
Lenexa, KS 66219
(913)599-5665

ANALYTICAL RESULTS

Project: RICO WATER SAMPLING DEC 2011
Pace Project No.: 60112290

Sample: DR-5 **Lab ID: 60112290005** Collected: 12/13/11 08:00 Received: 12/16/11 09:00 Matrix: Water

Parameters	Results	Units	Report Limit	DF	Prepared	Analyzed	CAS No.	Qual
245.1 Mercury, Dissolved	Analytical Method: EPA 245.1							
Mercury, Dissolved	ND	ug/L	0.20	1	12/21/11 12:14	12/23/11 09:16	7439-97-6	
2510B Specific Conductance	Analytical Method: SM 2510B							
Specific Conductance	**1140**	umhos/cm	10.0	1		12/22/11 10:51		
Salinity	Analytical Method: Calculated							
Salinity (as dissolved solids)	**728**	mg/L	6.0	1		12/27/11 11:31		
Salinity (as seawater)	**0.56**	PSU	0.010	1		12/27/11 11:31		
2320B Alkalinity	Analytical Method: SM 2320B							
Alkalinity,Bicarbonate (CaCO3)	**102**	mg/L	20.0	1		12/27/11 12:30		
Alkalinity, Carbonate (CaCO3)	ND	mg/L	20.0	1		12/27/11 12:30		
Alkalinity, Total as CaCO3	**102**	mg/L	20.0	1		12/27/11 12:30		
2540C Total Dissolved Solids	Analytical Method: SM 2540C							
Total Dissolved Solids	**912**	mg/L	5.0	1		12/19/11 13:39		
2540D Total Suspended Solids	Analytical Method: SM 2540D							
Total Suspended Solids	**7.0**	mg/L	5.0	1		12/20/11 07:46		
4500H+ pH, Electrometric	Analytical Method: SM 4500-H+B							
pH at 25 Degrees C	**7.6**	Std. Units	0.10	1		12/16/11 17:45		H6
300.0 IC Anions 28 Days	Analytical Method: EPA 300.0							
Sulfate	**532**	mg/L	50.0	50		12/29/11 08:15	14808-79-8	
4500CNE Cyanide, Total	Analytical Method: SM 4500-CN-E							
Cyanide	ND	mg/L	0.0050	1		12/21/11 17:19	57-12-5	

This report shall not be reproduced, except in full,
without the written consent of Pace Analytical Services, Inc..

Pace Analytical Services, Inc.
9608 Loiret Blvd.
Lenexa, KS 66219
(913)599-5665

ANALYTICAL RESULTS

Project: RICO WATER SAMPLING DEC 2011
Pace Project No.: 60112290

Sample: DR-6 **Lab ID: 60112290006** Collected: 12/13/11 08:00 Received: 12/16/11 09:00 Matrix: Water

Parameters	Results	Units	Report Limit	DF	Prepared	Analyzed	CAS No.	Qual
200.8 MET ICPMS	Analytical Method: EPA 200.8							
Aluminum	**82.8**	ug/L	4.0	1	12/22/11 07:49	12/31/11 05:15	7429-90-5	
Arsenic	ND	ug/L	0.50	1	12/22/11 07:49	12/31/11 05:15	7440-38-2	
Barium	**19.0**	ug/L	0.30	1	12/22/11 07:49	12/31/11 05:15	7440-39-3	
Cadmium	**13.0**	ug/L	0.080	1	12/22/11 07:49	12/31/11 05:15	7440-43-9	
Calcium	**199000**	ug/L	500	25	12/22/11 07:49	01/03/12 14:39	7440-70-2	
Chromium	ND	ug/L	0.50	1	12/22/11 07:49	12/31/11 05:15	7440-47-3	
Copper	**13.6**	ug/L	0.50	1	12/22/11 07:49	12/31/11 05:15	7440-50-8	
Iron	**1860**	ug/L	250	5	12/22/11 07:49	01/03/12 14:35	7439-89-6	
Lead	**0.89**	ug/L	0.10	1	12/22/11 07:49	12/31/11 05:15	7439-92-1	
Magnesium	**21100**	ug/L	5.0	1	12/22/11 07:49	12/31/11 05:15	7439-95-4	
Manganese	**2010**	ug/L	2.5	5	12/22/11 07:49	01/03/12 14:35	7439-96-5	
Nickel	**5.3**	ug/L	0.50	1	12/22/11 07:49	12/31/11 05:15	7440-02-0	
Potassium	**2190**	ug/L	20.0	1	12/22/11 07:49	12/31/11 05:15	7440-09-7	
Selenium	ND	ug/L	0.50	1	12/22/11 07:49	12/31/11 05:15	7782-49-2	
Silver	ND	ug/L	0.50	1	12/22/11 07:49	12/31/11 05:15	7440-22-4	
Sodium	**11700**	ug/L	50.0	1	12/22/11 07:49	12/31/11 05:15	7440-23-5	
Thallium	ND	ug/L	0.10	1	12/22/11 07:49	12/31/11 05:15	7440-28-0	
Total Hardness by 2340B	**585000**	ug/L	1780	25	12/22/11 07:49	01/03/12 14:39		
Vanadium	ND	ug/L	0.10	1	12/22/11 07:49	12/31/11 05:15	7440-62-2	
Zinc	**3160**	ug/L	50.0	10	12/22/11 07:49	12/31/11 05:20	7440-66-6	
200.8 MET ICPMS, Dissolved	Analytical Method: EPA 200.8							
Aluminum, Dissolved	**6.4**	ug/L	4.0	1	12/22/11 07:57	12/30/11 16:49	7429-90-5	
Arsenic, Dissolved	ND	ug/L	0.50	1	12/22/11 07:57	12/30/11 16:49	7440-38-2	CH
Barium, Dissolved	**20.0**	ug/L	0.30	1	12/22/11 07:57	12/30/11 16:49	7440-39-3	
Cadmium, Dissolved	**12.8**	ug/L	0.080	1	12/22/11 07:57	12/30/11 16:49	7440-43-9	
Calcium, Dissolved	**243000**	ug/L	400	20	12/22/11 07:57	12/30/11 16:53	7440-70-2	
Chromium, Dissolved	ND	ug/L	0.50	1	12/22/11 07:57	12/30/11 16:49	7440-47-3	
Copper, Dissolved	**1.2**	ug/L	0.50	1	12/22/11 07:57	12/30/11 16:49	7440-50-8	
Iron, Dissolved	**79.0**	ug/L	50.0	1	12/22/11 07:57	12/30/11 16:49	7439-89-6	
Lead, Dissolved	ND	ug/L	0.10	1	12/22/11 07:57	12/30/11 16:49	7439-92-1	
Magnesium, Dissolved	**21600**	ug/L	100	20	12/22/11 07:57	12/30/11 16:53	7439-95-4	
Manganese, Dissolved	**1940**	ug/L	10.0	20	12/22/11 07:57	12/30/11 16:53	7439-96-5	
Nickel, Dissolved	**5.2**	ug/L	0.50	1	12/22/11 07:57	12/30/11 16:49	7440-02-0	
Potassium, Dissolved	**2390**	ug/L	20.0	1	12/22/11 07:57	12/30/11 16:49	7440-09-7	
Selenium, Dissolved	ND	ug/L	0.50	1	12/22/11 07:57	12/30/11 16:49	7782-49-2	
Silver, Dissolved	ND	ug/L	0.50	1	12/22/11 07:57	12/30/11 16:49	7440-22-4	
Sodium, Dissolved	**13400**	ug/L	50.0	1	12/22/11 07:57	12/30/11 16:49	7440-23-5	
Thallium, Dissolved	ND	ug/L	0.10	1	12/22/11 07:57	12/30/11 16:49	7440-28-0	
Vanadium, Dissolved	ND	ug/L	0.10	1	12/22/11 07:57	12/30/11 16:49	7440-62-2	
Zinc, Dissolved	**2620**	ug/L	100	20	12/22/11 07:57	12/30/11 16:53	7440-66-6	
245.1 Mercury	Analytical Method: EPA 245.1							
Mercury	ND	ug/L	0.20	1	12/21/11 12:12	12/22/11 13:18	7439-97-6	

This report shall not be reproduced, except in full,
without the written consent of Pace Analytical Services, Inc..

Pace Analytical Services, Inc.
9608 Loiret Blvd.
Lenexa, KS 66219
(913)599-5665

ANALYTICAL RESULTS

Project: RICO WATER SAMPLING DEC 2011
Pace Project No.: 60112290

Sample: DR-6 **Lab ID: 60112290006** Collected: 12/13/11 08:00 Received: 12/16/11 09:00 Matrix: Water

Parameters	Results	Units	Report Limit	DF	Prepared	Analyzed	CAS No.	Qual
245.1 Mercury, Dissolved	Analytical Method: EPA 245.1							
Mercury, Dissolved	ND	ug/L	0.20	1	12/21/11 12:14	12/23/11 09:18	7439-97-6	
2510B Specific Conductance	Analytical Method: SM 2510B							
Specific Conductance	**1180**	umhos/cm	10.0	1		12/22/11 10:51		
Salinity	Analytical Method: Calculated							
Salinity (as dissolved solids)	**753**	mg/L	6.0	1		12/27/11 11:31		
Salinity (as seawater)	**0.58**	PSU	0.010	1		12/27/11 11:31		
2320B Alkalinity	Analytical Method: SM 2320B							
Alkalinity,Bicarbonate (CaCO3)	**126**	mg/L	20.0	1		12/27/11 12:30		
Alkalinity, Carbonate (CaCO3)	ND	mg/L	20.0	1		12/27/11 12:30		
Alkalinity, Total as CaCO3	**126**	mg/L	20.0	1		12/27/11 12:30		
2540C Total Dissolved Solids	Analytical Method: SM 2540C							
Total Dissolved Solids	**956**	mg/L	5.0	1		12/19/11 13:39		
2540D Total Suspended Solids	Analytical Method: SM 2540D							
Total Suspended Solids	ND	mg/L	5.0	1		12/20/11 07:46		
4500H+ pH, Electrometric	Analytical Method: SM 4500-H+B							
pH at 25 Degrees C	**7.3**	Std. Units	0.10	1		12/16/11 17:45		H6
300.0 IC Anions 28 Days	Analytical Method: EPA 300.0							
Sulfate	**531**	mg/L	50.0	50		12/29/11 08:30	14808-79-8	
4500CNE Cyanide, Total	Analytical Method: SM 4500-CN-E							
Cyanide	ND	mg/L	0.0050	1		12/21/11 17:20	57-12-5	

This report shall not be reproduced, except in full,
without the written consent of Pace Analytical Services, Inc..

Pace Analytical Services, Inc.
9608 Loiret Blvd.
Lenexa, KS 66219
(913)599-5665

ANALYTICAL RESULTS

Project: RICO WATER SAMPLING DEC 2011
Pace Project No.: 60112290

Sample: DR-7 **Lab ID: 60112290007** Collected: 12/13/11 08:00 Received: 12/16/11 09:00 Matrix: Water

Parameters	Results	Units	Report Limit	DF	Prepared	Analyzed	CAS No.	Qual
200.8 MET ICPMS	Analytical Method: EPA 200.8							
Aluminum	**19.9**	ug/L	4.0	1	12/22/11 07:49	12/31/11 05:25	7429-90-5	
Arsenic	**0.77**	ug/L	0.50	1	12/22/11 07:49	12/31/11 05:25	7440-38-2	
Barium	**60.2**	ug/L	0.30	1	12/22/11 07:49	12/31/11 05:25	7440-39-3	
Cadmium	**1.4**	ug/L	0.080	1	12/22/11 07:49	12/31/11 05:25	7440-43-9	
Calcium	**98900**	ug/L	200	10	12/22/11 07:49	12/31/11 05:30	7440-70-2	
Chromium	ND	ug/L	0.50	1	12/22/11 07:49	12/31/11 05:25	7440-47-3	
Copper	**1.6**	ug/L	0.50	1	12/22/11 07:49	12/31/11 05:25	7440-50-8	
Iron	**339**	ug/L	100	2	12/22/11 07:49	01/03/12 14:44	7439-89-6	
Lead	**0.11**	ug/L	0.10	1	12/22/11 07:49	12/31/11 05:25	7439-92-1	
Magnesium	**11100**	ug/L	5.0	1	12/22/11 07:49	12/31/11 05:25	7439-95-4	
Manganese	**381**	ug/L	0.50	1	12/22/11 07:49	12/31/11 05:25	7439-96-5	
Nickel	**0.74**	ug/L	0.50	1	12/22/11 07:49	12/31/11 05:25	7440-02-0	
Potassium	**1640**	ug/L	20.0	1	12/22/11 07:49	12/31/11 05:25	7440-09-7	
Selenium	ND	ug/L	0.50	1	12/22/11 07:49	12/31/11 05:25	7782-49-2	
Silver	ND	ug/L	0.50	1	12/22/11 07:49	12/31/11 05:25	7440-22-4	
Sodium	**5680**	ug/L	50.0	1	12/22/11 07:49	12/31/11 05:25	7440-23-5	
Thallium	ND	ug/L	0.10	1	12/22/11 07:49	12/31/11 05:25	7440-28-0	
Total Hardness by 2340B	**293000**	ug/L	710	10	12/22/11 07:49	12/31/11 05:30		
Vanadium	ND	ug/L	0.10	1	12/22/11 07:49	12/31/11 05:25	7440-62-2	
Zinc	**291**	ug/L	5.0	1	12/22/11 07:49	12/31/11 05:25	7440-66-6	
200.8 MET ICPMS, Dissolved	Analytical Method: EPA 200.8							
Aluminum, Dissolved	**5.1**	ug/L	4.0	1	12/22/11 07:57	01/03/12 12:34	7429-90-5	
Arsenic, Dissolved	**0.66**	ug/L	0.50	1	12/22/11 07:57	01/03/12 12:34	7440-38-2	
Barium, Dissolved	**55.0**	ug/L	0.30	1	12/22/11 07:57	01/03/12 12:34	7440-39-3	
Cadmium, Dissolved	**1.1**	ug/L	0.080	1	12/22/11 07:57	01/03/12 12:34	7440-43-9	
Calcium, Dissolved	**62600**	ug/L	200	10	12/22/11 07:57	01/03/12 12:39	7440-70-2	
Chromium, Dissolved	ND	ug/L	0.50	1	12/22/11 07:57	01/03/12 12:34	7440-47-3	
Copper, Dissolved	**0.63**	ug/L	0.50	1	12/22/11 07:57	01/03/12 12:34	7440-50-8	
Iron, Dissolved	**104**	ug/L	50.0	1	12/22/11 07:57	01/03/12 12:34	7439-89-6	
Lead, Dissolved	ND	ug/L	0.10	1	12/22/11 07:57	01/03/12 12:34	7439-92-1	
Magnesium, Dissolved	**10500**	ug/L	5.0	1	12/22/11 07:57	01/03/12 12:34	7439-95-4	
Manganese, Dissolved	**346**	ug/L	0.50	1	12/22/11 07:57	01/03/12 12:34	7439-96-5	
Nickel, Dissolved	**1.0**	ug/L	0.50	1	12/22/11 07:57	01/03/12 12:34	7440-02-0	
Potassium, Dissolved	**1520**	ug/L	20.0	1	12/22/11 07:57	01/03/12 12:34	7440-09-7	
Selenium, Dissolved	ND	ug/L	0.50	1	12/22/11 07:57	01/03/12 12:34	7782-49-2	
Silver, Dissolved	ND	ug/L	0.50	1	12/22/11 07:57	01/03/12 12:34	7440-22-4	CH
Sodium, Dissolved	**5580**	ug/L	50.0	1	12/22/11 07:57	01/03/12 12:34	7440-23-5	
Thallium, Dissolved	ND	ug/L	0.10	1	12/22/11 07:57	01/03/12 12:34	7440-28-0	
Vanadium, Dissolved	ND	ug/L	0.10	1	12/22/11 07:57	01/03/12 12:34	7440-62-2	
Zinc, Dissolved	**240**	ug/L	5.0	1	12/22/11 07:57	01/03/12 12:34	7440-66-6	
245.1 Mercury	Analytical Method: EPA 245.1							
Mercury	ND	ug/L	0.20	1	12/21/11 12:12	12/22/11 13:20	7439-97-6	

This report shall not be reproduced, except in full,
without the written consent of Pace Analytical Services, Inc..

Pace Analytical Services, Inc.
9608 Loiret Blvd.
Lenexa, KS 66219
(913)599-5665

ANALYTICAL RESULTS

Project: RICO WATER SAMPLING DEC 2011
Pace Project No.: 60112290

Sample: DR-7 **Lab ID: 60112290007** Collected: 12/13/11 08:00 Received: 12/16/11 09:00 Matrix: Water

Parameters	Results	Units	Report Limit	DF	Prepared	Analyzed	CAS No.	Qual
245.1 Mercury, Dissolved	Analytical Method: EPA 245.1							
Mercury, Dissolved	ND	ug/L	0.20	1	12/21/11 12:14	12/23/11 09:20	7439-97-6	
2510B Specific Conductance	Analytical Method: SM 2510B							
Specific Conductance	**500**	umhos/cm	10.0	1		12/22/11 10:51		
Salinity	Analytical Method: Calculated							
Salinity (as dissolved solids)	**320**	mg/L	6.0	1		12/27/11 11:31		
Salinity (as seawater)	**0.24**	PSU	0.010	1		12/27/11 11:31		
2320B Alkalinity	Analytical Method: SM 2320B							
Alkalinity,Bicarbonate (CaCO3)	**130**	mg/L	20.0	1		12/27/11 12:30		
Alkalinity, Carbonate (CaCO3)	ND	mg/L	20.0	1		12/27/11 12:30		
Alkalinity, Total as CaCO3	**130**	mg/L	20.0	1		12/27/11 12:30		
2540C Total Dissolved Solids	Analytical Method: SM 2540C							
Total Dissolved Solids	**328**	mg/L	5.0	1		12/19/11 13:39		
2540D Total Suspended Solids	Analytical Method: SM 2540D							
Total Suspended Solids	ND	mg/L	5.0	1		12/20/11 07:46		
4500H+ pH, Electrometric	Analytical Method: SM 4500-H+B							
pH at 25 Degrees C	**7.2**	Std. Units	0.10	1		12/16/11 17:45		H6
300.0 IC Anions 28 Days	Analytical Method: EPA 300.0							
Sulfate	**150**	mg/L	10.0	10		12/29/11 08:46	14808-79-8	
4500CNE Cyanide, Total	Analytical Method: SM 4500-CN-E							
Cyanide	ND	mg/L	0.0050	1		12/21/11 17:22	57-12-5	

This report shall not be reproduced, except in full,
without the written consent of Pace Analytical Services, Inc..

Pace Analytical Services, Inc.
9608 Loiret Blvd.
Lenexa, KS 66219
(913)599-5665

ANALYTICAL RESULTS

Project: RICO WATER SAMPLING DEC 2011
Pace Project No.: 60112290

Sample: DR-8 **Lab ID: 60112290008** Collected: 12/13/11 08:00 Received: 12/16/11 09:00 Matrix: Water

Parameters	Results	Units	Report Limit	DF	Prepared	Analyzed	CAS No.	Qual
200.8 MET ICPMS	Analytical Method: EPA 200.8							
Aluminum	**275**	ug/L	4.0	1	12/22/11 07:49	12/31/11 05:44	7429-90-5	
Arsenic	ND	ug/L	0.50	1	12/22/11 07:49	12/31/11 05:44	7440-38-2	
Barium	**19.3**	ug/L	0.30	1	12/22/11 07:49	12/31/11 05:44	7440-39-3	
Cadmium	**17.0**	ug/L	0.080	1	12/22/11 07:49	12/31/11 05:44	7440-43-9	
Calcium	**189000**	ug/L	400	20	12/22/11 07:49	01/03/12 14:49	7440-70-2	
Chromium	ND	ug/L	0.50	1	12/22/11 07:49	12/31/11 05:44	7440-47-3	
Copper	**39.0**	ug/L	0.50	1	12/22/11 07:49	12/31/11 05:44	7440-50-8	
Iron	**6340**	ug/L	50.0	1	12/22/11 07:49	12/31/11 05:44	7439-89-6	
Lead	**2.2**	ug/L	0.10	1	12/22/11 07:49	12/31/11 05:44	7439-92-1	
Magnesium	**18800**	ug/L	5.0	1	12/22/11 07:49	12/31/11 05:44	7439-95-4	
Manganese	**2480**	ug/L	5.0	10	12/22/11 07:49	12/31/11 05:48	7439-96-5	
Nickel	**5.4**	ug/L	0.50	1	12/22/11 07:49	12/31/11 05:44	7440-02-0	
Potassium	**1590**	ug/L	20.0	1	12/22/11 07:49	12/31/11 05:44	7440-09-7	
Selenium	ND	ug/L	0.50	1	12/22/11 07:49	12/31/11 05:44	7782-49-2	
Silver	ND	ug/L	0.50	1	12/22/11 07:49	12/31/11 05:44	7440-22-4	
Sodium	**9620**	ug/L	50.0	1	12/22/11 07:49	12/31/11 05:44	7440-23-5	
Thallium	ND	ug/L	0.10	1	12/22/11 07:49	12/31/11 05:44	7440-28-0	
Total Hardness by 2340B	**550000**	ug/L	1420	20	12/22/11 07:49	01/03/12 14:49		
Vanadium	ND	ug/L	0.10	1	12/22/11 07:49	12/31/11 05:44	7440-62-2	
Zinc	**3750**	ug/L	50.0	10	12/22/11 07:49	12/31/11 05:48	7440-66-6	
200.8 MET ICPMS, Dissolved	Analytical Method: EPA 200.8							
Aluminum, Dissolved	**39.1**	ug/L	4.0	1	12/22/11 07:57	12/30/11 17:07	7429-90-5	
Arsenic, Dissolved	ND	ug/L	0.50	1	12/22/11 07:57	12/30/11 17:07	7440-38-2	CH
Barium, Dissolved	**18.9**	ug/L	0.30	1	12/22/11 07:57	12/30/11 17:07	7440-39-3	
Cadmium, Dissolved	**16.6**	ug/L	0.080	1	12/22/11 07:57	12/30/11 17:07	7440-43-9	
Calcium, Dissolved	**243000**	ug/L	400	20	12/22/11 07:57	12/30/11 17:12	7440-70-2	
Chromium, Dissolved	ND	ug/L	0.50	1	12/22/11 07:57	12/30/11 17:07	7440-47-3	
Copper, Dissolved	**6.7**	ug/L	0.50	1	12/22/11 07:57	12/30/11 17:07	7440-50-8	
Iron, Dissolved	**3130**	ug/L	50.0	1	12/22/11 07:57	12/30/11 17:07	7439-89-6	
Lead, Dissolved	ND	ug/L	0.10	1	12/22/11 07:57	12/30/11 17:07	7439-92-1	
Magnesium, Dissolved	**19200**	ug/L	5.0	1	12/22/11 07:57	12/30/11 17:07	7439-95-4	
Manganese, Dissolved	**2290**	ug/L	10.0	20	12/22/11 07:57	12/30/11 17:12	7439-96-5	
Nickel, Dissolved	**5.8**	ug/L	0.50	1	12/22/11 07:57	12/30/11 17:07	7440-02-0	
Potassium, Dissolved	**1650**	ug/L	20.0	1	12/22/11 07:57	12/30/11 17:07	7440-09-7	
Selenium, Dissolved	ND	ug/L	0.50	1	12/22/11 07:57	12/30/11 17:07	7782-49-2	
Silver, Dissolved	ND	ug/L	0.50	1	12/22/11 07:57	12/30/11 17:07	7440-22-4	
Sodium, Dissolved	**10400**	ug/L	50.0	1	12/22/11 07:57	12/30/11 17:07	7440-23-5	
Thallium, Dissolved	ND	ug/L	0.10	1	12/22/11 07:57	12/30/11 17:07	7440-28-0	
Vanadium, Dissolved	ND	ug/L	0.10	1	12/22/11 07:57	12/30/11 17:07	7440-62-2	
Zinc, Dissolved	**3570**	ug/L	100	20	12/22/11 07:57	12/30/11 17:12	7440-66-6	
245.1 Mercury	Analytical Method: EPA 245.1							
Mercury	ND	ug/L	0.20	1	12/21/11 12:12	12/22/11 13:22	7439-97-6	

This report shall not be reproduced, except in full,
without the written consent of Pace Analytical Services, Inc..

Pace Analytical Services, Inc.
9608 Loiret Blvd.
Lenexa, KS 66219
(913)599-5665

ANALYTICAL RESULTS

Project: RICO WATER SAMPLING DEC 2011
Pace Project No.: 60112290

Sample: DR-8 **Lab ID: 60112290008** Collected: 12/13/11 08:00 Received: 12/16/11 09:00 Matrix: Water

Parameters	Results	Units	Report Limit	DF	Prepared	Analyzed	CAS No.	Qual
245.1 Mercury, Dissolved	Analytical Method: EPA 245.1							
Mercury, Dissolved	ND	ug/L	0.20	1	12/21/11 12:14	12/23/11 09:22	7439-97-6	
2510B Specific Conductance	Analytical Method: SM 2510B							
Specific Conductance	**1150**	umhos/cm	10.0	1		12/22/11 10:51		
Salinity	Analytical Method: Calculated							
Salinity (as dissolved solids)	**735**	mg/L	6.0	1		12/27/11 11:31		
Salinity (as seawater)	**0.57**	PSU	0.010	1		12/27/11 11:31		
2320B Alkalinity	Analytical Method: SM 2320B							
Alkalinity,Bicarbonate (CaCO3)	**96.0**	mg/L	20.0	1		12/27/11 12:30		
Alkalinity, Carbonate (CaCO3)	ND	mg/L	20.0	1		12/27/11 12:30		
Alkalinity, Total as CaCO3	**96.0**	mg/L	20.0	1		12/27/11 12:30		
2540C Total Dissolved Solids	Analytical Method: SM 2540C							
Total Dissolved Solids	**948**	mg/L	5.0	1		12/19/11 13:39		
2540D Total Suspended Solids	Analytical Method: SM 2540D							
Total Suspended Solids	**14.0**	mg/L	5.0	1		12/20/11 07:47		
4500H+ pH, Electrometric	Analytical Method: SM 4500-H+B							
pH at 25 Degrees C	**7.0**	Std. Units	0.10	1		12/16/11 17:45		H6
300.0 IC Anions 28 Days	Analytical Method: EPA 300.0							
Sulfate	**563**	mg/L	50.0	50		12/29/11 09:01	14808-79-8	
4500CNE Cyanide, Total	Analytical Method: SM 4500-CN-E							
Cyanide	ND	mg/L	0.0050	1		12/21/11 17:23	57-12-5	

This report shall not be reproduced, except in full,
without the written consent of Pace Analytical Services, Inc..

Pace Analytical Services, Inc.
9608 Loiret Blvd.
Lenexa, KS 66219
(913)599-5665

ANALYTICAL RESULTS

Project: RICO WATER SAMPLING DEC 2011
Pace Project No.: 60112290

Sample: DR-4-SW **Lab ID: 60112290009** Collected: 12/13/11 08:00 Received: 12/16/11 09:00 Matrix: Water

Parameters	Results	Units	Report Limit	DF	Prepared	Analyzed	CAS No.	Qual
200.8 MET ICPMS	Analytical Method: EPA 200.8							
Aluminum	**26.6**	ug/L	4.0	1	12/22/11 07:49	12/31/11 05:53	7429-90-5	
Arsenic	ND	ug/L	0.50	1	12/22/11 07:49	12/31/11 05:53	7440-38-2	
Barium	**62.1**	ug/L	0.30	1	12/22/11 07:49	12/31/11 05:53	7440-39-3	
Cadmium	**1.2**	ug/L	0.080	1	12/22/11 07:49	12/31/11 05:53	7440-43-9	
Calcium	**84900**	ug/L	200	10	12/22/11 07:49	12/31/11 05:58	7440-70-2	
Chromium	ND	ug/L	0.50	1	12/22/11 07:49	12/31/11 05:53	7440-47-3	
Copper	**1.2**	ug/L	0.50	1	12/22/11 07:49	12/31/11 05:53	7440-50-8	
Iron	**182**	ug/L	50.0	1	12/22/11 07:49	12/31/11 05:53	7439-89-6	
Lead	**0.29**	ug/L	0.10	1	12/22/11 07:49	12/31/11 05:53	7439-92-1	
Magnesium	**9970**	ug/L	5.0	1	12/22/11 07:49	12/31/11 05:53	7439-95-4	
Manganese	**311**	ug/L	0.50	1	12/22/11 07:49	12/31/11 05:53	7439-96-5	
Nickel	**0.76**	ug/L	0.50	1	12/22/11 07:49	12/31/11 05:53	7440-02-0	
Potassium	**1300**	ug/L	20.0	1	12/22/11 07:49	12/31/11 05:53	7440-09-7	
Selenium	ND	ug/L	0.50	1	12/22/11 07:49	12/31/11 05:53	7782-49-2	
Silver	ND	ug/L	0.50	1	12/22/11 07:49	12/31/11 05:53	7440-22-4	
Sodium	**4570**	ug/L	50.0	1	12/22/11 07:49	12/31/11 05:53	7440-23-5	
Thallium	ND	ug/L	0.10	1	12/22/11 07:49	12/31/11 05:53	7440-28-0	
Total Hardness by 2340B	**253000**	ug/L	710	10	12/22/11 07:49	12/31/11 05:58		
Vanadium	ND	ug/L	0.10	1	12/22/11 07:49	12/31/11 05:53	7440-62-2	
Zinc	**244**	ug/L	5.0	1	12/22/11 07:49	12/31/11 05:53	7440-66-6	
200.8 MET ICPMS, Dissolved	Analytical Method: EPA 200.8							
Aluminum, Dissolved	**10.8**	ug/L	4.0	1	12/22/11 07:57	12/30/11 17:26	7429-90-5	
Arsenic, Dissolved	ND	ug/L	0.50	1	12/22/11 07:57	12/30/11 17:26	7440-38-2	CH
Barium, Dissolved	**66.0**	ug/L	0.30	1	12/22/11 07:57	12/30/11 17:26	7440-39-3	
Cadmium, Dissolved	**1.2**	ug/L	0.080	1	12/22/11 07:57	12/30/11 17:26	7440-43-9	
Calcium, Dissolved	**83300**	ug/L	400	20	12/22/11 07:57	12/30/11 17:31	7440-70-2	
Chromium, Dissolved	ND	ug/L	0.50	1	12/22/11 07:57	12/30/11 17:26	7440-47-3	
Copper, Dissolved	**0.88**	ug/L	0.50	1	12/22/11 07:57	12/30/11 17:26	7440-50-8	
Iron, Dissolved	**73.9**	ug/L	50.0	1	12/22/11 07:57	12/30/11 17:26	7439-89-6	
Lead, Dissolved	ND	ug/L	0.10	1	12/22/11 07:57	12/30/11 17:26	7439-92-1	
Magnesium, Dissolved	**10900**	ug/L	5.0	1	12/22/11 07:57	12/30/11 17:26	7439-95-4	
Manganese, Dissolved	**326**	ug/L	0.50	1	12/22/11 07:57	12/30/11 17:26	7439-96-5	
Nickel, Dissolved	**1.1**	ug/L	0.50	1	12/22/11 07:57	12/30/11 17:26	7440-02-0	
Potassium, Dissolved	**1440**	ug/L	20.0	1	12/22/11 07:57	12/30/11 17:26	7440-09-7	
Selenium, Dissolved	ND	ug/L	0.50	1	12/22/11 07:57	12/30/11 17:26	7782-49-2	
Silver, Dissolved	ND	ug/L	0.50	1	12/22/11 07:57	12/30/11 17:26	7440-22-4	
Sodium, Dissolved	**5230**	ug/L	50.0	1	12/22/11 07:57	12/30/11 17:26	7440-23-5	
Thallium, Dissolved	ND	ug/L	0.10	1	12/22/11 07:57	12/30/11 17:26	7440-28-0	
Vanadium, Dissolved	ND	ug/L	0.10	1	12/22/11 07:57	12/30/11 17:26	7440-62-2	
Zinc, Dissolved	**261**	ug/L	5.0	1	12/22/11 07:57	12/30/11 17:26	7440-66-6	
245.1 Mercury	Analytical Method: EPA 245.1							
Mercury	ND	ug/L	0.20	1	12/21/11 12:12	12/22/11 13:24	7439-97-6	

This report shall not be reproduced, except in full,
without the written consent of Pace Analytical Services, Inc..

Pace Analytical Services, Inc.
9608 Loiret Blvd.
Lenexa, KS 66219
(913)599-5665

ANALYTICAL RESULTS

Project: RICO WATER SAMPLING DEC 2011
Pace Project No.: 60112290

Sample: DR-4-SW **Lab ID: 60112290009** Collected: 12/13/11 08:00 Received: 12/16/11 09:00 Matrix: Water

Parameters	Results	Units	Report Limit	DF	Prepared	Analyzed	CAS No.	Qual
245.1 Mercury, Dissolved	Analytical Method: EPA 245.1							
Mercury, Dissolved	ND	ug/L	0.20	1	12/21/11 12:14	12/23/11 09:24	7439-97-6	
2510B Specific Conductance	Analytical Method: SM 2510B							
Specific Conductance	**475**	umhos/cm	10.0	1		12/22/11 10:51		
Salinity	Analytical Method: Calculated							
Salinity (as dissolved solids)	**304**	mg/L	6.0	1		12/27/11 11:31		
Salinity (as seawater)	**0.23**	PSU	0.010	1		12/27/11 11:31		
2320B Alkalinity	Analytical Method: SM 2320B							
Alkalinity,Bicarbonate (CaCO3)	**132**	mg/L	20.0	1		12/27/11 12:30		
Alkalinity, Carbonate (CaCO3)	ND	mg/L	20.0	1		12/27/11 12:30		
Alkalinity, Total as CaCO3	**132**	mg/L	20.0	1		12/27/11 12:30		
2540C Total Dissolved Solids	Analytical Method: SM 2540C							
Total Dissolved Solids	**302**	mg/L	5.0	1		12/19/11 13:40		
2540D Total Suspended Solids	Analytical Method: SM 2540D							
Total Suspended Solids	ND	mg/L	5.0	1		12/20/11 07:47		
4500H+ pH, Electrometric	Analytical Method: SM 4500-H+B							
pH at 25 Degrees C	**7.5**	Std. Units	0.10	1		12/16/11 17:45		H6
300.0 IC Anions 28 Days	Analytical Method: EPA 300.0							
Sulfate	**121**	mg/L	10.0	10		12/30/11 09:22	14808-79-8	
4500CNE Cyanide, Total	Analytical Method: SM 4500-CN-E							
Cyanide	ND	mg/L	0.0050	1		12/21/11 17:23	57-12-5	

This report shall not be reproduced, except in full,
without the written consent of Pace Analytical Services, Inc..

Pace Analytical Services, Inc.
9608 Loiret Blvd.
Lenexa, KS 66219
(913)599-5665

ANALYTICAL RESULTS

Project: RICO WATER SAMPLING DEC 2011
Pace Project No.: 60112290

Sample: DR-G **Lab ID: 60112290010** Collected: 12/13/11 08:00 Received: 12/16/11 09:00 Matrix: Water

Parameters	Results	Units	Report Limit	DF	Prepared	Analyzed	CAS No.	Qual
200.8 MET ICPMS	Analytical Method: EPA 200.8							
Aluminum	**17.5**	ug/L	4.0	1	12/22/11 07:49	12/31/11 06:02	7429-90-5	
Arsenic	ND	ug/L	0.50	1	12/22/11 07:49	12/31/11 06:02	7440-38-2	
Barium	**78.1**	ug/L	0.30	1	12/22/11 07:49	12/31/11 06:02	7440-39-3	
Cadmium	**0.78**	ug/L	0.080	1	12/22/11 07:49	12/31/11 06:02	7440-43-9	
Calcium	**84400**	ug/L	200	10	12/22/11 07:49	12/31/11 06:07	7440-70-2	
Chromium	ND	ug/L	0.50	1	12/22/11 07:49	12/31/11 06:02	7440-47-3	
Copper	**0.72**	ug/L	0.50	1	12/22/11 07:49	12/31/11 06:02	7440-50-8	
Iron	**82.4**	ug/L	50.0	1	12/22/11 07:49	12/31/11 06:02	7439-89-6	
Lead	**0.19**	ug/L	0.10	1	12/22/11 07:49	12/31/11 06:02	7439-92-1	
Magnesium	**9660**	ug/L	5.0	1	12/22/11 07:49	12/31/11 06:02	7439-95-4	
Manganese	**182**	ug/L	0.50	1	12/22/11 07:49	12/31/11 06:02	7439-96-5	
Nickel	**0.60**	ug/L	0.50	1	12/22/11 07:49	12/31/11 06:02	7440-02-0	
Potassium	**1160**	ug/L	20.0	1	12/22/11 07:49	12/31/11 06:02	7440-09-7	
Selenium	ND	ug/L	0.50	1	12/22/11 07:49	12/31/11 06:02	7782-49-2	
Silver	ND	ug/L	0.50	1	12/22/11 07:49	12/31/11 06:02	7440-22-4	
Sodium	**4270**	ug/L	50.0	1	12/22/11 07:49	12/31/11 06:02	7440-23-5	
Thallium	ND	ug/L	0.10	1	12/22/11 07:49	12/31/11 06:02	7440-28-0	
Total Hardness by 2340B	**250000**	ug/L	710	10	12/22/11 07:49	12/31/11 06:07		
Vanadium	**0.12**	ug/L	0.10	1	12/22/11 07:49	12/31/11 06:02	7440-62-2	
Zinc	**180**	ug/L	5.0	1	12/22/11 07:49	12/31/11 06:02	7440-66-6	
200.8 MET ICPMS, Dissolved	Analytical Method: EPA 200.8							
Aluminum, Dissolved	**6.4**	ug/L	4.0	1	12/22/11 07:57	12/30/11 17:35	7429-90-5	
Arsenic, Dissolved	ND	ug/L	0.50	1	12/22/11 07:57	12/30/11 17:35	7440-38-2	CH
Barium, Dissolved	**82.6**	ug/L	0.30	1	12/22/11 07:57	12/30/11 17:35	7440-39-3	
Cadmium, Dissolved	**0.82**	ug/L	0.080	1	12/22/11 07:57	12/30/11 17:35	7440-43-9	
Calcium, Dissolved	**78000**	ug/L	400	20	12/22/11 07:57	12/30/11 17:40	7440-70-2	
Chromium, Dissolved	ND	ug/L	0.50	1	12/22/11 07:57	12/30/11 17:35	7440-47-3	
Copper, Dissolved	**0.87**	ug/L	0.50	1	12/22/11 07:57	12/30/11 17:35	7440-50-8	
Iron, Dissolved	ND	ug/L	50.0	1	12/22/11 07:57	12/30/11 17:35	7439-89-6	
Lead, Dissolved	ND	ug/L	0.10	1	12/22/11 07:57	12/30/11 17:35	7439-92-1	
Magnesium, Dissolved	**10500**	ug/L	5.0	1	12/22/11 07:57	12/30/11 17:35	7439-95-4	
Manganese, Dissolved	**188**	ug/L	0.50	1	12/22/11 07:57	12/30/11 17:35	7439-96-5	
Nickel, Dissolved	**0.72**	ug/L	0.50	1	12/22/11 07:57	12/30/11 17:35	7440-02-0	
Potassium, Dissolved	**1300**	ug/L	20.0	1	12/22/11 07:57	12/30/11 17:35	7440-09-7	
Selenium, Dissolved	ND	ug/L	0.50	1	12/22/11 07:57	12/30/11 17:35	7782-49-2	
Silver, Dissolved	ND	ug/L	0.50	1	12/22/11 07:57	12/30/11 17:35	7440-22-4	
Sodium, Dissolved	**4880**	ug/L	50.0	1	12/22/11 07:57	12/30/11 17:35	7440-23-5	
Thallium, Dissolved	ND	ug/L	0.10	1	12/22/11 07:57	12/30/11 17:35	7440-28-0	
Vanadium, Dissolved	ND	ug/L	0.10	1	12/22/11 07:57	12/30/11 17:35	7440-62-2	
Zinc, Dissolved	**194**	ug/L	5.0	1	12/22/11 07:57	12/30/11 17:35	7440-66-6	
245.1 Mercury	Analytical Method: EPA 245.1							
Mercury	ND	ug/L	0.20	1	12/21/11 12:12	12/22/11 13:51	7439-97-6	

This report shall not be reproduced, except in full,
without the written consent of Pace Analytical Services, Inc..

Pace Analytical Services, Inc.
9608 Loiret Blvd.
Lenexa, KS 66219
(913)599-5665

ANALYTICAL RESULTS

Project: RICO WATER SAMPLING DEC 2011
Pace Project No.: 60112290

Sample: DR-G **Lab ID: 60112290010** Collected: 12/13/11 08:00 Received: 12/16/11 09:00 Matrix: Water

Parameters	Results	Units	Report Limit	DF	Prepared	Analyzed	CAS No.	Qual
245.1 Mercury, Dissolved	Analytical Method: EPA 245.1							
Mercury, Dissolved	ND	ug/L	0.20	1	12/21/11 12:14	12/23/11 09:26	7439-97-6	
2510B Specific Conductance	Analytical Method: SM 2510B							
Specific Conductance	**442**	umhos/cm	10.0	1		12/22/11 10:51		
Salinity	Analytical Method: Calculated							
Salinity (as dissolved solids)	**283**	mg/L	6.0	1		12/27/11 11:31		
Salinity (as seawater)	**0.21**	PSU	0.010	1		12/27/11 11:31		
2320B Alkalinity	Analytical Method: SM 2320B							
Alkalinity,Bicarbonate (CaCO3)	**134**	mg/L	20.0	1		12/27/11 12:30		
Alkalinity, Carbonate (CaCO3)	ND	mg/L	20.0	1		12/27/11 12:30		
Alkalinity, Total as CaCO3	**134**	mg/L	20.0	1		12/27/11 12:30		
2540C Total Dissolved Solids	Analytical Method: SM 2540C							
Total Dissolved Solids	**270**	mg/L	5.0	1		12/19/11 13:40		
2540D Total Suspended Solids	Analytical Method: SM 2540D							
Total Suspended Solids	ND	mg/L	5.0	1		12/20/11 07:47		
4500H+ pH, Electrometric	Analytical Method: SM 4500-H+B							
pH at 25 Degrees C	**8.0**	Std. Units	0.10	1		12/16/11 17:45		H6
300.0 IC Anions 28 Days	Analytical Method: EPA 300.0							
Sulfate	**106**	mg/L	10.0	10		12/30/11 09:39	14808-79-8	
4500CNE Cyanide, Total	Analytical Method: SM 4500-CN-E							
Cyanide	ND	mg/L	0.0050	1		12/21/11 17:24	57-12-5	

This report shall not be reproduced, except in full,
without the written consent of Pace Analytical Services, Inc..

Pace Analytical Services, Inc.
9608 Loiret Blvd.
Lenexa, KS 66219
(913)599-5665

ANALYTICAL RESULTS

Project: RICO WATER SAMPLING DEC 2011
Pace Project No.: 60112290

Sample: FB **Lab ID: 60112290011** Collected: 12/13/11 08:00 Received: 12/16/11 09:00 Matrix: Water

Parameters	Results	Units	Report Limit	DF	Prepared	Analyzed	CAS No.	Qual
200.8 MET ICPMS	Analytical Method: EPA 200.8							
Aluminum	ND	ug/L	4.0	1	12/22/11 07:49	12/31/11 06:12	7429-90-5	
Arsenic	ND	ug/L	0.50	1	12/22/11 07:49	12/31/11 06:12	7440-38-2	
Barium	ND	ug/L	0.30	1	12/22/11 07:49	12/31/11 06:12	7440-39-3	
Cadmium	ND	ug/L	0.080	1	12/22/11 07:49	12/31/11 06:12	7440-43-9	
Calcium	**27.5**	ug/L	20.0	1	12/22/11 07:49	12/31/11 06:12	7440-70-2	
Chromium	ND	ug/L	0.50	1	12/22/11 07:49	12/31/11 06:12	7440-47-3	
Copper	ND	ug/L	0.50	1	12/22/11 07:49	12/31/11 06:12	7440-50-8	
Iron	ND	ug/L	50.0	1	12/22/11 07:49	12/31/11 06:12	7439-89-6	
Lead	ND	ug/L	0.10	1	12/22/11 07:49	12/31/11 06:12	7439-92-1	
Magnesium	ND	ug/L	5.0	1	12/22/11 07:49	12/31/11 06:12	7439-95-4	
Manganese	ND	ug/L	0.50	1	12/22/11 07:49	12/31/11 06:12	7439-96-5	
Nickel	ND	ug/L	0.50	1	12/22/11 07:49	12/31/11 06:12	7440-02-0	
Potassium	**28.3**	ug/L	20.0	1	12/22/11 07:49	12/31/11 06:12	7440-09-7	M6
Selenium	ND	ug/L	0.50	1	12/22/11 07:49	12/31/11 06:12	7782-49-2	
Silver	ND	ug/L	0.50	1	12/22/11 07:49	12/31/11 06:12	7440-22-4	
Sodium	ND	ug/L	50.0	1	12/22/11 07:49	12/31/11 06:12	7440-23-5	
Thallium	ND	ug/L	0.10	1	12/22/11 07:49	12/31/11 06:12	7440-28-0	
Total Hardness by 2340B	**86.6**	ug/L	71.0	1	12/22/11 07:49	12/31/11 06:12		
Vanadium	ND	ug/L	0.10	1	12/22/11 07:49	12/31/11 06:12	7440-62-2	
Zinc	ND	ug/L	5.0	1	12/22/11 07:49	12/31/11 06:12	7440-66-6	
200.8 MET ICPMS, Dissolved	Analytical Method: EPA 200.8							
Aluminum, Dissolved	ND	ug/L	4.0	1	12/22/11 07:57	12/30/11 17:45	7429-90-5	
Arsenic, Dissolved	ND	ug/L	0.50	1	12/22/11 07:57	12/30/11 17:45	7440-38-2	CH
Barium, Dissolved	**0.36**	ug/L	0.30	1	12/22/11 07:57	12/30/11 17:45	7440-39-3	
Cadmium, Dissolved	ND	ug/L	0.080	1	12/22/11 07:57	12/30/11 17:45	7440-43-9	
Calcium, Dissolved	ND	ug/L	20.0	1	12/22/11 07:57	12/30/11 17:45	7440-70-2	
Chromium, Dissolved	ND	ug/L	0.50	1	12/22/11 07:57	12/30/11 17:45	7440-47-3	
Copper, Dissolved	ND	ug/L	0.50	1	12/22/11 07:57	12/30/11 17:45	7440-50-8	
Iron, Dissolved	ND	ug/L	50.0	1	12/22/11 07:57	12/30/11 17:45	7439-89-6	
Lead, Dissolved	ND	ug/L	0.10	1	12/22/11 07:57	12/30/11 17:45	7439-92-1	
Magnesium, Dissolved	ND	ug/L	5.0	1	12/22/11 07:57	12/30/11 17:45	7439-95-4	
Manganese, Dissolved	ND	ug/L	0.50	1	12/22/11 07:57	12/30/11 17:45	7439-96-5	
Nickel, Dissolved	ND	ug/L	0.50	1	12/22/11 07:57	12/30/11 17:45	7440-02-0	
Potassium, Dissolved	**45.8**	ug/L	20.0	1	12/22/11 07:57	12/30/11 17:45	7440-09-7	
Selenium, Dissolved	ND	ug/L	0.50	1	12/22/11 07:57	12/30/11 17:45	7782-49-2	
Silver, Dissolved	ND	ug/L	0.50	1	12/22/11 07:57	12/30/11 17:45	7440-22-4	
Sodium, Dissolved	**63.3**	ug/L	50.0	1	12/22/11 07:57	12/30/11 17:45	7440-23-5	
Thallium, Dissolved	ND	ug/L	0.10	1	12/22/11 07:57	12/30/11 17:45	7440-28-0	
Vanadium, Dissolved	ND	ug/L	0.10	1	12/22/11 07:57	12/30/11 17:45	7440-62-2	
Zinc, Dissolved	ND	ug/L	5.0	1	12/22/11 07:57	12/30/11 17:45	7440-66-6	
245.1 Mercury	Analytical Method: EPA 245.1							
Mercury	ND	ug/L	0.20	1	12/21/11 12:12	12/22/11 13:53	7439-97-6	

This report shall not be reproduced, except in full,
without the written consent of Pace Analytical Services, Inc..

Pace Analytical Services, Inc.
9608 Loiret Blvd.
Lenexa, KS 66219
(913)599-5665

ANALYTICAL RESULTS

Project: RICO WATER SAMPLING DEC 2011
Pace Project No.: 60112290

Sample: FB **Lab ID: 60112290011** Collected: 12/13/11 08:00 Received: 12/16/11 09:00 Matrix: Water

Parameters	Results	Units	Report Limit	DF	Prepared	Analyzed	CAS No.	Qual
245.1 Mercury, Dissolved	Analytical Method: EPA 245.1							
Mercury, Dissolved	ND	ug/L	0.20	1	12/21/11 12:14	12/23/11 09:32	7439-97-6	
2510B Specific Conductance	Analytical Method: SM 2510B							
Specific Conductance	ND	umhos/cm	10.0	1		12/22/11 10:51		
Salinity	Analytical Method: Calculated							
Salinity (as dissolved solids)	ND	mg/L	6.0	1		12/27/11 11:31		
Salinity (as seawater)	**0.012**	PSU	0.010	1		12/27/11 11:31		
2320B Alkalinity	Analytical Method: SM 2320B							
Alkalinity,Bicarbonate (CaCO3)	ND	mg/L	20.0	1		12/27/11 12:30		
Alkalinity, Carbonate (CaCO3)	ND	mg/L	20.0	1		12/27/11 12:30		
Alkalinity, Total as CaCO3	ND	mg/L	20.0	1		12/27/11 12:30		
2540C Total Dissolved Solids	Analytical Method: SM 2540C							
Total Dissolved Solids	**6.0**	mg/L	5.0	1		12/19/11 13:40		
2540D Total Suspended Solids	Analytical Method: SM 2540D							
Total Suspended Solids	ND	mg/L	5.0	1		12/20/11 07:47		
4500H+ pH, Electrometric	Analytical Method: SM 4500-H+B							
pH at 25 Degrees C	**6.0**	Std. Units	0.10	1		12/16/11 17:45		H6
300.0 IC Anions 28 Days	Analytical Method: EPA 300.0							
Sulfate	ND	mg/L	1.0	1		12/29/11 10:32	14808-79-8	
4500CNE Cyanide, Total	Analytical Method: SM 4500-CN-E							
Cyanide	ND	mg/L	0.0050	1		12/21/11 17:26	57-12-5	

This report shall not be reproduced, except in full,
without the written consent of Pace Analytical Services, Inc..

Pace Analytical Services, Inc.
9608 Loiret Blvd.
Lenexa, KS 66219
(913)599-5665

ANALYTICAL RESULTS

Project: RICO WATER SAMPLING DEC 2011
Pace Project No.: 60112290

Sample: MW-4 SHALLOW **Lab ID: 60112290018** Collected: 12/14/11 08:00 Received: 12/16/11 09:00 Matrix: Water

Parameters	Results	Units	Report Limit	DF	Prepared	Analyzed	CAS No.	Qual
200.8 MET ICPMS	Analytical Method: EPA 200.8							
Aluminum	**26600**	ug/L	40.0	10	12/22/11 07:49	12/31/11 07:50	7429-90-5	
Arsenic	**18.1**	ug/L	0.50	1	12/22/11 07:49	12/31/11 07:45	7440-38-2	
Barium	**620**	ug/L	3.0	10	12/22/11 07:49	12/31/11 07:50	7440-39-3	
Cadmium	**3.0**	ug/L	0.080	1	12/22/11 07:49	12/31/11 07:45	7440-43-9	
Calcium	**283000**	ug/L	1000	50	12/22/11 07:49	01/04/12 13:07	7440-70-2	
Chromium	**24.5**	ug/L	0.50	1	12/22/11 07:49	12/31/11 07:45	7440-47-3	
Copper	**130**	ug/L	0.50	1	12/22/11 07:49	12/31/11 07:45	7440-50-8	
Iron	**30900**	ug/L	500	10	12/22/11 07:49	12/31/11 07:50	7439-89-6	
Lead	**121**	ug/L	0.10	1	12/22/11 07:49	12/31/11 07:45	7439-92-1	
Magnesium	**35900**	ug/L	50.0	10	12/22/11 07:49	12/31/11 07:50	7439-95-4	
Manganese	**5860**	ug/L	25.0	50	12/22/11 07:49	01/04/12 13:07	7439-96-5	
Nickel	**25.9**	ug/L	0.50	1	12/22/11 07:49	12/31/11 07:45	7440-02-0	
Potassium	**9730**	ug/L	20.0	1	12/22/11 07:49	12/31/11 07:45	7440-09-7	
Selenium	**9.3**	ug/L	0.50	1	12/22/11 07:49	12/31/11 07:45	7782-49-2	
Silver	**2.8**	ug/L	0.50	1	12/22/11 07:49	12/31/11 07:45	7440-22-4	
Sodium	**15800**	ug/L	50.0	1	12/22/11 07:49	12/31/11 07:45	7440-23-5	
Thallium	**0.59**	ug/L	0.10	1	12/22/11 07:49	12/31/11 07:45	7440-28-0	
Total Hardness by 2340B	**855000**	ug/L	3550	50	12/22/11 07:49	01/04/12 13:07		
Vanadium	**34.0**	ug/L	0.10	1	12/22/11 07:49	12/31/11 07:45	7440-62-2	
Zinc	**436**	ug/L	5.0	1	12/22/11 07:49	12/31/11 07:45	7440-66-6	
200.8 MET ICPMS, Dissolved	Analytical Method: EPA 200.8							
Aluminum, Dissolved	**16.7**	ug/L	4.0	1	12/22/11 07:57	01/03/12 13:23	7429-90-5	
Arsenic, Dissolved	**0.56**	ug/L	0.50	1	12/22/11 07:57	01/03/12 13:23	7440-38-2	
Barium, Dissolved	**103**	ug/L	0.30	1	12/22/11 07:57	01/03/12 13:23	7440-39-3	
Cadmium, Dissolved	**0.77**	ug/L	0.080	1	12/22/11 07:57	01/03/12 13:23	7440-43-9	
Calcium, Dissolved	**256000**	ug/L	400	20	12/22/11 07:57	12/30/11 19:18	7440-70-2	
Chromium, Dissolved	**0.58**	ug/L	0.50	1	12/22/11 07:57	01/03/12 13:23	7440-47-3	
Copper, Dissolved	**1.7**	ug/L	0.50	1	12/22/11 07:57	01/03/12 13:23	7440-50-8	
Iron, Dissolved	**58.7**	ug/L	50.0	1	12/22/11 07:57	01/03/12 13:23	7439-89-6	
Lead, Dissolved	**0.40**	ug/L	0.10	1	12/22/11 07:57	01/03/12 13:23	7439-92-1	
Magnesium, Dissolved	**27900**	ug/L	100	20	12/22/11 07:57	12/30/11 19:18	7439-95-4	
Manganese, Dissolved	**4880**	ug/L	10.0	20	12/22/11 07:57	12/30/11 19:18	7439-96-5	
Nickel, Dissolved	**6.3**	ug/L	0.50	1	12/22/11 07:57	01/03/12 13:23	7440-02-0	
Potassium, Dissolved	**5580**	ug/L	20.0	1	12/22/11 07:57	01/03/12 13:23	7440-09-7	
Selenium, Dissolved	**6.4**	ug/L	0.50	1	12/22/11 07:57	01/03/12 13:23	7782-49-2	
Silver, Dissolved	ND	ug/L	0.50	1	12/22/11 07:57	01/03/12 13:23	7440-22-4	CH
Sodium, Dissolved	**16700**	ug/L	50.0	1	12/22/11 07:57	01/03/12 13:23	7440-23-5	
Thallium, Dissolved	ND	ug/L	0.10	1	12/22/11 07:57	01/03/12 13:23	7440-28-0	
Vanadium, Dissolved	**0.17**	ug/L	0.10	1	12/22/11 07:57	01/03/12 13:23	7440-62-2	
Zinc, Dissolved	**77.8**	ug/L	5.0	1	12/22/11 07:57	01/03/12 13:23	7440-66-6	
245.1 Mercury	Analytical Method: EPA 245.1							
Mercury	ND	ug/L	0.20	1	12/21/11 12:12	12/22/11 14:12	7439-97-6	

This report shall not be reproduced, except in full,
without the written consent of Pace Analytical Services, Inc..

Pace Analytical Services, Inc.
9608 Loiret Blvd.
Lenexa, KS 66219
(913)599-5665

ANALYTICAL RESULTS

Project: RICO WATER SAMPLING DEC 2011
Pace Project No.: 60112290

Sample: MW-4 SHALLOW **Lab ID: 60112290018** Collected: 12/14/11 08:00 Received: 12/16/11 09:00 Matrix: Water

Parameters	Results	Units	Report Limit	DF	Prepared	Analyzed	CAS No.	Qual
245.1 Mercury, Dissolved	Analytical Method: EPA 245.1							
Mercury, Dissolved	ND	ug/L	0.20	1	12/21/11 12:14	12/23/11 09:51	7439-97-6	
2510B Specific Conductance	Analytical Method: SM 2510B							
Specific Conductance	**1480**	umhos/cm	10.0	1		12/22/11 10:51		
Salinity	Analytical Method: Calculated							
Salinity (as dissolved solids)	**950**	mg/L	6.0	1		12/27/11 11:31		
Salinity (as seawater)	**0.74**	PSU	0.010	1		12/27/11 11:31		
2320B Alkalinity	Analytical Method: SM 2320B							
Alkalinity,Bicarbonate (CaCO3)	**366**	mg/L	20.0	1		12/28/11 12:30		
Alkalinity, Carbonate (CaCO3)	ND	mg/L	20.0	1		12/28/11 12:30		
Alkalinity, Total as CaCO3	**366**	mg/L	20.0	1		12/28/11 12:30		
2540C Total Dissolved Solids	Analytical Method: SM 2540C							
Total Dissolved Solids	**921**	mg/L	5.0	1		12/20/11 13:24		
2540D Total Suspended Solids	Analytical Method: SM 2540D							
Total Suspended Solids	**1750**	mg/L	5.0	1		12/20/11 08:01		
4500H+ pH, Electrometric	Analytical Method: SM 4500-H+B							
pH at 25 Degrees C	**6.8**	Std. Units	0.10	1		12/16/11 17:45		H6
300.0 IC Anions 28 Days	Analytical Method: EPA 300.0							
Sulfate	**382**	mg/L	50.0	50		12/29/11 12:19	14808-79-8	
4500CNE Cyanide, Total	Analytical Method: SM 4500-CN-E							
Cyanide	ND	mg/L	0.0050	1		12/21/11 17:36	57-12-5	

This report shall not be reproduced, except in full,
without the written consent of Pace Analytical Services, Inc..

Pace Analytical Services, Inc.
9608 Loiret Blvd.
Lenexa, KS 66219
(913)599-5665

ANALYTICAL RESULTS

Project: RICO WATER SAMPLING DEC 2011
Pace Project No.: 60112290

Sample: MW-4 DEEP **Lab ID: 60112290019** Collected: 12/14/11 08:00 Received: 12/16/11 09:00 Matrix: Water

Parameters	Results	Units	Report Limit	DF	Prepared	Analyzed	CAS No.	Qual
200.8 MET ICPMS	Analytical Method: EPA 200.8							
Aluminum	**575**	ug/L	4.0	1	12/22/11 07:49	01/03/12 15:18	7429-90-5	
Arsenic	**1.0**	ug/L	0.50	1	12/22/11 07:49	01/03/12 15:18	7440-38-2	
Barium	**24.0**	ug/L	0.30	1	12/22/11 07:49	01/03/12 15:18	7440-39-3	
Cadmium	**2.5**	ug/L	0.080	1	12/22/11 07:49	01/03/12 15:18	7440-43-9	
Calcium	**234000**	ug/L	400	20	12/22/11 07:49	01/03/12 15:23	7440-70-2	
Chromium	**1.1**	ug/L	0.50	1	12/22/11 07:49	01/03/12 15:18	7440-47-3	
Copper	**7.5**	ug/L	0.50	1	12/22/11 07:49	01/03/12 15:18	7440-50-8	
Iron	**934**	ug/L	50.0	1	12/22/11 07:49	01/03/12 15:18	7439-89-6	
Lead	**5.0**	ug/L	0.10	1	12/22/11 07:49	01/03/12 15:18	7439-92-1	
Magnesium	**35000**	ug/L	100	20	12/22/11 07:49	01/03/12 15:23	7439-95-4	
Manganese	**143**	ug/L	0.50	1	12/22/11 07:49	01/03/12 15:18	7439-96-5	
Nickel	**1.4**	ug/L	0.50	1	12/22/11 07:49	01/03/12 15:18	7440-02-0	
Potassium	**2540**	ug/L	20.0	1	12/22/11 07:49	01/03/12 15:18	7440-09-7	
Selenium	**23.3**	ug/L	0.50	1	12/22/11 07:49	01/03/12 15:18	7782-49-2	
Silver	ND	ug/L	0.50	1	12/22/11 07:49	01/03/12 15:18	7440-22-4	
Sodium	**5320**	ug/L	50.0	1	12/22/11 07:49	01/03/12 15:18	7440-23-5	
Thallium	ND	ug/L	0.10	1	12/22/11 07:49	01/03/12 15:18	7440-28-0	
Total Hardness by 2340B	**728000**	ug/L	1420	20	12/22/11 07:49	01/03/12 15:23		
Vanadium	**1.1**	ug/L	0.10	1	12/22/11 07:49	01/03/12 15:18	7440-62-2	
Zinc	**367**	ug/L	5.0	1	12/22/11 07:49	01/03/12 15:18	7440-66-6	
200.8 MET ICPMS, Dissolved	Analytical Method: EPA 200.8							
Aluminum, Dissolved	**55.3**	ug/L	4.0	1	12/22/11 07:57	12/30/11 19:22	7429-90-5	
Arsenic, Dissolved	ND	ug/L	0.50	1	12/22/11 07:57	12/30/11 19:22	7440-38-2	CH
Barium, Dissolved	**20.2**	ug/L	0.30	1	12/22/11 07:57	12/30/11 19:22	7440-39-3	
Cadmium, Dissolved	**2.8**	ug/L	0.40	5	12/22/11 07:57	01/03/12 13:27	7440-43-9	
Calcium, Dissolved	**326000**	ug/L	400	20	12/22/11 07:57	12/30/11 19:27	7440-70-2	
Chromium, Dissolved	ND	ug/L	0.50	1	12/22/11 07:57	12/30/11 19:22	7440-47-3	
Copper, Dissolved	**4.8**	ug/L	0.50	1	12/22/11 07:57	12/30/11 19:22	7440-50-8	
Iron, Dissolved	ND	ug/L	50.0	1	12/22/11 07:57	12/30/11 19:22	7439-89-6	
Lead, Dissolved	ND	ug/L	0.10	1	12/22/11 07:57	12/30/11 19:22	7439-92-1	
Magnesium, Dissolved	**36300**	ug/L	25.0	5	12/22/11 07:57	01/03/12 13:27	7439-95-4	
Manganese, Dissolved	**77.5**	ug/L	0.50	1	12/22/11 07:57	12/30/11 19:22	7439-96-5	
Nickel, Dissolved	**1.2**	ug/L	0.50	1	12/22/11 07:57	12/30/11 19:22	7440-02-0	
Potassium, Dissolved	**2540**	ug/L	20.0	1	12/22/11 07:57	12/30/11 19:22	7440-09-7	
Selenium, Dissolved	**23.6**	ug/L	0.50	1	12/22/11 07:57	12/30/11 19:22	7782-49-2	
Silver, Dissolved	ND	ug/L	0.50	1	12/22/11 07:57	12/30/11 19:22	7440-22-4	CH
Sodium, Dissolved	**5880**	ug/L	250	5	12/22/11 07:57	01/03/12 13:27	7440-23-5	
Thallium, Dissolved	ND	ug/L	0.10	1	12/22/11 07:57	12/30/11 19:22	7440-28-0	
Vanadium, Dissolved	ND	ug/L	0.10	1	12/22/11 07:57	12/30/11 19:22	7440-62-2	CH
Zinc, Dissolved	**405**	ug/L	25.0	5	12/22/11 07:57	01/03/12 13:27	7440-66-6	
245.1 Mercury	Analytical Method: EPA 245.1							
Mercury	ND	ug/L	0.20	1	12/23/11 08:57	12/23/11 11:17	7439-97-6	

This report shall not be reproduced, except in full,
without the written consent of Pace Analytical Services, Inc..

Pace Analytical Services, Inc.
9608 Loiret Blvd.
Lenexa, KS 66219
(913)599-5665

ANALYTICAL RESULTS

Project: RICO WATER SAMPLING DEC 2011
Pace Project No.: 60112290

Sample: MW-4 DEEP **Lab ID: 60112290019** Collected: 12/14/11 08:00 Received: 12/16/11 09:00 Matrix: Water

Parameters	Results	Units	Report Limit	DF	Prepared	Analyzed	CAS No.	Qual
245.1 Mercury, Dissolved	Analytical Method: EPA 245.1							
Mercury, Dissolved	ND	ug/L	0.20	1	12/21/11 14:31	12/22/11 11:54	7439-97-6	
2510B Specific Conductance	Analytical Method: SM 2510B							
Specific Conductance	**1410**	umhos/cm	10.0	1		12/22/11 10:51		
Salinity	Analytical Method: Calculated							
Salinity (as dissolved solids)	**901**	mg/L	6.0	1		12/27/11 11:31		
Salinity (as seawater)	**0.70**	PSU	0.010	1		12/27/11 11:31		
2320B Alkalinity	Analytical Method: SM 2320B							
Alkalinity,Bicarbonate (CaCO3)	**412**	mg/L	20.0	1		12/28/11 12:30		
Alkalinity, Carbonate (CaCO3)	ND	mg/L	20.0	1		12/28/11 12:30		
Alkalinity, Total as CaCO3	**412**	mg/L	20.0	1		12/28/11 12:30		
2540C Total Dissolved Solids	Analytical Method: SM 2540C							
Total Dissolved Solids	**1100**	mg/L	5.0	1		12/20/11 13:24		
2540D Total Suspended Solids	Analytical Method: SM 2540D							
Total Suspended Solids	**14.0**	mg/L	5.0	1		12/20/11 08:01		
4500H+ pH, Electrometric	Analytical Method: SM 4500-H+B							
pH at 25 Degrees C	**6.7**	Std. Units	0.10	1		12/16/11 17:45		H6
300.0 IC Anions 28 Days	Analytical Method: EPA 300.0							
Sulfate	**441**	mg/L	50.0	50		12/29/11 12:34	14808-79-8	
4500CNE Cyanide, Total	Analytical Method: SM 4500-CN-E							
Cyanide	**0.0065**	mg/L	0.0050	1		12/21/11 17:41	57-12-5	

This report shall not be reproduced, except in full,
without the written consent of Pace Analytical Services, Inc..

Pace Analytical Services, Inc.
9608 Loiret Blvd.
Lenexa, KS 66219
(913)599-5665

ANALYTICAL RESULTS

Project: RICO WATER SAMPLING DEC 2011
Pace Project No.: 60112290

Sample: MW-5 SHALLOW **Lab ID: 60112290020** Collected: 12/14/11 08:00 Received: 12/16/11 09:00 Matrix: Water

Parameters	Results	Units	Report Limit	DF	Prepared	Analyzed	CAS No.	Qual
200.8 MET ICPMS	Analytical Method: EPA 200.8							
Aluminum	**1880**	ug/L	4.0	1	12/22/11 07:49	01/03/12 15:27	7429-90-5	
Arsenic	**53.7**	ug/L	0.50	1	12/22/11 07:49	01/03/12 15:27	7440-38-2	
Barium	**41.8**	ug/L	0.30	1	12/22/11 07:49	01/03/12 15:27	7440-39-3	
Cadmium	**7.4**	ug/L	0.080	1	12/22/11 07:49	01/03/12 15:27	7440-43-9	
Calcium	**343000**	ug/L	400	20	12/22/11 07:49	01/03/12 15:32	7440-70-2	
Chromium	**1.0**	ug/L	0.50	1	12/22/11 07:49	01/03/12 15:27	7440-47-3	
Copper	**1.9**	ug/L	0.50	1	12/22/11 07:49	01/03/12 15:27	7440-50-8	
Iron	**103000**	ug/L	1000	20	12/22/11 07:49	01/03/12 15:32	7439-89-6	
Lead	**36.8**	ug/L	0.10	1	12/22/11 07:49	01/03/12 15:27	7439-92-1	
Magnesium	**25100**	ug/L	100	20	12/22/11 07:49	01/03/12 15:32	7439-95-4	
Manganese	**12700**	ug/L	50.0	100	12/22/11 07:49	01/03/12 15:37	7439-96-5	
Nickel	**53.7**	ug/L	0.50	1	12/22/11 07:49	01/03/12 15:27	7440-02-0	
Potassium	**5120**	ug/L	20.0	1	12/22/11 07:49	01/03/12 15:27	7440-09-7	
Selenium	**1.5**	ug/L	0.50	1	12/22/11 07:49	01/03/12 15:27	7782-49-2	
Silver	ND	ug/L	0.50	1	12/22/11 07:49	01/03/12 15:27	7440-22-4	
Sodium	**5470**	ug/L	50.0	1	12/22/11 07:49	01/03/12 15:27	7440-23-5	
Thallium	**0.27**	ug/L	0.10	1	12/22/11 07:49	01/03/12 15:27	7440-28-0	
Total Hardness by 2340B	**961000**	ug/L	1420	20	12/22/11 07:49	01/03/12 15:32		
Vanadium	**0.96**	ug/L	0.10	1	12/22/11 07:49	01/03/12 15:27	7440-62-2	
Zinc	**11400**	ug/L	500	100	12/22/11 07:49	01/03/12 15:37	7440-66-6	
200.8 MET ICPMS, Dissolved	Analytical Method: EPA 200.8							
Aluminum, Dissolved	**1140**	ug/L	4.0	1	12/22/11 07:57	12/30/11 19:32	7429-90-5	
Arsenic, Dissolved	**47.6**	ug/L	2.5	5	12/22/11 07:57	01/03/12 13:42	7440-38-2	
Barium, Dissolved	**23.8**	ug/L	0.30	1	12/22/11 07:57	12/30/11 19:32	7440-39-3	
Cadmium, Dissolved	**6.4**	ug/L	0.40	5	12/22/11 07:57	01/03/12 13:42	7440-43-9	
Calcium, Dissolved	**384000**	ug/L	1000	50	12/22/11 07:57	01/03/12 13:47	7440-70-2	
Chromium, Dissolved	**0.50**	ug/L	0.50	1	12/22/11 07:57	12/30/11 19:32	7440-47-3	
Copper, Dissolved	**0.54**	ug/L	0.50	1	12/22/11 07:57	12/30/11 19:32	7440-50-8	
Iron, Dissolved	**103000**	ug/L	250	5	12/22/11 07:57	01/03/12 13:42	7439-89-6	
Lead, Dissolved	**18.2**	ug/L	0.10	1	12/22/11 07:57	12/30/11 19:32	7439-92-1	
Magnesium, Dissolved	**26500**	ug/L	25.0	5	12/22/11 07:57	01/03/12 13:42	7439-95-4	
Manganese, Dissolved	**12200**	ug/L	25.0	50	12/22/11 07:57	01/03/12 13:47	7439-96-5	
Nickel, Dissolved	**56.9**	ug/L	0.50	1	12/22/11 07:57	12/30/11 19:32	7440-02-0	
Potassium, Dissolved	**5000**	ug/L	20.0	1	12/22/11 07:57	12/30/11 19:32	7440-09-7	
Selenium, Dissolved	**1.2**	ug/L	0.50	1	12/22/11 07:57	12/30/11 19:32	7782-49-2	
Silver, Dissolved	ND	ug/L	0.50	1	12/22/11 07:57	12/30/11 19:32	7440-22-4	CH
Sodium, Dissolved	**5290**	ug/L	250	5	12/22/11 07:57	01/03/12 13:42	7440-23-5	
Thallium, Dissolved	**0.25**	ug/L	0.10	1	12/22/11 07:57	12/30/11 19:32	7440-28-0	
Vanadium, Dissolved	ND	ug/L	0.10	1	12/22/11 07:57	12/30/11 19:32	7440-62-2	CH
Zinc, Dissolved	**10800**	ug/L	250	50	12/22/11 07:57	01/03/12 13:47	7440-66-6	
245.1 Mercury	Analytical Method: EPA 245.1							
Mercury	ND	ug/L	0.20	1	12/23/11 08:57	12/23/11 11:24	7439-97-6	

This report shall not be reproduced, except in full,
without the written consent of Pace Analytical Services, Inc..

Pace Analytical Services, Inc.
9608 Loiret Blvd.
Lenexa, KS 66219
(913)599-5665

ANALYTICAL RESULTS

Project: RICO WATER SAMPLING DEC 2011
Pace Project No.: 60112290

Sample: MW-5 SHALLOW **Lab ID: 60112290020** Collected: 12/14/11 08:00 Received: 12/16/11 09:00 Matrix: Water

Parameters	Results	Units	Report Limit	DF	Prepared	Analyzed	CAS No.	Qual
245.1 Mercury, Dissolved	Analytical Method: EPA 245.1							
Mercury, Dissolved	ND	ug/L	0.20	1	12/21/11 14:31	12/22/11 11:56	7439-97-6	
2510B Specific Conductance	Analytical Method: SM 2510B							
Specific Conductance	**2230**	umhos/cm	10.0	1		12/22/11 10:51		
Salinity	Analytical Method: Calculated							
Salinity (as dissolved solids)	**1430**	mg/L	6.0	1		12/27/11 11:31		
Salinity (as seawater)	**1.1**	PSU	0.010	1		12/27/11 11:31		
2320B Alkalinity	Analytical Method: SM 2320B							
Alkalinity,Bicarbonate (CaCO3)	ND	mg/L	20.0	1		12/28/11 12:30		
Alkalinity, Carbonate (CaCO3)	ND	mg/L	20.0	1		12/28/11 12:30		
Alkalinity, Total as CaCO3	ND	mg/L	20.0	1		12/28/11 12:30		
2540C Total Dissolved Solids	Analytical Method: SM 2540C							
Total Dissolved Solids	**2440**	mg/L	5.0	1		12/20/11 13:24		
2540D Total Suspended Solids	Analytical Method: SM 2540D							
Total Suspended Solids	**61.0**	mg/L	5.0	1		12/20/11 08:02		
4500H+ pH, Electrometric	Analytical Method: SM 4500-H+B							
pH at 25 Degrees C	**5.7**	Std. Units	0.10	1		12/16/11 17:45		H6
300.0 IC Anions 28 Days	Analytical Method: EPA 300.0							
Sulfate	**1620**	mg/L	100	100		12/30/11 10:12	14808-79-8	
4500CNE Cyanide, Total	Analytical Method: SM 4500-CN-E							
Cyanide	ND	mg/L	0.0050	1		12/21/11 17:44	57-12-5	

This report shall not be reproduced, except in full,
without the written consent of Pace Analytical Services, Inc..

Pace Analytical Services, Inc.
9608 Loiret Blvd.
Lenexa, KS 66219
(913)599-5665

ANALYTICAL RESULTS

Project: RICO WATER SAMPLING DEC 2011
Pace Project No.: 60112290

Sample: MW-5 DEEP **Lab ID: 60112290021** Collected: 12/14/11 08:00 Received: 12/16/11 09:00 Matrix: Water

Parameters	Results	Units	Report Limit	DF	Prepared	Analyzed	CAS No.	Qual
200.8 MET ICPMS	Analytical Method: EPA 200.8							
Aluminum	**1290**	ug/L	4.0	1	12/23/11 08:53	12/28/11 17:53	7429-90-5	
Arsenic	**166**	ug/L	0.50	1	12/23/11 08:53	12/28/11 17:53	7440-38-2	
Barium	**21.9**	ug/L	0.30	1	12/23/11 08:53	12/28/11 17:53	7440-39-3	
Cadmium	ND	ug/L	0.080	1	12/23/11 08:53	12/28/11 17:53	7440-43-9	
Calcium	**382000**	ug/L	2000	100	12/23/11 08:53	12/28/11 18:02	7440-70-2	
Chromium	**0.79**	ug/L	0.50	1	12/23/11 08:53	12/28/11 17:53	7440-47-3	
Copper	**1.4**	ug/L	0.50	1	12/23/11 08:53	12/28/11 17:53	7440-50-8	
Iron	**136000**	ug/L	500	10	12/23/11 08:53	12/28/11 17:57	7439-89-6	
Lead	**11.1**	ug/L	0.10	1	12/23/11 08:53	12/28/11 17:53	7439-92-1	
Magnesium	**73400**	ug/L	50.0	10	12/23/11 08:53	12/28/11 17:57	7439-95-4	
Manganese	**15100**	ug/L	50.0	100	12/23/11 08:53	12/28/11 18:02	7439-96-5	
Nickel	**20.1**	ug/L	0.50	1	12/23/11 08:53	12/28/11 17:53	7440-02-0	
Potassium	**9180**	ug/L	20.0	1	12/23/11 08:53	12/28/11 17:53	7440-09-7	
Selenium	ND	ug/L	0.50	1	12/23/11 08:53	12/28/11 17:53	7782-49-2	
Silver	ND	ug/L	0.50	1	12/23/11 08:53	12/28/11 17:53	7440-22-4	CH
Sodium	**8920**	ug/L	50.0	1	12/23/11 08:53	12/28/11 17:53	7440-23-5	
Thallium	ND	ug/L	0.10	1	12/23/11 08:53	12/28/11 17:53	7440-28-0	
Total Hardness by 2340B	**1260000**	ug/L	7100	100	12/23/11 08:53	12/28/11 18:02		
Vanadium	**0.10**	ug/L	0.10	1	12/23/11 08:53	12/28/11 17:53	7440-62-2	
Zinc	**18500**	ug/L	500	100	12/23/11 08:53	12/28/11 18:02	7440-66-6	
200.8 MET ICPMS, Dissolved	Analytical Method: EPA 200.8							
Aluminum, Dissolved	**1280**	ug/L	4.0	1	12/21/11 11:54	12/30/11 01:37	7429-90-5	M6
Arsenic, Dissolved	**170**	ug/L	0.50	1	12/21/11 11:54	12/30/11 01:37	7440-38-2	
Barium, Dissolved	**23.2**	ug/L	0.30	1	12/21/11 11:54	12/30/11 01:37	7440-39-3	
Cadmium, Dissolved	ND	ug/L	0.080	1	12/21/11 11:54	12/30/11 01:37	7440-43-9	
Calcium, Dissolved	**393000**	ug/L	2000	100	12/21/11 11:54	12/30/11 11:23	7440-70-2	M6
Chromium, Dissolved	**0.50**	ug/L	0.50	1	12/21/11 11:54	12/30/11 01:37	7440-47-3	
Copper, Dissolved	ND	ug/L	0.50	1	12/21/11 11:54	12/30/11 01:37	7440-50-8	
Iron, Dissolved	**138000**	ug/L	500	10	12/21/11 11:54	12/30/11 01:46	7439-89-6	M6
Lead, Dissolved	**0.13**	ug/L	0.10	1	12/21/11 11:54	12/30/11 01:37	7439-92-1	
Magnesium, Dissolved	**73000**	ug/L	50.0	10	12/21/11 11:54	12/30/11 01:46	7439-95-4	M6
Manganese, Dissolved	**15600**	ug/L	50.0	100	12/21/11 11:54	12/30/11 11:23	7439-96-5	M6
Nickel, Dissolved	**19.9**	ug/L	0.50	1	12/21/11 11:54	12/30/11 01:37	7440-02-0	
Potassium, Dissolved	**9360**	ug/L	20.0	1	12/21/11 11:54	12/30/11 01:37	7440-09-7	M6
Selenium, Dissolved	ND	ug/L	0.50	1	12/21/11 11:54	12/30/11 01:37	7782-49-2	
Silver, Dissolved	ND	ug/L	0.50	1	12/21/11 11:54	12/30/11 01:37	7440-22-4	CH
Sodium, Dissolved	**8990**	ug/L	50.0	1	12/21/11 11:54	12/30/11 01:37	7440-23-5	M6
Thallium, Dissolved	ND	ug/L	0.10	1	12/21/11 11:54	12/30/11 01:37	7440-28-0	
Vanadium, Dissolved	ND	ug/L	0.10	1	12/21/11 11:54	12/30/11 01:37	7440-62-2	
Zinc, Dissolved	**19200**	ug/L	500	100	12/21/11 11:54	12/30/11 11:23	7440-66-6	M6
245.1 Mercury	Analytical Method: EPA 245.1							
Mercury	ND	ug/L	0.20	1	12/23/11 08:57	12/23/11 11:30	7439-97-6	

This report shall not be reproduced, except in full,
without the written consent of Pace Analytical Services, Inc..

Pace Analytical Services, Inc.
9608 Loiret Blvd.
Lenexa, KS 66219
(913)599-5665

ANALYTICAL RESULTS

Project: RICO WATER SAMPLING DEC 2011
Pace Project No.: 60112290

Sample: MW-5 DEEP **Lab ID: 60112290021** Collected: 12/14/11 08:00 Received: 12/16/11 09:00 Matrix: Water

Parameters	Results	Units	Report Limit	DF	Prepared	Analyzed	CAS No.	Qual
245.1 Mercury, Dissolved	Analytical Method: EPA 245.1							
Mercury, Dissolved	ND	ug/L	0.20	1	12/21/11 14:31	12/22/11 11:58	7439-97-6	
2510B Specific Conductance	Analytical Method: SM 2510B							
Specific Conductance	**2210**	umhos/cm	10.0	1		12/23/11 10:20		
Salinity	Analytical Method: Calculated							
Salinity (as dissolved solids)	**1420**	mg/L	6.0	1		12/27/11 12:49		
Salinity (as seawater)	**1.1**	PSU	0.010	1		12/27/11 12:49		
2320B Alkalinity	Analytical Method: SM 2320B							
Alkalinity,Bicarbonate (CaCO3)	ND	mg/L	20.0	1		12/28/11 12:30		
Alkalinity, Carbonate (CaCO3)	ND	mg/L	20.0	1		12/28/11 12:30		
Alkalinity, Total as CaCO3	ND	mg/L	20.0	1		12/28/11 12:30		
2540C Total Dissolved Solids	Analytical Method: SM 2540C							
Total Dissolved Solids	**2180**	mg/L	5.0	1		12/20/11 13:25		
2540D Total Suspended Solids	Analytical Method: SM 2540D							
Total Suspended Solids	**40.0**	mg/L	5.0	1		12/20/11 08:02		
4500H+ pH, Electrometric	Analytical Method: SM 4500-H+B							
pH at 25 Degrees C	**6.4**	Std. Units	0.10	1		12/16/11 18:00		H6
300.0 IC Anions 28 Days	Analytical Method: EPA 300.0							
Sulfate	**1410**	mg/L	100	100		12/30/11 17:26	14808-79-8	
4500CNE Cyanide, Total	Analytical Method: SM 4500-CN-E							
Cyanide	ND	mg/L	0.0050	1		12/21/11 17:44	57-12-5	

This report shall not be reproduced, except in full,
without the written consent of Pace Analytical Services, Inc..

Pace Analytical Services, Inc.
9608 Loiret Blvd.
Lenexa, KS 66219
(913)599-5665

ANALYTICAL RESULTS

Project: RICO WATER SAMPLING DEC 2011
Pace Project No.: 60112290

Sample: MW-6 SHALLOW **Lab ID: 60112290022** Collected: 12/14/11 08:00 Received: 12/16/11 09:00 Matrix: Water

Parameters	Results	Units	Report Limit	DF	Prepared	Analyzed	CAS No.	Qual
200.8 MET ICPMS	Analytical Method: EPA 200.8							
Aluminum	**19000**	ug/L	4.0	1	12/23/11 08:53	12/30/11 08:17	7429-90-5	
Arsenic	**72.6**	ug/L	0.50	1	12/23/11 08:53	12/30/11 08:17	7440-38-2	
Barium	**212**	ug/L	0.30	1	12/23/11 08:53	12/30/11 08:17	7440-39-3	
Cadmium	**3.7**	ug/L	0.080	1	12/23/11 08:53	12/30/11 08:17	7440-43-9	
Calcium	**397000**	ug/L	400	20	12/23/11 08:53	12/28/11 16:38	7440-70-2	
Chromium	**12.1**	ug/L	0.50	1	12/23/11 08:53	12/30/11 08:17	7440-47-3	
Copper	**46.6**	ug/L	0.50	1	12/23/11 08:53	12/30/11 08:17	7440-50-8	
Iron	**80700**	ug/L	1000	20	12/23/11 08:53	12/28/11 16:38	7439-89-6	
Lead	**77.2**	ug/L	0.10	1	12/23/11 08:53	12/30/11 08:17	7439-92-1	
Magnesium	**62600**	ug/L	100	20	12/23/11 08:53	12/28/11 16:38	7439-95-4	
Manganese	**7070**	ug/L	10.0	20	12/23/11 08:53	12/28/11 16:38	7439-96-5	
Nickel	**11.3**	ug/L	0.50	1	12/23/11 08:53	12/30/11 08:17	7440-02-0	
Potassium	**16600**	ug/L	20.0	1	12/23/11 08:53	12/30/11 08:17	7440-09-7	
Selenium	**2.3**	ug/L	0.50	1	12/23/11 08:53	12/30/11 08:17	7782-49-2	
Silver	**0.53**	ug/L	0.50	1	12/23/11 08:53	12/30/11 08:17	7440-22-4	
Sodium	**4870**	ug/L	50.0	1	12/23/11 08:53	12/30/11 08:17	7440-23-5	
Thallium	**0.45**	ug/L	0.10	1	12/23/11 08:53	12/30/11 08:17	7440-28-0	
Total Hardness by 2340B	**1250000**	ug/L	1420	20	12/23/11 08:53	12/28/11 16:38		
Vanadium	**20.5**	ug/L	0.10	1	12/23/11 08:53	12/30/11 08:17	7440-62-2	
Zinc	**1440**	ug/L	100	20	12/23/11 08:53	12/28/11 16:38	7440-66-6	
200.8 MET ICPMS, Dissolved	Analytical Method: EPA 200.8							
Aluminum, Dissolved	**1100**	ug/L	4.0	1	12/21/11 11:54	12/30/11 02:14	7429-90-5	
Arsenic, Dissolved	**47.1**	ug/L	0.50	1	12/21/11 11:54	12/30/11 02:14	7440-38-2	
Barium, Dissolved	**20.1**	ug/L	0.30	1	12/21/11 11:54	12/30/11 02:14	7440-39-3	
Cadmium, Dissolved	ND	ug/L	0.080	1	12/21/11 11:54	12/30/11 02:14	7440-43-9	
Calcium, Dissolved	**410000**	ug/L	1000	50	12/21/11 11:54	12/30/11 11:27	7440-70-2	
Chromium, Dissolved	ND	ug/L	0.50	1	12/21/11 11:54	12/30/11 02:14	7440-47-3	
Copper, Dissolved	ND	ug/L	0.50	1	12/21/11 11:54	12/30/11 02:14	7440-50-8	
Iron, Dissolved	**62800**	ug/L	500	10	12/21/11 11:54	12/30/11 02:19	7439-89-6	
Lead, Dissolved	**0.13**	ug/L	0.10	1	12/21/11 11:54	12/30/11 02:14	7439-92-1	
Magnesium, Dissolved	**59000**	ug/L	50.0	10	12/21/11 11:54	12/30/11 02:19	7439-95-4	
Manganese, Dissolved	**7200**	ug/L	25.0	50	12/21/11 11:54	12/30/11 11:27	7439-96-5	
Nickel, Dissolved	**3.3**	ug/L	0.50	1	12/21/11 11:54	12/30/11 02:14	7440-02-0	
Potassium, Dissolved	**12600**	ug/L	20.0	1	12/21/11 11:54	12/30/11 02:14	7440-09-7	
Selenium, Dissolved	ND	ug/L	0.50	1	12/21/11 11:54	12/30/11 02:14	7782-49-2	
Silver, Dissolved	ND	ug/L	0.50	1	12/21/11 11:54	12/30/11 02:14	7440-22-4	CH
Sodium, Dissolved	**4040**	ug/L	50.0	1	12/21/11 11:54	12/30/11 02:14	7440-23-5	
Thallium, Dissolved	ND	ug/L	0.10	1	12/21/11 11:54	12/30/11 02:14	7440-28-0	
Vanadium, Dissolved	ND	ug/L	0.10	1	12/21/11 11:54	12/30/11 02:14	7440-62-2	
Zinc, Dissolved	**893**	ug/L	50.0	10	12/21/11 11:54	12/30/11 02:19	7440-66-6	
245.1 Mercury	Analytical Method: EPA 245.1							
Mercury	ND	ug/L	0.20	1	12/23/11 08:57	12/23/11 11:32	7439-97-6	

This report shall not be reproduced, except in full,
without the written consent of Pace Analytical Services, Inc..

Pace Analytical Services, Inc.
9608 Loiret Blvd.
Lenexa, KS 66219
(913)599-5665

ANALYTICAL RESULTS

Project: RICO WATER SAMPLING DEC 2011
Pace Project No.: 60112290

Sample: MW-6 SHALLOW **Lab ID: 60112290022** Collected: 12/14/11 08:00 Received: 12/16/11 09:00 Matrix: Water

Parameters	Results	Units	Report Limit	DF	Prepared	Analyzed	CAS No.	Qual
245.1 Mercury, Dissolved	Analytical Method: EPA 245.1							
Mercury, Dissolved	ND	ug/L	0.20	1	12/21/11 14:31	12/22/11 12:00	7439-97-6	
2510B Specific Conductance	Analytical Method: SM 2510B							
Specific Conductance	**1940**	umhos/cm	10.0	1		12/23/11 10:21		
Salinity	Analytical Method: Calculated							
Salinity (as dissolved solids)	**1240**	mg/L	6.0	1		12/27/11 12:49		
Salinity (as seawater)	**0.98**	PSU	0.010	1		12/27/11 12:49		
2320B Alkalinity	Analytical Method: SM 2320B							
Alkalinity,Bicarbonate (CaCO3)	**64.0**	mg/L	20.0	1		12/28/11 12:30		
Alkalinity, Carbonate (CaCO3)	ND	mg/L	20.0	1		12/28/11 12:30		
Alkalinity, Total as CaCO3	**64.0**	mg/L	20.0	1		12/28/11 12:30		
2540C Total Dissolved Solids	Analytical Method: SM 2540C							
Total Dissolved Solids	**1920**	mg/L	5.0	1		12/20/11 13:25		
2540D Total Suspended Solids	Analytical Method: SM 2540D							
Total Suspended Solids	**2220**	mg/L	5.0	1		12/20/11 08:02		
4500H+ pH, Electrometric	Analytical Method: SM 4500-H+B							
pH at 25 Degrees C	**6.4**	Std. Units	0.10	1		12/16/11 18:00		H6
300.0 IC Anions 28 Days	Analytical Method: EPA 300.0							
Sulfate	**532**	mg/L	50.0	50		12/30/11 03:40	14808-79-8	
4500CNE Cyanide, Total	Analytical Method: SM 4500-CN-E							
Cyanide	ND	mg/L	0.0050	1		12/21/11 17:45	57-12-5	

This report shall not be reproduced, except in full,
without the written consent of Pace Analytical Services, Inc..

Pace Analytical Services, Inc.
9608 Loiret Blvd.
Lenexa, KS 66219
(913)599-5665

ANALYTICAL RESULTS

Project: RICO WATER SAMPLING DEC 2011
Pace Project No.: 60112290

Sample: MW-6 DEEP **Lab ID: 60112290023** Collected: 12/14/11 08:00 Received: 12/16/11 09:00 Matrix: Water

Parameters	Results	Units	Report Limit	DF	Prepared	Analyzed	CAS No.	Qual
200.8 MET ICPMS	Analytical Method: EPA 200.8							
Aluminum	**586**	ug/L	4.0	1	12/23/11 08:53	12/28/11 16:43	7429-90-5	
Arsenic	**18.0**	ug/L	0.50	1	12/23/11 08:53	12/28/11 16:43	7440-38-2	
Barium	**22.6**	ug/L	0.30	1	12/23/11 08:53	12/28/11 16:43	7440-39-3	
Cadmium	**0.16**	ug/L	0.080	1	12/23/11 08:53	12/28/11 16:43	7440-43-9	
Calcium	**267000**	ug/L	400	20	12/23/11 08:53	12/28/11 16:47	7440-70-2	
Chromium	**1.1**	ug/L	0.50	1	12/23/11 08:53	12/28/11 16:43	7440-47-3	
Copper	**1.8**	ug/L	0.50	1	12/23/11 08:53	12/28/11 16:43	7440-50-8	
Iron	**21000**	ug/L	50.0	1	12/23/11 08:53	12/28/11 16:43	7439-89-6	
Lead	**5.0**	ug/L	0.10	1	12/23/11 08:53	12/28/11 16:43	7439-92-1	
Magnesium	**38800**	ug/L	100	20	12/23/11 08:53	12/28/11 16:47	7439-95-4	
Manganese	**9500**	ug/L	10.0	20	12/23/11 08:53	12/28/11 16:47	7439-96-5	
Nickel	**2.1**	ug/L	0.50	1	12/23/11 08:53	12/28/11 16:43	7440-02-0	
Potassium	**7150**	ug/L	20.0	1	12/23/11 08:53	12/28/11 16:43	7440-09-7	
Selenium	ND	ug/L	0.50	1	12/23/11 08:53	12/28/11 16:43	7782-49-2	
Silver	ND	ug/L	0.50	1	12/23/11 08:53	12/28/11 16:43	7440-22-4	CH
Sodium	**5790**	ug/L	50.0	1	12/23/11 08:53	12/28/11 16:43	7440-23-5	
Thallium	ND	ug/L	0.10	1	12/23/11 08:53	12/28/11 16:43	7440-28-0	
Total Hardness by 2340B	**826000**	ug/L	1420	20	12/23/11 08:53	12/28/11 16:47		
Vanadium	**0.23**	ug/L	0.10	1	12/23/11 08:53	12/28/11 16:43	7440-62-2	
Zinc	**309**	ug/L	5.0	1	12/23/11 08:53	12/28/11 16:43	7440-66-6	
200.8 MET ICPMS, Dissolved	Analytical Method: EPA 200.8							
Aluminum, Dissolved	**474**	ug/L	4.0	1	12/21/11 11:54	12/30/11 02:23	7429-90-5	
Arsenic, Dissolved	**17.3**	ug/L	0.50	1	12/21/11 11:54	12/30/11 02:23	7440-38-2	
Barium, Dissolved	**22.1**	ug/L	0.30	1	12/21/11 11:54	12/30/11 02:23	7440-39-3	
Cadmium, Dissolved	ND	ug/L	0.080	1	12/21/11 11:54	12/30/11 02:23	7440-43-9	
Calcium, Dissolved	**274000**	ug/L	1000	50	12/21/11 11:54	12/30/11 11:32	7440-70-2	
Chromium, Dissolved	ND	ug/L	0.50	1	12/21/11 11:54	12/30/11 02:23	7440-47-3	
Copper, Dissolved	**0.84**	ug/L	0.50	1	12/21/11 11:54	12/30/11 02:23	7440-50-8	
Iron, Dissolved	**20200**	ug/L	50.0	1	12/21/11 11:54	12/30/11 02:23	7439-89-6	
Lead, Dissolved	ND	ug/L	0.10	1	12/21/11 11:54	12/30/11 02:23	7439-92-1	
Magnesium, Dissolved	**38700**	ug/L	50.0	10	12/21/11 11:54	12/30/11 02:28	7439-95-4	
Manganese, Dissolved	**9820**	ug/L	25.0	50	12/21/11 11:54	12/30/11 11:32	7439-96-5	
Nickel, Dissolved	**1.9**	ug/L	0.50	1	12/21/11 11:54	12/30/11 02:23	7440-02-0	
Potassium, Dissolved	**7130**	ug/L	20.0	1	12/21/11 11:54	12/30/11 02:23	7440-09-7	
Selenium, Dissolved	ND	ug/L	0.50	1	12/21/11 11:54	12/30/11 02:23	7782-49-2	
Silver, Dissolved	ND	ug/L	0.50	1	12/21/11 11:54	12/30/11 02:23	7440-22-4	CH
Sodium, Dissolved	**5700**	ug/L	50.0	1	12/21/11 11:54	12/30/11 02:23	7440-23-5	
Thallium, Dissolved	ND	ug/L	0.10	1	12/21/11 11:54	12/30/11 02:23	7440-28-0	
Vanadium, Dissolved	ND	ug/L	0.10	1	12/21/11 11:54	12/30/11 02:23	7440-62-2	
Zinc, Dissolved	**289**	ug/L	5.0	1	12/21/11 11:54	12/30/11 02:23	7440-66-6	
245.1 Mercury	Analytical Method: EPA 245.1							
Mercury	ND	ug/L	0.20	1	12/23/11 08:57	12/23/11 11:34	7439-97-6	

This report shall not be reproduced, except in full,
without the written consent of Pace Analytical Services, Inc..

Pace Analytical Services, Inc.
9608 Loiret Blvd.
Lenexa, KS 66219
(913)599-5665

ANALYTICAL RESULTS

Project: RICO WATER SAMPLING DEC 2011
Pace Project No.: 60112290

Sample: MW-6 DEEP **Lab ID: 60112290023** Collected: 12/14/11 08:00 Received: 12/16/11 09:00 Matrix: Water

Parameters	Results	Units	Report Limit	DF	Prepared	Analyzed	CAS No.	Qual
245.1 Mercury, Dissolved	Analytical Method: EPA 245.1							
Mercury, Dissolved	ND	ug/L	0.20	1	12/21/11 14:31	12/22/11 12:02	7439-97-6	
2510B Specific Conductance	Analytical Method: SM 2510B							
Specific Conductance	**1420**	umhos/cm	10.0	1		12/23/11 10:22		
Salinity	Analytical Method: Calculated							
Salinity (as dissolved solids)	**912**	mg/L	6.0	1		12/27/11 12:49		
Salinity (as seawater)	**0.71**	PSU	0.010	1		12/27/11 12:49		
2320B Alkalinity	Analytical Method: SM 2320B							
Alkalinity,Bicarbonate (CaCO3)	**152**	mg/L	20.0	1		12/28/11 12:30		
Alkalinity, Carbonate (CaCO3)	ND	mg/L	20.0	1		12/28/11 12:30		
Alkalinity, Total as CaCO3	**152**	mg/L	20.0	1		12/28/11 12:30		
2540C Total Dissolved Solids	Analytical Method: SM 2540C							
Total Dissolved Solids	**1200**	mg/L	5.0	1		12/20/11 13:25		
2540D Total Suspended Solids	Analytical Method: SM 2540D							
Total Suspended Solids	**40.0**	mg/L	5.0	1		12/20/11 08:02		
4500H+ pH, Electrometric	Analytical Method: SM 4500-H+B							
pH at 25 Degrees C	**6.6**	Std. Units	0.10	1		12/16/11 18:00		H6
300.0 IC Anions 28 Days	Analytical Method: EPA 300.0							
Sulfate	**630**	mg/L	50.0	50		12/30/11 18:16	14808-79-8	
4500CNE Cyanide, Total	Analytical Method: SM 4500-CN-E							
Cyanide	ND	mg/L	0.0050	1		12/21/11 17:47	57-12-5	

This report shall not be reproduced, except in full,
without the written consent of Pace Analytical Services, Inc..

Pace Analytical Services, Inc.
9608 Loiret Blvd.
Lenexa, KS 66219
(913)599-5665

ANALYTICAL RESULTS

Project: RICO WATER SAMPLING DEC 2011
Pace Project No.: 60112290

Sample: MW-3 DEEP **Lab ID: 60112290024** Collected: 12/14/11 08:00 Received: 12/16/11 09:00 Matrix: Water

Parameters	Results	Units	Report Limit	DF	Prepared	Analyzed	CAS No.	Qual
200.8 MET ICPMS	Analytical Method: EPA 200.8							
Aluminum	**790**	ug/L	4.0	1	12/23/11 08:53	12/28/11 16:52	7429-90-5	
Arsenic	**7.2**	ug/L	0.50	1	12/23/11 08:53	12/28/11 16:52	7440-38-2	
Barium	**31.1**	ug/L	0.30	1	12/23/11 08:53	12/28/11 16:52	7440-39-3	
Cadmium	**0.49**	ug/L	0.080	1	12/23/11 08:53	12/28/11 16:52	7440-43-9	
Calcium	**235000**	ug/L	400	20	12/23/11 08:53	12/28/11 16:57	7440-70-2	
Chromium	**1.7**	ug/L	0.50	1	12/23/11 08:53	12/28/11 16:52	7440-47-3	
Copper	**4.8**	ug/L	0.50	1	12/23/11 08:53	12/28/11 16:52	7440-50-8	
Iron	**22100**	ug/L	50.0	1	12/23/11 08:53	12/28/11 16:52	7439-89-6	
Lead	**7.8**	ug/L	0.10	1	12/23/11 08:53	12/28/11 16:52	7439-92-1	
Magnesium	**23000**	ug/L	100	20	12/23/11 08:53	12/28/11 16:57	7439-95-4	
Manganese	**1410**	ug/L	10.0	20	12/23/11 08:53	12/28/11 16:57	7439-96-5	
Nickel	**0.90**	ug/L	0.50	1	12/23/11 08:53	12/28/11 16:52	7440-02-0	
Potassium	**2440**	ug/L	20.0	1	12/23/11 08:53	12/28/11 16:52	7440-09-7	
Selenium	ND	ug/L	0.50	1	12/23/11 08:53	12/28/11 16:52	7782-49-2	
Silver	ND	ug/L	0.50	1	12/23/11 08:53	12/28/11 16:52	7440-22-4	CH
Sodium	**10900**	ug/L	50.0	1	12/23/11 08:53	12/28/11 16:52	7440-23-5	
Thallium	ND	ug/L	0.10	1	12/23/11 08:53	12/28/11 16:52	7440-28-0	
Total Hardness by 2340B	**681000**	ug/L	1420	20	12/23/11 08:53	12/28/11 16:57		
Vanadium	**1.9**	ug/L	0.10	1	12/23/11 08:53	12/28/11 16:52	7440-62-2	
Zinc	**134**	ug/L	5.0	1	12/23/11 08:53	12/28/11 16:52	7440-66-6	
200.8 MET ICPMS, Dissolved	Analytical Method: EPA 200.8							
Aluminum, Dissolved	**6.9**	ug/L	4.0	1	12/21/11 11:54	12/30/11 02:33	7429-90-5	
Arsenic, Dissolved	**0.54**	ug/L	0.50	1	12/21/11 11:54	12/30/11 02:33	7440-38-2	
Barium, Dissolved	**18.0**	ug/L	0.30	1	12/21/11 11:54	12/30/11 02:33	7440-39-3	
Cadmium, Dissolved	ND	ug/L	0.080	1	12/21/11 11:54	12/30/11 02:33	7440-43-9	
Calcium, Dissolved	**248000**	ug/L	200	10	12/21/11 11:54	12/30/11 02:37	7440-70-2	
Chromium, Dissolved	ND	ug/L	0.50	1	12/21/11 11:54	12/30/11 02:33	7440-47-3	
Copper, Dissolved	**0.55**	ug/L	0.50	1	12/21/11 11:54	12/30/11 02:33	7440-50-8	
Iron, Dissolved	**895**	ug/L	50.0	1	12/21/11 11:54	12/30/11 02:33	7439-89-6	
Lead, Dissolved	ND	ug/L	0.10	1	12/21/11 11:54	12/30/11 02:33	7439-92-1	
Magnesium, Dissolved	**23900**	ug/L	50.0	10	12/21/11 11:54	12/30/11 02:37	7439-95-4	
Manganese, Dissolved	**1450**	ug/L	5.0	10	12/21/11 11:54	12/30/11 02:37	7439-96-5	
Nickel, Dissolved	ND	ug/L	0.50	1	12/21/11 11:54	12/30/11 02:33	7440-02-0	
Potassium, Dissolved	**2230**	ug/L	20.0	1	12/21/11 11:54	12/30/11 02:33	7440-09-7	
Selenium, Dissolved	ND	ug/L	0.50	1	12/21/11 11:54	12/30/11 02:33	7782-49-2	
Silver, Dissolved	ND	ug/L	0.50	1	12/21/11 11:54	12/30/11 02:33	7440-22-4	CH
Sodium, Dissolved	**10100**	ug/L	50.0	1	12/21/11 11:54	12/30/11 02:33	7440-23-5	
Thallium, Dissolved	ND	ug/L	0.10	1	12/21/11 11:54	12/30/11 02:33	7440-28-0	
Vanadium, Dissolved	ND	ug/L	0.10	1	12/21/11 11:54	12/30/11 02:33	7440-62-2	
Zinc, Dissolved	**37.5**	ug/L	5.0	1	12/21/11 11:54	12/30/11 02:33	7440-66-6	
245.1 Mercury	Analytical Method: EPA 245.1							
Mercury	ND	ug/L	0.20	1	12/23/11 08:57	12/23/11 11:36	7439-97-6	

This report shall not be reproduced, except in full,
without the written consent of Pace Analytical Services, Inc..

Pace Analytical Services, Inc.
9608 Loiret Blvd.
Lenexa, KS 66219
(913)599-5665

ANALYTICAL RESULTS

Project: RICO WATER SAMPLING DEC 2011
Pace Project No.: 60112290

Sample: MW-3 DEEP **Lab ID: 60112290024** Collected: 12/14/11 08:00 Received: 12/16/11 09:00 Matrix: Water

Parameters	Results	Units	Report Limit	DF	Prepared	Analyzed	CAS No.	Qual
245.1 Mercury, Dissolved	Analytical Method: EPA 245.1							
Mercury, Dissolved	ND	ug/L	0.20	1	12/21/11 14:31	12/22/11 12:04	7439-97-6	
2510B Specific Conductance	Analytical Method: SM 2510B							
Specific Conductance	**1180**	umhos/cm	10.0	1		12/23/11 10:23		
Salinity	Analytical Method: Calculated							
Salinity (as dissolved solids)	**755**	mg/L	6.0	1		12/27/11 12:49		
Salinity (as seawater)	**0.58**	PSU	0.010	1		12/27/11 12:49		
2320B Alkalinity	Analytical Method: SM 2320B							
Alkalinity,Bicarbonate (CaCO3)	**92.0**	mg/L	20.0	1		12/28/11 12:30		
Alkalinity, Carbonate (CaCO3)	ND	mg/L	20.0	1		12/28/11 12:30		
Alkalinity, Total as CaCO3	**92.0**	mg/L	20.0	1		12/28/11 12:30		
2540C Total Dissolved Solids	Analytical Method: SM 2540C							
Total Dissolved Solids	**953**	mg/L	5.0	1		12/20/11 13:25		
2540D Total Suspended Solids	Analytical Method: SM 2540D							
Total Suspended Solids	**83.0**	mg/L	5.0	1		12/20/11 08:03		
4500H+ pH, Electrometric	Analytical Method: SM 4500-H+B							
pH at 25 Degrees C	**7.1**	Std. Units	0.10	1		12/16/11 18:00		H6
300.0 IC Anions 28 Days	Analytical Method: EPA 300.0							
Sulfate	**589**	mg/L	50.0	50		12/30/11 19:06	14808-79-8	
4500CNE Cyanide, Total	Analytical Method: SM 4500-CN-E							
Cyanide	ND	mg/L	0.0050	1		12/21/11 17:48	57-12-5	

This report shall not be reproduced, except in full,
without the written consent of Pace Analytical Services, Inc..

Pace Analytical Services, Inc.
9608 Loiret Blvd.
Lenexa, KS 66219
(913)599-5665

January 03, 2012

Mark DeFriez
Anderson Engineering Company I
977 W 2100 S.
Salt Lake City, UT 84119

RE: Project: Rico
Pace Project No.: 60112423

Dear Mark DeFriez:
Enclosed are the analytical results for sample(s) received by the laboratory on December 17, 2011. The results relate only to the samples included in this report. Results reported herein conform to the most current TNI standards and the laboratory's Quality Assurance Manual, where applicable, unless otherwise noted in the body of the report.

If you have any questions concerning this report, please feel free to contact me.

Sincerely,

Heather M. Wilson

Heather Wilson for
Colleen Clyne
colleen.clyne@pacelabs.com
Project Manager

Enclosures

This report shall not be reproduced, except in full,
without the written consent of Pace Analytical Services, Inc..

Pace Analytical Services, Inc.
9608 Loiret Blvd.
Lenexa, KS 66219
(913)599-5665

CERTIFICATIONS

Project: Rico
Pace Project No.: 60112423

Minnesota Certification IDs

1700 Elm Street SE Suite 200, Minneapolis, MN 55414
A2LA Certification #: 2926.01
Alaska Certification #: UST-078
Alaska Certification #MN00064
Arizona Certification #: AZ-0014
Arkansas Certification #: 88-0680
California Certification #: 01155CA
EPA Region 8 Certification #: Pace
Florida/NELAP Certification #: E87605
Georgia Certification #: 959
Idaho Certification #: MN00064
Illinois Certification #: 200011
Iowa Certification #: 368
Kansas Certification #: E-10167
Louisiana Certification #: 03086
Louisiana Certification #: LA080009
Maine Certification #: 2007029
Maryland Certification #: 322
Michigan DEQ Certification #: 9909
Minnesota Certification #: 027-053-137
Mississippi Certification #: Pace
Montana Certification #: MT CERT0092
Nebraska Certification #: Pace
Nevada Certification #: MN_00064
New Jersey Certification #: MN-002
New Mexico Certification #: Pace
New York Certification #: 11647
North Carolina Certification #: 530
North Dakota Certification #: R-036
North Dakota Certification #: R-036A
Ohio VAP Certification #: CL101
Oklahoma Certification #: D9921
Oklahoma Certification #: 9507
Oregon Certification #: MN200001
Pennsylvania Certification #: 68-00563
Puerto Rico Certification
Tennessee Certification #: 02818
Texas Certification #: T104704192
Washington Certification #: C754
Wisconsin Certification #: 999407970

Montana Certification IDs

602 South 25th Street, Billings, MT 59101
EPA Region 8 Certification #: 8TMS-Q
Idaho Certification #: MT00012
Montana Certification #: MT CERT0040
NVLAP Certification #: 101292-0
Minnesota Dept of Health Certification #: 030-999-442

Kansas Certification IDs

9608 Loiret Boulevard, Lenexa, KS 66219
A2LA Certification #: 2456.01
Arkansas Certification #: 05-008-0
Illinois Certification #: 001191
Iowa Certification #: 118
Kansas/NELAP Certification #: E-10116
Louisiana Certification #: 03055
Nevada Certification #: KS000212008A
Oklahoma Certification #: 9205/9935
Texas Certification #: T104704407-08-TX
Utah Certification #: 9135995665

This report shall not be reproduced, except in full,
without the written consent of Pace Analytical Services, Inc..

Pace Analytical Services, Inc.
9608 Loiret Blvd.
Lenexa, KS 66219
(913)599-5665

SAMPLE SUMMARY

Project: Rico
Pace Project No.: 60112423

Lab ID	Sample ID	Matrix	Date Collected	Date Received
60112423001	**MW-1 DEEP**	Water	12/14/11 08:00	12/17/11 08:00
60112423002	**MW-2 DEEP**	Water	12/14/11 08:00	12/17/11 08:00
60112423003	**MW-1 SHALLOW**	Water	12/14/11 08:00	12/17/11 08:00

This report shall not be reproduced, except in full,
without the written consent of Pace Analytical Services, Inc..

Pace Analytical Services, Inc.
9608 Loiret Blvd.
Lenexa, KS 66219
(913)599-5665

SAMPLE ANALYTE COUNT

Project: Rico
Pace Project No.: 60112423

Lab ID	Sample ID	Method	Analysts	Analytes Reported	Laboratory
60112423001	**MW-1 DEEP**	EPA 200.8	RJS	22	PASI-M
		EPA 200.8	RJS	20	PASI-M
		EPA 245.1	TEM	1	PASI-M
		EPA 245.1	TEM	1	PASI-M
		SM 2510B	SR1	1	
		Calculated	SR1	2	
		SM 2320B	AJM	3	PASI-K
		SM 2540C	BGM	1	PASI-K
		SM 2540D	BGM	1	PASI-K
		EPA 300.0	JML	1	PASI-K
		SM 4500-CN-E	SRM1	1	PASI-K
60112423002	**MW-2 DEEP**	EPA 200.8	RJS	22	PASI-M
		EPA 200.8	RJS	20	PASI-M
		EPA 245.1	TEM	1	PASI-M
		EPA 245.1	TEM	1	PASI-M
		SM 2510B	SR1	1	
		Calculated	SR1	2	
		SM 2320B	AJM	3	PASI-K
		SM 2540C	BGM	1	PASI-K
		SM 2540D	BGM	1	PASI-K
		EPA 300.0	JML	1	PASI-K
		SM 4500-CN-E	SRM1	1	PASI-K
60112423003	**MW-1 SHALLOW**	EPA 200.8	RJS	22	PASI-M
		EPA 200.8	RJS	20	PASI-M
		EPA 245.1	TEM	1	PASI-M
		EPA 245.1	TEM	1	PASI-M
		SM 2510B	SR1	1	
		Calculated	SR1	2	
		SM 2320B	AJM	3	PASI-K
		SM 2540C	BGM	1	PASI-K
		SM 2540D	BGM	1	PASI-K
		EPA 300.0	JML	1	PASI-K
		SM 4500-CN-E	SRM1	1	PASI-K

This report shall not be reproduced, except in full,
without the written consent of Pace Analytical Services, Inc..

Pace Analytical Services, Inc.
9608 Loiret Blvd.
Lenexa, KS 66219
(913)599-5665

PROJECT NARRATIVE

Project: Rico
Pace Project No.: 60112423

Method: **EPA 200.8**
Description: 200.8 MET ICPMS
Client: BP Anderson Engineering Company Inc.
Date: January 03, 2012

General Information:
3 samples were analyzed for EPA 200.8. All samples were received in acceptable condition with any exceptions noted below.

Hold Time:
The samples were analyzed within the method required hold times with any exceptions noted below.

Initial Calibrations (including MS Tune as applicable):
All criteria were within method requirements with any exceptions noted below.

Continuing Calibration:
All criteria were within method requirements with any exceptions noted below.

QC Batch: ICPM/30352

CH: The continuing calibration for this compound is outside of Pace Analytical acceptance limits. The results may be biased high.

- MW-1 SHALLOW (Lab ID: 60112423003)
  - Beryllium

Internal Standards:
All internal standards were within QC limits with any exceptions noted below.

Method Blank:
All analytes were below the report limit in the method blank with any exceptions noted below.

Laboratory Control Spike:
All laboratory control spike compounds were within QC limits with any exceptions noted below.

Matrix Spikes:
All percent recoveries and relative percent differences (RPDs) were within acceptance criteria with any exceptions noted below.

QC Batch: ICPM/30352

A matrix spike and matrix spike duplicate (MS/MSD) were performed on the following sample(s): 10178822001,10178903002

M1: Matrix spike recovery exceeded QC limits. Batch accepted based on laboratory control sample (LCS) recovery.

- MS (Lab ID: 1118732)
  - Calcium
  - Magnesium

Duplicate Sample:
All duplicate sample results were within method acceptance criteria with any exceptions noted below.

Additional Comments:

This report shall not be reproduced, except in full,
without the written consent of Pace Analytical Services, Inc..

Pace Analytical Services, Inc.
9608 Loiret Blvd.
Lenexa, KS 66219
(913)599-5665

PROJECT NARRATIVE

Project: Rico
Pace Project No.: 60112423

Method: **EPA 200.8**
Description: 200.8 MET ICPMS, Dissolved
Client: BP Anderson Engineering Company Inc.
Date: January 03, 2012

General Information:
3 samples were analyzed for EPA 200.8. All samples were received in acceptable condition with any exceptions noted below.

Hold Time:
The samples were analyzed within the method required hold times with any exceptions noted below.

Initial Calibrations (including MS Tune as applicable):
All criteria were within method requirements with any exceptions noted below.

Continuing Calibration:
All criteria were within method requirements with any exceptions noted below.

QC Batch: ICPM/30350

CH: The continuing calibration for this compound is outside of Pace Analytical acceptance limits. The results may be biased high.

- BLANK (Lab ID: 1118720)
  - Silver, Dissolved
- LCS (Lab ID: 1118721)
  - Silver, Dissolved
- MS (Lab ID: 1118724)
  - Silver, Dissolved
- MW-1 DEEP (Lab ID: 60112423001)
  - Silver, Dissolved
- MW-1 SHALLOW (Lab ID: 60112423003)
  - Silver, Dissolved
- MW-2 DEEP (Lab ID: 60112423002)
  - Silver, Dissolved

Internal Standards:
All internal standards were within QC limits with any exceptions noted below.

Method Blank:
All analytes were below the report limit in the method blank with any exceptions noted below.

Laboratory Control Spike:
All laboratory control spike compounds were within QC limits with any exceptions noted below.

Matrix Spikes:
All percent recoveries and relative percent differences (RPDs) were within acceptance criteria with any exceptions noted below.

QC Batch: ICPM/30350

A matrix spike and matrix spike duplicate (MS/MSD) were performed on the following sample(s): 10178696001,60112290021

M1: Matrix spike recovery exceeded QC limits. Batch accepted based on laboratory control sample (LCS) recovery.

- MS (Lab ID: 1118916)
  - Calcium, Dissolved
  - Magnesium, Dissolved

This report shall not be reproduced, except in full,
without the written consent of Pace Analytical Services, Inc..

Pace Analytical Services, Inc.
9608 Loiret Blvd.
Lenexa, KS 66219
(913)599-5665

PROJECT NARRATIVE

Project: Rico
Pace Project No.: 60112423

Method: **EPA 200.8**
Description: 200.8 MET ICPMS, Dissolved
Client: BP Anderson Engineering Company Inc.
Date: January 03, 2012

QC Batch: ICPM/30350

A matrix spike and matrix spike duplicate (MS/MSD) were performed on the following sample(s): 10178696001,60112290021

M1: Matrix spike recovery exceeded QC limits. Batch accepted based on laboratory control sample (LCS) recovery.

- Sodium, Dissolved
- MSD (Lab ID: 1118917)
  - Potassium, Dissolved

Duplicate Sample:
All duplicate sample results were within method acceptance criteria with any exceptions noted below.

Additional Comments:

Analyte Comments:

QC Batch: ICPM/30350

E: Analyte concentration exceeded the calibration range. The reported result is estimated.

- MS (Lab ID: 1118724)
  - Calcium, Dissolved
  - Manganese, Dissolved
  - Zinc, Dissolved
  - Calcium, Dissolved
- MSD (Lab ID: 1118917)
  - Calcium, Dissolved

This report shall not be reproduced, except in full,
without the written consent of Pace Analytical Services, Inc..

Pace Analytical Services, Inc.
9608 Loiret Blvd.
Lenexa, KS 66219
(913)599-5665

PROJECT NARRATIVE

Project: Rico
Pace Project No.: 60112423

Method: **EPA 245.1**
Description: 245.1 Mercury
Client: BP Anderson Engineering Company Inc.
Date: January 03, 2012

General Information:
3 samples were analyzed for EPA 245.1. All samples were received in acceptable condition with any exceptions noted below.

Hold Time:
The samples were analyzed within the method required hold times with any exceptions noted below.

Initial Calibrations (including MS Tune as applicable):
All criteria were within method requirements with any exceptions noted below.

Continuing Calibration:
All criteria were within method requirements with any exceptions noted below.

Method Blank:
All analytes were below the report limit in the method blank with any exceptions noted below.

Laboratory Control Spike:
All laboratory control spike compounds were within QC limits with any exceptions noted below.

Matrix Spikes:
All percent recoveries and relative percent differences (RPDs) were within acceptance criteria with any exceptions noted below.

QC Batch: MERC/6312

A matrix spike and matrix spike duplicate (MS/MSD) were performed on the following sample(s): 10178903001,60112423001

M1: Matrix spike recovery exceeded QC limits. Batch accepted based on laboratory control sample (LCS) recovery.

- MS (Lab ID: 1118664)
  - Mercury
- MSD (Lab ID: 1118665)
  - Mercury

Duplicate Sample:
All duplicate sample results were within method acceptance criteria with any exceptions noted below.

Additional Comments:

This report shall not be reproduced, except in full,
without the written consent of Pace Analytical Services, Inc..

Pace Analytical Services, Inc.
9608 Loiret Blvd.
Lenexa, KS 66219
(913)599-5665

PROJECT NARRATIVE

Project: Rico
Pace Project No.: 60112423

Method: **EPA 245.1**
Description: 245.1 Mercury, Dissolved
Client: BP Anderson Engineering Company Inc.
Date: January 03, 2012

General Information:
3 samples were analyzed for EPA 245.1. All samples were received in acceptable condition with any exceptions noted below.

Hold Time:
The samples were analyzed within the method required hold times with any exceptions noted below.

Initial Calibrations (including MS Tune as applicable):
All criteria were within method requirements with any exceptions noted below.

Continuing Calibration:
All criteria were within method requirements with any exceptions noted below.

Method Blank:
All analytes were below the report limit in the method blank with any exceptions noted below.

Laboratory Control Spike:
All laboratory control spike compounds were within QC limits with any exceptions noted below.

Matrix Spikes:
All percent recoveries and relative percent differences (RPDs) were within acceptance criteria with any exceptions noted below.

QC Batch: MERC/6316

A matrix spike and matrix spike duplicate (MS/MSD) were performed on the following sample(s): 60112423001

M1: Matrix spike recovery exceeded QC limits. Batch accepted based on laboratory control sample (LCS) recovery.

- MS (Lab ID: 1119091)
  - Mercury, Dissolved
- MSD (Lab ID: 1119092)
  - Mercury, Dissolved

Duplicate Sample:
All duplicate sample results were within method acceptance criteria with any exceptions noted below.

Additional Comments:

This report shall not be reproduced, except in full,
without the written consent of Pace Analytical Services, Inc..

Pace Analytical Services, Inc.
9608 Loiret Blvd.
Lenexa, KS 66219
(913)599-5665

PROJECT NARRATIVE

Project: Rico
Pace Project No.: 60112423

Method: **SM 2510B**
Description: 2510B Specific Conductance
Client: BP Anderson Engineering Company Inc.
Date: January 03, 2012

General Information:
3 samples were analyzed for SM 2510B. All samples were received in acceptable condition with any exceptions noted below.

Hold Time:
The samples were analyzed within the method required hold times with any exceptions noted below.

Initial Calibrations (including MS Tune as applicable):
All criteria were within method requirements with any exceptions noted below.

Continuing Calibration:
All criteria were within method requirements with any exceptions noted below.

Internal Standards:
All internal standards were within QC limits with any exceptions noted below.

Surrogates:
All surrogates were within QC limits with any exceptions noted below.

Method Blank:
All analytes were below the report limit in the method blank with any exceptions noted below.

Laboratory Control Spike:
All laboratory control spike compounds were within QC limits with any exceptions noted below.

Matrix Spikes:
All percent recoveries and relative percent differences (RPDs) were within acceptance criteria with any exceptions noted below.

Duplicate Sample:
All duplicate sample results were within method acceptance criteria with any exceptions noted below.

Additional Comments:

This report shall not be reproduced, except in full,
without the written consent of Pace Analytical Services, Inc..

Pace Analytical Services, Inc.
9608 Loiret Blvd.
Lenexa, KS 66219
(913)599-5665

PROJECT NARRATIVE

Project: Rico
Pace Project No.: 60112423

Method: **Calculated**
Description: Salinity
Client: BP Anderson Engineering Company Inc.
Date: January 03, 2012

General Information:
3 samples were analyzed for Calculated. All samples were received in acceptable condition with any exceptions noted below.

Hold Time:
The samples were analyzed within the method required hold times with any exceptions noted below.

Initial Calibrations (including MS Tune as applicable):
All criteria were within method requirements with any exceptions noted below.

Continuing Calibration:
All criteria were within method requirements with any exceptions noted below.

Internal Standards:
All internal standards were within QC limits with any exceptions noted below.

Surrogates:
All surrogates were within QC limits with any exceptions noted below.

Method Blank:
All analytes were below the report limit in the method blank with any exceptions noted below.

Laboratory Control Spike:
All laboratory control spike compounds were within QC limits with any exceptions noted below.

Matrix Spikes:
All percent recoveries and relative percent differences (RPDs) were within acceptance criteria with any exceptions noted below.

Duplicate Sample:
All duplicate sample results were within method acceptance criteria with any exceptions noted below.

Additional Comments:

This report shall not be reproduced, except in full,
without the written consent of Pace Analytical Services, Inc..

Pace Analytical Services, Inc.
9608 Loiret Blvd.
Lenexa, KS 66219
(913)599-5665

PROJECT NARRATIVE

Project: Rico
Pace Project No.: 60112423

Method: **SM 2320B**
Description: 2320B Alkalinity
Client: BP Anderson Engineering Company Inc.
Date: January 03, 2012

General Information:
3 samples were analyzed for SM 2320B. All samples were received in acceptable condition with any exceptions noted below.

Hold Time:
The samples were analyzed within the method required hold times with any exceptions noted below.

H1: Analysis conducted outside the EPA method holding time.
- MW-1 SHALLOW (Lab ID: 60112423003)

Method Blank:
All analytes were below the report limit in the method blank with any exceptions noted below.

Laboratory Control Spike:
All laboratory control spike compounds were within QC limits with any exceptions noted below.

Matrix Spikes:
All percent recoveries and relative percent differences (RPDs) were within acceptance criteria with any exceptions noted below.

Duplicate Sample:
All duplicate sample results were within method acceptance criteria with any exceptions noted below.

Additional Comments:

This report shall not be reproduced, except in full,
without the written consent of Pace Analytical Services, Inc..

Pace Analytical Services, Inc.
9608 Loiret Blvd.
Lenexa, KS 66219
(913)599-5665

PROJECT NARRATIVE

Project: Rico
Pace Project No.: 60112423

Method: **SM 2540C**
Description: 2540C Total Dissolved Solids
Client: BP Anderson Engineering Company Inc.
Date: January 03, 2012

General Information:
3 samples were analyzed for SM 2540C. All samples were received in acceptable condition with any exceptions noted below.

Hold Time:
The samples were analyzed within the method required hold times with any exceptions noted below.

Method Blank:
All analytes were below the report limit in the method blank with any exceptions noted below.

Laboratory Control Spike:
All laboratory control spike compounds were within QC limits with any exceptions noted below.

Matrix Spikes:
All percent recoveries and relative percent differences (RPDs) were within acceptance criteria with any exceptions noted below.

Duplicate Sample:
All duplicate sample results were within method acceptance criteria with any exceptions noted below.

Additional Comments:

This report shall not be reproduced, except in full,
without the written consent of Pace Analytical Services, Inc..

Pace Analytical Services, Inc.
9608 Loiret Blvd.
Lenexa, KS 66219
(913)599-5665

PROJECT NARRATIVE

Project: Rico
Pace Project No.: 60112423

Method: **SM 2540D**
Description: 2540D Total Suspended Solids
Client: BP Anderson Engineering Company Inc.
Date: January 03, 2012

General Information:
3 samples were analyzed for SM 2540D. All samples were received in acceptable condition with any exceptions noted below.

Hold Time:
The samples were analyzed within the method required hold times with any exceptions noted below.

Method Blank:
All analytes were below the report limit in the method blank with any exceptions noted below.

Laboratory Control Spike:
All laboratory control spike compounds were within QC limits with any exceptions noted below.

Matrix Spikes:
All percent recoveries and relative percent differences (RPDs) were within acceptance criteria with any exceptions noted below.

Duplicate Sample:
All duplicate sample results were within method acceptance criteria with any exceptions noted below.

Additional Comments:

This report shall not be reproduced, except in full,
without the written consent of Pace Analytical Services, Inc..

Pace Analytical Services, Inc.
9608 Loiret Blvd.
Lenexa, KS 66219
(913)599-5665

PROJECT NARRATIVE

Project: Rico
Pace Project No.: 60112423

Method: **EPA 300.0**
Description: 300.0 IC Anions 28 Days
Client: BP Anderson Engineering Company Inc.
Date: January 03, 2012

General Information:
3 samples were analyzed for EPA 300.0. All samples were received in acceptable condition with any exceptions noted below.

Hold Time:
The samples were analyzed within the method required hold times with any exceptions noted below.

Initial Calibrations (including MS Tune as applicable):
All criteria were within method requirements with any exceptions noted below.

Continuing Calibration:
All criteria were within method requirements with any exceptions noted below.

Method Blank:
All analytes were below the report limit in the method blank with any exceptions noted below.

Laboratory Control Spike:
All laboratory control spike compounds were within QC limits with any exceptions noted below.

Matrix Spikes:
All percent recoveries and relative percent differences (RPDs) were within acceptance criteria with any exceptions noted below.

Duplicate Sample:
All duplicate sample results were within method acceptance criteria with any exceptions noted below.

Additional Comments:

This report shall not be reproduced, except in full,
without the written consent of Pace Analytical Services, Inc..

Pace Analytical Services, Inc.
9608 Loiret Blvd.
Lenexa, KS 66219
(913)599-5665

PROJECT NARRATIVE

Project: Rico
Pace Project No.: 60112423

Method: **SM 4500-CN-E**
Description: 4500CNE Cyanide, Total
Client: BP Anderson Engineering Company Inc.
Date: January 03, 2012

General Information:
3 samples were analyzed for SM 4500-CN-E. All samples were received in acceptable condition with any exceptions noted below.

Hold Time:
The samples were analyzed within the method required hold times with any exceptions noted below.

Initial Calibrations (including MS Tune as applicable):
All criteria were within method requirements with any exceptions noted below.

Continuing Calibration:
All criteria were within method requirements with any exceptions noted below.

Method Blank:
All analytes were below the report limit in the method blank with any exceptions noted below.

Laboratory Control Spike:
All laboratory control spike compounds were within QC limits with any exceptions noted below.

Matrix Spikes:
All percent recoveries and relative percent differences (RPDs) were within acceptance criteria with any exceptions noted below.

Duplicate Sample:
All duplicate sample results were within method acceptance criteria with any exceptions noted below.

Additional Comments:

This data package has been reviewed for quality and completeness and is approved for release.

This report shall not be reproduced, except in full,
without the written consent of Pace Analytical Services, Inc..

Pace Analytical Services, Inc.
9608 Loiret Blvd.
Lenexa, KS 66219
(913)599-5665

ANALYTICAL RESULTS

Project: Rico
Pace Project No.: 60112423

Sample: MW-1 DEEP **Lab ID: 60112423001** Collected: 12/14/11 08:00 Received: 12/17/11 08:00 Matrix: Water

Parameters	Results	Units	Report Limit	DF	Prepared	Analyzed	CAS No.	Qual
200.8 MET ICPMS	Analytical Method: EPA 200.8							
Aluminum	**38.4**	ug/L	4.0	1	12/21/11 11:53	12/28/11 04:11	7429-90-5	
Antimony	ND	ug/L	0.50	1	12/21/11 11:53	12/28/11 04:11	7440-36-0	
Arsenic	**0.58**	ug/L	0.50	1	12/21/11 11:53	12/28/11 04:11	7440-38-2	
Barium	**16.4**	ug/L	0.30	1	12/21/11 11:53	12/28/11 04:11	7440-39-3	
Beryllium	ND	ug/L	0.20	1	12/21/11 11:53	12/28/11 04:11	7440-41-7	
Cadmium	**2.3**	ug/L	0.080	1	12/21/11 11:53	12/28/11 04:11	7440-43-9	
Calcium	**230000**	ug/L	400	20	12/21/11 11:53	12/28/11 04:15	7440-70-2	
Chromium	**0.64**	ug/L	0.50	1	12/21/11 11:53	12/28/11 04:11	7440-47-3	
Copper	**1.5**	ug/L	0.50	1	12/21/11 11:53	12/28/11 04:11	7440-50-8	
Iron	**78.8**	ug/L	50.0	1	12/21/11 11:53	12/28/11 04:11	7439-89-6	
Lead	**1.9**	ug/L	0.10	1	12/21/11 11:53	12/28/11 04:11	7439-92-1	
Magnesium	**19900**	ug/L	5.0	1	12/21/11 11:53	12/28/11 04:11	7439-95-4	
Manganese	**11.6**	ug/L	0.50	1	12/21/11 11:53	12/28/11 04:11	7439-96-5	
Nickel	**0.69**	ug/L	0.50	1	12/21/11 11:53	12/28/11 04:11	7440-02-0	
Potassium	**1420**	ug/L	20.0	1	12/21/11 11:53	12/28/11 04:11	7440-09-7	
Selenium	**9.0**	ug/L	0.50	1	12/21/11 11:53	12/28/11 04:11	7782-49-2	
Silver	ND	ug/L	0.50	1	12/21/11 11:53	12/28/11 04:11	7440-22-4	
Sodium	**10600**	ug/L	50.0	1	12/21/11 11:53	12/28/11 04:11	7440-23-5	
Thallium	ND	ug/L	0.10	1	12/21/11 11:53	12/28/11 04:11	7440-28-0	
Total Hardness by 2340B	**657000**	ug/L	1420	20	12/21/11 11:53	12/28/11 04:15		
Vanadium	**0.13**	ug/L	0.10	1	12/21/11 11:53	12/28/11 04:11	7440-62-2	
Zinc	**379**	ug/L	5.0	1	12/21/11 11:53	12/28/11 04:11	7440-66-6	
200.8 MET ICPMS, Dissolved	Analytical Method: EPA 200.8							
Aluminum, Dissolved	**4.3**	ug/L	4.0	1	12/21/11 11:54	12/30/11 01:18	7429-90-5	
Antimony, Dissolved	ND	ug/L	0.50	1	12/21/11 11:54	12/30/11 01:18	7440-36-0	
Arsenic, Dissolved	ND	ug/L	0.50	1	12/21/11 11:54	12/30/11 01:18	7440-38-2	
Barium, Dissolved	**17.3**	ug/L	0.30	1	12/21/11 11:54	12/30/11 01:18	7440-39-3	
Cadmium, Dissolved	**2.3**	ug/L	0.080	1	12/21/11 11:54	12/30/11 01:18	7440-43-9	
Calcium, Dissolved	**226000**	ug/L	200	10	12/21/11 11:54	12/30/11 01:23	7440-70-2	
Chromium, Dissolved	ND	ug/L	0.50	1	12/21/11 11:54	12/30/11 01:18	7440-47-3	
Copper, Dissolved	**1.3**	ug/L	0.50	1	12/21/11 11:54	12/30/11 01:18	7440-50-8	
Iron, Dissolved	ND	ug/L	50.0	1	12/21/11 11:54	12/30/11 01:18	7439-89-6	
Lead, Dissolved	**0.12**	ug/L	0.10	1	12/21/11 11:54	12/30/11 01:18	7439-92-1	
Magnesium, Dissolved	**19600**	ug/L	5.0	1	12/21/11 11:54	12/30/11 01:18	7439-95-4	
Manganese, Dissolved	**5.7**	ug/L	0.50	1	12/21/11 11:54	12/30/11 01:18	7439-96-5	
Nickel, Dissolved	**0.66**	ug/L	0.50	1	12/21/11 11:54	12/30/11 01:18	7440-02-0	
Potassium, Dissolved	**1440**	ug/L	20.0	1	12/21/11 11:54	12/30/11 01:18	7440-09-7	
Selenium, Dissolved	**8.7**	ug/L	0.50	1	12/21/11 11:54	12/30/11 01:18	7782-49-2	
Silver, Dissolved	ND	ug/L	0.50	1	12/21/11 11:54	12/30/11 01:18	7440-22-4	CH
Sodium, Dissolved	**9860**	ug/L	50.0	1	12/21/11 11:54	12/30/11 01:18	7440-23-5	
Thallium, Dissolved	ND	ug/L	0.10	1	12/21/11 11:54	12/30/11 01:18	7440-28-0	
Vanadium, Dissolved	ND	ug/L	0.10	1	12/21/11 11:54	12/30/11 01:18	7440-62-2	
Zinc, Dissolved	**380**	ug/L	5.0	1	12/21/11 11:54	12/30/11 01:18	7440-66-6	

This report shall not be reproduced, except in full,
without the written consent of Pace Analytical Services, Inc..

Pace Analytical Services, Inc.
9608 Loiret Blvd.
Lenexa, KS 66219
(913)599-5665

ANALYTICAL RESULTS

Project: Rico
Pace Project No.: 60112423

Sample: MW-1 DEEP **Lab ID: 60112423001** Collected: 12/14/11 08:00 Received: 12/17/11 08:00 Matrix: Water

Parameters	Results	Units	Report Limit	DF	Prepared	Analyzed	CAS No.	Qual
245.1 Mercury	Analytical Method: EPA 245.1							
Mercury	ND	ug/L	0.20	1	12/21/11 10:53	12/22/11 10:47	7439-97-6	
245.1 Mercury, Dissolved	Analytical Method: EPA 245.1							
Mercury, Dissolved	ND	ug/L	0.20	1	12/21/11 14:31	12/22/11 11:34	7439-97-6	M1
2510B Specific Conductance	Analytical Method: SM 2510B							
Specific Conductance	**1130**	umhos/cm	10.0	1		12/23/11 10:13		
Salinity	Analytical Method: Calculated							
Salinity (as dissolved solids)	**723**	mg/L	6.0	1		12/27/11 12:49		
Salinity (as seawater)	**0.56**	PSU	0.010	1		12/27/11 12:49		
2320B Alkalinity	Analytical Method: SM 2320B							
Alkalinity,Bicarbonate (CaCO3)	**92.0**	mg/L	20.0	1		12/28/11 15:00		
Alkalinity, Carbonate (CaCO3)	ND	mg/L	20.0	1		12/28/11 15:00		
Alkalinity, Total as CaCO3	**92.0**	mg/L	20.0	1		12/28/11 15:00		
2540C Total Dissolved Solids	Analytical Method: SM 2540C							
Total Dissolved Solids	**917**	mg/L	5.0	1		12/20/11 13:26		
2540D Total Suspended Solids	Analytical Method: SM 2540D							
Total Suspended Solids	ND	mg/L	5.0	1		12/20/11 08:03		
300.0 IC Anions 28 Days	Analytical Method: EPA 300.0							
Sulfate	**523**	mg/L	50.0	50		12/30/11 08:33	14808-79-8	
4500CNE Cyanide, Total	Analytical Method: SM 4500-CN-E							
Cyanide	ND	mg/L	0.0050	1		12/21/11 17:49	57-12-5	

This report shall not be reproduced, except in full,
without the written consent of Pace Analytical Services, Inc..

Pace Analytical Services, Inc.
9608 Loiret Blvd.
Lenexa, KS 66219
(913)599-5665

ANALYTICAL RESULTS

Project: Rico
Pace Project No.: 60112423

Sample: MW-2 DEEP **Lab ID: 60112423002** Collected: 12/14/11 08:00 Received: 12/17/11 08:00 Matrix: Water

Parameters	Results	Units	Report Limit	DF	Prepared	Analyzed	CAS No.	Qual
200.8 MET ICPMS	Analytical Method: EPA 200.8							
Aluminum	**936**	ug/L	4.0	1	12/21/11 11:53	12/28/11 04:20	7429-90-5	
Antimony	ND	ug/L	0.50	1	12/21/11 11:53	12/28/11 04:20	7440-36-0	
Arsenic	**0.81**	ug/L	0.50	1	12/21/11 11:53	12/28/11 04:20	7440-38-2	
Barium	**24.8**	ug/L	0.30	1	12/21/11 11:53	12/28/11 04:20	7440-39-3	
Beryllium	ND	ug/L	0.20	1	12/21/11 11:53	12/28/11 04:20	7440-41-7	
Cadmium	**1.4**	ug/L	0.080	1	12/21/11 11:53	12/28/11 04:20	7440-43-9	
Calcium	**225000**	ug/L	400	20	12/21/11 11:53	12/28/11 04:25	7440-70-2	
Chromium	**1.9**	ug/L	0.50	1	12/21/11 11:53	12/28/11 04:20	7440-47-3	
Copper	**3.6**	ug/L	0.50	1	12/21/11 11:53	12/28/11 04:20	7440-50-8	
Iron	**1350**	ug/L	50.0	1	12/21/11 11:53	12/28/11 04:20	7439-89-6	
Lead	**6.8**	ug/L	0.10	1	12/21/11 11:53	12/28/11 04:20	7439-92-1	
Magnesium	**20600**	ug/L	5.0	1	12/21/11 11:53	12/28/11 04:20	7439-95-4	
Manganese	**33.2**	ug/L	0.50	1	12/21/11 11:53	12/28/11 04:20	7439-96-5	
Nickel	**0.81**	ug/L	0.50	1	12/21/11 11:53	12/28/11 04:20	7440-02-0	
Potassium	**2140**	ug/L	20.0	1	12/21/11 11:53	12/28/11 04:20	7440-09-7	
Selenium	**1.5**	ug/L	0.50	1	12/21/11 11:53	12/28/11 04:20	7782-49-2	
Silver	ND	ug/L	0.50	1	12/21/11 11:53	12/28/11 04:20	7440-22-4	
Sodium	**10400**	ug/L	50.0	1	12/21/11 11:53	12/28/11 04:20	7440-23-5	
Thallium	ND	ug/L	0.10	1	12/21/11 11:53	12/28/11 04:20	7440-28-0	
Total Hardness by 2340B	**645000**	ug/L	1420	20	12/21/11 11:53	12/28/11 04:25		
Vanadium	**1.3**	ug/L	0.10	1	12/21/11 11:53	12/28/11 04:20	7440-62-2	
Zinc	**36.1**	ug/L	5.0	1	12/21/11 11:53	12/28/11 04:20	7440-66-6	
200.8 MET ICPMS, Dissolved	Analytical Method: EPA 200.8							
Aluminum, Dissolved	**7.9**	ug/L	4.0	1	12/21/11 11:54	12/30/11 01:27	7429-90-5	
Antimony, Dissolved	ND	ug/L	0.50	1	12/21/11 11:54	12/30/11 01:27	7440-36-0	
Arsenic, Dissolved	ND	ug/L	0.50	1	12/21/11 11:54	12/30/11 01:27	7440-38-2	
Barium, Dissolved	**13.9**	ug/L	0.30	1	12/21/11 11:54	12/30/11 01:27	7440-39-3	
Cadmium, Dissolved	**1.3**	ug/L	0.080	1	12/21/11 11:54	12/30/11 01:27	7440-43-9	
Calcium, Dissolved	**239000**	ug/L	200	10	12/21/11 11:54	12/30/11 01:32	7440-70-2	
Chromium, Dissolved	ND	ug/L	0.50	1	12/21/11 11:54	12/30/11 01:27	7440-47-3	
Copper, Dissolved	**1.2**	ug/L	0.50	1	12/21/11 11:54	12/30/11 01:27	7440-50-8	
Iron, Dissolved	ND	ug/L	50.0	1	12/21/11 11:54	12/30/11 01:27	7439-89-6	
Lead, Dissolved	ND	ug/L	0.10	1	12/21/11 11:54	12/30/11 01:27	7439-92-1	
Magnesium, Dissolved	**20100**	ug/L	5.0	1	12/21/11 11:54	12/30/11 01:27	7439-95-4	
Manganese, Dissolved	**8.9**	ug/L	0.50	1	12/21/11 11:54	12/30/11 01:27	7439-96-5	
Nickel, Dissolved	**0.66**	ug/L	0.50	1	12/21/11 11:54	12/30/11 01:27	7440-02-0	
Potassium, Dissolved	**1910**	ug/L	20.0	1	12/21/11 11:54	12/30/11 01:27	7440-09-7	
Selenium, Dissolved	**1.4**	ug/L	0.50	1	12/21/11 11:54	12/30/11 01:27	7782-49-2	
Silver, Dissolved	ND	ug/L	0.50	1	12/21/11 11:54	12/30/11 01:27	7440-22-4	CH
Sodium, Dissolved	**9680**	ug/L	50.0	1	12/21/11 11:54	12/30/11 01:27	7440-23-5	
Thallium, Dissolved	ND	ug/L	0.10	1	12/21/11 11:54	12/30/11 01:27	7440-28-0	
Vanadium, Dissolved	ND	ug/L	0.10	1	12/21/11 11:54	12/30/11 01:27	7440-62-2	
Zinc, Dissolved	**22.4**	ug/L	5.0	1	12/21/11 11:54	12/30/11 01:27	7440-66-6	

This report shall not be reproduced, except in full,
without the written consent of Pace Analytical Services, Inc..

Pace Analytical Services, Inc.
9608 Loiret Blvd.
Lenexa, KS 66219
(913)599-5665

ANALYTICAL RESULTS

Project: Rico
Pace Project No.: 60112423

Sample: MW-2 DEEP **Lab ID: 60112423002** Collected: 12/14/11 08:00 Received: 12/17/11 08:00 Matrix: Water

Parameters	Results	Units	Report Limit	DF	Prepared	Analyzed	CAS No.	Qual
245.1 Mercury	Analytical Method: EPA 245.1							
Mercury	ND	ug/L	0.20	1	12/21/11 10:53	12/22/11 10:51	7439-97-6	
245.1 Mercury, Dissolved	Analytical Method: EPA 245.1							
Mercury, Dissolved	ND	ug/L	0.20	1	12/21/11 14:31	12/22/11 11:46	7439-97-6	
2510B Specific Conductance	Analytical Method: SM 2510B							
Specific Conductance	**1090**	umhos/cm	10.0	1		12/23/11 10:16		
Salinity	Analytical Method: Calculated							
Salinity (as dissolved solids)	**696**	mg/L	6.0	1		12/27/11 12:49		
Salinity (as seawater)	**0.54**	PSU	0.010	1		12/27/11 12:49		
2320B Alkalinity	Analytical Method: SM 2320B							
Alkalinity,Bicarbonate (CaCO3)	**90.0**	mg/L	20.0	1		12/28/11 15:00		
Alkalinity, Carbonate (CaCO3)	ND	mg/L	20.0	1		12/28/11 15:00		
Alkalinity, Total as CaCO3	**90.0**	mg/L	20.0	1		12/28/11 15:00		
2540C Total Dissolved Solids	Analytical Method: SM 2540C							
Total Dissolved Solids	**924**	mg/L	5.0	1		12/21/11 08:28		
2540D Total Suspended Solids	Analytical Method: SM 2540D							
Total Suspended Solids	ND	mg/L	5.0	1		12/20/11 08:03		
300.0 IC Anions 28 Days	Analytical Method: EPA 300.0							
Sulfate	**572**	mg/L	50.0	50		12/30/11 08:49	14808-79-8	
4500CNE Cyanide, Total	Analytical Method: SM 4500-CN-E							
Cyanide	**0.0051**	mg/L	0.0050	1		12/21/11 17:52	57-12-5	

This report shall not be reproduced, except in full,
without the written consent of Pace Analytical Services, Inc..

Pace Analytical Services, Inc.
9608 Loiret Blvd.
Lenexa, KS 66219
(913)599-5665

ANALYTICAL RESULTS

Project: Rico
Pace Project No.: 60112423

Sample: MW-1 SHALLOW **Lab ID: 60112423003** Collected: 12/14/11 08:00 Received: 12/17/11 08:00 Matrix: Water

Parameters	Results	Units	Report Limit	DF	Prepared	Analyzed	CAS No.	Qual
200.8 MET ICPMS	Analytical Method: EPA 200.8							
Aluminum	**1140**	ug/L	4.0	1	12/21/11 11:53	12/28/11 04:43	7429-90-5	
Antimony	ND	ug/L	0.50	1	12/21/11 11:53	12/28/11 04:43	7440-36-0	
Arsenic	**1.1**	ug/L	0.50	1	12/21/11 11:53	12/28/11 04:43	7440-38-2	
Barium	**39.5**	ug/L	0.30	1	12/21/11 11:53	12/28/11 04:43	7440-39-3	
Beryllium	ND	ug/L	0.20	1	12/21/11 11:53	12/28/11 04:43	7440-41-7	CH
Cadmium	**0.21**	ug/L	0.080	1	12/21/11 11:53	12/28/11 04:43	7440-43-9	
Calcium	**226000**	ug/L	400	20	12/21/11 11:53	12/28/11 04:48	7440-70-2	
Chromium	**2.2**	ug/L	0.50	1	12/21/11 11:53	12/28/11 04:43	7440-47-3	
Copper	**4.0**	ug/L	0.50	1	12/21/11 11:53	12/28/11 04:43	7440-50-8	
Iron	**1490**	ug/L	50.0	1	12/21/11 11:53	12/28/11 04:43	7439-89-6	
Lead	**9.0**	ug/L	0.10	1	12/21/11 11:53	12/28/11 04:43	7439-92-1	
Magnesium	**21300**	ug/L	5.0	1	12/21/11 11:53	12/28/11 04:43	7439-95-4	
Manganese	**85.7**	ug/L	0.50	1	12/21/11 11:53	12/28/11 04:43	7439-96-5	
Nickel	**0.98**	ug/L	0.50	1	12/21/11 11:53	12/28/11 04:43	7440-02-0	
Potassium	**1640**	ug/L	20.0	1	12/21/11 11:53	12/28/11 04:43	7440-09-7	
Selenium	**11.7**	ug/L	0.50	1	12/21/11 11:53	12/28/11 04:43	7782-49-2	
Silver	ND	ug/L	0.50	1	12/21/11 11:53	12/28/11 04:43	7440-22-4	
Sodium	**9040**	ug/L	50.0	1	12/21/11 11:53	12/28/11 04:43	7440-23-5	
Thallium	ND	ug/L	0.10	1	12/21/11 11:53	12/28/11 04:43	7440-28-0	
Total Hardness by 2340B	**653000**	ug/L	1420	20	12/21/11 11:53	12/28/11 04:48		
Vanadium	**1.9**	ug/L	0.10	1	12/21/11 11:53	12/28/11 04:43	7440-62-2	
Zinc	**29.3**	ug/L	5.0	1	12/21/11 11:53	12/28/11 04:43	7440-66-6	
200.8 MET ICPMS, Dissolved	Analytical Method: EPA 200.8							
Aluminum, Dissolved	**5.3**	ug/L	4.0	1	12/21/11 11:54	12/30/11 02:05	7429-90-5	
Antimony, Dissolved	ND	ug/L	0.50	1	12/21/11 11:54	12/30/11 02:05	7440-36-0	
Arsenic, Dissolved	ND	ug/L	0.50	1	12/21/11 11:54	12/30/11 02:05	7440-38-2	
Barium, Dissolved	**22.0**	ug/L	0.30	1	12/21/11 11:54	12/30/11 02:05	7440-39-3	
Cadmium, Dissolved	**0.11**	ug/L	0.080	1	12/21/11 11:54	12/30/11 02:05	7440-43-9	
Calcium, Dissolved	**229000**	ug/L	200	10	12/21/11 11:54	12/30/11 02:09	7440-70-2	
Chromium, Dissolved	ND	ug/L	0.50	1	12/21/11 11:54	12/30/11 02:05	7440-47-3	
Copper, Dissolved	**0.54**	ug/L	0.50	1	12/21/11 11:54	12/30/11 02:05	7440-50-8	
Iron, Dissolved	ND	ug/L	50.0	1	12/21/11 11:54	12/30/11 02:05	7439-89-6	
Lead, Dissolved	ND	ug/L	0.10	1	12/21/11 11:54	12/30/11 02:05	7439-92-1	
Magnesium, Dissolved	**19400**	ug/L	5.0	1	12/21/11 11:54	12/30/11 02:05	7439-95-4	
Manganese, Dissolved	**2.1**	ug/L	0.50	1	12/21/11 11:54	12/30/11 02:05	7439-96-5	
Nickel, Dissolved	ND	ug/L	0.50	1	12/21/11 11:54	12/30/11 02:05	7440-02-0	
Potassium, Dissolved	**1310**	ug/L	20.0	1	12/21/11 11:54	12/30/11 02:05	7440-09-7	
Selenium, Dissolved	**10.9**	ug/L	0.50	1	12/21/11 11:54	12/30/11 02:05	7782-49-2	
Silver, Dissolved	ND	ug/L	0.50	1	12/21/11 11:54	12/30/11 02:05	7440-22-4	CH
Sodium, Dissolved	**8750**	ug/L	50.0	1	12/21/11 11:54	12/30/11 02:05	7440-23-5	
Thallium, Dissolved	ND	ug/L	0.10	1	12/21/11 11:54	12/30/11 02:05	7440-28-0	
Vanadium, Dissolved	ND	ug/L	0.10	1	12/21/11 11:54	12/30/11 02:05	7440-62-2	
Zinc, Dissolved	**14.4**	ug/L	5.0	1	12/21/11 11:54	12/30/11 02:05	7440-66-6	

This report shall not be reproduced, except in full,
without the written consent of Pace Analytical Services, Inc..

Pace Analytical Services, Inc.
9608 Loiret Blvd.
Lenexa, KS 66219
(913)599-5665

ANALYTICAL RESULTS

Project: Rico
Pace Project No.: 60112423

Sample: MW-1 SHALLOW **Lab ID: 60112423003** Collected: 12/14/11 08:00 Received: 12/17/11 08:00 Matrix: Water

Parameters	Results	Units	Report Limit	DF	Prepared	Analyzed	CAS No.	Qual
245.1 Mercury	Analytical Method: EPA 245.1							
Mercury	ND	ug/L	0.20	1	12/21/11 10:53	12/22/11 10:57	7439-97-6	
245.1 Mercury, Dissolved	Analytical Method: EPA 245.1							
Mercury, Dissolved	ND	ug/L	0.20	1	12/21/11 14:31	12/22/11 11:48	7439-97-6	
2510B Specific Conductance	Analytical Method: SM 2510B							
Specific Conductance	**1140**	umhos/cm	10.0	1		12/23/11 10:19		
Salinity	Analytical Method: Calculated							
Salinity (as dissolved solids)	**730**	mg/L	6.0	1		12/27/11 12:49		
Salinity (as seawater)	**0.56**	PSU	0.010	1		12/27/11 12:49		
2320B Alkalinity	Analytical Method: SM 2320B							
Alkalinity,Bicarbonate (CaCO3)	**92.0**	mg/L	20.0	1		12/29/11 16:15		H1
Alkalinity, Carbonate (CaCO3)	ND	mg/L	20.0	1		12/29/11 16:15		H1
Alkalinity, Total as CaCO3	**92.0**	mg/L	20.0	1		12/29/11 16:15		H1
2540C Total Dissolved Solids	Analytical Method: SM 2540C							
Total Dissolved Solids	**829**	mg/L	5.0	1		12/21/11 08:28		
2540D Total Suspended Solids	Analytical Method: SM 2540D							
Total Suspended Solids	**104**	mg/L	5.0	1		12/20/11 08:04		
300.0 IC Anions 28 Days	Analytical Method: EPA 300.0							
Sulfate	**537**	mg/L	50.0	50		12/30/11 09:06	14808-79-8	
4500CNE Cyanide, Total	Analytical Method: SM 4500-CN-E							
Cyanide	ND	mg/L	0.0050	1		12/21/11 17:53	57-12-5	

This report shall not be reproduced, except in full,
without the written consent of Pace Analytical Services, Inc..

Appendix D

Laboratory QC Results

Pace Analytical Services, Inc.
9608 Loiret Blvd.
Lenexa, KS 66219
(913)599-5665

QUALITY CONTROL DATA

Project: RICO WATER SAMPLING DEC 2011
Pace Project No.: 60112290

QC Batch: ICPM/30353 Analysis Method: EPA 200.8
QC Batch Method: EPA 200.8 Analysis Description: 200.8 MET
Associated Lab Samples: 60112290001, 60112290002, 60112290003, 60112290004, 60112290005, 60112290006, 60112290007, 60112290008, 60112290009

METHOD BLANK: 1118735 Matrix: Water
Associated Lab Samples: 60112290001, 60112290002, 60112290003, 60112290004, 60112290005, 60112290006, 60112290007, 60112290008, 60112290009, 60112290010, 60112290011, 60112290012, 60112290013, 60112290014, 60112290015, 60112290016, 60112290017, 60112290018, 60112290019, 60112290020

Parameter	Units	Blank Result	Reporting Limit	Analyzed	Qualifiers
Aluminum	ug/L	ND	4.0	12/31/11 03:51	
Arsenic	ug/L	ND	0.50	12/31/11 03:51	
Barium	ug/L	ND	0.30	12/31/11 03:51	
Cadmium	ug/L	ND	0.080	12/31/11 03:51	
Calcium	ug/L	ND	20.0	12/31/11 03:51	
Chromium	ug/L	ND	0.50	12/31/11 03:51	
Copper	ug/L	ND	0.50	12/31/11 03:51	
Iron	ug/L	ND	50.0	12/31/11 03:51	CH
Lead	ug/L	ND	0.10	12/31/11 03:51	
Magnesium	ug/L	ND	5.0	12/31/11 03:51	
Manganese	ug/L	ND	0.50	12/31/11 03:51	
Nickel	ug/L	ND	0.50	12/31/11 03:51	
Potassium	ug/L	ND	20.0	12/31/11 03:51	
Selenium	ug/L	ND	0.50	12/31/11 03:51	
Silver	ug/L	ND	0.50	12/31/11 03:51	
Sodium	ug/L	ND	50.0	12/31/11 03:51	
Thallium	ug/L	ND	0.10	12/31/11 03:51	
Total Hardness by 2340B	ug/L	ND	71.0	12/31/11 03:51	
Vanadium	ug/L	ND	0.10	12/31/11 03:51	
Zinc	ug/L	ND	5.0	12/31/11 03:51	

LABORATORY CONTROL SAMPLE: 1118736

Parameter	Units	Spike Conc.	LCS Result	LCS % Rec	% Rec Limits	Qualifiers
Aluminum	ug/L	80	91.2	114	85-115	
Arsenic	ug/L	80	87.2	109	85-115	
Barium	ug/L	80	90.8	113	85-115	
Cadmium	ug/L	80	87.4	109	85-115	
Calcium	ug/L	1000	1090	109	85-115	
Chromium	ug/L	80	91.1	114	85-115	
Copper	ug/L	80	88.2	110	85-115	
Iron	ug/L	1000	1020	102	85-115	
Lead	ug/L	80	91.9	115	85-115	
Magnesium	ug/L	1000	1060	106	85-115	
Manganese	ug/L	80	90.0	113	85-115	
Nickel	ug/L	80	88.8	111	85-115	
Potassium	ug/L	1000	1060	106	85-115	
Selenium	ug/L	80	88.7	111	85-115	
Silver	ug/L	80	88.5	111	85-115	

This report shall not be reproduced, except in full,
without the written consent of Pace Analytical Services, Inc..

Pace Analytical Services, Inc.
9608 Loiret Blvd.
Lenexa, KS 66219
(913)599-5665

QUALITY CONTROL DATA

Project: RICO WATER SAMPLING DEC 2011
Pace Project No.: 60112290

LABORATORY CONTROL SAMPLE: 1118736

Parameter	Units	Spike Conc.	LCS Result	LCS % Rec	% Rec Limits	Qualifiers
Sodium	ug/L	1000	1030	103	85-115	
Thallium	ug/L	80	84.4	105	85-115	
Total Hardness by 2340B	ug/L		7100			
Vanadium	ug/L	80	88.7	111	85-115	
Zinc	ug/L	80	86.5	108	85-115	

MATRIX SPIKE & MATRIX SPIKE DUPLICATE: 1118737 1118738

Parameter	Units	60112290001 Result	MS Spike Conc.	MSD Spike Conc.	MS Result	MSD Result	MS % Rec	MSD % Rec	% Rec Limits	RPD	Max RPD	Qual
Aluminum	ug/L	20.3	80	80	134	137	142	146	70-130	2	20	M6
Arsenic	ug/L	ND	80	80	93.3	98.4	116	123	70-130	5	20	
Barium	ug/L	66.9	80	80	174	179	134	140	70-130	3	20	M6
Cadmium	ug/L	ND	80	80	92.1	95.6	115	119	70-130	4	20	
Calcium	ug/L	47500	1000	1000	43400	43800	-410	-372	70-130	.9	20	M6
Chromium	ug/L	0.53	80	80	95.2	98.2	118	122	70-130	3	20	
Copper	ug/L	ND	80	80	90.7	95.8	113	119	70-130	5	20	
Iron	ug/L	ND	1000	1000	1220	1260	118	123	70-130	4	20	
Lead	ug/L	0.10	80	80	95.5	98.3	119	123	70-130	3	20	
Magnesium	ug/L	6220	1000	1000	9110	9200	289	298	70-130	1	20	M6
Manganese	ug/L	16.1	80	80	112	116	119	125	70-130	4	20	
Nickel	ug/L	ND	80	80	93.0	96.7	116	121	70-130	4	20	
Potassium	ug/L	586	1000	1000	1850	1880	126	130	70-130	2	20	
Selenium	ug/L	0.57	80	80	93.4	98.5	116	122	70-130	5	20	
Silver	ug/L	ND	80	80	104	106	130	132	70-130	2	20	M6
Sodium	ug/L	2600	1000	1000	4490	4560	189	195	70-130	1	20	M6
Thallium	ug/L	ND	80	80	96.2	98.6	120	123	70-130	2	20	
Total Hardness by 2340B	ug/L	144000			146000	147000				.9	20	
Vanadium	ug/L	0.13	80	80	94.5	98.0	118	122	70-130	4	20	
Zinc	ug/L	ND	80	80	97.5	99.3	117	120	70-130	2	20	

MATRIX SPIKE SAMPLE: 1118739

Parameter	Units	60112290011 Result	Spike Conc.	MS Result	MS % Rec	% Rec Limits	Qualifiers
Aluminum	ug/L	ND	80	98.3	119	70-130	
Arsenic	ug/L	ND	80	87.5	109	70-130	
Barium	ug/L	ND	80	87.3	109	70-130	
Cadmium	ug/L	ND	80	85.6	107	70-130	
Calcium	ug/L	27.5	1000	1010	98	70-130	
Chromium	ug/L	ND	80	87.3	109	70-130	
Copper	ug/L	ND	80	85.9	107	70-130	
Iron	ug/L	ND	1000	1080	108	70-130	
Lead	ug/L	ND	80	83.8	105	70-130	
Magnesium	ug/L	ND	1000	1020	102	70-130	
Manganese	ug/L	ND	80	86.5	108	70-130	

This report shall not be reproduced, except in full,
without the written consent of Pace Analytical Services, Inc..

Pace Analytical Services, Inc.
9608 Loiret Blvd.
Lenexa, KS 66219
(913)599-5665

QUALITY CONTROL DATA

Project: RICO WATER SAMPLING DEC 2011
Pace Project No.: 60112290

MATRIX SPIKE SAMPLE: 1118739

Parameter	Units	60112290011 Result	Spike Conc.	MS Result	MS % Rec	% Rec Limits	Qualifiers
Nickel	ug/L	ND	80	85.8	107	70-130	
Potassium	ug/L	28.3	1000	1340	131	70-130	M6
Selenium	ug/L	ND	80	85.4	107	70-130	
Silver	ug/L	ND	80	82.6	103	70-130	
Sodium	ug/L	ND	1000	972	97	70-130	
Thallium	ug/L	ND	80	85.9	107	70-130	
Total Hardness by 2340B	ug/L	86.6		6740			
Vanadium	ug/L	ND	80	85.7	107	70-130	
Zinc	ug/L	ND	80	86.3	106	70-130	

This report shall not be reproduced, except in full,
without the written consent of Pace Analytical Services, Inc..

Pace Analytical Services, Inc.
9608 Loiret Blvd.
Lenexa, KS 66219
(913)599-5665

QUALITY CONTROL DATA

Project: RICO WATER SAMPLING DEC 2011
Pace Project No.: 60112290

QC Batch: ICPM/30378 Analysis Method: EPA 200.8
QC Batch Method: EPA 200.8 Analysis Description: 200.8 MET
Associated Lab Samples: 60112290021, 60112290022, 60112290023, 60112290024

METHOD BLANK: 1120036 Matrix: Water
Associated Lab Samples: 60112290021, 60112290022, 60112290023, 60112290024

Parameter	Units	Blank Result	Reporting Limit	Analyzed	Qualifiers
Aluminum	ug/L	ND	4.0	12/28/11 16:15	
Arsenic	ug/L	ND	0.50	12/28/11 16:15	
Barium	ug/L	ND	0.30	12/28/11 16:15	
Cadmium	ug/L	ND	0.080	12/28/11 16:15	
Calcium	ug/L	ND	20.0	12/28/11 16:15	
Chromium	ug/L	ND	0.50	12/28/11 16:15	
Copper	ug/L	ND	0.50	12/28/11 16:15	
Iron	ug/L	ND	50.0	12/28/11 16:15	
Lead	ug/L	ND	0.10	12/28/11 16:15	
Magnesium	ug/L	ND	5.0	12/28/11 16:15	
Manganese	ug/L	ND	0.50	12/28/11 16:15	
Nickel	ug/L	ND	0.50	12/28/11 16:15	
Potassium	ug/L	ND	20.0	12/28/11 16:15	
Selenium	ug/L	ND	0.50	12/28/11 16:15	
Silver	ug/L	ND	0.50	12/28/11 16:15	
Sodium	ug/L	ND	50.0	12/28/11 16:15	
Thallium	ug/L	ND	0.10	12/28/11 16:15	
Total Hardness by 2340B	ug/L	ND	71.0	12/28/11 16:15	
Vanadium	ug/L	ND	0.10	12/28/11 16:15	
Zinc	ug/L	ND	5.0	12/28/11 16:15	

LABORATORY CONTROL SAMPLE: 1120037

Parameter	Units	Spike Conc.	LCS Result	LCS % Rec	% Rec Limits	Qualifiers
Aluminum	ug/L	80	80.6	101	85-115	
Arsenic	ug/L	80	81.3	102	85-115	
Barium	ug/L	80	78.3	98	85-115	
Cadmium	ug/L	80	79.0	99	85-115	
Calcium	ug/L	1000	1010	101	85-115	
Chromium	ug/L	80	78.7	98	85-115	
Copper	ug/L	80	78.6	98	85-115	
Iron	ug/L	1000	972	97	85-115	
Lead	ug/L	80	74.4	93	85-115	
Magnesium	ug/L	1000	998	100	85-115	
Manganese	ug/L	80	77.9	97	85-115	
Nickel	ug/L	80	78.9	99	85-115	
Potassium	ug/L	1000	995	99	85-115	
Selenium	ug/L	80	76.2	95	85-115	
Silver	ug/L	80	77.0	96	85-115	
Sodium	ug/L	1000	985	98	85-115	
Thallium	ug/L	80	77.4	97	85-115	

This report shall not be reproduced, except in full,
without the written consent of Pace Analytical Services, Inc..

Pace Analytical Services, Inc.
9608 Loiret Blvd.
Lenexa, KS 66219
(913)599-5665

QUALITY CONTROL DATA

Project: RICO WATER SAMPLING DEC 2011
Pace Project No.: 60112290

LABORATORY CONTROL SAMPLE: 1120037

Parameter	Units	Spike Conc.	LCS Result	LCS % Rec	% Rec Limits	Qualifiers
Total Hardness by 2340B	ug/L		6620			
Vanadium	ug/L	80	79.8	100	85-115	
Zinc	ug/L	80	78.7	98	85-115	

MATRIX SPIKE & MATRIX SPIKE DUPLICATE: 1120038 1120039

Parameter	Units	10179022001 Result	MS Spike Conc.	MSD Spike Conc.	MS Result	MSD Result	MS % Rec	MSD % Rec	% Rec Limits	RPD	Max RPD	Qual
Aluminum	ug/L	22.7	80	80	116	102	117	99	70-130	13	20	
Arsenic	ug/L	ND	80	80	84.6	94.7	106	118	70-130	11	20	
Barium	ug/L	ND	80	80	86.6	91.1	107	112	70-130	5	20	
Cadmium	ug/L	ND	80	80	80.2	85.9	100	107	70-130	7	20	
Calcium	ug/L	230	1000	1000	1220	1330	99	110	70-130	8	20	
Chromium	ug/L	ND	80	80	79.9	87.3	99	108	70-130	9	20	
Copper	ug/L	ND	80	80	76.8	84.1	94	103	70-130	9	20	
Iron	ug/L	ND	1000	1000	971	1030	96	102	70-130	6	20	
Lead	ug/L	ND	80	80	69.9	76.0	87	95	70-130	8	20	
Magnesium	ug/L	55.9	1000	1000	1040	1130	99	108	70-130	8	20	
Manganese	ug/L	ND	80	80	76.3	82.7	95	103	70-130	8	20	
Nickel	ug/L	ND	80	80	77.4	85.3	96	106	70-130	10	20	
Potassium	ug/L	796	1000	1000	1830	1820	104	102	70-130	.9	20	
Selenium	ug/L	ND	80	80	75.3	81.9	94	102	70-130	8	20	
Silver	ug/L	ND	80	80	74.5	82.7	92	103	70-130	10	20	CH
Sodium	ug/L	5770000	1000	1000	5710000	6210000	-5950	43800	70-130	8	20	E,M6
Thallium	ug/L	ND	80	80	64.9	71.6	81	90	70-130	10	20	
Total Hardness by 2340B	ug/L	805			7350	7970				8	20	
Vanadium	ug/L	ND	80	80	83.6	88.3	105	110	70-130	5	20	
Zinc	ug/L	ND	80	80	83.2	85.6	100	103	70-130	3	20	

MATRIX SPIKE SAMPLE: 1120040

Parameter	Units	10178932001 Result	Spike Conc.	MS Result	MS % Rec	% Rec Limits	Qualifiers
Aluminum	ug/L	7.4	80	96.8	112	70-130	
Arsenic	ug/L	5.1	80	96.5	114	70-130	
Barium	ug/L	41.7	80	133	114	70-130	
Cadmium	ug/L	<0.080	80	89.4	112	70-130	
Calcium	ug/L	41900	1000	46200	436	70-130	M1
Chromium	ug/L	<0.50	80	88.8	111	70-130	
Copper	ug/L	0.0017 mg/L	80	86.7	106	70-130	
Iron	ug/L	<50.0	1000	1090	108	70-130	
Lead	ug/L	<0.00010 mg/L	80	80.3	100	70-130	
Magnesium	ug/L	12500	1000	14900	246	70-130	M1
Manganese	ug/L	<0.50	80	86.6	108	70-130	
Nickel	ug/L	<0.50	80	85.4	107	70-130	

This report shall not be reproduced, except in full,
without the written consent of Pace Analytical Services, Inc..

Pace Analytical Services, Inc.
9608 Loiret Blvd.
Lenexa, KS 66219
(913)599-5665

QUALITY CONTROL DATA

Project: RICO WATER SAMPLING DEC 2011
Pace Project No.: 60112290

MATRIX SPIKE SAMPLE: 1120040

Parameter	Units	10178932001 Result	Spike Conc.	MS Result	MS % Rec	% Rec Limits	Qualifiers
Potassium	ug/L	2910	1000	4250	134	70-130	M1
Selenium	ug/L	<0.50	80	82.8	103	70-130	
Silver	ug/L	<0.50	80	82.7	103	70-130	
Sodium	ug/L	23600	1000	26000	247	70-130	M1
Thallium	ug/L	<0.10	80	76.1	95	70-130	
Total Hardness by 2340B	ug/L	156000		177000			
Vanadium	ug/L	0.80	80	89.4	111	70-130	
Zinc	ug/L	<5.0	80	89.0	110	70-130	

This report shall not be reproduced, except in full,
without the written consent of Pace Analytical Services, Inc..

Pace Analytical Services, Inc.
9608 Loiret Blvd.
Lenexa, KS 66219
(913)599-5665

QUALITY CONTROL DATA

Project: RICO WATER SAMPLING DEC 2011
Pace Project No.: 60112290

QC Batch: ICPM/30350 Analysis Method: EPA 200.8
QC Batch Method: EPA 200.8 Analysis Description: 200.8 MET Dissolved
Associated Lab Samples: 60112290021, 60112290022, 60112290023, 60112290024

METHOD BLANK: 1118720 Matrix: Water
Associated Lab Samples: 60112290021, 60112290022, 60112290023, 60112290024

Parameter	Units	Blank Result	Reporting Limit	Analyzed	Qualifiers
Aluminum, Dissolved	ug/L	ND	4.0	12/30/11 00:13	
Arsenic, Dissolved	ug/L	ND	0.50	12/30/11 00:13	
Barium, Dissolved	ug/L	ND	0.30	12/30/11 00:13	
Cadmium, Dissolved	ug/L	ND	0.080	12/30/11 00:13	
Calcium, Dissolved	ug/L	ND	20.0	12/30/11 00:13	
Chromium, Dissolved	ug/L	ND	0.50	12/30/11 00:13	
Copper, Dissolved	ug/L	ND	0.50	12/30/11 00:13	
Iron, Dissolved	ug/L	ND	50.0	12/30/11 00:13	
Lead, Dissolved	ug/L	ND	0.10	12/30/11 00:13	
Magnesium, Dissolved	ug/L	ND	5.0	12/30/11 00:13	
Manganese, Dissolved	ug/L	ND	0.50	12/30/11 00:13	
Nickel, Dissolved	ug/L	ND	0.50	12/30/11 00:13	
Potassium, Dissolved	ug/L	ND	20.0	12/30/11 00:13	
Selenium, Dissolved	ug/L	ND	0.50	12/30/11 00:13	
Silver, Dissolved	ug/L	ND	0.50	12/30/11 00:13	CH
Sodium, Dissolved	ug/L	ND	50.0	12/30/11 00:13	
Thallium, Dissolved	ug/L	ND	0.10	12/30/11 00:13	
Vanadium, Dissolved	ug/L	ND	0.10	12/30/11 00:13	
Zinc, Dissolved	ug/L	ND	5.0	12/30/11 00:13	

LABORATORY CONTROL SAMPLE: 1118721

Parameter	Units	Spike Conc.	LCS Result	LCS % Rec	% Rec Limits	Qualifiers
Aluminum, Dissolved	ug/L	80	78.1	98	85-115	
Arsenic, Dissolved	ug/L	80	77.8	97	85-115	
Barium, Dissolved	ug/L	80	79.4	99	85-115	
Cadmium, Dissolved	ug/L	80	79.1	99	85-115	
Calcium, Dissolved	ug/L	1000	960	96	85-115	
Chromium, Dissolved	ug/L	80	77.1	96	85-115	
Copper, Dissolved	ug/L	80	79.3	99	85-115	
Iron, Dissolved	ug/L	1000	967	97	85-115	
Lead, Dissolved	ug/L	80	77.6	97	85-115	
Magnesium, Dissolved	ug/L	1000	977	98	85-115	
Manganese, Dissolved	ug/L	80	77.2	96	85-115	
Nickel, Dissolved	ug/L	80	77.7	97	85-115	
Potassium, Dissolved	ug/L	1000	970	97	85-115	
Selenium, Dissolved	ug/L	80	78.6	98	85-115	
Silver, Dissolved	ug/L	80	88.4	111	85-115	CH
Sodium, Dissolved	ug/L	1000	946	95	85-115	
Thallium, Dissolved	ug/L	80	80.3	100	85-115	
Vanadium, Dissolved	ug/L	80	77.1	96	85-115	

This report shall not be reproduced, except in full,
without the written consent of Pace Analytical Services, Inc..

Pace Analytical Services, Inc.
9608 Loiret Blvd.
Lenexa, KS 66219
(913)599-5665

QUALITY CONTROL DATA

Project: RICO WATER SAMPLING DEC 2011
Pace Project No.: 60112290

LABORATORY CONTROL SAMPLE: 1118721

Parameter	Units	Spike Conc.	LCS Result	LCS % Rec	% Rec Limits	Qualifiers
Zinc, Dissolved	ug/L	80	78.3	98	85-115	

MATRIX SPIKE SAMPLE: 1118724

Parameter	Units	60112290021 Result	Spike Conc.	MS Result	MS % Rec	% Rec Limits	Qualifiers
Aluminum, Dissolved	ug/L	1280	80	1530	318	70-130	M6
Arsenic, Dissolved	ug/L	170	80	266	120	70-130	
Barium, Dissolved	ug/L	23.2	80	112	112	70-130	
Cadmium, Dissolved	ug/L	ND	80	87.8	110	70-130	
Calcium, Dissolved	ug/L	393000	1000	406000	1290	70-130	E,M6
Chromium, Dissolved	ug/L	0.50	80	84.7	105	70-130	
Copper, Dissolved	ug/L	ND	80	81.6	102	70-130	
Iron, Dissolved	ug/L	138000	1000	151000	1320	70-130	M6
Lead, Dissolved	ug/L	0.13	80	79.1	99	70-130	
Magnesium, Dissolved	ug/L	73000	1000	78300	526	70-130	M6
Manganese, Dissolved	ug/L	15600	80	17000	1780	70-130	E,M6
Nickel, Dissolved	ug/L	19.9	80	101	102	70-130	
Potassium, Dissolved	ug/L	9360	1000	11500	214	70-130	M6
Selenium, Dissolved	ug/L	ND	80	83.1	103	70-130	
Silver, Dissolved	ug/L	ND	80	90.5	113	70-130	CH
Sodium, Dissolved	ug/L	8990	1000	10900	195	70-130	M6
Thallium, Dissolved	ug/L	ND	80	79.8	100	70-130	
Vanadium, Dissolved	ug/L	ND	80	85.8	107	70-130	
Zinc, Dissolved	ug/L	19200	80	19600	575	70-130	E,M6

MATRIX SPIKE & MATRIX SPIKE DUPLICATE: 1118916 1118917

Parameter	Units	10178696001 Result	MS Spike Conc.	MSD Spike Conc.	MS Result	MSD Result	MS % Rec	MSD % Rec	% Rec Limits	RPD	Max RPD	Qual
Aluminum, Dissolved	ug/L	6.8	80	80	95.4	88.8	111	103	70-130	7	20	
Arsenic, Dissolved	ug/L	2.5	80	80	82.8	79.5	100	96	70-130	4	20	
Barium, Dissolved	ug/L	24.4	80	80	107	103	103	98	70-130	4	20	
Cadmium, Dissolved	ug/L	1.9	80	80	83.6	79.6	102	97	70-130	5	20	
Calcium, Dissolved	ug/L	119000	1000	1000	124000	120000	515	105	70-130	3	20	E,M1
Chromium, Dissolved	ug/L	0.75	80	80	79.2	76.0	98	94	70-130	4	20	
Copper, Dissolved	ug/L	0.17J	80	80	80.0	77.1	100	96	70-130	4	20	
Iron, Dissolved	ug/L	40.2J	1000	1000	1030	994	99	95	70-130	4	20	
Lead, Dissolved	ug/L	0.051J	80	80	79.3	75.4	99	94	70-130	5	20	
Magnesium, Dissolved	ug/L	24700	1000	1000	26700	25600	202	94	70-130	4	20	M1
Manganese, Dissolved	ug/L	497	80	80	596	572	124	93	70-130	4	20	
Nickel, Dissolved	ug/L	2.1	80	80	80.2	78.2	98	95	70-130	3	20	
Potassium, Dissolved	ug/L	10700	1000	1000	11900	11400	115	69	70-130	4	20	M1
Selenium, Dissolved	ug/L	ND	80	80	80.8	78.7	101	98	70-130	3	20	
Silver, Dissolved	ug/L	ND	80	80	83.8	83.5	105	104	70-130	.4	20	
Sodium, Dissolved	ug/L	65400	1000	1000	69400	66500	390	105	70-130	4	20	M1

This report shall not be reproduced, except in full,
without the written consent of Pace Analytical Services, Inc..

Pace Analytical Services, Inc.
9608 Loiret Blvd.
Lenexa, KS 66219
(913)599-5665

QUALITY CONTROL DATA

Project: RICO WATER SAMPLING DEC 2011
Pace Project No.: 60112290

MATRIX SPIKE & MATRIX SPIKE DUPLICATE: 1118916 1118917

Parameter	Units	10178696001 Result	MS Spike Conc.	MSD Spike Conc.	MS Result	MSD Result	MS % Rec	MSD % Rec	% Rec Limits	RPD	Max RPD	Qual
Thallium, Dissolved	ug/L	ND	80	80	79.6	76.0	99	95	70-130	5	20	
Vanadium, Dissolved	ug/L	1.6	80	80	82.9	77.6	102	95	70-130	7	20	
Zinc, Dissolved	ug/L	140	80	80	230	224	112	104	70-130	3	20	

This report shall not be reproduced, except in full,
without the written consent of Pace Analytical Services, Inc..

Pace Analytical Services, Inc.
9608 Loiret Blvd.
Lenexa, KS 66219
(913)599-5665

QUALITY CONTROL DATA

Project: RICO WATER SAMPLING DEC 2011
Pace Project No.: 60112290

QC Batch: ICPM/30351 Analysis Method: EPA 200.8
QC Batch Method: EPA 200.8 Analysis Description: 200.8 MET Dissolved
Associated Lab Samples: 60112290001, 60112290002, 60112290003, 60112290004, 60112290005, 60112290006, 60112290007, 60112290008, 60112290009, 60112290010, 60112290011, 60112290012, 60112290013

METHOD BLANK: 1118725 Matrix: Water
Associated Lab Samples: 60112290001, 60112290002, 60112290003, 60112290004, 60112290005, 60112290006, 60112290007, 60112290008, 60112290009, 60112290010, 60112290011, 60112290012, 60112290013, 60112290014, 60112290015, 60112290016, 60112290017, 60112290018, 60112290019, 60112290020

Parameter	Units	Blank Result	Reporting Limit	Analyzed	Qualifiers
Aluminum, Dissolved	ug/L	ND	4.0	01/03/12 12:20	
Arsenic, Dissolved	ug/L	ND	0.50	01/03/12 12:20	
Barium, Dissolved	ug/L	ND	0.30	01/03/12 12:20	
Cadmium, Dissolved	ug/L	ND	0.080	01/03/12 12:20	
Calcium, Dissolved	ug/L	ND	20.0	01/03/12 12:20	
Chromium, Dissolved	ug/L	ND	0.50	01/03/12 12:20	
Copper, Dissolved	ug/L	ND	0.50	01/03/12 12:20	
Iron, Dissolved	ug/L	ND	50.0	01/03/12 12:20	
Lead, Dissolved	ug/L	ND	0.10	01/03/12 12:20	
Magnesium, Dissolved	ug/L	ND	5.0	01/03/12 12:20	
Manganese, Dissolved	ug/L	ND	0.50	01/03/12 12:20	
Nickel, Dissolved	ug/L	ND	0.50	01/03/12 12:20	
Potassium, Dissolved	ug/L	ND	20.0	01/03/12 12:20	
Selenium, Dissolved	ug/L	ND	0.50	01/03/12 12:20	
Silver, Dissolved	ug/L	ND	0.50	01/03/12 12:20	CH
Sodium, Dissolved	ug/L	ND	50.0	01/03/12 12:20	
Thallium, Dissolved	ug/L	ND	0.10	01/03/12 12:20	
Vanadium, Dissolved	ug/L	ND	0.10	01/03/12 12:20	
Zinc, Dissolved	ug/L	ND	5.0	01/03/12 12:20	

LABORATORY CONTROL SAMPLE: 1118726

Parameter	Units	Spike Conc.	LCS Result	LCS % Rec	% Rec Limits	Qualifiers
Aluminum, Dissolved	ug/L	80	83.1	104	85-115	
Arsenic, Dissolved	ug/L	80	86.3	108	85-115	
Barium, Dissolved	ug/L	80	83.8	105	85-115	
Cadmium, Dissolved	ug/L	80	84.5	106	85-115	
Calcium, Dissolved	ug/L	1000	1010	101	85-115	
Chromium, Dissolved	ug/L	80	84.6	106	85-115	
Copper, Dissolved	ug/L	80	84.7	106	85-115	
Iron, Dissolved	ug/L	1000	1050	105	85-115	
Lead, Dissolved	ug/L	80	83.3	104	85-115	
Magnesium, Dissolved	ug/L	1000	1030	103	85-115	
Manganese, Dissolved	ug/L	80	83.5	104	85-115	
Nickel, Dissolved	ug/L	80	84.2	105	85-115	
Potassium, Dissolved	ug/L	1000	1070	107	85-115	
Selenium, Dissolved	ug/L	80	83.3	104	85-115	
Silver, Dissolved	ug/L	80	87.2	109	85-115	
Sodium, Dissolved	ug/L	1000	1040	104	85-115	

This report shall not be reproduced, except in full,
without the written consent of Pace Analytical Services, Inc..

Pace Analytical Services, Inc.
9608 Loiret Blvd.
Lenexa, KS 66219
(913)599-5665

QUALITY CONTROL DATA

Project: RICO WATER SAMPLING DEC 2011
Pace Project No.: 60112290

LABORATORY CONTROL SAMPLE: 1118726

Parameter	Units	Spike Conc.	LCS Result	LCS % Rec	% Rec Limits	Qualifiers
Thallium, Dissolved	ug/L	80	83.0	104	85-115	
Vanadium, Dissolved	ug/L	80	84.6	106	85-115	
Zinc, Dissolved	ug/L	80	86.9	109	85-115	

MATRIX SPIKE & MATRIX SPIKE DUPLICATE: 1118727 1118728

Parameter	Units	60112290001 Result	MS Spike Conc.	MSD Spike Conc.	MS Result	MSD Result	MS % Rec	MSD % Rec	% Rec Limits	RPD	Max RPD	Qual
Aluminum, Dissolved	ug/L	6.3	80	80	110	98.1	130	115	70-130	12	20	
Arsenic, Dissolved	ug/L	ND	80	80	88.7	87.5	111	109	70-130	1	20	
Barium, Dissolved	ug/L	67.7	80	80	148	149	100	102	70-130	1	20	
Cadmium, Dissolved	ug/L	ND	80	80	82.2	81.6	103	102	70-130	.8	20	
Calcium, Dissolved	ug/L	49400	1000	1000	47700	47800	-173	-164	70-130	.2	20	M6
Chromium, Dissolved	ug/L	0.52	80	80	85.4	83.7	106	104	70-130	2	20	
Copper, Dissolved	ug/L	0.78	80	80	82.6	81.7	102	101	70-130	1	20	
Iron, Dissolved	ug/L	ND	1000	1000	1060	1040	104	103	70-130	1	20	
Lead, Dissolved	ug/L	ND	80	80	81.8	80.7	102	101	70-130	1	20	
Magnesium, Dissolved	ug/L	6440	1000	1000	7620	7540	118	110	70-130	1	20	
Manganese, Dissolved	ug/L	15.5	80	80	98.0	96.7	103	101	70-130	1	20	
Nickel, Dissolved	ug/L	ND	80	80	82.9	81.8	103	102	70-130	1	20	
Potassium, Dissolved	ug/L	664	1000	1000	1880	1890	122	122	70-130	.2	20	
Selenium, Dissolved	ug/L	ND	80	80	83.2	80.5	104	100	70-130	3	20	
Silver, Dissolved	ug/L	ND	80	80	83.8	84.4	105	105	70-130	.7	20	
Sodium, Dissolved	ug/L	2950	1000	1000	4050	4030	111	108	70-130	.7	20	
Thallium, Dissolved	ug/L	ND	80	80	81.9	80.5	102	101	70-130	2	20	
Vanadium, Dissolved	ug/L	ND	80	80	84.2	82.5	105	103	70-130	2	20	
Zinc, Dissolved	ug/L	ND	80	80	87.0	85.5	103	101	70-130	2	20	

MATRIX SPIKE SAMPLE: 1118729

Parameter	Units	60112290011 Result	Spike Conc.	MS Result	MS % Rec	% Rec Limits	Qualifiers
Aluminum, Dissolved	ug/L	ND	80	94.0	114	70-130	
Arsenic, Dissolved	ug/L	ND	80	73.6	92	70-130	
Barium, Dissolved	ug/L	0.36	80	76.8	96	70-130	
Cadmium, Dissolved	ug/L	ND	80	73.9	92	70-130	
Calcium, Dissolved	ug/L	ND	1000	1130	112	70-130	
Chromium, Dissolved	ug/L	ND	80	75.5	94	70-130	
Copper, Dissolved	ug/L	ND	80	74.6	93	70-130	
Iron, Dissolved	ug/L	ND	1000	957	95	70-130	
Lead, Dissolved	ug/L	ND	80	78.0	97	70-130	
Magnesium, Dissolved	ug/L	ND	1000	949	95	70-130	
Manganese, Dissolved	ug/L	ND	80	78.8	98	70-130	
Nickel, Dissolved	ug/L	ND	80	72.9	91	70-130	
Potassium, Dissolved	ug/L	45.8	1000	859	81	70-130	
Selenium, Dissolved	ug/L	ND	80	75.5	94	70-130	

This report shall not be reproduced, except in full,
without the written consent of Pace Analytical Services, Inc..

Pace Analytical Services, Inc.
9608 Loiret Blvd.
Lenexa, KS 66219
(913)599-5665

QUALITY CONTROL DATA

Project: RICO WATER SAMPLING DEC 2011
Pace Project No.: 60112290

MATRIX SPIKE SAMPLE: 1118729

Parameter	Units	60112290011 Result	Spike Conc.	MS Result	MS % Rec	% Rec Limits	Qualifiers
Silver, Dissolved	ug/L	ND	80	84.5	106	70-130	CH
Sodium, Dissolved	ug/L	63.3	1000	1010	95	70-130	
Thallium, Dissolved	ug/L	ND	80	79.0	99	70-130	
Vanadium, Dissolved	ug/L	ND	80	74.9	94	70-130	
Zinc, Dissolved	ug/L	ND	80	80.9	99	70-130	

This report shall not be reproduced, except in full,
without the written consent of Pace Analytical Services, Inc..

Pace Analytical Services, Inc.
9608 Loiret Blvd.
Lenexa, KS 66219
(913)599-5665

QUALITY CONTROL DATA

Project: RICO WATER SAMPLING DEC 2011
Pace Project No.: 60112290

QC Batch: MERC/6313 Analysis Method: EPA 245.1
QC Batch Method: EPA 245.1 Analysis Description: 245.1 Mercury
Associated Lab Samples: 60112290001, 60112290002, 60112290003, 60112290004, 60112290005, 60112290006, 60112290007, 60112290008, 60112290009, 60112290010, 60112290011, 60112290012, 60112290013, 60112290014, 60112290015, 60112290016, 60112290017, 60112290018

METHOD BLANK: 1118901 Matrix: Water
Associated Lab Samples: 60112290001, 60112290002, 60112290003, 60112290004, 60112290005, 60112290006, 60112290007, 60112290008, 60112290009, 60112290010, 60112290011, 60112290012, 60112290013, 60112290014, 60112290015, 60112290016, 60112290017, 60112290018

Parameter	Units	Blank Result	Reporting Limit	Analyzed	Qualifiers
Mercury	ug/L	ND	0.20	12/22/11 12:55	

LABORATORY CONTROL SAMPLE: 1118902

Parameter	Units	Spike Conc.	LCS Result	LCS % Rec	% Rec Limits	Qualifiers
Mercury	ug/L	5	5.1	101	85-115	

MATRIX SPIKE & MATRIX SPIKE DUPLICATE: 1118903 1118904

Parameter	Units	60112290001 Result	MS Spike Conc.	MSD Spike Conc.	MS Result	MSD Result	MS % Rec	MSD % Rec	% Rec Limits	RPD	Max RPD	Qual
Mercury	ug/L	ND	5	5	5.1	5.7	102	114	85-115	11	30	

MATRIX SPIKE SAMPLE: 1118905

Parameter	Units	60112290018 Result	Spike Conc.	MS Result	MS % Rec	% Rec Limits	Qualifiers
Mercury	ug/L	ND	5	5.2	103	85-115	

This report shall not be reproduced, except in full,
without the written consent of Pace Analytical Services, Inc..

Pace Analytical Services, Inc.
9608 Loiret Blvd.
Lenexa, KS 66219
(913)599-5665

QUALITY CONTROL DATA

Project: RICO WATER SAMPLING DEC 2011
Pace Project No.: 60112290

QC Batch: MERC/6317 Analysis Method: EPA 245.1
QC Batch Method: EPA 245.1 Analysis Description: 245.1 Mercury
Associated Lab Samples: 60112290019, 60112290020, 60112290021, 60112290022, 60112290023, 60112290024

METHOD BLANK: 1119733 Matrix: Water
Associated Lab Samples: 60112290019, 60112290020, 60112290021, 60112290022, 60112290023, 60112290024

Parameter	Units	Blank Result	Reporting Limit	Analyzed	Qualifiers
Mercury	ug/L	ND	0.20	12/23/11 11:11	

LABORATORY CONTROL SAMPLE: 1119734

Parameter	Units	Spike Conc.	LCS Result	LCS % Rec	% Rec Limits	Qualifiers
Mercury	ug/L	5	4.9	98	85-115	

MATRIX SPIKE & MATRIX SPIKE DUPLICATE: 1119735 1119736

Parameter	Units	60112290019 Result	MS Spike Conc.	MSD Spike Conc.	MS Result	MSD Result	MS % Rec	MSD % Rec	% Rec Limits	RPD	Max RPD	Qual
Mercury	ug/L	ND	5	5	5.1	5.1	101	101	85-115	.2	30	

MATRIX SPIKE SAMPLE: 1119737

Parameter	Units	10179035003 Result	Spike Conc.	MS Result	MS % Rec	% Rec Limits	Qualifiers
Mercury	ug/L	ND	5	4.6	92	85-115	

This report shall not be reproduced, except in full,
without the written consent of Pace Analytical Services, Inc..

Pace Analytical Services, Inc.
9608 Loiret Blvd.
Lenexa, KS 66219
(913)599-5665

QUALITY CONTROL DATA

Project: RICO WATER SAMPLING DEC 2011
Pace Project No.: 60112290

QC Batch: MERC/6314 Analysis Method: EPA 245.1
QC Batch Method: EPA 245.1 Analysis Description: 245.1 Mercury - Dissolved
Associated Lab Samples: 60112290001, 60112290002, 60112290003, 60112290004, 60112290005, 60112290006, 60112290007, 60112290008, 60112290009, 60112290010, 60112290011, 60112290012, 60112290013, 60112290014, 60112290015, 60112290016, 60112290017, 60112290018

METHOD BLANK: 1118910 Matrix: Water
Associated Lab Samples: 60112290001, 60112290002, 60112290003, 60112290004, 60112290005, 60112290006, 60112290007, 60112290008, 60112290009, 60112290010, 60112290011, 60112290012, 60112290013, 60112290014, 60112290015, 60112290016, 60112290017, 60112290018

Parameter	Units	Blank Result	Reporting Limit	Analyzed	Qualifiers
Mercury, Dissolved	ug/L	ND	0.20	12/23/11 08:55	

LABORATORY CONTROL SAMPLE: 1118911

Parameter	Units	Spike Conc.	LCS Result	LCS % Rec	% Rec Limits	Qualifiers
Mercury, Dissolved	ug/L	5	5.2	103	85-115	

MATRIX SPIKE & MATRIX SPIKE DUPLICATE: 1118912 1118913

Parameter	Units	60112290001 Result	MS Spike Conc.	MSD Spike Conc.	MS Result	MSD Result	MS % Rec	MSD % Rec	% Rec Limits	RPD	Max RPD	Qual
Mercury, Dissolved	ug/L	ND	5	5	4.7	4.9	94	97	85-115	4	20	

MATRIX SPIKE SAMPLE: 1118914

Parameter	Units	60112290018 Result	Spike Conc.	MS Result	MS % Rec	% Rec Limits	Qualifiers
Mercury, Dissolved	ug/L	ND	5	5.4	108	85-115	

This report shall not be reproduced, except in full,
without the written consent of Pace Analytical Services, Inc..

Pace Analytical Services, Inc.
9608 Loiret Blvd.
Lenexa, KS 66219
(913)599-5665

QUALITY CONTROL DATA

Project: RICO WATER SAMPLING DEC 2011
Pace Project No.: 60112290

QC Batch: MERC/6316 Analysis Method: EPA 245.1
QC Batch Method: EPA 245.1 Analysis Description: 245.1 Mercury - Dissolved
Associated Lab Samples: 60112290019, 60112290020, 60112290021, 60112290022, 60112290023, 60112290024

METHOD BLANK: 1119089 Matrix: Water
Associated Lab Samples: 60112290019, 60112290020, 60112290021, 60112290022, 60112290023, 60112290024

Parameter	Units	Blank Result	Reporting Limit	Analyzed	Qualifiers
Mercury, Dissolved	ug/L	ND	0.20	12/22/11 11:28	

LABORATORY CONTROL SAMPLE: 1119090

Parameter	Units	Spike Conc.	LCS Result	LCS % Rec	% Rec Limits	Qualifiers
Mercury, Dissolved	ug/L	5	4.6	92	85-115	

MATRIX SPIKE & MATRIX SPIKE DUPLICATE: 1119091 1119092

Parameter	Units	60112423001 Result	MS Spike Conc.	MSD Spike Conc.	MS Result	MSD Result	MS % Rec	MSD % Rec	% Rec Limits	RPD	Max RPD	Qual
Mercury, Dissolved	ug/L	ND	5	5	2.5	3.5	51	70	85-115	32	20	D6,M1

This report shall not be reproduced, except in full,
without the written consent of Pace Analytical Services, Inc..

Pace Analytical Services, Inc.
9608 Loiret Blvd.
Lenexa, KS 66219
(913)599-5665

QUALITY CONTROL DATA

Project: RICO WATER SAMPLING DEC 2011
Pace Project No.: 60112290

QC Batch: MT/7923 | Analysis Method: SM 2510B
QC Batch Method: SM 2510B | Analysis Description: 2510B Specific Conductance

Associated Lab Samples: 60112290001, 60112290002, 60112290003, 60112290004, 60112290005, 60112290006, 60112290007, 60112290008, 60112290009, 60112290010, 60112290011, 60112290012, 60112290013, 60112290014, 60112290015, 60112290016, 60112290017, 60112290018, 60112290019, 60112290020

METHOD BLANK: 1119513 | Matrix: Water

Associated Lab Samples: 60112290001, 60112290002, 60112290003, 60112290004, 60112290005, 60112290006, 60112290007, 60112290008, 60112290009, 60112290010, 60112290011, 60112290012, 60112290013, 60112290014, 60112290015, 60112290016, 60112290017, 60112290018, 60112290019, 60112290020

Parameter	Units	Blank Result	Reporting Limit	Analyzed	Qualifiers
Specific Conductance	umhos/cm	ND	10.0	12/22/11 10:51	

LABORATORY CONTROL SAMPLE: 1119514

Parameter	Units	Spike Conc.	LCS Result	LCS % Rec	% Rec Limits	Qualifiers
Specific Conductance	umhos/cm	1000	978	98	90-110	

SAMPLE DUPLICATE: 1119515

Parameter	Units	60112290004 Result	Dup Result	RPD	Max RPD	Qualifiers
Specific Conductance	umhos/cm	1130	1120	2	20	

SAMPLE DUPLICATE: 1119516

Parameter	Units	60112290020 Result	Dup Result	RPD	Max RPD	Qualifiers
Specific Conductance	umhos/cm	2230	2240	.5	20	

This report shall not be reproduced, except in full,
without the written consent of Pace Analytical Services, Inc..

Pace Analytical Services, Inc.
9608 Loiret Blvd.
Lenexa, KS 66219
(913)599-5665

QUALITY CONTROL DATA

Project: RICO WATER SAMPLING DEC 2011
Pace Project No.: 60112290

QC Batch: MT/7931 | Analysis Method: SM 2510B
QC Batch Method: SM 2510B | Analysis Description: 2510B Specific Conductance
Associated Lab Samples: 60112290021, 60112290022, 60112290023, 60112290024

METHOD BLANK: 1120402 | Matrix: Water
Associated Lab Samples: 60112290021, 60112290022, 60112290023, 60112290024

Parameter	Units	Blank Result	Reporting Limit	Analyzed	Qualifiers
Specific Conductance	umhos/cm	ND	10.0	12/23/11 10:10	

LABORATORY CONTROL SAMPLE: 1120403

Parameter	Units	Spike Conc.	LCS Result	LCS % Rec	% Rec Limits	Qualifiers
Specific Conductance	umhos/cm	1000	976	98	90-110	

SAMPLE DUPLICATE: 1120404

Parameter	Units	60112423001 Result	Dup Result	RPD	Max RPD	Qualifiers
Specific Conductance	umhos/cm	1130	1100	3	20	

SAMPLE DUPLICATE: 1120405

Parameter	Units	10179027001 Result	Dup Result	RPD	Max RPD	Qualifiers
Specific Conductance	umhos/cm	192	192	.05	20	

This report shall not be reproduced, except in full,
without the written consent of Pace Analytical Services, Inc..

Pace Analytical Services, Inc.
9608 Loiret Blvd.
Lenexa, KS 66219
(913)599-5665

QUALITY CONTROL DATA

Project: RICO WATER SAMPLING DEC 2011
Pace Project No.: 60112290

QC Batch: WET/32766 Analysis Method: SM 2320B
QC Batch Method: SM 2320B Analysis Description: 2320B Alkalinity
Associated Lab Samples: 60112290001, 60112290002, 60112290003, 60112290004, 60112290005, 60112290006, 60112290007, 60112290008, 60112290009, 60112290010, 60112290011, 60112290012, 60112290013

METHOD BLANK: 931983 Matrix: Water
Associated Lab Samples: 60112290001, 60112290002, 60112290003, 60112290004, 60112290005, 60112290006, 60112290007, 60112290008, 60112290009, 60112290010, 60112290011, 60112290012, 60112290013

Parameter	Units	Blank Result	Reporting Limit	Analyzed	Qualifiers
Alkalinity, Carbonate (CaCO3)	mg/L	ND	20.0	12/27/11 12:30	
Alkalinity, Total as CaCO3	mg/L	ND	20.0	12/27/11 12:30	
Alkalinity,Bicarbonate (CaCO3)	mg/L	ND	20.0	12/27/11 12:30	

LABORATORY CONTROL SAMPLE: 931984

Parameter	Units	Spike Conc.	LCS Result	LCS % Rec	% Rec Limits	Qualifiers
Alkalinity, Total as CaCO3	mg/L	500	496	99	90-110	

SAMPLE DUPLICATE: 931985

Parameter	Units	60112525001 Result	Dup Result	RPD	Max RPD	Qualifiers
Alkalinity, Carbonate (CaCO3)	mg/L	ND	ND		24	
Alkalinity, Total as CaCO3	mg/L	900	850	6	9	
Alkalinity,Bicarbonate (CaCO3)	mg/L	900	850	6	9	

SAMPLE DUPLICATE: 931986

Parameter	Units	60112290002 Result	Dup Result	RPD	Max RPD	Qualifiers
Alkalinity, Carbonate (CaCO3)	mg/L	ND	ND		24	
Alkalinity, Total as CaCO3	mg/L	102	102	0	9	
Alkalinity,Bicarbonate (CaCO3)	mg/L	102	102	0	9	

This report shall not be reproduced, except in full,
without the written consent of Pace Analytical Services, Inc..

Pace Analytical Services, Inc.
9608 Loiret Blvd.
Lenexa, KS 66219
(913)599-5665

QUALITY CONTROL DATA

Project: RICO WATER SAMPLING DEC 2011
Pace Project No.: 60112290

QC Batch: WET/32790 Analysis Method: SM 2320B
QC Batch Method: SM 2320B Analysis Description: 2320B Alkalinity
Associated Lab Samples: 60112290014, 60112290015, 60112290016, 60112290017, 60112290018, 60112290019, 60112290020, 60112290021, 60112290022, 60112290023, 60112290024

METHOD BLANK: 932335 Matrix: Water
Associated Lab Samples: 60112290014, 60112290015, 60112290016, 60112290017, 60112290018, 60112290019, 60112290020, 60112290021, 60112290022, 60112290023, 60112290024

Parameter	Units	Blank Result	Reporting Limit	Analyzed	Qualifiers
Alkalinity, Carbonate (CaCO3)	mg/L	ND	20.0	12/28/11 12:30	
Alkalinity, Total as CaCO3	mg/L	ND	20.0	12/28/11 12:30	
Alkalinity,Bicarbonate (CaCO3)	mg/L	ND	20.0	12/28/11 12:30	

LABORATORY CONTROL SAMPLE: 932336

Parameter	Units	Spike Conc.	LCS Result	LCS % Rec	% Rec Limits	Qualifiers
Alkalinity, Total as CaCO3	mg/L	500	498	100	90-110	

SAMPLE DUPLICATE: 932337

Parameter	Units	60112141001 Result	Dup Result	RPD	Max RPD	Qualifiers
Alkalinity, Carbonate (CaCO3)	mg/L	ND	ND		24	
Alkalinity, Total as CaCO3	mg/L	615	600	2	9	
Alkalinity,Bicarbonate (CaCO3)	mg/L	615	600	2	9	

SAMPLE DUPLICATE: 932338

Parameter	Units	60112165001 Result	Dup Result	RPD	Max RPD	Qualifiers
Alkalinity, Carbonate (CaCO3)	mg/L	ND	ND		24	
Alkalinity, Total as CaCO3	mg/L	550	550	0	9	
Alkalinity,Bicarbonate (CaCO3)	mg/L	550	550	0	9	

This report shall not be reproduced, except in full,
without the written consent of Pace Analytical Services, Inc..

Pace Analytical Services, Inc.
9608 Loiret Blvd.
Lenexa, KS 66219
(913)599-5665

QUALITY CONTROL DATA

Project: RICO WATER SAMPLING DEC 2011
Pace Project No.: 60112290

QC Batch: WET/32651 — Analysis Method: SM 2540C
QC Batch Method: SM 2540C — Analysis Description: 2540C Total Dissolved Solids
Associated Lab Samples: 60112290001, 60112290002, 60112290003, 60112290004, 60112290005, 60112290006, 60112290007, 60112290008, 60112290009, 60112290010, 60112290011

METHOD BLANK: 929073 — Matrix: Water
Associated Lab Samples: 60112290001, 60112290002, 60112290003, 60112290004, 60112290005, 60112290006, 60112290007, 60112290008, 60112290009, 60112290010, 60112290011

Parameter	Units	Blank Result	Reporting Limit	Analyzed	Qualifiers
Total Dissolved Solids	mg/L	ND	5.0	12/19/11 13:36	

SAMPLE DUPLICATE: 929074

Parameter	Units	60112005002 Result	Dup Result	RPD	Max RPD	Qualifiers
Total Dissolved Solids	mg/L	255	259	2	17	

SAMPLE DUPLICATE: 929075

Parameter	Units	60112290003 Result	Dup Result	RPD	Max RPD	Qualifiers
Total Dissolved Solids	mg/L	939	939	0	17	

This report shall not be reproduced, except in full,
without the written consent of Pace Analytical Services, Inc..

Pace Analytical Services, Inc.
9608 Loiret Blvd.
Lenexa, KS 66219
(913)599-5665

QUALITY CONTROL DATA

Project: RICO WATER SAMPLING DEC 2011
Pace Project No.: 60112290

QC Batch: WET/32666 Analysis Method: SM 2540C
QC Batch Method: SM 2540C Analysis Description: 2540C Total Dissolved Solids
Associated Lab Samples: 60112290012, 60112290013, 60112290014, 60112290015, 60112290016, 60112290017, 60112290018, 60112290019, 60112290020, 60112290021, 60112290022, 60112290023, 60112290024

METHOD BLANK: 929282 Matrix: Water
Associated Lab Samples: 60112290012, 60112290013, 60112290014, 60112290015, 60112290016, 60112290017, 60112290018, 60112290019, 60112290020, 60112290021, 60112290022, 60112290023, 60112290024

Parameter	Units	Blank Result	Reporting Limit	Analyzed	Qualifiers
Total Dissolved Solids	mg/L	ND	5.0	12/20/11 13:22	

SAMPLE DUPLICATE: 929283

Parameter	Units	60112159003 Result	Dup Result	RPD	Max RPD	Qualifiers
Total Dissolved Solids	mg/L	2320	2170	7	17	

SAMPLE DUPLICATE: 929284

Parameter	Units	60112290021 Result	Dup Result	RPD	Max RPD	Qualifiers
Total Dissolved Solids	mg/L	2180	2100	4	17	

This report shall not be reproduced, except in full,
without the written consent of Pace Analytical Services, Inc..

Pace Analytical Services, Inc.
9608 Loiret Blvd.
Lenexa, KS 66219
(913)599-5665

QUALITY CONTROL DATA

Project: RICO WATER SAMPLING DEC 2011
Pace Project No.: 60112290

QC Batch: WET/32661 — Analysis Method: SM 2540D
QC Batch Method: SM 2540D — Analysis Description: 2540D Total Suspended Solids
Associated Lab Samples: 60112290001, 60112290002, 60112290003, 60112290004, 60112290005, 60112290006, 60112290007, 60112290008, 60112290009, 60112290010, 60112290011

METHOD BLANK: 929256 — Matrix: Water
Associated Lab Samples: 60112290001, 60112290002, 60112290003, 60112290004, 60112290005, 60112290006, 60112290007, 60112290008, 60112290009, 60112290010, 60112290011

Parameter	Units	Blank Result	Reporting Limit	Analyzed	Qualifiers
Total Suspended Solids	mg/L	ND	5.0	12/20/11 07:44	

SAMPLE DUPLICATE: 929257

Parameter	Units	60112290001 Result	Dup Result	RPD	Max RPD	Qualifiers
Total Suspended Solids	mg/L	ND	ND		25	

SAMPLE DUPLICATE: 929258

Parameter	Units	60112290011 Result	Dup Result	RPD	Max RPD	Qualifiers
Total Suspended Solids	mg/L	ND	ND		25	

This report shall not be reproduced, except in full,
without the written consent of Pace Analytical Services, Inc..

Pace Analytical Services, Inc.
9608 Loiret Blvd.
Lenexa, KS 66219
(913)599-5665

QUALITY CONTROL DATA

Project: RICO WATER SAMPLING DEC 2011
Pace Project No.: 60112290

QC Batch: WET/32662 Analysis Method: SM 2540D
QC Batch Method: SM 2540D Analysis Description: 2540D Total Suspended Solids
Associated Lab Samples: 60112290012, 60112290013, 60112290014, 60112290015, 60112290016

METHOD BLANK: 929265 Matrix: Water
Associated Lab Samples: 60112290012, 60112290013, 60112290014, 60112290015, 60112290016

Parameter	Units	Blank Result	Reporting Limit	Analyzed	Qualifiers
Total Suspended Solids	mg/L	ND	5.0	12/20/11 07:50	

SAMPLE DUPLICATE: 929266

Parameter	Units	60112219001 Result	Dup Result	RPD	Max RPD	Qualifiers
Total Suspended Solids	mg/L	11.0	13.0	17	25	

SAMPLE DUPLICATE: 929267

Parameter	Units	60112240002 Result	Dup Result	RPD	Max RPD	Qualifiers
Total Suspended Solids	mg/L	296	313	5	25	

This report shall not be reproduced, except in full,
without the written consent of Pace Analytical Services, Inc..

Pace Analytical Services, Inc.
9608 Loiret Blvd.
Lenexa, KS 66219
(913)599-5665

QUALITY CONTROL DATA

Project: RICO WATER SAMPLING DEC 2011
Pace Project No.: 60112290

QC Batch: WET/32663 — Analysis Method: SM 2540D
QC Batch Method: SM 2540D — Analysis Description: 2540D Total Suspended Solids
Associated Lab Samples: 60112290017, 60112290018, 60112290019, 60112290020, 60112290021, 60112290022, 60112290023, 60112290024

METHOD BLANK: 929268 — Matrix: Water
Associated Lab Samples: 60112290017, 60112290018, 60112290019, 60112290020, 60112290021, 60112290022, 60112290023, 60112290024

Parameter	Units	Blank Result	Reporting Limit	Analyzed	Qualifiers
Total Suspended Solids	mg/L	ND	5.0	12/20/11 08:01	

SAMPLE DUPLICATE: 929269

Parameter	Units	60112290017 Result	Dup Result	RPD	Max RPD	Qualifiers
Total Suspended Solids	mg/L	100	100	0	25	

SAMPLE DUPLICATE: 929270

Parameter	Units	60112431001 Result	Dup Result	RPD	Max RPD	Qualifiers
Total Suspended Solids	mg/L	42.0	41.0	2	25	

This report shall not be reproduced, except in full,
without the written consent of Pace Analytical Services, Inc..

Pace Analytical Services, Inc.
9608 Loiret Blvd.
Lenexa, KS 66219
(913)599-5665

QUALITY CONTROL DATA

Project: RICO WATER SAMPLING DEC 2011
Pace Project No.: 60112290

QC Batch: WET/32626 Analysis Method: SM 4500-H+B
QC Batch Method: SM 4500-H+B Analysis Description: 4500H+B pH
Associated Lab Samples: 60112290001, 60112290002, 60112290003, 60112290004, 60112290005, 60112290006, 60112290007, 60112290008, 60112290009, 60112290010, 60112290011, 60112290012, 60112290013, 60112290014, 60112290015, 60112290016, 60112290017, 60112290018, 60112290019, 60112290020

SAMPLE DUPLICATE: 928256

Parameter	Units	60112290001 Result	Dup Result	RPD	Max RPD	Qualifiers
pH at 25 Degrees C	Std. Units	8.1	8.1	0	5	H6

This report shall not be reproduced, except in full,
without the written consent of Pace Analytical Services, Inc..

Pace Analytical Services, Inc.
9608 Loiret Blvd.
Lenexa, KS 66219
(913)599-5665

QUALITY CONTROL DATA

Project: RICO WATER SAMPLING DEC 2011
Pace Project No.: 60112290

QC Batch: WET/32627 Analysis Method: SM 4500-H+B
QC Batch Method: SM 4500-H+B Analysis Description: 4500H+B pH
Associated Lab Samples: 60112290021, 60112290022, 60112290023, 60112290024

SAMPLE DUPLICATE: 928329

Parameter	Units	60112290021 Result	Dup Result	RPD	Max RPD	Qualifiers
pH at 25 Degrees C	Std. Units	6.4	6.4	0	5	H6

This report shall not be reproduced, except in full,
without the written consent of Pace Analytical Services, Inc..

Pace Analytical Services, Inc.
9608 Loiret Blvd.
Lenexa, KS 66219
(913)599-5665

QUALITY CONTROL DATA

Project: RICO WATER SAMPLING DEC 2011
Pace Project No.: 60112290

QC Batch: WETA/18802 Analysis Method: EPA 300.0
QC Batch Method: EPA 300.0 Analysis Description: 300.0 IC Anions
Associated Lab Samples: 60112290001, 60112290002, 60112290003, 60112290004, 60112290005, 60112290006, 60112290007, 60112290008, 60112290009, 60112290010, 60112290011, 60112290012, 60112290013, 60112290014, 60112290015, 60112290016, 60112290017, 60112290018, 60112290019, 60112290020

METHOD BLANK: 932683 Matrix: Water
Associated Lab Samples: 60112290001, 60112290002, 60112290003, 60112290004, 60112290005, 60112290006, 60112290007, 60112290008, 60112290011, 60112290012, 60112290013, 60112290014, 60112290015, 60112290016, 60112290017, 60112290018, 60112290019

Parameter	Units	Blank Result	Reporting Limit	Analyzed	Qualifiers
Sulfate	mg/L	ND	1.0	12/28/11 22:32	

METHOD BLANK: 934354 Matrix: Water
Associated Lab Samples: 60112290009, 60112290010, 60112290020

Parameter	Units	Blank Result	Reporting Limit	Analyzed	Qualifiers
Sulfate	mg/L	ND	1.0	12/29/11 13:02	

LABORATORY CONTROL SAMPLE: 932684

Parameter	Units	Spike Conc.	LCS Result	LCS % Rec	% Rec Limits	Qualifiers
Sulfate	mg/L	5	5.1	103	90-110	

LABORATORY CONTROL SAMPLE: 934355

Parameter	Units	Spike Conc.	LCS Result	LCS % Rec	% Rec Limits	Qualifiers
Sulfate	mg/L	5	5.1	102	90-110	

MATRIX SPIKE & MATRIX SPIKE DUPLICATE: 932685 932686

Parameter	Units	60112290001 Result	MS Spike Conc.	MSD Spike Conc.	MS Result	MSD Result	MS % Rec	MSD % Rec	% Rec Limits	RPD	Max RPD	Qual
Sulfate	mg/L	47.0	25	25	70.2	70.8	92	95	61-119	1	10	

MATRIX SPIKE SAMPLE: 932687

Parameter	Units	60112290010 Result	Spike Conc.	MS Result	MS % Rec	% Rec Limits	Qualifiers
Sulfate	mg/L	106	25	133	110	61-119	

This report shall not be reproduced, except in full,
without the written consent of Pace Analytical Services, Inc..

Pace Analytical Services, Inc.
9608 Loiret Blvd.
Lenexa, KS 66219
(913)599-5665

QUALITY CONTROL DATA

Project: RICO WATER SAMPLING DEC 2011
Pace Project No.: 60112290

QC Batch: WETA/18815 Analysis Method: EPA 300.0
QC Batch Method: EPA 300.0 Analysis Description: 300.0 IC Anions
Associated Lab Samples: 60112290021, 60112290022, 60112290023, 60112290024

METHOD BLANK: 932979 Matrix: Water
Associated Lab Samples: 60112290021, 60112290022, 60112290023, 60112290024

Parameter	Units	Blank Result	Reporting Limit	Analyzed	Qualifiers
Sulfate	mg/L	ND	1.0	12/30/11 02:17	

METHOD BLANK: 934572 Matrix: Water
Associated Lab Samples: 60112290021, 60112290022, 60112290023, 60112290024

Parameter	Units	Blank Result	Reporting Limit	Analyzed	Qualifiers
Sulfate	mg/L	ND	1.0	12/30/11 16:53	

LABORATORY CONTROL SAMPLE: 932980

Parameter	Units	Spike Conc.	LCS Result	LCS % Rec	% Rec Limits	Qualifiers
Sulfate	mg/L	5	5.2	103	90-110	

LABORATORY CONTROL SAMPLE: 934573

Parameter	Units	Spike Conc.	LCS Result	LCS % Rec	% Rec Limits	Qualifiers
Sulfate	mg/L	5	4.7	94	90-110	

MATRIX SPIKE & MATRIX SPIKE DUPLICATE: 932981 932982

Parameter	Units	60112290021 Result	MS Spike Conc.	MSD Spike Conc.	MS Result	MSD Result	MS % Rec	MSD % Rec	% Rec Limits	RPD	Max RPD	Qual
Sulfate	mg/L	1410	500	500	1770	1830	72	82	61-119	3	10	

This report shall not be reproduced, except in full,
without the written consent of Pace Analytical Services, Inc..

Pace Analytical Services, Inc.
9608 Loiret Blvd.
Lenexa, KS 66219
(913)599-5665

QUALITY CONTROL DATA

Project: RICO WATER SAMPLING DEC 2011
Pace Project No.: 60112290

QC Batch: WETA/18746 Analysis Method: SM 4500-CN-E
QC Batch Method: SM 4500-CN-E Analysis Description: 4500CNE Cyanide, Total
Associated Lab Samples: 60112290001, 60112290002, 60112290003, 60112290004, 60112290005, 60112290006, 60112290007, 60112290008, 60112290009, 60112290010, 60112290011, 60112290012, 60112290013, 60112290014, 60112290015, 60112290016, 60112290017

METHOD BLANK: 929913 Matrix: Water
Associated Lab Samples: 60112290001, 60112290002, 60112290003, 60112290004, 60112290005, 60112290006, 60112290007, 60112290008, 60112290009, 60112290010, 60112290011, 60112290012, 60112290013, 60112290014, 60112290015, 60112290016, 60112290017

Parameter	Units	Blank Result	Reporting Limit	Analyzed	Qualifiers
Cyanide	mg/L	ND	0.0050	12/21/11 17:06	

LABORATORY CONTROL SAMPLE: 929914

Parameter	Units	Spike Conc.	LCS Result	LCS % Rec	% Rec Limits	Qualifiers
Cyanide	mg/L	.1	0.10	104	69-126	

MATRIX SPIKE SAMPLE: 929915

Parameter	Units	60112290001 Result	Spike Conc.	MS Result	MS % Rec	% Rec Limits	Qualifiers
Cyanide	mg/L	ND	.1	0.10	105	41-136	

SAMPLE DUPLICATE: 929916

Parameter	Units	60112290002 Result	Dup Result	RPD	Max RPD	Qualifiers
Cyanide	mg/L	ND	ND		26	

This report shall not be reproduced, except in full,
without the written consent of Pace Analytical Services, Inc..

Pace Analytical Services, Inc.
9608 Loiret Blvd.
Lenexa, KS 66219
(913)599-5665

QUALITY CONTROL DATA

Project: RICO WATER SAMPLING DEC 2011
Pace Project No.: 60112290

QC Batch: WETA/18747 Analysis Method: SM 4500-CN-E
QC Batch Method: SM 4500-CN-E Analysis Description: 4500CNE Cyanide, Total
Associated Lab Samples: 60112290018, 60112290019, 60112290020, 60112290021, 60112290022, 60112290023, 60112290024

METHOD BLANK: 929917 Matrix: Water
Associated Lab Samples: 60112290018, 60112290019, 60112290020, 60112290021, 60112290022, 60112290023, 60112290024

Parameter	Units	Blank Result	Reporting Limit	Analyzed	Qualifiers
Cyanide	mg/L	ND	0.0050	12/21/11 17:35	

LABORATORY CONTROL SAMPLE: 929918

Parameter	Units	Spike Conc.	LCS Result	LCS % Rec	% Rec Limits	Qualifiers
Cyanide	mg/L	.1	0.11	106	69-126	

MATRIX SPIKE SAMPLE: 929919

Parameter	Units	60112290018 Result	Spike Conc.	MS Result	MS % Rec	% Rec Limits	Qualifiers
Cyanide	mg/L	ND	.1	0.11	113	41-136	

SAMPLE DUPLICATE: 929920

Parameter	Units	60112290019 Result	Dup Result	RPD	Max RPD	Qualifiers
Cyanide	mg/L	0.0065	ND		26	

This report shall not be reproduced, except in full,
without the written consent of Pace Analytical Services, Inc..

Pace Analytical Services, Inc.
9608 Loiret Blvd.
Lenexa, KS 66219
(913)599-5665

QUALIFIERS

Project: RICO WATER SAMPLING DEC 2011
Pace Project No.: 60112290

DEFINITIONS

DF - Dilution Factor, if reported, represents the factor applied to the reported data due to changes in sample preparation, dilution of the sample aliquot, or moisture content.

ND - Not Detected at or above adjusted reporting limit.

J - Estimated concentration above the adjusted method detection limit and below the adjusted reporting limit.

MDL - Adjusted Method Detection Limit.

S - Surrogate

1,2-Diphenylhydrazine (8270 listed analyte) decomposes to Azobenzene.

Consistent with EPA guidelines, unrounded data are displayed and have been used to calculate % recovery and RPD values.

LCS(D) - Laboratory Control Sample (Duplicate)

MS(D) - Matrix Spike (Duplicate)

DUP - Sample Duplicate

RPD - Relative Percent Difference

NC - Not Calculable.

SG - Silica Gel - Clean-Up

U - Indicates the compound was analyzed for, but not detected.

N-Nitrosodiphenylamine decomposes and cannot be separated from Diphenylamine using Method 8270. The result reported for each analyte is a combined concentration.

Pace Analytical is TNI accredited. Contact your Pace PM for the current list of accredited analytes.

LABORATORIES

PASI-K	Pace Analytical Services - Kansas City
PASI-M	Pace Analytical Services - Minneapolis

ANALYTE QUALIFIERS

CH	The continuing calibration for this compound is outside of Pace Analytical acceptance limits. The results may be biased high.
D3	Sample was diluted due to the presence of high levels of non-target analytes or other matrix interference.
D6	The relative percent difference (RPD) between the sample and sample duplicate exceeded laboratory control limits.
E	Analyte concentration exceeded the calibration range. The reported result is estimated.
H6	Analysis initiated more than 15 minutes after sample collection.
M1	Matrix spike recovery exceeded QC limits. Batch accepted based on laboratory control sample (LCS) recovery.
M6	Matrix spike and Matrix spike duplicate recovery not evaluated against control limits due to sample dilution.

This report shall not be reproduced, except in full,
without the written consent of Pace Analytical Services, Inc..

Pace Analytical Services, Inc.
9608 Loiret Blvd.
Lenexa, KS 66219
(913)599-5665

QUALITY CONTROL DATA CROSS REFERENCE TABLE

Project: RICO WATER SAMPLING DEC 2011
Pace Project No.: 60112290

Lab ID	Sample ID	QC Batch Method	QC Batch	Analytical Method	Analytical Batch
60112290001	**DR-1**	EPA 200.8	ICPM/30353	EPA 200.8	ICPM/12095
60112290002	**DR-2**	EPA 200.8	ICPM/30353	EPA 200.8	ICPM/12095
60112290003	**DR-3**	EPA 200.8	ICPM/30353	EPA 200.8	ICPM/12095
60112290004	**DR-4**	EPA 200.8	ICPM/30353	EPA 200.8	ICPM/12095
60112290005	**DR-5**	EPA 200.8	ICPM/30353	EPA 200.8	ICPM/12095
60112290006	**DR-6**	EPA 200.8	ICPM/30353	EPA 200.8	ICPM/12095
60112290007	**DR-7**	EPA 200.8	ICPM/30353	EPA 200.8	ICPM/12095
60112290008	**DR-8**	EPA 200.8	ICPM/30353	EPA 200.8	ICPM/12095
60112290009	**DR-4-SW**	EPA 200.8	ICPM/30353	EPA 200.8	ICPM/12095
60112290010	**DR-G**	EPA 200.8	ICPM/30353	EPA 200.8	ICPM/12095
60112290011	**FB**	EPA 200.8	ICPM/30353	EPA 200.8	ICPM/12095
60112290012	**GW-3**	EPA 200.8	ICPM/30353	EPA 200.8	ICPM/12095
60112290013	**GW-4**	EPA 200.8	ICPM/30353	EPA 200.8	ICPM/12095
60112290014	**GW-5**	EPA 200.8	ICPM/30353	EPA 200.8	ICPM/12095
60112290015	**GW-7**	EPA 200.8	ICPM/30353	EPA 200.8	ICPM/12095
60112290016	**EB-1**	EPA 200.8	ICPM/30353	EPA 200.8	ICPM/12095
60112290017	**EB-2**	EPA 200.8	ICPM/30353	EPA 200.8	ICPM/12095
60112290018	**MW-4 SHALLOW**	EPA 200.8	ICPM/30353	EPA 200.8	ICPM/12095
60112290019	**MW-4 DEEP**	EPA 200.8	ICPM/30353	EPA 200.8	ICPM/12095
60112290020	**MW-5 SHALLOW**	EPA 200.8	ICPM/30353	EPA 200.8	ICPM/12095
60112290021	**MW-5 DEEP**	EPA 200.8	ICPM/30378	EPA 200.8	ICPM/12078
60112290022	**MW-6 SHALLOW**	EPA 200.8	ICPM/30378	EPA 200.8	ICPM/12078
60112290023	**MW-6 DEEP**	EPA 200.8	ICPM/30378	EPA 200.8	ICPM/12078
60112290024	**MW-3 DEEP**	EPA 200.8	ICPM/30378	EPA 200.8	ICPM/12078
60112290001	**DR-1**	EPA 200.8	ICPM/30351	EPA 200.8	ICPM/12094
60112290002	**DR-2**	EPA 200.8	ICPM/30351	EPA 200.8	ICPM/12094
60112290003	**DR-3**	EPA 200.8	ICPM/30351	EPA 200.8	ICPM/12094
60112290004	**DR-4**	EPA 200.8	ICPM/30351	EPA 200.8	ICPM/12094
60112290005	**DR-5**	EPA 200.8	ICPM/30351	EPA 200.8	ICPM/12094
60112290006	**DR-6**	EPA 200.8	ICPM/30351	EPA 200.8	ICPM/12094
60112290007	**DR-7**	EPA 200.8	ICPM/30351	EPA 200.8	ICPM/12094
60112290008	**DR-8**	EPA 200.8	ICPM/30351	EPA 200.8	ICPM/12094
60112290009	**DR-4-SW**	EPA 200.8	ICPM/30351	EPA 200.8	ICPM/12094
60112290010	**DR-G**	EPA 200.8	ICPM/30351	EPA 200.8	ICPM/12094
60112290011	**FB**	EPA 200.8	ICPM/30351	EPA 200.8	ICPM/12094
60112290012	**GW-3**	EPA 200.8	ICPM/30351	EPA 200.8	ICPM/12094
60112290013	**GW-4**	EPA 200.8	ICPM/30351	EPA 200.8	ICPM/12094
60112290014	**GW-5**	EPA 200.8	ICPM/30351	EPA 200.8	ICPM/12094
60112290015	**GW-7**	EPA 200.8	ICPM/30351	EPA 200.8	ICPM/12094
60112290016	**EB-1**	EPA 200.8	ICPM/30351	EPA 200.8	ICPM/12094
60112290017	**EB-2**	EPA 200.8	ICPM/30351	EPA 200.8	ICPM/12094
60112290018	**MW-4 SHALLOW**	EPA 200.8	ICPM/30351	EPA 200.8	ICPM/12094
60112290019	**MW-4 DEEP**	EPA 200.8	ICPM/30351	EPA 200.8	ICPM/12094
60112290020	**MW-5 SHALLOW**	EPA 200.8	ICPM/30351	EPA 200.8	ICPM/12094
60112290021	**MW-5 DEEP**	EPA 200.8	ICPM/30350	EPA 200.8	ICPM/12083
60112290022	**MW-6 SHALLOW**	EPA 200.8	ICPM/30350	EPA 200.8	ICPM/12083
60112290023	**MW-6 DEEP**	EPA 200.8	ICPM/30350	EPA 200.8	ICPM/12083

This report shall not be reproduced, except in full,
without the written consent of Pace Analytical Services, Inc..

Pace Analytical Services, Inc.
9608 Loiret Blvd.
Lenexa, KS 66219
(913)599-5665

QUALITY CONTROL DATA CROSS REFERENCE TABLE

Project: RICO WATER SAMPLING DEC 2011
Pace Project No.: 60112290

Lab ID	Sample ID	QC Batch Method	QC Batch	Analytical Method	Analytical Batch
60112290024	**MW-3 DEEP**	EPA 200.8	ICPM/30350	EPA 200.8	ICPM/12083
60112290001	**DR-1**	EPA 245.1	MERC/6313	EPA 245.1	MERC/7120
60112290002	**DR-2**	EPA 245.1	MERC/6313	EPA 245.1	MERC/7120
60112290003	**DR-3**	EPA 245.1	MERC/6313	EPA 245.1	MERC/7120
60112290004	**DR-4**	EPA 245.1	MERC/6313	EPA 245.1	MERC/7120
60112290005	**DR-5**	EPA 245.1	MERC/6313	EPA 245.1	MERC/7120
60112290006	**DR-6**	EPA 245.1	MERC/6313	EPA 245.1	MERC/7120
60112290007	**DR-7**	EPA 245.1	MERC/6313	EPA 245.1	MERC/7120
60112290008	**DR-8**	EPA 245.1	MERC/6313	EPA 245.1	MERC/7120
60112290009	**DR-4-SW**	EPA 245.1	MERC/6313	EPA 245.1	MERC/7120
60112290010	**DR-G**	EPA 245.1	MERC/6313	EPA 245.1	MERC/7120
60112290011	**FB**	EPA 245.1	MERC/6313	EPA 245.1	MERC/7120
60112290012	**GW-3**	EPA 245.1	MERC/6313	EPA 245.1	MERC/7120
60112290013	**GW-4**	EPA 245.1	MERC/6313	EPA 245.1	MERC/7120
60112290014	**GW-5**	EPA 245.1	MERC/6313	EPA 245.1	MERC/7120
60112290015	**GW-7**	EPA 245.1	MERC/6313	EPA 245.1	MERC/7120
60112290016	**EB-1**	EPA 245.1	MERC/6313	EPA 245.1	MERC/7120
60112290017	**EB-2**	EPA 245.1	MERC/6313	EPA 245.1	MERC/7120
60112290018	**MW-4 SHALLOW**	EPA 245.1	MERC/6313	EPA 245.1	MERC/7120
60112290019	**MW-4 DEEP**	EPA 245.1	MERC/6317	EPA 245.1	MERC/7121
60112290020	**MW-5 SHALLOW**	EPA 245.1	MERC/6317	EPA 245.1	MERC/7121
60112290021	**MW-5 DEEP**	EPA 245.1	MERC/6317	EPA 245.1	MERC/7121
60112290022	**MW-6 SHALLOW**	EPA 245.1	MERC/6317	EPA 245.1	MERC/7121
60112290023	**MW-6 DEEP**	EPA 245.1	MERC/6317	EPA 245.1	MERC/7121
60112290024	**MW-3 DEEP**	EPA 245.1	MERC/6317	EPA 245.1	MERC/7121
60112290001	**DR-1**	EPA 245.1	MERC/6314	EPA 245.1	MERC/7116
60112290002	**DR-2**	EPA 245.1	MERC/6314	EPA 245.1	MERC/7116
60112290003	**DR-3**	EPA 245.1	MERC/6314	EPA 245.1	MERC/7116
60112290004	**DR-4**	EPA 245.1	MERC/6314	EPA 245.1	MERC/7116
60112290005	**DR-5**	EPA 245.1	MERC/6314	EPA 245.1	MERC/7116
60112290006	**DR-6**	EPA 245.1	MERC/6314	EPA 245.1	MERC/7116
60112290007	**DR-7**	EPA 245.1	MERC/6314	EPA 245.1	MERC/7116
60112290008	**DR-8**	EPA 245.1	MERC/6314	EPA 245.1	MERC/7116
60112290009	**DR-4-SW**	EPA 245.1	MERC/6314	EPA 245.1	MERC/7116
60112290010	**DR-G**	EPA 245.1	MERC/6314	EPA 245.1	MERC/7116
60112290011	**FB**	EPA 245.1	MERC/6314	EPA 245.1	MERC/7116
60112290012	**GW-3**	EPA 245.1	MERC/6314	EPA 245.1	MERC/7116
60112290013	**GW-4**	EPA 245.1	MERC/6314	EPA 245.1	MERC/7116
60112290014	**GW-5**	EPA 245.1	MERC/6314	EPA 245.1	MERC/7116
60112290015	**GW-7**	EPA 245.1	MERC/6314	EPA 245.1	MERC/7116
60112290016	**EB-1**	EPA 245.1	MERC/6314	EPA 245.1	MERC/7116
60112290017	**EB-2**	EPA 245.1	MERC/6314	EPA 245.1	MERC/7116
60112290018	**MW-4 SHALLOW**	EPA 245.1	MERC/6314	EPA 245.1	MERC/7116
60112290019	**MW-4 DEEP**	EPA 245.1	MERC/6316	EPA 245.1	MERC/7119
60112290020	**MW-5 SHALLOW**	EPA 245.1	MERC/6316	EPA 245.1	MERC/7119
60112290021	**MW-5 DEEP**	EPA 245.1	MERC/6316	EPA 245.1	MERC/7119
60112290022	**MW-6 SHALLOW**	EPA 245.1	MERC/6316	EPA 245.1	MERC/7119

This report shall not be reproduced, except in full,
without the written consent of Pace Analytical Services, Inc..

Pace Analytical Services, Inc.
9608 Loiret Blvd.
Lenexa, KS 66219
(913)599-5665

QUALITY CONTROL DATA CROSS REFERENCE TABLE

Project: RICO WATER SAMPLING DEC 2011
Pace Project No.: 60112290

Lab ID	Sample ID	QC Batch Method	QC Batch	Analytical Method	Analytical Batch
60112290023	**MW-6 DEEP**	EPA 245.1	MERC/6316	EPA 245.1	MERC/7119
60112290024	**MW-3 DEEP**	EPA 245.1	MERC/6316	EPA 245.1	MERC/7119
60112290001	**DR-1**	SM 2510B	MT/7923		
60112290002	**DR-2**	SM 2510B	MT/7923		
60112290003	**DR-3**	SM 2510B	MT/7923		
60112290004	**DR-4**	SM 2510B	MT/7923		
60112290005	**DR-5**	SM 2510B	MT/7923		
60112290006	**DR-6**	SM 2510B	MT/7923		
60112290007	**DR-7**	SM 2510B	MT/7923		
60112290008	**DR-8**	SM 2510B	MT/7923		
60112290009	**DR-4-SW**	SM 2510B	MT/7923		
60112290010	**DR-G**	SM 2510B	MT/7923		
60112290011	**FB**	SM 2510B	MT/7923		
60112290012	**GW-3**	SM 2510B	MT/7923		
60112290013	**GW-4**	SM 2510B	MT/7923		
60112290014	**GW-5**	SM 2510B	MT/7923		
60112290015	**GW-7**	SM 2510B	MT/7923		
60112290016	**EB-1**	SM 2510B	MT/7923		
60112290017	**EB-2**	SM 2510B	MT/7923		
60112290018	**MW-4 SHALLOW**	SM 2510B	MT/7923		
60112290019	**MW-4 DEEP**	SM 2510B	MT/7923		
60112290020	**MW-5 SHALLOW**	SM 2510B	MT/7923		
60112290021	**MW-5 DEEP**	SM 2510B	MT/7931		
60112290022	**MW-6 SHALLOW**	SM 2510B	MT/7931		
60112290023	**MW-6 DEEP**	SM 2510B	MT/7931		
60112290024	**MW-3 DEEP**	SM 2510B	MT/7931		
60112290001	**DR-1**	Calculated	MT/7944		
60112290002	**DR-2**	Calculated	MT/7944		
60112290003	**DR-3**	Calculated	MT/7944		
60112290004	**DR-4**	Calculated	MT/7944		
60112290005	**DR-5**	Calculated	MT/7944		
60112290006	**DR-6**	Calculated	MT/7944		
60112290007	**DR-7**	Calculated	MT/7944		
60112290008	**DR-8**	Calculated	MT/7944		
60112290009	**DR-4-SW**	Calculated	MT/7944		
60112290010	**DR-G**	Calculated	MT/7944		
60112290011	**FB**	Calculated	MT/7944		
60112290012	**GW-3**	Calculated	MT/7944		
60112290013	**GW-4**	Calculated	MT/7944		
60112290014	**GW-5**	Calculated	MT/7944		
60112290015	**GW-7**	Calculated	MT/7944		
60112290016	**EB-1**	Calculated	MT/7944		
60112290017	**EB-2**	Calculated	MT/7944		
60112290018	**MW-4 SHALLOW**	Calculated	MT/7944		
60112290019	**MW-4 DEEP**	Calculated	MT/7944		
60112290020	**MW-5 SHALLOW**	Calculated	MT/7944		
60112290021	**MW-5 DEEP**	Calculated	MT/7945		

This report shall not be reproduced, except in full,
without the written consent of Pace Analytical Services, Inc..

Pace Analytical Services, Inc.
9608 Loiret Blvd.
Lenexa, KS 66219
(913)599-5665

QUALITY CONTROL DATA CROSS REFERENCE TABLE

Project: RICO WATER SAMPLING DEC 2011
Pace Project No.: 60112290

Lab ID	Sample ID	QC Batch Method	QC Batch	Analytical Method	Analytical Batch
60112290022	**MW-6 SHALLOW**	Calculated	MT/7945		
60112290023	**MW-6 DEEP**	Calculated	MT/7945		
60112290024	**MW-3 DEEP**	Calculated	MT/7945		
60112290001	**DR-1**	SM 2320B	WET/32766		
60112290002	**DR-2**	SM 2320B	WET/32766		
60112290003	**DR-3**	SM 2320B	WET/32766		
60112290004	**DR-4**	SM 2320B	WET/32766		
60112290005	**DR-5**	SM 2320B	WET/32766		
60112290006	**DR-6**	SM 2320B	WET/32766		
60112290007	**DR-7**	SM 2320B	WET/32766		
60112290008	**DR-8**	SM 2320B	WET/32766		
60112290009	**DR-4-SW**	SM 2320B	WET/32766		
60112290010	**DR-G**	SM 2320B	WET/32766		
60112290011	**FB**	SM 2320B	WET/32766		
60112290012	**GW-3**	SM 2320B	WET/32766		
60112290013	**GW-4**	SM 2320B	WET/32766		
60112290014	**GW-5**	SM 2320B	WET/32790		
60112290015	**GW-7**	SM 2320B	WET/32790		
60112290016	**EB-1**	SM 2320B	WET/32790		
60112290017	**EB-2**	SM 2320B	WET/32790		
60112290018	**MW-4 SHALLOW**	SM 2320B	WET/32790		
60112290019	**MW-4 DEEP**	SM 2320B	WET/32790		
60112290020	**MW-5 SHALLOW**	SM 2320B	WET/32790		
60112290021	**MW-5 DEEP**	SM 2320B	WET/32790		
60112290022	**MW-6 SHALLOW**	SM 2320B	WET/32790		
60112290023	**MW-6 DEEP**	SM 2320B	WET/32790		
60112290024	**MW-3 DEEP**	SM 2320B	WET/32790		
60112290001	**DR-1**	SM 2540C	WET/32651		
60112290002	**DR-2**	SM 2540C	WET/32651		
60112290003	**DR-3**	SM 2540C	WET/32651		
60112290004	**DR-4**	SM 2540C	WET/32651		
60112290005	**DR-5**	SM 2540C	WET/32651		
60112290006	**DR-6**	SM 2540C	WET/32651		
60112290007	**DR-7**	SM 2540C	WET/32651		
60112290008	**DR-8**	SM 2540C	WET/32651		
60112290009	**DR-4-SW**	SM 2540C	WET/32651		
60112290010	**DR-G**	SM 2540C	WET/32651		
60112290011	**FB**	SM 2540C	WET/32651		
60112290012	**GW-3**	SM 2540C	WET/32666		
60112290013	**GW-4**	SM 2540C	WET/32666		
60112290014	**GW-5**	SM 2540C	WET/32666		
60112290015	**GW-7**	SM 2540C	WET/32666		
60112290016	**EB-1**	SM 2540C	WET/32666		
60112290017	**EB-2**	SM 2540C	WET/32666		
60112290018	**MW-4 SHALLOW**	SM 2540C	WET/32666		
60112290019	**MW-4 DEEP**	SM 2540C	WET/32666		
60112290020	**MW-5 SHALLOW**	SM 2540C	WET/32666		

This report shall not be reproduced, except in full,
without the written consent of Pace Analytical Services, Inc..

Pace Analytical Services, Inc.
9608 Loiret Blvd.
Lenexa, KS 66219
(913)599-5665

QUALITY CONTROL DATA CROSS REFERENCE TABLE

Project: RICO WATER SAMPLING DEC 2011
Pace Project No.: 60112290

Lab ID	Sample ID	QC Batch Method	QC Batch	Analytical Method	Analytical Batch
60112290021	**MW-5 DEEP**	SM 2540C	WET/32666		
60112290022	**MW-6 SHALLOW**	SM 2540C	WET/32666		
60112290023	**MW-6 DEEP**	SM 2540C	WET/32666		
60112290024	**MW-3 DEEP**	SM 2540C	WET/32666		
60112290001	**DR-1**	SM 2540D	WET/32661		
60112290002	**DR-2**	SM 2540D	WET/32661		
60112290003	**DR-3**	SM 2540D	WET/32661		
60112290004	**DR-4**	SM 2540D	WET/32661		
60112290005	**DR-5**	SM 2540D	WET/32661		
60112290006	**DR-6**	SM 2540D	WET/32661		
60112290007	**DR-7**	SM 2540D	WET/32661		
60112290008	**DR-8**	SM 2540D	WET/32661		
60112290009	**DR-4-SW**	SM 2540D	WET/32661		
60112290010	**DR-G**	SM 2540D	WET/32661		
60112290011	**FB**	SM 2540D	WET/32661		
60112290012	**GW-3**	SM 2540D	WET/32662		
60112290013	**GW-4**	SM 2540D	WET/32662		
60112290014	**GW-5**	SM 2540D	WET/32662		
60112290015	**GW-7**	SM 2540D	WET/32662		
60112290016	**EB-1**	SM 2540D	WET/32662		
60112290017	**EB-2**	SM 2540D	WET/32663		
60112290018	**MW-4 SHALLOW**	SM 2540D	WET/32663		
60112290019	**MW-4 DEEP**	SM 2540D	WET/32663		
60112290020	**MW-5 SHALLOW**	SM 2540D	WET/32663		
60112290021	**MW-5 DEEP**	SM 2540D	WET/32663		
60112290022	**MW-6 SHALLOW**	SM 2540D	WET/32663		
60112290023	**MW-6 DEEP**	SM 2540D	WET/32663		
60112290024	**MW-3 DEEP**	SM 2540D	WET/32663		
60112290001	**DR-1**	SM 4500-H+B	WET/32626		
60112290002	**DR-2**	SM 4500-H+B	WET/32626		
60112290003	**DR-3**	SM 4500-H+B	WET/32626		
60112290004	**DR-4**	SM 4500-H+B	WET/32626		
60112290005	**DR-5**	SM 4500-H+B	WET/32626		
60112290006	**DR-6**	SM 4500-H+B	WET/32626		
60112290007	**DR-7**	SM 4500-H+B	WET/32626		
60112290008	**DR-8**	SM 4500-H+B	WET/32626		
60112290009	**DR-4-SW**	SM 4500-H+B	WET/32626		
60112290010	**DR-G**	SM 4500-H+B	WET/32626		
60112290011	**FB**	SM 4500-H+B	WET/32626		
60112290012	**GW-3**	SM 4500-H+B	WET/32626		
60112290013	**GW-4**	SM 4500-H+B	WET/32626		
60112290014	**GW-5**	SM 4500-H+B	WET/32626		
60112290015	**GW-7**	SM 4500-H+B	WET/32626		
60112290016	**EB-1**	SM 4500-H+B	WET/32626		
60112290017	**EB-2**	SM 4500-H+B	WET/32626		
60112290018	**MW-4 SHALLOW**	SM 4500-H+B	WET/32626		
60112290019	**MW-4 DEEP**	SM 4500-H+B	WET/32626		

This report shall not be reproduced, except in full,
without the written consent of Pace Analytical Services, Inc..

Pace Analytical Services, Inc.
9608 Loiret Blvd.
Lenexa, KS 66219
(913)599-5665

QUALITY CONTROL DATA CROSS REFERENCE TABLE

Project: RICO WATER SAMPLING DEC 2011
Pace Project No.: 60112290

Lab ID	Sample ID	QC Batch Method	QC Batch	Analytical Method	Analytical Batch
60112290020	**MW-5 SHALLOW**	SM 4500-H+B	WET/32626		
60112290021	**MW-5 DEEP**	SM 4500-H+B	WET/32627		
60112290022	**MW-6 SHALLOW**	SM 4500-H+B	WET/32627		
60112290023	**MW-6 DEEP**	SM 4500-H+B	WET/32627		
60112290024	**MW-3 DEEP**	SM 4500-H+B	WET/32627		
60112290001	**DR-1**	EPA 300.0	WETA/18802		
60112290002	**DR-2**	EPA 300.0	WETA/18802		
60112290003	**DR-3**	EPA 300.0	WETA/18802		
60112290004	**DR-4**	EPA 300.0	WETA/18802		
60112290005	**DR-5**	EPA 300.0	WETA/18802		
60112290006	**DR-6**	EPA 300.0	WETA/18802		
60112290007	**DR-7**	EPA 300.0	WETA/18802		
60112290008	**DR-8**	EPA 300.0	WETA/18802		
60112290009	**DR-4-SW**	EPA 300.0	WETA/18802		
60112290010	**DR-G**	EPA 300.0	WETA/18802		
60112290011	**FB**	EPA 300.0	WETA/18802		
60112290012	**GW-3**	EPA 300.0	WETA/18802		
60112290013	**GW-4**	EPA 300.0	WETA/18802		
60112290014	**GW-5**	EPA 300.0	WETA/18802		
60112290015	**GW-7**	EPA 300.0	WETA/18802		
60112290016	**EB-1**	EPA 300.0	WETA/18802		
60112290017	**EB-2**	EPA 300.0	WETA/18802		
60112290018	**MW-4 SHALLOW**	EPA 300.0	WETA/18802		
60112290019	**MW-4 DEEP**	EPA 300.0	WETA/18802		
60112290020	**MW-5 SHALLOW**	EPA 300.0	WETA/18802		
60112290021	**MW-5 DEEP**	EPA 300.0	WETA/18815		
60112290022	**MW-6 SHALLOW**	EPA 300.0	WETA/18815		
60112290023	**MW-6 DEEP**	EPA 300.0	WETA/18815		
60112290024	**MW-3 DEEP**	EPA 300.0	WETA/18815		
60112290001	**DR-1**	SM 4500-CN-E	WETA/18746		
60112290002	**DR-2**	SM 4500-CN-E	WETA/18746		
60112290003	**DR-3**	SM 4500-CN-E	WETA/18746		
60112290004	**DR-4**	SM 4500-CN-E	WETA/18746		
60112290005	**DR-5**	SM 4500-CN-E	WETA/18746		
60112290006	**DR-6**	SM 4500-CN-E	WETA/18746		
60112290007	**DR-7**	SM 4500-CN-E	WETA/18746		
60112290008	**DR-8**	SM 4500-CN-E	WETA/18746		
60112290009	**DR-4-SW**	SM 4500-CN-E	WETA/18746		
60112290010	**DR-G**	SM 4500-CN-E	WETA/18746		
60112290011	**FB**	SM 4500-CN-E	WETA/18746		
60112290012	**GW-3**	SM 4500-CN-E	WETA/18746		
60112290013	**GW-4**	SM 4500-CN-E	WETA/18746		
60112290014	**GW-5**	SM 4500-CN-E	WETA/18746		
60112290015	**GW-7**	SM 4500-CN-E	WETA/18746		
60112290016	**EB-1**	SM 4500-CN-E	WETA/18746		
60112290017	**EB-2**	SM 4500-CN-E	WETA/18746		

This report shall not be reproduced, except in full,
without the written consent of Pace Analytical Services, Inc..

Pace Analytical Services, Inc.
9608 Loiret Blvd.
Lenexa, KS 66219
(913)599-5665

QUALITY CONTROL DATA CROSS REFERENCE TABLE

Project: RICO WATER SAMPLING DEC 2011
Pace Project No.: 60112290

Lab ID	Sample ID	QC Batch Method	QC Batch	Analytical Method	Analytical Batch
60112290018	**MW-4 SHALLOW**	SM 4500-CN-E	WETA/18747		
60112290019	**MW-4 DEEP**	SM 4500-CN-E	WETA/18747		
60112290020	**MW-5 SHALLOW**	SM 4500-CN-E	WETA/18747		
60112290021	**MW-5 DEEP**	SM 4500-CN-E	WETA/18747		
60112290022	**MW-6 SHALLOW**	SM 4500-CN-E	WETA/18747		
60112290023	**MW-6 DEEP**	SM 4500-CN-E	WETA/18747		
60112290024	**MW-3 DEEP**	SM 4500-CN-E	WETA/18747		

This report shall not be reproduced, except in full,
without the written consent of Pace Analytical Services, Inc..

Pace Analytical Services, Inc.
9608 Loiret Blvd.
Lenexa, KS 66219
(913)599-5665

QUALITY CONTROL DATA

Project: Rico
Pace Project No.: 60112423

QC Batch: ICPM/30352 Analysis Method: EPA 200.8
QC Batch Method: EPA 200.8 Analysis Description: 200.8 MET
Associated Lab Samples: 60112423001, 60112423002, 60112423003

METHOD BLANK: 1118730 Matrix: Water
Associated Lab Samples: 60112423001, 60112423002, 60112423003

Parameter	Units	Blank Result	Reporting Limit	Analyzed	Qualifiers
Aluminum	ug/L	ND	4.0	12/27/11 23:59	
Antimony	ug/L	ND	0.50	12/27/11 23:59	
Arsenic	ug/L	ND	0.50	12/27/11 23:59	
Barium	ug/L	ND	0.30	12/27/11 23:59	
Beryllium	ug/L	ND	0.20	12/27/11 23:59	
Cadmium	ug/L	ND	0.080	12/27/11 23:59	
Calcium	ug/L	ND	20.0	12/27/11 23:59	
Chromium	ug/L	ND	0.50	12/27/11 23:59	
Copper	ug/L	ND	0.50	12/27/11 23:59	
Iron	ug/L	ND	50.0	12/27/11 23:59	
Lead	ug/L	ND	0.10	12/27/11 23:59	
Magnesium	ug/L	ND	5.0	12/27/11 23:59	
Manganese	ug/L	ND	0.50	12/27/11 23:59	
Nickel	ug/L	ND	0.50	12/27/11 23:59	
Potassium	ug/L	ND	20.0	12/27/11 23:59	
Selenium	ug/L	ND	0.50	12/27/11 23:59	
Silver	ug/L	ND	0.50	12/27/11 23:59	
Sodium	ug/L	ND	50.0	12/27/11 23:59	
Thallium	ug/L	ND	0.10	12/27/11 23:59	
Total Hardness by 2340B	ug/L	ND	71.0	12/27/11 23:59	
Vanadium	ug/L	ND	0.10	12/27/11 23:59	
Zinc	ug/L	ND	5.0	12/27/11 23:59	

LABORATORY CONTROL SAMPLE: 1118731

Parameter	Units	Spike Conc.	LCS Result	LCS % Rec	% Rec Limits	Qualifiers
Aluminum	ug/L	80	76.9	96	85-115	
Antimony	ug/L	80	79.5	99	85-115	
Arsenic	ug/L	80	78.4	98	85-115	
Barium	ug/L	80	77.6	97	85-115	
Beryllium	ug/L	80	82.3	103	85-115	
Cadmium	ug/L	80	79.7	100	85-115	
Calcium	ug/L	1000	1020	102	85-115	
Chromium	ug/L	80	80.6	101	85-115	
Copper	ug/L	80	78.2	98	85-115	
Iron	ug/L	1000	988	99	85-115	
Lead	ug/L	80	77.8	97	85-115	
Magnesium	ug/L	1000	1030	103	85-115	
Manganese	ug/L	80	80.9	101	85-115	
Nickel	ug/L	80	81.4	102	85-115	
Potassium	ug/L	1000	980	98	85-115	

This report shall not be reproduced, except in full,
without the written consent of Pace Analytical Services, Inc..

Pace Analytical Services, Inc.
9608 Loiret Blvd.
Lenexa, KS 66219
(913)599-5665

QUALITY CONTROL DATA

Project: Rico
Pace Project No.: 60112423

LABORATORY CONTROL SAMPLE: 1118731

Parameter	Units	Spike Conc.	LCS Result	LCS % Rec	% Rec Limits	Qualifiers
Selenium	ug/L	80	79.1	99	85-115	
Silver	ug/L	80	82.4	103	85-115	
Sodium	ug/L	1000	972	97	85-115	
Thallium	ug/L	80	76.4	96	85-115	
Total Hardness by 2340B	ug/L		6780			
Vanadium	ug/L	80	79.0	99	85-115	
Zinc	ug/L	80	79.4	99	85-115	

MATRIX SPIKE & MATRIX SPIKE DUPLICATE: 1118732 1118733

Parameter	Units	10178822001 Result	MS Spike Conc.	MSD Spike Conc.	MS Result	MSD Result	MS % Rec	MSD % Rec	% Rec Limits	RPD	Max RPD	Qual
Aluminum	ug/L	<4.0	80	80	87.9	85.9	106	103	70-130	2	20	
Antimony	ug/L	<0.50	80	80	83.4	81.6	104	102	70-130	2	20	
Arsenic	ug/L	<0.50	80	80	81.6	80.0	102	100	70-130	2	20	
Barium	ug/L	27.5	80	80	110	106	103	98	70-130	3	20	
Beryllium	ug/L	<0.20	80	80	88.2	88.4	110	110	70-130	.2	20	
Cadmium	ug/L	<0.080	80	80	83.4	81.2	104	101	70-130	3	20	
Calcium	ug/L	48600	1000	1000	50000	49500	136	92	70-130	.9	20	M1
Chromium	ug/L	<0.50	80	80	84.2	83.2	105	104	70-130	1	20	
Copper	ug/L	10.1	80	80	89.7	88.8	100	98	70-130	1	20	
Iron	ug/L	1650	1000	1000	2740	2660	109	102	70-130	3	20	
Lead	ug/L	0.72	80	80	81.2	80.0	101	99	70-130	2	20	
Magnesium	ug/L	20700	1000	1000	22400	22000	172	128	70-130	2	20	M1
Manganese	ug/L	134	80	80	218	212	106	98	70-130	3	20	
Nickel	ug/L	<0.50	80	80	83.4	82.2	104	102	70-130	2	20	
Potassium	ug/L	2020	1000	1000	3110	3050	109	104	70-130	2	20	
Selenium	ug/L	<0.50	80	80	81.2	81.9	101	102	70-130	.8	20	
Silver	ug/L	<0.50	80	80	79.8	82.2	99	102	70-130	3	20	
Sodium	ug/L	6670	1000	1000	7840	7630	118	96	70-130	3	20	
Thallium	ug/L	<0.10	80	80	79.9	78.4	100	98	70-130	2	20	
Total Hardness by 2340B	ug/L	207000			217000	214000				1	20	
Vanadium	ug/L	<0.10	80	80	83.2	83.0	104	104	70-130	.4	20	
Zinc	ug/L	7.1	80	80	88.2	87.1	101	100	70-130	1	20	

MATRIX SPIKE SAMPLE: 1118734

Parameter	Units	10178903002 Result	Spike Conc.	MS Result	MS % Rec	% Rec Limits	Qualifiers
Aluminum	ug/L	0.0072 mg/L	80	89.7	103	70-130	
Antimony	ug/L	0.38J	80	76.3	95	70-130	
Arsenic	ug/L	0.0022 mg/L	80	76.8	93	70-130	
Barium	ug/L	14.0	80	88.0	92	70-130	
Beryllium	ug/L	0.058J	80	82.1	103	70-130	
Cadmium	ug/L	0.00016 mg/L	80	77.0	96	70-130	
Calcium	ug/L	157 mg/L	1000	150000	-666	70-130	M6

This report shall not be reproduced, except in full,
without the written consent of Pace Analytical Services, Inc..

Pace Analytical Services, Inc.
9608 Loiret Blvd.
Lenexa, KS 66219
(913)599-5665

QUALITY CONTROL DATA

Project: Rico
Pace Project No.: 60112423

MATRIX SPIKE SAMPLE: 1118734

Parameter	Units	10178903002 Result	Spike Conc.	MS Result	MS % Rec	% Rec Limits	Qualifiers
Chromium	ug/L	0.58	80	78.0	97	70-130	
Copper	ug/L	0.0056 mg/L	80	82.0	95	70-130	
Iron	ug/L	0.019J mg/L	1000	971	95	70-130	
Lead	ug/L	0.00010 mg/L	80	75.6	94	70-130	
Magnesium	ug/L	34.8 mg/L	1000	34000	-79	70-130	M6
Manganese	ug/L	252	80	309	71	70-130	
Nickel	ug/L	0.97	80	80.0	99	70-130	
Potassium	ug/L	8330	1000	8720	39	70-130	M6
Selenium	ug/L	0.24J	80	76.9	96	70-130	
Silver	ug/L	ND	80	38.5	48	70-130	M6
Sodium	ug/L	69300	1000	58600	-1070	70-130	M6
Thallium	ug/L	ND	80	75.4	94	70-130	
Total Hardness by 2340B	ug/L	534 mg/L		514000			
Vanadium	ug/L	1.1	80	77.4	95	70-130	
Zinc	ug/L	0.053 mg/L	80	125	90	70-130	

This report shall not be reproduced, except in full,
without the written consent of Pace Analytical Services, Inc..

Pace Analytical Services, Inc.
9608 Loiret Blvd.
Lenexa, KS 66219
(913)599-5665

QUALITY CONTROL DATA

Project: Rico
Pace Project No.: 60112423

QC Batch: ICPM/30350 Analysis Method: EPA 200.8
QC Batch Method: EPA 200.8 Analysis Description: 200.8 MET Dissolved
Associated Lab Samples: 60112423001, 60112423002, 60112423003

METHOD BLANK: 1118720 Matrix: Water
Associated Lab Samples: 60112423001, 60112423002, 60112423003

Parameter	Units	Blank Result	Reporting Limit	Analyzed	Qualifiers
Aluminum, Dissolved	ug/L	ND	4.0	12/30/11 00:13	
Antimony, Dissolved	ug/L	ND	0.50	12/30/11 00:13	
Arsenic, Dissolved	ug/L	ND	0.50	12/30/11 00:13	
Barium, Dissolved	ug/L	ND	0.30	12/30/11 00:13	
Cadmium, Dissolved	ug/L	ND	0.080	12/30/11 00:13	
Calcium, Dissolved	ug/L	ND	20.0	12/30/11 00:13	
Chromium, Dissolved	ug/L	ND	0.50	12/30/11 00:13	
Copper, Dissolved	ug/L	ND	0.50	12/30/11 00:13	
Iron, Dissolved	ug/L	ND	50.0	12/30/11 00:13	
Lead, Dissolved	ug/L	ND	0.10	12/30/11 00:13	
Magnesium, Dissolved	ug/L	ND	5.0	12/30/11 00:13	
Manganese, Dissolved	ug/L	ND	0.50	12/30/11 00:13	
Nickel, Dissolved	ug/L	ND	0.50	12/30/11 00:13	
Potassium, Dissolved	ug/L	ND	20.0	12/30/11 00:13	
Selenium, Dissolved	ug/L	ND	0.50	12/30/11 00:13	
Silver, Dissolved	ug/L	ND	0.50	12/30/11 00:13	CH
Sodium, Dissolved	ug/L	ND	50.0	12/30/11 00:13	
Thallium, Dissolved	ug/L	ND	0.10	12/30/11 00:13	
Vanadium, Dissolved	ug/L	ND	0.10	12/30/11 00:13	
Zinc, Dissolved	ug/L	ND	5.0	12/30/11 00:13	

LABORATORY CONTROL SAMPLE: 1118721

Parameter	Units	Spike Conc.	LCS Result	LCS % Rec	% Rec Limits	Qualifiers
Aluminum, Dissolved	ug/L	80	78.1	98	85-115	
Antimony, Dissolved	ug/L	80	77.7	97	85-115	
Arsenic, Dissolved	ug/L	80	77.8	97	85-115	
Barium, Dissolved	ug/L	80	79.4	99	85-115	
Cadmium, Dissolved	ug/L	80	79.1	99	85-115	
Calcium, Dissolved	ug/L	1000	960	96	85-115	
Chromium, Dissolved	ug/L	80	77.1	96	85-115	
Copper, Dissolved	ug/L	80	79.3	99	85-115	
Iron, Dissolved	ug/L	1000	967	97	85-115	
Lead, Dissolved	ug/L	80	77.6	97	85-115	
Magnesium, Dissolved	ug/L	1000	977	98	85-115	
Manganese, Dissolved	ug/L	80	77.2	96	85-115	
Nickel, Dissolved	ug/L	80	77.7	97	85-115	
Potassium, Dissolved	ug/L	1000	970	97	85-115	
Selenium, Dissolved	ug/L	80	78.6	98	85-115	
Silver, Dissolved	ug/L	80	88.4	111	85-115	CH
Sodium, Dissolved	ug/L	1000	946	95	85-115	

This report shall not be reproduced, except in full,
without the written consent of Pace Analytical Services, Inc..

Pace Analytical Services, Inc.
9608 Loiret Blvd.
Lenexa, KS 66219
(913)599-5665

QUALITY CONTROL DATA

Project: Rico
Pace Project No.: 60112423

LABORATORY CONTROL SAMPLE: 1118721

Parameter	Units	Spike Conc.	LCS Result	LCS % Rec	% Rec Limits	Qualifiers
Thallium, Dissolved	ug/L	80	80.3	100	85-115	
Vanadium, Dissolved	ug/L	80	77.1	96	85-115	
Zinc, Dissolved	ug/L	80	78.3	98	85-115	

MATRIX SPIKE SAMPLE: 1118724

Parameter	Units	60112290021 Result	Spike Conc.	MS Result	MS % Rec	% Rec Limits	Qualifiers
Aluminum, Dissolved	ug/L	1280	80	1530	318	70-130	M6
Antimony, Dissolved	ug/L	ND	80	92.5	116	70-130	
Arsenic, Dissolved	ug/L	170	80	266	120	70-130	
Barium, Dissolved	ug/L	23.2	80	112	112	70-130	
Cadmium, Dissolved	ug/L	ND	80	87.8	110	70-130	
Calcium, Dissolved	ug/L	393000	1000	406000	1290	70-130	E,M6
Chromium, Dissolved	ug/L	0.50	80	84.7	105	70-130	
Copper, Dissolved	ug/L	ND	80	81.6	102	70-130	
Iron, Dissolved	ug/L	138000	1000	151000	1320	70-130	M6
Lead, Dissolved	ug/L	0.13	80	79.1	99	70-130	
Magnesium, Dissolved	ug/L	73000	1000	78300	526	70-130	M6
Manganese, Dissolved	ug/L	15600	80	17000	1780	70-130	E,M6
Nickel, Dissolved	ug/L	19.9	80	101	102	70-130	
Potassium, Dissolved	ug/L	9360	1000	11500	214	70-130	M6
Selenium, Dissolved	ug/L	ND	80	83.1	103	70-130	
Silver, Dissolved	ug/L	ND	80	90.5	113	70-130	CH
Sodium, Dissolved	ug/L	8990	1000	10900	195	70-130	M6
Thallium, Dissolved	ug/L	ND	80	79.8	100	70-130	
Vanadium, Dissolved	ug/L	ND	80	85.8	107	70-130	
Zinc, Dissolved	ug/L	19200	80	19600	575	70-130	E,M6

MATRIX SPIKE & MATRIX SPIKE DUPLICATE: 1118916 1118917

Parameter	Units	10178696001 Result	MS Spike Conc.	MSD Spike Conc.	MS Result	MSD Result	MS % Rec	MSD % Rec	% Rec Limits	RPD	Max RPD	Qual
Aluminum, Dissolved	ug/L	6.8	80	80	95.4	88.8	111	103	70-130	7	20	
Antimony, Dissolved	ug/L	0.071J	80	80	81.6	77.3	102	97	70-130	5	20	
Arsenic, Dissolved	ug/L	2.5	80	80	82.8	79.5	100	96	70-130	4	20	
Barium, Dissolved	ug/L	24.4	80	80	107	103	103	98	70-130	4	20	
Cadmium, Dissolved	ug/L	1.9	80	80	83.6	79.6	102	97	70-130	5	20	
Calcium, Dissolved	ug/L	119000	1000	1000	124000	120000	515	105	70-130	3	20	E,M1
Chromium, Dissolved	ug/L	0.75	80	80	79.2	76.0	98	94	70-130	4	20	
Copper, Dissolved	ug/L	0.17J	80	80	80.0	77.1	100	96	70-130	4	20	
Iron, Dissolved	ug/L	40.2J	1000	1000	1030	994	99	95	70-130	4	20	
Lead, Dissolved	ug/L	0.051J	80	80	79.3	75.4	99	94	70-130	5	20	
Magnesium, Dissolved	ug/L	24700	1000	1000	26700	25600	202	94	70-130	4	20	M1
Manganese, Dissolved	ug/L	497	80	80	596	572	124	93	70-130	4	20	
Nickel, Dissolved	ug/L	2.1	80	80	80.2	78.2	98	95	70-130	3	20	

This report shall not be reproduced, except in full,
without the written consent of Pace Analytical Services, Inc..

Pace Analytical Services, Inc.
9608 Loiret Blvd.
Lenexa, KS 66219
(913)599-5665

QUALITY CONTROL DATA

Project: Rico
Pace Project No.: 60112423

MATRIX SPIKE & MATRIX SPIKE DUPLICATE: 1118916 1118917

Parameter	Units	10178696001 Result	MS Spike Conc.	MSD Spike Conc.	MS Result	MSD Result	MS % Rec	MSD % Rec	% Rec Limits	RPD	Max RPD	Qual
Potassium, Dissolved	ug/L	10700	1000	1000	11900	11400	115	69	70-130	4	20	M1
Selenium, Dissolved	ug/L	ND	80	80	80.8	78.7	101	98	70-130	3	20	
Silver, Dissolved	ug/L	ND	80	80	83.8	83.5	105	104	70-130	.4	20	
Sodium, Dissolved	ug/L	65400	1000	1000	69400	66500	390	105	70-130	4	20	M1
Thallium, Dissolved	ug/L	ND	80	80	79.6	76.0	99	95	70-130	5	20	
Vanadium, Dissolved	ug/L	1.6	80	80	82.9	77.6	102	95	70-130	7	20	
Zinc, Dissolved	ug/L	140	80	80	230	224	112	104	70-130	3	20	

This report shall not be reproduced, except in full,
without the written consent of Pace Analytical Services, Inc..

Pace Analytical Services, Inc.
9608 Loiret Blvd.
Lenexa, KS 66219
(913)599-5665

QUALITY CONTROL DATA

Project: Rico
Pace Project No.: 60112423

QC Batch: MERC/6312 Analysis Method: EPA 245.1
QC Batch Method: EPA 245.1 Analysis Description: 245.1 Mercury
Associated Lab Samples: 60112423001, 60112423002, 60112423003

METHOD BLANK: 1118661 Matrix: Water
Associated Lab Samples: 60112423001, 60112423002, 60112423003

Parameter	Units	Blank Result	Reporting Limit	Analyzed	Qualifiers
Mercury	ug/L	ND	0.20	12/22/11 10:40	

LABORATORY CONTROL SAMPLE: 1118662

Parameter	Units	Spike Conc.	LCS Result	LCS % Rec	% Rec Limits	Qualifiers
Mercury	ug/L	5	5.2	104	85-115	

MATRIX SPIKE SAMPLE: 1118663

Parameter	Units	60112423001 Result	Spike Conc.	MS Result	MS % Rec	% Rec Limits	Qualifiers
Mercury	ug/L	ND	5	4.6	92	85-115	

MATRIX SPIKE & MATRIX SPIKE DUPLICATE: 1118664 1118665

Parameter	Units	10178903001 Result	MS Spike Conc.	MSD Spike Conc.	MS Result	MSD Result	MS % Rec	MSD % Rec	% Rec Limits	RPD	Max RPD	Qual
Mercury	ug/L	ND	5	5	4.0	4.1	81	81	85-115	1	30	M1

This report shall not be reproduced, except in full,
without the written consent of Pace Analytical Services, Inc..

Pace Analytical Services, Inc.
9608 Loiret Blvd.
Lenexa, KS 66219
(913)599-5665

QUALITY CONTROL DATA

Project: Rico
Pace Project No.: 60112423

QC Batch: MERC/6316 | Analysis Method: EPA 245.1
QC Batch Method: EPA 245.1 | Analysis Description: 245.1 Mercury - Dissolved
Associated Lab Samples: 60112423001, 60112423002, 60112423003

METHOD BLANK: 1119089 | Matrix: Water
Associated Lab Samples: 60112423001, 60112423002, 60112423003

Parameter	Units	Blank Result	Reporting Limit	Analyzed	Qualifiers
Mercury, Dissolved	ug/L	ND	0.20	12/22/11 11:28	

LABORATORY CONTROL SAMPLE: 1119090

Parameter	Units	Spike Conc.	LCS Result	LCS % Rec	% Rec Limits	Qualifiers
Mercury, Dissolved	ug/L	5	4.6	92	85-115	

MATRIX SPIKE & MATRIX SPIKE DUPLICATE: 1119091 1119092

Parameter	Units	60112423001 Result	MS Spike Conc.	MSD Spike Conc.	MS Result	MSD Result	MS % Rec	MSD % Rec	% Rec Limits	RPD	Max RPD	Qual
Mercury, Dissolved	ug/L	ND	5	5	2.5	3.5	51	70	85-115	32	20	D6,M1

This report shall not be reproduced, except in full,
without the written consent of Pace Analytical Services, Inc..

Pace Analytical Services, Inc.
9608 Loiret Blvd.
Lenexa, KS 66219
(913)599-5665

QUALITY CONTROL DATA

Project: Rico
Pace Project No.: 60112423

QC Batch: MT/7931 | Analysis Method: SM 2510B
QC Batch Method: SM 2510B | Analysis Description: 2510B Specific Conductance
Associated Lab Samples: 60112423001, 60112423002, 60112423003

METHOD BLANK: 1120402 | Matrix: Water
Associated Lab Samples: 60112423001, 60112423002, 60112423003

Parameter	Units	Blank Result	Reporting Limit	Analyzed	Qualifiers
Specific Conductance	umhos/cm	ND	10.0	12/23/11 10:10	

LABORATORY CONTROL SAMPLE: 1120403

Parameter	Units	Spike Conc.	LCS Result	LCS % Rec	% Rec Limits	Qualifiers
Specific Conductance	umhos/cm	1000	976	98	90-110	

SAMPLE DUPLICATE: 1120404

Parameter	Units	60112423001 Result	Dup Result	RPD	Max RPD	Qualifiers
Specific Conductance	umhos/cm	1130	1100	3	20	

SAMPLE DUPLICATE: 1120405

Parameter	Units	10179027001 Result	Dup Result	RPD	Max RPD	Qualifiers
Specific Conductance	umhos/cm	192	192	.05	20	

This report shall not be reproduced, except in full,
without the written consent of Pace Analytical Services, Inc..

Pace Analytical Services, Inc.
9608 Loiret Blvd.
Lenexa, KS 66219
(913)599-5665

QUALITY CONTROL DATA

Project: Rico
Pace Project No.: 60112423

QC Batch: WET/32791 | Analysis Method: SM 2320B
QC Batch Method: SM 2320B | Analysis Description: 2320B Alkalinity
Associated Lab Samples: 60112423001, 60112423002

METHOD BLANK: 932339 | Matrix: Water
Associated Lab Samples: 60112423001, 60112423002

Parameter	Units	Blank Result	Reporting Limit	Analyzed	Qualifiers
Alkalinity, Carbonate (CaCO3)	mg/L	ND	20.0	12/28/11 15:00	
Alkalinity, Total as CaCO3	mg/L	ND	20.0	12/28/11 15:00	
Alkalinity,Bicarbonate (CaCO3)	mg/L	ND	20.0	12/28/11 15:00	

LABORATORY CONTROL SAMPLE: 932340

Parameter	Units	Spike Conc.	LCS Result	LCS % Rec	% Rec Limits	Qualifiers
Alkalinity, Total as CaCO3	mg/L	500	500	100	90-110	

SAMPLE DUPLICATE: 932341

Parameter	Units	60112265001 Result	Dup Result	RPD	Max RPD	Qualifiers
Alkalinity, Carbonate (CaCO3)	mg/L	ND	ND		24	
Alkalinity, Total as CaCO3	mg/L	210	212	1	9	
Alkalinity,Bicarbonate (CaCO3)	mg/L	210	212	1	9	

SAMPLE DUPLICATE: 932342

Parameter	Units	60112265002 Result	Dup Result	RPD	Max RPD	Qualifiers
Alkalinity, Carbonate (CaCO3)	mg/L	ND	ND		24	
Alkalinity, Total as CaCO3	mg/L	8.0J	10J		9	
Alkalinity,Bicarbonate (CaCO3)	mg/L	8.0J	10J		9	

This report shall not be reproduced, except in full,
without the written consent of Pace Analytical Services, Inc..

Pace Analytical Services, Inc.
9608 Loiret Blvd.
Lenexa, KS 66219
(913)599-5665

QUALITY CONTROL DATA

Project: Rico
Pace Project No.: 60112423

QC Batch: WET/32829 | Analysis Method: SM 2320B
QC Batch Method: SM 2320B | Analysis Description: 2320B Alkalinity
Associated Lab Samples: 60112423003

METHOD BLANK: 933011 | Matrix: Water
Associated Lab Samples: 60112423003

Parameter	Units	Blank Result	Reporting Limit	Analyzed	Qualifiers
Alkalinity, Carbonate (CaCO3)	mg/L	ND	20.0	12/29/11 16:15	
Alkalinity, Total as CaCO3	mg/L	ND	20.0	12/29/11 16:15	
Alkalinity,Bicarbonate (CaCO3)	mg/L	ND	20.0	12/29/11 16:15	

LABORATORY CONTROL SAMPLE: 933012

Parameter	Units	Spike Conc.	LCS Result	LCS % Rec	% Rec Limits	Qualifiers
Alkalinity, Total as CaCO3	mg/L	500	500	100	90-110	

SAMPLE DUPLICATE: 933231

Parameter	Units	60112457001 Result	Dup Result	RPD	Max RPD	Qualifiers
Alkalinity, Carbonate (CaCO3)	mg/L	ND	ND		24	
Alkalinity, Total as CaCO3	mg/L	168	170	1	9	
Alkalinity,Bicarbonate (CaCO3)	mg/L	168	170	1	9	

SAMPLE DUPLICATE: 933232

Parameter	Units	60112457002 Result	Dup Result	RPD	Max RPD	Qualifiers
Alkalinity, Carbonate (CaCO3)	mg/L	ND	ND		24	
Alkalinity, Total as CaCO3	mg/L	168	166	1	9	
Alkalinity,Bicarbonate (CaCO3)	mg/L	168	166	1	9	

This report shall not be reproduced, except in full,
without the written consent of Pace Analytical Services, Inc..

Pace Analytical Services, Inc.
9608 Loiret Blvd.
Lenexa, KS 66219
(913)599-5665

QUALITY CONTROL DATA

Project: Rico
Pace Project No.: 60112423

QC Batch: WET/32666 | Analysis Method: SM 2540C
QC Batch Method: SM 2540C | Analysis Description: 2540C Total Dissolved Solids
Associated Lab Samples: 60112423001

METHOD BLANK: 929282 | Matrix: Water
Associated Lab Samples: 60112423001

Parameter	Units	Blank Result	Reporting Limit	Analyzed	Qualifiers
Total Dissolved Solids	mg/L	ND	5.0	12/20/11 13:22	

SAMPLE DUPLICATE: 929283

Parameter	Units	60112159003 Result	Dup Result	RPD	Max RPD	Qualifiers
Total Dissolved Solids	mg/L	2320	2170	7	17	

SAMPLE DUPLICATE: 929284

Parameter	Units	60112290021 Result	Dup Result	RPD	Max RPD	Qualifiers
Total Dissolved Solids	mg/L	2180	2100	4	17	

This report shall not be reproduced, except in full,
without the written consent of Pace Analytical Services, Inc..

Pace Analytical Services, Inc.
9608 Loiret Blvd.
Lenexa, KS 66219
(913)599-5665

QUALITY CONTROL DATA

Project: Rico
Pace Project No.: 60112423

QC Batch: WET/32685 | Analysis Method: SM 2540C
QC Batch Method: SM 2540C | Analysis Description: 2540C Total Dissolved Solids
Associated Lab Samples: 60112423002, 60112423003

METHOD BLANK: 929885 | Matrix: Water
Associated Lab Samples: 60112423002, 60112423003

Parameter	Units	Blank Result	Reporting Limit	Analyzed	Qualifiers
Total Dissolved Solids	mg/L	ND	5.0	12/21/11 08:26	

SAMPLE DUPLICATE: 929886

Parameter	Units	60112489001 Result	Dup Result	RPD	Max RPD	Qualifiers
Total Dissolved Solids	mg/L	731	739	1	17	

SAMPLE DUPLICATE: 929887

Parameter	Units	60112265001 Result	Dup Result	RPD	Max RPD	Qualifiers
Total Dissolved Solids	mg/L	225	217	4	17	

This report shall not be reproduced, except in full,
without the written consent of Pace Analytical Services, Inc..

Pace Analytical Services, Inc.
9608 Loiret Blvd.
Lenexa, KS 66219
(913)599-5665

QUALITY CONTROL DATA

Project: Rico
Pace Project No.: 60112423

QC Batch: WET/32663 | Analysis Method: SM 2540D
QC Batch Method: SM 2540D | Analysis Description: 2540D Total Suspended Solids
Associated Lab Samples: 60112423001, 60112423002, 60112423003

METHOD BLANK: 929268 | Matrix: Water
Associated Lab Samples: 60112423001, 60112423002, 60112423003

Parameter	Units	Blank Result	Reporting Limit	Analyzed	Qualifiers
Total Suspended Solids	mg/L	ND	5.0	12/20/11 08:01	

SAMPLE DUPLICATE: 929269

Parameter	Units	60112290017 Result	Dup Result	RPD	Max RPD	Qualifiers
Total Suspended Solids	mg/L	100	100	0	25	

SAMPLE DUPLICATE: 929270

Parameter	Units	60112431001 Result	Dup Result	RPD	Max RPD	Qualifiers
Total Suspended Solids	mg/L	42.0	41.0	2	25	

This report shall not be reproduced, except in full,
without the written consent of Pace Analytical Services, Inc..

Pace Analytical Services, Inc.
9608 Loiret Blvd.
Lenexa, KS 66219
(913)599-5665

QUALITY CONTROL DATA

Project: Rico
Pace Project No.: 60112423

QC Batch: WETA/18815 Analysis Method: EPA 300.0
QC Batch Method: EPA 300.0 Analysis Description: 300.0 IC Anions
Associated Lab Samples: 60112423001, 60112423002, 60112423003

METHOD BLANK: 932979 Matrix: Water
Associated Lab Samples: 60112423001, 60112423002, 60112423003

Parameter	Units	Blank Result	Reporting Limit	Analyzed	Qualifiers
Sulfate	mg/L	ND	1.0	12/30/11 02:17	

LABORATORY CONTROL SAMPLE: 932980

Parameter	Units	Spike Conc.	LCS Result	LCS % Rec	% Rec Limits	Qualifiers
Sulfate	mg/L	5	5.2	103	90-110	

This report shall not be reproduced, except in full,
without the written consent of Pace Analytical Services, Inc..

Pace Analytical Services, Inc.
9608 Loiret Blvd.
Lenexa, KS 66219
(913)599-5665

QUALITY CONTROL DATA

Project: Rico
Pace Project No.: 60112423

QC Batch: WETA/18747 | Analysis Method: SM 4500-CN-E
QC Batch Method: SM 4500-CN-E | Analysis Description: 4500CNE Cyanide, Total
Associated Lab Samples: 60112423001, 60112423002, 60112423003

METHOD BLANK: 929917 | Matrix: Water
Associated Lab Samples: 60112423001, 60112423002, 60112423003

Parameter	Units	Blank Result	Reporting Limit	Analyzed	Qualifiers
Cyanide	mg/L	ND	0.0050	12/21/11 17:35	

LABORATORY CONTROL SAMPLE: 929918

Parameter	Units	Spike Conc.	LCS Result	LCS % Rec	% Rec Limits	Qualifiers
Cyanide	mg/L	.1	0.11	106	69-126	

MATRIX SPIKE SAMPLE: 929919

Parameter	Units	60112290018 Result	Spike Conc.	MS Result	MS % Rec	% Rec Limits	Qualifiers
Cyanide	mg/L	ND	.1	0.11	113	41-136	

SAMPLE DUPLICATE: 929920

Parameter	Units	60112290019 Result	Dup Result	RPD	Max RPD	Qualifiers
Cyanide	mg/L	0.0065	ND		26	

This report shall not be reproduced, except in full,
without the written consent of Pace Analytical Services, Inc..

Pace Analytical Services, Inc.
9608 Loiret Blvd.
Lenexa, KS 66219
(913)599-5665

QUALIFIERS

Project: Rico
Pace Project No.: 60112423

DEFINITIONS

DF - Dilution Factor, if reported, represents the factor applied to the reported data due to changes in sample preparation, dilution of the sample aliquot, or moisture content.

ND - Not Detected at or above adjusted reporting limit.

J - Estimated concentration above the adjusted method detection limit and below the adjusted reporting limit.

MDL - Adjusted Method Detection Limit.

S - Surrogate

1,2-Diphenylhydrazine (8270 listed analyte) decomposes to Azobenzene.

Consistent with EPA guidelines, unrounded data are displayed and have been used to calculate % recovery and RPD values.

LCS(D) - Laboratory Control Sample (Duplicate)

MS(D) - Matrix Spike (Duplicate)

DUP - Sample Duplicate

RPD - Relative Percent Difference

NC - Not Calculable.

SG - Silica Gel - Clean-Up

U - Indicates the compound was analyzed for, but not detected.

N-Nitrosodiphenylamine decomposes and cannot be separated from Diphenylamine using Method 8270. The result reported for each analyte is a combined concentration.

Pace Analytical is TNI accredited. Contact your Pace PM for the current list of accredited analytes.

LABORATORIES

PASI-K	Pace Analytical Services - Kansas City
PASI-M	Pace Analytical Services - Minneapolis

ANALYTE QUALIFIERS

CH	The continuing calibration for this compound is outside of Pace Analytical acceptance limits. The results may be biased high.
D6	The relative percent difference (RPD) between the sample and sample duplicate exceeded laboratory control limits.
E	Analyte concentration exceeded the calibration range. The reported result is estimated.
H1	Analysis conducted outside the EPA method holding time.
M1	Matrix spike recovery exceeded QC limits. Batch accepted based on laboratory control sample (LCS) recovery.
M6	Matrix spike and Matrix spike duplicate recovery not evaluated against control limits due to sample dilution.

This report shall not be reproduced, except in full,
without the written consent of Pace Analytical Services, Inc..

Pace Analytical Services, Inc.
9608 Loiret Blvd.
Lenexa, KS 66219
(913)599-5665

QUALITY CONTROL DATA CROSS REFERENCE TABLE

Project: Rico
Pace Project No.: 60112423

Lab ID	Sample ID	QC Batch Method	QC Batch	Analytical Method	Analytical Batch
60112423001	**MW-1 DEEP**	EPA 200.8	ICPM/30352	EPA 200.8	ICPM/12067
60112423002	**MW-2 DEEP**	EPA 200.8	ICPM/30352	EPA 200.8	ICPM/12067
60112423003	**MW-1 SHALLOW**	EPA 200.8	ICPM/30352	EPA 200.8	ICPM/12067
60112423001	**MW-1 DEEP**	EPA 200.8	ICPM/30350	EPA 200.8	ICPM/12083
60112423002	**MW-2 DEEP**	EPA 200.8	ICPM/30350	EPA 200.8	ICPM/12083
60112423003	**MW-1 SHALLOW**	EPA 200.8	ICPM/30350	EPA 200.8	ICPM/12083
60112423001	**MW-1 DEEP**	EPA 245.1	MERC/6312	EPA 245.1	MERC/7115
60112423002	**MW-2 DEEP**	EPA 245.1	MERC/6312	EPA 245.1	MERC/7115
60112423003	**MW-1 SHALLOW**	EPA 245.1	MERC/6312	EPA 245.1	MERC/7115
60112423001	**MW-1 DEEP**	EPA 245.1	MERC/6316	EPA 245.1	MERC/7119
60112423002	**MW-2 DEEP**	EPA 245.1	MERC/6316	EPA 245.1	MERC/7119
60112423003	**MW-1 SHALLOW**	EPA 245.1	MERC/6316	EPA 245.1	MERC/7119
60112423001	**MW-1 DEEP**	SM 2510B	MT/7931		
60112423002	**MW-2 DEEP**	SM 2510B	MT/7931		
60112423003	**MW-1 SHALLOW**	SM 2510B	MT/7931		
60112423001	**MW-1 DEEP**	Calculated	MT/7945		
60112423002	**MW-2 DEEP**	Calculated	MT/7945		
60112423003	**MW-1 SHALLOW**	Calculated	MT/7945		
60112423001	**MW-1 DEEP**	SM 2320B	WET/32791		
60112423002	**MW-2 DEEP**	SM 2320B	WET/32791		
60112423003	**MW-1 SHALLOW**	SM 2320B	WET/32829		
60112423001	**MW-1 DEEP**	SM 2540C	WET/32666		
60112423002	**MW-2 DEEP**	SM 2540C	WET/32685		
60112423003	**MW-1 SHALLOW**	SM 2540C	WET/32685		
60112423001	**MW-1 DEEP**	SM 2540D	WET/32663		
60112423002	**MW-2 DEEP**	SM 2540D	WET/32663		
60112423003	**MW-1 SHALLOW**	SM 2540D	WET/32663		
60112423001	**MW-1 DEEP**	EPA 300.0	WETA/18815		
60112423002	**MW-2 DEEP**	EPA 300.0	WETA/18815		
60112423003	**MW-1 SHALLOW**	EPA 300.0	WETA/18815		
60112423001	**MW-1 DEEP**	SM 4500-CN-E	WETA/18747		
60112423002	**MW-2 DEEP**	SM 4500-CN-E	WETA/18747		
60112423003	**MW-1 SHALLOW**	SM 4500-CN-E	WETA/18747		

This report shall not be reproduced, except in full,
without the written consent of Pace Analytical Services, Inc..

Appendix E

Flow Cross Sections

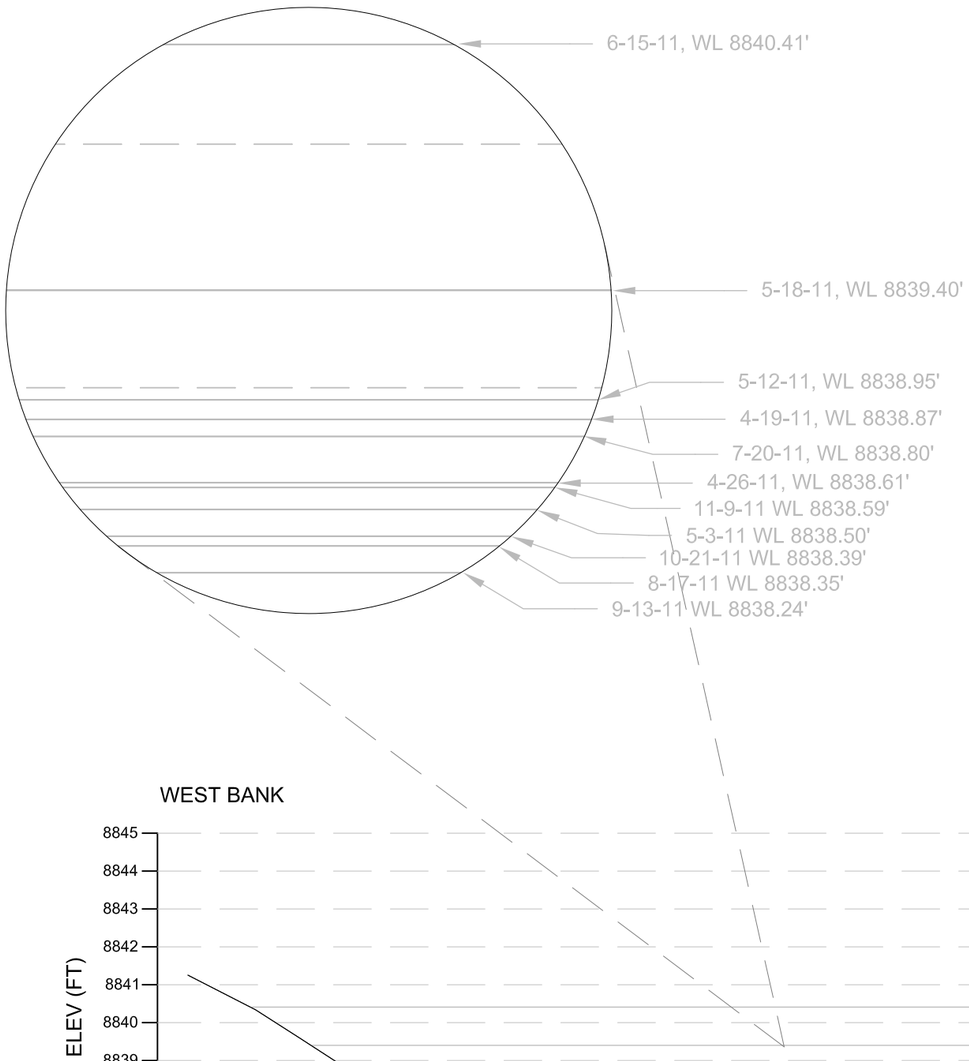

NOTE: COULD NOT OBTAIN FLOW DUE TO LARGE ICE SHELF OVER RIVER

DR-1 CROSS SECTION

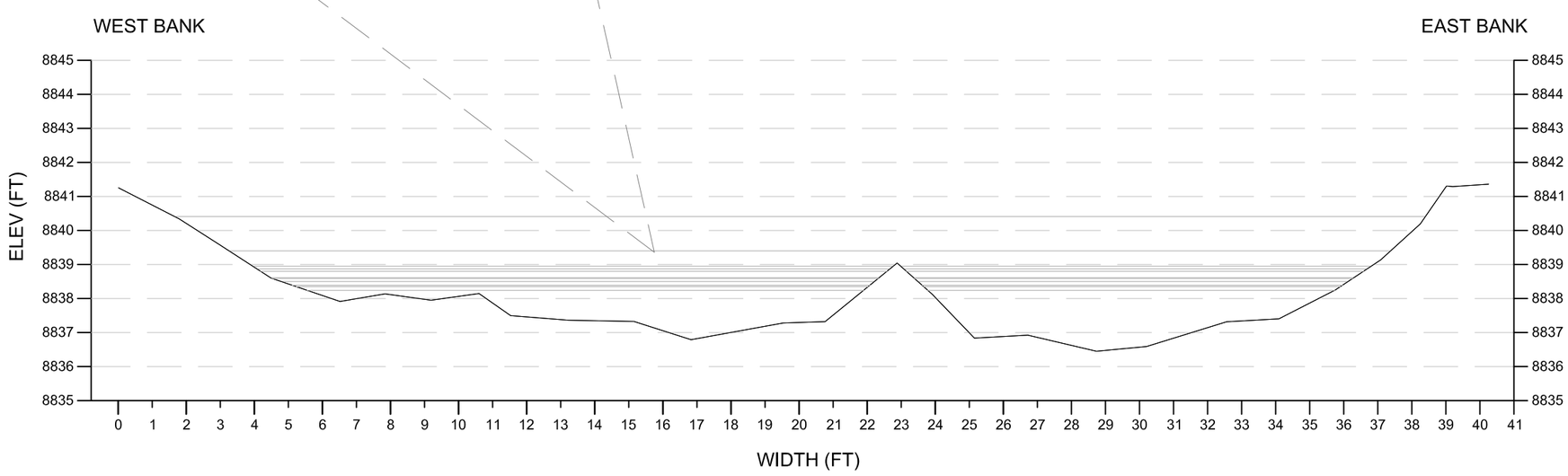

General Notes

Scale in Feet
0 2 4

No.	Revision/Issue	Date

ATLANTIC RICHFIELD COMPANY

ANDERSON
ENGINEERING COMPANY, INC.

DRAWN BY: MAD
ENGINEER: CS, MAD
APPROVED:

RICO SURFACE WATER SAMPLING

DOLORES RIVER CROSS SECTION AT SAMPLING STATION DR-1

RICO, CO

Project
Date 13-DEC-2011
Scale
Figure 3

THESE PLANS AND SPECIFICATIONS ARE THE PROPERTY OF ANDERSON ENGINEERING COMPANY, INC., 977 WEST 2100 SOUTH, SALT LAKE CITY, UTAH, 84119 AND SHALL NOT BE COPIED, REDUCED, OR REPRODUCED WITHOUT THEIR WRITTEN PERMISSION.

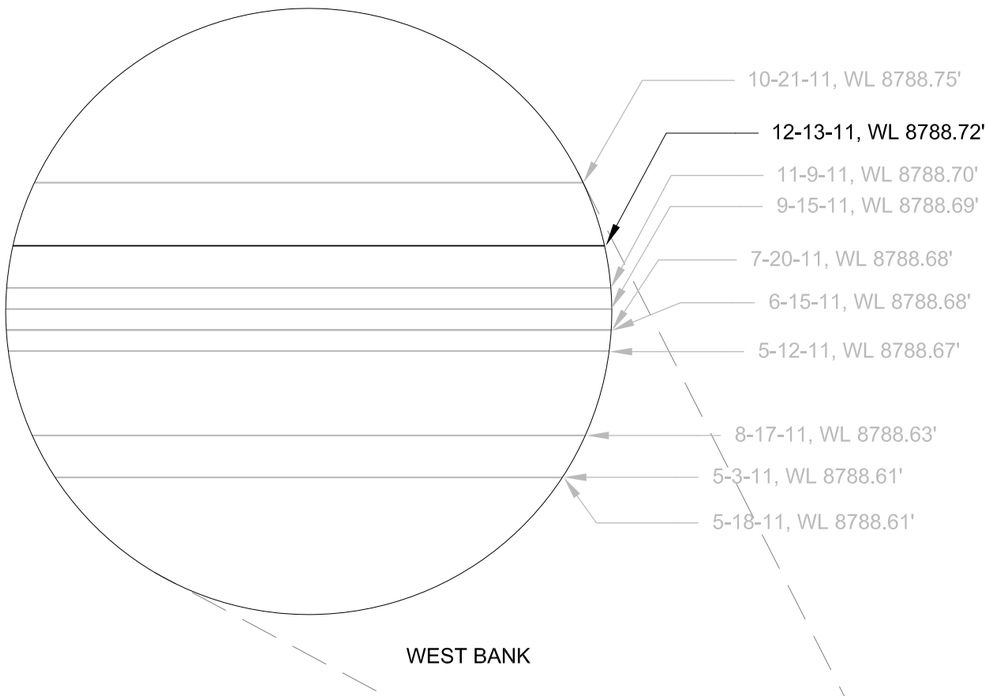

DR-5 CROSS SECTION

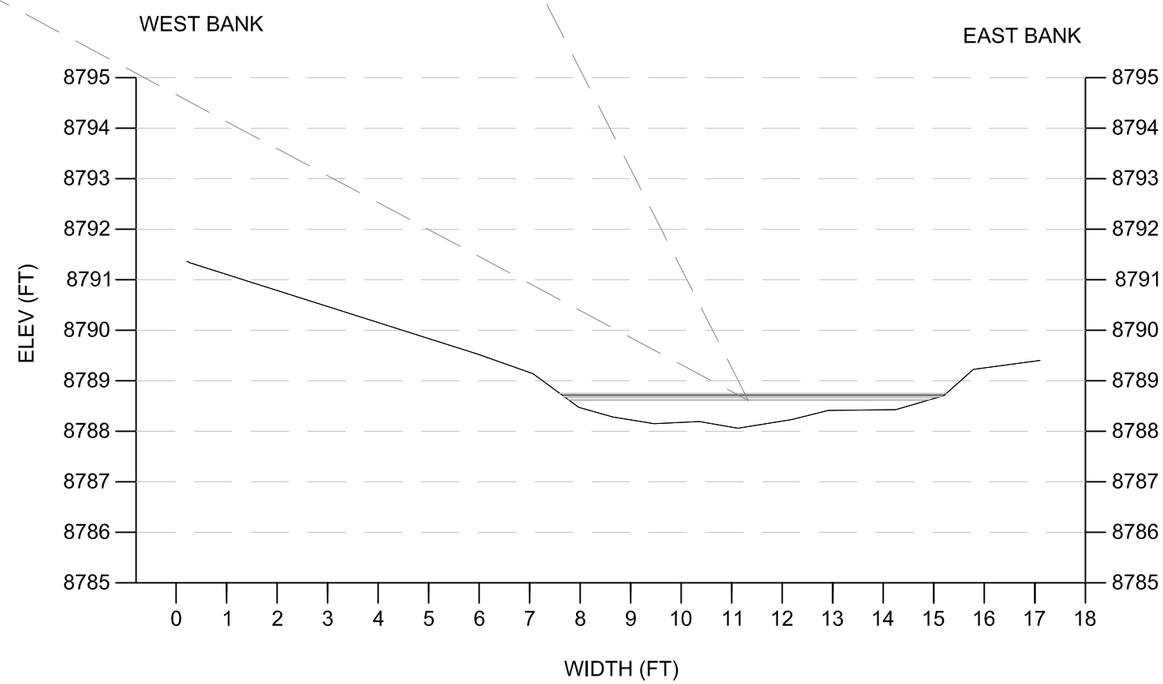

General Notes

Scale in Feet
0 1.5 3

No.	Revision/Issue	Date

ATLANTIC RICHFIELD COMPANY

ANDERSON
ENGINEERING COMPANY, INC.

DRAWN BY: MAD
ENGINEER: CS, MAD
APPROVED:

RICO SURFACE WATER SAMPLING

POND 8 EMBANKMENT CROSS SECTION AT SAMPLING STATION DR-5

RICO, CO

Project
Date 13-DEC-2011
Scale
Figure 4

THESE PLANS AND SPECIFICATIONS ARE THE PROPERTY OF ANDERSON ENGINEERING COMPANY, INC., 977 WEST 2100 SOUTH, SALT LAKE CITY, UTAH, 84119 AND SHALL NOT BE COPIED, REDUCED, OR REPRODUCED WITHOUT THEIR WRITTEN PERMISSION.

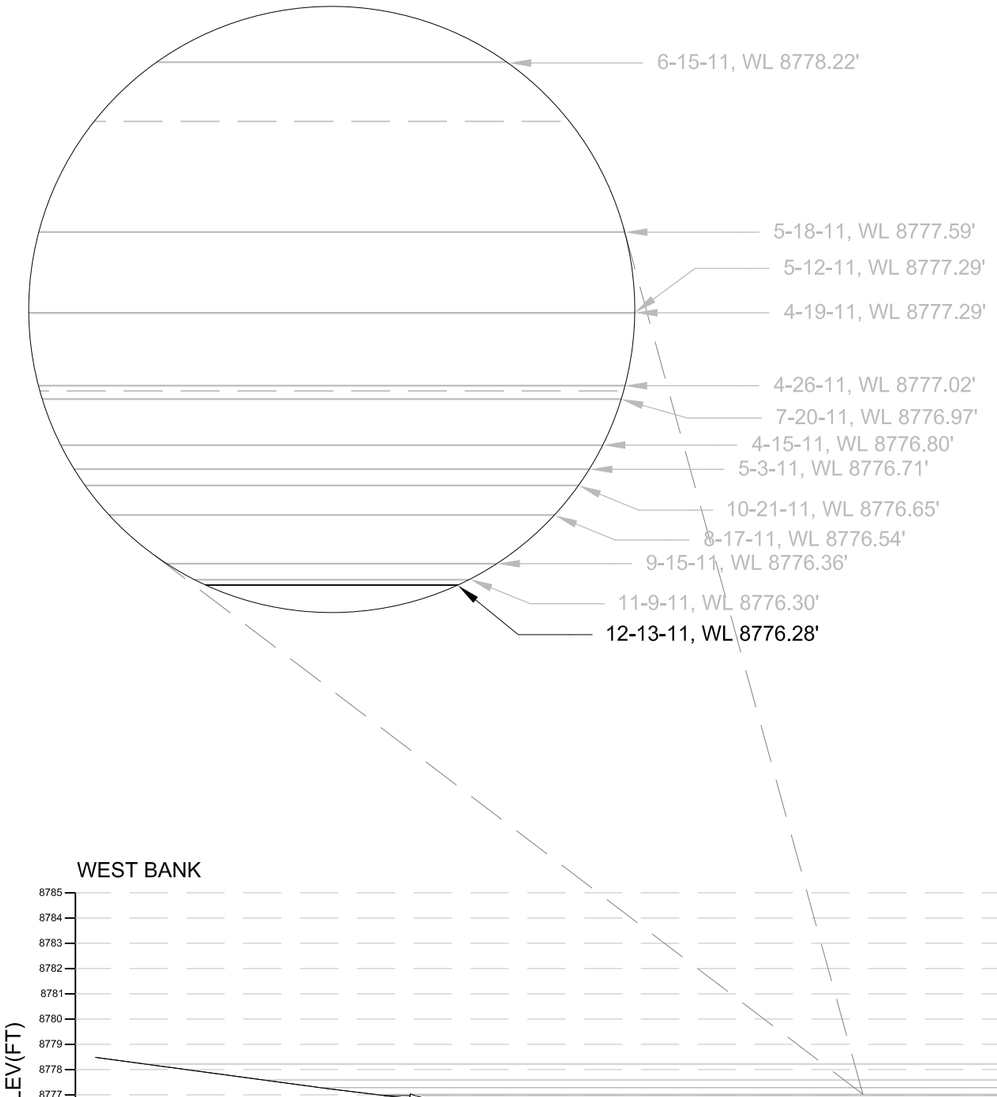

DR-2 CROSS SECTION

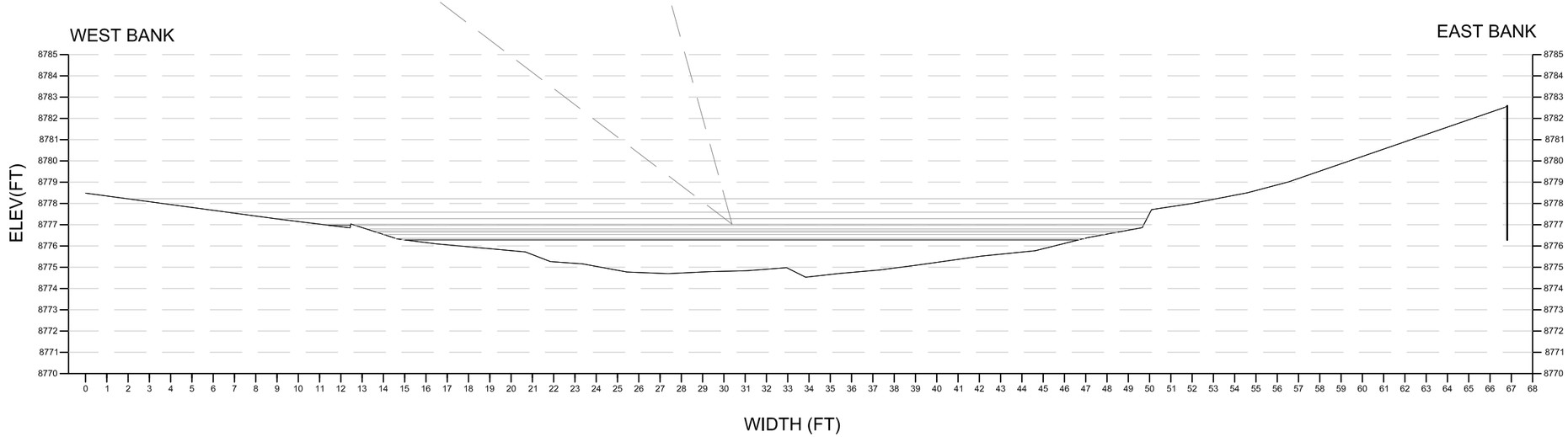

General Notes

Scale in Feet
0 3 6

No.	Revision/Issue	Date

ATLANTIC RICHFIELD COMPANY

ANDERSON
ENGINEERING COMPANY, INC.

DRAWN BY: MAD
ENGINEER: CS, MAD
APPROVED:

RICO SURFACE WATER SAMPLING

DOLORES RIVER CROSS SECTION AT SAMPLING STATION DR-2

RICO, CO

Project
Date 13-DEC-2011
Scale
Figure 5

THESE PLANS AND SPECIFICATIONS ARE THE PROPERTY OF ANDERSON ENGINEERING COMPANY, INC., 977 WEST 2100 SOUTH, SALT LAKE CITY, UTAH, 84119 AND SHALL NOT BE COPIED, REDUCED, OR REPRODUCED WITHOUT THEIR WRITTEN PERMISSION.

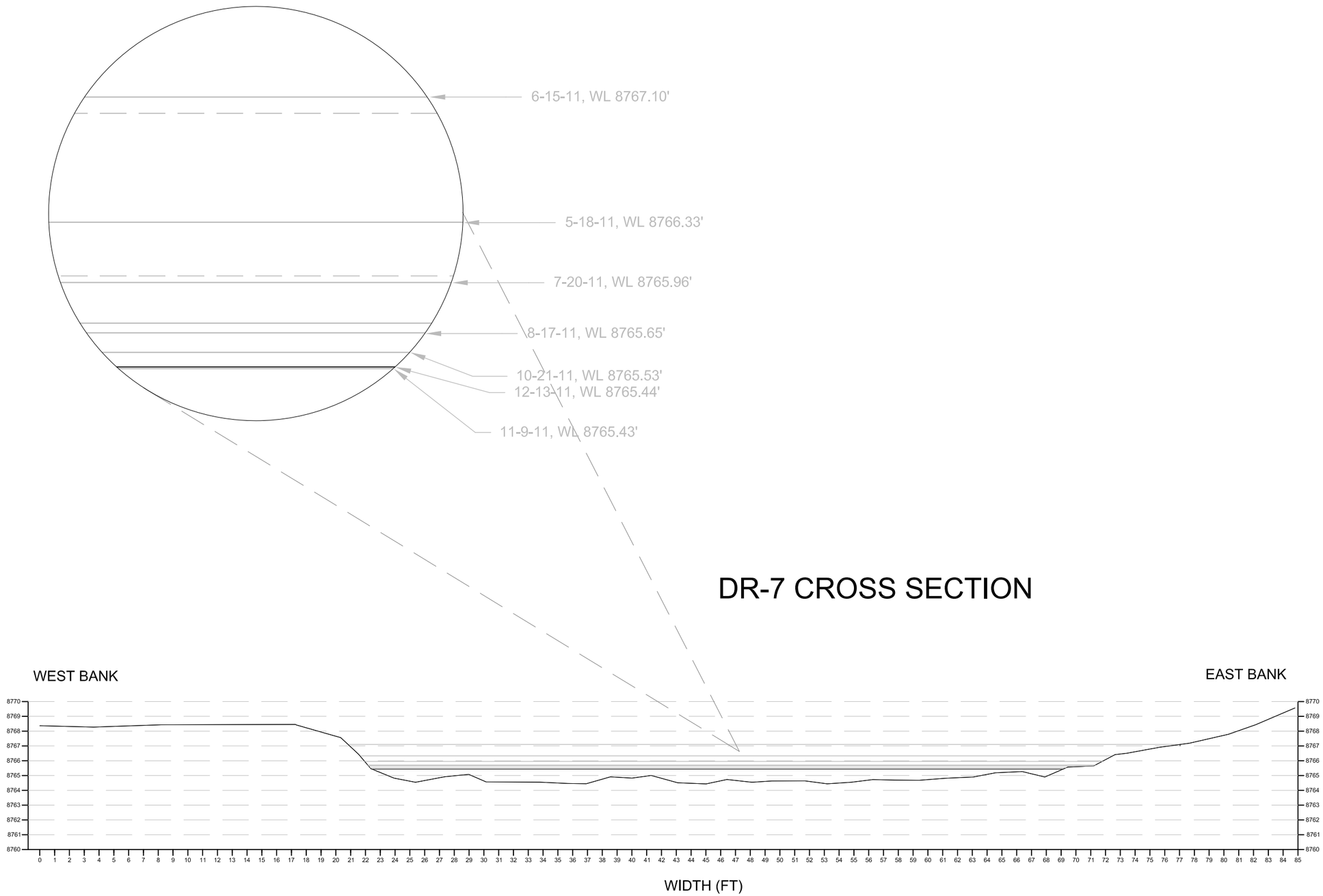

DR-7 CROSS SECTION

General Notes

Scale in Feet
0 3.5 7

No.	Revision/Issue	Date

ATLANTIC RICHFIELD COMPANY

ANDERSON
ENGINEERING COMPANY, INC.

DRAWN BY: MAD
ENGINEER: CS, MAD
APPROVED:

RICO SURFACE WATER SAMPLING

DOLORES RIVER CROSS SECTION AT SAMPLING STATION DR-7

RICO, CO

Project
Date 13-DEC-2011
Scale
Figure 6

THESE PLANS AND SPECIFICATIONS ARE THE PROPERTY OF ANDERSON ENGINEERING COMPANY, INC., 977 WEST 2100 SOUTH, SALT LAKE CITY, UTAH, 84119 AND SHALL NOT BE COPIED, REDUCED, OR REPRODUCED WITHOUT THEIR WRITTEN PERMISSION.

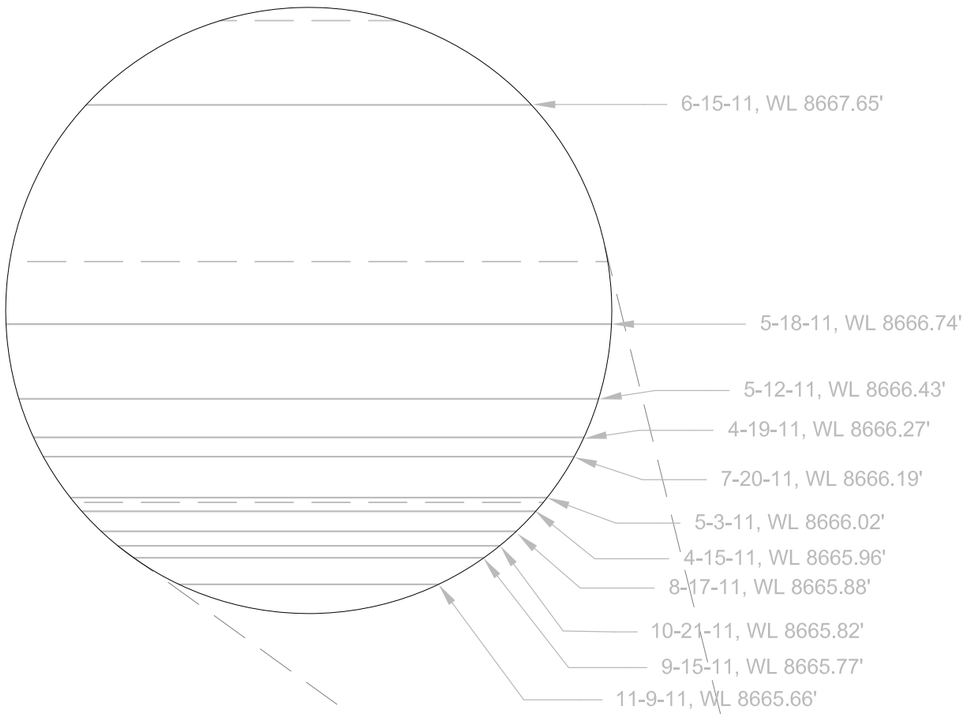

NOTE: COULD NOT OBTAIN FLOW DUE TO LARGE ICE SHELF OVER RIVER

DR-4-SW CROSS SECTION

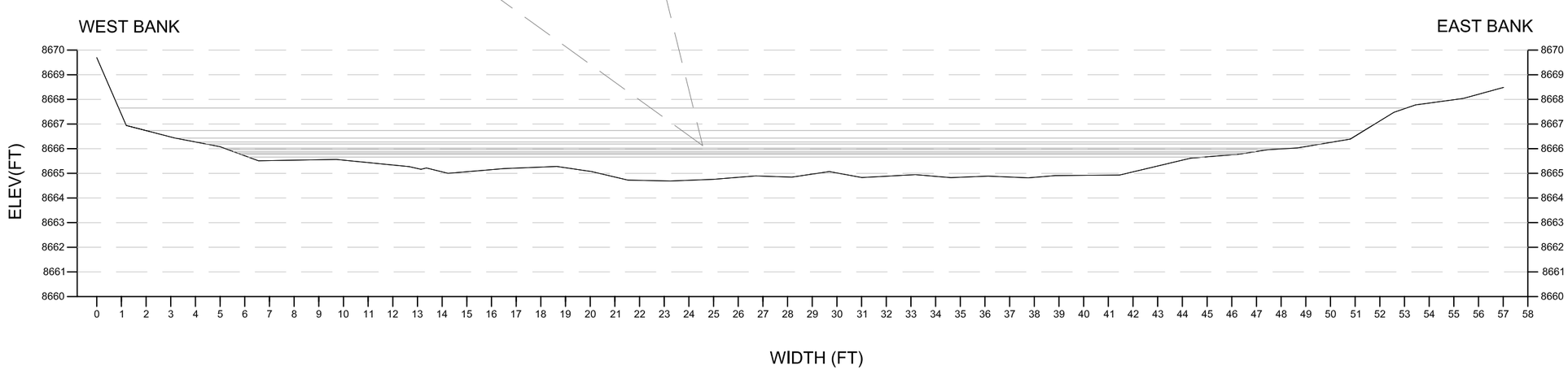

General Notes

Scale in Feet
0 2.5 5

No.	Revision/Issue	Date

ATLANTIC RICHFIELD COMPANY

ANDERSON
ENGINEERING COMPANY, INC.

DRAWN BY: MAD
ENGINEER: CS, MAD
APPROVED:

RICO SURFACE WATER SAMPLING

DOLORES RIVER CROSS SECTION AT SAMPLING STATION DR-4-SW

RICO, CO

Project
Date 13-DEC-2011
Scale
Figure 7

THESE PLANS AND SPECIFICATIONS ARE THE PROPERTY OF ANDERSON ENGINEERING COMPANY, INC., 977 WEST 2100 SOUTH, SALT LAKE CITY, UTAH, 84119 AND SHALL NOT BE COPIED, REDUCED, OR REPRODUCED WITHOUT THEIR WRITTEN PERMISSION.

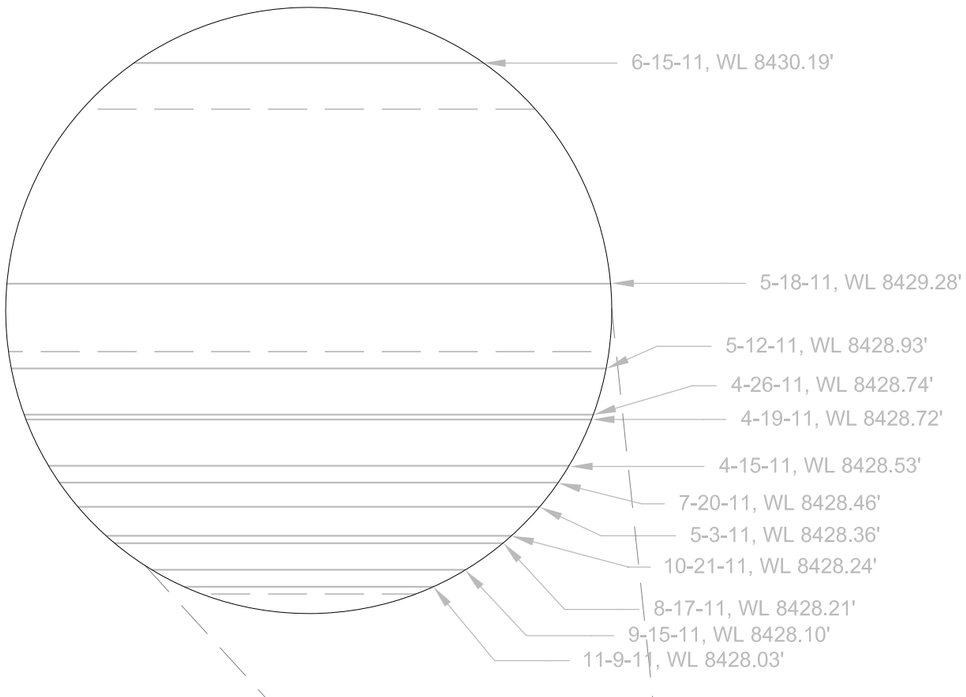

NOTE: COULD NOT OBTAIN FLOW DUE TO LARGE ICE SHELF OVER RIVER

DR-G CROSS SECTION

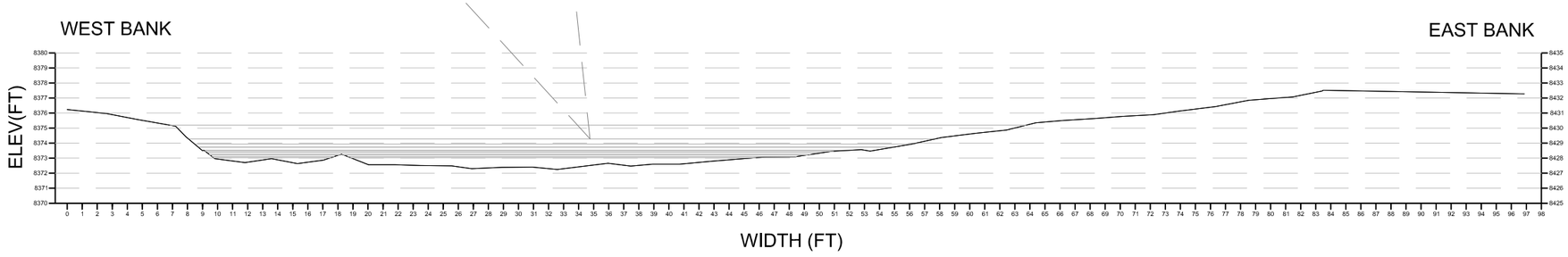

General Notes

Scale in Feet
0 4.5 9

No.	Revision/Issue	Date

ATLANTIC RICHFIELD COMPANY

ANDERSON
ENGINEERING COMPANY, INC.

DRAWN BY: MAD
ENGINEER: CS, MAD
APPROVED:

RICO SURFACE WATER SAMPLING

DOLORES RIVER CROSS SECTION AT SAMPLING STATION DR-G

RICO, CO

Project
Date 13-DEC-2011
Scale
Figure 8

THESE PLANS AND SPECIFICATIONS ARE THE PROPERTY OF ANDERSON ENGINEERING COMPANY, INC., 977 WEST 2100 SOUTH, SALT LAKE CITY, UTAH, 84119 AND SHALL NOT BE COPIED, REDUCED, OR REPRODUCED WITHOUT THEIR WRITTEN PERMISSION.

Appendix F

Chain of Custody Records

Atlantic Richfield Company
bp
A BP affiliated company

Chain of Custody Record

184852

Project Name: Rico Water Sampling December 2011
BP BU/AR Region/Enfos Segment:
State or Lead Regulatory Agency:
Requested Due Date (mm/dd/yy): 01/02/12

On-site Time:	Temp:
Off-site Time:	Temp:
Sky Conditions:	
Meteorological Events:	
Wind Speed:	Direction:

Lab Name: Pace Analytical Services	BP/AR Facility No.:	Consultant/Contractor:
Address: 9608 Loiret Blvd.	BP/AR Facility Address:	Address:
Lenexa, KS 66219	Site Lat/Long:	
Lab PM: Colleen Koporc	California Global ID No.:	Consultant/Contractor Project No.:
Tele/Fax: (913) 563-1407	Enfos Project No.:	Consultant/Contractor PM:
BP/AR EBM:	Provision or OOC (circle one)	Tele/Fax:
Address:	Phase/WBS:	Report Type & QC Level:
	Sub Phase/Task:	E-mail EDD To:
Tele/Fax:	Cost Element:	Invoice to: Consultant or BP or Atlantic Richfield Co. (circle one)

Lab Bottle Order No: 60112290

Item No.	Sample Description	Time	Date	Matrix: Soil/Solid	Matrix: Water/Liquid	Matrix: Air		Laboratory No.	No. of Containers	Preservative: Unpreserved	Preservative: H_2SO_4	Preservative: HNO_3	Preservative: HCl	Preservative: Methanol	Preservative: NaOH	Requested Analysis: Total Metals/Hardness	Requested Analysis: Dissolved Metals	Requested Analysis: Cyanide	Requested Analysis: Alkalinity/TDS/TSS/Sulfate	Requested Analysis: Salinity	Requested Analysis: pH					Sample Point Lat/Long and Comments
1	DR-1		12/13/11		X				5	X		X			X	X	X	X	X	X	X					(BP2W) (BP3N) (BP2) 12 (BP3N) 15 (BP3S) 16 001
2	DR-2		↓		X				5	X		X			X	X	X	X	X	X	X					002
3	DR-3				X				5	X		X			X	X	X	X	X	X	X					003
4	DR-4				X				5	X		X			X	X	X	X	X	X	X					004
5	DR-5				X				5	X		X			X	X	X	X	X	X	X					005
6	DR-6		↓		X				5	X		X			X	X	X	X	X	X	X					006
7																										
8																										
9																										
10																										

	Relinquished By / Affiliation	Date	Time	Accepted By / Affiliation	Date	Time
Sampler's Name: Mark DeFriez						
Sampler's Company: Anderson Engineering Co., Inc.	[signature] / AECI	12/13/11	4:30p	[signature]	12/16/11	900
Shipment Date:						
Shipment Method:						
Shipment Tracking No:						

Special Instructions:

Custody Seals In Place: Yes / No | Temp Blank: Yes / No | Cooler Temp on Receipt: 2.5 °F/C | Trip Blank: Yes / No | MS/MSD Sample Submitted: Yes / No

Laboratory Copy

BP COC Rev. 5 10/11/2006

Atlantic Richfield Company
bp
A BP affiliated company

Chain of Custody Record

184852

Project Name: Rico Water Sampling December 2011
BP BU/AR Region/Enfos Segment:
State or Lead Regulatory Agency:
Requested Due Date (mm/dd/yy): 01/02/12

On-site Time:	Temp:
Off-site Time:	Temp:
Sky Conditions:	
Meteorological Events:	
Wind Speed:	Direction:

Lab Name: Pace Analytical Services	BP/AR Facility No.:	Consultant/Contractor:
Address: 9608 Loiret Blvd.	BP/AR Facility Address:	Address:
Lenexa, KS 66219	Site Lat/Long:	
Lab PM: Colleen Koporc	California Global ID No.:	Consultant/Contractor Project No.:
Tele/Fax: (913) 563-1407	Enfos Project No.:	Consultant/Contractor PM:
BP/AR EBM:	Provision or OOC (circle one)	Tele/Fax:
Address:	Phase/WBS:	Report Type & QC Level:
	Sub Phase/Task:	E-mail EDD To:
Tele/Fax:	Cost Element:	Invoice to: Consultant or BP or Atlantic Richfield Co. (circle one)

Lab Bottle Order No: 60112290

Item No.	Sample Description	Time	Date	Soil/Solid	Water/Liquid	Air		Laboratory No.	No. of Containers	Unpreserved	H_2SO_4	HNO_3	HCl	Methanol	NaOH	Total Metals/Hardness	Dissolved Metals	Cyanide	Alkalinity/TDS/TSS/Sulfate	Salinity	pH					Sample Point Lat/Long and Comments
1	DR-7		12/13/11		X				5	X		X			X	X	X	X	X	X	X					(BPZn)1 (BPCu)1 (BPZc)12 (BPCd)15 (BPAl)15 007
2	DR-8				X				5	X		X			X	X	X	X	X	X	X					008
3	DR-4-SW				X				5	X		X			X	X	X	X	X	X	X					009
4	DR-6				X				5	X		X			X	X	X	X	X	X	X					010
5	FB				X				5	X		X			X	X	X	X	X	X	X					011
6																										
7																										
8																										
9																										
10																										

	Relinquished By / Affiliation	Date	Time	Accepted By / Affiliation	Date	Time
Sampler's Name: Mark DeFriez						
Sampler's Company: Anderson Engineering Co., Inc.	[signature] / AEC	12/15/11	4:30p			
Shipment Date:						
Shipment Method:						
Shipment Tracking No:						

Special Instructions:

Custody Seals In Place: Yes / No | Temp Blank: Yes / No | Cooler Temp on Receipt: 2.6°F/C | Trip Blank: Yes / No | MS/MSD Sample Submitted: Yes / No

Laboratory Copy

BP COC Rev. 5 10/11/2006

Atlantic Richfield Company
bp
A BP affiliated company

Chain of Custody Record

184852

Project Name: Rico Water Sampling December 2011
BP BU/AR Region/Enfos Segment:
State or Lead Regulatory Agency:
Requested Due Date (mm/dd/yy): 01/02/12

On-site Time:	Temp:
Off-site Time:	Temp:
Sky Conditions:	
Meteorological Events:	
Wind Speed:	Direction:

Lab Name: Pace Analytical Services	BP/AR Facility No.:	Consultant/Contractor:
Address: 9608 Loiret Blvd.	BP/AR Facility Address:	Address:
Lenexa, KS 66219	Site Lat/Long:	
Lab PM: Colleen Koperc	California Global ID No.:	Consultant/Contractor Project No.:
Tele/Fax: (913) 563-1407	Enfos Project No.:	Consultant/Contractor PM:
BP/AR EBM:	Provision or OOC (circle one)	Tele/Fax:
Address:	Phase/WBS:	Report Type & QC Level:
	Sub Phase/Task:	E-mail EDD To:
Tele/Fax:	Cost Element:	Invoice to: Consultant or BP or Atlantic Richfield Co. (circle one)

Lab Bottle Order No: 60112296

Item No.	Sample Description	Time	Date	Matrix: Soil/Solid	Water/Liquid	Air		Laboratory No.	No. of Containers	Preservative: Unpreserved	H_2SO_4	HNO_3	HCl	Methanol	NaOH	Requested Analysis: Total Metals/Hardness	Dissolved Metals	Cyanide	Alkalinity/TDS/TSS/Sulfate	Salinity	pH					Sample Point Lat/Long and Comments
1	GW-1		12/14/11		X				5	X		X			X	X	X	X	X	X	X					
2	GW-3		↓		X				5	X		X			X	X	X	X	X	X	X					1(BP2N) 1(BP3N) 1(BP3C)[2] 1(BP3N)[65] 1(BP4)[65] 012
3	GW-4				X				5	X		X			X	X	X	X	X	X	X					013
4	GW-5				X				5	X		X			X	X	X	X	X	X	X					014
5																										
6																										
7																										
8																										
9																										
10																										

	Relinquished By / Affiliation	Date	Time	Accepted By / Affiliation	Date	Time
Sampler's Name: Mark DeFriez						
Sampler's Company: Anderson Engineering Co., Inc.	[illegible] / AECI	12/13/11		[illegible]	12/16/11	900
Shipment Date:						
Shipment Method:						
Shipment Tracking No:						

Special Instructions:

Custody Seals In Place: Yes / No | Temp Blank: Yes / No | Cooler Temp on Receipt: 32°F/C | Trip Blank: Yes / No | MS/MSD Sample Submitted: Yes / No

Laboratory Copy

BP COC Rev. 5 10/11/2006

Atlantic Richfield Company
bp
A BP affiliated company

184852

Chain of Custody Record

Project Name: Rico Water Sampling December 2011
BP BU/AR Region/Enfos Segment:
State or Lead Regulatory Agency:
Requested Due Date (mm/dd/yy): 01/02/12

On-site Time:	Temp:
Off-site Time:	Temp:
Sky Conditions:	
Meteorological Events:	
Wind Speed:	Direction:

Lab Name: Pace Analytical Services	BP/AR Facility No.:	Consultant/Contractor:
Address: 9608 Loiret Blvd.	BP/AR Facility Address:	Address:
Lenexa, KS 66219	Site Lat/Long:	
Lab PM: Colleen Koporc	California Global ID No.:	Consultant/Contractor Project No.:
Tele/Fax: (913) 563-1407	Enfos Project No.:	Consultant/Contractor PM:
BP/AR EBM:	Provision or OOC (circle one)	Tele/Fax:
Address:	Phase/WBS:	Report Type & QC Level:
	Sub Phase/Task:	E-mail EDD To:
Tele/Fax:	Cost Element:	Invoice to: Consultant or BP or Atlantic Richfield Co. (circle one)

Lab Bottle Order No: 60112290

Item No.	Sample Description	Time	Date	Matrix: Soil/Solid	Matrix: Water/Liquid	Matrix: Air		Laboratory No.	No. of Containers	Preservative: Unpreserved	Preservative: H_2SO_4	Preservative: HNO_3	Preservative: HCl	Preservative: Methanol	Preservative: NaOH	Requested Analysis: Total Metals/Hardness	Requested Analysis: Dissolved Metals	Requested Analysis: Cyanide	Requested Analysis: Alkalinity/TDS/TSS/Sulfate	Requested Analysis: Salinity	Requested Analysis: pH					Sample Point Lat/Long and Comments
1	GW-7		12/14/11		X				5	X		X			X	X	X	X	X	X	X					(BP3N) (BP3N) (BP3C)[2] (BP3N) (BP3F)[2] 015
2	EB-1		↓		X				5	X		X			X	X	X	X	X	X	X					016
3	EB-2		↓		X				5	X		X			X	X	X	X	X	X	X					017
4	GW-6		↓		X				5	X		X			X	X	X	X	X	X	X					
5																										
6																										
7																										
8																										
9																										
10																										

	Relinquished By / Affiliation	Date	Time	Accepted By / Affiliation	Date	Time
Sampler's Name: Mark DeFriez						
Sampler's Company: Anderson Engineering Co., Inc.	[signature] / AECI	12/15	4:30p	[signature] / IDL	12/16/11	900
Shipment Date:						
Shipment Method:						
Shipment Tracking No:						

Special Instructions:

Custody Seals In Place: Yes / No | Temp Blank: Yes / No | Cooler Temp on Receipt: 2.4°F/C | Trip Blank: Yes / No | MS/MSD Sample Submitted: Yes / No

Laboratory Copy

BP COC Rev. 5 10/11/2006

Atlantic Richfield Company
bp
A BP affiliated company

184852

Chain of Custody Record

Project Name: Rico Water Sampling December 2011
BP BU/AR Region/Enfos Segment:
State or Lead Regulatory Agency:
Requested Due Date (mm/dd/yy): 01/02/12

On-site Time:	Temp:
Off-site Time:	Temp:
Sky Conditions:	
Meteorological Events:	
Wind Speed:	Direction:

Lab Name: Pace Analytical Services	BP/AR Facility No.:	Consultant/Contractor:
Address: 9608 Loiret Blvd.	BP/AR Facility Address:	Address:
Lenexa, KS 66219	Site Lat/Long:	
Lab PM: Colleen Koperc	California Global ID No.:	Consultant/Contractor Project No.:
Tele/Fax: (913) 563-1407	Enfos Project No.:	Consultant/Contractor PM:
BP/AR EBM:	Provision or OOC (circle one)	Tele/Fax:
Address:	Phase/WBS:	Report Type & QC Level:
	Sub Phase/Task:	E-mail EDD To:
Tele/Fax:	Cost Element:	Invoice to: Consultant or BP or Atlantic Richfield Co. (circle one)

Lab Bottle Order No: 60112290

Item No.	Sample Description	Time	Date	Matrix: Soil/Solid	Matrix: Water/Liquid	Matrix: Air		Laboratory No.	No. of Containers	Preservative: Unpreserved	Preservative: H_2SO_4	Preservative: HNO_3	Preservative: HCl	Preservative: Methanol	Preservative: NaOH	Requested Analysis: Total Metals/Hardness	Requested Analysis: Dissolved Metals	Requested Analysis: Cyanide	Requested Analysis: Alkalinity/TDS/TSS/Sulfate	Requested Analysis: Salinity	Requested Analysis: pH					Sample Point Lat/Long and Comments	
1	MW-4 Shallow		12/14		X				5	X		X			X	X	X	X	X	X	X					(illegible)	018
2	MW-4 Deep		↓		X				5	X		X			X	X	X	X	X	X	X						019
3	MW-5 Shallow				X				5	X		X			X	X	X	X	X	X	X						020
4	MW-5 Deep				X				5	X		X			X	X	X	X	X	X	X						021
5	MW-6 Shallow				X				5	X		X			X	X	X	X	X	X	X						022
6	MW-6 Deep				X				5	X		X			X	X	X	X	X	X	X						023
7																											
8																											
9																											
10																											

	Relinquished By / Affiliation	Date	Time	Accepted By / Affiliation	Date	Time
Sampler's Name: Mark DeFriez						
Sampler's Company: Andersen Engineering Co., Inc.	[illegible] / AECI	12/15	4:30p	[illegible]	12/16/11	900
Shipment Date:						
Shipment Method:						
Shipment Tracking No:						

Special Instructions:

Custody Seals In Place: Yes / No | Temp Blank: Yes / No | Cooler Temp on Receipt: 2.2°F/C | Trip Blank: Yes / No | MS/MSD Sample Submitted: Yes / No

Laboratory Copy

BP COC Rev. 5 10/11/2006

Pace Analytical®
www.pacelabs.com

Sample Condition Upon Receipt – ESI Tech Specs

Client Name: BP Anderson Project #: 60112290

Courier: Fed Ex ☒ UPS ☐ USPS ☐ Client ☐ Commercial ☐ Pace ☐ Other ☐ _____

Optional
Proj Due Date: 12/29/11
Proj Name:

Tracking #: 8987 2840 7112 Pace Shipping Label Used? Yes ☐ No ☒

Custody Seal on Cooler/Box Present: Yes ☒ No ☐ Seals intact: Yes ☒ No ☐

Packing Material: Bubble Wrap ☒ Bubble Bags ☐ Foam ☐ None ☐ Other ☐ _____

Thermometer Used: T-191 / T-194 **Type of Ice:** Wet Blue None (circle one) ☐ Samples received on ice, cooling process has begun.

Cooler Temperature: 3.2, 2.6, 2.2, 2.7, 3.5

Temperature should be above freezing to 6°C

Date and initials of person examining contents: JM 12/16/11 1530

Chain of Custody present:	☑Yes ☐No ☐N/A	1.
Chain of Custody filled out:	☑Yes ☐No ☐N/A	2.
Chain of Custody relinquished:	☑Yes ☐No ☐N/A	3.
Sampler name & signature on COC:	☑Yes ☐No ☐N/A	4.
Samples arrived within holding time:	☑Yes ☐No ☐N/A	5.
Short Hold Time analyses (<72hr):	☑Yes ☑No ☐N/A	6. pH
Rush Turn Around Time requested:	☑Yes ☐No ☐N/A	7.
Sufficient volume:	☑Yes ☐No ☐N/A	8.
Correct containers used:	☑Yes ☐No ☐N/A	EW-1 + EW-6 received empty containers.
-Pace containers used:	☑Yes ☐No ☐N/A	9.
Containers intact:	☑Yes ☐No ☐N/A	10.
Unpreserved 5035A soils frozen w/in 48hrs?	☐Yes ☐No ☑N/A	11.
Filtered volume received for dissolved tests?	☐Yes ☐No ☑N/A	12.
Sample labels match COC: -Includes date/time/ID/analyses Matrix: water	☑Yes ☐No ☐N/A	Sample "MW-3 Deep" relabeled not on COC. 13. 1(BP2U) (BP3U) 1(BP2U)$^{+5}$ 1(BP3U)$^{+5}$ 1(BP3C)^{12}
All containers needing preservation have been checked.	☐Yes ☐No ☑N/A	
All containers needing preservation are found to be in compliance with EPA recommendation.	☐Yes ☐No ☑N/A	14.
Exceptions: VOA, coliform, TOC, O&G, WI-DRO (water), Phenolics	☑Yes ☐No	Initial when completed MA Lot # of added preservative
Trip Blank present: Pace Trip Blank lot # (if purchased): MA	☐Yes ☐No ☑N/A	15.
Headspace in VOA vials (>6mm):	☐Yes ☐No ☑N/A	16.
Project sampled in USDA Regulated Area:	☐Yes ☐No ☑N/A	17. List State:

Client Notification/ Resolution: Copy COC to Client? Y / N Field Data Required? Y / N

Person Contacted: _____ Date/Time: _____

Comments/ Resolution: Emailed Mark about extra sample & empty containers for GW-1 & GW-6. CBK 12/29/11

Project Manager Review: CBK Date: 12/16/11

Temp Log: Record start and finish times when unpacking cooler, if >20 min, recheck sample temps.

Start: 1530	Start:
End: 1530	End:
Temp:	Temp:

Note: Whenever there is a discrepancy affecting North Carolina compliance samples, a copy of this form will be sent to the NCDENR Certification Office (i.e out of hold, incorrect preservative, out of temp, incorrect containers).

F-KS-C-004-Rev.0, 02February2011

Pace Analytical™
www.pacelabs.com

CHAIN-OF-CUSTODY / Analytical Request Document

The Chain-of-Custody is a LEGAL DOCUMENT. All relevant fields must be completed accurately.

Page: 1 of 1

Section A Required Client Information:	Section B Required Project Information:	Section C Invoice Information:
Company: Anderson Engineering	Report To:	Attention:
Address: 977 West 2100 South Salt Lake City, UT 84119	Copy To:	Company Name:
		Address:
Email To: mdefriez@andersoneng.com	Purchase Order No.:	Pace Quote Reference:
Phone: 801-284-9583 Fax:	Project Name:	Pace Project Manager:
Requested Due Date/TAT:	Project Number:	Pace Profile #:

REGULATORY AGENCY: ☐ NPDES ☐ GROUND WATER ☐ DRINKING WATER ☐ UST ☐ RCRA ☐ OTHER ____

Site Location STATE: Co

Requested Analysis Filtered (Y/N)

ITEM #	Section D Required Client Information SAMPLE ID (A-Z, 0-9 / ,-) Sample IDs MUST BE UNIQUE	MATRIX CODE (see valid codes to left)	SAMPLE TYPE (G=GRAB C=COMP)	COLLECTED Composite Start Date	Composite Start Time	Composite End/Grab Date	Composite End/Grab Time	SAMPLE TEMP AT COLLECTION	# OF CONTAINERS	Unpreserved	H_2SO_4	HNO_3	HCl	NaOH	$Na_2S_2O_3$	Methanol	Other	Analysis Test (Y/N)	Total Metals/Hardness (Y)	Dissolved Metals (Y)	Alk/TDS/TSS/Sulfate (Y)	Cyanide (Y)	Salinity (Y)	Residual Chlorine (Y/N)	Pace Project No./ Lab I.D.
1	MW-1 Deep	WT	G			12/14/11			5	X		X		X					X	X	X	X	X		001
2	MW-2 Deep	WT	G			12/14/11			5	X		X		X					X	X	X	X	X		002
3	MW-1 Shallow	WT	G			12/14/11			5	X		X		X					X	X	X	X	X		003
4																									
5																									
6																									
7																									
8																									
9																									
10																									
11																									
12																									

Valid Matrix Codes

MATRIX	CODE
DRINKING WATER	DW
WATER	WT
WASTE WATER	WW
PRODUCT	P
SOIL/SOLID	SL
OIL	OL
WIPE	WP
AIR	AR
OTHER	OT
TISSUE	TS

ADDITIONAL COMMENTS	RELINQUISHED BY / AFFILIATION	DATE	TIME	ACCEPTED BY / AFFILIATION	DATE	TIME	SAMPLE CONDITIONS			
	[illegible] / AECI	12/19/11	9:30 am	[illegible] / Pace	12/17/11	800	1.0			

SAMPLER NAME AND SIGNATURE

PRINT Name of SAMPLER: Mark Defriez

SIGNATURE of SAMPLER: [signature] DATE Signed (MM/DD/YY): 12/19/2011

Temp in °C | Received on Ice (Y/N) | Custody Sealed Cooler (Y/N) | Samples Intact (Y/N)

*Important Note: By signing this form you are accepting Pace's NET 30 day payment terms and agreeing to late charges of 1.5% per month for any invoices not paid within 30 days.

F-ALL-Q-020rev.08, 12-Oct-2007

Sample Condition Upon Receipt

Pace Analytical®
www.pacelabs.com

Client Name: Anderson Engineering Project # 6011 2423

Courier: ☑ Fed Ex ☐ UPS ☐ USPS ☐ Client ☐ Commercial ☐ Pace ☐ Other _____

Tracking #: 793022849953 Pace Shipping Label Used? ☐ Yes ☑ No

Custody Seal on Cooler/Box Present: ☐ Yes ☑ No Seals intact: ☐ Yes ☑ No

Optional	
Proj. Due Date:	12/30
Proj. Name:	Posco

Packing Material: ☐ Bubble Wrap ☐ Bubble Bags ☐ Foam ☐ None ☐ Other _____

Thermometer Used: T-191 / T-194 **Type of Ice:** Wet Blue None ☐ Samples on ice, cooling process has begun

Cooler Temperature: 1.0

Temperature should be above freezing to 6°C

Date and Initials of person examining contents: 12/19/11 [illegible]

		Comments:
Chain of Custody present:	☐Yes ☑No ☐N/A	1.
Chain of Custody filled out:	☐Yes ☐No ☐N/A	2.
Chain of Custody relinquished:	☐Yes ☐No ☐N/A	3.
Sampler name & signature on COC:	☐Yes ☐No ☐N/A	4.
Samples arrived within holding time:	☐Yes ☐No ☐N/A	5.
Short Hold Time analyses (<72hr):	☐Yes ☐No ☐N/A	6.
Rush Turn Around Time requested:	☐Yes ☐No ☐N/A	7.
Sufficient volume:	☐Yes ☐No ☐N/A	8.
Correct containers used:	☐Yes ☐No ☐N/A	9.
-Pace containers used:	☐Yes ☐No ☐N/A	
Containers intact:	☐Yes ☐No ☐N/A	10.
Unpreserved 5035A soils frozen w/in 48hrs?	☐Yes ☐No ☑N/A	11.
Filtered volume received for dissolved tests	☐Yes ☐No ☑N/A	12.
Sample labels match COC:	☐Yes ☐No ☐N/A	13. MW-1 Deep - 1BP3U, 1BP3N (1.5), 1BP3F (1.5), 1BP3U, 1BP3C pH 12.0
-Includes date/time/ID/analyses Matrix: WT		MW-2 Deep
All containers needing preservation have been checked.	☑Yes ☐No ☐N/A	14. MW-1 Shallow
All containers needing preservation are found to be in compliance with EPA recommendation.	☑Yes ☐No ☐N/A	MW-1 Shallow BP3U lid was off - no volume
Exceptions: VOA, coliform, TOC, O&G, WI-DRO (water), Phenolics	☐Yes ☑No	Initial when completed _____ Lot # of added preservative _____
Trip Blank present:	☐Yes ☐No ☑N/A	15. Received samples in a box
Pace Trip Blank lot # (if purchased): _____		From FED-EX, no cooler, no ICE, no COC
Headspace in VOA vials (>6mm):	☐Yes ☐No ☑N/A	16.
Project sampled in USDA Regulated Area:	☐Yes ☐No ☑N/A	17. List State: _____

Client Notification/ Resolution: Copy COC to Client? (Y) / N Field Data Required? Y / N

Person Contacted: _____ Date/Time: _____

Comments/ Resolution: Emailed Mark Defriez about out of deep sample. CBK 12/19/11. Per Mark run these samples. CBK 12/19/11

Project Manager Review: CBK Date: 12/19/11

Note: Whenever there is a discrepancy affecting North Carolina compliance samples, a copy of this form will be sent to the North Carolina DEHNR Certification Office (i.e out of hold, incorrect preservative, out of temp, incorrect containers)

F-KS-C-003-Rev.05, 19February2010

Appendix G

Field Photos

December 2011 Field Photos

Cross Section at Station DR-1

Cross Section at Station DR-5

Cross Section at Station DR-2

Cross Section at Station DR-7

December 2011 Field Photos

Cross Section at Station DR-4-SW

Cross Section at Station DR-G

Appendix H

Field Log Book Records

Rico Surface Water Sampling
12/13/11

DR-G
BM EL
WL EL
Velocities: (No- River Iced over

pH T 35.4°F
EC 435 µS DO

photo#

Sample collected at:

12/15/11
DR-4-SW
~~DR~~
BM EL
WL EL

Velocities: Could not obtain due to ice shelf over water

pH (Lab) T 35.6°F
EC 475 µS DO (No

photo# 5

Sample Collected at: 4:20 pm

12/13/11
DR-7
BM EL 7.22'
WL EL 11.35'
East → West
Velocities: 0.2, 0.2, 0.5, 0.6, 1.1, 1.7, 1.8, 1.3, 1.1, 1.3, 1.2, 1.5, 1.0, 1.2, 0.3, 0.8, 1.1, 1.6, 0.6, 0.7, 0.6, 0.7, 0.8, 0.2, 0.3

pH T 35.4°F
EC 530 µS DO

photo # 4

sample Collected at: 3:45pm

~~DR-6~~ 12/13/11
DR-6
~~North~~ South Flume

pH T: 1.8°C
EC: 1235 µS DO

Sample Collected at: 3:16 pm

12/13/11
DR-2
BM EL 5.49'
WL EL 11.75
East → West
Velocities: 0.2, 0.1, 0.3, 0.5, 0.8, 0.5, 0.7, 1.1, 0.9, 0.7, 0.5, 0.6, 0.4, 0.7, 0.2, 0.1, 0.1

pH (Done in Lab) T 6°C
EC 328 µS DO CNO

photo# 3

Sample collected at: 3:05 pm

12/13/11
DR-5
BM EL 5.63
WL EL 8.27

Velocities: flow too slow to detect

~~pH~~
pH (Lab) T 3.3°C
EC 1184 µS DO CNO

photo # 2

Sample Collected at: 3:00 pm

12/13/11
DR-4 - Bond 15 Discharge
BM EL
WL EL

~~Velocity~~

pH T: 12.0°C
EC 1200uS DO

Sample Collected at:

12/13/11
DR-1
BM EL
WL EL

Could not obtain flow reading due to ice shelf in river

pH 8.21 T 4.1°C
EC 275uS DO 3.7ppm

Sample collected at: 11:45am

photo #1

12/13/11

DR-3

pH 7.65 T 12°C

EC 1275 µS DO —

collected at 12:35 pm

12/13/11

DR-8

pH 7.65 T 12°C

EC 1275 µS DO —

Collected @ 12 35 pm

FB

pH: 8.75 T: 9.8°C

EC: 17.1 µS DO

12/14/11
MW-4 Shallow
Depth: 16.95 Collected: 9:25
pH T ~~44.1°F~~ 45.6°F
EC ~~1450~~ 1320 µS DO

MW-4 Deep
Depth 16.88' Collected 9:36
pH T: 44.1°F
EC 1450 µS DO

MW-1 Shallow
Depth: 6.31' collected 10:10
~~pH~~ EC 1057 µS T 47.6°F
pH DO

MW-1 Deep 10:13
Depth: 8.99' Collected
EC 1065 µS T 42.0°F
pH DO

12/14/11
MW-2 Shallow DRY
Depth Collected 10:35
EC NA T NA
pH DO

MW-2 Deep
Depth 10.16 Collected 10:45
EC 1026 µS T 59.7°F
pH DO

MW-6 Shallow
Depth 23.23 Collected
EC 1975 µS T 56.3°F
pH DO

MW-6 Deep
Depth 23.16
EC 1270 µS T 58.5°F
pH DO

12/14/11

MW-5 Shallow

Depth 16.19' Collected 11:55a

pH T 47.8°F

EC 2.26 mS DO

MW-5 Deep

Depth 17.33' Collected 11:50a

pH T 50.0°F

EC 2.13 mS DO

MW-3 Shallow DRY

Depth DRY

pH T

EC DO

MW-3 Deep

Depth 10.37'

pH T 57.5°F

EC 1083 µS DO

Appendix I

North Flume Ultrasonic Meter Data with Flowrates

Date, Time	Reading	Parameter	Depth to water (ft)	Depth from sensor to Bottom of Flume (ft)	Depth of Flow (ft)	Depth of Flow (in)	Flowrate (cfs)	Flowrate (gpm)
12/1/2011 0:00	8.56	Level	1.44	2.073	0.633	7.595	1.54	689.8
12/1/2011 0:15	8.56	Level	1.44	2.073	0.633	7.595	1.54	689.8
12/1/2011 0:30	8.56	Level	1.44	2.073	0.633	7.595	1.54	689.8
12/1/2011 0:45	8.56	Level	1.44	2.073	0.633	7.595	1.54	689.8
12/1/2011 1:00	8.56	Level	1.44	2.073	0.633	7.595	1.54	689.8
12/1/2011 1:15	8.56	Level	1.44	2.073	0.633	7.595	1.54	689.8
12/1/2011 1:30	8.56	Level	1.44	2.073	0.633	7.595	1.54	689.8
12/1/2011 1:45	8.56	Level	1.44	2.073	0.633	7.595	1.54	689.8
12/1/2011 2:00	8.56	Level	1.44	2.073	0.633	7.595	1.54	689.8
12/1/2011 2:15	8.56	Level	1.44	2.073	0.633	7.595	1.54	689.8
12/1/2011 2:30	8.56	Level	1.44	2.073	0.633	7.595	1.54	689.8
12/1/2011 2:45	8.56	Level	1.44	2.073	0.633	7.595	1.54	689.8
12/1/2011 3:00	8.56	Level	1.44	2.073	0.633	7.595	1.54	689.8
12/1/2011 3:15	8.56	Level	1.44	2.073	0.633	7.595	1.54	689.8
12/1/2011 3:30	8.56	Level	1.44	2.073	0.633	7.595	1.54	689.8
12/1/2011 3:45	8.56	Level	1.44	2.073	0.633	7.595	1.54	689.8
12/1/2011 4:00	8.56	Level	1.44	2.073	0.633	7.595	1.54	689.8
12/1/2011 4:15	8.56	Level	1.44	2.073	0.633	7.595	1.54	689.8
12/1/2011 4:30	8.56	Level	1.44	2.073	0.633	7.595	1.54	689.8
12/1/2011 4:45	8.56	Level	1.44	2.073	0.633	7.595	1.54	689.8
12/1/2011 5:00	8.56	Level	1.44	2.073	0.633	7.595	1.54	689.8
12/1/2011 5:15	8.56	Level	1.44	2.073	0.633	7.595	1.54	689.8
12/1/2011 5:30	8.56	Level	1.44	2.073	0.633	7.595	1.54	689.8
12/1/2011 5:45	8.56	Level	1.44	2.073	0.633	7.595	1.54	689.8
12/1/2011 6:00	8.56	Level	1.44	2.073	0.633	7.595	1.54	689.8
12/1/2011 6:15	8.56	Level	1.44	2.073	0.633	7.595	1.54	689.8
12/1/2011 6:30	8.56	Level	1.44	2.073	0.633	7.595	1.54	689.8
12/1/2011 6:45	8.56	Level	1.44	2.073	0.633	7.595	1.54	689.8
12/1/2011 7:00	8.56	Level	1.44	2.073	0.633	7.595	1.54	689.8
12/1/2011 7:15	8.56	Level	1.44	2.073	0.633	7.595	1.54	689.8
12/1/2011 7:30	8.51	Level	1.49	2.073	0.583	6.995	1.36	609.2
12/1/2011 7:45	8.56	Level	1.44	2.073	0.633	7.595	1.54	689.8
12/1/2011 8:00	8.56	Level	1.44	2.073	0.633	7.595	1.54	689.8
12/1/2011 8:15	8.56	Level	1.44	2.073	0.633	7.595	1.54	689.8
12/1/2011 8:30	8.56	Level	1.44	2.073	0.633	7.595	1.54	689.8
12/1/2011 8:45	8.56	Level	1.44	2.073	0.633	7.595	1.54	689.8
12/1/2011 9:00	8.56	Level	1.44	2.073	0.633	7.595	1.54	689.8
12/1/2011 9:15	8.6	Level	1.4	2.073	0.673	8.075	1.69	756.7
12/1/2011 9:30	8.56	Level	1.44	2.073	0.633	7.595	1.54	689.8
12/1/2011 9:45	8.56	Level	1.44	2.073	0.633	7.595	1.54	689.8
12/1/2011 10:00	8.56	Level	1.44	2.073	0.633	7.595	1.54	689.8
12/1/2011 10:15	8.56	Level	1.44	2.073	0.633	7.595	1.54	689.8
12/1/2011 10:30	8.56	Level	1.44	2.073	0.633	7.595	1.54	689.8
12/1/2011 10:45	8.56	Level	1.44	2.073	0.633	7.595	1.54	689.8
12/1/2011 11:00	8.56	Level	1.44	2.073	0.633	7.595	1.54	689.8

12/1/2011 11:15	8.6	Level	1.4	2.073	0.673	8.075	1.69	756.7
12/1/2011 11:30	8.56	Level	1.44	2.073	0.633	7.595	1.54	689.8
12/1/2011 11:45	8.56	Level	1.44	2.073	0.633	7.595	1.54	689.8
12/1/2011 12:00	8.56	Level	1.44	2.073	0.633	7.595	1.54	689.8
12/1/2011 12:15	8.56	Level	1.44	2.073	0.633	7.595	1.54	689.8
12/1/2011 12:30	8.56	Level	1.44	2.073	0.633	7.595	1.54	689.8
12/1/2011 12:45	8.56	Level	1.44	2.073	0.633	7.595	1.54	689.8
12/1/2011 13:00	8.56	Level	1.44	2.073	0.633	7.595	1.54	689.8
12/1/2011 13:15	8.6	Level	1.4	2.073	0.673	8.075	1.69	756.7
12/1/2011 13:30	8.6	Level	1.4	2.073	0.673	8.075	1.69	756.7
12/1/2011 13:45	8.56	Level	1.44	2.073	0.633	7.595	1.54	689.8
12/1/2011 14:00	8.56	Level	1.44	2.073	0.633	7.595	1.54	689.8
12/1/2011 14:15	8.6	Level	1.4	2.073	0.673	8.075	1.69	756.7
12/1/2011 14:30	8.56	Level	1.44	2.073	0.633	7.595	1.54	689.8
12/1/2011 14:45	8.56	Level	1.44	2.073	0.633	7.595	1.54	689.8
12/1/2011 15:00	8.56	Level	1.44	2.073	0.633	7.595	1.54	689.8
12/1/2011 15:15	8.56	Level	1.44	2.073	0.633	7.595	1.54	689.8
12/1/2011 15:30	8.56	Level	1.44	2.073	0.633	7.595	1.54	689.8
12/1/2011 15:45	8.56	Level	1.44	2.073	0.633	7.595	1.54	689.8
12/1/2011 16:00	8.56	Level	1.44	2.073	0.633	7.595	1.54	689.8
12/1/2011 16:15	8.56	Level	1.44	2.073	0.633	7.595	1.54	689.8
12/1/2011 16:30	8.56	Level	1.44	2.073	0.633	7.595	1.54	689.8
12/1/2011 16:45	8.56	Level	1.44	2.073	0.633	7.595	1.54	689.8
12/1/2011 17:00	8.56	Level	1.44	2.073	0.633	7.595	1.54	689.8
12/1/2011 17:15	8.56	Level	1.44	2.073	0.633	7.595	1.54	689.8
12/1/2011 17:30	8.56	Level	1.44	2.073	0.633	7.595	1.54	689.8
12/1/2011 17:45	8.56	Level	1.44	2.073	0.633	7.595	1.54	689.8
12/1/2011 18:00	8.56	Level	1.44	2.073	0.633	7.595	1.54	689.8
12/1/2011 18:15	8.56	Level	1.44	2.073	0.633	7.595	1.54	689.8
12/1/2011 18:30	8.56	Level	1.44	2.073	0.633	7.595	1.54	689.8
12/1/2011 18:45	8.56	Level	1.44	2.073	0.633	7.595	1.54	689.8
12/1/2011 19:00	8.56	Level	1.44	2.073	0.633	7.595	1.54	689.8
12/1/2011 19:15	8.56	Level	1.44	2.073	0.633	7.595	1.54	689.8
12/1/2011 19:30	8.56	Level	1.44	2.073	0.633	7.595	1.54	689.8
12/1/2011 19:45	8.56	Level	1.44	2.073	0.633	7.595	1.54	689.8
12/1/2011 20:00	8.56	Level	1.44	2.073	0.633	7.595	1.54	689.8
12/1/2011 20:15	8.56	Level	1.44	2.073	0.633	7.595	1.54	689.8
12/1/2011 20:30	8.56	Level	1.44	2.073	0.633	7.595	1.54	689.8
12/1/2011 20:45	8.56	Level	1.44	2.073	0.633	7.595	1.54	689.8
12/1/2011 21:00	8.56	Level	1.44	2.073	0.633	7.595	1.54	689.8
12/1/2011 21:15	8.56	Level	1.44	2.073	0.633	7.595	1.54	689.8
12/1/2011 21:30	8.56	Level	1.44	2.073	0.633	7.595	1.54	689.8
12/1/2011 21:45	8.56	Level	1.44	2.073	0.633	7.595	1.54	689.8
12/1/2011 22:00	8.56	Level	1.44	2.073	0.633	7.595	1.54	689.8
12/1/2011 22:15	8.56	Level	1.44	2.073	0.633	7.595	1.54	689.8
12/1/2011 22:30	8.56	Level	1.44	2.073	0.633	7.595	1.54	689.8
12/1/2011 22:45	8.6	Level	1.4	2.073	0.673	8.075	1.69	756.7

12/1/2011 23:00	8.6	Level	1.4	2.073	0.673	8.075	1.69	756.7
12/1/2011 23:15	8.56	Level	1.44	2.073	0.633	7.595	1.54	689.8
12/1/2011 23:30	8.56	Level	1.44	2.073	0.633	7.595	1.54	689.8
12/1/2011 23:45	8.56	Level	1.44	2.073	0.633	7.595	1.54	689.8
12/2/2011 0:00	8.56	Level	1.44	2.073	0.633	7.595	1.54	689.8
12/2/2011 0:15	8.56	Level	1.44	2.073	0.633	7.595	1.54	689.8
12/2/2011 0:30	8.56	Level	1.44	2.073	0.633	7.595	1.54	689.8
12/2/2011 0:45	8.56	Level	1.44	2.073	0.633	7.595	1.54	689.8
12/2/2011 1:00	8.56	Level	1.44	2.073	0.633	7.595	1.54	689.8
12/2/2011 1:15	8.56	Level	1.44	2.073	0.633	7.595	1.54	689.8
12/2/2011 1:30	8.56	Level	1.44	2.073	0.633	7.595	1.54	689.8
12/2/2011 1:45	8.56	Level	1.44	2.073	0.633	7.595	1.54	689.8
12/2/2011 2:00	8.56	Level	1.44	2.073	0.633	7.595	1.54	689.8
12/2/2011 2:15	8.56	Level	1.44	2.073	0.633	7.595	1.54	689.8
12/2/2011 2:30	8.56	Level	1.44	2.073	0.633	7.595	1.54	689.8
12/2/2011 2:45	8.56	Level	1.44	2.073	0.633	7.595	1.54	689.8
12/2/2011 3:00	8.56	Level	1.44	2.073	0.633	7.595	1.54	689.8
12/2/2011 3:15	8.56	Level	1.44	2.073	0.633	7.595	1.54	689.8
12/2/2011 3:30	8.56	Level	1.44	2.073	0.633	7.595	1.54	689.8
12/2/2011 3:45	8.56	Level	1.44	2.073	0.633	7.595	1.54	689.8
12/2/2011 4:00	8.56	Level	1.44	2.073	0.633	7.595	1.54	689.8
12/2/2011 4:15	8.56	Level	1.44	2.073	0.633	7.595	1.54	689.8
12/2/2011 4:30	8.56	Level	1.44	2.073	0.633	7.595	1.54	689.8
12/2/2011 4:45	8.56	Level	1.44	2.073	0.633	7.595	1.54	689.8
12/2/2011 5:00	8.56	Level	1.44	2.073	0.633	7.595	1.54	689.8
12/2/2011 5:15	8.56	Level	1.44	2.073	0.633	7.595	1.54	689.8
12/2/2011 5:30	8.56	Level	1.44	2.073	0.633	7.595	1.54	689.8
12/2/2011 5:45	8.56	Level	1.44	2.073	0.633	7.595	1.54	689.8
12/2/2011 6:00	8.56	Level	1.44	2.073	0.633	7.595	1.54	689.8
12/2/2011 6:15	8.56	Level	1.44	2.073	0.633	7.595	1.54	689.8
12/2/2011 6:30	8.56	Level	1.44	2.073	0.633	7.595	1.54	689.8
12/2/2011 6:45	8.51	Level	1.49	2.073	0.583	6.995	1.36	609.2
12/2/2011 7:00	8.56	Level	1.44	2.073	0.633	7.595	1.54	689.8
12/2/2011 7:15	8.56	Level	1.44	2.073	0.633	7.595	1.54	689.8
12/2/2011 7:30	8.56	Level	1.44	2.073	0.633	7.595	1.54	689.8
12/2/2011 7:45	8.56	Level	1.44	2.073	0.633	7.595	1.54	689.8
12/2/2011 8:00	8.56	Level	1.44	2.073	0.633	7.595	1.54	689.8
12/2/2011 8:15	8.56	Level	1.44	2.073	0.633	7.595	1.54	689.8
12/2/2011 8:30	8.56	Level	1.44	2.073	0.633	7.595	1.54	689.8
12/2/2011 8:45	8.56	Level	1.44	2.073	0.633	7.595	1.54	689.8
12/2/2011 9:00	8.56	Level	1.44	2.073	0.633	7.595	1.54	689.8
12/2/2011 9:15	8.56	Level	1.44	2.073	0.633	7.595	1.54	689.8
12/2/2011 9:30	8.56	Level	1.44	2.073	0.633	7.595	1.54	689.8
12/2/2011 9:45	8.6	Level	1.4	2.073	0.673	8.075	1.69	756.7
12/2/2011 10:00	8.56	Level	1.44	2.073	0.633	7.595	1.54	689.8
12/2/2011 10:15	8.56	Level	1.44	2.073	0.633	7.595	1.54	689.8
12/2/2011 10:30	8.56	Level	1.44	2.073	0.633	7.595	1.54	689.8

12/2/2011 10:45	8.56 Level	1.44	2.073	0.633	7.595	1.54	689.8
12/2/2011 11:00	8.56 Level	1.44	2.073	0.633	7.595	1.54	689.8
12/2/2011 11:15	8.56 Level	1.44	2.073	0.633	7.595	1.54	689.8
12/2/2011 11:30	8.56 Level	1.44	2.073	0.633	7.595	1.54	689.8
12/2/2011 11:45	8.56 Level	1.44	2.073	0.633	7.595	1.54	689.8
12/2/2011 12:00	8.56 Level	1.44	2.073	0.633	7.595	1.54	689.8
12/2/2011 12:15	8.56 Level	1.44	2.073	0.633	7.595	1.54	689.8
12/2/2011 12:30	8.56 Level	1.44	2.073	0.633	7.595	1.54	689.8
12/2/2011 12:45	8.56 Level	1.44	2.073	0.633	7.595	1.54	689.8
12/2/2011 13:00	8.56 Level	1.44	2.073	0.633	7.595	1.54	689.8
12/2/2011 13:15	8.56 Level	1.44	2.073	0.633	7.595	1.54	689.8
12/2/2011 13:30	8.56 Level	1.44	2.073	0.633	7.595	1.54	689.8
12/2/2011 13:45	8.56 Level	1.44	2.073	0.633	7.595	1.54	689.8
12/2/2011 14:00	8.56 Level	1.44	2.073	0.633	7.595	1.54	689.8
12/2/2011 14:15	8.56 Level	1.44	2.073	0.633	7.595	1.54	689.8
12/2/2011 14:30	8.56 Level	1.44	2.073	0.633	7.595	1.54	689.8
12/2/2011 14:45	8.56 Level	1.44	2.073	0.633	7.595	1.54	689.8
12/2/2011 15:00	8.56 Level	1.44	2.073	0.633	7.595	1.54	689.8
12/2/2011 15:15	8.56 Level	1.44	2.073	0.633	7.595	1.54	689.8
12/2/2011 15:30	8.56 Level	1.44	2.073	0.633	7.595	1.54	689.8
12/2/2011 15:45	8.56 Level	1.44	2.073	0.633	7.595	1.54	689.8
12/2/2011 16:00	8.56 Level	1.44	2.073	0.633	7.595	1.54	689.8
12/2/2011 16:15	8.56 Level	1.44	2.073	0.633	7.595	1.54	689.8
12/2/2011 16:30	8.56 Level	1.44	2.073	0.633	7.595	1.54	689.8
12/2/2011 16:45	8.56 Level	1.44	2.073	0.633	7.595	1.54	689.8
12/2/2011 17:00	8.56 Level	1.44	2.073	0.633	7.595	1.54	689.8
12/2/2011 17:15	8.56 Level	1.44	2.073	0.633	7.595	1.54	689.8
12/2/2011 17:30	8.56 Level	1.44	2.073	0.633	7.595	1.54	689.8
12/2/2011 17:45	8.56 Level	1.44	2.073	0.633	7.595	1.54	689.8
12/2/2011 18:00	8.56 Level	1.44	2.073	0.633	7.595	1.54	689.8
12/2/2011 18:15	8.56 Level	1.44	2.073	0.633	7.595	1.54	689.8
12/2/2011 18:30	8.56 Level	1.44	2.073	0.633	7.595	1.54	689.8
12/2/2011 18:45	8.56 Level	1.44	2.073	0.633	7.595	1.54	689.8
12/2/2011 19:00	8.56 Level	1.44	2.073	0.633	7.595	1.54	689.8
12/2/2011 19:15	8.56 Level	1.44	2.073	0.633	7.595	1.54	689.8
12/2/2011 19:30	8.56 Level	1.44	2.073	0.633	7.595	1.54	689.8
12/2/2011 19:45	8.56 Level	1.44	2.073	0.633	7.595	1.54	689.8
12/2/2011 20:00	8.51 Level	1.49	2.073	0.583	6.995	1.36	609.2
12/2/2011 20:15	8.56 Level	1.44	2.073	0.633	7.595	1.54	689.8
12/2/2011 20:30	8.56 Level	1.44	2.073	0.633	7.595	1.54	689.8
12/2/2011 20:45	8.56 Level	1.44	2.073	0.633	7.595	1.54	689.8
12/2/2011 21:00	8.56 Level	1.44	2.073	0.633	7.595	1.54	689.8
12/2/2011 21:15	8.56 Level	1.44	2.073	0.633	7.595	1.54	689.8
12/2/2011 21:30	8.56 Level	1.44	2.073	0.633	7.595	1.54	689.8
12/2/2011 21:45	8.56 Level	1.44	2.073	0.633	7.595	1.54	689.8
12/2/2011 22:00	8.56 Level	1.44	2.073	0.633	7.595	1.54	689.8
12/2/2011 22:15	8.56 Level	1.44	2.073	0.633	7.595	1.54	689.8

12/2/2011 22:30	8.56 Level	1.44	2.073	0.633	7.595	1.54	689.8
12/2/2011 22:45	8.56 Level	1.44	2.073	0.633	7.595	1.54	689.8
12/2/2011 23:00	8.56 Level	1.44	2.073	0.633	7.595	1.54	689.8
12/2/2011 23:15	8.56 Level	1.44	2.073	0.633	7.595	1.54	689.8
12/2/2011 23:30	8.56 Level	1.44	2.073	0.633	7.595	1.54	689.8
12/2/2011 23:45	8.56 Level	1.44	2.073	0.633	7.595	1.54	689.8
12/3/2011 0:00	8.56 Level	1.44	2.073	0.633	7.595	1.54	689.8
12/3/2011 0:15	8.56 Level	1.44	2.073	0.633	7.595	1.54	689.8
12/3/2011 0:30	8.56 Level	1.44	2.073	0.633	7.595	1.54	689.8
12/3/2011 0:45	8.56 Level	1.44	2.073	0.633	7.595	1.54	689.8
12/3/2011 1:00	8.56 Level	1.44	2.073	0.633	7.595	1.54	689.8
12/3/2011 1:15	8.56 Level	1.44	2.073	0.633	7.595	1.54	689.8
12/3/2011 1:30	8.56 Level	1.44	2.073	0.633	7.595	1.54	689.8
12/3/2011 1:45	8.56 Level	1.44	2.073	0.633	7.595	1.54	689.8
12/3/2011 2:00	8.56 Level	1.44	2.073	0.633	7.595	1.54	689.8
12/3/2011 2:15	8.56 Level	1.44	2.073	0.633	7.595	1.54	689.8
12/3/2011 2:30	8.56 Level	1.44	2.073	0.633	7.595	1.54	689.8
12/3/2011 2:45	8.56 Level	1.44	2.073	0.633	7.595	1.54	689.8
12/3/2011 3:00	8.56 Level	1.44	2.073	0.633	7.595	1.54	689.8
12/3/2011 3:15	8.56 Level	1.44	2.073	0.633	7.595	1.54	689.8
12/3/2011 3:30	8.56 Level	1.44	2.073	0.633	7.595	1.54	689.8
12/3/2011 3:45	8.56 Level	1.44	2.073	0.633	7.595	1.54	689.8
12/3/2011 4:00	8.56 Level	1.44	2.073	0.633	7.595	1.54	689.8
12/3/2011 4:15	8.56 Level	1.44	2.073	0.633	7.595	1.54	689.8
12/3/2011 4:30	8.51 Level	1.49	2.073	0.583	6.995	1.36	609.2
12/3/2011 4:45	8.56 Level	1.44	2.073	0.633	7.595	1.54	689.8
12/3/2011 5:00	8.56 Level	1.44	2.073	0.633	7.595	1.54	689.8
12/3/2011 5:15	8.51 Level	1.49	2.073	0.583	6.995	1.36	609.2
12/3/2011 5:30	8.56 Level	1.44	2.073	0.633	7.595	1.54	689.8
12/3/2011 5:45	8.56 Level	1.44	2.073	0.633	7.595	1.54	689.8
12/3/2011 6:00	8.56 Level	1.44	2.073	0.633	7.595	1.54	689.8
12/3/2011 6:15	8.56 Level	1.44	2.073	0.633	7.595	1.54	689.8
12/3/2011 6:30	8.56 Level	1.44	2.073	0.633	7.595	1.54	689.8
12/3/2011 6:45	8.56 Level	1.44	2.073	0.633	7.595	1.54	689.8
12/3/2011 7:00	8.56 Level	1.44	2.073	0.633	7.595	1.54	689.8
12/3/2011 7:15	8.56 Level	1.44	2.073	0.633	7.595	1.54	689.8
12/3/2011 7:30	8.56 Level	1.44	2.073	0.633	7.595	1.54	689.8
12/3/2011 7:45	8.56 Level	1.44	2.073	0.633	7.595	1.54	689.8
12/3/2011 8:00	8.56 Level	1.44	2.073	0.633	7.595	1.54	689.8
12/3/2011 8:15	8.56 Level	1.44	2.073	0.633	7.595	1.54	689.8
12/3/2011 8:30	8.51 Level	1.49	2.073	0.583	6.995	1.36	609.2
12/3/2011 8:45	8.56 Level	1.44	2.073	0.633	7.595	1.54	689.8
12/3/2011 9:00	8.56 Level	1.44	2.073	0.633	7.595	1.54	689.8
12/3/2011 9:15	8.56 Level	1.44	2.073	0.633	7.595	1.54	689.8
12/3/2011 9:30	8.56 Level	1.44	2.073	0.633	7.595	1.54	689.8
12/3/2011 9:45	8.56 Level	1.44	2.073	0.633	7.595	1.54	689.8
12/3/2011 10:00	8.56 Level	1.44	2.073	0.633	7.595	1.54	689.8

12/3/2011 10:15	8.51 Level	1.49	2.073	0.583	6.995	1.36	609.2
12/3/2011 10:30	8.56 Level	1.44	2.073	0.633	7.595	1.54	689.8
12/3/2011 10:45	8.56 Level	1.44	2.073	0.633	7.595	1.54	689.8
12/3/2011 11:00	8.56 Level	1.44	2.073	0.633	7.595	1.54	689.8
12/3/2011 11:15	8.56 Level	1.44	2.073	0.633	7.595	1.54	689.8
12/3/2011 11:30	8.56 Level	1.44	2.073	0.633	7.595	1.54	689.8
12/3/2011 11:45	8.56 Level	1.44	2.073	0.633	7.595	1.54	689.8
12/3/2011 12:00	8.56 Level	1.44	2.073	0.633	7.595	1.54	689.8
12/3/2011 12:15	8.56 Level	1.44	2.073	0.633	7.595	1.54	689.8
12/3/2011 12:30	8.56 Level	1.44	2.073	0.633	7.595	1.54	689.8
12/3/2011 12:45	8.56 Level	1.44	2.073	0.633	7.595	1.54	689.8
12/3/2011 13:00	8.56 Level	1.44	2.073	0.633	7.595	1.54	689.8
12/3/2011 13:15	8.56 Level	1.44	2.073	0.633	7.595	1.54	689.8
12/3/2011 13:30	8.56 Level	1.44	2.073	0.633	7.595	1.54	689.8
12/3/2011 13:45	8.56 Level	1.44	2.073	0.633	7.595	1.54	689.8
12/3/2011 14:00	8.56 Level	1.44	2.073	0.633	7.595	1.54	689.8
12/3/2011 14:15	8.56 Level	1.44	2.073	0.633	7.595	1.54	689.8
12/3/2011 14:30	8.56 Level	1.44	2.073	0.633	7.595	1.54	689.8
12/3/2011 14:45	8.56 Level	1.44	2.073	0.633	7.595	1.54	689.8
12/3/2011 15:00	8.56 Level	1.44	2.073	0.633	7.595	1.54	689.8
12/3/2011 15:15	8.56 Level	1.44	2.073	0.633	7.595	1.54	689.8
12/3/2011 15:30	8.56 Level	1.44	2.073	0.633	7.595	1.54	689.8
12/3/2011 15:45	8.56 Level	1.44	2.073	0.633	7.595	1.54	689.8
12/3/2011 16:00	8.56 Level	1.44	2.073	0.633	7.595	1.54	689.8
12/3/2011 16:15	8.56 Level	1.44	2.073	0.633	7.595	1.54	689.8
12/3/2011 16:30	8.56 Level	1.44	2.073	0.633	7.595	1.54	689.8
12/3/2011 16:45	8.56 Level	1.44	2.073	0.633	7.595	1.54	689.8
12/3/2011 17:00	8.56 Level	1.44	2.073	0.633	7.595	1.54	689.8
12/3/2011 17:15	8.56 Level	1.44	2.073	0.633	7.595	1.54	689.8
12/3/2011 17:30	8.56 Level	1.44	2.073	0.633	7.595	1.54	689.8
12/3/2011 17:45	8.56 Level	1.44	2.073	0.633	7.595	1.54	689.8
12/3/2011 18:00	8.56 Level	1.44	2.073	0.633	7.595	1.54	689.8
12/3/2011 18:15	8.56 Level	1.44	2.073	0.633	7.595	1.54	689.8
12/3/2011 18:30	8.56 Level	1.44	2.073	0.633	7.595	1.54	689.8
12/3/2011 18:45	8.56 Level	1.44	2.073	0.633	7.595	1.54	689.8
12/3/2011 19:00	8.56 Level	1.44	2.073	0.633	7.595	1.54	689.8
12/3/2011 19:15	8.56 Level	1.44	2.073	0.633	7.595	1.54	689.8
12/3/2011 19:30	8.56 Level	1.44	2.073	0.633	7.595	1.54	689.8
12/3/2011 19:45	8.51 Level	1.49	2.073	0.583	6.995	1.36	609.2
12/3/2011 20:00	8.56 Level	1.44	2.073	0.633	7.595	1.54	689.8
12/3/2011 20:15	8.56 Level	1.44	2.073	0.633	7.595	1.54	689.8
12/3/2011 20:30	8.56 Level	1.44	2.073	0.633	7.595	1.54	689.8
12/3/2011 20:45	8.56 Level	1.44	2.073	0.633	7.595	1.54	689.8
12/3/2011 21:00	8.56 Level	1.44	2.073	0.633	7.595	1.54	689.8
12/3/2011 21:15	8.56 Level	1.44	2.073	0.633	7.595	1.54	689.8
12/3/2011 21:30	8.56 Level	1.44	2.073	0.633	7.595	1.54	689.8
12/3/2011 21:45	8.56 Level	1.44	2.073	0.633	7.595	1.54	689.8

12/3/2011 22:00	8.56	Level	1.44	2.073	0.633	7.595	1.54	689.8
12/3/2011 22:15	8.52	Level	1.48	2.073	0.593	7.115	1.39	625.0
12/3/2011 22:30	8.56	Level	1.44	2.073	0.633	7.595	1.54	689.8
12/3/2011 22:45	8.56	Level	1.44	2.073	0.633	7.595	1.54	689.8
12/3/2011 23:00	8.56	Level	1.44	2.073	0.633	7.595	1.54	689.8
12/3/2011 23:15	8.56	Level	1.44	2.073	0.633	7.595	1.54	689.8
12/3/2011 23:30	8.56	Level	1.44	2.073	0.633	7.595	1.54	689.8
12/3/2011 23:45	8.56	Level	1.44	2.073	0.633	7.595	1.54	689.8
12/4/2011 0:00	8.56	Level	1.44	2.073	0.633	7.595	1.54	689.8
12/4/2011 0:15	8.56	Level	1.44	2.073	0.633	7.595	1.54	689.8
12/4/2011 0:30	8.56	Level	1.44	2.073	0.633	7.595	1.54	689.8
12/4/2011 0:45	8.56	Level	1.44	2.073	0.633	7.595	1.54	689.8
12/4/2011 1:00	8.56	Level	1.44	2.073	0.633	7.595	1.54	689.8
12/4/2011 1:15	8.56	Level	1.44	2.073	0.633	7.595	1.54	689.8
12/4/2011 1:30	8.56	Level	1.44	2.073	0.633	7.595	1.54	689.8
12/4/2011 1:45	8.56	Level	1.44	2.073	0.633	7.595	1.54	689.8
12/4/2011 2:00	8.52	Level	1.48	2.073	0.593	7.115	1.39	625.0
12/4/2011 2:15	8.56	Level	1.44	2.073	0.633	7.595	1.54	689.8
12/4/2011 2:30	8.56	Level	1.44	2.073	0.633	7.595	1.54	689.8
12/4/2011 2:45	8.56	Level	1.44	2.073	0.633	7.595	1.54	689.8
12/4/2011 3:00	8.56	Level	1.44	2.073	0.633	7.595	1.54	689.8
12/4/2011 3:15	8.56	Level	1.44	2.073	0.633	7.595	1.54	689.8
12/4/2011 3:30	8.56	Level	1.44	2.073	0.633	7.595	1.54	689.8
12/4/2011 3:45	8.56	Level	1.44	2.073	0.633	7.595	1.54	689.8
12/4/2011 4:00	8.56	Level	1.44	2.073	0.633	7.595	1.54	689.8
12/4/2011 4:15	8.56	Level	1.44	2.073	0.633	7.595	1.54	689.8
12/4/2011 4:30	8.56	Level	1.44	2.073	0.633	7.595	1.54	689.8
12/4/2011 4:45	8.56	Level	1.44	2.073	0.633	7.595	1.54	689.8
12/4/2011 5:00	8.56	Level	1.44	2.073	0.633	7.595	1.54	689.8
12/4/2011 5:15	8.56	Level	1.44	2.073	0.633	7.595	1.54	689.8
12/4/2011 5:30	8.56	Level	1.44	2.073	0.633	7.595	1.54	689.8
12/4/2011 5:45	8.56	Level	1.44	2.073	0.633	7.595	1.54	689.8
12/4/2011 6:00	8.56	Level	1.44	2.073	0.633	7.595	1.54	689.8
12/4/2011 6:15	8.56	Level	1.44	2.073	0.633	7.595	1.54	689.8
12/4/2011 6:30	8.56	Level	1.44	2.073	0.633	7.595	1.54	689.8
12/4/2011 6:45	8.56	Level	1.44	2.073	0.633	7.595	1.54	689.8
12/4/2011 7:00	8.52	Level	1.48	2.073	0.593	7.115	1.39	625.0
12/4/2011 7:15	8.56	Level	1.44	2.073	0.633	7.595	1.54	689.8
12/4/2011 7:30	8.56	Level	1.44	2.073	0.633	7.595	1.54	689.8
12/4/2011 7:45	8.56	Level	1.44	2.073	0.633	7.595	1.54	689.8
12/4/2011 8:00	8.51	Level	1.49	2.073	0.583	6.995	1.36	609.2
12/4/2011 8:15	8.51	Level	1.49	2.073	0.583	6.995	1.36	609.2
12/4/2011 8:30	8.56	Level	1.44	2.073	0.633	7.595	1.54	689.8
12/4/2011 8:45	8.56	Level	1.44	2.073	0.633	7.595	1.54	689.8
12/4/2011 9:00	8.56	Level	1.44	2.073	0.633	7.595	1.54	689.8
12/4/2011 9:15	8.56	Level	1.44	2.073	0.633	7.595	1.54	689.8
12/4/2011 9:30	8.51	Level	1.49	2.073	0.583	6.995	1.36	609.2

12/4/2011 9:45	8.51 Level	1.49	2.073	0.583	6.995	1.36	609.2
12/4/2011 10:00	8.56 Level	1.44	2.073	0.633	7.595	1.54	689.8
12/4/2011 10:15	8.51 Level	1.49	2.073	0.583	6.995	1.36	609.2
12/4/2011 10:30	8.56 Level	1.44	2.073	0.633	7.595	1.54	689.8
12/4/2011 10:45	8.56 Level	1.44	2.073	0.633	7.595	1.54	689.8
12/4/2011 11:00	8.56 Level	1.44	2.073	0.633	7.595	1.54	689.8
12/4/2011 11:15	8.56 Level	1.44	2.073	0.633	7.595	1.54	689.8
12/4/2011 11:30	8.56 Level	1.44	2.073	0.633	7.595	1.54	689.8
12/4/2011 11:45	8.56 Level	1.44	2.073	0.633	7.595	1.54	689.8
12/4/2011 12:00	8.56 Level	1.44	2.073	0.633	7.595	1.54	689.8
12/4/2011 12:15	8.56 Level	1.44	2.073	0.633	7.595	1.54	689.8
12/4/2011 12:30	8.56 Level	1.44	2.073	0.633	7.595	1.54	689.8
12/4/2011 12:45	8.56 Level	1.44	2.073	0.633	7.595	1.54	689.8
12/4/2011 13:00	8.56 Level	1.44	2.073	0.633	7.595	1.54	689.8
12/4/2011 13:15	8.56 Level	1.44	2.073	0.633	7.595	1.54	689.8
12/4/2011 13:30	8.56 Level	1.44	2.073	0.633	7.595	1.54	689.8
12/4/2011 13:45	8.56 Level	1.44	2.073	0.633	7.595	1.54	689.8
12/4/2011 14:00	8.56 Level	1.44	2.073	0.633	7.595	1.54	689.8
12/4/2011 14:15	8.56 Level	1.44	2.073	0.633	7.595	1.54	689.8
12/4/2011 14:30	8.56 Level	1.44	2.073	0.633	7.595	1.54	689.8
12/4/2011 14:45	8.56 Level	1.44	2.073	0.633	7.595	1.54	689.8
12/4/2011 15:00	8.56 Level	1.44	2.073	0.633	7.595	1.54	689.8
12/4/2011 15:15	8.56 Level	1.44	2.073	0.633	7.595	1.54	689.8
12/4/2011 15:30	8.56 Level	1.44	2.073	0.633	7.595	1.54	689.8
12/4/2011 15:45	8.56 Level	1.44	2.073	0.633	7.595	1.54	689.8
12/4/2011 16:00	8.56 Level	1.44	2.073	0.633	7.595	1.54	689.8
12/4/2011 16:15	8.56 Level	1.44	2.073	0.633	7.595	1.54	689.8
12/4/2011 16:30	8.51 Level	1.49	2.073	0.583	6.995	1.36	609.2
12/4/2011 16:45	8.56 Level	1.44	2.073	0.633	7.595	1.54	689.8
12/4/2011 17:00	8.56 Level	1.44	2.073	0.633	7.595	1.54	689.8
12/4/2011 17:15	8.56 Level	1.44	2.073	0.633	7.595	1.54	689.8
12/4/2011 17:30	8.56 Level	1.44	2.073	0.633	7.595	1.54	689.8
12/4/2011 17:45	8.56 Level	1.44	2.073	0.633	7.595	1.54	689.8
12/4/2011 18:00	8.56 Level	1.44	2.073	0.633	7.595	1.54	689.8
12/4/2011 18:15	8.56 Level	1.44	2.073	0.633	7.595	1.54	689.8
12/4/2011 18:30	8.51 Level	1.49	2.073	0.583	6.995	1.36	609.2
12/4/2011 18:45	8.56 Level	1.44	2.073	0.633	7.595	1.54	689.8
12/4/2011 19:00	8.56 Level	1.44	2.073	0.633	7.595	1.54	689.8
12/4/2011 19:15	8.56 Level	1.44	2.073	0.633	7.595	1.54	689.8
12/4/2011 19:30	8.56 Level	1.44	2.073	0.633	7.595	1.54	689.8
12/4/2011 19:45	8.56 Level	1.44	2.073	0.633	7.595	1.54	689.8
12/4/2011 20:00	8.56 Level	1.44	2.073	0.633	7.595	1.54	689.8
12/4/2011 20:15	8.56 Level	1.44	2.073	0.633	7.595	1.54	689.8
12/4/2011 20:30	8.56 Level	1.44	2.073	0.633	7.595	1.54	689.8
12/4/2011 20:45	8.56 Level	1.44	2.073	0.633	7.595	1.54	689.8
12/4/2011 21:00	8.51 Level	1.49	2.073	0.583	6.995	1.36	609.2
12/4/2011 21:15	8.56 Level	1.44	2.073	0.633	7.595	1.54	689.8

12/4/2011 21:30	8.51 Level	1.49	2.073	0.583	6.995	1.36	609.2
12/4/2011 21:45	8.56 Level	1.44	2.073	0.633	7.595	1.54	689.8
12/4/2011 22:00	8.51 Level	1.49	2.073	0.583	6.995	1.36	609.2
12/4/2011 22:15	8.51 Level	1.49	2.073	0.583	6.995	1.36	609.2
12/4/2011 22:30	8.51 Level	1.49	2.073	0.583	6.995	1.36	609.2
12/4/2011 22:45	8.52 Level	1.48	2.073	0.593	7.115	1.39	625.0
12/4/2011 23:00	8.55 Level	1.45	2.073	0.623	7.475	1.50	673.4
12/4/2011 23:15	8.56 Level	1.44	2.073	0.633	7.595	1.54	689.8
12/4/2011 23:30	8.51 Level	1.49	2.073	0.583	6.995	1.36	609.2
12/4/2011 23:45	8.51 Level	1.49	2.073	0.583	6.995	1.36	609.2
12/5/2011 0:00	8.55 Level	1.45	2.073	0.623	7.475	1.50	673.4
12/5/2011 0:15	8.51 Level	1.49	2.073	0.583	6.995	1.36	609.2
12/5/2011 0:30	8.51 Level	1.49	2.073	0.583	6.995	1.36	609.2
12/5/2011 0:45	8.56 Level	1.44	2.073	0.633	7.595	1.54	689.8
12/5/2011 1:00	8.51 Level	1.49	2.073	0.583	6.995	1.36	609.2
12/5/2011 1:15	8.56 Level	1.44	2.073	0.633	7.595	1.54	689.8
12/5/2011 1:30	8.51 Level	1.49	2.073	0.583	6.995	1.36	609.2
12/5/2011 1:45	8.51 Level	1.49	2.073	0.583	6.995	1.36	609.2
12/5/2011 2:00	8.56 Level	1.44	2.073	0.633	7.595	1.54	689.8
12/5/2011 2:15	8.51 Level	1.49	2.073	0.583	6.995	1.36	609.2
12/5/2011 2:30	8.56 Level	1.44	2.073	0.633	7.595	1.54	689.8
12/5/2011 2:45	8.56 Level	1.44	2.073	0.633	7.595	1.54	689.8
12/5/2011 3:00	8.56 Level	1.44	2.073	0.633	7.595	1.54	689.8
12/5/2011 3:15	8.51 Level	1.49	2.073	0.583	6.995	1.36	609.2
12/5/2011 3:30	8.51 Level	1.49	2.073	0.583	6.995	1.36	609.2
12/5/2011 3:45	8.56 Level	1.44	2.073	0.633	7.595	1.54	689.8
12/5/2011 4:00	8.51 Level	1.49	2.073	0.583	6.995	1.36	609.2
12/5/2011 4:15	8.51 Level	1.49	2.073	0.583	6.995	1.36	609.2
12/5/2011 4:30	8.51 Level	1.49	2.073	0.583	6.995	1.36	609.2
12/5/2011 4:45	8.56 Level	1.44	2.073	0.633	7.595	1.54	689.8
12/5/2011 5:00	8.56 Level	1.44	2.073	0.633	7.595	1.54	689.8
12/5/2011 5:15	8.56 Level	1.44	2.073	0.633	7.595	1.54	689.8
12/5/2011 5:30	8.51 Level	1.49	2.073	0.583	6.995	1.36	609.2
12/5/2011 5:45	8.56 Level	1.44	2.073	0.633	7.595	1.54	689.8
12/5/2011 6:00	8.56 Level	1.44	2.073	0.633	7.595	1.54	689.8
12/5/2011 6:15	8.56 Level	1.44	2.073	0.633	7.595	1.54	689.8
12/5/2011 6:30	8.51 Level	1.49	2.073	0.583	6.995	1.36	609.2
12/5/2011 6:45	8.51 Level	1.49	2.073	0.583	6.995	1.36	609.2
12/5/2011 7:00	8.51 Level	1.49	2.073	0.583	6.995	1.36	609.2
12/5/2011 7:15	8.51 Level	1.49	2.073	0.583	6.995	1.36	609.2
12/5/2011 7:30	8.51 Level	1.49	2.073	0.583	6.995	1.36	609.2
12/5/2011 7:45	8.56 Level	1.44	2.073	0.633	7.595	1.54	689.8
12/5/2011 8:00	8.51 Level	1.49	2.073	0.583	6.995	1.36	609.2
12/5/2011 8:15	8.51 Level	1.49	2.073	0.583	6.995	1.36	609.2
12/5/2011 8:30	8.51 Level	1.49	2.073	0.583	6.995	1.36	609.2
12/5/2011 8:45	8.51 Level	1.49	2.073	0.583	6.995	1.36	609.2
12/5/2011 9:00	8.51 Level	1.49	2.073	0.583	6.995	1.36	609.2

12/5/2011 9:15	8.51	Level	1.49	2.073	0.583	6.995	1.36	609.2
12/5/2011 9:30	8.51	Level	1.49	2.073	0.583	6.995	1.36	609.2
12/5/2011 9:45	8.51	Level	1.49	2.073	0.583	6.995	1.36	609.2
12/5/2011 10:00	8.51	Level	1.49	2.073	0.583	6.995	1.36	609.2
12/5/2011 10:15	8.51	Level	1.49	2.073	0.583	6.995	1.36	609.2
12/5/2011 10:30	8.51	Level	1.49	2.073	0.583	6.995	1.36	609.2
12/5/2011 10:45	8.56	Level	1.44	2.073	0.633	7.595	1.54	689.8
12/5/2011 11:00	8.51	Level	1.49	2.073	0.583	6.995	1.36	609.2
12/5/2011 11:15	8.56	Level	1.44	2.073	0.633	7.595	1.54	689.8
12/5/2011 11:30	8.56	Level	1.44	2.073	0.633	7.595	1.54	689.8
12/5/2011 11:45	8.56	Level	1.44	2.073	0.633	7.595	1.54	689.8
12/5/2011 12:00	8.51	Level	1.49	2.073	0.583	6.995	1.36	609.2
12/5/2011 12:15	8.56	Level	1.44	2.073	0.633	7.595	1.54	689.8
12/5/2011 12:30	8.56	Level	1.44	2.073	0.633	7.595	1.54	689.8
12/5/2011 12:45	8.56	Level	1.44	2.073	0.633	7.595	1.54	689.8
12/5/2011 13:00	8.56	Level	1.44	2.073	0.633	7.595	1.54	689.8
12/5/2011 13:15	8.51	Level	1.49	2.073	0.583	6.995	1.36	609.2
12/5/2011 13:30	8.51	Level	1.49	2.073	0.583	6.995	1.36	609.2
12/5/2011 13:45	8.56	Level	1.44	2.073	0.633	7.595	1.54	689.8
12/5/2011 14:00	8.56	Level	1.44	2.073	0.633	7.595	1.54	689.8
12/5/2011 14:15	8.56	Level	1.44	2.073	0.633	7.595	1.54	689.8
12/5/2011 14:30	8.51	Level	1.49	2.073	0.583	6.995	1.36	609.2
12/5/2011 14:45	8.51	Level	1.49	2.073	0.583	6.995	1.36	609.2
12/5/2011 15:00	8.56	Level	1.44	2.073	0.633	7.595	1.54	689.8
12/5/2011 15:15	8.56	Level	1.44	2.073	0.633	7.595	1.54	689.8
12/5/2011 15:30	8.51	Level	1.49	2.073	0.583	6.995	1.36	609.2
12/5/2011 15:45	8.56	Level	1.44	2.073	0.633	7.595	1.54	689.8
12/5/2011 16:00	8.51	Level	1.49	2.073	0.583	6.995	1.36	609.2
12/5/2011 16:15	8.56	Level	1.44	2.073	0.633	7.595	1.54	689.8
12/5/2011 16:30	8.51	Level	1.49	2.073	0.583	6.995	1.36	609.2
12/5/2011 16:45	8.56	Level	1.44	2.073	0.633	7.595	1.54	689.8
12/5/2011 17:00	8.56	Level	1.44	2.073	0.633	7.595	1.54	689.8
12/5/2011 17:15	8.51	Level	1.49	2.073	0.583	6.995	1.36	609.2
12/5/2011 17:30	8.51	Level	1.49	2.073	0.583	6.995	1.36	609.2
12/5/2011 17:45	8.56	Level	1.44	2.073	0.633	7.595	1.54	689.8
12/5/2011 18:00	8.56	Level	1.44	2.073	0.633	7.595	1.54	689.8
12/5/2011 18:15	8.56	Level	1.44	2.073	0.633	7.595	1.54	689.8
12/5/2011 18:30	8.51	Level	1.49	2.073	0.583	6.995	1.36	609.2
12/5/2011 18:45	8.51	Level	1.49	2.073	0.583	6.995	1.36	609.2
12/5/2011 19:00	8.51	Level	1.49	2.073	0.583	6.995	1.36	609.2
12/5/2011 19:15	8.51	Level	1.49	2.073	0.583	6.995	1.36	609.2
12/5/2011 19:30	8.51	Level	1.49	2.073	0.583	6.995	1.36	609.2
12/5/2011 19:45	8.51	Level	1.49	2.073	0.583	6.995	1.36	609.2
12/5/2011 20:00	8.51	Level	1.49	2.073	0.583	6.995	1.36	609.2
12/5/2011 20:15	8.51	Level	1.49	2.073	0.583	6.995	1.36	609.2
12/5/2011 20:30	8.51	Level	1.49	2.073	0.583	6.995	1.36	609.2
12/5/2011 20:45	8.51	Level	1.49	2.073	0.583	6.995	1.36	609.2

12/5/2011 21:00	8.51 Level	1.49	2.073	0.583	6.995	1.36	609.2
12/5/2011 21:15	8.51 Level	1.49	2.073	0.583	6.995	1.36	609.2
12/5/2011 21:30	8.51 Level	1.49	2.073	0.583	6.995	1.36	609.2
12/5/2011 21:45	8.51 Level	1.49	2.073	0.583	6.995	1.36	609.2
12/5/2011 22:00	8.51 Level	1.49	2.073	0.583	6.995	1.36	609.2
12/5/2011 22:15	8.51 Level	1.49	2.073	0.583	6.995	1.36	609.2
12/5/2011 22:30	8.46 Level	1.54	2.073	0.533	6.395	1.19	532.0
12/5/2011 22:45	8.51 Level	1.49	2.073	0.583	6.995	1.36	609.2
12/5/2011 23:00	8.51 Level	1.49	2.073	0.583	6.995	1.36	609.2
12/5/2011 23:15	8.51 Level	1.49	2.073	0.583	6.995	1.36	609.2
12/5/2011 23:30	8.51 Level	1.49	2.073	0.583	6.995	1.36	609.2
12/5/2011 23:45	8.51 Level	1.49	2.073	0.583	6.995	1.36	609.2
12/6/2011 0:00	8.51 Level	1.49	2.073	0.583	6.995	1.36	609.2
12/6/2011 0:15	8.51 Level	1.49	2.073	0.583	6.995	1.36	609.2
12/6/2011 0:30	8.51 Level	1.49	2.073	0.583	6.995	1.36	609.2
12/6/2011 0:45	8.51 Level	1.49	2.073	0.583	6.995	1.36	609.2
12/6/2011 1:00	8.51 Level	1.49	2.073	0.583	6.995	1.36	609.2
12/6/2011 1:15	8.51 Level	1.49	2.073	0.583	6.995	1.36	609.2
12/6/2011 1:30	8.51 Level	1.49	2.073	0.583	6.995	1.36	609.2
12/6/2011 1:45	8.51 Level	1.49	2.073	0.583	6.995	1.36	609.2
12/6/2011 2:00	8.51 Level	1.49	2.073	0.583	6.995	1.36	609.2
12/6/2011 2:15	8.51 Level	1.49	2.073	0.583	6.995	1.36	609.2
12/6/2011 2:30	8.51 Level	1.49	2.073	0.583	6.995	1.36	609.2
12/6/2011 2:45	8.51 Level	1.49	2.073	0.583	6.995	1.36	609.2
12/6/2011 3:00	8.46 Level	1.54	2.073	0.533	6.395	1.19	532.0
12/6/2011 3:15	8.51 Level	1.49	2.073	0.583	6.995	1.36	609.2
12/6/2011 3:30	8.51 Level	1.49	2.073	0.583	6.995	1.36	609.2
12/6/2011 3:45	8.51 Level	1.49	2.073	0.583	6.995	1.36	609.2
12/6/2011 4:00	8.46 Level	1.54	2.073	0.533	6.395	1.19	532.0
12/6/2011 4:15	8.51 Level	1.49	2.073	0.583	6.995	1.36	609.2
12/6/2011 4:30	8.51 Level	1.49	2.073	0.583	6.995	1.36	609.2
12/6/2011 4:45	8.51 Level	1.49	2.073	0.583	6.995	1.36	609.2
12/6/2011 5:00	8.51 Level	1.49	2.073	0.583	6.995	1.36	609.2
12/6/2011 5:15	8.51 Level	1.49	2.073	0.583	6.995	1.36	609.2
12/6/2011 5:30	8.51 Level	1.49	2.073	0.583	6.995	1.36	609.2
12/6/2011 5:45	8.51 Level	1.49	2.073	0.583	6.995	1.36	609.2
12/6/2011 6:00	8.51 Level	1.49	2.073	0.583	6.995	1.36	609.2
12/6/2011 6:15	8.51 Level	1.49	2.073	0.583	6.995	1.36	609.2
12/6/2011 6:30	8.51 Level	1.49	2.073	0.583	6.995	1.36	609.2
12/6/2011 6:45	8.46 Level	1.54	2.073	0.533	6.395	1.19	532.0
12/6/2011 7:00	8.51 Level	1.49	2.073	0.583	6.995	1.36	609.2
12/6/2011 7:15	8.46 Level	1.54	2.073	0.533	6.395	1.19	532.0
12/6/2011 7:30	8.51 Level	1.49	2.073	0.583	6.995	1.36	609.2
12/6/2011 7:45	8.51 Level	1.49	2.073	0.583	6.995	1.36	609.2
12/6/2011 8:00	8.51 Level	1.49	2.073	0.583	6.995	1.36	609.2
12/6/2011 8:15	8.51 Level	1.49	2.073	0.583	6.995	1.36	609.2
12/6/2011 8:30	8.51 Level	1.49	2.073	0.583	6.995	1.36	609.2

12/6/2011 8:45	8.51	Level	1.49	2.073	0.583	6.995	1.36	609.2
12/6/2011 9:00	8.51	Level	1.49	2.073	0.583	6.995	1.36	609.2
12/6/2011 9:15	8.51	Level	1.49	2.073	0.583	6.995	1.36	609.2
12/6/2011 9:30	8.51	Level	1.49	2.073	0.583	6.995	1.36	609.2
12/6/2011 9:45	8.51	Level	1.49	2.073	0.583	6.995	1.36	609.2
12/6/2011 10:00	8.51	Level	1.49	2.073	0.583	6.995	1.36	609.2
12/6/2011 10:15	8.51	Level	1.49	2.073	0.583	6.995	1.36	609.2
12/6/2011 10:30	8.56	Level	1.44	2.073	0.633	7.595	1.54	689.8
12/6/2011 10:45	8.56	Level	1.44	2.073	0.633	7.595	1.54	689.8
12/6/2011 11:00	8.51	Level	1.49	2.073	0.583	6.995	1.36	609.2
12/6/2011 11:15	8.56	Level	1.44	2.073	0.633	7.595	1.54	689.8
12/6/2011 11:30	8.56	Level	1.44	2.073	0.633	7.595	1.54	689.8
12/6/2011 11:45	8.56	Level	1.44	2.073	0.633	7.595	1.54	689.8
12/6/2011 12:00	8.56	Level	1.44	2.073	0.633	7.595	1.54	689.8
12/6/2011 12:15	8.56	Level	1.44	2.073	0.633	7.595	1.54	689.8
12/6/2011 12:30	8.56	Level	1.44	2.073	0.633	7.595	1.54	689.8
12/6/2011 12:45	8.56	Level	1.44	2.073	0.633	7.595	1.54	689.8
12/6/2011 13:00	8.56	Level	1.44	2.073	0.633	7.595	1.54	689.8
12/6/2011 13:15	8.56	Level	1.44	2.073	0.633	7.595	1.54	689.8
12/6/2011 13:30	8.56	Level	1.44	2.073	0.633	7.595	1.54	689.8
12/6/2011 13:45	8.56	Level	1.44	2.073	0.633	7.595	1.54	689.8
12/6/2011 14:00	8.56	Level	1.44	2.073	0.633	7.595	1.54	689.8
12/6/2011 14:15	8.56	Level	1.44	2.073	0.633	7.595	1.54	689.8
12/6/2011 14:30	8.56	Level	1.44	2.073	0.633	7.595	1.54	689.8
12/6/2011 14:45	8.56	Level	1.44	2.073	0.633	7.595	1.54	689.8
12/6/2011 15:00	8.56	Level	1.44	2.073	0.633	7.595	1.54	689.8
12/6/2011 15:15	8.56	Level	1.44	2.073	0.633	7.595	1.54	689.8
12/6/2011 15:30	8.56	Level	1.44	2.073	0.633	7.595	1.54	689.8
12/6/2011 15:45	8.6	Level	1.4	2.073	0.673	8.075	1.69	756.7
12/6/2011 16:00	8.56	Level	1.44	2.073	0.633	7.595	1.54	689.8
12/6/2011 16:15	8.56	Level	1.44	2.073	0.633	7.595	1.54	689.8
12/6/2011 16:30	8.56	Level	1.44	2.073	0.633	7.595	1.54	689.8
12/6/2011 16:45	8.56	Level	1.44	2.073	0.633	7.595	1.54	689.8
12/6/2011 17:00	8.56	Level	1.44	2.073	0.633	7.595	1.54	689.8
12/6/2011 17:15	8.56	Level	1.44	2.073	0.633	7.595	1.54	689.8
12/6/2011 17:30	8.56	Level	1.44	2.073	0.633	7.595	1.54	689.8
12/6/2011 17:45	8.56	Level	1.44	2.073	0.633	7.595	1.54	689.8
12/6/2011 18:00	8.56	Level	1.44	2.073	0.633	7.595	1.54	689.8
12/6/2011 18:15	8.51	Level	1.49	2.073	0.583	6.995	1.36	609.2
12/6/2011 18:30	8.56	Level	1.44	2.073	0.633	7.595	1.54	689.8
12/6/2011 18:45	8.56	Level	1.44	2.073	0.633	7.595	1.54	689.8
12/6/2011 19:00	8.56	Level	1.44	2.073	0.633	7.595	1.54	689.8
12/6/2011 19:15	8.56	Level	1.44	2.073	0.633	7.595	1.54	689.8
12/6/2011 19:30	8.56	Level	1.44	2.073	0.633	7.595	1.54	689.8
12/6/2011 19:45	8.56	Level	1.44	2.073	0.633	7.595	1.54	689.8
12/6/2011 20:00	8.56	Level	1.44	2.073	0.633	7.595	1.54	689.8
12/6/2011 20:15	8.56	Level	1.44	2.073	0.633	7.595	1.54	689.8

12/6/2011 20:30	8.56 Level	1.44	2.073	0.633	7.595	1.54	689.8
12/6/2011 20:45	8.56 Level	1.44	2.073	0.633	7.595	1.54	689.8
12/6/2011 21:00	8.56 Level	1.44	2.073	0.633	7.595	1.54	689.8
12/6/2011 21:15	8.51 Level	1.49	2.073	0.583	6.995	1.36	609.2
12/6/2011 21:30	8.51 Level	1.49	2.073	0.583	6.995	1.36	609.2
12/6/2011 21:45	8.56 Level	1.44	2.073	0.633	7.595	1.54	689.8
12/6/2011 22:00	8.51 Level	1.49	2.073	0.583	6.995	1.36	609.2
12/6/2011 22:15	8.51 Level	1.49	2.073	0.583	6.995	1.36	609.2
12/6/2011 22:30	8.51 Level	1.49	2.073	0.583	6.995	1.36	609.2
12/6/2011 22:45	8.51 Level	1.49	2.073	0.583	6.995	1.36	609.2
12/6/2011 23:00	8.51 Level	1.49	2.073	0.583	6.995	1.36	609.2
12/6/2011 23:15	8.51 Level	1.49	2.073	0.583	6.995	1.36	609.2
12/6/2011 23:30	8.56 Level	1.44	2.073	0.633	7.595	1.54	689.8
12/6/2011 23:45	8.51 Level	1.49	2.073	0.583	6.995	1.36	609.2
12/7/2011 0:00	8.56 Level	1.44	2.073	0.633	7.595	1.54	689.8
12/7/2011 0:15	8.56 Level	1.44	2.073	0.633	7.595	1.54	689.8
12/7/2011 0:30	8.51 Level	1.49	2.073	0.583	6.995	1.36	609.2
12/7/2011 0:45	8.51 Level	1.49	2.073	0.583	6.995	1.36	609.2
12/7/2011 1:00	8.51 Level	1.49	2.073	0.583	6.995	1.36	609.2
12/7/2011 1:15	8.51 Level	1.49	2.073	0.583	6.995	1.36	609.2
12/7/2011 1:30	8.51 Level	1.49	2.073	0.583	6.995	1.36	609.2
12/7/2011 1:45	8.56 Level	1.44	2.073	0.633	7.595	1.54	689.8
12/7/2011 2:00	8.56 Level	1.44	2.073	0.633	7.595	1.54	689.8
12/7/2011 2:15	8.51 Level	1.49	2.073	0.583	6.995	1.36	609.2
12/7/2011 2:30	8.51 Level	1.49	2.073	0.583	6.995	1.36	609.2
12/7/2011 2:45	8.56 Level	1.44	2.073	0.633	7.595	1.54	689.8
12/7/2011 3:00	8.51 Level	1.49	2.073	0.583	6.995	1.36	609.2
12/7/2011 3:15	8.51 Level	1.49	2.073	0.583	6.995	1.36	609.2
12/7/2011 3:30	8.56 Level	1.44	2.073	0.633	7.595	1.54	689.8
12/7/2011 3:45	8.56 Level	1.44	2.073	0.633	7.595	1.54	689.8
12/7/2011 4:00	8.56 Level	1.44	2.073	0.633	7.595	1.54	689.8
12/7/2011 4:15	8.51 Level	1.49	2.073	0.583	6.995	1.36	609.2
12/7/2011 4:30	8.56 Level	1.44	2.073	0.633	7.595	1.54	689.8
12/7/2011 4:45	8.56 Level	1.44	2.073	0.633	7.595	1.54	689.8
12/7/2011 5:00	8.51 Level	1.49	2.073	0.583	6.995	1.36	609.2
12/7/2011 5:15	8.51 Level	1.49	2.073	0.583	6.995	1.36	609.2
12/7/2011 5:30	8.51 Level	1.49	2.073	0.583	6.995	1.36	609.2
12/7/2011 5:45	8.51 Level	1.49	2.073	0.583	6.995	1.36	609.2
12/7/2011 6:00	8.51 Level	1.49	2.073	0.583	6.995	1.36	609.2
12/7/2011 6:15	8.56 Level	1.44	2.073	0.633	7.595	1.54	689.8
12/7/2011 6:30	8.51 Level	1.49	2.073	0.583	6.995	1.36	609.2
12/7/2011 6:45	8.51 Level	1.49	2.073	0.583	6.995	1.36	609.2
12/7/2011 7:00	8.56 Level	1.44	2.073	0.633	7.595	1.54	689.8
12/7/2011 7:15	8.51 Level	1.49	2.073	0.583	6.995	1.36	609.2
12/7/2011 7:30	8.56 Level	1.44	2.073	0.633	7.595	1.54	689.8
12/7/2011 7:45	8.56 Level	1.44	2.073	0.633	7.595	1.54	689.8
12/7/2011 8:00	8.56 Level	1.44	2.073	0.633	7.595	1.54	689.8

12/7/2011 8:15	8.51	Level	1.49	2.073	0.583	6.995	1.36	609.2
12/7/2011 8:30	8.51	Level	1.49	2.073	0.583	6.995	1.36	609.2
12/7/2011 8:45	8.51	Level	1.49	2.073	0.583	6.995	1.36	609.2
12/7/2011 9:00	8.56	Level	1.44	2.073	0.633	7.595	1.54	689.8
12/7/2011 9:15	8.51	Level	1.49	2.073	0.583	6.995	1.36	609.2
12/7/2011 9:30	8.56	Level	1.44	2.073	0.633	7.595	1.54	689.8
12/7/2011 9:45	8.51	Level	1.49	2.073	0.583	6.995	1.36	609.2
12/7/2011 10:00	8.51	Level	1.49	2.073	0.583	6.995	1.36	609.2
12/7/2011 10:15	8.56	Level	1.44	2.073	0.633	7.595	1.54	689.8
12/7/2011 10:30	8.51	Level	1.49	2.073	0.583	6.995	1.36	609.2
12/7/2011 10:45	8.56	Level	1.44	2.073	0.633	7.595	1.54	689.8
12/7/2011 11:00	8.56	Level	1.44	2.073	0.633	7.595	1.54	689.8
12/7/2011 11:15	8.56	Level	1.44	2.073	0.633	7.595	1.54	689.8
12/7/2011 11:30	8.56	Level	1.44	2.073	0.633	7.595	1.54	689.8
12/7/2011 11:45	8.55	Level	1.45	2.073	0.623	7.475	1.50	673.4
12/7/2011 12:00	8.55	Level	1.45	2.073	0.623	7.475	1.50	673.4
12/7/2011 12:15	8.55	Level	1.45	2.073	0.623	7.475	1.50	673.4
12/7/2011 12:30	8.55	Level	1.45	2.073	0.623	7.475	1.50	673.4
12/7/2011 12:45	8.55	Level	1.45	2.073	0.623	7.475	1.50	673.4
12/7/2011 13:00	8.56	Level	1.44	2.073	0.633	7.595	1.54	689.8
12/7/2011 13:15	8.55	Level	1.45	2.073	0.623	7.475	1.50	673.4
12/7/2011 13:30	8.6	Level	1.4	2.073	0.673	8.075	1.69	756.7
12/7/2011 13:45	8.55	Level	1.45	2.073	0.623	7.475	1.50	673.4
12/7/2011 14:00	8.55	Level	1.45	2.073	0.623	7.475	1.50	673.4
12/7/2011 14:15	8.56	Level	1.44	2.073	0.633	7.595	1.54	689.8
12/7/2011 14:30	8.56	Level	1.44	2.073	0.633	7.595	1.54	689.8
12/7/2011 14:45	8.56	Level	1.44	2.073	0.633	7.595	1.54	689.8
12/7/2011 15:00	8.56	Level	1.44	2.073	0.633	7.595	1.54	689.8
12/7/2011 15:15	8.55	Level	1.45	2.073	0.623	7.475	1.50	673.4
12/7/2011 15:30	8.55	Level	1.45	2.073	0.623	7.475	1.50	673.4
12/7/2011 15:45	8.6	Level	1.4	2.073	0.673	8.075	1.69	756.7
12/7/2011 16:00	8.55	Level	1.45	2.073	0.623	7.475	1.50	673.4
12/7/2011 16:15	8.56	Level	1.44	2.073	0.633	7.595	1.54	689.8
12/7/2011 16:30	8.56	Level	1.44	2.073	0.633	7.595	1.54	689.8
12/7/2011 16:45	8.55	Level	1.45	2.073	0.623	7.475	1.50	673.4
12/7/2011 17:00	8.55	Level	1.45	2.073	0.623	7.475	1.50	673.4
12/7/2011 17:15	8.55	Level	1.45	2.073	0.623	7.475	1.50	673.4
12/7/2011 17:30	8.56	Level	1.44	2.073	0.633	7.595	1.54	689.8
12/7/2011 17:45	8.56	Level	1.44	2.073	0.633	7.595	1.54	689.8
12/7/2011 18:00	8.56	Level	1.44	2.073	0.633	7.595	1.54	689.8
12/7/2011 18:15	8.56	Level	1.44	2.073	0.633	7.595	1.54	689.8
12/7/2011 18:30	8.56	Level	1.44	2.073	0.633	7.595	1.54	689.8
12/7/2011 18:45	8.56	Level	1.44	2.073	0.633	7.595	1.54	689.8
12/7/2011 19:00	8.56	Level	1.44	2.073	0.633	7.595	1.54	689.8
12/7/2011 19:15	8.56	Level	1.44	2.073	0.633	7.595	1.54	689.8
12/7/2011 19:30	8.56	Level	1.44	2.073	0.633	7.595	1.54	689.8
12/7/2011 19:45	8.56	Level	1.44	2.073	0.633	7.595	1.54	689.8

12/7/2011 20:00	8.56	Level	1.44	2.073	0.633	7.595	1.54	689.8
12/7/2011 20:15	8.56	Level	1.44	2.073	0.633	7.595	1.54	689.8
12/7/2011 20:30	8.56	Level	1.44	2.073	0.633	7.595	1.54	689.8
12/7/2011 20:45	8.56	Level	1.44	2.073	0.633	7.595	1.54	689.8
12/7/2011 21:00	8.56	Level	1.44	2.073	0.633	7.595	1.54	689.8
12/7/2011 21:15	8.56	Level	1.44	2.073	0.633	7.595	1.54	689.8
12/7/2011 21:30	8.56	Level	1.44	2.073	0.633	7.595	1.54	689.8
12/7/2011 21:45	8.51	Level	1.49	2.073	0.583	6.995	1.36	609.2
12/7/2011 22:00	8.56	Level	1.44	2.073	0.633	7.595	1.54	689.8
12/7/2011 22:15	8.51	Level	1.49	2.073	0.583	6.995	1.36	609.2
12/7/2011 22:30	8.56	Level	1.44	2.073	0.633	7.595	1.54	689.8
12/7/2011 22:45	8.56	Level	1.44	2.073	0.633	7.595	1.54	689.8
12/7/2011 23:00	8.51	Level	1.49	2.073	0.583	6.995	1.36	609.2
12/7/2011 23:15	8.51	Level	1.49	2.073	0.583	6.995	1.36	609.2
12/7/2011 23:30	8.51	Level	1.49	2.073	0.583	6.995	1.36	609.2
12/7/2011 23:45	8.51	Level	1.49	2.073	0.583	6.995	1.36	609.2
12/8/2011 0:00	8.51	Level	1.49	2.073	0.583	6.995	1.36	609.2
12/8/2011 0:15	8.51	Level	1.49	2.073	0.583	6.995	1.36	609.2
12/8/2011 0:30	8.56	Level	1.44	2.073	0.633	7.595	1.54	689.8
12/8/2011 0:45	8.51	Level	1.49	2.073	0.583	6.995	1.36	609.2
12/8/2011 1:00	8.51	Level	1.49	2.073	0.583	6.995	1.36	609.2
12/8/2011 1:15	8.56	Level	1.44	2.073	0.633	7.595	1.54	689.8
12/8/2011 1:30	8.56	Level	1.44	2.073	0.633	7.595	1.54	689.8
12/8/2011 1:45	8.56	Level	1.44	2.073	0.633	7.595	1.54	689.8
12/8/2011 2:00	8.51	Level	1.49	2.073	0.583	6.995	1.36	609.2
12/8/2011 2:15	8.56	Level	1.44	2.073	0.633	7.595	1.54	689.8
12/8/2011 2:30	8.56	Level	1.44	2.073	0.633	7.595	1.54	689.8
12/8/2011 2:45	8.51	Level	1.49	2.073	0.583	6.995	1.36	609.2
12/8/2011 3:00	8.51	Level	1.49	2.073	0.583	6.995	1.36	609.2
12/8/2011 3:15	8.56	Level	1.44	2.073	0.633	7.595	1.54	689.8
12/8/2011 3:30	8.51	Level	1.49	2.073	0.583	6.995	1.36	609.2
12/8/2011 3:45	8.51	Level	1.49	2.073	0.583	6.995	1.36	609.2
12/8/2011 4:00	8.52	Level	1.48	2.073	0.593	7.115	1.39	625.0
12/8/2011 4:15	8.56	Level	1.44	2.073	0.633	7.595	1.54	689.8
12/8/2011 4:30	8.56	Level	1.44	2.073	0.633	7.595	1.54	689.8
12/8/2011 4:45	8.51	Level	1.49	2.073	0.583	6.995	1.36	609.2
12/8/2011 5:00	8.51	Level	1.49	2.073	0.583	6.995	1.36	609.2
12/8/2011 5:15	8.51	Level	1.49	2.073	0.583	6.995	1.36	609.2
12/8/2011 5:30	8.51	Level	1.49	2.073	0.583	6.995	1.36	609.2
12/8/2011 5:45	8.56	Level	1.44	2.073	0.633	7.595	1.54	689.8
12/8/2011 6:00	8.51	Level	1.49	2.073	0.583	6.995	1.36	609.2
12/8/2011 6:15	8.51	Level	1.49	2.073	0.583	6.995	1.36	609.2
12/8/2011 6:30	8.56	Level	1.44	2.073	0.633	7.595	1.54	689.8
12/8/2011 6:45	8.51	Level	1.49	2.073	0.583	6.995	1.36	609.2
12/8/2011 7:00	8.51	Level	1.49	2.073	0.583	6.995	1.36	609.2
12/8/2011 7:15	8.51	Level	1.49	2.073	0.583	6.995	1.36	609.2
12/8/2011 7:30	8.51	Level	1.49	2.073	0.583	6.995	1.36	609.2

12/8/2011 7:45	8.56	Level	1.44	2.073	0.633	7.595	1.54	689.8
12/8/2011 8:00	8.51	Level	1.49	2.073	0.583	6.995	1.36	609.2
12/8/2011 8:15	8.51	Level	1.49	2.073	0.583	6.995	1.36	609.2
12/8/2011 8:30	8.51	Level	1.49	2.073	0.583	6.995	1.36	609.2
12/8/2011 8:45	8.56	Level	1.44	2.073	0.633	7.595	1.54	689.8
12/8/2011 9:00	8.51	Level	1.49	2.073	0.583	6.995	1.36	609.2
12/8/2011 9:15	8.51	Level	1.49	2.073	0.583	6.995	1.36	609.2
12/8/2011 9:30	8.51	Level	1.49	2.073	0.583	6.995	1.36	609.2
12/8/2011 9:45	8.51	Level	1.49	2.073	0.583	6.995	1.36	609.2
12/8/2011 10:00	8.51	Level	1.49	2.073	0.583	6.995	1.36	609.2
12/8/2011 10:15	8.51	Level	1.49	2.073	0.583	6.995	1.36	609.2
12/8/2011 10:30	8.56	Level	1.44	2.073	0.633	7.595	1.54	689.8
12/8/2011 10:45	8.56	Level	1.44	2.073	0.633	7.595	1.54	689.8
12/8/2011 11:00	8.56	Level	1.44	2.073	0.633	7.595	1.54	689.8
12/8/2011 11:15	8.56	Level	1.44	2.073	0.633	7.595	1.54	689.8
12/8/2011 11:30	8.56	Level	1.44	2.073	0.633	7.595	1.54	689.8
12/8/2011 11:45	8.56	Level	1.44	2.073	0.633	7.595	1.54	689.8
12/8/2011 12:00	8.56	Level	1.44	2.073	0.633	7.595	1.54	689.8
12/8/2011 12:15	8.6	Level	1.4	2.073	0.673	8.075	1.69	756.7
12/8/2011 12:30	8.56	Level	1.44	2.073	0.633	7.595	1.54	689.8
12/8/2011 12:45	8.56	Level	1.44	2.073	0.633	7.595	1.54	689.8
12/8/2011 13:00	8.56	Level	1.44	2.073	0.633	7.595	1.54	689.8
12/8/2011 13:15	8.56	Level	1.44	2.073	0.633	7.595	1.54	689.8
12/8/2011 13:30	8.56	Level	1.44	2.073	0.633	7.595	1.54	689.8
12/8/2011 13:45	8.56	Level	1.44	2.073	0.633	7.595	1.54	689.8
12/8/2011 14:00	8.56	Level	1.44	2.073	0.633	7.595	1.54	689.8
12/8/2011 14:15	8.56	Level	1.44	2.073	0.633	7.595	1.54	689.8
12/8/2011 14:30	8.56	Level	1.44	2.073	0.633	7.595	1.54	689.8
12/8/2011 14:45	8.56	Level	1.44	2.073	0.633	7.595	1.54	689.8
12/8/2011 15:00	8.56	Level	1.44	2.073	0.633	7.595	1.54	689.8
12/8/2011 15:15	8.56	Level	1.44	2.073	0.633	7.595	1.54	689.8
12/8/2011 15:30	8.56	Level	1.44	2.073	0.633	7.595	1.54	689.8
12/8/2011 15:45	8.56	Level	1.44	2.073	0.633	7.595	1.54	689.8
12/8/2011 16:00	8.56	Level	1.44	2.073	0.633	7.595	1.54	689.8
12/8/2011 16:15	8.56	Level	1.44	2.073	0.633	7.595	1.54	689.8
12/8/2011 16:30	8.56	Level	1.44	2.073	0.633	7.595	1.54	689.8
12/8/2011 16:45	8.56	Level	1.44	2.073	0.633	7.595	1.54	689.8
12/8/2011 17:00	8.56	Level	1.44	2.073	0.633	7.595	1.54	689.8
12/8/2011 17:15	8.56	Level	1.44	2.073	0.633	7.595	1.54	689.8
12/8/2011 17:30	8.56	Level	1.44	2.073	0.633	7.595	1.54	689.8
12/8/2011 17:45	8.56	Level	1.44	2.073	0.633	7.595	1.54	689.8
12/8/2011 18:00	8.56	Level	1.44	2.073	0.633	7.595	1.54	689.8
12/8/2011 18:15	8.51	Level	1.49	2.073	0.583	6.995	1.36	609.2
12/8/2011 18:30	8.56	Level	1.44	2.073	0.633	7.595	1.54	689.8
12/8/2011 18:45	8.56	Level	1.44	2.073	0.633	7.595	1.54	689.8
12/8/2011 19:00	8.51	Level	1.49	2.073	0.583	6.995	1.36	609.2
12/8/2011 19:15	8.51	Level	1.49	2.073	0.583	6.995	1.36	609.2

12/8/2011 19:30	8.56 Level	1.44	2.073	0.633	7.595	1.54	689.8
12/8/2011 19:45	8.56 Level	1.44	2.073	0.633	7.595	1.54	689.8
12/8/2011 20:00	8.56 Level	1.44	2.073	0.633	7.595	1.54	689.8
12/8/2011 20:15	8.51 Level	1.49	2.073	0.583	6.995	1.36	609.2
12/8/2011 20:30	8.56 Level	1.44	2.073	0.633	7.595	1.54	689.8
12/8/2011 20:45	8.51 Level	1.49	2.073	0.583	6.995	1.36	609.2
12/8/2011 21:00	8.51 Level	1.49	2.073	0.583	6.995	1.36	609.2
12/8/2011 21:15	8.51 Level	1.49	2.073	0.583	6.995	1.36	609.2
12/8/2011 21:30	8.51 Level	1.49	2.073	0.583	6.995	1.36	609.2
12/8/2011 21:45	8.56 Level	1.44	2.073	0.633	7.595	1.54	689.8
12/8/2011 22:00	8.51 Level	1.49	2.073	0.583	6.995	1.36	609.2
12/8/2011 22:15	8.51 Level	1.49	2.073	0.583	6.995	1.36	609.2
12/8/2011 22:30	8.51 Level	1.49	2.073	0.583	6.995	1.36	609.2
12/8/2011 22:45	8.51 Level	1.49	2.073	0.583	6.995	1.36	609.2
12/8/2011 23:00	8.51 Level	1.49	2.073	0.583	6.995	1.36	609.2
12/8/2011 23:15	8.51 Level	1.49	2.073	0.583	6.995	1.36	609.2
12/8/2011 23:30	8.51 Level	1.49	2.073	0.583	6.995	1.36	609.2
12/8/2011 23:45	8.51 Level	1.49	2.073	0.583	6.995	1.36	609.2
12/9/2011 0:00	8.51 Level	1.49	2.073	0.583	6.995	1.36	609.2
12/9/2011 0:15	8.51 Level	1.49	2.073	0.583	6.995	1.36	609.2
12/9/2011 0:30	8.52 Level	1.48	2.073	0.593	7.115	1.39	625.0
12/9/2011 0:45	8.51 Level	1.49	2.073	0.583	6.995	1.36	609.2
12/9/2011 1:00	8.51 Level	1.49	2.073	0.583	6.995	1.36	609.2
12/9/2011 1:15	8.51 Level	1.49	2.073	0.583	6.995	1.36	609.2
12/9/2011 1:30	8.51 Level	1.49	2.073	0.583	6.995	1.36	609.2
12/9/2011 1:45	8.51 Level	1.49	2.073	0.583	6.995	1.36	609.2
12/9/2011 2:00	8.51 Level	1.49	2.073	0.583	6.995	1.36	609.2
12/9/2011 2:15	8.51 Level	1.49	2.073	0.583	6.995	1.36	609.2
12/9/2011 2:30	8.51 Level	1.49	2.073	0.583	6.995	1.36	609.2
12/9/2011 2:45	8.51 Level	1.49	2.073	0.583	6.995	1.36	609.2
12/9/2011 3:00	8.51 Level	1.49	2.073	0.583	6.995	1.36	609.2
12/9/2011 3:15	8.51 Level	1.49	2.073	0.583	6.995	1.36	609.2
12/9/2011 3:30	8.51 Level	1.49	2.073	0.583	6.995	1.36	609.2
12/9/2011 3:45	8.51 Level	1.49	2.073	0.583	6.995	1.36	609.2
12/9/2011 4:00	8.51 Level	1.49	2.073	0.583	6.995	1.36	609.2
12/9/2011 4:15	8.51 Level	1.49	2.073	0.583	6.995	1.36	609.2
12/9/2011 4:30	8.56 Level	1.44	2.073	0.633	7.595	1.54	689.8
12/9/2011 4:45	8.51 Level	1.49	2.073	0.583	6.995	1.36	609.2
12/9/2011 5:00	8.47 Level	1.53	2.073	0.543	6.515	1.22	547.2
12/9/2011 5:15	8.51 Level	1.49	2.073	0.583	6.995	1.36	609.2
12/9/2011 5:30	8.51 Level	1.49	2.073	0.583	6.995	1.36	609.2
12/9/2011 5:45	8.51 Level	1.49	2.073	0.583	6.995	1.36	609.2
12/9/2011 6:00	8.51 Level	1.49	2.073	0.583	6.995	1.36	609.2
12/9/2011 6:15	8.51 Level	1.49	2.073	0.583	6.995	1.36	609.2
12/9/2011 6:30	8.51 Level	1.49	2.073	0.583	6.995	1.36	609.2
12/9/2011 6:45	8.51 Level	1.49	2.073	0.583	6.995	1.36	609.2
12/9/2011 7:00	8.51 Level	1.49	2.073	0.583	6.995	1.36	609.2

12/9/2011 7:15	8.51	Level	1.49	2.073	0.583	6.995	1.36	609.2
12/9/2011 7:30	8.51	Level	1.49	2.073	0.583	6.995	1.36	609.2
12/9/2011 7:45	8.51	Level	1.49	2.073	0.583	6.995	1.36	609.2
12/9/2011 8:00	8.51	Level	1.49	2.073	0.583	6.995	1.36	609.2
12/9/2011 8:15	8.51	Level	1.49	2.073	0.583	6.995	1.36	609.2
12/9/2011 8:30	8.51	Level	1.49	2.073	0.583	6.995	1.36	609.2
12/9/2011 8:45	8.51	Level	1.49	2.073	0.583	6.995	1.36	609.2
12/9/2011 9:00	8.51	Level	1.49	2.073	0.583	6.995	1.36	609.2
12/9/2011 9:15	8.51	Level	1.49	2.073	0.583	6.995	1.36	609.2
12/9/2011 9:30	8.51	Level	1.49	2.073	0.583	6.995	1.36	609.2
12/9/2011 9:45	8.51	Level	1.49	2.073	0.583	6.995	1.36	609.2
12/9/2011 10:00	8.51	Level	1.49	2.073	0.583	6.995	1.36	609.2
12/9/2011 10:15	8.51	Level	1.49	2.073	0.583	6.995	1.36	609.2
12/9/2011 10:30	8.51	Level	1.49	2.073	0.583	6.995	1.36	609.2
12/9/2011 10:45	8.56	Level	1.44	2.073	0.633	7.595	1.54	689.8
12/9/2011 11:00	8.56	Level	1.44	2.073	0.633	7.595	1.54	689.8
12/9/2011 11:15	8.56	Level	1.44	2.073	0.633	7.595	1.54	689.8
12/9/2011 11:30	8.56	Level	1.44	2.073	0.633	7.595	1.54	689.8
12/9/2011 11:45	8.56	Level	1.44	2.073	0.633	7.595	1.54	689.8
12/9/2011 12:00	8.56	Level	1.44	2.073	0.633	7.595	1.54	689.8
12/9/2011 12:15	8.56	Level	1.44	2.073	0.633	7.595	1.54	689.8
12/9/2011 12:30	8.56	Level	1.44	2.073	0.633	7.595	1.54	689.8
12/9/2011 12:45	8.56	Level	1.44	2.073	0.633	7.595	1.54	689.8
12/9/2011 13:00	8.56	Level	1.44	2.073	0.633	7.595	1.54	689.8
12/9/2011 13:15	8.56	Level	1.44	2.073	0.633	7.595	1.54	689.8
12/9/2011 13:30	8.56	Level	1.44	2.073	0.633	7.595	1.54	689.8
12/9/2011 13:45	8.56	Level	1.44	2.073	0.633	7.595	1.54	689.8
12/9/2011 14:00	8.56	Level	1.44	2.073	0.633	7.595	1.54	689.8
12/9/2011 14:15	8.56	Level	1.44	2.073	0.633	7.595	1.54	689.8
12/9/2011 14:30	8.56	Level	1.44	2.073	0.633	7.595	1.54	689.8
12/9/2011 14:45	8.56	Level	1.44	2.073	0.633	7.595	1.54	689.8
12/9/2011 15:00	8.6	Level	1.4	2.073	0.673	8.075	1.69	756.7
12/9/2011 15:15	8.55	Level	1.45	2.073	0.623	7.475	1.50	673.4
12/9/2011 15:30	8.6	Level	1.4	2.073	0.673	8.075	1.69	756.7
12/9/2011 15:45	8.55	Level	1.45	2.073	0.623	7.475	1.50	673.4
12/9/2011 16:00	8.55	Level	1.45	2.073	0.623	7.475	1.50	673.4
12/9/2011 16:15	8.55	Level	1.45	2.073	0.623	7.475	1.50	673.4
12/9/2011 16:30	8.56	Level	1.44	2.073	0.633	7.595	1.54	689.8
12/9/2011 16:45	8.56	Level	1.44	2.073	0.633	7.595	1.54	689.8
12/9/2011 17:00	8.55	Level	1.45	2.073	0.623	7.475	1.50	673.4
12/9/2011 17:15	8.55	Level	1.45	2.073	0.623	7.475	1.50	673.4
12/9/2011 17:30	8.55	Level	1.45	2.073	0.623	7.475	1.50	673.4
12/9/2011 17:45	8.56	Level	1.44	2.073	0.633	7.595	1.54	689.8
12/9/2011 18:00	8.56	Level	1.44	2.073	0.633	7.595	1.54	689.8
12/9/2011 18:15	8.56	Level	1.44	2.073	0.633	7.595	1.54	689.8
12/9/2011 18:30	8.56	Level	1.44	2.073	0.633	7.595	1.54	689.8
12/9/2011 18:45	8.56	Level	1.44	2.073	0.633	7.595	1.54	689.8

12/9/2011 19:00	8.56 Level	1.44	2.073	0.633	7.595	1.54	689.8
12/9/2011 19:15	8.56 Level	1.44	2.073	0.633	7.595	1.54	689.8
12/9/2011 19:30	8.56 Level	1.44	2.073	0.633	7.595	1.54	689.8
12/9/2011 19:45	8.51 Level	1.49	2.073	0.583	6.995	1.36	609.2
12/9/2011 20:00	8.51 Level	1.49	2.073	0.583	6.995	1.36	609.2
12/9/2011 20:15	8.56 Level	1.44	2.073	0.633	7.595	1.54	689.8
12/9/2011 20:30	8.56 Level	1.44	2.073	0.633	7.595	1.54	689.8
12/9/2011 20:45	8.51 Level	1.49	2.073	0.583	6.995	1.36	609.2
12/9/2011 21:00	8.56 Level	1.44	2.073	0.633	7.595	1.54	689.8
12/9/2011 21:15	8.56 Level	1.44	2.073	0.633	7.595	1.54	689.8
12/9/2011 21:30	8.56 Level	1.44	2.073	0.633	7.595	1.54	689.8
12/9/2011 21:45	8.56 Level	1.44	2.073	0.633	7.595	1.54	689.8
12/9/2011 22:00	8.51 Level	1.49	2.073	0.583	6.995	1.36	609.2
12/9/2011 22:15	8.56 Level	1.44	2.073	0.633	7.595	1.54	689.8
12/9/2011 22:30	8.51 Level	1.49	2.073	0.583	6.995	1.36	609.2
12/9/2011 22:45	8.51 Level	1.49	2.073	0.583	6.995	1.36	609.2
12/9/2011 23:00	8.51 Level	1.49	2.073	0.583	6.995	1.36	609.2
12/9/2011 23:15	8.51 Level	1.49	2.073	0.583	6.995	1.36	609.2
12/9/2011 23:30	8.51 Level	1.49	2.073	0.583	6.995	1.36	609.2
12/9/2011 23:45	8.51 Level	1.49	2.073	0.583	6.995	1.36	609.2
12/10/2011 0:00	8.51 Level	1.49	2.073	0.583	6.995	1.36	609.2
12/10/2011 0:15	8.51 Level	1.49	2.073	0.583	6.995	1.36	609.2
12/10/2011 0:30	8.51 Level	1.49	2.073	0.583	6.995	1.36	609.2
12/10/2011 0:45	8.51 Level	1.49	2.073	0.583	6.995	1.36	609.2
12/10/2011 1:00	8.51 Level	1.49	2.073	0.583	6.995	1.36	609.2
12/10/2011 1:15	8.51 Level	1.49	2.073	0.583	6.995	1.36	609.2
12/10/2011 1:30	8.51 Level	1.49	2.073	0.583	6.995	1.36	609.2
12/10/2011 1:45	8.56 Level	1.44	2.073	0.633	7.595	1.54	689.8
12/10/2011 2:00	8.51 Level	1.49	2.073	0.583	6.995	1.36	609.2
12/10/2011 2:15	8.51 Level	1.49	2.073	0.583	6.995	1.36	609.2
12/10/2011 2:30	8.51 Level	1.49	2.073	0.583	6.995	1.36	609.2
12/10/2011 2:45	8.56 Level	1.44	2.073	0.633	7.595	1.54	689.8
12/10/2011 3:00	8.51 Level	1.49	2.073	0.583	6.995	1.36	609.2
12/10/2011 3:15	8.51 Level	1.49	2.073	0.583	6.995	1.36	609.2
12/10/2011 3:30	8.51 Level	1.49	2.073	0.583	6.995	1.36	609.2
12/10/2011 3:45	8.51 Level	1.49	2.073	0.583	6.995	1.36	609.2
12/10/2011 4:00	8.51 Level	1.49	2.073	0.583	6.995	1.36	609.2
12/10/2011 4:15	8.51 Level	1.49	2.073	0.583	6.995	1.36	609.2
12/10/2011 4:30	8.51 Level	1.49	2.073	0.583	6.995	1.36	609.2
12/10/2011 4:45	8.51 Level	1.49	2.073	0.583	6.995	1.36	609.2
12/10/2011 5:00	8.51 Level	1.49	2.073	0.583	6.995	1.36	609.2
12/10/2011 5:15	8.51 Level	1.49	2.073	0.583	6.995	1.36	609.2
12/10/2011 5:30	8.51 Level	1.49	2.073	0.583	6.995	1.36	609.2
12/10/2011 5:45	8.51 Level	1.49	2.073	0.583	6.995	1.36	609.2
12/10/2011 6:00	8.51 Level	1.49	2.073	0.583	6.995	1.36	609.2
12/10/2011 6:15	8.51 Level	1.49	2.073	0.583	6.995	1.36	609.2
12/10/2011 6:30	8.56 Level	1.44	2.073	0.633	7.595	1.54	689.8

12/10/2011 6:45	8.51	Level	1.49	2.073	0.583	6.995	1.36	609.2
12/10/2011 7:00	8.51	Level	1.49	2.073	0.583	6.995	1.36	609.2
12/10/2011 7:15	8.51	Level	1.49	2.073	0.583	6.995	1.36	609.2
12/10/2011 7:30	8.51	Level	1.49	2.073	0.583	6.995	1.36	609.2
12/10/2011 7:45	8.51	Level	1.49	2.073	0.583	6.995	1.36	609.2
12/10/2011 8:00	8.51	Level	1.49	2.073	0.583	6.995	1.36	609.2
12/10/2011 8:15	8.51	Level	1.49	2.073	0.583	6.995	1.36	609.2
12/10/2011 8:30	8.51	Level	1.49	2.073	0.583	6.995	1.36	609.2
12/10/2011 8:45	8.51	Level	1.49	2.073	0.583	6.995	1.36	609.2
12/10/2011 9:00	8.51	Level	1.49	2.073	0.583	6.995	1.36	609.2
12/10/2011 9:15	8.51	Level	1.49	2.073	0.583	6.995	1.36	609.2
12/10/2011 9:30	8.51	Level	1.49	2.073	0.583	6.995	1.36	609.2
12/10/2011 9:45	8.56	Level	1.44	2.073	0.633	7.595	1.54	689.8
12/10/2011 10:00	8.51	Level	1.49	2.073	0.583	6.995	1.36	609.2
12/10/2011 10:15	8.51	Level	1.49	2.073	0.583	6.995	1.36	609.2
12/10/2011 10:30	8.56	Level	1.44	2.073	0.633	7.595	1.54	689.8
12/10/2011 10:45	8.56	Level	1.44	2.073	0.633	7.595	1.54	689.8
12/10/2011 11:00	8.56	Level	1.44	2.073	0.633	7.595	1.54	689.8
12/10/2011 11:15	8.56	Level	1.44	2.073	0.633	7.595	1.54	689.8
12/10/2011 11:30	8.56	Level	1.44	2.073	0.633	7.595	1.54	689.8
12/10/2011 11:45	8.56	Level	1.44	2.073	0.633	7.595	1.54	689.8
12/10/2011 12:00	8.56	Level	1.44	2.073	0.633	7.595	1.54	689.8
12/10/2011 12:15	8.56	Level	1.44	2.073	0.633	7.595	1.54	689.8
12/10/2011 12:30	8.56	Level	1.44	2.073	0.633	7.595	1.54	689.8
12/10/2011 12:45	8.56	Level	1.44	2.073	0.633	7.595	1.54	689.8
12/10/2011 13:00	8.6	Level	1.4	2.073	0.673	8.075	1.69	756.7
12/10/2011 13:15	8.56	Level	1.44	2.073	0.633	7.595	1.54	689.8
12/10/2011 13:30	8.56	Level	1.44	2.073	0.633	7.595	1.54	689.8
12/10/2011 13:45	8.56	Level	1.44	2.073	0.633	7.595	1.54	689.8
12/10/2011 14:00	8.56	Level	1.44	2.073	0.633	7.595	1.54	689.8
12/10/2011 14:15	8.55	Level	1.45	2.073	0.623	7.475	1.50	673.4
12/10/2011 14:30	8.6	Level	1.4	2.073	0.673	8.075	1.69	756.7
12/10/2011 14:45	8.55	Level	1.45	2.073	0.623	7.475	1.50	673.4
12/10/2011 15:00	8.55	Level	1.45	2.073	0.623	7.475	1.50	673.4
12/10/2011 15:15	8.55	Level	1.45	2.073	0.623	7.475	1.50	673.4
12/10/2011 15:30	8.56	Level	1.44	2.073	0.633	7.595	1.54	689.8
12/10/2011 15:45	8.56	Level	1.44	2.073	0.633	7.595	1.54	689.8
12/10/2011 16:00	8.55	Level	1.45	2.073	0.623	7.475	1.50	673.4
12/10/2011 16:15	8.56	Level	1.44	2.073	0.633	7.595	1.54	689.8
12/10/2011 16:30	8.56	Level	1.44	2.073	0.633	7.595	1.54	689.8
12/10/2011 16:45	8.56	Level	1.44	2.073	0.633	7.595	1.54	689.8
12/10/2011 17:00	8.56	Level	1.44	2.073	0.633	7.595	1.54	689.8
12/10/2011 17:15	8.56	Level	1.44	2.073	0.633	7.595	1.54	689.8
12/10/2011 17:30	8.56	Level	1.44	2.073	0.633	7.595	1.54	689.8
12/10/2011 17:45	8.56	Level	1.44	2.073	0.633	7.595	1.54	689.8
12/10/2011 18:00	8.56	Level	1.44	2.073	0.633	7.595	1.54	689.8
12/10/2011 18:15	8.56	Level	1.44	2.073	0.633	7.595	1.54	689.8

12/10/2011 18:30	8.51	Level	1.49	2.073	0.583	6.995	1.36	609.2
12/10/2011 18:45	8.51	Level	1.49	2.073	0.583	6.995	1.36	609.2
12/10/2011 19:00	8.51	Level	1.49	2.073	0.583	6.995	1.36	609.2
12/10/2011 19:15	8.51	Level	1.49	2.073	0.583	6.995	1.36	609.2
12/10/2011 19:30	8.51	Level	1.49	2.073	0.583	6.995	1.36	609.2
12/10/2011 19:45	8.56	Level	1.44	2.073	0.633	7.595	1.54	689.8
12/10/2011 20:00	8.51	Level	1.49	2.073	0.583	6.995	1.36	609.2
12/10/2011 20:15	8.56	Level	1.44	2.073	0.633	7.595	1.54	689.8
12/10/2011 20:30	8.51	Level	1.49	2.073	0.583	6.995	1.36	609.2
12/10/2011 20:45	8.56	Level	1.44	2.073	0.633	7.595	1.54	689.8
12/10/2011 21:00	8.56	Level	1.44	2.073	0.633	7.595	1.54	689.8
12/10/2011 21:15	8.51	Level	1.49	2.073	0.583	6.995	1.36	609.2
12/10/2011 21:30	8.51	Level	1.49	2.073	0.583	6.995	1.36	609.2
12/10/2011 21:45	8.56	Level	1.44	2.073	0.633	7.595	1.54	689.8
12/10/2011 22:00	8.51	Level	1.49	2.073	0.583	6.995	1.36	609.2
12/10/2011 22:15	8.56	Level	1.44	2.073	0.633	7.595	1.54	689.8
12/10/2011 22:30	8.56	Level	1.44	2.073	0.633	7.595	1.54	689.8
12/10/2011 22:45	8.56	Level	1.44	2.073	0.633	7.595	1.54	689.8
12/10/2011 23:00	8.51	Level	1.49	2.073	0.583	6.995	1.36	609.2
12/10/2011 23:15	8.56	Level	1.44	2.073	0.633	7.595	1.54	689.8
12/10/2011 23:30	8.56	Level	1.44	2.073	0.633	7.595	1.54	689.8
12/10/2011 23:45	8.51	Level	1.49	2.073	0.583	6.995	1.36	609.2
12/11/2011 0:00	8.51	Level	1.49	2.073	0.583	6.995	1.36	609.2
12/11/2011 0:15	8.51	Level	1.49	2.073	0.583	6.995	1.36	609.2
12/11/2011 0:30	8.51	Level	1.49	2.073	0.583	6.995	1.36	609.2
12/11/2011 0:45	8.56	Level	1.44	2.073	0.633	7.595	1.54	689.8
12/11/2011 1:00	8.51	Level	1.49	2.073	0.583	6.995	1.36	609.2
12/11/2011 1:15	8.56	Level	1.44	2.073	0.633	7.595	1.54	689.8
12/11/2011 1:30	8.51	Level	1.49	2.073	0.583	6.995	1.36	609.2
12/11/2011 1:45	8.51	Level	1.49	2.073	0.583	6.995	1.36	609.2
12/11/2011 2:00	8.51	Level	1.49	2.073	0.583	6.995	1.36	609.2
12/11/2011 2:15	8.51	Level	1.49	2.073	0.583	6.995	1.36	609.2
12/11/2011 2:30	8.51	Level	1.49	2.073	0.583	6.995	1.36	609.2
12/11/2011 2:45	8.51	Level	1.49	2.073	0.583	6.995	1.36	609.2
12/11/2011 3:00	8.51	Level	1.49	2.073	0.583	6.995	1.36	609.2
12/11/2011 3:15	8.56	Level	1.44	2.073	0.633	7.595	1.54	689.8
12/11/2011 3:30	8.51	Level	1.49	2.073	0.583	6.995	1.36	609.2
12/11/2011 3:45	8.51	Level	1.49	2.073	0.583	6.995	1.36	609.2
12/11/2011 4:00	8.51	Level	1.49	2.073	0.583	6.995	1.36	609.2
12/11/2011 4:15	8.51	Level	1.49	2.073	0.583	6.995	1.36	609.2
12/11/2011 4:30	8.51	Level	1.49	2.073	0.583	6.995	1.36	609.2
12/11/2011 4:45	8.56	Level	1.44	2.073	0.633	7.595	1.54	689.8
12/11/2011 5:00	8.56	Level	1.44	2.073	0.633	7.595	1.54	689.8
12/11/2011 5:15	8.51	Level	1.49	2.073	0.583	6.995	1.36	609.2
12/11/2011 5:30	8.51	Level	1.49	2.073	0.583	6.995	1.36	609.2
12/11/2011 5:45	8.56	Level	1.44	2.073	0.633	7.595	1.54	689.8
12/11/2011 6:00	8.51	Level	1.49	2.073	0.583	6.995	1.36	609.2

12/11/2011 6:15	8.51	Level	1.49	2.073	0.583	6.995	1.36	609.2
12/11/2011 6:30	8.51	Level	1.49	2.073	0.583	6.995	1.36	609.2
12/11/2011 6:45	8.51	Level	1.49	2.073	0.583	6.995	1.36	609.2
12/11/2011 7:00	8.51	Level	1.49	2.073	0.583	6.995	1.36	609.2
12/11/2011 7:15	8.51	Level	1.49	2.073	0.583	6.995	1.36	609.2
12/11/2011 7:30	8.51	Level	1.49	2.073	0.583	6.995	1.36	609.2
12/11/2011 7:45	8.51	Level	1.49	2.073	0.583	6.995	1.36	609.2
12/11/2011 8:00	8.51	Level	1.49	2.073	0.583	6.995	1.36	609.2
12/11/2011 8:15	8.51	Level	1.49	2.073	0.583	6.995	1.36	609.2
12/11/2011 8:30	8.51	Level	1.49	2.073	0.583	6.995	1.36	609.2
12/11/2011 8:45	8.55	Level	1.45	2.073	0.623	7.475	1.50	673.4
12/11/2011 9:00	8.51	Level	1.49	2.073	0.583	6.995	1.36	609.2
12/11/2011 9:15	8.51	Level	1.49	2.073	0.583	6.995	1.36	609.2
12/11/2011 9:30	8.56	Level	1.44	2.073	0.633	7.595	1.54	689.8
12/11/2011 9:45	8.51	Level	1.49	2.073	0.583	6.995	1.36	609.2
12/11/2011 10:00	8.51	Level	1.49	2.073	0.583	6.995	1.36	609.2
12/11/2011 10:15	8.51	Level	1.49	2.073	0.583	6.995	1.36	609.2
12/11/2011 10:30	8.56	Level	1.44	2.073	0.633	7.595	1.54	689.8
12/11/2011 10:45	8.56	Level	1.44	2.073	0.633	7.595	1.54	689.8
12/11/2011 11:00	8.56	Level	1.44	2.073	0.633	7.595	1.54	689.8
12/11/2011 11:15	8.56	Level	1.44	2.073	0.633	7.595	1.54	689.8
12/11/2011 11:30	8.56	Level	1.44	2.073	0.633	7.595	1.54	689.8
12/11/2011 11:45	8.56	Level	1.44	2.073	0.633	7.595	1.54	689.8
12/11/2011 12:00	8.56	Level	1.44	2.073	0.633	7.595	1.54	689.8
12/11/2011 12:15	8.56	Level	1.44	2.073	0.633	7.595	1.54	689.8
12/11/2011 12:30	8.55	Level	1.45	2.073	0.623	7.475	1.50	673.4
12/11/2011 12:45	8.56	Level	1.44	2.073	0.633	7.595	1.54	689.8
12/11/2011 13:00	8.56	Level	1.44	2.073	0.633	7.595	1.54	689.8
12/11/2011 13:15	8.56	Level	1.44	2.073	0.633	7.595	1.54	689.8
12/11/2011 13:30	8.56	Level	1.44	2.073	0.633	7.595	1.54	689.8
12/11/2011 13:45	8.55	Level	1.45	2.073	0.623	7.475	1.50	673.4
12/11/2011 14:00	8.55	Level	1.45	2.073	0.623	7.475	1.50	673.4
12/11/2011 14:15	8.56	Level	1.44	2.073	0.633	7.595	1.54	689.8
12/11/2011 14:30	8.56	Level	1.44	2.073	0.633	7.595	1.54	689.8
12/11/2011 14:45	8.56	Level	1.44	2.073	0.633	7.595	1.54	689.8
12/11/2011 15:00	8.56	Level	1.44	2.073	0.633	7.595	1.54	689.8
12/11/2011 15:15	8.55	Level	1.45	2.073	0.623	7.475	1.50	673.4
12/11/2011 15:30	8.55	Level	1.45	2.073	0.623	7.475	1.50	673.4
12/11/2011 15:45	8.55	Level	1.45	2.073	0.623	7.475	1.50	673.4
12/11/2011 16:00	8.55	Level	1.45	2.073	0.623	7.475	1.50	673.4
12/11/2011 16:15	8.55	Level	1.45	2.073	0.623	7.475	1.50	673.4
12/11/2011 16:30	8.56	Level	1.44	2.073	0.633	7.595	1.54	689.8
12/11/2011 16:45	8.55	Level	1.45	2.073	0.623	7.475	1.50	673.4
12/11/2011 17:00	8.55	Level	1.45	2.073	0.623	7.475	1.50	673.4
12/11/2011 17:15	8.55	Level	1.45	2.073	0.623	7.475	1.50	673.4
12/11/2011 17:30	8.56	Level	1.44	2.073	0.633	7.595	1.54	689.8
12/11/2011 17:45	8.56	Level	1.44	2.073	0.633	7.595	1.54	689.8

12/11/2011 18:00	8.56	Level	1.44	2.073	0.633	7.595	1.54	689.8
12/11/2011 18:15	8.56	Level	1.44	2.073	0.633	7.595	1.54	689.8
12/11/2011 18:30	8.56	Level	1.44	2.073	0.633	7.595	1.54	689.8
12/11/2011 18:45	8.56	Level	1.44	2.073	0.633	7.595	1.54	689.8
12/11/2011 19:00	8.56	Level	1.44	2.073	0.633	7.595	1.54	689.8
12/11/2011 19:15	8.56	Level	1.44	2.073	0.633	7.595	1.54	689.8
12/11/2011 19:30	8.55	Level	1.45	2.073	0.623	7.475	1.50	673.4
12/11/2011 19:45	8.51	Level	1.49	2.073	0.583	6.995	1.36	609.2
12/11/2011 20:00	8.51	Level	1.49	2.073	0.583	6.995	1.36	609.2
12/11/2011 20:15	8.51	Level	1.49	2.073	0.583	6.995	1.36	609.2
12/11/2011 20:30	8.51	Level	1.49	2.073	0.583	6.995	1.36	609.2
12/11/2011 20:45	8.56	Level	1.44	2.073	0.633	7.595	1.54	689.8
12/11/2011 21:00	8.51	Level	1.49	2.073	0.583	6.995	1.36	609.2
12/11/2011 21:15	8.51	Level	1.49	2.073	0.583	6.995	1.36	609.2
12/11/2011 21:30	8.56	Level	1.44	2.073	0.633	7.595	1.54	689.8
12/11/2011 21:45	8.56	Level	1.44	2.073	0.633	7.595	1.54	689.8
12/11/2011 22:00	8.56	Level	1.44	2.073	0.633	7.595	1.54	689.8
12/11/2011 22:15	8.56	Level	1.44	2.073	0.633	7.595	1.54	689.8
12/11/2011 22:30	8.51	Level	1.49	2.073	0.583	6.995	1.36	609.2
12/11/2011 22:45	8.51	Level	1.49	2.073	0.583	6.995	1.36	609.2
12/11/2011 23:00	8.51	Level	1.49	2.073	0.583	6.995	1.36	609.2
12/11/2011 23:15	8.51	Level	1.49	2.073	0.583	6.995	1.36	609.2
12/11/2011 23:30	8.51	Level	1.49	2.073	0.583	6.995	1.36	609.2
12/11/2011 23:45	8.51	Level	1.49	2.073	0.583	6.995	1.36	609.2
12/12/2011 0:00	8.51	Level	1.49	2.073	0.583	6.995	1.36	609.2
12/12/2011 0:15	8.56	Level	1.44	2.073	0.633	7.595	1.54	689.8
12/12/2011 0:30	8.51	Level	1.49	2.073	0.583	6.995	1.36	609.2
12/12/2011 0:45	8.51	Level	1.49	2.073	0.583	6.995	1.36	609.2
12/12/2011 1:00	8.55	Level	1.45	2.073	0.623	7.475	1.50	673.4
12/12/2011 1:15	8.51	Level	1.49	2.073	0.583	6.995	1.36	609.2
12/12/2011 1:30	8.5	Level	1.5	2.073	0.573	6.875	1.32	593.5
12/12/2011 1:45	8.51	Level	1.49	2.073	0.583	6.995	1.36	609.2
12/12/2011 2:00	8.51	Level	1.49	2.073	0.583	6.995	1.36	609.2
12/12/2011 2:15	8.56	Level	1.44	2.073	0.633	7.595	1.54	689.8
12/12/2011 2:30	8.56	Level	1.44	2.073	0.633	7.595	1.54	689.8
12/12/2011 2:45	8.51	Level	1.49	2.073	0.583	6.995	1.36	609.2
12/12/2011 3:00	8.51	Level	1.49	2.073	0.583	6.995	1.36	609.2
12/12/2011 3:15	8.51	Level	1.49	2.073	0.583	6.995	1.36	609.2
12/12/2011 3:30	8.51	Level	1.49	2.073	0.583	6.995	1.36	609.2
12/12/2011 3:45	8.51	Level	1.49	2.073	0.583	6.995	1.36	609.2
12/12/2011 4:00	8.56	Level	1.44	2.073	0.633	7.595	1.54	689.8
12/12/2011 4:15	8.51	Level	1.49	2.073	0.583	6.995	1.36	609.2
12/12/2011 4:30	8.51	Level	1.49	2.073	0.583	6.995	1.36	609.2
12/12/2011 4:45	8.51	Level	1.49	2.073	0.583	6.995	1.36	609.2
12/12/2011 5:00	8.51	Level	1.49	2.073	0.583	6.995	1.36	609.2
12/12/2011 5:15	8.51	Level	1.49	2.073	0.583	6.995	1.36	609.2
12/12/2011 5:30	8.51	Level	1.49	2.073	0.583	6.995	1.36	609.2

12/12/2011 5:45	8.51	Level	1.49	2.073	0.583	6.995	1.36	609.2
12/12/2011 6:00	8.56	Level	1.44	2.073	0.633	7.595	1.54	689.8
12/12/2011 6:15	8.51	Level	1.49	2.073	0.583	6.995	1.36	609.2
12/12/2011 6:30	8.51	Level	1.49	2.073	0.583	6.995	1.36	609.2
12/12/2011 6:45	8.56	Level	1.44	2.073	0.633	7.595	1.54	689.8
12/12/2011 7:00	8.51	Level	1.49	2.073	0.583	6.995	1.36	609.2
12/12/2011 7:15	8.51	Level	1.49	2.073	0.583	6.995	1.36	609.2
12/12/2011 7:30	8.51	Level	1.49	2.073	0.583	6.995	1.36	609.2
12/12/2011 7:45	8.51	Level	1.49	2.073	0.583	6.995	1.36	609.2
12/12/2011 8:00	8.51	Level	1.49	2.073	0.583	6.995	1.36	609.2
12/12/2011 8:15	8.51	Level	1.49	2.073	0.583	6.995	1.36	609.2
12/12/2011 8:30	8.51	Level	1.49	2.073	0.583	6.995	1.36	609.2
12/12/2011 8:45	8.51	Level	1.49	2.073	0.583	6.995	1.36	609.2
12/12/2011 9:00	8.51	Level	1.49	2.073	0.583	6.995	1.36	609.2
12/12/2011 9:15	8.55	Level	1.45	2.073	0.623	7.475	1.50	673.4
12/12/2011 9:30	8.56	Level	1.44	2.073	0.633	7.595	1.54	689.8
12/12/2011 9:45	8.56	Level	1.44	2.073	0.633	7.595	1.54	689.8
12/12/2011 10:00	8.56	Level	1.44	2.073	0.633	7.595	1.54	689.8
12/12/2011 10:15	8.56	Level	1.44	2.073	0.633	7.595	1.54	689.8
12/12/2011 10:30	8.56	Level	1.44	2.073	0.633	7.595	1.54	689.8
12/12/2011 10:45	8.56	Level	1.44	2.073	0.633	7.595	1.54	689.8
12/12/2011 11:00	8.56	Level	1.44	2.073	0.633	7.595	1.54	689.8
12/12/2011 11:15	8.56	Level	1.44	2.073	0.633	7.595	1.54	689.8
12/12/2011 11:30	8.56	Level	1.44	2.073	0.633	7.595	1.54	689.8
12/12/2011 11:45	8.56	Level	1.44	2.073	0.633	7.595	1.54	689.8
12/12/2011 12:00	8.56	Level	1.44	2.073	0.633	7.595	1.54	689.8
12/12/2011 12:15	8.56	Level	1.44	2.073	0.633	7.595	1.54	689.8
12/12/2011 12:30	8.56	Level	1.44	2.073	0.633	7.595	1.54	689.8
12/12/2011 12:45	8.56	Level	1.44	2.073	0.633	7.595	1.54	689.8
12/12/2011 13:00	8.56	Level	1.44	2.073	0.633	7.595	1.54	689.8
12/12/2011 13:15	8.56	Level	1.44	2.073	0.633	7.595	1.54	689.8
12/12/2011 13:30	8.56	Level	1.44	2.073	0.633	7.595	1.54	689.8
12/12/2011 13:45	8.56	Level	1.44	2.073	0.633	7.595	1.54	689.8
12/12/2011 14:00	8.56	Level	1.44	2.073	0.633	7.595	1.54	689.8
12/12/2011 14:15	8.56	Level	1.44	2.073	0.633	7.595	1.54	689.8
12/12/2011 14:30	8.56	Level	1.44	2.073	0.633	7.595	1.54	689.8
12/12/2011 14:45	8.56	Level	1.44	2.073	0.633	7.595	1.54	689.8
12/12/2011 15:00	8.56	Level	1.44	2.073	0.633	7.595	1.54	689.8
12/12/2011 15:15	8.56	Level	1.44	2.073	0.633	7.595	1.54	689.8
12/12/2011 15:30	8.56	Level	1.44	2.073	0.633	7.595	1.54	689.8
12/12/2011 15:45	8.56	Level	1.44	2.073	0.633	7.595	1.54	689.8
12/12/2011 16:00	8.56	Level	1.44	2.073	0.633	7.595	1.54	689.8
12/12/2011 16:15	8.56	Level	1.44	2.073	0.633	7.595	1.54	689.8
12/12/2011 16:30	8.56	Level	1.44	2.073	0.633	7.595	1.54	689.8
12/12/2011 16:45	8.56	Level	1.44	2.073	0.633	7.595	1.54	689.8
12/12/2011 17:00	8.56	Level	1.44	2.073	0.633	7.595	1.54	689.8
12/12/2011 17:15	8.56	Level	1.44	2.073	0.633	7.595	1.54	689.8

12/12/2011 17:30	8.56 Level	1.44	2.073	0.633	7.595	1.54	689.8
12/12/2011 17:45	8.56 Level	1.44	2.073	0.633	7.595	1.54	689.8
12/12/2011 18:00	8.56 Level	1.44	2.073	0.633	7.595	1.54	689.8
12/12/2011 18:15	8.56 Level	1.44	2.073	0.633	7.595	1.54	689.8
12/12/2011 18:30	8.56 Level	1.44	2.073	0.633	7.595	1.54	689.8
12/12/2011 18:45	8.56 Level	1.44	2.073	0.633	7.595	1.54	689.8
12/12/2011 19:00	8.56 Level	1.44	2.073	0.633	7.595	1.54	689.8
12/12/2011 19:15	8.56 Level	1.44	2.073	0.633	7.595	1.54	689.8
12/12/2011 19:30	8.56 Level	1.44	2.073	0.633	7.595	1.54	689.8
12/12/2011 19:45	8.56 Level	1.44	2.073	0.633	7.595	1.54	689.8
12/12/2011 20:00	8.56 Level	1.44	2.073	0.633	7.595	1.54	689.8
12/12/2011 20:15	8.56 Level	1.44	2.073	0.633	7.595	1.54	689.8
12/12/2011 20:30	8.56 Level	1.44	2.073	0.633	7.595	1.54	689.8
12/12/2011 20:45	8.56 Level	1.44	2.073	0.633	7.595	1.54	689.8
12/12/2011 21:00	8.51 Level	1.49	2.073	0.583	6.995	1.36	609.2
12/12/2011 21:15	8.56 Level	1.44	2.073	0.633	7.595	1.54	689.8
12/12/2011 21:30	8.56 Level	1.44	2.073	0.633	7.595	1.54	689.8
12/12/2011 21:45	8.56 Level	1.44	2.073	0.633	7.595	1.54	689.8
12/12/2011 22:00	8.56 Level	1.44	2.073	0.633	7.595	1.54	689.8
12/12/2011 22:15	8.56 Level	1.44	2.073	0.633	7.595	1.54	689.8
12/12/2011 22:30	8.56 Level	1.44	2.073	0.633	7.595	1.54	689.8
12/12/2011 22:45	8.56 Level	1.44	2.073	0.633	7.595	1.54	689.8
12/12/2011 23:00	8.56 Level	1.44	2.073	0.633	7.595	1.54	689.8
12/12/2011 23:15	8.56 Level	1.44	2.073	0.633	7.595	1.54	689.8
12/12/2011 23:30	8.56 Level	1.44	2.073	0.633	7.595	1.54	689.8
12/12/2011 23:45	8.56 Level	1.44	2.073	0.633	7.595	1.54	689.8
12/13/2011 0:00	8.56 Level	1.44	2.073	0.633	7.595	1.54	689.8
12/13/2011 0:15	8.56 Level	1.44	2.073	0.633	7.595	1.54	689.8
12/13/2011 0:30	8.56 Level	1.44	2.073	0.633	7.595	1.54	689.8
12/13/2011 0:45	8.56 Level	1.44	2.073	0.633	7.595	1.54	689.8
12/13/2011 1:00	8.56 Level	1.44	2.073	0.633	7.595	1.54	689.8
12/13/2011 1:15	8.56 Level	1.44	2.073	0.633	7.595	1.54	689.8
12/13/2011 1:30	8.56 Level	1.44	2.073	0.633	7.595	1.54	689.8
12/13/2011 1:45	8.56 Level	1.44	2.073	0.633	7.595	1.54	689.8
12/13/2011 2:00	8.56 Level	1.44	2.073	0.633	7.595	1.54	689.8
12/13/2011 2:15	8.56 Level	1.44	2.073	0.633	7.595	1.54	689.8
12/13/2011 2:30	8.56 Level	1.44	2.073	0.633	7.595	1.54	689.8
12/13/2011 2:45	8.56 Level	1.44	2.073	0.633	7.595	1.54	689.8
12/13/2011 3:00	8.56 Level	1.44	2.073	0.633	7.595	1.54	689.8
12/13/2011 3:15	8.56 Level	1.44	2.073	0.633	7.595	1.54	689.8
12/13/2011 3:30	8.56 Level	1.44	2.073	0.633	7.595	1.54	689.8
12/13/2011 3:45	8.56 Level	1.44	2.073	0.633	7.595	1.54	689.8
12/13/2011 4:00	8.56 Level	1.44	2.073	0.633	7.595	1.54	689.8
12/13/2011 4:15	8.56 Level	1.44	2.073	0.633	7.595	1.54	689.8
12/13/2011 4:30	8.56 Level	1.44	2.073	0.633	7.595	1.54	689.8
12/13/2011 4:45	8.56 Level	1.44	2.073	0.633	7.595	1.54	689.8
12/13/2011 5:00	8.56 Level	1.44	2.073	0.633	7.595	1.54	689.8

12/13/2011 5:15	8.56 Level	1.44	2.073	0.633	7.595	1.54	689.8
12/13/2011 5:30	8.56 Level	1.44	2.073	0.633	7.595	1.54	689.8
12/13/2011 5:45	8.56 Level	1.44	2.073	0.633	7.595	1.54	689.8
12/13/2011 6:00	8.56 Level	1.44	2.073	0.633	7.595	1.54	689.8
12/13/2011 6:15	8.56 Level	1.44	2.073	0.633	7.595	1.54	689.8
12/13/2011 6:30	8.56 Level	1.44	2.073	0.633	7.595	1.54	689.8
12/13/2011 6:45	8.56 Level	1.44	2.073	0.633	7.595	1.54	689.8
12/13/2011 7:00	8.56 Level	1.44	2.073	0.633	7.595	1.54	689.8
12/13/2011 7:15	8.56 Level	1.44	2.073	0.633	7.595	1.54	689.8
12/13/2011 7:30	8.56 Level	1.44	2.073	0.633	7.595	1.54	689.8
12/13/2011 7:45	8.56 Level	1.44	2.073	0.633	7.595	1.54	689.8
12/13/2011 8:00	8.56 Level	1.44	2.073	0.633	7.595	1.54	689.8
12/13/2011 8:15	8.51 Level	1.49	2.073	0.583	6.995	1.36	609.2
12/13/2011 8:30	8.56 Level	1.44	2.073	0.633	7.595	1.54	689.8
12/13/2011 8:45	8.51 Level	1.49	2.073	0.583	6.995	1.36	609.2
12/13/2011 9:00	8.56 Level	1.44	2.073	0.633	7.595	1.54	689.8
12/13/2011 9:15	8.56 Level	1.44	2.073	0.633	7.595	1.54	689.8
12/13/2011 9:30	8.56 Level	1.44	2.073	0.633	7.595	1.54	689.8
12/13/2011 9:45	8.56 Level	1.44	2.073	0.633	7.595	1.54	689.8
12/13/2011 10:00	8.56 Level	1.44	2.073	0.633	7.595	1.54	689.8
12/13/2011 10:15	8.56 Level	1.44	2.073	0.633	7.595	1.54	689.8
12/13/2011 10:30	8.56 Level	1.44	2.073	0.633	7.595	1.54	689.8
12/13/2011 10:45	8.56 Level	1.44	2.073	0.633	7.595	1.54	689.8
12/13/2011 11:00	8.56 Level	1.44	2.073	0.633	7.595	1.54	689.8
12/13/2011 11:15	8.56 Level	1.44	2.073	0.633	7.595	1.54	689.8
12/13/2011 11:30	8.56 Level	1.44	2.073	0.633	7.595	1.54	689.8
12/13/2011 11:45	8.56 Level	1.44	2.073	0.633	7.595	1.54	689.8
12/13/2011 12:00	8.56 Level	1.44	2.073	0.633	7.595	1.54	689.8
12/13/2011 12:15	8.56 Level	1.44	2.073	0.633	7.595	1.54	689.8
12/13/2011 12:30	8.56 Level	1.44	2.073	0.633	7.595	1.54	689.8
12/13/2011 12:45	8.56 Level	1.44	2.073	0.633	7.595	1.54	689.8
12/13/2011 13:00	8.56 Level	1.44	2.073	0.633	7.595	1.54	689.8
12/13/2011 13:15	8.56 Level	1.44	2.073	0.633	7.595	1.54	689.8
12/13/2011 13:30	8.56 Level	1.44	2.073	0.633	7.595	1.54	689.8
12/13/2011 13:45	8.56 Level	1.44	2.073	0.633	7.595	1.54	689.8
12/13/2011 14:00	8.56 Level	1.44	2.073	0.633	7.595	1.54	689.8
12/13/2011 14:15	8.56 Level	1.44	2.073	0.633	7.595	1.54	689.8
12/13/2011 14:30	8.56 Level	1.44	2.073	0.633	7.595	1.54	689.8
12/13/2011 14:45	8.56 Level	1.44	2.073	0.633	7.595	1.54	689.8
12/13/2011 15:00	8.56 Level	1.44	2.073	0.633	7.595	1.54	689.8
12/13/2011 15:15	8.56 Level	1.44	2.073	0.633	7.595	1.54	689.8
12/13/2011 15:30	8.56 Level	1.44	2.073	0.633	7.595	1.54	689.8
12/13/2011 15:45	8.56 Level	1.44	2.073	0.633	7.595	1.54	689.8
12/13/2011 16:00	8.56 Level	1.44	2.073	0.633	7.595	1.54	689.8
12/13/2011 16:15	8.56 Level	1.44	2.073	0.633	7.595	1.54	689.8
12/13/2011 16:30	8.56 Level	1.44	2.073	0.633	7.595	1.54	689.8
12/13/2011 16:45	8.56 Level	1.44	2.073	0.633	7.595	1.54	689.8

12/13/2011 17:00	8.56 Level	1.44	2.073	0.633	7.595	1.54	689.8
12/13/2011 17:15	8.56 Level	1.44	2.073	0.633	7.595	1.54	689.8
12/13/2011 17:30	8.56 Level	1.44	2.073	0.633	7.595	1.54	689.8
12/13/2011 17:45	8.56 Level	1.44	2.073	0.633	7.595	1.54	689.8
12/13/2011 18:00	8.51 Level	1.49	2.073	0.583	6.995	1.36	609.2
12/13/2011 18:15	8.56 Level	1.44	2.073	0.633	7.595	1.54	689.8
12/13/2011 18:30	8.56 Level	1.44	2.073	0.633	7.595	1.54	689.8
12/13/2011 18:45	8.56 Level	1.44	2.073	0.633	7.595	1.54	689.8
12/13/2011 19:00	8.56 Level	1.44	2.073	0.633	7.595	1.54	689.8
12/13/2011 19:15	8.56 Level	1.44	2.073	0.633	7.595	1.54	689.8
12/13/2011 19:30	8.56 Level	1.44	2.073	0.633	7.595	1.54	689.8
12/13/2011 19:45	8.56 Level	1.44	2.073	0.633	7.595	1.54	689.8
12/13/2011 20:00	8.56 Level	1.44	2.073	0.633	7.595	1.54	689.8
12/13/2011 20:15	8.56 Level	1.44	2.073	0.633	7.595	1.54	689.8
12/13/2011 20:30	8.56 Level	1.44	2.073	0.633	7.595	1.54	689.8
12/13/2011 20:45	8.56 Level	1.44	2.073	0.633	7.595	1.54	689.8
12/13/2011 21:00	8.56 Level	1.44	2.073	0.633	7.595	1.54	689.8
12/13/2011 21:15	8.56 Level	1.44	2.073	0.633	7.595	1.54	689.8
12/13/2011 21:30	8.56 Level	1.44	2.073	0.633	7.595	1.54	689.8
12/13/2011 21:45	8.56 Level	1.44	2.073	0.633	7.595	1.54	689.8
12/13/2011 22:00	8.56 Level	1.44	2.073	0.633	7.595	1.54	689.8
12/13/2011 22:15	8.56 Level	1.44	2.073	0.633	7.595	1.54	689.8
12/13/2011 22:30	8.56 Level	1.44	2.073	0.633	7.595	1.54	689.8
12/13/2011 22:45	8.56 Level	1.44	2.073	0.633	7.595	1.54	689.8
12/13/2011 23:00	8.56 Level	1.44	2.073	0.633	7.595	1.54	689.8
12/13/2011 23:15	8.56 Level	1.44	2.073	0.633	7.595	1.54	689.8
12/13/2011 23:30	8.56 Level	1.44	2.073	0.633	7.595	1.54	689.8
12/13/2011 23:45	8.56 Level	1.44	2.073	0.633	7.595	1.54	689.8
12/14/2011 0:00	8.56 Level	1.44	2.073	0.633	7.595	1.54	689.8
12/14/2011 0:15	8.56 Level	1.44	2.073	0.633	7.595	1.54	689.8
12/14/2011 0:30	8.56 Level	1.44	2.073	0.633	7.595	1.54	689.8
12/14/2011 0:45	8.56 Level	1.44	2.073	0.633	7.595	1.54	689.8
12/14/2011 1:00	8.56 Level	1.44	2.073	0.633	7.595	1.54	689.8
12/14/2011 1:15	8.56 Level	1.44	2.073	0.633	7.595	1.54	689.8
12/14/2011 1:30	8.56 Level	1.44	2.073	0.633	7.595	1.54	689.8
12/14/2011 1:45	8.56 Level	1.44	2.073	0.633	7.595	1.54	689.8
12/14/2011 2:00	8.56 Level	1.44	2.073	0.633	7.595	1.54	689.8
12/14/2011 2:15	8.56 Level	1.44	2.073	0.633	7.595	1.54	689.8
12/14/2011 2:30	8.51 Level	1.49	2.073	0.583	6.995	1.36	609.2
12/14/2011 2:45	8.56 Level	1.44	2.073	0.633	7.595	1.54	689.8
12/14/2011 3:00	8.56 Level	1.44	2.073	0.633	7.595	1.54	689.8
12/14/2011 3:15	8.56 Level	1.44	2.073	0.633	7.595	1.54	689.8
12/14/2011 3:30	8.56 Level	1.44	2.073	0.633	7.595	1.54	689.8
12/14/2011 3:45	8.56 Level	1.44	2.073	0.633	7.595	1.54	689.8
12/14/2011 4:00	8.56 Level	1.44	2.073	0.633	7.595	1.54	689.8
12/14/2011 4:15	8.56 Level	1.44	2.073	0.633	7.595	1.54	689.8
12/14/2011 4:30	8.56 Level	1.44	2.073	0.633	7.595	1.54	689.8

12/14/2011 4:45	8.56 Level	1.44	2.073	0.633	7.595	1.54	689.8
12/14/2011 5:00	8.56 Level	1.44	2.073	0.633	7.595	1.54	689.8
12/14/2011 5:15	8.56 Level	1.44	2.073	0.633	7.595	1.54	689.8
12/14/2011 5:30	8.51 Level	1.49	2.073	0.583	6.995	1.36	609.2
12/14/2011 5:45	8.56 Level	1.44	2.073	0.633	7.595	1.54	689.8
12/14/2011 6:00	8.56 Level	1.44	2.073	0.633	7.595	1.54	689.8
12/14/2011 6:15	8.56 Level	1.44	2.073	0.633	7.595	1.54	689.8
12/14/2011 6:30	8.56 Level	1.44	2.073	0.633	7.595	1.54	689.8
12/14/2011 6:45	8.56 Level	1.44	2.073	0.633	7.595	1.54	689.8
12/14/2011 7:00	8.56 Level	1.44	2.073	0.633	7.595	1.54	689.8
12/14/2011 7:15	8.56 Level	1.44	2.073	0.633	7.595	1.54	689.8
12/14/2011 7:30	8.56 Level	1.44	2.073	0.633	7.595	1.54	689.8
12/14/2011 7:45	8.56 Level	1.44	2.073	0.633	7.595	1.54	689.8
12/14/2011 8:00	8.56 Level	1.44	2.073	0.633	7.595	1.54	689.8
12/14/2011 8:15	8.51 Level	1.49	2.073	0.583	6.995	1.36	609.2
12/14/2011 8:30	8.56 Level	1.44	2.073	0.633	7.595	1.54	689.8
12/14/2011 8:45	8.56 Level	1.44	2.073	0.633	7.595	1.54	689.8
12/14/2011 9:00	8.56 Level	1.44	2.073	0.633	7.595	1.54	689.8
12/14/2011 9:15	8.56 Level	1.44	2.073	0.633	7.595	1.54	689.8
12/14/2011 9:30	8.56 Level	1.44	2.073	0.633	7.595	1.54	689.8
12/14/2011 9:45	8.51 Level	1.49	2.073	0.583	6.995	1.36	609.2
12/14/2011 10:00	8.56 Level	1.44	2.073	0.633	7.595	1.54	689.8
12/14/2011 10:15	8.56 Level	1.44	2.073	0.633	7.595	1.54	689.8
12/14/2011 10:30	8.56 Level	1.44	2.073	0.633	7.595	1.54	689.8
12/14/2011 10:45	8.56 Level	1.44	2.073	0.633	7.595	1.54	689.8
12/14/2011 11:00	8.56 Level	1.44	2.073	0.633	7.595	1.54	689.8
12/14/2011 11:15	8.56 Level	1.44	2.073	0.633	7.595	1.54	689.8
12/14/2011 11:30	8.51 Level	1.49	2.073	0.583	6.995	1.36	609.2
12/14/2011 11:45	8.56 Level	1.44	2.073	0.633	7.595	1.54	689.8
12/14/2011 12:00	8.56 Level	1.44	2.073	0.633	7.595	1.54	689.8
12/14/2011 12:15	8.56 Level	1.44	2.073	0.633	7.595	1.54	689.8
12/14/2011 12:30	8.56 Level	1.44	2.073	0.633	7.595	1.54	689.8
12/14/2011 12:45	8.56 Level	1.44	2.073	0.633	7.595	1.54	689.8
12/14/2011 13:00	8.56 Level	1.44	2.073	0.633	7.595	1.54	689.8
12/14/2011 13:15	8.56 Level	1.44	2.073	0.633	7.595	1.54	689.8
12/14/2011 13:30	8.56 Level	1.44	2.073	0.633	7.595	1.54	689.8
12/14/2011 13:45	8.56 Level	1.44	2.073	0.633	7.595	1.54	689.8
12/14/2011 14:00	8.56 Level	1.44	2.073	0.633	7.595	1.54	689.8
12/14/2011 14:15	8.56 Level	1.44	2.073	0.633	7.595	1.54	689.8
12/14/2011 14:30	8.56 Level	1.44	2.073	0.633	7.595	1.54	689.8
12/14/2011 14:45	8.56 Level	1.44	2.073	0.633	7.595	1.54	689.8
12/14/2011 15:00	8.56 Level	1.44	2.073	0.633	7.595	1.54	689.8
12/14/2011 15:15	8.56 Level	1.44	2.073	0.633	7.595	1.54	689.8
12/14/2011 15:30	8.56 Level	1.44	2.073	0.633	7.595	1.54	689.8
12/14/2011 15:45	8.56 Level	1.44	2.073	0.633	7.595	1.54	689.8
12/14/2011 16:00	8.56 Level	1.44	2.073	0.633	7.595	1.54	689.8
12/14/2011 16:15	8.56 Level	1.44	2.073	0.633	7.595	1.54	689.8

12/14/2011 16:30	8.56 Level	1.44	2.073	0.633	7.595	1.54	689.8
12/14/2011 16:45	8.56 Level	1.44	2.073	0.633	7.595	1.54	689.8
12/14/2011 17:00	8.56 Level	1.44	2.073	0.633	7.595	1.54	689.8
12/14/2011 17:15	8.56 Level	1.44	2.073	0.633	7.595	1.54	689.8
12/14/2011 17:30	8.56 Level	1.44	2.073	0.633	7.595	1.54	689.8
12/14/2011 17:45	8.56 Level	1.44	2.073	0.633	7.595	1.54	689.8
12/14/2011 18:00	8.56 Level	1.44	2.073	0.633	7.595	1.54	689.8
12/14/2011 18:15	8.56 Level	1.44	2.073	0.633	7.595	1.54	689.8
12/14/2011 18:30	8.51 Level	1.49	2.073	0.583	6.995	1.36	609.2
12/14/2011 18:45	8.51 Level	1.49	2.073	0.583	6.995	1.36	609.2
12/14/2011 19:00	8.51 Level	1.49	2.073	0.583	6.995	1.36	609.2
12/14/2011 19:15	8.51 Level	1.49	2.073	0.583	6.995	1.36	609.2
12/14/2011 19:30	8.51 Level	1.49	2.073	0.583	6.995	1.36	609.2
12/14/2011 19:45	8.51 Level	1.49	2.073	0.583	6.995	1.36	609.2
12/14/2011 20:00	8.55 Level	1.45	2.073	0.623	7.475	1.50	673.4
12/14/2011 20:15	8.51 Level	1.49	2.073	0.583	6.995	1.36	609.2
12/14/2011 20:30	8.51 Level	1.49	2.073	0.583	6.995	1.36	609.2
12/14/2011 20:45	8.51 Level	1.49	2.073	0.583	6.995	1.36	609.2
12/14/2011 21:00	8.51 Level	1.49	2.073	0.583	6.995	1.36	609.2
12/14/2011 21:15	8.51 Level	1.49	2.073	0.583	6.995	1.36	609.2
12/14/2011 21:30	8.51 Level	1.49	2.073	0.583	6.995	1.36	609.2
12/14/2011 21:45	8.51 Level	1.49	2.073	0.583	6.995	1.36	609.2
12/14/2011 22:00	8.51 Level	1.49	2.073	0.583	6.995	1.36	609.2
12/14/2011 22:15	8.51 Level	1.49	2.073	0.583	6.995	1.36	609.2
12/14/2011 22:30	8.51 Level	1.49	2.073	0.583	6.995	1.36	609.2
12/14/2011 22:45	8.51 Level	1.49	2.073	0.583	6.995	1.36	609.2
12/14/2011 23:00	8.51 Level	1.49	2.073	0.583	6.995	1.36	609.2
12/14/2011 23:15	8.51 Level	1.49	2.073	0.583	6.995	1.36	609.2
12/14/2011 23:30	8.51 Level	1.49	2.073	0.583	6.995	1.36	609.2
12/14/2011 23:45	8.51 Level	1.49	2.073	0.583	6.995	1.36	609.2
12/15/2011 0:00	8.51 Level	1.49	2.073	0.583	6.995	1.36	609.2
12/15/2011 0:15	8.51 Level	1.49	2.073	0.583	6.995	1.36	609.2
12/15/2011 0:30	8.51 Level	1.49	2.073	0.583	6.995	1.36	609.2
12/15/2011 0:45	8.51 Level	1.49	2.073	0.583	6.995	1.36	609.2
12/15/2011 1:00	8.51 Level	1.49	2.073	0.583	6.995	1.36	609.2
12/15/2011 1:15	8.51 Level	1.49	2.073	0.583	6.995	1.36	609.2
12/15/2011 1:30	8.51 Level	1.49	2.073	0.583	6.995	1.36	609.2
12/15/2011 1:45	8.51 Level	1.49	2.073	0.583	6.995	1.36	609.2
12/15/2011 2:00	8.51 Level	1.49	2.073	0.583	6.995	1.36	609.2
12/15/2011 2:15	8.51 Level	1.49	2.073	0.583	6.995	1.36	609.2
12/15/2011 2:30	8.51 Level	1.49	2.073	0.583	6.995	1.36	609.2
12/15/2011 2:45	8.46 Level	1.54	2.073	0.533	6.395	1.19	532.0
12/15/2011 3:00	8.51 Level	1.49	2.073	0.583	6.995	1.36	609.2
12/15/2011 3:15	8.51 Level	1.49	2.073	0.583	6.995	1.36	609.2
12/15/2011 3:30	8.51 Level	1.49	2.073	0.583	6.995	1.36	609.2
12/15/2011 3:45	8.51 Level	1.49	2.073	0.583	6.995	1.36	609.2
12/15/2011 4:00	8.51 Level	1.49	2.073	0.583	6.995	1.36	609.2

12/15/2011 4:15	8.51	Level	1.49	2.073	0.583	6.995	1.36	609.2
12/15/2011 4:30	8.51	Level	1.49	2.073	0.583	6.995	1.36	609.2
12/15/2011 4:45	8.51	Level	1.49	2.073	0.583	6.995	1.36	609.2
12/15/2011 5:00	8.51	Level	1.49	2.073	0.583	6.995	1.36	609.2
12/15/2011 5:15	8.51	Level	1.49	2.073	0.583	6.995	1.36	609.2
12/15/2011 5:30	8.51	Level	1.49	2.073	0.583	6.995	1.36	609.2
12/15/2011 5:45	8.51	Level	1.49	2.073	0.583	6.995	1.36	609.2
12/15/2011 6:00	8.51	Level	1.49	2.073	0.583	6.995	1.36	609.2
12/15/2011 6:15	8.51	Level	1.49	2.073	0.583	6.995	1.36	609.2
12/15/2011 6:30	8.51	Level	1.49	2.073	0.583	6.995	1.36	609.2
12/15/2011 6:45	8.51	Level	1.49	2.073	0.583	6.995	1.36	609.2
12/15/2011 7:00	8.51	Level	1.49	2.073	0.583	6.995	1.36	609.2
12/15/2011 7:15	8.51	Level	1.49	2.073	0.583	6.995	1.36	609.2
12/15/2011 7:30	8.51	Level	1.49	2.073	0.583	6.995	1.36	609.2
12/15/2011 7:45	8.51	Level	1.49	2.073	0.583	6.995	1.36	609.2
12/15/2011 8:00	8.51	Level	1.49	2.073	0.583	6.995	1.36	609.2
12/15/2011 8:15	8.51	Level	1.49	2.073	0.583	6.995	1.36	609.2
12/15/2011 8:30	8.51	Level	1.49	2.073	0.583	6.995	1.36	609.2
12/15/2011 8:45	8.51	Level	1.49	2.073	0.583	6.995	1.36	609.2
12/15/2011 9:00	8.51	Level	1.49	2.073	0.583	6.995	1.36	609.2
12/15/2011 9:15	8.51	Level	1.49	2.073	0.583	6.995	1.36	609.2
12/15/2011 9:30	8.51	Level	1.49	2.073	0.583	6.995	1.36	609.2
12/15/2011 9:45	8.51	Level	1.49	2.073	0.583	6.995	1.36	609.2
12/15/2011 10:00	8.51	Level	1.49	2.073	0.583	6.995	1.36	609.2
12/15/2011 10:15	8.51	Level	1.49	2.073	0.583	6.995	1.36	609.2
12/15/2011 10:30	8.51	Level	1.49	2.073	0.583	6.995	1.36	609.2
12/15/2011 10:45	8.51	Level	1.49	2.073	0.583	6.995	1.36	609.2
12/15/2011 11:00	8.51	Level	1.49	2.073	0.583	6.995	1.36	609.2
12/15/2011 11:15	8.51	Level	1.49	2.073	0.583	6.995	1.36	609.2
12/15/2011 11:30	8.56	Level	1.44	2.073	0.633	7.595	1.54	689.8
12/15/2011 11:45	8.51	Level	1.49	2.073	0.583	6.995	1.36	609.2
12/15/2011 12:00	8.56	Level	1.44	2.073	0.633	7.595	1.54	689.8
12/15/2011 12:15	8.56	Level	1.44	2.073	0.633	7.595	1.54	689.8
12/15/2011 12:30	8.56	Level	1.44	2.073	0.633	7.595	1.54	689.8
12/15/2011 12:45	8.56	Level	1.44	2.073	0.633	7.595	1.54	689.8
12/15/2011 13:00	8.56	Level	1.44	2.073	0.633	7.595	1.54	689.8
12/15/2011 13:15	8.56	Level	1.44	2.073	0.633	7.595	1.54	689.8
12/15/2011 13:30	8.56	Level	1.44	2.073	0.633	7.595	1.54	689.8
12/15/2011 13:45	8.56	Level	1.44	2.073	0.633	7.595	1.54	689.8
12/15/2011 14:00	8.51	Level	1.49	2.073	0.583	6.995	1.36	609.2
12/15/2011 14:15	8.56	Level	1.44	2.073	0.633	7.595	1.54	689.8
12/15/2011 14:30	8.56	Level	1.44	2.073	0.633	7.595	1.54	689.8
12/15/2011 14:45	8.56	Level	1.44	2.073	0.633	7.595	1.54	689.8
12/15/2011 15:00	8.55	Level	1.45	2.073	0.623	7.475	1.50	673.4
12/15/2011 15:15	8.56	Level	1.44	2.073	0.633	7.595	1.54	689.8
12/15/2011 15:30	8.56	Level	1.44	2.073	0.633	7.595	1.54	689.8
12/15/2011 15:45	8.55	Level	1.45	2.073	0.623	7.475	1.50	673.4

12/15/2011 16:00	8.55	Level	1.45	2.073	0.623	7.475	1.50	673.4
12/15/2011 16:15	8.56	Level	1.44	2.073	0.633	7.595	1.54	689.8
12/15/2011 16:30	8.56	Level	1.44	2.073	0.633	7.595	1.54	689.8
12/15/2011 16:45	8.56	Level	1.44	2.073	0.633	7.595	1.54	689.8
12/15/2011 17:00	8.56	Level	1.44	2.073	0.633	7.595	1.54	689.8
12/15/2011 17:15	8.55	Level	1.45	2.073	0.623	7.475	1.50	673.4
12/15/2011 17:30	8.55	Level	1.45	2.073	0.623	7.475	1.50	673.4
12/15/2011 17:45	8.56	Level	1.44	2.073	0.633	7.595	1.54	689.8
12/15/2011 18:00	8.56	Level	1.44	2.073	0.633	7.595	1.54	689.8
12/15/2011 18:15	8.56	Level	1.44	2.073	0.633	7.595	1.54	689.8
12/15/2011 18:30	8.51	Level	1.49	2.073	0.583	6.995	1.36	609.2
12/15/2011 18:45	8.51	Level	1.49	2.073	0.583	6.995	1.36	609.2
12/15/2011 19:00	8.51	Level	1.49	2.073	0.583	6.995	1.36	609.2
12/15/2011 19:15	8.51	Level	1.49	2.073	0.583	6.995	1.36	609.2
12/15/2011 19:30	8.51	Level	1.49	2.073	0.583	6.995	1.36	609.2
12/15/2011 19:45	8.51	Level	1.49	2.073	0.583	6.995	1.36	609.2
12/15/2011 20:00	8.51	Level	1.49	2.073	0.583	6.995	1.36	609.2
12/15/2011 20:15	8.51	Level	1.49	2.073	0.583	6.995	1.36	609.2
12/15/2011 20:30	8.51	Level	1.49	2.073	0.583	6.995	1.36	609.2
12/15/2011 20:45	8.51	Level	1.49	2.073	0.583	6.995	1.36	609.2
12/15/2011 21:00	8.51	Level	1.49	2.073	0.583	6.995	1.36	609.2
12/15/2011 21:15	8.51	Level	1.49	2.073	0.583	6.995	1.36	609.2
12/15/2011 21:30	8.51	Level	1.49	2.073	0.583	6.995	1.36	609.2
12/15/2011 21:45	8.51	Level	1.49	2.073	0.583	6.995	1.36	609.2
12/15/2011 22:00	8.51	Level	1.49	2.073	0.583	6.995	1.36	609.2
12/15/2011 22:15	8.51	Level	1.49	2.073	0.583	6.995	1.36	609.2
12/15/2011 22:30	8.51	Level	1.49	2.073	0.583	6.995	1.36	609.2
12/15/2011 22:45	8.51	Level	1.49	2.073	0.583	6.995	1.36	609.2
12/15/2011 23:00	8.51	Level	1.49	2.073	0.583	6.995	1.36	609.2
12/15/2011 23:15	8.51	Level	1.49	2.073	0.583	6.995	1.36	609.2
12/15/2011 23:30	8.51	Level	1.49	2.073	0.583	6.995	1.36	609.2
12/15/2011 23:45	8.51	Level	1.49	2.073	0.583	6.995	1.36	609.2
12/16/2011 0:00	8.51	Level	1.49	2.073	0.583	6.995	1.36	609.2
12/16/2011 0:15	8.51	Level	1.49	2.073	0.583	6.995	1.36	609.2
12/16/2011 0:30	8.51	Level	1.49	2.073	0.583	6.995	1.36	609.2
12/16/2011 0:45	8.51	Level	1.49	2.073	0.583	6.995	1.36	609.2
12/16/2011 1:00	8.51	Level	1.49	2.073	0.583	6.995	1.36	609.2
12/16/2011 1:15	8.51	Level	1.49	2.073	0.583	6.995	1.36	609.2
12/16/2011 1:30	8.51	Level	1.49	2.073	0.583	6.995	1.36	609.2
12/16/2011 1:45	8.51	Level	1.49	2.073	0.583	6.995	1.36	609.2
12/16/2011 2:00	8.51	Level	1.49	2.073	0.583	6.995	1.36	609.2
12/16/2011 2:15	8.51	Level	1.49	2.073	0.583	6.995	1.36	609.2
12/16/2011 2:30	8.51	Level	1.49	2.073	0.583	6.995	1.36	609.2
12/16/2011 2:45	8.51	Level	1.49	2.073	0.583	6.995	1.36	609.2
12/16/2011 3:00	8.51	Level	1.49	2.073	0.583	6.995	1.36	609.2
12/16/2011 3:15	8.51	Level	1.49	2.073	0.583	6.995	1.36	609.2
12/16/2011 3:30	8.51	Level	1.49	2.073	0.583	6.995	1.36	609.2

12/16/2011 3:45	8.51	Level	1.49	2.073	0.583	6.995	1.36	609.2
12/16/2011 4:00	8.51	Level	1.49	2.073	0.583	6.995	1.36	609.2
12/16/2011 4:15	8.51	Level	1.49	2.073	0.583	6.995	1.36	609.2
12/16/2011 4:30	8.51	Level	1.49	2.073	0.583	6.995	1.36	609.2
12/16/2011 4:45	8.51	Level	1.49	2.073	0.583	6.995	1.36	609.2
12/16/2011 5:00	8.51	Level	1.49	2.073	0.583	6.995	1.36	609.2
12/16/2011 5:15	8.51	Level	1.49	2.073	0.583	6.995	1.36	609.2
12/16/2011 5:30	8.51	Level	1.49	2.073	0.583	6.995	1.36	609.2
12/16/2011 5:45	8.51	Level	1.49	2.073	0.583	6.995	1.36	609.2
12/16/2011 6:00	8.51	Level	1.49	2.073	0.583	6.995	1.36	609.2
12/16/2011 6:15	8.51	Level	1.49	2.073	0.583	6.995	1.36	609.2
12/16/2011 6:30	8.51	Level	1.49	2.073	0.583	6.995	1.36	609.2
12/16/2011 6:45	8.51	Level	1.49	2.073	0.583	6.995	1.36	609.2
12/16/2011 7:00	8.51	Level	1.49	2.073	0.583	6.995	1.36	609.2
12/16/2011 7:15	8.51	Level	1.49	2.073	0.583	6.995	1.36	609.2
12/16/2011 7:30	8.51	Level	1.49	2.073	0.583	6.995	1.36	609.2
12/16/2011 7:45	8.51	Level	1.49	2.073	0.583	6.995	1.36	609.2
12/16/2011 8:00	8.51	Level	1.49	2.073	0.583	6.995	1.36	609.2
12/16/2011 8:15	8.51	Level	1.49	2.073	0.583	6.995	1.36	609.2
12/16/2011 8:30	8.51	Level	1.49	2.073	0.583	6.995	1.36	609.2
12/16/2011 8:45	8.51	Level	1.49	2.073	0.583	6.995	1.36	609.2
12/16/2011 9:00	8.51	Level	1.49	2.073	0.583	6.995	1.36	609.2
12/16/2011 9:15	8.51	Level	1.49	2.073	0.583	6.995	1.36	609.2
12/16/2011 9:30	8.51	Level	1.49	2.073	0.583	6.995	1.36	609.2
12/16/2011 9:45	8.51	Level	1.49	2.073	0.583	6.995	1.36	609.2
12/16/2011 10:00	8.51	Level	1.49	2.073	0.583	6.995	1.36	609.2
12/16/2011 10:15	8.51	Level	1.49	2.073	0.583	6.995	1.36	609.2
12/16/2011 10:30	8.51	Level	1.49	2.073	0.583	6.995	1.36	609.2
12/16/2011 10:45	8.51	Level	1.49	2.073	0.583	6.995	1.36	609.2
12/16/2011 11:00	8.51	Level	1.49	2.073	0.583	6.995	1.36	609.2
12/16/2011 11:15	8.56	Level	1.44	2.073	0.633	7.595	1.54	689.8
12/16/2011 11:30	8.56	Level	1.44	2.073	0.633	7.595	1.54	689.8
12/16/2011 11:45	8.56	Level	1.44	2.073	0.633	7.595	1.54	689.8
12/16/2011 12:00	8.51	Level	1.49	2.073	0.583	6.995	1.36	609.2
12/16/2011 12:15	8.56	Level	1.44	2.073	0.633	7.595	1.54	689.8
12/16/2011 12:30	8.56	Level	1.44	2.073	0.633	7.595	1.54	689.8
12/16/2011 12:45	8.51	Level	1.49	2.073	0.583	6.995	1.36	609.2
12/16/2011 13:00	8.56	Level	1.44	2.073	0.633	7.595	1.54	689.8
12/16/2011 13:15	8.56	Level	1.44	2.073	0.633	7.595	1.54	689.8
12/16/2011 13:30	8.56	Level	1.44	2.073	0.633	7.595	1.54	689.8
12/16/2011 13:45	8.56	Level	1.44	2.073	0.633	7.595	1.54	689.8
12/16/2011 14:00	8.6	Level	1.4	2.073	0.673	8.075	1.69	756.7
12/16/2011 14:15	8.56	Level	1.44	2.073	0.633	7.595	1.54	689.8
12/16/2011 14:30	8.55	Level	1.45	2.073	0.623	7.475	1.50	673.4
12/16/2011 14:45	8.55	Level	1.45	2.073	0.623	7.475	1.50	673.4
12/16/2011 15:00	8.55	Level	1.45	2.073	0.623	7.475	1.50	673.4
12/16/2011 15:15	8.55	Level	1.45	2.073	0.623	7.475	1.50	673.4

12/16/2011 15:30	8.55	Level	1.45	2.073	0.623	7.475	1.50	673.4
12/16/2011 15:45	8.55	Level	1.45	2.073	0.623	7.475	1.50	673.4
12/16/2011 16:00	8.55	Level	1.45	2.073	0.623	7.475	1.50	673.4
12/16/2011 16:15	8.55	Level	1.45	2.073	0.623	7.475	1.50	673.4
12/16/2011 16:30	8.55	Level	1.45	2.073	0.623	7.475	1.50	673.4
12/16/2011 16:45	8.55	Level	1.45	2.073	0.623	7.475	1.50	673.4
12/16/2011 17:00	8.55	Level	1.45	2.073	0.623	7.475	1.50	673.4
12/16/2011 17:15	8.55	Level	1.45	2.073	0.623	7.475	1.50	673.4
12/16/2011 17:30	8.56	Level	1.44	2.073	0.633	7.595	1.54	689.8
12/16/2011 17:45	8.55	Level	1.45	2.073	0.623	7.475	1.50	673.4
12/16/2011 18:00	8.56	Level	1.44	2.073	0.633	7.595	1.54	689.8
12/16/2011 18:15	8.51	Level	1.49	2.073	0.583	6.995	1.36	609.2
12/16/2011 18:30	8.56	Level	1.44	2.073	0.633	7.595	1.54	689.8
12/16/2011 18:45	8.56	Level	1.44	2.073	0.633	7.595	1.54	689.8
12/16/2011 19:00	8.56	Level	1.44	2.073	0.633	7.595	1.54	689.8
12/16/2011 19:15	8.56	Level	1.44	2.073	0.633	7.595	1.54	689.8
12/16/2011 19:30	8.56	Level	1.44	2.073	0.633	7.595	1.54	689.8
12/16/2011 19:45	8.51	Level	1.49	2.073	0.583	6.995	1.36	609.2
12/16/2011 20:00	8.56	Level	1.44	2.073	0.633	7.595	1.54	689.8
12/16/2011 20:15	8.56	Level	1.44	2.073	0.633	7.595	1.54	689.8
12/16/2011 20:30	8.51	Level	1.49	2.073	0.583	6.995	1.36	609.2
12/16/2011 20:45	8.51	Level	1.49	2.073	0.583	6.995	1.36	609.2
12/16/2011 21:00	8.51	Level	1.49	2.073	0.583	6.995	1.36	609.2
12/16/2011 21:15	8.51	Level	1.49	2.073	0.583	6.995	1.36	609.2
12/16/2011 21:30	8.51	Level	1.49	2.073	0.583	6.995	1.36	609.2
12/16/2011 21:45	8.51	Level	1.49	2.073	0.583	6.995	1.36	609.2
12/16/2011 22:00	8.55	Level	1.45	2.073	0.623	7.475	1.50	673.4
12/16/2011 22:15	8.51	Level	1.49	2.073	0.583	6.995	1.36	609.2
12/16/2011 22:30	8.51	Level	1.49	2.073	0.583	6.995	1.36	609.2
12/16/2011 22:45	8.51	Level	1.49	2.073	0.583	6.995	1.36	609.2
12/16/2011 23:00	8.51	Level	1.49	2.073	0.583	6.995	1.36	609.2
12/16/2011 23:15	8.51	Level	1.49	2.073	0.583	6.995	1.36	609.2
12/16/2011 23:30	8.51	Level	1.49	2.073	0.583	6.995	1.36	609.2
12/16/2011 23:45	8.51	Level	1.49	2.073	0.583	6.995	1.36	609.2
12/17/2011 0:00	8.51	Level	1.49	2.073	0.583	6.995	1.36	609.2
12/17/2011 0:15	8.51	Level	1.49	2.073	0.583	6.995	1.36	609.2
12/17/2011 0:30	8.51	Level	1.49	2.073	0.583	6.995	1.36	609.2
12/17/2011 0:45	8.51	Level	1.49	2.073	0.583	6.995	1.36	609.2
12/17/2011 1:00	8.51	Level	1.49	2.073	0.583	6.995	1.36	609.2
12/17/2011 1:15	8.51	Level	1.49	2.073	0.583	6.995	1.36	609.2
12/17/2011 1:30	8.51	Level	1.49	2.073	0.583	6.995	1.36	609.2
12/17/2011 1:45	8.51	Level	1.49	2.073	0.583	6.995	1.36	609.2
12/17/2011 2:00	8.51	Level	1.49	2.073	0.583	6.995	1.36	609.2
12/17/2011 2:15	8.51	Level	1.49	2.073	0.583	6.995	1.36	609.2
12/17/2011 2:30	8.51	Level	1.49	2.073	0.583	6.995	1.36	609.2
12/17/2011 2:45	8.51	Level	1.49	2.073	0.583	6.995	1.36	609.2
12/17/2011 3:00	8.51	Level	1.49	2.073	0.583	6.995	1.36	609.2

12/17/2011 3:15	8.51	Level	1.49	2.073	0.583	6.995	1.36	609.2
12/17/2011 3:30	8.55	Level	1.45	2.073	0.623	7.475	1.50	673.4
12/17/2011 3:45	8.51	Level	1.49	2.073	0.583	6.995	1.36	609.2
12/17/2011 4:00	8.51	Level	1.49	2.073	0.583	6.995	1.36	609.2
12/17/2011 4:15	8.51	Level	1.49	2.073	0.583	6.995	1.36	609.2
12/17/2011 4:30	8.51	Level	1.49	2.073	0.583	6.995	1.36	609.2
12/17/2011 4:45	8.51	Level	1.49	2.073	0.583	6.995	1.36	609.2
12/17/2011 5:00	8.51	Level	1.49	2.073	0.583	6.995	1.36	609.2
12/17/2011 5:15	8.51	Level	1.49	2.073	0.583	6.995	1.36	609.2
12/17/2011 5:30	8.51	Level	1.49	2.073	0.583	6.995	1.36	609.2
12/17/2011 5:45	8.51	Level	1.49	2.073	0.583	6.995	1.36	609.2
12/17/2011 6:00	8.51	Level	1.49	2.073	0.583	6.995	1.36	609.2
12/17/2011 6:15	8.51	Level	1.49	2.073	0.583	6.995	1.36	609.2
12/17/2011 6:30	8.51	Level	1.49	2.073	0.583	6.995	1.36	609.2
12/17/2011 6:45	8.51	Level	1.49	2.073	0.583	6.995	1.36	609.2
12/17/2011 7:00	8.51	Level	1.49	2.073	0.583	6.995	1.36	609.2
12/17/2011 7:15	8.51	Level	1.49	2.073	0.583	6.995	1.36	609.2
12/17/2011 7:30	8.51	Level	1.49	2.073	0.583	6.995	1.36	609.2
12/17/2011 7:45	8.51	Level	1.49	2.073	0.583	6.995	1.36	609.2
12/17/2011 8:00	8.51	Level	1.49	2.073	0.583	6.995	1.36	609.2
12/17/2011 8:15	8.51	Level	1.49	2.073	0.583	6.995	1.36	609.2
12/17/2011 8:30	8.51	Level	1.49	2.073	0.583	6.995	1.36	609.2
12/17/2011 8:45	8.51	Level	1.49	2.073	0.583	6.995	1.36	609.2
12/17/2011 9:00	8.51	Level	1.49	2.073	0.583	6.995	1.36	609.2
12/17/2011 9:15	8.51	Level	1.49	2.073	0.583	6.995	1.36	609.2
12/17/2011 9:30	8.51	Level	1.49	2.073	0.583	6.995	1.36	609.2
12/17/2011 9:45	8.51	Level	1.49	2.073	0.583	6.995	1.36	609.2
12/17/2011 10:00	8.51	Level	1.49	2.073	0.583	6.995	1.36	609.2
12/17/2011 10:15	8.51	Level	1.49	2.073	0.583	6.995	1.36	609.2
12/17/2011 10:30	8.51	Level	1.49	2.073	0.583	6.995	1.36	609.2
12/17/2011 10:45	8.55	Level	1.45	2.073	0.623	7.475	1.50	673.4
12/17/2011 11:00	8.51	Level	1.49	2.073	0.583	6.995	1.36	609.2
12/17/2011 11:15	8.55	Level	1.45	2.073	0.623	7.475	1.50	673.4
12/17/2011 11:30	8.55	Level	1.45	2.073	0.623	7.475	1.50	673.4
12/17/2011 11:45	8.56	Level	1.44	2.073	0.633	7.595	1.54	689.8
12/17/2011 12:00	8.55	Level	1.45	2.073	0.623	7.475	1.50	673.4
12/17/2011 12:15	8.56	Level	1.44	2.073	0.633	7.595	1.54	689.8
12/17/2011 12:30	8.56	Level	1.44	2.073	0.633	7.595	1.54	689.8
12/17/2011 12:45	8.56	Level	1.44	2.073	0.633	7.595	1.54	689.8
12/17/2011 13:00	8.56	Level	1.44	2.073	0.633	7.595	1.54	689.8
12/17/2011 13:15	8.56	Level	1.44	2.073	0.633	7.595	1.54	689.8
12/17/2011 13:30	8.56	Level	1.44	2.073	0.633	7.595	1.54	689.8
12/17/2011 13:45	8.56	Level	1.44	2.073	0.633	7.595	1.54	689.8
12/17/2011 14:00	8.56	Level	1.44	2.073	0.633	7.595	1.54	689.8
12/17/2011 14:15	8.56	Level	1.44	2.073	0.633	7.595	1.54	689.8
12/17/2011 14:30	8.56	Level	1.44	2.073	0.633	7.595	1.54	689.8
12/17/2011 14:45	8.56	Level	1.44	2.073	0.633	7.595	1.54	689.8

12/17/2011 15:00	8.55	Level	1.45	2.073	0.623	7.475	1.50	673.4
12/17/2011 15:15	8.55	Level	1.45	2.073	0.623	7.475	1.50	673.4
12/17/2011 15:30	8.55	Level	1.45	2.073	0.623	7.475	1.50	673.4
12/17/2011 15:45	8.55	Level	1.45	2.073	0.623	7.475	1.50	673.4
12/17/2011 16:00	8.55	Level	1.45	2.073	0.623	7.475	1.50	673.4
12/17/2011 16:15	8.55	Level	1.45	2.073	0.623	7.475	1.50	673.4
12/17/2011 16:30	8.55	Level	1.45	2.073	0.623	7.475	1.50	673.4
12/17/2011 16:45	8.55	Level	1.45	2.073	0.623	7.475	1.50	673.4
12/17/2011 17:00	8.55	Level	1.45	2.073	0.623	7.475	1.50	673.4
12/17/2011 17:15	8.55	Level	1.45	2.073	0.623	7.475	1.50	673.4
12/17/2011 17:30	8.56	Level	1.44	2.073	0.633	7.595	1.54	689.8
12/17/2011 17:45	8.55	Level	1.45	2.073	0.623	7.475	1.50	673.4
12/17/2011 18:00	8.55	Level	1.45	2.073	0.623	7.475	1.50	673.4
12/17/2011 18:15	8.55	Level	1.45	2.073	0.623	7.475	1.50	673.4
12/17/2011 18:30	8.56	Level	1.44	2.073	0.633	7.595	1.54	689.8
12/17/2011 18:45	8.56	Level	1.44	2.073	0.633	7.595	1.54	689.8
12/17/2011 19:00	8.56	Level	1.44	2.073	0.633	7.595	1.54	689.8
12/17/2011 19:15	8.56	Level	1.44	2.073	0.633	7.595	1.54	689.8
12/17/2011 19:30	8.56	Level	1.44	2.073	0.633	7.595	1.54	689.8
12/17/2011 19:45	8.56	Level	1.44	2.073	0.633	7.595	1.54	689.8
12/17/2011 20:00	8.56	Level	1.44	2.073	0.633	7.595	1.54	689.8
12/17/2011 20:15	8.56	Level	1.44	2.073	0.633	7.595	1.54	689.8
12/17/2011 20:30	8.56	Level	1.44	2.073	0.633	7.595	1.54	689.8
12/17/2011 20:45	8.56	Level	1.44	2.073	0.633	7.595	1.54	689.8
12/17/2011 21:00	8.55	Level	1.45	2.073	0.623	7.475	1.50	673.4
12/17/2011 21:15	8.56	Level	1.44	2.073	0.633	7.595	1.54	689.8
12/17/2011 21:30	8.51	Level	1.49	2.073	0.583	6.995	1.36	609.2
12/17/2011 21:45	8.56	Level	1.44	2.073	0.633	7.595	1.54	689.8
12/17/2011 22:00	8.51	Level	1.49	2.073	0.583	6.995	1.36	609.2
12/17/2011 22:15	8.51	Level	1.49	2.073	0.583	6.995	1.36	609.2
12/17/2011 22:30	8.56	Level	1.44	2.073	0.633	7.595	1.54	689.8
12/17/2011 22:45	8.51	Level	1.49	2.073	0.583	6.995	1.36	609.2
12/17/2011 23:00	8.51	Level	1.49	2.073	0.583	6.995	1.36	609.2
12/17/2011 23:15	8.51	Level	1.49	2.073	0.583	6.995	1.36	609.2
12/17/2011 23:30	8.51	Level	1.49	2.073	0.583	6.995	1.36	609.2
12/17/2011 23:45	8.56	Level	1.44	2.073	0.633	7.595	1.54	689.8
12/18/2011 0:00	8.56	Level	1.44	2.073	0.633	7.595	1.54	689.8
12/18/2011 0:15	8.56	Level	1.44	2.073	0.633	7.595	1.54	689.8
12/18/2011 0:30	8.55	Level	1.45	2.073	0.623	7.475	1.50	673.4
12/18/2011 0:45	8.51	Level	1.49	2.073	0.583	6.995	1.36	609.2
12/18/2011 1:00	8.51	Level	1.49	2.073	0.583	6.995	1.36	609.2
12/18/2011 1:15	8.51	Level	1.49	2.073	0.583	6.995	1.36	609.2
12/18/2011 1:30	8.51	Level	1.49	2.073	0.583	6.995	1.36	609.2
12/18/2011 1:45	8.56	Level	1.44	2.073	0.633	7.595	1.54	689.8
12/18/2011 2:00	8.56	Level	1.44	2.073	0.633	7.595	1.54	689.8
12/18/2011 2:15	8.51	Level	1.49	2.073	0.583	6.995	1.36	609.2
12/18/2011 2:30	8.51	Level	1.49	2.073	0.583	6.995	1.36	609.2

12/18/2011 2:45	8.51	Level	1.49	2.073	0.583	6.995	1.36	609.2
12/18/2011 3:00	8.51	Level	1.49	2.073	0.583	6.995	1.36	609.2
12/18/2011 3:15	8.56	Level	1.44	2.073	0.633	7.595	1.54	689.8
12/18/2011 3:30	8.55	Level	1.45	2.073	0.623	7.475	1.50	673.4
12/18/2011 3:45	8.51	Level	1.49	2.073	0.583	6.995	1.36	609.2
12/18/2011 4:00	8.51	Level	1.49	2.073	0.583	6.995	1.36	609.2
12/18/2011 4:15	8.51	Level	1.49	2.073	0.583	6.995	1.36	609.2
12/18/2011 4:30	8.56	Level	1.44	2.073	0.633	7.595	1.54	689.8
12/18/2011 4:45	8.51	Level	1.49	2.073	0.583	6.995	1.36	609.2
12/18/2011 5:00	8.51	Level	1.49	2.073	0.583	6.995	1.36	609.2
12/18/2011 5:15	8.51	Level	1.49	2.073	0.583	6.995	1.36	609.2
12/18/2011 5:30	8.51	Level	1.49	2.073	0.583	6.995	1.36	609.2
12/18/2011 5:45	8.56	Level	1.44	2.073	0.633	7.595	1.54	689.8
12/18/2011 6:00	8.51	Level	1.49	2.073	0.583	6.995	1.36	609.2
12/18/2011 6:15	8.51	Level	1.49	2.073	0.583	6.995	1.36	609.2
12/18/2011 6:30	8.56	Level	1.44	2.073	0.633	7.595	1.54	689.8
12/18/2011 6:45	8.56	Level	1.44	2.073	0.633	7.595	1.54	689.8
12/18/2011 7:00	8.56	Level	1.44	2.073	0.633	7.595	1.54	689.8
12/18/2011 7:15	8.51	Level	1.49	2.073	0.583	6.995	1.36	609.2
12/18/2011 7:30	8.56	Level	1.44	2.073	0.633	7.595	1.54	689.8
12/18/2011 7:45	8.51	Level	1.49	2.073	0.583	6.995	1.36	609.2
12/18/2011 8:00	8.51	Level	1.49	2.073	0.583	6.995	1.36	609.2
12/18/2011 8:15	8.51	Level	1.49	2.073	0.583	6.995	1.36	609.2
12/18/2011 8:30	8.56	Level	1.44	2.073	0.633	7.595	1.54	689.8
12/18/2011 8:45	8.51	Level	1.49	2.073	0.583	6.995	1.36	609.2
12/18/2011 9:00	8.56	Level	1.44	2.073	0.633	7.595	1.54	689.8
12/18/2011 9:15	8.56	Level	1.44	2.073	0.633	7.595	1.54	689.8
12/18/2011 9:30	8.51	Level	1.49	2.073	0.583	6.995	1.36	609.2
12/18/2011 9:45	8.51	Level	1.49	2.073	0.583	6.995	1.36	609.2
12/18/2011 10:00	8.55	Level	1.45	2.073	0.623	7.475	1.50	673.4
12/18/2011 10:15	8.51	Level	1.49	2.073	0.583	6.995	1.36	609.2
12/18/2011 10:30	8.55	Level	1.45	2.073	0.623	7.475	1.50	673.4
12/18/2011 10:45	8.56	Level	1.44	2.073	0.633	7.595	1.54	689.8
12/18/2011 11:00	8.56	Level	1.44	2.073	0.633	7.595	1.54	689.8
12/18/2011 11:15	8.56	Level	1.44	2.073	0.633	7.595	1.54	689.8
12/18/2011 11:30	8.55	Level	1.45	2.073	0.623	7.475	1.50	673.4
12/18/2011 11:45	8.56	Level	1.44	2.073	0.633	7.595	1.54	689.8
12/18/2011 12:00	8.55	Level	1.45	2.073	0.623	7.475	1.50	673.4
12/18/2011 12:15	8.55	Level	1.45	2.073	0.623	7.475	1.50	673.4
12/18/2011 12:30	8.55	Level	1.45	2.073	0.623	7.475	1.50	673.4
12/18/2011 12:45	8.6	Level	1.4	2.073	0.673	8.075	1.69	756.7
12/18/2011 13:00	8.56	Level	1.44	2.073	0.633	7.595	1.54	689.8
12/18/2011 13:15	8.55	Level	1.45	2.073	0.623	7.475	1.50	673.4
12/18/2011 13:30	8.55	Level	1.45	2.073	0.623	7.475	1.50	673.4
12/18/2011 13:45	8.55	Level	1.45	2.073	0.623	7.475	1.50	673.4
12/18/2011 14:00	8.6	Level	1.4	2.073	0.673	8.075	1.69	756.7
12/18/2011 14:15	8.55	Level	1.45	2.073	0.623	7.475	1.50	673.4

12/18/2011 14:30	8.6	Level	1.4	2.073	0.673	8.075	1.69	756.7
12/18/2011 14:45	8.6	Level	1.4	2.073	0.673	8.075	1.69	756.7
12/18/2011 15:00	8.6	Level	1.4	2.073	0.673	8.075	1.69	756.7
12/18/2011 15:15	8.55	Level	1.45	2.073	0.623	7.475	1.50	673.4
12/18/2011 15:30	8.55	Level	1.45	2.073	0.623	7.475	1.50	673.4
12/18/2011 15:45	8.55	Level	1.45	2.073	0.623	7.475	1.50	673.4
12/18/2011 16:00	8.59	Level	1.41	2.073	0.663	7.955	1.65	739.8
12/18/2011 16:15	8.55	Level	1.45	2.073	0.623	7.475	1.50	673.4
12/18/2011 16:30	8.6	Level	1.4	2.073	0.673	8.075	1.69	756.7
12/18/2011 16:45	8.56	Level	1.44	2.073	0.633	7.595	1.54	689.8
12/18/2011 17:00	8.56	Level	1.44	2.073	0.633	7.595	1.54	689.8
12/18/2011 17:15	8.55	Level	1.45	2.073	0.623	7.475	1.50	673.4
12/18/2011 17:30	8.55	Level	1.45	2.073	0.623	7.475	1.50	673.4
12/18/2011 17:45	8.55	Level	1.45	2.073	0.623	7.475	1.50	673.4
12/18/2011 18:00	8.55	Level	1.45	2.073	0.623	7.475	1.50	673.4
12/18/2011 18:15	8.55	Level	1.45	2.073	0.623	7.475	1.50	673.4
12/18/2011 18:30	8.55	Level	1.45	2.073	0.623	7.475	1.50	673.4
12/18/2011 18:45	8.56	Level	1.44	2.073	0.633	7.595	1.54	689.8
12/18/2011 19:00	8.56	Level	1.44	2.073	0.633	7.595	1.54	689.8
12/18/2011 19:15	8.55	Level	1.45	2.073	0.623	7.475	1.50	673.4
12/18/2011 19:30	8.55	Level	1.45	2.073	0.623	7.475	1.50	673.4
12/18/2011 19:45	8.55	Level	1.45	2.073	0.623	7.475	1.50	673.4
12/18/2011 20:00	8.55	Level	1.45	2.073	0.623	7.475	1.50	673.4
12/18/2011 20:15	8.55	Level	1.45	2.073	0.623	7.475	1.50	673.4
12/18/2011 20:30	8.56	Level	1.44	2.073	0.633	7.595	1.54	689.8
12/18/2011 20:45	8.55	Level	1.45	2.073	0.623	7.475	1.50	673.4
12/18/2011 21:00	8.51	Level	1.49	2.073	0.583	6.995	1.36	609.2
12/18/2011 21:15	8.55	Level	1.45	2.073	0.623	7.475	1.50	673.4
12/18/2011 21:30	8.55	Level	1.45	2.073	0.623	7.475	1.50	673.4
12/18/2011 21:45	8.55	Level	1.45	2.073	0.623	7.475	1.50	673.4
12/18/2011 22:00	8.56	Level	1.44	2.073	0.633	7.595	1.54	689.8
12/18/2011 22:15	8.56	Level	1.44	2.073	0.633	7.595	1.54	689.8
12/18/2011 22:30	8.56	Level	1.44	2.073	0.633	7.595	1.54	689.8
12/18/2011 22:45	8.56	Level	1.44	2.073	0.633	7.595	1.54	689.8
12/18/2011 23:00	8.56	Level	1.44	2.073	0.633	7.595	1.54	689.8
12/18/2011 23:15	8.56	Level	1.44	2.073	0.633	7.595	1.54	689.8
12/18/2011 23:30	8.56	Level	1.44	2.073	0.633	7.595	1.54	689.8
12/18/2011 23:45	8.55	Level	1.45	2.073	0.623	7.475	1.50	673.4
12/19/2011 0:00	8.56	Level	1.44	2.073	0.633	7.595	1.54	689.8
12/19/2011 0:15	8.56	Level	1.44	2.073	0.633	7.595	1.54	689.8
12/19/2011 0:30	8.56	Level	1.44	2.073	0.633	7.595	1.54	689.8
12/19/2011 0:45	8.56	Level	1.44	2.073	0.633	7.595	1.54	689.8
12/19/2011 1:00	8.56	Level	1.44	2.073	0.633	7.595	1.54	689.8
12/19/2011 1:15	8.56	Level	1.44	2.073	0.633	7.595	1.54	689.8
12/19/2011 1:30	8.56	Level	1.44	2.073	0.633	7.595	1.54	689.8
12/19/2011 1:45	8.56	Level	1.44	2.073	0.633	7.595	1.54	689.8
12/19/2011 2:00	8.56	Level	1.44	2.073	0.633	7.595	1.54	689.8

12/19/2011 2:15	8.51	Level	1.49	2.073	0.583	6.995	1.36	609.2
12/19/2011 2:30	8.51	Level	1.49	2.073	0.583	6.995	1.36	609.2
12/19/2011 2:45	8.56	Level	1.44	2.073	0.633	7.595	1.54	689.8
12/19/2011 3:00	8.56	Level	1.44	2.073	0.633	7.595	1.54	689.8
12/19/2011 3:15	8.56	Level	1.44	2.073	0.633	7.595	1.54	689.8
12/19/2011 3:30	8.51	Level	1.49	2.073	0.583	6.995	1.36	609.2
12/19/2011 3:45	8.56	Level	1.44	2.073	0.633	7.595	1.54	689.8
12/19/2011 4:00	8.56	Level	1.44	2.073	0.633	7.595	1.54	689.8
12/19/2011 4:15	8.56	Level	1.44	2.073	0.633	7.595	1.54	689.8
12/19/2011 4:30	8.51	Level	1.49	2.073	0.583	6.995	1.36	609.2
12/19/2011 4:45	8.56	Level	1.44	2.073	0.633	7.595	1.54	689.8
12/19/2011 5:00	8.56	Level	1.44	2.073	0.633	7.595	1.54	689.8
12/19/2011 5:15	8.56	Level	1.44	2.073	0.633	7.595	1.54	689.8
12/19/2011 5:30	8.51	Level	1.49	2.073	0.583	6.995	1.36	609.2
12/19/2011 5:45	8.56	Level	1.44	2.073	0.633	7.595	1.54	689.8
12/19/2011 6:00	8.56	Level	1.44	2.073	0.633	7.595	1.54	689.8
12/19/2011 6:15	8.56	Level	1.44	2.073	0.633	7.595	1.54	689.8
12/19/2011 6:30	8.56	Level	1.44	2.073	0.633	7.595	1.54	689.8
12/19/2011 6:45	8.56	Level	1.44	2.073	0.633	7.595	1.54	689.8
12/19/2011 7:00	8.51	Level	1.49	2.073	0.583	6.995	1.36	609.2
12/19/2011 7:15	8.51	Level	1.49	2.073	0.583	6.995	1.36	609.2
12/19/2011 7:30	8.56	Level	1.44	2.073	0.633	7.595	1.54	689.8
12/19/2011 7:45	8.56	Level	1.44	2.073	0.633	7.595	1.54	689.8
12/19/2011 8:00	8.56	Level	1.44	2.073	0.633	7.595	1.54	689.8
12/19/2011 8:15	8.56	Level	1.44	2.073	0.633	7.595	1.54	689.8
12/19/2011 8:30	8.56	Level	1.44	2.073	0.633	7.595	1.54	689.8
12/19/2011 8:45	8.56	Level	1.44	2.073	0.633	7.595	1.54	689.8
12/19/2011 9:00	8.56	Level	1.44	2.073	0.633	7.595	1.54	689.8
12/19/2011 9:15	8.56	Level	1.44	2.073	0.633	7.595	1.54	689.8
12/19/2011 9:30	8.56	Level	1.44	2.073	0.633	7.595	1.54	689.8
12/19/2011 9:45	8.56	Level	1.44	2.073	0.633	7.595	1.54	689.8
12/19/2011 10:00	8.56	Level	1.44	2.073	0.633	7.595	1.54	689.8
12/19/2011 10:15	8.56	Level	1.44	2.073	0.633	7.595	1.54	689.8
12/19/2011 10:30	8.55	Level	1.45	2.073	0.623	7.475	1.50	673.4
12/19/2011 10:45	8.56	Level	1.44	2.073	0.633	7.595	1.54	689.8
12/19/2011 11:00	8.56	Level	1.44	2.073	0.633	7.595	1.54	689.8
12/19/2011 11:15	8.56	Level	1.44	2.073	0.633	7.595	1.54	689.8
12/19/2011 11:30	8.56	Level	1.44	2.073	0.633	7.595	1.54	689.8
12/19/2011 11:45	8.56	Level	1.44	2.073	0.633	7.595	1.54	689.8
12/19/2011 12:00	8.56	Level	1.44	2.073	0.633	7.595	1.54	689.8
12/19/2011 12:15	8.56	Level	1.44	2.073	0.633	7.595	1.54	689.8
12/19/2011 12:30	8.56	Level	1.44	2.073	0.633	7.595	1.54	689.8
12/19/2011 12:45	8.55	Level	1.45	2.073	0.623	7.475	1.50	673.4
12/19/2011 13:00	8.55	Level	1.45	2.073	0.623	7.475	1.50	673.4
12/19/2011 13:15	8.55	Level	1.45	2.073	0.623	7.475	1.50	673.4
12/19/2011 13:30	8.55	Level	1.45	2.073	0.623	7.475	1.50	673.4
12/19/2011 13:45	8.55	Level	1.45	2.073	0.623	7.475	1.50	673.4

12/19/2011 14:00	8.56	Level	1.44	2.073	0.633	7.595	1.54	689.8
12/19/2011 14:15	8.55	Level	1.45	2.073	0.623	7.475	1.50	673.4
12/19/2011 14:30	8.56	Level	1.44	2.073	0.633	7.595	1.54	689.8
12/19/2011 14:45	8.56	Level	1.44	2.073	0.633	7.595	1.54	689.8
12/19/2011 15:00	8.56	Level	1.44	2.073	0.633	7.595	1.54	689.8
12/19/2011 15:15	8.56	Level	1.44	2.073	0.633	7.595	1.54	689.8
12/19/2011 15:30	8.56	Level	1.44	2.073	0.633	7.595	1.54	689.8
12/19/2011 15:45	8.56	Level	1.44	2.073	0.633	7.595	1.54	689.8
12/19/2011 16:00	8.56	Level	1.44	2.073	0.633	7.595	1.54	689.8
12/19/2011 16:15	8.56	Level	1.44	2.073	0.633	7.595	1.54	689.8
12/19/2011 16:30	8.56	Level	1.44	2.073	0.633	7.595	1.54	689.8
12/19/2011 16:45	8.55	Level	1.45	2.073	0.623	7.475	1.50	673.4
12/19/2011 17:00	8.56	Level	1.44	2.073	0.633	7.595	1.54	689.8
12/19/2011 17:15	8.56	Level	1.44	2.073	0.633	7.595	1.54	689.8
12/19/2011 17:30	8.56	Level	1.44	2.073	0.633	7.595	1.54	689.8
12/19/2011 17:45	8.56	Level	1.44	2.073	0.633	7.595	1.54	689.8
12/19/2011 18:00	8.56	Level	1.44	2.073	0.633	7.595	1.54	689.8
12/19/2011 18:15	8.56	Level	1.44	2.073	0.633	7.595	1.54	689.8
12/19/2011 18:30	8.56	Level	1.44	2.073	0.633	7.595	1.54	689.8
12/19/2011 18:45	8.56	Level	1.44	2.073	0.633	7.595	1.54	689.8
12/19/2011 19:00	8.56	Level	1.44	2.073	0.633	7.595	1.54	689.8
12/19/2011 19:15	8.56	Level	1.44	2.073	0.633	7.595	1.54	689.8
12/19/2011 19:30	8.56	Level	1.44	2.073	0.633	7.595	1.54	689.8
12/19/2011 19:45	8.56	Level	1.44	2.073	0.633	7.595	1.54	689.8
12/19/2011 20:00	8.56	Level	1.44	2.073	0.633	7.595	1.54	689.8
12/19/2011 20:15	8.56	Level	1.44	2.073	0.633	7.595	1.54	689.8
12/19/2011 20:30	8.56	Level	1.44	2.073	0.633	7.595	1.54	689.8
12/19/2011 20:45	8.56	Level	1.44	2.073	0.633	7.595	1.54	689.8
12/19/2011 21:00	8.56	Level	1.44	2.073	0.633	7.595	1.54	689.8
12/19/2011 21:15	8.56	Level	1.44	2.073	0.633	7.595	1.54	689.8
12/19/2011 21:30	8.56	Level	1.44	2.073	0.633	7.595	1.54	689.8
12/19/2011 21:45	8.56	Level	1.44	2.073	0.633	7.595	1.54	689.8
12/19/2011 22:00	8.56	Level	1.44	2.073	0.633	7.595	1.54	689.8
12/19/2011 22:15	8.56	Level	1.44	2.073	0.633	7.595	1.54	689.8
12/19/2011 22:30	8.56	Level	1.44	2.073	0.633	7.595	1.54	689.8
12/19/2011 22:45	8.56	Level	1.44	2.073	0.633	7.595	1.54	689.8
12/19/2011 23:00	8.56	Level	1.44	2.073	0.633	7.595	1.54	689.8
12/19/2011 23:15	8.56	Level	1.44	2.073	0.633	7.595	1.54	689.8
12/19/2011 23:30	8.56	Level	1.44	2.073	0.633	7.595	1.54	689.8
12/19/2011 23:45	8.56	Level	1.44	2.073	0.633	7.595	1.54	689.8
12/20/2011 0:00	8.56	Level	1.44	2.073	0.633	7.595	1.54	689.8
12/20/2011 0:15	8.56	Level	1.44	2.073	0.633	7.595	1.54	689.8
12/20/2011 0:30	8.56	Level	1.44	2.073	0.633	7.595	1.54	689.8
12/20/2011 0:45	8.56	Level	1.44	2.073	0.633	7.595	1.54	689.8
12/20/2011 1:00	8.56	Level	1.44	2.073	0.633	7.595	1.54	689.8
12/20/2011 1:15	8.56	Level	1.44	2.073	0.633	7.595	1.54	689.8
12/20/2011 1:30	8.56	Level	1.44	2.073	0.633	7.595	1.54	689.8

12/20/2011 1:45	8.56	Level	1.44	2.073	0.633	7.595	1.54	689.8
12/20/2011 2:00	8.56	Level	1.44	2.073	0.633	7.595	1.54	689.8
12/20/2011 2:15	8.56	Level	1.44	2.073	0.633	7.595	1.54	689.8
12/20/2011 2:30	8.56	Level	1.44	2.073	0.633	7.595	1.54	689.8
12/20/2011 2:45	8.56	Level	1.44	2.073	0.633	7.595	1.54	689.8
12/20/2011 3:00	8.56	Level	1.44	2.073	0.633	7.595	1.54	689.8
12/20/2011 3:15	8.56	Level	1.44	2.073	0.633	7.595	1.54	689.8
12/20/2011 3:30	8.56	Level	1.44	2.073	0.633	7.595	1.54	689.8
12/20/2011 3:45	8.56	Level	1.44	2.073	0.633	7.595	1.54	689.8
12/20/2011 4:00	8.56	Level	1.44	2.073	0.633	7.595	1.54	689.8
12/20/2011 4:15	8.56	Level	1.44	2.073	0.633	7.595	1.54	689.8
12/20/2011 4:30	8.56	Level	1.44	2.073	0.633	7.595	1.54	689.8
12/20/2011 4:45	8.56	Level	1.44	2.073	0.633	7.595	1.54	689.8
12/20/2011 5:00	8.56	Level	1.44	2.073	0.633	7.595	1.54	689.8
12/20/2011 5:15	8.56	Level	1.44	2.073	0.633	7.595	1.54	689.8
12/20/2011 5:30	8.56	Level	1.44	2.073	0.633	7.595	1.54	689.8
12/20/2011 5:45	8.56	Level	1.44	2.073	0.633	7.595	1.54	689.8
12/20/2011 6:00	8.51	Level	1.49	2.073	0.583	6.995	1.36	609.2
12/20/2011 6:15	8.56	Level	1.44	2.073	0.633	7.595	1.54	689.8
12/20/2011 6:30	8.55	Level	1.45	2.073	0.623	7.475	1.50	673.4
12/20/2011 6:45	8.56	Level	1.44	2.073	0.633	7.595	1.54	689.8
12/20/2011 7:00	8.56	Level	1.44	2.073	0.633	7.595	1.54	689.8
12/20/2011 7:15	8.56	Level	1.44	2.073	0.633	7.595	1.54	689.8
12/20/2011 7:30	8.51	Level	1.49	2.073	0.583	6.995	1.36	609.2
12/20/2011 7:45	8.56	Level	1.44	2.073	0.633	7.595	1.54	689.8
12/20/2011 8:00	8.56	Level	1.44	2.073	0.633	7.595	1.54	689.8
12/20/2011 8:15	8.51	Level	1.49	2.073	0.583	6.995	1.36	609.2
12/20/2011 8:30	8.51	Level	1.49	2.073	0.583	6.995	1.36	609.2
12/20/2011 8:45	8.51	Level	1.49	2.073	0.583	6.995	1.36	609.2
12/20/2011 9:00	8.51	Level	1.49	2.073	0.583	6.995	1.36	609.2
12/20/2011 9:15	8.51	Level	1.49	2.073	0.583	6.995	1.36	609.2
12/20/2011 9:30	8.55	Level	1.45	2.073	0.623	7.475	1.50	673.4
12/20/2011 9:45	8.51	Level	1.49	2.073	0.583	6.995	1.36	609.2
12/20/2011 10:00	8.51	Level	1.49	2.073	0.583	6.995	1.36	609.2
12/20/2011 10:15	8.51	Level	1.49	2.073	0.583	6.995	1.36	609.2
12/20/2011 10:30	8.51	Level	1.49	2.073	0.583	6.995	1.36	609.2
12/20/2011 10:45	8.51	Level	1.49	2.073	0.583	6.995	1.36	609.2
12/20/2011 11:00	8.56	Level	1.44	2.073	0.633	7.595	1.54	689.8
12/20/2011 11:15	8.56	Level	1.44	2.073	0.633	7.595	1.54	689.8
12/20/2011 11:30	8.55	Level	1.45	2.073	0.623	7.475	1.50	673.4
12/20/2011 11:45	8.55	Level	1.45	2.073	0.623	7.475	1.50	673.4
12/20/2011 12:00	8.55	Level	1.45	2.073	0.623	7.475	1.50	673.4
12/20/2011 12:15	8.55	Level	1.45	2.073	0.623	7.475	1.50	673.4
12/20/2011 12:30	8.55	Level	1.45	2.073	0.623	7.475	1.50	673.4
12/20/2011 12:45	8.56	Level	1.44	2.073	0.633	7.595	1.54	689.8
12/20/2011 13:00	8.56	Level	1.44	2.073	0.633	7.595	1.54	689.8
12/20/2011 13:15	8.56	Level	1.44	2.073	0.633	7.595	1.54	689.8

12/20/2011 13:30	8.56	Level	1.44	2.073	0.633	7.595	1.54	689.8
12/20/2011 13:45	8.55	Level	1.45	2.073	0.623	7.475	1.50	673.4
12/20/2011 14:00	8.55	Level	1.45	2.073	0.623	7.475	1.50	673.4
12/20/2011 14:15	8.55	Level	1.45	2.073	0.623	7.475	1.50	673.4
12/20/2011 14:30	8.55	Level	1.45	2.073	0.623	7.475	1.50	673.4
12/20/2011 14:45	8.55	Level	1.45	2.073	0.623	7.475	1.50	673.4
12/20/2011 15:00	8.55	Level	1.45	2.073	0.623	7.475	1.50	673.4
12/20/2011 15:15	8.55	Level	1.45	2.073	0.623	7.475	1.50	673.4
12/20/2011 15:30	8.55	Level	1.45	2.073	0.623	7.475	1.50	673.4
12/20/2011 15:45	8.55	Level	1.45	2.073	0.623	7.475	1.50	673.4
12/20/2011 16:00	8.55	Level	1.45	2.073	0.623	7.475	1.50	673.4
12/20/2011 16:15	8.55	Level	1.45	2.073	0.623	7.475	1.50	673.4
12/20/2011 16:30	8.55	Level	1.45	2.073	0.623	7.475	1.50	673.4
12/20/2011 16:45	8.51	Level	1.49	2.073	0.583	6.995	1.36	609.2
12/20/2011 17:00	8.55	Level	1.45	2.073	0.623	7.475	1.50	673.4
12/20/2011 17:15	8.55	Level	1.45	2.073	0.623	7.475	1.50	673.4
12/20/2011 17:30	8.55	Level	1.45	2.073	0.623	7.475	1.50	673.4
12/20/2011 17:45	8.55	Level	1.45	2.073	0.623	7.475	1.50	673.4
12/20/2011 18:00	8.51	Level	1.49	2.073	0.583	6.995	1.36	609.2
12/20/2011 18:15	8.56	Level	1.44	2.073	0.633	7.595	1.54	689.8
12/20/2011 18:30	8.56	Level	1.44	2.073	0.633	7.595	1.54	689.8
12/20/2011 18:45	8.51	Level	1.49	2.073	0.583	6.995	1.36	609.2
12/20/2011 19:00	8.56	Level	1.44	2.073	0.633	7.595	1.54	689.8
12/20/2011 19:15	8.56	Level	1.44	2.073	0.633	7.595	1.54	689.8
12/20/2011 19:30	8.51	Level	1.49	2.073	0.583	6.995	1.36	609.2
12/20/2011 19:45	8.51	Level	1.49	2.073	0.583	6.995	1.36	609.2
12/20/2011 20:00	8.51	Level	1.49	2.073	0.583	6.995	1.36	609.2
12/20/2011 20:15	8.51	Level	1.49	2.073	0.583	6.995	1.36	609.2
12/20/2011 20:30	8.56	Level	1.44	2.073	0.633	7.595	1.54	689.8
12/20/2011 20:45	8.51	Level	1.49	2.073	0.583	6.995	1.36	609.2
12/20/2011 21:00	8.51	Level	1.49	2.073	0.583	6.995	1.36	609.2
12/20/2011 21:15	8.56	Level	1.44	2.073	0.633	7.595	1.54	689.8
12/20/2011 21:30	8.55	Level	1.45	2.073	0.623	7.475	1.50	673.4
12/20/2011 21:45	8.51	Level	1.49	2.073	0.583	6.995	1.36	609.2
12/20/2011 22:00	8.51	Level	1.49	2.073	0.583	6.995	1.36	609.2
12/20/2011 22:15	8.51	Level	1.49	2.073	0.583	6.995	1.36	609.2
12/20/2011 22:30	8.51	Level	1.49	2.073	0.583	6.995	1.36	609.2
12/20/2011 22:45	8.51	Level	1.49	2.073	0.583	6.995	1.36	609.2
12/20/2011 23:00	8.51	Level	1.49	2.073	0.583	6.995	1.36	609.2
12/20/2011 23:15	8.51	Level	1.49	2.073	0.583	6.995	1.36	609.2
12/20/2011 23:30	8.51	Level	1.49	2.073	0.583	6.995	1.36	609.2
12/20/2011 23:45	8.51	Level	1.49	2.073	0.583	6.995	1.36	609.2
12/21/2011 0:00	8.56	Level	1.44	2.073	0.633	7.595	1.54	689.8
12/21/2011 0:15	8.51	Level	1.49	2.073	0.583	6.995	1.36	609.2
12/21/2011 0:30	8.55	Level	1.45	2.073	0.623	7.475	1.50	673.4
12/21/2011 0:45	8.51	Level	1.49	2.073	0.583	6.995	1.36	609.2
12/21/2011 1:00	8.51	Level	1.49	2.073	0.583	6.995	1.36	609.2

12/21/2011 1:15	8.51	Level	1.49	2.073	0.583	6.995	1.36	609.2
12/21/2011 1:30	8.51	Level	1.49	2.073	0.583	6.995	1.36	609.2
12/21/2011 1:45	8.51	Level	1.49	2.073	0.583	6.995	1.36	609.2
12/21/2011 2:00	8.51	Level	1.49	2.073	0.583	6.995	1.36	609.2
12/21/2011 2:15	8.51	Level	1.49	2.073	0.583	6.995	1.36	609.2
12/21/2011 2:30	8.51	Level	1.49	2.073	0.583	6.995	1.36	609.2
12/21/2011 2:45	8.51	Level	1.49	2.073	0.583	6.995	1.36	609.2
12/21/2011 3:00	8.51	Level	1.49	2.073	0.583	6.995	1.36	609.2
12/21/2011 3:15	8.51	Level	1.49	2.073	0.583	6.995	1.36	609.2
12/21/2011 3:30	8.51	Level	1.49	2.073	0.583	6.995	1.36	609.2
12/21/2011 3:45	8.51	Level	1.49	2.073	0.583	6.995	1.36	609.2
12/21/2011 4:00	8.51	Level	1.49	2.073	0.583	6.995	1.36	609.2
12/21/2011 4:15	8.51	Level	1.49	2.073	0.583	6.995	1.36	609.2
12/21/2011 4:30	8.51	Level	1.49	2.073	0.583	6.995	1.36	609.2
12/21/2011 4:45	8.51	Level	1.49	2.073	0.583	6.995	1.36	609.2
12/21/2011 5:00	8.51	Level	1.49	2.073	0.583	6.995	1.36	609.2
12/21/2011 5:15	8.51	Level	1.49	2.073	0.583	6.995	1.36	609.2
12/21/2011 5:30	8.51	Level	1.49	2.073	0.583	6.995	1.36	609.2
12/21/2011 5:45	8.51	Level	1.49	2.073	0.583	6.995	1.36	609.2
12/21/2011 6:00	8.51	Level	1.49	2.073	0.583	6.995	1.36	609.2
12/21/2011 6:15	8.51	Level	1.49	2.073	0.583	6.995	1.36	609.2
12/21/2011 6:30	8.51	Level	1.49	2.073	0.583	6.995	1.36	609.2
12/21/2011 6:45	8.51	Level	1.49	2.073	0.583	6.995	1.36	609.2
12/21/2011 7:00	8.51	Level	1.49	2.073	0.583	6.995	1.36	609.2
12/21/2011 7:15	8.51	Level	1.49	2.073	0.583	6.995	1.36	609.2
12/21/2011 7:30	8.51	Level	1.49	2.073	0.583	6.995	1.36	609.2
12/21/2011 7:45	8.51	Level	1.49	2.073	0.583	6.995	1.36	609.2
12/21/2011 8:00	8.51	Level	1.49	2.073	0.583	6.995	1.36	609.2
12/21/2011 8:15	8.51	Level	1.49	2.073	0.583	6.995	1.36	609.2
12/21/2011 8:30	8.51	Level	1.49	2.073	0.583	6.995	1.36	609.2
12/21/2011 8:45	8.51	Level	1.49	2.073	0.583	6.995	1.36	609.2
12/21/2011 9:00	8.51	Level	1.49	2.073	0.583	6.995	1.36	609.2
12/21/2011 9:15	8.51	Level	1.49	2.073	0.583	6.995	1.36	609.2
12/21/2011 9:30	8.51	Level	1.49	2.073	0.583	6.995	1.36	609.2
12/21/2011 9:45	8.51	Level	1.49	2.073	0.583	6.995	1.36	609.2
12/21/2011 10:00	8.51	Level	1.49	2.073	0.583	6.995	1.36	609.2
12/21/2011 10:15	8.51	Level	1.49	2.073	0.583	6.995	1.36	609.2
12/21/2011 10:30	8.51	Level	1.49	2.073	0.583	6.995	1.36	609.2
12/21/2011 10:45	8.51	Level	1.49	2.073	0.583	6.995	1.36	609.2
12/21/2011 11:00	8.51	Level	1.49	2.073	0.583	6.995	1.36	609.2
12/21/2011 11:15	8.51	Level	1.49	2.073	0.583	6.995	1.36	609.2
12/21/2011 11:30	8.51	Level	1.49	2.073	0.583	6.995	1.36	609.2
12/21/2011 11:45	8.55	Level	1.45	2.073	0.623	7.475	1.50	673.4
12/21/2011 12:00	8.55	Level	1.45	2.073	0.623	7.475	1.50	673.4
12/21/2011 12:15	8.55	Level	1.45	2.073	0.623	7.475	1.50	673.4
12/21/2011 12:30	8.55	Level	1.45	2.073	0.623	7.475	1.50	673.4
12/21/2011 12:45	8.55	Level	1.45	2.073	0.623	7.475	1.50	673.4

12/21/2011 13:00	8.56	Level	1.44	2.073	0.633	7.595	1.54	689.8
12/21/2011 13:15	8.55	Level	1.45	2.073	0.623	7.475	1.50	673.4
12/21/2011 13:30	8.55	Level	1.45	2.073	0.623	7.475	1.50	673.4
12/21/2011 13:45	8.55	Level	1.45	2.073	0.623	7.475	1.50	673.4
12/21/2011 14:00	8.55	Level	1.45	2.073	0.623	7.475	1.50	673.4
12/21/2011 14:15	8.55	Level	1.45	2.073	0.623	7.475	1.50	673.4
12/21/2011 14:30	8.55	Level	1.45	2.073	0.623	7.475	1.50	673.4
12/21/2011 14:45	8.56	Level	1.44	2.073	0.633	7.595	1.54	689.8
12/21/2011 15:00	8.56	Level	1.44	2.073	0.633	7.595	1.54	689.8
12/21/2011 15:15	8.56	Level	1.44	2.073	0.633	7.595	1.54	689.8
12/21/2011 15:30	8.55	Level	1.45	2.073	0.623	7.475	1.50	673.4
12/21/2011 15:45	8.55	Level	1.45	2.073	0.623	7.475	1.50	673.4
12/21/2011 16:00	8.55	Level	1.45	2.073	0.623	7.475	1.50	673.4
12/21/2011 16:15	8.55	Level	1.45	2.073	0.623	7.475	1.50	673.4
12/21/2011 16:30	8.55	Level	1.45	2.073	0.623	7.475	1.50	673.4
12/21/2011 16:45	8.55	Level	1.45	2.073	0.623	7.475	1.50	673.4
12/21/2011 17:00	8.56	Level	1.44	2.073	0.633	7.595	1.54	689.8
12/21/2011 17:15	8.56	Level	1.44	2.073	0.633	7.595	1.54	689.8
12/21/2011 17:30	8.51	Level	1.49	2.073	0.583	6.995	1.36	609.2
12/21/2011 17:45	8.55	Level	1.45	2.073	0.623	7.475	1.50	673.4
12/21/2011 18:00	8.51	Level	1.49	2.073	0.583	6.995	1.36	609.2
12/21/2011 18:15	8.51	Level	1.49	2.073	0.583	6.995	1.36	609.2
12/21/2011 18:30	8.51	Level	1.49	2.073	0.583	6.995	1.36	609.2
12/21/2011 18:45	8.51	Level	1.49	2.073	0.583	6.995	1.36	609.2
12/21/2011 19:00	8.56	Level	1.44	2.073	0.633	7.595	1.54	689.8
12/21/2011 19:15	8.51	Level	1.49	2.073	0.583	6.995	1.36	609.2
12/21/2011 19:30	8.51	Level	1.49	2.073	0.583	6.995	1.36	609.2
12/21/2011 19:45	8.55	Level	1.45	2.073	0.623	7.475	1.50	673.4
12/21/2011 20:00	8.55	Level	1.45	2.073	0.623	7.475	1.50	673.4
12/21/2011 20:15	8.51	Level	1.49	2.073	0.583	6.995	1.36	609.2
12/21/2011 20:30	8.51	Level	1.49	2.073	0.583	6.995	1.36	609.2
12/21/2011 20:45	8.51	Level	1.49	2.073	0.583	6.995	1.36	609.2
12/21/2011 21:00	8.51	Level	1.49	2.073	0.583	6.995	1.36	609.2
12/21/2011 21:15	8.51	Level	1.49	2.073	0.583	6.995	1.36	609.2
12/21/2011 21:30	8.51	Level	1.49	2.073	0.583	6.995	1.36	609.2
12/21/2011 21:45	8.51	Level	1.49	2.073	0.583	6.995	1.36	609.2
12/21/2011 22:00	8.51	Level	1.49	2.073	0.583	6.995	1.36	609.2
12/21/2011 22:15	8.51	Level	1.49	2.073	0.583	6.995	1.36	609.2
12/21/2011 22:30	8.51	Level	1.49	2.073	0.583	6.995	1.36	609.2
12/21/2011 22:45	8.51	Level	1.49	2.073	0.583	6.995	1.36	609.2
12/21/2011 23:00	8.51	Level	1.49	2.073	0.583	6.995	1.36	609.2
12/21/2011 23:15	8.51	Level	1.49	2.073	0.583	6.995	1.36	609.2
12/21/2011 23:30	8.51	Level	1.49	2.073	0.583	6.995	1.36	609.2
12/21/2011 23:45	8.51	Level	1.49	2.073	0.583	6.995	1.36	609.2
12/22/2011 0:00	8.51	Level	1.49	2.073	0.583	6.995	1.36	609.2
12/22/2011 0:15	8.51	Level	1.49	2.073	0.583	6.995	1.36	609.2
12/22/2011 0:30	8.46	Level	1.54	2.073	0.533	6.395	1.19	532.0

12/22/2011 0:45	8.51	Level	1.49	2.073	0.583	6.995	1.36	609.2
12/22/2011 1:00	8.51	Level	1.49	2.073	0.583	6.995	1.36	609.2
12/22/2011 1:15	8.51	Level	1.49	2.073	0.583	6.995	1.36	609.2
12/22/2011 1:30	8.51	Level	1.49	2.073	0.583	6.995	1.36	609.2
12/22/2011 1:45	8.51	Level	1.49	2.073	0.583	6.995	1.36	609.2
12/22/2011 2:00	8.51	Level	1.49	2.073	0.583	6.995	1.36	609.2
12/22/2011 2:15	8.51	Level	1.49	2.073	0.583	6.995	1.36	609.2
12/22/2011 2:30	8.51	Level	1.49	2.073	0.583	6.995	1.36	609.2
12/22/2011 2:45	8.51	Level	1.49	2.073	0.583	6.995	1.36	609.2
12/22/2011 3:00	8.51	Level	1.49	2.073	0.583	6.995	1.36	609.2
12/22/2011 3:15	8.55	Level	1.45	2.073	0.623	7.475	1.50	673.4
12/22/2011 3:30	8.51	Level	1.49	2.073	0.583	6.995	1.36	609.2
12/22/2011 3:45	8.51	Level	1.49	2.073	0.583	6.995	1.36	609.2
12/22/2011 4:00	8.51	Level	1.49	2.073	0.583	6.995	1.36	609.2
12/22/2011 4:15	8.51	Level	1.49	2.073	0.583	6.995	1.36	609.2
12/22/2011 4:30	8.51	Level	1.49	2.073	0.583	6.995	1.36	609.2
12/22/2011 4:45	8.51	Level	1.49	2.073	0.583	6.995	1.36	609.2
12/22/2011 5:00	8.51	Level	1.49	2.073	0.583	6.995	1.36	609.2
12/22/2011 5:15	8.51	Level	1.49	2.073	0.583	6.995	1.36	609.2
12/22/2011 5:30	8.51	Level	1.49	2.073	0.583	6.995	1.36	609.2
12/22/2011 5:45	8.51	Level	1.49	2.073	0.583	6.995	1.36	609.2
12/22/2011 6:00	8.51	Level	1.49	2.073	0.583	6.995	1.36	609.2
12/22/2011 6:15	8.51	Level	1.49	2.073	0.583	6.995	1.36	609.2
12/22/2011 6:30	8.51	Level	1.49	2.073	0.583	6.995	1.36	609.2
12/22/2011 6:45	8.51	Level	1.49	2.073	0.583	6.995	1.36	609.2
12/22/2011 7:00	8.51	Level	1.49	2.073	0.583	6.995	1.36	609.2
12/22/2011 7:15	8.56	Level	1.44	2.073	0.633	7.595	1.54	689.8
12/22/2011 7:30	8.51	Level	1.49	2.073	0.583	6.995	1.36	609.2
12/22/2011 7:45	8.51	Level	1.49	2.073	0.583	6.995	1.36	609.2
12/22/2011 8:00	8.51	Level	1.49	2.073	0.583	6.995	1.36	609.2
12/22/2011 8:15	8.51	Level	1.49	2.073	0.583	6.995	1.36	609.2
12/22/2011 8:30	8.51	Level	1.49	2.073	0.583	6.995	1.36	609.2
12/22/2011 8:45	8.51	Level	1.49	2.073	0.583	6.995	1.36	609.2
12/22/2011 9:00	8.51	Level	1.49	2.073	0.583	6.995	1.36	609.2
12/22/2011 9:15	8.51	Level	1.49	2.073	0.583	6.995	1.36	609.2
12/22/2011 9:30	8.51	Level	1.49	2.073	0.583	6.995	1.36	609.2
12/22/2011 9:45	8.51	Level	1.49	2.073	0.583	6.995	1.36	609.2
12/22/2011 10:00	8.51	Level	1.49	2.073	0.583	6.995	1.36	609.2
12/22/2011 10:15	8.51	Level	1.49	2.073	0.583	6.995	1.36	609.2
12/22/2011 10:30	8.51	Level	1.49	2.073	0.583	6.995	1.36	609.2
12/22/2011 10:45	8.51	Level	1.49	2.073	0.583	6.995	1.36	609.2
12/22/2011 11:00	8.51	Level	1.49	2.073	0.583	6.995	1.36	609.2
12/22/2011 11:15	8.51	Level	1.49	2.073	0.583	6.995	1.36	609.2
12/22/2011 11:30	8.51	Level	1.49	2.073	0.583	6.995	1.36	609.2
12/22/2011 11:45	8.51	Level	1.49	2.073	0.583	6.995	1.36	609.2
12/22/2011 12:00	8.56	Level	1.44	2.073	0.633	7.595	1.54	689.8
12/22/2011 12:15	8.51	Level	1.49	2.073	0.583	6.995	1.36	609.2

12/22/2011 12:30	8.56 Level	1.44	2.073	0.633	7.595	1.54	689.8
12/22/2011 12:45	8.56 Level	1.44	2.073	0.633	7.595	1.54	689.8
12/22/2011 13:00	8.56 Level	1.44	2.073	0.633	7.595	1.54	689.8
12/22/2011 13:15	8.56 Level	1.44	2.073	0.633	7.595	1.54	689.8
12/22/2011 13:30	8.56 Level	1.44	2.073	0.633	7.595	1.54	689.8
12/22/2011 13:45	8.51 Level	1.49	2.073	0.583	6.995	1.36	609.2
12/22/2011 14:00	8.51 Level	1.49	2.073	0.583	6.995	1.36	609.2
12/22/2011 14:15	8.56 Level	1.44	2.073	0.633	7.595	1.54	689.8
12/22/2011 14:30	8.51 Level	1.49	2.073	0.583	6.995	1.36	609.2
12/22/2011 14:45	8.56 Level	1.44	2.073	0.633	7.595	1.54	689.8
12/22/2011 15:00	8.51 Level	1.49	2.073	0.583	6.995	1.36	609.2
12/22/2011 15:15	8.51 Level	1.49	2.073	0.583	6.995	1.36	609.2
12/22/2011 15:30	8.51 Level	1.49	2.073	0.583	6.995	1.36	609.2
12/22/2011 15:45	8.51 Level	1.49	2.073	0.583	6.995	1.36	609.2
12/22/2011 16:00	8.51 Level	1.49	2.073	0.583	6.995	1.36	609.2
12/22/2011 16:15	8.56 Level	1.44	2.073	0.633	7.595	1.54	689.8
12/22/2011 16:30	8.56 Level	1.44	2.073	0.633	7.595	1.54	689.8
12/22/2011 16:45	8.51 Level	1.49	2.073	0.583	6.995	1.36	609.2
12/22/2011 17:00	8.51 Level	1.49	2.073	0.583	6.995	1.36	609.2
12/22/2011 17:15	8.51 Level	1.49	2.073	0.583	6.995	1.36	609.2
12/22/2011 17:30	8.56 Level	1.44	2.073	0.633	7.595	1.54	689.8
12/22/2011 17:45	8.51 Level	1.49	2.073	0.583	6.995	1.36	609.2
12/22/2011 18:00	8.51 Level	1.49	2.073	0.583	6.995	1.36	609.2
12/22/2011 18:15	8.51 Level	1.49	2.073	0.583	6.995	1.36	609.2
12/22/2011 18:30	8.51 Level	1.49	2.073	0.583	6.995	1.36	609.2
12/22/2011 18:45	8.51 Level	1.49	2.073	0.583	6.995	1.36	609.2
12/22/2011 19:00	8.51 Level	1.49	2.073	0.583	6.995	1.36	609.2
12/22/2011 19:15	8.51 Level	1.49	2.073	0.583	6.995	1.36	609.2
12/22/2011 19:30	8.51 Level	1.49	2.073	0.583	6.995	1.36	609.2
12/22/2011 19:45	8.51 Level	1.49	2.073	0.583	6.995	1.36	609.2
12/22/2011 20:00	8.51 Level	1.49	2.073	0.583	6.995	1.36	609.2
12/22/2011 20:15	8.51 Level	1.49	2.073	0.583	6.995	1.36	609.2
12/22/2011 20:30	8.51 Level	1.49	2.073	0.583	6.995	1.36	609.2
12/22/2011 20:45	8.51 Level	1.49	2.073	0.583	6.995	1.36	609.2
12/22/2011 21:00	8.51 Level	1.49	2.073	0.583	6.995	1.36	609.2
12/22/2011 21:15	8.51 Level	1.49	2.073	0.583	6.995	1.36	609.2
12/22/2011 21:30	8.51 Level	1.49	2.073	0.583	6.995	1.36	609.2
12/22/2011 21:45	8.51 Level	1.49	2.073	0.583	6.995	1.36	609.2
12/22/2011 22:00	8.51 Level	1.49	2.073	0.583	6.995	1.36	609.2
12/22/2011 22:15	8.51 Level	1.49	2.073	0.583	6.995	1.36	609.2
12/22/2011 22:30	8.51 Level	1.49	2.073	0.583	6.995	1.36	609.2
12/22/2011 22:45	8.51 Level	1.49	2.073	0.583	6.995	1.36	609.2
12/22/2011 23:00	8.51 Level	1.49	2.073	0.583	6.995	1.36	609.2
12/22/2011 23:15	8.51 Level	1.49	2.073	0.583	6.995	1.36	609.2
12/22/2011 23:30	8.51 Level	1.49	2.073	0.583	6.995	1.36	609.2
12/22/2011 23:45	8.51 Level	1.49	2.073	0.583	6.995	1.36	609.2
12/23/2011 0:00	8.51 Level	1.49	2.073	0.583	6.995	1.36	609.2

12/23/2011 0:15	8.51	Level	1.49	2.073	0.583	6.995	1.36	609.2
12/23/2011 0:30	8.51	Level	1.49	2.073	0.583	6.995	1.36	609.2
12/23/2011 0:45	8.51	Level	1.49	2.073	0.583	6.995	1.36	609.2
12/23/2011 1:00	8.46	Level	1.54	2.073	0.533	6.395	1.19	532.0
12/23/2011 1:15	8.51	Level	1.49	2.073	0.583	6.995	1.36	609.2
12/23/2011 1:30	8.51	Level	1.49	2.073	0.583	6.995	1.36	609.2
12/23/2011 1:45	8.51	Level	1.49	2.073	0.583	6.995	1.36	609.2
12/23/2011 2:00	8.51	Level	1.49	2.073	0.583	6.995	1.36	609.2
12/23/2011 2:15	8.51	Level	1.49	2.073	0.583	6.995	1.36	609.2
12/23/2011 2:30	8.51	Level	1.49	2.073	0.583	6.995	1.36	609.2
12/23/2011 2:45	8.51	Level	1.49	2.073	0.583	6.995	1.36	609.2
12/23/2011 3:00	8.51	Level	1.49	2.073	0.583	6.995	1.36	609.2
12/23/2011 3:15	8.51	Level	1.49	2.073	0.583	6.995	1.36	609.2
12/23/2011 3:30	8.51	Level	1.49	2.073	0.583	6.995	1.36	609.2
12/23/2011 3:45	8.51	Level	1.49	2.073	0.583	6.995	1.36	609.2
12/23/2011 4:00	8.51	Level	1.49	2.073	0.583	6.995	1.36	609.2
12/23/2011 4:15	8.51	Level	1.49	2.073	0.583	6.995	1.36	609.2
12/23/2011 4:30	8.51	Level	1.49	2.073	0.583	6.995	1.36	609.2
12/23/2011 4:45	8.51	Level	1.49	2.073	0.583	6.995	1.36	609.2
12/23/2011 5:00	8.51	Level	1.49	2.073	0.583	6.995	1.36	609.2
12/23/2011 5:15	8.51	Level	1.49	2.073	0.583	6.995	1.36	609.2
12/23/2011 5:30	8.51	Level	1.49	2.073	0.583	6.995	1.36	609.2
12/23/2011 5:45	8.51	Level	1.49	2.073	0.583	6.995	1.36	609.2
12/23/2011 6:00	8.51	Level	1.49	2.073	0.583	6.995	1.36	609.2
12/23/2011 6:15	8.51	Level	1.49	2.073	0.583	6.995	1.36	609.2
12/23/2011 6:30	8.51	Level	1.49	2.073	0.583	6.995	1.36	609.2
12/23/2011 6:45	8.51	Level	1.49	2.073	0.583	6.995	1.36	609.2
12/23/2011 7:00	8.51	Level	1.49	2.073	0.583	6.995	1.36	609.2
12/23/2011 7:15	8.51	Level	1.49	2.073	0.583	6.995	1.36	609.2
12/23/2011 7:30	8.51	Level	1.49	2.073	0.583	6.995	1.36	609.2
12/23/2011 7:45	8.51	Level	1.49	2.073	0.583	6.995	1.36	609.2
12/23/2011 8:00	8.51	Level	1.49	2.073	0.583	6.995	1.36	609.2
12/23/2011 8:15	8.51	Level	1.49	2.073	0.583	6.995	1.36	609.2
12/23/2011 8:30	8.51	Level	1.49	2.073	0.583	6.995	1.36	609.2
12/23/2011 8:45	8.51	Level	1.49	2.073	0.583	6.995	1.36	609.2
12/23/2011 9:00	8.51	Level	1.49	2.073	0.583	6.995	1.36	609.2
12/23/2011 9:15	8.51	Level	1.49	2.073	0.583	6.995	1.36	609.2
12/23/2011 9:30	8.51	Level	1.49	2.073	0.583	6.995	1.36	609.2
12/23/2011 9:45	8.51	Level	1.49	2.073	0.583	6.995	1.36	609.2
12/23/2011 10:00	8.51	Level	1.49	2.073	0.583	6.995	1.36	609.2
12/23/2011 10:15	8.51	Level	1.49	2.073	0.583	6.995	1.36	609.2
12/23/2011 10:30	8.51	Level	1.49	2.073	0.583	6.995	1.36	609.2
12/23/2011 10:45	8.51	Level	1.49	2.073	0.583	6.995	1.36	609.2
12/23/2011 11:00	8.51	Level	1.49	2.073	0.583	6.995	1.36	609.2
12/23/2011 11:15	8.56	Level	1.44	2.073	0.633	7.595	1.54	689.8
12/23/2011 11:30	8.56	Level	1.44	2.073	0.633	7.595	1.54	689.8
12/23/2011 11:45	8.51	Level	1.49	2.073	0.583	6.995	1.36	609.2

12/23/2011 12:00	8.56 Level	1.44	2.073	0.633	7.595	1.54	689.8
12/23/2011 12:15	8.56 Level	1.44	2.073	0.633	7.595	1.54	689.8
12/23/2011 12:30	8.56 Level	1.44	2.073	0.633	7.595	1.54	689.8
12/23/2011 12:45	8.51 Level	1.49	2.073	0.583	6.995	1.36	609.2
12/23/2011 13:00	8.56 Level	1.44	2.073	0.633	7.595	1.54	689.8
12/23/2011 13:15	8.56 Level	1.44	2.073	0.633	7.595	1.54	689.8
12/23/2011 13:30	8.56 Level	1.44	2.073	0.633	7.595	1.54	689.8
12/23/2011 13:45	8.56 Level	1.44	2.073	0.633	7.595	1.54	689.8
12/23/2011 14:00	8.56 Level	1.44	2.073	0.633	7.595	1.54	689.8
12/23/2011 14:15	8.56 Level	1.44	2.073	0.633	7.595	1.54	689.8
12/23/2011 14:30	8.56 Level	1.44	2.073	0.633	7.595	1.54	689.8
12/23/2011 14:45	8.56 Level	1.44	2.073	0.633	7.595	1.54	689.8
12/23/2011 15:00	8.56 Level	1.44	2.073	0.633	7.595	1.54	689.8
12/23/2011 15:15	8.56 Level	1.44	2.073	0.633	7.595	1.54	689.8
12/23/2011 15:30	8.56 Level	1.44	2.073	0.633	7.595	1.54	689.8
12/23/2011 15:45	8.56 Level	1.44	2.073	0.633	7.595	1.54	689.8
12/23/2011 16:00	8.56 Level	1.44	2.073	0.633	7.595	1.54	689.8
12/23/2011 16:15	8.56 Level	1.44	2.073	0.633	7.595	1.54	689.8
12/23/2011 16:30	8.56 Level	1.44	2.073	0.633	7.595	1.54	689.8
12/23/2011 16:45	8.56 Level	1.44	2.073	0.633	7.595	1.54	689.8
12/23/2011 17:00	8.56 Level	1.44	2.073	0.633	7.595	1.54	689.8
12/23/2011 17:15	8.51 Level	1.49	2.073	0.583	6.995	1.36	609.2
12/23/2011 17:30	8.56 Level	1.44	2.073	0.633	7.595	1.54	689.8
12/23/2011 17:45	8.56 Level	1.44	2.073	0.633	7.595	1.54	689.8
12/23/2011 18:00	8.56 Level	1.44	2.073	0.633	7.595	1.54	689.8
12/23/2011 18:15	8.56 Level	1.44	2.073	0.633	7.595	1.54	689.8
12/23/2011 18:30	8.51 Level	1.49	2.073	0.583	6.995	1.36	609.2
12/23/2011 18:45	8.56 Level	1.44	2.073	0.633	7.595	1.54	689.8
12/23/2011 19:00	8.51 Level	1.49	2.073	0.583	6.995	1.36	609.2
12/23/2011 19:15	8.51 Level	1.49	2.073	0.583	6.995	1.36	609.2
12/23/2011 19:30	8.51 Level	1.49	2.073	0.583	6.995	1.36	609.2
12/23/2011 19:45	8.56 Level	1.44	2.073	0.633	7.595	1.54	689.8
12/23/2011 20:00	8.51 Level	1.49	2.073	0.583	6.995	1.36	609.2
12/23/2011 20:15	8.51 Level	1.49	2.073	0.583	6.995	1.36	609.2
12/23/2011 20:30	8.56 Level	1.44	2.073	0.633	7.595	1.54	689.8
12/23/2011 20:45	8.51 Level	1.49	2.073	0.583	6.995	1.36	609.2
12/23/2011 21:00	8.51 Level	1.49	2.073	0.583	6.995	1.36	609.2
12/23/2011 21:15	8.51 Level	1.49	2.073	0.583	6.995	1.36	609.2
12/23/2011 21:30	8.51 Level	1.49	2.073	0.583	6.995	1.36	609.2
12/23/2011 21:45	8.56 Level	1.44	2.073	0.633	7.595	1.54	689.8
12/23/2011 22:00	8.51 Level	1.49	2.073	0.583	6.995	1.36	609.2
12/23/2011 22:15	8.51 Level	1.49	2.073	0.583	6.995	1.36	609.2
12/23/2011 22:30	8.51 Level	1.49	2.073	0.583	6.995	1.36	609.2
12/23/2011 22:45	8.51 Level	1.49	2.073	0.583	6.995	1.36	609.2
12/23/2011 23:00	8.51 Level	1.49	2.073	0.583	6.995	1.36	609.2
12/23/2011 23:15	8.51 Level	1.49	2.073	0.583	6.995	1.36	609.2
12/23/2011 23:30	8.51 Level	1.49	2.073	0.583	6.995	1.36	609.2

12/23/2011 23:45	8.51	Level	1.49	2.073	0.583	6.995	1.36	609.2
12/24/2011 0:00	8.51	Level	1.49	2.073	0.583	6.995	1.36	609.2
12/24/2011 0:15	8.51	Level	1.49	2.073	0.583	6.995	1.36	609.2
12/24/2011 0:30	8.51	Level	1.49	2.073	0.583	6.995	1.36	609.2
12/24/2011 0:45	8.51	Level	1.49	2.073	0.583	6.995	1.36	609.2
12/24/2011 1:00	8.51	Level	1.49	2.073	0.583	6.995	1.36	609.2
12/24/2011 1:15	8.51	Level	1.49	2.073	0.583	6.995	1.36	609.2
12/24/2011 1:30	8.51	Level	1.49	2.073	0.583	6.995	1.36	609.2
12/24/2011 1:45	8.51	Level	1.49	2.073	0.583	6.995	1.36	609.2
12/24/2011 2:00	8.51	Level	1.49	2.073	0.583	6.995	1.36	609.2
12/24/2011 2:15	8.51	Level	1.49	2.073	0.583	6.995	1.36	609.2
12/24/2011 2:30	8.51	Level	1.49	2.073	0.583	6.995	1.36	609.2
12/24/2011 2:45	8.51	Level	1.49	2.073	0.583	6.995	1.36	609.2
12/24/2011 3:00	8.51	Level	1.49	2.073	0.583	6.995	1.36	609.2
12/24/2011 3:15	8.51	Level	1.49	2.073	0.583	6.995	1.36	609.2
12/24/2011 3:30	8.51	Level	1.49	2.073	0.583	6.995	1.36	609.2
12/24/2011 3:45	8.51	Level	1.49	2.073	0.583	6.995	1.36	609.2
12/24/2011 4:00	8.51	Level	1.49	2.073	0.583	6.995	1.36	609.2
12/24/2011 4:15	8.51	Level	1.49	2.073	0.583	6.995	1.36	609.2
12/24/2011 4:30	8.51	Level	1.49	2.073	0.583	6.995	1.36	609.2
12/24/2011 4:45	8.51	Level	1.49	2.073	0.583	6.995	1.36	609.2
12/24/2011 5:00	8.51	Level	1.49	2.073	0.583	6.995	1.36	609.2
12/24/2011 5:15	8.51	Level	1.49	2.073	0.583	6.995	1.36	609.2
12/24/2011 5:30	8.56	Level	1.44	2.073	0.633	7.595	1.54	689.8
12/24/2011 5:45	8.51	Level	1.49	2.073	0.583	6.995	1.36	609.2
12/24/2011 6:00	8.51	Level	1.49	2.073	0.583	6.995	1.36	609.2
12/24/2011 6:15	8.56	Level	1.44	2.073	0.633	7.595	1.54	689.8
12/24/2011 6:30	8.55	Level	1.45	2.073	0.623	7.475	1.50	673.4
12/24/2011 6:45	8.56	Level	1.44	2.073	0.633	7.595	1.54	689.8
12/24/2011 7:00	8.51	Level	1.49	2.073	0.583	6.995	1.36	609.2
12/24/2011 7:15	8.51	Level	1.49	2.073	0.583	6.995	1.36	609.2
12/24/2011 7:30	8.51	Level	1.49	2.073	0.583	6.995	1.36	609.2
12/24/2011 7:45	8.51	Level	1.49	2.073	0.583	6.995	1.36	609.2
12/24/2011 8:00	8.51	Level	1.49	2.073	0.583	6.995	1.36	609.2
12/24/2011 8:15	8.51	Level	1.49	2.073	0.583	6.995	1.36	609.2
12/24/2011 8:30	8.51	Level	1.49	2.073	0.583	6.995	1.36	609.2
12/24/2011 8:45	8.51	Level	1.49	2.073	0.583	6.995	1.36	609.2
12/24/2011 9:00	8.51	Level	1.49	2.073	0.583	6.995	1.36	609.2
12/24/2011 9:15	8.51	Level	1.49	2.073	0.583	6.995	1.36	609.2
12/24/2011 9:30	8.51	Level	1.49	2.073	0.583	6.995	1.36	609.2
12/24/2011 9:45	8.51	Level	1.49	2.073	0.583	6.995	1.36	609.2
12/24/2011 10:00	8.51	Level	1.49	2.073	0.583	6.995	1.36	609.2
12/24/2011 10:15	8.51	Level	1.49	2.073	0.583	6.995	1.36	609.2
12/24/2011 10:30	8.51	Level	1.49	2.073	0.583	6.995	1.36	609.2
12/24/2011 10:45	8.51	Level	1.49	2.073	0.583	6.995	1.36	609.2
12/24/2011 11:00	8.56	Level	1.44	2.073	0.633	7.595	1.54	689.8
12/24/2011 11:15	8.56	Level	1.44	2.073	0.633	7.595	1.54	689.8

12/24/2011 11:30	8.55 Level	1.45	2.073	0.623	7.475	1.50	673.4
12/24/2011 11:45	8.56 Level	1.44	2.073	0.633	7.595	1.54	689.8
12/24/2011 12:00	8.56 Level	1.44	2.073	0.633	7.595	1.54	689.8
12/24/2011 12:15	8.56 Level	1.44	2.073	0.633	7.595	1.54	689.8
12/24/2011 12:30	8.55 Level	1.45	2.073	0.623	7.475	1.50	673.4
12/24/2011 12:45	8.55 Level	1.45	2.073	0.623	7.475	1.50	673.4
12/24/2011 13:00	8.55 Level	1.45	2.073	0.623	7.475	1.50	673.4
12/24/2011 13:15	8.55 Level	1.45	2.073	0.623	7.475	1.50	673.4
12/24/2011 13:30	8.55 Level	1.45	2.073	0.623	7.475	1.50	673.4
12/24/2011 13:45	8.55 Level	1.45	2.073	0.623	7.475	1.50	673.4
12/24/2011 14:00	8.55 Level	1.45	2.073	0.623	7.475	1.50	673.4
12/24/2011 14:15	8.55 Level	1.45	2.073	0.623	7.475	1.50	673.4
12/24/2011 14:30	8.55 Level	1.45	2.073	0.623	7.475	1.50	673.4
12/24/2011 14:45	8.55 Level	1.45	2.073	0.623	7.475	1.50	673.4
12/24/2011 15:00	8.55 Level	1.45	2.073	0.623	7.475	1.50	673.4
12/24/2011 15:15	8.55 Level	1.45	2.073	0.623	7.475	1.50	673.4
12/24/2011 15:30	8.55 Level	1.45	2.073	0.623	7.475	1.50	673.4
12/24/2011 15:45	8.55 Level	1.45	2.073	0.623	7.475	1.50	673.4
12/24/2011 16:00	8.55 Level	1.45	2.073	0.623	7.475	1.50	673.4
12/24/2011 16:15	8.55 Level	1.45	2.073	0.623	7.475	1.50	673.4
12/24/2011 16:30	8.55 Level	1.45	2.073	0.623	7.475	1.50	673.4
12/24/2011 16:45	8.55 Level	1.45	2.073	0.623	7.475	1.50	673.4
12/24/2011 17:00	8.55 Level	1.45	2.073	0.623	7.475	1.50	673.4
12/24/2011 17:15	8.55 Level	1.45	2.073	0.623	7.475	1.50	673.4
12/24/2011 17:30	8.51 Level	1.49	2.073	0.583	6.995	1.36	609.2
12/24/2011 17:45	8.51 Level	1.49	2.073	0.583	6.995	1.36	609.2
12/24/2011 18:00	8.56 Level	1.44	2.073	0.633	7.595	1.54	689.8
12/24/2011 18:15	8.56 Level	1.44	2.073	0.633	7.595	1.54	689.8
12/24/2011 18:30	8.56 Level	1.44	2.073	0.633	7.595	1.54	689.8
12/24/2011 18:45	8.56 Level	1.44	2.073	0.633	7.595	1.54	689.8
12/24/2011 19:00	8.56 Level	1.44	2.073	0.633	7.595	1.54	689.8
12/24/2011 19:15	8.56 Level	1.44	2.073	0.633	7.595	1.54	689.8
12/24/2011 19:30	8.56 Level	1.44	2.073	0.633	7.595	1.54	689.8
12/24/2011 19:45	8.56 Level	1.44	2.073	0.633	7.595	1.54	689.8
12/24/2011 20:00	8.56 Level	1.44	2.073	0.633	7.595	1.54	689.8
12/24/2011 20:15	8.51 Level	1.49	2.073	0.583	6.995	1.36	609.2
12/24/2011 20:30	8.51 Level	1.49	2.073	0.583	6.995	1.36	609.2
12/24/2011 20:45	8.55 Level	1.45	2.073	0.623	7.475	1.50	673.4
12/24/2011 21:00	8.51 Level	1.49	2.073	0.583	6.995	1.36	609.2
12/24/2011 21:15	8.51 Level	1.49	2.073	0.583	6.995	1.36	609.2
12/24/2011 21:30	8.51 Level	1.49	2.073	0.583	6.995	1.36	609.2
12/24/2011 21:45	8.51 Level	1.49	2.073	0.583	6.995	1.36	609.2
12/24/2011 22:00	8.51 Level	1.49	2.073	0.583	6.995	1.36	609.2
12/24/2011 22:15	8.51 Level	1.49	2.073	0.583	6.995	1.36	609.2
12/24/2011 22:30	8.51 Level	1.49	2.073	0.583	6.995	1.36	609.2
12/24/2011 22:45	8.51 Level	1.49	2.073	0.583	6.995	1.36	609.2
12/24/2011 23:00	8.51 Level	1.49	2.073	0.583	6.995	1.36	609.2

12/24/2011 23:15	8.51	Level	1.49	2.073	0.583	6.995	1.36	609.2
12/24/2011 23:30	8.51	Level	1.49	2.073	0.583	6.995	1.36	609.2
12/24/2011 23:45	8.51	Level	1.49	2.073	0.583	6.995	1.36	609.2
12/25/2011 0:00	8.51	Level	1.49	2.073	0.583	6.995	1.36	609.2
12/25/2011 0:15	8.51	Level	1.49	2.073	0.583	6.995	1.36	609.2
12/25/2011 0:30	8.51	Level	1.49	2.073	0.583	6.995	1.36	609.2
12/25/2011 0:45	8.51	Level	1.49	2.073	0.583	6.995	1.36	609.2
12/25/2011 1:00	8.51	Level	1.49	2.073	0.583	6.995	1.36	609.2
12/25/2011 1:15	8.51	Level	1.49	2.073	0.583	6.995	1.36	609.2
12/25/2011 1:30	8.51	Level	1.49	2.073	0.583	6.995	1.36	609.2
12/25/2011 1:45	8.51	Level	1.49	2.073	0.583	6.995	1.36	609.2
12/25/2011 2:00	8.51	Level	1.49	2.073	0.583	6.995	1.36	609.2
12/25/2011 2:15	8.51	Level	1.49	2.073	0.583	6.995	1.36	609.2
12/25/2011 2:30	8.51	Level	1.49	2.073	0.583	6.995	1.36	609.2
12/25/2011 2:45	8.51	Level	1.49	2.073	0.583	6.995	1.36	609.2
12/25/2011 3:00	8.51	Level	1.49	2.073	0.583	6.995	1.36	609.2
12/25/2011 3:15	8.51	Level	1.49	2.073	0.583	6.995	1.36	609.2
12/25/2011 3:30	8.51	Level	1.49	2.073	0.583	6.995	1.36	609.2
12/25/2011 3:45	8.51	Level	1.49	2.073	0.583	6.995	1.36	609.2
12/25/2011 4:00	8.51	Level	1.49	2.073	0.583	6.995	1.36	609.2
12/25/2011 4:15	8.51	Level	1.49	2.073	0.583	6.995	1.36	609.2
12/25/2011 4:30	8.51	Level	1.49	2.073	0.583	6.995	1.36	609.2
12/25/2011 4:45	8.51	Level	1.49	2.073	0.583	6.995	1.36	609.2
12/25/2011 5:00	8.51	Level	1.49	2.073	0.583	6.995	1.36	609.2
12/25/2011 5:15	8.51	Level	1.49	2.073	0.583	6.995	1.36	609.2
12/25/2011 5:30	8.51	Level	1.49	2.073	0.583	6.995	1.36	609.2
12/25/2011 5:45	8.56	Level	1.44	2.073	0.633	7.595	1.54	689.8
12/25/2011 6:00	8.51	Level	1.49	2.073	0.583	6.995	1.36	609.2
12/25/2011 6:15	8.51	Level	1.49	2.073	0.583	6.995	1.36	609.2
12/25/2011 6:30	8.51	Level	1.49	2.073	0.583	6.995	1.36	609.2
12/25/2011 6:45	8.51	Level	1.49	2.073	0.583	6.995	1.36	609.2
12/25/2011 7:00	8.51	Level	1.49	2.073	0.583	6.995	1.36	609.2
12/25/2011 7:15	8.51	Level	1.49	2.073	0.583	6.995	1.36	609.2
12/25/2011 7:30	8.51	Level	1.49	2.073	0.583	6.995	1.36	609.2
12/25/2011 7:45	8.51	Level	1.49	2.073	0.583	6.995	1.36	609.2
12/25/2011 8:00	8.51	Level	1.49	2.073	0.583	6.995	1.36	609.2
12/25/2011 8:15	8.51	Level	1.49	2.073	0.583	6.995	1.36	609.2
12/25/2011 8:30	8.51	Level	1.49	2.073	0.583	6.995	1.36	609.2
12/25/2011 8:45	8.51	Level	1.49	2.073	0.583	6.995	1.36	609.2
12/25/2011 9:00	8.51	Level	1.49	2.073	0.583	6.995	1.36	609.2
12/25/2011 9:15	8.51	Level	1.49	2.073	0.583	6.995	1.36	609.2
12/25/2011 9:30	8.51	Level	1.49	2.073	0.583	6.995	1.36	609.2
12/25/2011 9:45	8.51	Level	1.49	2.073	0.583	6.995	1.36	609.2
12/25/2011 10:00	8.51	Level	1.49	2.073	0.583	6.995	1.36	609.2
12/25/2011 10:15	8.51	Level	1.49	2.073	0.583	6.995	1.36	609.2
12/25/2011 10:30	8.51	Level	1.49	2.073	0.583	6.995	1.36	609.2
12/25/2011 10:45	8.56	Level	1.44	2.073	0.633	7.595	1.54	689.8

12/25/2011 11:00	8.56	Level	1.44	2.073	0.633	7.595	1.54	689.8
12/25/2011 11:15	8.51	Level	1.49	2.073	0.583	6.995	1.36	609.2
12/25/2011 11:30	8.55	Level	1.45	2.073	0.623	7.475	1.50	673.4
12/25/2011 11:45	8.55	Level	1.45	2.073	0.623	7.475	1.50	673.4
12/25/2011 12:00	8.55	Level	1.45	2.073	0.623	7.475	1.50	673.4
12/25/2011 12:15	8.56	Level	1.44	2.073	0.633	7.595	1.54	689.8
12/25/2011 12:30	8.55	Level	1.45	2.073	0.623	7.475	1.50	673.4
12/25/2011 12:45	8.55	Level	1.45	2.073	0.623	7.475	1.50	673.4
12/25/2011 13:00	8.56	Level	1.44	2.073	0.633	7.595	1.54	689.8
12/25/2011 13:15	8.55	Level	1.45	2.073	0.623	7.475	1.50	673.4
12/25/2011 13:30	8.55	Level	1.45	2.073	0.623	7.475	1.50	673.4
12/25/2011 13:45	8.55	Level	1.45	2.073	0.623	7.475	1.50	673.4
12/25/2011 14:00	8.55	Level	1.45	2.073	0.623	7.475	1.50	673.4
12/25/2011 14:15	8.55	Level	1.45	2.073	0.623	7.475	1.50	673.4
12/25/2011 14:30	8.6	Level	1.4	2.073	0.673	8.075	1.69	756.7
12/25/2011 14:45	8.55	Level	1.45	2.073	0.623	7.475	1.50	673.4
12/25/2011 15:00	8.55	Level	1.45	2.073	0.623	7.475	1.50	673.4
12/25/2011 15:15	8.59	Level	1.41	2.073	0.663	7.955	1.65	739.8
12/25/2011 15:30	8.55	Level	1.45	2.073	0.623	7.475	1.50	673.4
12/25/2011 15:45	8.55	Level	1.45	2.073	0.623	7.475	1.50	673.4
12/25/2011 16:00	8.55	Level	1.45	2.073	0.623	7.475	1.50	673.4
12/25/2011 16:15	8.55	Level	1.45	2.073	0.623	7.475	1.50	673.4
12/25/2011 16:30	8.55	Level	1.45	2.073	0.623	7.475	1.50	673.4
12/25/2011 16:45	8.56	Level	1.44	2.073	0.633	7.595	1.54	689.8
12/25/2011 17:00	8.51	Level	1.49	2.073	0.583	6.995	1.36	609.2
12/25/2011 17:15	8.55	Level	1.45	2.073	0.623	7.475	1.50	673.4
12/25/2011 17:30	8.51	Level	1.49	2.073	0.583	6.995	1.36	609.2
12/25/2011 17:45	8.55	Level	1.45	2.073	0.623	7.475	1.50	673.4
12/25/2011 18:00	8.55	Level	1.45	2.073	0.623	7.475	1.50	673.4
12/25/2011 18:15	8.56	Level	1.44	2.073	0.633	7.595	1.54	689.8
12/25/2011 18:30	8.51	Level	1.49	2.073	0.583	6.995	1.36	609.2
12/25/2011 18:45	8.55	Level	1.45	2.073	0.623	7.475	1.50	673.4
12/25/2011 19:00	8.55	Level	1.45	2.073	0.623	7.475	1.50	673.4
12/25/2011 19:15	8.55	Level	1.45	2.073	0.623	7.475	1.50	673.4
12/25/2011 19:30	8.51	Level	1.49	2.073	0.583	6.995	1.36	609.2
12/25/2011 19:45	8.56	Level	1.44	2.073	0.633	7.595	1.54	689.8
12/25/2011 20:00	8.55	Level	1.45	2.073	0.623	7.475	1.50	673.4
12/25/2011 20:15	8.56	Level	1.44	2.073	0.633	7.595	1.54	689.8
12/25/2011 20:30	8.56	Level	1.44	2.073	0.633	7.595	1.54	689.8
12/25/2011 20:45	8.55	Level	1.45	2.073	0.623	7.475	1.50	673.4
12/25/2011 21:00	8.51	Level	1.49	2.073	0.583	6.995	1.36	609.2
12/25/2011 21:15	8.56	Level	1.44	2.073	0.633	7.595	1.54	689.8
12/25/2011 21:30	8.56	Level	1.44	2.073	0.633	7.595	1.54	689.8
12/25/2011 21:45	8.56	Level	1.44	2.073	0.633	7.595	1.54	689.8
12/25/2011 22:00	8.55	Level	1.45	2.073	0.623	7.475	1.50	673.4
12/25/2011 22:15	8.51	Level	1.49	2.073	0.583	6.995	1.36	609.2
12/25/2011 22:30	8.51	Level	1.49	2.073	0.583	6.995	1.36	609.2

12/25/2011 22:45	8.51	Level	1.49	2.073	0.583	6.995	1.36	609.2
12/25/2011 23:00	8.51	Level	1.49	2.073	0.583	6.995	1.36	609.2
12/25/2011 23:15	8.56	Level	1.44	2.073	0.633	7.595	1.54	689.8
12/25/2011 23:30	8.51	Level	1.49	2.073	0.583	6.995	1.36	609.2
12/25/2011 23:45	8.56	Level	1.44	2.073	0.633	7.595	1.54	689.8
12/26/2011 0:00	8.56	Level	1.44	2.073	0.633	7.595	1.54	689.8
12/26/2011 0:15	8.51	Level	1.49	2.073	0.583	6.995	1.36	609.2
12/26/2011 0:30	8.51	Level	1.49	2.073	0.583	6.995	1.36	609.2
12/26/2011 0:45	8.51	Level	1.49	2.073	0.583	6.995	1.36	609.2
12/26/2011 1:00	8.51	Level	1.49	2.073	0.583	6.995	1.36	609.2
12/26/2011 1:15	8.51	Level	1.49	2.073	0.583	6.995	1.36	609.2
12/26/2011 1:30	8.51	Level	1.49	2.073	0.583	6.995	1.36	609.2
12/26/2011 1:45	8.51	Level	1.49	2.073	0.583	6.995	1.36	609.2
12/26/2011 2:00	8.55	Level	1.45	2.073	0.623	7.475	1.50	673.4
12/26/2011 2:15	8.51	Level	1.49	2.073	0.583	6.995	1.36	609.2
12/26/2011 2:30	8.51	Level	1.49	2.073	0.583	6.995	1.36	609.2
12/26/2011 2:45	8.56	Level	1.44	2.073	0.633	7.595	1.54	689.8
12/26/2011 3:00	8.51	Level	1.49	2.073	0.583	6.995	1.36	609.2
12/26/2011 3:15	8.51	Level	1.49	2.073	0.583	6.995	1.36	609.2
12/26/2011 3:30	8.55	Level	1.45	2.073	0.623	7.475	1.50	673.4
12/26/2011 3:45	8.55	Level	1.45	2.073	0.623	7.475	1.50	673.4
12/26/2011 4:00	8.51	Level	1.49	2.073	0.583	6.995	1.36	609.2
12/26/2011 4:15	8.51	Level	1.49	2.073	0.583	6.995	1.36	609.2
12/26/2011 4:30	8.51	Level	1.49	2.073	0.583	6.995	1.36	609.2
12/26/2011 4:45	8.51	Level	1.49	2.073	0.583	6.995	1.36	609.2
12/26/2011 5:00	8.51	Level	1.49	2.073	0.583	6.995	1.36	609.2
12/26/2011 5:15	8.51	Level	1.49	2.073	0.583	6.995	1.36	609.2
12/26/2011 5:30	8.51	Level	1.49	2.073	0.583	6.995	1.36	609.2
12/26/2011 5:45	8.51	Level	1.49	2.073	0.583	6.995	1.36	609.2
12/26/2011 6:00	8.51	Level	1.49	2.073	0.583	6.995	1.36	609.2
12/26/2011 6:15	8.55	Level	1.45	2.073	0.623	7.475	1.50	673.4
12/26/2011 6:30	8.51	Level	1.49	2.073	0.583	6.995	1.36	609.2
12/26/2011 6:45	8.51	Level	1.49	2.073	0.583	6.995	1.36	609.2
12/26/2011 7:00	8.51	Level	1.49	2.073	0.583	6.995	1.36	609.2
12/26/2011 7:15	8.56	Level	1.44	2.073	0.633	7.595	1.54	689.8
12/26/2011 7:30	8.51	Level	1.49	2.073	0.583	6.995	1.36	609.2
12/26/2011 7:45	8.51	Level	1.49	2.073	0.583	6.995	1.36	609.2
12/26/2011 8:00	8.56	Level	1.44	2.073	0.633	7.595	1.54	689.8
12/26/2011 8:15	8.56	Level	1.44	2.073	0.633	7.595	1.54	689.8
12/26/2011 8:30	8.56	Level	1.44	2.073	0.633	7.595	1.54	689.8
12/26/2011 8:45	8.56	Level	1.44	2.073	0.633	7.595	1.54	689.8
12/26/2011 9:00	8.55	Level	1.45	2.073	0.623	7.475	1.50	673.4
12/26/2011 9:15	8.56	Level	1.44	2.073	0.633	7.595	1.54	689.8
12/26/2011 9:30	8.56	Level	1.44	2.073	0.633	7.595	1.54	689.8
12/26/2011 9:45	8.56	Level	1.44	2.073	0.633	7.595	1.54	689.8
12/26/2011 10:00	8.51	Level	1.49	2.073	0.583	6.995	1.36	609.2
12/26/2011 10:15	8.56	Level	1.44	2.073	0.633	7.595	1.54	689.8

12/26/2011 10:30	8.51	Level	1.49	2.073	0.583	6.995	1.36	609.2
12/26/2011 10:45	8.56	Level	1.44	2.073	0.633	7.595	1.54	689.8
12/26/2011 11:00	8.56	Level	1.44	2.073	0.633	7.595	1.54	689.8
12/26/2011 11:15	8.55	Level	1.45	2.073	0.623	7.475	1.50	673.4
12/26/2011 11:30	8.55	Level	1.45	2.073	0.623	7.475	1.50	673.4
12/26/2011 11:45	8.56	Level	1.44	2.073	0.633	7.595	1.54	689.8
12/26/2011 12:00	8.55	Level	1.45	2.073	0.623	7.475	1.50	673.4
12/26/2011 12:15	8.55	Level	1.45	2.073	0.623	7.475	1.50	673.4
12/26/2011 12:30	8.55	Level	1.45	2.073	0.623	7.475	1.50	673.4
12/26/2011 12:45	8.56	Level	1.44	2.073	0.633	7.595	1.54	689.8
12/26/2011 13:00	8.55	Level	1.45	2.073	0.623	7.475	1.50	673.4
12/26/2011 13:15	8.56	Level	1.44	2.073	0.633	7.595	1.54	689.8
12/26/2011 13:30	8.55	Level	1.45	2.073	0.623	7.475	1.50	673.4
12/26/2011 13:45	8.55	Level	1.45	2.073	0.623	7.475	1.50	673.4
12/26/2011 14:00	8.55	Level	1.45	2.073	0.623	7.475	1.50	673.4
12/26/2011 14:15	8.55	Level	1.45	2.073	0.623	7.475	1.50	673.4
12/26/2011 14:30	8.55	Level	1.45	2.073	0.623	7.475	1.50	673.4
12/26/2011 14:45	8.55	Level	1.45	2.073	0.623	7.475	1.50	673.4
12/26/2011 15:00	8.55	Level	1.45	2.073	0.623	7.475	1.50	673.4
12/26/2011 15:15	8.69	Level	1.31	2.073	0.763	9.155	2.04	914.7
12/26/2011 15:30	8.69	Level	1.31	2.073	0.763	9.155	2.04	914.7
12/26/2011 15:45	8.69	Level	1.31	2.073	0.763	9.155	2.04	914.7
12/26/2011 16:00	8.69	Level	1.31	2.073	0.763	9.155	2.04	914.7
12/26/2011 16:15	8.69	Level	1.31	2.073	0.763	9.155	2.04	914.7
12/26/2011 16:30	8.69	Level	1.31	2.073	0.763	9.155	2.04	914.7
12/26/2011 16:45	8.69	Level	1.31	2.073	0.763	9.155	2.04	914.7
12/26/2011 17:00	8.69	Level	1.31	2.073	0.763	9.155	2.04	914.7
12/26/2011 17:15	8.69	Level	1.31	2.073	0.763	9.155	2.04	914.7
12/26/2011 17:30	8.69	Level	1.31	2.073	0.763	9.155	2.04	914.7
12/26/2011 17:45	8.64	Level	1.36	2.073	0.713	8.555	1.84	825.7
12/26/2011 18:00	8.69	Level	1.31	2.073	0.763	9.155	2.04	914.7
12/26/2011 18:15	8.69	Level	1.31	2.073	0.763	9.155	2.04	914.7
12/26/2011 18:30	8.69	Level	1.31	2.073	0.763	9.155	2.04	914.7
12/26/2011 18:45	8.64	Level	1.36	2.073	0.713	8.555	1.84	825.7
12/26/2011 19:00	8.64	Level	1.36	2.073	0.713	8.555	1.84	825.7
12/26/2011 19:15	8.64	Level	1.36	2.073	0.713	8.555	1.84	825.7
12/26/2011 19:30	8.64	Level	1.36	2.073	0.713	8.555	1.84	825.7
12/26/2011 19:45	8.64	Level	1.36	2.073	0.713	8.555	1.84	825.7
12/26/2011 20:00	8.64	Level	1.36	2.073	0.713	8.555	1.84	825.7
12/26/2011 20:15	8.69	Level	1.31	2.073	0.763	9.155	2.04	914.7
12/26/2011 20:30	8.69	Level	1.31	2.073	0.763	9.155	2.04	914.7
12/26/2011 20:45	8.65	Level	1.35	2.073	0.723	8.675	1.88	843.3
12/26/2011 21:00	8.64	Level	1.36	2.073	0.713	8.555	1.84	825.7
12/26/2011 21:15	8.69	Level	1.31	2.073	0.763	9.155	2.04	914.7
12/26/2011 21:30	8.69	Level	1.31	2.073	0.763	9.155	2.04	914.7
12/26/2011 21:45	8.65	Level	1.35	2.073	0.723	8.675	1.88	843.3
12/26/2011 22:00	8.64	Level	1.36	2.073	0.713	8.555	1.84	825.7

12/26/2011 22:15	8.65 Level	1.35	2.073	0.723	8.675	1.88	843.3
12/26/2011 22:30	8.64 Level	1.36	2.073	0.713	8.555	1.84	825.7
12/26/2011 22:45	8.64 Level	1.36	2.073	0.713	8.555	1.84	825.7
12/26/2011 23:00	8.65 Level	1.35	2.073	0.723	8.675	1.88	843.3
12/26/2011 23:15	8.64 Level	1.36	2.073	0.713	8.555	1.84	825.7
12/26/2011 23:30	8.64 Level	1.36	2.073	0.713	8.555	1.84	825.7
12/26/2011 23:45	8.69 Level	1.31	2.073	0.763	9.155	2.04	914.7
12/27/2011 0:00	8.64 Level	1.36	2.073	0.713	8.555	1.84	825.7
12/27/2011 0:15	8.65 Level	1.35	2.073	0.723	8.675	1.88	843.3
12/27/2011 0:30	8.64 Level	1.36	2.073	0.713	8.555	1.84	825.7
12/27/2011 0:45	8.64 Level	1.36	2.073	0.713	8.555	1.84	825.7
12/27/2011 1:00	8.64 Level	1.36	2.073	0.713	8.555	1.84	825.7
12/27/2011 1:15	8.64 Level	1.36	2.073	0.713	8.555	1.84	825.7
12/27/2011 1:30	8.64 Level	1.36	2.073	0.713	8.555	1.84	825.7
12/27/2011 1:45	8.64 Level	1.36	2.073	0.713	8.555	1.84	825.7
12/27/2011 2:00	8.64 Level	1.36	2.073	0.713	8.555	1.84	825.7
12/27/2011 2:15	8.64 Level	1.36	2.073	0.713	8.555	1.84	825.7
12/27/2011 2:30	8.64 Level	1.36	2.073	0.713	8.555	1.84	825.7
12/27/2011 2:45	8.64 Level	1.36	2.073	0.713	8.555	1.84	825.7
12/27/2011 3:00	8.64 Level	1.36	2.073	0.713	8.555	1.84	825.7
12/27/2011 3:15	8.64 Level	1.36	2.073	0.713	8.555	1.84	825.7
12/27/2011 3:30	8.64 Level	1.36	2.073	0.713	8.555	1.84	825.7
12/27/2011 3:45	8.64 Level	1.36	2.073	0.713	8.555	1.84	825.7
12/27/2011 4:00	8.64 Level	1.36	2.073	0.713	8.555	1.84	825.7
12/27/2011 4:15	8.64 Level	1.36	2.073	0.713	8.555	1.84	825.7
12/27/2011 4:30	8.64 Level	1.36	2.073	0.713	8.555	1.84	825.7
12/27/2011 4:45	8.64 Level	1.36	2.073	0.713	8.555	1.84	825.7
12/27/2011 5:00	8.64 Level	1.36	2.073	0.713	8.555	1.84	825.7
12/27/2011 5:15	8.64 Level	1.36	2.073	0.713	8.555	1.84	825.7
12/27/2011 5:30	8.65 Level	1.35	2.073	0.723	8.675	1.88	843.3
12/27/2011 5:45	8.64 Level	1.36	2.073	0.713	8.555	1.84	825.7
12/27/2011 6:00	8.64 Level	1.36	2.073	0.713	8.555	1.84	825.7
12/27/2011 6:15	8.64 Level	1.36	2.073	0.713	8.555	1.84	825.7
12/27/2011 6:30	8.64 Level	1.36	2.073	0.713	8.555	1.84	825.7
12/27/2011 6:45	8.64 Level	1.36	2.073	0.713	8.555	1.84	825.7
12/27/2011 7:00	8.65 Level	1.35	2.073	0.723	8.675	1.88	843.3
12/27/2011 7:15	8.64 Level	1.36	2.073	0.713	8.555	1.84	825.7
12/27/2011 7:30	8.64 Level	1.36	2.073	0.713	8.555	1.84	825.7
12/27/2011 7:45	8.64 Level	1.36	2.073	0.713	8.555	1.84	825.7
12/27/2011 8:00	8.64 Level	1.36	2.073	0.713	8.555	1.84	825.7
12/27/2011 8:15	8.64 Level	1.36	2.073	0.713	8.555	1.84	825.7
12/27/2011 8:30	8.64 Level	1.36	2.073	0.713	8.555	1.84	825.7
12/27/2011 8:45	8.64 Level	1.36	2.073	0.713	8.555	1.84	825.7
12/27/2011 9:00	8.64 Level	1.36	2.073	0.713	8.555	1.84	825.7
12/27/2011 9:15	8.64 Level	1.36	2.073	0.713	8.555	1.84	825.7
12/27/2011 9:30	8.64 Level	1.36	2.073	0.713	8.555	1.84	825.7
12/27/2011 9:45	8.64 Level	1.36	2.073	0.713	8.555	1.84	825.7

12/27/2011 10:00	8.64 Level	1.36	2.073	0.713	8.555	1.84	825.7
12/27/2011 10:15	8.64 Level	1.36	2.073	0.713	8.555	1.84	825.7
12/27/2011 10:30	8.64 Level	1.36	2.073	0.713	8.555	1.84	825.7
12/27/2011 10:45	8.69 Level	1.31	2.073	0.763	9.155	2.04	914.7
12/27/2011 11:00	8.69 Level	1.31	2.073	0.763	9.155	2.04	914.7
12/27/2011 11:15	8.69 Level	1.31	2.073	0.763	9.155	2.04	914.7
12/27/2011 11:30	8.69 Level	1.31	2.073	0.763	9.155	2.04	914.7
12/27/2011 11:45	8.69 Level	1.31	2.073	0.763	9.155	2.04	914.7
12/27/2011 12:00	8.69 Level	1.31	2.073	0.763	9.155	2.04	914.7
12/27/2011 12:15	8.69 Level	1.31	2.073	0.763	9.155	2.04	914.7
12/27/2011 12:30	8.69 Level	1.31	2.073	0.763	9.155	2.04	914.7
12/27/2011 12:45	8.69 Level	1.31	2.073	0.763	9.155	2.04	914.7
12/27/2011 13:00	8.69 Level	1.31	2.073	0.763	9.155	2.04	914.7
12/27/2011 13:15	8.69 Level	1.31	2.073	0.763	9.155	2.04	914.7
12/27/2011 13:30	8.69 Level	1.31	2.073	0.763	9.155	2.04	914.7
12/27/2011 13:45	8.69 Level	1.31	2.073	0.763	9.155	2.04	914.7
12/27/2011 14:00	8.69 Level	1.31	2.073	0.763	9.155	2.04	914.7
12/27/2011 14:15	8.69 Level	1.31	2.073	0.763	9.155	2.04	914.7
12/27/2011 14:30	8.69 Level	1.31	2.073	0.763	9.155	2.04	914.7
12/27/2011 14:45	8.69 Level	1.31	2.073	0.763	9.155	2.04	914.7
12/27/2011 15:00	8.69 Level	1.31	2.073	0.763	9.155	2.04	914.7
12/27/2011 15:15	8.69 Level	1.31	2.073	0.763	9.155	2.04	914.7
12/27/2011 15:30	8.69 Level	1.31	2.073	0.763	9.155	2.04	914.7
12/27/2011 15:45	8.69 Level	1.31	2.073	0.763	9.155	2.04	914.7
12/27/2011 16:00	8.69 Level	1.31	2.073	0.763	9.155	2.04	914.7
12/27/2011 16:15	8.69 Level	1.31	2.073	0.763	9.155	2.04	914.7
12/27/2011 16:30	8.69 Level	1.31	2.073	0.763	9.155	2.04	914.7
12/27/2011 16:45	8.69 Level	1.31	2.073	0.763	9.155	2.04	914.7
12/27/2011 17:00	8.69 Level	1.31	2.073	0.763	9.155	2.04	914.7
12/27/2011 17:15	8.69 Level	1.31	2.073	0.763	9.155	2.04	914.7
12/27/2011 17:30	8.69 Level	1.31	2.073	0.763	9.155	2.04	914.7
12/27/2011 17:45	8.64 Level	1.36	2.073	0.713	8.555	1.84	825.7
12/27/2011 18:00	8.69 Level	1.31	2.073	0.763	9.155	2.04	914.7
12/27/2011 18:15	8.69 Level	1.31	2.073	0.763	9.155	2.04	914.7
12/27/2011 18:30	8.64 Level	1.36	2.073	0.713	8.555	1.84	825.7
12/27/2011 18:45	8.65 Level	1.35	2.073	0.723	8.675	1.88	843.3
12/27/2011 19:00	8.65 Level	1.35	2.073	0.723	8.675	1.88	843.3
12/27/2011 19:15	8.64 Level	1.36	2.073	0.713	8.555	1.84	825.7
12/27/2011 19:30	8.64 Level	1.36	2.073	0.713	8.555	1.84	825.7
12/27/2011 19:45	8.64 Level	1.36	2.073	0.713	8.555	1.84	825.7
12/27/2011 20:00	8.69 Level	1.31	2.073	0.763	9.155	2.04	914.7
12/27/2011 20:15	8.64 Level	1.36	2.073	0.713	8.555	1.84	825.7
12/27/2011 20:30	8.69 Level	1.31	2.073	0.763	9.155	2.04	914.7
12/27/2011 20:45	8.69 Level	1.31	2.073	0.763	9.155	2.04	914.7
12/27/2011 21:00	8.69 Level	1.31	2.073	0.763	9.155	2.04	914.7
12/27/2011 21:15	8.69 Level	1.31	2.073	0.763	9.155	2.04	914.7
12/27/2011 21:30	8.69 Level	1.31	2.073	0.763	9.155	2.04	914.7

12/27/2011 21:45	8.69	Level	1.31	2.073	0.763	9.155	2.04	914.7
12/27/2011 22:00	8.69	Level	1.31	2.073	0.763	9.155	2.04	914.7
12/27/2011 22:15	8.64	Level	1.36	2.073	0.713	8.555	1.84	825.7
12/27/2011 22:30	8.69	Level	1.31	2.073	0.763	9.155	2.04	914.7
12/27/2011 22:45	8.65	Level	1.35	2.073	0.723	8.675	1.88	843.3
12/27/2011 23:00	8.65	Level	1.35	2.073	0.723	8.675	1.88	843.3
12/27/2011 23:15	8.64	Level	1.36	2.073	0.713	8.555	1.84	825.7
12/27/2011 23:30	8.64	Level	1.36	2.073	0.713	8.555	1.84	825.7
12/27/2011 23:45	8.64	Level	1.36	2.073	0.713	8.555	1.84	825.7
12/28/2011 0:00	8.64	Level	1.36	2.073	0.713	8.555	1.84	825.7
12/28/2011 0:15	8.65	Level	1.35	2.073	0.723	8.675	1.88	843.3
12/28/2011 0:30	8.64	Level	1.36	2.073	0.713	8.555	1.84	825.7
12/28/2011 0:45	8.64	Level	1.36	2.073	0.713	8.555	1.84	825.7
12/28/2011 1:00	8.64	Level	1.36	2.073	0.713	8.555	1.84	825.7
12/28/2011 1:15	8.69	Level	1.31	2.073	0.763	9.155	2.04	914.7
12/28/2011 1:30	8.69	Level	1.31	2.073	0.763	9.155	2.04	914.7
12/28/2011 1:45	8.69	Level	1.31	2.073	0.763	9.155	2.04	914.7
12/28/2011 2:00	8.69	Level	1.31	2.073	0.763	9.155	2.04	914.7
12/28/2011 2:15	8.69	Level	1.31	2.073	0.763	9.155	2.04	914.7
12/28/2011 2:30	8.64	Level	1.36	2.073	0.713	8.555	1.84	825.7
12/28/2011 2:45	8.64	Level	1.36	2.073	0.713	8.555	1.84	825.7
12/28/2011 3:00	8.64	Level	1.36	2.073	0.713	8.555	1.84	825.7
12/28/2011 3:15	8.69	Level	1.31	2.073	0.763	9.155	2.04	914.7
12/28/2011 3:30	8.69	Level	1.31	2.073	0.763	9.155	2.04	914.7
12/28/2011 3:45	8.69	Level	1.31	2.073	0.763	9.155	2.04	914.7
12/28/2011 4:00	8.64	Level	1.36	2.073	0.713	8.555	1.84	825.7
12/28/2011 4:15	8.64	Level	1.36	2.073	0.713	8.555	1.84	825.7
12/28/2011 4:30	8.69	Level	1.31	2.073	0.763	9.155	2.04	914.7
12/28/2011 4:45	8.64	Level	1.36	2.073	0.713	8.555	1.84	825.7
12/28/2011 5:00	8.64	Level	1.36	2.073	0.713	8.555	1.84	825.7
12/28/2011 5:15	8.64	Level	1.36	2.073	0.713	8.555	1.84	825.7
12/28/2011 5:30	8.64	Level	1.36	2.073	0.713	8.555	1.84	825.7
12/28/2011 5:45	8.64	Level	1.36	2.073	0.713	8.555	1.84	825.7
12/28/2011 6:00	8.69	Level	1.31	2.073	0.763	9.155	2.04	914.7
12/28/2011 6:15	8.64	Level	1.36	2.073	0.713	8.555	1.84	825.7
12/28/2011 6:30	8.69	Level	1.31	2.073	0.763	9.155	2.04	914.7
12/28/2011 6:45	8.69	Level	1.31	2.073	0.763	9.155	2.04	914.7
12/28/2011 7:00	8.64	Level	1.36	2.073	0.713	8.555	1.84	825.7
12/28/2011 7:15	8.65	Level	1.35	2.073	0.723	8.675	1.88	843.3
12/28/2011 7:30	8.69	Level	1.31	2.073	0.763	9.155	2.04	914.7
12/28/2011 7:45	8.69	Level	1.31	2.073	0.763	9.155	2.04	914.7
12/28/2011 8:00	8.69	Level	1.31	2.073	0.763	9.155	2.04	914.7
12/28/2011 8:15	8.69	Level	1.31	2.073	0.763	9.155	2.04	914.7
12/28/2011 8:30	8.69	Level	1.31	2.073	0.763	9.155	2.04	914.7
12/28/2011 8:45	8.69	Level	1.31	2.073	0.763	9.155	2.04	914.7
12/28/2011 9:00	8.69	Level	1.31	2.073	0.763	9.155	2.04	914.7
12/28/2011 9:15	8.65	Level	1.35	2.073	0.723	8.675	1.88	843.3

12/28/2011 9:30	8.69	Level	1.31	2.073	0.763	9.155	2.04	914.7
12/28/2011 9:45	8.69	Level	1.31	2.073	0.763	9.155	2.04	914.7
12/28/2011 10:00	8.69	Level	1.31	2.073	0.763	9.155	2.04	914.7
12/28/2011 10:15	8.69	Level	1.31	2.073	0.763	9.155	2.04	914.7
12/28/2011 10:30	8.69	Level	1.31	2.073	0.763	9.155	2.04	914.7
12/28/2011 10:45	8.69	Level	1.31	2.073	0.763	9.155	2.04	914.7
12/28/2011 11:00	8.69	Level	1.31	2.073	0.763	9.155	2.04	914.7
12/28/2011 11:15	8.69	Level	1.31	2.073	0.763	9.155	2.04	914.7
12/28/2011 11:30	8.69	Level	1.31	2.073	0.763	9.155	2.04	914.7
12/28/2011 11:45	8.69	Level	1.31	2.073	0.763	9.155	2.04	914.7
12/28/2011 12:00	8.69	Level	1.31	2.073	0.763	9.155	2.04	914.7
12/28/2011 12:15	8.69	Level	1.31	2.073	0.763	9.155	2.04	914.7
12/28/2011 12:30	8.69	Level	1.31	2.073	0.763	9.155	2.04	914.7
12/28/2011 12:45	8.69	Level	1.31	2.073	0.763	9.155	2.04	914.7
12/28/2011 13:00	8.69	Level	1.31	2.073	0.763	9.155	2.04	914.7
12/28/2011 13:15	8.69	Level	1.31	2.073	0.763	9.155	2.04	914.7
12/28/2011 13:30	8.69	Level	1.31	2.073	0.763	9.155	2.04	914.7
12/28/2011 13:45	8.73	Level	1.27	2.073	0.803	9.635	2.20	988.2
12/28/2011 14:00	8.69	Level	1.31	2.073	0.763	9.155	2.04	914.7
12/28/2011 14:15	8.73	Level	1.27	2.073	0.803	9.635	2.20	988.2
12/28/2011 14:30	8.69	Level	1.31	2.073	0.763	9.155	2.04	914.7
12/28/2011 14:45	8.69	Level	1.31	2.073	0.763	9.155	2.04	914.7
12/28/2011 15:00	8.69	Level	1.31	2.073	0.763	9.155	2.04	914.7
12/28/2011 15:15	8.69	Level	1.31	2.073	0.763	9.155	2.04	914.7
12/28/2011 15:30	8.69	Level	1.31	2.073	0.763	9.155	2.04	914.7
12/28/2011 15:45	8.73	Level	1.27	2.073	0.803	9.635	2.20	988.2
12/28/2011 16:00	8.69	Level	1.31	2.073	0.763	9.155	2.04	914.7
12/28/2011 16:15	8.69	Level	1.31	2.073	0.763	9.155	2.04	914.7
12/28/2011 16:30	8.69	Level	1.31	2.073	0.763	9.155	2.04	914.7
12/28/2011 16:45	8.69	Level	1.31	2.073	0.763	9.155	2.04	914.7
12/28/2011 17:00	8.69	Level	1.31	2.073	0.763	9.155	2.04	914.7
12/28/2011 17:15	8.69	Level	1.31	2.073	0.763	9.155	2.04	914.7
12/28/2011 17:30	8.69	Level	1.31	2.073	0.763	9.155	2.04	914.7
12/28/2011 17:45	8.69	Level	1.31	2.073	0.763	9.155	2.04	914.7
12/28/2011 18:00	8.69	Level	1.31	2.073	0.763	9.155	2.04	914.7
12/28/2011 18:15	8.69	Level	1.31	2.073	0.763	9.155	2.04	914.7
12/28/2011 18:30	8.69	Level	1.31	2.073	0.763	9.155	2.04	914.7
12/28/2011 18:45	8.69	Level	1.31	2.073	0.763	9.155	2.04	914.7
12/28/2011 19:00	8.69	Level	1.31	2.073	0.763	9.155	2.04	914.7
12/28/2011 19:15	8.69	Level	1.31	2.073	0.763	9.155	2.04	914.7
12/28/2011 19:30	8.69	Level	1.31	2.073	0.763	9.155	2.04	914.7
12/28/2011 19:45	8.69	Level	1.31	2.073	0.763	9.155	2.04	914.7
12/28/2011 20:00	8.69	Level	1.31	2.073	0.763	9.155	2.04	914.7
12/28/2011 20:15	8.69	Level	1.31	2.073	0.763	9.155	2.04	914.7
12/28/2011 20:30	8.69	Level	1.31	2.073	0.763	9.155	2.04	914.7
12/28/2011 20:45	8.69	Level	1.31	2.073	0.763	9.155	2.04	914.7
12/28/2011 21:00	8.69	Level	1.31	2.073	0.763	9.155	2.04	914.7

12/28/2011 21:15	8.69	Level	1.31	2.073	0.763	9.155	2.04	914.7
12/28/2011 21:30	8.69	Level	1.31	2.073	0.763	9.155	2.04	914.7
12/28/2011 21:45	8.69	Level	1.31	2.073	0.763	9.155	2.04	914.7
12/28/2011 22:00	8.69	Level	1.31	2.073	0.763	9.155	2.04	914.7
12/28/2011 22:15	8.69	Level	1.31	2.073	0.763	9.155	2.04	914.7
12/28/2011 22:30	8.64	Level	1.36	2.073	0.713	8.555	1.84	825.7
12/28/2011 22:45	8.69	Level	1.31	2.073	0.763	9.155	2.04	914.7
12/28/2011 23:00	8.69	Level	1.31	2.073	0.763	9.155	2.04	914.7
12/28/2011 23:15	8.69	Level	1.31	2.073	0.763	9.155	2.04	914.7
12/28/2011 23:30	8.64	Level	1.36	2.073	0.713	8.555	1.84	825.7
12/28/2011 23:45	8.69	Level	1.31	2.073	0.763	9.155	2.04	914.7
12/29/2011 0:00	8.69	Level	1.31	2.073	0.763	9.155	2.04	914.7
12/29/2011 0:15	8.69	Level	1.31	2.073	0.763	9.155	2.04	914.7
12/29/2011 0:30	8.69	Level	1.31	2.073	0.763	9.155	2.04	914.7
12/29/2011 0:45	8.64	Level	1.36	2.073	0.713	8.555	1.84	825.7
12/29/2011 1:00	8.69	Level	1.31	2.073	0.763	9.155	2.04	914.7
12/29/2011 1:15	8.69	Level	1.31	2.073	0.763	9.155	2.04	914.7
12/29/2011 1:30	8.69	Level	1.31	2.073	0.763	9.155	2.04	914.7
12/29/2011 1:45	8.69	Level	1.31	2.073	0.763	9.155	2.04	914.7
12/29/2011 2:00	8.69	Level	1.31	2.073	0.763	9.155	2.04	914.7
12/29/2011 2:15	8.69	Level	1.31	2.073	0.763	9.155	2.04	914.7
12/29/2011 2:30	8.69	Level	1.31	2.073	0.763	9.155	2.04	914.7
12/29/2011 2:45	8.69	Level	1.31	2.073	0.763	9.155	2.04	914.7
12/29/2011 3:00	8.65	Level	1.35	2.073	0.723	8.675	1.88	843.3
12/29/2011 3:15	8.64	Level	1.36	2.073	0.713	8.555	1.84	825.7
12/29/2011 3:30	8.64	Level	1.36	2.073	0.713	8.555	1.84	825.7
12/29/2011 3:45	8.64	Level	1.36	2.073	0.713	8.555	1.84	825.7
12/29/2011 4:00	8.64	Level	1.36	2.073	0.713	8.555	1.84	825.7
12/29/2011 4:15	8.69	Level	1.31	2.073	0.763	9.155	2.04	914.7
12/29/2011 4:30	8.64	Level	1.36	2.073	0.713	8.555	1.84	825.7
12/29/2011 4:45	8.64	Level	1.36	2.073	0.713	8.555	1.84	825.7
12/29/2011 5:00	8.69	Level	1.31	2.073	0.763	9.155	2.04	914.7
12/29/2011 5:15	8.69	Level	1.31	2.073	0.763	9.155	2.04	914.7
12/29/2011 5:30	8.69	Level	1.31	2.073	0.763	9.155	2.04	914.7
12/29/2011 5:45	8.69	Level	1.31	2.073	0.763	9.155	2.04	914.7
12/29/2011 6:00	8.69	Level	1.31	2.073	0.763	9.155	2.04	914.7
12/29/2011 6:15	8.69	Level	1.31	2.073	0.763	9.155	2.04	914.7
12/29/2011 6:30	8.69	Level	1.31	2.073	0.763	9.155	2.04	914.7
12/29/2011 6:45	8.69	Level	1.31	2.073	0.763	9.155	2.04	914.7
12/29/2011 7:00	8.69	Level	1.31	2.073	0.763	9.155	2.04	914.7
12/29/2011 7:15	8.69	Level	1.31	2.073	0.763	9.155	2.04	914.7
12/29/2011 7:30	8.69	Level	1.31	2.073	0.763	9.155	2.04	914.7
12/29/2011 7:45	8.69	Level	1.31	2.073	0.763	9.155	2.04	914.7
12/29/2011 8:00	8.69	Level	1.31	2.073	0.763	9.155	2.04	914.7
12/29/2011 8:15	8.69	Level	1.31	2.073	0.763	9.155	2.04	914.7
12/29/2011 8:30	8.69	Level	1.31	2.073	0.763	9.155	2.04	914.7
12/29/2011 8:45	8.64	Level	1.36	2.073	0.713	8.555	1.84	825.7

12/29/2011 9:00	8.69	Level	1.31	2.073	0.763	9.155	2.04	914.7
12/29/2011 9:15	8.69	Level	1.31	2.073	0.763	9.155	2.04	914.7
12/29/2011 9:30	8.69	Level	1.31	2.073	0.763	9.155	2.04	914.7
12/29/2011 9:45	8.69	Level	1.31	2.073	0.763	9.155	2.04	914.7
12/29/2011 10:00	8.69	Level	1.31	2.073	0.763	9.155	2.04	914.7
12/29/2011 10:15	8.69	Level	1.31	2.073	0.763	9.155	2.04	914.7
12/29/2011 10:30	8.69	Level	1.31	2.073	0.763	9.155	2.04	914.7
12/29/2011 10:45	8.69	Level	1.31	2.073	0.763	9.155	2.04	914.7
12/29/2011 11:00	8.69	Level	1.31	2.073	0.763	9.155	2.04	914.7
12/29/2011 11:15	8.69	Level	1.31	2.073	0.763	9.155	2.04	914.7
12/29/2011 11:30	8.69	Level	1.31	2.073	0.763	9.155	2.04	914.7
12/29/2011 11:45	8.73	Level	1.27	2.073	0.803	9.635	2.20	988.2
12/29/2011 12:00	8.73	Level	1.27	2.073	0.803	9.635	2.20	988.2
12/29/2011 12:15	8.69	Level	1.31	2.073	0.763	9.155	2.04	914.7
12/29/2011 12:30	8.73	Level	1.27	2.073	0.803	9.635	2.20	988.2
12/29/2011 12:45	8.69	Level	1.31	2.073	0.763	9.155	2.04	914.7
12/29/2011 13:00	8.73	Level	1.27	2.073	0.803	9.635	2.20	988.2
12/29/2011 13:15	8.69	Level	1.31	2.073	0.763	9.155	2.04	914.7
12/29/2011 13:30	8.73	Level	1.27	2.073	0.803	9.635	2.20	988.2
12/29/2011 13:45	8.73	Level	1.27	2.073	0.803	9.635	2.20	988.2
12/29/2011 14:00	8.74	Level	1.26	2.073	0.813	9.755	2.24	1006.8
12/29/2011 14:15	8.69	Level	1.31	2.073	0.763	9.155	2.04	914.7
12/29/2011 14:30	8.74	Level	1.26	2.073	0.813	9.755	2.24	1006.8
12/29/2011 14:45	8.73	Level	1.27	2.073	0.803	9.635	2.20	988.2
12/29/2011 15:00	8.69	Level	1.31	2.073	0.763	9.155	2.04	914.7
12/29/2011 15:15	8.69	Level	1.31	2.073	0.763	9.155	2.04	914.7
12/29/2011 15:30	8.69	Level	1.31	2.073	0.763	9.155	2.04	914.7
12/29/2011 15:45	8.69	Level	1.31	2.073	0.763	9.155	2.04	914.7
12/29/2011 16:00	8.69	Level	1.31	2.073	0.763	9.155	2.04	914.7
12/29/2011 16:15	8.69	Level	1.31	2.073	0.763	9.155	2.04	914.7
12/29/2011 16:30	8.74	Level	1.26	2.073	0.813	9.755	2.24	1006.8
12/29/2011 16:45	8.64	Level	1.36	2.073	0.713	8.555	1.84	825.7
12/29/2011 17:00	8.69	Level	1.31	2.073	0.763	9.155	2.04	914.7
12/29/2011 17:15	8.69	Level	1.31	2.073	0.763	9.155	2.04	914.7
12/29/2011 17:30	8.69	Level	1.31	2.073	0.763	9.155	2.04	914.7
12/29/2011 17:45	8.69	Level	1.31	2.073	0.763	9.155	2.04	914.7
12/29/2011 18:00	8.69	Level	1.31	2.073	0.763	9.155	2.04	914.7
12/29/2011 18:15	8.69	Level	1.31	2.073	0.763	9.155	2.04	914.7
12/29/2011 18:30	8.69	Level	1.31	2.073	0.763	9.155	2.04	914.7
12/29/2011 18:45	8.69	Level	1.31	2.073	0.763	9.155	2.04	914.7
12/29/2011 19:00	8.69	Level	1.31	2.073	0.763	9.155	2.04	914.7
12/29/2011 19:15	8.69	Level	1.31	2.073	0.763	9.155	2.04	914.7
12/29/2011 19:30	8.69	Level	1.31	2.073	0.763	9.155	2.04	914.7
12/29/2011 19:45	8.69	Level	1.31	2.073	0.763	9.155	2.04	914.7
12/29/2011 20:00	8.69	Level	1.31	2.073	0.763	9.155	2.04	914.7
12/29/2011 20:15	8.69	Level	1.31	2.073	0.763	9.155	2.04	914.7
12/29/2011 20:30	8.69	Level	1.31	2.073	0.763	9.155	2.04	914.7

12/29/2011 20:45	8.69	Level	1.31	2.073	0.763	9.155	2.04	914.7
12/29/2011 21:00	8.69	Level	1.31	2.073	0.763	9.155	2.04	914.7
12/29/2011 21:15	8.69	Level	1.31	2.073	0.763	9.155	2.04	914.7
12/29/2011 21:30	8.64	Level	1.36	2.073	0.713	8.555	1.84	825.7
12/29/2011 21:45	8.69	Level	1.31	2.073	0.763	9.155	2.04	914.7
12/29/2011 22:00	8.64	Level	1.36	2.073	0.713	8.555	1.84	825.7
12/29/2011 22:15	8.69	Level	1.31	2.073	0.763	9.155	2.04	914.7
12/29/2011 22:30	8.69	Level	1.31	2.073	0.763	9.155	2.04	914.7
12/29/2011 22:45	8.69	Level	1.31	2.073	0.763	9.155	2.04	914.7
12/29/2011 23:00	8.69	Level	1.31	2.073	0.763	9.155	2.04	914.7
12/29/2011 23:15	8.69	Level	1.31	2.073	0.763	9.155	2.04	914.7
12/29/2011 23:30	8.64	Level	1.36	2.073	0.713	8.555	1.84	825.7
12/29/2011 23:45	8.64	Level	1.36	2.073	0.713	8.555	1.84	825.7
12/30/2011 0:00	8.69	Level	1.31	2.073	0.763	9.155	2.04	914.7
12/30/2011 0:15	8.69	Level	1.31	2.073	0.763	9.155	2.04	914.7
12/30/2011 0:30	8.69	Level	1.31	2.073	0.763	9.155	2.04	914.7
12/30/2011 0:45	8.69	Level	1.31	2.073	0.763	9.155	2.04	914.7
12/30/2011 1:00	8.69	Level	1.31	2.073	0.763	9.155	2.04	914.7
12/30/2011 1:15	8.69	Level	1.31	2.073	0.763	9.155	2.04	914.7
12/30/2011 1:30	8.69	Level	1.31	2.073	0.763	9.155	2.04	914.7
12/30/2011 1:45	8.69	Level	1.31	2.073	0.763	9.155	2.04	914.7
12/30/2011 2:00	8.69	Level	1.31	2.073	0.763	9.155	2.04	914.7
12/30/2011 2:15	8.69	Level	1.31	2.073	0.763	9.155	2.04	914.7
12/30/2011 2:30	8.69	Level	1.31	2.073	0.763	9.155	2.04	914.7
12/30/2011 2:45	8.69	Level	1.31	2.073	0.763	9.155	2.04	914.7
12/30/2011 3:00	8.69	Level	1.31	2.073	0.763	9.155	2.04	914.7
12/30/2011 3:15	8.69	Level	1.31	2.073	0.763	9.155	2.04	914.7
12/30/2011 3:30	8.69	Level	1.31	2.073	0.763	9.155	2.04	914.7
12/30/2011 3:45	8.69	Level	1.31	2.073	0.763	9.155	2.04	914.7
12/30/2011 4:00	8.69	Level	1.31	2.073	0.763	9.155	2.04	914.7
12/30/2011 4:15	8.69	Level	1.31	2.073	0.763	9.155	2.04	914.7
12/30/2011 4:30	8.69	Level	1.31	2.073	0.763	9.155	2.04	914.7
12/30/2011 4:45	8.69	Level	1.31	2.073	0.763	9.155	2.04	914.7
12/30/2011 5:00	8.69	Level	1.31	2.073	0.763	9.155	2.04	914.7
12/30/2011 5:15	8.69	Level	1.31	2.073	0.763	9.155	2.04	914.7
12/30/2011 5:30	8.69	Level	1.31	2.073	0.763	9.155	2.04	914.7
12/30/2011 5:45	8.69	Level	1.31	2.073	0.763	9.155	2.04	914.7
12/30/2011 6:00	8.69	Level	1.31	2.073	0.763	9.155	2.04	914.7
12/30/2011 6:15	8.69	Level	1.31	2.073	0.763	9.155	2.04	914.7
12/30/2011 6:30	8.69	Level	1.31	2.073	0.763	9.155	2.04	914.7
12/30/2011 6:45	8.69	Level	1.31	2.073	0.763	9.155	2.04	914.7
12/30/2011 7:00	8.69	Level	1.31	2.073	0.763	9.155	2.04	914.7
12/30/2011 7:15	8.69	Level	1.31	2.073	0.763	9.155	2.04	914.7
12/30/2011 7:30	8.69	Level	1.31	2.073	0.763	9.155	2.04	914.7
12/30/2011 7:45	8.69	Level	1.31	2.073	0.763	9.155	2.04	914.7
12/30/2011 8:00	8.69	Level	1.31	2.073	0.763	9.155	2.04	914.7
12/30/2011 8:15	8.69	Level	1.31	2.073	0.763	9.155	2.04	914.7

12/30/2011 8:30	8.64	Level	1.36	2.073	0.713	8.555	1.84	825.7
12/30/2011 8:45	8.69	Level	1.31	2.073	0.763	9.155	2.04	914.7
12/30/2011 9:00	8.64	Level	1.36	2.073	0.713	8.555	1.84	825.7
12/30/2011 9:15	8.69	Level	1.31	2.073	0.763	9.155	2.04	914.7
12/30/2011 9:30	8.69	Level	1.31	2.073	0.763	9.155	2.04	914.7
12/30/2011 9:45	8.69	Level	1.31	2.073	0.763	9.155	2.04	914.7
12/30/2011 10:00	8.69	Level	1.31	2.073	0.763	9.155	2.04	914.7
12/30/2011 10:15	8.69	Level	1.31	2.073	0.763	9.155	2.04	914.7
12/30/2011 10:30	8.69	Level	1.31	2.073	0.763	9.155	2.04	914.7
12/30/2011 10:45	8.69	Level	1.31	2.073	0.763	9.155	2.04	914.7
12/30/2011 11:00	8.69	Level	1.31	2.073	0.763	9.155	2.04	914.7
12/30/2011 11:15	8.69	Level	1.31	2.073	0.763	9.155	2.04	914.7
12/30/2011 11:30	8.69	Level	1.31	2.073	0.763	9.155	2.04	914.7
12/30/2011 11:45	8.69	Level	1.31	2.073	0.763	9.155	2.04	914.7
12/30/2011 12:00	8.69	Level	1.31	2.073	0.763	9.155	2.04	914.7
12/30/2011 12:15	8.69	Level	1.31	2.073	0.763	9.155	2.04	914.7
12/30/2011 12:30	8.69	Level	1.31	2.073	0.763	9.155	2.04	914.7
12/30/2011 12:45	8.69	Level	1.31	2.073	0.763	9.155	2.04	914.7
12/30/2011 13:00	8.74	Level	1.26	2.073	0.813	9.755	2.24	1006.8
12/30/2011 13:15	8.69	Level	1.31	2.073	0.763	9.155	2.04	914.7
12/30/2011 13:30	8.74	Level	1.26	2.073	0.813	9.755	2.24	1006.8
12/30/2011 13:45	8.74	Level	1.26	2.073	0.813	9.755	2.24	1006.8
12/30/2011 14:00	8.69	Level	1.31	2.073	0.763	9.155	2.04	914.7
12/30/2011 14:15	8.69	Level	1.31	2.073	0.763	9.155	2.04	914.7
12/30/2011 14:30	8.69	Level	1.31	2.073	0.763	9.155	2.04	914.7
12/30/2011 14:45	8.69	Level	1.31	2.073	0.763	9.155	2.04	914.7
12/30/2011 15:00	8.69	Level	1.31	2.073	0.763	9.155	2.04	914.7
12/30/2011 15:15	8.69	Level	1.31	2.073	0.763	9.155	2.04	914.7
12/30/2011 15:30	8.74	Level	1.26	2.073	0.813	9.755	2.24	1006.8
12/30/2011 15:45	8.69	Level	1.31	2.073	0.763	9.155	2.04	914.7
12/30/2011 16:00	8.69	Level	1.31	2.073	0.763	9.155	2.04	914.7
12/30/2011 16:15	8.69	Level	1.31	2.073	0.763	9.155	2.04	914.7
12/30/2011 16:30	8.69	Level	1.31	2.073	0.763	9.155	2.04	914.7
12/30/2011 16:45	8.69	Level	1.31	2.073	0.763	9.155	2.04	914.7
12/30/2011 17:00	8.69	Level	1.31	2.073	0.763	9.155	2.04	914.7
12/30/2011 17:15	8.69	Level	1.31	2.073	0.763	9.155	2.04	914.7
12/30/2011 17:30	8.69	Level	1.31	2.073	0.763	9.155	2.04	914.7
12/30/2011 17:45	8.69	Level	1.31	2.073	0.763	9.155	2.04	914.7
12/30/2011 18:00	8.69	Level	1.31	2.073	0.763	9.155	2.04	914.7
12/30/2011 18:15	8.69	Level	1.31	2.073	0.763	9.155	2.04	914.7
12/30/2011 18:30	8.69	Level	1.31	2.073	0.763	9.155	2.04	914.7
12/30/2011 18:45	8.64	Level	1.36	2.073	0.713	8.555	1.84	825.7
12/30/2011 19:00	8.69	Level	1.31	2.073	0.763	9.155	2.04	914.7
12/30/2011 19:15	8.69	Level	1.31	2.073	0.763	9.155	2.04	914.7
12/30/2011 19:30	8.69	Level	1.31	2.073	0.763	9.155	2.04	914.7
12/30/2011 19:45	8.69	Level	1.31	2.073	0.763	9.155	2.04	914.7
12/30/2011 20:00	8.69	Level	1.31	2.073	0.763	9.155	2.04	914.7

12/30/2011 20:15	8.64	Level	1.36	2.073	0.713	8.555	1.84	825.7
12/30/2011 20:30	8.69	Level	1.31	2.073	0.763	9.155	2.04	914.7
12/30/2011 20:45	8.69	Level	1.31	2.073	0.763	9.155	2.04	914.7
12/30/2011 21:00	8.69	Level	1.31	2.073	0.763	9.155	2.04	914.7
12/30/2011 21:15	8.69	Level	1.31	2.073	0.763	9.155	2.04	914.7
12/30/2011 21:30	8.69	Level	1.31	2.073	0.763	9.155	2.04	914.7
12/30/2011 21:45	8.69	Level	1.31	2.073	0.763	9.155	2.04	914.7
12/30/2011 22:00	8.69	Level	1.31	2.073	0.763	9.155	2.04	914.7
12/30/2011 22:15	8.69	Level	1.31	2.073	0.763	9.155	2.04	914.7
12/30/2011 22:30	8.69	Level	1.31	2.073	0.763	9.155	2.04	914.7
12/30/2011 22:45	8.64	Level	1.36	2.073	0.713	8.555	1.84	825.7
12/30/2011 23:00	8.69	Level	1.31	2.073	0.763	9.155	2.04	914.7
12/30/2011 23:15	8.69	Level	1.31	2.073	0.763	9.155	2.04	914.7
12/30/2011 23:30	8.69	Level	1.31	2.073	0.763	9.155	2.04	914.7
12/30/2011 23:45	8.69	Level	1.31	2.073	0.763	9.155	2.04	914.7
12/31/2011 0:00	8.69	Level	1.31	2.073	0.763	9.155	2.04	914.7
12/31/2011 0:15	8.69	Level	1.31	2.073	0.763	9.155	2.04	914.7
12/31/2011 0:30	8.69	Level	1.31	2.073	0.763	9.155	2.04	914.7
12/31/2011 0:45	8.69	Level	1.31	2.073	0.763	9.155	2.04	914.7
12/31/2011 1:00	8.64	Level	1.36	2.073	0.713	8.555	1.84	825.7
12/31/2011 1:15	8.69	Level	1.31	2.073	0.763	9.155	2.04	914.7
12/31/2011 1:30	8.69	Level	1.31	2.073	0.763	9.155	2.04	914.7
12/31/2011 1:45	8.64	Level	1.36	2.073	0.713	8.555	1.84	825.7
12/31/2011 2:00	8.69	Level	1.31	2.073	0.763	9.155	2.04	914.7
12/31/2011 2:15	8.69	Level	1.31	2.073	0.763	9.155	2.04	914.7
12/31/2011 2:30	8.64	Level	1.36	2.073	0.713	8.555	1.84	825.7
12/31/2011 2:45	8.69	Level	1.31	2.073	0.763	9.155	2.04	914.7
12/31/2011 3:00	8.69	Level	1.31	2.073	0.763	9.155	2.04	914.7
12/31/2011 3:15	8.69	Level	1.31	2.073	0.763	9.155	2.04	914.7
12/31/2011 3:30	8.69	Level	1.31	2.073	0.763	9.155	2.04	914.7
12/31/2011 3:45	8.69	Level	1.31	2.073	0.763	9.155	2.04	914.7
12/31/2011 4:00	8.69	Level	1.31	2.073	0.763	9.155	2.04	914.7
12/31/2011 4:15	8.69	Level	1.31	2.073	0.763	9.155	2.04	914.7
12/31/2011 4:30	8.69	Level	1.31	2.073	0.763	9.155	2.04	914.7
12/31/2011 4:45	8.69	Level	1.31	2.073	0.763	9.155	2.04	914.7
12/31/2011 5:00	8.64	Level	1.36	2.073	0.713	8.555	1.84	825.7
12/31/2011 5:15	8.64	Level	1.36	2.073	0.713	8.555	1.84	825.7
12/31/2011 5:30	8.69	Level	1.31	2.073	0.763	9.155	2.04	914.7
12/31/2011 5:45	8.69	Level	1.31	2.073	0.763	9.155	2.04	914.7
12/31/2011 6:00	8.64	Level	1.36	2.073	0.713	8.555	1.84	825.7
12/31/2011 6:15	8.64	Level	1.36	2.073	0.713	8.555	1.84	825.7
12/31/2011 6:30	8.64	Level	1.36	2.073	0.713	8.555	1.84	825.7
12/31/2011 6:45	8.64	Level	1.36	2.073	0.713	8.555	1.84	825.7
12/31/2011 7:00	8.69	Level	1.31	2.073	0.763	9.155	2.04	914.7
12/31/2011 7:15	8.64	Level	1.36	2.073	0.713	8.555	1.84	825.7
12/31/2011 7:30	8.69	Level	1.31	2.073	0.763	9.155	2.04	914.7
12/31/2011 7:45	8.69	Level	1.31	2.073	0.763	9.155	2.04	914.7

12/31/2011 8:00	8.64	Level	1.36	2.073	0.713	8.555	1.84	825.7
12/31/2011 8:15	8.64	Level	1.36	2.073	0.713	8.555	1.84	825.7
12/31/2011 8:30	8.64	Level	1.36	2.073	0.713	8.555	1.84	825.7
12/31/2011 8:45	8.64	Level	1.36	2.073	0.713	8.555	1.84	825.7
12/31/2011 9:00	8.64	Level	1.36	2.073	0.713	8.555	1.84	825.7
12/31/2011 9:15	8.69	Level	1.31	2.073	0.763	9.155	2.04	914.7
12/31/2011 9:30	8.69	Level	1.31	2.073	0.763	9.155	2.04	914.7
12/31/2011 9:45	8.69	Level	1.31	2.073	0.763	9.155	2.04	914.7
12/31/2011 10:00	8.69	Level	1.31	2.073	0.763	9.155	2.04	914.7
12/31/2011 10:15	8.69	Level	1.31	2.073	0.763	9.155	2.04	914.7
12/31/2011 10:30	8.69	Level	1.31	2.073	0.763	9.155	2.04	914.7
12/31/2011 10:45	8.69	Level	1.31	2.073	0.763	9.155	2.04	914.7
12/31/2011 11:00	8.69	Level	1.31	2.073	0.763	9.155	2.04	914.7
12/31/2011 11:15	8.69	Level	1.31	2.073	0.763	9.155	2.04	914.7
12/31/2011 11:30	8.69	Level	1.31	2.073	0.763	9.155	2.04	914.7
12/31/2011 11:45	8.69	Level	1.31	2.073	0.763	9.155	2.04	914.7
12/31/2011 12:00	8.69	Level	1.31	2.073	0.763	9.155	2.04	914.7
12/31/2011 12:15	8.69	Level	1.31	2.073	0.763	9.155	2.04	914.7
12/31/2011 12:30	8.69	Level	1.31	2.073	0.763	9.155	2.04	914.7
12/31/2011 12:45	8.69	Level	1.31	2.073	0.763	9.155	2.04	914.7
12/31/2011 13:00	8.69	Level	1.31	2.073	0.763	9.155	2.04	914.7
12/31/2011 13:15	8.69	Level	1.31	2.073	0.763	9.155	2.04	914.7
12/31/2011 13:30	8.69	Level	1.31	2.073	0.763	9.155	2.04	914.7
12/31/2011 13:45	8.69	Level	1.31	2.073	0.763	9.155	2.04	914.7
12/31/2011 14:00	8.69	Level	1.31	2.073	0.763	9.155	2.04	914.7
12/31/2011 14:15	8.69	Level	1.31	2.073	0.763	9.155	2.04	914.7
12/31/2011 14:30	8.69	Level	1.31	2.073	0.763	9.155	2.04	914.7
12/31/2011 14:45	8.69	Level	1.31	2.073	0.763	9.155	2.04	914.7
12/31/2011 15:00	8.69	Level	1.31	2.073	0.763	9.155	2.04	914.7
12/31/2011 15:15	8.69	Level	1.31	2.073	0.763	9.155	2.04	914.7
12/31/2011 15:30	8.69	Level	1.31	2.073	0.763	9.155	2.04	914.7
12/31/2011 15:45	8.69	Level	1.31	2.073	0.763	9.155	2.04	914.7
12/31/2011 16:00	8.69	Level	1.31	2.073	0.763	9.155	2.04	914.7
12/31/2011 16:15	8.64	Level	1.36	2.073	0.713	8.555	1.84	825.7
12/31/2011 16:30	8.69	Level	1.31	2.073	0.763	9.155	2.04	914.7
12/31/2011 16:45	8.69	Level	1.31	2.073	0.763	9.155	2.04	914.7
12/31/2011 17:00	8.69	Level	1.31	2.073	0.763	9.155	2.04	914.7
12/31/2011 17:15	8.69	Level	1.31	2.073	0.763	9.155	2.04	914.7
12/31/2011 17:30	8.69	Level	1.31	2.073	0.763	9.155	2.04	914.7
12/31/2011 17:45	8.69	Level	1.31	2.073	0.763	9.155	2.04	914.7
12/31/2011 18:00	8.69	Level	1.31	2.073	0.763	9.155	2.04	914.7
12/31/2011 18:15	8.69	Level	1.31	2.073	0.763	9.155	2.04	914.7
12/31/2011 18:30	8.69	Level	1.31	2.073	0.763	9.155	2.04	914.7
12/31/2011 18:45	8.69	Level	1.31	2.073	0.763	9.155	2.04	914.7
12/31/2011 19:00	8.69	Level	1.31	2.073	0.763	9.155	2.04	914.7
12/31/2011 19:15	8.69	Level	1.31	2.073	0.763	9.155	2.04	914.7
12/31/2011 19:30	8.65	Level	1.35	2.073	0.723	8.675	1.88	843.3

12/31/2011 19:45	8.64	Level	1.36	2.073	0.713	8.555	1.84	825.7
12/31/2011 20:00	8.64	Level	1.36	2.073	0.713	8.555	1.84	825.7
12/31/2011 20:15	8.64	Level	1.36	2.073	0.713	8.555	1.84	825.7
12/31/2011 20:30	8.64	Level	1.36	2.073	0.713	8.555	1.84	825.7
12/31/2011 20:45	8.64	Level	1.36	2.073	0.713	8.555	1.84	825.7
12/31/2011 21:00	8.69	Level	1.31	2.073	0.763	9.155	2.04	914.7
12/31/2011 21:15	8.69	Level	1.31	2.073	0.763	9.155	2.04	914.7
12/31/2011 21:30	8.69	Level	1.31	2.073	0.763	9.155	2.04	914.7
12/31/2011 21:45	8.64	Level	1.36	2.073	0.713	8.555	1.84	825.7
12/31/2011 22:00	8.64	Level	1.36	2.073	0.713	8.555	1.84	825.7
12/31/2011 22:15	8.64	Level	1.36	2.073	0.713	8.555	1.84	825.7
12/31/2011 22:30	8.69	Level	1.31	2.073	0.763	9.155	2.04	914.7
12/31/2011 22:45	8.64	Level	1.36	2.073	0.713	8.555	1.84	825.7
12/31/2011 23:00	8.64	Level	1.36	2.073	0.713	8.555	1.84	825.7
12/31/2011 23:15	8.64	Level	1.36	2.073	0.713	8.555	1.84	825.7
12/31/2011 23:30	8.64	Level	1.36	2.073	0.713	8.555	1.84	825.7
12/31/2011 23:45	8.64	Level	1.36	2.073	0.713	8.555	1.84	825.7

Appendix H

South Flume Orpheus Mini Data with Flowrates

Date	Time	Depth from top of flume to water (ft)	Depth of Flume Total (ft)	Depth of Flow (ft)	Flowrate (cfs)	Flowrate (gpm)
12/1/2011	12:00:00 AM	1.93	2.5	0.57	1.31	588.9
12/1/2011	1:00:00 AM	1.93	2.5	0.57	1.31	588.9
12/1/2011	2:00:00 AM	1.93	2.5	0.57	1.31	588.9
12/1/2011	3:00:00 AM	1.93	2.5	0.57	1.31	588.9
12/1/2011	4:00:00 AM	1.93	2.5	0.57	1.31	588.9
12/1/2011	5:00:00 AM	1.93	2.5	0.57	1.31	588.9
12/1/2011	6:00:00 AM	1.93	2.5	0.57	1.31	588.9
12/1/2011	7:00:00 AM	1.93	2.5	0.57	1.31	588.9
12/1/2011	8:00:00 AM	1.93	2.5	0.57	1.31	588.9
12/1/2011	9:00:00 AM	1.93	2.5	0.57	1.31	588.9
12/1/2011	10:00:00 AM	1.94	2.5	0.56	1.28	573.4
12/1/2011	11:00:00 AM	1.93	2.5	0.57	1.31	588.9
12/1/2011	12:00:00 PM	1.93	2.5	0.57	1.31	588.9
12/1/2011	1:00:00 PM	1.94	2.5	0.56	1.28	573.4
12/1/2011	2:00:00 PM	1.92	2.5	0.58	1.35	604.6
12/1/2011	3:00:00 PM	1.93	2.5	0.57	1.31	588.9
12/1/2011	4:00:00 PM	1.94	2.5	0.56	1.28	573.4
12/1/2011	5:00:00 PM	1.91	2.5	0.59	1.38	620.4
12/1/2011	6:00:00 PM	1.91	2.5	0.59	1.38	620.4
12/1/2011	7:00:00 PM	1.91	2.5	0.59	1.38	620.4
12/1/2011	8:00:00 PM	1.9	2.5	0.60	1.42	636.4
12/1/2011	9:00:00 PM	1.9	2.5	0.60	1.42	636.4
12/1/2011	10:00:00 PM	1.9	2.5	0.60	1.42	636.4
12/1/2011	11:00:00 PM	1.91	2.5	0.59	1.38	620.4
12/2/2011	12:00:00 AM	1.91	2.5	0.59	1.38	620.4
12/2/2011	1:00:00 AM	1.91	2.5	0.59	1.38	620.4
12/2/2011	2:00:00 AM	1.92	2.5	0.58	1.35	604.6
12/2/2011	3:00:00 AM	1.92	2.5	0.58	1.35	604.6
12/2/2011	4:00:00 AM	1.92	2.5	0.58	1.35	604.6
12/2/2011	5:00:00 AM	1.91	2.5	0.59	1.38	620.4
12/2/2011	6:00:00 AM	1.92	2.5	0.58	1.35	604.6
12/2/2011	7:00:00 AM	1.93	2.5	0.57	1.31	588.9
12/2/2011	8:00:00 AM	1.92	2.5	0.58	1.35	604.6
12/2/2011	9:00:00 AM	1.92	2.5	0.58	1.35	604.6
12/2/2011	10:00:00 AM	1.92	2.5	0.58	1.35	604.6
12/2/2011	11:00:00 AM	1.92	2.5	0.58	1.35	604.6
12/2/2011	12:00:00 PM	1.92	2.5	0.58	1.35	604.6
12/2/2011	1:00:00 PM	1.93	2.5	0.57	1.31	588.9
12/2/2011	2:00:00 PM	1.93	2.5	0.57	1.31	588.9
12/2/2011	3:00:00 PM	1.92	2.5	0.58	1.35	604.6
12/2/2011	4:00:00 PM	1.92	2.5	0.58	1.35	604.6
12/2/2011	5:00:00 PM	1.93	2.5	0.57	1.31	588.9
12/2/2011	6:00:00 PM	1.93	2.5	0.57	1.31	588.9
12/2/2011	7:00:00 PM	1.93	2.5	0.57	1.31	588.9
12/2/2011	8:00:00 PM	1.92	2.5	0.58	1.35	604.6

12/2/2011	9:00:00 PM	1.92	2.5	0.58	1.35	604.6
12/2/2011	10:00:00 PM	1.92	2.5	0.58	1.35	604.6
12/2/2011	11:00:00 PM	1.93	2.5	0.57	1.31	588.9
12/3/2011	12:00:00 AM	1.93	2.5	0.57	1.31	588.9
12/3/2011	1:00:00 AM	1.93	2.5	0.57	1.31	588.9
12/3/2011	2:00:00 AM	1.92	2.5	0.58	1.35	604.6
12/3/2011	3:00:00 AM	1.92	2.5	0.58	1.35	604.6
12/3/2011	4:00:00 AM	1.92	2.5	0.58	1.35	604.6
12/3/2011	5:00:00 AM	1.92	2.5	0.58	1.35	604.6
12/3/2011	6:00:00 AM	1.92	2.5	0.58	1.35	604.6
12/3/2011	7:00:00 AM	1.92	2.5	0.58	1.35	604.6
12/3/2011	8:00:00 AM	1.92	2.5	0.58	1.35	604.6
12/3/2011	9:00:00 AM	1.92	2.5	0.58	1.35	604.6
12/3/2011	10:00:00 AM	1.92	2.5	0.58	1.35	604.6
12/3/2011	11:00:00 AM	1.93	2.5	0.57	1.31	588.9
12/3/2011	12:00:00 PM	1.92	2.5	0.58	1.35	604.6
12/3/2011	1:00:00 PM	1.93	2.5	0.57	1.31	588.9
12/3/2011	2:00:00 PM	1.92	2.5	0.58	1.35	604.6
12/3/2011	3:00:00 PM	1.91	2.5	0.59	1.38	620.4
12/3/2011	4:00:00 PM	1.91	2.5	0.59	1.38	620.4
12/3/2011	5:00:00 PM	1.91	2.5	0.59	1.38	620.4
12/3/2011	6:00:00 PM	1.91	2.5	0.59	1.38	620.4
12/3/2011	7:00:00 PM	1.91	2.5	0.59	1.38	620.4
12/3/2011	8:00:00 PM	1.91	2.5	0.59	1.38	620.4
12/3/2011	9:00:00 PM	1.91	2.5	0.59	1.38	620.4
12/3/2011	10:00:00 PM	1.91	2.5	0.59	1.38	620.4
12/3/2011	11:00:00 PM	1.91	2.5	0.59	1.38	620.4
12/4/2011	12:00:00 AM	1.91	2.5	0.59	1.38	620.4
12/4/2011	1:00:00 AM	1.91	2.5	0.59	1.38	620.4
12/4/2011	2:00:00 AM	1.91	2.5	0.59	1.38	620.4
12/4/2011	3:00:00 AM	1.92	2.5	0.58	1.35	604.6
12/4/2011	4:00:00 AM	1.92	2.5	0.58	1.35	604.6
12/4/2011	5:00:00 AM	1.92	2.5	0.58	1.35	604.6
12/4/2011	6:00:00 AM	1.92	2.5	0.58	1.35	604.6
12/4/2011	7:00:00 AM	1.92	2.5	0.58	1.35	604.6
12/4/2011	8:00:00 AM	1.92	2.5	0.58	1.35	604.6
12/4/2011	9:00:00 AM	1.92	2.5	0.58	1.35	604.6
12/4/2011	10:00:00 AM	1.92	2.5	0.58	1.35	604.6
12/4/2011	11:00:00 AM	1.93	2.5	0.57	1.31	588.9
12/4/2011	12:00:00 PM	1.92	2.5	0.58	1.35	604.6
12/4/2011	1:00:00 PM	1.92	2.5	0.58	1.35	604.6
12/4/2011	2:00:00 PM	1.92	2.5	0.58	1.35	604.6
12/4/2011	3:00:00 PM	1.93	2.5	0.57	1.31	588.9
12/4/2011	4:00:00 PM	1.92	2.5	0.58	1.35	604.6
12/4/2011	5:00:00 PM	1.92	2.5	0.58	1.35	604.6
12/4/2011	6:00:00 PM	1.93	2.5	0.57	1.31	588.9
12/4/2011	7:00:00 PM	1.93	2.5	0.57	1.31	588.9

12/4/2011	8:00:00 PM	1.93	2.5	0.57	1.31	588.9
12/4/2011	9:00:00 PM	1.92	2.5	0.58	1.35	604.6
12/4/2011	10:00:00 PM	1.92	2.5	0.58	1.35	604.6
12/4/2011	11:00:00 PM	1.93	2.5	0.57	1.31	588.9
12/5/2011	12:00:00 AM	1.92	2.5	0.58	1.35	604.6
12/5/2011	1:00:00 AM	1.92	2.5	0.58	1.35	604.6
12/5/2011	2:00:00 AM	1.92	2.5	0.58	1.35	604.6
12/5/2011	3:00:00 AM	1.92	2.5	0.58	1.35	604.6
12/5/2011	4:00:00 AM	1.92	2.5	0.58	1.35	604.6
12/5/2011	5:00:00 AM	1.92	2.5	0.58	1.35	604.6
12/5/2011	6:00:00 AM	1.92	2.5	0.58	1.35	604.6
12/5/2011	7:00:00 AM	1.92	2.5	0.58	1.35	604.6
12/5/2011	8:00:00 AM	1.92	2.5	0.58	1.35	604.6
12/5/2011	9:00:00 AM	1.92	2.5	0.58	1.35	604.6
12/5/2011	10:00:00 AM	1.93	2.5	0.57	1.31	588.9
12/5/2011	11:00:00 AM	1.92	2.5	0.58	1.35	604.6
12/5/2011	12:00:00 PM	1.93	2.5	0.57	1.31	588.9
12/5/2011	1:00:00 PM	1.92	2.5	0.58	1.35	604.6
12/5/2011	2:00:00 PM	1.92	2.5	0.58	1.35	604.6
12/5/2011	3:00:00 PM	1.92	2.5	0.58	1.35	604.6
12/5/2011	4:00:00 PM	1.92	2.5	0.58	1.35	604.6
12/5/2011	5:00:00 PM	1.92	2.5	0.58	1.35	604.6
12/5/2011	6:00:00 PM	1.92	2.5	0.58	1.35	604.6
12/5/2011	7:00:00 PM	1.92	2.5	0.58	1.35	604.6
12/5/2011	8:00:00 PM	1.92	2.5	0.58	1.35	604.6
12/5/2011	9:00:00 PM	1.92	2.5	0.58	1.35	604.6
12/5/2011	10:00:00 PM	1.92	2.5	0.58	1.35	604.6
12/5/2011	11:00:00 PM	1.92	2.5	0.58	1.35	604.6
12/6/2011	12:00:00 AM	1.92	2.5	0.58	1.35	604.6
12/6/2011	1:00:00 AM	1.93	2.5	0.57	1.31	588.9
12/6/2011	2:00:00 AM	1.93	2.5	0.57	1.31	588.9
12/6/2011	3:00:00 AM	1.93	2.5	0.57	1.31	588.9
12/6/2011	4:00:00 AM	1.92	2.5	0.58	1.35	604.6
12/6/2011	5:00:00 AM	1.93	2.5	0.57	1.31	588.9
12/6/2011	6:00:00 AM	1.93	2.5	0.57	1.31	588.9
12/6/2011	7:00:00 AM	1.92	2.5	0.58	1.35	604.6
12/6/2011	8:00:00 AM	1.94	2.5	0.56	1.28	573.4
12/6/2011	9:00:00 AM	1.94	2.5	0.56	1.28	573.4
12/6/2011	10:00:00 AM	1.93	2.5	0.57	1.31	588.9
12/6/2011	11:00:00 AM	1.94	2.5	0.56	1.28	573.4
12/6/2011	12:00:00 PM	1.94	2.5	0.56	1.28	573.4
12/6/2011	1:00:00 PM	1.94	2.5	0.56	1.28	573.4
12/6/2011	2:00:00 PM	1.94	2.5	0.56	1.28	573.4
12/6/2011	3:00:00 PM	1.95	2.5	0.55	1.24	558.0
12/6/2011	4:00:00 PM	1.93	2.5	0.57	1.31	588.9
12/6/2011	5:00:00 PM	1.93	2.5	0.57	1.31	588.9
12/6/2011	6:00:00 PM	1.94	2.5	0.56	1.28	573.4

12/6/2011	7:00:00 PM	1.94	2.5	0.56	1.28	573.4
12/6/2011	8:00:00 PM	1.94	2.5	0.56	1.28	573.4
12/6/2011	9:00:00 PM	1.93	2.5	0.57	1.31	588.9
12/6/2011	10:00:00 PM	1.94	2.5	0.56	1.28	573.4
12/6/2011	11:00:00 PM	1.93	2.5	0.57	1.31	588.9
12/7/2011	12:00:00 AM	1.93	2.5	0.57	1.31	588.9
12/7/2011	1:00:00 AM	1.93	2.5	0.57	1.31	588.9
12/7/2011	2:00:00 AM	1.94	2.5	0.56	1.28	573.4
12/7/2011	3:00:00 AM	1.93	2.5	0.57	1.31	588.9
12/7/2011	4:00:00 AM	1.93	2.5	0.57	1.31	588.9
12/7/2011	5:00:00 AM	1.94	2.5	0.56	1.28	573.4
12/7/2011	6:00:00 AM	1.93	2.5	0.57	1.31	588.9
12/7/2011	7:00:00 AM	1.93	2.5	0.57	1.31	588.9
12/7/2011	8:00:00 AM	1.94	2.5	0.56	1.28	573.4
12/7/2011	9:00:00 AM	1.93	2.5	0.57	1.31	588.9
12/7/2011	10:00:00 AM	1.94	2.5	0.56	1.28	573.4
12/7/2011	11:00:00 AM	1.94	2.5	0.56	1.28	573.4
12/7/2011	12:00:00 PM	1.94	2.5	0.56	1.28	573.4
12/7/2011	1:00:00 PM	1.94	2.5	0.56	1.28	573.4
12/7/2011	2:00:00 PM	1.93	2.5	0.57	1.31	588.9
12/7/2011	3:00:00 PM	1.94	2.5	0.56	1.28	573.4
12/7/2011	4:00:00 PM	1.93	2.5	0.57	1.31	588.9
12/7/2011	5:00:00 PM	1.93	2.5	0.57	1.31	588.9
12/7/2011	6:00:00 PM	1.93	2.5	0.57	1.31	588.9
12/7/2011	7:00:00 PM	1.93	2.5	0.57	1.31	588.9
12/7/2011	8:00:00 PM	1.93	2.5	0.57	1.31	588.9
12/7/2011	9:00:00 PM	1.93	2.5	0.57	1.31	588.9
12/7/2011	10:00:00 PM	1.93	2.5	0.57	1.31	588.9
12/7/2011	11:00:00 PM	1.93	2.5	0.57	1.31	588.9
12/8/2011	12:00:00 AM	1.93	2.5	0.57	1.31	588.9
12/8/2011	1:00:00 AM	1.93	2.5	0.57	1.31	588.9
12/8/2011	2:00:00 AM	1.93	2.5	0.57	1.31	588.9
12/8/2011	3:00:00 AM	1.93	2.5	0.57	1.31	588.9
12/8/2011	4:00:00 AM	1.93	2.5	0.57	1.31	588.9
12/8/2011	5:00:00 AM	1.93	2.5	0.57	1.31	588.9
12/8/2011	6:00:00 AM	1.94	2.5	0.56	1.28	573.4
12/8/2011	7:00:00 AM	1.94	2.5	0.56	1.28	573.4
12/8/2011	8:00:00 AM	1.93	2.5	0.57	1.31	588.9
12/8/2011	9:00:00 AM	1.94	2.5	0.56	1.28	573.4
12/8/2011	10:00:00 AM	1.93	2.5	0.57	1.31	588.9
12/8/2011	11:00:00 AM	1.93	2.5	0.57	1.31	588.9
12/8/2011	12:00:00 PM	1.94	2.5	0.56	1.28	573.4
12/8/2011	1:00:00 PM	1.94	2.5	0.56	1.28	573.4
12/8/2011	2:00:00 PM	1.93	2.5	0.57	1.31	588.9
12/8/2011	3:00:00 PM	1.93	2.5	0.57	1.31	588.9
12/8/2011	4:00:00 PM	1.94	2.5	0.56	1.28	573.4
12/8/2011	5:00:00 PM	1.94	2.5	0.56	1.28	573.4

12/8/2011	6:00:00 PM	1.93	2.5	0.57	1.31	588.9
12/8/2011	7:00:00 PM	1.94	2.5	0.56	1.28	573.4
12/8/2011	8:00:00 PM	1.94	2.5	0.56	1.28	573.4
12/8/2011	9:00:00 PM	1.93	2.5	0.57	1.31	588.9
12/8/2011	10:00:00 PM	1.93	2.5	0.57	1.31	588.9
12/8/2011	11:00:00 PM	1.93	2.5	0.57	1.31	588.9
12/9/2011	12:00:00 AM	1.94	2.5	0.56	1.28	573.4
12/9/2011	1:00:00 AM	1.93	2.5	0.57	1.31	588.9
12/9/2011	2:00:00 AM	1.94	2.5	0.56	1.28	573.4
12/9/2011	3:00:00 AM	1.94	2.5	0.56	1.28	573.4
12/9/2011	4:00:00 AM	1.94	2.5	0.56	1.28	573.4
12/9/2011	5:00:00 AM	1.94	2.5	0.56	1.28	573.4
12/9/2011	6:00:00 AM	1.94	2.5	0.56	1.28	573.4
12/9/2011	7:00:00 AM	1.94	2.5	0.56	1.28	573.4
12/9/2011	8:00:00 AM	1.94	2.5	0.56	1.28	573.4
12/9/2011	9:00:00 AM	1.94	2.5	0.56	1.28	573.4
12/9/2011	10:00:00 AM	1.94	2.5	0.56	1.28	573.4
12/9/2011	11:00:00 AM	1.94	2.5	0.56	1.28	573.4
12/9/2011	12:00:00 PM	1.95	2.5	0.55	1.24	558.0
12/9/2011	1:00:00 PM	1.94	2.5	0.56	1.28	573.4
12/9/2011	2:00:00 PM	1.94	2.5	0.56	1.28	573.4
12/9/2011	3:00:00 PM	1.94	2.5	0.56	1.28	573.4
12/9/2011	4:00:00 PM	1.94	2.5	0.56	1.28	573.4
12/9/2011	5:00:00 PM	1.93	2.5	0.57	1.31	588.9
12/9/2011	6:00:00 PM	1.93	2.5	0.57	1.31	588.9
12/9/2011	7:00:00 PM	1.94	2.5	0.56	1.28	573.4
12/9/2011	8:00:00 PM	1.93	2.5	0.57	1.31	588.9
12/9/2011	9:00:00 PM	1.93	2.5	0.57	1.31	588.9
12/9/2011	10:00:00 PM	1.93	2.5	0.57	1.31	588.9
12/9/2011	11:00:00 PM	1.93	2.5	0.57	1.31	588.9
12/10/2011	12:00:00 AM	1.94	2.5	0.56	1.28	573.4
12/10/2011	1:00:00 AM	1.94	2.5	0.56	1.28	573.4
12/10/2011	2:00:00 AM	1.94	2.5	0.56	1.28	573.4
12/10/2011	3:00:00 AM	1.93	2.5	0.57	1.31	588.9
12/10/2011	4:00:00 AM	1.94	2.5	0.56	1.28	573.4
12/10/2011	5:00:00 AM	1.94	2.5	0.56	1.28	573.4
12/10/2011	6:00:00 AM	1.94	2.5	0.56	1.28	573.4
12/10/2011	7:00:00 AM	1.94	2.5	0.56	1.28	573.4
12/10/2011	8:00:00 AM	1.94	2.5	0.56	1.28	573.4
12/10/2011	9:00:00 AM	1.94	2.5	0.56	1.28	573.4
12/10/2011	10:00:00 AM	1.94	2.5	0.56	1.28	573.4
12/10/2011	11:00:00 AM	1.94	2.5	0.56	1.28	573.4
12/10/2011	12:00:00 PM	1.94	2.5	0.56	1.28	573.4
12/10/2011	1:00:00 PM	1.94	2.5	0.56	1.28	573.4
12/10/2011	2:00:00 PM	1.94	2.5	0.56	1.28	573.4
12/10/2011	3:00:00 PM	1.94	2.5	0.56	1.28	573.4
12/10/2011	4:00:00 PM	1.94	2.5	0.56	1.28	573.4

12/10/2011	5:00:00 PM	1.93	2.5	0.57	1.31	588.9
12/10/2011	6:00:00 PM	1.93	2.5	0.57	1.31	588.9
12/10/2011	7:00:00 PM	1.93	2.5	0.57	1.31	588.9
12/10/2011	8:00:00 PM	1.93	2.5	0.57	1.31	588.9
12/10/2011	9:00:00 PM	1.94	2.5	0.56	1.28	573.4
12/10/2011	10:00:00 PM	1.94	2.5	0.56	1.28	573.4
12/10/2011	11:00:00 PM	1.93	2.5	0.57	1.31	588.9
12/11/2011	12:00:00 AM	1.93	2.5	0.57	1.31	588.9
12/11/2011	1:00:00 AM	1.94	2.5	0.56	1.28	573.4
12/11/2011	2:00:00 AM	1.94	2.5	0.56	1.28	573.4
12/11/2011	3:00:00 AM	1.94	2.5	0.56	1.28	573.4
12/11/2011	4:00:00 AM	1.94	2.5	0.56	1.28	573.4
12/11/2011	5:00:00 AM	1.94	2.5	0.56	1.28	573.4
12/11/2011	6:00:00 AM	1.94	2.5	0.56	1.28	573.4
12/11/2011	7:00:00 AM	1.94	2.5	0.56	1.28	573.4
12/11/2011	8:00:00 AM	1.94	2.5	0.56	1.28	573.4
12/11/2011	9:00:00 AM	1.94	2.5	0.56	1.28	573.4
12/11/2011	10:00:00 AM	1.94	2.5	0.56	1.28	573.4
12/11/2011	11:00:00 AM	1.95	2.5	0.55	1.24	558.0
12/11/2011	12:00:00 PM	1.94	2.5	0.56	1.28	573.4
12/11/2011	1:00:00 PM	1.95	2.5	0.55	1.24	558.0
12/11/2011	2:00:00 PM	1.94	2.5	0.56	1.28	573.4
12/11/2011	3:00:00 PM	1.94	2.5	0.56	1.28	573.4
12/11/2011	4:00:00 PM	1.94	2.5	0.56	1.28	573.4
12/11/2011	5:00:00 PM	1.93	2.5	0.57	1.31	588.9
12/11/2011	6:00:00 PM	1.94	2.5	0.56	1.28	573.4
12/11/2011	7:00:00 PM	1.94	2.5	0.56	1.28	573.4
12/11/2011	8:00:00 PM	1.93	2.5	0.57	1.31	588.9
12/11/2011	9:00:00 PM	1.93	2.5	0.57	1.31	588.9
12/11/2011	10:00:00 PM	1.93	2.5	0.57	1.31	588.9
12/11/2011	11:00:00 PM	1.94	2.5	0.56	1.28	573.4
12/12/2011	12:00:00 AM	1.94	2.5	0.56	1.28	573.4
12/12/2011	1:00:00 AM	1.94	2.5	0.56	1.28	573.4
12/12/2011	2:00:00 AM	1.94	2.5	0.56	1.28	573.4
12/12/2011	3:00:00 AM	1.94	2.5	0.56	1.28	573.4
12/12/2011	4:00:00 AM	1.94	2.5	0.56	1.28	573.4
12/12/2011	5:00:00 AM	1.94	2.5	0.56	1.28	573.4
12/12/2011	6:00:00 AM	1.94	2.5	0.56	1.28	573.4
12/12/2011	7:00:00 AM	1.94	2.5	0.56	1.28	573.4
12/12/2011	8:00:00 AM	1.94	2.5	0.56	1.28	573.4
12/12/2011	9:00:00 AM	1.94	2.5	0.56	1.28	573.4
12/12/2011	10:00:00 AM	1.94	2.5	0.56	1.28	573.4
12/12/2011	11:00:00 AM	1.94	2.5	0.56	1.28	573.4
12/12/2011	12:00:00 PM	1.94	2.5	0.56	1.28	573.4
12/12/2011	1:00:00 PM	1.94	2.5	0.56	1.28	573.4
12/12/2011	2:00:00 PM	1.94	2.5	0.56	1.28	573.4
12/12/2011	3:00:00 PM	1.94	2.5	0.56	1.28	573.4

12/12/2011	4:00:00 PM	1.94	2.5	0.56	1.28	573.4
12/12/2011	5:00:00 PM	1.94	2.5	0.56	1.28	573.4
12/12/2011	6:00:00 PM	1.94	2.5	0.56	1.28	573.4
12/12/2011	7:00:00 PM	1.94	2.5	0.56	1.28	573.4
12/12/2011	8:00:00 PM	1.93	2.5	0.57	1.31	588.9
12/12/2011	9:00:00 PM	1.94	2.5	0.56	1.28	573.4
12/12/2011	10:00:00 PM	1.93	2.5	0.57	1.31	588.9
12/12/2011	11:00:00 PM	1.93	2.5	0.57	1.31	588.9
12/13/2011	12:00:00 AM	1.93	2.5	0.57	1.31	588.9
12/13/2011	1:00:00 AM	1.92	2.5	0.58	1.35	604.6
12/13/2011	2:00:00 AM	1.92	2.5	0.58	1.35	604.6
12/13/2011	3:00:00 AM	1.92	2.5	0.58	1.35	604.6
12/13/2011	4:00:00 AM	1.92	2.5	0.58	1.35	604.6
12/13/2011	5:00:00 AM	1.92	2.5	0.58	1.35	604.6
12/13/2011	6:00:00 AM	1.92	2.5	0.58	1.35	604.6
12/13/2011	7:00:00 AM	1.92	2.5	0.58	1.35	604.6
12/13/2011	8:00:00 AM	1.92	2.5	0.58	1.35	604.6
12/13/2011	9:00:00 AM	1.92	2.5	0.58	1.35	604.6
12/13/2011	10:00:00 AM	1.92	2.5	0.58	1.35	604.6
12/13/2011	11:00:00 AM	1.92	2.5	0.58	1.35	604.6
12/13/2011	12:00:00 PM	1.93	2.5	0.57	1.31	588.9
12/13/2011	1:00:00 PM	1.93	2.5	0.57	1.31	588.9
12/13/2011	2:00:00 PM	1.93	2.5	0.57	1.31	588.9
12/13/2011	3:00:00 PM	1.93	2.5	0.57	1.31	588.9
12/13/2011	4:00:00 PM	1.93	2.5	0.57	1.31	588.9
12/13/2011	5:00:00 PM	1.93	2.5	0.57	1.31	588.9
12/13/2011	6:00:00 PM	1.93	2.5	0.57	1.31	588.9
12/13/2011	7:00:00 PM	1.93	2.5	0.57	1.31	588.9
12/13/2011	8:00:00 PM	1.93	2.5	0.57	1.31	588.9
12/13/2011	9:00:00 PM	1.93	2.5	0.57	1.31	588.9
12/13/2011	10:00:00 PM	1.93	2.5	0.57	1.31	588.9
12/13/2011	11:00:00 PM	1.92	2.5	0.58	1.35	604.6
12/14/2011	12:00:00 AM	1.92	2.5	0.58	1.35	604.6
12/14/2011	1:00:00 AM	1.91	2.5	0.59	1.38	620.4
12/14/2011	2:00:00 AM	1.92	2.5	0.58	1.35	604.6
12/14/2011	3:00:00 AM	1.91	2.5	0.59	1.38	620.4
12/14/2011	4:00:00 AM	1.91	2.5	0.59	1.38	620.4
12/14/2011	5:00:00 AM	1.91	2.5	0.59	1.38	620.4
12/14/2011	6:00:00 AM	1.92	2.5	0.58	1.35	604.6
12/14/2011	7:00:00 AM	1.92	2.5	0.58	1.35	604.6
12/14/2011	8:00:00 AM	1.92	2.5	0.58	1.35	604.6
12/14/2011	9:00:00 AM	1.91	2.5	0.59	1.38	620.4
12/14/2011	10:00:00 AM	1.92	2.5	0.58	1.35	604.6
12/14/2011	11:00:00 AM	1.92	2.5	0.58	1.35	604.6
12/14/2011	12:00:00 PM	1.92	2.5	0.58	1.35	604.6
12/14/2011	1:00:00 PM	1.92	2.5	0.58	1.35	604.6
12/14/2011	2:00:00 PM	1.92	2.5	0.58	1.35	604.6

12/14/2011	3:00:00 PM	1.92	2.5	0.58	1.35	604.6
12/14/2011	4:00:00 PM	1.92	2.5	0.58	1.35	604.6
12/14/2011	5:00:00 PM	1.93	2.5	0.57	1.31	588.9
12/14/2011	6:00:00 PM	1.92	2.5	0.58	1.35	604.6
12/14/2011	7:00:00 PM	1.92	2.5	0.58	1.35	604.6
12/14/2011	8:00:00 PM	1.93	2.5	0.57	1.31	588.9
12/14/2011	9:00:00 PM	1.93	2.5	0.57	1.31	588.9
12/14/2011	10:00:00 PM	1.93	2.5	0.57	1.31	588.9
12/14/2011	11:00:00 PM	1.93	2.5	0.57	1.31	588.9
12/15/2011	12:00:00 AM	1.93	2.5	0.57	1.31	588.9
12/15/2011	1:00:00 AM	1.93	2.5	0.57	1.31	588.9
12/15/2011	2:00:00 AM	1.93	2.5	0.57	1.31	588.9
12/15/2011	3:00:00 AM	1.93	2.5	0.57	1.31	588.9
12/15/2011	4:00:00 AM	1.93	2.5	0.57	1.31	588.9
12/15/2011	5:00:00 AM	1.94	2.5	0.56	1.28	573.4
12/15/2011	6:00:00 AM	1.94	2.5	0.56	1.28	573.4
12/15/2011	7:00:00 AM	1.94	2.5	0.56	1.28	573.4
12/15/2011	8:00:00 AM	1.94	2.5	0.56	1.28	573.4
12/15/2011	9:00:00 AM	1.94	2.5	0.56	1.28	573.4
12/15/2011	10:00:00 AM	1.93	2.5	0.57	1.31	588.9
12/15/2011	11:00:00 AM	1.94	2.5	0.56	1.28	573.4
12/15/2011	12:00:00 PM	1.94	2.5	0.56	1.28	573.4
12/15/2011	1:00:00 PM	1.94	2.5	0.56	1.28	573.4
12/15/2011	2:00:00 PM	1.94	2.5	0.56	1.28	573.4
12/15/2011	3:00:00 PM	1.94	2.5	0.56	1.28	573.4
12/15/2011	4:00:00 PM	1.94	2.5	0.56	1.28	573.4
12/15/2011	5:00:00 PM	1.94	2.5	0.56	1.28	573.4
12/15/2011	6:00:00 PM	1.94	2.5	0.56	1.28	573.4
12/15/2011	7:00:00 PM	1.94	2.5	0.56	1.28	573.4
12/15/2011	8:00:00 PM	1.94	2.5	0.56	1.28	573.4
12/15/2011	9:00:00 PM	1.93	2.5	0.57	1.31	588.9
12/15/2011	10:00:00 PM	1.94	2.5	0.56	1.28	573.4
12/15/2011	11:00:00 PM	1.94	2.5	0.56	1.28	573.4
12/16/2011	12:00:00 AM	1.94	2.5	0.56	1.28	573.4
12/16/2011	1:00:00 AM	1.94	2.5	0.56	1.28	573.4
12/16/2011	2:00:00 AM	1.94	2.5	0.56	1.28	573.4
12/16/2011	3:00:00 AM	1.94	2.5	0.56	1.28	573.4
12/16/2011	4:00:00 AM	1.94	2.5	0.56	1.28	573.4
12/16/2011	5:00:00 AM	1.94	2.5	0.56	1.28	573.4
12/16/2011	6:00:00 AM	1.94	2.5	0.56	1.28	573.4
12/16/2011	7:00:00 AM	1.94	2.5	0.56	1.28	573.4
12/16/2011	8:00:00 AM	1.94	2.5	0.56	1.28	573.4
12/16/2011	9:00:00 AM	1.94	2.5	0.56	1.28	573.4
12/16/2011	10:00:00 AM	1.94	2.5	0.56	1.28	573.4
12/16/2011	11:00:00 AM	1.94	2.5	0.56	1.28	573.4
12/16/2011	12:00:00 PM	1.94	2.5	0.56	1.28	573.4
12/16/2011	1:00:00 PM	1.94	2.5	0.56	1.28	573.4

12/16/2011	2:00:00 PM	1.93	2.5	0.57	1.31	588.9
12/16/2011	3:00:00 PM	1.94	2.5	0.56	1.28	573.4
12/16/2011	4:00:00 PM	1.94	2.5	0.56	1.28	573.4
12/16/2011	5:00:00 PM	1.93	2.5	0.57	1.31	588.9
12/16/2011	6:00:00 PM	1.94	2.5	0.56	1.28	573.4
12/16/2011	7:00:00 PM	1.94	2.5	0.56	1.28	573.4
12/16/2011	8:00:00 PM	1.93	2.5	0.57	1.31	588.9
12/16/2011	9:00:00 PM	1.94	2.5	0.56	1.28	573.4
12/16/2011	10:00:00 PM	1.94	2.5	0.56	1.28	573.4
12/16/2011	11:00:00 PM	1.94	2.5	0.56	1.28	573.4
12/17/2011	12:00:00 AM	1.94	2.5	0.56	1.28	573.4
12/17/2011	1:00:00 AM	1.94	2.5	0.56	1.28	573.4
12/17/2011	2:00:00 AM	1.95	2.5	0.55	1.24	558.0
12/17/2011	3:00:00 AM	1.94	2.5	0.56	1.28	573.4
12/17/2011	4:00:00 AM	1.94	2.5	0.56	1.28	573.4
12/17/2011	5:00:00 AM	1.94	2.5	0.56	1.28	573.4
12/17/2011	6:00:00 AM	1.94	2.5	0.56	1.28	573.4
12/17/2011	7:00:00 AM	1.94	2.5	0.56	1.28	573.4
12/17/2011	8:00:00 AM	1.94	2.5	0.56	1.28	573.4
12/17/2011	9:00:00 AM	1.94	2.5	0.56	1.28	573.4
12/17/2011	10:00:00 AM	1.95	2.5	0.55	1.24	558.0
12/17/2011	11:00:00 AM	1.96	2.5	0.54	1.21	542.7
12/17/2011	12:00:00 PM	1.98	2.5	0.52	1.14	512.6
12/17/2011	1:00:00 PM	2.01	2.5	0.49	1.04	468.6
12/17/2011	2:00:00 PM	2.01	2.5	0.49	1.04	468.6
12/17/2011	3:00:00 PM	1.97	2.5	0.53	1.18	527.6
12/17/2011	4:00:00 PM	1.94	2.5	0.56	1.28	573.4
12/17/2011	5:00:00 PM	1.91	2.5	0.59	1.38	620.4
12/17/2011	6:00:00 PM	1.91	2.5	0.59	1.38	620.4
12/17/2011	7:00:00 PM	1.91	2.5	0.59	1.38	620.4
12/17/2011	8:00:00 PM	1.91	2.5	0.59	1.38	620.4
12/17/2011	9:00:00 PM	1.92	2.5	0.58	1.35	604.6
12/17/2011	10:00:00 PM	1.92	2.5	0.58	1.35	604.6
12/17/2011	11:00:00 PM	1.92	2.5	0.58	1.35	604.6
12/18/2011	12:00:00 AM	1.94	2.5	0.56	1.28	573.4
12/18/2011	1:00:00 AM	1.93	2.5	0.57	1.31	588.9
12/18/2011	2:00:00 AM	1.94	2.5	0.56	1.28	573.4
12/18/2011	3:00:00 AM	1.94	2.5	0.56	1.28	573.4
12/18/2011	4:00:00 AM	1.94	2.5	0.56	1.28	573.4
12/18/2011	5:00:00 AM	1.94	2.5	0.56	1.28	573.4
12/18/2011	6:00:00 AM	1.94	2.5	0.56	1.28	573.4
12/18/2011	7:00:00 AM	1.94	2.5	0.56	1.28	573.4
12/18/2011	8:00:00 AM	1.94	2.5	0.56	1.28	573.4
12/18/2011	9:00:00 AM	1.94	2.5	0.56	1.28	573.4
12/18/2011	10:00:00 AM	1.94	2.5	0.56	1.28	573.4
12/18/2011	11:00:00 AM	1.94	2.5	0.56	1.28	573.4
12/18/2011	12:00:00 PM	1.95	2.5	0.55	1.24	558.0

12/18/2011	1:00:00 PM	1.94	2.5	0.56	1.28	573.4
12/18/2011	2:00:00 PM	1.94	2.5	0.56	1.28	573.4
12/18/2011	3:00:00 PM	1.94	2.5	0.56	1.28	573.4
12/18/2011	4:00:00 PM	1.93	2.5	0.57	1.31	588.9
12/18/2011	5:00:00 PM	1.94	2.5	0.56	1.28	573.4
12/18/2011	6:00:00 PM	1.94	2.5	0.56	1.28	573.4
12/18/2011	7:00:00 PM	1.94	2.5	0.56	1.28	573.4
12/18/2011	8:00:00 PM	1.94	2.5	0.56	1.28	573.4
12/18/2011	9:00:00 PM	1.94	2.5	0.56	1.28	573.4
12/18/2011	10:00:00 PM	1.93	2.5	0.57	1.31	588.9
12/18/2011	11:00:00 PM	1.94	2.5	0.56	1.28	573.4
12/19/2011	12:00:00 AM	1.94	2.5	0.56	1.28	573.4
12/19/2011	1:00:00 AM	1.94	2.5	0.56	1.28	573.4
12/19/2011	2:00:00 AM	1.94	2.5	0.56	1.28	573.4
12/19/2011	3:00:00 AM	1.94	2.5	0.56	1.28	573.4
12/19/2011	4:00:00 AM	1.94	2.5	0.56	1.28	573.4
12/19/2011	5:00:00 AM	1.94	2.5	0.56	1.28	573.4
12/19/2011	6:00:00 AM	1.94	2.5	0.56	1.28	573.4
12/19/2011	7:00:00 AM	1.94	2.5	0.56	1.28	573.4
12/19/2011	8:00:00 AM	1.94	2.5	0.56	1.28	573.4
12/19/2011	9:00:00 AM	1.94	2.5	0.56	1.28	573.4
12/19/2011	10:00:00 AM	1.94	2.5	0.56	1.28	573.4
12/19/2011	11:00:00 AM	1.95	2.5	0.55	1.24	558.0
12/19/2011	12:00:00 PM	1.94	2.5	0.56	1.28	573.4
12/19/2011	1:00:00 PM	1.94	2.5	0.56	1.28	573.4
12/19/2011	2:00:00 PM	1.94	2.5	0.56	1.28	573.4
12/19/2011	3:00:00 PM	1.94	2.5	0.56	1.28	573.4
12/19/2011	4:00:00 PM	1.94	2.5	0.56	1.28	573.4
12/19/2011	5:00:00 PM	1.94	2.5	0.56	1.28	573.4
12/19/2011	6:00:00 PM	1.94	2.5	0.56	1.28	573.4
12/19/2011	7:00:00 PM	1.95	2.5	0.55	1.24	558.0
12/19/2011	8:00:00 PM	1.94	2.5	0.56	1.28	573.4
12/19/2011	9:00:00 PM	1.93	2.5	0.57	1.31	588.9
12/19/2011	10:00:00 PM	1.93	2.5	0.57	1.31	588.9
12/19/2011	11:00:00 PM	1.94	2.5	0.56	1.28	573.4
12/20/2011	12:00:00 AM	1.93	2.5	0.57	1.31	588.9
12/20/2011	1:00:00 AM	1.93	2.5	0.57	1.31	588.9
12/20/2011	2:00:00 AM	1.93	2.5	0.57	1.31	588.9
12/20/2011	3:00:00 AM	1.94	2.5	0.56	1.28	573.4
12/20/2011	4:00:00 AM	1.93	2.5	0.57	1.31	588.9
12/20/2011	5:00:00 AM	1.93	2.5	0.57	1.31	588.9
12/20/2011	6:00:00 AM	1.93	2.5	0.57	1.31	588.9
12/20/2011	7:00:00 AM	1.93	2.5	0.57	1.31	588.9
12/20/2011	8:00:00 AM	1.94	2.5	0.56	1.28	573.4
12/20/2011	9:00:00 AM	1.94	2.5	0.56	1.28	573.4
12/20/2011	10:00:00 AM	1.93	2.5	0.57	1.31	588.9
12/20/2011	11:00:00 AM	1.93	2.5	0.57	1.31	588.9

12/20/2011	12:00:00 PM	1.94	2.5	0.56	1.28	573.4
12/20/2011	1:00:00 PM	1.94	2.5	0.56	1.28	573.4
12/20/2011	2:00:00 PM	1.94	2.5	0.56	1.28	573.4
12/20/2011	3:00:00 PM	1.94	2.5	0.56	1.28	573.4
12/20/2011	4:00:00 PM	1.94	2.5	0.56	1.28	573.4
12/20/2011	5:00:00 PM	1.94	2.5	0.56	1.28	573.4
12/20/2011	6:00:00 PM	1.93	2.5	0.57	1.31	588.9
12/20/2011	7:00:00 PM	1.94	2.5	0.56	1.28	573.4
12/20/2011	8:00:00 PM	1.94	2.5	0.56	1.28	573.4
12/20/2011	9:00:00 PM	1.94	2.5	0.56	1.28	573.4
12/20/2011	10:00:00 PM	1.94	2.5	0.56	1.28	573.4
12/20/2011	11:00:00 PM	1.94	2.5	0.56	1.28	573.4
12/21/2011	12:00:00 AM	1.94	2.5	0.56	1.28	573.4
12/21/2011	1:00:00 AM	1.94	2.5	0.56	1.28	573.4
12/21/2011	2:00:00 AM	1.94	2.5	0.56	1.28	573.4
12/21/2011	3:00:00 AM	1.94	2.5	0.56	1.28	573.4
12/21/2011	4:00:00 AM	1.94	2.5	0.56	1.28	573.4
12/21/2011	5:00:00 AM	1.94	2.5	0.56	1.28	573.4
12/21/2011	6:00:00 AM	1.94	2.5	0.56	1.28	573.4
12/21/2011	7:00:00 AM	1.94	2.5	0.56	1.28	573.4
12/21/2011	8:00:00 AM	1.94	2.5	0.56	1.28	573.4
12/21/2011	9:00:00 AM	1.94	2.5	0.56	1.28	573.4
12/21/2011	10:00:00 AM	1.94	2.5	0.56	1.28	573.4
12/21/2011	11:00:00 AM	1.95	2.5	0.55	1.24	558.0
12/21/2011	12:00:00 PM	1.95	2.5	0.55	1.24	558.0
12/21/2011	1:00:00 PM	1.95	2.5	0.55	1.24	558.0
12/21/2011	2:00:00 PM	1.94	2.5	0.56	1.28	573.4
12/21/2011	3:00:00 PM	1.95	2.5	0.55	1.24	558.0
12/21/2011	4:00:00 PM	1.94	2.5	0.56	1.28	573.4
12/21/2011	5:00:00 PM	1.94	2.5	0.56	1.28	573.4
12/21/2011	6:00:00 PM	1.94	2.5	0.56	1.28	573.4
12/21/2011	7:00:00 PM	1.94	2.5	0.56	1.28	573.4
12/21/2011	8:00:00 PM	1.94	2.5	0.56	1.28	573.4
12/21/2011	9:00:00 PM	1.94	2.5	0.56	1.28	573.4
12/21/2011	10:00:00 PM	1.94	2.5	0.56	1.28	573.4
12/21/2011	11:00:00 PM	1.94	2.5	0.56	1.28	573.4
12/22/2011	12:00:00 AM	1.94	2.5	0.56	1.28	573.4
12/22/2011	1:00:00 AM	1.94	2.5	0.56	1.28	573.4
12/22/2011	2:00:00 AM	1.94	2.5	0.56	1.28	573.4
12/22/2011	3:00:00 AM	1.94	2.5	0.56	1.28	573.4
12/22/2011	4:00:00 AM	1.95	2.5	0.55	1.24	558.0
12/22/2011	5:00:00 AM	1.94	2.5	0.56	1.28	573.4
12/22/2011	6:00:00 AM	1.94	2.5	0.56	1.28	573.4
12/22/2011	7:00:00 AM	1.94	2.5	0.56	1.28	573.4
12/22/2011	8:00:00 AM	1.94	2.5	0.56	1.28	573.4
12/22/2011	9:00:00 AM	1.94	2.5	0.56	1.28	573.4
12/22/2011	10:00:00 AM	1.94	2.5	0.56	1.28	573.4

12/22/2011	11:00:00 AM	1.93	2.5	0.57	1.31	588.9
12/22/2011	12:00:00 PM	1.94	2.5	0.56	1.28	573.4
12/22/2011	1:00:00 PM	1.93	2.5	0.57	1.31	588.9
12/22/2011	2:00:00 PM	1.93	2.5	0.57	1.31	588.9
12/22/2011	3:00:00 PM	1.94	2.5	0.56	1.28	573.4
12/22/2011	4:00:00 PM	1.94	2.5	0.56	1.28	573.4
12/22/2011	5:00:00 PM	1.94	2.5	0.56	1.28	573.4
12/22/2011	6:00:00 PM	1.94	2.5	0.56	1.28	573.4
12/22/2011	7:00:00 PM	1.94	2.5	0.56	1.28	573.4
12/22/2011	8:00:00 PM	1.95	2.5	0.55	1.24	558.0
12/22/2011	9:00:00 PM	1.95	2.5	0.55	1.24	558.0
12/22/2011	10:00:00 PM	1.94	2.5	0.56	1.28	573.4
12/22/2011	11:00:00 PM	1.94	2.5	0.56	1.28	573.4
12/23/2011	12:00:00 AM	1.94	2.5	0.56	1.28	573.4
12/23/2011	1:00:00 AM	1.93	2.5	0.57	1.31	588.9
12/23/2011	2:00:00 AM	1.94	2.5	0.56	1.28	573.4
12/23/2011	3:00:00 AM	1.94	2.5	0.56	1.28	573.4
12/23/2011	4:00:00 AM	1.95	2.5	0.55	1.24	558.0
12/23/2011	5:00:00 AM	1.94	2.5	0.56	1.28	573.4
12/23/2011	6:00:00 AM	1.95	2.5	0.55	1.24	558.0
12/23/2011	7:00:00 AM	1.95	2.5	0.55	1.24	558.0
12/23/2011	8:00:00 AM	1.95	2.5	0.55	1.24	558.0
12/23/2011	9:00:00 AM	1.95	2.5	0.55	1.24	558.0
12/23/2011	10:00:00 AM	1.95	2.5	0.55	1.24	558.0
12/23/2011	11:00:00 AM	1.96	2.5	0.54	1.21	542.7
12/23/2011	12:00:00 PM	1.96	2.5	0.54	1.21	542.7
12/23/2011	1:00:00 PM	1.95	2.5	0.55	1.24	558.0
12/23/2011	2:00:00 PM	1.94	2.5	0.56	1.28	573.4
12/23/2011	3:00:00 PM	1.94	2.5	0.56	1.28	573.4
12/23/2011	4:00:00 PM	1.94	2.5	0.56	1.28	573.4
12/23/2011	5:00:00 PM	1.94	2.5	0.56	1.28	573.4
12/23/2011	6:00:00 PM	1.95	2.5	0.55	1.24	558.0
12/23/2011	7:00:00 PM	1.95	2.5	0.55	1.24	558.0
12/23/2011	8:00:00 PM	1.93	2.5	0.57	1.31	588.9
12/23/2011	9:00:00 PM	1.95	2.5	0.55	1.24	558.0
12/23/2011	10:00:00 PM	1.95	2.5	0.55	1.24	558.0
12/23/2011	11:00:00 PM	1.94	2.5	0.56	1.28	573.4
12/24/2011	12:00:00 AM	1.95	2.5	0.55	1.24	558.0
12/24/2011	1:00:00 AM	1.95	2.5	0.55	1.24	558.0
12/24/2011	2:00:00 AM	1.94	2.5	0.56	1.28	573.4
12/24/2011	3:00:00 AM	1.94	2.5	0.56	1.28	573.4
12/24/2011	4:00:00 AM	1.94	2.5	0.56	1.28	573.4
12/24/2011	5:00:00 AM	1.94	2.5	0.56	1.28	573.4
12/24/2011	6:00:00 AM	1.95	2.5	0.55	1.24	558.0
12/24/2011	7:00:00 AM	1.94	2.5	0.56	1.28	573.4
12/24/2011	8:00:00 AM	1.95	2.5	0.55	1.24	558.0
12/24/2011	9:00:00 AM	1.95	2.5	0.55	1.24	558.0

12/24/2011	10:00:00 AM	1.94	2.5	0.56	1.28	573.4
12/24/2011	11:00:00 AM	1.94	2.5	0.56	1.28	573.4
12/24/2011	12:00:00 PM	1.95	2.5	0.55	1.24	558.0
12/24/2011	1:00:00 PM	1.95	2.5	0.55	1.24	558.0
12/24/2011	2:00:00 PM	1.94	2.5	0.56	1.28	573.4
12/24/2011	3:00:00 PM	1.95	2.5	0.55	1.24	558.0
12/24/2011	4:00:00 PM	1.95	2.5	0.55	1.24	558.0
12/24/2011	5:00:00 PM	1.95	2.5	0.55	1.24	558.0
12/24/2011	6:00:00 PM	1.95	2.5	0.55	1.24	558.0
12/24/2011	7:00:00 PM	1.95	2.5	0.55	1.24	558.0
12/24/2011	8:00:00 PM	1.95	2.5	0.55	1.24	558.0
12/24/2011	9:00:00 PM	1.94	2.5	0.56	1.28	573.4
12/24/2011	10:00:00 PM	1.95	2.5	0.55	1.24	558.0
12/24/2011	11:00:00 PM	1.95	2.5	0.55	1.24	558.0
12/25/2011	12:00:00 AM	1.94	2.5	0.56	1.28	573.4
12/25/2011	1:00:00 AM	1.95	2.5	0.55	1.24	558.0
12/25/2011	2:00:00 AM	1.95	2.5	0.55	1.24	558.0
12/25/2011	3:00:00 AM	1.95	2.5	0.55	1.24	558.0
12/25/2011	4:00:00 AM	1.95	2.5	0.55	1.24	558.0
12/25/2011	5:00:00 AM	1.95	2.5	0.55	1.24	558.0
12/25/2011	6:00:00 AM	1.95	2.5	0.55	1.24	558.0
12/25/2011	7:00:00 AM	1.95	2.5	0.55	1.24	558.0
12/25/2011	8:00:00 AM	1.95	2.5	0.55	1.24	558.0
12/25/2011	9:00:00 AM	1.95	2.5	0.55	1.24	558.0
12/25/2011	10:00:00 AM	1.95	2.5	0.55	1.24	558.0
12/25/2011	11:00:00 AM	1.95	2.5	0.55	1.24	558.0
12/25/2011	12:00:00 PM	1.95	2.5	0.55	1.24	558.0
12/25/2011	1:00:00 PM	1.96	2.5	0.54	1.21	542.7
12/25/2011	2:00:00 PM	1.95	2.5	0.55	1.24	558.0
12/25/2011	3:00:00 PM	1.95	2.5	0.55	1.24	558.0
12/25/2011	4:00:00 PM	1.95	2.5	0.55	1.24	558.0
12/25/2011	5:00:00 PM	1.95	2.5	0.55	1.24	558.0
12/25/2011	6:00:00 PM	1.95	2.5	0.55	1.24	558.0
12/25/2011	7:00:00 PM	1.94	2.5	0.56	1.28	573.4
12/25/2011	8:00:00 PM	1.95	2.5	0.55	1.24	558.0
12/25/2011	9:00:00 PM	1.93	2.5	0.57	1.31	588.9
12/25/2011	10:00:00 PM	1.94	2.5	0.56	1.28	573.4
12/25/2011	11:00:00 PM	1.94	2.5	0.56	1.28	573.4
12/26/2011	12:00:00 AM	1.94	2.5	0.56	1.28	573.4
12/26/2011	1:00:00 AM	1.94	2.5	0.56	1.28	573.4
12/26/2011	2:00:00 AM	1.95	2.5	0.55	1.24	558.0
12/26/2011	3:00:00 AM	1.94	2.5	0.56	1.28	573.4
12/26/2011	4:00:00 AM	1.94	2.5	0.56	1.28	573.4
12/26/2011	5:00:00 AM	1.95	2.5	0.55	1.24	558.0
12/26/2011	6:00:00 AM	1.95	2.5	0.55	1.24	558.0
12/26/2011	7:00:00 AM	1.95	2.5	0.55	1.24	558.0
12/26/2011	8:00:00 AM	1.95	2.5	0.55	1.24	558.0

12/26/2011	9:00:00 AM	1.95	2.5	0.55	1.24	558.0
12/26/2011	10:00:00 AM	1.95	2.5	0.55	1.24	558.0
12/26/2011	11:00:00 AM	1.95	2.5	0.55	1.24	558.0
12/26/2011	12:00:00 PM	1.96	2.5	0.54	1.21	542.7
12/26/2011	1:00:00 PM	1.96	2.5	0.54	1.21	542.7
12/26/2011	2:00:00 PM	1.96	2.5	0.54	1.21	542.7
12/26/2011	3:00:00 PM	1.96	2.5	0.54	1.21	542.7
12/26/2011	4:00:00 PM	1.95	2.5	0.55	1.24	558.0
12/26/2011	5:00:00 PM	1.95	2.5	0.55	1.24	558.0
12/26/2011	6:00:00 PM	1.95	2.5	0.55	1.24	558.0
12/26/2011	7:00:00 PM	1.95	2.5	0.55	1.24	558.0
12/26/2011	8:00:00 PM	1.94	2.5	0.56	1.28	573.4
12/26/2011	9:00:00 PM	1.95	2.5	0.55	1.24	558.0
12/26/2011	10:00:00 PM	1.95	2.5	0.55	1.24	558.0
12/26/2011	11:00:00 PM	1.95	2.5	0.55	1.24	558.0
12/27/2011	12:00:00 AM	1.95	2.5	0.55	1.24	558.0
12/27/2011	1:00:00 AM	1.95	2.5	0.55	1.24	558.0
12/27/2011	2:00:00 AM	1.95	2.5	0.55	1.24	558.0
12/27/2011	3:00:00 AM	1.95	2.5	0.55	1.24	558.0
12/27/2011	4:00:00 AM	1.94	2.5	0.56	1.28	573.4
12/27/2011	5:00:00 AM	1.95	2.5	0.55	1.24	558.0
12/27/2011	6:00:00 AM	1.95	2.5	0.55	1.24	558.0
12/27/2011	7:00:00 AM	1.96	2.5	0.54	1.21	542.7
12/27/2011	8:00:00 AM	1.95	2.5	0.55	1.24	558.0
12/27/2011	9:00:00 AM	1.95	2.5	0.55	1.24	558.0
12/27/2011	10:00:00 AM	1.95	2.5	0.55	1.24	558.0
12/27/2011	11:00:00 AM	1.95	2.5	0.55	1.24	558.0
12/27/2011	12:00:00 PM	1.96	2.5	0.54	1.21	542.7
12/27/2011	1:00:00 PM	1.96	2.5	0.54	1.21	542.7
12/27/2011	2:00:00 PM	1.95	2.5	0.55	1.24	558.0
12/27/2011	3:00:00 PM	1.96	2.5	0.54	1.21	542.7
12/27/2011	4:00:00 PM	1.95	2.5	0.55	1.24	558.0
12/27/2011	5:00:00 PM	1.95	2.5	0.55	1.24	558.0
12/27/2011	6:00:00 PM	1.94	2.5	0.56	1.28	573.4
12/27/2011	7:00:00 PM	1.94	2.5	0.56	1.28	573.4
12/27/2011	8:00:00 PM	1.94	2.5	0.56	1.28	573.4
12/27/2011	9:00:00 PM	1.95	2.5	0.55	1.24	558.0
12/27/2011	10:00:00 PM	1.94	2.5	0.56	1.28	573.4
12/27/2011	11:00:00 PM	1.95	2.5	0.55	1.24	558.0
12/28/2011	12:00:00 AM	1.94	2.5	0.56	1.28	573.4
12/28/2011	1:00:00 AM	1.95	2.5	0.55	1.24	558.0
12/28/2011	2:00:00 AM	1.95	2.5	0.55	1.24	558.0
12/28/2011	3:00:00 AM	1.95	2.5	0.55	1.24	558.0
12/28/2011	4:00:00 AM	1.95	2.5	0.55	1.24	558.0
12/28/2011	5:00:00 AM	1.95	2.5	0.55	1.24	558.0
12/28/2011	6:00:00 AM	1.95	2.5	0.55	1.24	558.0
12/28/2011	7:00:00 AM	1.95	2.5	0.55	1.24	558.0

12/28/2011	8:00:00 AM	1.95	2.5	0.55	1.24	558.0
12/28/2011	9:00:00 AM	1.95	2.5	0.55	1.24	558.0
12/28/2011	10:00:00 AM	1.95	2.5	0.55	1.24	558.0
12/28/2011	11:00:00 AM	1.96	2.5	0.54	1.21	542.7
12/28/2011	12:00:00 PM	1.96	2.5	0.54	1.21	542.7
12/28/2011	1:00:00 PM	1.97	2.5	0.53	1.18	527.6
12/28/2011	2:00:00 PM	1.96	2.5	0.54	1.21	542.7
12/28/2011	3:00:00 PM	1.97	2.5	0.53	1.18	527.6
12/28/2011	4:00:00 PM	1.96	2.5	0.54	1.21	542.7
12/28/2011	5:00:00 PM	1.95	2.5	0.55	1.24	558.0
12/28/2011	6:00:00 PM	1.95	2.5	0.55	1.24	558.0
12/28/2011	7:00:00 PM	1.95	2.5	0.55	1.24	558.0
12/28/2011	8:00:00 PM	1.95	2.5	0.55	1.24	558.0
12/28/2011	9:00:00 PM	1.95	2.5	0.55	1.24	558.0
12/28/2011	10:00:00 PM	1.95	2.5	0.55	1.24	558.0
12/28/2011	11:00:00 PM	1.95	2.5	0.55	1.24	558.0
12/29/2011	12:00:00 AM	1.95	2.5	0.55	1.24	558.0
12/29/2011	1:00:00 AM	1.95	2.5	0.55	1.24	558.0
12/29/2011	2:00:00 AM	1.95	2.5	0.55	1.24	558.0
12/29/2011	3:00:00 AM	1.95	2.5	0.55	1.24	558.0
12/29/2011	4:00:00 AM	1.95	2.5	0.55	1.24	558.0
12/29/2011	5:00:00 AM	1.95	2.5	0.55	1.24	558.0
12/29/2011	6:00:00 AM	1.95	2.5	0.55	1.24	558.0
12/29/2011	7:00:00 AM	1.95	2.5	0.55	1.24	558.0
12/29/2011	8:00:00 AM	1.95	2.5	0.55	1.24	558.0
12/29/2011	9:00:00 AM	1.96	2.5	0.54	1.21	542.7
12/29/2011	10:00:00 AM	1.95	2.5	0.55	1.24	558.0
12/29/2011	11:00:00 AM	1.95	2.5	0.55	1.24	558.0
12/29/2011	12:00:00 PM	1.96	2.5	0.54	1.21	542.7
12/29/2011	1:00:00 PM	1.95	2.5	0.55	1.24	558.0
12/29/2011	2:00:00 PM	1.95	2.5	0.55	1.24	558.0
12/29/2011	3:00:00 PM	1.96	2.5	0.54	1.21	542.7
12/29/2011	4:00:00 PM	1.94	2.5	0.56	1.28	573.4
12/29/2011	5:00:00 PM	1.94	2.5	0.56	1.28	573.4
12/29/2011	6:00:00 PM	1.95	2.5	0.55	1.24	558.0
12/29/2011	7:00:00 PM	1.95	2.5	0.55	1.24	558.0
12/29/2011	8:00:00 PM	1.95	2.5	0.55	1.24	558.0
12/29/2011	9:00:00 PM	1.95	2.5	0.55	1.24	558.0
12/29/2011	10:00:00 PM	1.95	2.5	0.55	1.24	558.0
12/29/2011	11:00:00 PM	1.95	2.5	0.55	1.24	558.0
12/30/2011	12:00:00 AM	1.94	2.5	0.56	1.28	573.4
12/30/2011	1:00:00 AM	1.95	2.5	0.55	1.24	558.0
12/30/2011	2:00:00 AM	1.95	2.5	0.55	1.24	558.0
12/30/2011	3:00:00 AM	1.95	2.5	0.55	1.24	558.0
12/30/2011	4:00:00 AM	1.95	2.5	0.55	1.24	558.0
12/30/2011	5:00:00 AM	1.95	2.5	0.55	1.24	558.0
12/30/2011	6:00:00 AM	1.94	2.5	0.56	1.28	573.4

12/30/2011	7:00:00 AM	1.95	2.5	0.55	1.24	558.0
12/30/2011	8:00:00 AM	1.95	2.5	0.55	1.24	558.0
12/30/2011	9:00:00 AM	1.95	2.5	0.55	1.24	558.0
12/30/2011	10:00:00 AM	1.94	2.5	0.56	1.28	573.4
12/30/2011	11:00:00 AM	1.95	2.5	0.55	1.24	558.0
12/30/2011	12:00:00 PM	1.95	2.5	0.55	1.24	558.0
12/30/2011	1:00:00 PM	1.95	2.5	0.55	1.24	558.0
12/30/2011	2:00:00 PM	1.95	2.5	0.55	1.24	558.0
12/30/2011	3:00:00 PM	1.95	2.5	0.55	1.24	558.0
12/30/2011	4:00:00 PM	1.94	2.5	0.56	1.28	573.4
12/30/2011	5:00:00 PM	1.95	2.5	0.55	1.24	558.0
12/30/2011	6:00:00 PM	1.95	2.5	0.55	1.24	558.0
12/30/2011	7:00:00 PM	1.94	2.5	0.56	1.28	573.4
12/30/2011	8:00:00 PM	1.87	2.5	0.63	1.53	685.0
12/30/2011	9:00:00 PM	1.79	2.5	0.71	1.83	820.6
12/30/2011	10:00:00 PM	1.76	2.5	0.74	1.95	873.6
12/30/2011	11:00:00 PM	1.75	2.5	0.75	1.99	891.5
12/31/2011	12:00:00 AM	1.74	2.5	0.76	2.03	909.5
12/31/2011	1:00:00 AM	1.73	2.5	0.77	2.07	927.6
12/31/2011	2:00:00 AM	1.74	2.5	0.76	2.03	909.5
12/31/2011	3:00:00 AM	1.75	2.5	0.75	1.99	891.5
12/31/2011	4:00:00 AM	1.75	2.5	0.75	1.99	891.5
12/31/2011	5:00:00 AM	1.75	2.5	0.75	1.99	891.5
12/31/2011	6:00:00 AM	1.76	2.5	0.74	1.95	873.6
12/31/2011	7:00:00 AM	1.76	2.5	0.74	1.95	873.6
12/31/2011	8:00:00 AM	1.76	2.5	0.74	1.95	873.6
12/31/2011	9:00:00 AM	1.76	2.5	0.74	1.95	873.6
12/31/2011	10:00:00 AM	1.76	2.5	0.74	1.95	873.6
12/31/2011	11:00:00 AM	1.77	2.5	0.73	1.91	855.8
12/31/2011	12:00:00 PM	1.78	2.5	0.72	1.87	838.1
12/31/2011	1:00:00 PM	1.78	2.5	0.72	1.87	838.1
12/31/2011	2:00:00 PM	1.8	2.5	0.70	1.79	803.2
12/31/2011	3:00:00 PM	1.8	2.5	0.70	1.79	803.2
12/31/2011	4:00:00 PM	1.8	2.5	0.70	1.79	803.2
12/31/2011	5:00:00 PM	1.8	2.5	0.70	1.79	803.2
12/31/2011	6:00:00 PM	1.8	2.5	0.70	1.79	803.2
12/31/2011	7:00:00 PM	1.8	2.5	0.70	1.79	803.2
12/31/2011	8:00:00 PM	1.81	2.5	0.69	1.75	785.9
12/31/2011	9:00:00 PM	1.81	2.5	0.69	1.75	785.9
12/31/2011	10:00:00 PM	1.82	2.5	0.68	1.71	768.8
12/31/2011	11:00:00 PM	1.82	2.5	0.68	1.71	768.8

Appendix K

North Flume OTT PLS Data with Flowrates

Date, Time	Depth Reading (ft)	Flowrate (cfs)	Flowrate (gpm)
12/15/2011 2:00	0.66	1.64	734.9
12/15/2011 3:00	0.66	1.64	734.9
12/15/2011 4:00	0.66	1.64	734.9
12/15/2011 5:00	0.66	1.64	734.9
12/15/2011 6:00	0.66	1.64	734.9
12/15/2011 7:00	0.66	1.64	734.9
12/15/2011 8:00	0.66	1.64	734.9
12/15/2011 9:00	0.66	1.64	734.9
12/15/2011 10:00	0.66	1.64	734.9
12/15/2011 11:00	0.66	1.64	734.9
12/15/2011 12:00	0.66	1.64	734.9
12/15/2011 13:00	0.66	1.64	734.9
12/15/2011 14:00	0.66	1.64	734.9
12/15/2011 15:00	0.66	1.64	734.9
12/15/2011 16:00	0.66	1.64	734.9
12/15/2011 17:00	0.66	1.64	734.9
12/15/2011 18:00	0.66	1.64	734.9
12/15/2011 19:00	0.66	1.64	734.9
12/15/2011 20:00	0.66	1.64	734.9
12/15/2011 21:00	0.66	1.64	734.9
12/15/2011 22:00	0.66	1.64	734.9
12/15/2011 23:00	0.66	1.64	734.9
12/16/2011 0:00	0.66	1.64	734.9
12/16/2011 1:00	0.66	1.64	734.9
12/16/2011 2:00	0.66	1.64	734.9
12/16/2011 3:00	0.66	1.64	734.9
12/16/2011 4:00	0.66	1.64	734.9
12/16/2011 5:00	0.66	1.64	734.9
12/16/2011 6:00	0.66	1.64	734.9
12/16/2011 7:00	0.66	1.64	734.9
12/16/2011 8:00	0.66	1.64	734.9
12/16/2011 9:00	0.66	1.64	734.9
12/16/2011 10:00	0.66	1.64	734.9
12/16/2011 11:00	0.66	1.64	734.9
12/16/2011 12:00	0.66	1.64	734.9
12/16/2011 13:00	0.66	1.64	734.9
12/16/2011 14:00	0.66	1.64	734.9
12/16/2011 15:00	0.66	1.64	734.9
12/16/2011 16:00	0.66	1.64	734.9
12/16/2011 17:00	0.66	1.64	734.9
12/16/2011 18:00	0.66	1.64	734.9
12/16/2011 19:00	0.66	1.64	734.9
12/16/2011 20:00	0.66	1.64	734.9
12/16/2011 21:00	0.66	1.64	734.9

12/16/2011 22:00	0.66	1.64	734.9
12/16/2011 23:00	0.66	1.64	734.9
12/17/2011 0:00	0.66	1.64	734.9
12/17/2011 1:00	0.66	1.64	734.9
12/17/2011 2:00	0.66	1.64	734.9
12/17/2011 3:00	0.66	1.64	734.9
12/17/2011 4:00	0.66	1.64	734.9
12/17/2011 5:00	0.66	1.64	734.9
12/17/2011 6:00	0.66	1.64	734.9
12/17/2011 7:00	0.66	1.64	734.9
12/17/2011 8:00	0.66	1.64	734.9
12/17/2011 9:00	0.66	1.64	734.9
12/17/2011 10:00	0.66	1.64	734.9
12/17/2011 11:00	0.66	1.64	734.9
12/17/2011 12:00	0.66	1.64	734.9
12/17/2011 13:00	0.66	1.64	734.9
12/17/2011 14:00	0.66	1.64	734.9
12/17/2011 15:00	0.66	1.64	734.9
12/17/2011 16:00	0.66	1.64	734.9
12/17/2011 17:00	0.65	1.60	718.1
12/17/2011 18:00	0.66	1.64	734.9
12/17/2011 19:00	0.66	1.64	734.9
12/17/2011 20:00	0.66	1.64	734.9
12/17/2011 21:00	0.66	1.64	734.9
12/17/2011 22:00	0.66	1.64	734.9
12/17/2011 23:00	0.66	1.64	734.9
12/18/2011 0:00	0.66	1.64	734.9
12/18/2011 1:00	0.66	1.64	734.9
12/18/2011 2:00	0.66	1.64	734.9
12/18/2011 3:00	0.66	1.64	734.9
12/18/2011 4:00	0.66	1.64	734.9
12/18/2011 5:00	0.66	1.64	734.9
12/18/2011 6:00	0.66	1.64	734.9
12/18/2011 7:00	0.66	1.64	734.9
12/18/2011 8:00	0.65	1.60	718.1
12/18/2011 9:00	0.66	1.64	734.9
12/18/2011 10:00	0.65	1.60	718.1
12/18/2011 11:00	0.66	1.64	734.9
12/18/2011 12:00	0.66	1.64	734.9
12/18/2011 13:00	0.66	1.64	734.9
12/18/2011 14:00	0.66	1.64	734.9
12/18/2011 15:00	0.66	1.64	734.9
12/18/2011 16:00	0.66	1.64	734.9
12/18/2011 17:00	0.65	1.60	718.1
12/18/2011 18:00	0.66	1.64	734.9
12/18/2011 19:00	0.65	1.60	718.1
12/18/2011 20:00	0.66	1.64	734.9

12/18/2011 21:00	0.66	1.64	734.9
12/18/2011 22:00	0.66	1.64	734.9
12/18/2011 23:00	0.66	1.64	734.9
12/19/2011 0:00	0.66	1.64	734.9
12/19/2011 1:00	0.65	1.60	718.1
12/19/2011 2:00	0.65	1.60	718.1
12/19/2011 3:00	0.66	1.64	734.9
12/19/2011 4:00	0.66	1.64	734.9
12/19/2011 5:00	0.65	1.60	718.1
12/19/2011 6:00	0.66	1.64	734.9
12/19/2011 7:00	0.66	1.64	734.9
12/19/2011 8:00	0.66	1.64	734.9
12/19/2011 9:00	0.66	1.64	734.9
12/19/2011 10:00	0.66	1.64	734.9
12/19/2011 11:00	0.66	1.64	734.9
12/19/2011 12:00	0.66	1.64	734.9
12/19/2011 13:00	0.65	1.60	718.1
12/19/2011 14:00	0.66	1.64	734.9
12/19/2011 15:00	0.65	1.60	718.1
12/19/2011 16:00	0.66	1.64	734.9
12/19/2011 17:00	0.65	1.60	718.1
12/19/2011 18:00	0.65	1.60	718.1
12/19/2011 19:00	0.65	1.60	718.1
12/19/2011 20:00	0.65	1.60	718.1
12/19/2011 21:00	0.65	1.60	718.1
12/19/2011 22:00	0.66	1.64	734.9
12/19/2011 23:00	0.65	1.60	718.1
12/20/2011 0:00	0.66	1.64	734.9
12/20/2011 1:00	0.66	1.64	734.9
12/20/2011 2:00	0.66	1.64	734.9
12/20/2011 3:00	0.66	1.64	734.9
12/20/2011 4:00	0.66	1.64	734.9
12/20/2011 5:00	0.66	1.64	734.9
12/20/2011 6:00	0.66	1.64	734.9
12/20/2011 7:00	0.65	1.60	718.1
12/20/2011 8:00	0.66	1.64	734.9
12/20/2011 9:00	0.66	1.64	734.9
12/20/2011 10:00	0.65	1.60	718.1
12/20/2011 11:00	0.65	1.60	718.1
12/20/2011 12:00	0.66	1.64	734.9
12/20/2011 13:00	0.65	1.60	718.1
12/20/2011 14:00	0.66	1.64	734.9
12/20/2011 15:00	0.65	1.60	718.1
12/20/2011 16:00	0.65	1.60	718.1
12/20/2011 17:00	0.66	1.64	734.9
12/20/2011 18:00	0.65	1.60	718.1
12/20/2011 19:00	0.66	1.64	734.9

12/20/2011 20:00	0.66	1.64	734.9
12/20/2011 21:00	0.65	1.60	718.1
12/20/2011 22:00	0.66	1.64	734.9
12/20/2011 23:00	0.65	1.60	718.1
12/21/2011 0:00	0.66	1.64	734.9
12/21/2011 1:00	0.65	1.60	718.1
12/21/2011 2:00	0.65	1.60	718.1
12/21/2011 3:00	0.66	1.64	734.9
12/21/2011 4:00	0.66	1.64	734.9
12/21/2011 5:00	0.65	1.60	718.1
12/21/2011 6:00	0.65	1.60	718.1
12/21/2011 7:00	0.66	1.64	734.9
12/21/2011 8:00	0.65	1.60	718.1
12/21/2011 9:00	0.65	1.60	718.1
12/21/2011 10:00	0.65	1.60	718.1
12/21/2011 11:00	0.65	1.60	718.1
12/21/2011 12:00	0.65	1.60	718.1
12/21/2011 13:00	0.65	1.60	718.1
12/21/2011 14:00	0.65	1.60	718.1
12/21/2011 15:00	0.65	1.60	718.1
12/21/2011 16:00	0.65	1.60	718.1
12/21/2011 17:00	0.65	1.60	718.1
12/21/2011 18:00	0.65	1.60	718.1
12/21/2011 19:00	0.65	1.60	718.1
12/21/2011 20:00	0.65	1.60	718.1
12/21/2011 21:00	0.65	1.60	718.1
12/21/2011 22:00	0.65	1.60	718.1
12/21/2011 23:00	0.65	1.60	718.1
12/22/2011 0:00	0.65	1.60	718.1
12/22/2011 1:00	0.65	1.60	718.1
12/22/2011 2:00	0.65	1.60	718.1
12/22/2011 3:00	0.65	1.60	718.1
12/22/2011 4:00	0.65	1.60	718.1
12/22/2011 5:00	0.65	1.60	718.1
12/22/2011 6:00	0.65	1.60	718.1
12/22/2011 7:00	0.65	1.60	718.1
12/22/2011 8:00	0.65	1.60	718.1
12/22/2011 9:00	0.65	1.60	718.1
12/22/2011 10:00	0.65	1.60	718.1
12/22/2011 11:00	0.65	1.60	718.1
12/22/2011 12:00	0.65	1.60	718.1
12/22/2011 13:00	0.65	1.60	718.1
12/22/2011 14:00	0.65	1.60	718.1
12/22/2011 15:00	0.65	1.60	718.1
12/22/2011 16:00	0.65	1.60	718.1
12/22/2011 17:00	0.65	1.60	718.1
12/22/2011 18:00	0.65	1.60	718.1

12/22/2011 19:00	0.65	1.60	718.1
12/22/2011 20:00	0.66	1.64	734.9
12/22/2011 21:00	0.66	1.64	734.9
12/22/2011 22:00	0.66	1.64	734.9
12/22/2011 23:00	0.66	1.64	734.9
12/23/2011 0:00	0.66	1.64	734.9
12/23/2011 1:00	0.66	1.64	734.9
12/23/2011 2:00	0.66	1.64	734.9
12/23/2011 3:00	0.66	1.64	734.9
12/23/2011 4:00	0.65	1.60	718.1
12/23/2011 5:00	0.66	1.64	734.9
12/23/2011 6:00	0.66	1.64	734.9
12/23/2011 7:00	0.66	1.64	734.9
12/23/2011 8:00	0.66	1.64	734.9
12/23/2011 9:00	0.66	1.64	734.9
12/23/2011 10:00	0.66	1.64	734.9
12/23/2011 11:00	0.66	1.64	734.9
12/23/2011 12:00	0.66	1.64	734.9
12/23/2011 13:00	0.65	1.60	718.1
12/23/2011 14:00	0.66	1.64	734.9
12/23/2011 15:00	0.66	1.64	734.9
12/23/2011 16:00	0.66	1.64	734.9
12/23/2011 17:00	0.66	1.64	734.9
12/23/2011 18:00	0.66	1.64	734.9
12/23/2011 19:00	0.66	1.64	734.9
12/23/2011 20:00	0.66	1.64	734.9
12/23/2011 21:00	0.66	1.64	734.9
12/23/2011 22:00	0.66	1.64	734.9
12/23/2011 23:00	0.66	1.64	734.9
12/24/2011 0:00	0.66	1.64	734.9
12/24/2011 1:00	0.66	1.64	734.9
12/24/2011 2:00	0.66	1.64	734.9
12/24/2011 3:00	0.66	1.64	734.9
12/24/2011 4:00	0.66	1.64	734.9
12/24/2011 5:00	0.66	1.64	734.9
12/24/2011 6:00	0.66	1.64	734.9
12/24/2011 7:00	0.66	1.64	734.9
12/24/2011 8:00	0.66	1.64	734.9
12/24/2011 9:00	0.66	1.64	734.9
12/24/2011 10:00	0.66	1.64	734.9
12/24/2011 11:00	0.66	1.64	734.9
12/24/2011 12:00	0.66	1.64	734.9
12/24/2011 13:00	0.65	1.60	718.1
12/24/2011 14:00	0.66	1.64	734.9
12/24/2011 15:00	0.65	1.60	718.1
12/24/2011 16:00	0.65	1.60	718.1
12/24/2011 17:00	0.66	1.64	734.9

12/24/2011 18:00	0.65	1.60	718.1
12/24/2011 19:00	0.66	1.64	734.9
12/24/2011 20:00	0.65	1.60	718.1
12/24/2011 21:00	0.66	1.64	734.9
12/24/2011 22:00	0.66	1.64	734.9
12/24/2011 23:00	0.66	1.64	734.9
12/25/2011 0:00	0.66	1.64	734.9
12/25/2011 1:00	0.66	1.64	734.9
12/25/2011 2:00	0.66	1.64	734.9
12/25/2011 3:00	0.66	1.64	734.9
12/25/2011 4:00	0.66	1.64	734.9
12/25/2011 5:00	0.66	1.64	734.9
12/25/2011 6:00	0.66	1.64	734.9
12/25/2011 7:00	0.65	1.60	718.1
12/25/2011 8:00	0.65	1.60	718.1
12/25/2011 9:00	0.66	1.64	734.9
12/25/2011 10:00	0.65	1.60	718.1
12/25/2011 11:00	0.65	1.60	718.1
12/25/2011 12:00	0.66	1.64	734.9
12/25/2011 13:00	0.66	1.64	734.9
12/25/2011 14:00	0.66	1.64	734.9
12/25/2011 15:00	0.66	1.64	734.9
12/25/2011 16:00	0.65	1.60	718.1
12/25/2011 17:00	0.65	1.60	718.1
12/25/2011 18:00	0.66	1.64	734.9
12/25/2011 19:00	0.66	1.64	734.9
12/25/2011 20:00	0.66	1.64	734.9
12/25/2011 21:00	0.65	1.60	718.1
12/25/2011 22:00	0.66	1.64	734.9
12/25/2011 23:00	0.65	1.60	718.1
12/26/2011 0:00	0.66	1.64	734.9
12/26/2011 1:00	0.66	1.64	734.9
12/26/2011 2:00	0.66	1.64	734.9
12/26/2011 3:00	0.66	1.64	734.9
12/26/2011 4:00	0.66	1.64	734.9
12/26/2011 5:00	0.66	1.64	734.9
12/26/2011 6:00	0.66	1.64	734.9
12/26/2011 7:00	0.66	1.64	734.9
12/26/2011 8:00	0.65	1.60	718.1
12/26/2011 9:00	0.65	1.60	718.1
12/26/2011 10:00	0.65	1.60	718.1
12/26/2011 11:00	0.65	1.60	718.1
12/26/2011 12:00	0.66	1.64	734.9
12/26/2011 13:00	0.65	1.60	718.1
12/26/2011 14:00	0.65	1.60	718.1
12/26/2011 15:00	0.65	1.60	718.1
12/26/2011 16:00	0.7	1.79	803.2

12/26/2011 17:00	0.7	1.79	803.2
12/26/2011 18:00	0.7	1.79	803.2
12/26/2011 19:00	0.7	1.79	803.2
12/26/2011 20:00	0.7	1.79	803.2
12/26/2011 21:00	0.7	1.79	803.2
12/26/2011 22:00	0.69	1.75	785.9
12/26/2011 23:00	0.7	1.79	803.2
12/27/2011 0:00	0.7	1.79	803.2
12/27/2011 1:00	0.7	1.79	803.2
12/27/2011 2:00	0.7	1.79	803.2
12/27/2011 3:00	0.7	1.79	803.2
12/27/2011 4:00	0.7	1.79	803.2
12/27/2011 5:00	0.7	1.79	803.2
12/27/2011 6:00	0.7	1.79	803.2
12/27/2011 7:00	0.7	1.79	803.2
12/27/2011 8:00	0.7	1.79	803.2
12/27/2011 9:00	0.7	1.79	803.2
12/27/2011 10:00	0.7	1.79	803.2
12/27/2011 11:00	0.7	1.79	803.2
12/27/2011 12:00	0.7	1.79	803.2
12/27/2011 13:00	0.7	1.79	803.2
12/27/2011 14:00	0.7	1.79	803.2
12/27/2011 15:00	0.7	1.79	803.2
12/27/2011 16:00	0.7	1.79	803.2
12/27/2011 17:00	0.7	1.79	803.2
12/27/2011 18:00	0.7	1.79	803.2
12/27/2011 19:00	0.7	1.79	803.2
12/27/2011 20:00	0.7	1.79	803.2
12/27/2011 21:00	0.7	1.79	803.2
12/27/2011 22:00	0.7	1.79	803.2
12/27/2011 23:00	0.7	1.79	803.2
12/28/2011 0:00	0.7	1.79	803.2
12/28/2011 1:00	0.7	1.79	803.2
12/28/2011 2:00	0.7	1.79	803.2
12/28/2011 3:00	0.7	1.79	803.2
12/28/2011 4:00	0.7	1.79	803.2
12/28/2011 5:00	0.7	1.79	803.2
12/28/2011 6:00	0.7	1.79	803.2
12/28/2011 7:00	0.7	1.79	803.2
12/28/2011 8:00	0.7	1.79	803.2
12/28/2011 9:00	0.7	1.79	803.2
12/28/2011 10:00	0.7	1.79	803.2
12/28/2011 11:00	0.7	1.79	803.2
12/28/2011 12:00	0.7	1.79	803.2
12/28/2011 13:00	0.7	1.79	803.2
12/28/2011 14:00	0.7	1.79	803.2
12/28/2011 15:00	0.7	1.79	803.2

12/28/2011 16:00	0.7	1.79	803.2
12/28/2011 17:00	0.7	1.79	803.2
12/28/2011 18:00	0.7	1.79	803.2
12/28/2011 19:00	0.7	1.79	803.2
12/28/2011 20:00	0.7	1.79	803.2
12/28/2011 21:00	0.7	1.79	803.2
12/28/2011 22:00	0.7	1.79	803.2
12/28/2011 23:00	0.7	1.79	803.2
12/29/2011 0:00	0.7	1.79	803.2
12/29/2011 1:00	0.7	1.79	803.2
12/29/2011 2:00	0.7	1.79	803.2
12/29/2011 3:00	0.7	1.79	803.2
12/29/2011 4:00	0.7	1.79	803.2
12/29/2011 5:00	0.7	1.79	803.2
12/29/2011 6:00	0.7	1.79	803.2
12/29/2011 7:00	0.7	1.79	803.2
12/29/2011 8:00	0.7	1.79	803.2
12/29/2011 9:00	0.7	1.79	803.2
12/29/2011 10:00	0.7	1.79	803.2
12/29/2011 11:00	0.7	1.79	803.2
12/29/2011 12:00	0.7	1.79	803.2
12/29/2011 13:00	0.7	1.79	803.2
12/29/2011 14:00	0.7	1.79	803.2
12/29/2011 15:00	0.7	1.79	803.2
12/29/2011 16:00	0.7	1.79	803.2
12/29/2011 17:00	0.7	1.79	803.2
12/29/2011 18:00	0.7	1.79	803.2
12/29/2011 19:00	0.7	1.79	803.2
12/29/2011 20:00	0.7	1.79	803.2
12/29/2011 21:00	0.7	1.79	803.2
12/29/2011 22:00	0.7	1.79	803.2
12/29/2011 23:00	0.7	1.79	803.2
12/30/2011 0:00	0.7	1.79	803.2
12/30/2011 1:00	0.7	1.79	803.2
12/30/2011 2:00	0.7	1.79	803.2
12/30/2011 3:00	0.7	1.79	803.2
12/30/2011 4:00	0.7	1.79	803.2
12/30/2011 5:00	0.7	1.79	803.2
12/30/2011 6:00	0.7	1.79	803.2
12/30/2011 7:00	0.7	1.79	803.2
12/30/2011 8:00	0.7	1.79	803.2
12/30/2011 9:00	0.7	1.79	803.2
12/30/2011 10:00	0.7	1.79	803.2
12/30/2011 11:00	0.7	1.79	803.2
12/30/2011 12:00	0.7	1.79	803.2
12/30/2011 13:00	0.7	1.79	803.2
12/30/2011 14:00	0.7	1.79	803.2

12/30/2011 15:00	0.7	1.79	803.2
12/30/2011 16:00	0.7	1.79	803.2
12/30/2011 17:00	0.7	1.79	803.2
12/30/2011 18:00	0.7	1.79	803.2
12/30/2011 19:00	0.7	1.79	803.2
12/30/2011 20:00	0.7	1.79	803.2
12/30/2011 21:00	0.7	1.79	803.2
12/30/2011 22:00	0.7	1.79	803.2
12/30/2011 23:00	0.7	1.79	803.2
12/31/2011 0:00	0.7	1.79	803.2
12/31/2011 1:00	0.7	1.79	803.2
12/31/2011 2:00	0.7	1.79	803.2
12/31/2011 3:00	0.7	1.79	803.2
12/31/2011 4:00	0.7	1.79	803.2
12/31/2011 5:00	0.7	1.79	803.2
12/31/2011 6:00	0.7	1.79	803.2
12/31/2011 7:00	0.7	1.79	803.2
12/31/2011 8:00	0.7	1.79	803.2
12/31/2011 9:00	0.7	1.79	803.2
12/31/2011 10:00	0.7	1.79	803.2
12/31/2011 11:00	0.7	1.79	803.2
12/31/2011 12:00	0.7	1.79	803.2
12/31/2011 13:00	0.7	1.79	803.2
12/31/2011 14:00	0.7	1.79	803.2
12/31/2011 15:00	0.7	1.79	803.2
12/31/2011 16:00	0.7	1.79	803.2
12/31/2011 17:00	0.7	1.79	803.2
12/31/2011 18:00	0.7	1.79	803.2
12/31/2011 19:00	0.7	1.79	803.2
12/31/2011 20:00	0.7	1.79	803.2
12/31/2011 21:00	0.7	1.79	803.2
12/31/2011 22:00	0.7	1.79	803.2
12/31/2011 23:00	0.7	1.79	803.2