1290041

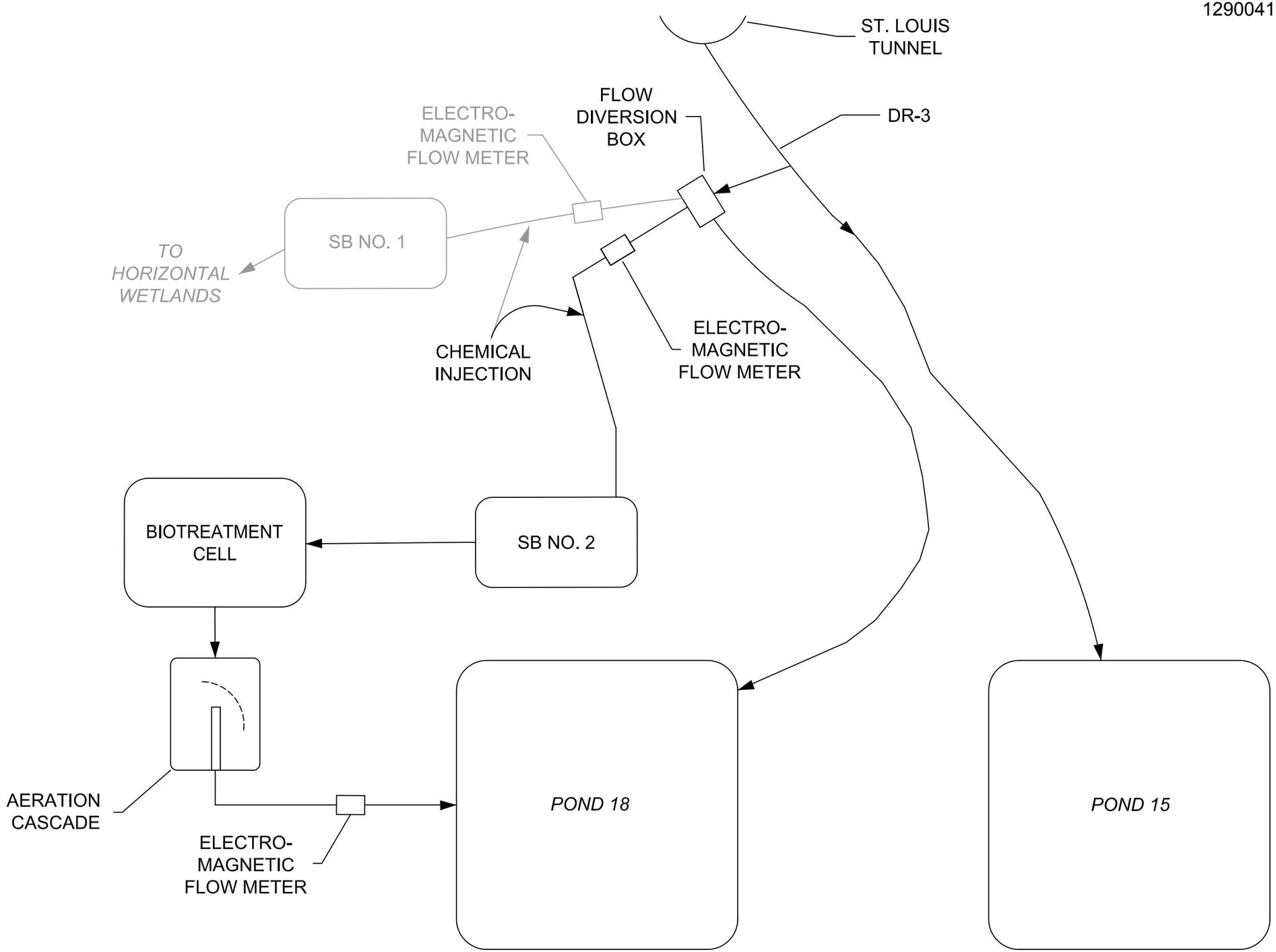

DRAWN BY:	LPCjr
CHECKED:	BRW
REVIEWED:	DD
APPROVED:	BRW
JOB No:	1316
CAD FILE:	V1.dwg

REV	DATE	DESCRIPTION

RESOURCE MANAGEMENT CONSULTANTS
8138 SOUTH STATE ST.
SUITE 2A
MIDVALE, UT 84047
801-255-2626

RICO - ARGENTINE MINE SITE
WETLAND DEMONSTRATION

VWTT PROCESS FLOW DIAGRAM

AEEC
www.americanconsultants.com
3489 W 2100 S, Salt Lake City, UT 84119
801-908-5447 Fax 801-972-2741

DATE:	20 DEC 2013
SCALE:	NTS
SHEET:	01 OF 15

V1

W:\UT\Projects\1316 Rico Vertical Wetland Design\7_Technical\CAD Files\Wetland Design\V1.dwg

LEGEND

FLOW DIRECTION

301 FINAL GRADING POINT

N

5' 0' 5' 10'

FINAL GRADING POINT TABLE				
POINT #	NORTHING	EASTING	ELEV.	DESC.
100	1389013.06	2267887.10	8832.00	INV
101	1389011.98	2267887.43	8832.00	INV
102	1389011.52	2267888.81	8832.00	INV
103	1389012.44	2267890.02	8832.00	INV
104	1389079.79	2267909.03	8832.00	INV
105	1389080.58	2267906.25	8832.00	INV
106	1389093.17	2267897.39	8839.00	TOB
107	1389085.99	2267923.22	8839.00	TOB
108	1389008.76	2267901.44	8839.00	TOB
109	1388999.75	2267885.32	8839.00	TOB
110	1389000.64	2267883.05	8839.00	TOB
111	1389016.79	2267875.66	8839.00	TOB

NOTES:

1. 37,000 GALLON CAPACITY FOR ~20 HOUR RETENTION TIME.
2. SEE HYDRAULIC PROFILE FOR ELEVATIONS OF PIPES, INLET STRUCTURES, AND OUTLET STRUCTURES.
3. SEE CROSS SECTIONS FOR MATRIX MATERIAL.
4. SEE DETAIL 2, SHEET H21 FOR TRENCH DETAIL.
5. 6" SCH 40 PERFORATED PIPE WITH ¾" HOLES AT 90° EVERY 6" EXCEPT FOR TOP OF PIPE.

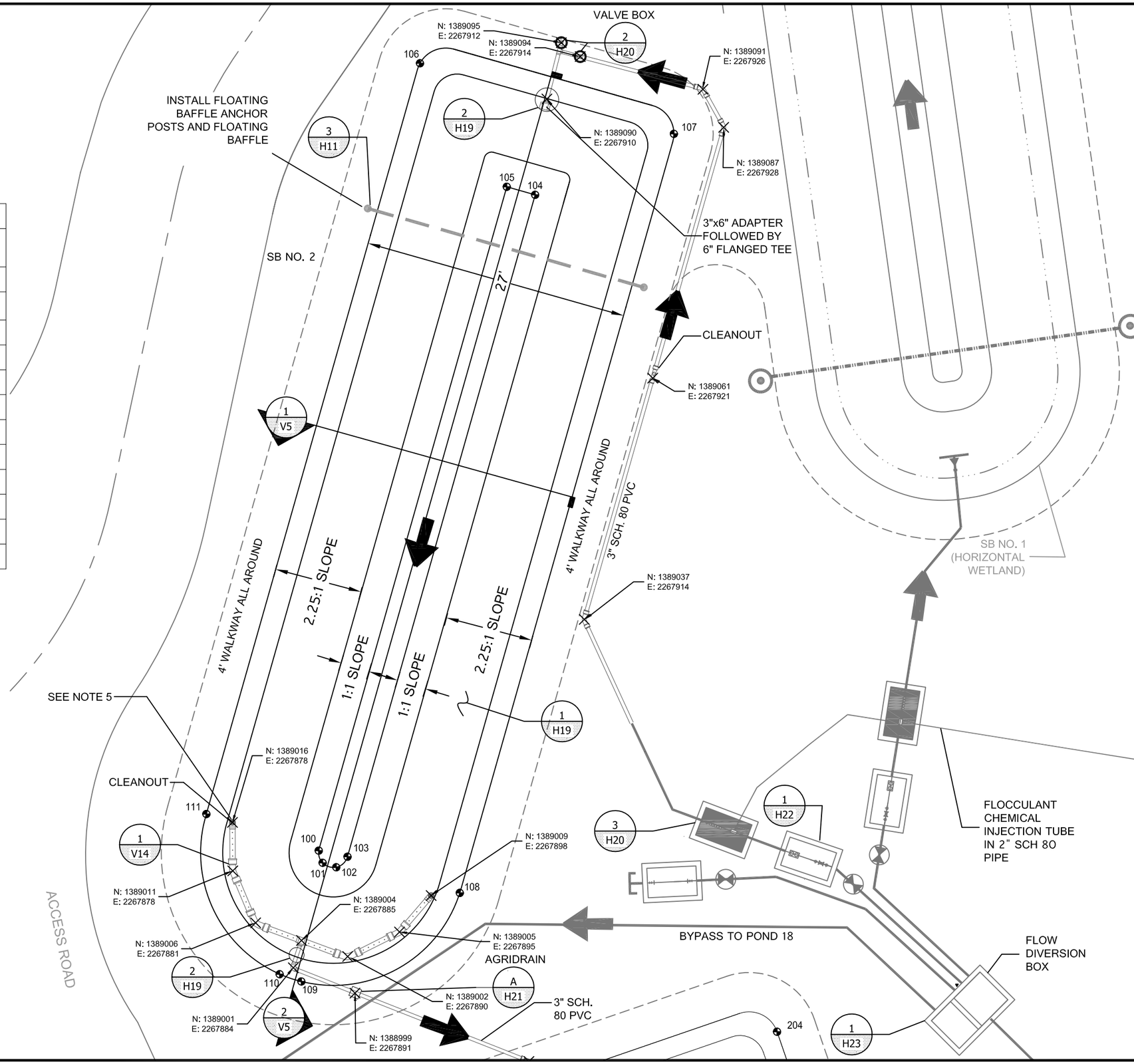

DRAWN BY:	BRW
CHECKED:	KS
REVIEWED:	DD
APPROVED:	BRW
JOB No:	1316
CAD FILE:	V2.dwg

REV	DATE	DESCRIPTION

RESOURCE MANAGEMENT CONSULTANTS
8138 SOUTH STATE ST.
SUITE 2A
MIDVALE, UT 84047
801-255-2626

RICO - ARGENTINE MINE SITE
WETLAND DEMONSTRATION

SB NO. 2 PLAN VIEW

AEEC
www.americanconsultants.com
3489 W 2100 S, Salt Lake City, UT 84119
801-908-5447 Fax 801-972-2741

DATE:	20 DEC 2013
SCALE:	1:10
SHEET:	02 OF 15

V2

W:\UT\Projects\1316 Rico Vertical Wetland Design\7 Technical\CAD Files\Wetland Design\V2.dwg

LEGEND

FLOW DIRECTION

301 FINAL GRADING POINT

FINAL GRADING POINT TABLE				
POINT #	NORTHING	EASTING	ELEV.	DESC.
200	1388927.28	2267917.78	8832.50	BOM
201	1388935.42	2267941.42	8832.50	BOM
202	1388982.22	2267925.30	8832.50	BOM
203	1388974.08	2267901.67	8832.50	BOM
204	1388994.64	2267933.72	8838.50	TOB
205	1388989.50	2267909.58	8838.50	TOB
206	1388978.69	2267887.39	8838.50	TOB
207	1388914.86	2267909.37	8838.50	TOB
208	1388920.00	2267933.51	8838.50	TOB
209	1388930.82	2267955.70	8838.50	TOB

NOTES:

1. TOTAL DEPTH OF BIOTREATMENT CELL IS 6' (1' FREEBOARD, 4' SUBSTRATE, 1' DRAINAGE ROCK). REFER TO SPECIFICATIONS FOR ADDITIONAL DETAILS.
2. SEE HYDRAULIC PROFILE FOR ELEVATIONS OF PIPES, INLET STRUCTURES, AND OUTLET STRUCTURES.
3. SEE CROSS SECTIONS FOR MATRIX MATERIAL.
4. SEE DETAIL 2, SHEET H21 FOR TRENCH DETAIL.
5. 3" SCH 40 PERFORATED PIPE WITH ¾" HOLES AT 90° EVERY 6".
6. SUBSTRATE DETAILS PROVIDED IN SPECIFICATIONS.
7. BIOTREATMENT CELL INFLUENT/EFFLUENT ACCOMPLISHED THROUGH HEADER CONNECTED TO 3" PERFORATED SCH 40 PVC PLACED AT 5' CENTERS ACROSS TOP AND BOTTOM.
8. REFER TO HYDRAULIC PROFILE FOR ELEVATIONS OF PIPING AND INLET/OUTLET STRUCTURES.

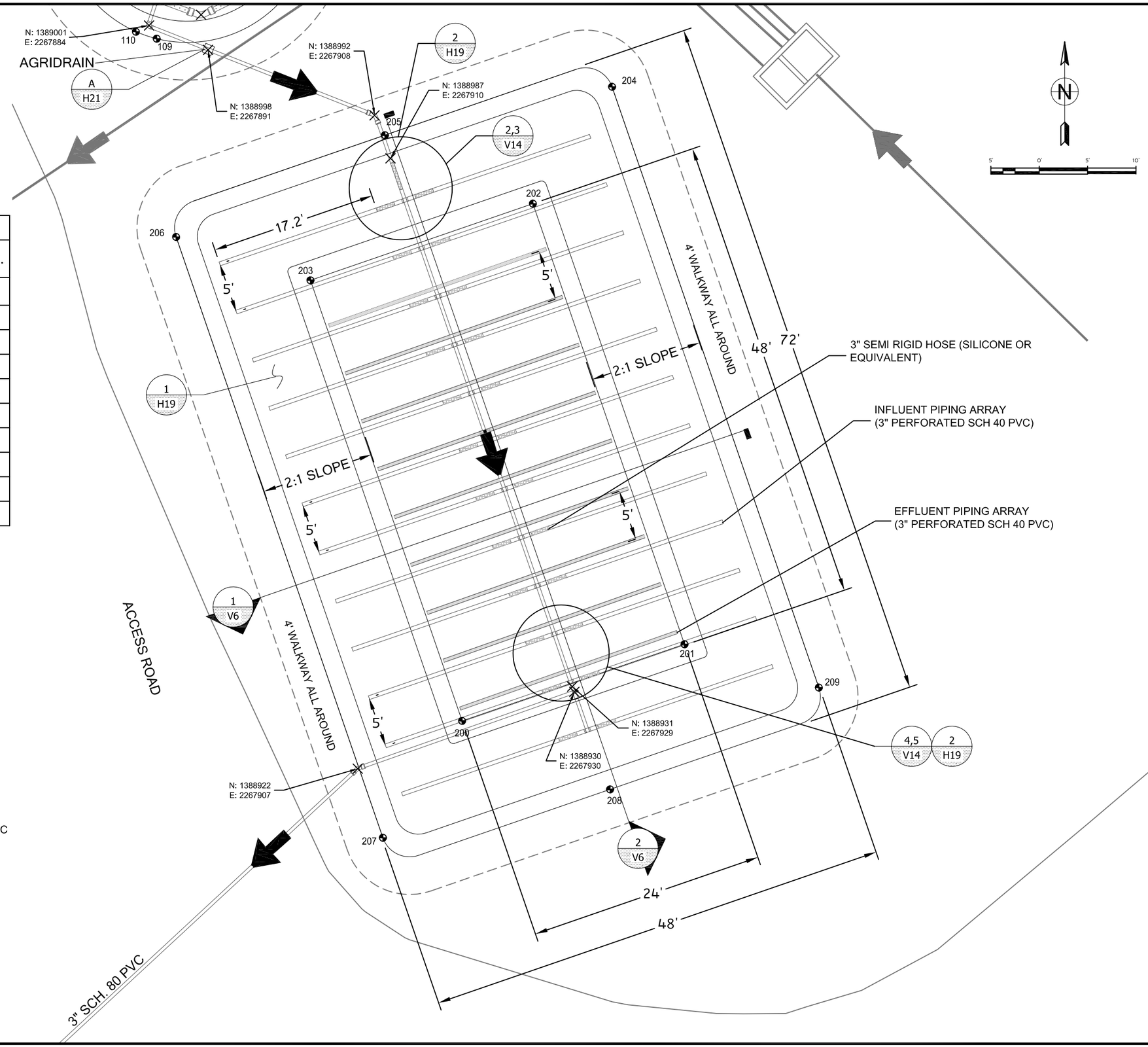

DRAWN BY:	BRW
CHECKED:	KS
REVIEWED:	DD
APPROVED:	BRW
JOB No:	1316
CAD FILE:	V3.dwg

REV	DATE	DESCRIPTION

RESOURCE MANAGEMENT CONSULTANTS
8138 SOUTH STATE ST.
SUITE 2A
MIDVALE, UT 84047
801-255-2626

RICO - ARGENTINE MINE SITE
WETLAND DEMONSTRATION

BIOTREATMENT CELL PLAN VIEW

AEC
www.americanconsultants.com
3489 W 2100 S, Salt Lake City, UT 84119
801-908-5447 Fax 801-972-2741

DATE:	20 DEC 2013
SCALE:	1:10
SHEET:	03 OF 15

V3

W:\UT\Projects\1316 Rico Vertical Wetland Design\7. Technical\CAD Files\Wetland Design\V3.dwg

LEGEND

FLOW DIRECTION

301 FINAL GRADING POINT

FINAL GRADING POINT TABLE				
POINT #	NORTHING	EASTING	ELEV.	DESC.
300	1388868.76	2267855.08	8834.00	INV
301	1388868.20	2267857.00	8834.00	INV
302	1388858.45	2267852.97	8833.50	INV
303	1388859.22	2267852.16	8832.50	INV
304	1388858.64	2267854.07	8832.50	INV
305	1388848.89	2267850.05	8832.00	INV
306	1388849.66	2267849.24	8831.00	INV
307	1388849.07	2267851.15	8831.00	INV
308	1388839.32	2267847.12	8830.50	INV
309	1388840.09	2267846.31	8829.50	INV
310	1388839.51	2267848.23	8829.50	INV
311	1388829.76	2267844.20	8828.50	INV
312	1388830.53	2267843.39	8828.00	INV
313	1388829.95	2267845.30	8828.00	INV
314	1388820.97	2267840.47	8828.00	INV
315	1388820.38	2267842.38	8828.00	INV

NOTES:

1. THE AERATION CASCADE IS COMPRISED OF FIVE PRE-FABRICATED HDPE TROUGHS W/ PERF. DIVIDER.
2. DOWNSTREAM HALF OF EACH TROUGH TO BE FILLED WITH 2-4" ANGULAR INERT ROCK.
3. REFER TO HYDRAULIC PROFILE FOR ELEVATIONS OF PIPING AND INLET/OUTLET STRUCTURES.
4. SEE HYDRAULIC PROFILE FOR ELEVATIONS OF PIPES, INLET STRUCTURES, AND OUTLET STRUCTURES.
5. SEE CROSS SECTIONS FOR MATRIX MATERIAL.
6. SEE DETAIL 2, SHEET H21 FOR TRENCH DETAIL.
7. INSTALL TIMBERED STEPS AS NECESSARY.
8. GRADING AND DRAINAGE SHOWN AS SHEET G9.

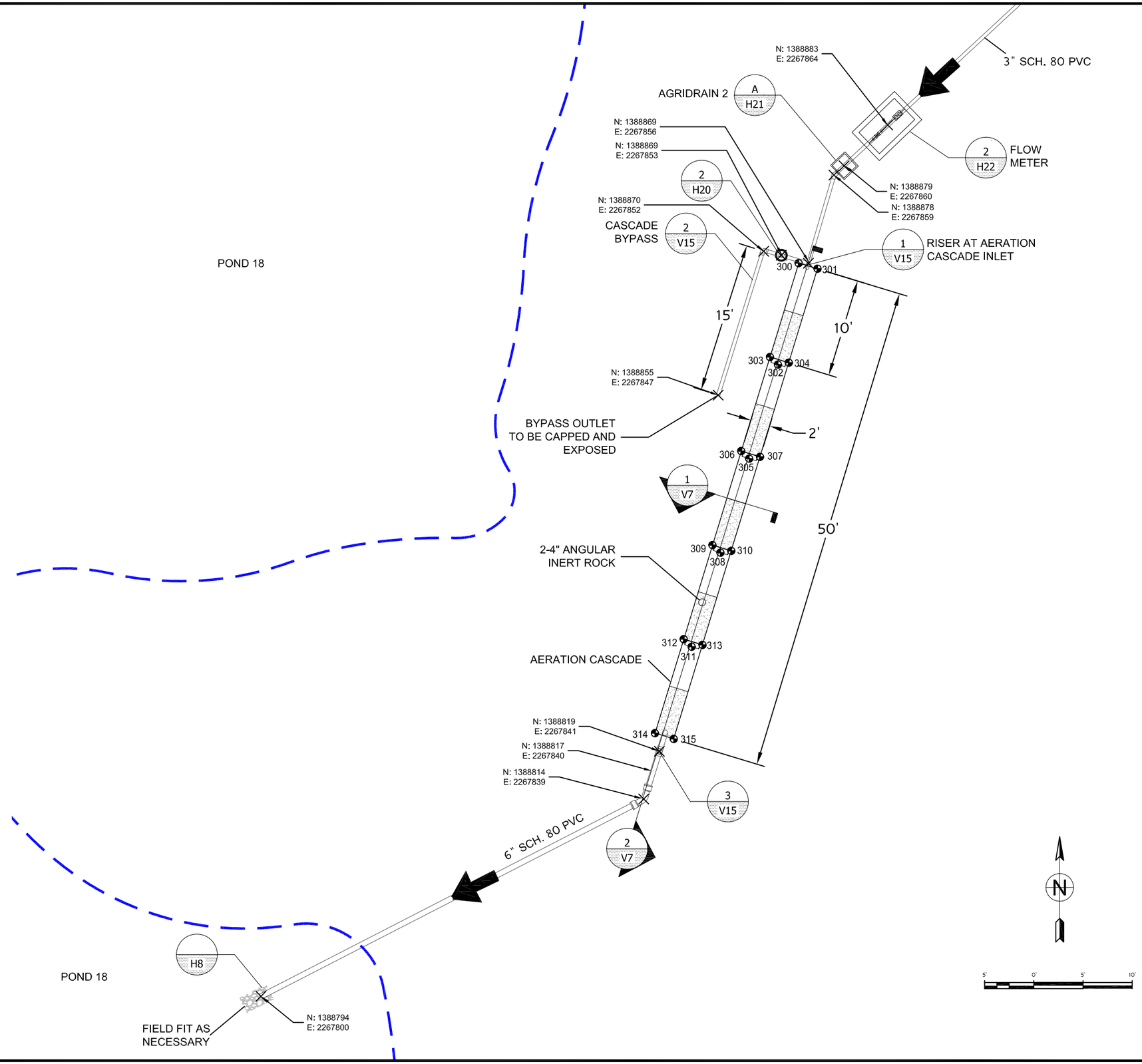

DRAWN BY:	BRW
CHECKED:	KS
REVIEWED:	DD
APPROVED:	BRW
JOB No:	1316
CAD FILE:	V4.dwg

REV	DATE	DESCRIPTION

RESOURCE MANAGEMENT CONSULTANTS
8138 SOUTH STATE ST.
SUITE 2A
MIDVALE, UT 84047
801-255-2626

RICO - ARGENTINE MINE SITE
WETLAND DEMONSTRATION

AERATION CASCADE PLAN VIEW

AEEC
www.americanconsultants.com
3489 W 2100 S, Salt Lake City, UT 84119
801-908-5447 Fax 801-972-2741

DATE:	20 DEC 2013
SCALE:	1:10
SHEET:	04 OF 15

V4

W:\UT\Projects\1316 Rico Vertical Wetland Design\7. Technical\CAD Files\Wetland Design\V4.dwg

NOTES:

1. 37,000 GALLON CAPACITY FOR ~20 HOUR RETENTION TIME.
2. REFER TO HYDRAULIC PROFILE FOR ELEVATIONS OF PIPING AND INLET/OUTLET STRUCTURES.
3. LINER AND PIPE PENETRATION DETAILS PROVIDED ON SHEET H19.
4. 6" SCH 40 PERFORATED PIPE WITH ¾" HOLES AT 90° EVERY 6".
5. STRUCTURAL BACKFILL PROVIDED IN SPECIFICATIONS.

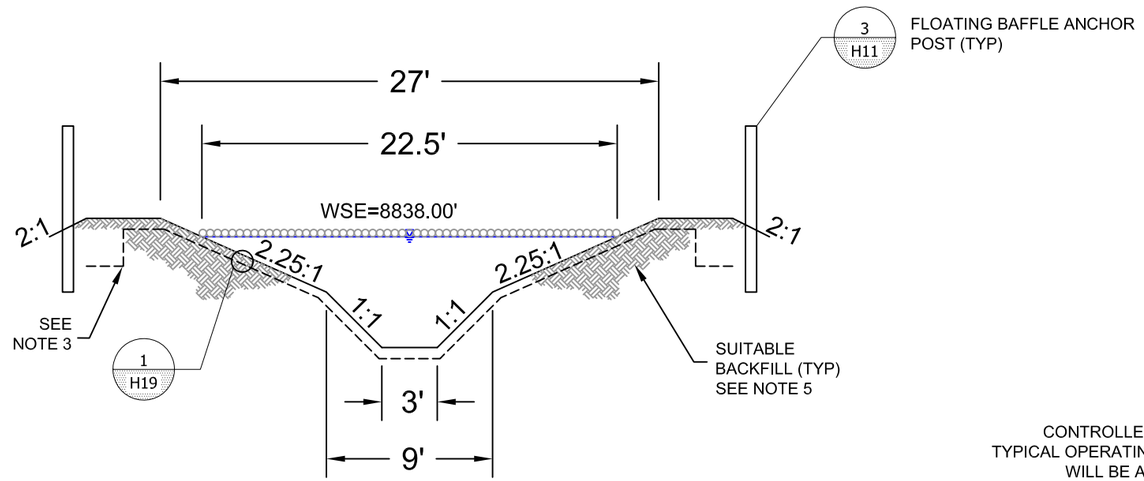

1 V2 SB NO. 2 TYPICAL CROSS SECTION

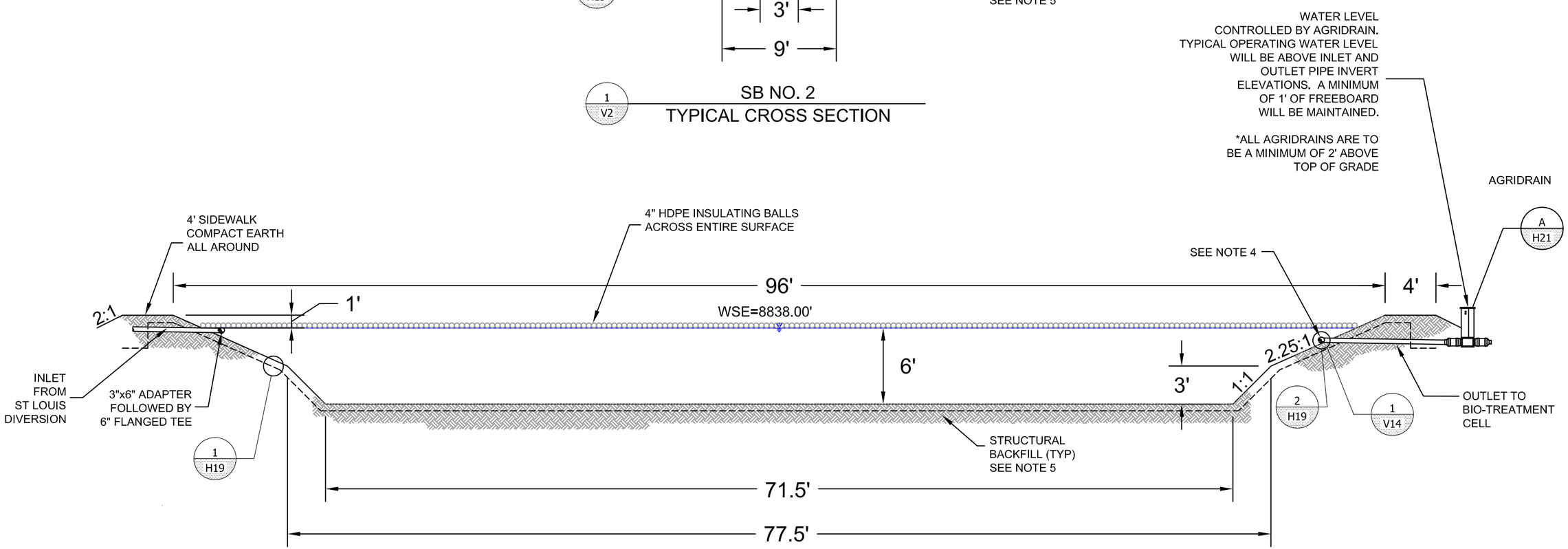

2 V2 SB NO. 2 TYPICAL PROFILE SECTION

DRAWN BY:	LPCjr
CHECKED:	BRW
REVIEWED:	DD
APPROVED:	BRW
JOB No:	1316
CAD FILE:	V5.dwg

REV	DATE	DESCRIPTION

RESOURCE MANAGEMENT CONSULTANTS
8138 SOUTH STATE ST.
SUITE 2A
MIDVALE, UT 84047
801-255-2626

RICO - ARGENTINE MINE SITE
WETLAND DEMONSTRATION

SB NO. 2 SECTIONS

AEEC
www.americanconsultants.com
3489 W 2100 S, Salt Lake City, UT 84119
801-908-5447 Fax 801-972-2741

DATE:	20 DEC 2013
SCALE:	1:6
SHEET:	05 OF 15

V5

W:\UT\Projects\1316 Rico Vertical Wetland Design\7_Technical\CAD Files\Wetland Design\V5.dwg

NOTES:

1. TOTAL DEPTH OF BIOTREATMENT CELL IS 6' (1' FREEBOARD, 4' SUBSTRATE, 1' DRAINAGE ROCK).
2. REFER TO HYDRAULIC PROFILE FOR ELEVATIONS OF PIPING AND INLET/OUTLET STRUCTURES.
3. LINER DETAILS SHOWN ON SHEET H19.
4. STRUCTURAL BACKFILL DETAILS PROVIDED IN SPECIFICATIONS.
5. REFER TO SPECIFICATIONS FOR BACKFILL COMPACTION AND MATERIALS.
6. 1.5-INCH WASHED ANGULAR LIMESTONE (DETAILS PROVIDED IN SPECIFICATIONS).

VWTT BIOTREATMENT CELL MATRIX

Material	% by Volume
>1" Wood Chips	65%
0.5" Wood Shavings	25%
Manure	5%
Hay	5%

1 / V3 BIOTREATMENT CELL TYPICAL CROSS SECTION

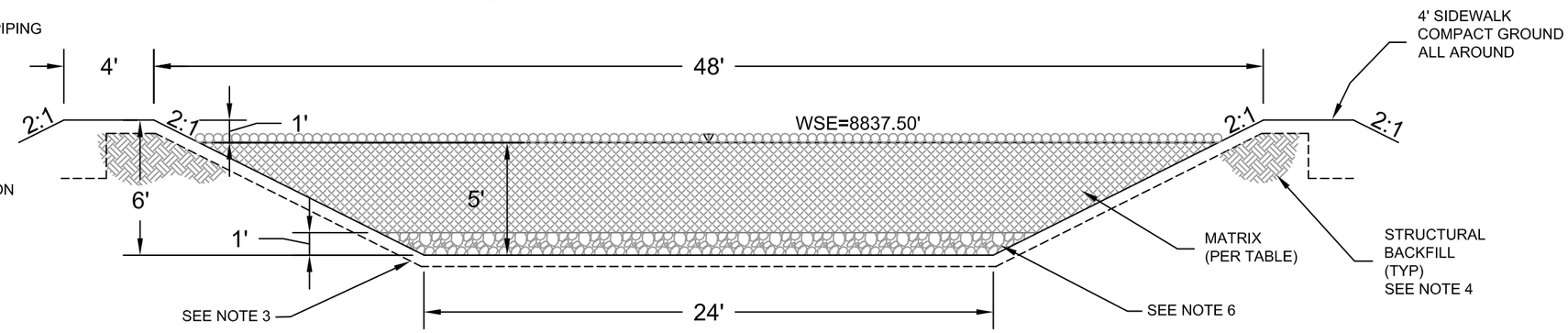

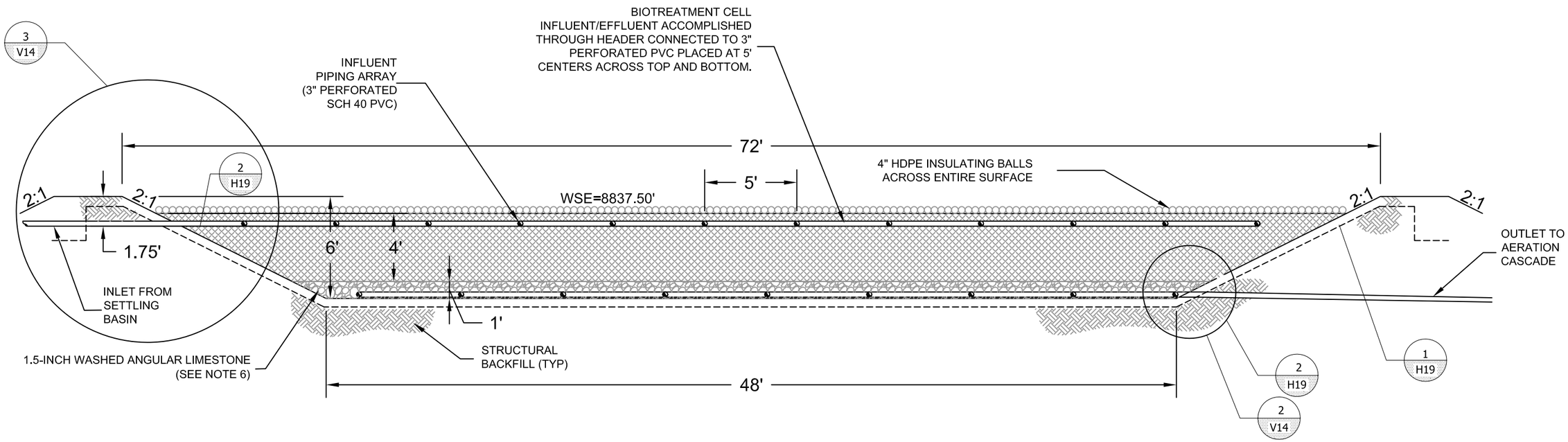

2 / V3 BIOTREATMENT CELL TYPICAL PROFILE SECTION

DRAWN BY:	LPCjr
CHECKED:	BRW
REVIEWED:	DD
APPROVED:	BRW
JOB No:	1316
CAD FILE:	V6.dwg

DESCRIPTION

REV | DATE

RESOURCE MANAGEMENT CONSULTANTS
8138 SOUTH STATE ST.
SUITE 2A
MIDVALE, UT 84047
801-255-2626

RICO - ARGENTINE MINE SITE
WETLAND DEMONSTRATION

BIOTREATMENT CELL SECTIONS

AEC
www.americanconsultants.com
3489 W 2100 S, Salt Lake City, UT 84119
801-908-5447 Fax 801-972-2741

DATE:	20 DEC 2013
SCALE:	1:6
SHEET:	06 OF 15

V6

W:\UT\Projects\1316 Rico Vertical Wetland Design\7_Technical\CAD Files\Wetland Design\V6.dwg

NOTES:

1. HDPE TROUGHS TO BE CONSTRUCTED BY OTHERS AND ARRANGED ONSITE BY CONTRACTOR.
2. DOWNSTREAM HALF OF EACH TROUGH TO BE FILLED WITH 2-4" ANGULAR INERT ROCK.
3. SEE SPECIFICATIONS FOR GRADATION.
4. REFER TO HYDRAULIC PROFILE FOR ELEVATION.
5. HDPE TROUGHS TO BE LEAK TESTED PRIOR TO INSTALLATION.

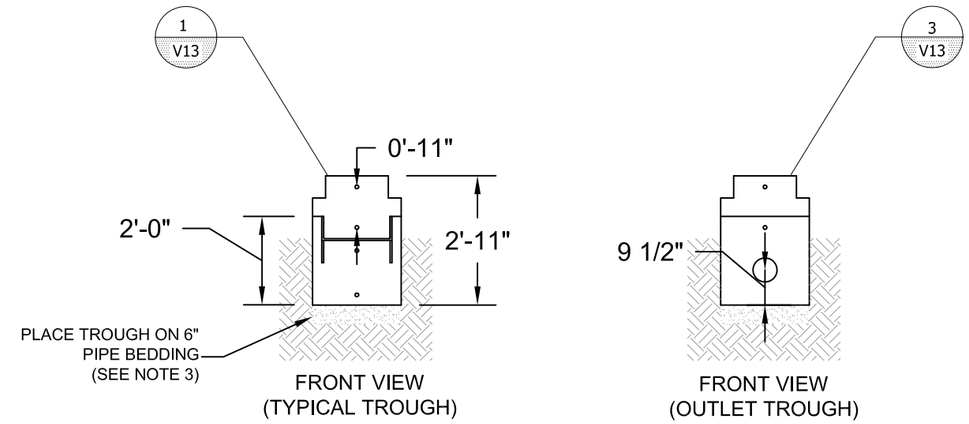

4 V4 HDPE AERATION CASCADE TROUGH
TYPICAL CROSS SECTION

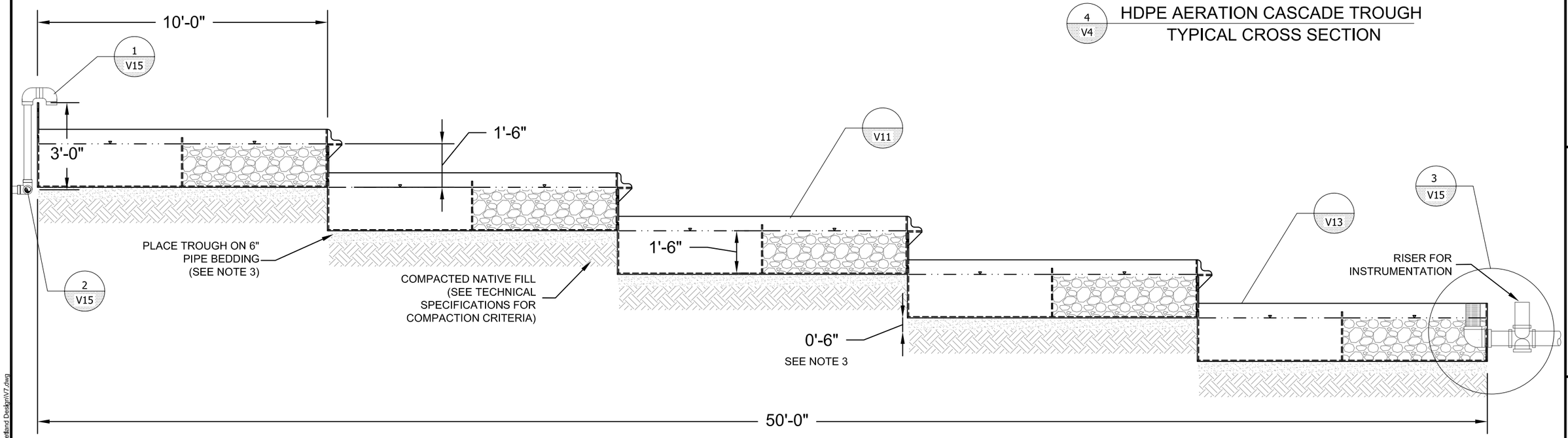

2 V4 HDPE AERATION CASCADE TROUGH
TYPICAL PROFILE SECTION

DRAWN BY:	LPCjr
CHECKED:	BRW
REVIEWED:	DD
APPROVED:	BRW
JOB No:	1316
CAD FILE:	V7.dwg

REV	DATE	DESCRIPTION

RESOURCE MANAGEMENT CONSULTANTS
8138 SOUTH STATE ST.
SUITE 2A
MIDVALE, UT 84047
801-255-2626

RICO - ARGENTINE MINE SITE
WETLAND DEMONSTRATION

AERATION CASCADE SECTIONS

AEEC
www.americanconsultants.com
3489 W 2100 S, Salt Lake City, UT 84119
801-908-5447 Fax 801-972-2741

DATE:	20 DEC 2013
SCALE:	1:4
SHEET:	07 OF 15

V7

W:\UT\Projects\1316 Rico Vertical Wetland Design\7_Technical\CAD Files\Wetland Design\V7.dwg

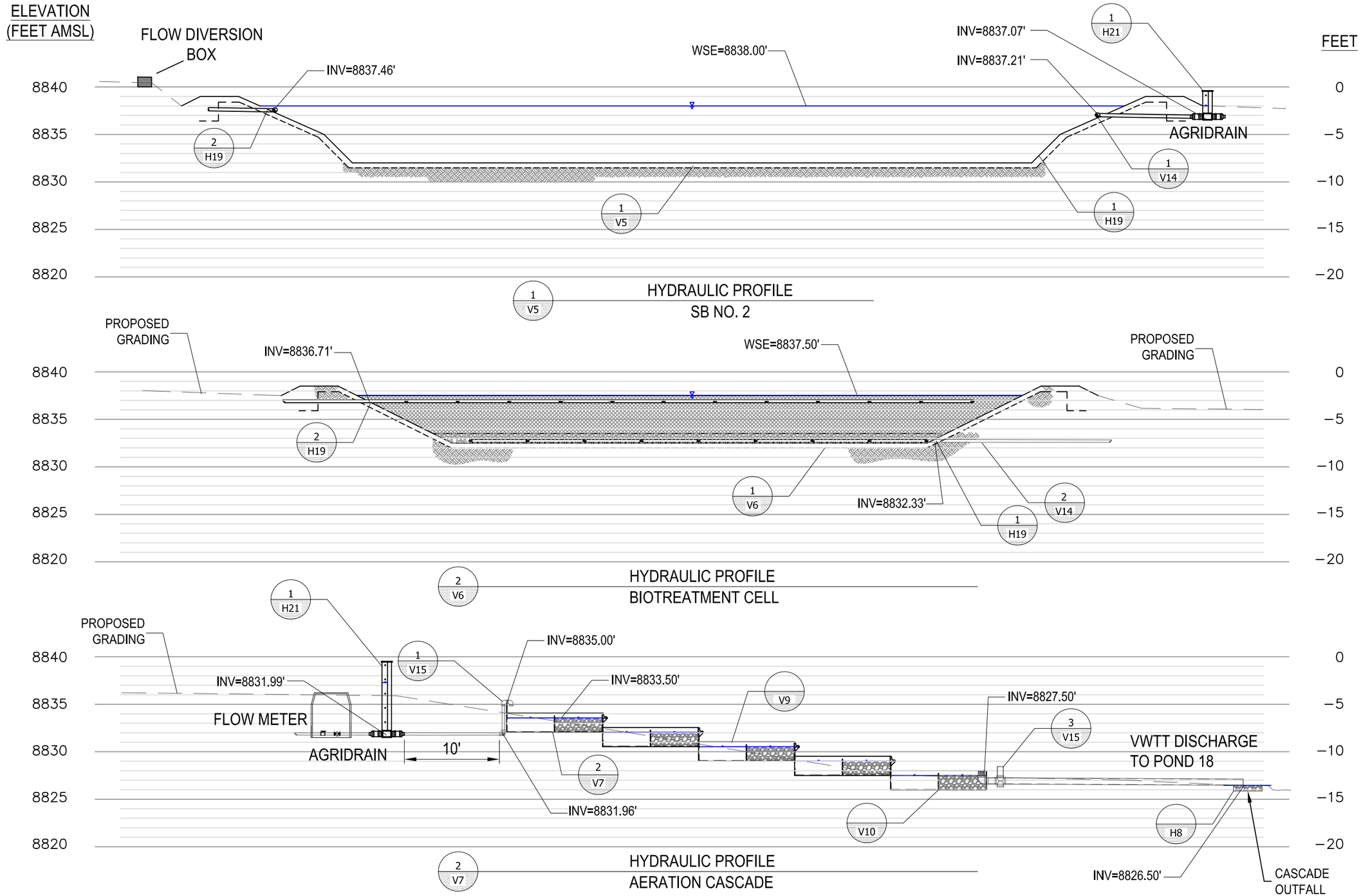

DRAWN BY:	BRW
CHECKED:	KS
REVIEWED:	DD
APPROVED:	BRW
JOB No:	1316
CAD FILE:	V8.dwg

REV	DATE	DESCRIPTION

RESOURCE MANAGEMENT CONSULTANTS
8138 SOUTH STATE ST.
SUITE 2A
MIDVALE, UT 84047
801-255-2626

RICO - ARGENTINE MINE SITE
WETLAND DEMONSTRATION

HYDRAULIC PROFILE

AEEC
www.americanconsultants.com
3489 W 2100 S, Salt Lake City, UT 84119
801-908-5447 Fax 801-972-2741

DATE:	20 DEC 2013
SCALE:	AS SHOWN
SHEET:	8 OF 15

V8

W:\UT\Projects\1316 Rico Vertical Wetland Design\7_Technical\CAD Files\Wetland Design\V8.dwg

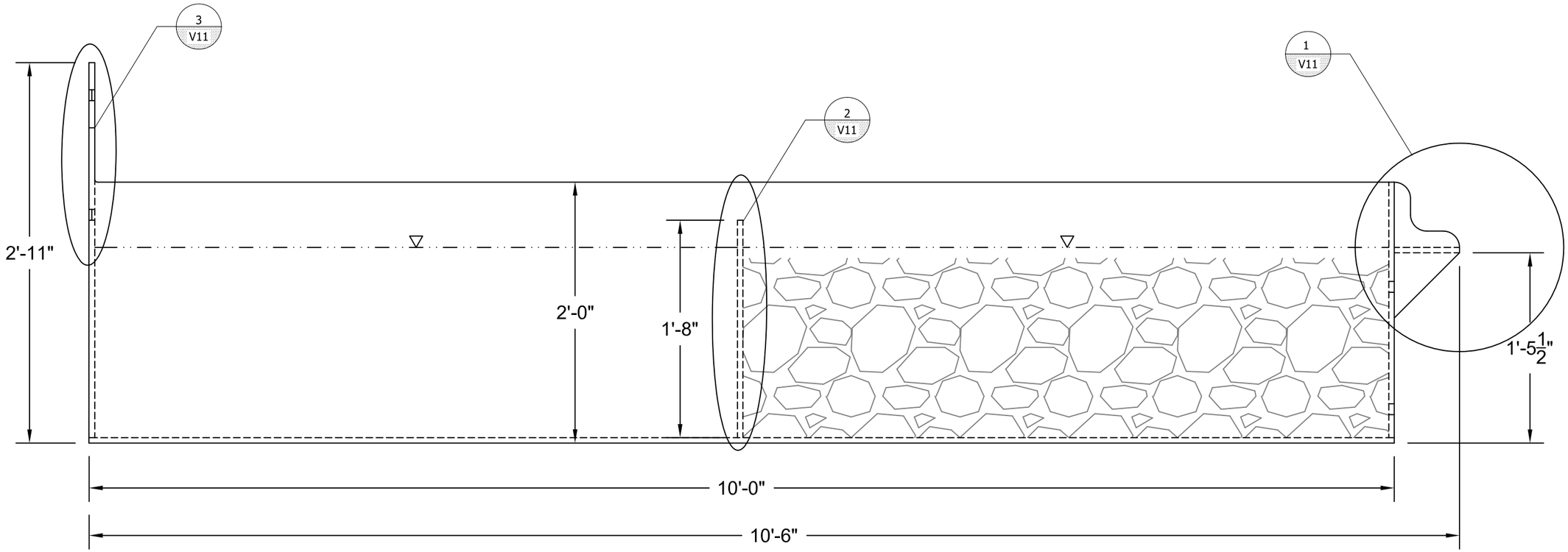

HDPE AERATION TROUGH
TYPICAL RIGHT SIDE DETAIL

NOTES:

1. HDPE TROUGHS TO BE FABRICATED BY OTHERS AND ASSEMBLED ONSITE BY CONTRACTOR.
2. DOWNSTREAM HALF OF EACH TROUGH TO BE FILLED WITH 2-4" ANGULAR INERT ROCK. DETAILS PROVIDED IN SPECIFICATION.

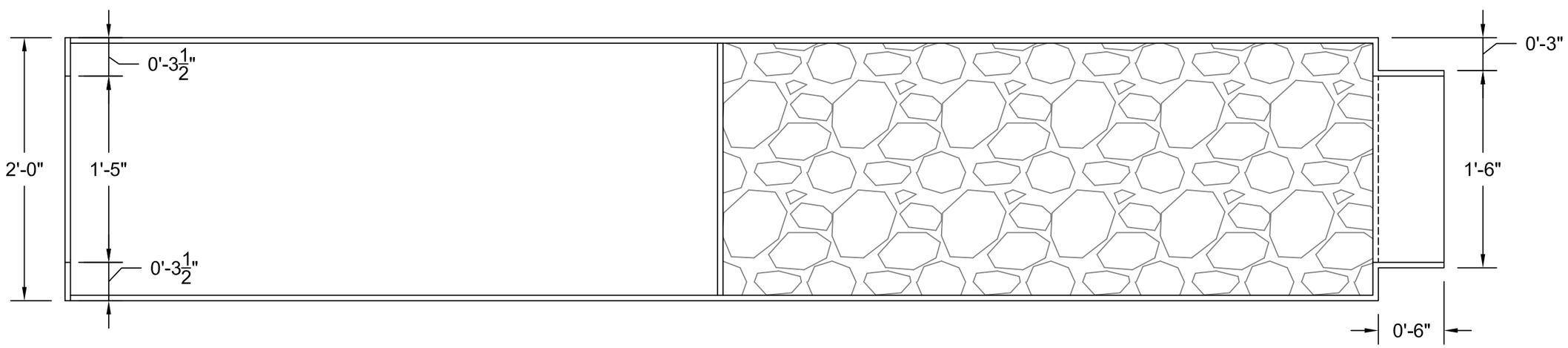

HDPE AERATION TROUGH
TYPICAL TOP DETAIL

DRAWN BY:	LPCjr
CHECKED:	BRW
REVIEWED:	DD
APPROVED:	BRW
JOB No:	1316
CAD FILE:	V9.dwg

REV	DATE	DESCRIPTION

RESOURCE MANAGEMENT CONSULTANTS
8138 SOUTH STATE ST.
SUITE 2A
MIDVALE, UT 84047
801-255-2626

RICO - ARGENTINE MINE SITE
WETLAND DEMONSTRATION

SECTIONS AND DETAILS (1 OF 7)

AEEC
www.americanconsultants.com
3489 W 2100 S, Salt Lake City, UT 84119
801-908-5447 Fax 801-972-2741

DATE:	20 DEC 2013
SCALE:	1:1
SHEET:	11 OF 15

V9

W:\UT\Projects\1316 Rico Vertical Wetland Design\7_Technical\CAD Files\Wetland Design\V9.dwg

NOTES:

1. HDPE TROUGHS TO BE FABRICATED BY OTHERS AND ASSEMBLED ONSITE BY CONTRACTOR.
2. DOWNSTREAM HALF OF EACH TROUGH TO BE FILLED WITH 3" WASHED ANGULAR LIMESTONE. DETAILS PROVIDED IN SPECIFICATION.
3. WELL SCREEN TO BE SCH 40 PVC WITH SLOTS OF 0.040 INCHES.

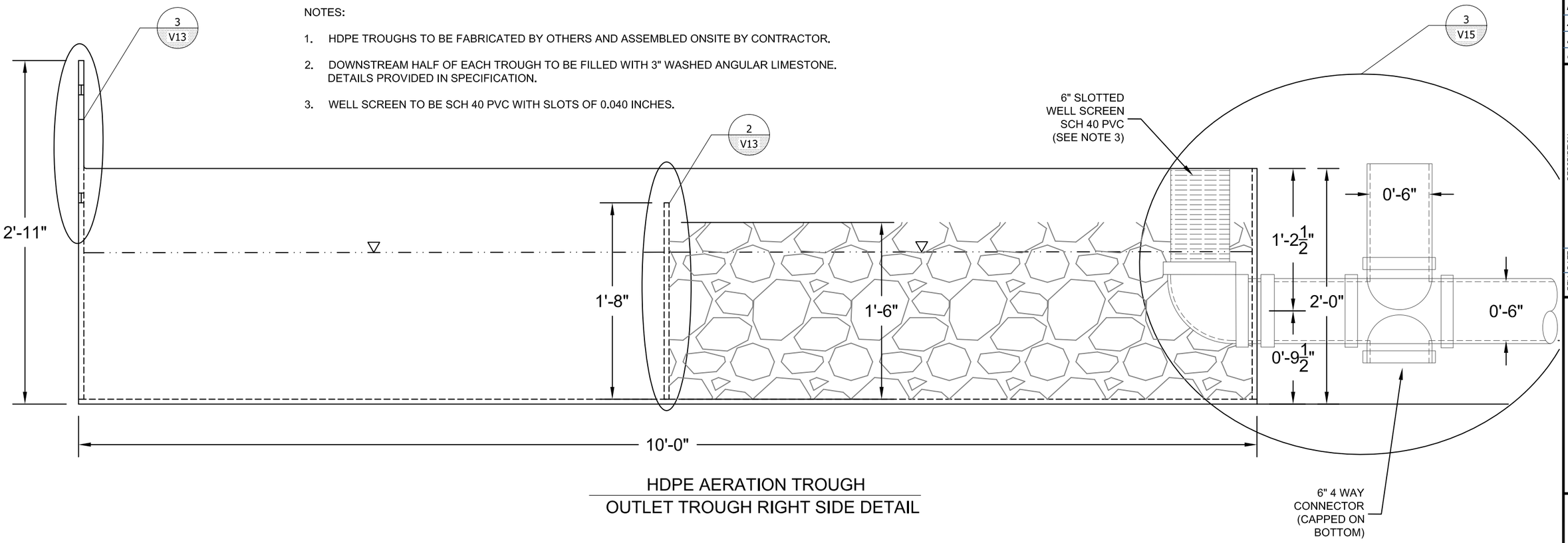

HDPE AERATION TROUGH
OUTLET TROUGH RIGHT SIDE DETAIL

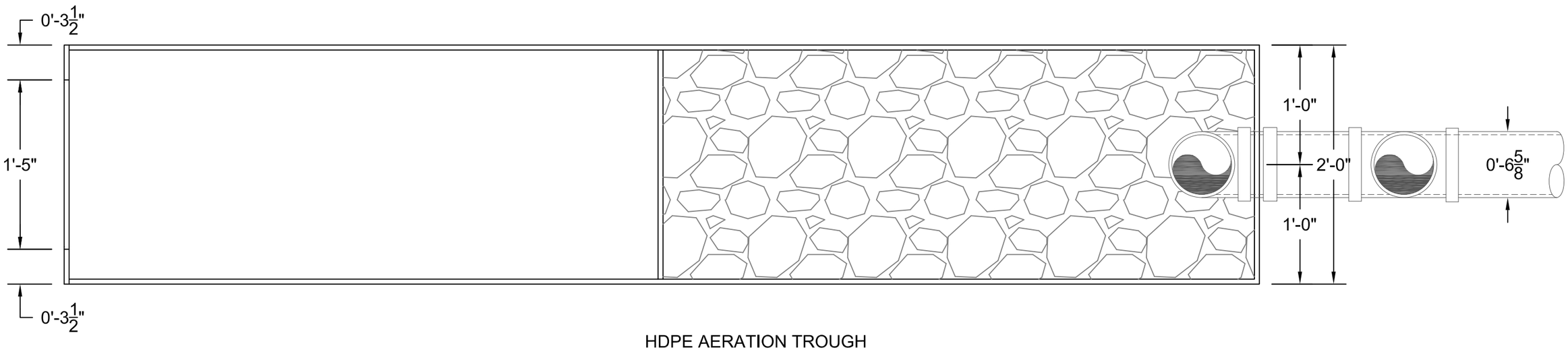

HDPE AERATION TROUGH
OUTLET TROUGH TOP DETAIL

DRAWN BY:	LPCjr
CHECKED:	BRW
REVIEWED:	DD
APPROVED:	BRW
JOB No:	1316
CAD FILE:	V10.dwg

REV	DATE	DESCRIPTION

RESOURCE MANAGEMENT CONSULTANTS
8138 SOUTH STATE ST.
SUITE 2A
MIDVALE, UT 84047
801-255-2626

RICO - ARGENTINE MINE SITE
WETLAND DEMONSTRATION

SECTIONS AND DETAILS (2 OF 7)

AEC
www.americanconsultants.com
3489 W 2100 S, Salt Lake City, UT 84119
801-908-5447 Fax 801-972-2741

DATE:	20 DEC 2013
SCALE:	1:1
SHEET:	10 OF 15

V10

W:\UT\Projects\1316 Rico Vertical Wetland Design\7_Technical\CAD Files\Wetland Design\V10.dwg

1 V7

HDPE AERATION TROUGH TYPICAL CROSS SECTION

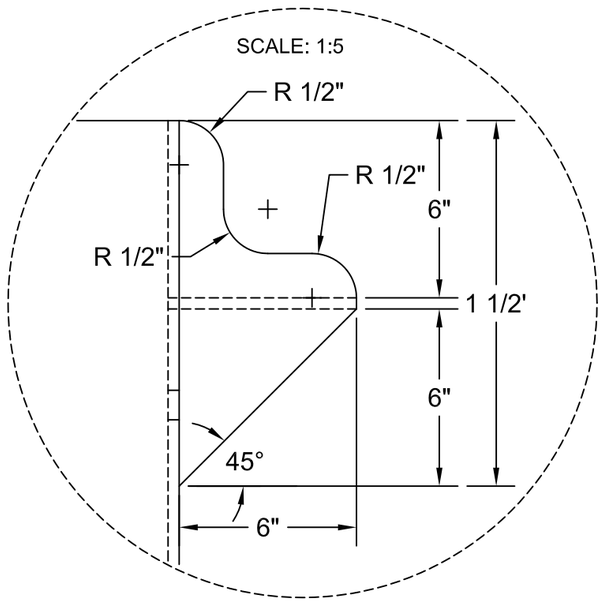

4 V7

HDPE AERATION TROUGH TYPICAL CROSS SECTION

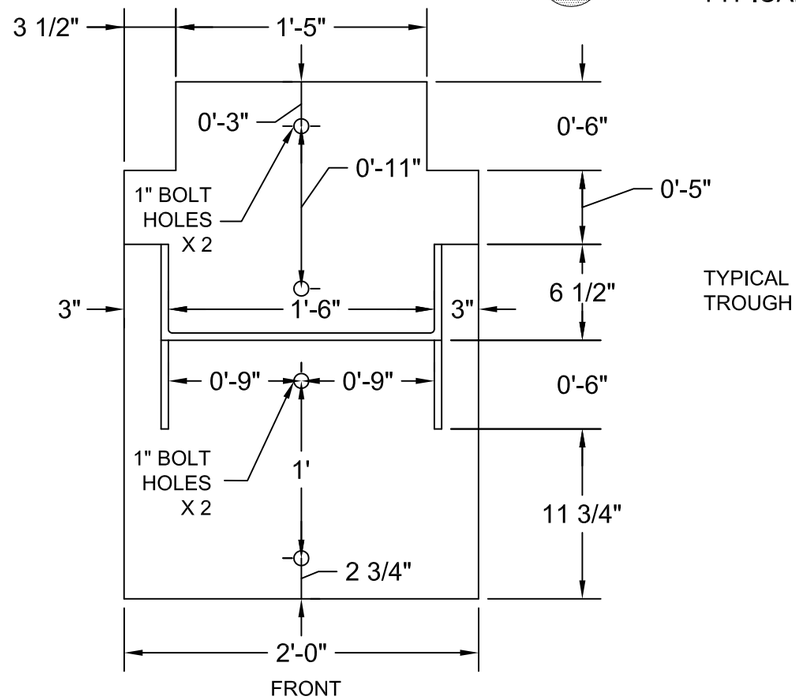

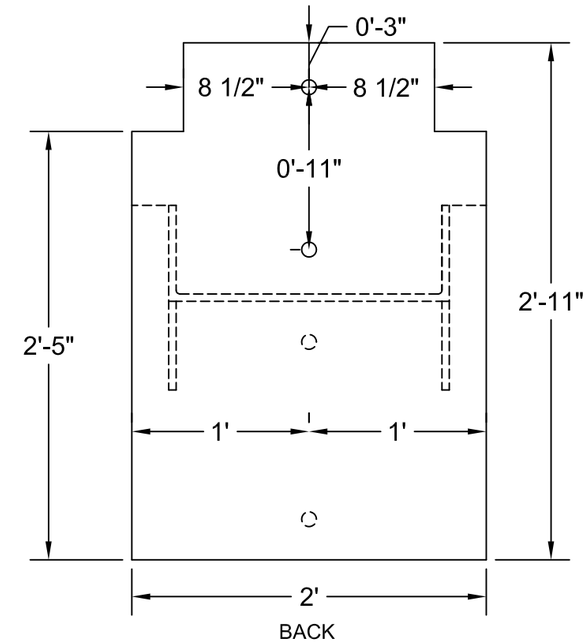

2 V7

HDPE AERATION TROUGH TROUGH DIVIDER DETAIL

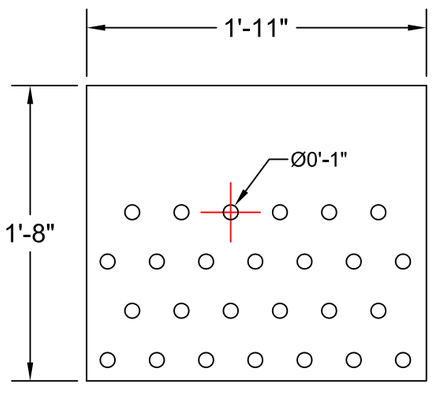

3 V7

HDPE AERATION TROUGH OUTLET TROUGH DETAIL

RIGHT SIDE VIEW OF FRONT HALF OF OUTLET TROUGH

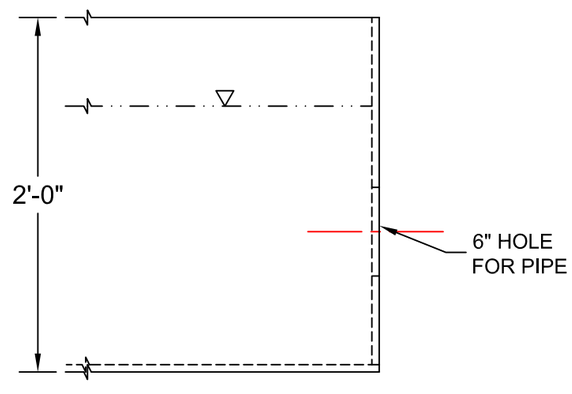

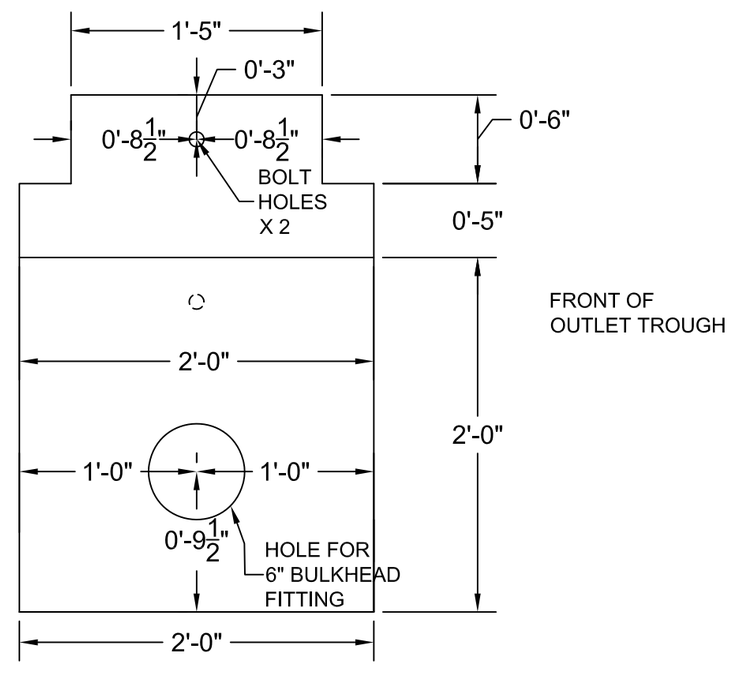

DRAWN BY:	LPCjr
CHECKED:	BRW
REVIEWED:	DD
APPROVED:	BRW
JOB No:	1316
CAD FILE:	V11.dwg

REV	DATE	DESCRIPTION

RESOURCE MANAGEMENT CONSULTANTS
8138 SOUTH STATE ST.
SUITE 2A
MIDVALE, UT 84047
801-255-2626

RICO - ARGENTINE MINE SITE
WETLAND DEMONSTRATION

SECTIONS AND DETAILS (3 OF 7)

AEEC
www.americanconsultants.com
3489 W 2100 S, Salt Lake City, UT 84119
801-908-5447 Fax 801-972-2741

DATE:	20 DEC 2013
SCALE:	1:10
SHEET:	11 OF 15

V11

W:\UT\Projects\1316 Rico Vertical Wetland Design\7_Technical\CAD Files\Wetland Design\V11.dwg

1
V11

HDPE AERATION TROUGH
TROUGH ISOMETRIC VIEW

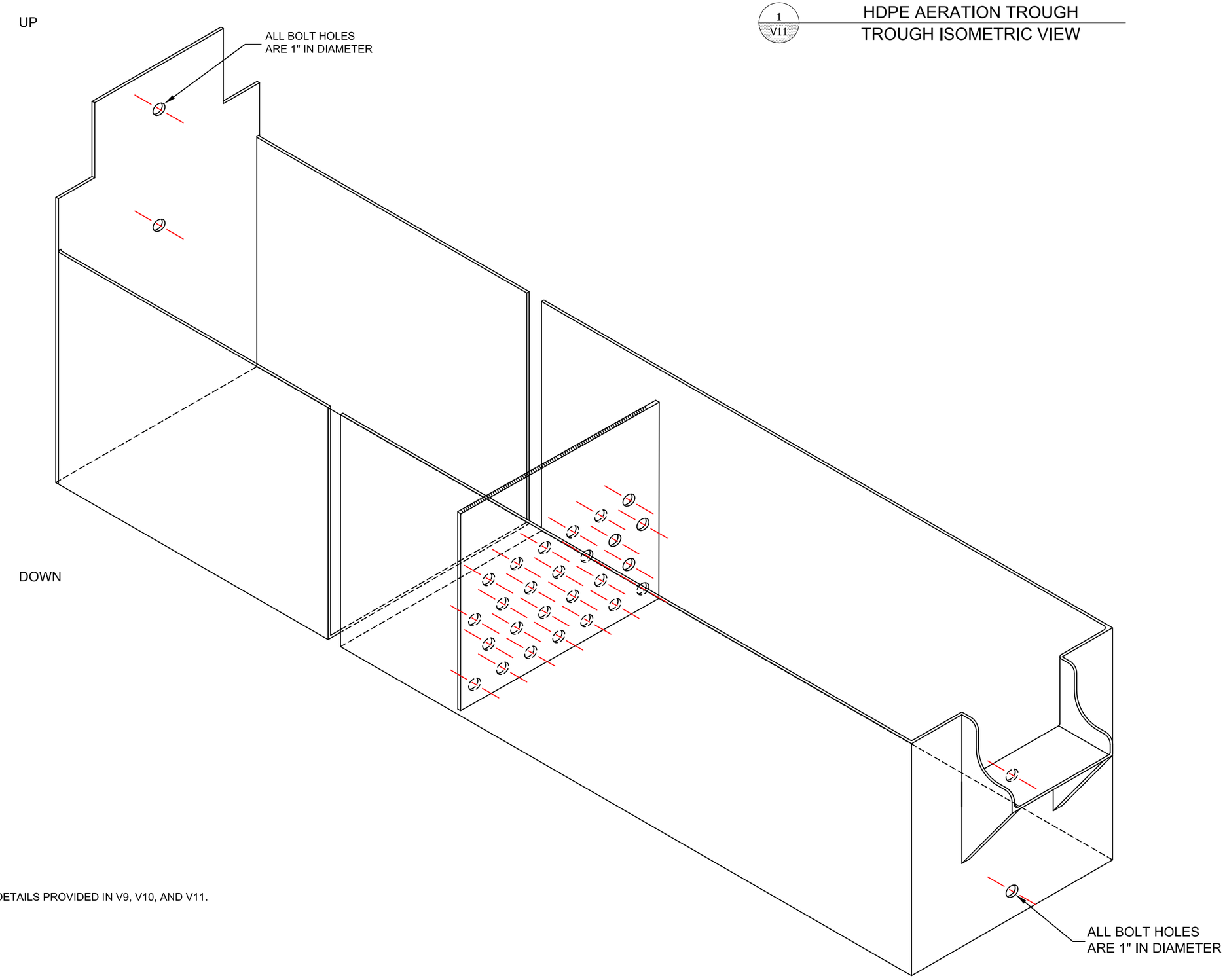

NOTES:

1. HDPE TROUGH DIMENSIONS AND DETAILS PROVIDED IN V9, V10, AND V11.

DRAWN BY:	LPCjr
CHECKED:	BRW
REVIEWED:	DD
APPROVED:	BRW
JOB No:	1316
CAD FILE:	V12.dwg

REV	DATE	DESCRIPTION

RESOURCE MANAGEMENT CONSULTANTS
8138 SOUTH STATE ST.
SUITE 2A
MIDVALE, UT 84047
801-255-2626

RICO - ARGENTINE MINE SITE
WETLAND DEMONSTRATION

SECTIONS AND DETAILS (4 OF 7)

AEEC
www.americanconsultants.com
3489 W 2100 S, Salt Lake City, UT 84119
801-908-5447 Fax 801-972-2741

DATE:	20 DEC 2013
SCALE:	NTS
SHEET:	12 OF 15

V12

W:\UT\Projects\1316 Rico Vertical Wetland Design\7_Technical\CAD Files\Wetland Design\V12.dwg

1
V12

HDPE AERATION TROUGH
OUTLET TROUGH ISOMETRIC VIEW

NOTES:

1. HDPE TROUGH DIMENSIONS AND DETAILS PROVIDED IN V9, V10, AND V11.

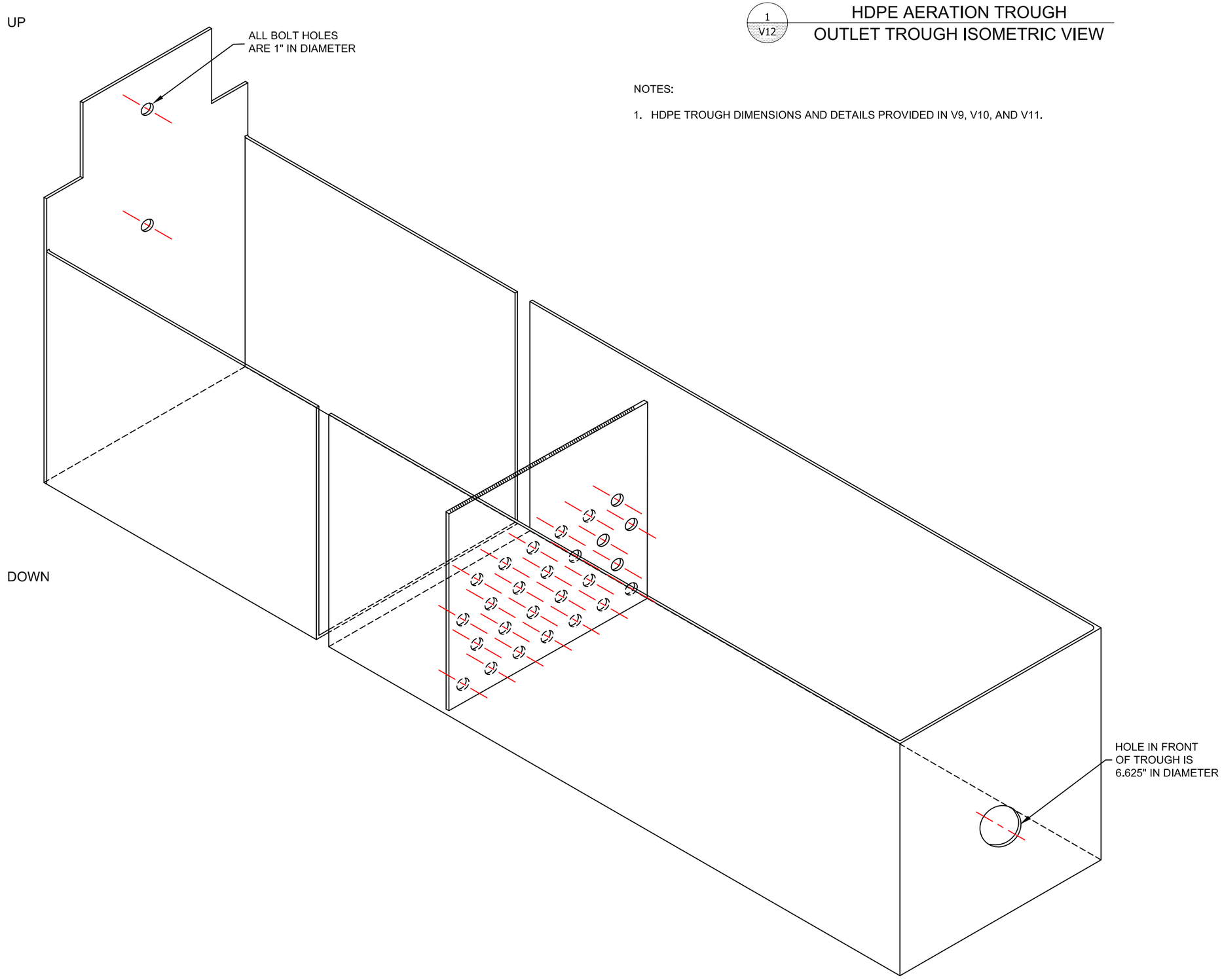

DRAWN BY:	LPCjr
CHECKED:	BRW
REVIEWED:	DD
APPROVED:	BRW
JOB No:	1316
CAD FILE:	V13.dwg

REV	DATE	DESCRIPTION

RESOURCE MANAGEMENT CONSULTANTS
8138 SOUTH STATE ST.
SUITE 2A
MIDVALE, UT 84047
801-255-2626

RICO - ARGENTINE MINE SITE
WETLAND DEMONSTRATION

SECTIONS AND DETAILS (5 OF 7)

AEEC
www.americanconsultants.com
3489 W 2100 S, Salt Lake City, UT 84119
801-908-5447 Fax 801-972-2741

DATE:	20 DEC 2013
SCALE:	NTS
SHEET:	13 OF 15

V13

W:\UT\Projects\1316 Rico Vertical Wetland Design\7_Technical\CAD Files\Wetland Design\V13.dwg

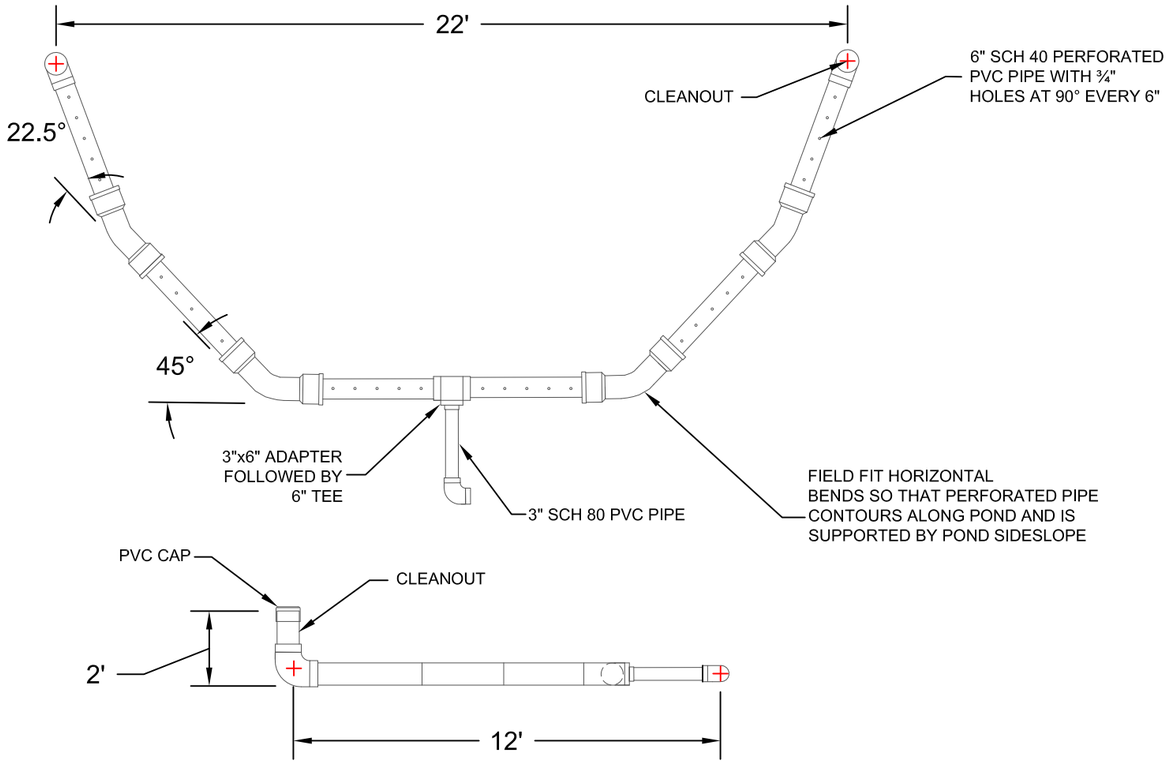

1 V2 SB NO. 2
OUTLET DETAIL PLAN AND PROFILE VIEW

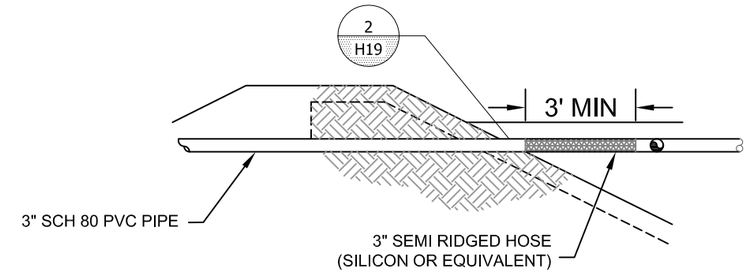

3 V3 BIOTREATMENT CELL
INLET DETAIL PROFILE VIEW

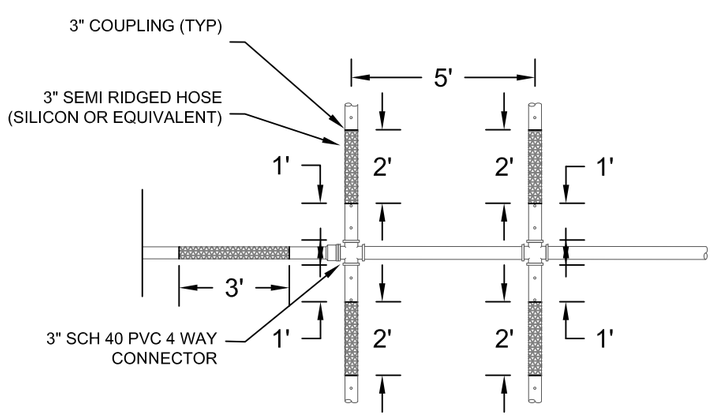

2 V3 BIOTREATMENT CELL
INLET DETAIL PLAN VIEW

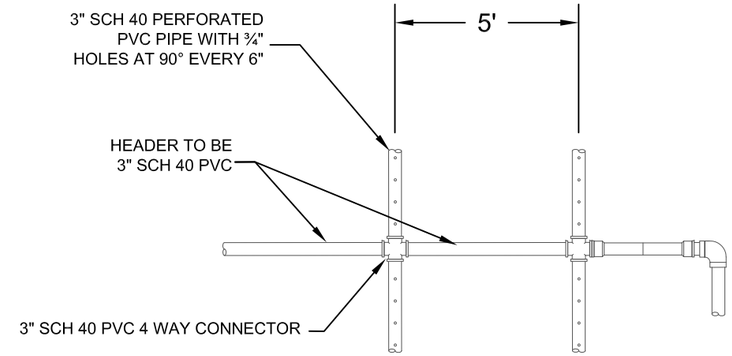

4 V3 BIOTREATMENT CELL
OUTLET DETAIL PLAN VIEW

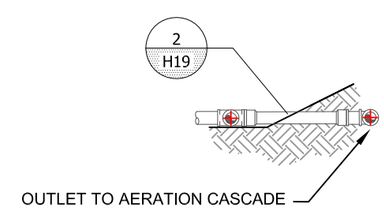

5 V3 BIOTREATMENT CELL
OUTLET DETAIL PROFILE VIEW

DRAWN BY:	LPCjr
CHECKED:	BRW
REVIEWED:	DD
APPROVED:	BRW
JOB No:	1316
CAD FILE:	V14.dwg

REV	DATE	DESCRIPTION

RESOURCE MANAGEMENT CONSULTANTS
8138 SOUTH STATE ST.
SUITE 2A
MIDVALE, UT 84047
801-255-2626

RICO - ARGENTINE MINE SITE
WETLAND DEMONSTRATION

SECTIONS AND DETAILS (6 OF 7)

AEEC
www.americanconsultants.com
3489 W 2100 S, Salt Lake City, UT 84119
801-908-5447 Fax 801-972-2741

DATE:	20 DEC 2013
SCALE:	1:4
SHEET:	14 OF 15

V14

W:\UT\Projects\1316 Rico Verifical Wetland Design\7_Technical\CAD Files\Wetland Design\V14.dwg

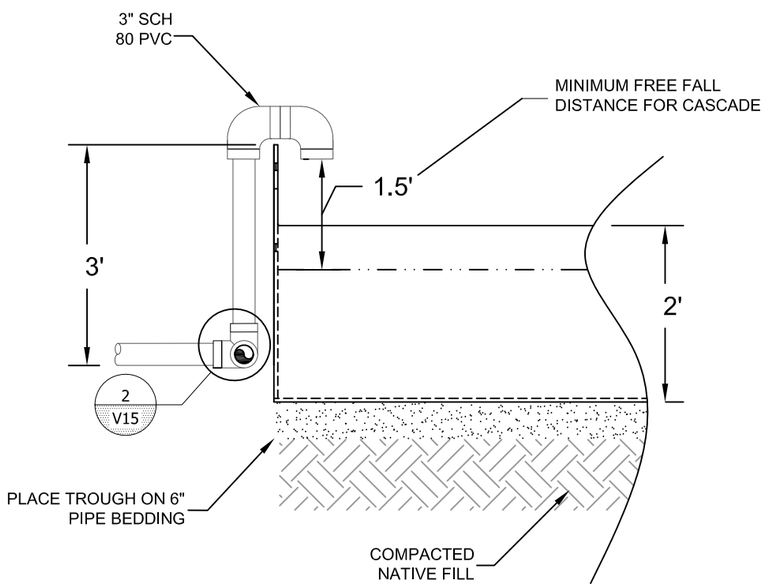

1 V7 AERATION CASCADE INLET DETAIL

NOTES:

1. REFER TO SPECIFICATIONS FOR COMPACTION CRITERIA.
2. WELL SCREEN TO BE SCH 40 PVC WITH SLOTS OF 0.040 INCHES.

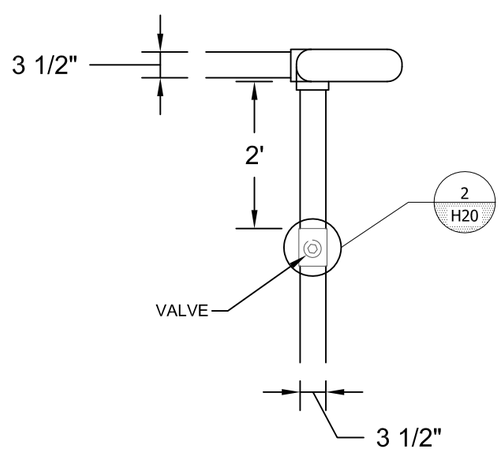

2 V15 AERATION CASCADE BYPASS DETAIL

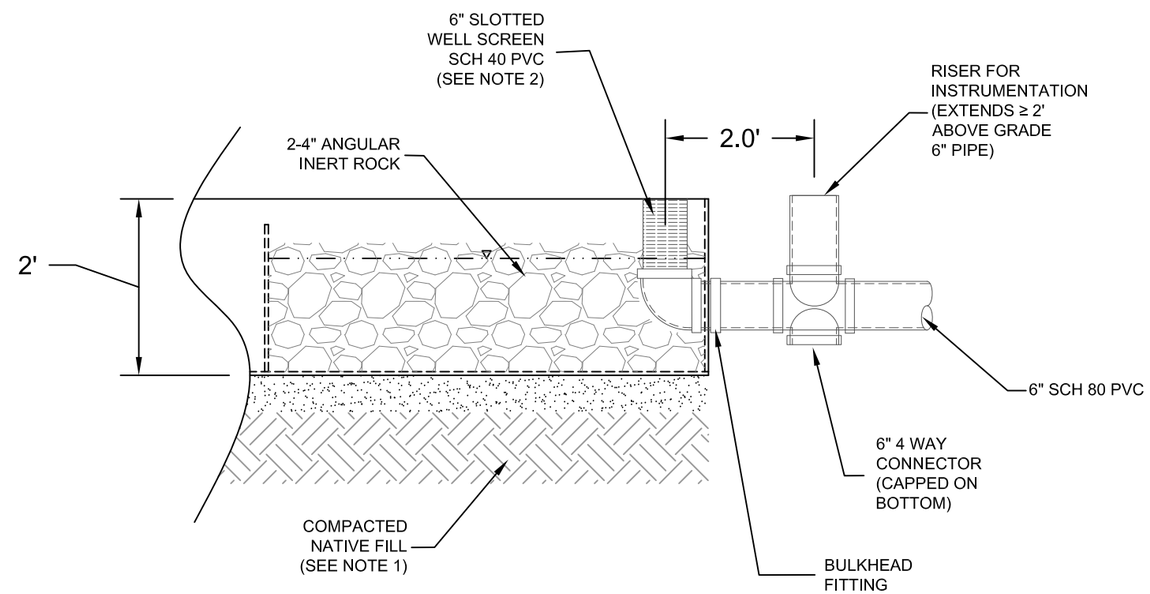

3 V7 AERATION CASCADE OUTLET TROUGH OULET DETAIL

DRAWN BY:	BRW
CHECKED:	KS
REVIEWED:	DD
APPROVED:	BRW
JOB No:	1316
CAD FILE:	V13.dwg

REV	DATE	DESCRIPTION

RESOURCE MANAGEMENT CONSULTANTS
8138 SOUTH STATE ST.
SUITE 2A
MIDVALE, UT 84047
801-255-2626

RICO - ARGENTINE MINE SITE
WETLAND DEMONSTRATION

SECTIONS AND DETAILS (7 OF 7)

AEEC
www.americanconsultants.com
3489 W 2100 S. Salt Lake City, UT 84119
801-908-5447 Fax 801-972-2741

DATE:	20 DEC 2013
SCALE:	1:2
SHEET:	15 OF 15

V15

W:\UT\Projects\1316 Rico Vertical Wetland Design\7_Technical\CAD Files\Wetland Design\ V13.dwg