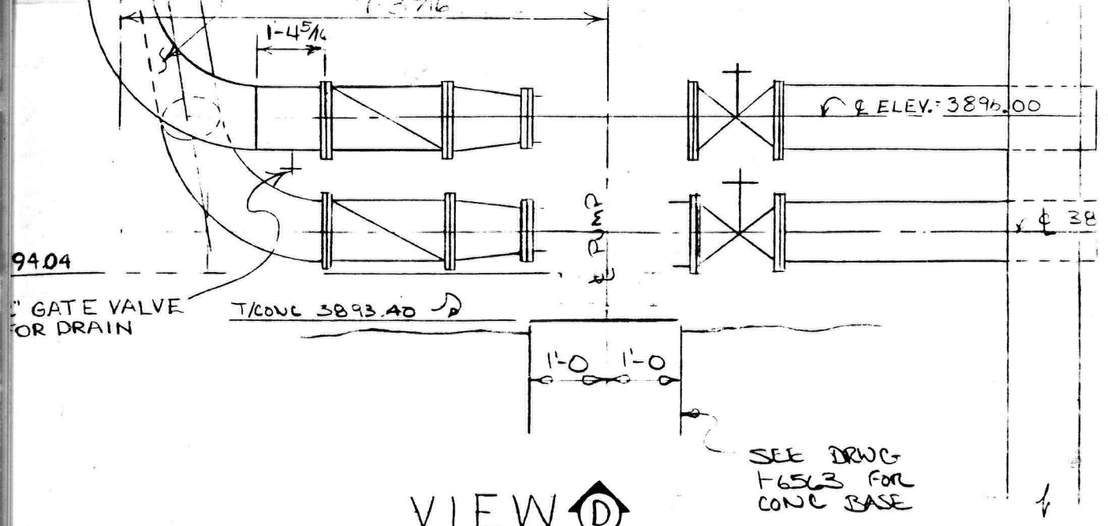

VIEW D

SCALE: 1/2" = 1'-0

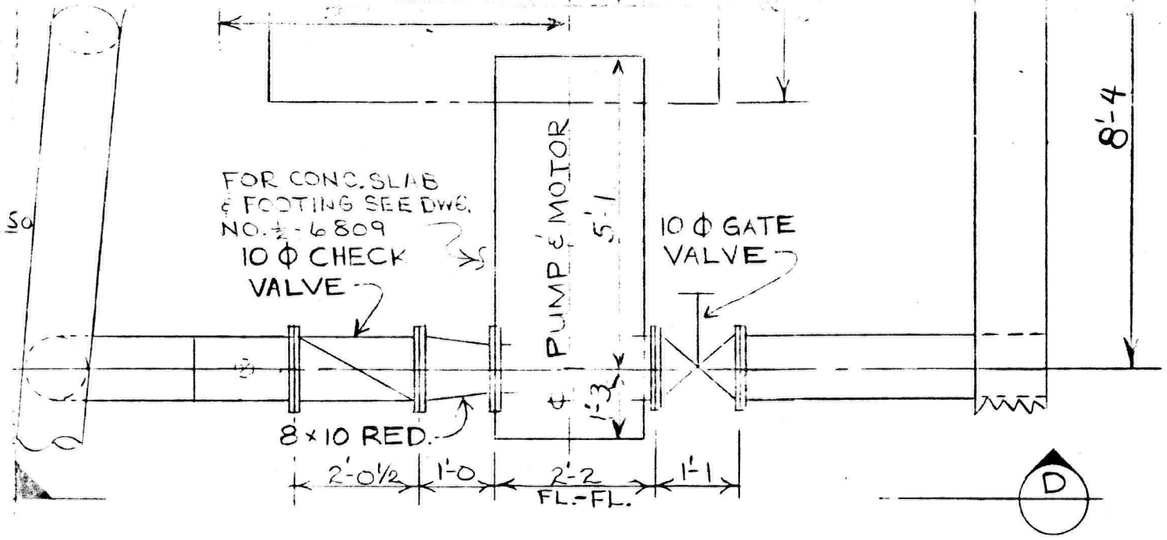

PLAN VIEW - PIPING @ DAM

NO SCALE

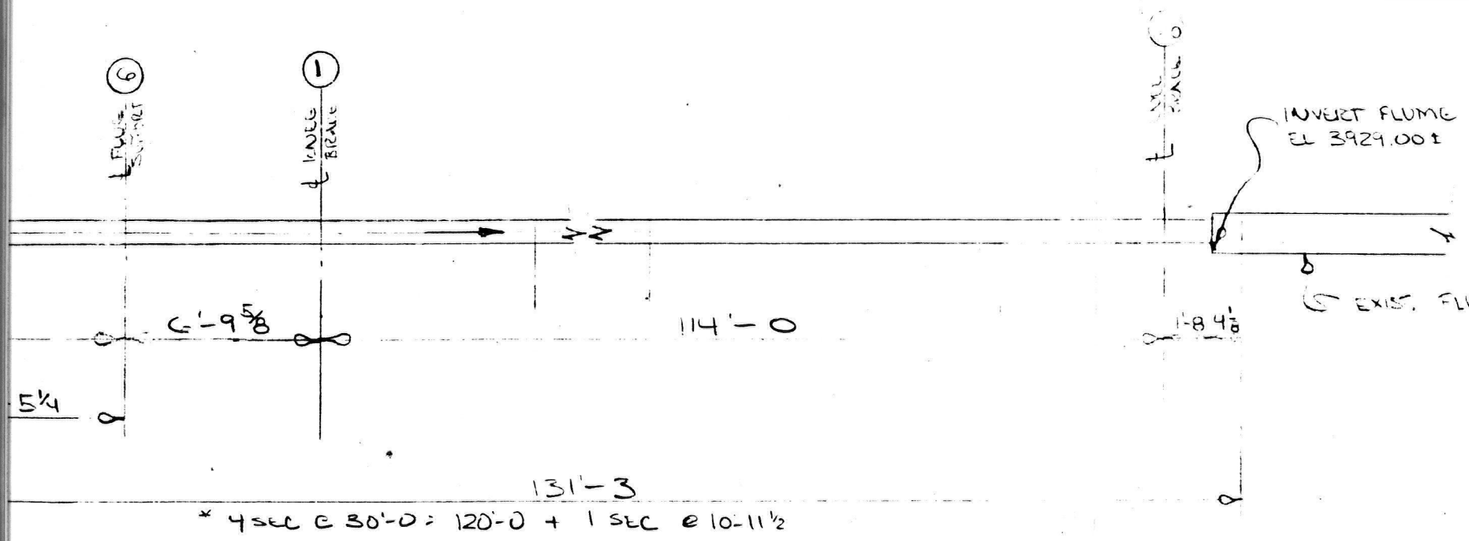

NOTE SEE DRWG HA-238 FOR LOCATION & NO OF FLUE SUPPORTS

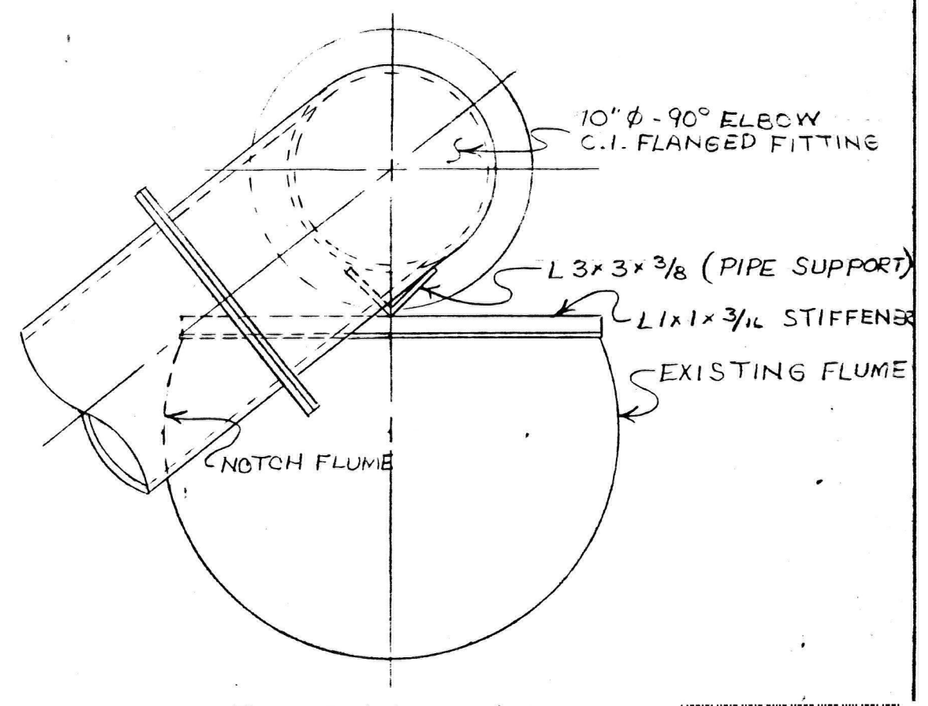

DETAIL 1

1262337 - R8 SDMS

434793

SCRIPTIONS			DATE
	DRAWN BY	THORNOCK	6-5-75
	CHECKED BY		
	APPROVED		
ATER W/ 10" Φ PLASTIC PI	SCALE AS MARKED		

AMERICAN SMELTING AND REFINING COMPANY

EAST HELENA PLANT

EAST HELENA, MONTANA

GENERAL
RECIRCULATION OF B.F WATER
GENERAL ARRANGEMENT

N. Y. APPROP. NO.	PLANT NO.
DATE PRINTED MAR 26 1990	
DRAWING NUMBER	REV.
1-6559	1

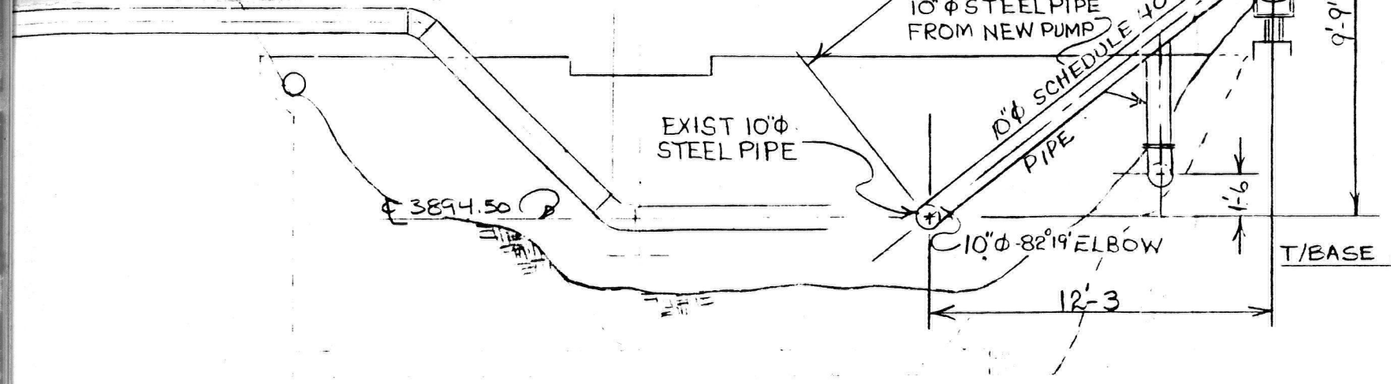

SECTION (A)
SCALE: 3/16" = 1'-0

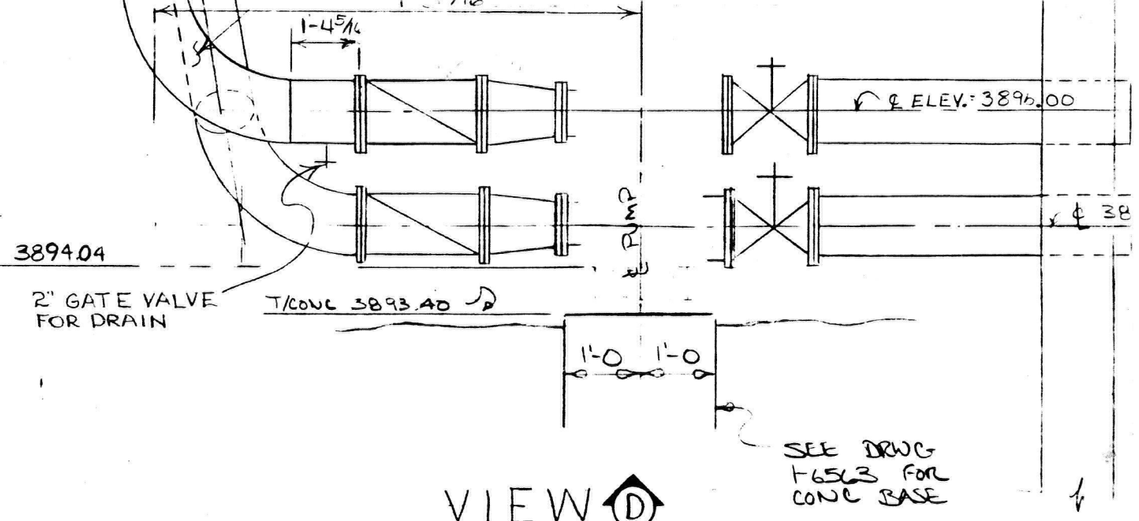

VIEW (D)
SCALE: 1/2" = 1'-0

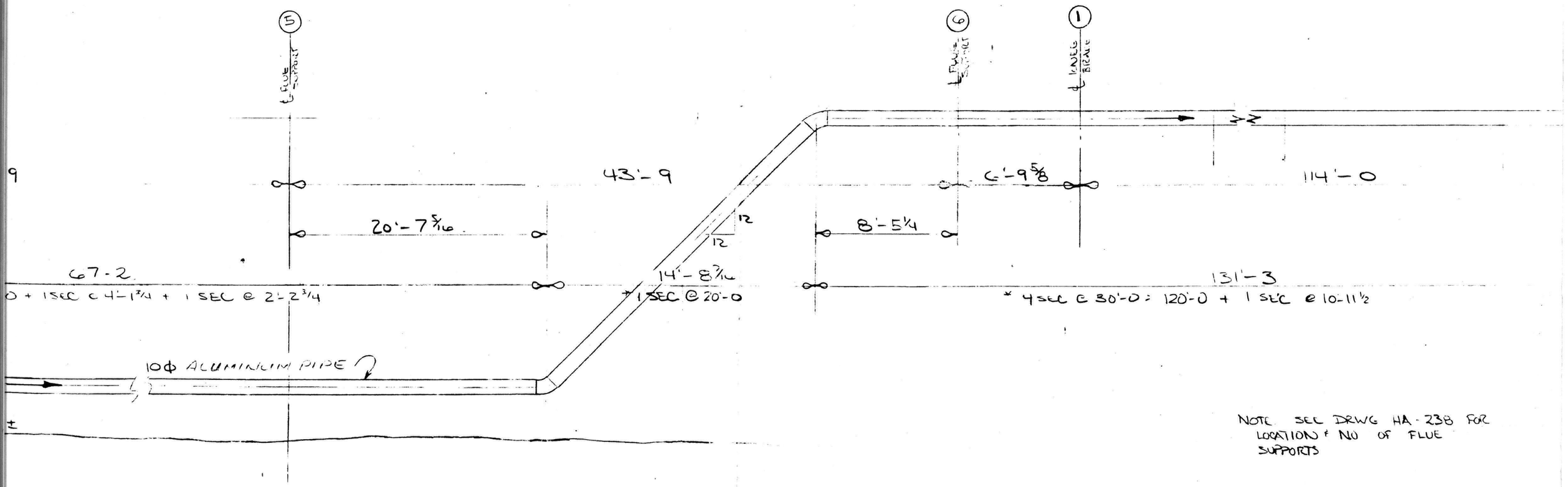

NOTE SEE DRWG HA-238 FOR LOCATION & NO OF FLUE SUPPORTS

SECTION (B)
SCALE: 3/16" = 1'-0

FERENCE DRAWINGS	REVISIONS NO.	BY	DATE	DESCRIPTIONS	REVISIONS NO.	BY	DATE	DESCRIPTIONS			DATE
	8				4				DRAWN BY	THORNOCK	6-5-75
	7				3				CHECKED BY		
	6				2				APPROVED		
	5				1	R.L.K.	11-23-77	RECIR. B.F. WATER W/ 10"Φ PLASTIC PIPE	SCALE AS MARKED		

AMERICAN SMELTING AN
EAST HELEN
EAST HELENA,

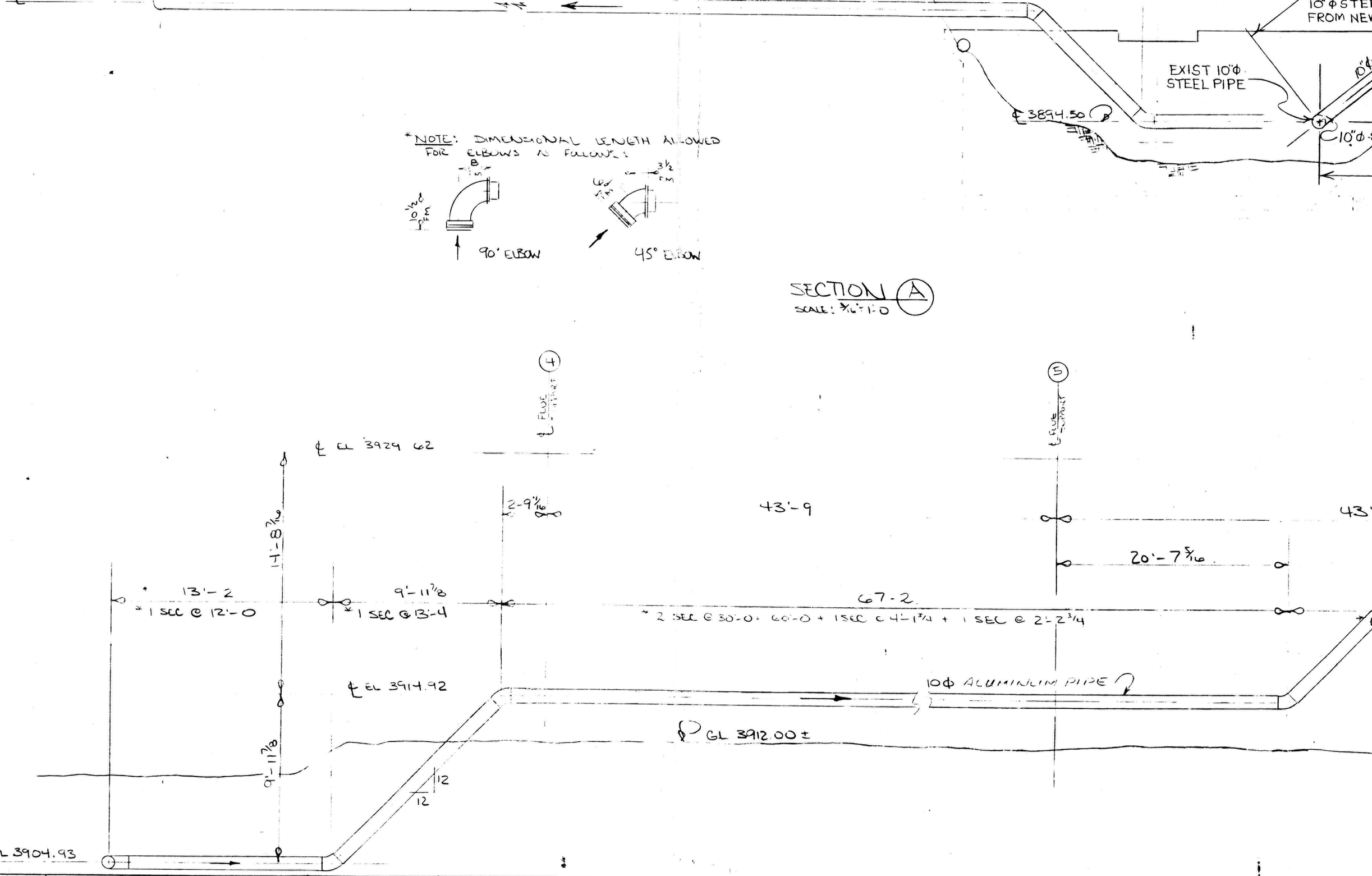

DRWG. NO.	REFERENCE DRAWINGS	DRWG. NO.	REFERENCE DRAWINGS	DRWG. NO.	REFERENCE DRAWINGS
HA 238	2N FLUE ; GEN. ARR				
1-6565	RECIRCULATION OF B.F. WATER				

REVISIONS	NO.	BY	DATE	DESCRIPTIONS	REVISIONS
	(8)				
	(7)				
	(6)				
	(5)				

N25970-A

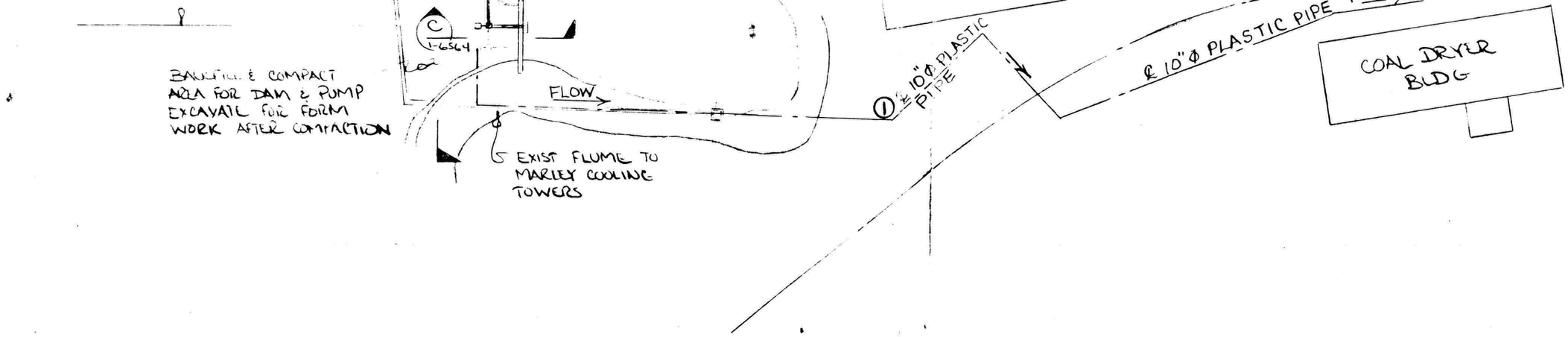

PLAN VIEW 1" = 40'

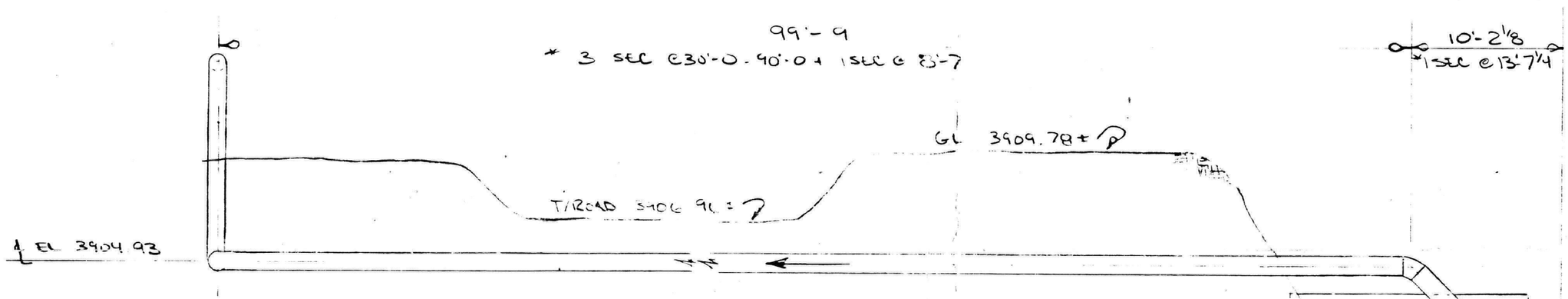

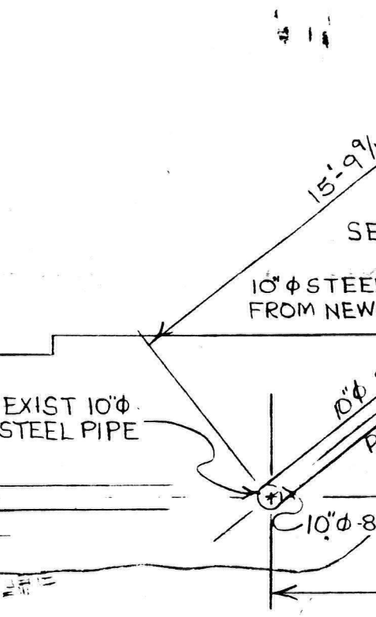

*NOTE: DIMENSIONAL LENGTH ALLOWED FOR ELBOWS AS FOLLOWS:

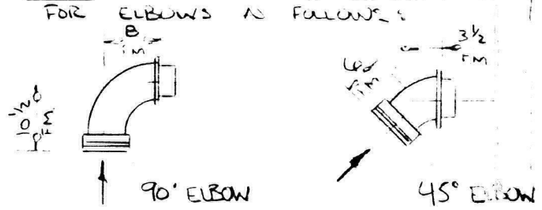

SECTION (A)
SCALE: 3/16" = 1'-0

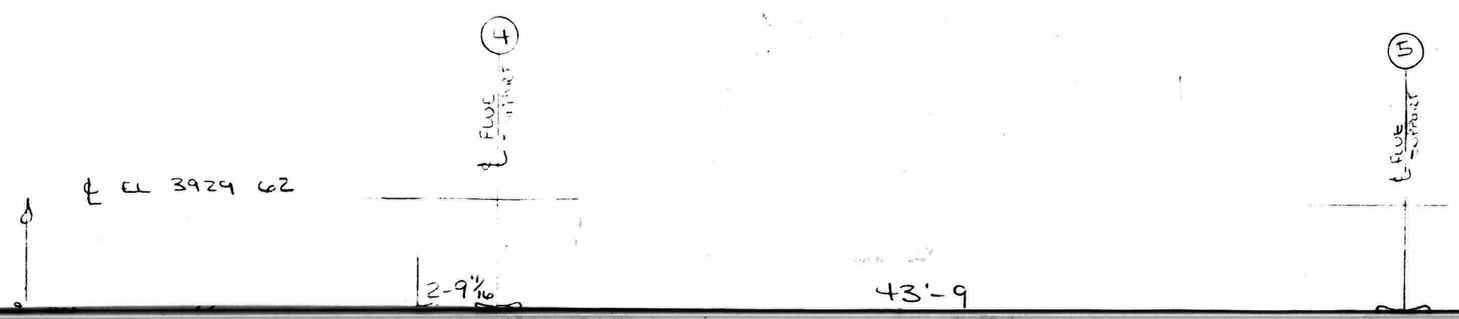

OPEN FLUME TO LOWER LAKE DISCHARGE SHOWN ON DWG 1-6561

EW 1" = 40'

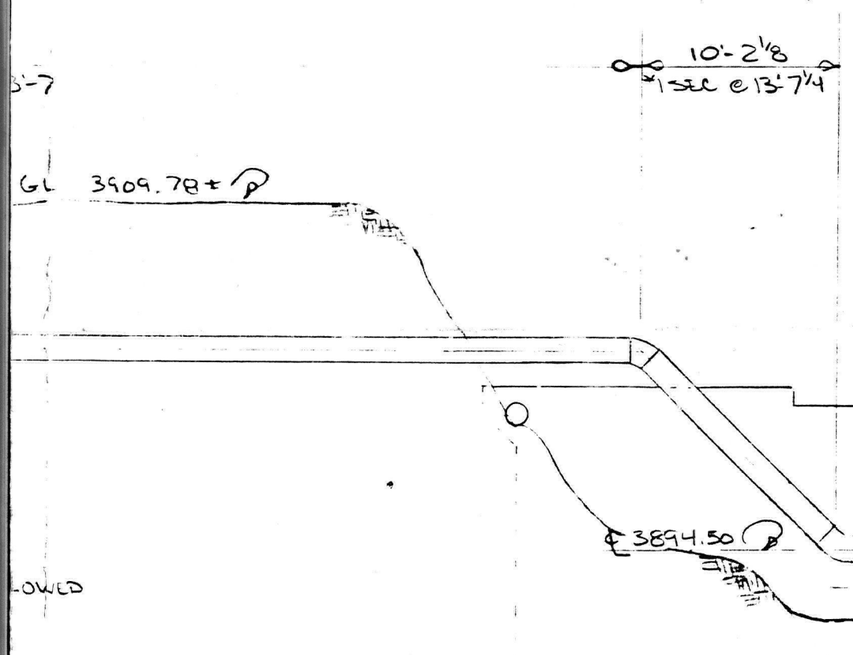

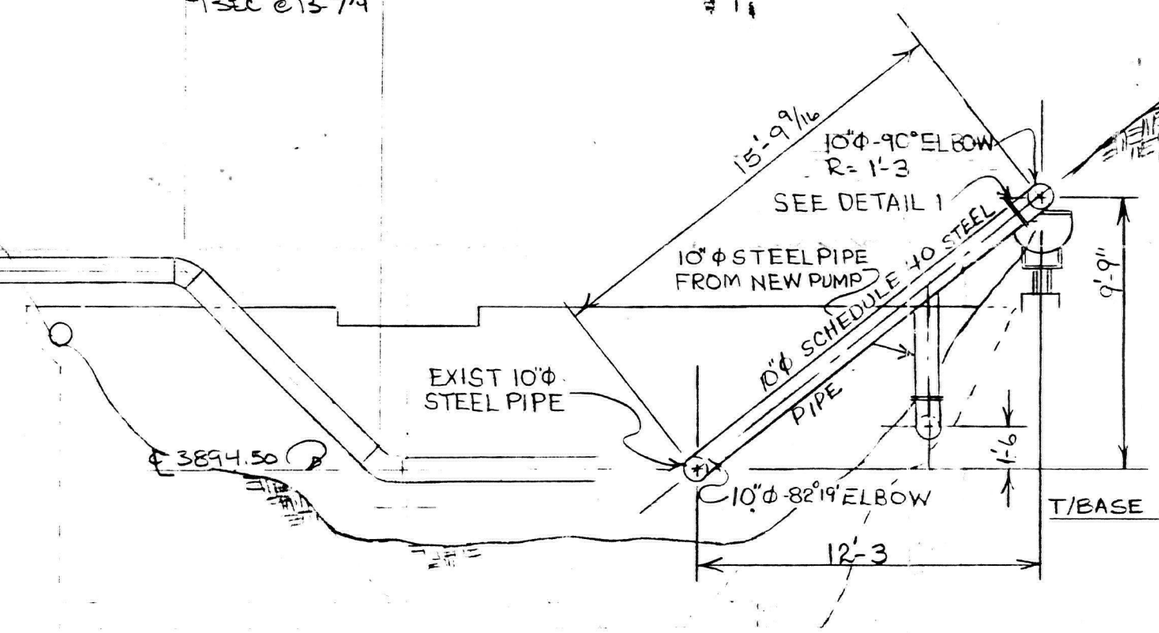

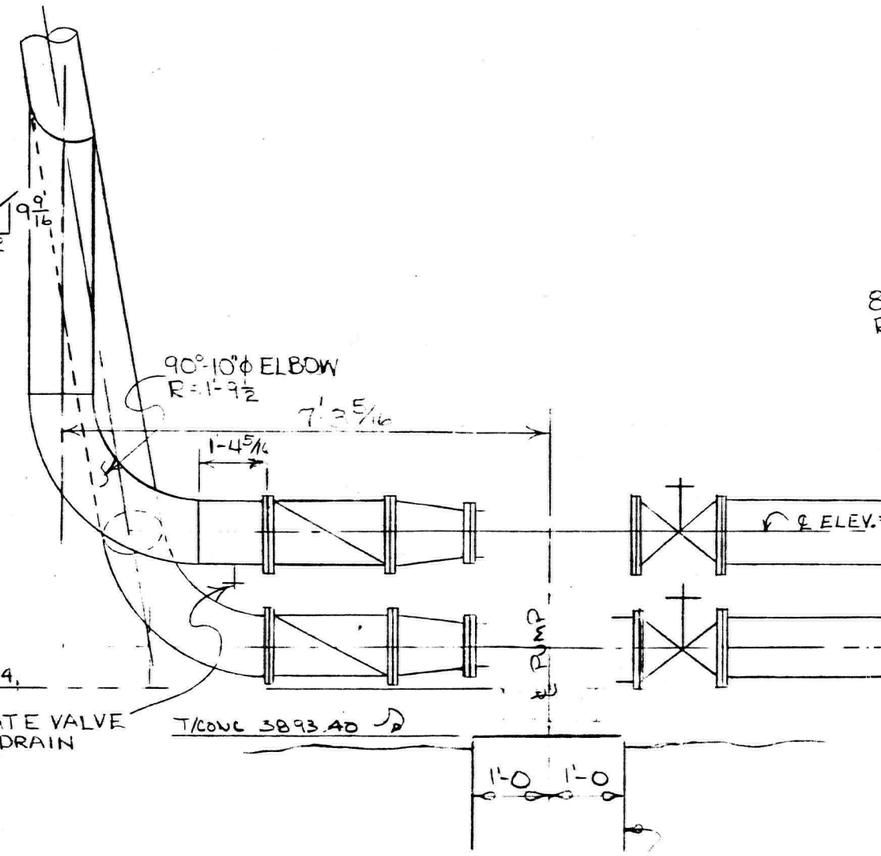

SECTION (A)
SCALE: 3/16" = 1'-0

VIEW (D)
SCALE: 1/2" = 1'-0

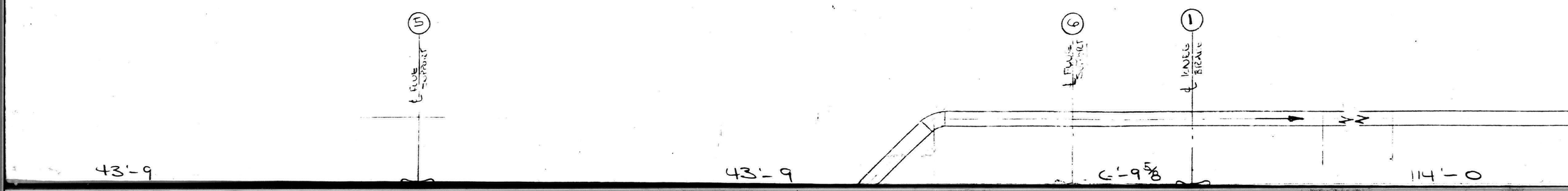

OPEN FLUME TO LOWER LAKE
DISCHARGE SHOWN ON DWG 1-6561

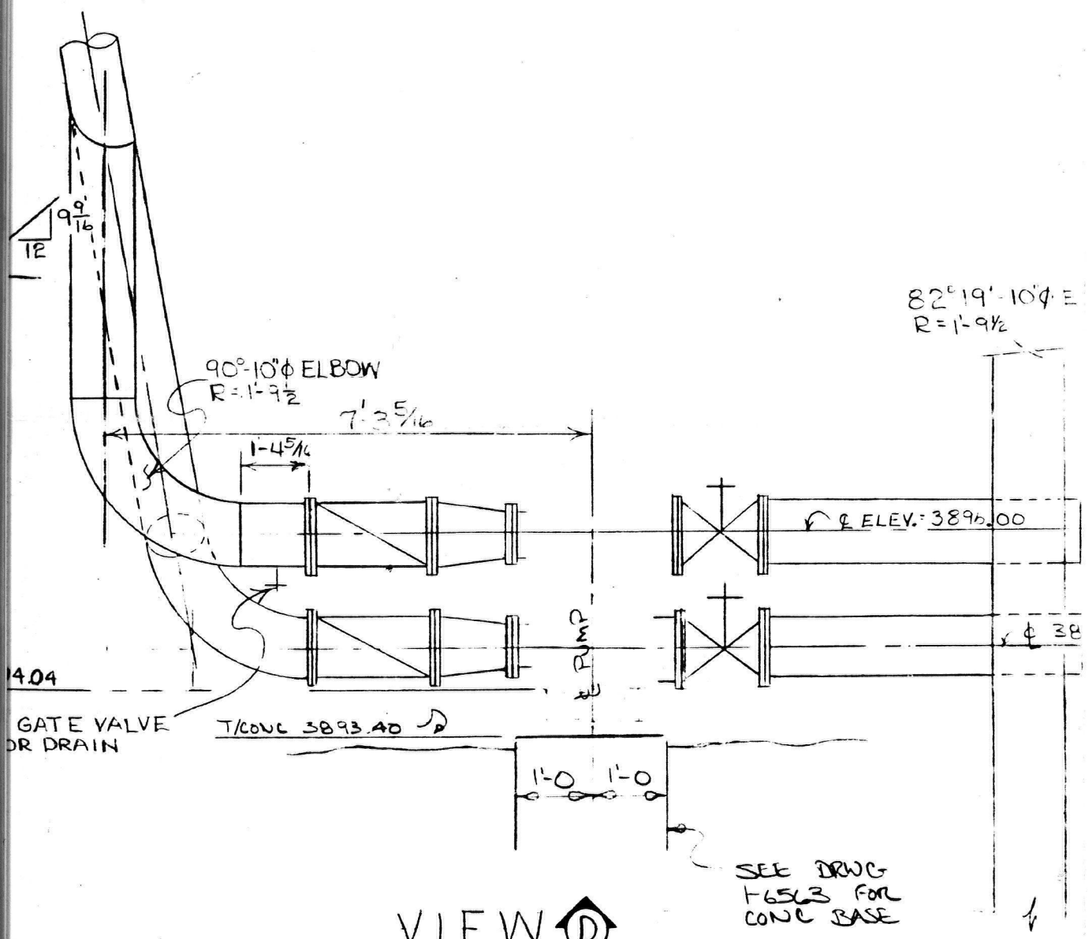

VIEW D
SCALE: ½" = 1'-0

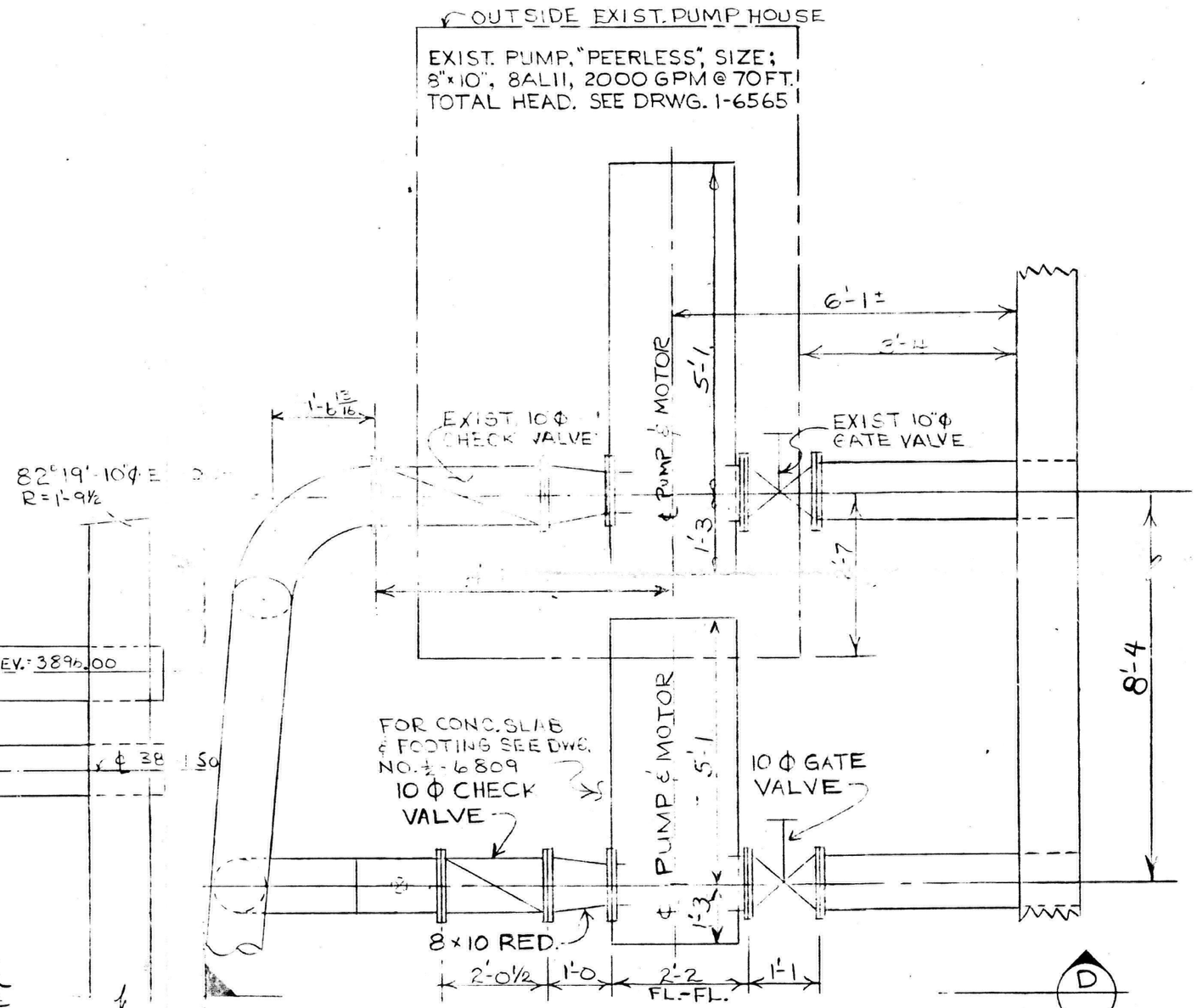

PLAN VIEW - PIPING @ DAM
NO SCALE

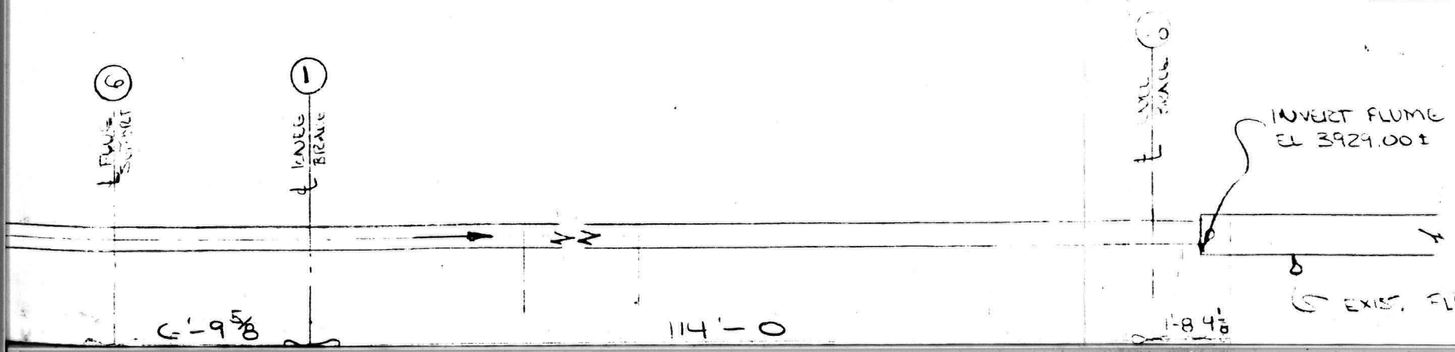

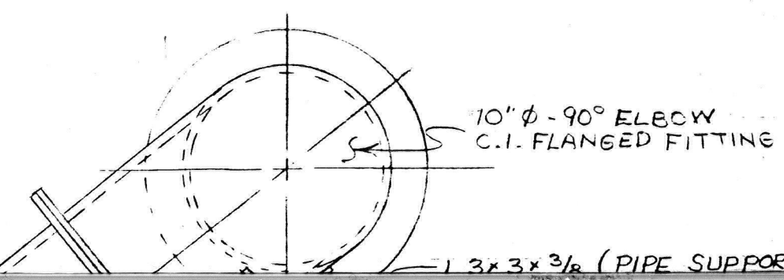

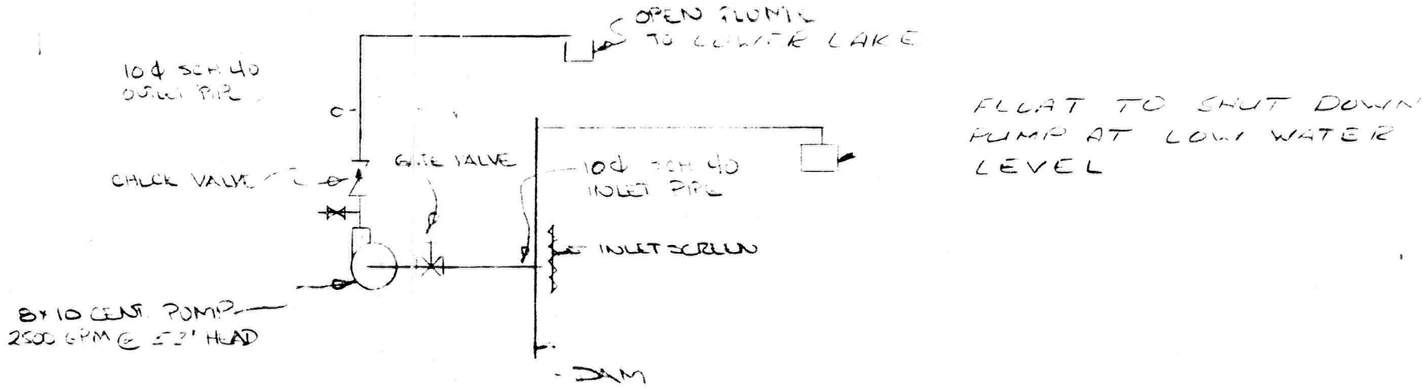

PIPING SCHEMATIC

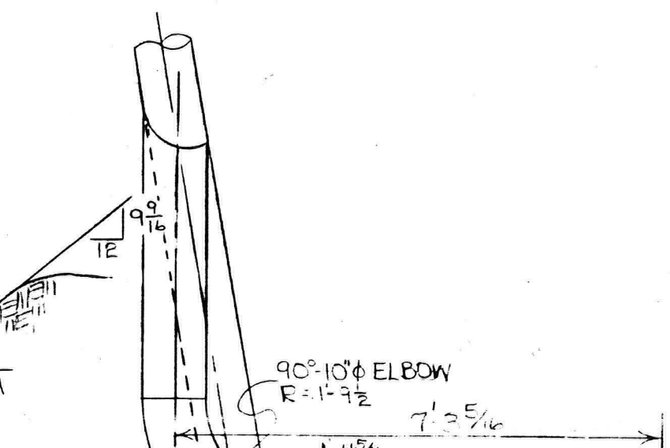

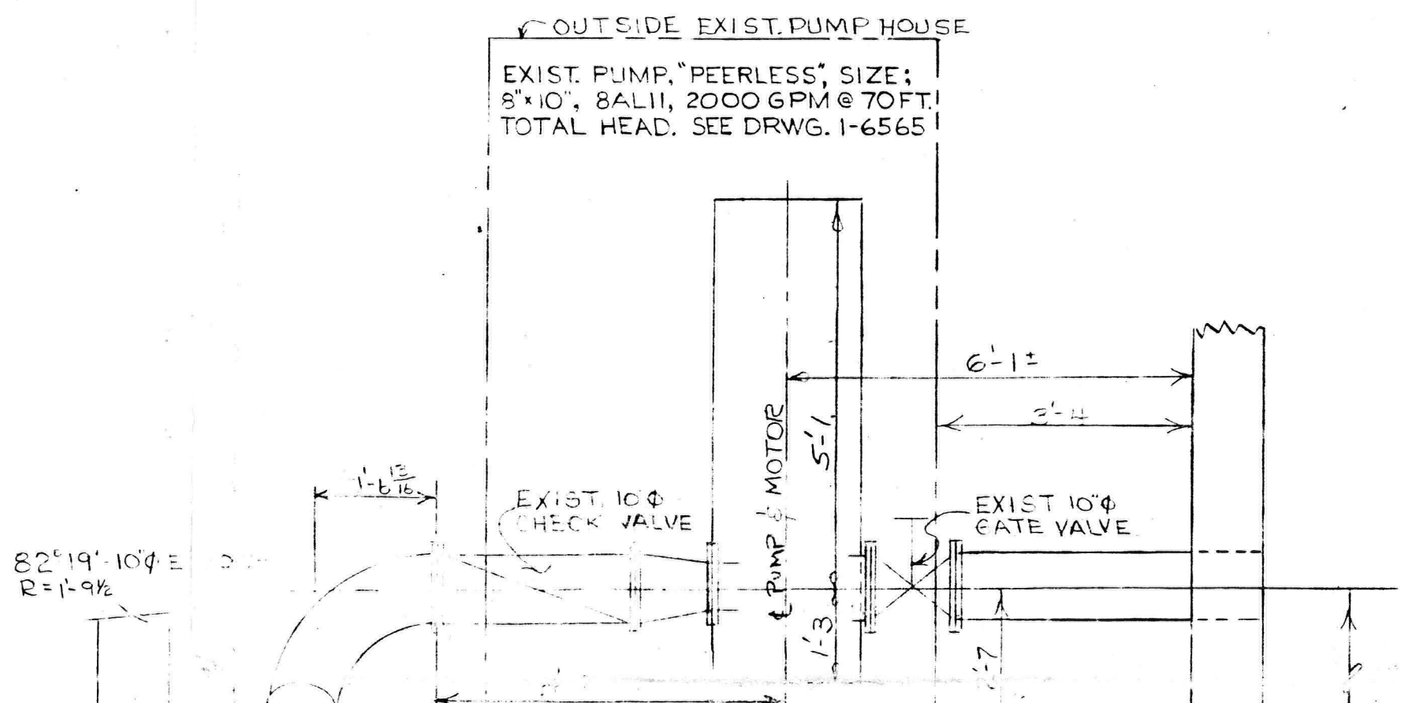

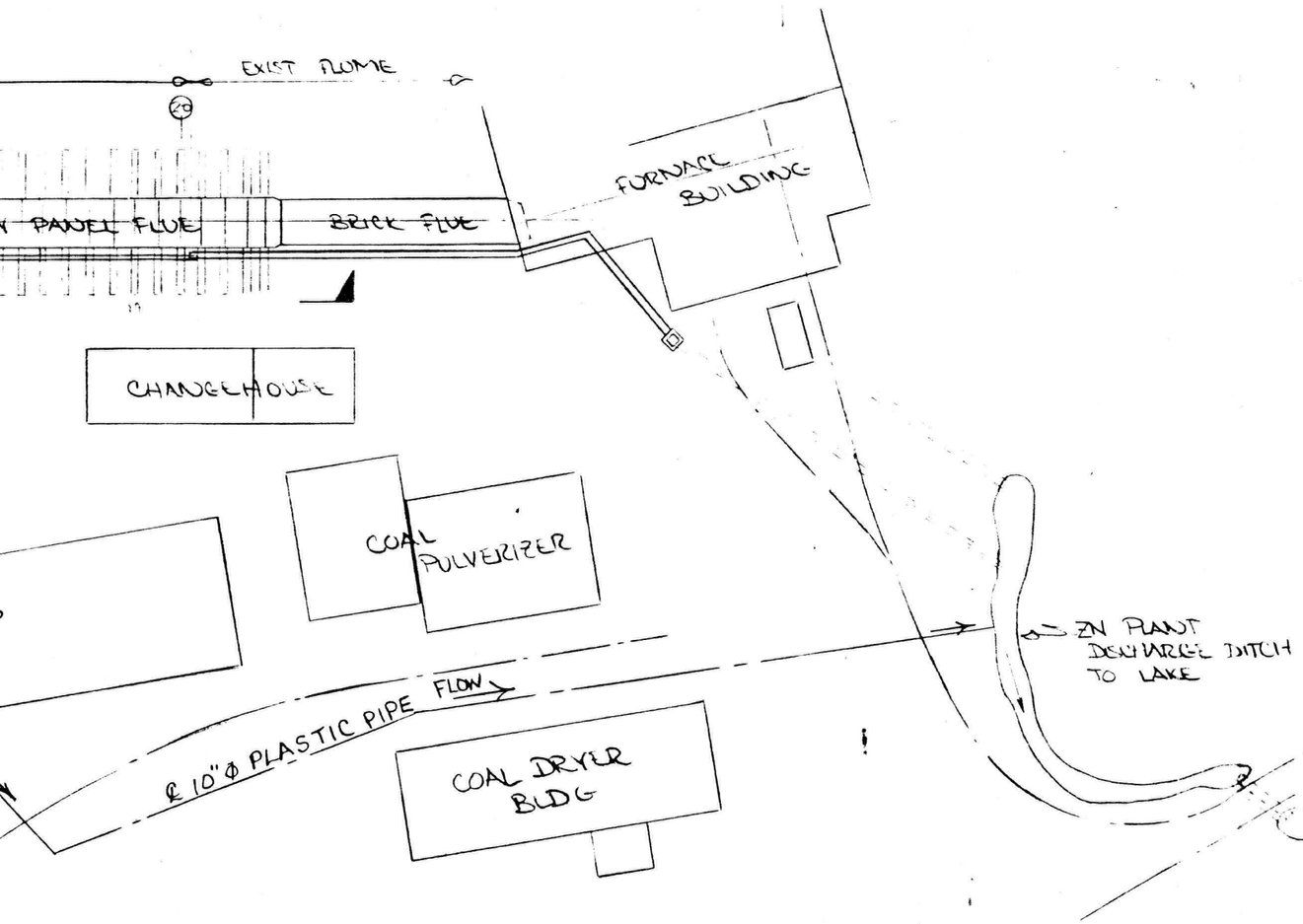

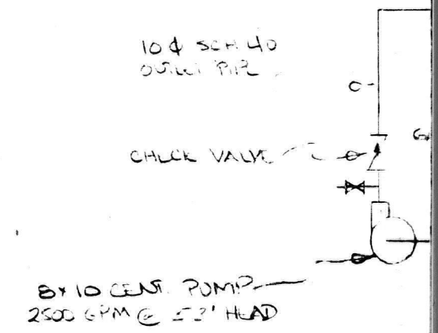

PIPING

OPEN FLUME TO LOWER LAKE DISCHARGE SHOWN ON DWG 1-6561

" = 40'

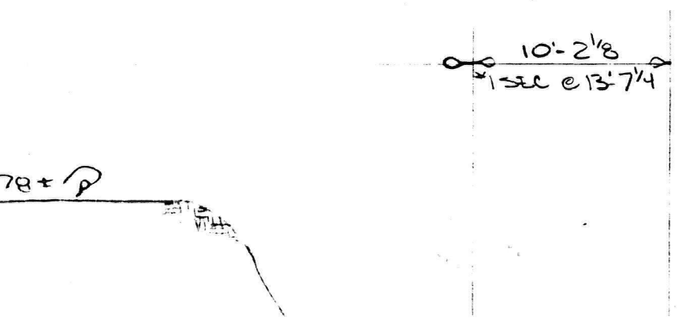

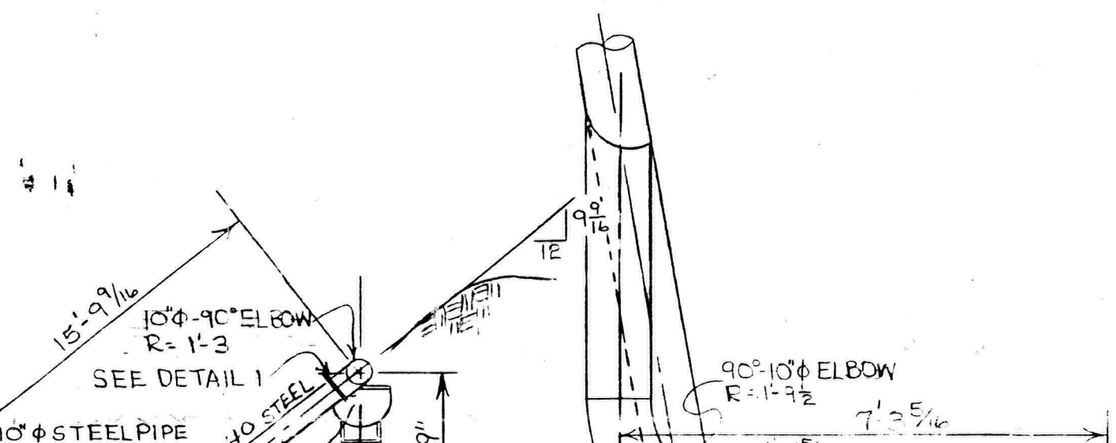

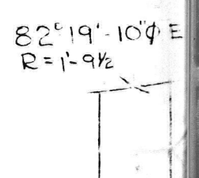

Administrative Record
SF File Number
20600000

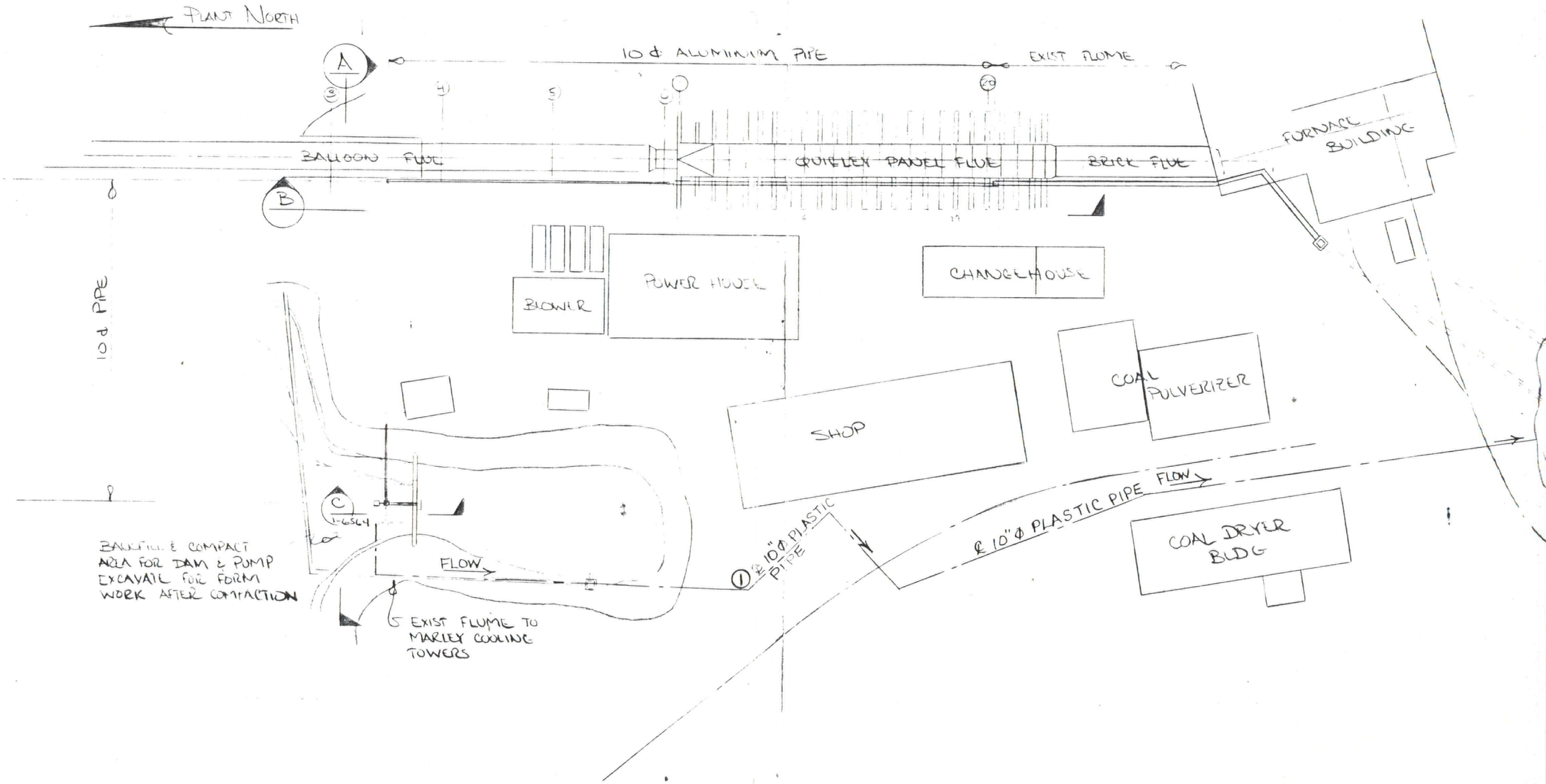
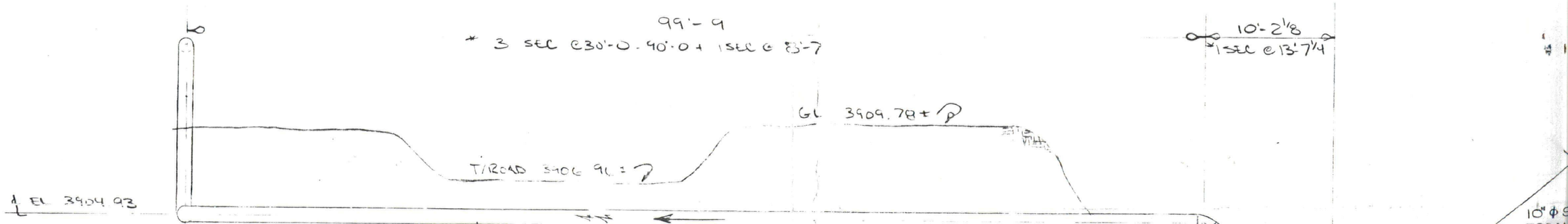
PLAN VIEW 1" = 40'