| | | | | | | | |
|---|---|---|---|---|---|---|---|
| | [illegible] | COMPANION FLANGES | C.I. | | | | " |
| 1 | 200 | 1/16 GASKETS | RUBBER | | | | A5996 |
| 1 | 1800 | 7/8 x 3 1/2" MCH. BOLTS-WITH 1 HEX. NUT | | | | | A-5992 |
| 1 | 1 | 12" FLANGED CHECK VALVE | IRON BODY | DISCHARGE LINE | | | " |
| 1 | 1 | 12"x12"x12" LATERAL | | | | | " |
| 1 | 10 | FT. 10" PIPE | | | | | " |
| 1 | 8 | 10" COMP FLANGES | | | | | " |
| 1 | 1 | 30' x 12' WOOD TANK | | | | | A-5963 |
| 1 | 1 | 12" x 12 x 6 STD FLGD. TEE | C.I. | | | | A-5996 |
| 1 | 2 | 6" x 11" STD. COMPANION FLGS. | C.I. | | | | " |
| 20 | 1 | 6" DIA. x 8" NIPPLE | STEEL | | | | " |

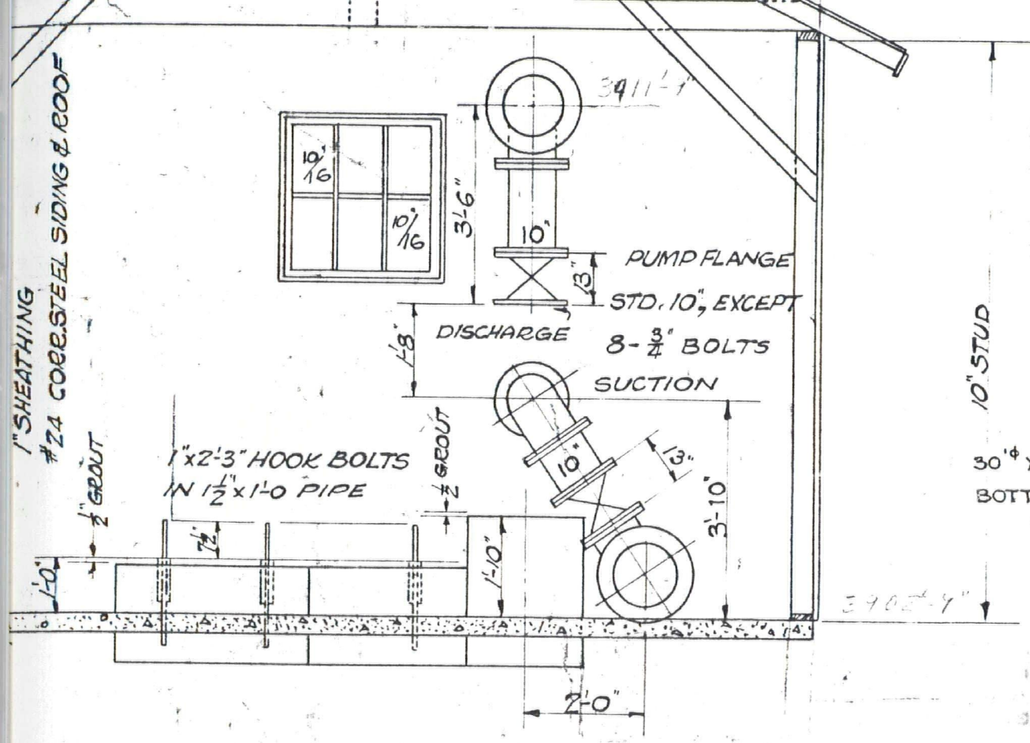


SECTION

2- 10" HIGH LIFT D.S. PUMPS
DIRECT CONNECTED TO
125 PL. ELECTRIC MOTOR
MFG BY MORRIS MACHINE WKS.
BALDWINSVILLE, N.Y.

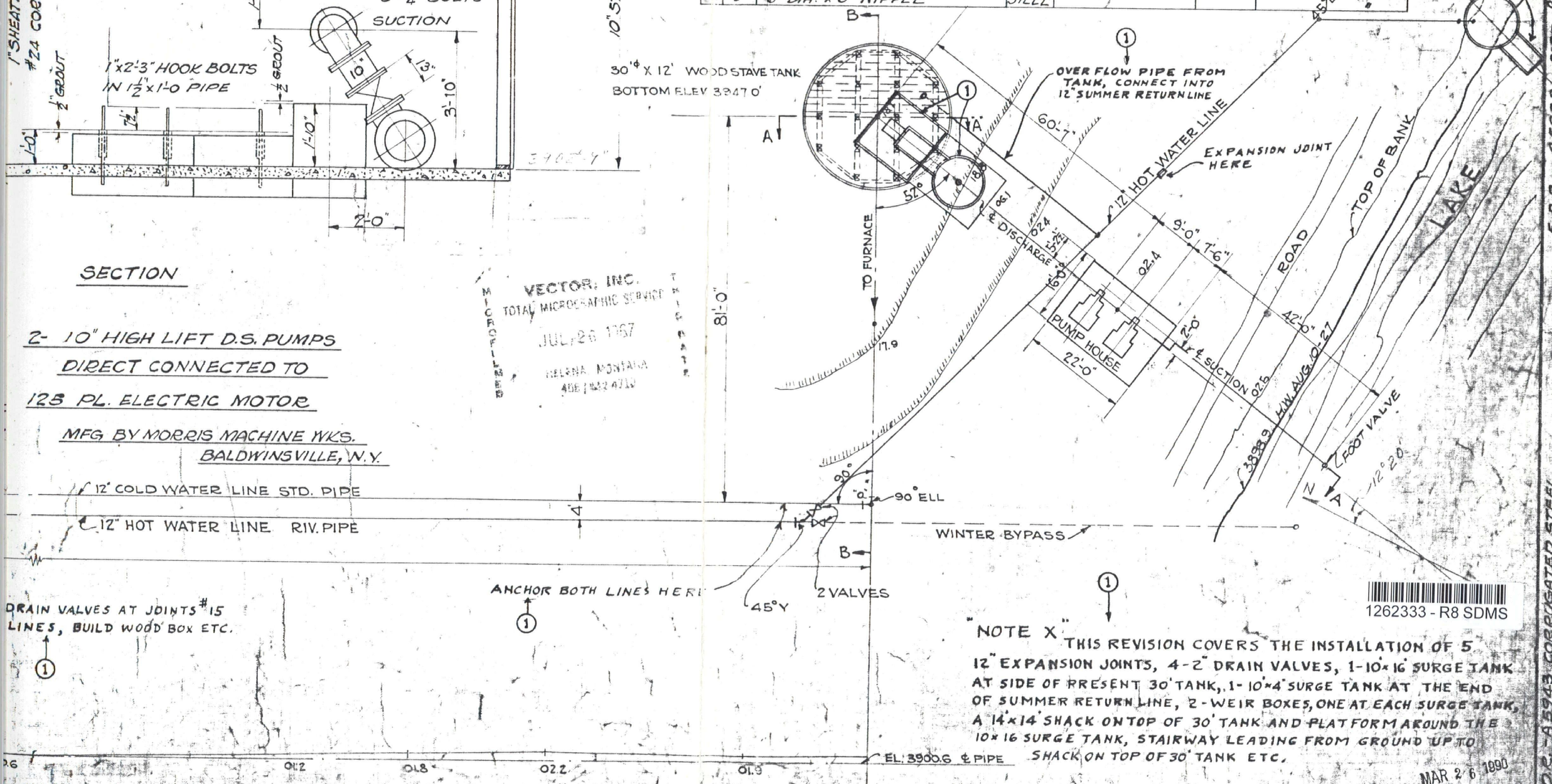


"NOTE X" THIS REVISION COVERS THE INSTALLATION OF 5 12" EXPANSION JOINTS, 4-2" DRAIN VALVES, 1-10'x16' SURGE TANK AT SIDE OF PRESENT 30' TANK, 1-10'x4' SURGE TANK AT THE END OF SUMMER RETURN LINE, 2-WEIR BOXES, ONE AT EACH SURGE TANK, A 14'x14' SHACK ON TOP OF 30' TANK AND PLATFORM AROUND THE 10x16 SURGE TANK, STAIRWAY LEADING FROM GROUND UP TO SHACK ON TOP OF 30' TANK ETC.

MAR 26 1990

E.D.R. - A5992 PIPE & FITTINGS
E.D.R. - A5996 " "
E.D.R. - A6835 PIPE, VALVES & FITTINGS
E.D.R. - A5943 CORRUGATED STEEL
E.D.R. - A5959 CENTRIFUGAL PUMPS WITH MOTORS
E.D.R. - A5963 WOOD STAVE TANK

VECTOR, INC.
TOTAL MICROGRAPHIC SERVICE
JUL 26 1967
HELENA, MONTANA
406 / 442-4710
MICROFILMED
THIS DATE

1262333 - R8 SDMS

| DESCRIPTION | | DATE |
|---|---|---|
| SEE "NOTE X" | DRAWN BY WARNER & DAVENPORT | 8-17-27 |
| | TRACED BY C.D. HURST | 8-17-27 |
| | CHECKED BY | |
| | APPROVED | |

EAST HELENA SLAG PLANT
WATER SUPPLY TO FURNACE BLDG.
LAYOUT & DETAILS

ANACONDA COPPER MINING COMPANY.
EAST HELENA, MONTANA.

SCALE 3/8"=1'-0" & 1"=40'

HG-4

434789

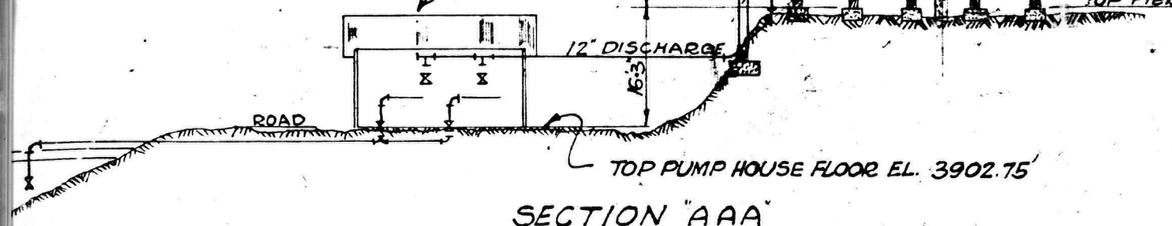


SECTION "AAA"

| MATERIAL FOR TANK | |
|---|---|
| POSTS | 12"x14" |
| BOTTOM SILLS | 12"x17" |
| TOP SILLS | 12"x14" |
| FLOOR JOISTS | 3"x12" |
| BRACING | 2"x6" |

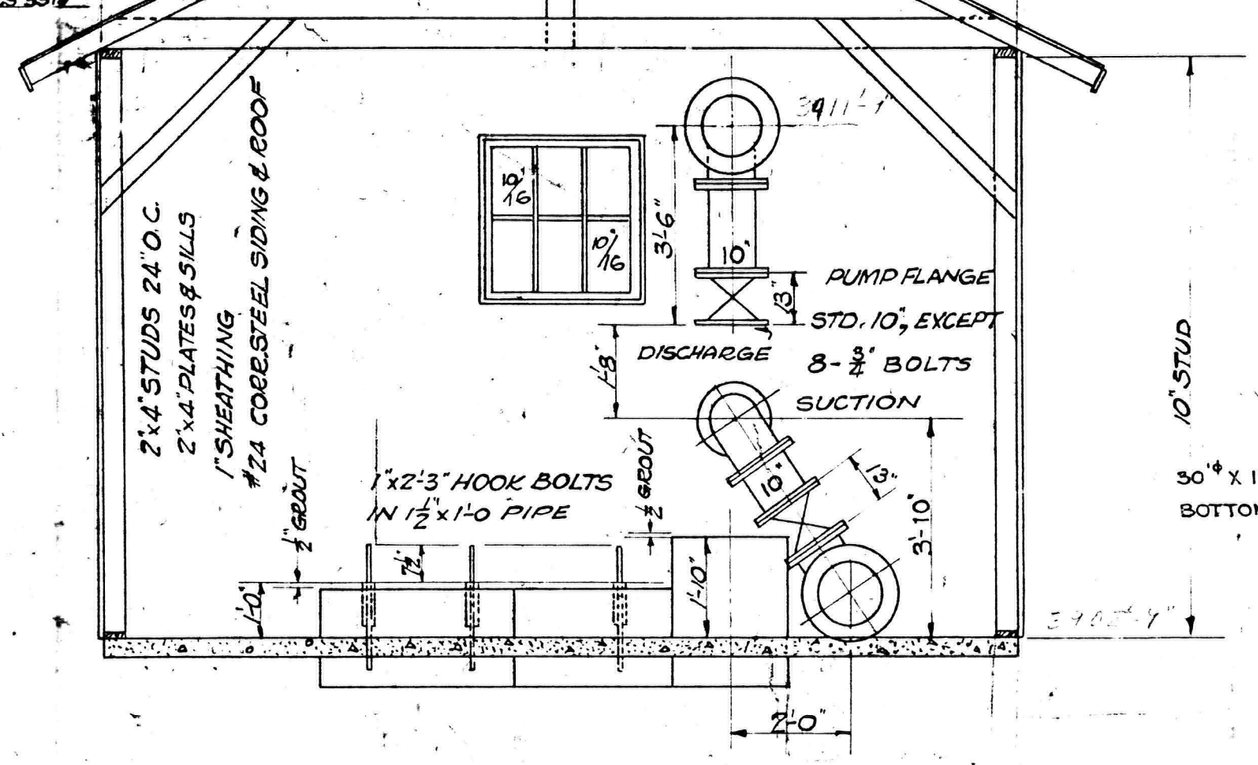


SECTION

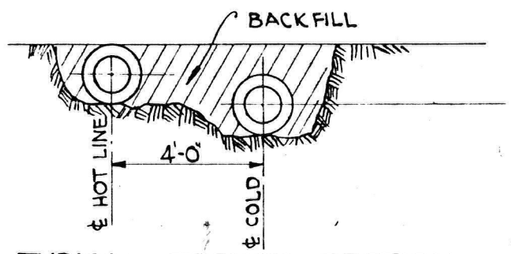


TYPICAL TRENCH SECTION

2- 10" HIGH LIFT D.S. PUMPS
DIRECT CONNECTED TO
125 PL. ELECTRIC MOTOR
MFG BY MORRIS MACHINE WKS.
BALDWINSVILLE, N.Y.

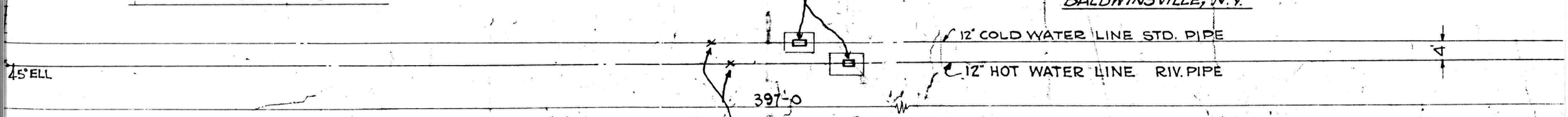


PLAN

| REVISIONS NO. | MADE BY | DATE | DESCRIPTION |
|---|---|---|---|
| 5 | | | |
| 6 | | | |
| 7 | | | |
| 8 | | | |

| REVISIONS NO. | MADE BY | DATE | DESCRIPTION |
|---|---|---|---|
| 1 | GEO. | 4-6-28 | SEE NOTE X |
| 2 | | | |
| 3 | | | |
| 4 | | | |

| | | DATE |
|---|---|---|
| DRAWN BY | WARNER & DAVENPORT | 8-17-27 |
| TRACED BY | C.D. HURST | 8-17-27 |
| CHECKED BY | | |
| APPROVED | | |

EAST HE
WATER SU
LAYO

VECTOR, INC.
TOTAL MICROGRAPHIC SERVICE
JUL 26 1967
HELENA MONTANA
406 442-4710
MICROFILMED

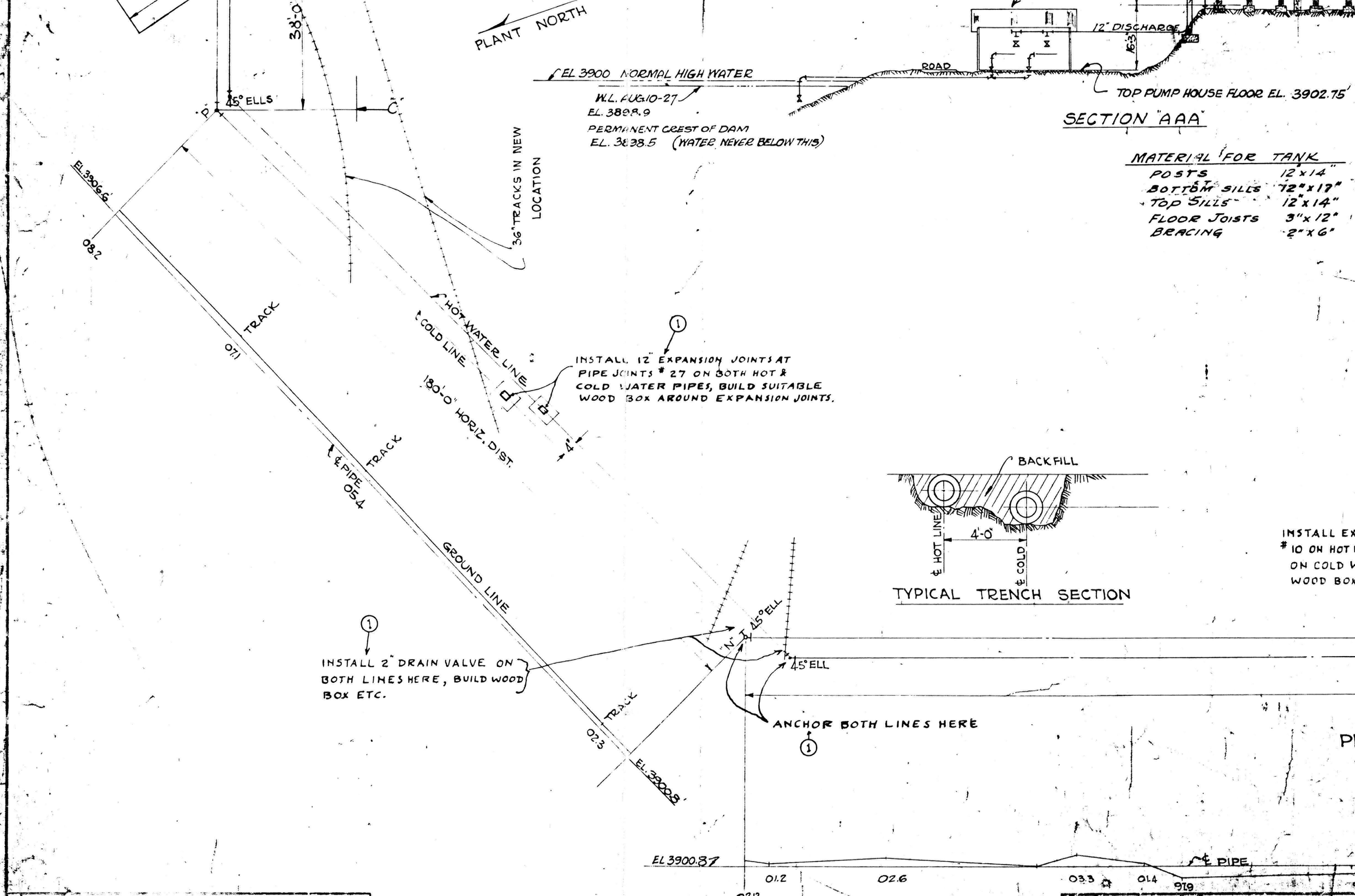


| REFERENCES | DWG. NO. | DESCRIPTION |
|---|---|---|
| | HG-3 | GENERAL MAP |
| | HG-9 | DETAILS OF SURGE TANKS & WEIR BOXES. ← 1 |

| REVISIONS | NO. | MADE BY | DATE | DESCRIPTION |
|---|---|---|---|---|
| | 5 | | | |
| | 6 | | | |
| | 7 | | | |
| | 8 | | | |

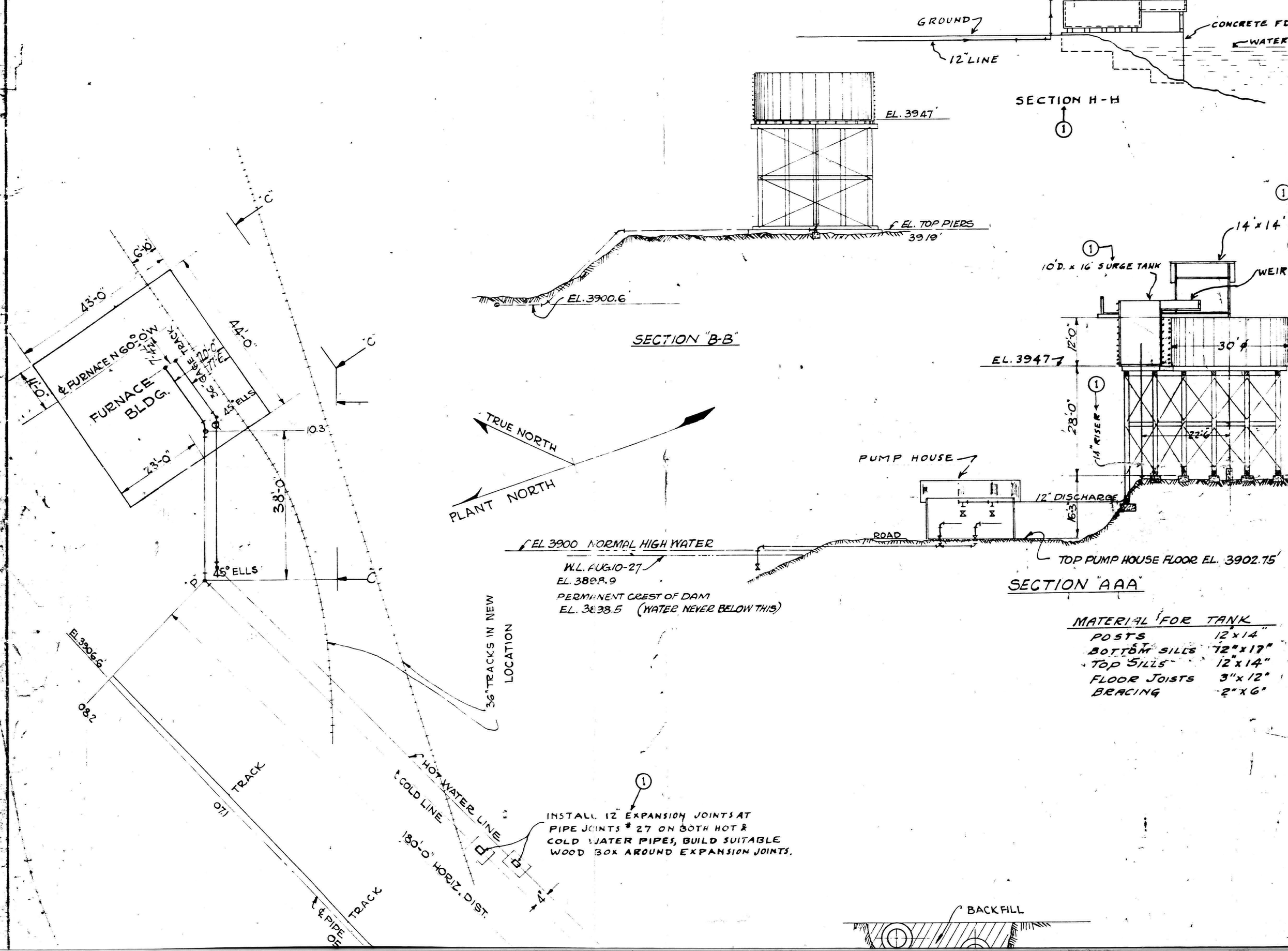


MATERIAL FOR TANK

| | |
|---|---|
| POSTS | 12" x 14" |
| BOTTOM SILLS | 12" x 17" |
| TOP SILLS | 12" x 14" |
| FLOOR JOISTS | 3" x 12" |
| BRACING | 2" x 6" |

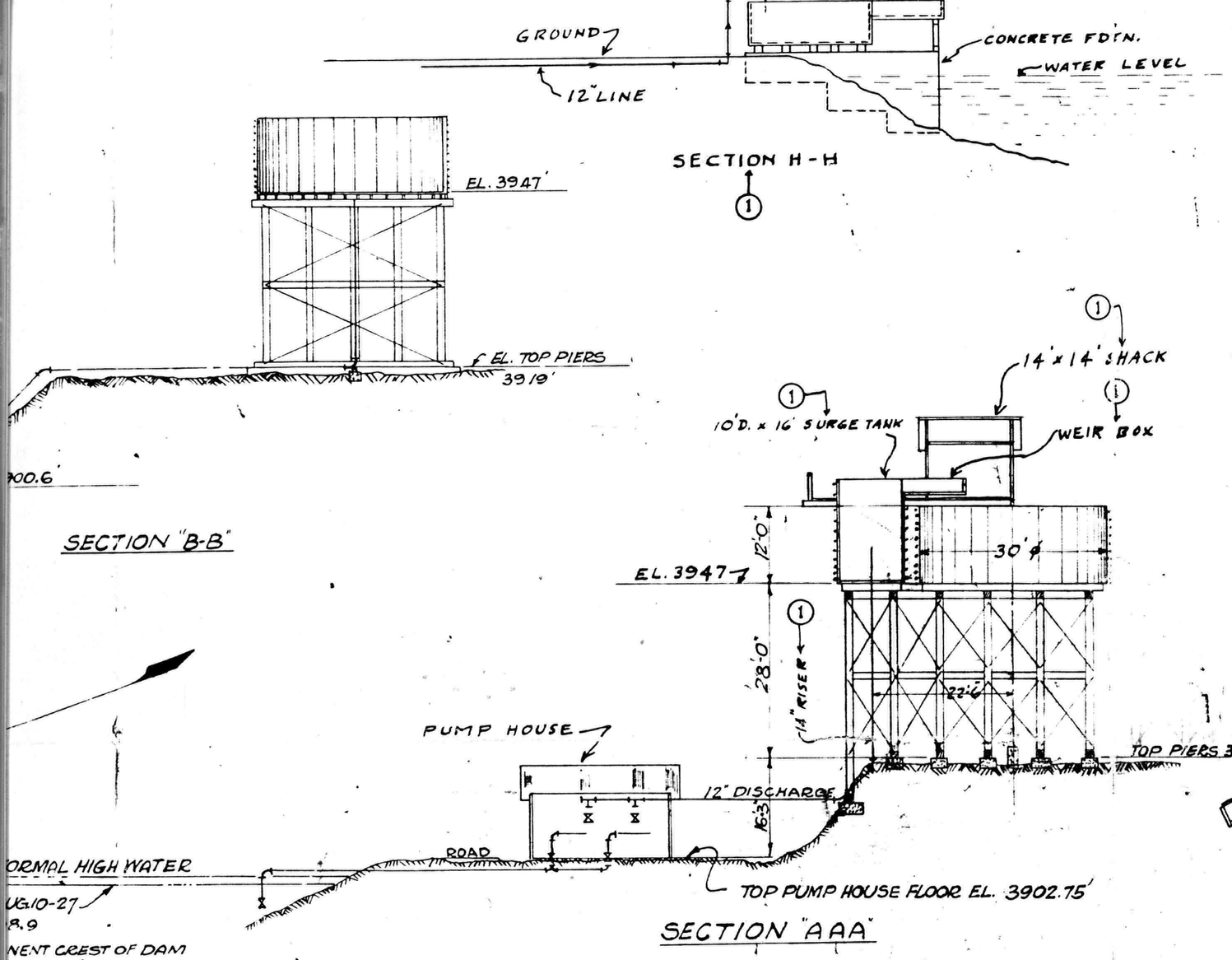


| MATERIAL FOR TANK | |
|---|---|
| POSTS | 12"x14" |
| BOTTOM & TOP SILLS | 12"x17" |
| TOP SILLS | 12"x14" |
| FLOOR JOISTS | 3"x12" |
| BRACING | 2"x6" |

1

12" EXPANSION JOINTS AT
INTS # 27 ON BOTH HOT &
WATER PIPES, BUILD SUITABLE
BOX AROUND EXPANSION JOINTS.

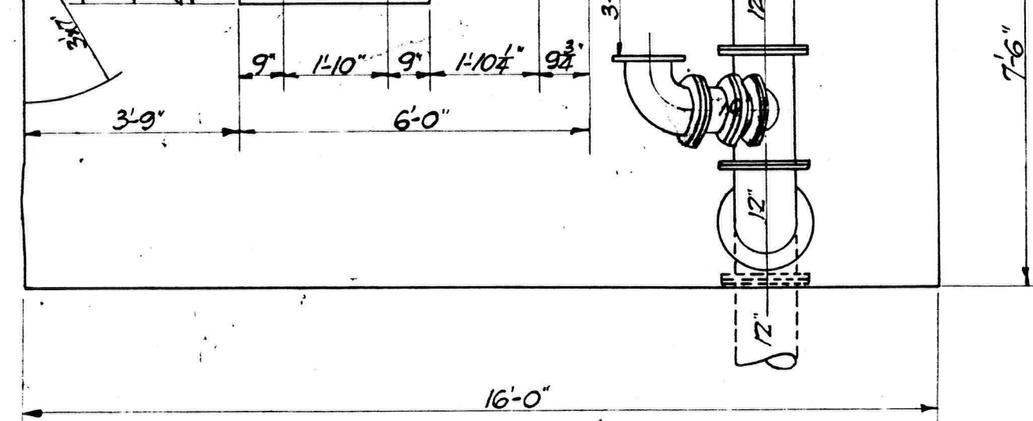


PLAN
SHOWING OUTLINE OF PUMP HOUSE, PUMP FOUNDATIONS AND SUCTION LINE TO PUMPS.

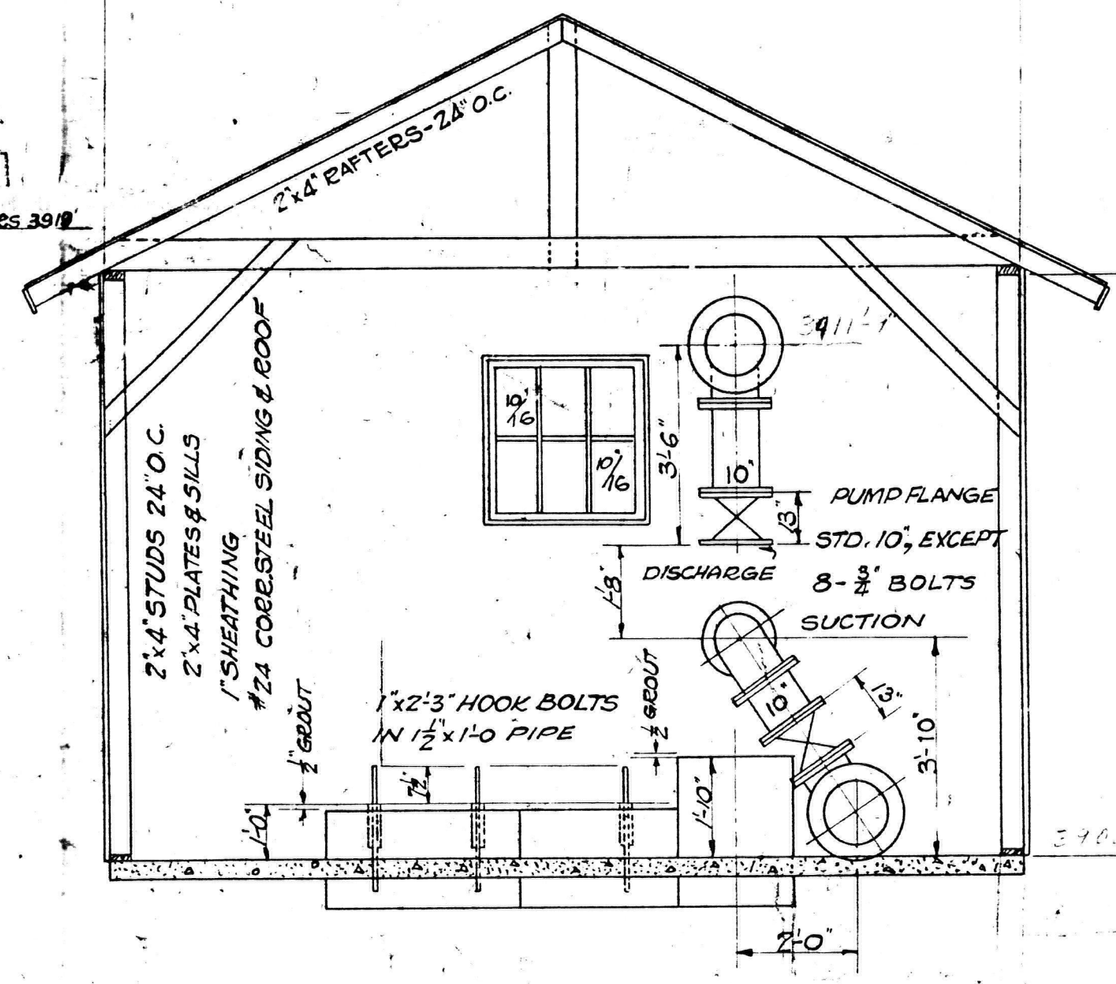


SECTION

BACKFILL

1

2- 10" HIGH LIFT D.S. PUMPS

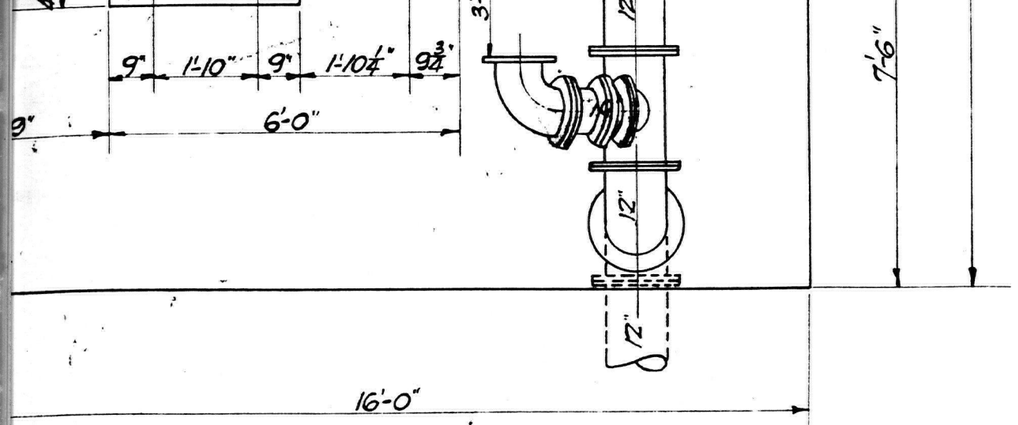


PLAN
SHOWING OUTLINE OF PUMP HOUSE, PUMP FOUNDATIONS AND SUCTION LINE TO PUMPS.

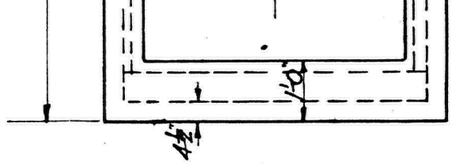


ELEVATION

DETAIL OF INTAKE BOX- CONCRETE

(PRE-CAST THIS BOX AND SET IN PLACE IN LAKE)

BILL OF MATERIAL FOR 12" SUPPLY & RETURN LINES

| ITEM | NO REQ | DESCRIPTION | MAT'L | LOCATION | MARK OR PATT | DETAILED ON DWG | REQ'N |
|---|---|---|---|---|---|---|---|
| 21 | 1 | 16" STD. GATE VALVE | ALL IRON | | | | A-5996 |
| 1 | 1800 | FT. OF 12" STD. PIPE | STL. | | | | A-5992 |
| 2 | 1 | 12" FOOT VALVES | C.I. | | | | " |
| 3 | 4 | 12"x12"x10" STD. FLANGED TEES | " | | | | " |
| 4 | 2 | 10" STD. 90° FLANGED ELBOWS | " | | | | " |
| 5 | 4 | 10" STD. GATE VALVES | IRON BODY | | | | " |
| 6 | 8 | 12" STD. 45° FLANGED ELBOWS | C.I. | | | | " |
| 1 | 5 | 12" EXPANSION JOINTS | | 12" LINES | Crane #401 | | |
| 8 | 11 | 12" STD 90° " " | " | | | | A-5992 |
| 9 | 5 | 12" GATE VALVE-L.P. 11" F. TO F. | IRON BODY | | | | " |
| 10 | 150 | COMPANION FLANGES | C.I. | | | | " |
| 11 | 200 | 1/16" GASKETS | RUBBER | | | | A5996 |
| 12 | 1800 | 7/8"x3½" MCH. BOLTS-WITH 1 HEX. NUT | | | | | A-5992 |
| 13 | 1 | 12" FLANGED CHECK VALVE | IRON BODY | DISCHARGE LINE | | | " |
| 14 | 1 | 12"x12"x12" LATERAL | | | | | " |
| 15 | 10 | FT. 10" PIPE | | | | | " |
| 16 | 8 | 10" COMP FLANGES | | | | | " |
| 17 | 1 | 30'x12' WOOD TANK | | | | | A-5963 |
| 18 | 1 | 12"x12x6 STD FLGD. TEE | C.I. | | | | A-5996 |
| 19 | 2 | 6"x11" STD. COMPANION FLGS. | C.I. | | | | " |
| 20 | 1 | 6" DIA. x 8" NIPPLE | STEEL | | | | " |

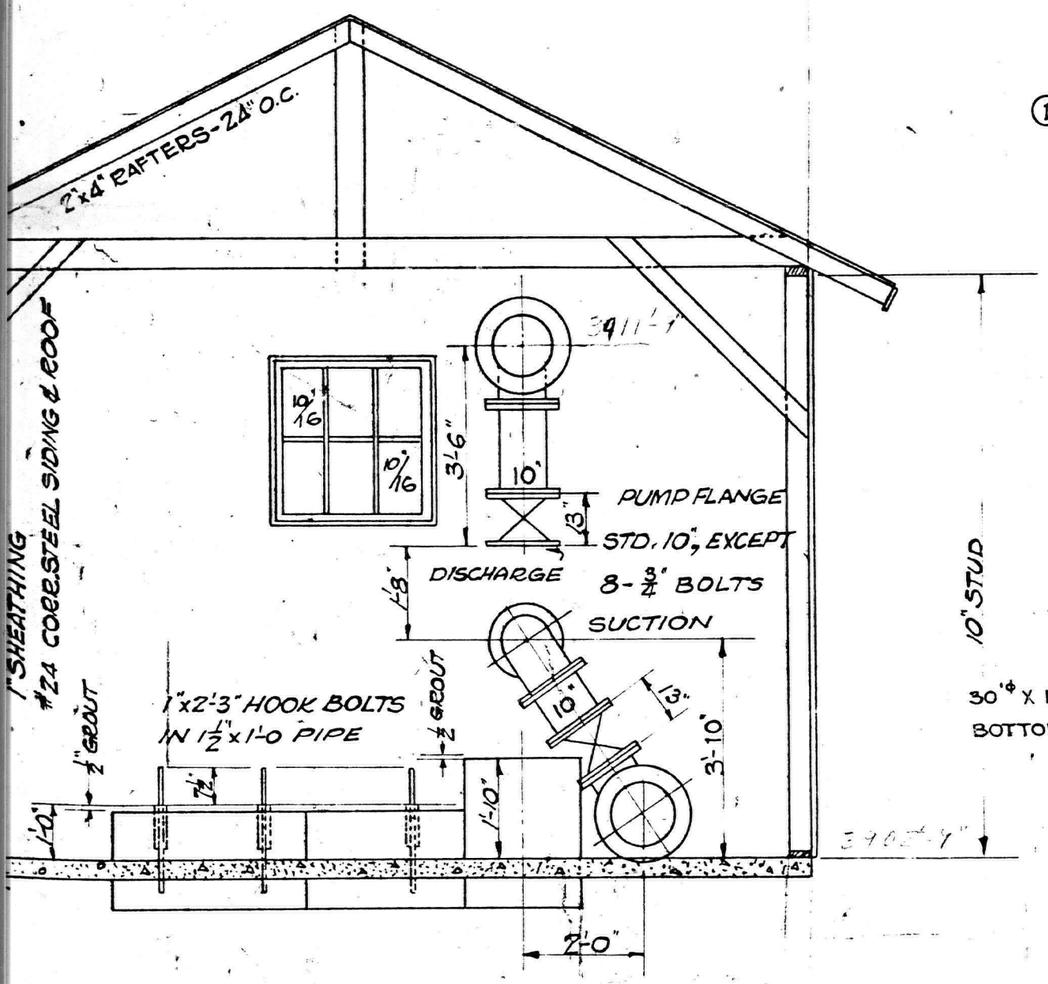


SECTION

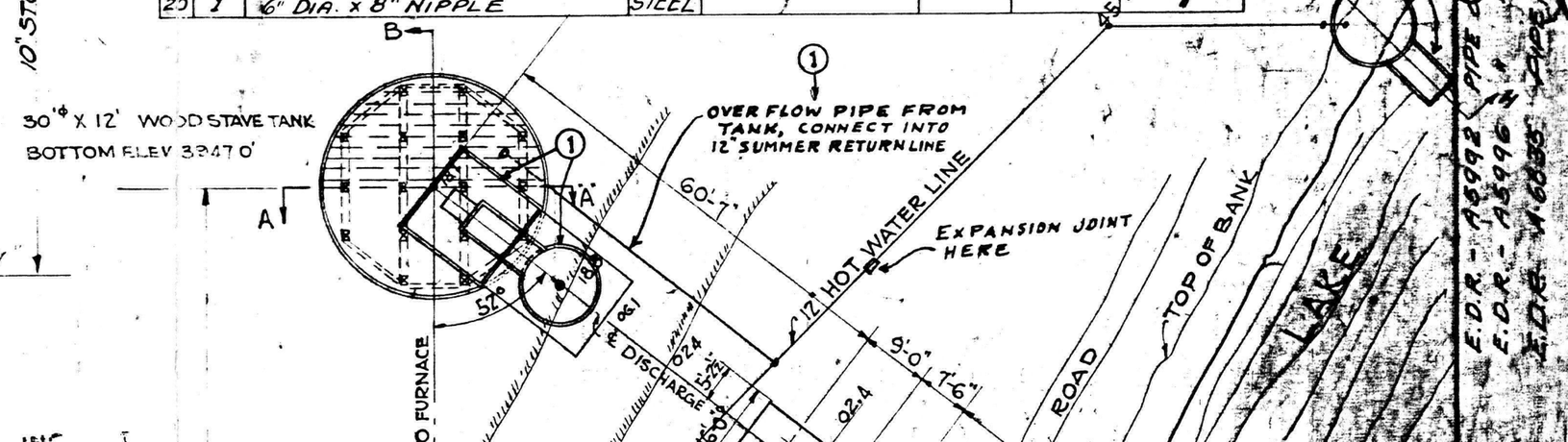

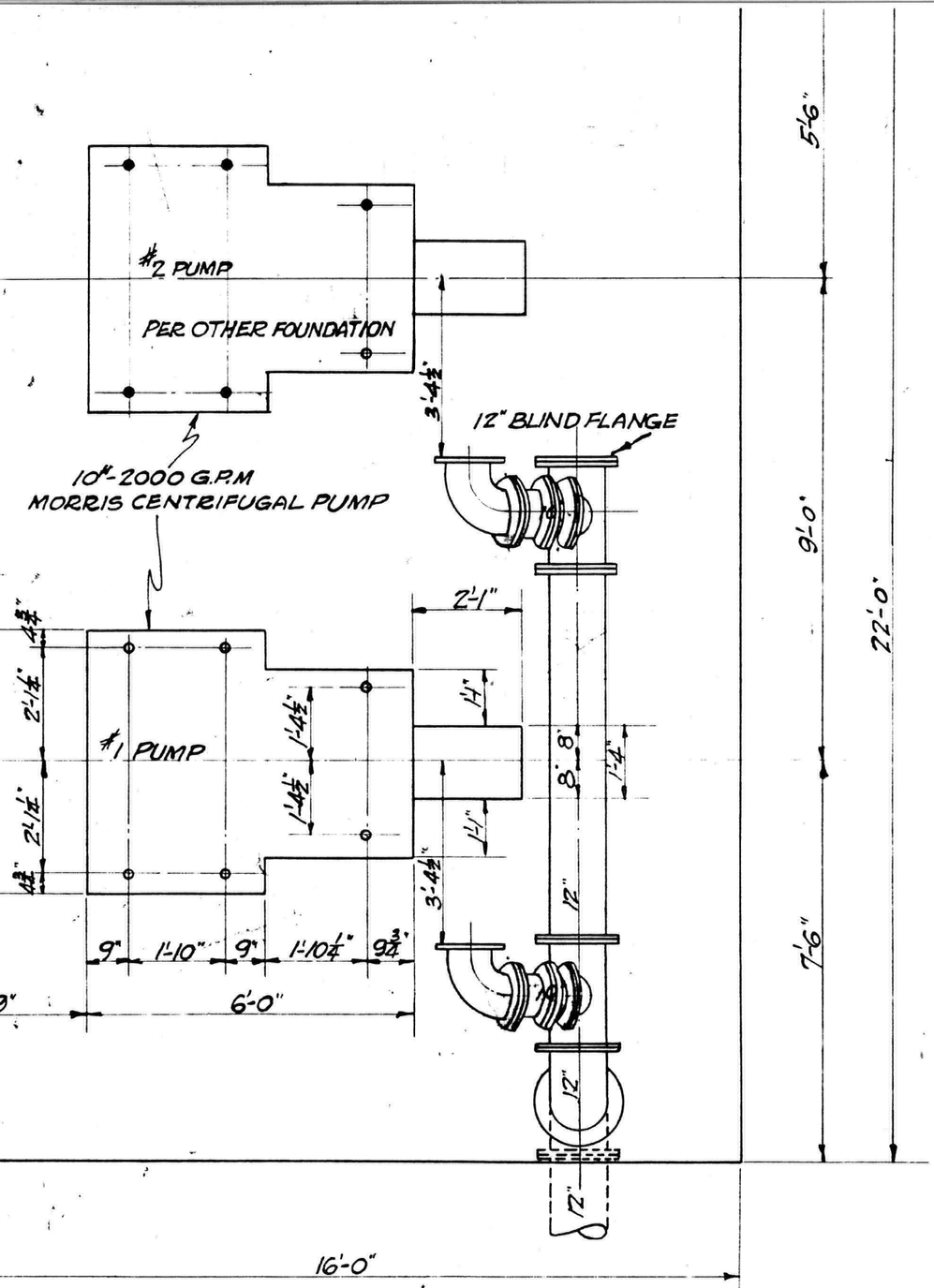


PLAN
SHOWING OUTLINE OF PUMP HOUSE, PUMP FOUNDATIONS AND SUCTION LINE TO PUMPS.

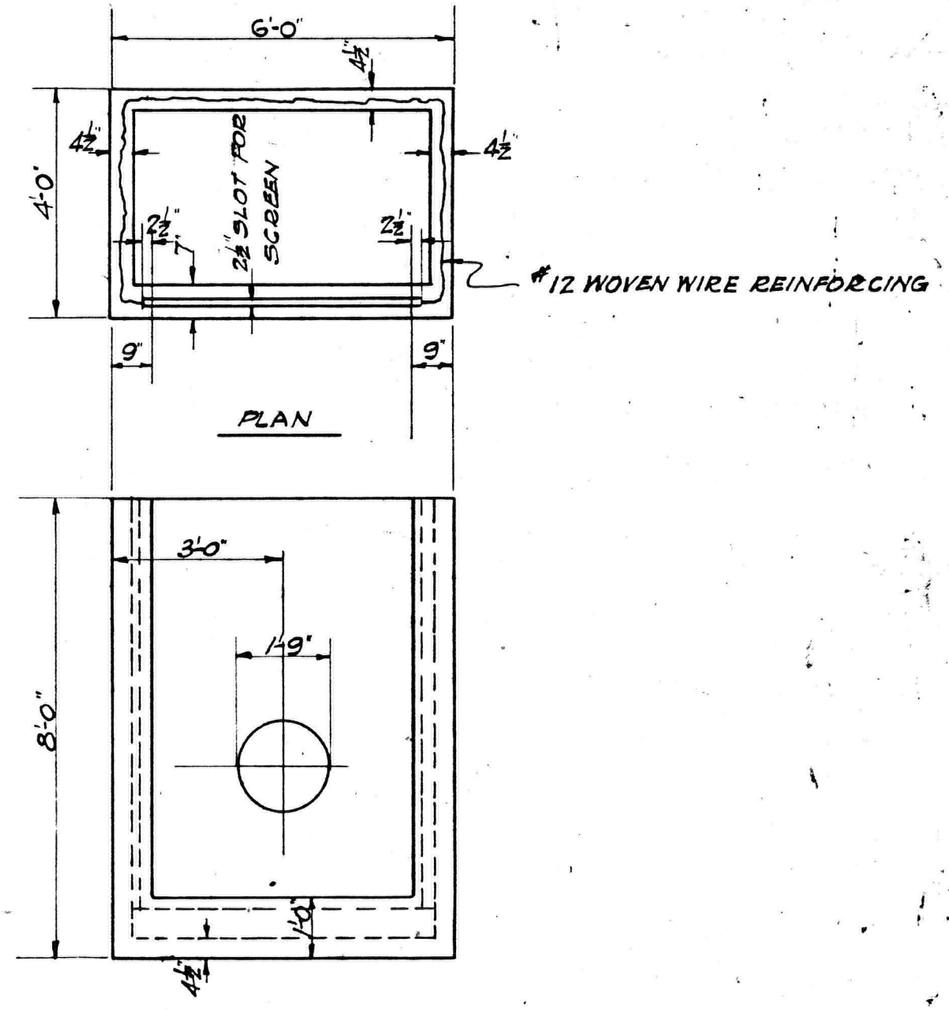


DETAIL OF INTAKE BOX- CONCRETE

(PRE-CAST THIS BOX AND SET IN PLACE IN LAKE)

BILL OF MATERIAL FOR 12" SUPPLY & RETURN LINES

| ITEM | No REQ | DESCRIPTION | MAT'L | LOCATION | MARK OR PATT | DETAILED ON DWG | REQ'N |
|---|---|---|---|---|---|---|---|
| 21 | 1 | 16" STD. GATE VALVE | ALL IRON | - | | | A-5996 |
| 1 | 1800 | FT. OF 12" STD. PIPE | STL. | | | | A-5992 |
| 2 | 1 | 12" FOOT VALVES | C.I. | | | | " |
| 3 | 4 | 12"x12"x10" STD. FLANGED TEES | " | | | | " |
| 4 | 2 | 10" STD. 90° FLANGED ELBOWS | " | | | | " |
| 5 | 4 | 10" STD. GATE VALVES | IRON BODY | | | | " |
| 6 | 8 | 12" STD. 45° FLANGED ELBOWS | C.I. | | | | " |
| 7 | 5 | 12" EXPANSION JOINTS | | 12" LINES | Crane #401 | | |
| 8 | " | 12" STD 90° " " | " | | | | A-5992 |
| 9 | [illegible] | 16" GATE VALVE-L.B.U. F.T.F. | IRON | | | | |

1 →

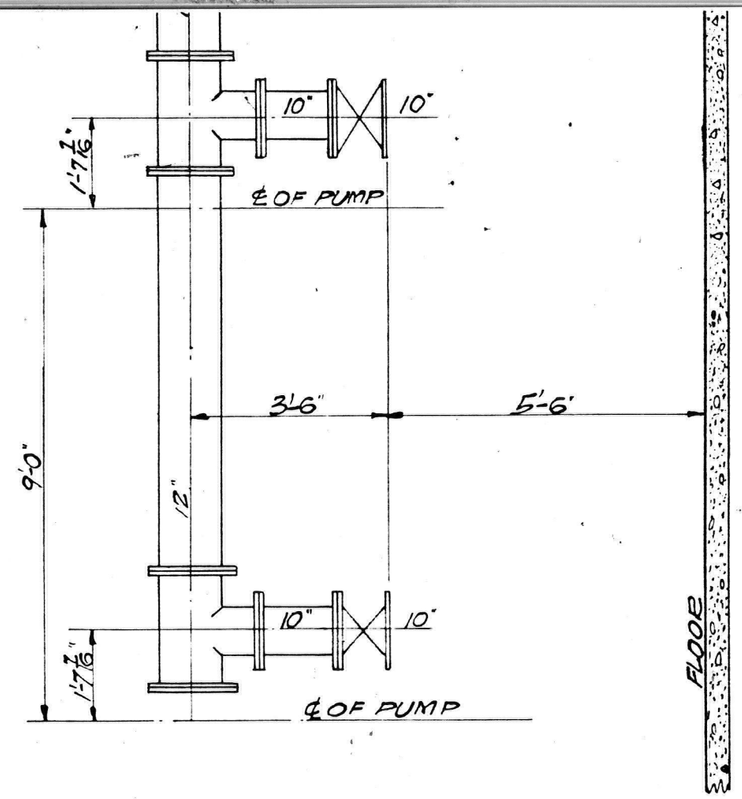


SIDE ELEVATION
SHOWING DISCH FROM PUMPS

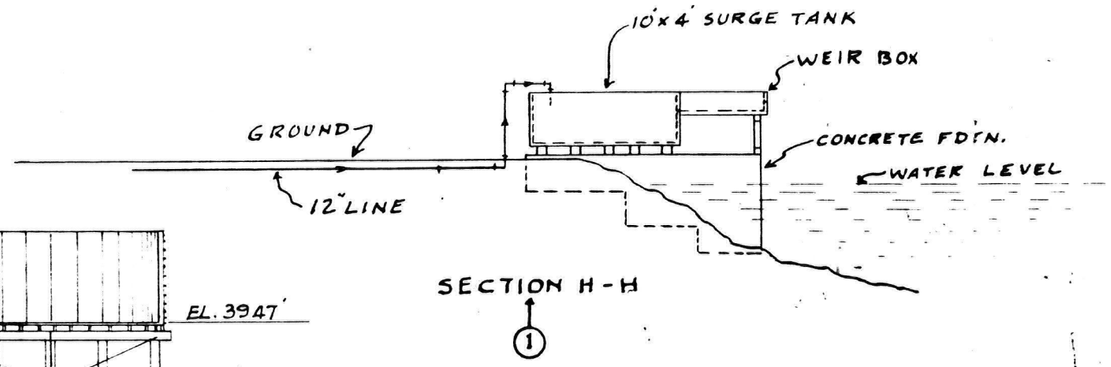


SECTION H-H
1

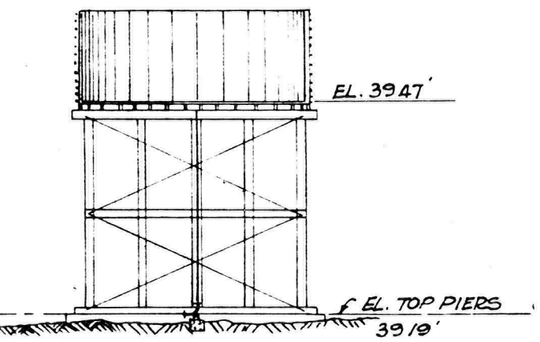


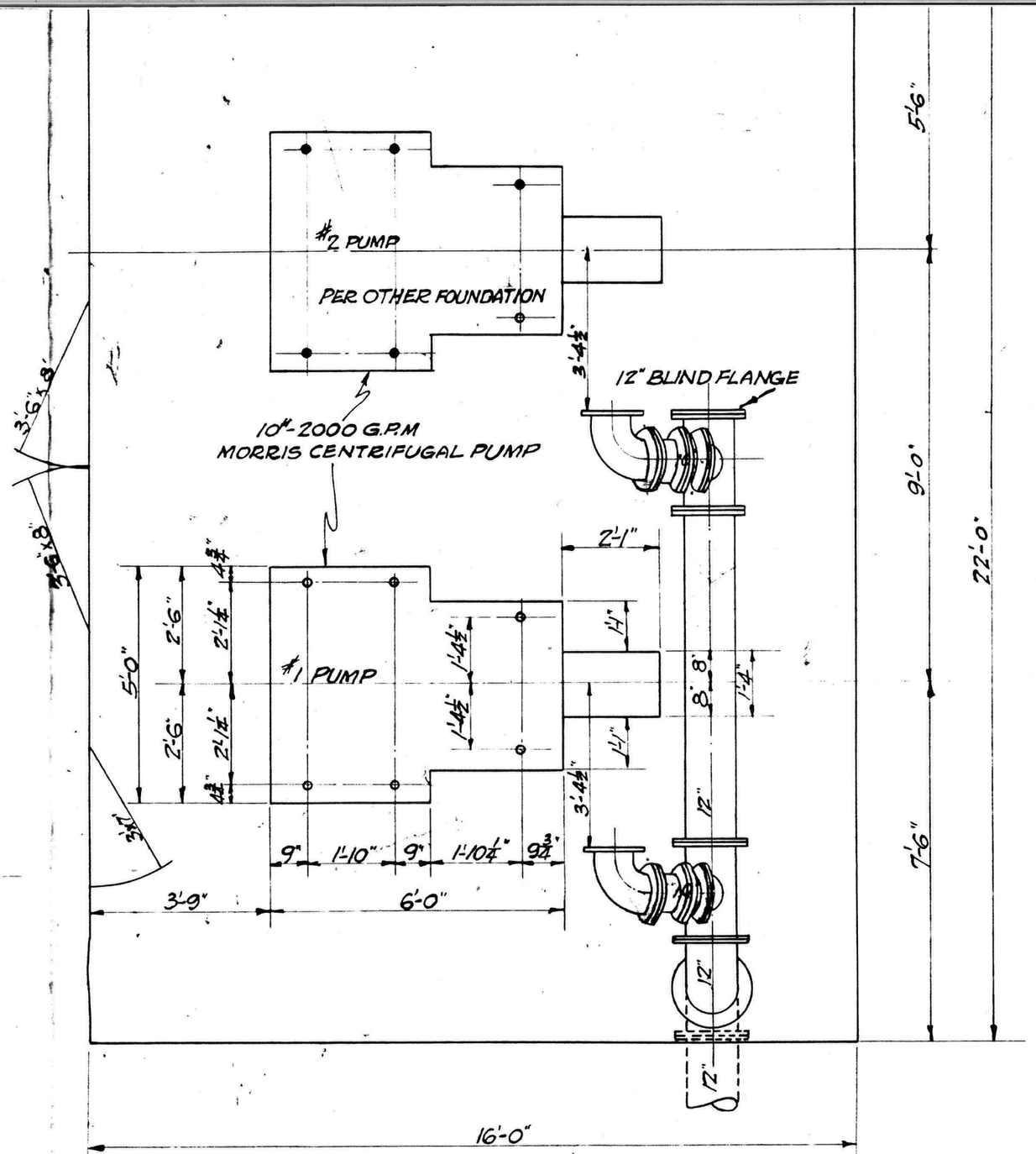


PLAN
SHOWING OUTLINE OF PUMP HOUSE, PUMP FOUNDATIONS AND SUCTION LINE TO PUMPS.

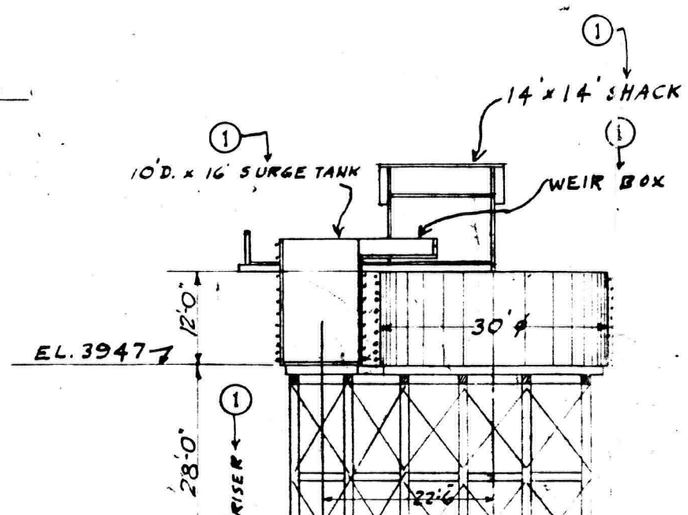

3-B"

Administrative Record
SF File Number
2060000

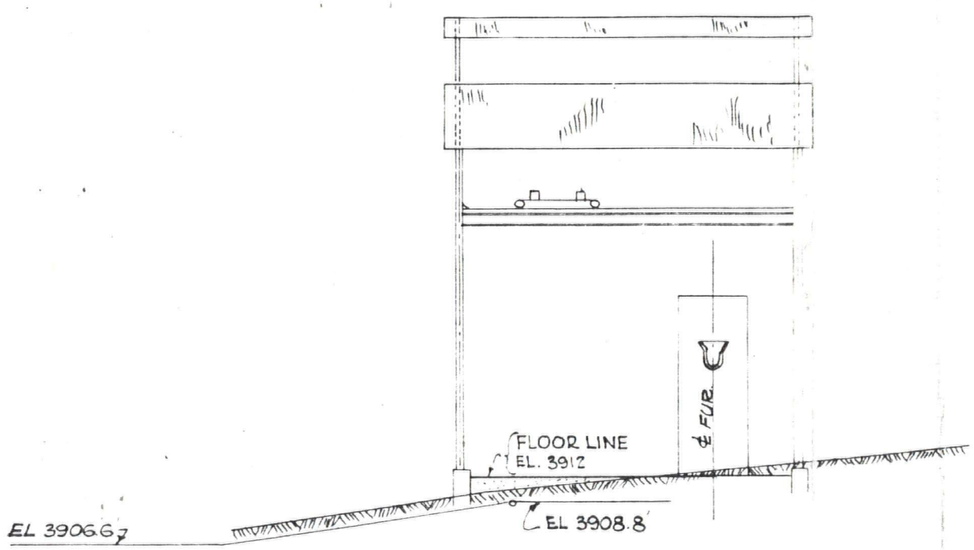


SECTION "C-C-C"

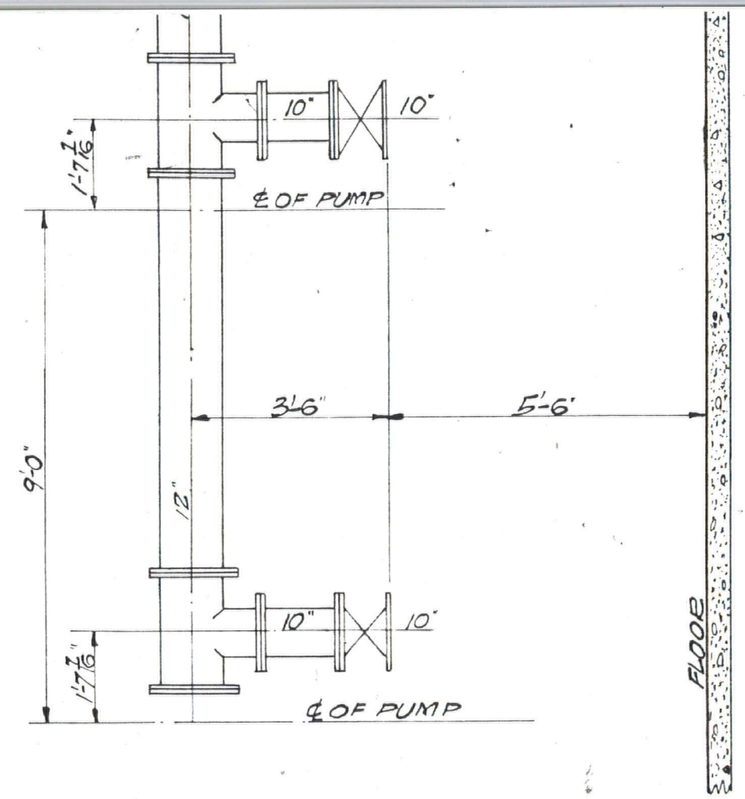


SIDE ELEVATION
SHOWING DISCH FROM PUMPS

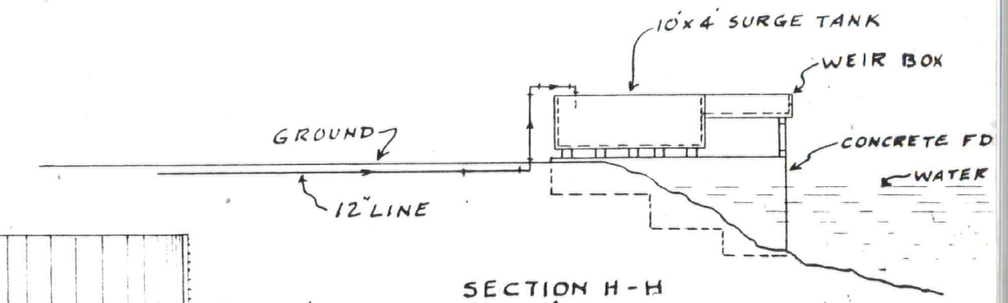


SECTION H-H
1

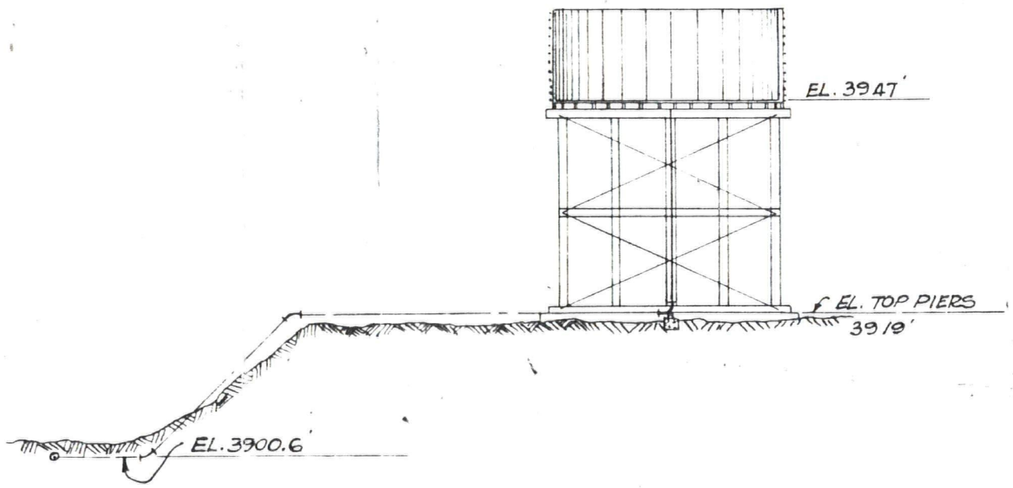

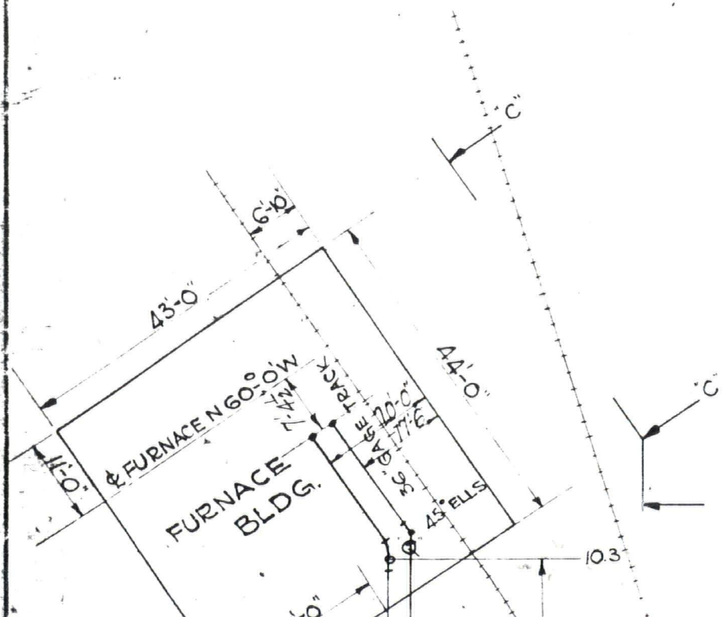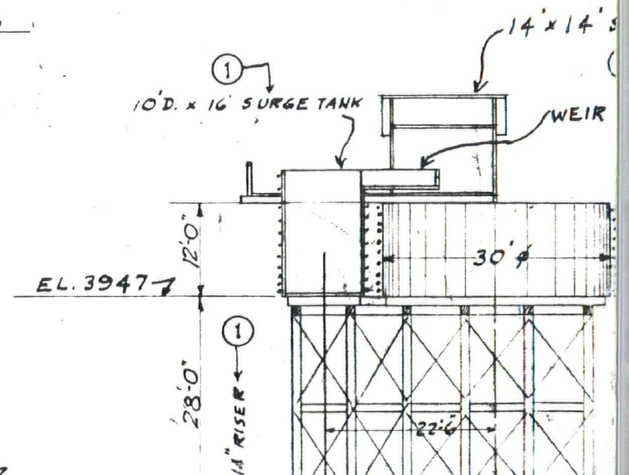
SECTION "B-B"