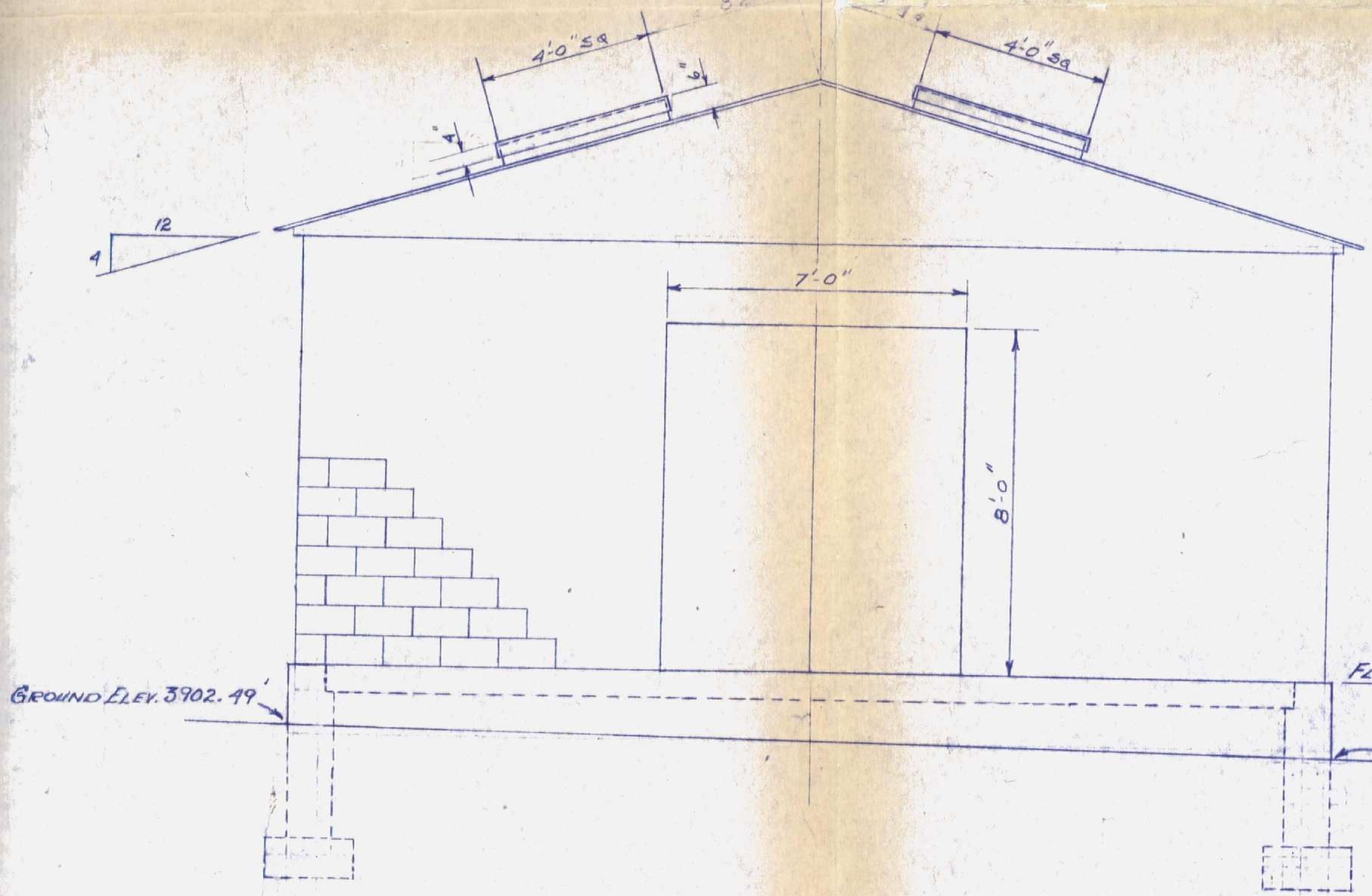

NORTH ELEVATION

VECTOR, INC.
TOTAL MICROGRAPHIC SERVICE
JUL 26 1967
HELENA, MONTANA
406/442-4710
MICROFILMED
THIS DATE

ATTACHMENT 6

1262327 - R8 SDMS
434782

NO.	NAME	MATERIAL & DESCRIPTION	REQ'D
APPROVED		APPROVED	APPROVED
APPROVED	CSchlosser 12/9/63	APPROVED	DATE OF ISSUE

DESCRIPTION

DRAWN BY Schlosser DATE 10-63
TRACED BY
CHECKED BY
APPROVED 12-9-63

EAST HELENA SLAG PLANT
WATER SUPPLY FOR FURN. BLDG.
GENERAL PLAN OF PUMP HOUSE
FOR VERTICAL PUMP

THE ANACONDA COMPANY

SCALE 3/8" = 1'-0"

HG-20

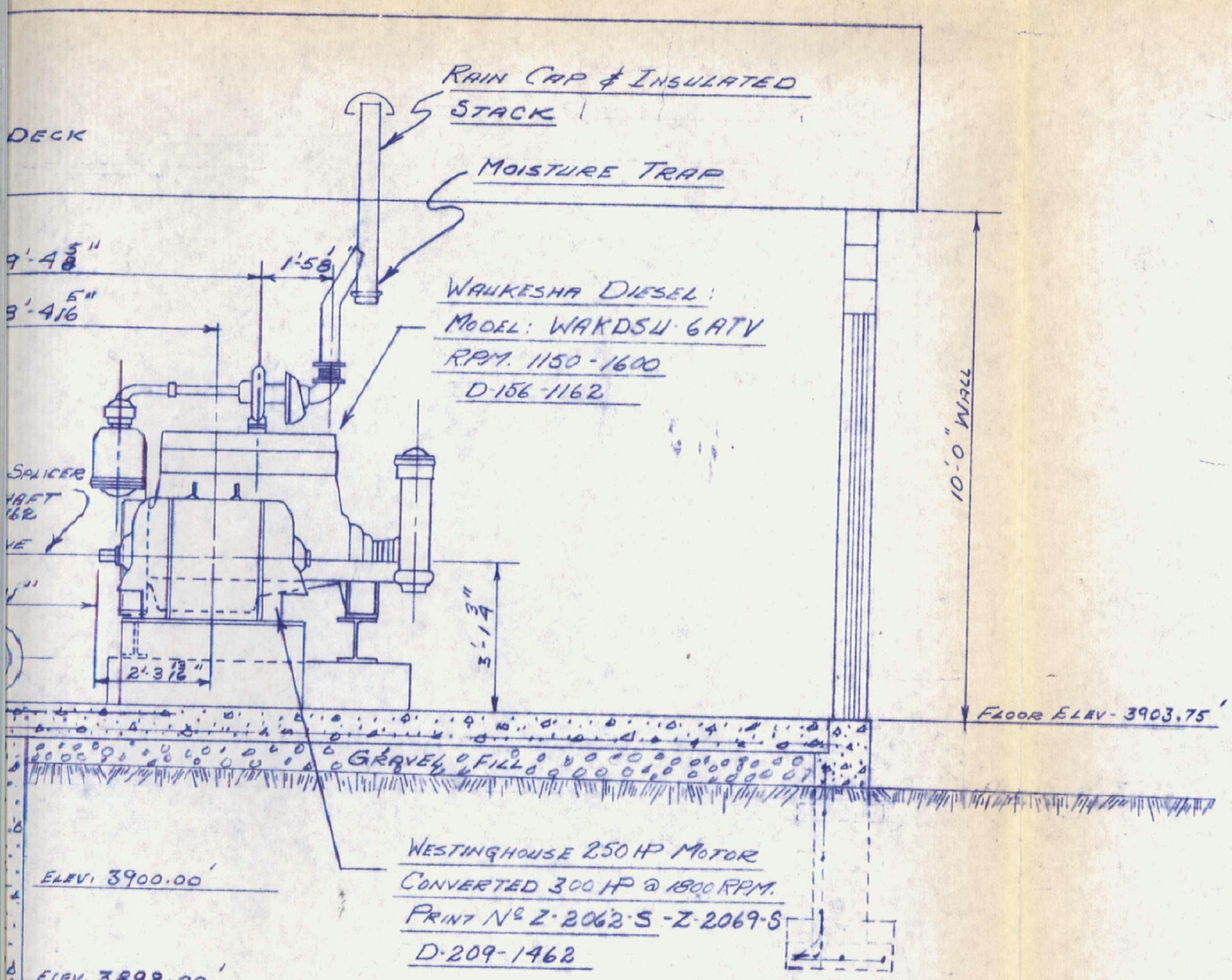

SECTION "AA"

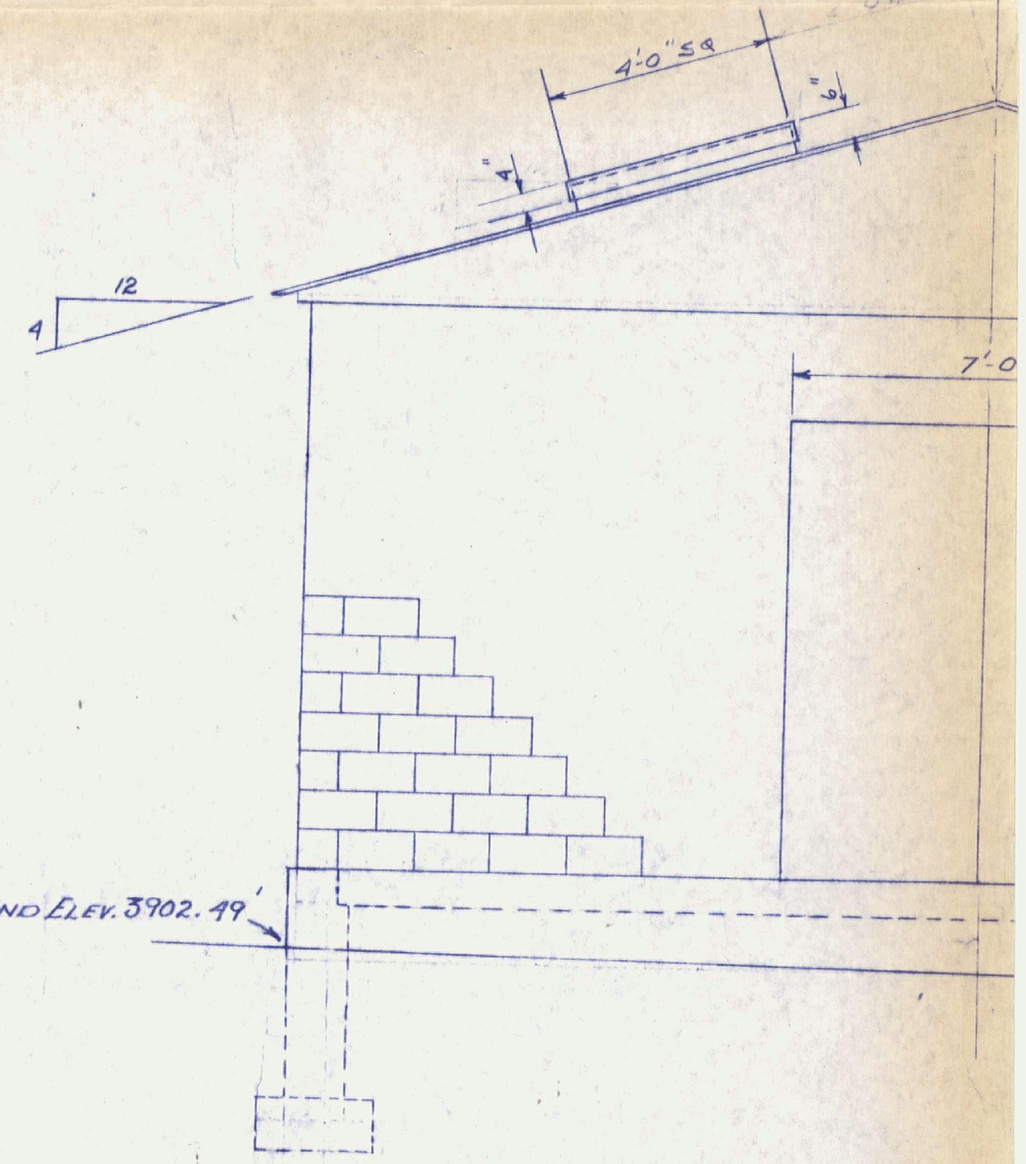

NORTH

REVISIONS NO.	MADE BY	CHECKED	DATE	DESCRIPTION
5				
6				
7				
8				

REVISIONS NO.	MADE BY	CHECKED	DATE	DESCRIPTION
1				
2				
3				
4				

DRAWN BY SCHLOSSER DATE 10-63
TRACED BY
CHECKED BY
APPROVED PARSONS 12-9-63

NO.	NA
APPROVED	
APPROVED	CO

EAST HELE
WATER SUPPLY
GENERAL PLAN
FOR VERTICAL

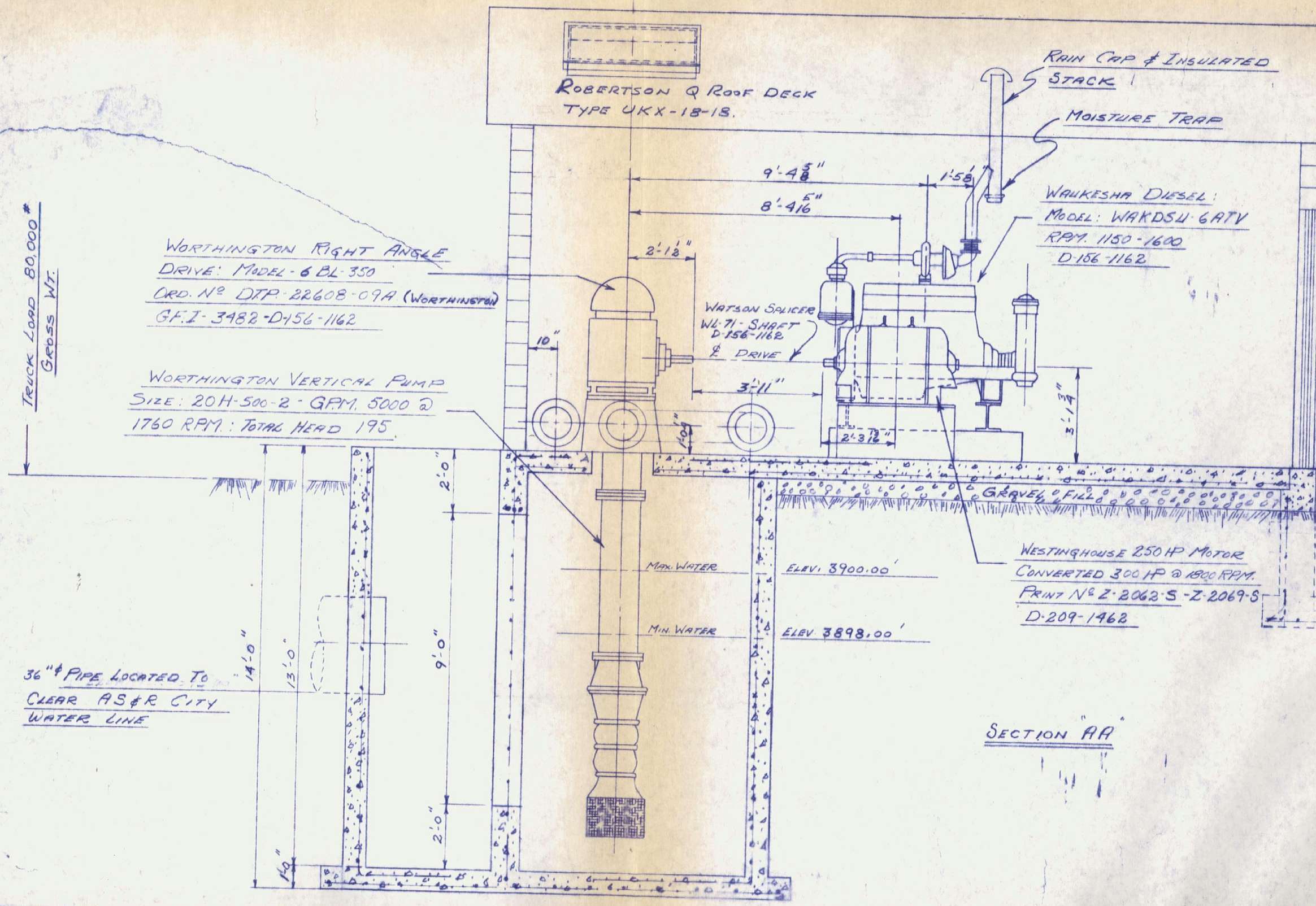

REFERENCES	DWG. NO.	TITLE

REFERENCES	DWG. NO.	TITLE

REVISIONS	NO.	MADE BY	CHECKED	DATE	DESCRIPTION
	5				
	6				
	7				
	8				

REVISIONS	NO.
	1
	2
	3
	4

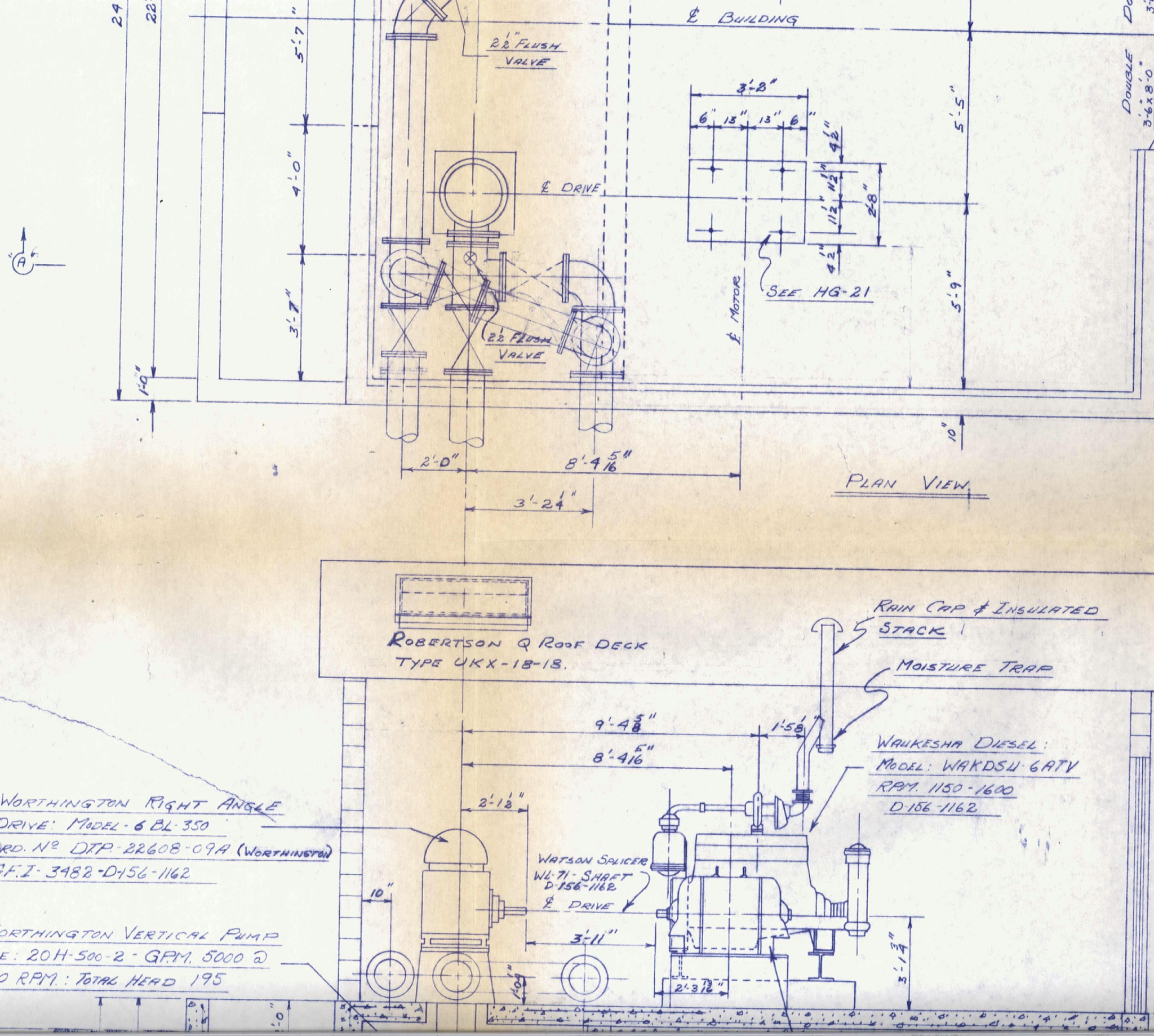
PLAN VIEW
℄ BUILDING
2½" FLUSH VALVE
℄ DRIVE
℄ MOTOR
SEE HG-21
DOUBLE 3'-6" x 8'-0"
24'-0"
22'-0"
5'-7"
4'-0"
3'-7"
1'-0"
3'-8"
6" 13" 13" 6"
4½"
11½"
11½"
4½"
2'-8"
5'-5"
5'-9"
10"
2'-0"
8'-4 5/16"
3'-2¼"
ROBERTSON Q ROOF DECK
TYPE UKX-18-18.
RAIN CAP & INSULATED STACK
MOISTURE TRAP
9'-4⅝"
8'-4 5/16"
1'-5⅛"
2'-1⅛"
10"
WAUKESHA DIESEL:
MODEL: WAKDSU-6ATV
RPM. 1150-1600
D-156-1162
WATSON SPLICER
WL-71-SHAFT
D-156-1162
℄ DRIVE
3'-11"
2'-3 7/16"
3'-1¾"
1'-0"
WORTHINGTON RIGHT ANGLE
DRIVE: MODEL-6BL-350
ORD. Nº DTP-22608-09A (WORTHINGTON)
GFI-3482-D-156-1162
WORTHINGTON VERTICAL PUMP
SIZE: 20H-500-2-GPM. 5000 @
1760 RPM: TOTAL HEAD 195
TRUCK LOAD 80,000#
GROSS WT.

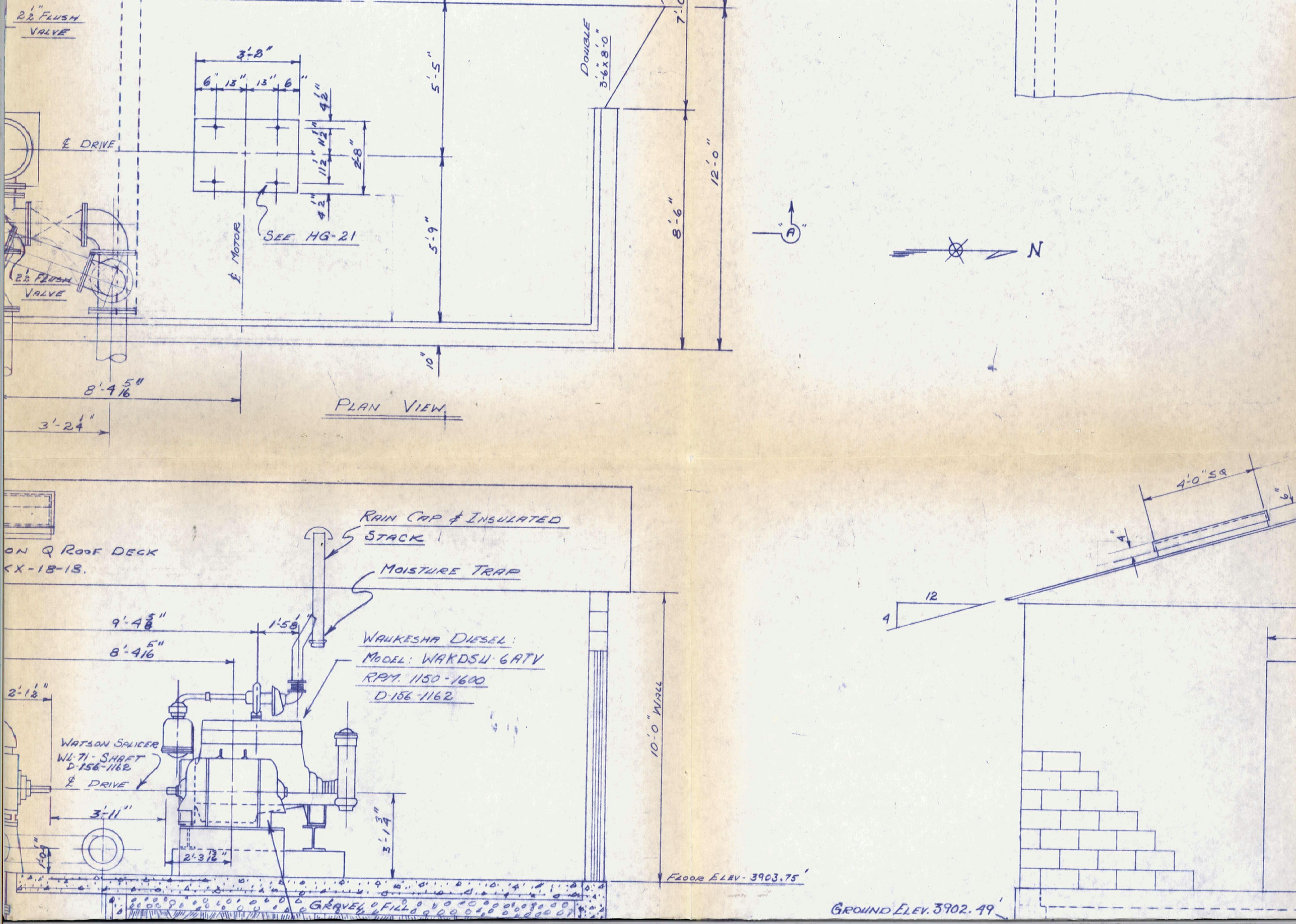
2½" FLUSH VALVE
3'-8"
6" 13" 13" 6"
4½"
1½"
1½"
2'-8"
4½"
℄ DRIVE
SEE HG-21
℄ MOTOR
5'-5"
5'-9"
DOUBLE 3'-6"x8'-0"
7'-0"
8'-6"
12'-0"
10"
2½" FLUSH VALVE
8'-4 5/16"
3'-2¼"
PLAN VIEW
A
N
ON Q ROOF DECK
KX-18-18.
RAIN CAP & INSULATED STACK
MOISTURE TRAP
9'-4⅝"
8'-4 5/16"
1'-5½"
WAUKESHA DIESEL:
MODEL: WAKDSU-6ATV
RPM. 1150-1600
D-156-1162
2'-1½"
WATSON SPLICER
WL-71-SHAFT
D-156-1162
℄ DRIVE
3'-11"
2'-3 13/16"
3'-1¾"
10'-0" WALL
FLOOR ELEV-3903.75'
GRAVEL FILL
4'-0" SQ
4"
12
4
GROUND ELEV. 3902.49'

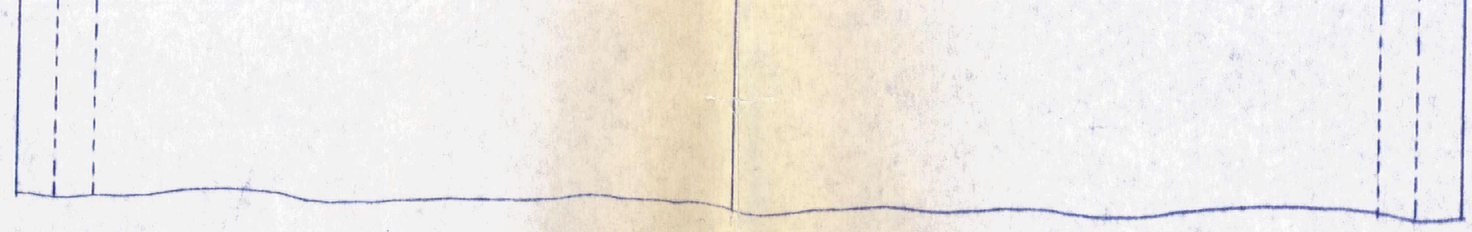

ROOF VIEW

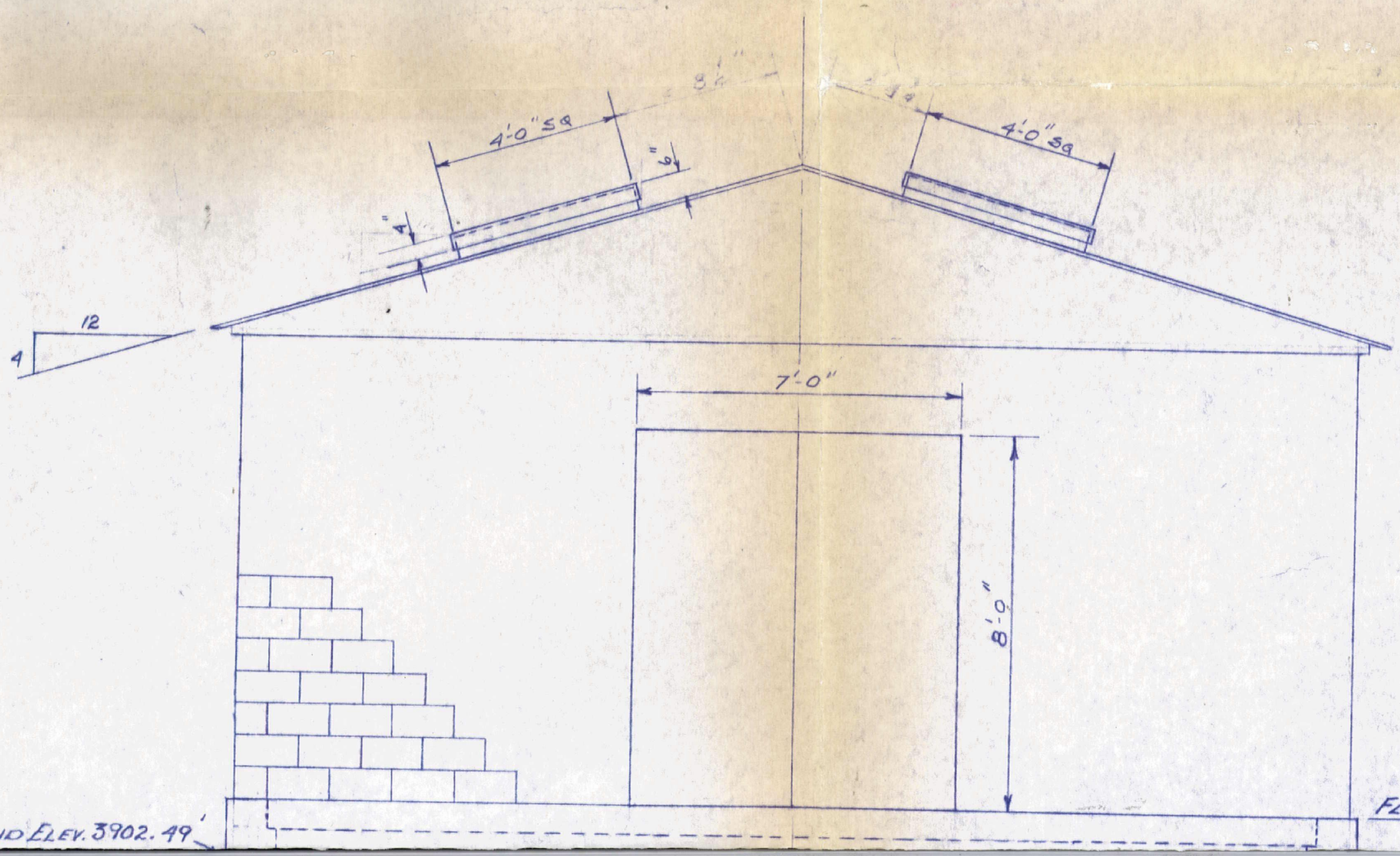

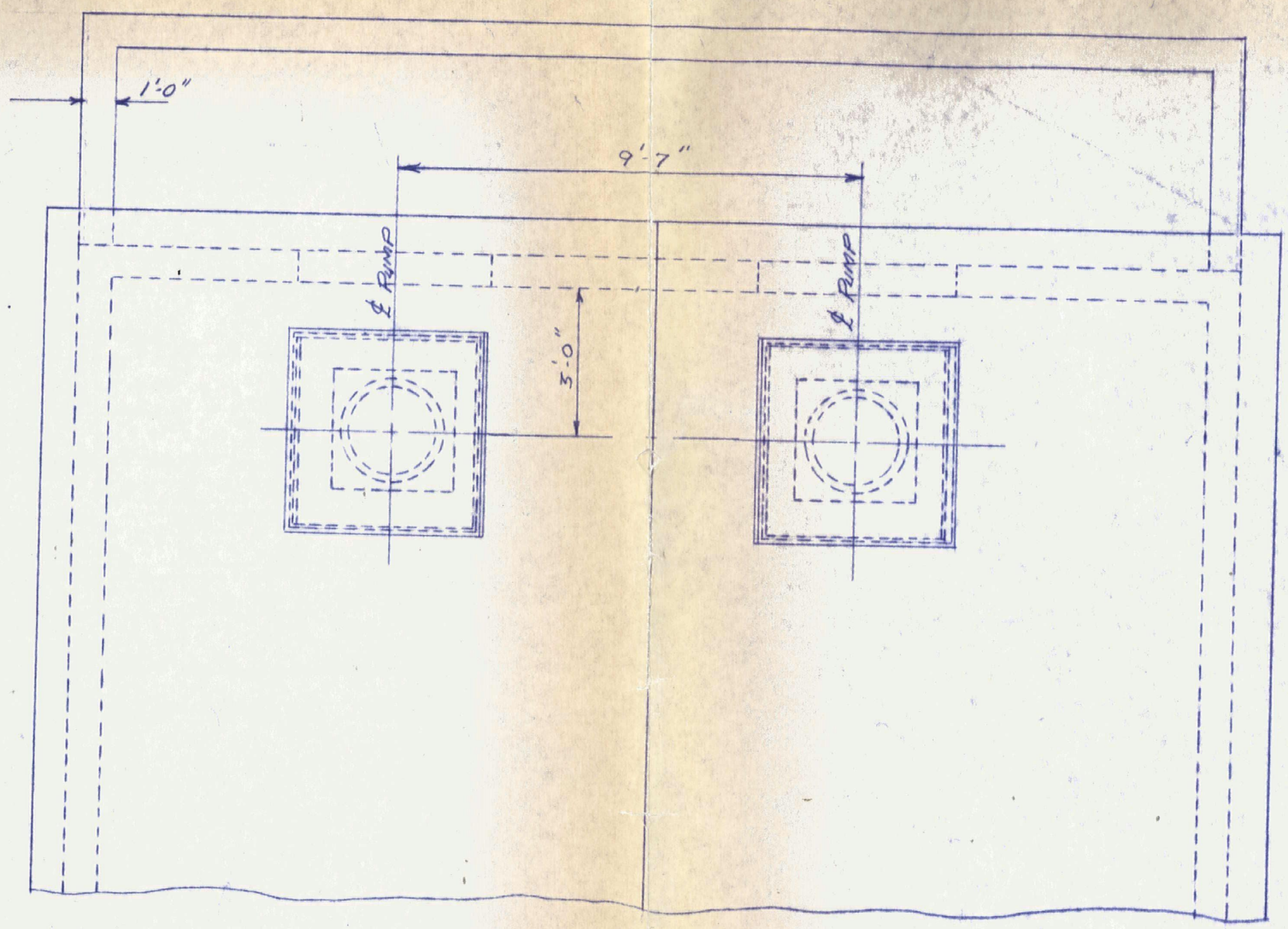

ROOF VIEW

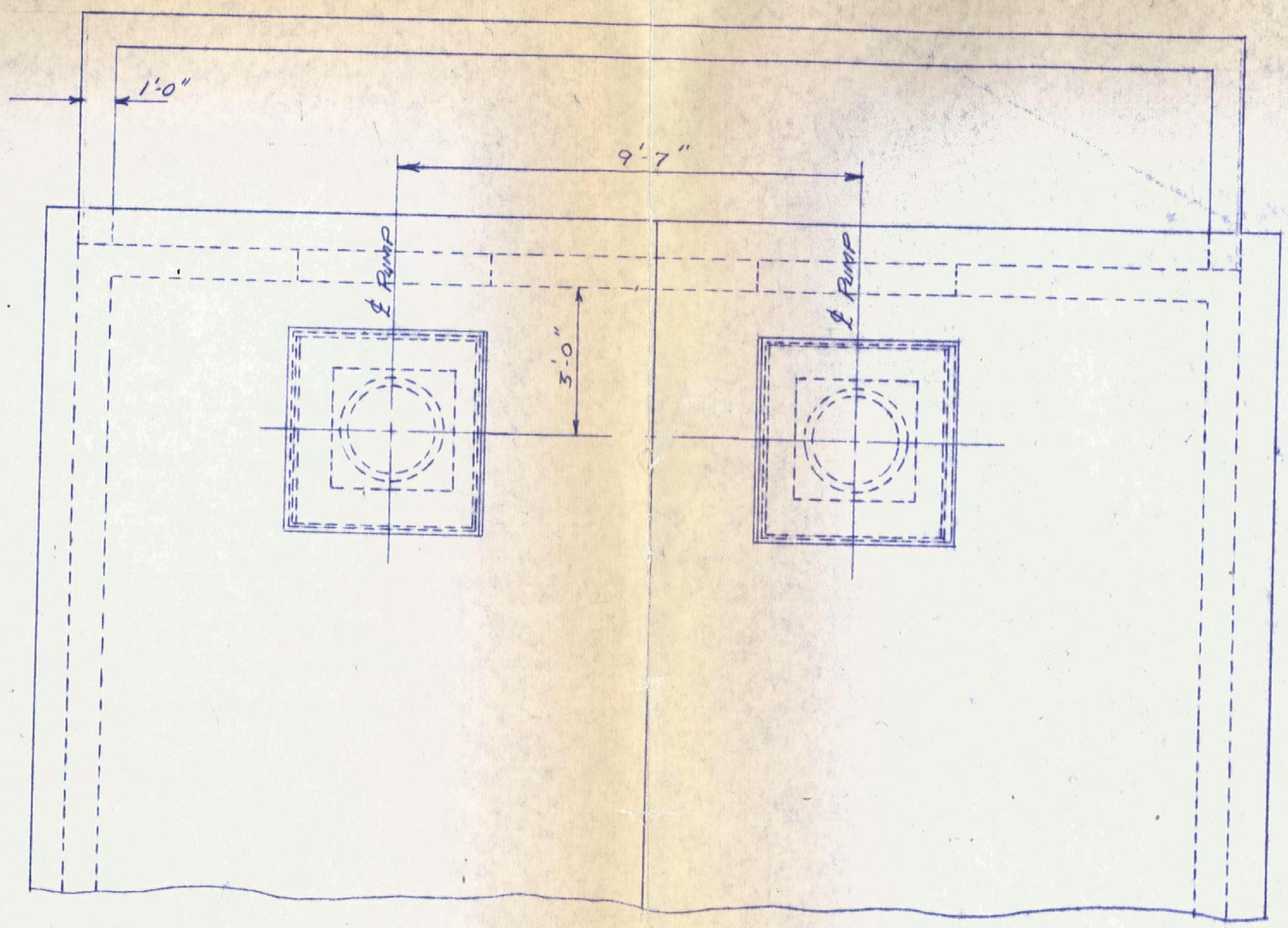

ROOF VIEW

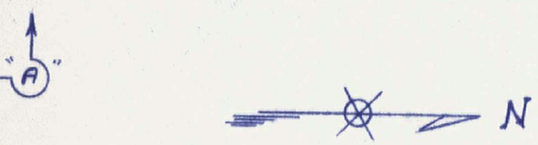

ATTACHMENT 6

Administrative Record
SF File Number
2060000

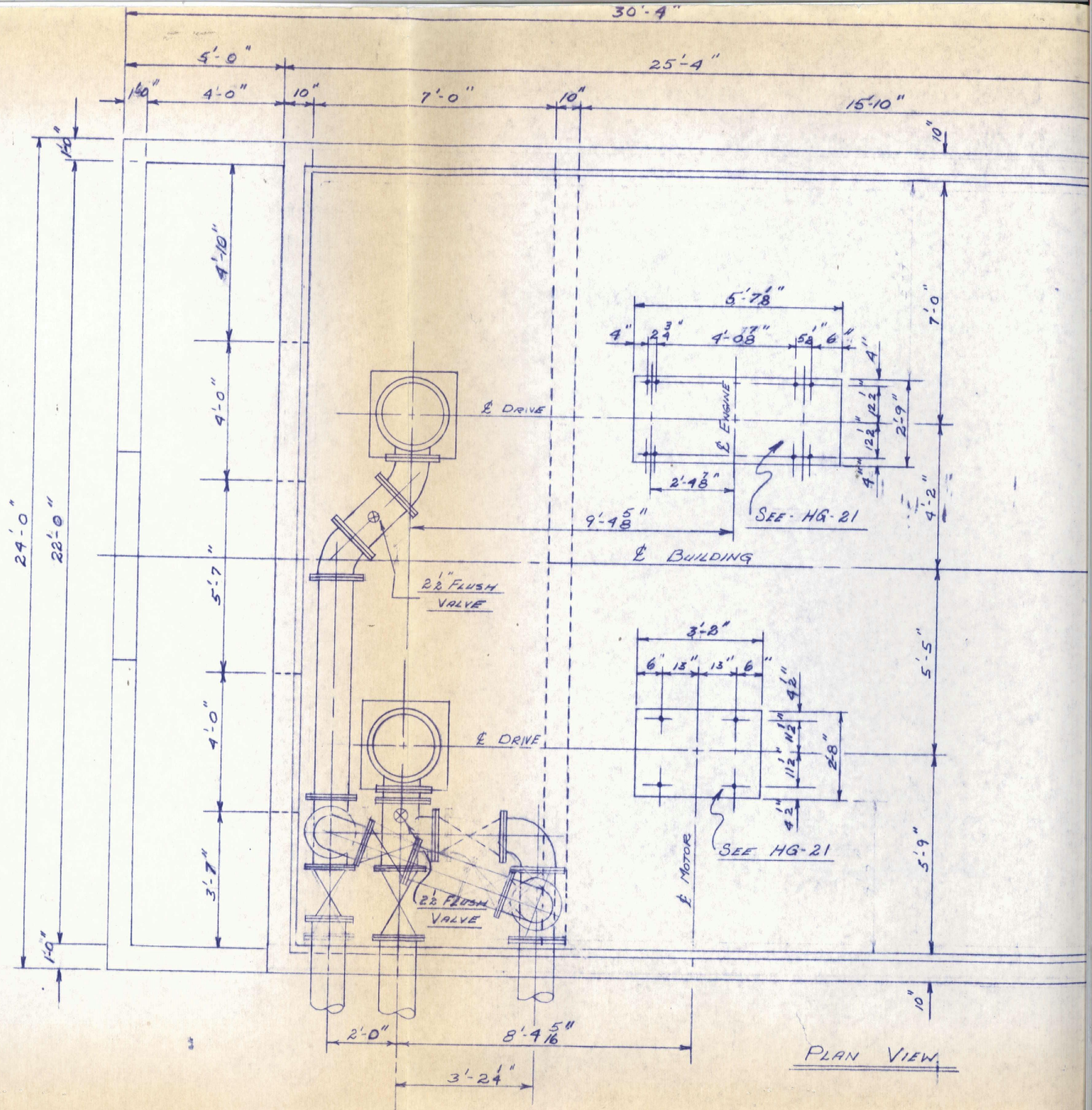

PLAN VIEW