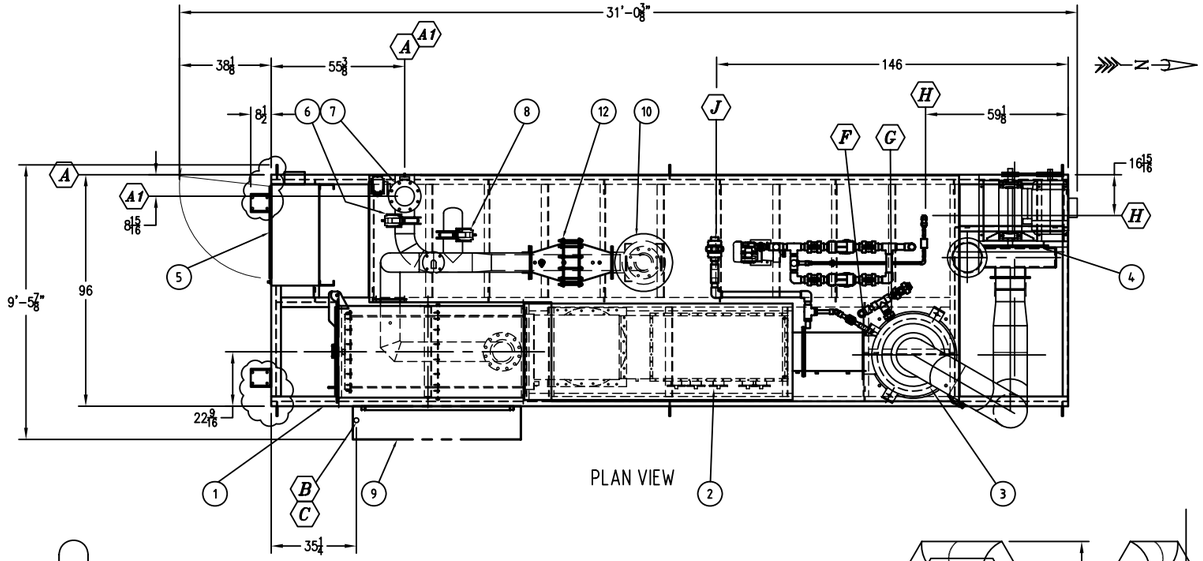

TERMINAL POINT SCHEDULE

T.P.	DESCRIPTION	MEDIA	SIZE	CONNECTION	MATERIAL
A	PROCESS INLET	VOC LADEN AIR	8"Ø	FLANGED	CARBON STEEL
A1	PROCESS BYPASS	VOC LADEN AIR	8"Ø	FLANGED	CARBON STEEL
B	FUEL INLET	NATURAL GAS	1-1/2"Ø	NPT	CARBON STEEL
C	COMPRESSED AIR INLET	COMPRESSED AIR	1"Ø	NPT	CARBON STEEL
D	NaOH Supply	25% wt NaOH	1/2"Ø	NPT	CPVC
F	OVERFLOW OUTLET	SUMP WATER	1-1/2"Ø	SLIP	CPVC
G	SUMP DRAIN	SUMP SOLUTION	2"Ø	SLIP	CPVC
H	BLOWDOWN OUTLET	BLOWDOWN SOLUTION	3/4"Ø	SLIP	CPVC
J	MAKE-UP WATER	SOFT WATER	2"Ø	NPT	CARBON STEEL
K	SYSTEM EXHAUST	MOIST CLEAN AIR	TBD	FLANGED	FRP

ITEM NO	DESCRIPTION	DWG. NO	TAG NO	COMMENTS
1	BURNER ASSEMBLY			CARBON STEEL
2	QUENCH ASSEMBLY			AL6XN
3	SCRUBBER TOWER			FRP
4	SYSTEM FAN		F-101	
5	CONTROL PANEL	450		NEMA 12
6	SYSTEM INLET VALVE 8" WAFERTYPE W. ELECTRIC ACTUATOR		XV-401	
7	SYSTEM BYPASS VALVE 8" WAFERTYPE W. ELECTRIC ACTUATOR		XV-402	
8	FRESH AIR VALVE 8" WAFERTYPE W. ELECTRIC ACTUATOR		FCV-400	
9	FUEL TRAIN	H000		
10	INLINE AIR FILTER		FI-103	
11	INLET FLOW SENSOR		FE-101/PDT-101	
12	FLAME ARRESTOR 16" Ø BANK			WITH TE-104
13	COMPRESSED AIR TRAIN			
14	REMOVABLE CASTERS FOR MOVING INSIDE BUILDING			10,000 LB CAP EACH BOLT ON FOR MOVING UNIT

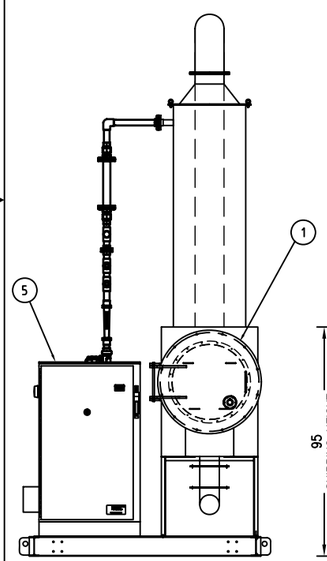

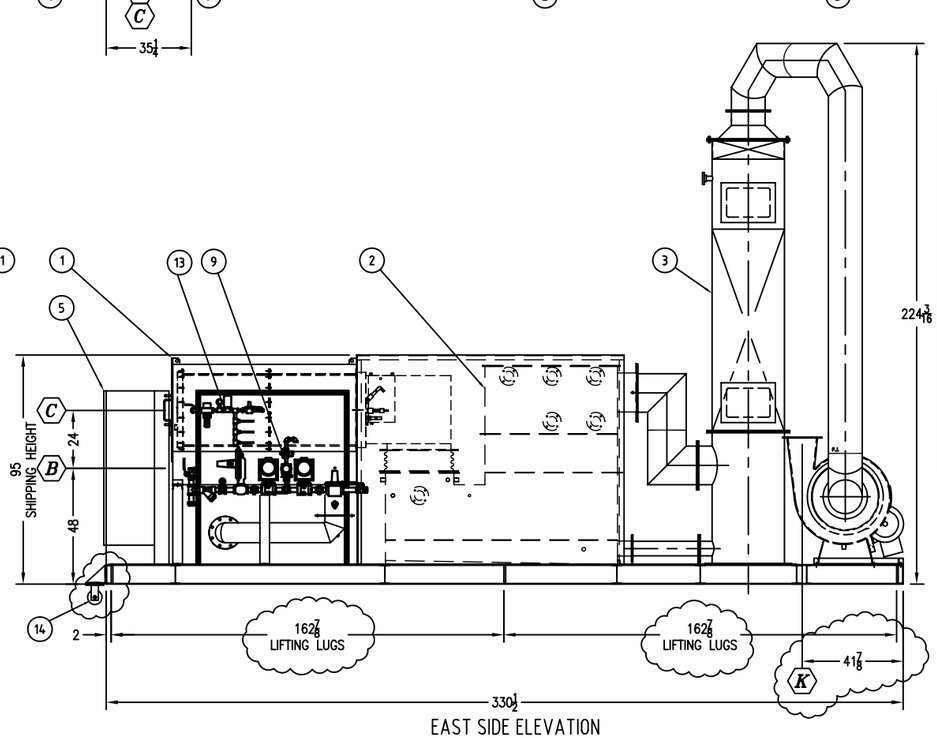

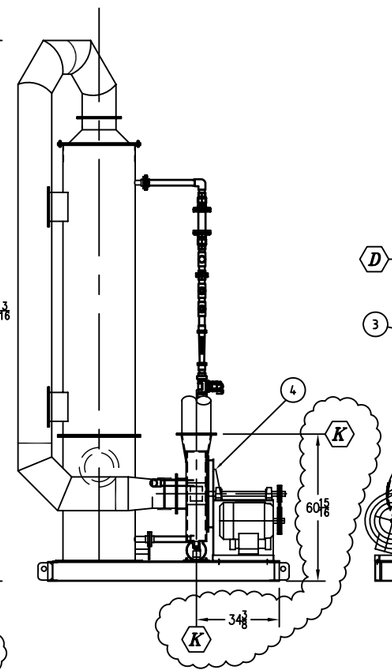

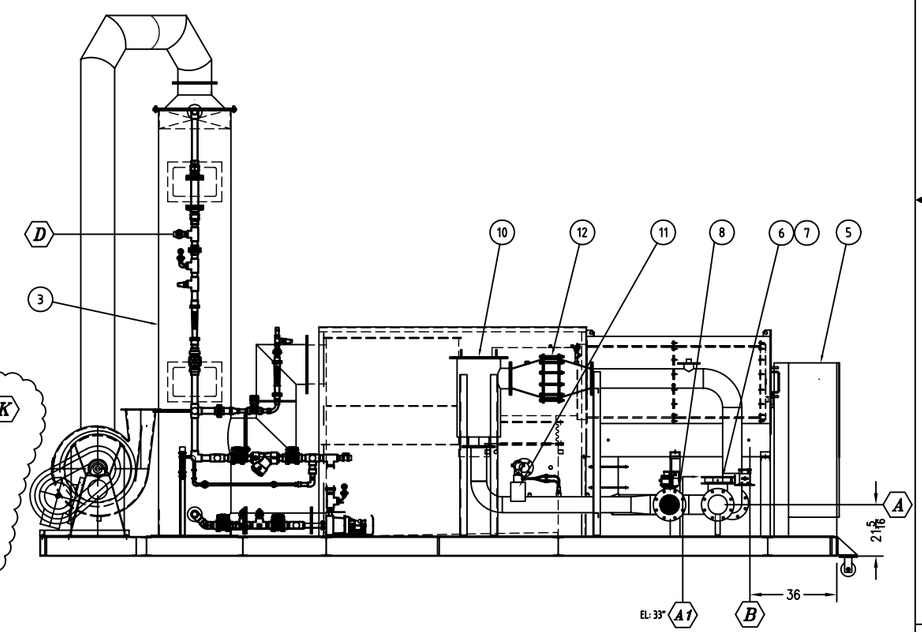

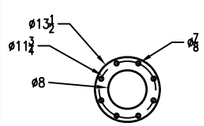

DETAIL INLET & BYPASS FLANGE

BURNER DESIGN UNDER LICENSE FROM:

ALZETA CORPORATION
2343 Calle Del Mundo, Santa Clara, CA 95054-1008

REFERENCE DRAWING

REV	BY	DATE	CHANGE
A	JPW	24AUG06	MOVE WHEELS TO OPPOSITE END REVISE FAN & SCRBR TO ACTUAL DIMENSIONS

ANGUIL

ANGUIL ENVIRONMENTAL SYSTEMS, INC.
MILWAUKEE, WISCONSIN

INFORMATION CONTAINED HEREIN IS THE PROPERTY OF ANGUIL ENVIRONMENTAL SYSTEMS,INC. AND IS LOANED FOR INFORMATION ONLY. DRAWING OR PARTS OF DRAWING MAY NOT BE REPRODUCED WITHOUT THE EXPRESSED WRITTEN CONSENT OF ANGUIL ENVIRONMENTAL SYSTEMS,INC., MILWAUKEE, WI.

TITLE: MODEL 10 FLAMELESS THERMAL OXIDIZER W. SCRUBBER
GENERAL ARRANGEMENT OF EQUIPMENT

DRAWING NO. 12584-7
SCALE 3/8"=1'-0"

DRAWN JPW DATE 17JULY06
CHECKED DATE
APPROVED DATE
LAST DRAWN JPW DATE 24AUG06

CUSTOMER: PEMACO SUPERFUND SITE
US ARMY CORP OF ENGINEERS
MAYWOOD CA

REV. A

SOURCE
PAGE 1 OF 1

AUTOCAD PATH H:\CAD\JOBS\12000

LAST PLOT BY JPW DATE 24AUG06