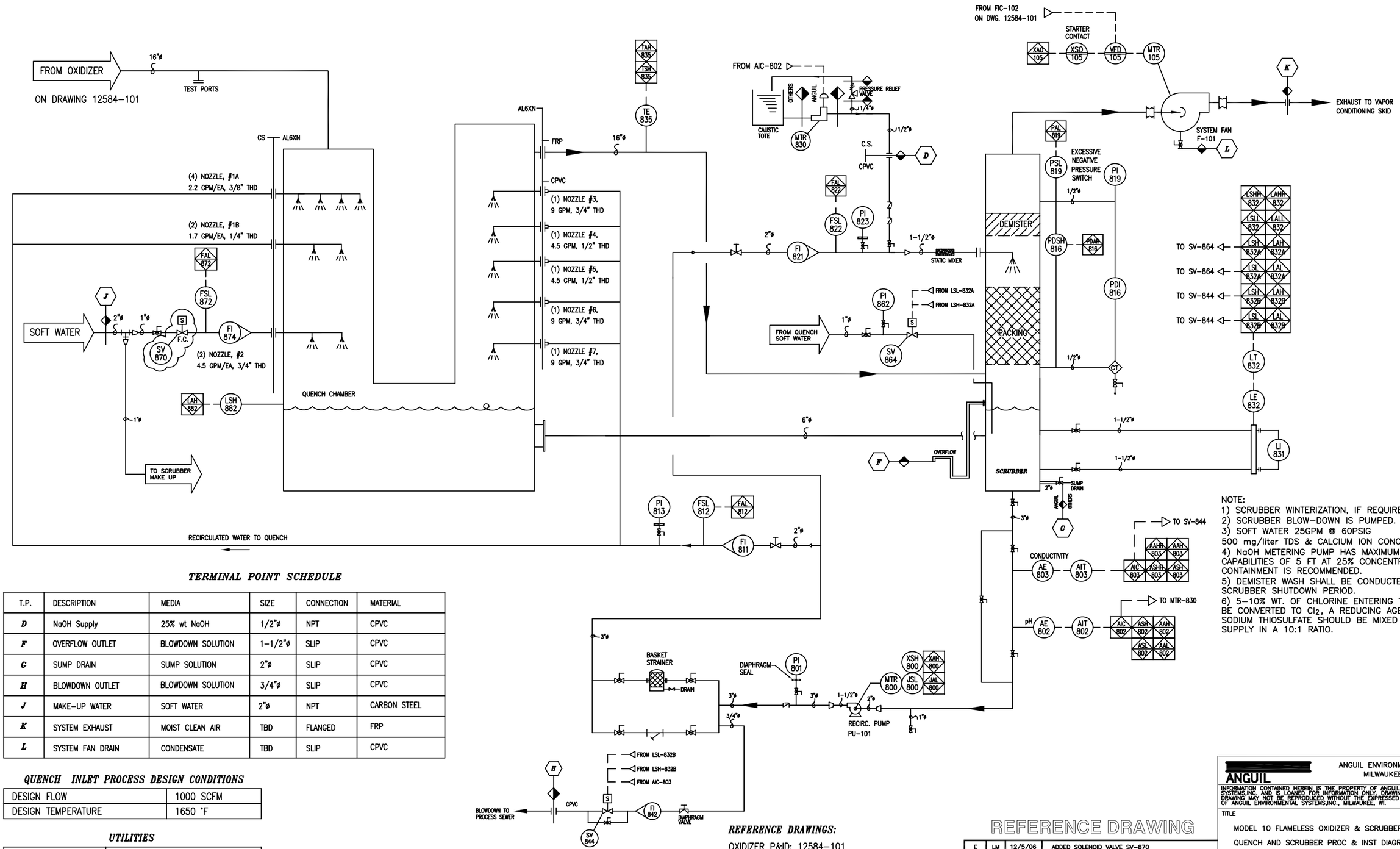

NOTE:
1) SCRUBBER WINTERIZATION, IF REQUIRED IS BY OTHERS.
2) SCRUBBER BLOW-DOWN IS PUMPED.
3) SOFT WATER 25GPM @ 60PSIG
500 mg/liter TDS & CALCIUM ION CONC < 3ppm
4) NaOH METERING PUMP HAS MAXIMUM SUCTION LIFT CAPABILITIES OF 5 FT AT 25% CONCENTRATION. SUITABLE CONTAINMENT IS RECOMMENDED.
5) DEMISTER WASH SHALL BE CONDUCTED DURING SCRUBBER SHUTDOWN PERIOD.
6) 5-10% WT. OF CHLORINE ENTERING THE OXIDIZER WILL BE CONVERTED TO Cl_2, A REDUCING AGENT SUCH AS SODIUM THIOSULFATE SHOULD BE MIXED WITH THE CAUSTIC SUPPLY IN A 10:1 RATIO.

TERMINAL POINT SCHEDULE

T.P.	DESCRIPTION	MEDIA	SIZE	CONNECTION	MATERIAL
D	NaOH Supply	25% wt NaOH	1/2"ø	NPT	CPVC
F	OVERFLOW OUTLET	BLOWDOWN SOLUTION	1-1/2"ø	SLIP	CPVC
G	SUMP DRAIN	SUMP SOLUTION	2"ø	SLIP	CPVC
H	BLOWDOWN OUTLET	BLOWDOWN SOLUTION	3/4"ø	SLIP	CPVC
J	MAKE-UP WATER	SOFT WATER	2"ø	NPT	CARBON STEEL
K	SYSTEM EXHAUST	MOIST CLEAN AIR	TBD	FLANGED	FRP
L	SYSTEM FAN DRAIN	CONDENSATE	TBD	SLIP	CPVC

QUENCH INLET PROCESS DESIGN CONDITIONS

DESIGN FLOW	1000 SCFM
DESIGN TEMPERATURE	1650 °F

UTILITIES

POWER	460V/60Hz/3PH
SOFT WATER	25 GPM @ 60 PSIG
25% WT CAUSTIC	TBD

REFERENCE DRAWINGS:

OXIDIZER P&ID: 12584-101
GENERAL ARRANGEMENT: 12584-7
ELECTRICAL SCHEMATICS: 12584-400
PROCESS FLOW DIAGRAM: 12584-120

REFERENCE DRAWING

REV	BY	DATE	CHANGE
E	LM	12/5/06	ADDED SOLENOID VALVE SV-870
D	LM	30OCT06	PT-101 CHANGED TO FIC-102 AS SHOWN
C	JPW	01SEPT06	ADD PDI-816 & PI-819; REMOVE PDSL-818
B	LM	8/16/06	CHANGES AS INDICATED
A	LM	7/17/06	CHANGES AS INDICATED

[redacted]
ANGUIL
ANGUIL ENVIRONMENTAL SYSTEMS, INC.
MILWAUKEE, WISCONSIN

INFORMATION CONTAINED HEREIN IS THE PROPERTY OF ANGUIL ENVIRONMENTAL SYSTEMS,INC. AND IS LOANED FOR INFORMATION ONLY. DRAWING OR PARTS OF DRAWING MAY NOT BE REPRODUCED WITHOUT THE EXPRESSED WRITTEN CONSENT OF ANGUIL ENVIRONMENTAL SYSTEMS,INC., MILWAUKEE, WI.

TITLE: MODEL 10 FLAMELESS OXIDIZER & SCRUBBER
QUENCH AND SCRUBBER PROC & INST DIAGRAM

DRAWING NO. 12584-102
SCALE NTS

DRAWN LM DATE 25MAY06
CHECKED DATE
APPROVED DATE
LAST DRAWN LM DATE 5DEC06

CUSTOMER: US ARMY CORP OF ENG./PEMACO
MAYWOOD, CA
SOURCE
REV. E
PAGE 2 OF 2
LAST PLOT BY LM DATE 5DEC06
AUTOCAD PATH H:\CAD\JOBS\12000S\