US Army Corps
of Engineers
Kansas City District

GROUNDWATER TREATMENT FACILITY PACKAGE
ROCKAWAY BOROUGH SUPERFUND SITE
EAST MAIN/WALL STREET PLUME - OU2
ROCKAWAY BOROUGH, NEW JERSEY

FINAL AS-BUILT

JUNE 2013

Prepared By:

CAPE Environmental Management, Inc.

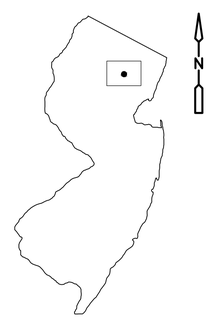

NEW JERSEY

LOCATION MAP
NTS

123787

USACE CONTRACT NO.:
W912D□-05-D-0001 DELIVERY ORDER NO. 0005

DRAWING INDEX

GENERAL

	COVER SHEET
G-1	DRAWING INDEX, ABBREVIATIONS, GENERAL NOTES AND SYMBOLS
G-2	AREA MAP

AS-BUILT SURVEY (LAN ASSOCIATES)

AB.01	FINAL TRENCH LAYOUT AS-BUILT
AB.02	FINAL TRENCH LAYOUT AS-BUILT
AB.03	FINAL TRENCH LAYOUT AS-BUILT
AB.04	FINAL TRENCH LAYOUT AS-BUILT
AB.05	FINAL TRENCH LAYOUT AS-BUILT
AB.06	FINAL TRENCH LAYOUT AS-BUILT
AB.07	FINAL TRENCH LAYOUT AS-BUILT
AB.08	FINAL TRENCH LAYOUT AS-BUILT
AB.09	FINAL TRENCH LAYOUT AS-BUILT

CIVIL

C-1	EXISTING SITE CONDITIONS AND DEMOLITION PLAN
C-2	SITE PLAN
C-3	PIPING PLAN
CD-1	CIVIL DETAILS I
CD-2	CIVIL DETAILS II
CD-3	CIVIL DETAILS III

ARCHITECTURAL

A-1	ARCHITECTURAL SHEET INDEX, GENERAL NOTES, ABBREVIATIONS, SYMBOLS, AND BUILDING CODE ANALYSIS
A-2	FLOOR PLAN AND ARCHITECTURAL SPECIFICATIONS
A-3	ROOF PLAN AND ARCHITECTURAL SPECIFICATIONS
A-4	ARCHITECTURAL SPECIFICATIONS
A-5	EXTERIOR ELEVATIONS
A-6	BUILDING SECTIONS AND ARCHITECTURAL DETAILS
A-7	WALL SECTIONS
AD-1	FINISH SCHEDULE, DOOR SCHEDULE AND TYPES, WINDOW SCHEDULE AND TYPES, AND ARCHITECTURAL DETAILS

STRUCTURAL

S-1	STRUCTURAL NOTES
S-2	FOUNDATION/SLAB PLAN, TRANSFORMER PAD PLAN AND SECTIONS
S-3	ROOF PLAN AND SECTIONS
S-4	SECTIONS
S-5	SECTIONS
S-6	ELEVATIONS
S-7	ELEVATIONS
SD-1	STANDARD DETAILS
SD-2	STANDARD DETAILS

MECHANICAL

M-1	GROUNDWATER TREATMENT FACILITY PLAN AND SECTION
M-2	GROUNDWATER TREATMENT FACILITY SECTIONS
M-3	WELL HOUSE PLAN AND SECTIONS
M-4	WELL HOUSE DETAILS
MD-1	MISCELLANEOUS DETAILS

HVAC

H-1	HVAC LEGEND, SYMBOLS AND ABBREVIATIONS
H-2	HVAC PLAN, DIAGRAMS, DETAIL AND SCHEDULES

ELECTRICAL

E-1	ELECTRICAL LEGEND AND ABBREVIATIONS I
E-2	ELECTRICAL LEGEND AND ABBREVIATIONS II
E-3	ELECTRICAL SITE POWER PLAN
E-4	ELECTRICAL SINGLE LINE DIAGRAM
E-5	ELECTRICAL LIGHTING PLAN
E-6	ELECTRICAL POWER AND DEMOLITION PLAN
E-7	ELECTRICAL GROUNDING PLAN
E-8	ELECTRICAL FIRE ALARM AND SECURITY SYSTEM PLAN
E-9	ELECTRICAL WIRING DIAGRAMS I
E-10	ELECTRICAL PANELBOARD SCHEDULES
E-11	ELECTRICAL PANEL DETAILS
E-12	ELECTRICAL TEMPORARY PUMP STATION ELEVATION
E-13	ELECTRICAL NETWORK ARCHITECTURE DIAGRAM
E-14	ELECTRICAL PLC CONTROL PANEL ARRANGEMENT
E-15	ELECTRICAL PLC CONTROL PANEL WIRING DIAGRAM I
E-16	ELECTRICAL PLC CONTROL PANEL WIRING DIAGRAM II
E-17	ELECTRICAL PLC CONTROL PANEL WIRING DIAGRAM III
E-18	DELETED
E-19	DELETED
E-20	ELECTRICAL WELL PUMP CONTROL DIAGRAM
ED-1	ELECTRICAL DETAILS I
ED-2	ELECTRICAL DETAILS II
ED-3	ELECTRICAL DETAILS III

INSTRUMENTATION

PR-01	PROCESS & INSTRUMENTATION DIAGRAM – LEGEND I
PR-02	PROCESS & INSTRUMENTATION DIAGRAM – LEGEND II
PR-03	PROCESS & INSTRUMENTATION DIAGRAM – EXTRACTION WELLS
PR-04	PROCESS & INSTRUMENTATION DIAGRAM – AIR STRIPPER
PR-05	PROCESS & INSTRUMENTATION DIAGRAM – GRANULAR ACTIVATED CARBON UNITS
PR-06	PROCESS & INSTRUMENTATION DIAGRAM – WELL HOUSE

ABBREVIATIONS – CIVIL/MECHANICAL

APPROX	APPROXIMATELY
A/V	AIR VACUUM
AVG	AVERAGE
B	BOLLARD
BFV	BUTTERFLY VALVE
BTWN	BETWEEN
BV	BALL VALVE
CL OR ℄	CENTERLINE
CMU	CONCRETE MASONRY UNTIT
CON	CONCENTRIC
CONC	CONCRETE
CPLG	COUPLING
CPVC	CHLORINATED POLYVINYL CHLORIDE
CU	COPPER
CV	CHECK VALVE
DDCV	DUAL DISC CHECK VALVE
DI	DUCTILE IRON
DIA	DIAMETER
DICL	DUCTILE IRON CEMENT LINED
DIP	DUCTILE IRON PIPE
DISCH	DISCHARGE
DMH	DRAIN MANHOLE
DR	DRAIN
DWG	DRAWING
E	EAST/UNDERGROUND ELECTRICAL CONDUIT
EFF	EFFLUENT
EL	ELEVATION
ELEC	ELECTRICAL
ELEV	ELEVATION
ELL	ELBOW
EW	EXTRACTION WELL
FCV	FLOW CONTROL VALVE
FIN	FINISHED
FLG	FLANGE
FM	FORCE MAIN
FT	FEET
G	GAS LINE
GAC	GRANULAR ACTIVATED CARBON
GALV	GALVANIZE/GALVANIZED
GR	GRADE
GV	GAS VALVE
GW	GROUNDWATER/GUY WIRE
GWTF	GROUNDWATER TREATMENT FACILITY
HDPE	HIGH DENSITY POLYETHYLENE
HVAC	HEATING, VENTILATING, AND AIR CONDITIONING
HYD	HYDRANT
ID	IDENTIFICATION DATA
IN	INCH
INV	INVERT
LB	POUND
MAX	MAXIMUM
MIN	MINIMUM
NAD	NORTH AMERICAN DATUM
NGVD	NATIONAL GEODETIC VERTICAL DATUM
NTS	NOT TO SCALE
O.C.	ON CENTER
O.D.	OUTER DIAMETER
OED	OPEN END DRAIN
P & ID	PROCESS & INSTRUMENTATION DRAWING
PLC	PROGRAMMABLE LOGIC CONTROLLER
PSI	POUNDS PER SQUARE INCH
PVC	POLYVINYL CHLORIDE
PW	POTABLE WATER
RCP	REINFORCED CONCRETE PIPE
RCV	RUBBER CHECK VALVE
RED	REDUCER
REINF	REINFORCED
REQ'D	REQUIRED
RPZ	REDUCED PRESSURE ZONE
RV	RELIEF VALVE
S	SLOPE/SANITARY SEWER LINE/SOUTH
S & D	SURVEY AND DEED
SCH	SCHEDULE
SD	STORM DRAIN LINE
SF	SQUARE FEET
SHT	SHEET
SMH	SANITARY MANHOLE
SS	STAINLESS STEEL
STL	STEEL
STRU	STRUCTURAL
T	THICKNESS
THD	THREAD/THREADED
THK	THICK
TOC	TOP OF CASING
TR	TREE
TYP	TYPICAL
UNC	UNIFIED INCH COARSE THREAD SERIES
UP	UTILITY POLE
VPGAC	VAPOR PHASE GRANULAR ACTIVATED CARBON
W	WATER/WEST
W/	WITH
WV	WATER VALVE
WWF	WELDED WIRE FABRIC

VALVE AND APPURTENANCE SYMBOLS

UNCLASSIFIED. TYPE AS SHOWN ON THE DRAWINGS ADJACENT TO SYMBOL	
GATE VALVE	(GV)
BALL VALVE	(BV)
BUTTERFLY VALVE	(BFV)
CHECK VALVE, GENERAL SYMBOL	(CV)
SOLENOID VALVE	(SV)
REDUCER	(RED)
FLUSHING CONNECTION	(FC)
MAGNETIC FLOW METER	
AIR/VACUUM RELIEF VALVE	(ARVR)

GENERAL NOTES

1. THE CONTRACTOR PROTECTED ALL EXISTING SITE FEATURES DESIGNATED TO REMAIN DURING SITE CONSTRUCTION.

2. THE CONTRACTOR WAS RESPONSIBLE FOR VERIFYING ALL EXISTING CONDITIONS WITHIN OR ADJACENT TO THE WORK AREA THAT MAY BE DISTURBED DURING THE WORK.

3. LOCATIONS OF ALL UTILITIES, STRUCTURES, PROPERTY LINES, AND SUBSURFACE SOIL CONDITIONS ARE BASED ON THE BEST AVAILABLE INFORMATION AND ARE NOT WARRANTED TO BE EXACT, NOR IS IT WARRANTED THAT ALL ARE SHOWN.

4. THE CONTRACTOR VERIFIED LOCATIONS OF ALL PROPERTY LINES, EASEMENTS AND EXISTING UTILITES AND OTHER EXISTING ITEMS.

5. ALL WORK WAS PERFORMED IN ACCORDANCE WITH APPROVED SITE SPECIFIC SOIL EROSION AND SEDIMENT CONTROL PLAN AND APPROVED ENVIRONMENTAL PROTECTION PLAN.

6. THE CONTRACTOR COMPLIED WITH ALL FEDERAL, STATE AND LOCAL REQUIRMENTS AND SHALL OBTAIN THE NECESSARY PERMITS.

7. THE CONTRACTOR COORDINATED WITH ALL UTILITES.

8. EXISTING SITE CONDITIONS ARE SHOWN AS GREY WITH ITALICIZED TEXT. PROPOSED WORK IS SHOWN AS BLACK WITH NON-ITALICIZED TEXT.

9. SEE INDIVIDUAL SHEETS FOR ADDITIONAL NOTES AND LEGENDS.

10. THE SITE IS LOCATED WITHIN THE FLOOD HAZARD AREA. THE CONTRACTOR COMPLIED WITH NEW JERSEY DEPARTMENT OF ENVIRONMENTAL PROTECTION FLOOD HAZARD AREA REGULATIONS. THE FLOOD HAZARD AREA FLOOD ELEVATION FOR THE SITE IS 516.00 FEET NGVD 1929.

PIPE TAG

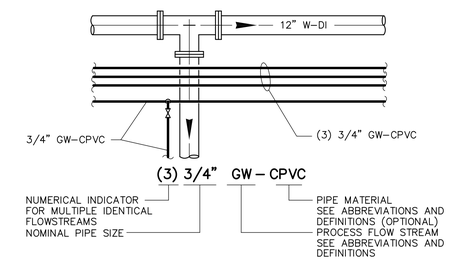

SECTION SYMBOLS

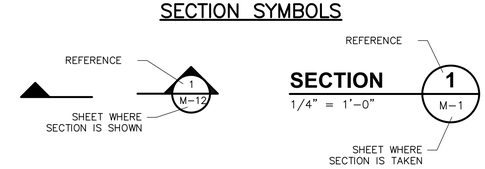

DETAIL SYMBOLS

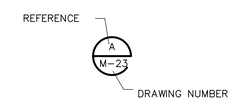

FINAL AS-BUILT

REV. NO.	DATE	DRWN	CHKD	REMARKS

DESIGNED BY:
DRAWN BY:
SHEET CHK'D BY:
CROSS CHK'D BY:
APPROVED BY:
DATE: MARCH 2012

PREPARED BY:
CAPE
CAPE Environmental Management, Inc.

US Army Corps of Engineers Kansas City District
GROUNDWATER TREATMENT FACILITY PACKAGE
ROCKAWAY BOROUGH SUPERFUND SITE
EAST MAIN/WALL STREET PLUME - OU2
ROCKAWAY BOROUGH, NEW JERSEY

DRAWING INDEX, ABBREVIATIONS, GENERAL NOTES, AND SYMBOLS

PROJECT 50001.005
FILE NAME: GINDX001 AS-BUILT
SHEET NO.
G-1

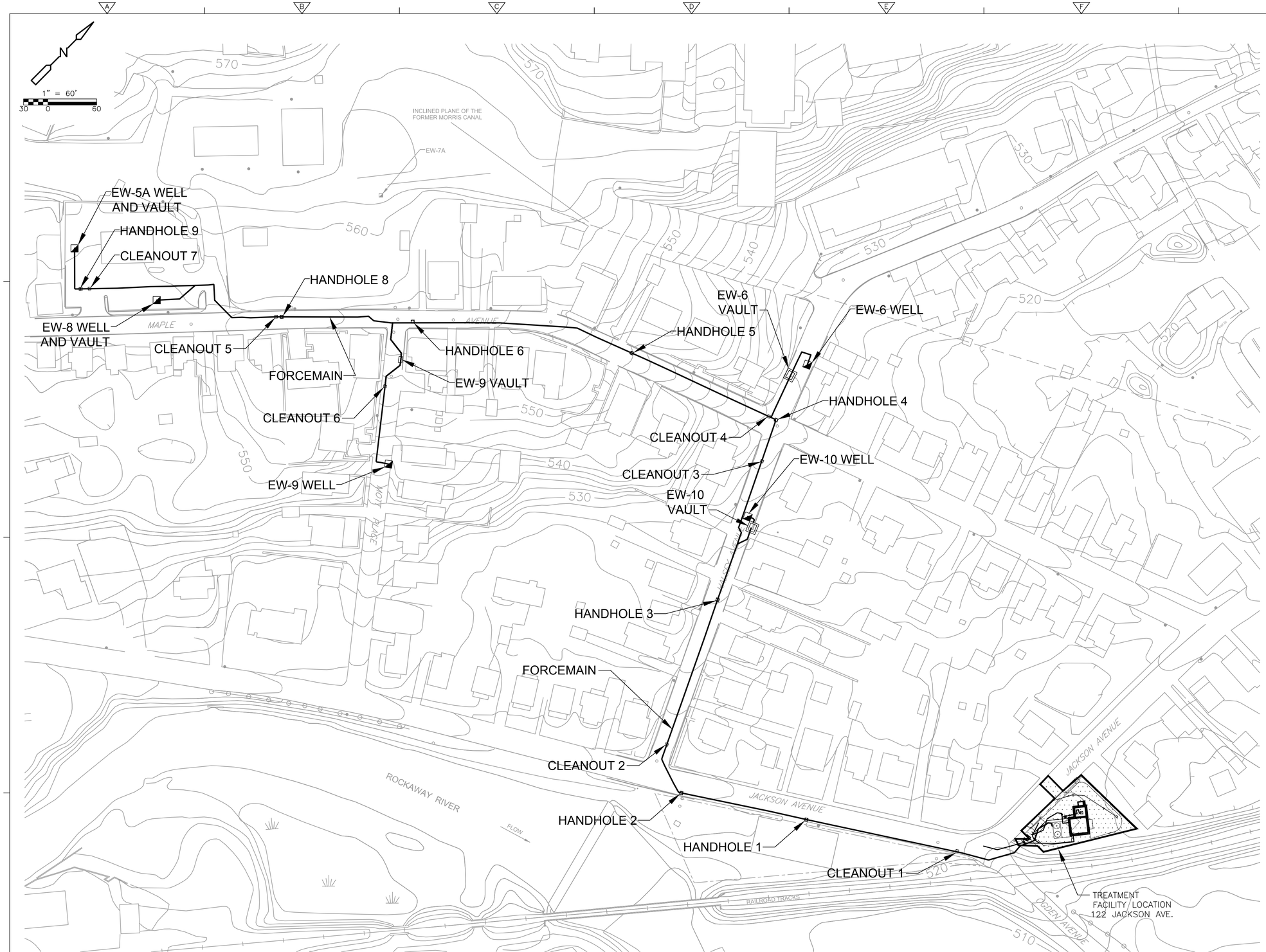

LEGEND

- NEW FORCE MAIN LINE
- NEW GROUNDWATER EXTRACTION WELL
- APPROXIMATE LIMITS OF DESIGN PACKAGE

NOTES

1. DRAWINGS ARE BASED ON SURVEY PREPARED BY STEWART SURVEYING & ENGINEERING LLC DATED AUGUST 2004 AND JULY 2005 AND LAN ASSOCIATES DATED AUGUST 2007 AND SEPTEMBER 2011.
2. HORIZONTAL COORDINATE SYSTEM IS NEW JERSEY STATE PLANE NAD27. VERTICAL COORDINATE SYSTEM IS NGVD 1929.

FINAL AS-BUILT

REV. NO.	DATE	DRWN	CHKD	REMARKS

DESIGNED BY:
DRAWN BY:
SHEET CHK'D BY:
CROSS CHK'D BY:
APPROVED BY:
DATE: MARCH 2012

PREPARED BY:
CAPE
CAPE Environmental Management, Inc.

US Army Corps of Engineers Kansas City District
GROUNDWATER TREATMENT FACILITY PACKAGE
ROCKAWAY BOROUGH SUPERFUND SITE
EAST MAIN/WALL STREET PLUME - OU2
ROCKAWAY BOROUGH, NEW JERSEY

AREA MAP

PROJECT 50001.005
FILE NAME: GSTPL002 AS-BUILT
SHEET NO.
G-2

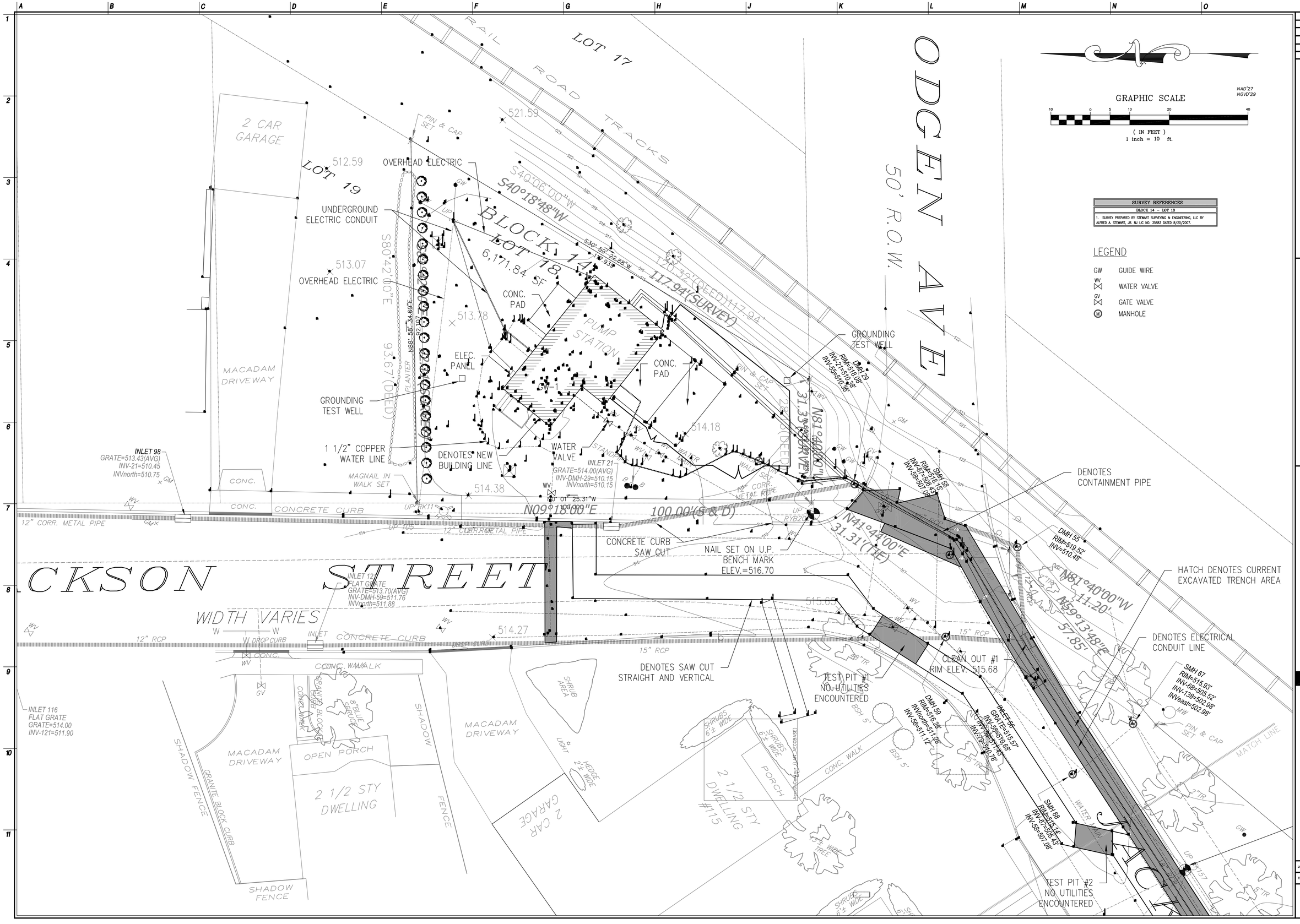

SURVEY REFERENCES
BLOCK 14 – LOT 18
1. SURVEY PREPARED BY STEWART SURVEYING & ENGINEERING, LLC BY ALFRED A. STEWART, JR. NJ LIC NO. 35883 DATED 8/20/2007.

LEGEND

- GW — GUIDE WIRE
- WV — WATER VALVE
- GV — GATE VALVE
- (M) — MANHOLE

NJ Certificate of Authorization	
Eng'r. Nos.	GA276878
Arch. Nos.	AC124
Date	09/02/11
Checked	MMW
Drawn	ER

MATTHEW M. WEBB, PLS
Title PROFESSIONAL LAND SURVEYOR License No. NJ 24GS04330200

Revisions:

LAN ASSOCIATES
engineering • planning • architecture • surveying
445 GODWIN AVENUE, MIDLAND PARK, N.J. 07432 (201)447-6400

FINAL TRENCH LAYOUT AS-BUILT
WELL FIELD SUPERFUND SITE
BOROUGH OF ROCKAWAY
BOROUGH OF ROCKAWAY, NEW JERSEY

Job No. 2.8387.03
File No. 838703AB01.dwg

AB.01

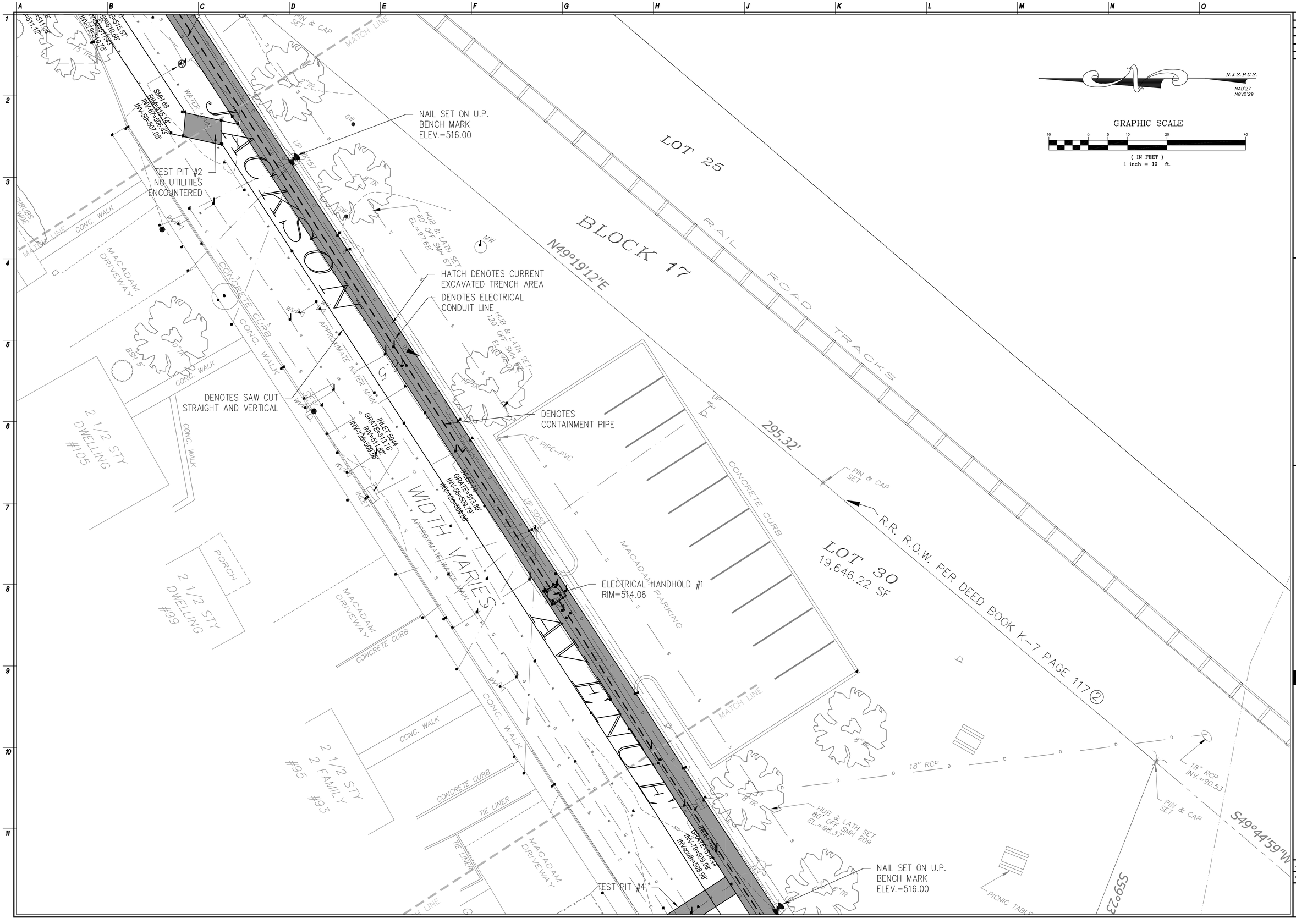

NJ Certificate of Authorization	
Eng'r. Nos.	GA276878
Arch. Nos.	AC124
Date	09/02/11
Checked	MWW
Drawn	ER

MATTHEW M. WEBB, PLS
Title PROFESSIONAL LAND SURVEYOR License No. NJ 24GS04330200

Revisions:

LAN ASSOCIATES
engineering • planning • architecture • surveying
445 GODWIN AVENUE, MIDLAND PARK, N.J. 07432 (201)447-6400

FINAL TRENCH LAYOUT AS-BUILT
WELL FIELD SUPERFUND SITE
BOROUGH OF ROCKAWAY
BOROUGH OF ROCKAWAY, NEW JERSEY

Job No. 2.8387.03
File No. 838703AB01.dwg

AB.02

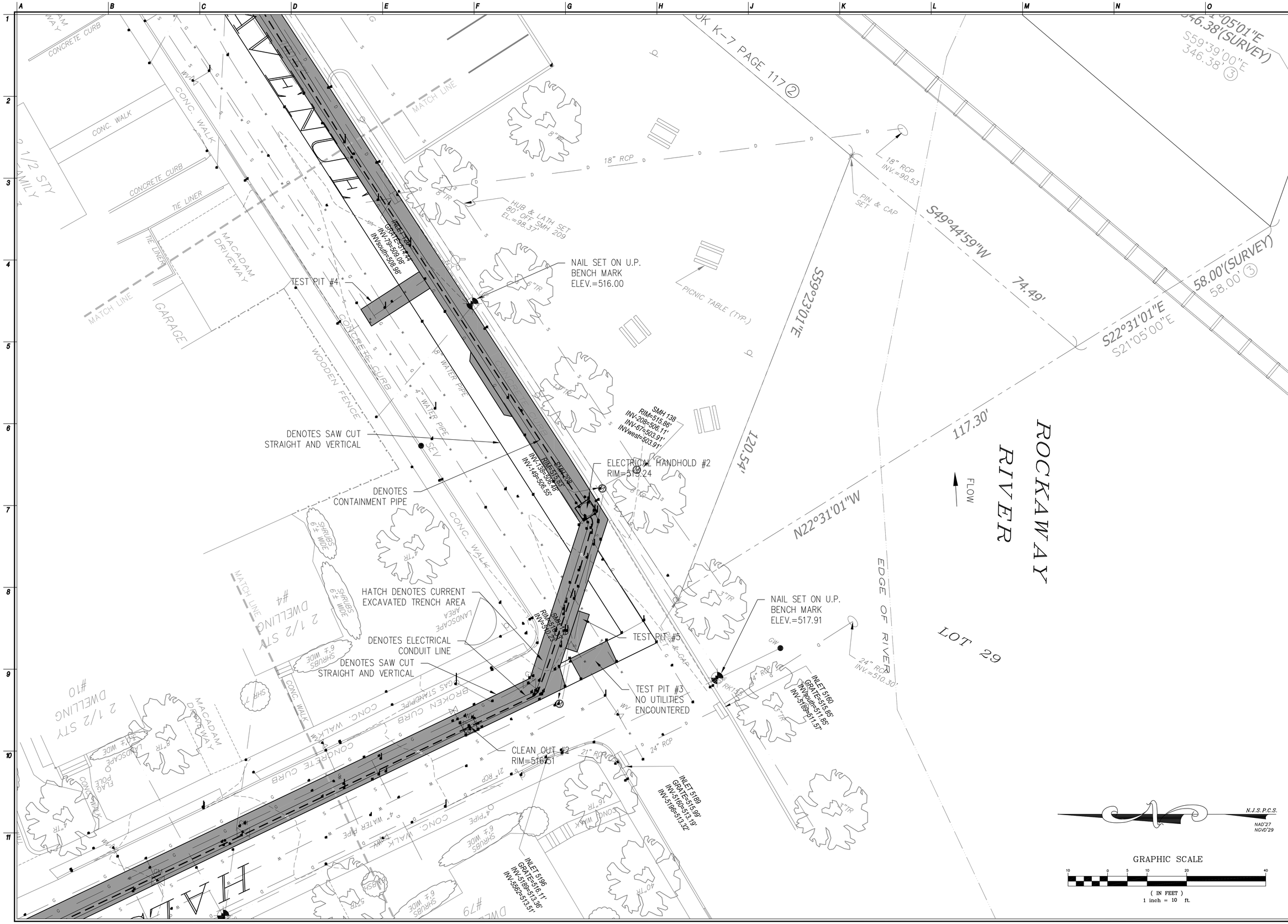

NJ Certificate of Authorization	
Eng'r. Nos.	GA276878
Arch. Nos.	AC124
Date	09/02/11
Checked	MMW
Drawn	ER

MATTHEW M. WEBB, PLS
Title PROFESSIONAL LAND SURVEYOR License No. NJ 24GS04330200

Revisions:

LAN ASSOCIATES
engineering • planning • architecture • surveying
445 GODWIN AVENUE, MIDLAND PARK, N.J. 07432 (201)447-6400

FINAL TRENCH LAYOUT AS-BUILT
WELL FIELD SUPERFUND SITE
BOROUGH OF ROCKAWAY
BOROUGH OF ROCKAWAY, NEW JERSEY

Job No. 2.8387.03
File No. 838703AB01.dwg

AB.03

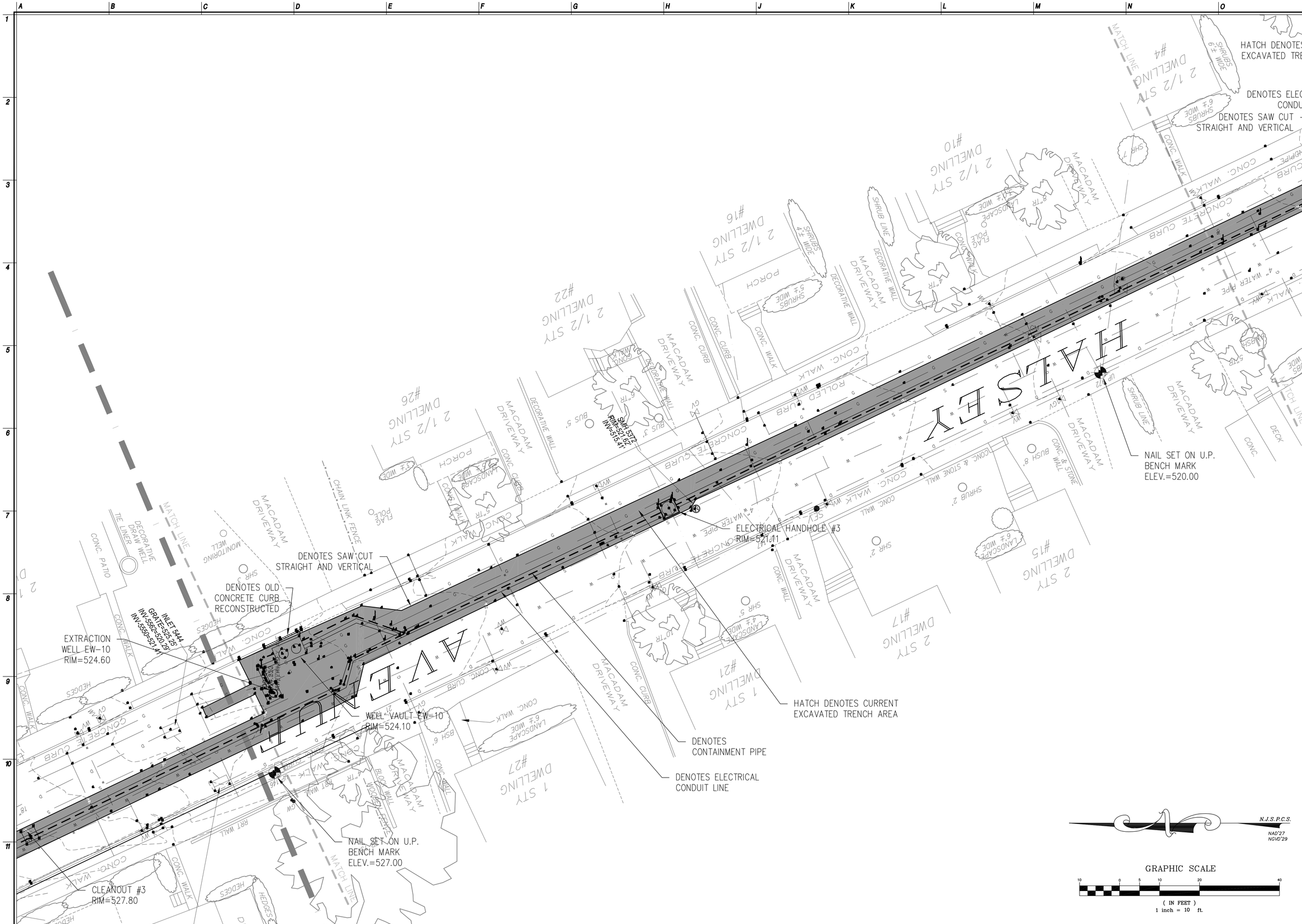

NJ Certificate of Authorization	
Eng'r. Nos.	GA276878
Arch. Nos.	AC124
Date	09/02/11
Checked	MMW
Drawn	ER

MATTHEW M. WEBB, PLS

Title PROFESSIONAL LAND SURVEYOR License No. NJ 24GS04330200

Revisions:

LAN ASSOCIATES

engineering • planning • architecture • surveying INC.

445 GODWIN AVENUE, MIDLAND PARK, N.J. 07432 (201)447-6400

FINAL TRENCH LAYOUT AS-BUILT

WELL FIELD SUPERFUND SITE

BOROUGH OF ROCKAWAY
BOROUGH OF ROCKAWAY, NEW JERSEY

Job No. 2.8387.03

File No. 838703AB01.dwg

AB.04

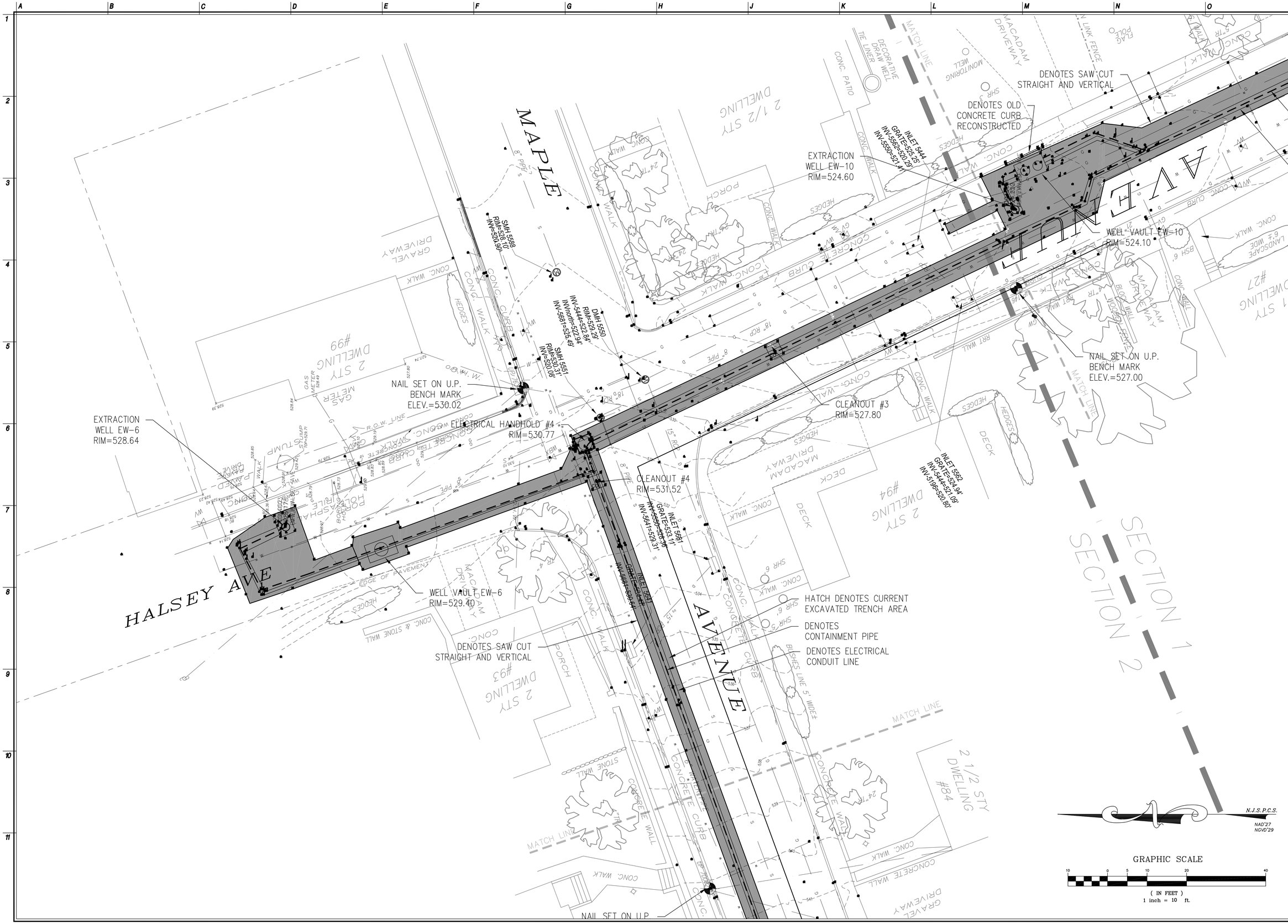

NJ Certificate of Authorization	
Eng'r. Nos.	GA276878
Arch. Nos.	AC124
Date	09/02/11
Checked	MMW
Drawn	ER

MATTHEW M. WEBB, PLS
Title PROFESSIONAL LAND SURVEYOR License No. NJ 24GS04330200

Revisions:

LAN ASSOCIATES
engineering • planning • architecture • surveying
445 GODWIN AVENUE, MIDLAND PARK, N.J. 07432 (201)447-8400

FINAL TRENCH LAYOUT AS-BUILT
WELL FIELD SUPERFUND SITE
BOROUGH OF ROCKAWAY
BOROUGH OF ROCKAWAY, NEW JERSEY

Job No. 2.8387.03
File No. 838703AB01.dwg

AB.05

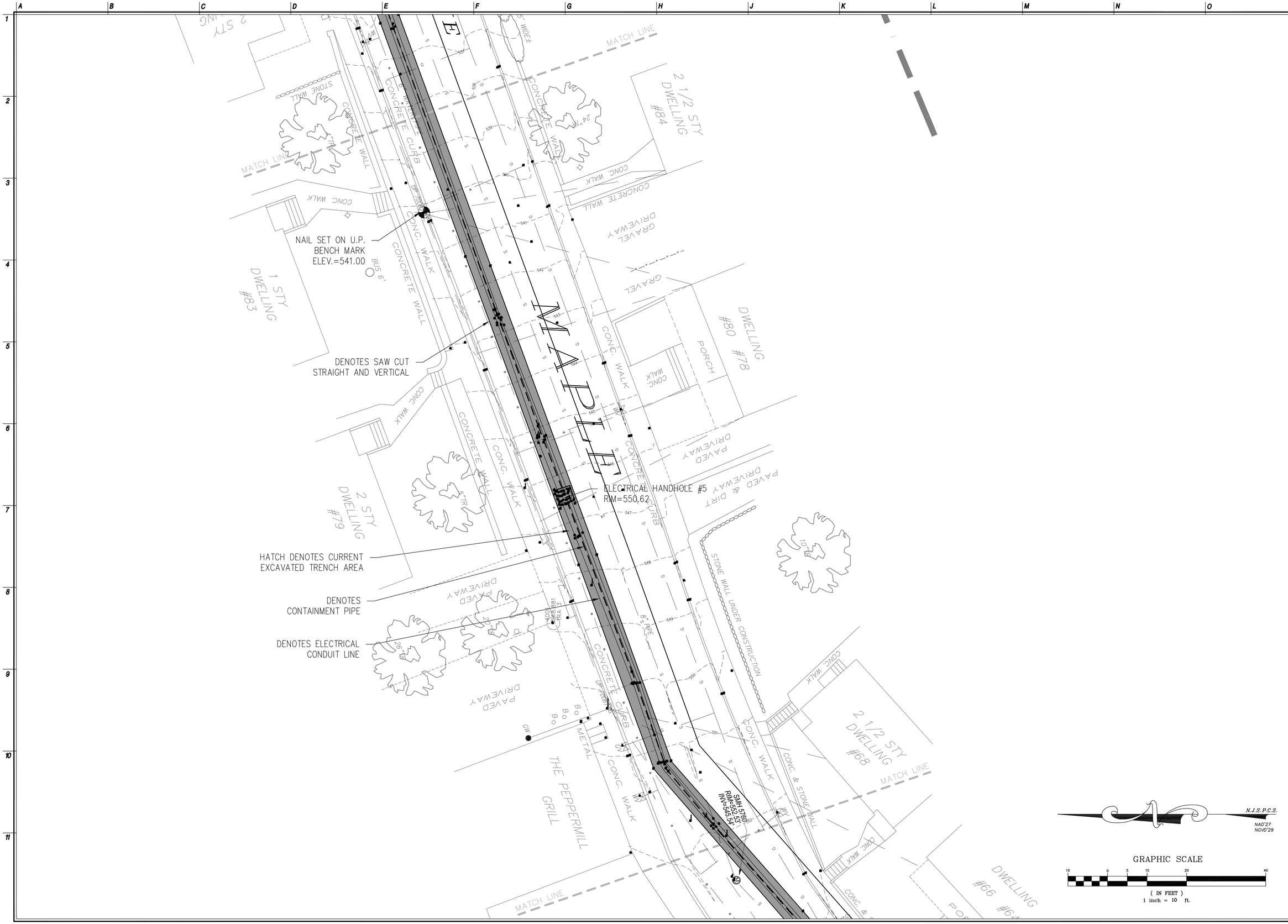

NJ Certificate of Authorization	
Eng'r. Nos.	GA276878
Arch. Nos.	AC124
Date	09/02/11
Checked	MMW
Drawn	ER

MATTHEW M. WEBB, PLS
Title PROFESSIONAL LAND SURVEYOR License No. NJ 24GS043330200

Revisions:

LAN ASSOCIATES
engineering • planning • architecture • surveying INC
445 GODWIN AVENUE, MIDLAND PARK, N.J. 07432 (201)447-6400

FINAL TRENCH LAYOUT AS-BUILT
WELL FIELD SUPERFUND SITE
BOROUGH OF ROCKAWAY
BOROUGH OF ROCKAWAY, NEW JERSEY

Job No. 2.8387.03
File No. 838703AB01.dwg

AB.06

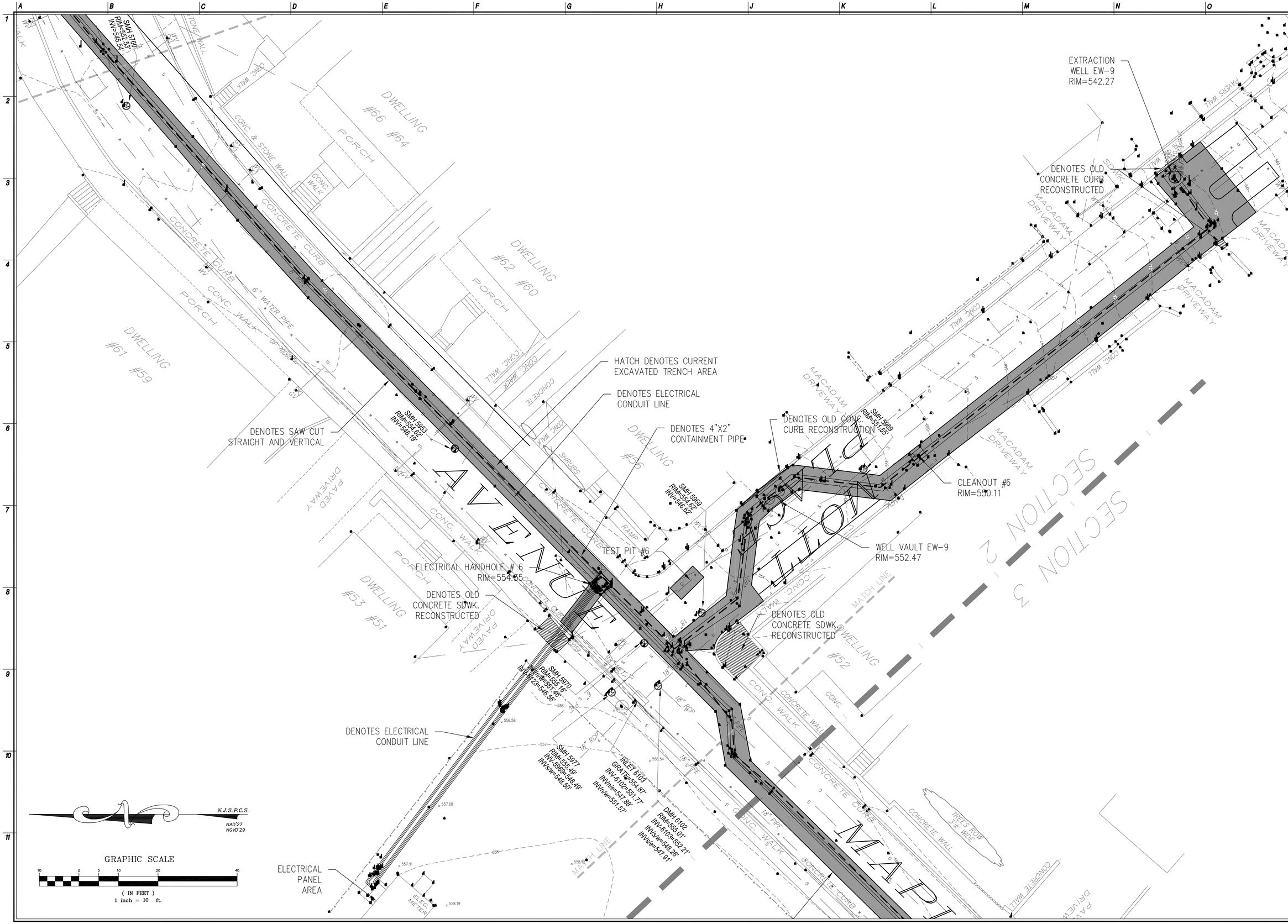

NJ Certificate of Authorization	
Eng'r. Nos.	GA276878
Arch. Nos.	AC124
Date	09/02/11
Checked	MMW
Drawn	ER

MATTHEW M. WEBB, PLS
Title PROFESSIONAL LAND SURVEYOR License No. NJ 24GS043330200

Revisions:

LAN ASSOCIATES
engineering • planning • architecture • surveying INC
445 GODWIN AVENUE, MIDLAND PARK, N.J. 07432 (201)447-6400

FINAL TRENCH LAYOUT AS-BUILT
WELL FIELD SUPERFUND SITE
BOROUGH OF ROCKAWAY
BOROUGH OF ROCKAWAY, NEW JERSEY

Job No. 2.8387.03
File No. 838703AB01.dwg

AB.07

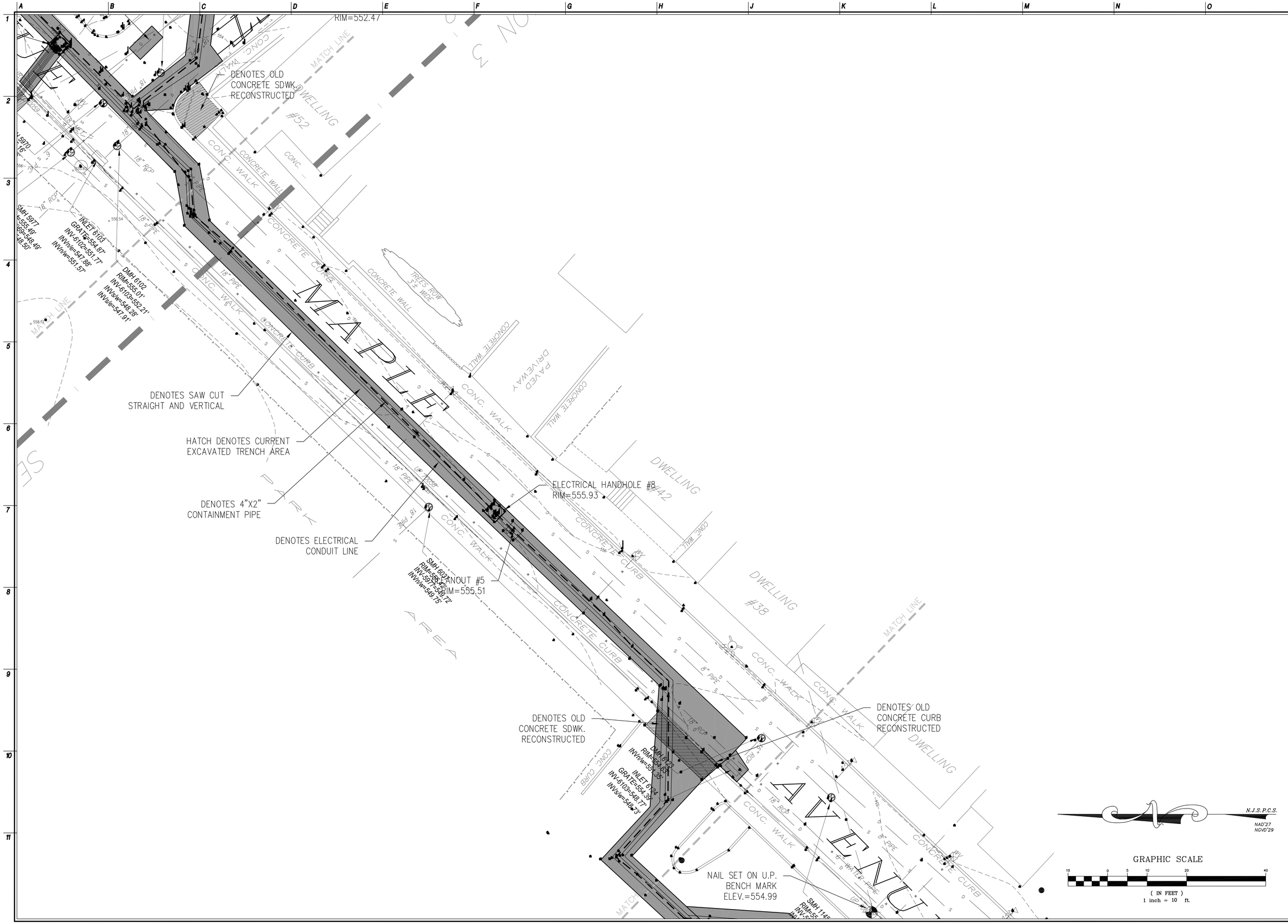

NJ Certificate of Authorization	
Eng'r. Nos.	GA276878
Arch. Nos.	AC124
Date	09/02/11
Checked	MMW
Drawn	ER

MATTHEW M. WEBB, PLS
Title PROFESSIONAL LAND SURVEYOR License No. NJ 24GS043430200

Revisions:

LAN ASSOCIATES
engineering • planning • architecture • surveying
445 GODWIN AVENUE, MIDLAND PARK, N.J. 07432 (201)447-6400

FINAL TRENCH LAYOUT AS-BUILT
WELL FIELD SUPERFUND SITE
BOROUGH OF ROCKAWAY
BOROUGH OF ROCKAWAY, NEW JERSEY

Job No. 2.8387.03
File No. 838703AB01.dwg

AB.08

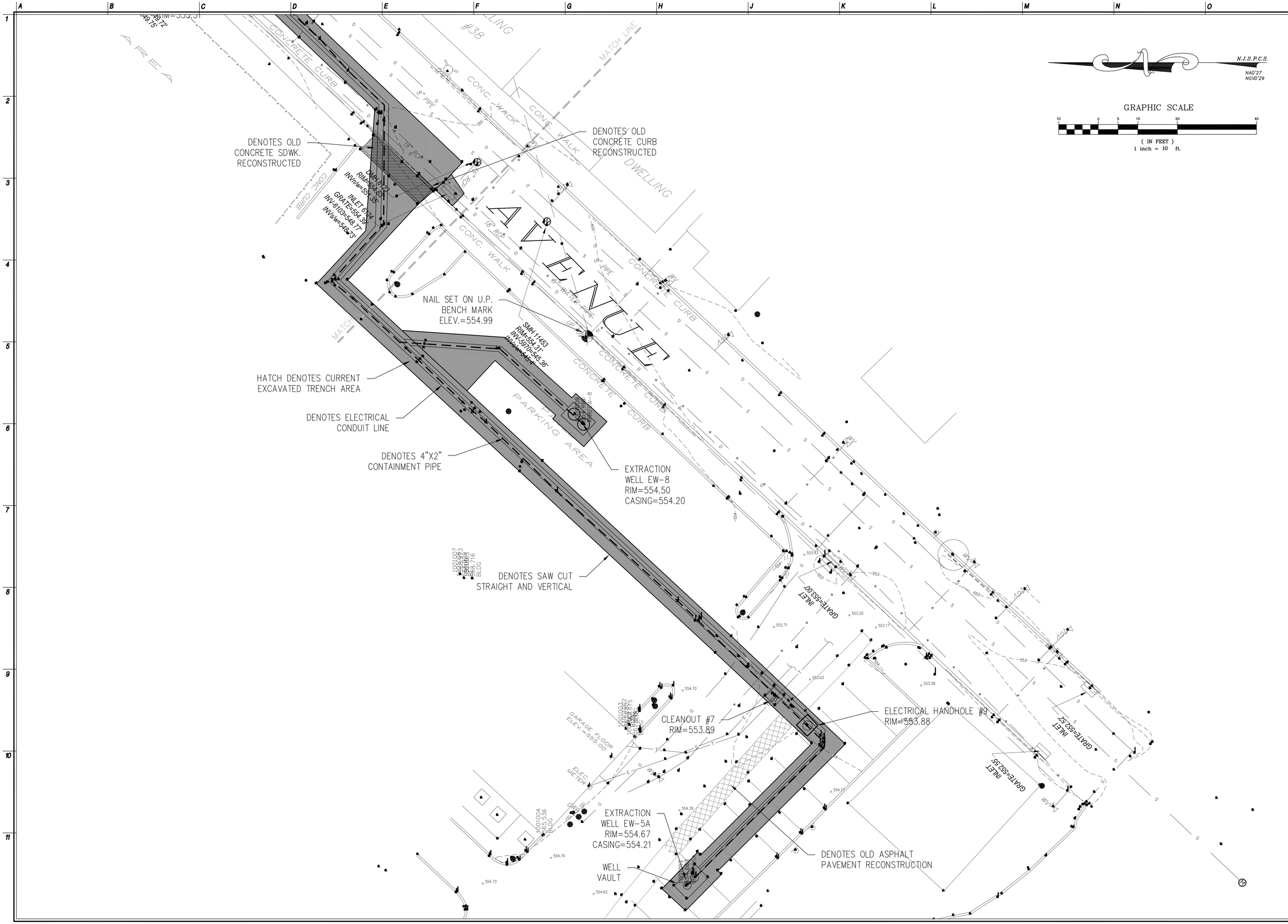

NJ Certificate of Authorization	
Eng'r. Nos.	GA276878
Arch. Nos.	AC124
Date	09/02/11
Checked	MMW
Drawn	ER

MATTHEW M. WEBB, PLS
Title PROFESSIONAL LAND SURVEYOR License No. NJ 24GS04330200

Revisions:

LAN ASSOCIATES
engineering • planning • architecture • surveying
445 GODWIN AVENUE, MIDLAND PARK, N.J. 07432 (201)447-6400

FINAL TRENCH LAYOUT AS-BUILT
WELL FIELD SUPERFUND SITE
BOROUGH OF ROCKAWAY
BOROUGH OF ROCKAWAY, NEW JERSEY

Job No. 2.8387.03
File No. 838703AB01.dwg

AB.09

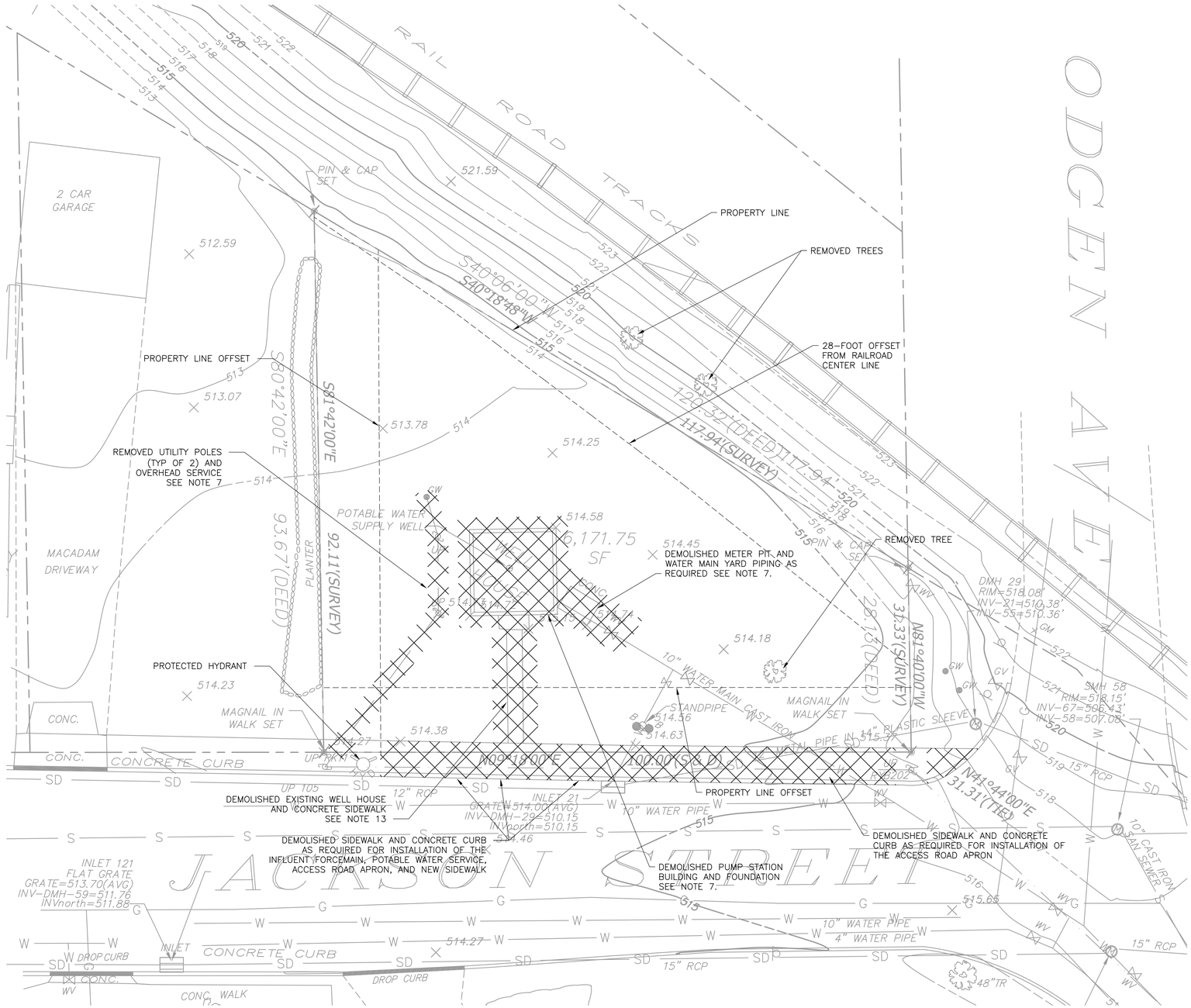

N

NOTES

1. DRAWINGS ARE BASED ON SURVEY PREPARED BY STEWART SURVEYING & ENGINEERING LLC DATED AUGUST 2004 AND JULY 2005 AND LAN ASSOCIATES AUGUST 2007 AND SEPTEMBER 2011.

2. HORIZONTAL COORDINATE SYSTEM IS NEW JERSEY STATE PLANE NAD27. VERTICAL COORDINATE SYSTEM IS NGVD 1929.

3. INSTALLED SEDIMENT CONTROL MEASURES IN WORK AREA BEFORE BEGINNING WORK IN ACCORDANCE WITH THE CONTRACTOR'S APPROVED SOIL EROSION AND SEDIMENT CONTROL PLAN AND MAINTAIN SEDIMENT CONTROL MEASURES AND DID NOT REMOVE UNTIL GROUND SURFACE WAS RESTORED AND STABILIZED.

4. PRIOR TO COMMENCEMENT OF WORK CONTACTED THE NEW JERSEY ONE-CALL SYSTEM TO LOCATE UTILITIES WITHIN THE WORK AREA.

5. VEHICLE AND EQUIPMENT STAGING, SOIL, STOCKPILE AREA AND TEMPORARY STORAGE FOR EXCESS EXCAVATED AND/OR WASTE MATERIALS WAS AT LOCATIONS DESIGNATED BY THE CONTRACTING OFFICER. NO SOIL, EQUIPMENT, OR MATERIALS WERE STORED BENEATH OVERHEAD ELECTRICAL TRANSMISSION LINES.

6. TRAFFIC CONTROL WAS PERFORMED IN ACCORDANCE WITH THE CONTRACTOR'S APPROVED TRAFFIC CONTROL PLAN.

7. DEMOLITION/REMOVAL OF THE OVERHEAD ELECTRICAL LINES AND SUPPLY WELL BUILDING, EQUIPMENT, AND PIPING WAS COORDINATED WITH THE RESPECTIVE UTILITY AUTHORITY.

8. CLEARING, GRUBBING AND TOPSOIL STRIPPING WAS PERFORMED PRIOR TO CONSTRUCTION.

9. PROTECTED TREES DESIGNATED TO REMAIN BY THE CONTRACTING OFFICER.

10. PROTECTED ALL UTILITIES AND SITE FEATURES DESIGNATED TO REMAIN DURING DEMOLITION, MODIFICATION, AND REMOVAL WORK. PROMPTY REPAIRED DAMAGE CAUSED BY DEMOLITION OPERATIONS AT NO COST TO THE GOVERNMENT.

11. DEMOLISHED, AND CLEARED/GRUBBED MATERIAL WAS DISPOSED OF IN ACCORDANCE WITH THE CONTRACTOR'S APPROVED WASTE MANAGEMENT PLAN

12. COORDINATED ALL WORK ON THE RAILROAD PROPERTY WITH THE RAILROAD.

13. EXISTING WELL PUMP AND MOTOR WAS SALVAGED AND REPLACED. EXISTING WELL PUMP CASING WAS PROTECTED AND REMAINED. CONCRETE PAD TOPPING WELL CASING WAS DEMOLISHED, AND PROPERLY DISPOSED/RECYCLED.

14. ALL REQUIRED PERMITS WERE SUBMITTED BY THE CONTRACTOR OR ENGINEER OF RECORD.

LEGEND

—x—	FENCE LINE
•	POWER POLE
	MONITORING WELL
—SD—	STORM DRAIN LINE
—G—	GAS LINE
—OE— —OE—	OVERHEAD ELECTRICAL LINE
—SS—	SANITARY SEWER LINE
—W—	WATER LINE
Ⓜ	MANHOLE
▭	CATCH BASIN
	HYDRANT
	TREE
WV	WATER VALVE
GV	GAS VALVE
GW	GUY WIRE
SEV	SEWER CLEANOUT
	ITEMS TO BE DEMOLISHED OR REMOVED

1" = 10'
5 0 10

FINAL AS-BUILT

REV. NO.	DATE	DRWN	CHKD	REMARKS

DESIGNED BY:
DRAWN BY:
SHEET CHK'D BY:
CROSS CHK'D BY:
APPROVED BY:
DATE: MARCH 2012

PREPARED BY:
CAPE
CAPE Environmental Management, Inc.

US Army Corps of Engineers Kansas City District
GROUNDWATER TREATMENT FACILITY PACKAGE
ROCKAWAY BOROUGH SUPERFUND SITE
EAST MAIN/WALL STREET PLUME - OU2
ROCKAWAY BOROUGH, NEW JERSEY

EXISTING SITE CONDITIONS AND DEMOLITION PLAN

PROJECT 50001.005
FILE NAME: CSTPL002 AS-BUILT
SHEET NO.
C-1

XREFS: RKAWYBDR, XSTPL001

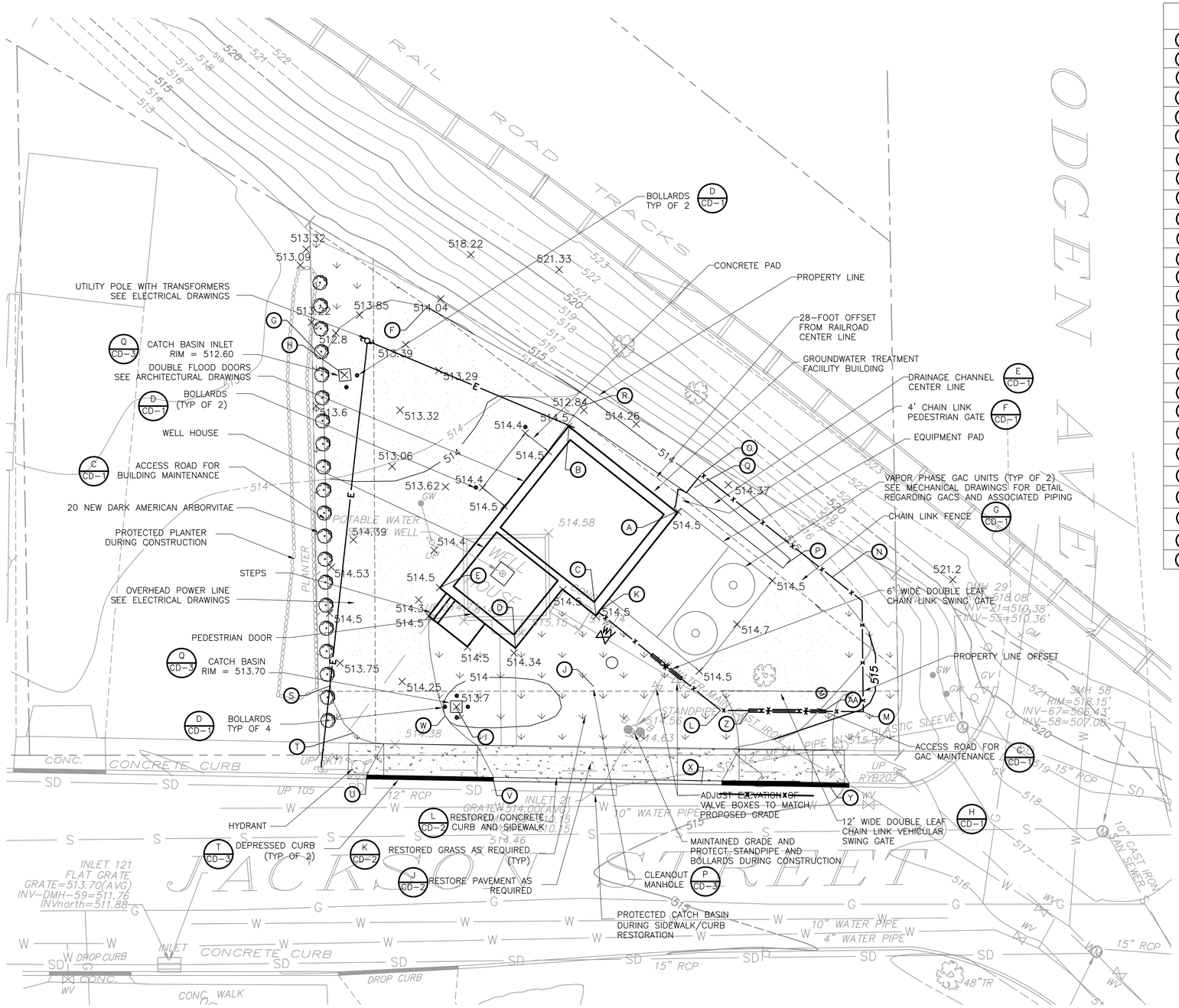

	NORTHING	EASTING	DESCRIPTION
A	753730	2043781	BUILDING CORNER
B	753748	2043795	BUILDING CORNER
C	753745	2043762	BUILDING CORNER
D	753759	2043757	BUILDING CORNER
E	753771	2043766	BUILDING CORNER
F	753774	2043815	EDGE OF CRUSHED STONE PARKING AREA
G	753792	2043806	EDGE OF CRUSHED STONE PARKING AREA
H	753789	2043803	CATCH BASIN
I	753769	2043746	CATCH BASIN
J	753746	2043749	CLEAN-OUT MANHOLE
K	753745	2043762	FENCE CORNER
L	753724	2043745	FENCE CORNER
M	753699	2043745	FENCE CORNER
N	753699	2043764	FENCE CORNER
O	753727	2043785	FENCE CORNER
P	753712	2043770	SWALE CENTER LINE
Q	753728	2043784	SWALE CENTER LINE
R	753748	2043798	SWALE CENTER LINE
S	753791	2043749	EDGE OF ACCESS ROAD
T	753787	2043741	EDGE OF ACCESS ROAD
U	753785	2043734	LIMITS OF CONCRETE APRON
V	753763	2043733	LIMITS OF CONCRETE APRON
W	753771	2043744	EDGE OF ACCESS ROAD
X	753727	2043733	LIMITS OF CONCRETE APRON
Y	753705	2043732	LIMITS OF CONCRETE APRON
Z	753719	2043746	GATE POST
AA	753706	2043745	GATE POST

N

NOTES

1. DRAWINGS ARE BASED ON SURVEY PREPARED BY STEWART SURVEYING & ENGINEERING LLC DATED AUGUST 2004 AND JULY 2005 AND LAN ASSOCIATES AUGUST 2007 AND SEPTEMBER 2011.

2. HORIZONTAL COORDINATE SYSTEM IS NEW JERSEY STATE PLANE NAD27. VERTICAL COORDINATE SYSTEM IS NGVD 1929.

3. INSTALLED SEDIMENT CONTROL MEASURES IN WORK AREA BEFORE BEGINNING WORK IN ACCORDANCE WITH THE CONTRACTOR'S APPROVED SOIL EROSION AND SEDIMENT CONTROL PLAN AND MAINTAINED SEDIMENT CONTROL MEASURES AND DID NOT REMOVE UNTIL GROUND SURFACE IS RESTORED AND STABILIZED.

4. PRIOR TO COMMENCEMENT OF WORK CONTACTED THE NEW JERSEY ONE-CALL SYSTEM TO LOCATE UTILITIES WITHIN THE WORK AREA.

5. VEHICLE AND EQUIPMENT STAGING, SOIL, STOCKPILE AREA AND TEMPORARY STORAGE FOR EXCESS EXCAVATED AND/OR WASTE MATERIALS WERE AT LOCATIONS DESIGNATED BY THE CONTRACTING OFFICER. NO SOIL, EQUIPMENT, OR MATERIALS WAS STORED BENEATH OVERHEAD ELECTRICAL TRANSMISSION LINES.

6. TRAFFIC CONTROL WAS PERFORMED IN ACCORDANCE WITH THE CONTRACTOR'S APPROVED TRAFFIC CONTROL PLAN.

7. PROTECTED ALL UTILITIES AND SITE FEATURES DESIGNATED TO REMAIN DURING CONSTRUCTION. PROMPTY REPAIRED DAMAGE CAUSED BY CONSTRUCTION OPERATIONS AT NO COST TO THE GOVERNMENT.

8. SITE WAS GRADED FOR POSITIVE DRAINAGE TOWARDS ONE OF THE TWO NEW CATCH BASINS.

9. GRASS WAS RESTORED TO THE EXISTING GRASS LIMITS.

10. CATCH BASINS AND MANHOLES WERE DESIGNED FOR FLOTATION AND HYDROSTATIC FORCES IN ACCORDANCE WITH THE NEW JERSEY DEPARTMENT OF ENVIRONMENTAL PROTECTION FLOOD HAZARD AREA REQUIREMENTS, AVAILABLE AT: HTTP://WWW.STATE.NJ.US/DEP/LANDUSE/7-13.PDF.

11. SPOT ELEVATIONS FOR PROPOSED GRADING INDICATE FINAL GRADE ELEVATIONS.

LEGEND

- FENCE LINE
- POWER POLE
- MONITORING WELL
- SD — STORM DRAIN LINE
- G — GAS LINE
- OE — OVERHEAD ELECTRICAL LINE
- SS — SANITARY SEWER LINE
- W — WATER LINE
- MANHOLE
- CATCH BASIN
- HYDRANT
- TREE
- WV — WATER VALVE
- GV — GAS VALVE
- GW — GUY WIRE
- SEV — SEWER CLEANOUT
- DEPRESSED CURB
- E — OVERHEAD ELECTRICAL
- 514 — PROPOSED INTERMEDIATE CONTOUR
- 515 — PROPOSED INDEX CONTOUR
- WV — NEW WATER VALVE BOX
- x515 — PROPOSED SPOT ELEVATION
- DRAINAGE CHANNEL CENTERLINE
- GRASS
- CRUSHED STONE ACCESS ROAD/PARKING AREA
- CONCRETE SIDEWALK
- MANHOLE
- X — FENCE
- BOLLARD
- CATCH BASIN
- J — COORDINATE CALLOUT

1" = 10'
5 0 10

FINAL AS-BUILT

REV. NO.	DATE	DRWN	CHKD	REMARKS

DESIGNED BY:
DRAWN BY:
SHEET CHK'D BY:
CROSS CHK'D BY:
APPROVED BY:
DATE: MARCH 2012

PREPARED BY:
CAPE
CAPE Environmental Management, Inc.

US Army Corps of Engineers Kansas City District
GROUNDWATER TREATMENT FACILITY PACKAGE
ROCKAWAY BOROUGH SUPERFUND SITE
EAST MAIN/WALL STREET PLUME - OU2
ROCKAWAY BOROUGH, NEW JERSEY

SITE PLAN

PROJECT 50001.005
FILE NAME: CSTPL002 AS-BUILT
SHEET NO.
C-2

XREFS: RKAWYBDR, XSTPL001

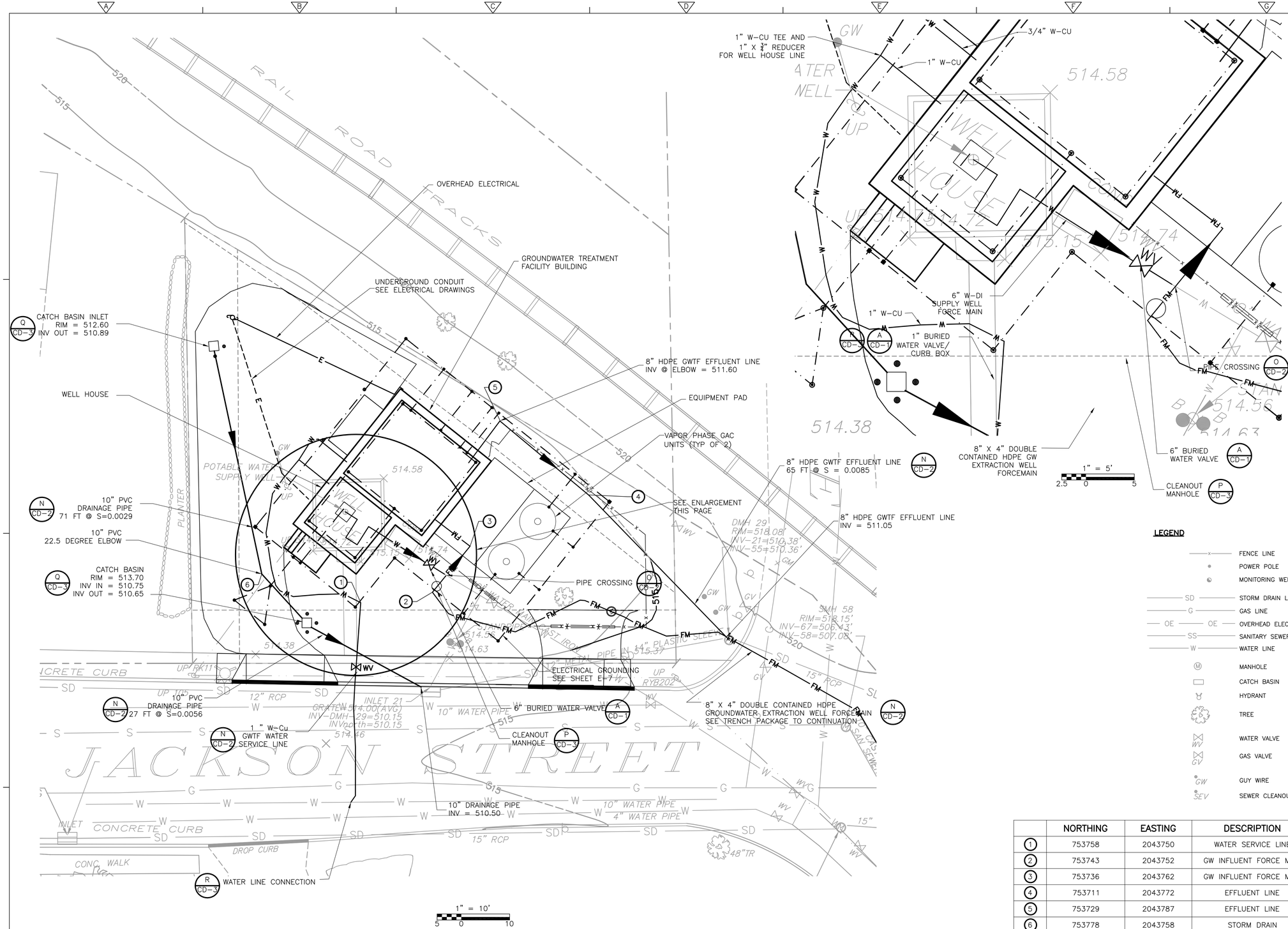

NOTES

1. DRAWINGS ARE BASED ON SURVEY PREPARED BY STEWART SURVEYING & ENGINEERING LLC DATED AUGUST 2004 AND JULY 2005 AND LAN ASSOCIATES AUGUST 2007 AND SEPTEMBER 2011.

2. HORIZONTAL COORDINATE SYSTEM IS NEW JERSEY STATE PLANE NAD27. VERTICAL COORDINATE SYSTEM IS NGVD 1929.

3. INSTALLED SEDIMENT CONTROL MEASURES IN WORK AREA BEFORE BEGINNING WORK IN ACCORDANCE WITH THE CONTRACTOR'S APPROVED SOIL EROSION AND SEDIMENT CONTROL PLAN AND MAINTAINED SEDIMENT CONTROL MEASURES AND DID NOT REMOVE UNTIL GROUND SURFACE IS RESTORED AND STABILIZED.

4. PRIOR TO COMMENCEMENT OF WORK CONTACTED THE NEW JERSEY ONE-CALL SYSTEM TO LOCATE UTILITIES WITHIN THE WORK AREA.

5. TRAFFIC CONTROL WAS PERFORMED IN ACCORDANCE WITH THE CONTRACTOR'S APPROVED TRAFFIC CONTROL PLAN.

6. PROTECTED ALL UTILITIES AND SITE FEATURES DESIGNATED TO REMAIN DURING CONSTRUCTION. PROMPTY REPAIRED DAMAGE CAUSED BY CONSTRUCTION OPERATIONS AT NO COST TO THE GOVERNMENT.

7. CATCH BASINS AND MANHOLES WERE DESIGNED FOR FLOTATION AND HYDROSTATIC FORCES IN ACCORDANCE WITH THE NEW JERSEY DEPARTMENT OF ENVIRONMENTAL PROTECTION FLOOD HAZARD AREA REQUIREMENT.

8. EXISTING BURIED GAS AND ELECTRIC UTILITIES ARE ASSUMED TO HAVE 2'± OF COVER, EXISTING WATER LINES ARE ASSUMED TO HAVE 4'± OF COVER. CONTRACTOR TO VERIFY LOCATION, DEPTH AND SIZE OF ALL BURIED UTILITIES PRIOR TO COMMENCING EXCAVATION.

9. HAND DUG WITHIN 3' OF UTILITIES.

10. THE LOCATION, TYPE AND SIZE OF UTILITIES SHOWN ON THE DRAWINGS WAS TAKEN FROM INFORMATION GIVEN BY THE VARIOUS UTILITIES AND WAS USED AS A GUIDE ONLY.

11. SUPPORTED BURIED UTILITIES AT ALL UTILITY CROSSINGS.

12. THE CONTRACTOR FURNISHED AND INSTALLED PROTECTIVE COVERING/SECURED THE WORK AREA AS NECESSARY FOR TRENCHES THAT REMAIN OPEN OVERNIGHT.

13. THE CONTRACTOR PROTECTED AND SUPPORTED EXISTING UTILITIES DURING EXCAVATION. IF DAMAGE OCCURED TO AN EXISTING UTILITY LINE, THE UTILITY AUTHORITY WAS NOTIFIED IMMEDIATELY. REPAIR TO DAMAGED WATER LINES WAS PERFORMED BY THE BOROUGH OF ROCKAWAY. CONTRACTOR WAS RESPONSIBLE FOR COST OF REPAIRS.

14. THE FORCE MAIN AND SUPPLY WELL MAIN MAINTAINED A HORIZONTAL SEPARATION OF 10 FEET FROM POTABLE WATER LINES. WHEN A 10 FOOT HORIZONTAL SEPARATION WAS NOT POSSIBLE, THE FORCE MAIN/SUPPLY WELL MAIN WAS INSTALLED 18 INCHES BELOW THE BOTTOM OF THE WATER MAIN OR WAS ENCASED IN CONCRETE. IF 18 INCHES VERTICAL CLEARANCE WAS NOT MAINTAINED BETWEEN THE FORCE MAIN AND WATER MAIN, THE FORCE MAIN/SUPPLY WELL MAIN WAS ENCASED IN CONCRETE FOR AT LEAST 10 FEET ON EACH SIDE OF THE CROSSING. IN ADDITION, JOINTS WERE INSTALLED AS FAR FROM THE WATER MAIN AS POSSIBLE.

15. FOR ALL UTILITY CROSSINGS OTHER THAN WATER MAINS, THE MINIMUM VERTICAL CLEARANCE BETWEEN THE FORCE MAIN AND EXISTING UTILITY WAS 6 INCHES AND FLOWABLE FILL SWAS USED BETWEEN THE FORCE MAIN AND EXISTING UTILITY FOR STRUCTURAL SUPPORT.

16. TRENCH OPERATIONS THAT REQUIRED THE CONTRACTOR TO WORK IN PROXIMITY TO OVERHEAD ELECTRIC, TELEPHONE AND CABLE SERVICE AND MAIN LINES. THE CONTRACTOR COMPLIED WITH THE REQUIREMENTS OF 1926.550(a)(15).

LEGEND

—x—	FENCE LINE
•	POWER POLE
	MONITORING WELL
—SD—	STORM DRAIN LINE
—G—	GAS LINE
—OE— —OE—	OVERHEAD ELECTRICAL LINE
—SS—	SANITARY SEWER LINE
—W—	WATER LINE
M	MANHOLE
	CATCH BASIN
	HYDRANT
	TREE
WV	WATER VALVE
GV	GAS VALVE
GW	GUY WIRE
SEV	SEWER CLEANOUT
—W—	NEW WATER LINE
—FM—	NEW FORCE MAIN
- - - E - - -	UNDERGROUND ELECTRICAL CONDUIT
—514—	PROPOSED INTERMEDIATE CONTOUR
—515—	PROPOSED INDEX CONTOUR
	NEW WATER VALVE
	MANHOLE
•	BOLLARD
	CATCH BASIN
1	PIPING COORDINATE CALLOUT

	NORTHING	EASTING	DESCRIPTION
1	753758	2043750	WATER SERVICE LINE
2	753743	2043752	GW INFLUENT FORCE MAIN
3	753736	2043762	GW INFLUENT FORCE MAIN
4	753711	2043772	EFFLUENT LINE
5	753729	2043787	EFFLUENT LINE
6	753778	2043758	STORM DRAIN

FINAL AS-BUILT

REV. NO.	DATE	DRWN	CHKD	REMARKS

DESIGNED BY:
DRAWN BY:
SHEET CHK'D BY:
CROSS CHK'D BY:
APPROVED BY:
DATE: MARCH 2012

PREPARED BY:
CAPE
CAPE Environmental Management, Inc.

US Army Corps of Engineers Kansas City District
GROUNDWATER TREATMENT FACILITY PACKAGE
ROCKAWAY BOROUGH SUPERFUND SITE
EAST MAIN/WALL STREET PLUME - OU2
ROCKAWAY BOROUGH, NEW JERSEY

PIPING PLAN

PROJECT 50001.005
FILE NAME: CYPPL003 AS-BUILT
SHEET NO.
C-3

XREFS: RKAWYBDR, XSTPL001

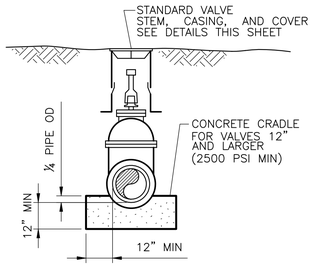

VERTICAL GATE VALVE INSTALLATION

DETAIL A / C-3

NTS

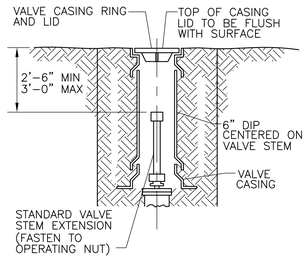

VALVE CASING

DETAIL B / C-3

NTS

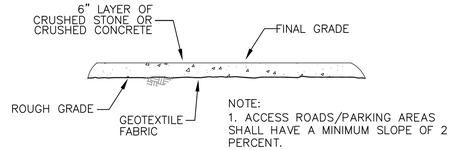

NOTE:
1. ACCESS ROADS/PARKING AREAS SHALL HAVE A MINIMUM SLOPE OF 2 PERCENT.

GEOTEXTILE FABRIC NOTES:

1. GEOTEXTILE FABRIC WAS A NONWOVEN FABRIC CONSISTING OF SYNTHETIC POLYMERS FORMED INTO A STABLE NETWORK, MIRAFI 600X OR EQUIVALENT. THE FABRIC WAS NONBIODEGRADABLE, RESISTANT TO ULTRAVIOLET LIGHT EXPOSURE, INSECT, MILDEW, AND RODENT RESISTANT.
2. NO MECHANICAL EQUIPMENT WAS DRIVEN DIRECTLY ON TOP OF THE FABRIC.
3. THE FABRIC WAS STORED IN SUCH A WAY THAT IT IS PROTECTED FROM PROLONGED EXPOSURE TO ULTRAVIOLET RADIATION AND WAS ELEVATED FROM THE GROUND A MINIMUM OF THREE INCHES TO PROTECT THE GEOTEXTILE FROM STANDING WATER.
4. THE EARTH SUBGRADE WAS MAINTAINED IN A SMOOTH, UNIFORM AND COMPACTED CONDITION DURING INSTALLATION OF THE FABRIC.
5. GEOTEXTILE WRAPPING WASE REMOVED NO SOONER THAN ONE HOUR PRIOR TO UNROLLING AFTER WHICH TIME IT WASL NOT BE EXPOSED FOR MORE THAN 15 CALENDAR DAYS.
6. GEOTEXTILES WERE CUT USING AN APPROVED GEOTEXTILE CUTTER ONLY.
7. JOINTS AND OVERLAPS: GEOTEXTILES WERE CONTINUOUSLY SEWN WITH OVERLAPPED SEVEN INCHES PRIOR TO JOINING OR ALTERNATIVELY WERE OVERLAPPED A MINIMUM OF 18 INCHES WITHOUT SEWING. ANY SEWING WAS DONE USING POLYMERIC THREAD WITH CHEMICAL RESISTANCE PROPERTIES EQUAL TO OR EXCEEDING THOSE OF THE GEOTEXTILE.
8. CARE WAS TAKEN TO REMOVE ANY SOIL OR OTHER MATERIAL WHICH MAY HAVE PENETRATED THE TORN GEOTEXTILE. ANY HOLES OR TEARS IN THE GEOTEXTILE WERE REPAIRED AS FOLLOWS: PATCH MADE FROM THE SAME GEOTEXTILE WERE SPOT-SEAMED IN PLACE WITH A MINIMUM OF 24-INCH OVERLAP IN ALL DIRECTION, OR SEWN IN-PLACE NO CLOSER THAN SIX INCHES FROM ANY EDGE.
9. COVER MATERIAL WAS PLACED AS SOON AS POSSIBLE TO PROTECT MATERIALS FROM ULTRAVIOLET DEGRADATION AND TEMPERATURE FLUCTUATIONS.

ACCESS ROAD/PARKING AREA

DETAIL C / C-2

NTS

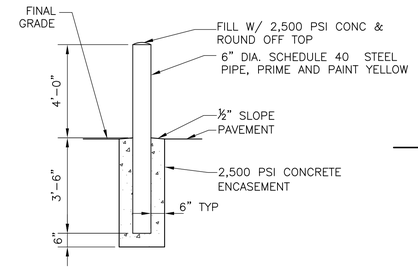

BOLLARD

DETAIL D / C-2

NTS

COORDINATE LETTER FROM SHEET C-2	TOP OF SWALE ELEV (FT)	BOTTOM OF SWALE ELEV (FT)	DEPTH (FT)
P	514.40	514.00	0.40
Q	514.40	513.75	0.65
R	514.40	513.50	0.90

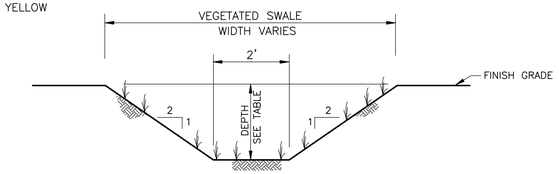

NOTE: EROSION CONTROL BLANKET WAS INSTALLED FOR THE VEGETATED SWALE – SEE DETAIL I ON THIS SHEET

VEGETATED DRAINAGE SWALE

DETAIL E / C-2

NTS

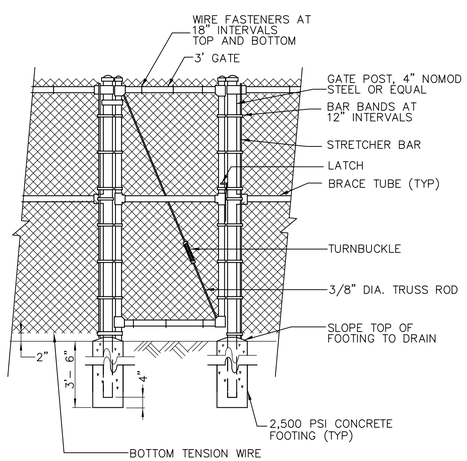

NOTE: PRIVACY SCREENING WAS INSTALLED FOR ALL CHAINLINK FENCE AND GATES. SCREENING WAS PVC OR ALUMINUM CONSTRUCTION, DARK GREEN IN COLOR AND WAS INSTALLED TO PROVIDE COMPLETE PRIVACY OF CONTENTS WITHIN THE FENCED AREA.

PEDESTRIAN CHAIN LINK FENCE GATE

DETAIL F / C-2

NTS

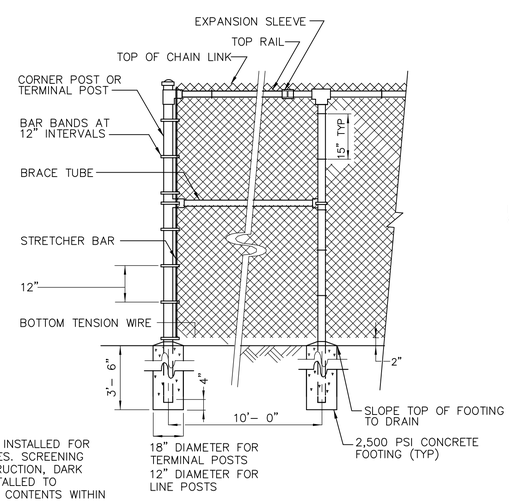

CHAIN LINK FENCE

DETAIL G / C-2

NTS

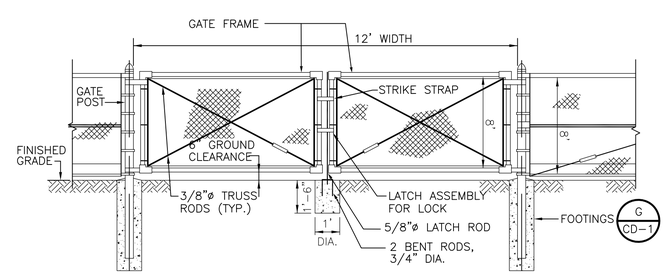

DOUBLE LEAF VEHICULAR SWING GATE

DETAIL H / C-2

NTS

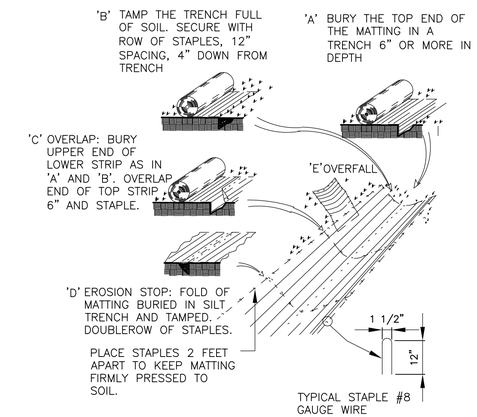

NOTE: EROSION CONTROL BLANKET WAS INSTALLED FOR THE VEGETATED SWALE

EROSION BLANKET CONTROL

DETAIL I / –

NTS

FINAL AS-BUILT

REV. NO.	DATE	DRWN	CHKD	REMARKS

DESIGNED BY:
DRAWN BY:
SHEET CHK'D BY:
CROSS CHK'D BY:
APPROVED BY:
DATE: MARCH 2012

PREPARED BY:
CAPE
CAPE Environmental Management, Inc.

US Army Corps of Engineers Kansas City District
GROUNDWATER TREATMENT FACILITY PACKAGE
ROCKAWAY BOROUGH SUPERFUND SITE
EAST MAIN/WALL STREET PLUME - OU2
ROCKAWAY BOROUGH, NEW JERSEY

CIVIL DETAILS I

PROJECT 50001.005
FILE NAME: C00XSTDT AS-BUILT
SHEET NO.
CD-1

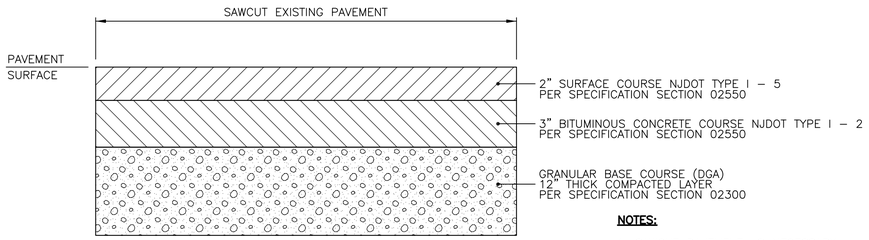

ROAD RESTORATION

DETAIL J / C–2

NTS

NOTES:

1. SAWCUT PAVEMENT AS NECESSARY TO PROVIDE A SMOOTH TRANSITION TO EXISTING PAVEMENT.

2. RESTORE PAVEMENT TO ORIGINAL ELEVATIONS UNLESS OTHERWISE NOTED.

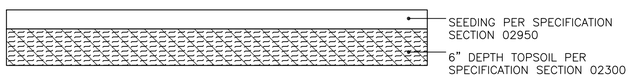

GRASSED AREA RESTORATION

DETAIL K / C–2

NTS

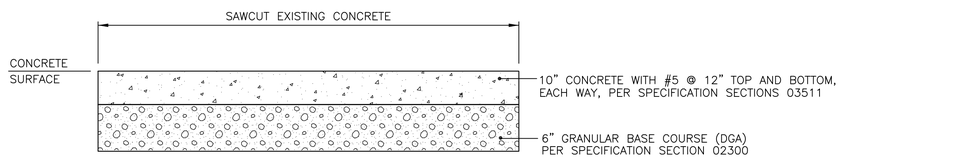

SIDEWALK RESTORATION

DETAIL L / C–2

NTS

NOTES:

1. SAWCUT JOINTS AT ⅓ DEPTH OF CONCRETE SLAB AT EVERY 4 FEET ON CENTER.

2. PROVIDED ½" EXPANSION JOINTS WHERE NEW SIDEWALK MEETS EXISTING SIDEWALK OR EVERY 12 FEET MAXIMUM.

3. CURBS AND SIDEWALKS WERE RESTORED TO MATCH EXISTING CONDITIONS.

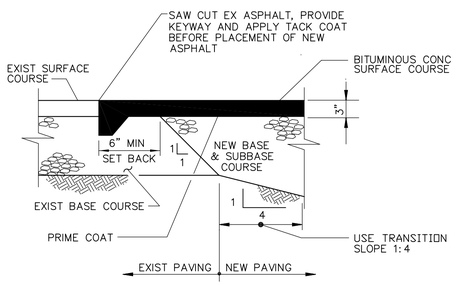

PAVEMENT TRANSITION BETWEEN NEW AND EXISTING ASPHALT PAVEMENTS

DETAIL M / –

NTS

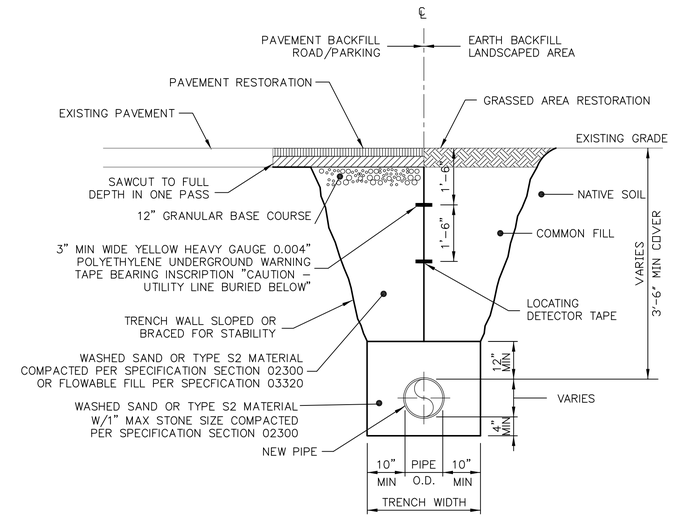

PIPE TRENCH

DETAIL N / C–3

NTS

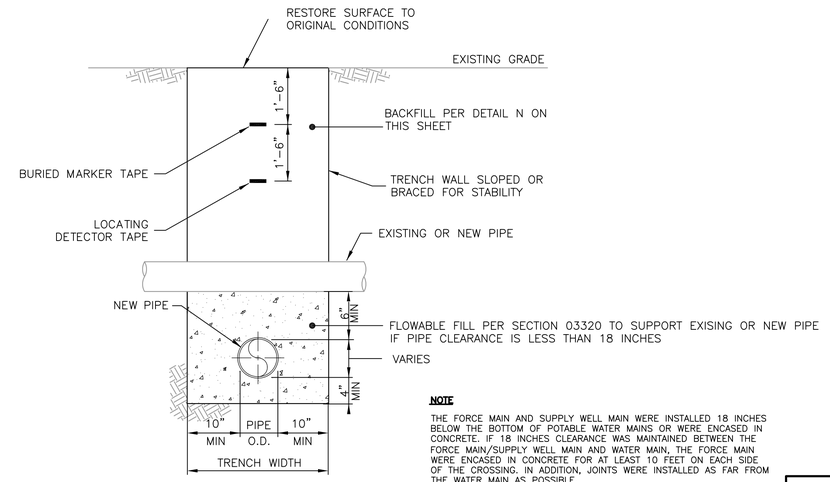

NOTE

THE FORCE MAIN AND SUPPLY WELL MAIN WERE INSTALLED 18 INCHES BELOW THE BOTTOM OF POTABLE WATER MAINS OR WERE ENCASED IN CONCRETE. IF 18 INCHES CLEARANCE WAS MAINTAINED BETWEEN THE FORCE MAIN/SUPPLY WELL MAIN AND WATER MAIN, THE FORCE MAIN WERE ENCASED IN CONCRETE FOR AT LEAST 10 FEET ON EACH SIDE OF THE CROSSING. IN ADDITION, JOINTS WERE INSTALLED AS FAR FROM THE WATER MAIN AS POSSIBLE.

PIPE CROSSING

DETAIL O / –

NTS

FINAL AS-BUILT

REV. NO.	DATE	DRWN	CHKD	REMARKS

DESIGNED BY:
DRAWN BY:
SHEET CHK'D BY:
CROSS CHK'D BY:
APPROVED BY:
DATE: MARCH 2012

PREPARED BY:
CAPE
CAPE Environmental Management, Inc.

US Army Corps of Engineers Kansas City District
GROUNDWATER TREATMENT FACILITY PACKAGE
ROCKAWAY BOROUGH SUPERFUND SITE
EAST MAIN/WALL STREET PLUME - OU2
ROCKAWAY BOROUGH, NEW JERSEY

CIVIL DETAILS II

PROJECT 50001.005
FILE NAME: C002STDT AS–BUILT
SHEET NO.
CD-2

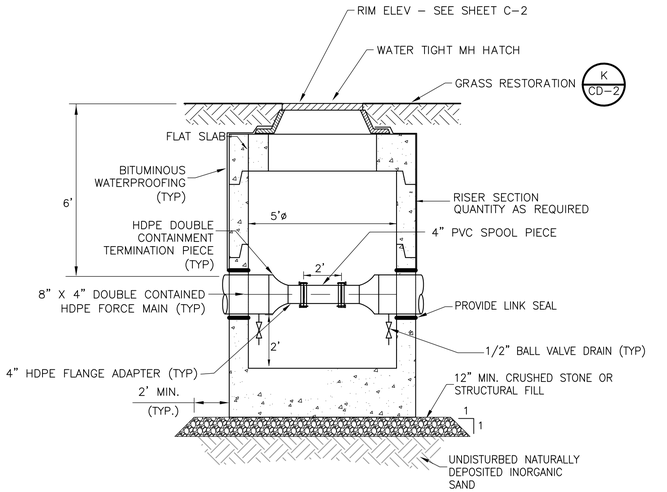

CLEANOUT MANHOLE

NOTE:
PROVIDED LADDER OR MANHOLE RUNGS IN ACCORDANCE WITH SECTION 03410.

DETAIL P / C-2,3
NTS

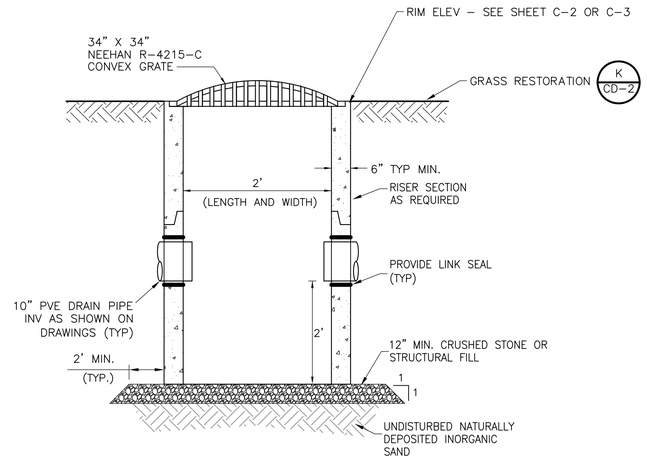

CATCH BASIN

DETAIL Q / C-2,3
NTS

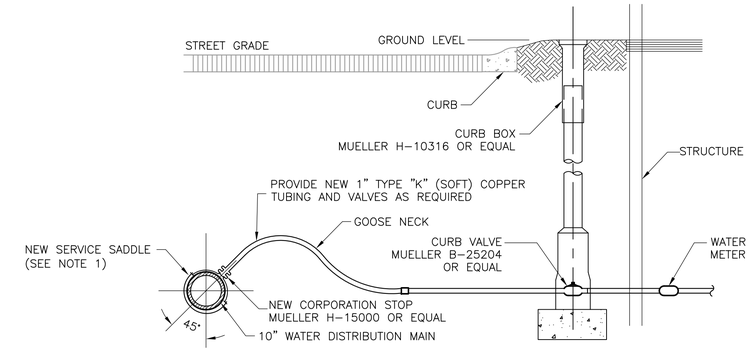

WATER MAIN CONNECTION

NOTES:
1. WATER MAIN MATERIAL IS UNKNOWN. CONTRACTOR DETERMINED PIPE MATERIAL AND CONFIRM SIZE. SERVICE SADDLE WAS COMPATIBLE WITH EXISTING MAIN.

DETAIL R / C-3

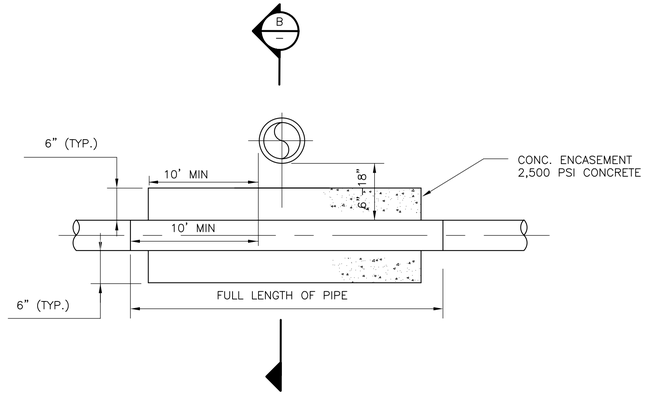

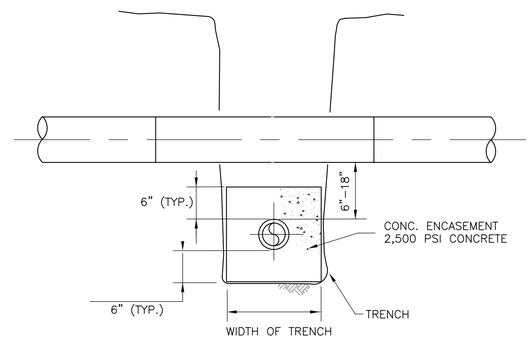

SECTION

PIPE CONCRETE ENCASEMENT

NOTES

1. POTABLE WATER MAINS WERE ENCASED IN CONCRETE IF POTABLE WATER MAIN CROSSES UNDER GWTF INFLUENT MAIN OR WELL HOUSE WATER SUPPLY MAIN.

2. IF A 10 FOOT HORIZONTAL CLEARANCE WAS NOT MAINTAINED, THE GWTF INFLUENT FORCE MAIN/ WELL HOUSE SUPPLY WELL MAIN WERE INSTALLED 18 INCHES BELOW THE BOTTOM OF POTABLE WATER MAINS UNLESS OTHERWISE SPECIFIED OR WERE ENCASED IN CONCRETE. IF 18 INCHES CLEARANCE WAS NOT MAINTAINED BETWEEN THE FORCE MAIN/SUPPLY WELL MAIN AND WATER MAIN, THE FORCE MAIN WAS ENCASED IN CONCRETE FOR AT LEAST 10 FEET ON EACH SIDE OF THE CROSSING. IN ADDITION, JOINTS WERE INSTALLED AS FAR FROM THE WATER MAIN AS POSSIBLE.

DETAIL S / –
NTS

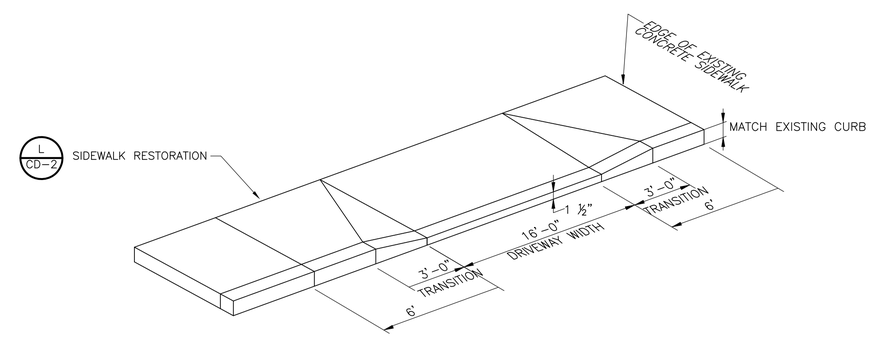

NOTES
1. THICKNESS OF SIDEWALK SHALL BE 10" AT DRIVEWAY WITH #5 AT 12" TOP AND BOTTOM EACH WAY.
2. MATCHED ALL EXISTING ELEVATIONS.
3. CONTRACTOR FIELD VERIFIED ALL EXISTING DIMENSIONS.

CONCRETE APRON

DETAIL T / C-2
NTS

FINAL AS-BUILT

REV. NO.	DATE	DRWN	CHKD	REMARKS

DESIGNED BY:
DRAWN BY:
SHEET CHK'D BY:
CROSS CHK'D BY:
APPROVED BY:
DATE: MARCH 2012

PREPARED BY:
CAPE
CAPE Environmental Management, Inc.

US Army Corps of Engineers Kansas City District
GROUNDWATER TREATMENT FACILITY PACKAGE
ROCKAWAY BOROUGH SUPERFUND SITE
EAST MAIN/WALL STREET PLUME - OU2
ROCKAWAY BOROUGH, NEW JERSEY

CIVIL DETAILS III

PROJECT 50001.005
FILE NAME: C003STDT AS-BUILT
SHEET NO.
CD-3

ABBREVIATIONS

&	AND
<	ANGLE
@	AT
AB	ANCHOR BOLT
ABV	ABOVE
ACMU	ACOUSTICAL CONCRETE MASONRY UNIT
AFF	ABOVE FINISHED FLOOR
AFG	ABOVE FINISHED GRADE
AL, ALUM	ALUMINUM
AMP	ACOUSTICAL METAL PANELS
ANOD	ANODIZE(D)
ASSY	ASSEMBLY
BBT	BIOBASED TILE
BD	BOARD
BEV	BEVEL(ED)
BLDG	BUILDING
BLK	BLOCK
BLKG	BLOCKING
BRG	BEARING
BRK	BRICK
BRS	BRASS
BRZ	BRONZE
BTM	BOTTOM
C TO C	CENTER TO CENTER
CAB	CABINET
CARP	CARPET
CEM	CEMENT
CF	COMPRESSIBLE FILLER
CGFB	CEMENTITIOUS GLASS FIBER BOARD
CH	CONCRETE HARDENER
CHAM	CHAMFER
CHAN	CHANNEL
CIP	CAST IN PLACE
CJ	CONTROL JOINT
CL OR ℄	CENTERLINE
CLG	CEILING
CLKG	CAULKING
CMU	CONCRETE MASONRY UNIT
COL	COLUMN
COMP	COMPRESSIBLE
CONC	CONCRETE
CONT	CONTINUOUS
CRS	COURSE(S)
CT	CERAMIC TILE
DET	DETAIL
DF	DRINKING FOUNTAIN
DIA	DIAMETER
DIAG	DIAGONAL
DIM	DIMENSION
DISP	DISPENSER
DN	DOWN
DP	DAMPPROOFING
DR	DRAIN
ELEC	ELECTRICAL
ELEV	ELEVATION
EQ	EQUAL(LY)
EQPT	EQUIPMENT
EWC	ELECTRICAL WATER COOLER
EXP	EXPOSED
EJ	EXPANSION JOINT
EXIST, (E)	EXISTING
FD	FLOOR DRAIN
FE	FIRE EXTINGUISHER
FF	FACTORY FINISH
FGL	FIBERGLASS
FIN	FINISH(ED)
FLG	FLASHING
FL	FLOOR(ING)
FLR	FILLER
FR	FRAME
FRP	FIBERGLASS REINFORCED PLASTIC
FO	FRAME OPENING
FV	FIELD VERIFY
FXD	FIXED
GA	GAGE, GAUGE
GALV	GALVANIZED
GL	GLASS
GB	GLASS BLOCK
GRTG	GRATING
GYP	GYPSUM
GWB	GYPSUM WALL BOARD
HARD	HARDENER
HD	HEAVY DUTY
HDWD	HARDWOOD
HDWR	HARDWARE
HGR	HANGER
HGT	HEIGHT
HM	HOLLOW METAL
HOR	HORIZONTAL
HP	HIGH POINT
HR	HANDRAIL
IN	INCH
INST	INSTRUMENTATION
INSUL	INSULATION
JC	JANITOR'S CLOSET
JT	JOINT
JT FLR	JOINT FILLER
L	LINE OF STRUCTURAL ANGLE DESIGNATION
LAB	LABORATORY
LAD	LADDER
LAM	LAMINATED
LAV	LAVATORY
LG	LAMINATED GLASS
LKR	LOCKER
LNTL	LINTEL
LP	LOW POINT
LT	LIGHT(S)
MAS	MASONRY
MATL	MATERIAL
MAX	MAXIMUM
MEMB	MEMBRANE
MFR	MANUFACTURER
MIN	MINIMUM
MISC	MISCELLANEOUS
MO	MASONRY OPENING
MR	MOISTURE RESISTANT
MRAT	MOISTURE RESISTANT ACOUSTICAL TILE
MTD	MOUNTED
MTG	MOUNTING
MTL	METAL
NIC	NOT IN CONTRACT
NOM	NOMINAL
NTS	NOT TO SCALE
OC	ON CENTER
OH	OVERHANG
OPNG	OPENING
OPP HD	OPPOSITE HAND
ORD	OVERFLOW ROOF DRAIN
OSB	ORIENTED STRAND BOARD
OV	OVER
OVHD	OVERHEAD
PERIM	PERIMETER
PL	PLATE
PL	PROPERTY LINE
PLAS	PLASTER
PLK	PLANK
PLYWD	PLYWOOD
PM	PRESSED METAL
PORC	PORCELAIN TILE
PR	PAIR
PRD	PROMENADE ROOF DRAIN
PRCST	PRECAST
PREFAB	PRE-FABRICATED
PT	PRESSURE TREATED
PRMLD	PREMOLDED
PSF	POUNDS PER SQUARE FOOT
PTD	PAINTED
QT	QUARRY TILE
QTB	QUARRY TILE BASE
R	RISER(S)
R+S	BACKER ROD & SEALANT
RB	RUBBER BASE
RD	ROOF DRAIN
RECT	RECEPTACLE
REF	ROOF EXHAUST FAN
REINF	REINFORCE (D, ING)
REQ'D	REQUIRED
REV	REVISED
RF	ROOF FAN
RFG	ROOFING
RGH	ROUGH
RJ	REVEAL/RUSTICATION JOINT
RL	RAIN LEADER
RLG	RAILING
RM	ROOM
RO	ROUGH OPENING
RT	RUBBER TILE
RWL	RAIN WATER LEADER
S	STEEL S-SHAPE DESIGNATION
SAT	SUSPENDED ACOUSTICAL TILE
SB	SEAMLESS BASE
SCHD	SCHEDULE
SCRN	SCREEN(ED, ING)
SECT	SECTION
SF	SEAMLESS FLOORING
SGFT	STRUCTURAL GLAZED FACING TILE
SHT	SHEET
SIM	SIMILAR
SK	SINK
SL	SLOPE
SLNT	SEALANT
SPEC	SPECIFICATION, SPECIFIED
SST	STAINLESS STEEL
STD	STANDARD
STL	STEEL
STOR	STORAGE
STRU	STRUCTURE(S, URAL)
STWY	STAIRWAY
SUPT	SUPERINTENDENT
SUSP	SUSPENDED
T	TREAD(S)
TBM	TRAFFIC BEARING MEMBRANE
T&G	TONGUE AND GROOVE
TEMP	TEMPERATURE
TEMP	TEMPERED
TEMP	TEMPORARY
TER	TERRAZZO
TERB	TERRAZZO BASE
THK	THICK(NESS)
THR	THRESHOLD
TKBD	TACKBOARD
TO	TOP OF
TOB	TOP OF BRICK
TOIL	TOILET
TOM	TOP OF MASONRY
TOPG	TOPPING
TOS	TOP OF STEEL
TS	STRUCTURAL TUBING (STEEL UNLESS NOTED)
TSL	TOP OF SLAB
TWF	THROUGH WALL FLASHING
TYP	TYPICAL
UC	UNDERCUT
UON	UNLESS OTHERWISE NOTED
UR	URINAL
VB	VAPOR BARRIER
VCT	VINYL COMPOSITION TILE
VERT	VERTICAL
VEST	VESTIBULE
VTR	VENT THRU ROOF
W	WITH
W/	WITH
W/A	WHERE APPLICABLE
W/O	WITHOUT
WC	WATER CLOSET
WD	WOOD
WDW	WINDOW
WF	WIDE FLANGE
WP	WOOD PANEL
WPG	WATERPROOFING
WT	STEEL TEE-SHAPE DESIGNATION
WWF	WELDED WIRE FABRIC

LINE TYPES (UNLESS OTHERWISE NOTED)

CONTINUOUS – NEW CONSTRUCTION

DASHED ON CONSTRUCTION PLANS/SHEETS – HIDDEN ELEMENTS ABOVE, BELOW, OR BEYOND

MATERIAL SYMBOLS

EARTH, SOIL

GRAVEL

BRICK

CONCRETE BLOCK

PRECAST CONCRETE

CONC CAST IN PLACE

WOOD–BLOCKING

WOOD–FINISH

PLYWOOD

RIGID INSULATION

BLANKET INSULATION

STEEL

ALUMINUM

GROUT

CAULK

GLASS

STRUCTURAL STEEL

SHEET METAL, STEEL, GLASS, WATERPROOFING

DIMENSIONING SYSTEM

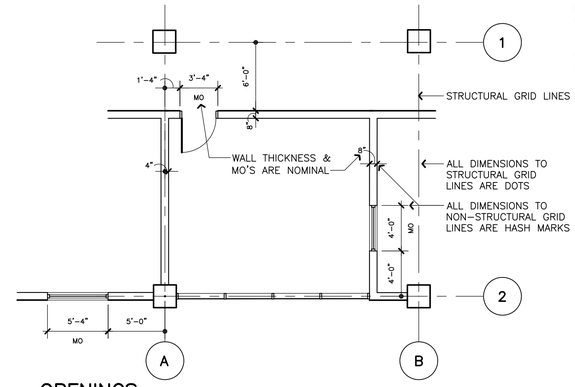

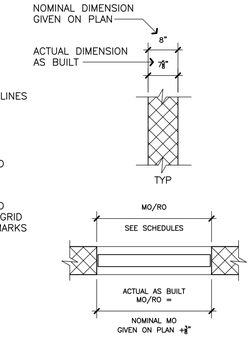

WINDOW OR LOUVER OPENING IN PLAN

OPENINGS

USUALLY LABELED IN PLAN VIEW; HOWEVER, OPENINGS NOT SHOWN IN PLAN ARE LABELED ON ELEVATIONS

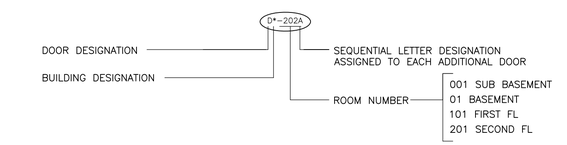

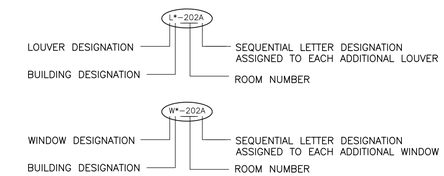

SYMBOLS

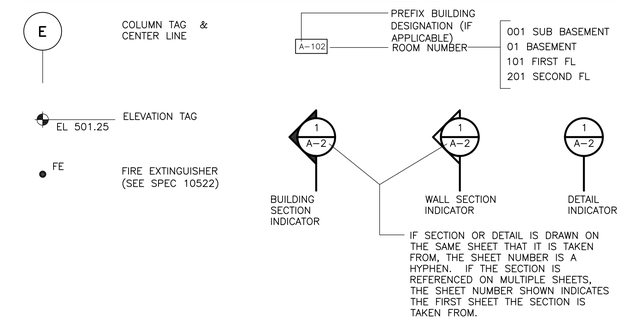

BUILDING CODE ANALYSIS

CODES REVIEWED	NEW JERSEY BUILDING CODE, 2006 INTERNATIONAL BUILDING CODE, NEW JERSEY EDITION 2006 INTERNATIONAL FIRE PREVENTION CODE AMERICANS WITH DISABILITIES ACT ACCESSIBILITIES GUIDELINES		
BUILDING CLASSIFICATION OCCUPANCY – SECTION 306.3 CONSTRUCTION – SECTION 602.2	 GROUP F–2, LOW HAZARD FACTORY INDUSTRIAL TYPE II B		
BUILDING HEIGHTS AND AREAS TABLE 503	MAX AREA MAX HEIGHT MAX STORIES	23,000 SF 55 FEET 3	ACTUAL 772 SF ACTUAL 22 FEET ACTUAL 1
OCCUPANT LOAD SECTION 1004.1	772 SF/ 100 SF = 8 OCCUPANTS		
EXITS PER SPACE TABLE 1015.1	REQUIRED	1	ACTUAL 1
MAX TRAVEL DISTANCE TABLE 1016.1	MAXIMUM	300 FT	ACTUAL 30
FIRE SEPARATION DISTANCE FIRE RESISTANCE RATING TABLE 602	TYPE II B ≥ 10 FEET FROM PROPERTY LINE = 0HR ACTUAL 10 FEET FROM PROPERTY LINE		
STAIRS SECTION 1009	MIN WIDTH MIN RISER HEIGHT MIN TREAD DEPTH	36–IN 4–IN 11–IN	ACTUAL 48–IN ACTUAL 7–IN ACTUAL 11–IN
RAMPS	N/A		
HAZARDOUS CHEMICALS INTERIOR STORAGE	NO BULK INTERIOR CHEMICAL STORAGE		
EXTERIOR STORAGE	NO HAZARDOUS BULK EXTERIOR CHEMICAL STORAGE		
SPRINKLERS REQUIRED	NO		

GENERAL NOTES

HEIGHT OF INTERIOR PARTITIONS ARE FROM FLOOR TO THE UNDERSIDE OF ROOF DECK (UNLESS OTHERWISE NOTED)

NOT ALL EQUIPMENT IS SHOWN FOR CLARITY. REFER TO THE APPROPRIATE DISCIPLINE SHEETS FOR SPECIFIC EQUIPMENT LAYOUT AND OTHER REQUIREMENTS

SEE "S" SHEETS FOR SIZE AND LOCATION OF CONCRETE PADS, TRENCHES, VAULTS, SUMPS, ETC

SEE "S" SHEETS FOR CONCRETE AND MASONRY REINFORCEMENT

DO NOT SCALE FROM THE DRAWINGS

NOTIFY ARCHITECT IF CONSTRUCTION DOCUMENTS DIFFER FROM ACTUAL FIELD CONDITIONS PRIOR TO FABRICATION OR NEW CONSTRUCTION

ARCHITECTURAL SHEET INDEX

A–1 ARCHITECTURAL SHEET INDEX, GENERAL NOTES, ABBREVIATIONS, SYMBOLS, AND BUILDING CODE ANALYSIS.

A–2 FLOOR PLAN AND ARCHITECTURAL SPECIFICATIONS

A–3 ROOF PLAN AND ARCHITECTURAL SPECIFICATIONS

A–4 ARCHITECTURAL SPECIFICATIONS

A–5 EXTERIOR ELEVATIONS

A–6 BUILDING SECTIONS AND ARCHITECTURAL DETAILS

A–7 WALL SECTIONS

AD–1 FINISH SCHEDULE, DOOR SCHEDULE AND TYPES, WINDOW SCHEDULE AND TYPES, LOUVER SCHEDULE AND TYPES, AND ARCHITECTURAL DETAILS

FINAL AS-BUILT

REV. NO.	DATE	DRWN	CHKD	REMARKS

DESIGNED BY:
DRAWN BY:
SHEET CHK'D BY:
CROSS CHK'D BY:
APPROVED BY:
DATE: MARCH 2012

PREPARED BY:
CAPE
CAPE Environmental Management, Inc.

US Army Corps of Engineers Kansas City District
GROUNDWATER TREATMENT FACILITY PACKAGE
ROCKAWAY BOROUGH SUPERFUND SITE
EAST MAIN/WALL STREET PLUME - OU2
ROCKAWAY BOROUGH, NEW JERSEY

ARCHITECTURAL SHEET INDEX, GENERAL NOTES, ABBREVIATIONS, SYMBOLS, AND BUILDING CODE ANALYSIS

PROJECT 50001.005
FILE NAME: A001SYMB AS–BUILT
SHEET NO.
A-1

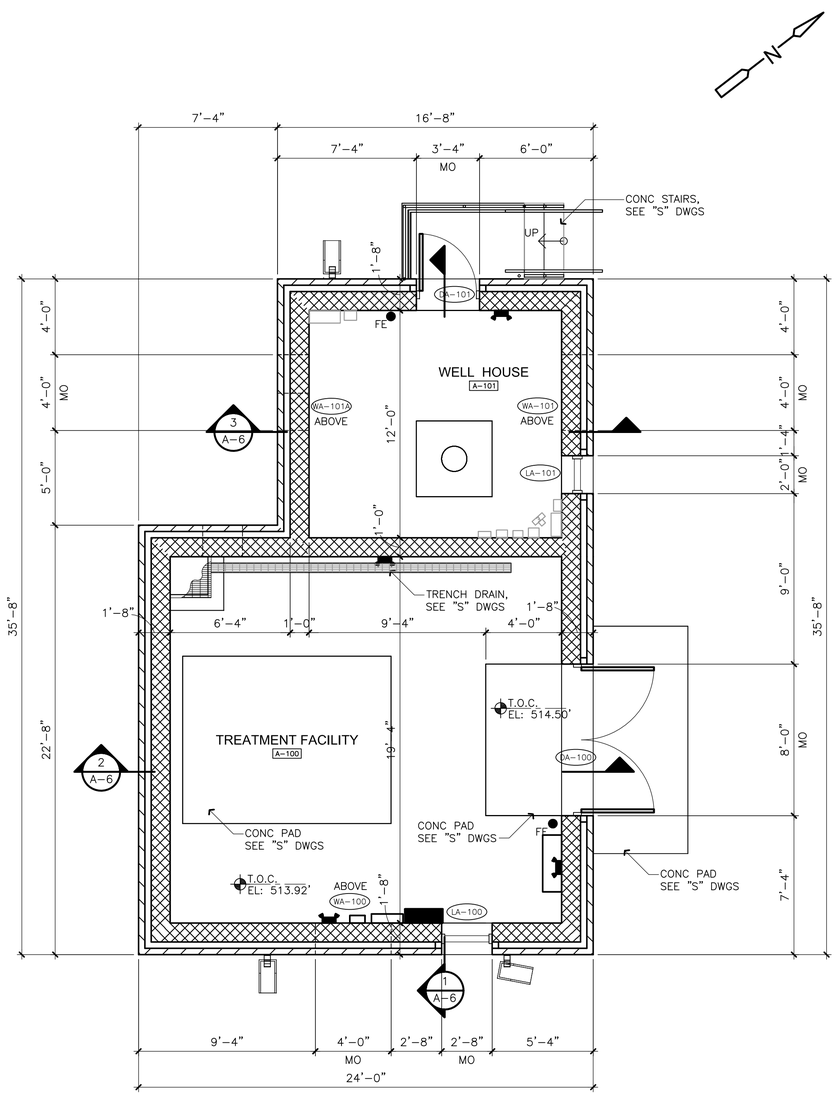

FLOOR

PLAN

1/4" = 1'-0"

GENERAL NOTES:

SEE SHEET A-1 FOR ADDITIONAL GENERAL NOTES

SEE SHEETS A-3 AND A-4 FOR ADDITIONAL ARCHITECTURAL SPECIFICATIONS

SPECIFICATIONS

04200 – MASONRY:

A. FACE BRICK
1. FACE BRICK SHALL BE SELECTED AND APPROVED BY THE OWNER FROM SAMPLES SUBMITTED. COLOR TO MATCH BRICK ON BUILDING DEMOLISHED AT SITE.
2. NET AREA COMPRESSIVE STRENGTH OF BRICK MASONRY UNITS SHALL BE A MINIMUM OF 3200 PSI WHEN TESTED IN ACCORDANCE WITH ASTM C67. COMPRESSIVE STRENGTH OF MASONRY (F'M) SHALL BE A MINIMUM OF 1200 PSI IN ACCORDANCE WITH ACI 530.1 WHEN THESE UNITS ARE USED WITH THE MORTAR SPECIFIED HEREIN.
3. BRICK SHALL HAVE THE NOMINAL DIMENSIONS OF 2¼–IN BY 8–IN FACE BY 4–IN AND SHALL CONFORM TO THE REQUIREMENTS OF ASTM C216 GRADE MW. PROVIDE SPECIAL SHAPE BRICK AS REQUIRED AND APPROVED. THE VARIATIONS IN COLOR AND TEXTURE SHALL NOT EXCEED THOSE OF THE SAMPLES APPROVED BY THE ENGINEER.

B. CONCRETE MASONRY UNITS (CMU)
1. CMU SHALL CONFORM TO ASTM C90, NORMAL WEIGHT, HOLLOW, LOAD BEARING UNITS OF 8–IN BY 12–IN BY 16–IN NOMINAL SIZE.
2. CMU SHALL BE FREE FROM SUBSTANCES THAT WILL CAUSE STAINING OR POP–OUTS AND SHALL BE FINE, EVEN TEXTURE WITH STRAIGHT AND TRUE EDGES. ALL UNITS SHALL BE AIR CURED IN COVERED STORAGE FOR NOT LESS THAN 28 DAYS BEFORE DELIVERY.
3. MINIMUM COMPRESSIVE STRENGTH ON THE NET AREA (AVERAGE OF THREE UNITS) WHEN TESTED IN ACCORDANCE WITH ASTM C140 SHALL BE 1900 PSI ON THE NET AREA RESULTING IN A MINIMUM F'M OF 1500 PSI. MINIMUM COMPRESSIVE STRENGTH OF ANY INDIVIDUAL UNIT SHALL BE NOT LESS THAN 80 PERCENT OF THE REQUIRED THREE–UNIT AVERAGE.
4. OVEN DRY WEIGHT OF THE CONCRETE SHALL NOT BE LESS THAN 125 LBS/CU–FT.
5. UNITS SHALL BE OBTAINED FROM ONE MANUFACTURER TO ENSURE EVEN COLOR AND TEXTURE.
6. PROVIDE SPECIAL UNITS REQUIRED BY THE DRAWINGS, INCLUDING BUT NECESSARILY LIMITED TO SOLID, CORNER, PILASTER, BOND BEAM, LINTEL, AND JAMB UNITS.

C. JOINT REINFORCEMENT
1. MASONRY JOINT REINFORCEMENT FOR MULTIWYTHE MASONRY SHALL BE ADJUSTABLE (TWO–PIECE) TYPE, EITHER LADDER OR TRUSS DESIGN, WITH ONE 9 GAUGE SIDE ROD AT EACH FACE SHELL OF BACKING WYTHE, 9 GAUGE CROSS RODS, AND WITH SEPARATE TIES THAT EXTEND INTO FACING WYTHE. TIES HAVE TWO HOOKS THAT ENGAGE EYES OR SLOTS IN REINFORCEMENT AND RESIST MOVEMENT PERPENDICULAR TO WALL. TIES EXTEND AT LEAST HALFWAY THROUGH FACING WYTHE BUT WITH AT LEAST 5/8–INCH COVER ON OUTSIDE FACE.
2. REINFORCEMENT SHALL BE MANUFACTURED BY DUR–O–WAL; HOHMANN AND BARNARD; AA WIRE PRODUCTS, OR EQUAL.

D. MORTAR AND GROUT
1. PORTLAND CEMENT SHALL CONFORM TO ASTM C150 TYPE II. MASONRY CEMENTS SHALL NOT BE USED.
2. LIME MASONRY MORTAR SHALL BE HYDRATED, CONFORMING TO ASTM C207, TYPE S.
3. SAND SHALL BE CLEAN, DURABLE PARTICLES, FREE FROM INJURIOUS AMOUNTS OF ORGANIC MATTER. THE SAND SHALL CONFORM TO THE LIMITS OF ASTM C144. SAND FOR GROUT SHALL CONFORM TO ASTM C144 OR C33 AS REQUIRED.
4. INTEGRAL WATER REPELLANT SHALL BE DRY–BLOCK MORTAR ADMIXTURE, A LIQUID POLYMERIC ADMIXTURE RESISTANT TO WATER PENETRATION TO ACHIEVE A CLASS E RATING IN ACCORDANCE WITH ASTM E514 BY W.R. GRACE & CO.–CONN.
5. WATER SHALL BE FREE FROM OILS, ACIDS, ALKALIS, OR ORGANIC MATTER AND SHALL BE CLEAN AND FRESH.
6. INGREDIENTS SHALL BE ACCURATELY MEASURED BY VOLUME IN BOXES ESPECIALLY CONSTRUCTED FOR THE PURPOSE. MEASUREMENT BY SHOVEL WILL NOT BE ALLOWED. MEASURE MATERIALS IN A DAMP, LOOSE CONDITION.
7. PORTLAND CEMENT MORTAR SHALL CONFORM TO ASTM C 270, TYPE S. PROVIDE TEST DATA AS REQUIRED TO SUBSTANTIATE STRENGTH REQUIREMENTS OF 1,800 PSI AT 28 DAYS.
8. GROUT FOR CONSTRUCTING CMU LINTEL BLOCKS FOR GROUTING CORES TO RECEIVE EMBEDDED ANCHORS OR REINFORCING SHALL CONFORM TO ASTM C476, FINE GROUT, PROPORTIONED BY VOLUME: 1 PART PORTLAND CEMENT, 0 TO $\frac{1}{10}$ PART LIME AND SAND EQUAL TO 2–1/4 TO 3 TIMES THE SUM OF THE VOLUMES OF CEMENT AND LIME MATERIALS. STRENGTH SHALL BE 2,500 PSI MINIMUM AT 28 DAYS. MIX GROUT TO HAVE A SLUMP OF 10–IN PLUS OR MINUS 1–IN, AT TIME OF PLACEMENT.
9. NONSHRINK GROUT WHERE REQUIRED SHALL BE MIXED AS RECOMMENDED BY THE MANUFACTURER TO GIVE THE NECESSARY CONSISTENCY FOR PLACING AND TO GIVE A MINIMUM COMPRESSIVE STRENGTH OF 3,000 LB/SQ IN 3 DAYS.

E. ACCESSORIES
1. WEEP HOLE VENTS SHALL BE NON–COMPRESSIBLE ADJUSTABLE WEEP VENT WITH OPEN WEAVE MESH INSERT BY ILLINOIS PRODUCTS CORPORATION OR EQUAL. COLOR TO MATCH MORTAR.
2. PRECAST CONCRETE SPLASH BLOCKS, SIZED AS APPROVED, SHALL BE PROVIDED AT ALL ROOF DOWNSPOUT OUTLETS THAT ARE NOT DIRECTLY CONNECTED TO AN UNDERGROUND DRAINAGE SYSTEM. REINFORCE SPLASH BLOCKS WITH WELDED WIRE MESH AND PROVIDE SLOPE IN UNITS FOR DRAINAGE. PROVIDE WITH PIGMENT FOR INTEGRAL COLOR AS APPROVED.
3. EXPANSION AND JOINT FILLER MATERIAL SHALL BE CLOSED CELL, PREMOLDED, 50 PERCENT COMPRESSIBLE, NEOPRENE FOAM STRIPS COMPLYING WITH ASTM D1056, GRADE 2A1. THICKNESS SHALL BE 3/8–IN OR AS OTHERWISE SHOWN BY WIDTH REQUIRED FOR JOINT AND WALL CONDITIONS.
4. CONTROL JOINTS SHALL BE WIDE FLANGE RAPID PERFORMANCE NEOPRENE GASKET.
5. INSULATION FOR CAVITY WALLS SHALL BE EXTRUDED CLOSED CELL POLYSTYRENE FOAM BOARD WITH INTEGRAL HIGH DENSITY SKINS OF THE SAME MATERIAL. THICKNESS SHALL BE AS SHOWN. INSULATION SHALL HAVE A K FACTOR OF 0.20 AT 75 DEGREES F AND 0.18 AT 40 DEGREES F. DENSITY SHALL BE 2.1 LBS/CU–FT WITH A COMPRESSIVE STRENGTH OF 25 PSI. WATER ABSORPTION SHALL BE 0.1 PERCENT WITH A WATER VAPOR TRANSMISSION OF 0.6 PERM–IN.
   a. PROVIDE KARNAK 920, SONNEBORN 700, MEADOWS TROWEL MASTIC (TYPE 3) OR EQUAL FIBRATED, ASBESTOS–FREE ASPHALT EMULSION COMPATIBLE WITH INSULATION FOR ADHERING THE FOAM BOARD INSULATION TO BACKUP MATERIAL AND FOR COVERING STEEL ENCASING IN MASONRY. EMULSION SHALL BE NON–BLEEDING WHEN SET. PARGE CMU WITH ASPHAULT EMULSION AT A RATE OF 5 GALLONS PER 100 SQ FT TO AVERAGE THICKNESS OF $\frac{1}{16}$"–IN FORMING A CONTINUOUS VAPOR BARRIER OVER WALL, JOINTS, AND PROTRUSIONS.

F. MASONRY INSULATION
1. CMU AND FACE BRICK SHALL BE LAID IN RUNNING BOND UNLESS OTHERWISE NOTED.
2 JOINTS SHALL BE ⅜ INCH, TOOL CONCAVE AS APPROVED.
3. BUILD IN AND GROUT FULLY ALL WALL REINFORCINGS SHOWN.

G. PRECAST CONCRETE SPLASHBLOCK
1. PRECAST CONCRETE SPLASHBLOCKSSHALL BE REINFORCED WITH WELDED WIRE MESH AND WITH SLOPE TO DRAIN. PROVIDE WITH PIGMENT FOR INTEGRAL COLOR AS APPROVED.

06100 – ROUGH CARPENTRY:

A. WOOD FOR BLOCKING AND NAILERS SHALL BE SEASONED, 19 PERCENT MAXIMUM MOISTURE CONTENT, CONSTRUCTION GRADE QUALITY AND OF DOUGLAS FIR; SOUTHERN PINE OR PONDEROSA PINE SPECIES.
1. ALL WOOD MEMBERS SHALL BE VACUUM–PRESSURE TREATED WITH 100 PERCENT OXIDE PURE ALKALINE COPPER QUART (ACQ) MEETING AIWA STANDARD P–5. MINIMUM NET RETENTION OF SOLID PRESERVATIVE SHALL BE AS FOLLOWS:
   a. ABOVE GROUND: 0.25 LB PER CU. FT.
   b. BELOW GROUND OR FRESH WATER CONTACT/IMMERSION: 0.40 LB PER CU. FT.
   c. WOOD FOUNDATION OR STRUCTURAL POLES: 0.60 LB PER CU. FT.
   d. SALT WATER CONTACT/IMMERSION: 2.50 LB PER CU. FT.
2. ALL TREATMENT SHALL BE PERFORMED IN ACCORDANCE WITH THE REQUIREMENT OF THE STANDARD SPECIFICATION OF THE AMERICAN WOOD PRESERVATION ASSOCIATION FOR TREATING WOOD. APPLY A HEAVY COAT OF THE SAME PRESERVATIVE USED IN TREATING TO ALL SURFACES CUT AFTER TREATMENT.
3. PRODUCTS CONTAINING ARSENIC IN ANY FORM SHALL NOT BE PERMITTED.

07005 – AMIPRO AND WATERPROOFING:

A. AMIPRO SHALL BE TROWEL GRADE ASPHALT EMULSION WITH FIBERS CONFORMING TO ATM D 1227, TYPE II, CLASS 1. THE AMIPRO SHALL BE HYDROXIDE 700 BY SOMEONE BUILDING PRODUCTS, DIVISION OF CENTREX INC., MINNEAPOLIS, MN; KANAKA 920 ASPHALT EMULSION BY KANAKA CORPORATION, CLARK, NJ, OR EQUAL.

B. FACE BRICK WATERPROOFING SHALL BE A HIGH PERFORMANCE, WATER BASED, VOC COMPLIANT, CLEAR SILANE/SILOXANE SEALER FOR DENSE, VERTICAL MASONRY SURFACES EQUAL TO ENVIRONS DOUBLE 7 FOR BRICK BY HYDROZOA DIVISION OF BAS, OR EQUAL. THE SOLUTION SHALL BE TRANSPARENT, NON–STAINING AND BREATHABLE.

C. MATERIALS FOR THROUGH–WALL FLASHING
1. THROUGH–WALL FLASHING SHALL BE FACTORY ASSEMBLED MATERIAL COMPOSED OF TWO LAYERS OF ASPHAULT COATED WOVEN FIBERGLASS FABRIC BETWEEN WHICH IS PLACED ELECTRO SHEET COPPER, BOUNDED TO FABRIC WITH ASPHAULT MASTIC.
2. ELECTRO SHEET COPPER SHALL CONSIST OF A FULL SHEET OF COPPER WEIGHING 3OZ PER SQUARE FOOT.
3. WHEN COMPLETELY ASSEMBLED, THE FLASHING SHALL BE GROOVED BY A SERIES OF PARRALLEL DEPRESSIONS.
4. PROVIDE 26 GAUGE GALVANIZED STEEL REGLETS AS SHOWN FOR SECURING THROUGH–WALL FLASHING TO CONCRETE WHERE REQUIRED.

FINAL AS-BUILT

REV. NO.	DATE	DRWN	CHKD	REMARKS

DESIGNED BY:
DRAWN BY:
SHEET CHK'D BY:
CROSS CHK'D BY:
APPROVED BY:
DATE: MARCH 2012

PREPARED BY:
CAPE
CAPE Environmental Management, Inc.

US Army Corps of Engineers Kansas City District
GROUNDWATER TREATMENT FACILITY PACKAGE
ROCKAWAY BOROUGH SUPERFUND SITE
EAST MAIN/WALL STREET PLUME - OU2
ROCKAWAY BOROUGH, NEW JERSEY

FLOOR PLAN AND ARCHITECTURAL SPECIFICATIONS

PROJECT 50001.005
FILE NAME: A002PSPL AS–BUILT
SHEET NO.
A-2

GENERAL NOTES:

SEE SHEET A–1 FOR ADDITIONAL GENERAL NOTES

SEE SHEETS A–2 AND A–4 FOR ADDITIONAL ARCHITECTURAL SPECIFICATIONS

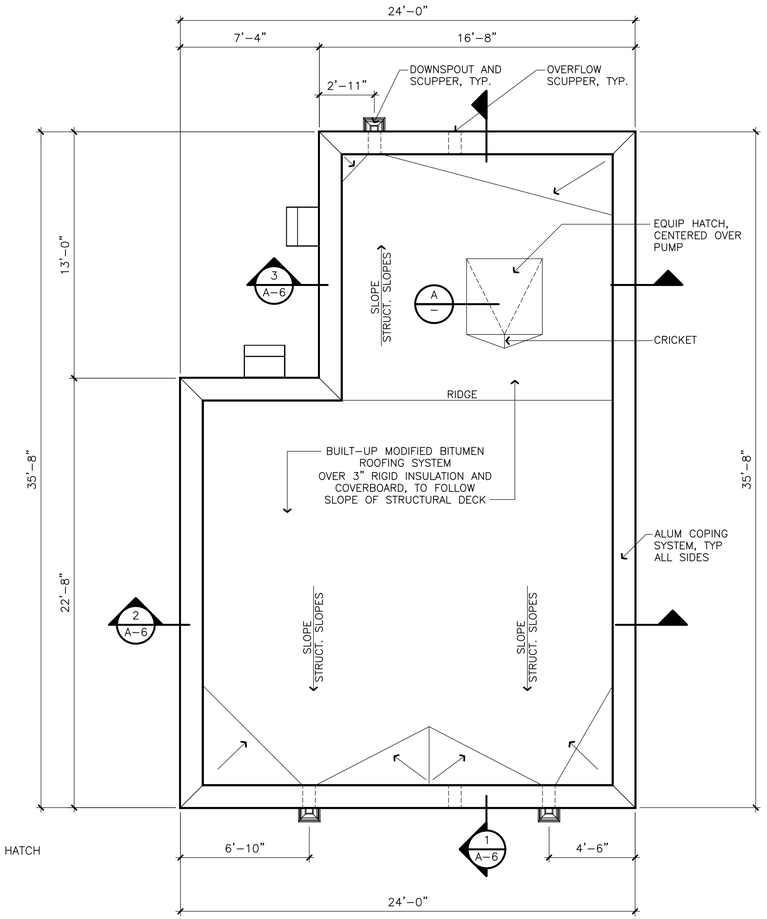

ROOF

PLAN

1/4" = 1'–0"

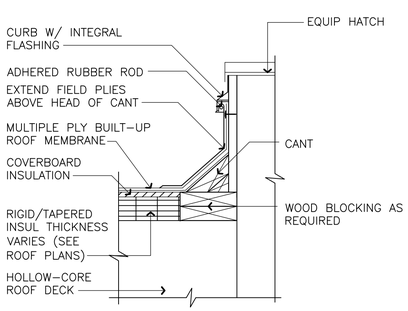

ROOF HATCH

DETAIL A

1 1/2" = 1'–0"

SPECIFICATIONS

07231 – PERIMETER INSULATION AND VAPOR BARRIER

A. PERIMETER INSULATION SHALL BE 2–IN EXTRUDED CLOSED CELL POLYSTYRENE FOAM BOARD WITH INTEGRAL HIGH DENSITY SKINS OF SAME MATERIAL. INSULATION SHALL HAVE A K FACTOR OF 0.20 AT 75 DEGREES F AND 0.18 AT 40 DEGREES F. DENSITY SHALL BE 1.7 LBS/CU–FT MAXIMUM WITH A WATER VAPOR TRANSMISSION OF 0.6 PERM–IN MAXIMUM.

B. VAPOR BARRIER SHALL BE 10 MIL THICK POLYETHYLENE SHEET WITH VAPOR TRANSMISSION RATING OF 0.20 PERMS OR LESS. PROVIDE WITH APPROVED PRESSURE SENSITIVE POLYETHYLENE TAPE TO SEAL JOINTS.

07510 – STYRENE BUTADIENE STYRENE (SBS) MODIFIED BITUMEN ROOFING SYSTEM:

A. MANUFACTURER'S STANDARD WARRANTY – UPON COMPLETION OF THE WORK AND ACCEPTANCE BY THE OWNER, THE MANUFACTURER SHALL FURNISH TO THE OWNER A WRITTEN AND SIGNED STANDARD WARRANTY, CERTIFYING THE PERFORMANCE OF HIS PRODUCTS AND THE CONSISTENCY OF THE PROPERTIES OF SUCH PRODUCTS TO BE WATERTIGHT FOR A PERIOD OF 20 YEARS FROM DATE OF ACCEPTANCE.

B. CONTRACTOR'S STANDARD WARRANTY – THE CONTRACTOR IS TO GUARANTEE ALL WORK AGAINST DEFECTS IN MATERIAL AND WORKMANSHIP FOR A PERIOD OF TWO (2) YEARS FOLLOWING FINAL ACCEPTANCE OF THE WORK.

C. ROOFING SYSTEM
   1. SBS CAP SHEET: GRANULE SURFACED SBS POLYMER–MODIFIED BITUMEN SHEET, REINFORCED WITH NON–WOVEN POLYESTER FABRIC, COMPLYING WITH ASTM D6164, TYPE 1, GRADE G, FORMULATED FOR HOT ASPHALT APPLICATION, 0.15–INCH THICK, WHITE, SBS FR CAP BY FIRESTONE OR EQUAL.
   2. SBS BASE SHEET: SBS POLYMER–MODIFIED BITUMEN SHEET, COMPLYING WITH ASTM D6163, TYPE 1, GRADE S, WITH GLASS FIBER REINFORCING FABRIC, FORMULATED FOR HOT ASPHALT ADHESIVE APPLICATION TO SUBSTRATE AND CAP SHEET, 0.089–INCH THICK, SBS BASE BY FIRESTONE OR APPROVED EQUAL.
3. SLOPE: DECK IS SLOPED, VERIFY SLOPE OF 1/4–INCH PER FOOT.
4. COMPLY WITH APPLICABLE LOCAL BUILDING CODE REQUIREMENTS.
5. ATTACHMENT: ASPHALT ATTACHMENT

D. INSULATION
   1. POLYISOCYANURATE BOARD INSULATION: CLOSED CELL POLYISOCYANURATE FOAM WITH BLACK GLASS REINFORCED MAT LAMINATED TO FACES, COMPLYING WITH ASTM C1289, TYPE 1, CLASS 1, ISO 95+ GL BY FIRESTONE OR EQUAL.

E. INSULATION COVER BOARD SHALL BE ASTM C1177/ C1177M, WATER RESISTANT GYPSUM–BASED BOARD, TYPE X, ⅝"–INCH THICK ASPHALT ATTACHMENT.

F. CRICKETS: TAPERED INSULATION OF SAME TYPE AS SPECIFIED FOR TOP LAYER; SLOPE AS INDICATED.

G. FLASHINGS: SAME MATERIALS AND CONFIGURATION AS ROOFING MEMBRANE.

H. PARAPET COPINGS: FORMED METAL COPING WITH GALVANIZED STEEL ANCHOR/SUPPORT CLEATS FOR CAPPING PARAPET WALL; WATERTIGHT, MAINTENANCE FREE, WITHOUT FASTENERS; BUTT TYPE JOINTS WITH CONCEALED SPLICE PLATES; MECHANICALLY FASTENED AS INDICATED; FIRESTONE MODEL PTCF, OR EQUAL.
   1. MATERIALS AND FINISH: 0.040–INCH THICK FORMED ALUMINUM, KYNAR 500 FINISH IN MANUFACTURER'S STANDARD COLOR; MATCHING CONCEALED JOINT SPLICE PLATES; FACTORY–INSTALLED PROTECTIVE PLASTIC FILM.

I. SCUPPERS BOX COLLECTOR AND DOWNSPOUTS SHALL BE FORMED 0.063 INCH ALUIMINUM OF THE PROFILE SHOWN BY HICKMAN CONSTRUCTION PRODUCTS OR EQUAL. PROVIDE WITH CONRERS, END CAPS, AND INTERSECTIONS FACTORY WELDER WATERTIGHT, CONCEALED JOINT COVERS MECHANICAL FASTENERS AND OTHER SYSTEM APPURTENANCES..
   1. FINISH SYSTEM SHALL BE KYNAR 500 IN MANUFACTURERS STANDARD COLORS.

07700 – EQUIPMENT ACCESS SCUTTLE:

A. EQUIPMENT ACCESS SCUTTLE SHALL BE 4'–0" BY 4'–0" SINGLE LEAF CONSTRUCTION, BILCO TYPE F, OR EQUAL.
   1. COVER: SHALL BE 11 GAUGE ALUMINUM WITH A 3–INCH (76MM) BEADED FLANGE WITH FORMED REINFORCING MEMBERS. COVERS SHALL HAVE A HEAVY EXTRUDED ETHYLENE PROPYLENE DIENE MONOMER (EPDM) RUBBER GASKET THAT IS BONDED TO THE COVER INTERIOR TO ASSURE A CONTINUOUS SEAL WHEN COMPRESSED TO THE TOP SURFACE OF THE CURB.
   2. COVER INSULATION: SHALL BE FIBERGLASS OF 1–INCH (25.4MM) THICKNESS, FULLY COVERED AND PROTECTED BY AN 18 GAUGE ALUMINUM LINER IN THE AREAS OF THE COVERS WHERE THE DOMES ARE NOT INSTALLED.
   3. CURB: SHALL BE 12–INCH (305MM) IN HEIGHT AND OF 11 GAUGE ALUMINUM. THE CURB SHALL BE FORMED WITH A 3½–INCH (89MM) FLANGE WITH 7/16–INCH (11.1MM) HOLES PROVIDED FOR SECURING TO THE ROOF DECK. THE CURB SHALL BE EQUIPPED WITH AN INTEGRAL METAL CAP FLASHING OF THE SAME GAUGE AND MATERIAL AS THE CURB, FULLY WELDED AT THE CORNERS, THAT FEATURES POSI–FLASH FLASHING SYSTEM, INCLUDING STAMPED TABS, 6–INCH (153MM) ON CENTER, TO BE BENT INWARD TO HOLD SINGLE PLY ROOFING MEMBRANE.

07900 – JOINT SEALANTS:

A. EXTERIOR AND INTERIOR SEALANT FOR JOINTS ON THE HORIZONTAL PLANE SHALL BE A TWO–PART, POUR GRADE POLYURETHANE BASE, ASTM C920–87, TYPE M, GRADE P, CLASS 25, THC–900BY TREMCO; SONOLASTIC SL2 BY SONNEBORN; OR EQUAL. PRIMER SHALL BE AS RECOMMENDED BY THE MANUFACTURER.

B. EXTERIOR AND INTERIOR SEALANT FOR JOINTS ON ALL OTHER SURFACES SHALL BE ONE–PART, GUN GRADE, POLYURETHANE ASTM C290–87, TYPE S, GRADE NS, CLASS 25, DYMONIC BY TREMCO; SONOLASTIC NP1 BY SONNEBORN; OR EQUAL. PRIMER SHALL BE AS RECOMMENDED BY THE SEALANT MANUFACTURER.

08120 – ALUMINUM DOORS AND FRAMES:

A. ALUMINUM FLUSH DOORS SHALL BE 1¾–INCH THICK, COMPLETELY FLUSH IN DESIGN, CONSTRUCTED WITH EXTRUDED ALUMINUM ALLOY 6063–T5 TUBULAR JAMB RAILS (0.125–INCH LOCK SIDE, 0.190–INCH HINGE SIDE) AND MINIMUM 0.090–INCH THICK SMOOTH ALUMINUM ALLOY 5005–H34 FACE SHEETS.

B. INTERNAL GRID SYSTEM SHALL CONSIST OF 4½–INCH, 0.080–INCH EXTRUDED ALUMINUM TUBULAR SECTIONS. TOP AND BOTTOM OF DOORS SHALL BE REINFORCED WITH (5½–INCH) AND TIED TO JAMB RAILS WITH ⅜–INCH PLATED STEEL RODS, NUTS AND WASHERS. JAMB RAILS SHALL BE 4 7/16–INCH HINGE RAIL AND 4 9/16–INCH LOCK RAILS SO THAT NO PORTION OF THE LOCKSETS, EXIT DEVICES OR OTHER HARDWARE PROJECT INTO THE CORE AREA OF THE DOOR. THE PERIMETER OF ALL CUT OUTS SHALL BE REINFORCED WITH SAME SECTION. ALL INTERNAL MEMBERS SHALL BE ANODIZED (ALUMINUM ASSOCIATION AA–C22A31).

C. ALL VOIDS IN DOORS BETWEEN GRID SECTIONS SHALL BE FILLED WITH A RIGID, HIGH DENSITY, WATERPROOF, NONCOMBUSTIBLE MATERIAL INSULATION CONFORMING TO FS HH–1–529B, POLYISOCYANURATE FS HH–I–530, OR OTHER SELF EXTINGUISHING, INSULATING STIFFENING MATERIAL; ASTM E84 FLAMESPREAD 25.

D. THE FACE PANELS SHALL BE BONDED TO THE PERIMETER, GRID SECTIONS AND CORE WITH A THERMOSETTING TWO COMPONENT EPOXY ADHESIVE. DOORS SHALL BE COMPLETELY REINFORCED FOR AND SHOP FABRICATED TO RECEIVE ALL SPECIFIED HARDWARE. REINFORCEMENT SHALL BE 6061–T6 ALLOY, 0.250–INCH THICK, MINIMUM. DOORS SHALL BE SERIES 2901 FLUSH ALUMINUM DOOR BY ALUTECH CORPORATION OR APPROVED EQUAL.

E. FRAMES SHALL BE 0.125–INCH MINIMUM WALL THICKNESS, EXTRUDED TUBULAR 6063–T5 ALUMINUM ALLOY WITH PILE WEATHER–STRIPPED DOORSTOPS.

F. FINISH SHALL BE DARK BRONZE ANODIZED CONFORMING TO AA C22A 42.

FINAL AS-BUILT

REV. NO.	DATE	DRWN	CHKD	REMARKS

DESIGNED BY:
DRAWN BY:
SHEET CHK'D BY:
CROSS CHK'D BY:
APPROVED BY:
DATE: MARCH 2012

PREPARED BY:
CAPE
CAPE Environmental Management, Inc.

US Army Corps of Engineers Kansas City District
GROUNDWATER TREATMENT FACILITY PACKAGE
ROCKAWAY BOROUGH SUPERFUND SITE
EAST MAIN/WALL STREET PLUME - OU2
ROCKAWAY BOROUGH, NEW JERSEY

ROOF PLAN AND ARCHITECTURAL SPECIFICATIONS

PROJECT 50001.005
FILE NAME: A003PSRP AS–BUILT
SHEET NO.
A-3

GENERAL NOTES:

SEE SHEETS A–2 AND A–3 FOR ADDITIONAL ARCHITECTURAL SPECIFICATIONS

SPECIFICATIONS

08390 – WATERTIGHT DOORS:

A. HINGED WATERTIGHT FLOOD DOOR SHALL BE PS DOORS MODEL PD–520, OR EQUAL.

B. PRODUCT DETAILS:
1. FLOOD DOOR AND GASKET DESIGN SHALL PROVIDE AN EFFECTIVE BARRIER AGAINST SHORT–TERM HIGH WATER SITUATIONS, TO THE PROTECTIVE LEVEL INDICATED ON DRAWINGS.
2. PROVIDE WITH LATCHING OPERABLE FROM ONE SIDE ONLY.
3. MOUNTING/LOAD TRANSFER: ANCHOR TO EXISTING STRUCTURE. FLOOD DOOR DESIGNED FOR SPECIFIED HYDROSTATIC PRESSURE AND OTHER LOADS AS SPECIFIED ON STRUCTURAL DRAWINGS AND WILL TRANSFER LOADS TO ADJACENT STRUCTURE.
4. LOADING DIRECTION SELECTION SHALL BE STANDARD POSITIVE PRESSURE LOADING.
5. PROVIDE COMPRESSION GASKET WHICH REQUIRES NO INFLATION.

C. FLOOD DOOR TO BE 6063 ALUMINUM ALLOY CONFORMING TO ASTM B211.

D. FLOOD DOOR TO BE SHEETED WITH 6063 ALUMINUM ALLOY CONFORMING TO ASTM B209.

E. GASKETS TO BE FACTORY MOUNTED TO FLOOD DOOR ASSEMBLY. GASKETS TO BE COMPRESSIBLE RUBBER TYPE, TYPICALLY EPDM UNLESS OTHERWISE NOTED, AND TO BE FIELD REPLACEABLE.

F. FRAME TO INCLUDE JAMB, HEAD, AND SILL MEMBERS FOR FIELD LOCATING AND INSTALLATION ON STRUCTURE. JAMB MEMBERS TO BE DESIGNED AND FABRICATED WITH APPROPRIATE MATERIALS AS REQUIRED FOR THE LOADING, 6063 ALUMINUM ALLOY CONFORMING TO ASTM B26.

G. THRESHOLD TO BE 6063 ALUMINUM ALLOY CONFORMING TO ASTM B26.

H. PROVIDE ANCHORS, SEALANT, AND WATER STOP, AS REQUIRED.

I. PROVIDE HARDWARE SIZED FOR THE SIZE AND WEIGHT OF THE FLOOD DOOR AND LOADS. HARDWARE TO BE FACTORY LOCATED ON JAMBS AND DOOR PANELS, AS PRACTICAL. ALL LOADS ARE TRANSFERRED TO BUILDING STRUCTURE. LATCHING HARDWARE TO BE AS INDICATED ON DRAWINGS. FLOOD DOOR PANEL TO BE FACTORY PREPARED FOR APPLICABLE LATCHING DEVICES.

J. STAINLESS STEEL AND ALUMINUM PRODUCTS TO BE MILL FINISH, WELDS ARE GROUND SMOOTH, NOT POLISHED, AND ARE FACTORY ACID WASHED, NEUTRALIZED AND RINSED.

08522 – ALUMINUM WINDOWS:

A. PROVIDE EXTERIOR FIXED ALUMINUM WINDOW SYSTEM AS SHOWN FOR INSULATED GLAZING SPECIFIED IN 08800. SYSTEM SHALL BE KAUNEER AA900 ISO WEB WINDOW SYSTEM, OR APPROVED EQUAL.

08710 – DOOR HARDWARE

A. ALL HARDWARE SHALL BE BEST GRADE, ENTIRELY FREE FROM IMPERFECTIONS IN MANUFACTURE AND FINISH. QUALITIES, WEIGHTS AND SIZES SPECIFIED HEREIN ARE THE MINIMUM THAT WILL BE ACCEPTED. ALL UL LABELED DOORS SHALL HAVE UL APPROVED HARDWARE, EXCEPT THAT HINGES WHICH ARE NOT UL APPROVED SHALL HAVE A MELTING POINT OF GREATER THAN 2000 DEGREES F.

B. HARDWARE ITEMS
1. STAINLESS STEEL, STANLEY FBB191 WITH NON–REMOVABLE PINS, THREE 4½–INCH BY 4½–INCH. EQUALS – HAGER, MCKINNEY.
2. DOOR CLOSERS: SARGENT 281 SERIES (CAST IRON BODIES). COVERS SHALL BE PRIMED COMPATIBLE WITH FINISH PAINT SPECIFIED EXCEPT WITH PLASTIC COVERS, NO PRIMING REQUIRED. PROVIDE WITH CUSHION STOP ARM WHERE NO SEPARATE STOP IS PROVIDED AND WITH OTHER ARM FUNCTIONS AS SCHEDULED. EQUALS – LCN4000 SERIES.
3. KICK PLATES: STAINLESS STEEL, 6–INCH HIGH BY 0.050–INCH THICK BY 2–INCH LESS WIDTH OF DOOR (LWOD), 1–INCH LWOD, AT DOUBLE DOORS.
4. STOPS: IVES 436 OR 438 AS REQUIRED BY FLOOR CONDITION. OTHER STOPS AS SCHEDULED. EQUALS – BALDWIN, QUALITY.
5. FLUSH BOLTS: GLYNN–JOHNSON FB6W FORGED BRASS, 1/2–INCH DIAMETER FLATTENED BOLT TIP AND STANDARD 12–INCH ROD.
6. SOUND/WEATHER SEALS: ZERO 153A SILL PROTECTION X ZERO 188N SURFACE TYPE NEOPRENE HEAD AND JAMBS.
7. MEETING STILE: ZERO 328 EACH LEAF ON INSIDE. ALL CLEAR ALUMINUM EXCEPT PROVIDE IN BRONZE ANODIZED FINISH AT BRONZE ANODIZED/BROZE COLORED DOORS. EQUALS – PEMKO, REESE.
8. SILENCERS: GLYNN–JOHNSON GJ 64. EQUALS – BALDWIN, QUALITY.
9. THRESHOLDS: ZERO 655 5–INCH THRESHOLD IN ALUMINUM (UNLESS OTHERWISE NOTED). ZERO 65A 5–INCH THRESHOLD IN ALUMINUM FOR LATCH TRACK HARDWARE APPLICATIONS. EQUALS – PEMKO, REESE.
10. EXIT DEVICES: SARGENT SERIES SURFACE VERTICAL ROD EXIT DEVICE; OR, MORTISE LOCK TYPE PUSHBAR 8900 SERIES, FUNCTION AS INDICATED IN HARDWARE SCHEDULE. TRIM DESIGN SHALL BE MODEL ETP. STAINLESS STEEL ASSEMBLIES, COVERS, INTERNAL PARTS, PINS, SPRINGS, AND PIVOTS. PROVIDE FULL COVERAGE, STAINLESS STEEL BACK PLATES AT FULL VISION LIGHT DOORS. EQUAL – VON DUPRIN.

C. SCHEDULE OF HARDWARE SETS

HW1 – SINGLE DOOR:
HINGES
1 EXIT DEVICE – 8713ET
1 CLOSER
1 KICKPLATE
SILENCERS
BOTTOM SEAL

HW2 – PAIR OF DOORS:
HINGES
1 EXIT DEVICE – 8713ET
1 FLUSH BOLT (INACTIVE LEAF)
2 CLOSERS – STOP/HOLDER ARM
2 KICKPLATES
SILENCERS
BOTTOM SEAL

08800 – GLAZING:

A. INSULATING GLASS UNITS SHALL BE 1–INCH UNITS WITH 1/2–INCH AIR SPACE, AND TWO 1/4–INCH LITES. THE TWO LITES OF GLASS SHALL BE PERMANENTLY AND HERMETICALLY SEALED TOGETHER AT EDGES WITH CONTINUOUS SPACERS AND DUAL SEALANT TO MAINTAIN A FACTORY DEHYDRATED AIR SPACE.

SPECIFICATIONS

09900 – PAINTING:

A. THE FOLLOWING TYPES OF PAINTS BY TNEMEC CO. HAVE BEEN USED AS A BASIS FOR THE PAINT SCHEDULE:
54WB – MASONRY FILLER – WATER BASED EPOXY BLOCK FILLER
N69 – HI–BUILD EPOXOLINE II – POLYAMIDOAMINE EPOXY
73 – ENDURA–SHIELD – SEMI–GLOSS ACRYLIC URETHANE
113 – H.B. TNEME–TUFCOAT – WATER BASED EPOXY
135 – CHEMBUILD – SURFACE TOLERANT EPOXY

B. THE FOLLOWING SURFACES SHALL HAVE THE TYPES OF PAINT SCHEDULED BELOW APPLIED AT THE DRY FILM THICKNESS (DFT) IN MILS PER COAT NOTED:

1. CONCRETE MASONRY UNITS (BLOCK): INTERIOR (UNCONDITIONED SPACE)
SURFACE PREPARATION: CLEAN AND DRY
BLOCK FILLER: SERIES 54 WB @ 100 – 120 SF/GAL
1ST COAT: SERIES 113 (4.0 – 6.0 MILS DFT)
2ND COAT: SERIES 113 (4.0 – 6.0 MILS DFT)
MIN TOTAL DFT FOR 2 COATS: 8.0 MILS

2. PLASTIC PIPING NONSUBMERGED: EXTERIOR
SURFACE PREPARATION: SSPC–SP1 AND SCARIFY
1ST COAT: SERIES N69 (2.0 – 3.0 MILS DFT)
2ND COAT: SERIES 73 (2.0 – 3.0 MILS DFT)
MIN TOTAL DFT FOR 2 COATS: 5.0 MILS

COLOR: AIR PIPING – LIGHT GRAY TNEMEC 32 GR
DRAIN PIPING – DARK GRAY – TNEMEC 46 GR

3. DUCTILE IRON PIPE: INTERIOR
SURFACE PREPARATION: SSPC–SP6
1ST COAT: SERIES N69 (6.0 – 8.0 MILS DFT)
2ND COAT: SERIES N69 (6.0 – 8.0 MILS DFT)
MIN TOTAL DFT FOR 2 COATS; 12.0 MILS

COLOR: BLUE TNEMEC 11 SF

4. OVERHEAD CEILINGS (INCLUDING METAL DECKING, RAFTERS, DUCTWORK, CONDUIT, ETC.): INTERIOR
SURFACE PREPARATION: PRESSURE CLEAN (3500 PSI) AND BRUSH BLAST (SSPC–SP7)
SPOT PRIMER: SERIES 135 (3.0 – 5.0 MILS DFT)
1ST COAT: SERIES 135 (3.0 – 5.0 MILS DFT)
2ND COAT: SERIES N69 HI–BUILD EPOXOLINE II (3.0 – 5.0 MILS DFT)

10522 – FIRE EXTINGUISHERS:

A. UNITS SHALL BE 10 LB NOMINAL CAPACITY, DRY CHEMICAL TYPE, UL RATED FOR 4A–80BC. UNITS SHALL BE RED ENAMELED ALUMINUM CYLINDERS, COSMIC 10E BY J.L. INDUSTRIES OR EQUAL LOCATE WHERE SHOWN/NOTED ON DRAWINGS.

B. MARK SERIES FIRE EXTINGUISHER BRACKETS, SUPPORTING BOTTOM AND SIDES OF EXTINGUISHERS AS MANUFACTURED BY J.L. INDUSTRIES OR EQUAL, SHALL BE PROVIDED FOR ALL SURFACE MOUNTED EXTINGUISHERS.

11761 – FIRST AID KITS:

A. FIRST AID KITS SHALL BE WALL MOUNTED METAL CABINETS WITH HINGED DOORS, INDUSTRIAL TYPE FOR 10 PERSONS CONFORMING TO ISEA/ANSI 308.1 AND OSHA 29 CFR 1910.151 STANDARDS AS MANUFACTURED BY CINTAS, JOHNSON & JOHNSON OR EQUAL.

B. FURNISH AND INSTALL ONE FIRST AID KIT IN THE TREATMENT FACILITY.

FINAL AS-BUILT

REV. NO.	DATE	DRWN	CHKD	REMARKS

DESIGNED BY: H. BUCHANAN
DRAWN BY: D. CHATER
SHEET CHK'D BY: M. ALFORD
CROSS CHK'D BY: H. BUCHANAN
APPROVED BY: B. GIORGI
DATE: MARCH 2012

PREPARED BY:
CAPE
CAPE Environmental Management, Inc.

US Army Corps of Engineers Kansas City District
GROUNDWATER TREATMENT FACILITY PACKAGE
ROCKAWAY BOROUGH SUPERFUND SITE
EAST MAIN/WALL STREET PLUME - OU2
ROCKAWAY BOROUGH, NEW JERSEY

ARCHITECTURAL SPECIFICATIONS

PROJECT 50001.005
FILE NAME: A004SPEC AS–BUILT
SHEET NO.
A-4

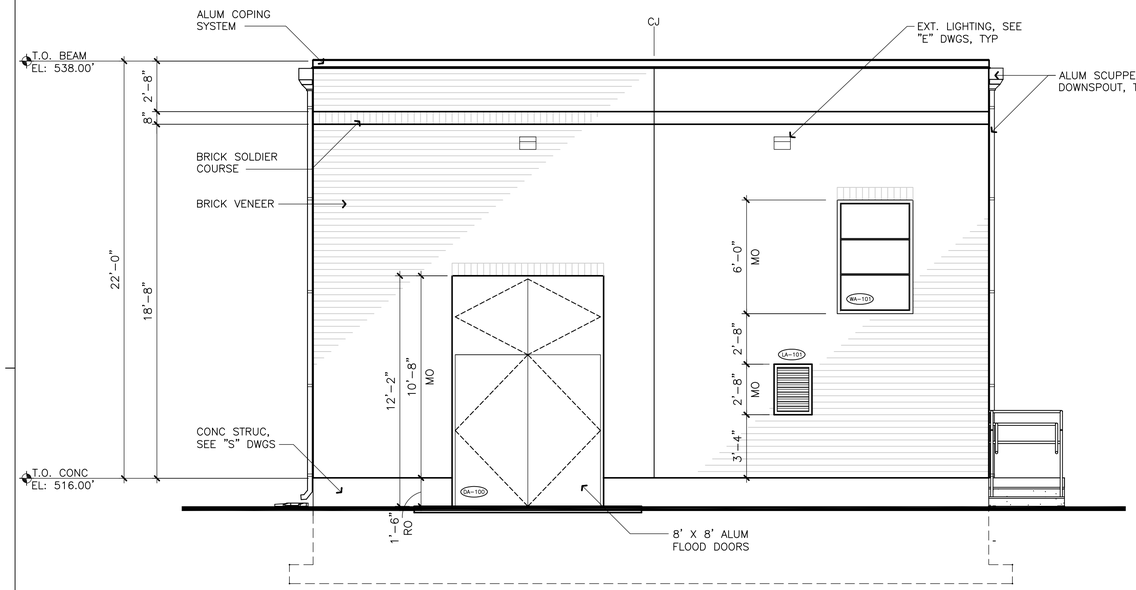

NORTH

ELEVATION

1/4" = 1'-0"

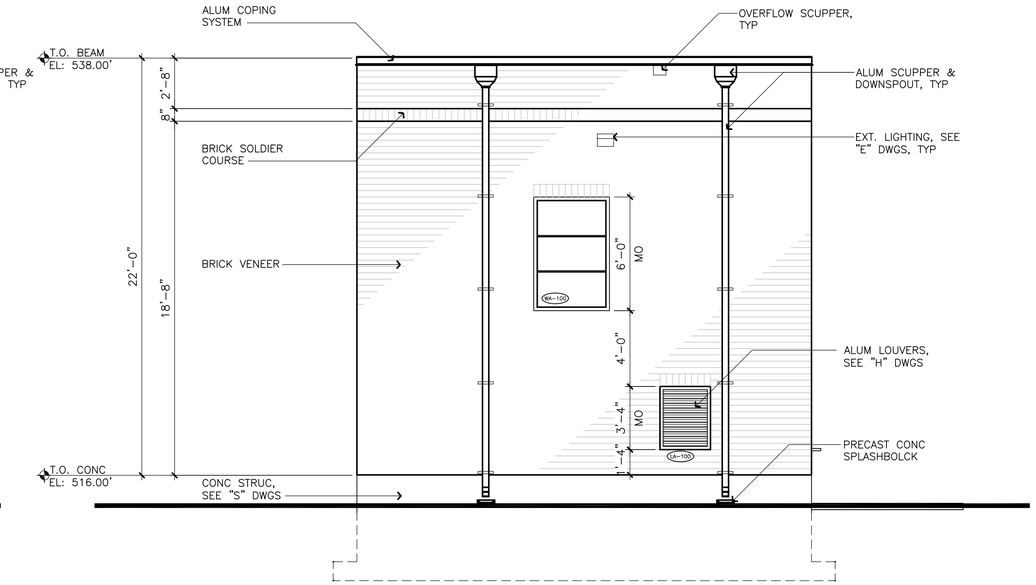

EAST

ELEVATION

1/4" = 1'-0"

GENERAL NOTES:

SEE SHEET A-1 FOR ADDITIONAL GENERAL NOTES.

SEE "M" & "S" DWGS FOR PIPE PENETRATION LOCATIONS. COORDINATE SCUPPERS & DOWNSPOUTS WITH ALL PIPE PENETRATIONS.

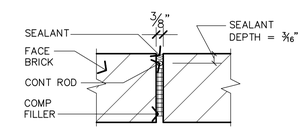

CONTROL JOINT

DETAIL A

3" = 1'-0"

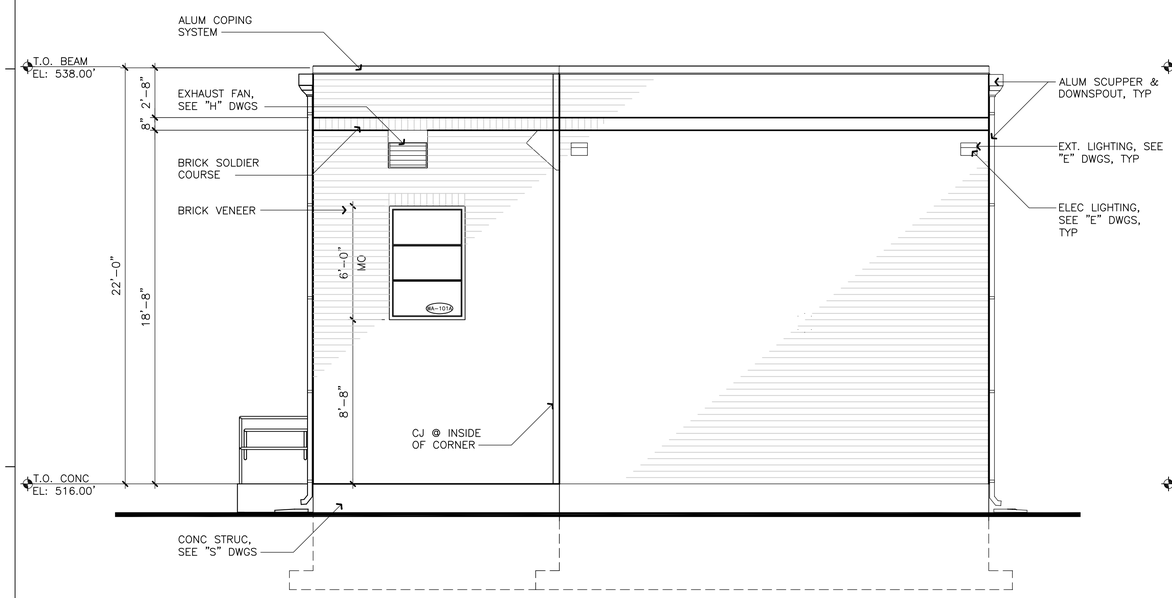

SOUTH

ELEVATION

1/4" = 1'-0"

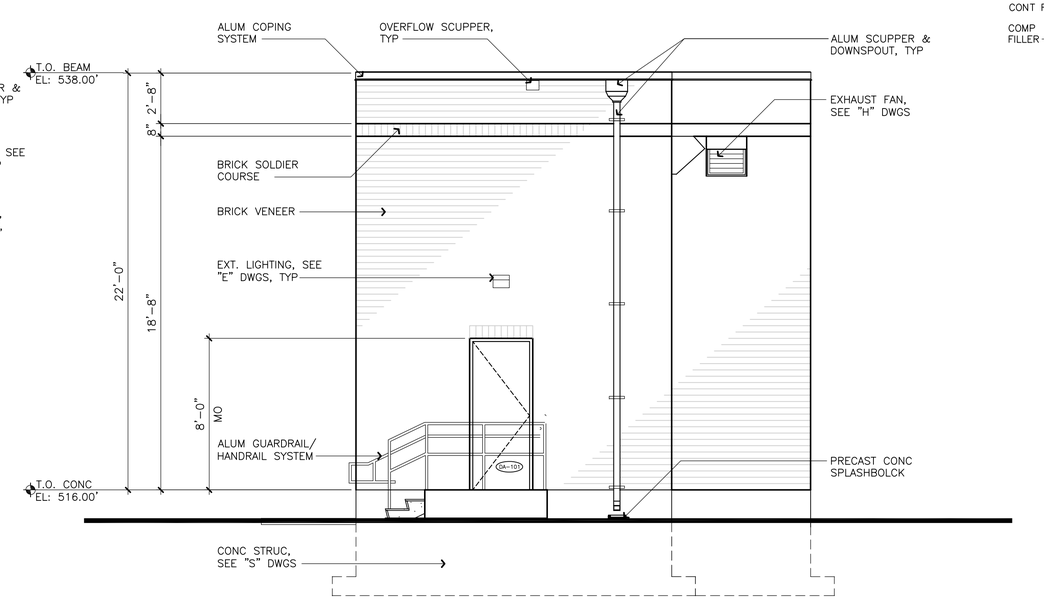

WEST

ELEVATION

1/4" = 1'-0"

FINAL AS-BUILT

REV. NO.	DATE	DRWN	CHKD	REMARKS

DESIGNED BY:
DRAWN BY:
SHEET CHK'D BY:
CROSS CHK'D BY:
APPROVED BY:
DATE: MARCH 2012

PREPARED BY:
CAPE
CAPE Environmental Management, Inc.

US Army Corps of Engineers Kansas City District
GROUNDWATER TREATMENT FACILITY PACKAGE
ROCKAWAY BOROUGH SUPERFUND SITE
EAST MAIN/WALL STREET PLUME - OU2
ROCKAWAY BOROUGH, NEW JERSEY

EXTERIOR ELEVATIONS

PROJECT 50001.005
FILE NAME: A005PSEL AS-BUILT
SHEET NO.
A-5

GENERAL NOTES:

SEE SHEET A-1 FOR ADDITIONAL GENERAL NOTES

STRUCTURAL ITEMS SUCH AS GROUTED/FILLED CELLS AND REINFORCEMENT SHOWN ON THIS SHEET ARE FOR GRAPHICAL ILLUSTRATION ONLY, REFER TO THE STRUCTURAL DRAWINGS FOR SPECIFIC LOCATION AND DETAILED REQUIREMENTS

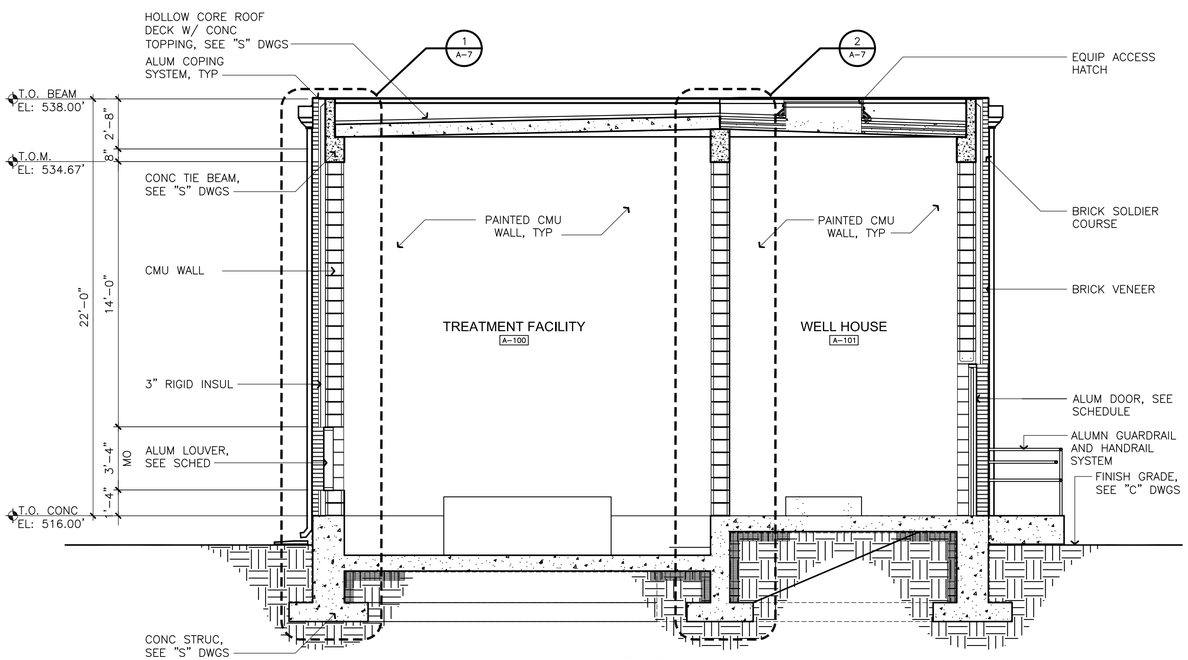

BUILDING

SECTION 1 / A-2

1/4" = 1'-0"

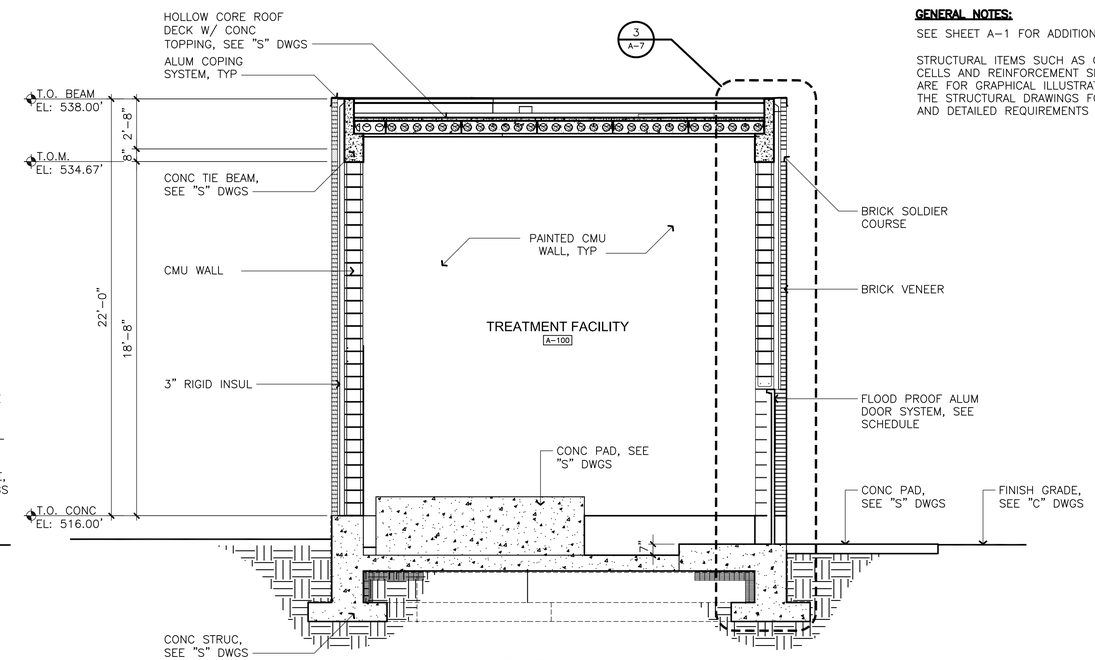

BUILDING

SECTION 2 / A-2

1/4" = 1'-0"

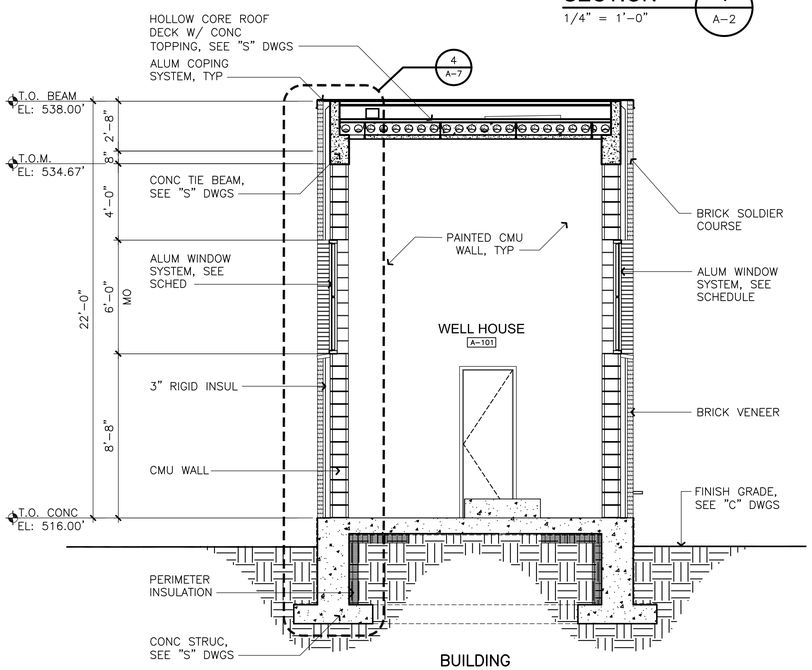

BUILDING

SECTION 3 / A-2

1/4" = 1'-0"

ARCHITECTURAL DETAILS

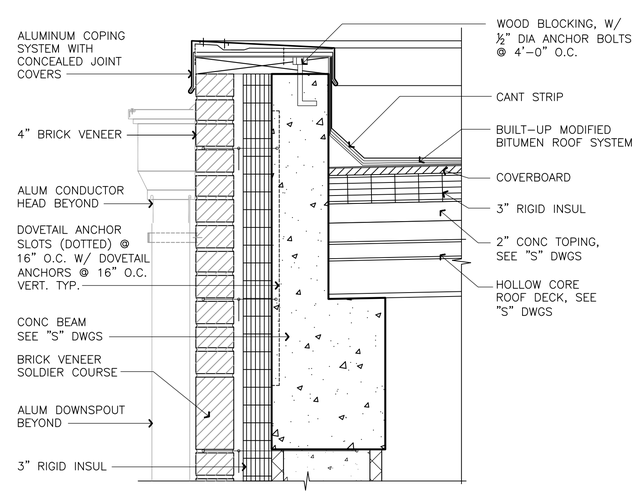

PARAPET

DETAIL A / –

1 1/2" = 1'-0"

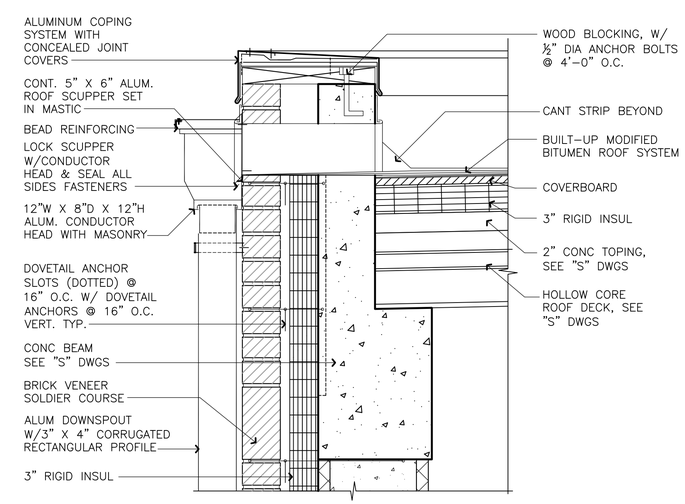

PARAPET/SCUPPER

DETAIL B / –

1 1/2" = 1'-0"

FINAL AS-BUILT

REV. NO.	DATE	DRWN	CHKD	REMARKS

DESIGNED BY:
DRAWN BY:
SHEET CHK'D BY:
CROSS CHK'D BY:
APPROVED BY:
DATE: MARCH 2012

PREPARED BY:
CAPE
CAPE Environmental Management, Inc.

US Army Corps of Engineers Kansas City District
GROUNDWATER TREATMENT FACILITY PACKAGE
ROCKAWAY BOROUGH SUPERFUND SITE
EAST MAIN/WALL STREET PLUME - OU2
ROCKAWAY BOROUGH, NEW JERSEY

BUILDING SECTIONS AND ARCHITECTURAL DETAILS

PROJECT 50001.005
FILE NAME: A006PSBS AS-BUILT

SHEET NO.
A-6

GENERAL NOTES:

SEE SHEET A–1 FOR ADDITIONAL GENERAL NOTES

STRUCTURAL ITEMS SUCH AS GROUTED/FILLED CELLS AND REINFORCEMENT SHOWN ON THIS SHEET ARE FOR GRAPHICAL ILLUSTRATION ONLY, REFER TO THE STRUCTURAL DRAWINGS FOR SPECIFIC LOCATION AND DETAILED REQUIREMENTS

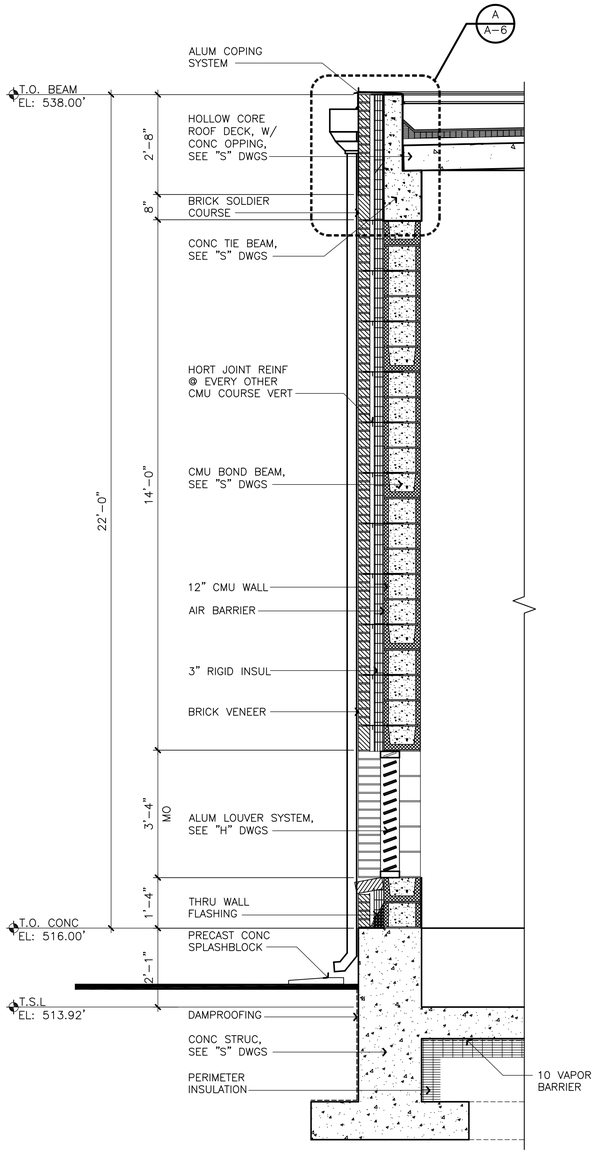

WALL SECTION 1
1/2" = 1'–0"

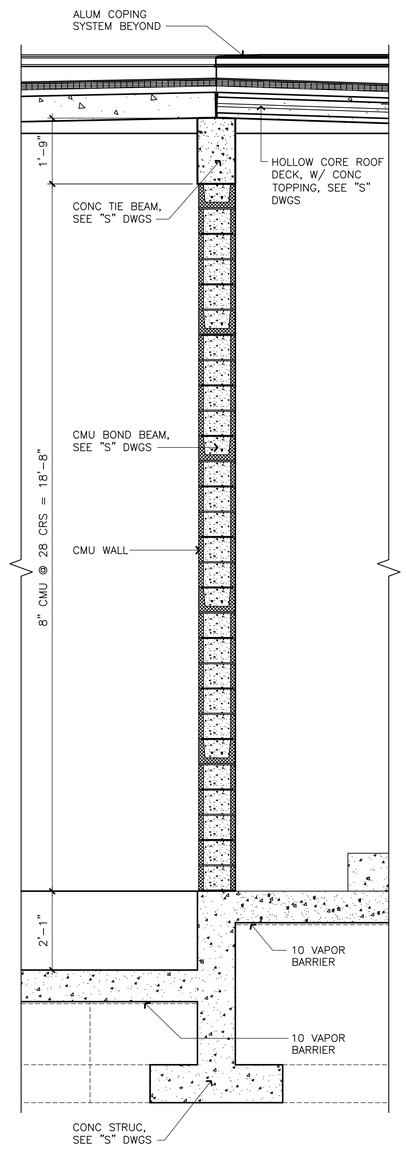

WALL SECTION 2
1/2" = 1'–0"

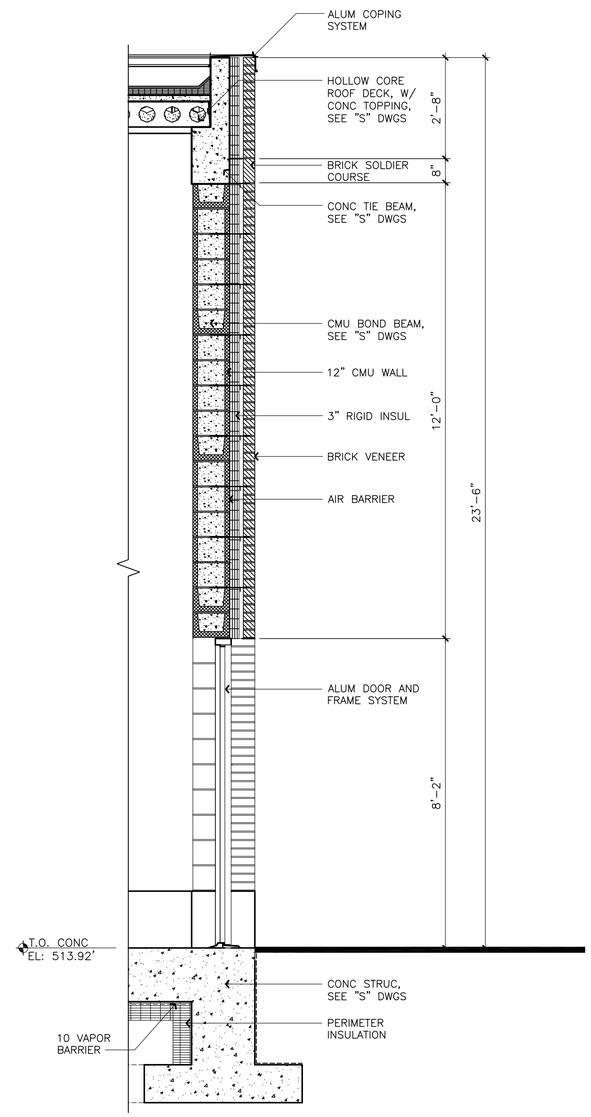

WALL SECTION 3
1/2" = 1'–0"

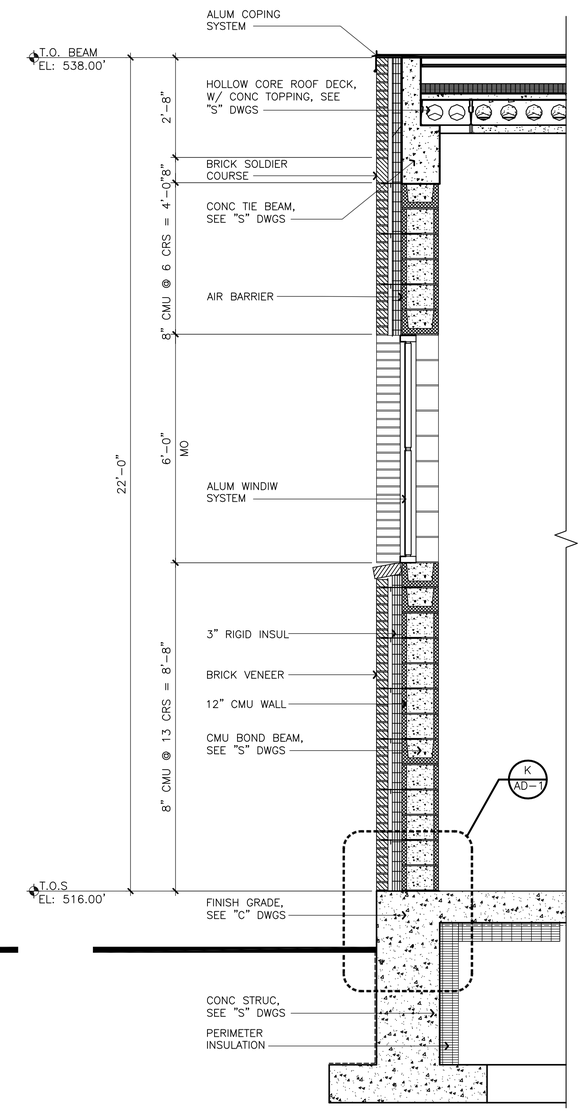

WALL SECTION 4
1/2" = 1'–0"

FINAL AS-BUILT

REV. NO.	DATE	DRWN	CHKD	REMARKS

DESIGNED BY:
DRAWN BY:
SHEET CHK'D BY:
CROSS CHK'D BY:
APPROVED BY:
DATE: MARCH 2012

PREPARED BY:
CAPE
CAPE Environmental Management, Inc.

US Army Corps of Engineers Kansas City District
GROUNDWATER TREATMENT FACILITY PACKAGE
ROCKAWAY BOROUGH SUPERFUND SITE
EAST MAIN/WALL STREET PLUME - OU2
ROCKAWAY BOROUGH, NEW JERSEY

WALL SECTIONS

PROJECT 50001.005
FILE NAME: A007PSWS AS–BUILT
SHEET NO.
A-7

DOOR SCHEDULE

ROOM NAME	NUMBER	DOOR SIZE		DOOR				FRAME			DETAIL			FIRE RATING (MIN)	HDW SET	NOTE NO.
		WD	HGT	TYPE	MATL	FIN	GLASS	TYPE	MATL	FIN	HEAD	JAMB	THRESHOLD			
TREATMENT FACILITY	DA–100	8'–0"	12'–0"	B	ALUM	SPEC	––	B	ALUM	SPEC	B/AD–1	C/AD–1	A/AD–1	0	1	1
WELL HOUSE	DA–101	3'–0"	7'–10"	A	ALUM	SPEC	––	A	ALUM	SPEC	B/AD–1	C/AD–1	A/AD–1	0	1	2

1. FLOOD PROOF DOOR SYSTEM.
2. ALUMINUM PERSONEL DOOR.

WINDOW SCHEDULE

ROOM NAME	WINDOW NUMBER	ROUGH OPN'G		TYPE (ELEV)	MAT'L	FIN	GLASS	DETAILS			NOTE NO.
		WIDTH	HEIGHT					HEAD	JAMB	SILL	
TREATMENT FACILITY	WA–100	4'–0"	6'–0"	A	ALUM	SPEC	INSULATING	D/AD–1	E/AD–1	F/AD–1	––
WELL HOUSE	WA–101	4'–0"	6'–0"	A	ALUM	SPEC	INSULATING	D/AD–1	E/AD–1	F/AD–1	––
WELL HOUSE	WA–101A	4'–0"	6'–0"	A	ALUM	SPEC	INSULATING	D/AD–1	E/AD–1	F/AD–1	––

LOUVER SCHEDULE

ROOM NAME	LOUVER NUMBER	ROUGH OPENING		DEPTH	TYPE	PERFORMANCE	DETAIL			NOTE NO.
		WD	HGT				HEAD	JAMB	SILL	
TREATMENT FACILITY	LA–100	2'–8"	3'–4"	8"	A	DRAINABLE BLADE LOUVER	G/AD–1	H/AD–1	J/AD–1	––
WELL HOUSE	LA–101	2'–0"	2'–8"	8"	A	DRAINABLE BLADE LOUVER	G/AD–1	H/AD–1	J/AD–1	––

FINISH SCHEDULE

ROOM NAME	ROOM NUMBER	FLOOR		WALL							CEILING			NOTE NO.
				MATERIAL	FINISH				BASE					
		MATERIAL	FINISH		NORTH	EAST	SOUTH	WEST	MATERIAL	DETAIL	MATERIAL	FINISH	HEIGHT	
TREATMENT FACILITY	A–100	CONC	SEALED	CMU	PTD	PTD	PTD	PTD	––	––	CONC	PTD	20'–0"	1
WELL HOUSE	A–101	CONC	SEALED	CMU	PTD	PTD	PTD	PTD	––	––	CONC	PTD	20'–0"	1

① PAINT ALL EXPOSED CONCRETE AND CMU EXCEPT FLOOR

DOOR TYPES

NTS

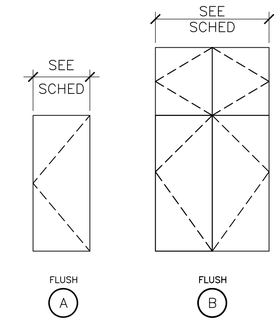

FRAME TYPES

NTS

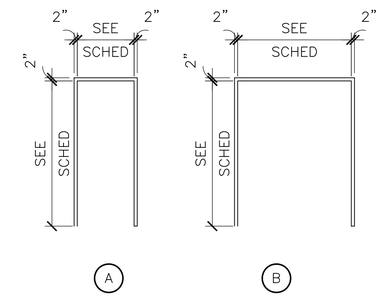

GENERAL NOTES:

SEE SHEET A–1 FOR ADDITIONAL GENERAL NOTES

STRUCTURAL ITEMS SUCH AS GROUTED/FILLED CELLS AND EINFORCEMENT SHOWN ON THIS SHEET ARE FOR GRAPHICAL ILLUSTRATION ONLY, REFER TO THE STRUCTURAL DRAWINGS FOR SPECIFIC LOCATION AND DETAILED REQUIREMENTS

WINDOW TYPES

NTS

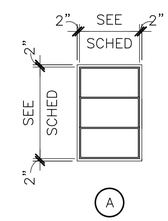

LOUVER TYPES

NTS

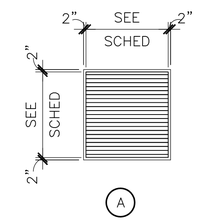

ARCHITECTURAL DETAILS

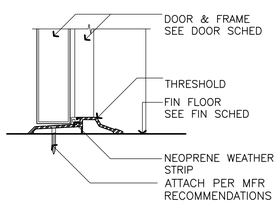

THRESHOLD

DETAIL A
1 1/2" = 1'–0"

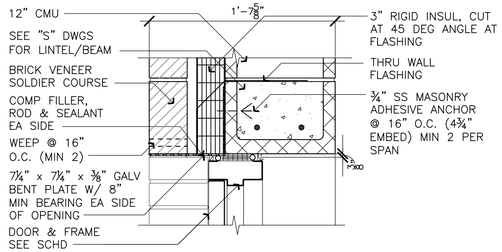

DOOR HEAD

DETAIL B
1 1/2" = 1'–0"

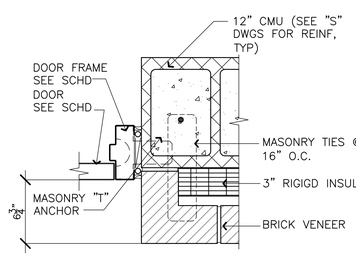

DOOR JAMB

DETAIL C
1 1/2" = 1'–0"

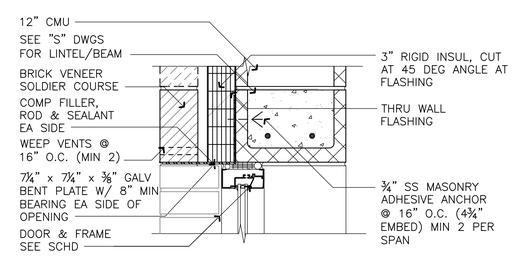

WINDOW HEAD

DETAIL D
1 1/2" = 1'–0"

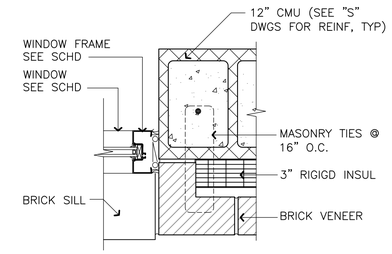

WINDOW JAMB

DETAIL E
1 1/2" = 1'–0"

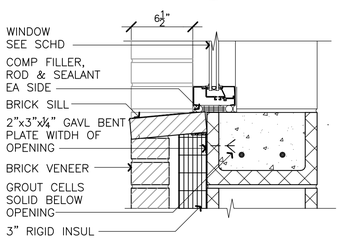

WINDOW SILL

DETAIL F
1 1/2" = 1'–0"

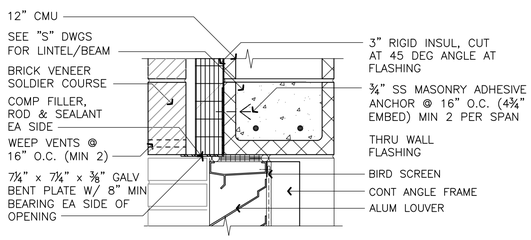

LOUVER HEAD

DETAIL G
1 1/2" = 1'–0"

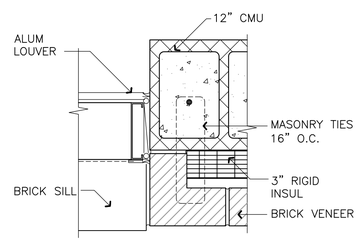

LOUVER JAMB

DETAIL H
1 1/2" = 1'–0"

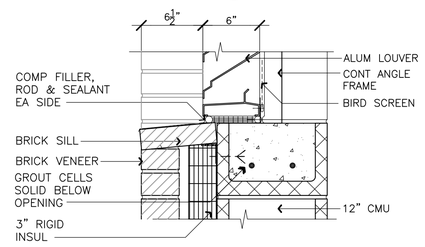

LOUVER SILL

DETAIL J
1 1/2" = 1'–0"

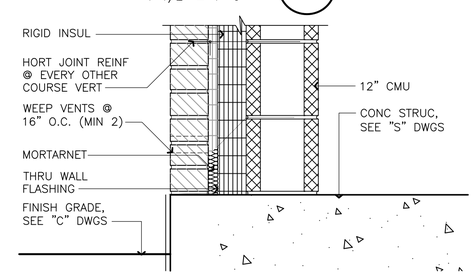

BASE

DETAIL K
1 1/2" = 1'–0"

FINAL AS-BUILT

REV. NO.	DATE	DRWN	CHKD	REMARKS

DESIGNED BY:
DRAWN BY:
SHEET CHK'D BY:
CROSS CHK'D BY:
APPROVED BY:
DATE: MARCH 2012

PREPARED BY:
CAPE
CAPE Environmental Management, Inc.

US Army Corps of Engineers Kansas City District
GROUNDWATER TREATMENT FACILITY PACKAGE
ROCKAWAY BOROUGH SUPERFUND SITE
EAST MAIN/WALL STREET PLUME - OU2
ROCKAWAY BOROUGH, NEW JERSEY

FINISH SCHEDULE, DOOR SCHEDULE AND TYPES, WINDOW SCHEDULE AND TYPES, AND ARCHITECTURAL DETAILS

PROJECT 50001.005
FILE NAME: AD01SCHD AS–BUILT

SHEET NO.
AD-1

GENERAL NOTES

DESIGN CRITERIA:

CODES:

- NEW JERSEY BUILDING CODE ADOPTING 2006 INTERNATIONAL BUILDING CODE
- ENVIRONMENTAL STRUCTURES: ACI 350 "CODE REQUIREMENTS FOR ENVIRONMENTAL CONCRETE STRUCTURES"
- OTHER STRUCTURES: ACI 318 "BUILDING CODE REQUIREMENTS FOR REINFORCED CONCRETE"
- AISC STEEL CONSTRUCTION MANUAL, THIRTEENTH EDITION
- ACI 530 "BUILDING CODE REQUIREMENTS FOR REINFORCED MASONRY STRUCTURES"

DESIGN LOADS:

ROOF SNOW LOAD:

– FLAT SNOW LOAD, PF	30 PSF
– SNOW EXPOSURE FACTOR, CE	0.9
– SNOW LOAD IMPORTANCE FACTOR, I	1.1
– THERMAL FACTOR, CT	1.0

RAIN LOAD — FLOODED TO T/PARAPET

SUPERIMPOSED DEADLOADS:

– ROOFS	AS NOTED
– FLOORS	AS NOTED

WINDLOADS:

– BASIC WIND SPEED	90 MPH
– EXPOSURE CATEGORY	C
– IMPORTANCE FACTOR	1.15
– INTERNAL PRESSURE COEFFICIENT	±0.18

EARTHQUAKE:

– SEISMIC DESIGN CATEGORY	C
– SEISMIC IMPORTANCE FACTOR, I	1.25
– MAPPED SPECTRAL RESPONSE ACC, SS	0.33
– MAPPED SPECTRAL RESPONSE ACC, S1	0.069
– SPECTRAL RESPONSE COEFFICIENT, SDS	0.338
– SPECTRAL RESPONSE COEFFICIENT, SD1	0.11
– BASIC SEISMIC–FORCE– RESISTING SYSTEM	ORDINARY REINFORCED MASONRY SHEAR WALL
– DESIGN BASE SHEAR	40 KIPS
– SEISMIC RESPONSE COEFFICIENT, CS	0.20
– RESPONSE MODIFICATION FACTOR, R	2.0
– ANALYSIS PROCEDURE USED	EQUIVALENT LATERAL FORCE PROCEDURE

CONCRETE 28–DAY STRENGTH:

– COLUMNS, BEAMS, SLABS, WALLS, FOOTINGS	4000	PSI
– MASONRY FILLED CELL GROUT	2500	PSI
– PRESTRESSED ELEMENTS	5000	PSI

REINFORCING STEEL:

- ALL BARS ASTM A615, GRADE 60
- WELDED WIRE FABRIC ASTM A185

FOUNDATIONS:

- ALLOWABLE BEARING PRESSURE FOR SPREAD FOOTINGS OVER SUBSURFACE PREPARED AS PER SPECIFICATIONS: 2500 PSF

GENERAL CONDITIONS:

ALL STRUCTURAL DRAWINGS WERE USED IN CONJUNCTION WITH THE ARCHITECTURAL, HVAC, PLUMBING, MECHANICAL, CIVIL, ELECTRICAL AND SHOP DRAWINGS AND SPECIFICATIONS.

THE CONTRACTOR REVIEWED AND VERIFIED DIMENSIONS SHOWN IN ALL PLANS AND REVIEW ALL FIELD CONDITIONS THAT MAY AFFECT THE INSTALLATION OF THE FACILITY, SHOULD DISCREPANCIES APPEAR, THE CONTRACTOR NOTIFIED THE ENGINEER IN WRITING TO OBTAIN ENGINEER'S CLARIFICATION BEFORE COMMENCING WITH THE WORK.

FOR ALL ITEMS EMBEDDED IN OR PASSED THROUGH CONCRETE, THE CONTRACTOR INITIALLY REFER TO MECHANICAL, HEATING AND VENTILATION DRAWINGS FOR TYPE, SIZE, LOCATION AND SPECIAL INSTALLATION REQUIREMENTS FOR THESE ITEMS.

THE CONTRACTOR TOOK ANY AND ALL NECESSARY MEASURES TO PROTECT EXISTING STRUCTURES FROM DAMAGE WHEN WORKING IN AND AROUND EXISTING STRUCTURES PERFORMING WORK SUCH AS DEMOLITION, FOUNDATION EXCAVATION AND OTHERS.

SIZE AND LOCATION OF EQUIPMENT PADS AND ANCHOR BOLTS WERE PER EQUIPMENT MANUFACTURER'S REQUIREMENTS.

ANY EQUIPMENT THAT MAY INDUCE VIBRATION TO THE STRUCTURE WAS ADEQUATELY ISOLATED FROM THE STRUCTURES.

ALL DETAILS AND SECTIONS SHOWN ON THE DRAWINGS ARE INTENDED TO BE TYPICAL AND WERE CONSTRUED TO APPLY TO ANY SIMILAR SITUATION ELSE–WHERE ON THE PROJECT, EXCEPT WHERE A DIFFERENT DETAIL IS SHOWN.

STANDARD DETAILS (SHOWN ON SD1 AND SD2) APPLIED TO ALL SIMILAR SITUATIONS ON THE PROJECT, EXCEPT WHERE A DIFFERENT DETAIL IS SHOWN.

CONCRETE:

ALL MATERIALS AND METHODS OF CONSTRUCTION WERE IN ACCORDANCE WITH ACI 318 REQUIREMENTS.

ALL CONCRETE WAS BE AIR–ENTRAINED WITH 4000 PSI COMPRESSIVE STRENGTH AT 28 DAYS UNLESS OTHERWISE NOTED.

WATER REDUCING AGENT WAS IN ACCORDANCE WITH ASTM C494.

ALL CONCRETE SURFACES EXPOSED TO AIR, UNLESS OTHERWISE NOTED IN SPECIFICATIONS, WERE TREATED WITH AN APPROPRIATE CURING COMPOUND AS SOON AS CEMENT FINISHING IS COMPLETED OR FORMS ARE REMOVED.

ALL EXPOSED CORNERS OF CONCRETE HAVE A MINIMUM CHAMFER OF ¾" UNLESS OTHERWISE NOTED.

THE CONTRACTOR OBTAINED ENGINEER'S APPROVAL FOR THE LOCATION OF CONSTRUCTION JOINTS THAT ARE NOT SHOWN ON THE DRAWING.

REINFORCING STEEL:

REINFORCEMENT CONFORMED TO ASTM A615, GRADE 60 REQUIREMENTS.

ALL ACCESSORIES WERE IN CONFORMANCE WITH ACI 315 REQUIREMENTS. REINFORCING STEEL HAD THE FOLLOWING CLEAR COVER UNLESS OTHER–WISE NOTED:

– CONCRETE CAST AGAINST EARTH	3"
– FORMED SURFACES IN CONTACT WITH SOIL, SEWAGE, WATER OR EXPOSED TO WEATHER	2"
– FORMED SURFACES NOT EXPOSED TO WEATHER OR IN CONTACT WITH SOIL:	
– SLABS, WALLS AND JOISTS	¾"
– BEAMS AND COLUMNS	1–½"

LAP SPLICES WERE AS SHOWN ON THE DRAWINGS. FOR LAP SPLICES NOT SHOWN ON THE DRAWINGS, THE CONTRACTOR OBTAINED ENGINEER'S APPROVAL.

THE CONTRACTOR PREPARED PLACING DRAWINGS AND SCHEDULES IN CONFORMANCE WITH ACI 315 REQUIREMENTS.

PRECAST PRESTRESSED CONSTRUCTION:

ALL PRECAST PRESTRESSED MEMBERS WERE DESIGNED BY A REGISTERED PROFESSIONAL ENGINEER FOR THE SUPERIMPOSED LOADS SHOWN ON THE DRAWINGS IN CONFORMANCE WITH THE REQUIREMENTS OF APPLICABLE SPECIFICATIONS. EQUIPMENT LOADS WERE CONSIDERED AS REQUIRED.

CONCRETE MASONRY:

DESIGN CRITERIA:

– DESIGN COMPRESSIVE STRENGTH OF MASONRY AT 28 DAYS	f'm = 1500 psi
– ALLOWABLE STEEL STRESS	fs = 24,000 psi

CONTINUOUS INSPECTION IS REQUIRED FOR ALL MASONRY WORK.

ALL MATERIALS AND METHODS OF CONSTRUCTION WERE IN ACCORDANCE WITH DRAWINGS AND SPECIFICATIONS AND:

- THE NATIONAL CONCRETE MASONRY ASSOCIATION "SPECIFICATIONS FOR DESIGN AND CONSTRUCTION OF LOAD BEARING STRUCTURES."
- ACI 530 "BUILDING CODE REQUIREMENTS FOR REINFORCED MASONRY STRUCTURES."

MATERIALS:

- BLOCK: CONFORM TO ASTM C90 – LOAD BEARING, NORMAL WEIGHT TWO CELL, 8"x8"x16" (COMPRESSIVE STRENGTH, NET AREA 1900 PSI)
- MORTAR: CONFORM TO ASTM C270, TYPE S. MINIMUM COMPRESSIVE STRENGTH AT 28 DAYS – 1800 PSI. UTILIZE TYPE II CEMENT AND TYPE S LIME. MASONRY CEMENT AND MASONRY MORTAR WILL NOT BE CONSIDERED.
- STEEL: DUR–O–WAL OR EQUAL LADDER TYPE JOINT REINFORCEMENT AT EVERY SECOND COARSE (16" OC) BOND BEAM AND FILLED CELL REINFORCEMENT AS PER DRAWINGS (ASTM A615, GRADE 60).

CONSTRUCTION:

- MAXIMUM CONSTRUCTION HEIGHT OF MASONRY WALLS WITHOUT FILLED CELL OR COLUMN POURS IS TO BE 8'–0". THE CONCRETE FOR FILLED CELLS SHALL BE RODDED OR PUDDLED DURING PLACEMENT TO INSURE COMPLETE FILLING TO THE BLOCK CORE.
- SEE STANDARD DETAILS AND ARCHITECTURAL DRAWINGS FOR LINTEL REQUIREME–MENTS OVER OPENINGS.
- PROVIDE CLEAN OUT AND INSPECTION BLOCK OUTS IN CELLS CONTAINING REINFORCEMENT.

GEOTECHNICAL REPORT:

GEOTECHNICAL REPORT PREPARED BY CDM, INC., DATED AUGUST 2010.

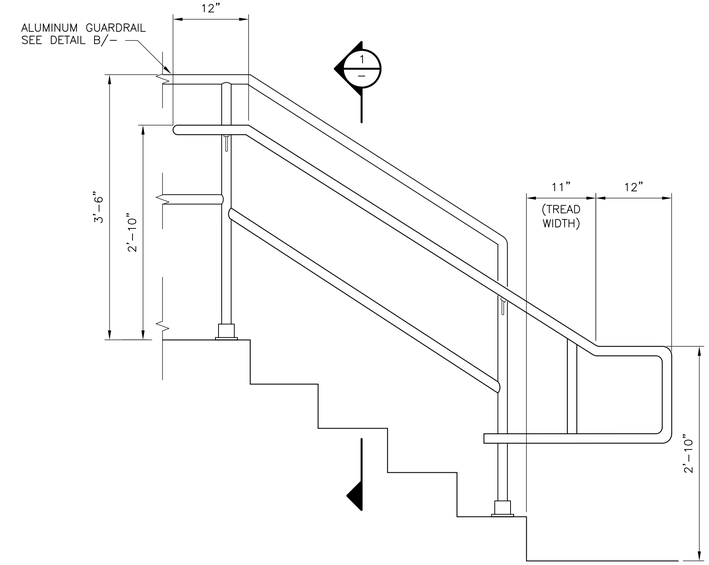

HANDRAIL ATTACHED TO GUARDRAIL SYSTEM

DETAIL A
1" = 1'–0"

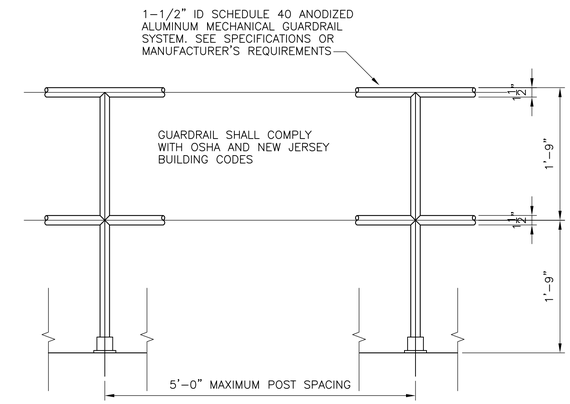

GUARDRAIL

DETAIL B
1" = 1'–0"

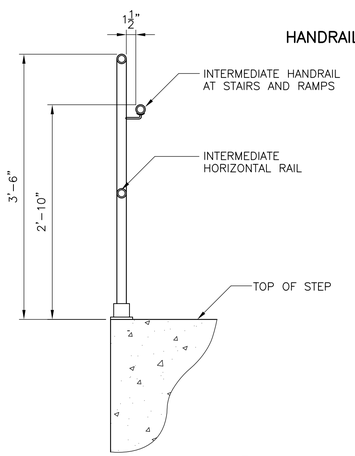

SECTION 1
1" = 1'–0"

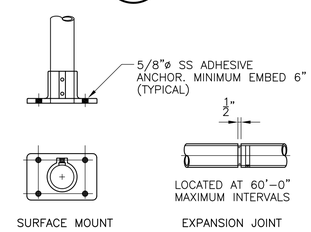

CONNECTIONS FOR NON–REMOVABLE GUARDRAIL

GUARDRAIL NOTES:

1. ALUMINUM SHAPES IN CONTACT WITH CONCRETE WERE SEPARATED BY A 1/32" NEOPRENE GASKET OR ANY CASE WHERE TWO DIFFERENT METALS ARE WERE IN CONTACT. A NEOPRENE GASKET WAS PROVIDED.
2. HANDRAILS, GUARDRAILS, POSTS, BRACKETS AND MOUNTINGS MEET THE NEW JERSEY BUILDING CODE AND OCCUPATIONAL SAFETY AND HEALTH ADMINISTRATION (OSHA) LOADING REQUIREMENTS.

ALUMINUM GUARDRAIL AND HANDRAIL NOTES:

GUARDRAILS

1. GUARDRAILS WERE TWO RAIL, 1.5" DIAMETER SYSTEM. THE CENTERLINE OF THE INTERMEDIATE PARALLEL RAIL IS AT THE POST MID–POINT BETWEEN THE TOP RAIL AND HORIZONTAL SURFACE, AND BETWEEN TOP RAIL AND STRINGER (AT STAIRS/STEPS). HOWEVER, MAXIMUM CLEAR DISTANCE BETWEEN RAILS MEASURED AT RIGHT ANGLES TO RAILS IS 21".
2. GUARDRAILS AT HORIZONTAL SURFACES (LANDINGS, MEZZANINES, ETC) ARE 42" HIGH.
3. AT STAIRS/STEPS, PROVIDED STRINGER–MOUNTED GUARDRAIL SYSTEM PARALLEL TO STRINGER SLOPE, 42" HIGH ABOVE LEADING EDGE OF TREAD AND PROVIDE ADDITIONAL INSIDE MOUNTED HANDRAIL(S) MEETING THE REQUIREMENTS FOR HANDRAILS AS DESCRIBED BELOW.

HANDRAILS

1. HANDRAILS (WALL OR GUARDRAIL MOUNTED) AT STAIRS/STEPS. PROVIDE 1.5" DIAMETER WALL AND/OR GUARDRAIL MOUNTED (AS APPLICABLE) ALUMINUM HANDRAILS AT BOTH SIDES OF STAIRS/STEPS. HANDRAILS WERE MOUNTED PARALLEL TO STRINGER SLOPE, 36" HIGH ABOVE LEADING EDGE OF TREAD. HANDRAILS EXTENDED 12" BEYOND TOP RISER, AND EXTENDED 24" BEYOND THE BOTTOM RISER. AT THE BOTTOM, HANDRAILS CONTINUED TO SLOPE FOR A DISTANCE OF THE DEPTH OF ONE TREAD BEYOND THE BOTTOM RISER; THE REMAINDER WERE HORIZONTAL. THE FINGER CLEARANCE BETWEEN THE HANDRAIL AND THE WALL, GUARD OR OTHER OBSTRUCTION WAS 1.5".

ABBREVIATIONS:

AL	ALUMINUM	MIN	MINIMUM
BLDG	BUILDING	MISC	MISCELLANEOUS
BOT	BOTTOM	NF	NEAR FACE
CC	CENTER TO CENTER	NTS	NOT TO SCALE
CJ	CONTROL JOINT	OC	ON CENTER
CMU	CONCRETE MASONRY UNIT	PL	PLATE
CONC	CONCRETE	PLF	POUNDS PER LINEAR FOOT
CONST JT	CONSTRUCTION JOINT	PROJ	PROJECTION
CONT	CONTINUOUS	PSF	POUNDS PER SQUARE FOOT
DIA	DIAMETER	PSI	POUNDS PER SQUARE INCH
DWG	DRAWING	REINF	REINFORCEMENT
EF	EACH FACE	SPECS	SPECIFICATIONS
EJ	EXPANSION JOINT	SS	STAINLESS STEEL
EL	ELEVATION	STD	STANDARD
EW	EACH WAY	T&B	TOP AND BOTTOM
FF	FAR FACE	T/STRUCTURE	TOP OF STRUCTURE
FTC	FOOTING	TYP	TYPICAL
HORIZ	HORIZONTAL	UON	UNLESS OTHERWISE NOTED
HP	HIGH POINT	VERT	VERTICAL
ID	INSIDE DIAMETER	WSTP	WATERSTOP
LP	LOW POINT	WWF	WELDED WIRE FABRIC
MAT'L	MATERIAL		
MAX	MAXIMUM		

NOTE:
THESE ABBREVIATIONS ARE FOR USE ON STRUCTURAL DRAWINGS ONLY.

FINAL AS-BUILT

REV. NO.	DATE	DRWN	CHKD	REMARKS

DESIGNED BY:
DRAWN BY:
SHEET CHK'D BY:
CROSS CHK'D BY:
APPROVED BY:
DATE: MARCH 2012

PREPARED BY:
CAPE
CAPE Environmental Management, Inc.

US Army Corps of Engineers Kansas City District
GROUNDWATER TREATMENT FACILITY PACKAGE
ROCKAWAY BOROUGH SUPERFUND SITE
EAST MAIN/WALL STREET PLUME - OU2
ROCKAWAY BOROUGH, NEW JERSEY

STRUCTURAL NOTES

PROJECT 50001.005
FILE NAME: S001STNT AS–BUILT
SHEET NO.
S-1

SECTION 3
3/8" = 1'-0"

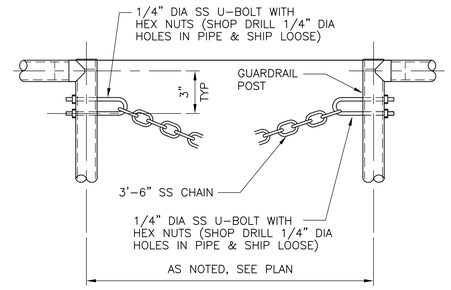

CHAIN OPENING HOOK
DETAIL A
3/4" = 1'-0"

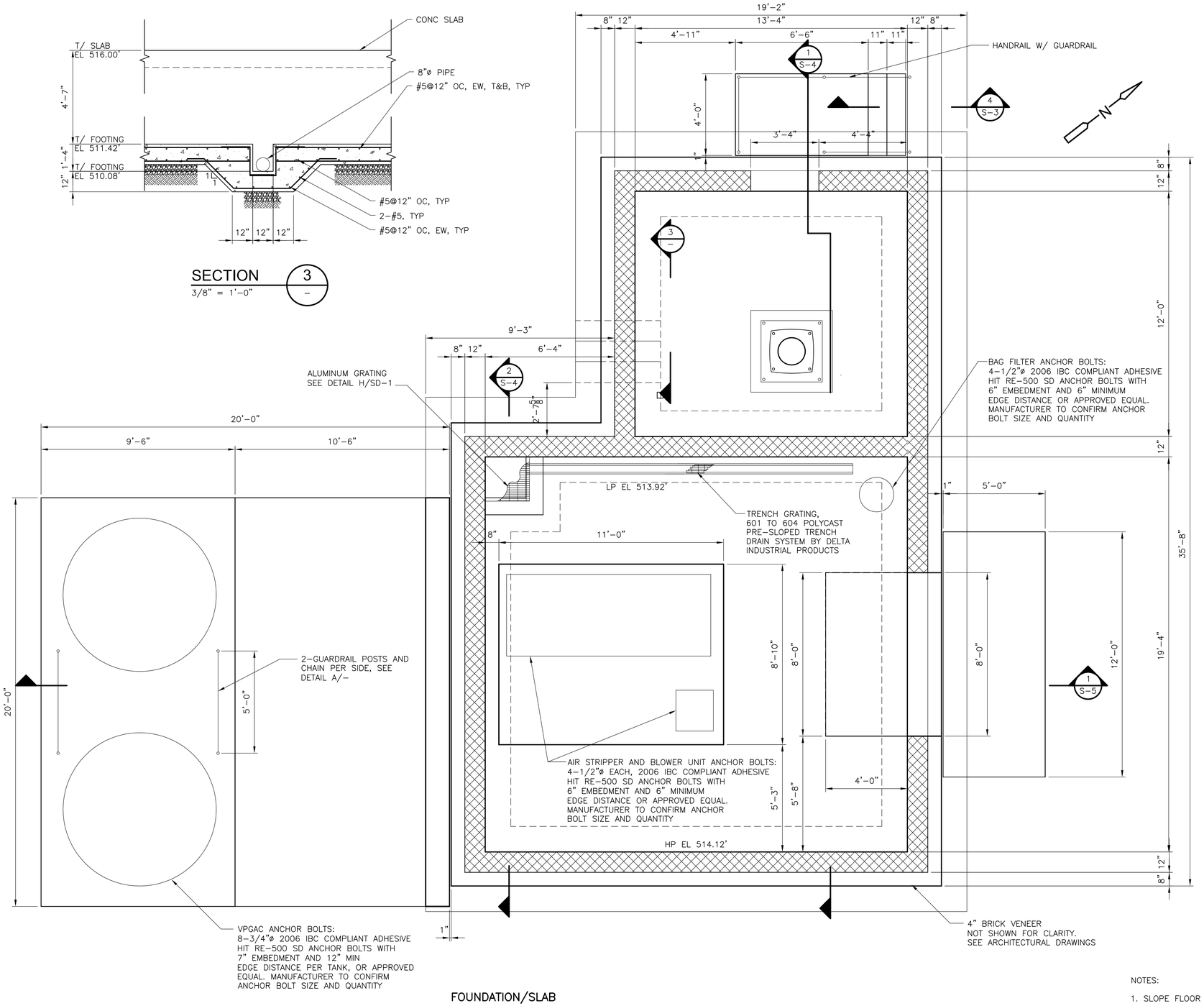

FOUNDATION/SLAB
PLAN
3/8" = 1'-0"

FINAL AS-BUILT

NOTES:

1. SLOPE FLOOR TO THE TRENCH DRAIN.

REV. NO.	DATE	DRWN	CHKD	REMARKS

DESIGNED BY:
DRAWN BY:
SHEET CHK'D BY:
CROSS CHK'D BY:
APPROVED BY:
DATE: MARCH 2012

PREPARED BY:
CAPE Environmental Management, Inc.

US Army Corps of Engineers Kansas City District
GROUNDWATER TREATMENT FACILITY PACKAGE
ROCKAWAY BOROUGH SUPERFUND SITE
EAST MAIN/WALL STREET PLUME - OU2
ROCKAWAY BOROUGH, NEW JERSEY

FOUNDATION/SLAB PLAN,
TRANSFORMER PAD PLAN AND SECTIONS

PROJECT 50001.005
FILE NAME: S002BLPL AS-BUILT
SHEET NO.
S-2

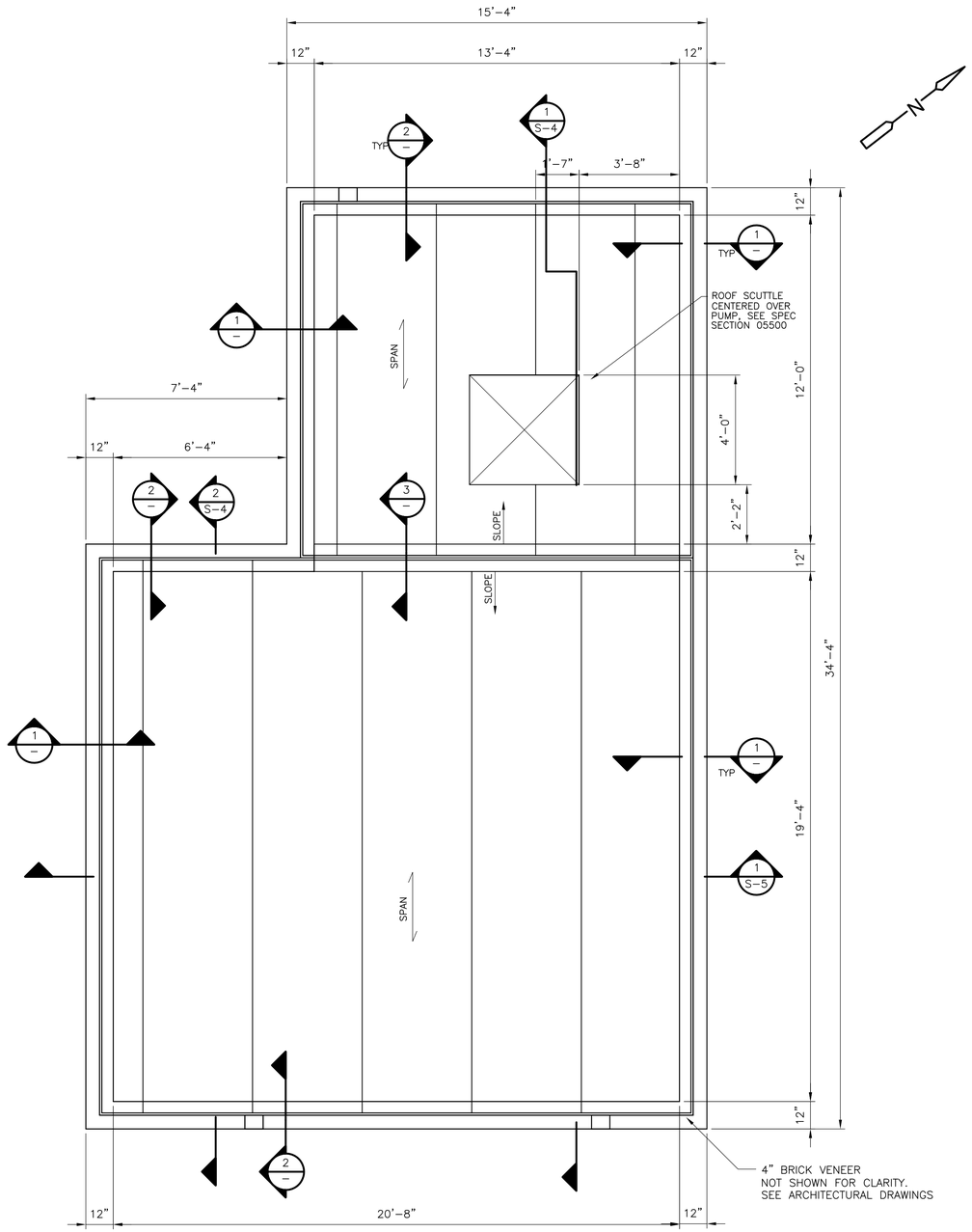

PLAN
3/8" = 1'-0"

ROOF NOTES:

1 – HOLLOW CORE SLABS WERE DESIGNED BY THE PRECAST SUPPLIER FOR THE FOLLOWING LOADS:

SUPERIMPOSED LIVE LOAD: 20 PSF
SUPERIMPOSED DEAD LOAD: 20 PSF (PLUS TOPPING)
SNOW LOAD: SEE S-1
RAIN LOAD: SEE S-1

HOLLOW CORE SLABS ADJACENT TO OPENINGS SHALL BE DESIGNED TO SUPPORT ALL LOADS FROM THE INTERRUPTED SLABS.

2 – HOLLOW CORE SLAB CALCULATIONS AND SHOP DRAWINGS WERE SIGNED AND SEALED BY A NEW JERSEY REGISTERED PROFESSIONAL ENGINEER AND SUBMITTED TO ENGINEER FOR REVIEW.

3 – STEEL HANGER ASSEMBLIES AT OPENINGS WERE PROVIDED BY THE HOLLOW CORE SLAB MANUFACTURER.

4 – FOR ROOF PENETRATIONS SEE "A" DWGS

5 – ALL LOADS FROM EQUIPMENT, PIPING, LIGHTING, MECHANICAL, ELECTRICAL AND MISC ITEMS LOCATED ON THE ROOF, OR SUSPENDED FROM THE ROOF, WERE VERIFIED BY THE PRECAST SUPPLIER W/ EACH INDIVIDUAL EQUIPMENT SUPPLIER.

6 – 2" CONCRETE TOPPING WAS REINFORCED WITH WWR 4x4 –W4xW4.

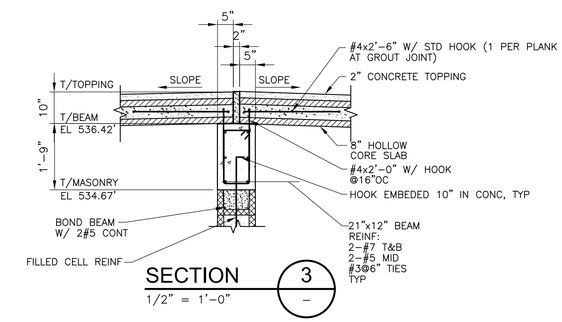

SECTION 3 –
1/2" = 1'-0"

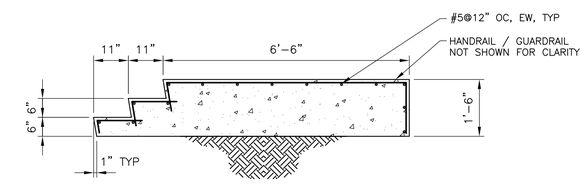

SECTION 4 S-2
1/2" = 1'-0"

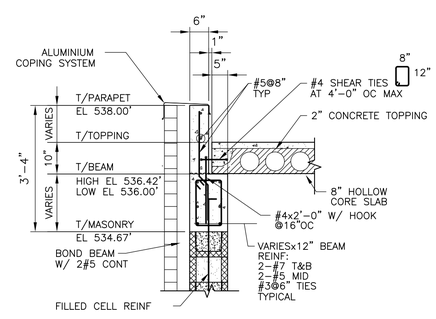

SECTION 1 –
1/2" = 1'-0"

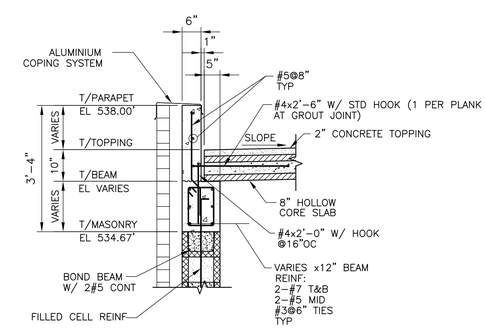

SECTION 2 –
1/2" = 1'-0"

FINAL AS-BUILT

REV. NO.	DATE	DRWN	CHKD	REMARKS

DESIGNED BY:
DRAWN BY:
SHEET CHK'D BY:
CROSS CHK'D BY:
APPROVED BY:
DATE: MARCH 2012

PREPARED BY:
CAPE Environmental Management, Inc.

US Army Corps of Engineers Kansas City District
GROUNDWATER TREATMENT FACILITY PACKAGE
ROCKAWAY BOROUGH SUPERFUND SITE
EAST MAIN/WALL STREET PLUME - OU2
ROCKAWAY BOROUGH, NEW JERSEY

ROOF PLAN AND SECTIONS

PROJECT 50001.005
FILE NAME: S003BLPL AS-BUILT
SHEET NO.
S-3

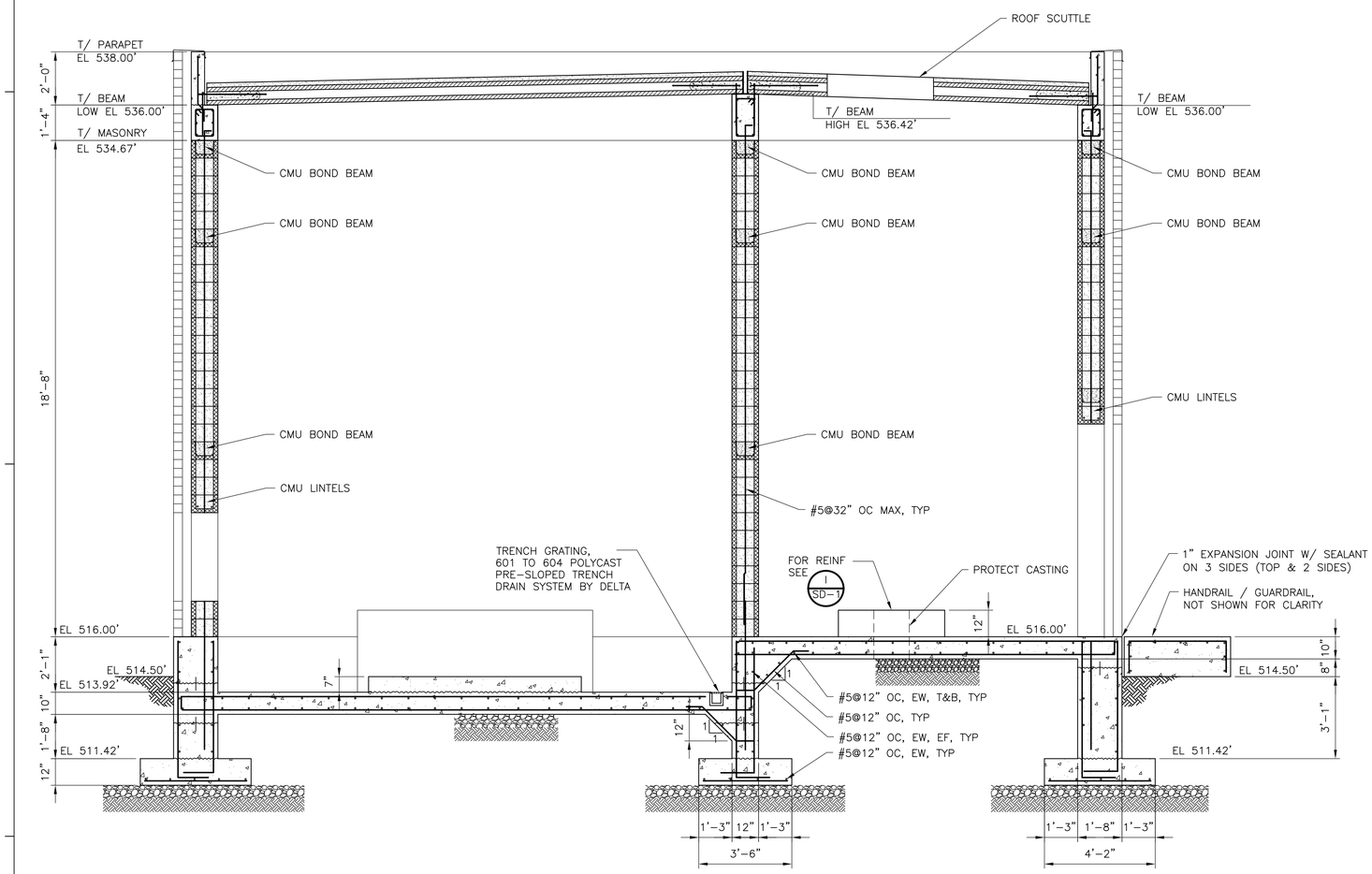

SECTION 1
3/8" = 1'-0"
S-2,3

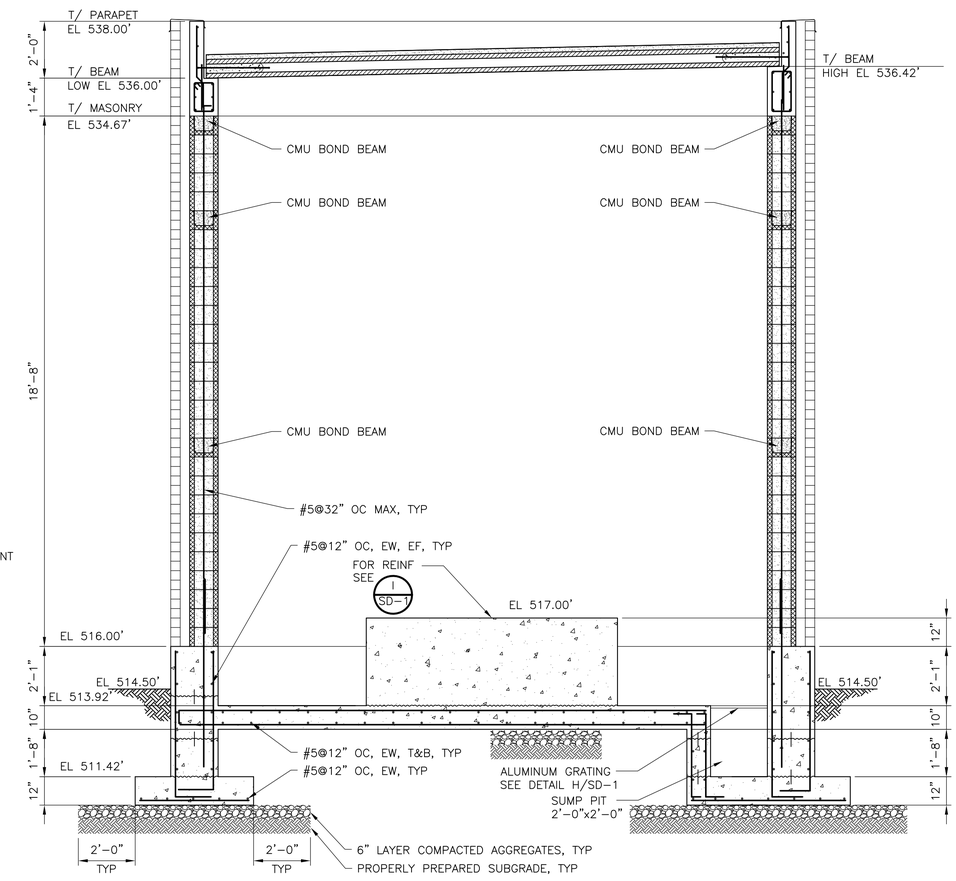

SECTION 2
3/8" = 1'-0"
S-2,3

FINAL AS-BUILT

REV. NO.	DATE	DRWN	CHKD	REMARKS

DESIGNED BY:
DRAWN BY:
SHEET CHK'D BY:
CROSS CHK'D BY:
APPROVED BY:
DATE: MARCH 2012

PREPARED BY:
CAPE
CAPE Environmental Management, Inc.

US Army Corps of Engineers Kansas City District
GROUNDWATER TREATMENT FACILITY PACKAGE
ROCKAWAY BOROUGH SUPERFUND SITE
EAST MAIN/WALL STREET PLUME - OU2
ROCKAWAY BOROUGH, NEW JERSEY

SECTIONS

PROJECT 50001.005
FILE NAME: S004PSSC AS-BUILT
SHEET NO.
S-4

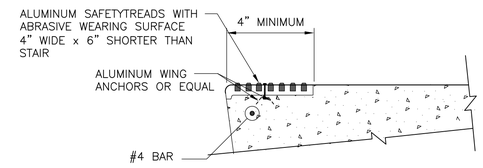

DETAIL 1 / –
NOT TO SCALE

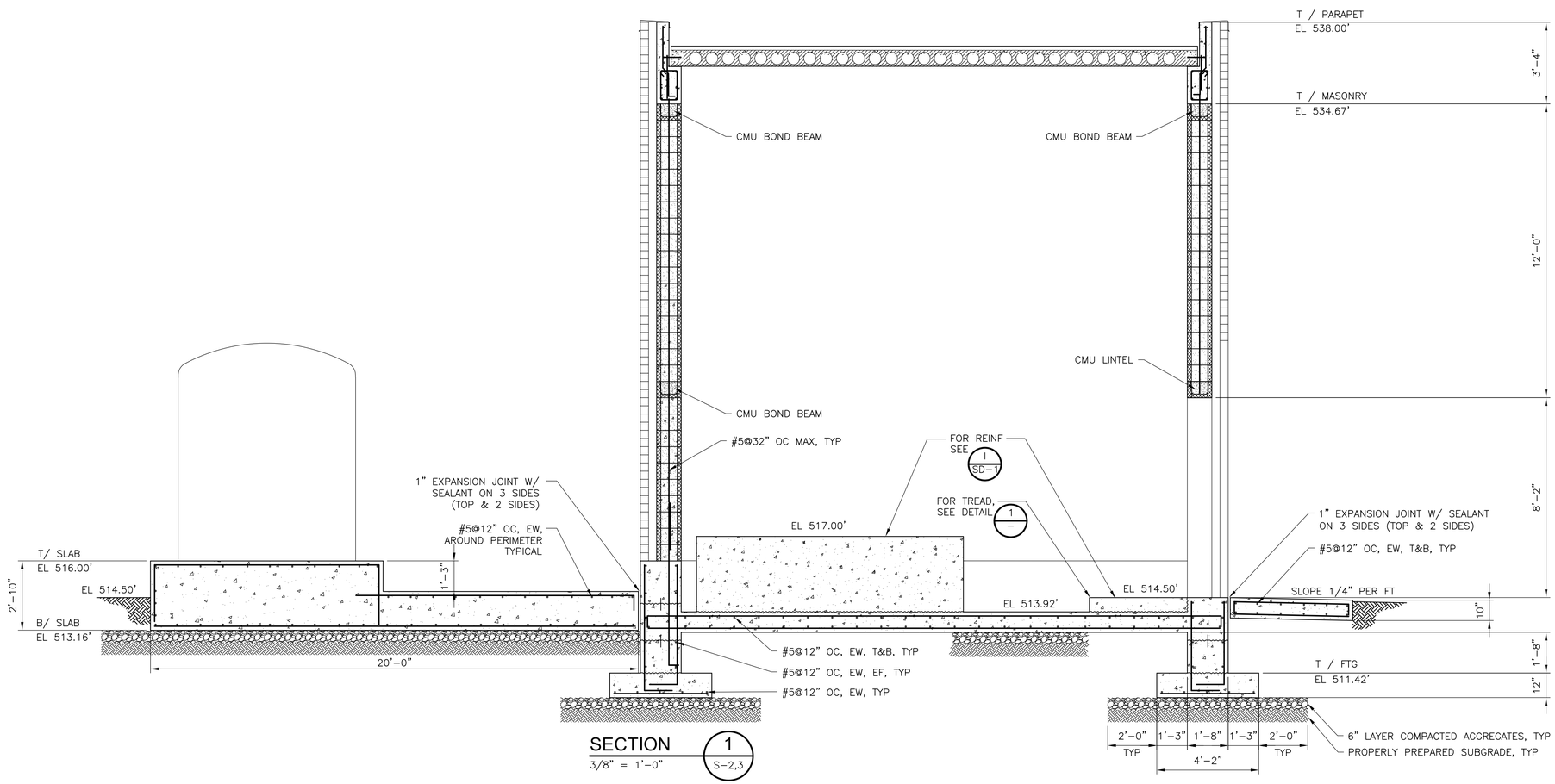

SECTION 1 / S-2,3
3/8" = 1'-0"

FINAL AS-BUILT

REV. NO.	DATE	DRWN	CHKD	REMARKS

DESIGNED BY:
DRAWN BY:
SHEET CHK'D BY:
CROSS CHK'D BY:
APPROVED BY:
DATE: MARCH 2012

PREPARED BY:
CAPE Environmental Management, Inc.

US Army Corps of Engineers Kansas City District
GROUNDWATER TREATMENT FACILITY PACKAGE
ROCKAWAY BOROUGH SUPERFUND SITE
EAST MAIN/WALL STREET PLUME - OU2
ROCKAWAY BOROUGH, NEW JERSEY

SECTIONS

PROJECT 50001.005
FILE NAME: S005PSSC AS-BUILT
SHEET NO.
S-5

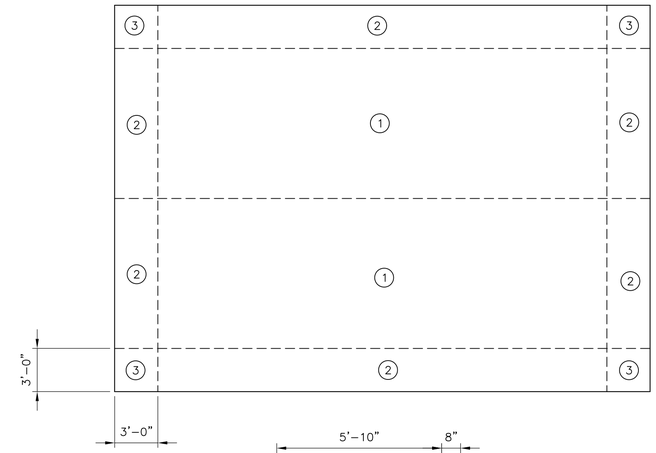

ROOF PRESSURE

PLAN

NTS

WIND PRESSURE (PSF) ON ROOFING MEMBRANE		
ZONE	MAX POSITIVE PRESSURE	MAX NEGATIVE PRESSURE (UPLIFT)
1 (INTERIOR)	8	−22
2 (EDGE STRIP)	8	−37
3 (CORNER)	8	−55

WIND PRESSURE (PSF) ON WALL OPENINGS		
OPENING LABEL	MAX POSITIVE PRESSURE	MAX NEGATIVE PRESSURE (SUCTION)
ALL OPENINGS	20	−27

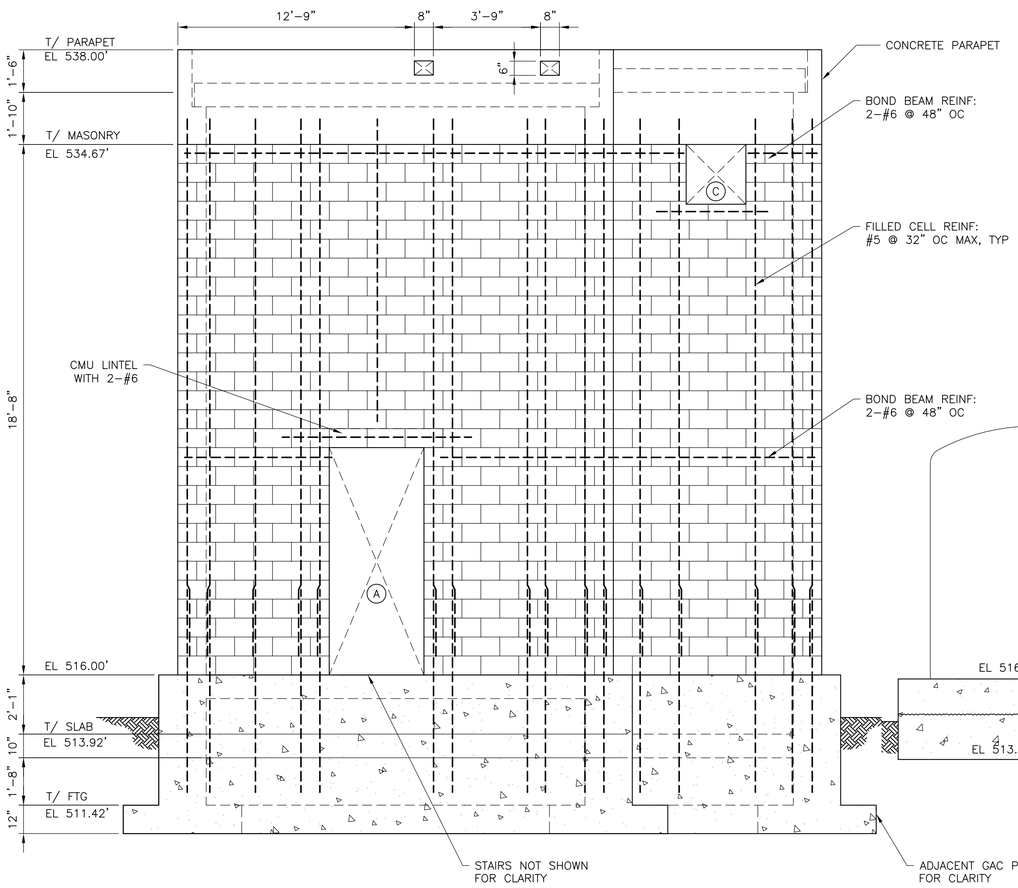

WEST

ELEVATION

3/8" = 1'-0"

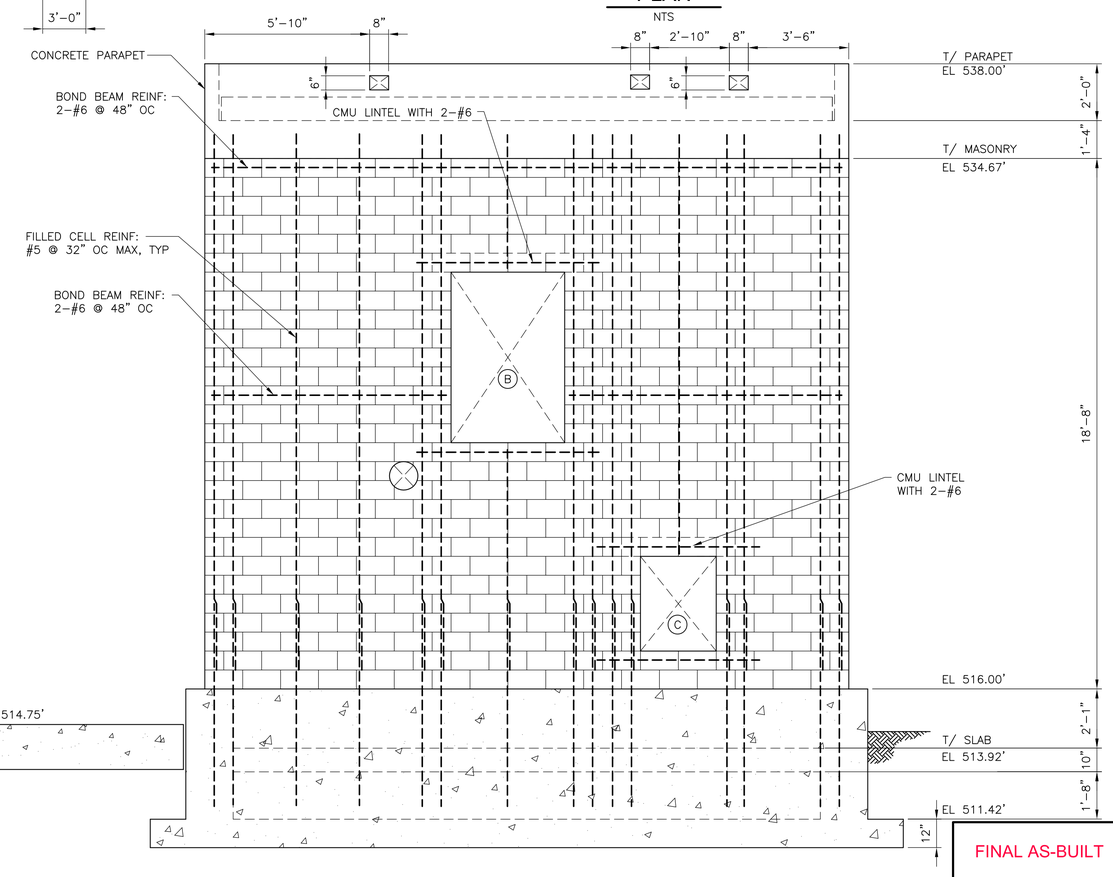

EAST

ELEVATION

3/8" = 1'-0"

FINAL AS-BUILT

REV. NO.	DATE	DRWN	CHKD	REMARKS

DESIGNED BY:
DRAWN BY:
SHEET CHK'D BY:
CROSS CHK'D BY:
APPROVED BY:
DATE: MARCH 2012

PREPARED BY:
CAPE Environmental Management, Inc.

US Army Corps of Engineers Kansas City District
GROUNDWATER TREATMENT FACILITY PACKAGE
ROCKAWAY BOROUGH SUPERFUND SITE
EAST MAIN/WALL STREET PLUME - OU2
ROCKAWAY BOROUGH, NEW JERSEY

ELEVATIONS

PROJECT 50001.005
FILE NAME: S006BLEL AS-BUILT

SHEET NO.
S-6

WIND PRESSURE (PSF) ON WALL OPENINGS		
OPENING LABEL	MAX POSITIVE PRESSURE	MAX NEGATIVE PRESSURE (SUCTION)
A	20	−27
B	14	−21

SOUTH

ELEVATION

3/8" = 1'−0"

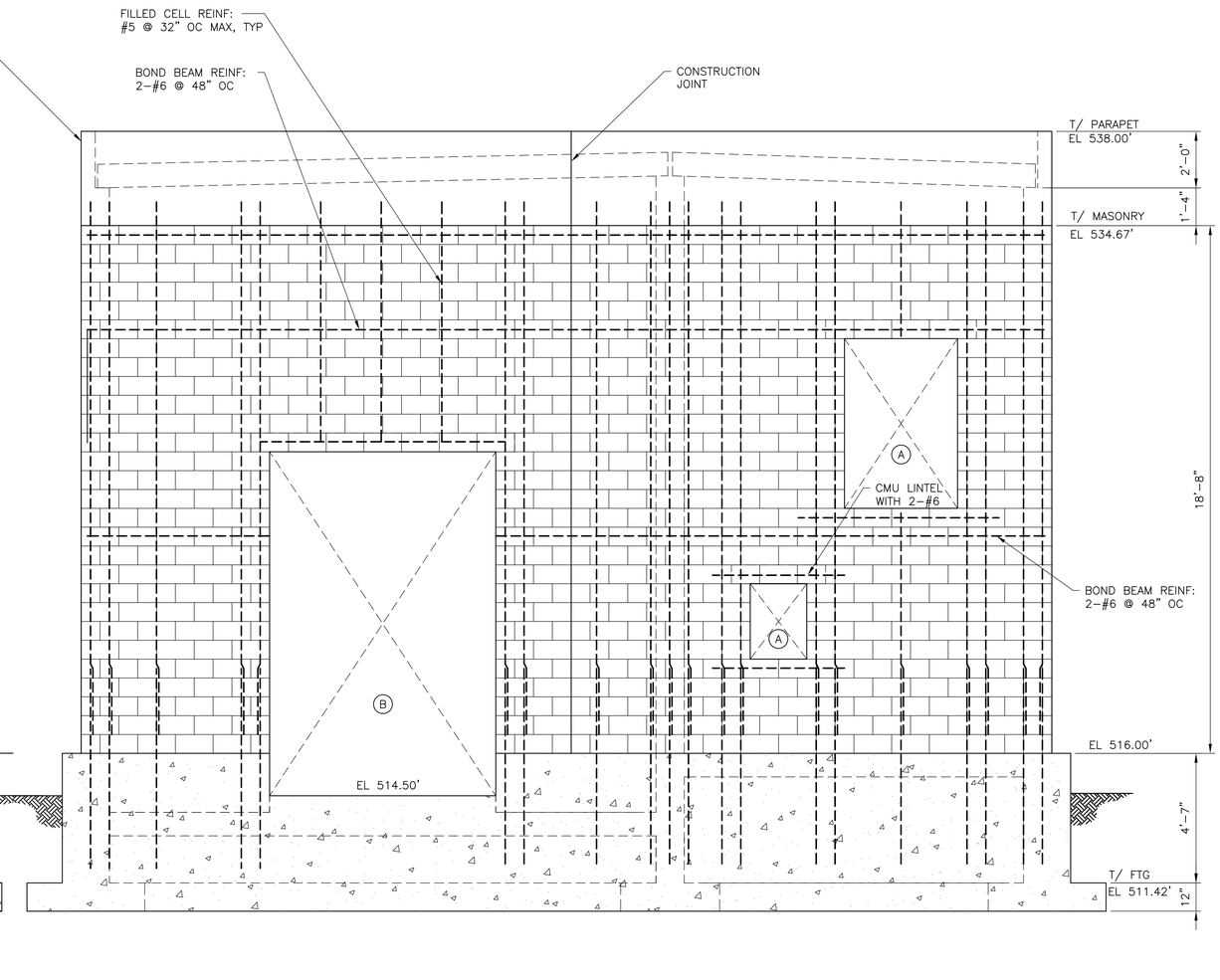

NORTH

ELEVATION

3/8" = 1'−0"

FINAL AS-BUILT

REV. NO.	DATE	DRWN	CHKD	REMARKS

DESIGNED BY:
DRAWN BY:
SHEET CHK'D BY:
CROSS CHK'D BY:
APPROVED BY:
DATE: MARCH 2012

PREPARED BY:
CAPE Environmental Management, Inc.

US Army Corps of Engineers Kansas City District
GROUNDWATER TREATMENT FACILITY PACKAGE
ROCKAWAY BOROUGH SUPERFUND SITE
EAST MAIN/WALL STREET PLUME - OU2
ROCKAWAY BOROUGH, NEW JERSEY

ELEVATIONS

PROJECT 50001.005
FILE NAME: S007BLEL AS−BUILT
SHEET NO.
S-7

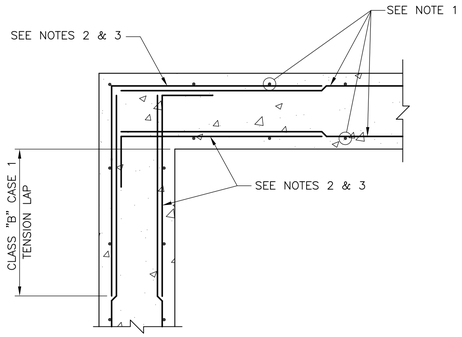

WALL CORNER REINFORCING

DETAIL A
NTS

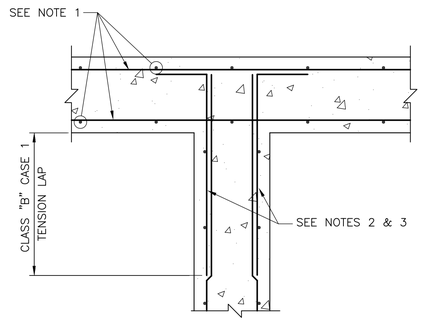

WALL INTERSECTION REINFORCING

DETAIL B
NTS

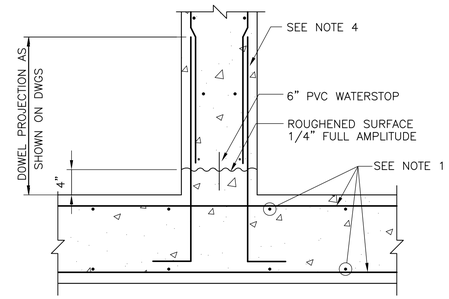

WALL BASE CONSTRUCTION JOINT

DETAIL C
NTS

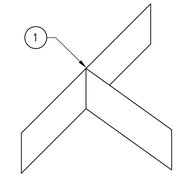

VERTICAL TEE

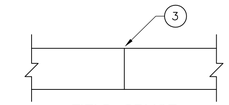

FIELD SPLICE

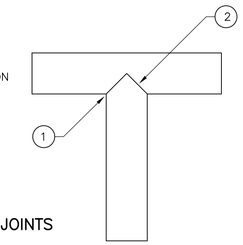

FLAT TEE

NOTES:

1. FACTORY FABRICATED INTERSECTION PIECES.
2. USED THERMOSTATICALLY CONTROLLED SPLICING IRON TO WELD INTERSECTION PIECE TO FIELD PIECE. SPLICING IRON SHALL BE DESIGNED SPECIFICALLY FOR THE WATERSTOP BEING SPLICED.
3. USED INDIRECT SOURCE OF HEAT ONLY. USE OF DIRECT FLAME IS SPECIFICALLY PROHIBITED.
4. FOLLOWED MANUFACTURER'S RECOMMENDATIONS FOR ALL SPLICING AND WELDING REQUIREMENTS.

PVC WATERSTOP SPLICE AND JOINTS

DETAIL D
NTS

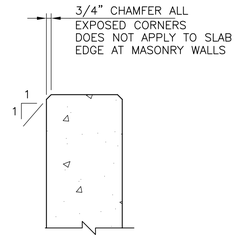

CHAMFER

DETAIL E
NTS

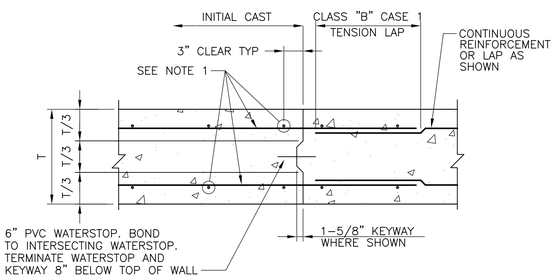

WALL CONSTRUCTION JOINT

DETAIL F
NTS

NOTES:

1. BASIC SLAB/WALL/BEAM REINFORCING AS SHOWN ON DESIGN DRAWINGS
2. SIZE AND SPACING OF BAR TO MATCH WALL/BEAM REINFORCEMENT AS SHOWN ON DESIGN DRAWINGS
3. FOR ADDITIONAL BARS AT CORNERS AND INTER-SECTIONS, SEE DESIGN DRAWINGS
4. FOR DOWEL SIZE AND SPACING SEE DESIGN DRAWINGS

CLASS B TENSION LAP SPLICE LENGTHS IN WALLS AND SLABS (INCHES)

BAR SIZE	BLACK STEEL f'c=4000 psi TOP BARS	BLACK STEEL f'c=4000 psi OTHER BARS
3	15	12
4	20	15
5	29	23
6	40	31
7	65	50
8	81	62
8*	49	37
9*	60	46
10*	74	57

TENSION DEVELOPMENT LENGTHS IN WALLS AND SLABS (INCHES)

BAR SIZE	BLACK STEEL f'c=4000 psi TOP BARS	BLACK STEEL f'c=4000 psi OTHER BARS
3	12	12
4	15	12
5	22	17
6	31	24
7	50	38
8	62	48
8*	37	29
9*	46	36
10*	57	44

NOTES:

1. MINIMUM BAR SPACING = 6" INCHES ON CENTER.
2. MINIMUM CONCRETE COVER = 1", EXCEPT AS NOTED BY * . * INDICATES MINIMUM CONCRETE COVER= 2".
3. A TOP BAR IS A HORIZONTAL BAR WHERE MORE THAN 12" OF FRESH CONCRETE IS CAST DIRECTLY BELOW THE BAR. WHERE HORIZONTAL WALL REINFORCEMENT IS UNIFORMLY SPACED IN A VERTICAL PLANE AT 12" MAXIMUM SPACING, LENGTHS MAY BE AS FOR "OTHER BARS".
4. LENGTHS FOR BEAMS AND COLUMNS SHALL BE AS SHOWN ON THE DRAWINGS.

LAP SPLICE AND DEVELOPMENT LENGTHS
BLACK REINFORCING STEEL

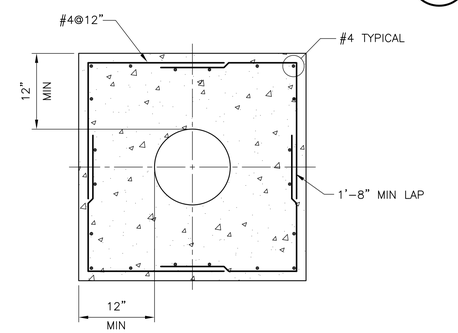

PIPE ENCASEMENT

DETAIL G
1"=1'-0"

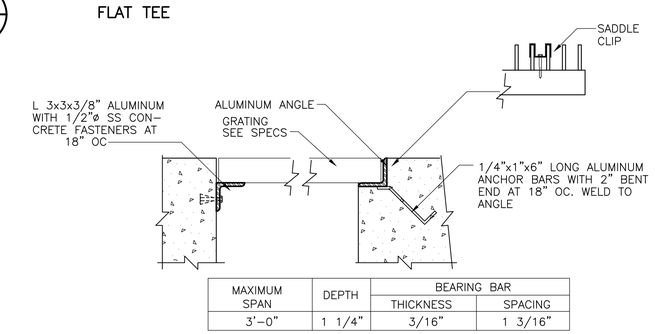

MAXIMUM SPAN	DEPTH	BEARING BAR THICKNESS	BEARING BAR SPACING
3'-0"	1 1/4"	3/16"	1 3/16"

GRATING AND GRATING SUPPORT

DETAIL H
1"=1'-0"

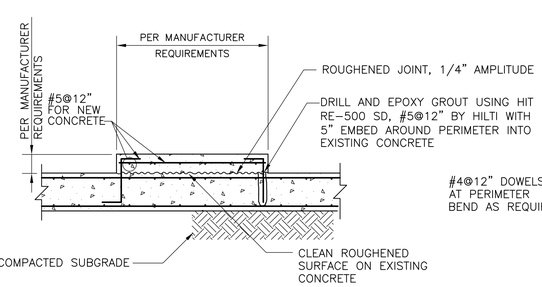

HOUSEKEEPING PAD FOR NEW OR EXISTING SLAB

DETAIL I
NOT TO SCALE

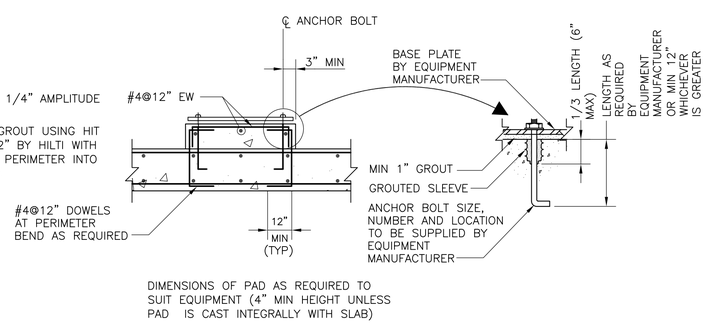

EQUIPMENT PAD

DETAIL J
NOT TO SCALE

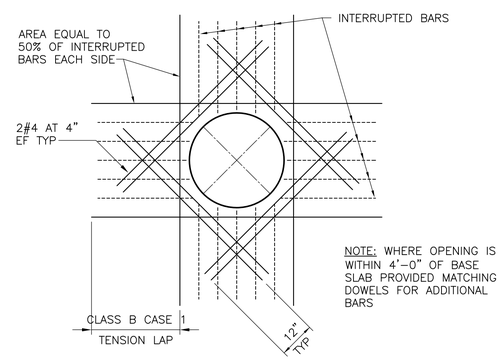

NOTE: WHERE OPENING IS WITHIN 4'-0" OF BASE SLAB PROVIDED MATCHING DOWELS FOR ADDITIONAL BARS

REINFORCEMENT AT CIRCULAR OPENINGS GREATER THAN 12"

DETAIL K
NOT TO SCALE

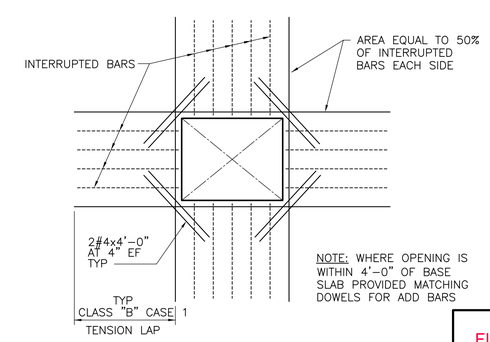

NOTE: WHERE OPENING IS WITHIN 4'-0" OF BASE SLAB PROVIDED MATCHING DOWELS FOR ADD BARS

REINFORCEMENT AT RECTANGULAR OPENINGS GREATER THAN 12"

DETAIL L
NOT TO SCALE

FINAL AS-BUILT

REV. NO.	DATE	DRWN	CHKD	REMARKS

DESIGNED BY:
DRAWN BY:
SHEET CHK'D BY:
CROSS CHK'D BY:
APPROVED BY:
DATE: MARCH 2012

PREPARED BY:
CAPE
CAPE Environmental Management, Inc.

US Army Corps of Engineers Kansas City District
GROUNDWATER TREATMENT FACILITY PACKAGE
ROCKAWAY BOROUGH SUPERFUND SITE
EAST MAIN/WALL STREET PLUME - OU2
ROCKAWAY BOROUGH, NEW JERSEY

STANDARD DETAILS

PROJECT 50001.005
FILE NAME: SD01STDT AS-BUILT
SHEET NO.
SD-1

Xref's: [RKAWYBDR,] Images: []

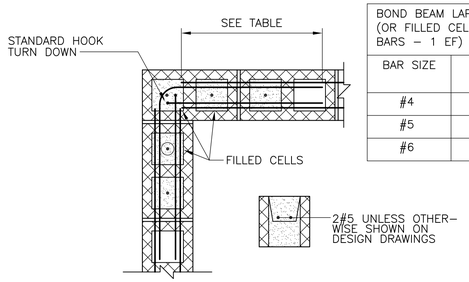

BOND BEAM LAP LENGTH (OR FILLED CELLS WITH 2 BARS – 1 EF)	
BAR SIZE	LAP LENGTH (INCHES)
#4	2'–10"
#5	4'–6"
#6	6'–2"

CORNER CMU/BOND BEAM/FILLED CELL

DETAIL A
NTS

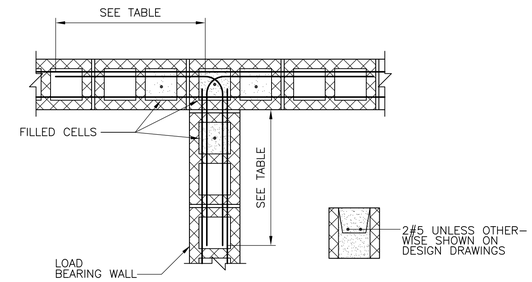

INTERSECTION CMU/BOND BEAM/FILLED CELL

DETAIL B
NTS

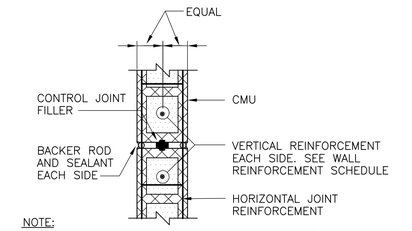

NOTE:
EXTENDED VERTICAL REINFORCEMENT FULL HEIGHT OF MASONRY. DISCONTINUE HORIZONTAL REINFORCEMENT AT MASONRY CONTROL JOINT, EXCEPT FOR BOND BEAM REINFORCEMENT AT ROOF.

CMU CONTROL JOINT

DETAIL C
NTS

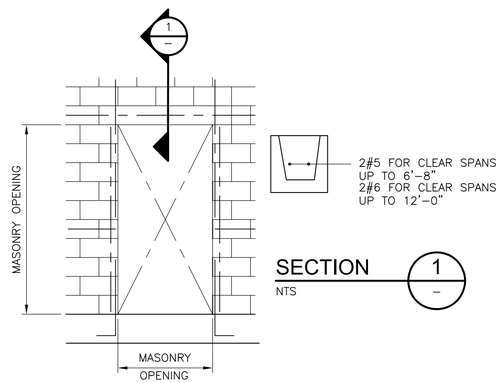

SECTION 1
NTS

LINTEL WITH STUCCO OR VENEER FINISH

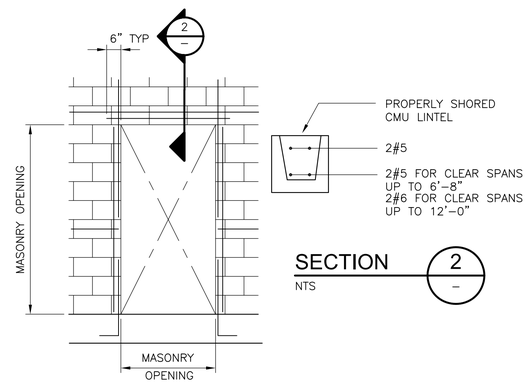

SECTION 2
NTS

LINTEL WITHOUT STUCCO FINISH

DETAIL D
NTS

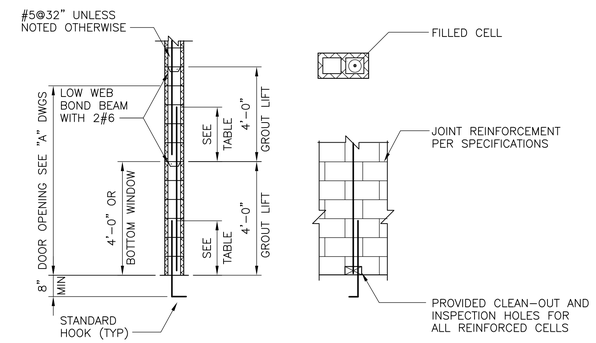

DOWEL/VERTICAL BAR LAP LENGTH (1 MAIN BAR IN CENTER OF THE CELL)	
BAR SIZE	LAP LENGTH (INCHES)
#5	2'–0"
#6	2'–6"
#7	3'–4"
#8	4'–6"

NOTE: BOND BEAM REINFORCEMENT: 2#6 @ 4'–0" OC MAX. UNLESS OTHERWISE SHOWN ON DESIGN DRAWINGS.

FILLED CELL

DETAIL E
NTS

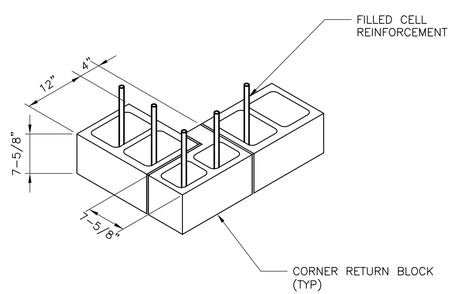

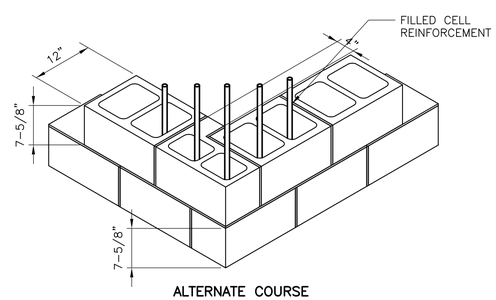

ALTERNATE COURSE

12" CMU BLOCK CORNER DETAIL

DETAIL F
1"=1'–0"

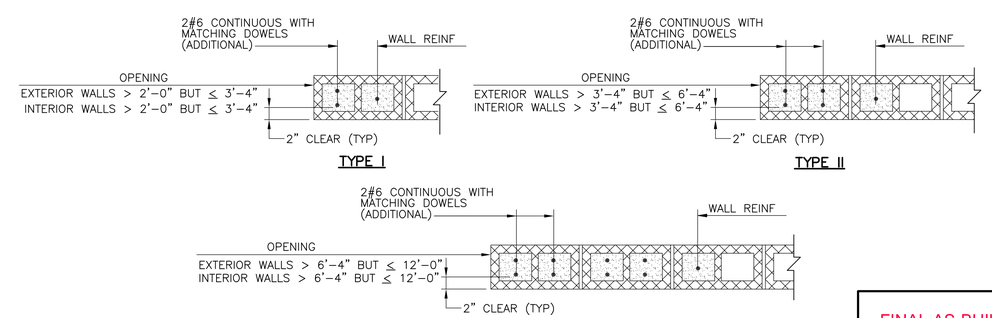

TYPICAL CMU WALL OPENING

DETAIL G
NTS

FINAL AS-BUILT

REV. NO.	DATE	DRWN	CHKD	REMARKS

DESIGNED BY:
DRAWN BY:
SHEET CHK'D BY:
CROSS CHK'D BY:
APPROVED BY:
DATE: MARCH 2012

PREPARED BY:
CAPE Environmental Management, Inc.

US Army Corps of Engineers Kansas City District
GROUNDWATER TREATMENT FACILITY PACKAGE
ROCKAWAY BOROUGH SUPERFUND SITE
EAST MAIN/WALL STREET PLUME - OU2
ROCKAWAY BOROUGH, NEW JERSEY

STANDARD DETAILS

PROJECT 50001.005
FILE NAME: SD02STDT AS-BUILT
SHEET NO.
SD-2

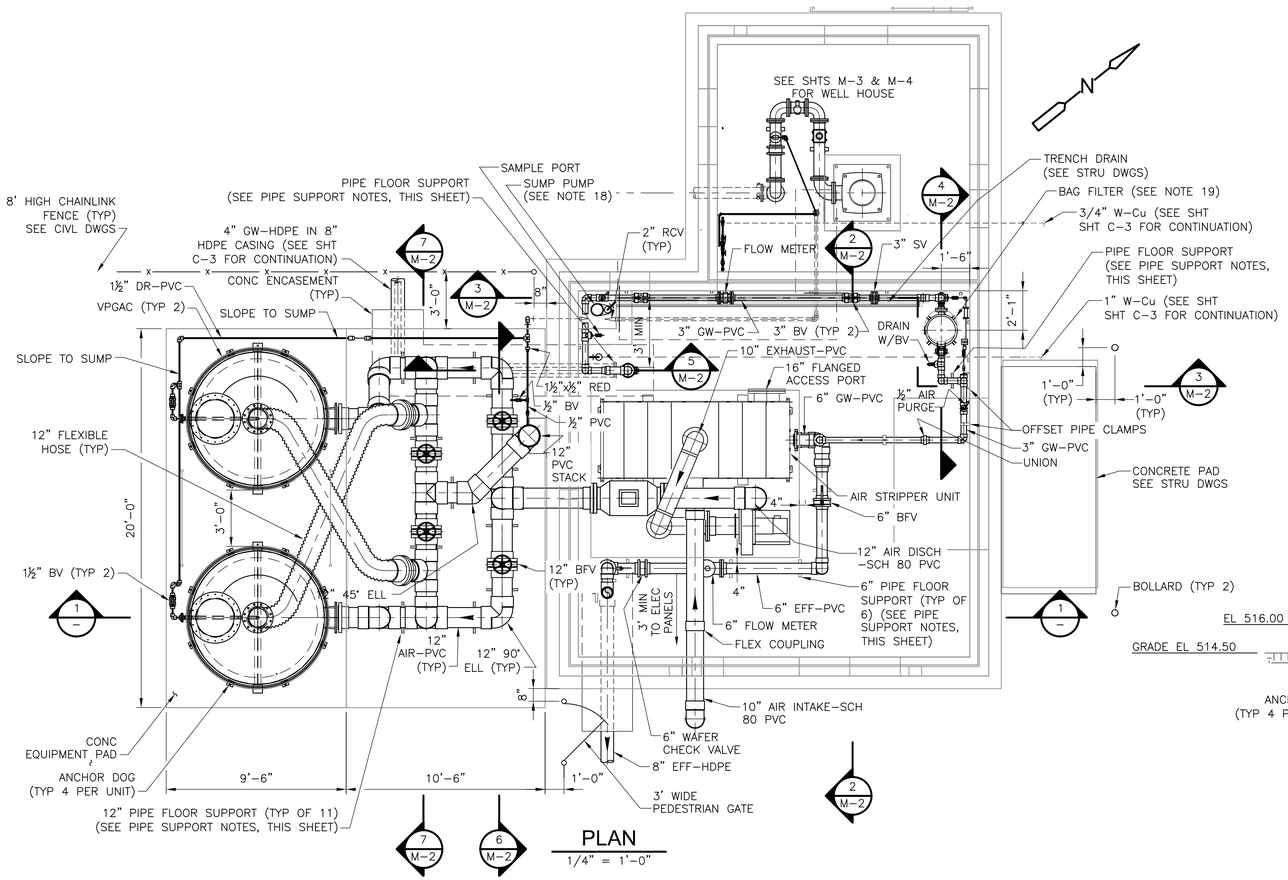

PLAN
1/4" = 1'-0"

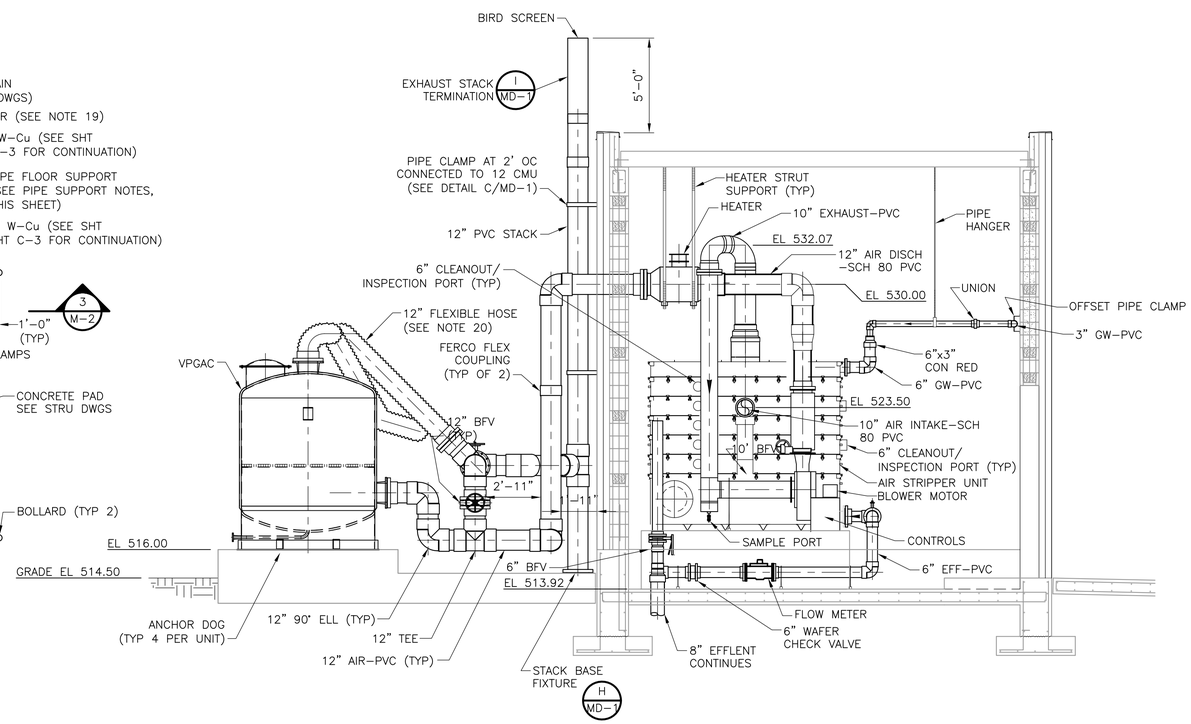

SECTION 1
1/4" = 1'-0"

MECHANICAL PIPING GENERAL NOTES:

1. PROCESS EQUIPMENT DIMENSIONS, LOCATIONS AND PIPING SYSTEM LAYOUTS ARE BASED ON EQUIPMENT SELECTED BY THE OWNER AND ENGINEER. IF THE CONTRACTOR PROPOSES TO FURNISH EQUIPMENT THAT REQUIRES AN ARRANGEMENT OR SPACE DIFFERING FROM THAT INDICATED ON THE DRAWINGS OR SPECIFIED, THE CONTRACTOR SHALL PREPARE AND SUBMIT TO THE ENGINEER FOR APPROVAL DETAILED ARCHITECTURAL, STRUCTURAL, MECHANICAL, PLUMBING, INSTRUMENTATION, HVAC AND ELECTRICAL DRAWINGS AND EQUIPMENT LISTS SHOWING ALL NECESSARY CHANGES AND EMBODYING ALL FEATURES OF THE EQUIPMENT AND/OR PROCESS SYSTEM HE PROPOSES TO FURNISH. THIS INFORMATION SHALL INCLUDE BUT NOT BE LIMITED TO PLANS, SECTIONS, DETAILS AND SCHEMATICS OF ALL APPURTENANCES REQUIRED. SUCH CHANGES, IF APPROVED BY THE ENGINEER, SHALL BE AT NO EXTRA COST TO THE OWNER. THE CONTRACTOR SHALL ASSUME THE COST OF, AND THE RESPONSIBILITY FOR, SATISFACTORILY ACCOMPLISHING ALL THE NECESSARY CHANGES CORRESPONDING TO THE DIMENSIONS AND CHARACTERISTICS OF THE EQUIPMENT SUBMITTED AND APPROVED BY THE ENGINEER.
2. EXTERIOR PIPING IS SHOWN ON SHEET C-3.
3. DIELECTRIC COUPLINGS, FLANGES OR UNIONS WERE INSTALLED AT ALL CONNECTIONS OF COPPER PIPE TO OTHER TYPES OF METALLIC PIPING.
4. GENERALLY, SMALL PIPING IS SHOWN DIAGRAMMATICALLY. FIELD ROUTE SUBJECT TO THE APPROVAL OF THE ENGINEER TO AVOID INTERFERENCES. APPURTENANCES MAY NOT BE SHOWN ON THE DRAWINGS FOR THE SAKE OF CLARITY. THE CONTRACTOR FURNISHED, INSTALLED AND TESTED ALL PIPING SYSTEMS AS INDICATED ON THE PROCESS FLOW SCHEMATICS, P&ID'S AND/OR AS DEFINED IN THE SPECIFICATIONS TO PROVIDE THE COMPLETE SYSTEM.
5. NOT ALL AND ONLY CERTAIN TYPES OF SUPPORTS ARE SHOWN ON THE MECHANICAL DRAWINGS.
6. ALL VALVES, EQUIPMENT, AND PIPING HAVING DRAIN OUTLETS WERE PIPED TO THE FLOOR USING PVC PIPE OF APPROPRIATE DIAMETER AS INDICATED ON THE DRAWINGS OR AS RECOMMENDED BY THE EQUIPMENT MANUFACTURER. SMALL DRAIN PIPING IS NOT SHOWN ON THE DRAWINGS. AIR PURGE VALVES WERE PIPED TO THE SUMP.
7. UNLESS OTHERWISE SHOWN, ALL PIPES UNDER CONCRETE SLABS WERE ENCASED IN CONCRETE AS SHOWN ON THE STRUCTURAL DRAWINGS. PIPES WERE PRESSURE TESTED BEFORE ENCASING.
8. NOT ALL VALVE AND GATE OPERATORS ARE SHOWN (i.e. HANDWHEELS, CRANKS, CHAINWHEELS, MOTORS OR LEVERS). OPERATORS WERE LOCATED TO ALLOW CONVENIENT OPENING AND CLOSING OF VALVES OR GATES. ORIENTATION OF OPERATORS WAS BY APPROVAL OF ENGINEER. NO VALVE WERE INSTALLED WITH THE OPERATING STEM IN THE VERTICAL DOWNWARD POSITION.
9. PIPING WAS INSTALLED SO THAT ANY PIPE, LAYER OF PIPING OR EQUIPMENT CAN BE REMOVED WITHOUT DISTURBING REMAINING PIPES AND SUPPORTS.
10. THE CONTRACTOR PROVIDED UNIONS OR DISMANTLING COUPLINGS WHETHER THEY ARE SHOWN ON THE DRAWINGS OR NOT ON ALL PIPELINES WITH WELDED, THREADED OR SOLVENT-CEMENTED JOINTS: AT ALL EQUIPMENT CONNECTIONS, AT A MINIMUM OF EVERY 50 FEET AND IN BRANCH LINES TO ALLOW CONVENIENT REMOVAL OF PIPING, EQUIPMENT AND APPURTENANCES.
11. THE CONTRACTOR WAS RESPONSIBLE FOR FIELD LOCATING AND TAGGING ALL VALVES.
12. INSTRUMENTATION IS SHOWN ON PROCESS AND INSTRUMENTATION DRAWINGS (P&IDs). SEE P&IDs FOR ADDITIONAL NOTES AND DETAILS.
13. ALL REQUIRED SYSTEM PIPING, VALVES, EQUIPMENT AND APPURTENANCES MAY NOT BE SHOWN ON M DRAWINGS IN THEIR ENTIRETY. THOSE ITEMS, EXCEPT PIPE FITTINGS, UNIONS, BENDS, ETC, ARE SHOWN ON THE PROCESS FLOW DIAGRAM AND THE P&IDs. CONTRACTOR SHALL FURNISH, INSTALL AND TEST ALL SYSTEMS IN THE FIELD AS INDICATED IN THE P&ID, AS DEFINED IN THE CONTRACT, AND AS ACCEPTABLE TO THE ENGINEER, TO PROVIDE CONTINUOUS FLOW PATHS AND COMPLETE OPERATING SYSTEMS.
14. BALL VALVE WERE STAINLESS STEEL.
15. IT WAS THE CONTRACTOR'S RESPONSIBILITY TO FULLY COORDINATE ALL PROCESS PIPING AND EQUIPMENT WITH THAT OF ALL OTHER TRADES INCLUDING HVAC, PLUMBING, FIRE PROTECTION, ELECTRICAL AND CIVIL.
16. ALL PIPES GREATER THAN 8 FT FROM FINISHED FLOOR AND GREATER THAN 12" FROM WALLS WAS SUPPORTED FROM THE BUILDING ROOF STRUCTURE.
17. ALL DI AND EXTERIOR PVC PIPING WAS PAINTED PER THE SCHEDULE ON A-4.
18. SUMP PUMP WAS ZOELLER MODEL N163 OR EQUAL. PROVIDE 1 YEAR WARRENTY FROM TIME OF START UP.
19. BAG FILTER WAS EATON BAG FILTRATION SYSTEM MODEL MBF-0302-CS10-030A-UT-13HE MULTIBAG FILTER HOUSING. PROVIDE CARBON STEEL HOUSING CAPABLE OF HOLDING 3 FILTER BAGS. PROVIDE SPRING ASSISTED COVER WITH SWING EYE-BOLT OR SEGMENT CLAMP CLOSURE MECHANCISM, O-RING SEALS, 3-INCH FLANGED INLET AND OUTLET CONNECTION, AND 1" VENT. ALLOWABLE FLOW UP TO 210 GPM AND PRESSURE UP TO 150 PSI. BAG FILTERS : EATON SENTINEL FILTER BAGS, , BAG SIZE 2, 25 MICRON, POLYPROPYLENE FELT, MODEL PO-25-P02E-WW-30. PROVIDE ONE YEAR WARRANTY FROM SYSTEM STARTUP.
20. FLEXIBLE HOSE WERE TWO PLY POLYESTER, NEOPRENE COATED INDUSTRIAL HOSE, MANUFACTURED BY DURA-VENT, OR EQUIVALENT. THE HOSE WERE ATTACHED TO THE PVC PIPING USING CAMLOCK QUICK-CONNECT FITTINGS.

PIPE SUPPORT NOTES:

1. PIPE FLOOR SUPPORT LOCATIONS WERE AS SHOWN ON SHEET M-1, PLAN VIEW.
2. FLOOR STANDS AND HARDWARE WERE STEEL WITH COATING OF ELECTRO-PLATED ZINC (ASTM B633), PRE-GALVANIZED (ASTM A653), HOT-DIP GALVANIZED (ASTM A123) OR BETTER.
3. FLOOR SUPPORTS WERE COOPER B-LINE TYPE B3092 OR EQUAL.
4. BASE STANDS WERE COOPER B-LINE TYPE B3088T OR EQUAL.
5. BASE STANDS WERE ATTACHED TO THE FLOOR USING 1/2" WEDGE-EXPANSION ANCHORS, POWERS FASTENERS TYPE 7422SD1 OR EQUAL, WITH MINIMUM EMBEDMENT OF 2-1/4". CONTRACTOR INSTALLED ANCHORS ACCORDING TO MANUFACTURER'S INSTRUCTIONS AND AVOID INSTALLATION INTO CONCRETE REINFORCING.
6. OFFSET PIPE CLAMPS WERE COOPER B-LINE TYPE B3148 OR EQUAL.

FINAL AS-BUILT

1/4" = 1'- 0"
2 1 0 2 4

REV. NO.	DATE	DRWN	CHKD	REMARKS

DESIGNED BY: E. GALLERIE
DRAWN BY: J. ROBINSON
SHEET CHK'D BY: B. LUBENOW
CROSS CHK'D BY: M. POPPER
APPROVED BY:
DATE: MARCH 2012

PREPARED BY:
CAPE
CAPE Environmental Management, Inc.

US Army Corps of Engineers Kansas City District
GROUNDWATER TREATMENT FACILITY PACKAGE
ROCKAWAY BOROUGH SUPERFUND SITE
EAST MAIN/WALL STREET PLUME - OU2
ROCKAWAY BOROUGH, NEW JERSEY

GROUNDWATER TREATMENT FACILITY
PLAN AND SECTION

PROJECT 50001.005
FILE NAME: M001TFPL AS-BUILT
SHEET NO.
M-1

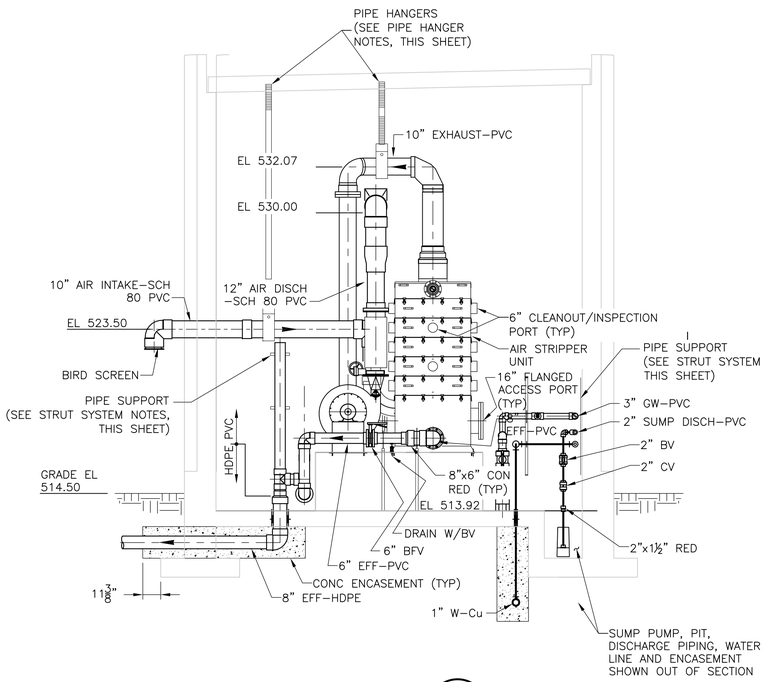

SECTION 2 (M–1)
1/4" = 1'–0"

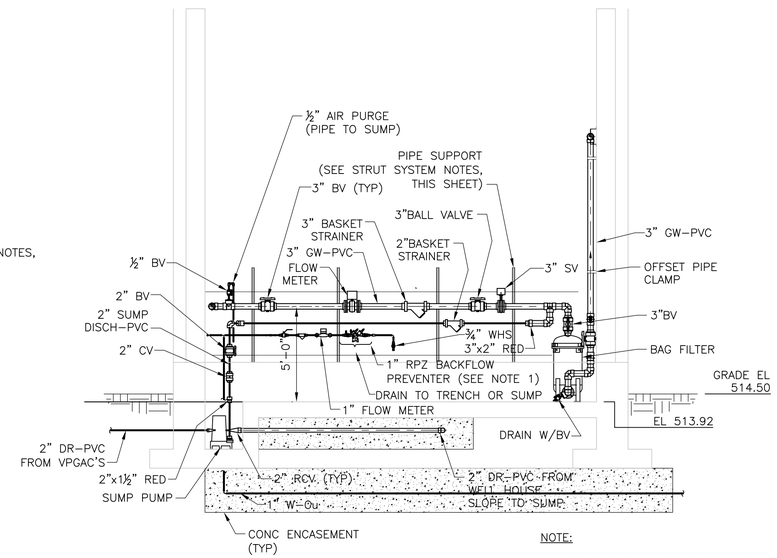

NOTE:

1. RPZ BACKFLOW PREVENTER WAS 1" WATTS SERIES 919 OR APPROVED EQUAL.

SECTION 3 (M–1)
1/4" = 1'–0"

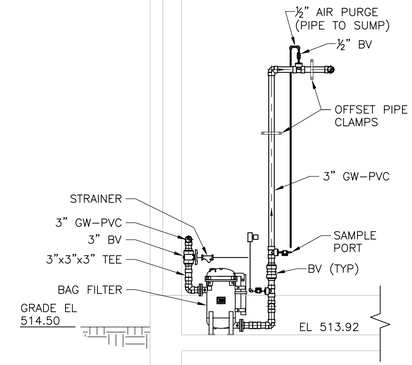

SECTION 4 (M–1)
1/4" = 1'–0"

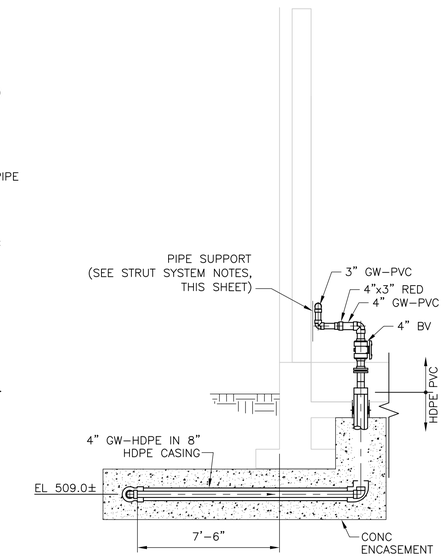

SECTION 5 (M–1)
1/4" = 1'–0"

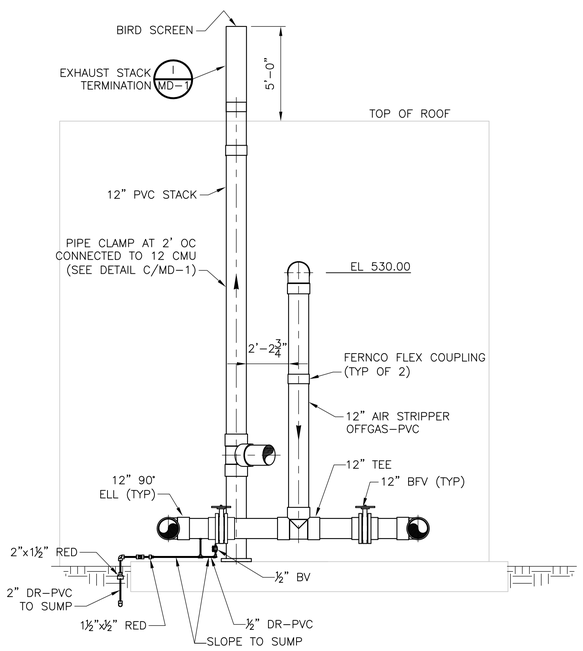

SECTION 6 (M–1)
1/4" = 1'–0"

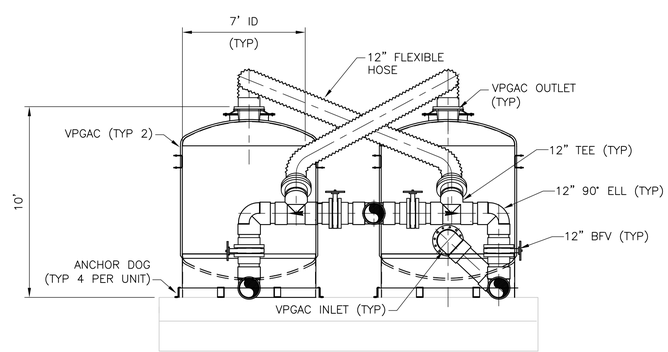

SECTION 7 (M–1)
1/4" = 1'–0"

STRUT SYSTEM NOTES:

1. CHANNEL WAS COOPER B–LINE TYPE B22 GALVANIZED OR EQUAL WITH PLASTIC END CAPS.
2. HARDWARE WAS STEEL WITH COATING OF ELECTRO–PLATED ZINC (ASTM B633), PRE–GALVANIZED (ASTM A653), HOT–DIP GALVANIZED (ASTM A123) OR BETTER.
3. PIPE STRAPS WERE COOPER B–LINE TYPE B2400 OR EQUAL INSTALLED WITH SPRING CHANNEL NUTS.
4. WATER PIPE STRAP SPACING WAS NO GREATER THAN FIVE (5) FEET. ELBOWS, TEES, AND OTHER CHANGES IN DIRECTION HAD STRAPS INSTALLED ON EACH SIDE WITHIN ONE (1) FOOT OF THE CHANGE IN DIRECTION.
5. POST BASE FOR FLOOR–MOUNTED VERTICAL PIPE SUPPORT STRUTS WERE COOPER B–LINE TYPE B280 OR EQUAL.
6. CHANNELS WERE ATTACHED TO CMU WALL USING ¼" WEDGE ANCHORS, POWERS FASTENERS TYPE 7210SD OR EQUAL, WITH MINIMUM EMBEDMENT OF 2" SPACED NO GREATER THAN FIVE (5) FEET APART. CONTRACTOR INSTALLED ANCHORS ACCORDING TO MANUFACTURER'S INSTRUCTIONS AND AVOID INSTALLATION INTO CMU REINFORCING.

PIPE & HEATER HANGER NOTES:

1. CEILING ANCHOR LOCATIONS WERE COORDINATED WITH THE ROOF SYSTEM SUPPLIER AND OVERHEAD LIGHT LOCATIONS.
2. HANGERS AND HARDWARE WERE STEEL WITH COATING OF ELECTRO–PLATED ZINC (ASTM B633), PRE–GALVANIZED (ASTM A653), HOT–DIP GALVANIZED (ASTM A123) OR BETTER.
3. WATER PIPE HANGERS WERE COOPER B–LINE TYPE B386 OR EQUAL WITH A SPACING OF NO GREATER THAN FIVE (5) FEET INSTALLED APPROXIMATELY WHERE SHOWN ON THE DRAWINGS.
4. AIR/VAPOR PIPE HANGERS WERE COOPER B–LINE TYPE B3100 OR EQUAL INSTALLED APPROXIMATELY WHERE SHOWN ON THE DRAWINGS.
5. CEILING ROD ATTACHMENTS WERE COOPER B–LINE TYPE B3082 OR EQUAL.
6. CEILING ROD ATTACHMENTS WERE ATTACHED TO CEILING USING 3/8" WEDGE–EXPANSION ANCHORS, POWER FASTENERS TYPE 7414SD1 OR EQUAL, WITH MINIMUM EMBEDMENT OF 2–3/8". CONTRACTOR INSTALLED ANCHORS ACCORDING TO MANUFACTURER'S INSTRUCTIONS AND AVOID INSTALLATION INTO CEILING REINFORCING.

1/4" = 1'– 0"
2 1 0 2 4

FINAL AS-BUILT

REV. NO.	DATE	DRWN	CHKD	REMARKS

DESIGNED BY:
DRAWN BY:
SHEET CHK'D BY:
CROSS CHK'D BY:
APPROVED BY:
DATE: MARCH 2012

PREPARED BY:
CAPE
CAPE Environmental Management, Inc.

US Army Corps of Engineers Kansas City District
GROUNDWATER TREATMENT FACILITY PACKAGE
ROCKAWAY BOROUGH SUPERFUND SITE
EAST MAIN/WALL STREET PLUME - OU2
ROCKAWAY BOROUGH, NEW JERSEY

GROUNDWATER TREATMENT FACILITY
SECTIONS

PROJECT 50001.005
FILE NAME: M002TFSC AS–BUILT
SHEET NO.
M-2

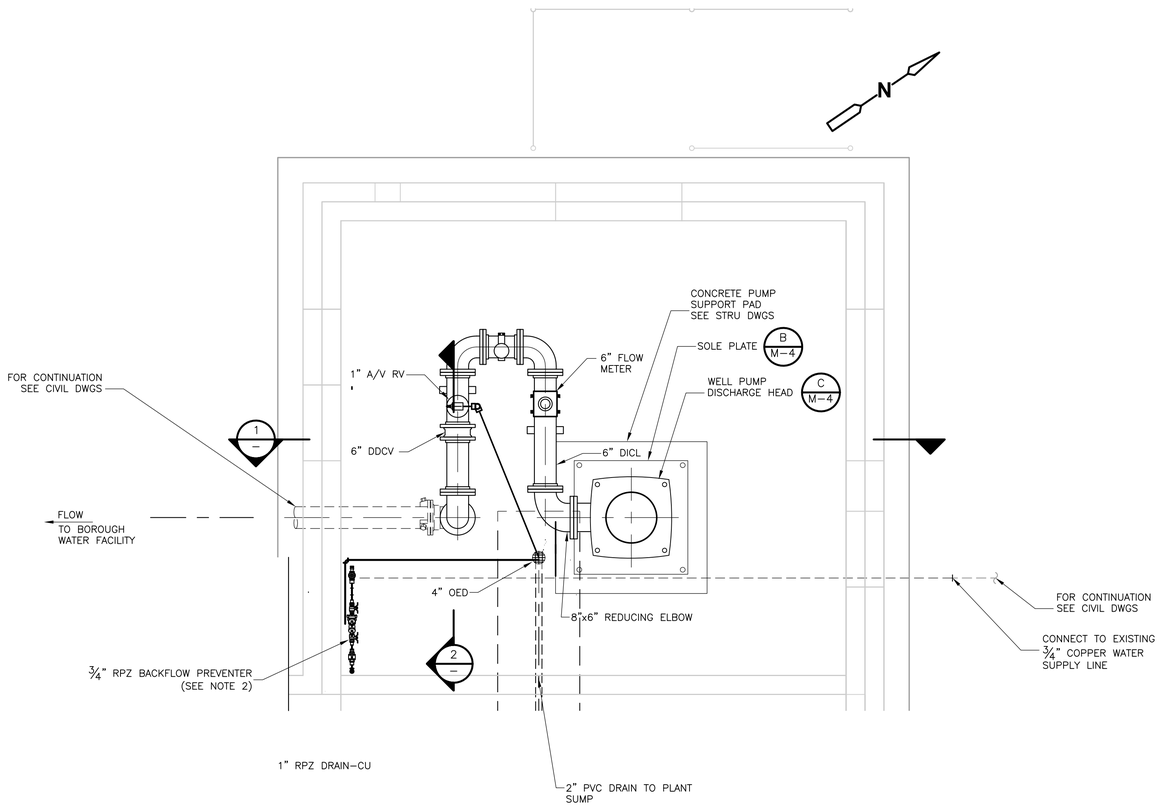

ENLARGED WELL HOUSE

PLAN

1/2" = 1'-0"

NOTES:
1. CONTRACTOR CONFIRMRD DIMENSIONS OF ALL EXISTING EQUIPMENT, STRUCTURES, AND PIPING PRIOR TO CONSTRUCTION.
2. RPZ BACKFLOW PREVENTER WAS ¾" WATTS SERIES 919 OR APPROVED EQUAL.

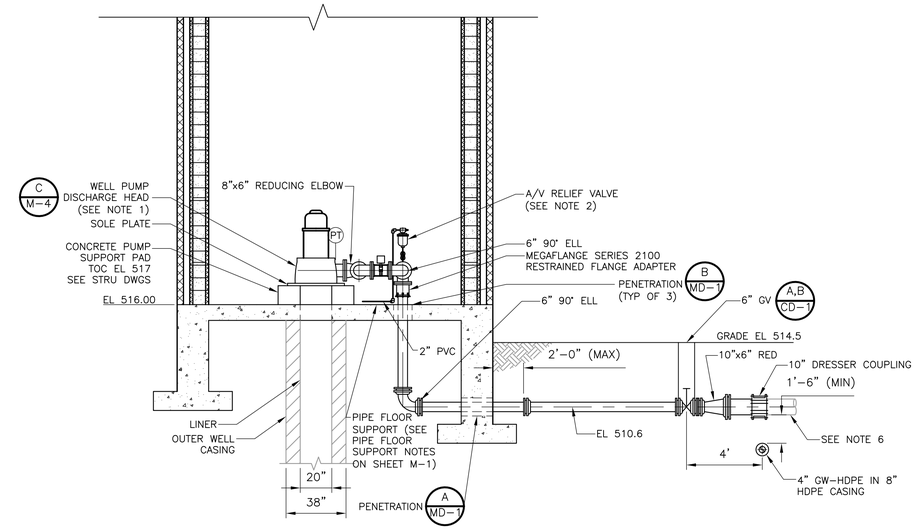

SECTION 1

1/4" = 1'-0"

NOTES:
1. CONTRACTOR PROTECTED AND EVALUATED CONDITION OF EXISTING PUMP HEAD, COLUMN, SHAFT, BOWLS AND APPURTENANCES AND REUSED WHERE POSSIBLE. IF A NEW PUMP WAS REQUIRED, PUMP WAS CURRENT MODEL VERTICAL CENTRIFUGAL PUMP EQUAL TO LAYNE MODEL TF825 WITH DESIGN CONDITION OF 500GPM AT 160FT TDH.
2. A/V RELIEF VALVE WAS BY APCO 142DAT OR APPROVED EQUAL.
3. CHECK VALVE WAS 6-INCH CRANE MODEL DUO-CHEK II STYLE G OR APPROVED EQUAL.
4. FLOW METER WAS 6-INCH MCCROMETER MCSPACESAVER M0300F WITH FS100 FLOW STRAIGHTENER OR APPROVED EQUAL. PROVIDED MINIMUM 1.5 PIPE DIAMETERS FROM THREAD-O-LET TO PROPELLER TIP AND MINIMUM 1 PIPE DIAMETER FROM METER SADDLE TO CHECK VALVE.
5. BURIED DIP JOINTS WERE RESTRAINED PUSH-ON TYPE JOINTS PER SPECIFICATION SECTION 02616.
6. CONTRACTOR EXPOSED EXISTING FORCE MAIN, DETERMINED ELEVATION OF CONNECTION, AND ADJUSTED ELEVATION/SLOPE OF NEW FORCE MAIN TO ALIGN PROPERLY AT THE CONNECTION POINT. TOP OF PIPE WAS 42-IN MINIMUM BELOW GRADE.
7. DISCHARGE PIPING WAS CEMENT-LINED DUCTILE IRON.

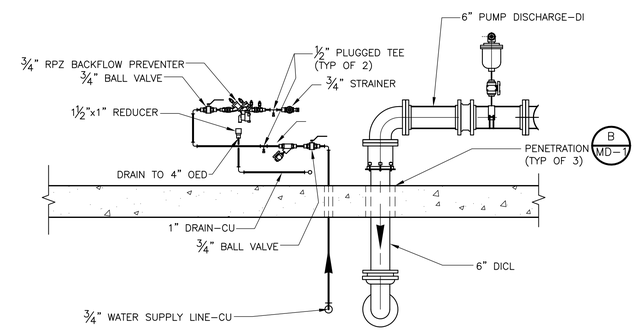

SECTION 2

1/2" = 1'-0"

1/4" = 1'- 0"
2 1 0 2 4

1/2" = 1'-0"
1 0 1 2

FINAL AS-BUILT

REV. NO.	DATE	DRWN	CHKD	REMARKS

DESIGNED BY:
DRAWN BY:
SHEET CHK'D BY:
CROSS CHK'D BY:
APPROVED BY:
DATE: MARCH 2012

PREPARED BY:
CAPE Environmental Management, Inc.

US Army Corps of Engineers Kansas City District
GROUNDWATER TREATMENT FACILITY PACKAGE
ROCKAWAY BOROUGH SUPERFUND SITE
EAST MAIN/WALL STREET PLUME - OU2
ROCKAWAY BOROUGH, NEW JERSEY

GW-1 WELL HOUSE PLAN AND SECTIONS

PROJECT 50001.005
FILE NAME: M003WHPL AS-BUILT
SHEET NO.
M-3

XREFS: RKAWYBDR, MTBWP001, STFBS000, MTBWS001

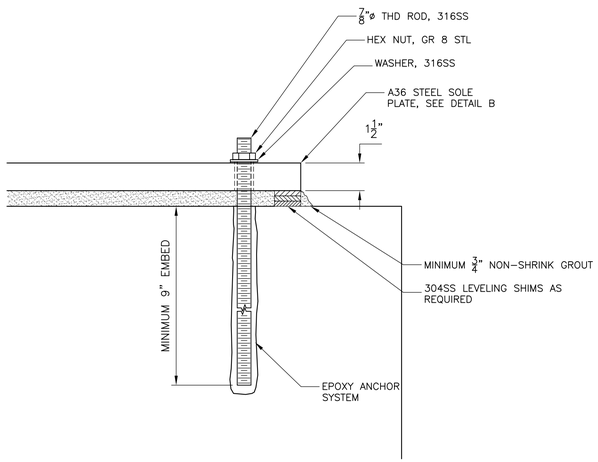

ANCHOR BOLT

DETAIL A

NTS

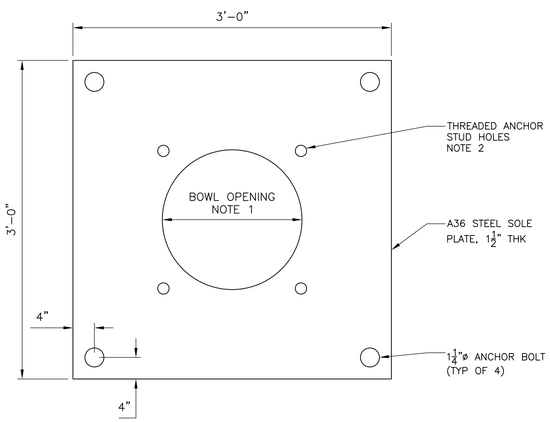

SOLE PLATE

DETAIL B

NTS

NOTES:
1. DIAMETER WAS EQUAL TO WELL CASE ID, CONTRACTOR MEASURED ID UPON REMOVAL OF EXISTING PUMP.
2. DRILLED AND TAPPED FOUR HOLES TO MATCH EXISTING BASE PLATE BOLT STUDS. BOLT HOLE PATTERN WAS OBTAINED FROM EXISTING PUMP BASE PLATE.

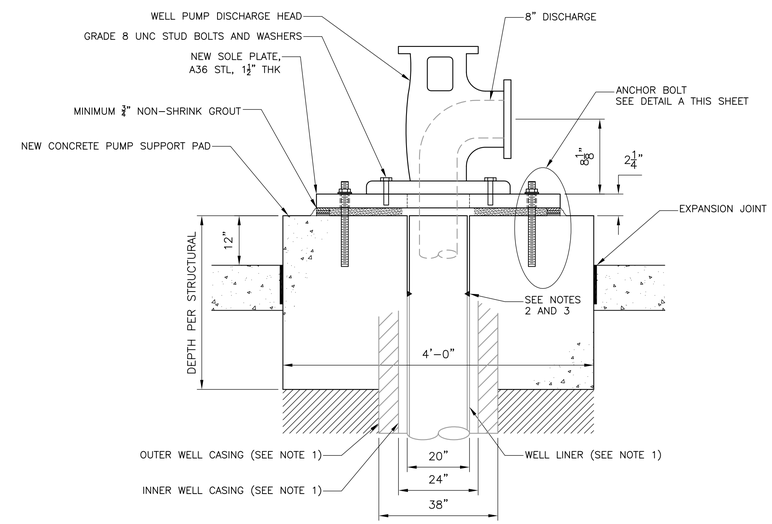

PUMP DISCHARGE HEAD

DETAIL C

NTS

NOTES:
1. TOP OF CASING ELEVATIONS FOR EXISTING WELL LINER AND CASINGS ARE UNKNOWN.
2. DEMOLISHED EXISTING SLAB AND PUMP SUPPORT PAD WHILE PROTECTING WELL LINER AND CASINGS.
3. CLEAN CUT WELL LINER AND BUTT WELDED MATCHING EXTENSION TO ELEVATION 517.

FINAL AS-BUILT

REV. NO.	DATE	DRWN	CHKD	REMARKS

DESIGNED BY:
DRAWN BY:
SHEET CHK'D BY:
CROSS CHK'D BY:
APPROVED BY:
DATE: MARCH 2012

PREPARED BY:
CAPE
CAPE Environmental Management, Inc.

US Army Corps of Engineers Kansas City District
GROUNDWATER TREATMENT FACILITY PACKAGE
ROCKAWAY BOROUGH SUPERFUND SITE
EAST MAIN/WALL STREET PLUME - OU2
ROCKAWAY BOROUGH, NEW JERSEY

WELL HOUSE DETAILS

PROJECT 50001.005
FILE NAME: M004STDT AS-BUILT
SHEET NO.
M-4

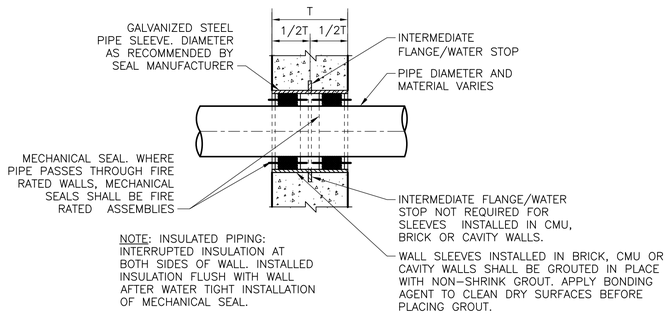

WALL SLEEVE WITH MECHANICAL SEAL FOR NEW CONCRETE, BRICK, CMU OR CAVITY WALLS

DETAIL A
NTS

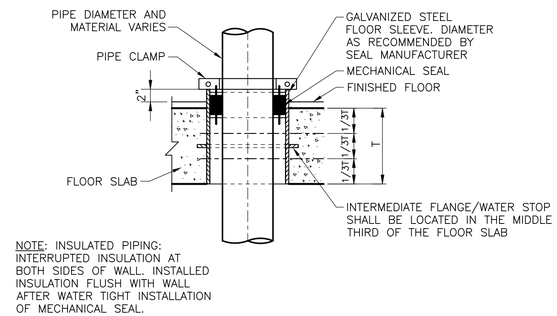

FLOOR SLEEVE WITH MECHANICAL SEAL

DETAIL B
NTS

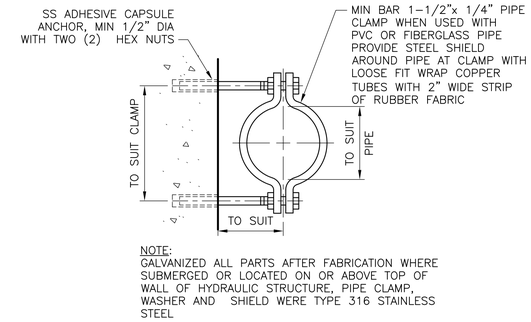

PIPE CLAMP

DETAIL C
NTS

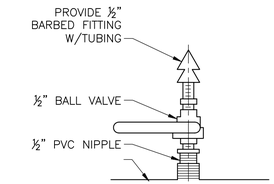

SAMPLE TAP

DETAIL D
NTS

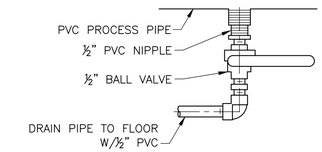

DRAIN

DETAIL E
NTS

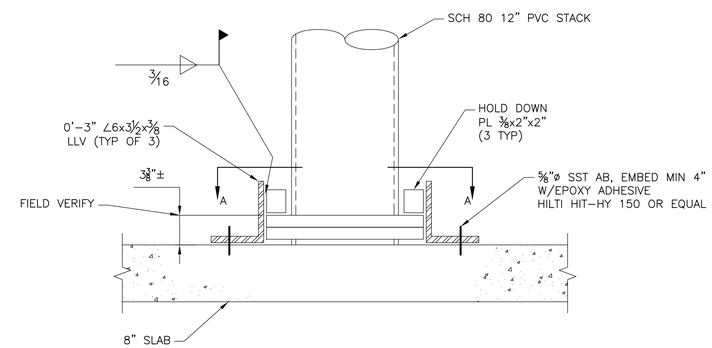

PLAN

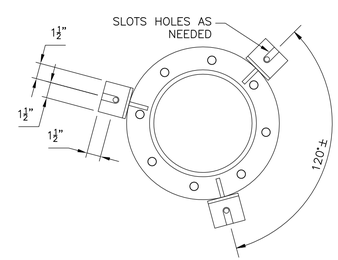

SECTION A-A

STACK BASE FIXTURE

DETAIL H
NTS

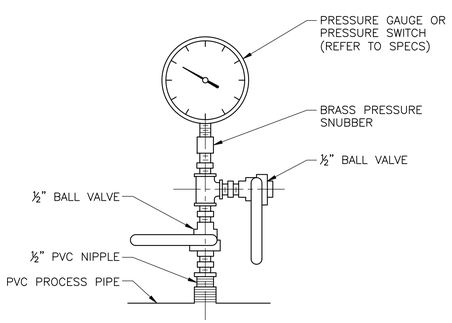

SAMPLE TAP OR DRAIN

DETAIL F
NTS

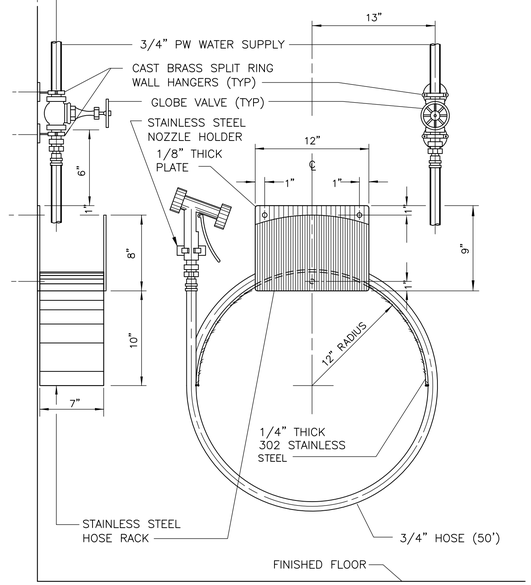

WASH HOSE STATION

DETAIL G
NTS

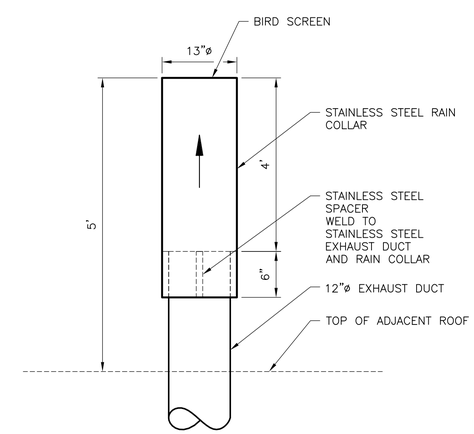

EXHAUST STACK TERMINATION

DETAIL I
NTS

FINAL AS-BUILT

REV. NO.	DATE	DRWN	CHKD	REMARKS

DESIGNED BY:
DRAWN BY:
SHEET CHK'D BY:
CROSS CHK'D BY:
APPROVED BY:
DATE: MARCH 2012

PREPARED BY:
CAPE
CAPE Environmental Management, Inc.

US Army Corps of Engineers Kansas City District
GROUNDWATER TREATMENT FACILITY PACKAGE
ROCKAWAY BOROUGH SUPERFUND SITE
EAST MAIN/WALL STREET PLUME - OU2
ROCKAWAY BOROUGH, NEW JERSEY

MISCELLANEOUS DETAILS

PROJECT 50001.005
FILE NAME: MD01SDDT AS-BUILT
SHEET NO.
MD-1

GENERAL ABBREVIATIONS

A	ACC	AIR COOLED CONDENSER
	ACU	AIR CONDITIONER UNIT (W/DX OR CHILL. WTR COILS)
	AFF	ABOVE FINISHED FLOOR
	AG	ABOVE GRADE
	AHU	AIR HANDLING UNIT
	ALT	ALTITUDE
	AP	ACCESS PANEL
	AD	ACCESS DOOR
	ATC	AUTOMATIC TEMPERATURE CONTROL
	AUTO	AUTOMATIC
	AUX	AUXILIARY
	AVG	AVERAGE
	AV	AUTOMATIC AIR RELEASE VENT
B	B TO B	BACK TO BACK
	BHP	BRAKE HORSEPOWER
	BOT	BOTTOM
	BTU	BRITISH THERMAL UNIT
	BBD	BACK DRAFT SELF ACTING DAMPER
	BBH	BASE BOARD HEATER
C	C TO C	CENTER TO CENTER
	CCW	COUNTER CLOCKWISE
	CENT	CENTRIFUGAL
	CFM	CUBIC FEET PER MINUTE
	CGP	CHILLED WTR GLYCOL PUMP
	CHIL	CHILLER (WTR OR AIR COOLED)
	CL	CENTER LINE
	CLG	CEILING
	CLR	CLEAR
	COL	COLUMN
	CTR	CENTER
	CV	VALVE FLOW COEFFICIENT
	CW	CLOCKWISE
D	D	TO DRAIN (NEAREST)
	DG	DOOR GRILLE
	DB	DRY BULB
	DIA	DIAMETER
	DISCH	DISCHARGE
	DN	DOWN
	DWG	DRAWING
	DX	DIRECT EXPANSION COIL
E	EUH	ELECTRIC UNIT HEATER
	EA	EACH
	EAF	EXHAUST AIR FAN
	ENT	ENTERING
	ELEC	ELECTRICAL
	ELEV	ELEVATION
	EMERG	EMERGENCY
	EXH	EXHAUST
	EXP	EXPANSION/COMPRESSION TANK
F	F	FAHRENHEIT
	FBV	FLOW BALANCE & SHUTOFF VALVE
	FC	FLEX CONNECTION
	FD	FIRE DAMPER
	FG	FLOOR GRILLE
	FLR	FLOOR
	FLG	FLANGE
	FOB	FLAT ON BOTTOM
	FOT	FLAT ON TOP
	FPM	FEET PER MINUTE
	FD	FIRE DAMPER
	FS	FLOW SENSOR
	FTR	FIN-TUBE RADIATION
G	GPM	GALLONS PER MINUTE
H	H-O-A	HAND-OFF-AUTO
	HP	HORSEPOWER
	H&V	HEATING AND VENTILATING
	HVAC	HEATING, VENTILATING AND AIR CONDITIONING
	HZ	HERTZ
I	ID	INSIDE DIAMETER
	INS	INSULATE,INSULATION
	INSTR	INSTRUMENT(ATION)
L	LAT	LEAVING AIR TEMPERATURE
	LWT	LEAVING WATER TEMPERATURE
	LVG	LEAVING
M	M	MOTOR
	MBH	THOUSAND BTU PER HOUR
	MATL	MATERIAL
	MAX	MAXIMUM
	MCC	MOTOR CONTROL CENTER
	MECH	MECHANICAL
	MFR	MANUFACTURER
	MIN	MINIMUM
	MISC	MISCELLANEOUS
	MTD	MOUNTED
N	NC	NORMALLY CLOSED
	NO	NORMALLY OPEN
	NOM	NOMINAL
	NPT	AMERICAN NATIONAL TAPER PIPE THREAD
	NTS	NOT TO SCALE
O	OA	OUTSIDE AIR
	OC	ON CENTER
	OD	OUTSIDE DIAMETER
	OPP	OPPOSITE
P	PSI	POUNDS PER SQUARE IN
	PSIA	PSI ABSOLUTE
	PSIG	PSI GUAGE
R	RA	RETURN AIR
	RAF	RETURN AIR FAN
	REG	REGISTER
	RH	RELATIVE HUMIDITY
	RPM	REVOLUTIONS PER MINUTE
	RED	REDUCER
S	SA	SUPPLY AIR
	SAF	SUPPLY AIR FAN
	SCH	SCHEDULE
	SP	STATIC PRESSURE
	SPEC	SPECIFICATION
	SS	STAINLESS STEEL
T	TAF	TRANSFER AIR FAN
	TD	TEMPERATURE DIFFERENCE
	TEMP	TEMPERATURE
	TOS	TOP OF STEEL
	TXV	THERMAL EXPANSION VALVE
U	U	HEAT TRANSFER COEFFICIENT
	UH	UNIT HEATER
	UL	UNDERWRITERS LABORATORY
V	V	VOLTS
	VAV	VARIABLE AIR VOLUME
	VEL	VELOCITY
W	W/	WITH
	W/O	WITHOUT
	WB	WET BULB
	WG	WALL GRILLE

SYMBOLS
VALVES

- UNCLASSIFIED. TYPE AS SHOWN ON THE DRAWINGS ADJACENT TO SYMBOL
- FLOW METER
- GATE VALVE
- GLOBE VALVE
- NEEDLE VALVE
- BALL VALVE
- 3-WAY BALL VALVE
- CONE VALVE
- PINCH VALVE
- DIAPHRAGM VALVE
- FLOW BALANCING AND SHUTOFF VALVE
- BUTTERFLY VALVE
- PLUG VALVE
- 3-WAY PLUG VALVE
- 4-WAY PLUG VALVE
- CHECK VALVE, GENERAL SYMBOL
- BALL CHECK VALVE
- DOUBLE DOOR CHECK VALVE
- S — SOLENOID VALVE
- S — 3-WAY SOLENOID VALVE
- ANGLE VALVE
- PRESSURE CONTROL VALVE (SELF CONTAINED)
- PRESSURE CONTROL VALVE (ACTIVATED BY STEAM PRESSURE)
- DIFFERENTIAL PRESSURE REDUCING REGULATOR WITH INTERNAL AND EXTERNAL PRESSURE TAPS
- 2-WAY CONTROL VALVE
- A AB B — 3-WAY MIXING VALVE
- 3-WAY MIXING VALVE
- AV — AUTOMATIC AIR RELEASE VENT
- GATE VALVE (NC) WITH HOSE CONNECTOR

SYMBOLS
PIPE FITTINGS

- CAP
- BOTTOM CONNECTION
- TOP CONNECTION
- ELBOW UP
- ELBOW DOWN
- REDUCER-CONCENTRIC
- REDUCER-ECCENTRIC STRAIGHT INVERT
- REDUCER-ECCENTRIC STRAIGHT CROWN
- TEE
- TEE UP
- TEE DOWN
- UNION-SCREWED
- UNION-FLANGED

SPECIALTIES

- ALIGNMENT GUIDE
- PA — ANCHOR
- H — HUMIDISTAT
- P — PRESSURE GAUGE AND COCK
- STRAINER
- THERMOMETER
- PD — PRESS. DIFF. W/ INDICATOR LIGHT & REMOTE ALARM @ ATC
- T — THERMOSTAT
- S — SMOKE SENSOR
- FS — FLOW SENSOR
- TO SPACE
- FROM SPACE
- 1/2" UC 100 CFM — UNDERCUT DOOR
- 20X12 LD OR DG 200 CFM — LOUVER DOOR OR DOOR GRILLE

SYMBOLS DUCTWORK

- MANUAL VOLUME DAMPER
- FIRE DAMPER ▲ -1.5(1-1/2HR RATED)
- MOTOR OPERATED DAMPER
- DIRECTION OF FLOW
- 12X20 — DUCT SIZE- FIRST NUMBER IS SIDE SHOWN
- 20X12 — DUCT SECTION,POSITIVE PRESS. FIRST NUMBER IS TOP
- 20X12 — DUCT SECTION,NEGATIVE PRESS. FIRST NUMBER IS TOP
- R — ELEVATION CHANGE (R) RISE, (D) DROP
- AD — ACCESS DOOR
- FLEXIBLE CONNECTION
- FLEXIBLE DUCT
- DUCT LINING
- 20x12 16x8 — TRANSITON
- TURNING VANES
- 12x20 — SIDE MOUNTED DEVICE
- BOTTOM MOUNTED DEVICE

GENERAL NOTES:

1. HVAC EQUIPMENT DIMENSIONS, LOCATIONS, DUCTWORK AND PIPING SYSTEM LAYOUTS ARE BASED ON EQUIPMENT SELECTED BY THE ENGINEER. IF THE CONTRACTOR PROPOSES TO FURNISH EQUIPMENT THAT REQUIRES AN ARRANGEMENT OR SPACE DIFFERING FROM THAT INDICATED ON THE DRAWINGS OR SPECIFIED, THE CONTRACTOR SHALL PREPARE AND SUBMIT TO THE ENGINEER FOR APPROVAL, DETAILED ARCHITECTURAL, STRUCTURAL, MECHANICAL, PLUMBING, INSTRUMENTATION, HVAC AND ELECTRICAL DRAWINGS AND EQUIPMENT LISTS SHOWING ALL NECESSARY CHANGES AND EMBODYING ALL FEATURES OF THE HE PROPOSES TO FURNISH. THIS INFORMATION SHALL INCLUDE BUT EQUIPMENT NOT BE LIMITED TO PLANS, SECTIONS, DETAILS, AND SCHEMATICS OF ALL SUCH CHANGES IF APPROVED BY THE ENGINEER. APPURTENANCES REQUIRED SHALL BE AT NO EXTRA COST TO THE OWNER. THE CONTRACTOR SHALL ASSUME THE COST OF, AND THE RESPONSIBILITY FOR SATISFACTORILY ACCOMPLISHING ALL THE NECESSARY CHANGES CORRESPONDING TO THE DIMENSIONS AND CHARACTERISTICS OF THE EQUIPMENT SUBMITTED AND APPROVED BY THE ENGINEER. REFER TO SPECIFICATIONS FOR FUTHER DETAILS.
2. SIZES OF EQUIPMENT PADS INDICATED ON THE DRAWINGS ARE APPROXIMATE. EXACT DIMENSIONS WERE DETERMINED BY THE CONTRACTOR FOR THE EQUIPMENT FURNISHED. ALL FLOOR MOUNTED EQUIPMENT WAS SET ON CONCRETE PADS CONFORMING TO DETAILS SHOWN ON THE STRUCTURAL DRAWINGS.
3. DIELECTRIC COUPLINGS, FLANGES OR UNIONS WERE INSTALLED AT ALL CONNECTIONS OF COPPER PIPE TO OTHER TYPES OF METALLIC PIPING.
4. HVAC PIPING AND DUCTWORK DRAWINGS DO NOT SHOW ALL DRAINS, VENTS, OFFSETS AND FITTINGS ETC. REQUIRED FOR THE COMPLETE SYSTEM. SMALL PIPING IS SHOWN APPROXIMATED TO SCALE BUT NOT EVERY FITTING AND OFFSET IS SHOWN. SOME VALVES AND APPURTENANCES MAY BE OMITTED FOR THE SAKE OF CLARITY. THE CONTRACTOR FURNISH,ED INSTALLED AND TESTED ALL HVAC SYSTEMS SHOWN AND/OR AS DEFINED IN THE SPECIFICATIONS TO ON THE DRAWINGS AND DETAILS, PROVIDE THE COMPLETE SYSTEM.
5. ABOVE GROUND EXTERIOR WALL AND ROOF PENETRATIONS WERE AS SHOWNS ON THE ARCHITECTURAL DRAWINGS. IF APPROVED BY THE ENGINEER, THE CONTRACTOR MAY HAVE SUBSTITUTED ALTERNATE METHODS PROVIDING THEY MEET INTENDED DESIGN REQUIREMENTS.
6. NOT ALL AND ONLY CERTAIN TYPES OF SUPPORTS ARE SHOWN ON THE HVAC DRAWINGS. UNLESS OTHERWISE DETAILED ON THE DRAWINGS ALL PIPE AND DUCT SUPPORTS WERE DESIGNED, FURNISHED AND INSTALLED BY THE CONTRACTOR AS SPECIFIED AND TO THE APPORVAL OF THE ENGINEER.

NOTE: THIS IS A GENERAL LIST OF SYMBOLS NOT ALL ITEMS SHOWN AND ABBREVIATIONS. HERE APPEAR ON THE CONTRACT DRAWINGS.

PIPE MATERIAL CODES

CU	COPPER
FRP	FIBER REINFORCED PLASTIC
GS	GALVANIZED STEEL
PVC	POLYVINYL CHLORIDE
STL	BLACK STEEL

FLOW STREAM CODE

D	DRAIN
RS	REFRIGERANT SUPPLY
RL	REFRIGERANT LIQUID
RG	REFRIGERANT-HOT GAS

REGISTERS GRILLES AND DIFFUSERS

EAG	EXHAUST GRILLE
EAR	EXHAUST REGISTER
RAG	RETURN GRILLE
RAR	RETURN REGISTER
SAD	SUPPLY DIFFUSER
SAG	SUPPLY GRILLE
SAR	SUPPLY REGISTER
TAG	TRANSFER GRILLE
WAG	WALL GRILLE

TYPICAL TAG

TYPE OF DEVICE		
EG	20X20	SIZE
	400CFM	CAPACITY

FINAL AS-BUILT

REV. NO.	DATE	DRWN	CHKD	REMARKS

DESIGNED BY:
DRAWN BY:
SHEET CHK'D BY:
CROSS CHK'D BY:
APPROVED BY:
DATE: MARCH 2012

PREPARED BY:
CAPE Environmental Management, Inc.

US Army Corps of Engineers Kansas City District
GROUNDWATER TREATMENT FACILITY PACKAGE
ROCKAWAY BOROUGH SUPERFUND SITE
EAST MAIN/WALL STREET PLUME - OU2
ROCKAWAY BOROUGH, NEW JERSEY

HVAC
LEGEND, SYMBOLS AND ABBREVIATIONS

PROJECT 50001.005
FILE NAME: H001SYMB AS-BUILT
SHEET NO.
H-1

XREFS: RK4WYBDR

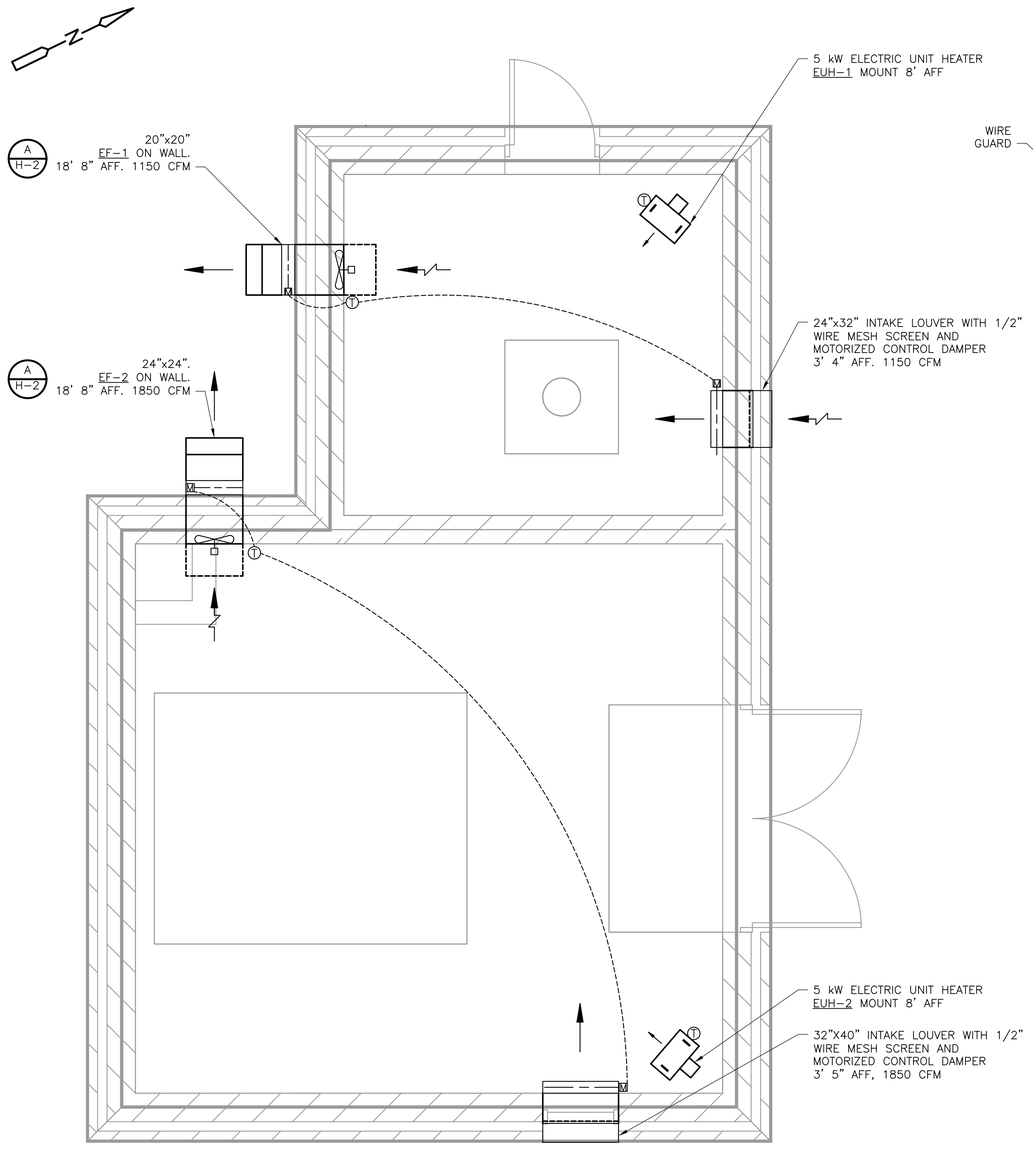

HVAC NEW WORK

PLAN

3/8" = 1'–0"

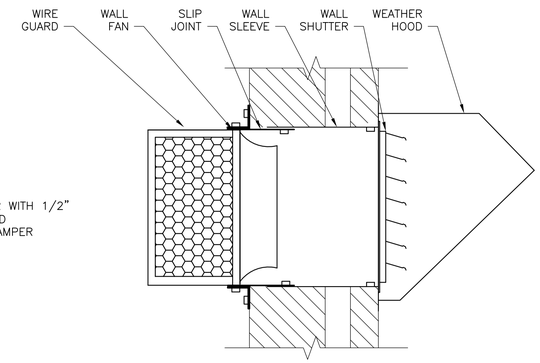

EXHAUST FAN

DETAIL A / H–2

1" = 1'

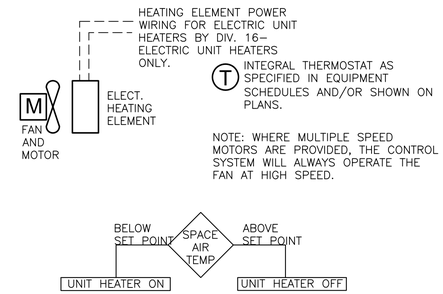

UNIT HEATER CONTROL

DIAGRAM 1 / –

EUH–1,2

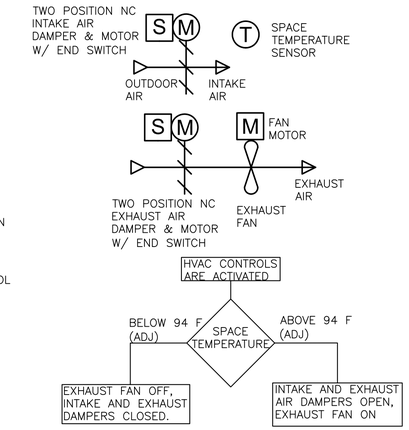

VENTILATION CONTROL

DIAGRAM 2 / –

EF–1,2

DAMPER SCHEDULE

MAKE	MODEL	AREA SERVED	CAPACITY	PRESSURE DROP (IN. W.G.)	SIZE (W x H)	DEPTH	BLADE DIRECTION	CONSTRUCTION	INSTALLATION	V/PH/HZ	COMMENTS
RUSKIN	CD50	WELL HOUSE	1150 CFM	.01	24" x 32"	5"	PARALLEL	ALUMINUM	FLANGED	240/1/60	1, 2
RUSKIN	CD50	TREATMENT FACILITY	1850 CFM	.01	32" x 40"	5"	PARALLEL	ALUMINUM	FLANGED	480/3/60	1, 2

COMMENTS:

1. ALL DAMPERS SHALL BE MOTORIZED

UNIT HEATER SCHEDULE

TAG	MAKE	MODEL	AREA SERVED	CAPACITY	TYPE	V/PH/HZ	AMPS	MOTOR RPM	MOTOR HP	WEIGHT (LBS.)	COMMENTS
EUH–1	CHROMALOX	HD3D–300T	WELL HOUSE	3 KW	ELECTRIC	240/1/60	12.5	1050	1/15	45	1, 2
EUH–2	CHROMALOX	HD3D–500T	TREATMENT FACILITY	5 KW	ELECTRIC	480/3/60	6.0	1050	1/15	50	1, 2

COMMENTS:

1. PROVIDE UNIT HEATERS WITH INTEGRAL THERMOSTAT

EXHAUST FAN SCHEDULE

TAG	MAKE	MODEL	AREA SERVED	CFM	RPM	STATIC PRESSURE (IN. W.G.)	TYPE	V/PH/HZ	WALL OPENING	MOTOR HP	BHP	COMMENTS
EF–1	COOK	AWD16A17D	WELL HOUSE	1304	1725	.375	PROPELLER DIRECT DRIVE	230/1/60	20"X20"	1/4	.261	1
EF–2	COOK	AWD16A17D	TREATMENT FACILITY	2073	1725	.375	PROPELLER DIRECT DRIVE	240/3/60	24"X24"	3/4	.285	1

COMMENTS:

1. PROVIDE EXHAUST FANS WITH WEATHER HOOD, MOTORIZED SHUTTER, AND MOTOR SIDE WIRE GUARD
2. PROVIDE SHEET METAL SLIP JOINT.

FINAL AS-BUILT

1" = 1'– 0"
.5 0 1

3/8" = 1'– 0"
2 0 2 4

XREFS: RKAWYBDR, RH01PSPL, ZATFBS000

REV. NO.	DATE	DRWN	CHKD	REMARKS

DESIGNED BY:
DRAWN BY:
SHEET CHK'D BY:
CROSS CHK'D BY:
APPROVED BY:
DATE: MARCH 2012

PREPARED BY:
CAPE
CAPE Environmental Management, Inc.

US Army Corps of Engineers Kansas City District
GROUNDWATER TREATMENT FACILITY PACKAGE
ROCKAWAY BOROUGH SUPERFUND SITE
EAST MAIN/WALL STREET PLUME - OU2
ROCKAWAY BOROUGH, NEW JERSEY

HVAC
PLAN, DIAGRAMS, DETAIL AND SCHEDULES

PROJECT 50001.005
FILE NAME: H002PSPL AS–BUILT
SHEET NO.
H-2

ONE LINE OR CONTROL DIAGRAM	PLAN	DESCRIPTION
52 CS	—	MEDIUM VOLTAGE DRAWOUT TYPE POWER CIRCUIT BREAKER CS=CONTROL SWITCH
FRAME TRIP	CB	LOW VOLTAGE AIR OR MOLDED CASE CIRCUIT BREAKER, 3 POLE UNLESS OTHERWISE NOTED.
*		COMBINATION MOTOR CIRCUIT PROTECTOR AND MAGNETIC MOTOR STARTER, FULL VOLTAGE NON-REVERSING UNLESS OTHERWISE NOTED: * FVR- FULL VOLTAGE REVERSING RVNR- REDUCED VOLTAGE NON-REVERSING 2S1W- TWO SPEED, ONE WINDING 2S2W- TWO SPEED, TWO WINDING RVAT- REDUCED VOLTAGE AUTOTRANSFORMER RVSS- REDUCED VOLTAGE, SOLID STATE
*		NON-FUSIBLE DISCONNECT SWITCH, 600 VOLT, 3 POLE * AMPERE RATING NOTED IF OTHER THAN 30A
* *	F	FUSIBLE DISCONNECT SWITCH, 600 VOLT, 3 POLE, AMPERE RATING AND FUSE SIZE AS NOTED * AMPERE RATING NOTED IF OTHER THAN 30A * FUSE RATING
	P 2	MANUAL MOTOR STARTER WITH THERMAL OVERLOAD HEATER, 1 POLE UNLESS OTHERWISE NOTED "P" INDICATES WITH PILOT LIGHT "2" INDICATES TWO POLE
	—	DRAWOUT TYPE EQUIPMENT OR DEVICE
	—	MEDIUM VOLTAGE CABLE TERMINATION
	—	MEDIUM VOLTAGE AIR INTERRUPTER SWITCH
*	—	MEDIUM VOLTAGE FUSED AIR INTERRUPTER SWITCH * FUSE RATING
	—	MEDIUM VOLTAGE FUSED MOTOR CONTROLLER
480V Δ TO 120/208Y 30 KVA K-*	T	TRANSFORMER, RATINGS AND CONNECTIONS AS NOTED. UNLESS OTHERWISE NOTED ON THE SINGLE LINE DIAGRAMS, ALL DRY TYPE TRANSFORMERS SERVICING ADMINISTRATIVE AND LABORATORY SPACES SHALL HAVE A K FACTOR OF 4. ISOLATION TRANSFORMERS SHALL HAVE A K-20 RATING
* A TO 5	—	CURRENT TRANSFORMER * QUANTITY A = PRIMARY AMPERES
* V TO 120	—	POTENTIAL TRANSFORMER * QUANTITY V = PRIMARY VOLTAGE
	G	GENERATOR, RATINGS AND CONNECTIONS AS NOTED
100A ATS-1 N S	—	AUTOMATIC OR MANUAL TRANSFER SWITCH NO.1 (ATS-1), (MTS-1) "N" INDICATES NORMAL OR PREFERRED SOURCE "S" INDICATES STANDBY OR ALTERNATE SOURCE 100A INDICATES CONTINUOUS CURRENT RATING
*	*	VARIABLE SPEED DRIVE CONTROLLER * D.C.= D.C. DRIVE CONTROLLER SCR= SILICON CONTROLLED RECTIFIER VFD= VARIABLE FREQUENCY DRIVE
#KW	E	UNIT HEATER - ELECTRIC HEATING COIL AND FAN # - RATING
—	U	UNIT HEATER - STEAM OR WATER HEATING COIL AND FAN
5	M	MOTOR, NUMERAL INDICATES HORSEPOWER
VS VM *	—	VOLTMETER WITH SWITCH, 3 PHASE
AS AM *	—	AMMETER WITH SWITCH, 3 PHASE

ONE LINE OR CONTROL DIAGRAM	PLAN	DESCRIPTION
*	—	METER * WM - WATTMETER WHM - WATTHOUR METER WHDM - WATTHOUR DEMAND METER WHDR - WATTHOUR DEMAND RECORDER PF - POWER FACTOR METER ETM - ELAPSED TIME METER TRANSDUCER AX - CURRENT TRANSDUCER WX - WATT TRANSDUCER WHX - WATTHOUR TRANSDUCER
#	#	RELAY, NO. AS INDICATED 25 - SYNCHRONISM CHECK RELAY 27 - UNDERVOLTAGE RELAY 32 - DIRECTIONAL POWER RELAY 38 - BEARING PROTECTIVE DEVICE 40 - LOSS OF EXCITATION RELAY 42 - RUNNING CONTACTOR/PILOT RELAY 46 - REVERSE PHASE/PHASE BALANCE/CURRENT RELAY 47 - PHASE SEQUENCE VOLTAGE RELAY 49 - MACHINE OR TRANSFORMER THERMAL RELAY 50/51 -INSTANTANEOUS/TIME OVERCURRENT RELAY 50G -INSTANTANEOUS GROUND 51 - TIME OVERCURRENT RELAY 51G - TIME OVERCURRENT RELAY, GROUNDING RESISTOR TYPE 51N - TIME OVERCURRENT RELAY, RESIDUAL TYPE 51V - TIME OVERCURRENT RELAY WITH VOLTAGE RESTRAINT 51X - AUXILIARY RELAY (TRIPS CB AND ALARMS) 59 - OVERVOLTAGE RELAY 60 - NEGATIVE SEQUENCE VOLTAGE RELAY 62 - TIME DELAY RELAY 63 - OVERPRESSURE RELAY 64 - GENERATOR FIELD GROUND RELAY 67 - AC DIRECTIONAL OVERCURRENT RELAY 74 - ALARM LATCHING RELAY 83 - AUTOMATIC SELECTIVE CONTROL OR TRANSFER RELAY 86 - LOCKING-OUT RELAY 87 - DIFFERENTIAL PROTECTIVE RELAY B - SUFFIX INDICATES "BUS" G - SUFFIX INDICATES "GENERATOR" GF - GROUND FAULT ST - SHUNT TRIP T - SUFFIX INDICATES "TRANSFORMER" X - SUFFIX INDICATES "AUXILIARY"
*	—	SPECIAL CAPACITOR * SC - SURGE CAPACITOR PF - POWER FACTOR CORRECTION CAPACITOR
*	—	TUNED POWER FACTOR CORRECTION CAPACITOR
	—	PUSHBUTTON, MOMENTARY CONTACT, SPRING RETURN, NORMALLY CLOSED
	—	PUSHBUTTON, MOMENTARY CONTACT, SPRING RETURN, NORMALLY OPEN
	ES	EMERGENCY STOP PUSHBUTTON WITH RED MUSHROOM HEAD OPERATOR (MAINTAINED CONTACT)
STOP START	PBL	START-STOP PUSHBUTTON CONTROL STATION (MOMENTARY CONTACT) WITH LOCKOUT DEVICE ON STOP
STOP START	PBM	START-STOP PUSHBUTTON CONTROL STATION, MAINTAINED CONTACT WITH LOCKOUT DEVICE ON STOP
ON OFF	S/S	OFF/ON SELECTOR SWITCH
L R (XO) (OX)	LR	LOCAL/REMOTE SELECTOR SWITCH
B A C * (XOO) (OXO) (OOX)	*	3 POSITION SELECTOR SWITCH, MAINTAINED CONTACT O-OPEN X-CLOSED POSITION / TOP CONTACT / MIDDLE CONTACT / BOTTOM CONTACT A / X / O / O B / O / X / O C / O / O / X * NAMEPLATE (A/B/C) HOA - HAND/OFF/AUTO HOR - HAND/OFF/REMOTE LOR - LOCAL/OFF/REMOTE RSL - RAISE/STOP/LOWER TOA - TEST/OFF/AUTO

GD/VF
#
	GD/VF
	#
		GAS DETECTOR / VENTILATION FAILURE ALARM
		# INDICATES TYPE OF UNIT
		1=MASTER, 2=REMOTE

GENERAL NOTE

THIS IS A STANDARD LEGEND. SOME SYMBOLS MAY NOT APPEAR ON THE DRAWINGS.

ONE LINE OR CONTROL DIAGRAM	PLAN	DESCRIPTION
42 #	—	MOTOR STARTER COIL, NUMBER AS INDICATED TO DENOTE INTERLOCKING ONLY
CR #	—	CONTROL RELAY COIL, NUMBER AS INDICATED
*	—	PILOT LIGHT, COLOR AS NOTED * R - RED G - GREEN B - BLUE W - WHITE A - AMBER
*	—	PILOT LIGHT, PUSH-TO-TEST TYPE, COLOR AS NOTED ABOVE.
* RANGE # SETPOINT * NOTC NCTO NOTO NCTC	—	TIME DELAY RELAY RANGE AS NOTED SETPOINT AS NOTED #NUMBER AS INDICATED *TDE-TIME DELAY AFTER ENERGIZATION-ON DELAY TDD-TIME DELAY AFTER DE-ENERGIZATION-OFF DELAY NOTC-NORMALLY OPEN, TIMED CLOSING WHEN ENERGIZED NCTO-NORMALLY CLOSED, TIMED OPENING WHEN ENERGIZED NOTO-NORMALLY OPEN, TIMED OPENING WHEN DE-ENERGIZED NCTC-NORMALLY CLOSED, TIMED CLOSING WHEN DE-ENERGIZED
—	* - ##	FIELD INSTRUMENT, TAG NO. AS INDICATED * - INDICATES INSTRUMENT TYPE DEFINED ON LOOP SHEETS OR P & ID ## - INDICATES LOOP NO.
	LS OR ■	LIQUID LEVEL (FLOAT) SWITCH NORMALLY OPEN, CLOSES ON RISING LEVEL NORMALLY CLOSED, OPENS ON RISING LEVEL
	PS OR ■	PRESSURE OR VACUUM SWITCH NORMALLY OPEN, CLOSES ON RISING PRESSURE NORMALLY OPEN, CLOSES ON DROPPING PRESSURE NORMALLY CLOSED, OPENS ON RISING PRESSURE NORMALLY CLOSED, OPENS ON DROPPING PRESSURE
	TS OR T OR ■	TEMPERATURE SWITCH OR THERMOSTAT NORMALLY OPEN, CLOSES ON RISING TEMPERATURE NORMALLY OPEN, CLOSES ON DROPPING TEMP. NORMALLY CLOSED, OPENS ON RISING TEMPERATURE NORMALLY CLOSED, OPENS ON DROPPING TEMP.
	FS OR ■	FLOW SWITCH (AIR, WATER, ETC.) NORMALLY OPEN, CLOSES ON INCREASED FLOW NORMALLY CLOSED, OPENS ON INCREASED FLOW
	ZS OR ■	POSITION (LIMIT) SWITCH NORMALLY OPEN NORMALLY OPEN - HELD CLOSED NORMALLY CLOSED NORMALLY CLOSED - HELD OPEN
	TQ OR ■	TORQUE SWITCH NORMALLY OPEN, CLOSES ON HIGH TORQUE NORMALLY CLOSED, OPENS ON HIGH TORQUE
#	—	UTILIZED IN CONJUNCTION WITH OTHER CONTROL SCHEMATIC SYMBOLS TO DEPICT THE PHYSICAL LOCATION OF THE DEVICE # REPRESENTS LOCATION SEE LOCATION LEGEND ON DRAWING

ONE LINE OR CONTROL DIAGRAM	PLAN	DESCRIPTION
	—	CONDUCTORS OR CONDUITS CROSSING PATHS BUT NOT CONNECTED
	—	CONDUCTORS ELECTRICALLY CONNECTED
	—	INDICATES LIMITS OF ELECTRICAL EQUIPMENT OR WIRING ENCLOSURE
LA	—	LIGHTNING ARRESTER
		GROUND OR GROUND ROD
30A	—	FUSE, AMPERE RATING AS NOTED
	HTR	STRIP HEATER OR HEATING ELEMENT
	—	INDUCTOR
TG	TG	TACHOMETER GENERATOR
	—	CONTACT, NORMALLY OPEN (NO)
	—	CONTACT, NORMALLY CLOSED (NC)
	—	OVERLOAD RELAY HEATER
K	—	KEY INTERLOCK
TB	—	TERMINAL OR TEST BLOCK
RTD	—	RESISTANCE TEMPERATURE DETECTOR
VE OR VE	—	VIBRATION DETECTOR
DM	DM	DAMPER MOTOR
ETM	—	ELAPSED TIME METER
MO M BY DIV. 16 BY OTHERS	MO M BY DIV. 16 BY OTHERS	MOTOR OPERATED VALVE OR GATE

ABBREVIATIONS

A	AMPS
AC	ALTERNATING CURRENT
AFF	ABOVE FINISHED FLOOR
AFG	ABOVE FINISHED GRADE
AL	ALUMINUM
AIC	AMPERE INTERRUPTING CAPACITY
AMP	AMPERE
ATS	AUTOMATIC TRANSFER SWITCH
AUTO	AUTOMATIC
AUX	AUXILIARY
AWG	AMERICAN WIRE GAUGE
BKR	BREAKER
BLDG	BUILDING
C	CONDUIT
CB	CIRCUIT BREAKER
CKT	CIRCUIT
CLB	CURRENT LIMITING BREAKER
CLF	CURRENT LIMITING FUSE
CP	CONTROL PANEL
CPT	CONTROL POWER TRANSFORMER
CR	CONTROL RELAY
CS	CONTROL SWITCH
CT	CURRENT TRANSFORMER
CU	COPPER
CWS	CONDUIT WALL SEAL
DC	DIRECT CURRENT
DIA	DIAMETER
DMU	DIGITAL METERING UNIT
DN	DOWN
EC	EMPTY CONDUIT
ELEC	ELECTRICAL
ELEV	ELEVATION
EM	EMERGENCY
ENCL	ENCLOSURE OR ENCLOSED
EQUIP	EQUIPMENT
EWC	ELECTRIC WATER COOLER
EWH	ELECTRIC WATER HEATER
EX	EXISTING
FBO	FURNISHED BY OTHERS
FLS	FLOAT LEVEL SWITCH
FO	FIBER OPTIC
FU	FUSE
GCP	GENERATOR CONTROL PANEL
GEN	GENERATOR
GB	GROUND BAR
G , GRD	GROUND
GFI	GROUND FAULT INTERRUPTER
GRS	GALVANIZED RIGID STEEL
HH	HANDHOLE
HT	HEIGHT
HID	HIGH INTENSITY DISCHARGE
HP	HORSEPOWER
HZ	HERTZ
INST	INSTANTANEOUS
INSTR	INSTRUMENT OR INSTRUMENTATION
K	KILO (PREFIX)
KCMIL	1000 CIRCULAR MILS
KVA	KILOVOLT AMPERES
KW	KILOWATTS
LA	LIGHTNING ARRESTER
LGTS	LIGHTS
LTG	LIGHTING
LP	LIGHTING PANEL
LV	LOW VOLTAGE
MAX	MAXIMUM
MCB	MAIN CIRCUIT BREAKER
MCC	MOTOR CONTROL CENTER
MCP	MOTOR CIRCUIT PROTECTOR
MCM	1000 CIRCULAR MILS
MFR	MANUFACTURER
MH	MANHOLE
MIN	MINIMUM
MLO	MAIN LUGS ONLY
MMU	MICROPROCESSOR METERING UNIT
MTG	MOUNTING
MTD	MOUNTED
MTS	MANUAL TRANSFER SWITCH
MV	MEDIUM VOLTAGE
N	NEUTRAL
NC	NORMALLY CLOSED
NIC	NOT IN CONTRACT
NO	NORMALLY OPEN OR NUMBER
NTS	NOT TO SCALE
OH	OVERHEAD
PB	PULL BOX
OL	OVERLOAD

ABBREVIATIONS (CONTINUED)

PCP	PUMP CONTROL PANEL
PH	PHASE
PMH	POWER MANHOLE
PNL	PANEL OR PANELBOARD
PR	PAIR
PRI	PRIMARY
PT	POTENTIAL TRANSFORMER
PVC	POLYVINYL CHLORIDE
RECPT	RECEPTACLE
REQD	REQUIRED
QTY	QUANTITY
SA	SURGE ARRESTER
SC	SURGE CAPACITOR
SEC	SECONDS OR SECONDARY
SH	SHIELDED
SHH	SIGNAL HANDHOLE
SHT	SHEET
SN	SOLID NEUTRAL
SS	STAINLESS STEEL
SV	SOLENOID VALVE
SW	SWITCH

ABBREVIATIONS (CONTINUED)

SWBD	SWITCHBOARD
SWGR	SWITCHGEAR
TC	TIME TO CLOSE OR TRAY CABLE
TEL	TELEPHONE
THH	TELEPHONE HANDHOLE
TM	TELEPHONE BACKBOARD
TO	TIME TO OPEN
TVSS	TRANSIENT VOLTAGE SURGE SUPRESSOR
TS	TWISTED SHIELDED
TYP	TYPICAL
UG	UNDERGROUND
UON	UNLESS OTHERWISE NOTED
UPS	UNINTERRUPTIBLE POWER SUPPLY
V	VOLTS
VA	VOLT AMPS
VAR	VOLT AMPS REACTIVE
VFD	VARIABLE FREQUENCY DRIVE
W	WIRE, WATTS, WITH, WIDTH
WP	WEATHERPROOF
XP	EXPLOSION PROOF
XFMR	TRANSFORMER

FINAL AS-BUILT

REV. NO.	DATE	DRWN	CHKD	REMARKS

DESIGNED BY:
DRAWN BY:
SHEET CHK'D BY:
CROSS CHK'D BY:
APPROVED BY:
DATE: MARCH 2012

PREPARED BY:
CAPE
CAPE Environmental Management, Inc.

US Army Corps of Engineers Kansas City District
GROUNDWATER TREATMENT FACILITY PACKAGE
ROCKAWAY BOROUGH SUPERFUND SITE
EAST MAIN/WALL STREET PLUME - OU2
ROCKAWAY BOROUGH, NEW JERSEY

ELECTRICAL
LEGEND AND ABBREVIATIONS I

PROJECT 50001.005
FILE NAME: E001SY00 AS-BUILT
SHEET NO.
E-1

XREFS: RKAWYBDR

SYMBOL	DESCRIPTION
A 3 b	INCANDESCENT, COMPACT FLUORESCENT OR H.I.D. TYPE LIGHTING FIXTURE "A" – FIXTURE TYPE (SEE LIGHTING FIXTURE SCHEDULE) "b" – CONTROLLED BY SWITCH "b" "3" – CIRCUIT NUMBER
A 3 b	FLUORESCENT TYPE LIGHTING FIXTURE, NOTATIONS SAME AS ABOVE
A 3 b	WALL MOUNTED INCANDESCENT, COMPACT FLUORESCENT OR H.I.D. TYPE LIGHTING FIXTURE, NOTATIONS SAME AS ABOVE
A 3 b OR A 3 b	CROSS HATCH INDICATES LIGHTING FIXTURE FOR EMERGENCY EGRESS LIGHTING. SEE CONTROL DIAGRAM FOR SWITCHING ARRANGEMENT.
BU–1 3 (*)	EMERGENCY LIGHTING BATTERY UNIT WITH TWO LAMP HEADS "BU–1" – FIXTURE TYPE (SEE LIGHTING FIXTURE SCHEDULE) "3" – SUPERVISORY CIRCUIT * – FIXTURE TAG #
R–2 BU–1(*)	REMOTE EMERGENCY ADJUSTABLE WALL LIGHTING FIXTURE WITH TWO LAMP HEADS "R–2" – FIXTURE TYPE (SEE LIGHTING FIXTURE SCHEDULE) * – HOME RUN TO BATTERY UNIT INDICATED. CONDUIT SHALL BE 3/4" AND CONTAIN 2 NO. 12 AWG BRANCH CIRCUIT CONDUCTORS AND 1 NO. 12 AWG GROUND CONDUCTOR UNLESS OTHERWISE INDICATED.
	COMBINATION BATTERY UNIT AND EXIT SIGN
A 3	CEILING MOUNTED EXIT SIGN, NOTATIONS SAME AS ABOVE. WHEN USED, ARROW INDICATES DIRECTION OF EGRESS
A 3	WALL MOUNTED EXIT SIGN, NOTATIONS SAME AS ABOVE. WHEN USED, ARROW INDICATES DIRECTION OF EGRESS.
RH–3 E 3 BU–1(*)	REMOTE EMERGENCY CEILING LIGHTING FIXTURE. "RH–3" – FIXTURE TYPE (SEE LIGHTING FIXTURE SCHEDULE) "3" – SUPERVISORY CIRCUIT * – HOME RUN TO BATTERY UNIT INDICATED. CONDUIT SHALL BE 3/4" AND CONTAIN 2 NO. 12 AWG BRANCH CIRCUIT CONDUCTORS AND 1 NO. 12 AWG GROUND CONDUCTOR UNLESS OTHERWISE INDICATED.
	BRANCH CIRCUIT CONDUIT WITH 2 NO. 12 AWG BRANCH CIRCUIT CONDUCTORS AND 1 NO. 12 AWG GROUND CONDUCTOR UON INSTALLED EXPOSED. FOR MINIMUM SIZE CONDUIT PERMITTED REFER TO THE SPECIFICATIONS. ALSO INDICATES UNDERGROUND DUCT BANK ON SITE PLANS.
	BRANCH CIRCUIT CONDUIT WITH 2 NO. 12 AWG BRANCH CIRCUIT CONDUCTORS AND 1 NO. 12 AWG GROUND CONDUCTOR UON INSTALLED CONCEALED IN CEILING, WALL, FLOOR OR ABOVE SUSPENDED CEILING. FOR MINIMUM SIZE CONDUIT PERMITTED REFER TO THE SPECIFICATIONS.
	BRANCH CIRCUIT CONDUIT INSTALLED EXPOSED TURNING UP. CONDUIT TO CONTAIN 2 NO. 12 AWG BRANCH CIRCUIT CONDUCTORS AND 1 NO. 12 AWG GROUND CONDUCTOR UON. FOR MINIMUM SIZE CONDUIT PERMITTED REFER TO THE SPECIFICATIONS.
	BRANCH CIRCUIT CONDUIT INSTALLED EXPOSED TURNING DOWN. CONDUIT TO CONTAIN 2 NO. 12 AWG BRANCH CIRCUIT CONDUCTORS AND 1 NO. 12 AWG GROUND CONDUCTOR UON. FOR MINIMUM SIZE CONDUIT PERMITTED REFER TO THE SPECIFICATIONS.
	BRANCH CIRCUIT CONDUIT INSTALLED CONCEALED TURNING UP. CONDUIT TO CONTAIN 2 NO. 12 AWG BRANCH CIRCUIT CONDUCTORS AND 1 NO. 12 AWG GROUND CONDUCTOR UON. FOR MINIMUM SIZE CONDUIT PERMITTED REFER TO THE SPECIFICATIONS.
	BRANCH CIRCUIT CONDUIT INSTALLED CONCEALED TURNING DOWN. CONDUIT TO CONTAIN 2 NO. 12 AWG BRANCH CIRCUIT CONDUCTORS AND 1 NO. 12 AWG GROUND CONDUCTOR UON. FOR MINIMUM SIZE CONDUIT PERMITTED REFER TO THE SPECIFICATIONS.
	CONDUIT STUBBED OUT AND CAPPED
2(3"C., 3#3/0, 1#2G)	DENOTES A QUANTITY OF TWO (2) 3–INCH CONDUITS EACH CONTAINING THREE NO. 3/0 AWG CONDUCTORS AND 1 NO. 2 AWG GROUND CONDUCTOR.
2–2/C#16TS	DENOTES A QUANTITY OF TWO INSTRUMENT CABLES. EACH CABLE TO CONSIST OF TWO NO. 16 AWG CONDUCTORS TWISTED TOGETHER AND COVERED WITH A METALLIC SHIELD AND AN OVERALL PROTECTIVE JACKET. REFER TO THE SPECIFICATIONS FOR THE EXACT CABLE TO BE PROVIDED.
2–3/C#16TS	SAME AS ABOVE EXCEPT CABLE TO CONSIST OF THREE NO. 16 AWG CONDUCTORS TWISTED, SHIELDED AND COVERED WITH AN OVERALL PROTECTIVE JACKET. REFER TO THE SPECIFICATIONS FOR THE EXACT CABLE TO BE PROVIDED.
3(4"C)	THREE 4–INCH CONDUITS
	FLEXIBLE METAL CONDUIT "WHIP" (2#12, 1#12G, ?" C. UNLESS OTHERWISE NOTED) FOR RECESSED LIGHTING FIXTURES AND LIQUID TIGHT MOTOR CONNECTIONS
3 LP1	HOMERUN, CIRCUIT NO.3 RUN TO PANEL LP1 OR EQUIPMENT AS NOTED. CONDUIT SHALL BE 3/4" WITH 2 NO. 12 AWG AND 1 NO. 12 AWG GROUND UNLESS OTHERWISE INDICATED.
	CONDUIT SEAL FITTING SHOWN IN OTHER THAN CODE REQUIRED LOCATIONS.
	INDICATES MOTOR STARTER AND/OR MOTOR CONTROL EQUIPMENT WITHIN THE ENCLOSURE.

SYMBOL	DESCRIPTION
$b	SINGLE POLE SWITCH "b" INDICATES FIXTURES CONTROLLED.
$a 2	DOUBLE POLE SWITCH "a" INDICATES FIXTURES CONTROLLED.
$c 3	THREE WAY SWITCH "c" INDICATES FIXTURES CONTROLLED.
$a 4	FOUR WAY SWITCH "a" INDICATES FIXTURES CONTROLLED.
$M	SINGLE POLE, DOUBLE THROW MOMENTARY CONTACT SWITCH, CENTER OFF
$P	SINGLE POLE SWITCH AND PILOT LIGHT
D	DIMMER LIGHTING CONTROL SWITCH
C 3	LIGHTING CONTACTOR WITH NUMBER OF POLES AS INDICATED
TM	TIME SWITCH
TYPE A	INDICATES ALL LIGHTING FIXTURES WITHIN THE ROOM OR AREA IN WHICH THIS NOTATION APPEARS SHALL BE TYPE "A" UNLESS OTHERWISE NOTED. SEE LIGHTING FIXTURE SCHEDULE FOR TYPES
LPXX OR LPXX	LIGHTING PANELBOARD (LP)
PPXX OR PPXX	POWER PANELBOARD (PP) OR DISTRIBUTION PANELBOARD (DP)
* 4	DUPLEX RECEPTACLE, 20A, 120V, 2P, 3W * C – MOUNTED ABOVE COUNTER–TOP GF – GROUND FAULT INTERRUPTER TYPE WP – WEATHERPROOF T – TRANSIENT VOLTAGE SURGE SUPPRESSOR IC – ISOLATED GROUND 4 – CIRCUIT NUMBER
* 4	SIMPLEX RECEPTACLE, 20A, 120V, 2P, 3W, NOTATIONS SAME AS ABOVE FOR DUPLEX RECEPTACLE
* 3 60 4W	SPECIAL PURPOSE RECEPTACLE * – VOLT RATING – 3 INDICATES NUMBER OF POLES – 60 INDICATES AMPERE RATING – 4W INDICATES4 WIRES IN ADDITION TO GROUND
	COMBINATION 20A, 120V, 2P, 3W DUPLEX AND 20A, 240V, 2P, 3W SINGLE RECEPTACLES UNDER COMMON PLATE
*	SINGLE FACE, SINGLE GANG PEDESTAL WITH 20A, 120V, 2P, 3W DUPLEX RECEPTACLE, FURNISHED AND INSTALLED UNDER DIVISION 16 UNLESS OTHERWISE NOTED. * DENOTES FURNISHED UNDER OTHER DIVISIONS OF THE SPECIFICATIONS BUT INSTALLED UNDER DIVISION 16
D *	DOUBLE FACE, SINGLE GANG PEDESTAL WITH 20A, 120V, 2P, 3W DUPLEX RECEPTACLE AND 20A, 240V, 2P, 3W SINGLE RECEPTACLE, FURNISHED AND INSTALLED UNDER DIVISION 16 UNLESS OTHERWISE NOTED. * DENOTES FURNISHED UNDER OTHER DIVISIONS OF THE SPECIFICATIONS BUT INSTALLED UNDER DIVISION 16
	DOUBLE RECEPTACLE, 20A, 120V, 2P, 3W MOUNTED IN BOX CURB FURNISHED UNDER OTHER DIVISIONS OF THE SPECIFICATIONS BUT INSTALLED UNDER DIVISION 16
	MULTI–OUTLET ASSEMBLY, SYMBOL DENOTES RECEPTACLE TYPE
	FLOOR OUTLET BOX WITH TYPE OUTLET INDICATED
	UNDERFLOOR DUCT SYSTEM WITH TYPE OUTLETS INDICATED
	THREE CELL UNDERFLOOR DUCT SYSTEM JUNCTION BOX
J J	JUNCTION BOX
P	PULL BOX
TC	TERMINAL CABINET

SYMBOL	DESCRIPTION
OS	OCCUPANCY SENSOR
PC	PHOTOCELL
FS ESA LP LCP	EMERGENCY SHOWER ALARM STATION WITH FLOW SWITCH(ES)
C	SINGLE FACE CLOCK AND CLOCK HANGER OUTLET

GD/VF #	GAS DETECTOR/VENTILATION FAILURE ALARM,
	# INDICATES TYPE OF UNIT.
	1 = MASTER, 2 = REMOTE

DAMP	INDICATES THAT ALL ELECTRICAL EQUIPMENT AND MATERIALS INSTALLED WITHIN THE ROOM OR AREA IN WHICH THIS NOTATION APPEARS SHALL BE OF NEMA 12 CONSTRUCTION (OR GASKETED AND SUITABLE FOR USE IN A WET LOCATION WHERE NEMA STANDARDS DO NOT APPLY) UNLESS OTHERWISE NOTED.
WET	INDICATES THAT ALL ELECTRICAL EQUIPMENT AND MATERIALS INSTALLED WITHIN THE ROOM OR AREA IN WHICH THIS NOTATION APPEARS SHALL BE OF NEMA 4 CONSTRUCTION (OR GASKETED AND SUITABLE FOR USE IN A WET LOCATION WHERE NEMA STANDARDS DO NOT APPLY) UNLESS OTHERWISE NOTED.
CORROSIVE	INDICATES THAT ALL ELECTRICAL EQUIPMENT AND MATERIALS INSTALLED WITHIN THE ROOM OR AREA IN WHICH THIS NOTATION APPEARS SHALL BE OF NEMA 4X CONSTRUCTION (OR CORROSION RESISTANT CONSTRUCTION SUITABLE FOR USE IN A WET LOCATION WHERE NEMA STANDARDS DO NOT APPLY) UNLESS OTHERWISE NOTED.
CLASS 1, DIV. 1, GROUP D	INDICATES THAT ALL ELECTRICAL EQUIPMENT AND MATERIALS INSTALLED WITHIN THE ROOM OR AREA IN WHICH THIS NOTATION APPEARS SHALL CONFORM TO N.E.C. REQUIREMENTS FOR THE HAZARDOUS AREA CLASSIFICATION SHOWN.
	GROUND SYSTEM GRID OR LOOP, 36" BELOW FINISHED GRADE UNLESS OTHERWISE NOTED.
	INDICATED EQUIPMENT AND MATERIALS TO BE DEMOLISHED
	EXOTHERMIC WELD CONNECTION
COMMUNICATIONS SYSTEMS	
K	TELEPHONE OUTLET FOR DESK TYPE HANDSET K = KEY SYSTEM
K	TELEPHONE OUTLET FOR WALL TYPE HANDSET (MOUNT UP 4'–6") K = KEY SYSTEM
	PAGE/PARTY TELEPHONE OUTLET FOR DESK TYPE HANDSET
	PAGE/PARTY TELEPHONE OUTLET FOR WALL TYPE HANDSET (MOUNT UP 4'–6")
S H W	PAGING SPEAKER, WALL MOUNTED H = DENOTES HORN TYPE W = DENOTES WIDE ANGLE TYPE
S W	PAGING SPEAKER, WALL MOUNTED, BI–DIRECTIONAL, HORN TYPE W = DENOTES WIDE ANGLE TYPE
S	PAGING SPEAKER, FLUSH MOUNTED CEILING TYPE
S	PAGING SPEAKER, SURFACE MOUNTED CEILING TYPE
VC	REMOTE WALL MOUNTED VOLUME CONTROL FOR CEILING SPEAKER (MOUNT UP 5'–0")
A	PAGING SPEAKER AMPLIFIER ASSEMBLY
TM	TELEPHONE CABINET OR BACKBOARD AS NOTED
P	DATA INPUT/OUTPUT CABLE OUTLET. "P" DENOTES PROCESS COMPUTER SYSTEM

SYMBOL	DESCRIPTION
SECURITY SYSTEMS	
SACP	SECURITY ALARM CONTROL PANEL
DS	SECURITY ALARM DOOR SWITCH
K	SECURITY ALARM KEY PAD
R	SECURITY SYSTEM CARD ACCESS READER
WS	SECURITY ALARM WINDOW SWITCH
	SECURITY ALARM MOTION DETECTOR
CCTV	CLOSED CIRCUIT TV CAMERA
PTZ	PAN, TILT, ZOOM CAMERA LENS CONTROLS
GB	GLASS BREAK DETECTOR
FIRE ALARM SYSTEMS	
H 200 R	FIRE ALARM HEAT DETECTOR 135ŶF FIXED TEMPERATURE UNLESS OTHERWISE NOTED. "200" DENOTES 200ŶF FIXED TEMPERATURE, "R" DENOTES FIXED TEMPERATURE RATE–OF–RISE TYPE.
? I	FIRE ALARM SMOKE DETECTOR PHOTOELECTRIC TYPE UNLESS OTHERWISE NOTED. "I" DENOTES IONIZATION TYPE.
? D	FIRE ALARM DUCT SMOKE DETECTOR
FACP	FIRE ALARM CONTROL PANEL
FV	FIRE ALARM VENTILATION PANEL WITH GRAPHIC PANEL
FA	REMOTE FIRE ALARM ANNUNCIATOR PANEL
F	FIRE ALARM MASTER BOX
F	FIRE ALARM HORN, MOUNT UP 7'–6".
15 F	FIRE ALARM STROBE, MOUNT UP 6'–8". 15 = CANDELA RATING
15 F	FIRE ALARM HORN AND STROBE LIGHT COMBINATION, MOUNT UP 6'–8". 15 = CANDELA RATING
F	FIRE ALARM MANUAL PULL STATION, MOUNT UP 4'–0".
VSS	SPRINKLER VALVE SUPERVISORY SWITCH.
SFS	SPRINKLER FLOW ALARM SWITCH
F	FIRE ALARM BELL
FB	WEATHERPROOF HI–INTENSITY FIRE ALARM STROBE LIGHT WITH HORN
PIR	PASSIVE INFRARED DETECTOR
R	SMOKE BEAM DETECTOR (RECEIVER)
T	SMOKE BEAM DETECTOR (TRANSMITTER)
	FIRE ALARM SMOKE DETECTOR REMOTE INDICATOR AND TEST SWITCH

GENERAL NOTES:

1. THE PLANS DO NOT SHOW RACEWAYS AND CONDUCTORS BETWEEN RECEPTACLES, LIGHTING FIXTURES AND SWITCHES. HOWEVER, THE CONTRACTOR FURNISHED AND INSTALLED THOSE CONNECTIONS IN ACCORDANCE WITH THE ASSIGNED FIXTURE OR RECEPTACLE CIRCUIT NUMBER AND SWITCH DESIGNATIONS. HOMERUNS SHOWN CONCEALED WERE INDICATIVE OF ENTIRE CIRCUIT INSTALLATION. THE SAME WERE APPLIED FOR HOME–RUNS SHOWN EXPOSED. REFER TO SPECIFICATIONS FOR MATERIALS AND INSTALLATION REQUIREMENTS.

2. CONDUIT AND WIRE IS NOT SHOWN FOR FIXTURES, SWITCHES AND/OR RECEPTACLES, HOWEVER, IT WAS PROVIDED BY THE ELECTRICAL CONTRACTOR AND WAS:
   A. 3/4" (MIN) CONDUIT RUN:
      1. EXPOSED IN UNFINISHED AREAS
      2. CONCEALED ABOVE HUNG CEILINGS
      3. IN WALLS AND SLABS IN FINISHED AREAS
   B. NO OF WIRES AS REQUIRED
      1. NO 12 COPPER (MIN) TYPE "THWN/THHN"
      2. NO 10 COPPER TYPE "THWN/THHN" IF LENGTH OF RUN EXCEEDS 100 FEET TO REDUCE VOLTAGE DROP

3. THE WIRING DIAGRAMS, QUANTITY AND SIZE OF WIRES AND CONDUIT REPRESENT A SUGGESTED ARRANGEMENT BASED UPON SELECTED STANDARD COMPONENTS OF ELECTRICAL EQUIPMENT. MODIFICATIONS ACCEPTABLE TO THE ENGINEER MAY BE MADE BY THE CONTRACTOR TO ACCOMMODATE EQUIPMENT ACTUALLY PURCHASED. THE BASIC SEQUENCE AND METHOD OF CONTROL MUST BE MAINTAINED AS INDICATED ON THE DRAWINGS AND/OR SPECIFICATIONS.

4. THE CONTRACTOR COORDINATED THIS DRAWING WITH ALL ELECTRICAL DRAWINGS AND ALL OTHER ASSOCIATED DISCIPLINES.

5. THE CONTRACTOR FIELD VERIFIED ALL LOCATIONS AND EQUIPMENT FOR EXACT LOCATIONS AND ROUTING.

6. THE CONTRACTOR CHECKED ALL LOCAL CONDITIONS AFFECTING THE WORK AND MADE A THROUGH EXAMINATION OF THE ROUTE OF THE LINES, PLANS AND PREMISES IN ORDER TO BE ENTIRELY FAMILIAR WITH THE INSTALLATION.

7. NOTIFIED THE OWNER REPRESENTATIVE IN WRITING OF ANY DISCREPANCIES OR NECESSARY MODIFICATIONS PRIOR TO PROCEEDING WITH CONSTRUCTION.

GENERAL NOTE
THIS IS A STANDARD LEGEND. SOME SYMBOLS MAY NOT APPEAR ON THE DRAWINGS.

A E–5 — SHEET NO. WHERE DETAIL IS DRAWN

SYMBOL WHERE THERE IS A DETAIL

3 E–4 — SHEET NO. WHERE SECTION IS DRAWN

SYMBOL WHERE THERE IS A SECTION

SUBTITLE
DETAIL A
SCALE E–5
SHEET NO. WHERE THERE IS A DETAIL

SYMBOL WHERE DETAIL IS DRAWN

DETAIL SYMBOL

SUBTITLE
SECTION 3
SCALE E–4
SHEET NO. WHERE SECTION IS TAKEN

SYMBOL WHERE SECTION IS DRAWN

SECTION SYMBOL

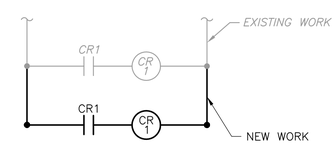

EXISTING CONDITION DESIGNATION

FINAL AS-BUILT

REV. NO.	DATE	DRWN	CHKD	REMARKS

DESIGNED BY:
DRAWN BY:
SHEET CHK'D BY:
CROSS CHK'D BY:
APPROVED BY:
DATE: MARCH 2012

PREPARED BY:
CAPE
CAPE Environmental Management, Inc.

US Army Corps of Engineers Kansas City District
GROUNDWATER TREATMENT FACILITY PACKAGE
ROCKAWAY BOROUGH SUPERFUND SITE
EAST MAIN/WALL STREET PLUME - OU2
ROCKAWAY BOROUGH, NEW JERSEY

ELECTRICAL
LEGEND AND ABBREVIATIONS II

PROJECT 50001.005
FILE NAME: E002SY00 AS–BUILT
SHEET NO.
E-2

XREFS: RKAWBDR

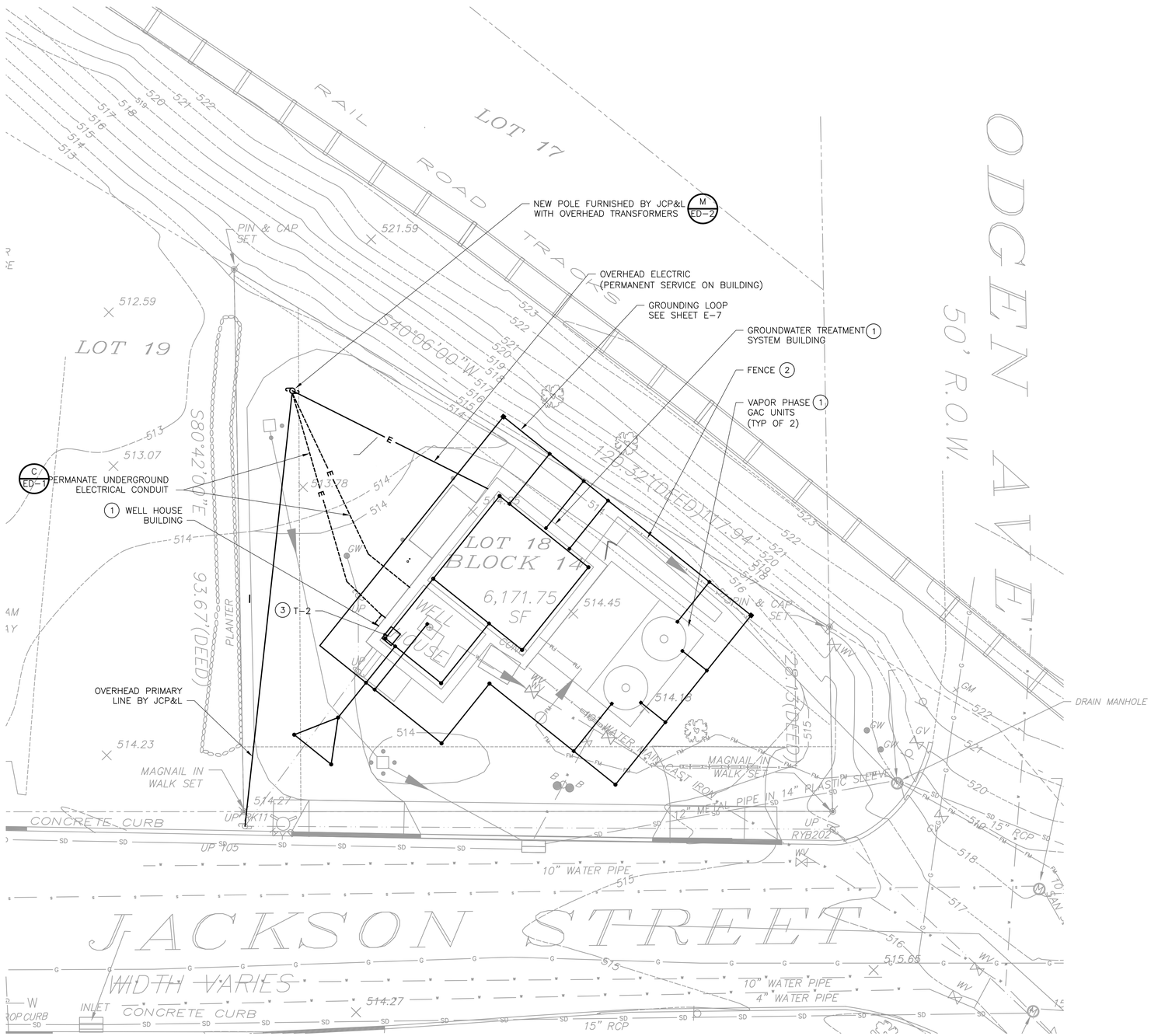

ELECTRICAL SITE

PLAN

1" = 10'

NOTE:

1. REFER TO SHEET E-2 FOR GENERAL NOTES.

DEMOLITION NOTES:

1. THE CONTRACTOR FIELD VERIFIED ALL ELECTRICAL ISOLATION (LOCK & TAG) AND EQUIPMENT SHOWN FOR SAFE DEMOLITION AND REMOVAL.

2. WHENEVER THE CONTRACTOR WAS REQUIRED TO DEMOLISH A PANELBOARD OR ANY POWER SOURCE SUPPLYING POWER TO MULTIPLE DEVICES OR LOCATIONS, THE CONTRACTOR FIELD VERIFIED ALL CIRCUITS. ANY CIRCUITS ROUTED TO LOCATIONS OUTSIDE THE DEMOLITION AREA WERE RELOCATED AS REQUIRED. THE OWNER WAS NOTIFIED PRIOR TO THE CIRCUIT RELOCATION.

3. THE CONTRACTOR DISCONNECTED ALL ELECTRICAL DEVICES/EQUIPMENT (PANELS, TRANSFORMERS, BUSDUCT, RECEPTACLES, SWITCHES, LIGHTS, MOTORS, ETC.) LIGHTING AND POWER FEEDERS ASSOCIATED WITHIN THE AREA OF WORK AS SHOWN (INCLUDING BUILDING EXTERIOR AND ROOF-TOP EQUIPMENT), TO ALLOW FOR SAFE AND COMPLETE REMOVAL OF ALL EQUIPMENT BEING DEMOLISHED, BACK TO SOURCE ALONG WITH ALL ASSOCIATED CONDUITS, CONDUCTORS, ETC. UNLESS OTHERWISE NOTED.

4. WHERE ELECTRICAL SYSTEMS PASS THROUGH THE DEMOLITION AREA TO SERVE OTHER PORTIONS OF THE PREMISES, THEY REMAINED OR WER SUITABLY RELOCATED AND THE SYSTEM RESTORED TO NORMAL OPERATION.

5. THE CONTRACTOR DISCONNECTED ANY EXISTING TEMPERATURE CONTROL SYSTEM DEVICES/EQUIPMENT AND ALL ASSOCIATED MATERIAL (CONDUIT, CONDUCTORS, ETC.) FOR AREA DEMOLITION, UNLESS OTHERWISE NOTED.

6. THIS WORK OCCURS WITHIN AN OPERATING FACILITY. COORDINATE ALL CONSTRUCTION ACCESS AND OPERATIONS WITH THE OWNER TO AVOID DISRUPTION TO ONGOING FACILITY OPERATIONS.

7. SURVEY THE EXISTING ELECTRICAL SYSTEMS AND EQUIPMENT IDENTIFIED FOR REMOVAL WITH REPRESENTATIVES FROM THE OTHER TRADES PRIOR TO PERFORMING ANY DEMOLITION WORK.

8. AREAS OF SYSTEMS SCHEDULED FOR COMPLETE DEMOLITION WERE MADE SAFE FROM ELECTRICAL SHOCK HAZARD PRIOR TO DEMOLITION. DISCONNECT ALL ELECTRICAL POWER, COMMUNICATIONS, ALARM, AND SIGNAL SYSTEMS.

9. REMOVED WELL PUMP MOTOR STARTER AND ALL CONDUIT, WIRING, CONTROLS AND ASSOCIATED APPURTENANCES INCLUDING FLOW METER, IN EXISTING PUMP STATION. COORDINATE OUTAGES IN SYSTEMS WITH THE OWNER. WHERE THE OWNER CANNOT ALLOW DURATION OF PROPOSED OUTAGE, PROVIDED TEMPORARY CONNECTIONS AS REQUIRED TO MAINTAIN SERVICE.

10. TRACED OUT EXISTING WIRING THAT WAS RELOCATED, OR REMOVED AND PERFORMED THE RELOCATION OR REMOVAL WORK AS REQUIRED FOR COMPLETE OPERATION AND SAFE SYSTEM.

11. THE CONTRACTOR MAINTAINED CONTINUITY OF ALL BUILDING SYSTEMS OUTSIDE DEMOLITION/RELOCATION AREA AS REQUIRED.

12. THE CONTRACTOR COMPLIED WITH ALL NATIONAL ELECTRICAL CODE AND THE STATE OF NEW JERSEY CODE REQUIREMENTS.

13. REMOVED 120V PANELBOARD IN EXISTING PUMP STATION AND ALL CONDUIT, WIRING AND ASSOCIATED APPURTENANCES.

14. REMOVED UNIT HEATER IN EXISTING PUMP STATION AND ALL CONDUIT, WIRING AND ASSOCIATED APPURTENANCES.

15. REMOVED MANUAL TRANSFER SWITCH IN EXISTING PUMP STATION AND ALL CONDUIT, WIRING AND ASSOCIATED APPURTENANCES. REUSE IN NEW SUPPLY WELL BUILDING.

KEYED NOTES:

1. REFER TO SHEETS E-5, E-6, E-7 AND E-8 FOR ENLARGED PLANS.
2. REFER TO SHEETS ED-1 AND ED-2 FOR FENCE GROUNDING DETAILS.
3. TRANSFORMER T-2 WAS RELOCATED INSIDE NEW WELL HOUSE BUILDING. MOUNTED A MINIMUM OF 1 FOOT ABOVE FLOOD PLAIN ELEVATION (FLOOD PLAIN ELEVATION IS 517 FEET, AMSL NGVD 1929).

FINAL AS-BUILT

1" = 10'
5 0 10

REV. NO.	DATE	DRWN	CHKD	REMARKS

DESIGNED BY:
DRAWN BY:
SHEET CHK'D BY:
CROSS CHK'D BY:
APPROVED BY:
DATE: MARCH 2012

PREPARED BY:
CAPE
CAPE Environmental Management, Inc.

US Army Corps of Engineers Kansas City District
GROUNDWATER TREATMENT FACILITY PACKAGE
ROCKAWAY BOROUGH SUPERFUND SITE
EAST MAIN/WALL STREET PLUME - OU2
ROCKAWAY BOROUGH, NEW JERSEY

ELECTRICAL SITE POWER PLAN

PROJECT 50001.005
FILE NAME: E003STPL AS-BUILT
SHEET NO.
E-3

XREFS: RKAWXBDR_CSTWB001_E001STWP

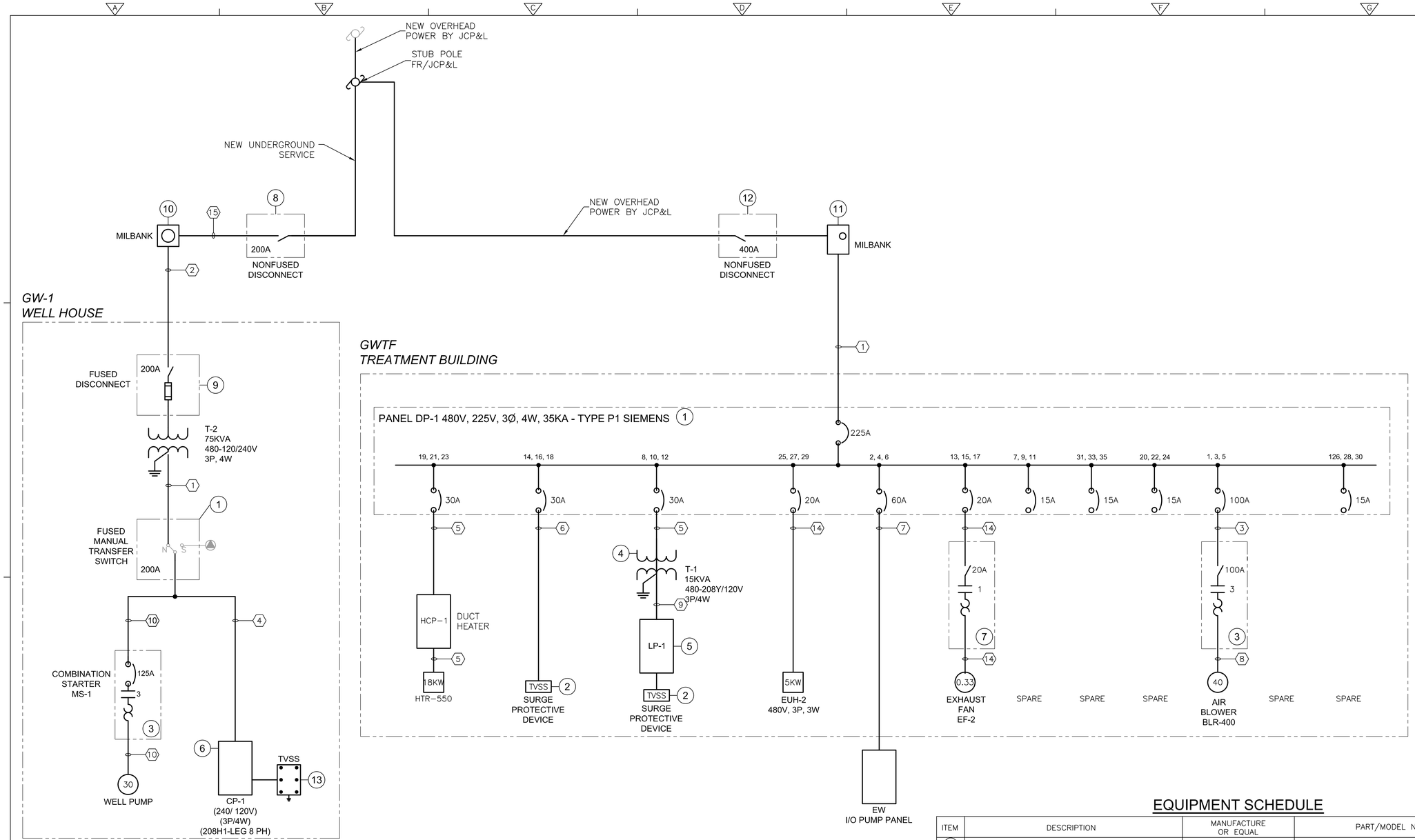

NOTES:

1. THE CONTRACTOR COORDINATED NEW ELECTRICAL WORK WITH ALL OTHER ASSOCIATED DISCIPLINES.

2. THE CONTRACTOR FIELD VERIFIED ALL NEW UNDERGROUND CONDUIT ROUTING AND CROSSINGS WITH ALL OTHER NEW AND EXISTING UTILITIES INCLUDING UNDERGROUND EXISTING ELECTRICAL UTILITIES.

3. THE CONTRACTOR FIELD VERIFIED AND CONFIRMED SPACE PROVIDED IS SUFFICIENT FOR EQUIPMENT SHOWN ON SINGLE LINE DIAGRAM. CONTRACTOR SHALL PROVIDE STARTERS WITH DOOR AND NECESSARY BLANK COVERS AND HARDWARE TO MAKE SYSTEM OPERATIONAL (TYP).

4. ALL SLAB PENETRATIONS USED 3/4" SCHEDULE 40 PVC SLEEVE.

5. ALL RACEWAYS FOR PROCESS AREA WERE RIGID ALUMINUM.

6. MAINTAINED AT LEAST 3'-6" IN FRONT OF ELECTRICAL EQUIPMENT PER NEC ARTICLE 110.

7. THE SHIELDS FOR INSTRUMENTATION CABLES WERE GROUNDED IN ACCORDANCE WITH THE INSTRUMENT MANUFACTURERS RECOMMENDATION. PROVIDED ISOLATED GROUND CONDUCTOR BACK TO THE POINT WHERE THE TRANSFORMER IS GROUNDED TO THE BUILDING GROUND GRID. DID NOT GROUND SHIELDS TO THE GROUND BUS IN THE LIGHTING PANEL.

8. GROUNDED TRANSFORMER TO THE METAL FRAME OF THE BUILDING.

9. ALL CIRCUIT BREAKERS AND COMPONENTS WERE FULLY RATED FOR 65,000 AMPS, RMS SYMMETRICAL.

10. BUSES WERE BRACED FOR 65,000 AMPS, RMS SYMMETRICAL.

11. INDICATES POWER CIRCUIT BREAKER (100% RATED) AS SPECIFIED.

KEYED NOTE:

1. MTS WAS REUSED FROM EXISTING WELL HOUSE.

CONDUIT AND WIRE LEGEND
(NUMBERS REFERENCE THIS SHEET ONLY)

NO.	DESCRIPTION
1	3"C, 3#4/0, 1#4G
2	2"C, 3#1, 1#6G
3	1 1/2"C, 3#3, 1#6G
4	3/4"C, 3#8, 1#10G
5	3/4"C, 3#10, 1#10G
6	MICRO-Z CABLE 4/C#10
7	3"C, 3#4/0, 1#4G
8	1"C, 3#6, 1#8G
9	1 1/2"C, 4#6, 1#8G
10	1 1/2"C, 3#3, 1#6G
11	3"C, 4-500MCM
12	2 1/2"C, 4#3/0, 1#6G
13	2-4"C (PVC), 4-350MCM
14	3/4"C, 3#12, 1#12G
15	3"C, 4#3/0

EQUIPMENT SCHEDULE

ITEM	DESCRIPTION	MANUFACTURE OR EQUAL	PART/MODEL NUMBER
1	DISTRIBUTION PANELBOARD, DP-1	SIEMENS	HD200.8 TYPE 3R DTF324R
2	TRANSIENT VOLTAGE SURGE SUPPRESSOR	MCG	160M-480D W/ CONNECTING MICRO-Z CABLE, NEMA 4X
3	COMBINATION SIZE 3 STARTER	SIEMENS	MCP CLASS 18, 18HUG92N
4	LIGHTING TRANSFORMER, T-1	HAMMOND-POWER	NMK015KBCN
5	LIGHTING PANEL, LP-1	SIEMENS	TYPE P1, NEMA 3R
6	WELL HOUSE DISTRIBUTION PANEL, CP-1	SIEMENS	TYPE P1, NEMA 3R
7	COMBINATION SIZE 1 STARTER	CUTLER-HAMMER	FREEDOM NEMA 3R
8	NON-FUSED DISCONNECT	SIEMENS	HD200.3 TYPE 3R HNF364R
9	FUSED CONNECT	SIEMENS	HD200.3 TYPE 3R KF364R
10	METER SOCKET	MILBANK	U3786-O-LBLG
11	METER SOCKET	MILBANK	U4168XK&BLG
12	NON-FUSED DISCONNECT	SIEMENS	HD400.6 TYPE 3R HNF365R
13	TRANSIENT VOLTAGE SURGE SUPPRESSOR	MCG	160M-480D W/CONNECTING MICRO-Z CABLE, NEMA 4X

WELL HOUSE
CONNECTED LOAD: 39VA
RUNNING LOAD: 26.2KVA
TREATMENT BUILDING
CONNECTED LOAD: 118.1KVA
RUNNING LOAD: 90.1KVA

FINAL AS-BUILT

REV. NO.	DATE	DRWN	CHKD	REMARKS

DESIGNED BY:
DRAWN BY:
SHEET CHK'D BY:
CROSS CHK'D BY:
APPROVED BY:
DATE: MARCH 2012

PREPARED BY:
CAPE Environmental Management, Inc.

US Army Corps of Engineers Kansas City District
GROUNDWATER TREATMENT FACILITY PACKAGE
ROCKAWAY BOROUGH SUPERFUND SITE
EAST MAIN/WALL STREET PLUME - OU2
ROCKAWAY BOROUGH, NEW JERSEY

ELECTRICAL SINGLE LINE DIAGRAM

PROJECT 50001.005
FILE NAME: E004STDI AS-BUILT
SHEET NO.
E-4

XREFS: RK4WYBD2

NOTE:

1. REFER TO SHEET E-2 FOR GENERAL NOTES.

CONDUIT AND WIRE LEGEND
(NUMBERS REFERENCE THIS SHEET ONLY)

NO.	DESCRIPTION
1	3/4"C, 2#12, 1#12G

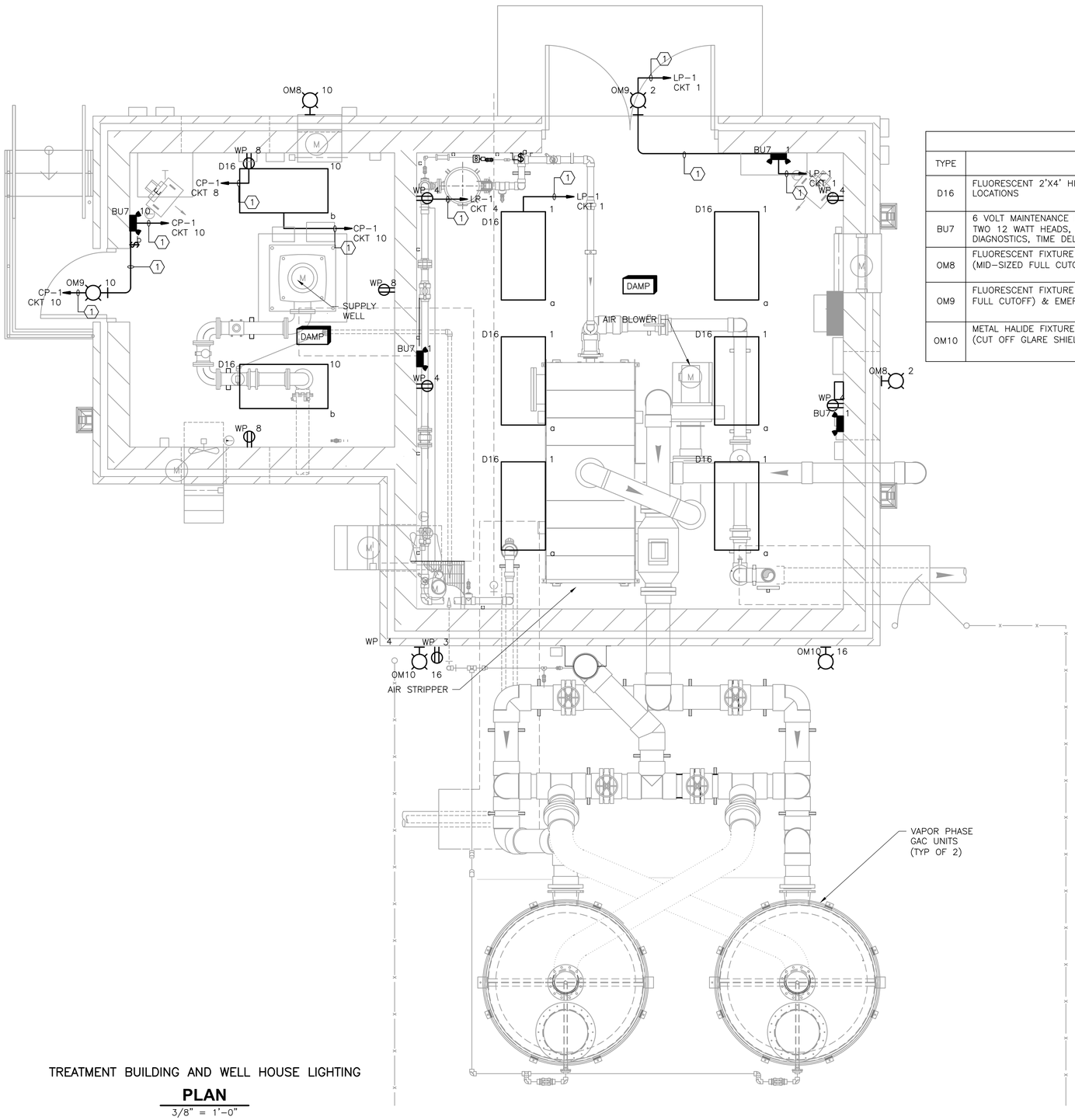

TREATMENT BUILDING AND WELL HOUSE LIGHTING

PLAN

3/8" = 1'-0"

LIGHTING FIXTURE SCHEDULE

TYPE	DESCRIPTION	MOUNTING	VOLTS/LAMPS	MANUFACTURER	REMARKS
D16	FLUORESCENT 2'X4' HIGH BAY FOR WET LOCATIONS	SUSPENDED	6-32W-MVOLT	CORONET LIGHTING VDP632MV 6 32 N1 X20 ACL MVOLT GEB10IS OR APPROVED EQUAL	PROVIDE HBBS36 CHAIN HANGER (36") FOR MOUNTING FIXTURES
BU7	6 VOLT MAINTENANCE FREE LEAD CALCIUM BATTERY UNIT, TWO 12 WATT HEADS, DUAL 120/277 VOLTAGE, WITH SELF DIAGNOSTICS, TIME DELAY AND AUDIBLE FAILURE INDICATION	WALL	2-12W-MVOLT	LITHONIA IND12100 H1206 SEL OR APPROVED EQUAL	MOUNT 8' AFF
OM8	FLUORESCENT FIXTURE WITH PHOTOCELL (MID-SIZED FULL CUTOFF)	WALL	1-42W-120	RAB LIGHTING WP2FCF42/PC	
OM9	FLUORESCENT FIXTURE WITH PHOTOCELL (MID-SIZED FULL CUTOFF) & EMERGENCY CIRCUIT	WALL	1-42W-120	RAB LIGHTING WP2FCF42/EI	
OM10	METAL HALIDE FIXTURE (CUT OFF GLARE SHIELD)	WALL	1-70W-120	RAB LIGHTING WP2CH70/PC	BREAKER CONTROL (MOUNT 18' AFF)

3/8" = 1'- 0"

2 0 2 4

FINAL AS-BUILT

REV. NO.	DATE	DRWN	CHKD	REMARKS

DESIGNED BY:
DRAWN BY:
SHEET CHK'D BY:
CROSS CHK'D BY:
APPROVED BY:
DATE: MARCH 2012

PREPARED BY:
CAPE
CAPE Environmental Management, Inc.

US Army Corps of Engineers Kansas City District
GROUNDWATER TREATMENT FACILITY PACKAGE
ROCKAWAY BOROUGH SUPERFUND SITE
EAST MAIN/WALL STREET PLUME - OU2
ROCKAWAY BOROUGH, NEW JERSEY

ELECTRICAL LIGHTING PLAN

PROJECT 50001.005
FILE NAME: E005PSPL AS-BUILT
SHEET NO.
E-5

XREFS: RKAWYBD2 ZATEBS000 RH01PSPL MTBWP001 | E001PSWP

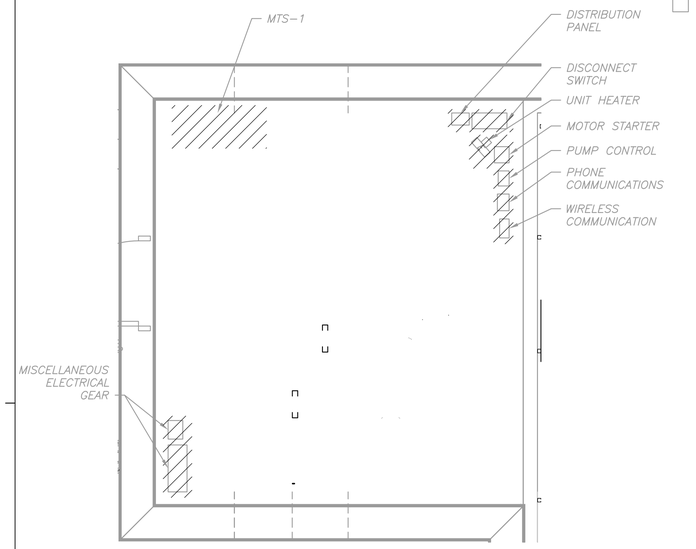

WELL HOUSE DEMOLITION

PLAN

3/8" = 1'-0"

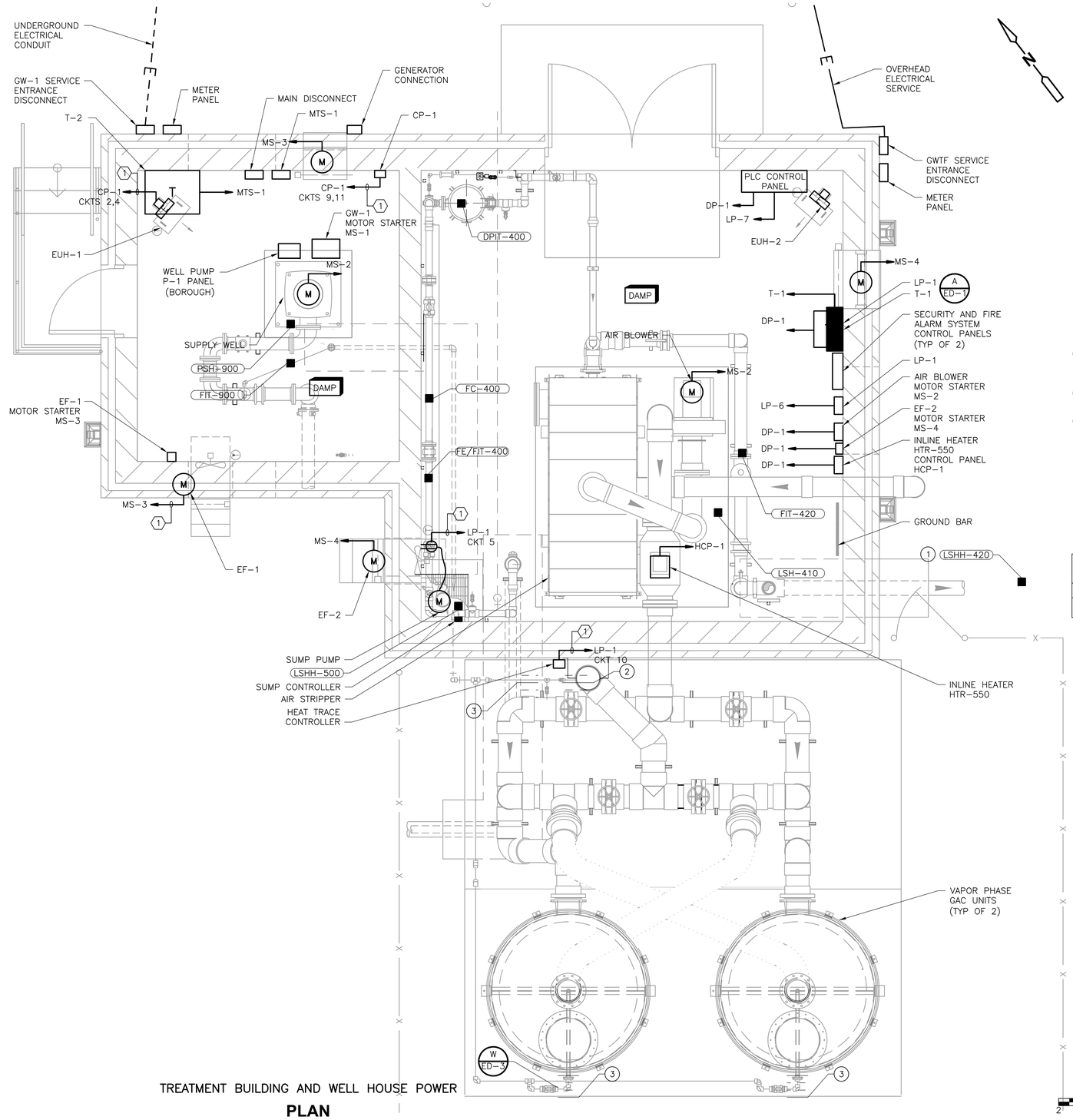

TREATMENT BUILDING AND WELL HOUSE POWER

PLAN

3/8" = 1'-0"

DEMOLITION NOTES:

1. ELECTRIC COMPONENTS WERE DEMOLISHED AS SHOWN.
2. EXISTING FLOW METER WAS GIVEN TO OWNER FOR FUTURE USE.
3. MTS-1 AND WIRELESS COMMUNICATION WERE REUSED IN NEW BUILDING.

NOTES:

1. REFER TO SHEET E-2 FOR GENERAL NOTES.
2. ELECTRIC COMPONENTS FOR TEMPORARY SERVICE WERE RELOCATED INSIDE WELL HOUSE BUILDING AS SHOWN.
3. ALL CONDUITS WERE CONCEALED IN BUILDING SLAB WHEN POSSIBLE.
4. ALL COMMUNICATION AND ANALOG CONTROL CIRCUITS WERE INSTALLED IN GALVANIZED RIGID STEEL.
5. ALL EQUIPMENT WAS INSTALLED ABOVE THE FLOOD PLAIN LEVEL OF 517 FEET AMSL NGVD 1929.

KEYED NOTES:

1. LSHH-420 WAS LOCATED IN EXISTING DRAIN MANHOLE. REFER TO SHEET E-3 FOR EXACT LOCATION.
2. HEAT TRACE FROM BASE OF STACK TO DRAIN VALVE AND VALVE BODY TO MAIN DRAIN PIPING.
3. HEAT TRACE DRIP LEG AND VALVE BODY TO MAIN DRAIN PIPING.

LEGEND:

HEAT TRACE

CONDUIT AND WIRE LEGEND
(NUMBERS REFERENCE THIS SHEET ONLY)

NO.	DESCRIPTION
1	3/4"C, 2#12, 1#12G

FINAL AS-BUILT

REV. NO.	DATE	DRWN	CHKD	REMARKS

DESIGNED BY:
DRAWN BY:
SHEET CHK'D BY:
CROSS CHK'D BY:
APPROVED BY:
DATE: MARCH 2012

PREPARED BY:
CAPE
CAPE Environmental Management, Inc.

US Army Corps of Engineers Kansas City District
GROUNDWATER TREATMENT FACILITY PACKAGE
ROCKAWAY BOROUGH SUPERFUND SITE
EAST MAIN/WALL STREET PLUME - OU2
ROCKAWAY BOROUGH, NEW JERSEY

ELECTRICAL POWER AND DEMOLITION PLAN

PROJECT 50001.005
FILE NAME: E006PSPL AS-BUILT
SHEET NO.
E-6

XREFS: RKAWYBD2, ZATFBS000, RH01PSPL, MTBWP001, E001PSWP

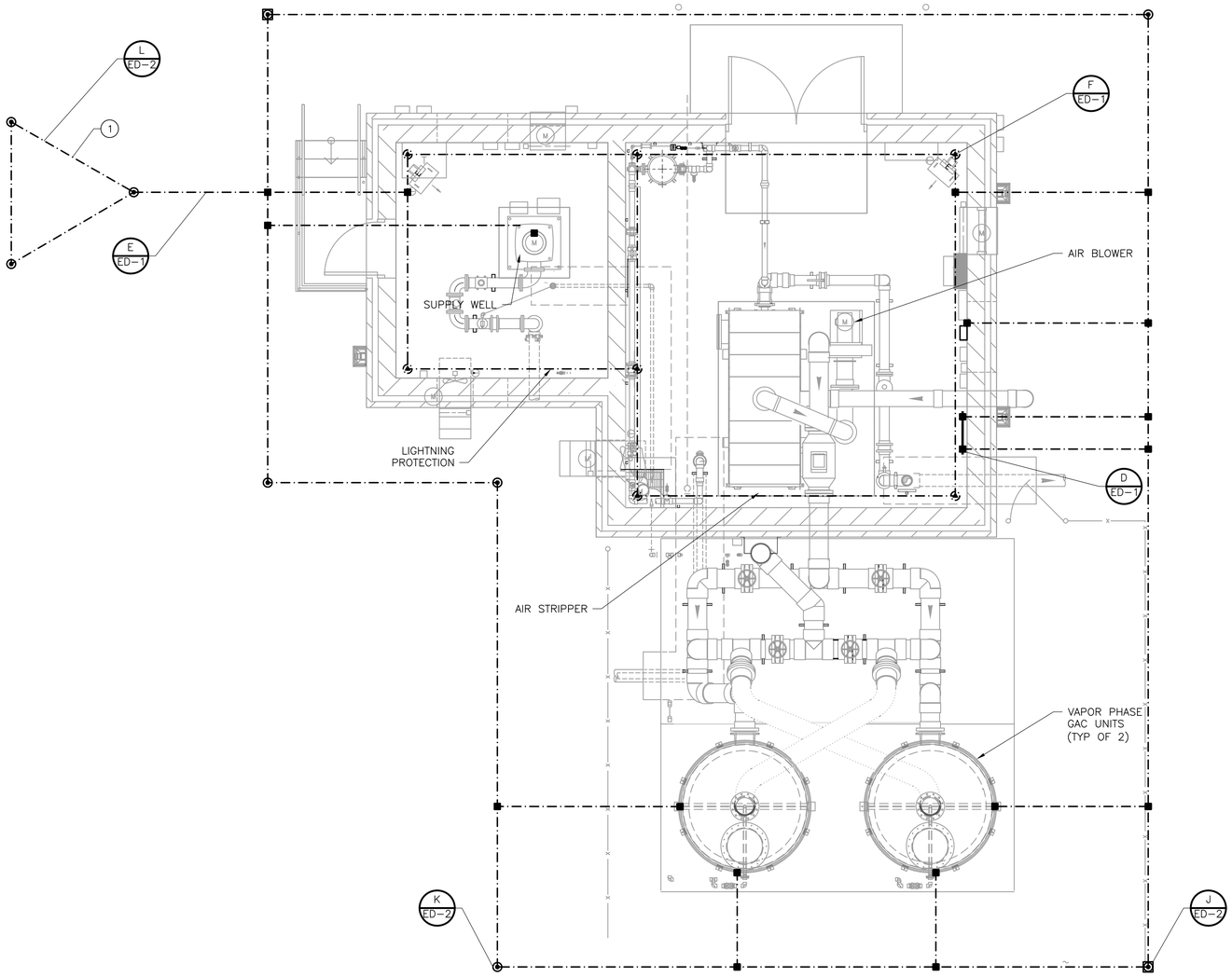

TREATMENT BUILDING AND WELL HOUSE GROUNDING

PLAN

1/4" = 1'-0"

NOTE:

1. REFER TO SHEET E-2 FOR GENERAL NOTES.

KEYED NOTE:

(1) THE CONTRACTOR ADDED ADDITIONAL GROUNDING IF REQUIRED.

GROUNDING SYMBOLS

- "TA" CALDWELD CONNECTION
- "GT" CALDWELD CONNECTION WITH 3/4" DIAMETER X 10'-0" GROUND ROD
- BARE STRANDED GROUND, INDEX 2/0 AWG
- GROUND ROD INSPECTION HOUSING

FINAL AS-BUILT

1/4" = 1'- 0"

2 1 0 2 4

REV. NO.	DATE	DRWN	CHKD	REMARKS

DESIGNED BY:
DRAWN BY:
SHEET CHK'D BY:
CROSS CHK'D BY:
APPROVED BY:
DATE: MARCH 2012

PREPARED BY:
CAPE
CAPE Environmental Management, Inc.

US Army Corps of Engineers Kansas City District
GROUNDWATER TREATMENT FACILITY PACKAGE
ROCKAWAY BOROUGH SUPERFUND SITE
EAST MAIN/WALL STREET PLUME - OU2
ROCKAWAY BOROUGH, NEW JERSEY

ELECTRICAL GROUNDING PLAN

PROJECT 50001.005
FILE NAME: E007PSPL AS-BUILT
SHEET NO.
E-7

XREFS: RKAWYB02, ZATERS000, RH01PSPL, MTRWP001, E001PSWP

NOTE:

1. REFER TO SHEET E-2 FOR GENERAL NOTES.
2. FOR ADDITIONAL INFORMATION REFER TO FIRE ALARM SHOP DRAWING 16720-1.

FIRE ALARM NOTES:

1. THE CONTRACTOR REFERRED TO ELECTRICAL PLAN DRAWINGS FOR EXACT LOCATIONS AND QUANTITIES OF EQUIPMENT UNLESS OTHERWISE NOTED.
2. THE CONTRACTOR REFERRED TO HVAC DRAWINGS FOR DUCT SMOKE DETECTOR LOCATIONS AND QUANTITIES.
3. INSTALLED 3/4"C CONDUITS, FIRE PROTECTION SYSTEM VENDOR WERE RESPONSIBLE FOR SIZING WIRES.

CONDUIT AND WIRE LEGEND
(NUMBERS REFERENCE THIS SHEET ONLY)

NO.	DESCRIPTION
1	3/4"C, 2#12, 1#12G

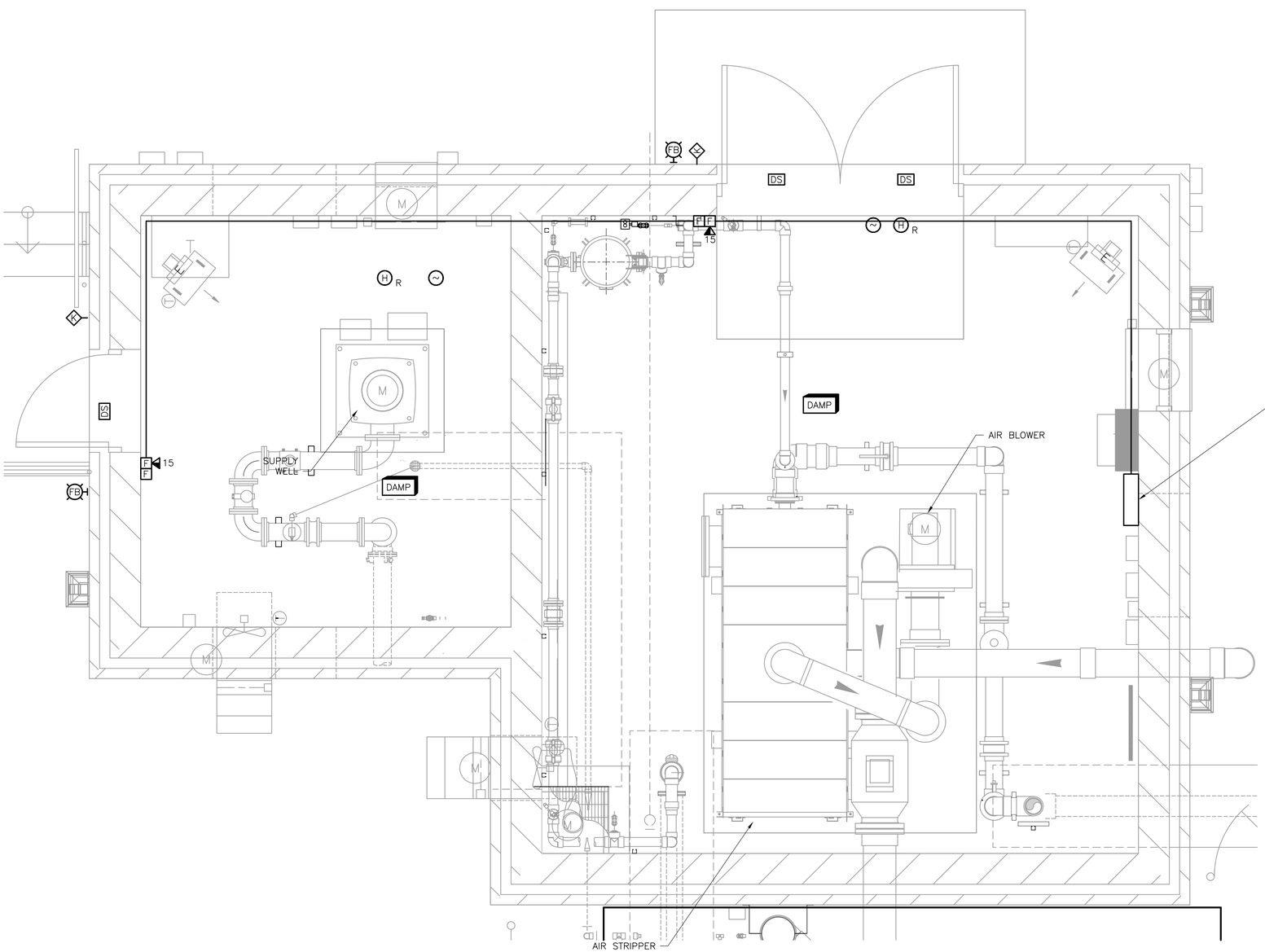

TREATMENT BUILDING AND WELL HOUSE FIRE ALARM AND SECURITY SYSTEM

PLAN

1/2" = 1'-0"

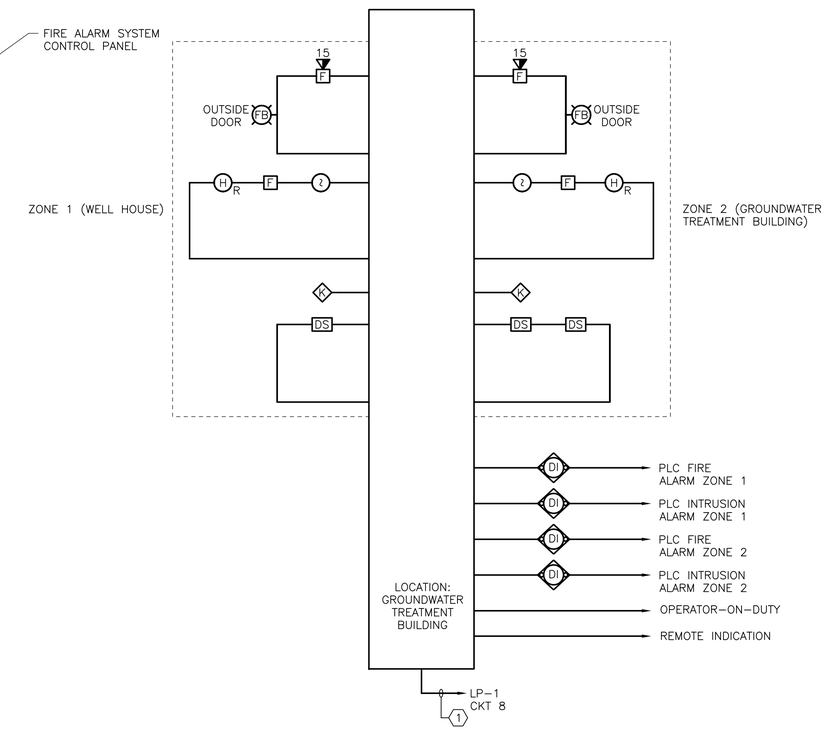

FIRE ALARM AND SECURITY SYSTEM

DIAGRAM

NTS

FINAL AS-BUILT

1/2" = 1'- 0"

REV. NO.	DATE	DRWN	CHKD	REMARKS

DESIGNED BY:
DRAWN BY:
SHEET CHK'D BY:
CROSS CHK'D BY:
APPROVED BY:
DATE: MARCH 2012

PREPARED BY:
CAPE
CAPE Environmental Management, Inc.

US Army Corps of Engineers Kansas City District
GROUNDWATER TREATMENT FACILITY PACKAGE
ROCKAWAY BOROUGH SUPERFUND SITE
EAST MAIN/WALL STREET PLUME - OU2
ROCKAWAY BOROUGH, NEW JERSEY

ELECTRICAL
FIRE ALARM AND SECURITY SYSTEM PLAN

PROJECT 50001.005
FILE NAME: E008PSPL AS-BUILT
SHEET NO.
E-8

XREFS: RKAWYBD2 ZATEBS000 RH01PSPL MTBWP001 F001PSWP

NOTE:

1. REFER TO SHEET E-2 FOR GENERAL NOTES.

LEGEND

- AI — ANALOG INPUT
- AO — ANALOG OUTPUT
- DI — DIGITAL INPUT
- DO — DIGITAL OUTPUT
- X2 — ALLEN BRADLEY MOTOR STARTER CONNECTION POINT
- ◆ — DEVICE LOCATED IN MAIN BUILDING PANEL

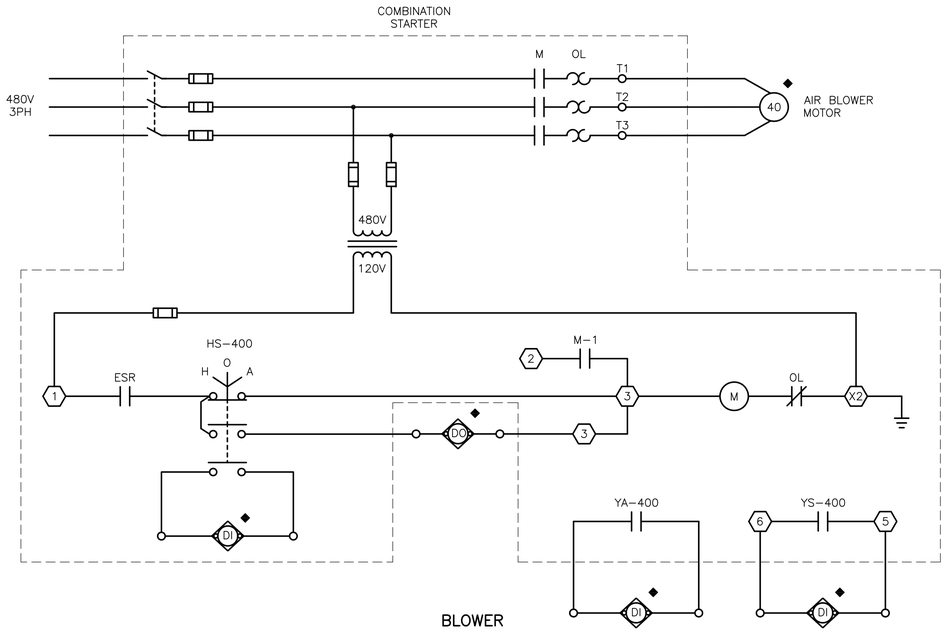

BLOWER

WIRING DIAGRAM

NTS

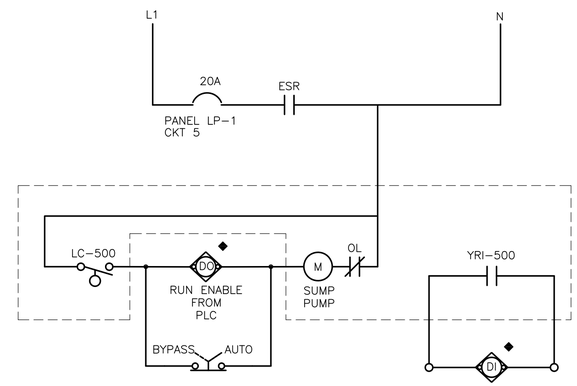

BUILDING SUMP PUMP

WIRING DIAGRAM

NTS

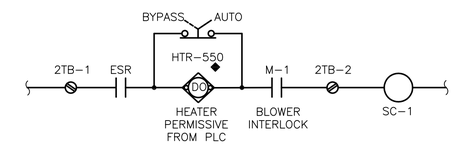

WATLOW INLINE HEATER SAFETY INTERLOCK

WIRING DIAGRAM

NTS

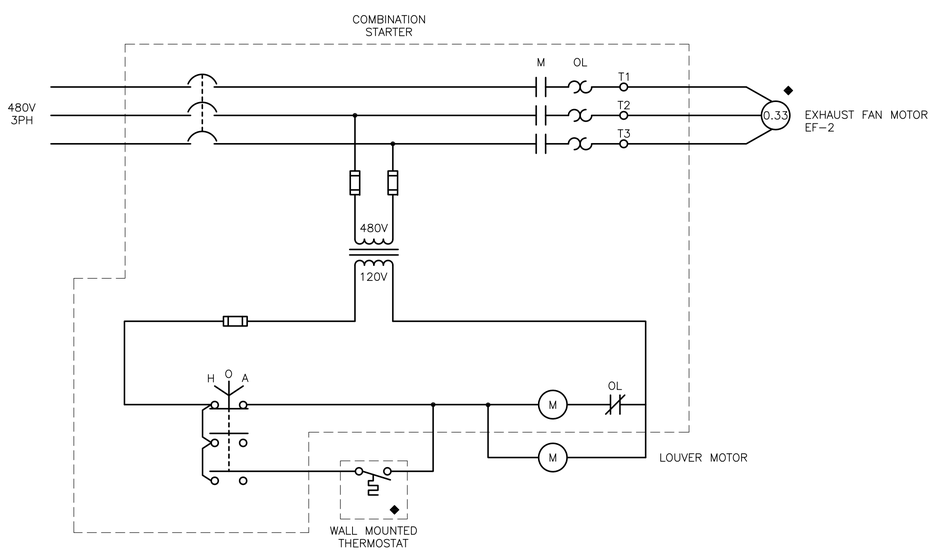

GWTF EXHAUST FAN (EF-2)

WIRING DIAGRAM

NTS

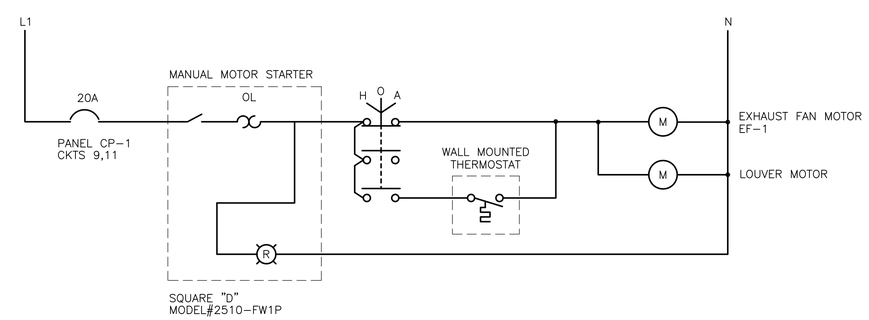

GW-1 EXHAUST FAN (EF-1)

WIRING DIAGRAM

NTS

FINAL AS-BUILT

REV. NO.	DATE	DRWN	CHKD	REMARKS

DESIGNED BY:
DRAWN BY:
SHEET CHK'D BY:
CROSS CHK'D BY:
APPROVED BY:
DATE: MARCH 2012

PREPARED BY:
CAPE
CAPE Environmental Management, Inc.

US Army Corps of Engineers Kansas City District
GROUNDWATER TREATMENT FACILITY PACKAGE
ROCKAWAY BOROUGH SUPERFUND SITE
EAST MAIN/WALL STREET PLUME - OU2
ROCKAWAY BOROUGH, NEW JERSEY

ELECTRICAL WIRING DIAGRAMS I

PROJECT 50001.005
FILE NAME: E009SDDI AS-BUILT
SHEET NO.
E-9

XREFS: RKAWYBD2

NOTE:

1. REFER TO SHEET E-2 FOR GENERAL NOTES.

PANELBOARD LP-1

LOCATION TREATMENT BUILDING

100 AMP BUS RATING 50 AMP MAIN C/B 22 KA SHORT CIRCUIT RATING 3 POLES

208/120 VOLTS 3 PH. 4 WIRE 60 HZ. ☐ ELECTRONIC GRADE (OPTIONAL) SURFACE MOUNTED

DESCRIPTION	LOAD KVA A	LOAD KVA B	LOAD KVA C	C/B AMP/POLES	CIRCUIT	C/B AMP/POLES	LOAD KVA A	LOAD KVA B	LOAD KVA C	DESCRIPTION
TREATMENT BUILDING LIGHTS				20/1	1–2	20/1				EXTERIOR LIGHTING
EXTERIOR RECEPTACLE				20/1	3–4	20/1				TREATMENT BUILDING RECEPTACLES
SUMP PUMP PANEL				20/1	5–6	20/1				SECURITY SYSTEM/ACCESS PANEL
SCADA				30/1	7–8	20/1				FIRE ALARM SYSTEM
TVSS				20/3	9–10	20/1				HEAT TRACE (GFI)
↓				↓	11–12	20/1				SPARE
↓				↓	13–14	20/1				SPARE
SPARE				20/1	15–16	20/1				EXTERIOR LIGHTING (VPGAC)
SPARE				20/1	17–18	20/1				SPARE
SPARE				20/1	19–20	20/1				SPARE
SPARE				20/1	21–22	20/1				SPARE
SPARE				20/1	23–24	20/1				SPARE
					A B C					
TOTAL KVA										TOTAL KVA
TOTAL CONNECTED KVA						___ øA	___ øB	___ øC		

PANELBOARD LP-1

SCHEDULE

NTS

PANELBOARD CP-1

LOCATION WELL HOUSE

100 AMP BUS RATING 50 AMP MAIN C/B 22 KA SHORT CIRCUIT RATING 3 POLES

240/120 VOLTS 3 PH. 4 WIRE 60 HZ. ☐ ELECTRONIC GRADE (OPTIONAL) SURFACE MOUNTED

DESCRIPTION	LOAD KVA A	LOAD KVA B	LOAD KVA C	C/B AMP/POLES	CIRCUIT	C/B AMP/POLES	LOAD KVA A	LOAD KVA B	LOAD KVA C	DESCRIPTION
SPARE				20/1	1–2	20/2				EUH-1
TVSS				20/3	3–4	↓				↓
↓				↓	5–6	20/1				SPARE
↓				↓	7–8	20/1				WELL HOUSE RECEPTACLES
EF-1				20/2	9–10	20/1				WELL HOUSE LIGHTS
↓				↓	11–12	20/1				SPARE
					13–14	20/1				PUMP CONTROL PANEL
					A B C					
TOTAL KVA										TOTAL KVA
TOTAL CONNECTED KVA						___ øA	___ øB	___ øC		

GW-1 PANELBOARD CP-1

SCHEDULE

NTS

PANELBOARD DP-1

LOCATION TREATMENT BUILDING

225 AMP BUS RATING 225 AMP MAIN C/B 35 KA SHORT CIRCUIT RATING 3 POLES

480/277 VOLTS 3 PH. 4 WIRE 60 HZ. ☐ ELECTRONIC GRADE (OPTIONAL) SURFACE MOUNTED

DESCRIPTION	LOAD KVA A	LOAD KVA B	LOAD KVA C	C/B AMP/POLES	CIRCUIT	C/B AMP/POLES	LOAD KVA A	LOAD KVA B	LOAD KVA C	DESCRIPTION
AIR BLOWER BLR-400				100/3	1–2	60/3				EXTRACTION WELL PANEL
↓				↓	3–4	↓				↓
↓				↓	5–6	↓				↓
SPARE				15/3	7–8	30/3				LP-1 & TRANSFORMER T-1
↓				↓	9–10	↓				↓
↓				↓	11–12	↓				↓
EXHAUST FAN EF-2				20/3	13–14	20/3				TVSS
↓				↓	15–16	↓				↓
↓				↓	17–18	↓				↓
DUCT HEATER HCP-1				30/3	19–20	15/3				SPARE
↓				↓	21–22	↓				↓
↓				↓	23–24	↓				↓
UNIT HEATER EUH-2				30/3	25–26	30/3				SPARE
↓				↓	27–28	↓				↓
↓				↓	29–30	↓				↓
SPARE				15/3	31–32					
↓				↓	33–34					
					35–36					
					A B C					
TOTAL KVA										TOTAL KVA
TOTAL CONNECTED KVA						___ øA	___ øB	___ øC		

PANELBOARD DP-1

SCHEDULE

NTS

FINAL AS-BUILT

REV. NO.	DATE	DRWN	CHKD	REMARKS

DESIGNED BY:
DRAWN BY:
SHEET CHK'D BY:
CROSS CHK'D BY:
APPROVED BY:
DATE: MARCH 2012

PREPARED BY:
CAPE
CAPE Environmental Management, Inc.

US Army Corps of Engineers Kansas City District
GROUNDWATER TREATMENT FACILITY PACKAGE
ROCKAWAY BOROUGH SUPERFUND SITE
EAST MAIN/WALL STREET PLUME - OU2
ROCKAWAY BOROUGH, NEW JERSEY

ELECTRICAL PANELBOARD SCHEDULES

PROJECT 50001.005
FILE NAME: E010SDSH AS-BUILT
SHEET NO.
E-10

XREFS: RKAWYB02

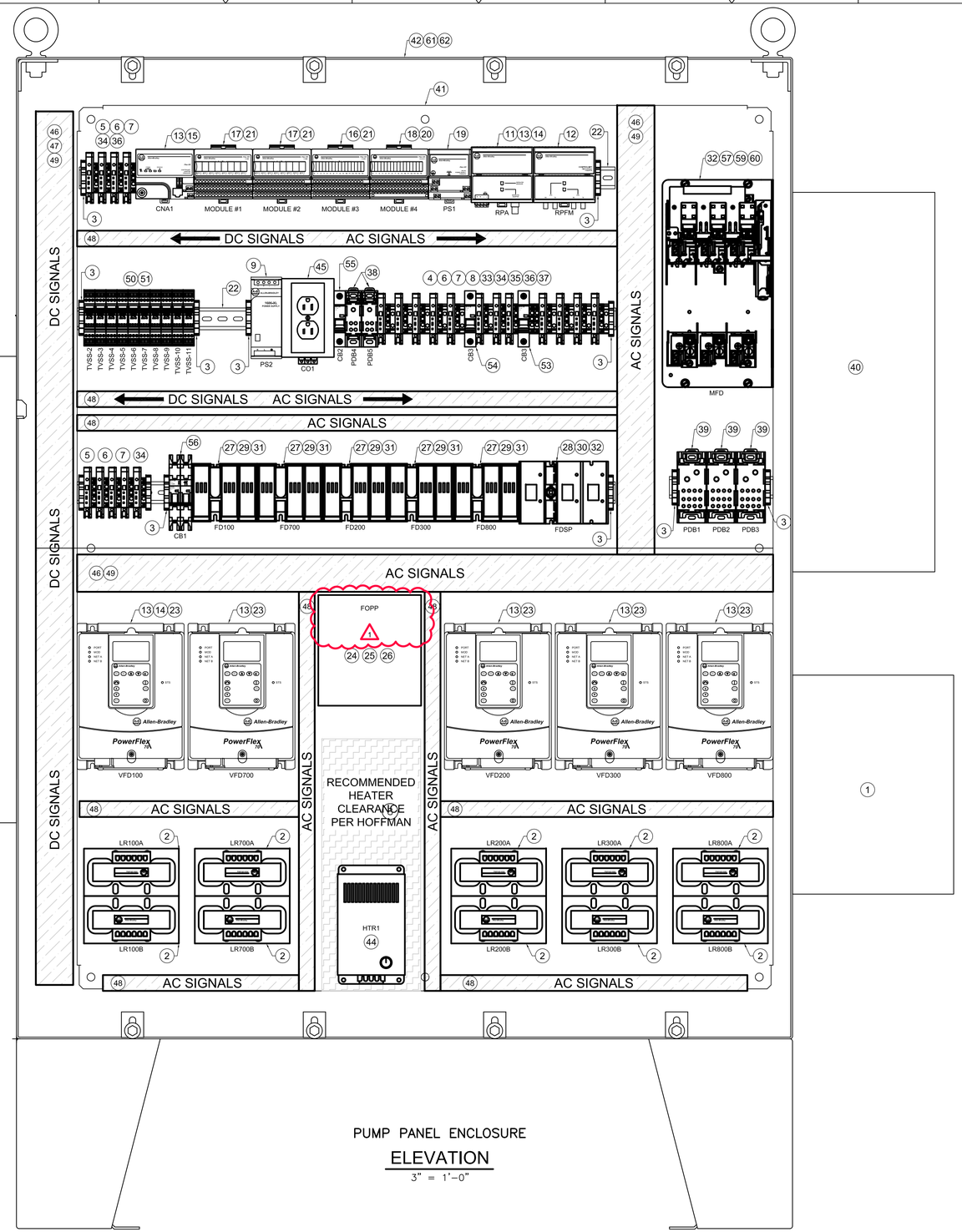

PUMP PANEL ENCLOSURE

ELEVATION

3" = 1'-0"

BILL OF MATERIAL		
ITEM	NO.	DESCRIPTION
1	1	ACME INDUSTRIAL CONTROL TRANSFORMER CAT. #T181221
2	10	ALLEN-BRADLEY LINE REACTOR, OPEN STYLE CAT. #1321-3R8-B
3	8	ALLEN-BRADLEY END ANCHOR CAT. #1492-EAJ35
4	12	ALLEN-BRADLEY FINGER-SAFE SINGLE CIRCUIT FUSE BLOCK CAT. #1492-H4
5	9	ALLEN-BRADLEY FINGER-SAFE SINGLE CIRCUIT FUSE BLOCK CAT. #1492-H5
6	16	ALLEN BRADLEY END BARRIER SINGLE CIRCUIT FUSE OR ISOLATION BLOCKS CAT. #1492-N37
7	23	ALLEN-BRADLEY IEC SINGLE FEEDTHROUGH CIRCUIT BLOCK CAT. #1492-W10
8	10	ALLEN BRADLEY IEC SINGLR CIRCUIT GROUNDING BLOCK CAT. #11492-WG10S
9	1	ALLEN BRADLEY STANDARD POWER SUPPLY CAT. #1606-XL60D
10	20	ALLEN BRADLEY CONTROLNET NETWORK, SHIELD HIGH FLEX CABLE CAT. #1786-RG6
11	1	ALLEN-BRADLEY CONTROLNET REPEATER ADAPTER MODULE CAT. #1786-RPA
12	1	ALLEN BRADLEY CONTROLNET MEDIUM-DISTANCE FIBER MODULE CAT. #1786-RPFM
13	7	ALLEN BRADLEY CONTROLNET T-TAP/STRAIGHT CAT. #1786-TPS
14	2	ALLEN BRADLEY CONTROLNET NEWTWORK TERMINATOR MODULES CAT. #1786-XT
15	1	ALLEN BRADLEY CONTROLNET FLEX I/O ADAPTER MODULE MODULE CAT. #1794-ACN15
16	1	ALLEN BRADLEY FLEX I/O INPUT MODULE CAT. #11794-IA16
17	2	ALLEN BRADLEY ANALOG INPUT MODULES, 8 SINGLE-ENDED INPUTS CAT. #1794-IE8
18	1	ALLEN BRADLEY FLEX I/O OUTPUT MODULE CAT. #1794-OA16
19	1	ALLEN BRADLEY 85-264 VAC TO 24 VDC 1.3A POWER SUPPLY CAT. #1794-PS13
20	1	ALLEN BRADLEY FLEX I/O TERMINAL BASE, 2-WIRE, CAGE CLAMP CAT. #1794-TB2
21	3	ALLEN BRADLEY FLEX I/O TERMINAL BASE, 3-WIRE, CAGE CLAMP CAT. #1794-TB3
22	3	ALLEN BRADLEY ZINC PLATED, CHROMATED STEEL, 1 METER CAT. #199-DR1
23	5	ALLEN BRADLEY POWERFLEX AC DRIVE CAT. #20AD8P0A3AYNACC0
24	1	AMERICAN TECH SUPPLY 6 PACK ST PB INSERT MM/SM FIBER OPTIC ADAPTER CAT. #AP-106ST
25	1	AMERICAN TECH SUPPLY ST-ST DUPLEX 62.5/125 MULTIMODE FIBER OPTIC PATCH CABLE CAT. #ATS-EFSTP-01M
26	1	AMERICAN TECH SUPPLY WALL-MOUNT 12 PORT FIBER PATCH PANEL ENCLOSURE CAT. #ATSWAC-1X
27	5	BUSSMANN DIRECT MOUNT HANDLE FOR DISCONNECT SWITCH CAT. #BDHA79
28	1	BUSSMANN DIRECT MOUNT HANDLE FOR 60A DISCONNECT SWITCH CAT. #CDH4
29	5	BUSSMANN 30A FUSIBLE DISCONNECT SWITCH CAT. #CFD30AJ3
30	1	BUSSMANN 60A FUSIBLE DISCONNECT SWITCH CAT. #CFD60J3
31	15	BUSSMANN LOW PEAK DUAL ELEMENT TIME DELAY FUSE CAT. #LPJ-15SP
32	6	BUSSMANN LOW PEAK DUAL ELEMENT TIME DELAY FUSE CAT. #LPJ-60SP
33	1	BUSSMANN FUSE, CARTRIDGE, 12A CAT. #MDL-12-R

BILL OF MATERIAL		
ITEM	NO.	DESCRIPTION
34	14	BUSSMANN FUSE, CARTRIDGE, 1A CAT. #MDL-1-R
35	1	BUSSMANN FUSE, CARTRIDGE, 2.5A CAT. #MDL-2-1/2-R
36	2	BUSSMANN FUSE, CARTRIDGE, 2A CAT. #MDL-2-R
37	1	BUSSMANN FUSE, CARTRIDGE, 4A CAT. #MDL-4-R
38	2	BUSSMANN POWER DISTRIBUTION BLOCK CAT. #PDBFS220
39	3	BUSSMANN POWER DISTRIBUTION BLOCK CAT. #PDBFS377
40	1	CURRENT TECHNOLOGY SURGE PROTECTOR CAT. #CGP100-480-3DG
41	1	HOFFMAN PANEL CAT. #S506-250-R
42	1	HOFFMAN STAINLESS STEEL, TWO-DOOR DISCONNECT ENCLOSURE CAT. #A60X48108SSLPN4
43	1	HOFFMAN AIR CONDITIONER, SIDE-MOUNT CAT. #CR290416G068
44	1	HOFFMAN ELECTRIC HEATER, 800 WATT CAT. #DAH8001B
45	1	HUBBELL DIN RAIL UTILITY BOX, GFCI DUPLEX RECEPTACLE CAT. #DRUBGFI115
46	10	IBOCO WIRE RETAINER, 2.25 x 4.0 IN. DUCT CAT. #CL-2240
47	10	IBOCO SUPPORT ARMS CAT. #MSN
48	5	IBOCO WIRE DUCT, 1 x 4.0 IN. CAT. #T1-1040W
49	2	IBOCO WIRE DUCT, 2.25 x 4.0 iN. CAT. # T1-2240W
50	10	PHOENIX CONTACT PROTECTIVE PLUG WITH PROTECTIVE CIRCUIT CAT. #2856032
51	10	PHOENIX CONTACT BASE ELEMENT FOR PROTECTIVE PLUG CAT. #2856126
52	5	PRECISION DIGITAL LOOP-POWERED PANEL METER CAT. #PD683-0K0
53	1	SIEMENS CIRCUIT BREAKER 240V 14KA, 1-POLE, C, 15A CAT. #5SJ4118-7HG040
54	1	SIEMENS CIRCUIT BREAKER 240V 14KA, 1-POLE, C, 20A CAT. #5SJ4120-7HG040
55	1	SIEMENS CIRCUIT BREAKER 240V 14KA, 1-POLE, C, 60A CAT. #5SJ4160-7HG040
56	1	SIEMENS CIRCUIT BREAKER 10KA, 2-POLE, C, 15A CAT. #5SJ4118-7HG042
57	1	SIEMENS FUSIBLE PANEL MOUNTED VARIABLE DEPTH DISCONNECT SWITCH CAT. #VBFS362
58	1	SIEMENS MAX-FLEX DISCONNECT OPERATOR HANDLE AND ADAPTER KIT CAT. #VBHM1
59	1	SIEMENS 36" DISCONNECT CABLE KIT CAT. #FH0EC036
60	1	SIEMENS DISCONNECT PROTECTIVE COVER CAT. #49PSD6
61	1	HOFFMAN FLUORESCENT LIGHT CAT. #LF120V18
62	1	HOFFMAN DOOR OPERATED SWITCH FOR ENCLOSURE LIGHT CAT. #ALFSWD
63	1	HOFFMAN DEEP-HINGED WINDOW KIT CAT. #AWDH2420N4SS

FINAL AS-BUILT

3" = 1'- 0"

.25 0 .25 .5

REV. NO.	DATE	DRWN	CHKD	REMARKS
1	4/19/13	JRD	MJ	ADDED TEMPERATURE SENSOR. SEE ATTACHED FOR DETAILS
2	4/19/13	JRD	MJ	REPLACED AIR CONDITIONER WITH LARGER 6500 BTU/Hr UNIT. SEE ATTACHED FOR DETAILS

DESIGNED BY:
DRAWN BY:
SHEET CHK'D BY:
CROSS CHK'D BY:
APPROVED BY:
DATE: MARCH 2012

PREPARED BY:
CAPE
CAPE Environmental Management, Inc.

US Army Corps of Engineers Kansas City District
GROUNDWATER TREATMENT FACILITY PACKAGE
ROCKAWAY BOROUGH SUPERFUND SITE
EAST MAIN/WALL STREET PLUME - OU2
ROCKAWAY BOROUGH, NEW JERSEY

ELECTRICAL
I/O PANEL DETAILS

PROJECT 50001.005
FILE NAME: E011SDSH AS-BUILT
SHEET NO.
E-11

XREFS: RKAWYBDR

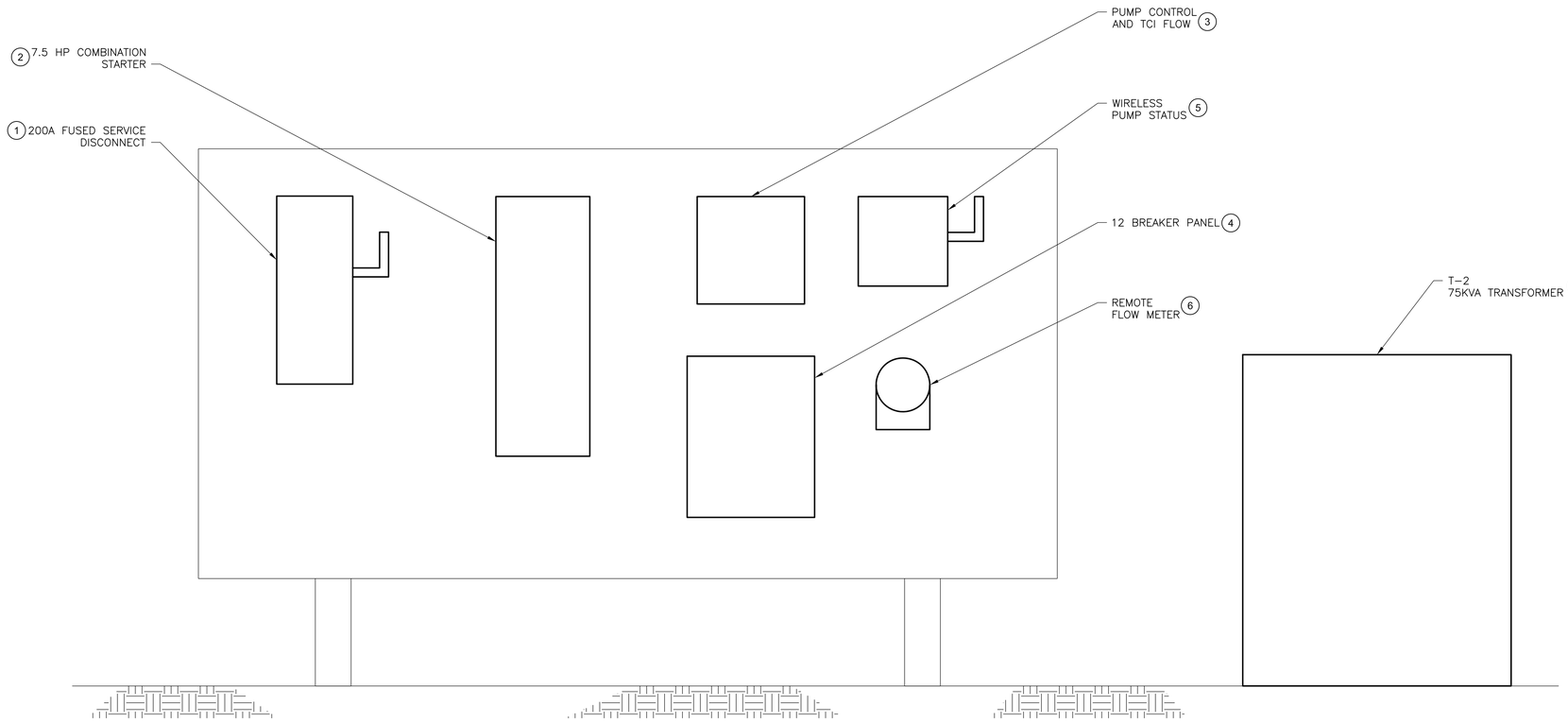

TEMPORARY PUMP STATION POWER

ELEVATION

1 1/2" = 1'-0"

NOTES:

1. REFER TO SHEET E-2 FOR GENERAL NOTES.
2. THE CONTRACTOR REUSED 75KVA TRANSFORMER, COMBINATION STARTER, PUMP CONTROL AND TCI FLOW, AND WIRELESS PUMP STATUS FOR PERMANENT INSTALLATION.
3. ALL ELECTRICAL COMPONENTS FOR TEMPORARY PUMP STATION SERVICE WERE NEMA 3R RATED MINIMUM.

CONDUIT AND WIRE LEGEND

(NUMBERS REFERENCE THIS SHEET ONLY)

NO.	DESCRIPTION
1	3/4"C, 3#10, 1#10G

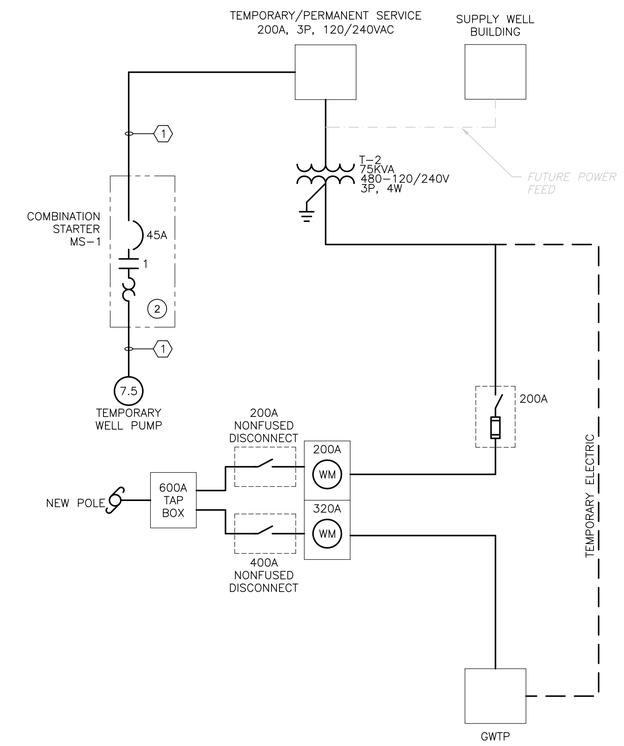

EQUIPMENT SCHEDULE

ITEM	DESCRIPTION	MANUFACTURE OR EQUAL	PART/MODEL NUMBER
1	SERVICE DISCONNECT	SQUARE D	H364NRB
2	COMBINATION SIZE 1 STARTER	CUTLER-HAMMER	ECN1612CAG
3	PUMP CONTROL	HOFFMAN	12X12X8 PANEL (NEMA 3R)
4	12 BREAKER PANEL	SQUARE D	QO112L200GRB
5	WIRELESS PUMP STATUS	SALCO	HST-220
6	REMOTE FLOW METER	MCCROMETER	M0306F
7	75KVA TRANSFORMER	SQUARE D	MODEL EE (NEMA 3R)

FINAL AS-BUILT

1 1/2" = 1'- 0"

.5 0 .5 1

XREFS: RKAWYBDR

REV. NO.	DATE	DRWN	CHKD	REMARKS

DESIGNED BY:
DRAWN BY:
SHEET CHK'D BY:
CROSS CHK'D BY:
APPROVED BY:
DATE: MARCH 2012

PREPARED BY:
CAPE
CAPE Environmental Management, Inc.

US Army Corps of Engineers Kansas City District
GROUNDWATER TREATMENT FACILITY PACKAGE
ROCKAWAY BOROUGH SUPERFUND SITE
EAST MAIN/WALL STREET PLUME - OU2
ROCKAWAY BOROUGH, NEW JERSEY

ELECTRICAL
TEMPORARY PUMP STATION
ELEVATION

PROJECT 50001.005
FILE NAME: E012PSEL AS-BUILT
SHEET NO.
E-12

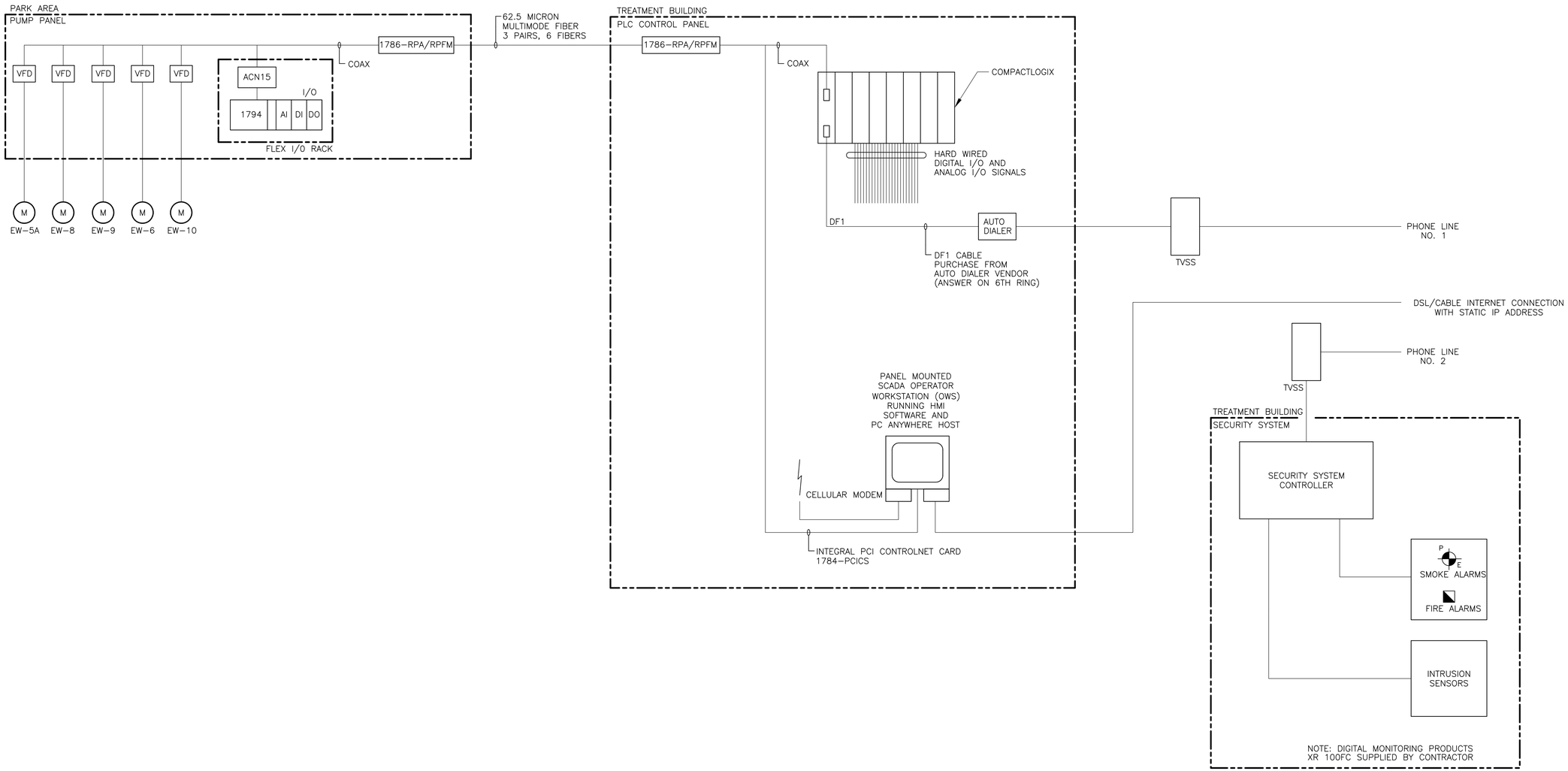

FINAL AS-BUILT

XREFS: RKAWYBDR

REV. NO.	DATE	DRWN	CHKD	REMARKS

DESIGNED BY:
DRAWN BY:
SHEET CHK'D BY:
CROSS CHK'D BY:
APPROVED BY:
DATE: MARCH 2012

PREPARED BY:
CAPE
CAPE Environmental Management, Inc.

US Army Corps of Engineers Kansas City District
GROUNDWATER TREATMENT FACILITY PACKAGE
ROCKAWAY BOROUGH SUPERFUND SITE
EAST MAIN/WALL STREET PLUME - OU2
ROCKAWAY BOROUGH, NEW JERSEY

ELECTRICAL
NETWORK ARCHITECTURE
DIAGRAM

PROJECT 50001.005
FILE NAME: E013SDDI AS-BUILT
SHEET NO.
E-13

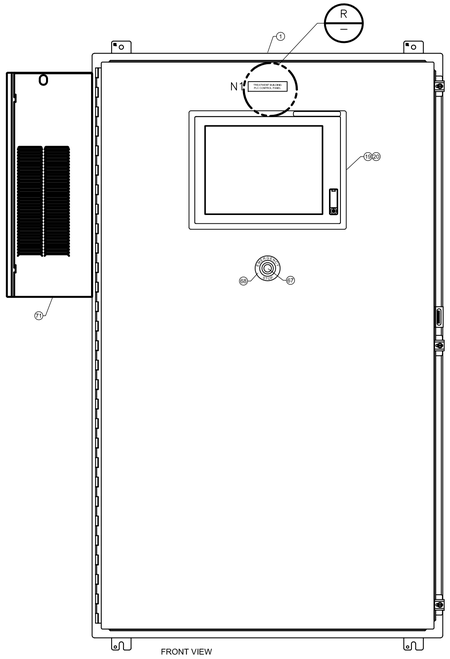

FRONT VIEW

ELEVATION

NTS

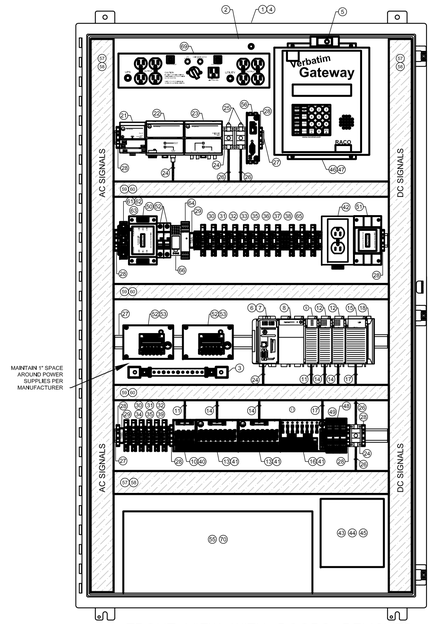

FRONT VIEW WITH DOORS REMOVED

ELEVATION

NTS

NAMEPLATE ENGRAVING

N1	TREATMENT BUILDING	4" x 1" WHITE SURFACE
	PLC CONTROL PANEL	3/16" HIGH BLACK LETTERING

LEGEND PLATE

DETAIL

NTS

R
–

GENERAL NOTES

WIRE COLOR CODES

CONTROL SIGNALS:		POWER:	
120 VAC	RED	1Ø 120/240 – L1	BLACK
120 VAC REMOTELY POWERED	YELLOW	1Ø 120/240 – N	WHITE
120 VAC NEUTRAL	WHITE	GROUND	GREEN
120 VAC GROUND	GREEN		
24 VDC +	BLUE	3Ø 208/230 – L1	BLACK
24 VDC + REMOTELY POWERED	YELLOW	3Ø 208/230 – L2	BLUE
24 VDC RETURN	BROWN	3Ø 208/230 – L3	RED
24 VDC GROUND	GREEN	GROUND	GREEN
ANALOG +	RED	3Ø 480 – L1	BLACK
ANALOG RETURN	BLACK	3Ø 480 – L2	ORANGE
GROUND	GREEN	3Ø 480 – L3	RED
		3Ø 480 – N	WHITE
		GROUND	GREEN

MINIMUM WIRE SIZES (UNLESS MARKED OTHERWISE)

CONTROL SIGNALS:		POWER:	
120 VAC	18 AWG STRANDED	120 VAC	14 AWG STRANDED
24 VDC	18 AWG STRANDED	24 VDC	16 AWG STRANDED
ANALOG	22 AWG TWISTED SHLD PAIR		

ACCEPTABLE WIRE AND CABLE (OR APPROVED EQUAL)

22 AWG TWISTED SHLD PAIR BELDEN # 8451

1. ALL ENCLOSURE EQUIPMENT WAS INSTALLED SO THAT THERE IS ACCESS TO ALL NECESSARY COMPONENTS AND SO THAT ALL EQUIPMENT DOORS CAN OPEN WITH A 90 DEGREES ANGLE.

2. CONNECTIONS WERE MADE TO DEVICES PER SCHEMATIC WIRING DIAGRAMS.

3. 120 VAC WIRING WAS ROUTED SEPARATE FROM 24 VDC AND ANALOG SIGNAL WIRING.

4. FABRICATOR SUPPLIED ALL FUSES PER SCHEMATIC WIRING DIAGRAM PLUS A MINIMUM OF 20% SPARES, ROUNDED TO THE BOX.

5. NAMEPLATES WERE PROVIDED PER NEC 409.110 STANDARD.

6. FABRICATOR DETERMINED THE LENGTH OF INTERCONNECTING CABLES FOR PLC INTERFACE MODULES REQUIRED FOR PROPER INSTALLATION AND LEAD DRESS.

7. THE INTERCONNECTING CABLES FOR PLC INTERFACE MODULES HAD THE CONNECTOR ON THE PLC END MARKED AS TO THE MODULE IT IS CONNECTED TO.

8. PRINTED LABELS WERE SUPPLIED FOR LISTED ENCLOSURE COMPONENTS. LABELS WERE BROTHERS "P-TOUCH" LABELS, OR APPROVED EQUAL, AND ARE WHITE WITH BLACK LETTERS AND A MINIMUM OF ¼" IN HEIGHT.

9. WIRES RAN FROM TERMINATION POINT TO TERMINATION POINT AND CONTAIN NO SPLICES.

10. ALL WIRES AND CABLES WERE NEATLY RUN INSIDE WIRE GUTTERS OR BE BUNDLED WITH PLASTIC TIES AND SECURED TO THE ENCLOSURES ELECTRICAL PANEL.

11. WIRE GUTTERS WERE KEPT A MINIMUM OF 2" AWAY FROM WIRE TERMINATION POINTS.

12. NO MORE THAN 2 WIRES WERE TERMINATED UNDER A SINGLE TERMINAL SCREW.

13. EACH INTERNAL WIRE WAS IDENTIFIED WITH A WRAPAROUND OR HEAT SHRINK LABEL AT BOTH ENDS WITH A UNIQUE NUMBER AS INDICATED ON THE SCHEMATIC WIRING DIAGRAM.

14. FABRICATOR WAS RESPONSIBLE TO VERIFY THE ENCLOSURE LAYOUT DIMENSIONS AND REPORT ANY DISCREPANCIES TO THE ENGINEER PRIOR TO PROCURING COMPONENTS.

BILL OF MATERIAL

ITEM	NO.	DESCRIPTION
1	1	HOFFMAN NEMA 12/13 ENCLOSURE CAT. #A603612LP
2	1	HOFFMAN NEMA 12 CONTROL PANEL CAT. #A60P36
3	1	HOFFMAN GROUNDING BAR SYSTEM CAT. #PGS2K
4	1	HOFFMAN FLOURESCENT LIGHT CAT. #LF120V18
5	1	HOFFMAN DOOR OPERATED SWITCH FOR ENCLOSURE LIGHT CAT. #ALFSWD
6	1	ALLEN BRADLEY COMPACTLOGIX CONTROLNET PROCESSOR CAT. #1769–L32C
7	1	ALLEN–BRADLEY LOGIC 556X INDUSTRIAL COMPACT FLASH CARD CAT. #1769–CF64
8	1	ALLEN BRADLEY POWER SUPPLY WITH CABLE #1769–PA2
9	1	ALLEN BRADLEY 8 POINT VAC/VDC INDIV. ISOLATED RELAY OUTPUT MODULE #1769–OW8I
10	1	ALLEN BRADLEY 20 POINT ISOLATED FUSIBLE IFM, 5x20MM FUSE CLIPS, BLOWN FUSE INDICATOR #1492–IMF20F–FS120–2
11	1	ALLEN–BRADLEY PREWIRED CABLE FOR 1769–OW8I MODULE, 10 CONDUCTORS CAT. #1492–CAB005D69
12	2	ALLEN BRADLEY 16 POINT 24 VDC SINKING/SOURCING INPUT MODULE CAT. #1769–IQ16
13	2	ALLEN BRADLEY 20 POINT FUSABLE DIGITAL IFM CAT. #1492–IMF20F–F24A–2
14	2	ALLEN BRADLEY PREWIRED CABLE FOR 1769–IQ16 AND IQ16F MODULES CAT. #1492–CAB005B69
15	1	ALLEN BRADLEY 8 CHANNEL ANALOG VOLTAGE/CURRENT INPUT MODULE CAT. #1769–IF8
16	1	ALLEN BRADLEY FUSABLE 8 CHANNEL ANALOG IFM CAT. #1492–AIFM8–F–5
17	1	ALLEN BRADLEY PREWIRED CABLE FOR 1769–IF8 CAT. #1492–EB10–Y
18	1	ALLEN BRADLEY RIGHT END CAP/TERMINATOR CAT. #1769–ECR
19	1	ALLEN BRADLEY INTEGRATED DISPLAY COMPUTER CAT. #6181P–15TPXP
20	1	ALLEN BRADLEY CONTROLNET PCI BUS I/O BRIDGE CARD 1784–PCICS
21	1	ALLEN BRADLEY 85–264 VAC TO 24 VDC 1.3A POWER SUPPLY CAT. #1794–PS13
22	1	ALLEN BRADLEY CONTROLNET REPEATER ADAPTER MODULE CAT. #1786–RPA
23	1	ALLEN BRADLEY CONTROLNET MEDIUM–DISTANCE FIBER MODULE CAT. #1786–RPFM
24	3	ALLEN–BRADLEY CONTROLNET T–TAPS/STRAIGHT CAT. #1786–TPS
25	2	ALLEN–BRADLEY CONTROLNET NETWORK TERMINATOR CAT. #1786–XT
26	12	ALLEN–BRADLEY CONTROLNET NETWORK, SHIELD HIGH FLEX CABLE CAT. #1786–RG6
27	3	ALLEN–BRADLEY ZINC PLATED, CHROMATED STEEL, 35mm x 7.5mm DIN RAIL, 1 METER CAT. #C199–DR1
28	12	ALLEN–BRADLEY END ANCHOR, USED WITH STANDARD 35mm DIN RAIL CAT. #1492–EAJ35
29	2	ALLEN–BRADLEY TERMINAL GROUP MARKER CARRIER CAT. #1492–GM35
30	17	ALLEN–BRADLEY IEC SINGLE FEEDTHROUGH CIRCUIT BLOCK CAT. #1492–W10
31	11	ALLEN–BRADLEY IEC SINGLE CIRCUIT GROUNDING BLOCK CAT. #1492–WG10S
32	17	ALLEN–BRADLEY END BARRIER SINGLE CIRCUIT FUSE OR ISOLATION BLOCK CAT. #1492–N37
33	11	ALLEN–BRADLEY FINGER–SAFE SINGLE CIRCUIT FUSE BLOCK CAT. #1492–H4
34	6	ALLEN–BRADLEY FINGER–SAFE SINGLE CIRCUIT FUSE BLOCK CAT. #1492–H5
35	1	ALLEN–BRADLEY SNAP–IN MARKER CARD CAT. #1492–MS8X12H1–50
36	1	ALLEN–BRADLEY SNAP–IN MARKER CARD CAT. #1492–MS8X12HGND
37	11	BUSSMANN FUSE, CARTRIDGE, 5A CAT. #MDL–5–R
38	10	BUSSMANN FUSE, CARTRIDGE, 2A CAT. #PT MDL–2–R
39	11	BUSSMANN FUSE, CARTRIDGE 1A CAT. #MDL–1–R
40	13	BUSSMANN CARTRIDGE FUSE 250V CAT. #S506–2.5–R

BILL OF MATERIAL

ITEM	NO.	DESCRIPTION
41	50	BUSSMANN CARTRIDGE FUSE 250V CAT. #S506–250–R
42	1	HUBBELL DIN RAIL UTILITY BOX CAT. #DRUBGFI15
43	1	AMERICAN TECH SUPPLY WALL–MOUNT 12–PORT FIBER PATCH PANEL ENCLOSURE CAT. #ATSWAX–1X
44	1	AMERICAN TECH SUPPLY ST–ST– DUPLEX 62.5/125 MULTIMODE FIBER OPTIC PATCH PANEL CAT. #ATS–EFSTP–01M
45	1	AMERICAN TECH SUPPLY 6 PACK ST PB INSERT MM/SM FIBER OPTIC ADAPTER CAT. #AP–106ST
46	1	RACO VERBATIM GATEWAY CAT. #323VPLC–4C–64AB
47	1	RACO 6' SERIAL ALLEN–BRADLEY DF1 CABLE CAT. #510VAB–1
48	3	PHOENIX CONTACT PT 1X2–24DC–ST PROTECTIVE PLUG PT WITH PROTECTIVE CIRCUITCAT. #2856032
49	3	PHOENIX CONTACT PT 1X2+F–BE BASE ELEMENT FOR PROTECTIVE PLUG CAT. # 2856126
50	1	MCG SURGE PROTECTION AC POWER LINE SURGE PROTECTOR CAT. #439–416–00–DIN
51	1	MCG SURGE PROTECTION DATA LINE SURGE PROTECTOR CAT. #DLP–4.71–200V2–DIN
52	2	SIEMENS CIRCUIT BREAKER 240V 14KA 1–POLE, C 15A CAT. #SSJ4118–7HG40
53	2	ACOPIAN GOLD BOX LINEAR REGULATED POWER SUPPLY CAT. #B24G75M
54	2	ACOPIAN DIN RAIL MOUNTING KIT FOR POWER SUPPLY CAT. #B24G75M
55	1	EATON UPS, 5125 2200 TOWER 1920 VA / 1600 WATTS, 120 VAC CAT. #05146635–5591
56	1	SIXNET INDUSTRIAL CELLULAR MODEM CAT. #BT–6600–ZV/FANRO819 SMALP
57	3	IBOCO WIRE DUCT, 2.25 x 4.0" CAT. #T1–2240W
58	10	IBOCO WIRE RETAINER, 2.25 x 4.0" DUCT CAT. #CL–2240
59	2	IBOCO WIRE DUCT, 1.5 x 4.0" DUCT CAT. #T1–1540W
60	9	IBOCO WIRE RETAINER, 1.5 x 4.0" DUCT CAT. #CL–1530
61	1	BUSSMANN DUAL–ELEMENT, TIME–DELAY FUSE CAT. #FRN–R–30
62	1	BUSSMANN 1–POLE, CLASS R FUSE BLOCK CAT. #R25030–1SR
63	1	BUSSMANN FUSE BLOCK COVER CAT. #SAMI–9I
64	1	PHOENIX CONTACT PLUGGABLE CONNECTING TERMINAL BLOCKS CAT. # 2856126 2963747
65	1	ALLEN–BRADLEY END BARRIER CAT. # 1492–EB10
66	1	PHOENIX CONTACT PR2–RSC3–LV–120AC/2X21 RELAY CAT. # 2834669
67	1	ALLEN–BRADLEY 30.5MM TYPE 4/13 2 POS. PB–NON–ILLUM., CAT. # 1492–EB10
68	1	ALLEN–BRADLEY 800T LEGEND PLATE, EMERGENCY STOP IEC RING CAT. # 800T–X646EM
69	1	LIEBERT UPS MAINTENANCE BYPASS SWITCH CAT. # MP2–115A
70	1	EATON UPS RELAY INTERFACE CARD CAT. # 1018460
71	1	HOFFMAN AIR CONDITIONER, SIDE MOUNT CAT. # CR230216G002

FINAL AS-BUILT

REV. NO.	DATE	DRWN	CHKD	REMARKS

DESIGNED BY:
DRAWN BY:
SHEET CHK'D BY:
CROSS CHK'D BY:
APPROVED BY:
DATE: MARCH 2012

PREPARED BY:
CAPE
CAPE Environmental Management, Inc.

US Army Corps of Engineers Kansas City District
GROUNDWATER TREATMENT FACILITY PACKAGE
ROCKAWAY BOROUGH SUPERFUND SITE
EAST MAIN/WALL STREET PLUME - OU2
ROCKAWAY BOROUGH, NEW JERSEY

ELECTRICAL
PLC CONTROL PANEL ARRANGEMENT

PROJECT 50001.005
FILE NAME: E014SDDI AS–BUILT
SHEET NO.
E-14

XREFS: RKAWYBD2

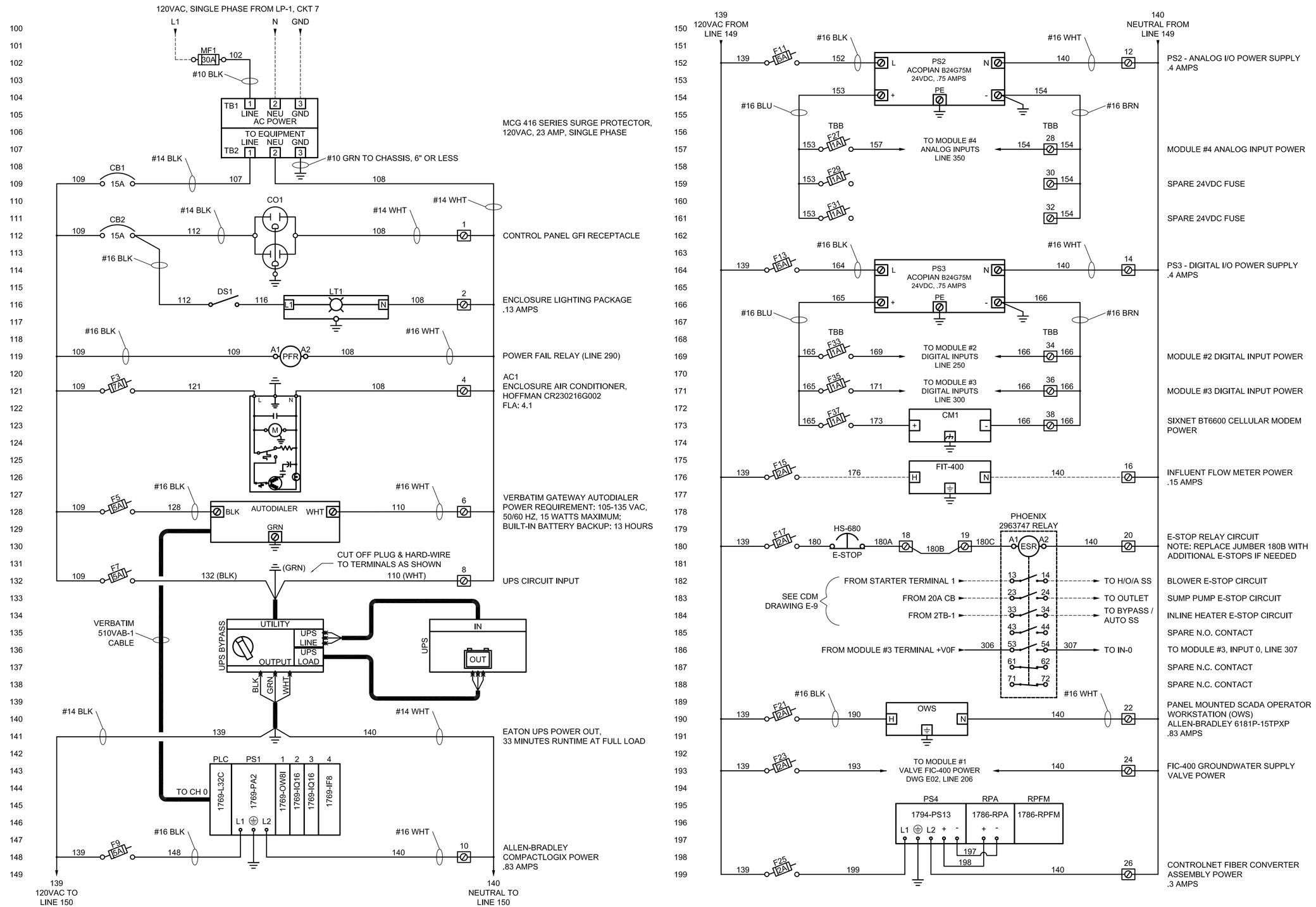

FINAL AS-BUILT

REV. NO.	DATE	DRWN	CHKD	REMARKS

DESIGNED BY:
DRAWN BY:
SHEET CHK'D BY:
CROSS CHK'D BY:
APPROVED BY:
DATE: MARCH 2012

PREPARED BY:
CAPE
CAPE Environmental Management, Inc.

US Army Corps of Engineers Kansas City District
GROUNDWATER TREATMENT FACILITY PACKAGE
ROCKAWAY BOROUGH SUPERFUND SITE
EAST MAIN/WALL STREET PLUME - OU2
ROCKAWAY BOROUGH, NEW JERSEY

ELECTRICAL PLC CONTROL PANEL WIRING DIAGRAM I

PROJECT 50001.005
FILE NAME: E015SDDI AS-BUILT
SHEET NO.
E-15

XREFS: RKAWYBD2

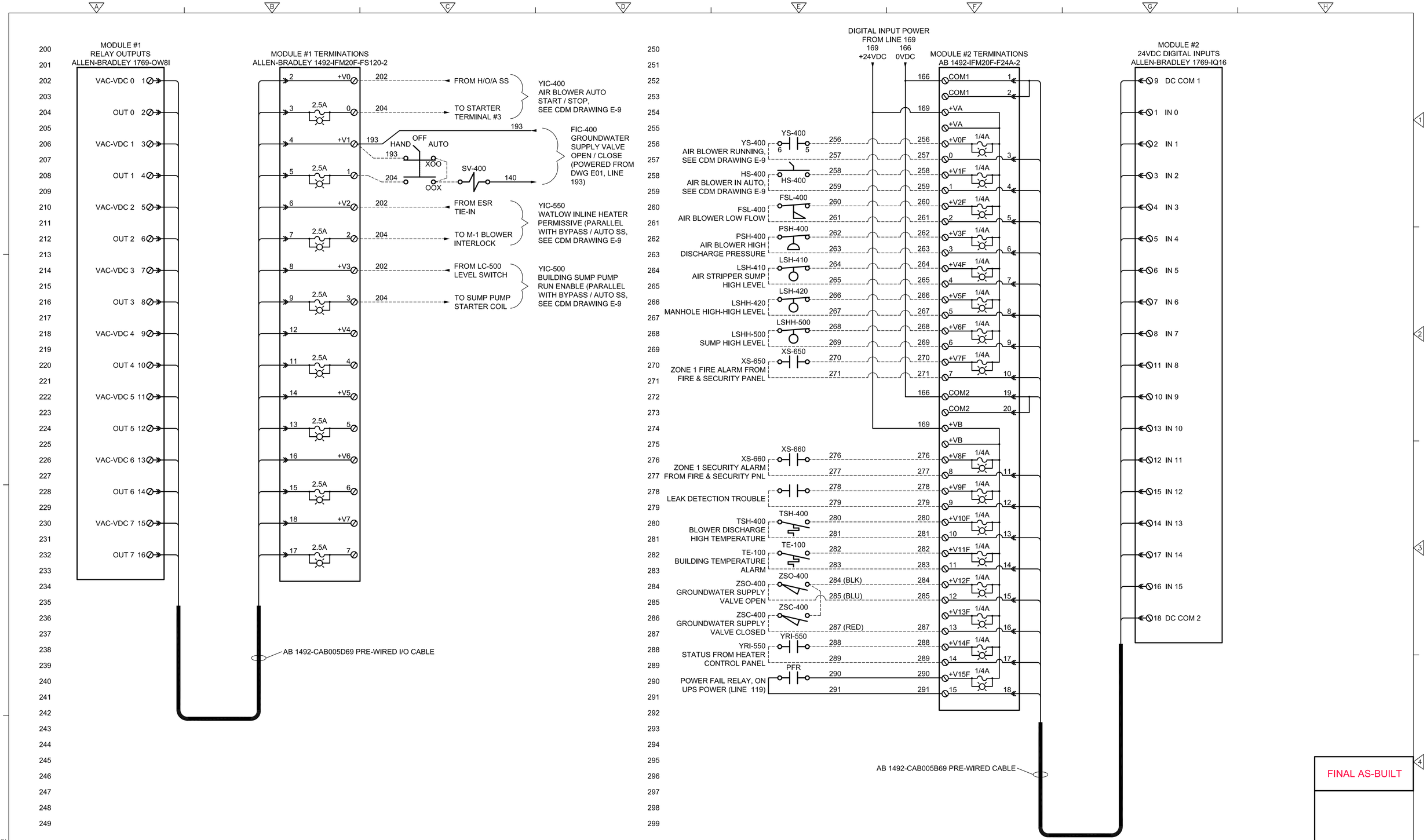

FINAL AS-BUILT

XREFS: RKAWYBD2

REV. NO.	DATE	DRWN	CHKD	REMARKS

DESIGNED BY:
DRAWN BY:
SHEET CHK'D BY:
CROSS CHK'D BY:
APPROVED BY:
DATE: MARCH 2012

PREPARED BY:
CAPE
CAPE Environmental Management, Inc.

US Army Corps of Engineers Kansas City District
GROUNDWATER TREATMENT FACILITY PACKAGE
ROCKAWAY BOROUGH SUPERFUND SITE
EAST MAIN/WALL STREET PLUME - OU2
ROCKAWAY BOROUGH, NEW JERSEY

ELECTRICAL
PLC CONTROL PANEL
WIRING DIAGRAM II

PROJECT 50001.005
FILE NAME: E016SDDI AS-BUILT
SHEET NO.
E-16

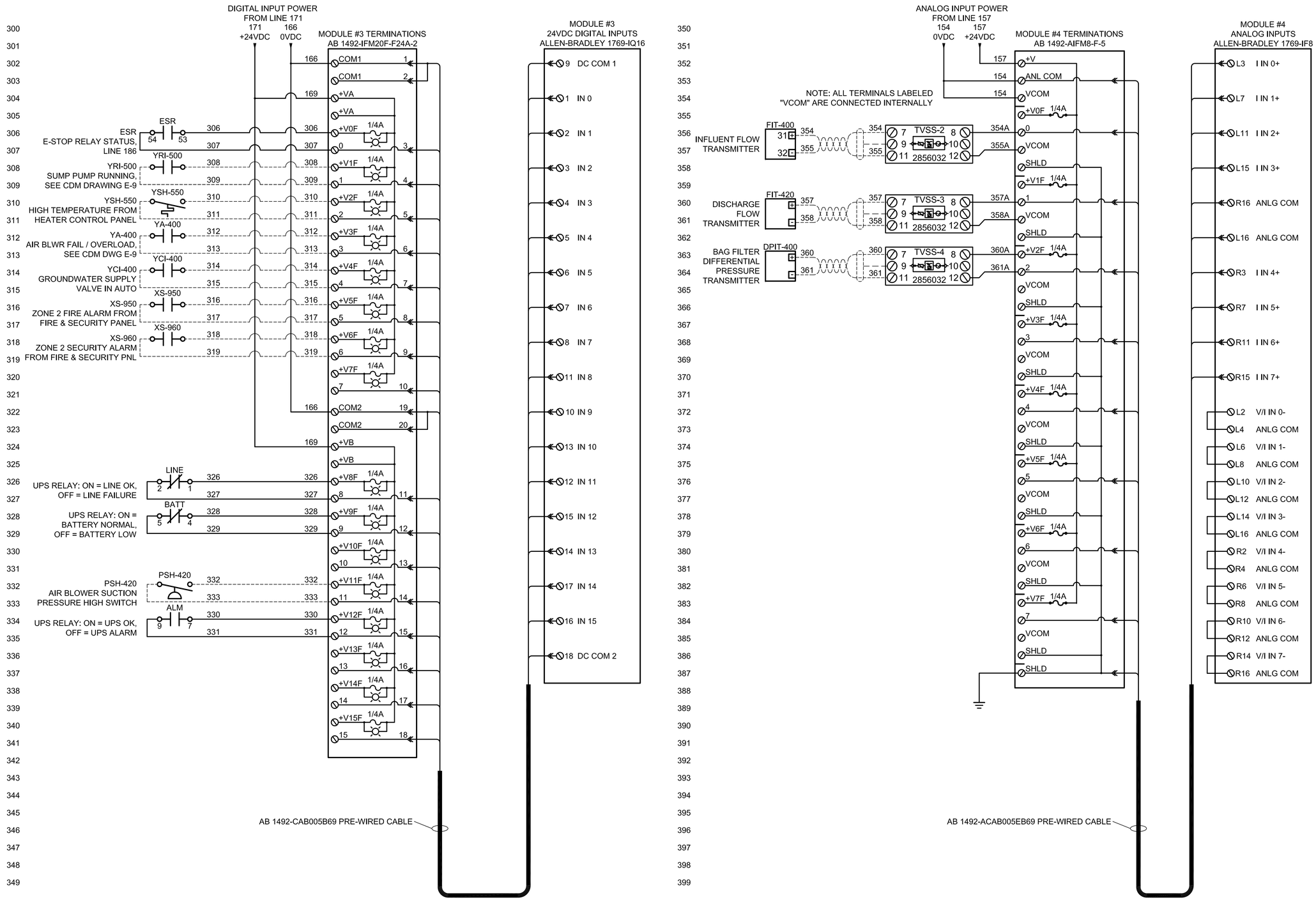

FINAL AS-BUILT

REV. NO.	DATE	DRWN	CHKD	REMARKS

DESIGNED BY:
DRAWN BY:
SHEET CHK'D BY:
CROSS CHK'D BY:
APPROVED BY:
DATE: MARCH 2012

PREPARED BY:
CAPE
CAPE Environmental Management, Inc.

US Army Corps of Engineers Kansas City District
GROUNDWATER TREATMENT FACILITY PACKAGE
ROCKAWAY BOROUGH SUPERFUND SITE
EAST MAIN/WALL STREET PLUME - OU2
ROCKAWAY BOROUGH, NEW JERSEY

ELECTRICAL
PLC CONTROL PANEL
WIRING DIAGRAM III

PROJECT 50001.005
FILE NAME: E017SDDI AS-BUILT
SHEET NO.
E-17

XREFS: RKAWYBD2

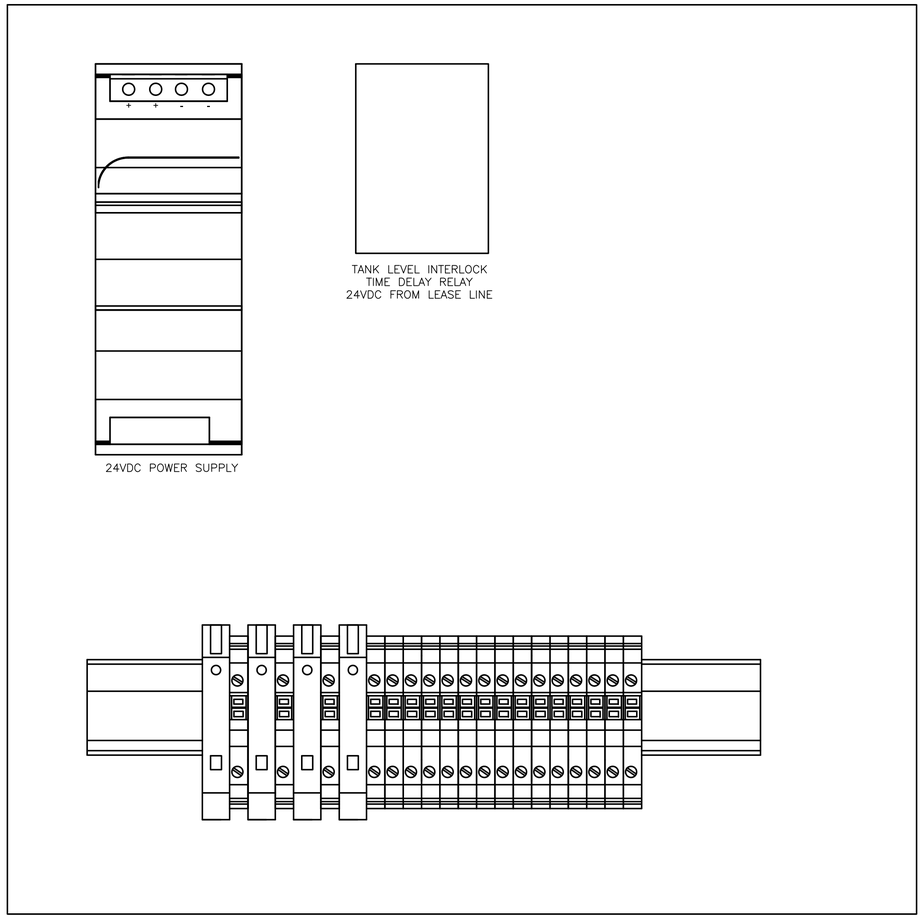

TELEPHONE COMMUNICATIONS PANEL ENCLOSURE

ELEVATION

1" = 1'-0"

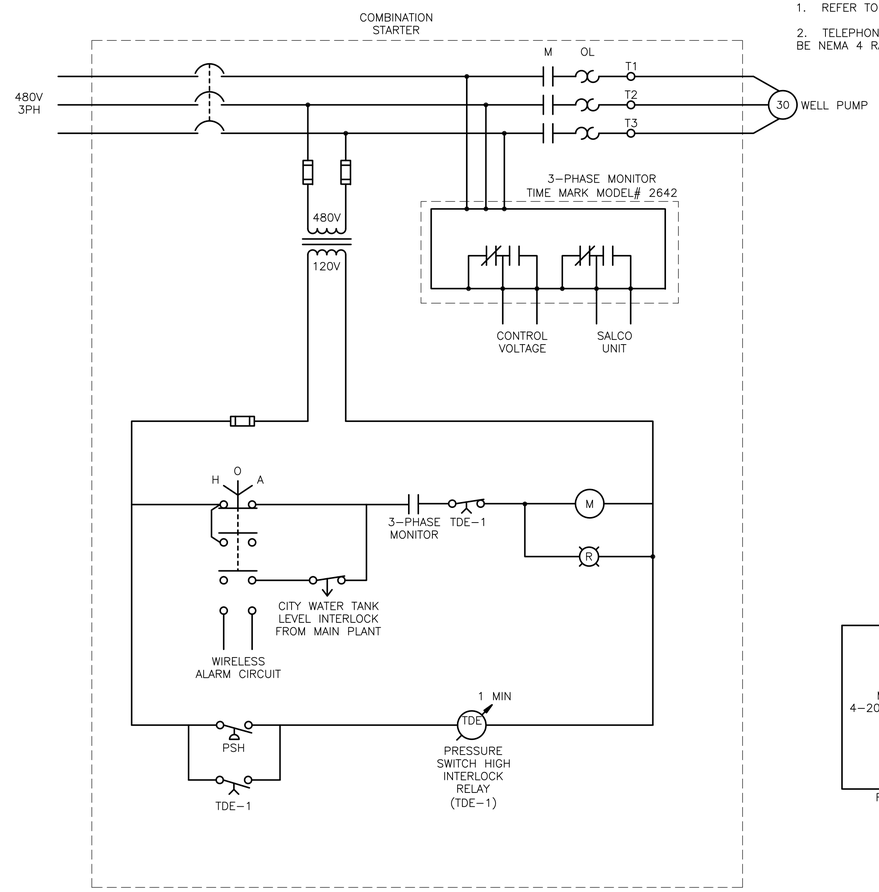

WELL PUMP

WIRING DIAGRAM

NTS

NOTES:

1. REFER TO SHEET E-2 FOR GENERAL NOTES.
2. TELEPHONE COMMUNICATIONS PANEL SHALL BE NEMA 4 RATED.

LEGEND

- AI — ANALOG INPUT
- AO — ANALOG OUTPUT
- DI — DIGITAL INPUT
- DO — DIGITAL OUTPUT
- X2 — ALLEN BRADLEY MOTOR STARTER CONNECTION POINT
- ▲ DEVICE LOCATED IN FIELD
- ■ DEVICE LOCATED IN PUMP PANEL
- ◆ DEVICE LOCATED IN MAIN BUILDING PANEL

SYSTEM OPERATION:

1. THE MAIN WATER PLANT CONTROLS THE WELL PUMP VIA A 24VDC START SIGNAL OVER THE LEASE LINE. A TIME DELAY RELAY WAS USED TO REDUCE FALSE STARTS DUE TO ANY LINE NOISE. THIS START SIGNAL IS INTERLOCKED WITH A TANK LEVEL SWITCH.

2. THE SALCO WIRELESS UNIT PROVIDES SUPERVISORY ALARMING OF ANY PUMP RELATED FAULT, NO CONTROL IS INITIATED FORM THE UNIT. UNIT MONITORS CONTROL LOOP AND ALARMS ON AN OPEN CIRCUIT CONDITION.

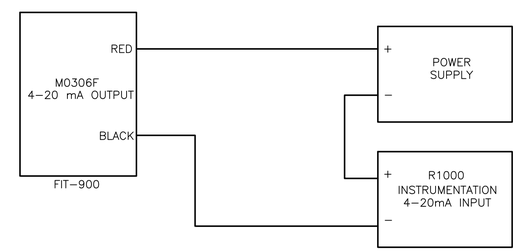

WELL HOUSE FLOW METER

WIRING DIAGRAM

NTS

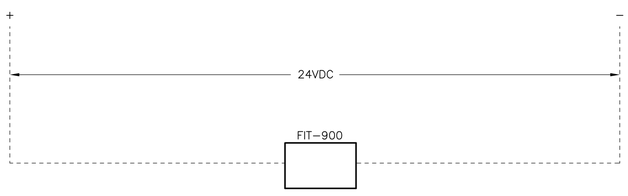

FLOW TRANSMITTER POWER

WIRING DIAGRAM

NTS

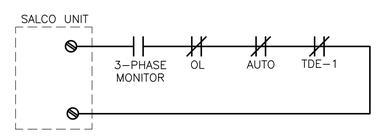

WIRELESS ALARM

WIRING DIAGRAM

NTS

1" = 1'- 0"
.5 0 1

FINAL AS-BUILT

REV. NO.	DATE	DRWN	CHKD	REMARKS

DESIGNED BY:
DRAWN BY:
SHEET CHK'D BY:
CROSS CHK'D BY:
APPROVED BY:
DATE: MARCH 2012

PREPARED BY:
CAPE
CAPE Environmental Management, Inc.

US Army Corps of Engineers Kansas City District
GROUNDWATER TREATMENT FACILITY PACKAGE
ROCKAWAY BOROUGH SUPERFUND SITE
EAST MAIN/WALL STREET PLUME - OU2
ROCKAWAY BOROUGH, NEW JERSEY

ELECTRICAL
WELL PUMP
CONTROL DIAGRAMS

PROJECT 50001.005
FILE NAME: E018SDDI AS-BUILT
SHEET NO.
E-20

XREFS: RKAWYBD2

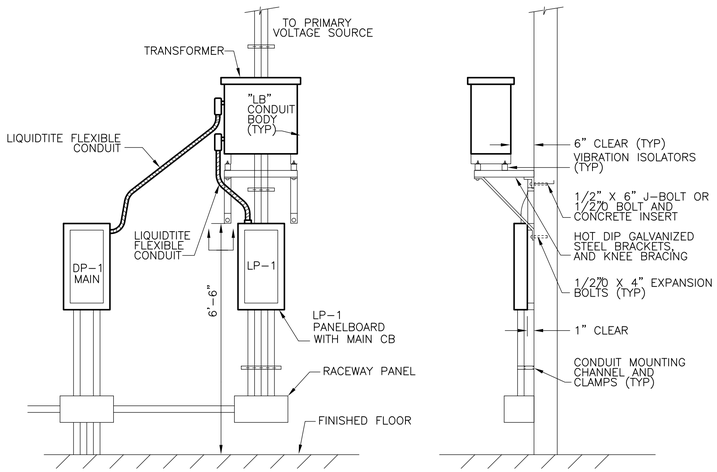

WALL-MOUNTED TRANSFORMER AND LP-1 AND DP-1 PANELBOARDS

DETAIL A / E-6
NTS

NOT USED

DETAIL B / –
NTS

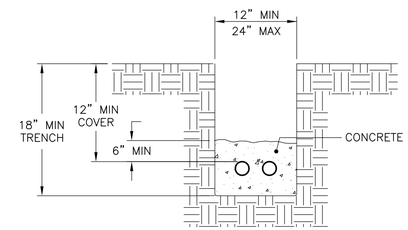

CONCRETE ENCASED CONDUIT

DETAIL C / E-3
NTS

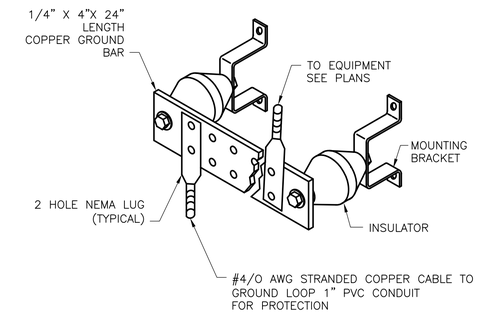

TYPICAL GROUND BAR

DETAIL D / E-7
NTS

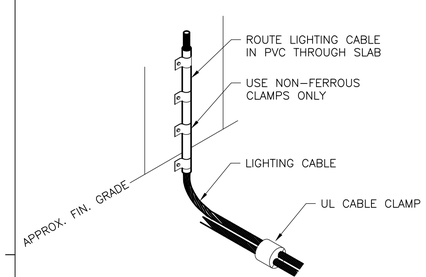

DOWN LEAD AND GROUND TERMINAL

DETAIL E / E-7
NTS

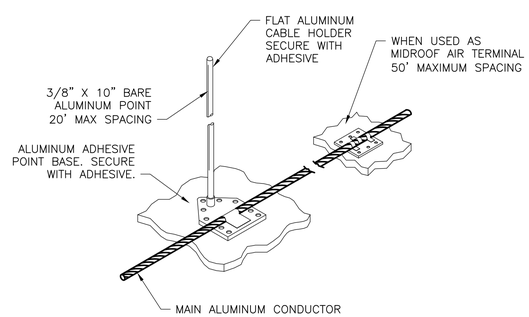

AIR TERMINAL CONNECTIONS

DETAIL F / E-7
NTS

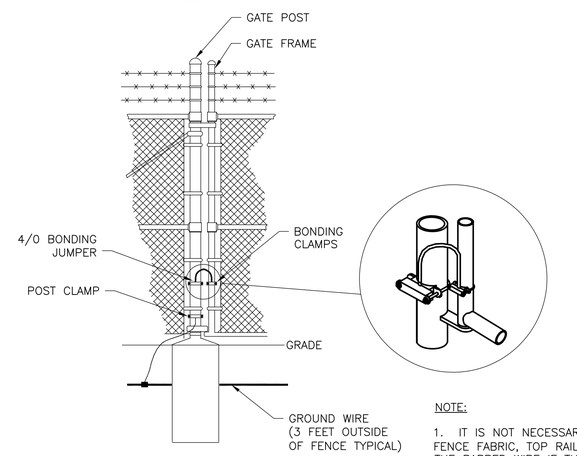

GATE & GATE POST

NOTE:

1. IT IS NOT NECESSARY TO CONNECT TO THE FENCE FABRIC, TOP RAIL (EXCEPT IN CANADA) OR THE BARBED WIRE IF THE POSTS ARE OF A CONDUCTING MATERIAL. (REF: NESC 93C6)

GATE & GATE POST GROUNDING

DETAIL G / –
NTS

FINAL AS-BUILT

XREFS: RKAWYBD2

REV. NO.	DATE	DRWN	CHKD	REMARKS

DESIGNED BY:
DRAWN BY:
SHEET CHK'D BY:
CROSS CHK'D BY:
APPROVED BY:
DATE: MARCH 2012

PREPARED BY:
CAPE
CAPE Environmental Management, Inc.

US Army Corps of Engineers Kansas City District
GROUNDWATER TREATMENT FACILITY PACKAGE
ROCKAWAY BOROUGH SUPERFUND SITE
EAST MAIN/WALL STREET PLUME - OU2
ROCKAWAY BOROUGH, NEW JERSEY

ELECTRICAL DETAILS I

PROJECT 50001.005
FILE NAME: E001SDDT AS-BUILT
SHEET NO.
ED-1

ITEM NUMBER	QUANTITY	DESCRIPTION	MANUFACTURER	CAT #
1A	1	CADWELD CONNECTION	ERICO, INC.	CRC16EK (#200)
1B	1	CADWELD GROUND BAR	ERICO, INC.	B542C003
2A	3	CADWELD TYPE GL CONNECTION	ERICO, INC.	
2B	3	CADWELD TYPE GL COPPER LUG	ERICO, INC.	
3A&B	1	INSPECTION HOUSING AND COVER	ERICO, INC.	T416A
4	1	GROUND ROD, 5/8" X 8' COPPER CLAD	ERITECH	P588

ITEM NUMBER	QUANTITY	DESCRIPTION	MANUFACTURER	CAT #
1	1	CADWELD CABLE TO ROD	CADWELD	TYPE GT
2	1	GROUND ROD, COPPER CLAD, 10 FT MIN	ERITECH	
3	1	CADWELD CABLE TO ROD	CADWELD	TYPE GS

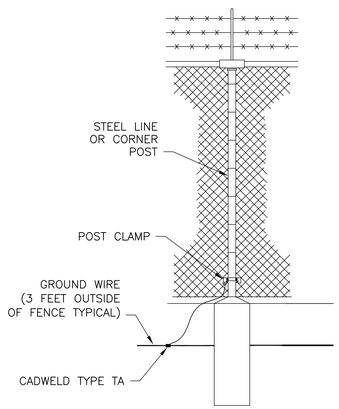

NOTE:

1. IT IS NOT NECESSARY TO CONNECT TO THE FENCE FABRIC, TOP RAIL (EXCEPT IN CANADA) OR THE BARBED WIRE IF THE POSTS ARE OF A CONDUCTING MATERIAL. (REF: NESC 93C6)

FENCE GROUNDING, LINE & CORNER POSTS

DETAIL H
NTS –

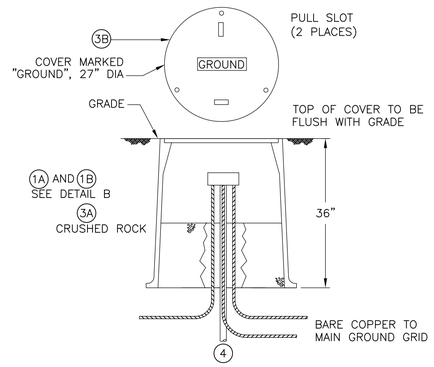

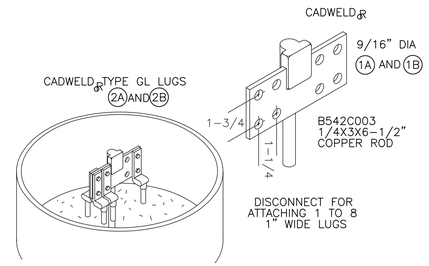

DETAIL B

NOTE:

1. TO IMPROVE SYSTEM RESISTANCE, ERICO DEM™ MAY BE USED AS A BACKFILL MATERIAL IN A AUGERED HOLE.

GROUND ROD INSPECTION HOUSE

DETAIL J
NTS E-7

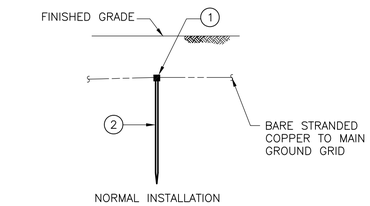

GROUND ROD INSTALLATIONS PER NEC 250-83(c) (3)

DETAIL K
NTS E-7

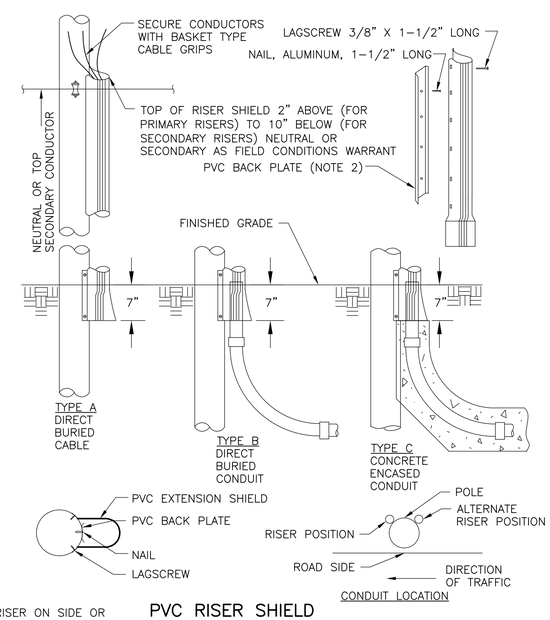

NOTES:

1. INSTALL RISER ON SIDE OR QUARTER OF POLE AWAY FROM CLIMBING SURFACE.

2. INSTALL BACK PLATE WITH THE RISER SHIELD FROM THE BOTTOM OF THE POLE.

PVC RISER SHIELD

DETAIL M
NTS E-3

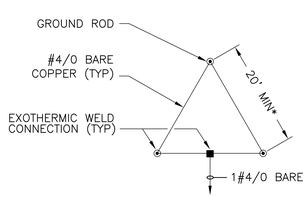

* WHERE PRACTICABLE

GROUND GRID

DETAIL L
NTS E-7

FINAL AS-BUILT

REV. NO.	DATE	DRWN	CHKD	REMARKS

DESIGNED BY:
DRAWN BY:
SHEET CHK'D BY:
CROSS CHK'D BY:
APPROVED BY:
DATE: MARCH 2012

PREPARED BY:
CAPE
CAPE Environmental Management, Inc.

US Army Corps of Engineers Kansas City District
GROUNDWATER TREATMENT FACILITY PACKAGE
ROCKAWAY BOROUGH SUPERFUND SITE
EAST MAIN/WALL STREET PLUME - OU2
ROCKAWAY BOROUGH, NEW JERSEY

ELECTRICAL DETAILS II

PROJECT 50001.005
FILE NAME: E002SDDT AS-BUILT
SHEET NO.
ED-2

XREFS: RKAWYBD2

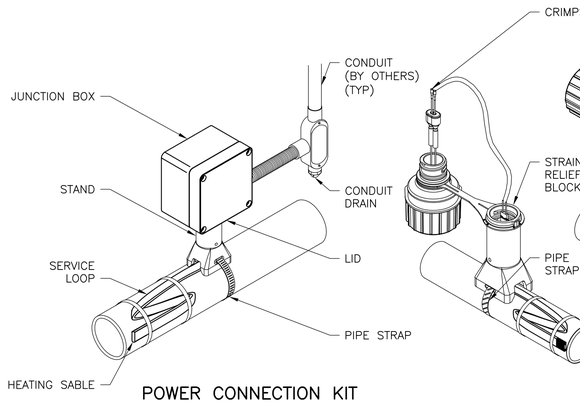

POWER CONNECTION KIT

DETAIL P
NTS –

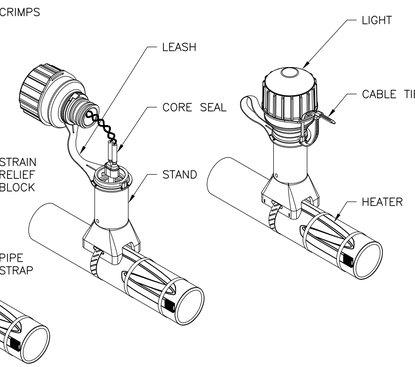

LIGHTED END SEAL

DETAIL R
NTS –

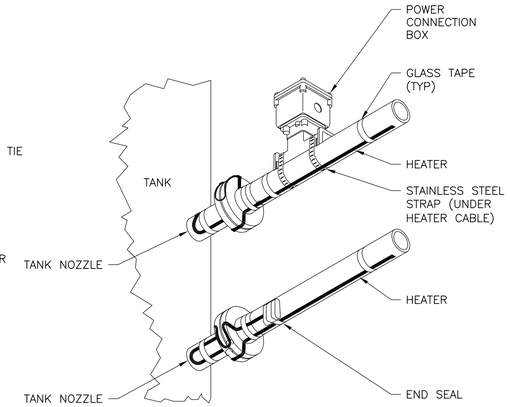

TYPICAL PLACEMENT OF HEAT TRACE ON TANK NOZZLES

DETAIL T
NTS –

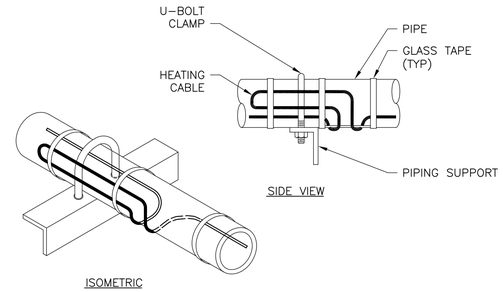

NOTE:

1. INSULATION NOT SHOWN FOR CLARITY.

ANGLE SUPPORT WITH U–BOLT

DETAIL U
NTS –

NOTE:

1. FOR PIPE HANGERS OF THIS CONSTRUCTION, NO ADDITIONAL HEATER CABLE WAS REQUIRED AT SUPPORT. DISREGARD PIPE SUPPORT ADDER SHOWN ON DESIGN ISOMETRIC.

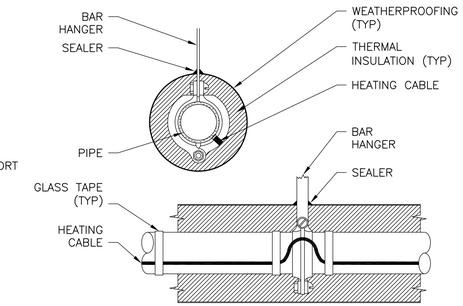

TYPICAL PIPE HANGER INSTALLATION

DETAIL V
NTS –

NOTES:

1. THE FINAL SYSTEM LAYOUT AND DESIGN OF THE HEAT TRACE SYSTEM WAS THE RESPONSIBILITY OF THE CONTRACTOR AND THE HEAT TRACE MANUFACTURER. THE CONTRACTOR REVIEWED ALL PIPE LENGTHS AND SIZES, PIPE MATERIALS AND HEAT LOSS CALCULATIONS WITH THE MANUFACTURER. THE MANUFACTURER THEN RECOMMEND THE QUANTITIES, WATTAGES AND CABLE PRODUCT REQUIRED FOR EACH APPLICATION.

2. REFER TO THE MECHANICAL DRAWINGS FOR PIPE LOCATIONS, NUMBER OF VALVES AND LENGTHS. ALL FITTINGS AND INSTRUMENTS WERE INCLUDED IN THE SCOPE OF WORK.

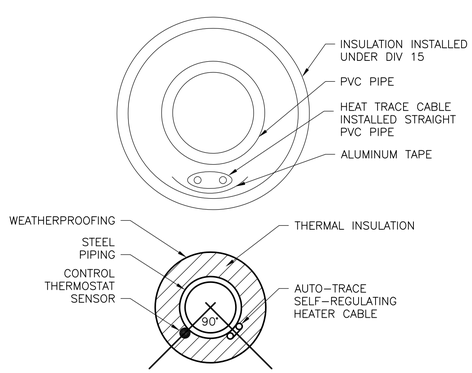

HEAT TRACE

DETAIL W
NTS E–6

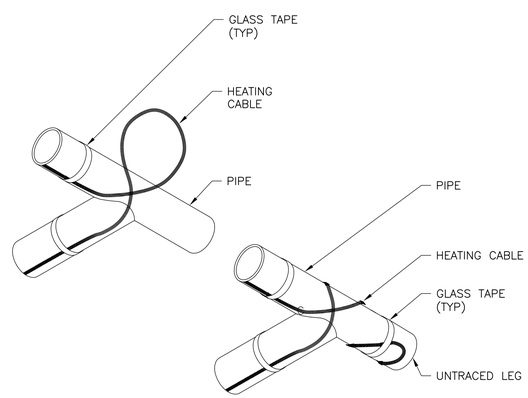

TYPICAL PIPE DEAD LEG TEE INSTALLATION

DETAIL X
NTS –

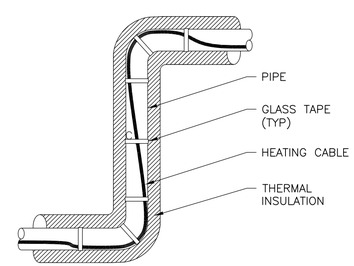

TYPICAL ELBOW INSTALLATION

DETAIL Y
NTS –

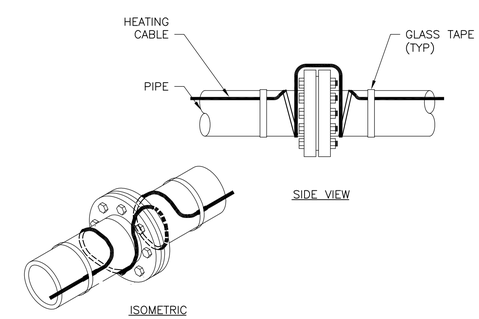

NOTE:

1. INSTALLATION RECOMMENDED LOOP LENGTH FOR FLANGE 2X PIP DIA

TYPICAL HEATING CABLE ON FLANGE

DETAIL Z
NTS –

FINAL AS-BUILT

XREFS: RKAWYBD2

REV. NO.	DATE	DRWN	CHKD	REMARKS

DESIGNED BY: P SIRBU
DRAWN BY: P SIRBU
SHEET CHK'D BY: J MORROW
CROSS CHK'D BY: E GALLERIE
APPROVED BY: K TAN
DATE: MARCH 2012

PREPARED BY:
CAPE
CAPE Environmental Management, Inc.

US Army Corps of Engineers Kansas City District
GROUNDWATER TREATMENT FACILITY PACKAGE
ROCKAWAY BOROUGH SUPERFUND SITE
EAST MAIN/WALL STREET PLUME - OU2
ROCKAWAY BOROUGH, NEW JERSEY

ELECTRICAL DETAILS III

PROJECT 50001.005
FILE NAME: E003SDDT AS–BUILT
SHEET NO.
ED-3

PROCESS / INSTRUMENT LINES

- MAIN PROCESS LINE
- SECONDARY PROCESS LINE
- VENDOR (MANUFACTURER) SUPPLIED CABLE
- PNEUMATIC SIGNAL
- ELECTRICAL SIGNAL
- CAPILLARY TUBE, FILLED SYSTEM
- ELECTROMAGNETIC OR SONIC SIGNAL (GUIDED)
- ELECTROMAGNETIC OR SONIC SIGNAL (NOT GUIDED)
- SOFTWARE (PLC INTERNAL) OR DATA (CONTROLNET/ETHERNET) LINK SIGNAL
- HYDRAULIC SIGNAL
- MECHANICAL LINK
- ELECTRICAL BINARY SIGNAL
- TO / FROM SHEET No. — OFF PAGE CONNECTOR
- UTILITY — UTILITY IN/OUT
- I 2 — HARDWIRED INTERLOCK LOGIC (-1,2,3...IS OPTIONAL REFERENCE TO INTERLOCK DETAIL DESCRIPTION)
- ES — ELECTRICAL SOURCE
- UPS — UPS POWER

VALVE SYMBOLS

- BA- " — BALL VALVE
- BU- " — BUTTERFLY VALVE
- CH- " — CHECK VALVE
- GA- " — GATE VALVE
- GL- " — GLOBE VALVE
- A B C — THREE WAY VALVE (FAIL OPEN TO PATH A-C)
- A B C D — FOUR WAY VALVE (FAIL OPEN TO PATH A-C AND B-D)
- DAMPER OR LOUVER

GENERAL INSTRUMENT SYMBOLS

- LOCALLY MOUNTED INSTRUMENTS
- PRIMARY PANEL MOUNTED INSTRUMENTS
- CPx — AUXILIARY PANEL MOUNTED INSTRUMENTS WHERE x = PANEL No. WHEN MORE THAN ONE PANEL IS PRESENT (MAIN PANEL IS INFERRED TO BE CP1)
- BEHIND BOARD MOUNTED INSTRUMENTS
- INSTRUMENTS SHARING COMMON HOUSING
- IN LINE INSTRUMENTS AS INDENTIFIED
- XY — SIGNAL CONVERTER (INPUT/OUTPUT)
  - * E - VOLTAGE
  - I - CURRENT
  - P - PNEUMATIC
  - B - BINARY (MODBUS, R5232...)
- COLOR — PILOT LIGHT
  - A = AMBER
  - B = BLUE
  - C = CLEAR
  - G = GREEN
  - R = RED
  - W = WHITE
  - Y = YELLOW

DISTRIBUTED CONTROL / SHARED DISPLAY INSTRUMENTS

- INDICATOR/CONTROLLER/RECORDER OR ALARM POINTS - USUALLY USED TO INDICATE VIDEO DISPLAY (DCS OR HMI CONFIGURATIONS)
  * NORMALLY ACCESSIBLE TO OPERATOR
- NORMALLY BLIND OPERATION
  * NOT NORMALLY ACCESSIBLE TO OPERATOR
- DISTRIBUTED CONTROL INTERCONNECTING LOGIC CONTROLLER OR PLC WITH BINARY OR SEQUENTIAL LOGIC FUNCTIONS.
  * NORMALLY ACCESSIBLE TO OPERATOR
- NORMALLY BLIND OPERATION
  * NOT NORMALLY ACCESSIBLE TO OPERATOR
- I 1 PLCx — INTERLOCK LOGIC IN CONTROLLER OR PLC WHERE:
  - 1,2,3.....IS OPTIONAL REFERENCE TO INTERLOCK DETAIL DESCRIPTION
  - x = PLC No. WHEN MORE THAN ONE PLC IS PRESENT IN THE SYSTEM

MISCELLANEOUS SYMBOLS

- REDUCER
- FLEXIBLE PIPE
- EXPANSION JOINT
- FLANGE
- BLIND FLANGE
- HOSE CONNECTION
- SCREWED CAP, CLEANOUT
- Y-LINE STRAINER
- SPECIFICATION CHANGE
- FUNNEL DRAIN
- STATIC MIXER
- FILTER/REGULATOR/LUBRICATOR
- ANNUNCIATOR HORN
- FILTER/REGULATOR
- X" — EQUIPMENT INSULATED WITH X" OF INSULATION
- R — RESET FOR LATCH-TYPE ACTUATOR
- VENT — OPEN VENT TO ATMOSPHERE
- INLINE BLANK
- RESTRICTION ORIFICE
- AIR EJECTOR
- T — TRAP
- PULSATION DAMPER
- BB — BLOCK & BLEED ASSEMBLY
- TP 1 — TIE POINT TO EXISTING SYSTEM
- DRAIN (FLOOR, SEWER, ETC.)
- FLOW STRAIGHTENING VANE
- SP 4 — SPECIALITY PART
- MS — MOTOR STARTER
- AV — AIR VENT, AUTOMATIC
- BASKET STRAINER
- BIRD SCREEN
- HEATER
- STE-110 — SUBMERSIBLE LEVEL SENSOR TERMINATION ENCLOSURE

- BACKPRESSURE REGULATOR (SELF CONTAINED)
- LEVEL REGULATOR WITH MECHANICAL LINKAGE

PRIMARY ELEMENT SYMBOLS

- PI — DIAPHRAGM SEAL WITH PRESSURE LEAD LINE
- PI — DIAPHRAGM SEAL (LINE-MOUNTED)
- TE RTD — TEMPERATURE ELEMENT WITH THERMOWELL (OPTIONAL ELEMENT DESCRIPTION RTD, TYPE K...)
- SG — SIGHT GLASS
- LEVEL DEVICE, FLOAT TYPE
- TURBINE TYPE FLOW METER
- M — MAGNETIC FLOW METER

ACTUATOR SYMBOLS

- DIAPHRAM ACTUATOR
- CYLINDER ACTUATOR
- M — ROTARY MOTOR ACTUATOR
- S — SOLENOID ACTUATOR
- HAND ACTUATOR OR HANDWHEEL
- D — AIR ACTUATED VALVE W/POSITIONER
  OPTIONAL:
  D - DIRECT ACTING POSITIONER
  R - REVERSE ACTING POSITIONER
  VALVE FAIL SYMBOLS
  FO - FAIL OPEN
  FC - FAIL CLOSED
  FL - FAIL LOCKED (LAST POSITION)
  FI - FAIL INDETERMINATE
- FC
- ZSL — LIMIT SWITCH ACTIVATED WHEN VALVE CLOSED (ZSH ACTIVATED WHEN VALVE OPEN)

SELF-ACTUATED REGULATORS, VALVES, AND OTHER DEVICES

- RUPTURE DISC FOR PRESSURE RELIEF
- RUPTURE DISC FOR VACUUM RELIEF
- PRESSURE RELIEF VALVE
- VACUUM RELIEF VALVE
- PRESSURE REDUCING REGULATOR (SELF CONTAINED)

FUNCTION BLOCK DESIGNATION

- LOW LIMITING
- HIGH LIMITING

INSTRUMENT / PROCESS LINES DESIGNATIONS

CS	CARBON STEEL PIPE
CSVD	CARBON STEEL VENT DUCT (12 GAUGE)
CU	COPPER PIPE
DVW	DRAIN VENT WASTE PIPE
GW	GROUNDWATER
HDPE	HIGH DENSITY POLYETHYLENE PIPE
KYA	KYNAR
PD	PUMP DISCHARGE
PDE	CPVC, SOLID
PVC	POLYVINYL CHLORIDE PIPE
PPL	POLYPROPYLENE LINED/LINED DUCTILE PIPE
SS	STAINLESS STEEL
STM	STORM SEWER
TFD	TEFLON
B	BARE
I	INSULATED
J	JACKETED AND INSULATED
TE	ELECTRICALLY TRACED AND INSULATED
OED	OPEN EQUIPMENT DRAIN
AVRV	AIR VACCUM RELIEF VALVE
DDCV	DOUBLE DOOR CHECK VALVE

TYPICAL PIPE TAG NUMBERS & DESIGNATION

2"-HDPE-GW-100

- FLOW DIRECTION
- TAG
- SERVICE
- SPEC
- SIZE

ABBREVIATIONS:

POWER SUPPLY OR PURGE FLUID TYPES

- AS - AIR SUPPLY
- IA - INSTRUMENT AIR
- PA - PLANT AIR
- ES - ELECTRICAL SUPPLY
- GS - GAS SUPPLY
- HS - HYDRAULIC SUPPLY
- NS - NITROGEN SUPPLY
- SS - STEAM SUPPLY
- WS - WATER SUPPLY

THE SUPPLY LEVEL MAY BE ADDED TO THE INSTRUMENT SUPPLY LINE, E.G., AG-100, A 100-PSI AIR SUPPLY; ES-24DC, A 24-VOLT DIRECT CURRENT POWER SUPPLY.

INSTRUMENTS:

- ST - START/ENABLE
- SP - STOP/INHIBIT
- HOA - HAND/OFF/AUTO
- LOR - LOCAL/OFF/REMOTE
- OCA - OPEN/CLOSE/AUTO
- OPN - OPEN
- CLS - CLOSE
- S.P. - SETPOINT
- OVLD - OVERLOAD
- SSO - SETUP/OFF/ON
- FACP - FIRE ALARM CONTROL PANEL

FINAL AS-BUILT

REV. NO.	DATE	DRWN	CHKD	REMARKS

DESIGNED BY:
DRAWN BY:
SHEET CHK'D BY:
CROSS CHK'D BY:
APPROVED BY:
DATE: MARCH 2012

PREPARED BY:
CAPE
CAPE Environmental Management, Inc.

US Army Corps of Engineers Kansas City District
GROUNDWATER TREATMENT FACILITY PACKAGE
ROCKAWAY BOROUGH SUPERFUND SITE
EAST MAIN/WALL STREET PLUME - OU2
ROCKAWAY BOROUGH, NEW JERSEY

PROCESS & INSTRUMENTATION DIAGRAM LEGEND I

PROJECT 50001.005
FILE NAME: ISY00001 AS-BUILT
SHEET NO.
PR-01

TYPICAL ISA LETTER COMBINATIONS

First-Letters	Initiating or Measured Variable	Controllers: Recording	Controllers: Indicating	Controllers: Blind	Controllers: Self-Actuated Control Valves	Readout Devices: Recording	Readout Devices: Indicating	Switches and Alarm Devices *: High **	Switches and Alarm Devices *: Low	Switches and Alarm Devices *: Comb	Transmitters: Recording	Transmitters: Indicating	Transmitters: Blind	Solenoids, Relays, Computing Devices	Primary Element	Test Point	Well or Probe	Viewing Device, Glass	Safety Device	Final Element
A	Analysis	ARC	AIC	AC		AR	AI	ASH	ASL	ASHL	ART	AIT	AT	AY	AE	AP	AW			AV
B	Burner/Combustion	BRC	BIC	BC		BR	BI	BSH	BSL	BSHL	BRT	BIT	BT	BY	BE		BW	BG		BZ
C	User's Choice																			
D	User's Choice																			
E	Voltage	ERC	EIC	EC		ER	EI	ESH	ESL	ESHL	ERT	EIT	ET	EY	EE					EZ
F	Flow Rate	FRC	FIC	FC	FCV, FICV	FR	FI	FSH	FSL	FSHL	FRT	FIT	FT	FY	FE	FP		FG		FV
FQ	Flow Quantity	FQRC	FQIC			FQR	FQI	FQSH	FQSL			FQIT	FQT	FQY	FQE					FQV
FF	Flow Ratio	FFRC	FFIC	FFC		FFR	FFI	FFSH	FFSL						FE					FFV
G	User's Choice																			
H	Hand		HIC	HC						HS										HV
I	Current	IRC	IIC			IR	II	ISH	ISL	ISHL	IRT	IIT	IT	IY	IE					IZ
J	Power	JRC	JIC			JR	JI	JSH	JSL	JSHL	JRT	JIT	JT	JY	JE					JV
K	Time	KRC	KIC	KC	KCV	KR	KI	KSH	KSL	KSHL	KRT	KIT	KT	KY	KE					KV
L	Level	LRC	LIC	LC	LCV	LR	LI	LSH	LSL	LSHL	LRT	LIT	LT	LY	LE		LW	LG		LV
M	User's Choice																			
N	User's Choice																			
O	User's Choice																			
P	Pressure/Vacuum	PRC	PIC	PC	PCV	PR	PI	PSH	PSL	PSHL	PRT	PIT	PT	PY	PE	PP			PSV, PSE	PV
PD	Pressure, Differential	PDRC	PDIC	PDC	PDCV	PDR	PDI	PDSH	PDSL		PDRT	PDIT	PDT	PDY	PE	PP				PDV
Q	Quantity	QRC	QIC			QR	QI	QSH	QSL	QSHL	QRT	QIT	QT	QY	QE					QZ
R	Radiation	RRC	RIC	RC		RR	RI	RSH	RSL	RSHL	RRT	RIT	RT	RY	RE		RW			RZ
S	Speed/Frequency	SRC	SIC	SC	SCV	SR	SI	SSH	SSL	SSHL	SRT	SIT	ST	SY	SE					SV
T	Temperature	TRC	TIC	TC	TCV	TR	TI	TSH	TSL	TSHL	TRT	TIT	TT	TY	TE	TP	TW		TSE	TV
TD	Temperature, Differential	TDRC	TDIC	TDC	TDCV	TDR	TDI	TDSH	TDSL		TDRT	TDIT	TDT	TDY	TE	TP	TW			TDV
U	Multivariable					UR	UI							UY						UV
V	Vibration/Machinery Analysis					VR	VI	VSH	VSL	VSHL	VRT	VIT	VT	VY	VE					VZ
W	Weight/Force	WRC	WIC	WC	WCV	WR	WI	WSH	WSL	WSHL	WRT	WIT	WT	WY	WE					WZ
WD	Weight/Force, Differential	WDRC	WDIC	WDC	WDCV	WDR	WDI	WDSH	WDSL		WDRT	WDIT	WDT	WDY	WE					WDZ
X	Unclassified																			
Y	Event/State/Presence		YIC	YC		YR	YI	YSH	YSL				YT	YY	YE					YZ
Z	Position/Dimension	ZRC	ZIC	ZC	ZCV	ZR	ZI	ZSH	ZSL	ZSHL	ZRT	ZIT	ZT	ZY	ZE					ZV
ZD	Gauging/Deviation	ZDRC	ZDIC	ZDC	ZDCV	ZDR	ZDI	ZDSH	ZDSL		ZDRT	ZDIT	ZDT	ZDY	ZDE					ZDV

Note: This table is not all-inclusive.
* A, alarm, the annunciating device, may be used in the same fashion as S, switch, the actuating device.

** The letters H and L may be omitted in the undefined case.

Other Possible Combinations:

FO	(Restriction Orifice)	LLH	(Level Light High)	KQI	(Running Time Indicator)	HMS	(Hand Momentary Switch)
FRK, HIK	(Control Stations)	LCH	(Level Control High)			LCL	(Level Control Low)

IDENTIFICATION LETTERS

	FIRST-LETTER: MEASURED OR INITIATING VARIABLE	FIRST-LETTER: MODIFIER	SUCCEEDING-LETTERS: READOUT OR PASSIVE FUNCTION	SUCCEEDING-LETTERS: OUTPUT FUNCTION	SUCCEEDING-LETTERS: MODIFIER
A	Analysis		Alarm		
B	Burner/Combustion		User's Choice	User's Choice	User's Choice
C	User's Choice			Control	
D	User's Choice	Differential			
E	Voltage		Sensor (Primary Element)		
F	Flow Rate	Ratio (Fraction)			
G	User's Choice		Glass, Viewing Device		
H	Hand				High
I	Current (Electrical)		Indicate		
J	Power	Scan			
K	Time, Time Schedule	Time Rate of Change		Control Station	
L	Level		Light		Low
M	User's Choice	Momentary			Middle, Intermediate
N	User's Choice		User's Choice	User's Choice	User's Choice
O	User's Choice		Orifice, Restriction		
P	Pressure, Vacuum		Point (Test) Connection		
Q	Quantity	Integrate, Totalize			
R	Radiation		Record		
S	Speed, Frequency	Safety		Switch	
T	Temperature			Transmit	
U	Multivariable		Multifunction	Multifunction	Multifunction
V	Vibration, Machinery Analysis			Valve, Damper, Louver	
W	Weight, Force		Well		
X	Unclassified	X Axis	Unclassified	Unclassified	Unclassified
Y	Event, State, or Presence	Y Axis		Relay, Compute, Convert	
Z	Position, Dimension	Z Axis		Driver, Actuator, Unclassified Final Control Element	

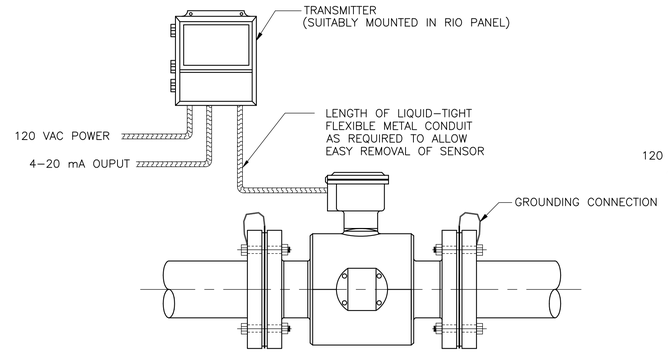

NOTES:

1) FLOW TUBE TO BE 5 STRAIGHT PIPE DIAMETERS UPSTREAM AND TWO PIPE DIAMETERS DOWNSTREAM.

2) PRODIVED GROUNDING RINGS AS REQUIRED.

3) 120 VAC POWER TO TRANSMITTER AND 4–20 mA OUTPUT SIGNAL WAS ROUTED THROUGH SEPERATE JUNCTION BOXES.

EXTRACTION WELL MAGNETIC FLOW METER AND REMOTE TRANSMITTER INSTALLATION

DETAIL 1 / CDM

NTS

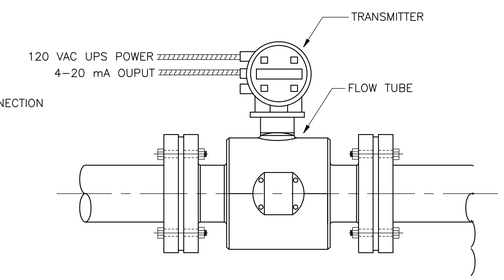

NOTES:
1. FLOW TUBE TO BE FIVE STRAIGHT PIPE DIAMETERS UPSTREAM AND TWO PIPE DIAMETERS DOWNSTREAM.
2. PROVIDED GROUNDING RINGS AS REQUIRED.
3. 120 VAC POWER TO TRANSMITTER AND 4–20 mA OUTPUT SIGNAL WAS ROUTED THROUGH SEPERATE JUNCTION BOXES.

TREATMENT BUIDLING MAGNETIC FLOW METER AND TRANSMITTER INSTALLATION

DETAIL 2 / CDM

NTS

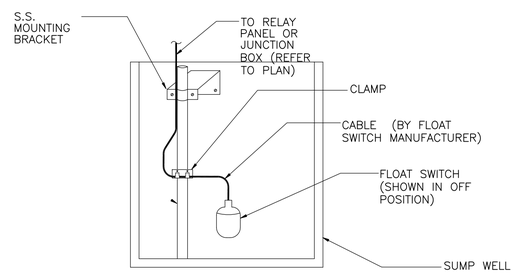

TILT – FLOAT SWITCH IN SUMP

DETAIL 3 / CDM

NTS

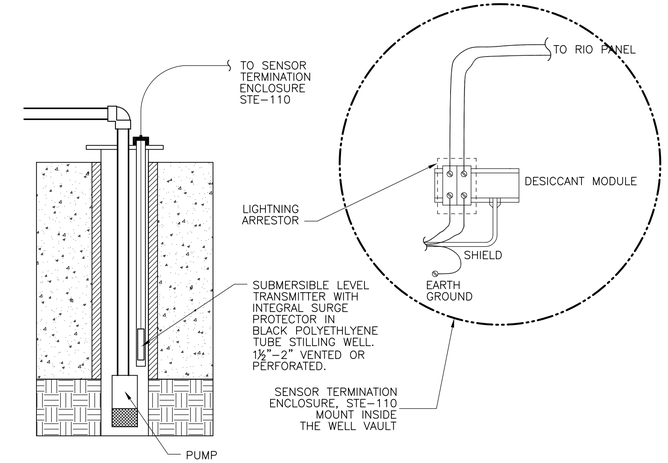

EXTRACTION WELL LEVEL TRANSMITTER INSTALLATION

DETAIL 4 / CDM

NTS

FINAL AS-BUILT

REV. NO.	DATE	DRWN	CHKD	REMARKS

DESIGNED BY:
DRAWN BY:
SHEET CHK'D BY:
CROSS CHK'D BY:
APPROVED BY:
DATE: MARCH 2012

PREPARED BY:
CAPE
CAPE Environmental Management, Inc.

US Army Corps of Engineers Kansas City District
GROUNDWATER TREATMENT FACILITY PACKAGE
ROCKAWAY BOROUGH SUPERFUND SITE
EAST MAIN/WALL STREET PLUME - OU2
ROCKAWAY BOROUGH, NEW JERSEY

PROCESS & INSTRUMENTATION DIAGRAM LEGEND II

PROJECT 50001.005
FILE NAME: ISY00002 AS–BUILT
SHEET NO.
PR-02

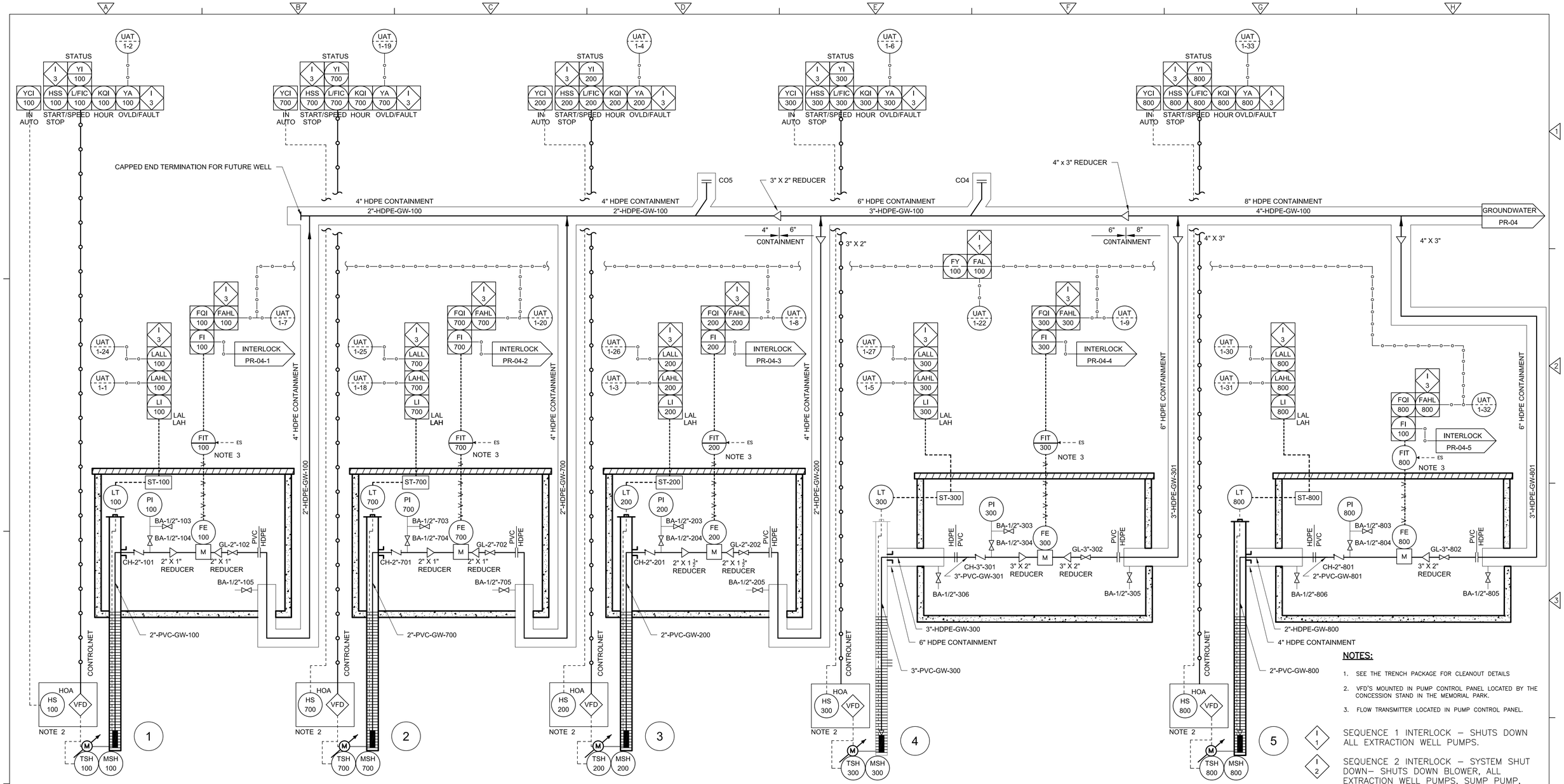

NOTES:

1. SEE THE TRENCH PACKAGE FOR CLEANOUT DETAILS
2. VFD'S MOUNTED IN PUMP CONTROL PANEL LOCATED BY THE CONCESSION STAND IN THE MEMORIAL PARK.
3. FLOW TRANSMITTER LOCATED IN PUMP CONTROL PANEL.

I 1 — SEQUENCE 1 INTERLOCK – SHUTS DOWN ALL EXTRACTION WELL PUMPS.

I 2 — SEQUENCE 2 INTERLOCK – SYSTEM SHUT DOWN– SHUTS DOWN BLOWER, ALL EXTRACTION WELL PUMPS, SUMP PUMP, HEATER.

I 3 — SEQUENCE 3 INTERLOCK – SHUTS DOWN RESPECTIVE EXTRACTION WELL PUMP.

FINAL AS-BUILT

PLANT ID.	EWP-100 (1)	EWP-700 (2)	EWP-200 (3)	EWP-300 (4)	EWP-800 (5)
NAME	EXTRACTION WELL EW-5A PUMP	EXTRACTION WELL EW-8 PUMP	EXTRACTION WELL EW-9 PUMP	EXTRACTION WELL EW-6 PUMP	EXTRACTION WELL EW-10 PUMP
DESCRIPTION: MATERIAL	SS	SS	SS	SS	SS
SIZE	2" DISCH	2" DISCH	2" DISCH	3" DISCH	2" DISCH
CAPACITY	40 GPM @ 240 TDH	40 GPM @ 240 TDH	60GPM @ 185TDH	120GPM @ 120TDH	80 GPM @ 100TDH
TEMP	55°F	55°F	55°F	55°F	55°F
HP/V/RPM	5/480/3450	5/480/3450	5/480/3450	7.5/480/3450	3/480/3450
WEIGHT	78 LBS	78 LBS	80 LBS	92 LBS	64 LBS
MANUFACTURE	GRUNDFOS	GRUNDFOS	GRUNDFOS	GRUNDFOS	GRUNDFOS
MODEL	40S50-12	40S50-12	60S50-9	150S75-3	75S30-5
VENDOR	-	-	-	-	-

REV. NO.	DATE	DRWN	CHKD	REMARKS

DESIGNED BY:
DRAWN BY:
SHEET CHK'D BY:
CROSS CHK'D BY:
APPROVED BY:
DATE: MARCH 2012

PREPARED BY:
CAPE Environmental Management, Inc.

US Army Corps of Engineers Kansas City District
GROUNDWATER TREATMENT FACILITY PACKAGE
ROCKAWAY BOROUGH SUPERFUND SITE
EAST MAIN/WALL STREET PLUME - OU2
ROCKAWAY BOROUGH, NEW JERSEY

PROCESS & INSTRUMENTATION DIAGRAM
EXTRACTION WELLS

PROJECT 50001.005
FILE NAME: ISTPI003 AS-BUILT
SHEET NO.
PR-03

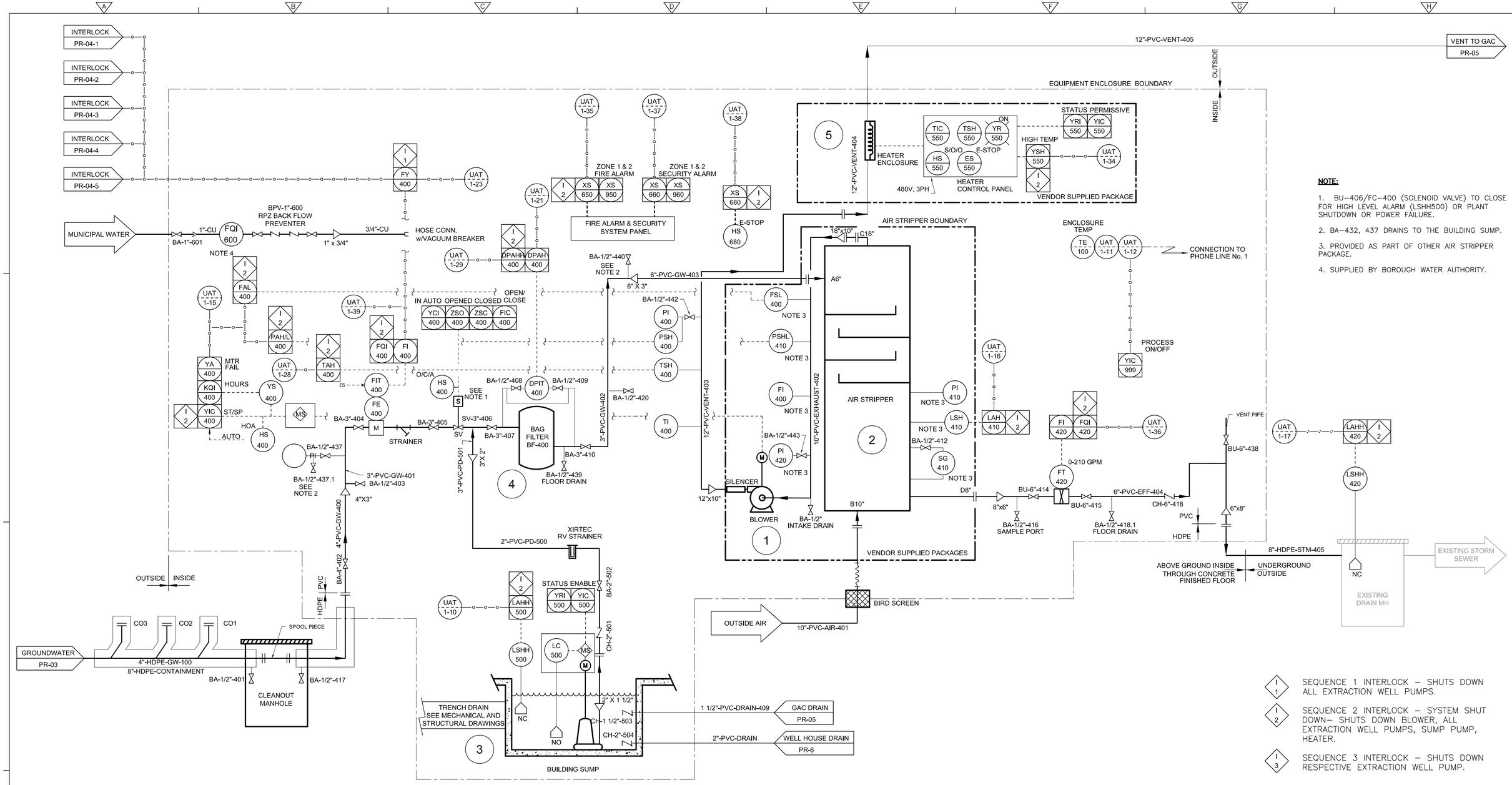

NOTE:

1. BU–406/FC–400 (SOLENOID VALVE) TO CLOSE FOR HIGH LEVEL ALARM (LSHH500) OR PLANT SHUTDOWN OR POWER FAILURE.
2. BA–432, 437 DRAINS TO THE BUILDING SUMP.
3. PROVIDED AS PART OF OTHER AIR STRIPPER PACKAGE.
4. SUPPLIED BY BOROUGH WATER AUTHORITY.

I 1 — SEQUENCE 1 INTERLOCK – SHUTS DOWN ALL EXTRACTION WELL PUMPS.

I 2 — SEQUENCE 2 INTERLOCK – SYSTEM SHUT DOWN– SHUTS DOWN BLOWER, ALL EXTRACTION WELL PUMPS, SUMP PUMP, HEATER.

I 3 — SEQUENCE 3 INTERLOCK – SHUTS DOWN RESPECTIVE EXTRACTION WELL PUMP.

PLANT ID.	BLR-400 (1)	AST-400 (2)	PMP-500 (3)	BF-400 (4)	HEATER-400 (5)
NAME	AIR BLOWER	AIR STRIPPER	SUMP PUMP	BAG FILTER	HEATER
DESCRIPTION: MATERIAL	CS	304 SST	CI	SS	
SIZE	-	-	1 1/2" DISCH	-	
CAPACITY	2100CFM @ 55"WC	210 GPM	15 GPM @ 60 TDH	230 GPM (MAX)	
TEMP	180°F (MAX)	-	130°F (MAX)	250°F (MAX)	
HP/V/RPM	40/480/3550	-	0.5/115/3450	-	
WEIGHT	900 LB	12,000 LBS	~80 LBS	245 LBS	
MANUFACTURE	N.Y. BLOWER	CARBONAIR	ZOELLER	HAYWARD	
MODEL	#2610A	STAT400	MODEL N163	MBF-0302	
VENDOR	CARBONAIR	CARBONAIR	ZOELLER	-	

FINAL AS-BUILT

REV. NO.	DATE	DRWN	CHKD	REMARKS

DESIGNED BY:
DRAWN BY:
SHEET CHK'D BY:
CROSS CHK'D BY:
APPROVED BY:
DATE: MARCH 2012

PREPARED BY:
CAPE
CAPE Environmental Management, Inc.

US Army Corps of Engineers Kansas City District
GROUNDWATER TREATMENT FACILITY PACKAGE
ROCKAWAY BOROUGH SUPERFUND SITE
EAST MAIN/WALL STREET PLUME - OU2
ROCKAWAY BOROUGH, NEW JERSEY

PROCESS & INSTRUMENTATION DIAGRAM AIR STRIPPER

PROJECT 50001.005
FILE NAME: ISTPI004 AS–BUILT
SHEET NO.
PR-04

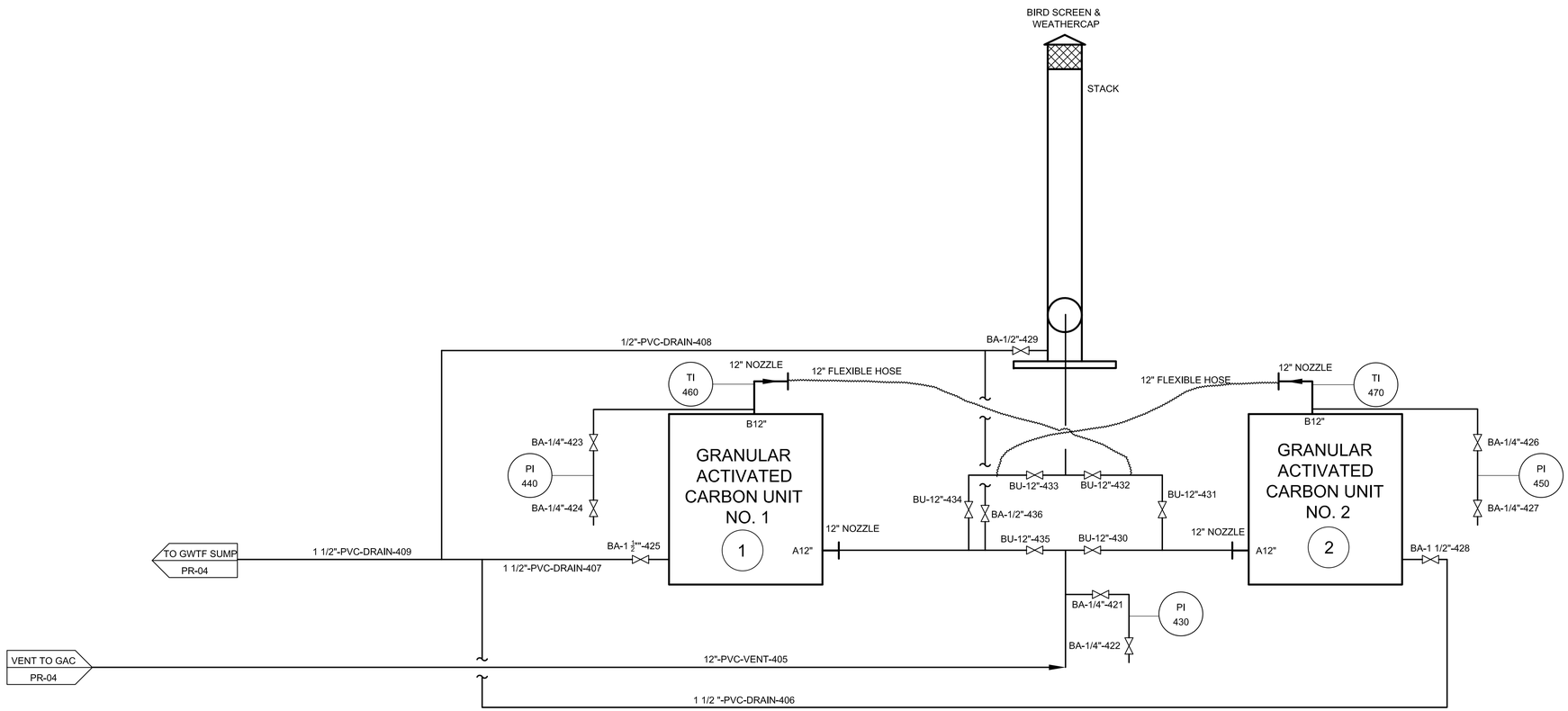

PLANT ID.	GAC-401 (1)	GAC-402 (2)
NAME	GAC UNIT No. 1	GAC UNIT No. 2
DESCRIPTION: MATERIAL	INSULATED FRP	INSULATED FRP
SIZE	7 FT DIAMETER	7 FT DIAMETER
CAPACITY	3,000 LBS CARBON	3,000 LBS CARBON
TEMP	-	-
HP/V/RPM	-	-
WEIGHT	4,700 LBS	4,700 LBS
MANUFACTURE	CARBONAIR	CARBONAIR
MODEL	GPC-40	GPC-40
VENDOR	-	-

FINAL AS-BUILT

REV. NO.	DATE	DRWN	CHKD	REMARKS

DESIGNED BY:
DRAWN BY:
SHEET CHK'D BY:
CROSS CHK'D BY:
APPROVED BY:
DATE: MARCH 2012

PREPARED BY:
CAPE
CAPE Environmental Management, Inc.

US Army Corps of Engineers Kansas City District
GROUNDWATER TREATMENT FACILITY PACKAGE
ROCKAWAY BOROUGH SUPERFUND SITE
EAST MAIN/WALL STREET PLUME - OU2
ROCKAWAY BOROUGH, NEW JERSEY

PROCESS & INSTRUMENTATION DIAGRAM
GRANULAR ACTIVATED CARBON UNITS

PROJECT 50001.005
FILE NAME: ISTPI005 AS-BUILT
SHEET NO.
PR-05

NOTE:

1. RADIO COMMUNICATION PANEL AND ANTENNA WERE REMOVED FROM THE OLD WELL HOUSE BUILDING AND INSTALLED IN THE NEW WELL HOUSE BUIDLING.

2. COMMUNICATION LINK WAS RESTORED AND TESTED.

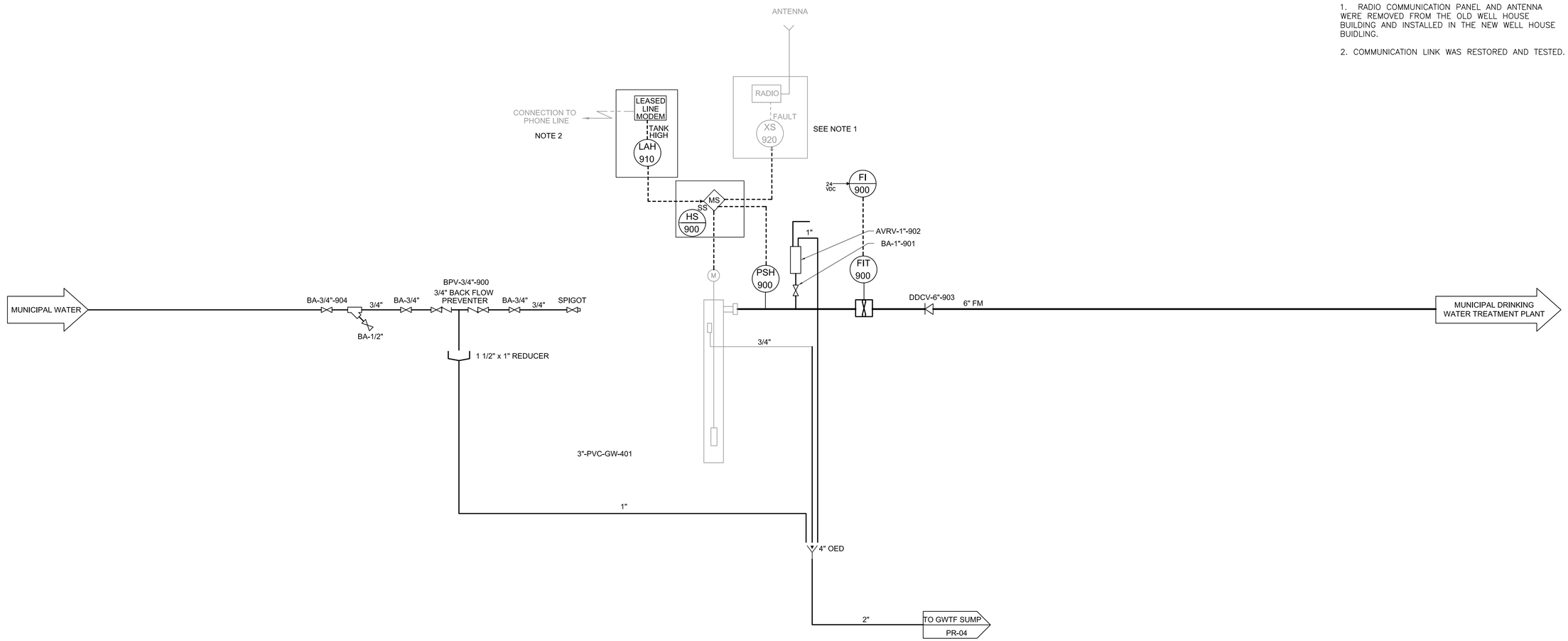

FINAL AS-BUILT

REV. NO.	DATE	DRWN	CHKD	REMARKS

DESIGNED BY:
DRAWN BY:
SHEET CHK'D BY:
CROSS CHK'D BY:
APPROVED BY:
DATE: MARCH 2012

PREPARED BY:
CAPE
CAPE Environmental Management, Inc.

US Army Corps of Engineers Kansas City District
GROUNDWATER TREATMENT FACILITY PACKAGE
ROCKAWAY BOROUGH SUPERFUND SITE
EAST MAIN/WALL STREET PLUME - OU2
ROCKAWAY BOROUGH, NEW JERSEY

PROCESS & INSTRUMENTATION DIAGRAM
WELL HOUSE

PROJECT 50001.005
FILE NAME: ISTPI006

SHEET NO.
PR-06

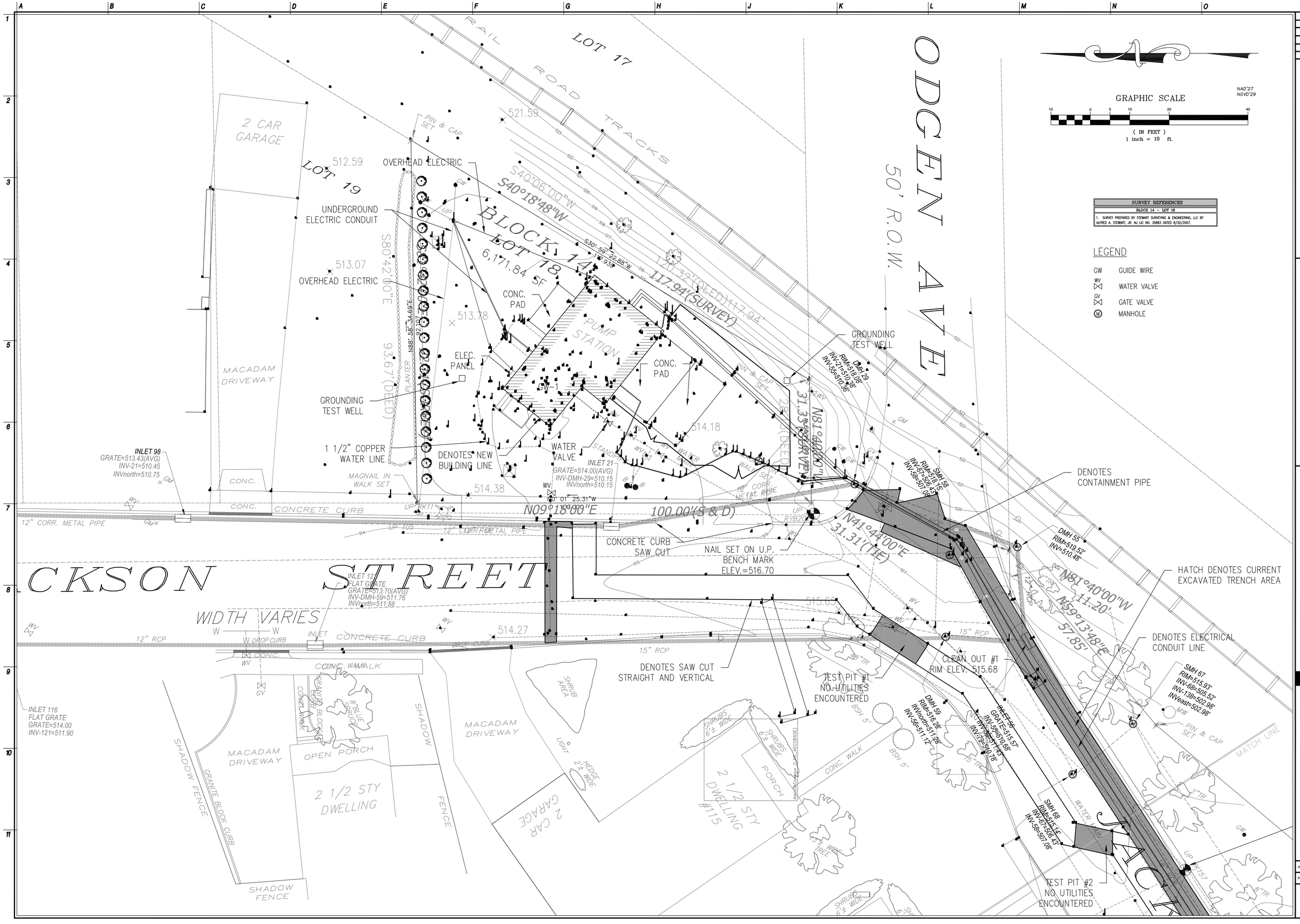

SURVEY REFERENCES
BLOCK 14 – LOT 18
1. SURVEY PREPARED BY STEWART SURVEYING & ENGINEERING, LLC BY ALFRED A. STEWART, JR. NJ LIC NO. 35883 DATED 8/20/2007.

LEGEND

- GW — GUIDE WIRE
- WV — WATER VALVE
- GV — GATE VALVE
- (M) — MANHOLE

NJ Certificate of Authorization	
Eng'r. Nos.	GA276878
Arch. Nos.	AC124
Date	09/02/11
Checked	MMW
Drawn	ER

MATTHEW M. WEBB, PLS
Title PROFESSIONAL LAND SURVEYOR License No. NJ 24GS04330200

Revisions:

LAN ASSOCIATES
engineering • planning • architecture • surveying
445 GODWIN AVENUE, MIDLAND PARK, N.J. 07432 (201)447-6400

FINAL TRENCH LAYOUT AS-BUILT
WELL FIELD SUPERFUND SITE
BOROUGH OF ROCKAWAY
BOROUGH OF ROCKAWAY, NEW JERSEY

Job No. 2.8387.03
File No. 838703AB01.dwg

AB.01

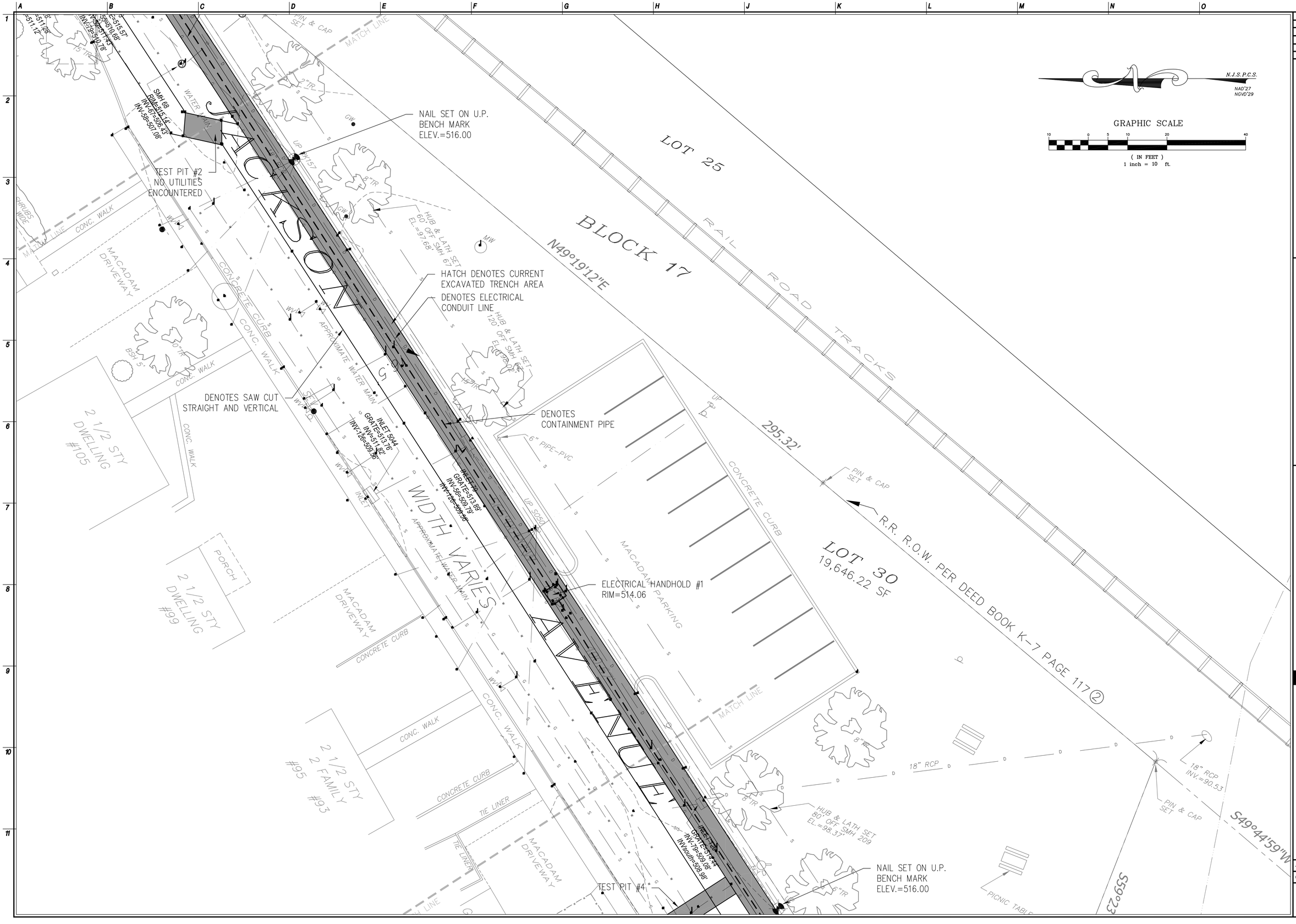

NJ Certificate of Authorization	
Eng'r. Nos.	GA276878
Arch. Nos.	AC124
Date	09/02/11
Checked	MWW
Drawn	ER

MATTHEW M. WEBB, PLS
Title PROFESSIONAL LAND SURVEYOR License No. NJ 24GS04330200

Revisions:

LAN ASSOCIATES
engineering • planning • architecture • surveying
445 GODWIN AVENUE, MIDLAND PARK, N.J. 07432 (201)447-6400

FINAL TRENCH LAYOUT AS-BUILT
WELL FIELD SUPERFUND SITE
BOROUGH OF ROCKAWAY
BOROUGH OF ROCKAWAY, NEW JERSEY

Job No. 2.8387.03
File No. 838703AB01.dwg

AB.02

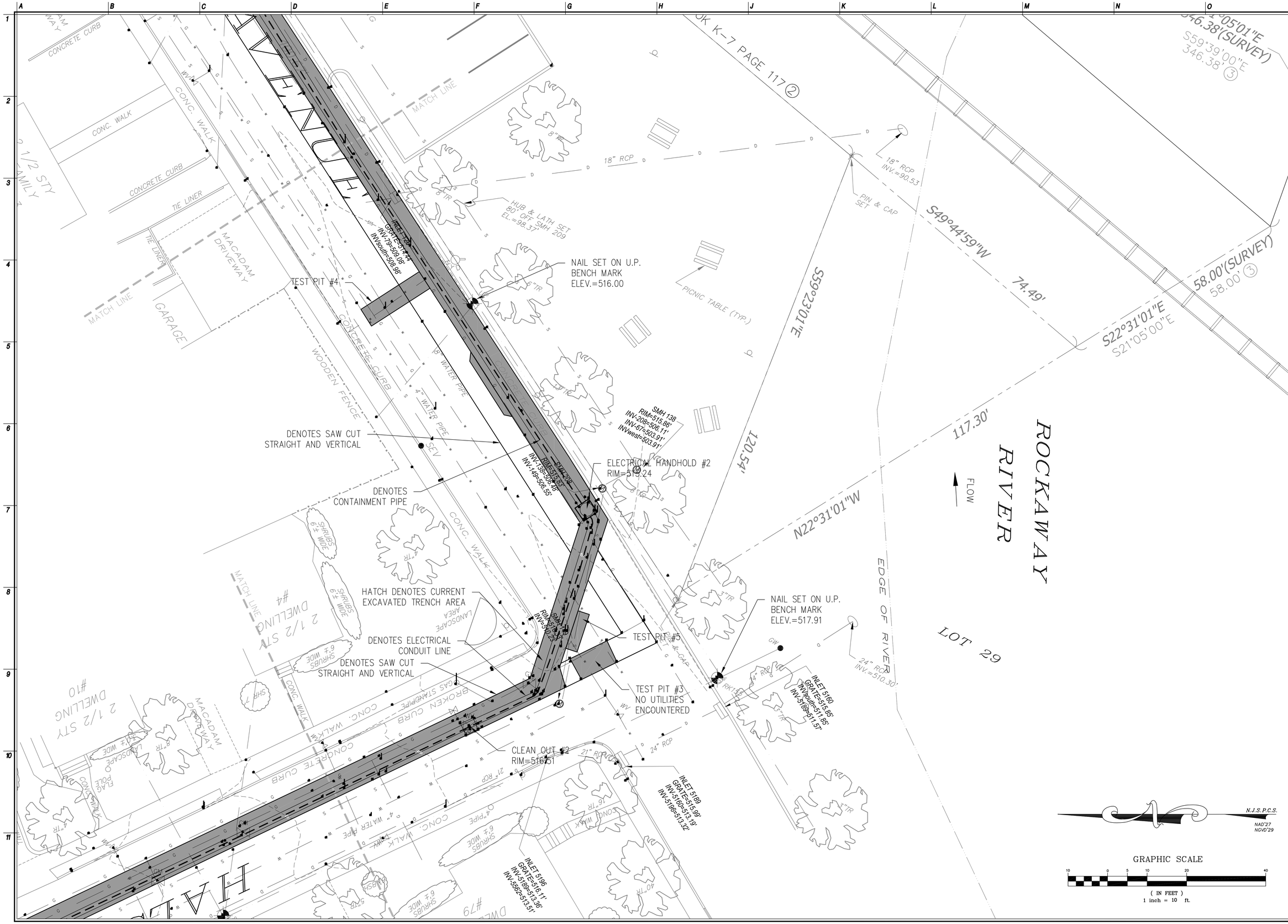

NJ Certificate of Authorization	
Eng'r. Nos.	GA276878
Arch. Nos.	AC124
Date	09/02/11
Checked	MMW
Drawn	ER

MATTHEW M. WEBB, PLS
Title PROFESSIONAL LAND SURVEYOR License No. NJ 24GS04330200

Revisions:

LAN ASSOCIATES
engineering • planning • architecture • surveying
445 GODWIN AVENUE, MIDLAND PARK, N.J. 07432 (201)447-6400

FINAL TRENCH LAYOUT AS-BUILT
WELL FIELD SUPERFUND SITE
BOROUGH OF ROCKAWAY
BOROUGH OF ROCKAWAY, NEW JERSEY

Job No. 2.8387.03
File No. 838703AB01.dwg

AB.03

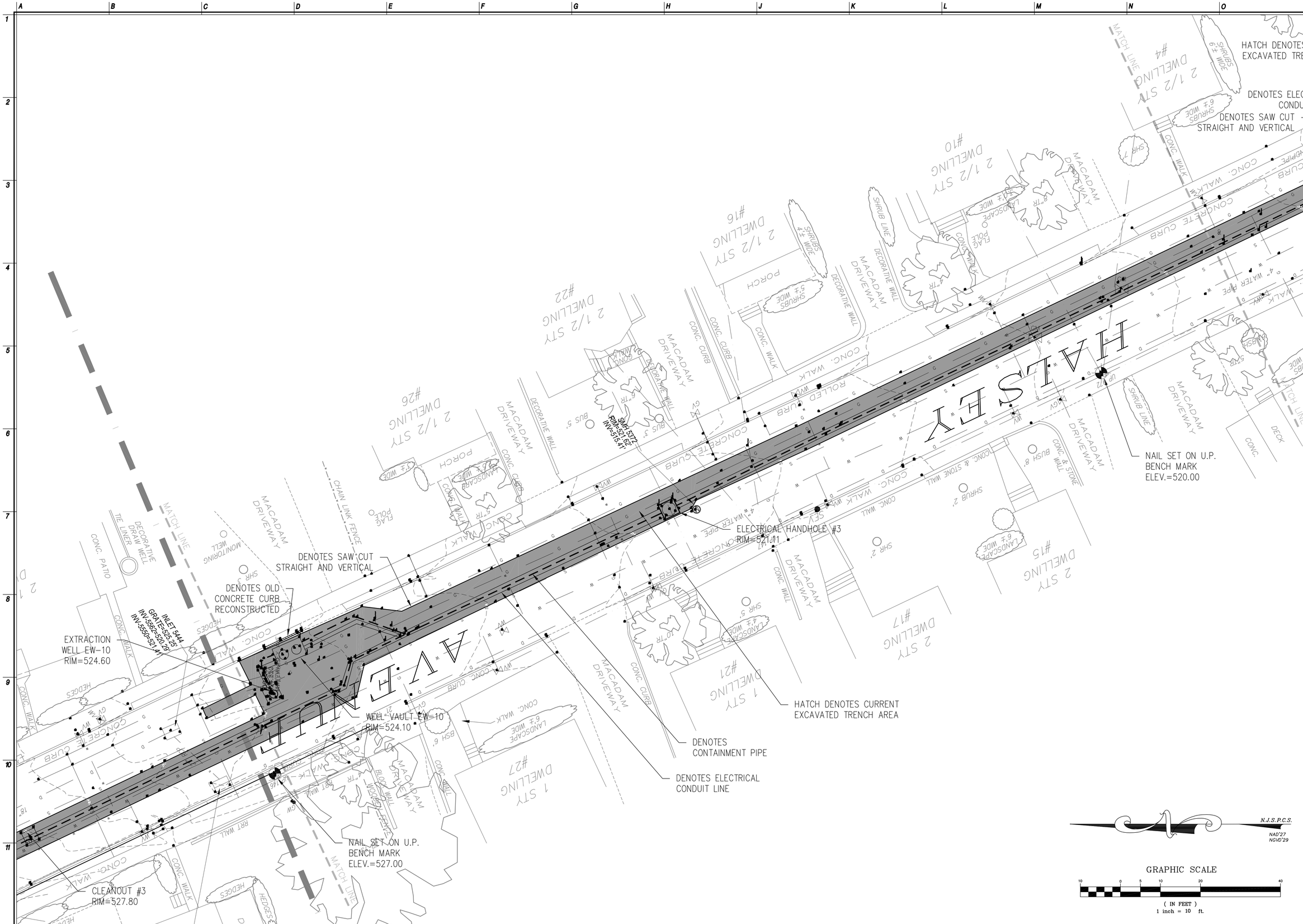

NJ Certificate of Authorization	
Eng'r. Nos.	GA276878
Arch. Nos.	AC124
Date	09/02/11
Checked	MMW
Drawn	ER

MATTHEW M. WEBB, PLS

Title PROFESSIONAL LAND SURVEYOR License No. NJ 24GS04330200

Revisions:

LAN ASSOCIATES

engineering • planning • architecture • surveying INC.

445 GODWIN AVENUE, MIDLAND PARK, N.J. 07432 (201)447-6400

FINAL TRENCH LAYOUT AS-BUILT

WELL FIELD SUPERFUND SITE

BOROUGH OF ROCKAWAY
BOROUGH OF ROCKAWAY, NEW JERSEY

Job No. 2.8387.03

File No. 838703AB01.dwg

AB.04

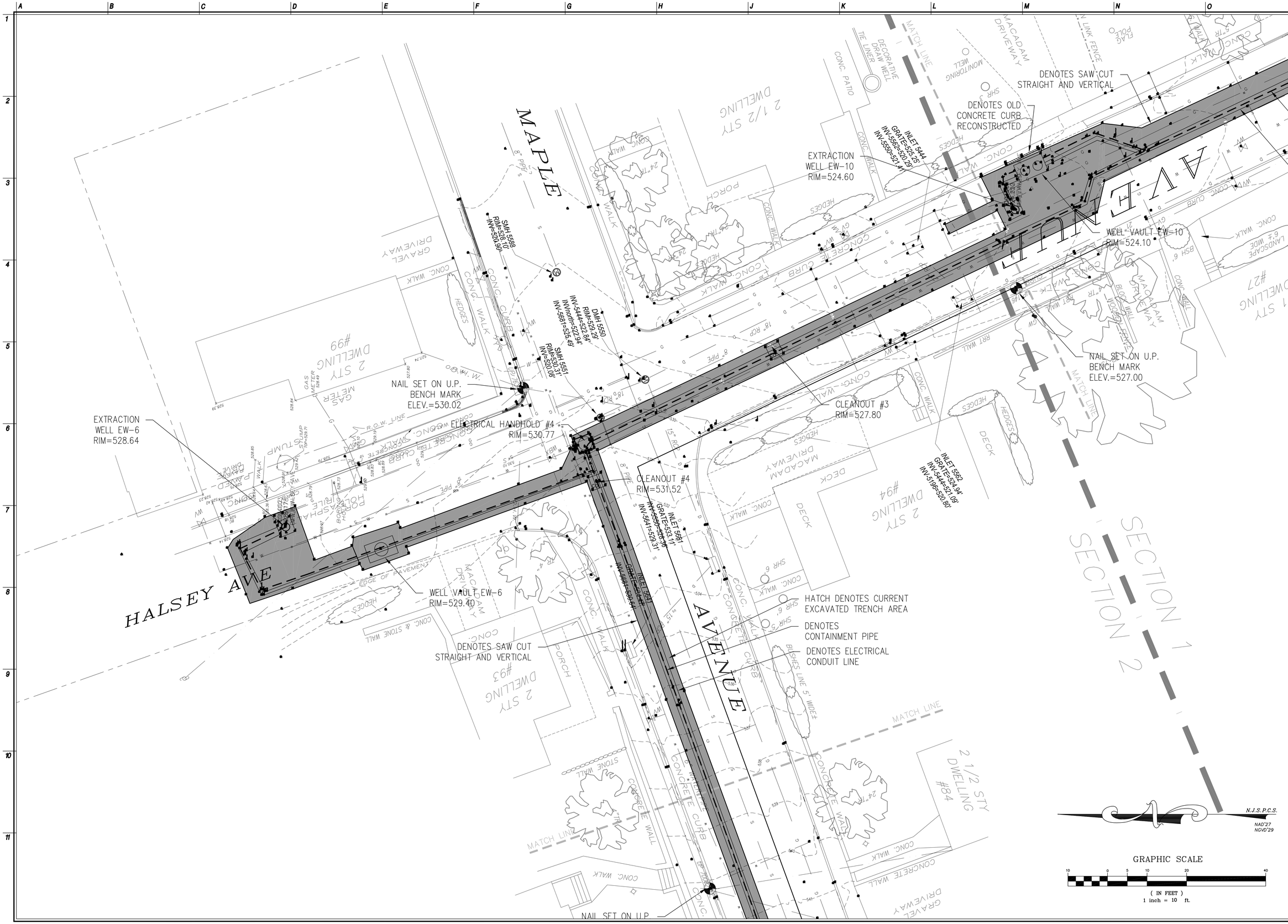

NJ Certificate of Authorization	
Eng'r. Nos.	GA276878
Arch. Nos.	AC124
Date	09/02/11
Checked	MMW
Drawn	ER

MATTHEW M. WEBB, PLS
Title PROFESSIONAL LAND SURVEYOR License No. NJ 24GS04330200

Revisions:

LAN ASSOCIATES
engineering • planning • architecture • surveying
445 GODWIN AVENUE, MIDLAND PARK, N.J. 07432 (201)447-8400

FINAL TRENCH LAYOUT AS-BUILT
WELL FIELD SUPERFUND SITE
BOROUGH OF ROCKAWAY
BOROUGH OF ROCKAWAY, NEW JERSEY

Job No. 2.8387.03
File No. 838703AB01.dwg

AB.05

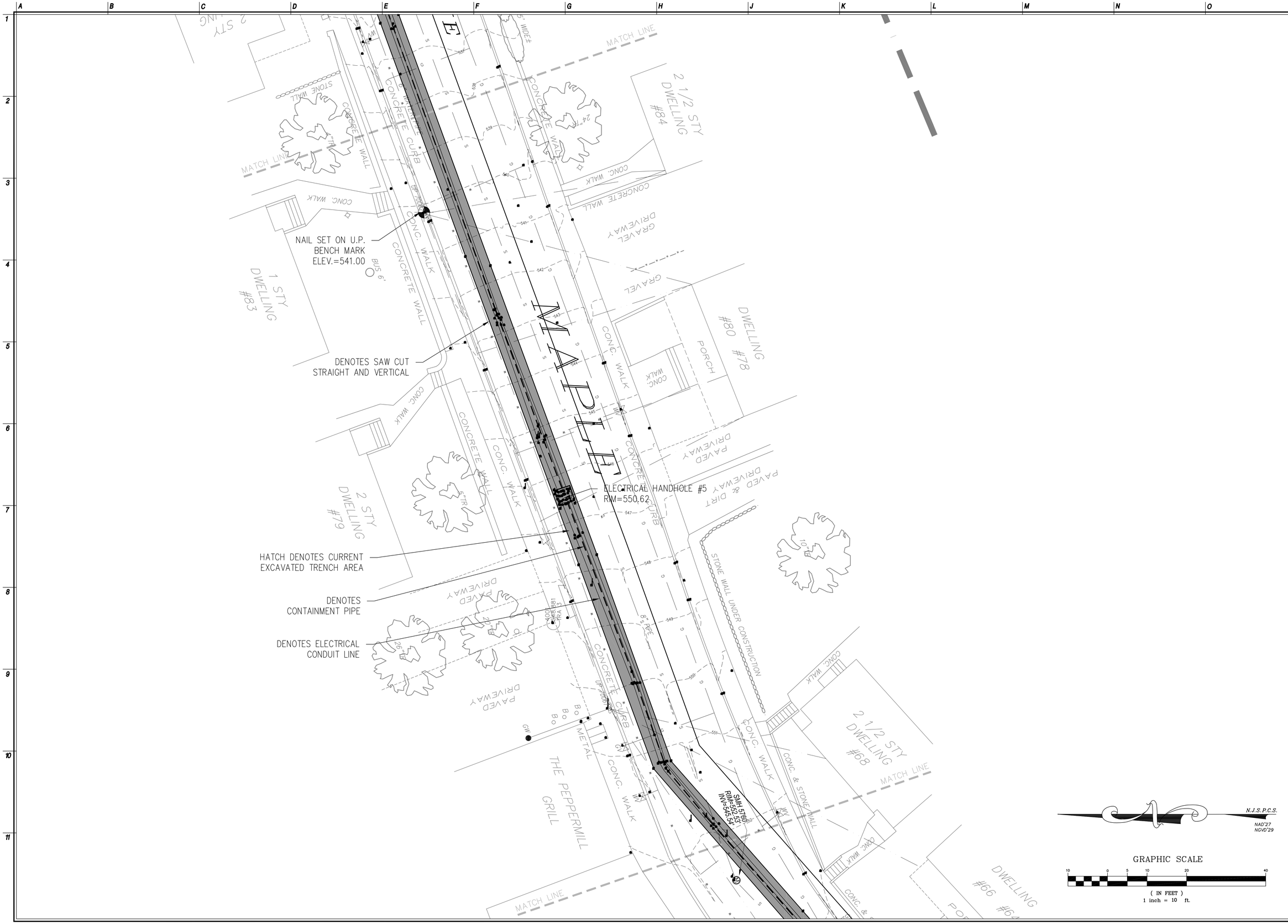

NJ Certificate of Authorization	
Eng'r. Nos.	GA276878
Arch. Nos.	AC124
Date	09/02/11
Checked	MMW
Drawn	ER

MATTHEW M. WEBB, PLS
Title PROFESSIONAL LAND SURVEYOR License No. NJ 24GS043330200

Revisions:

LAN ASSOCIATES
engineering • planning • architecture • surveying INC
445 GODWIN AVENUE, MIDLAND PARK, N.J. 07432 (201)447-6400

FINAL TRENCH LAYOUT AS-BUILT
WELL FIELD SUPERFUND SITE
BOROUGH OF ROCKAWAY
BOROUGH OF ROCKAWAY, NEW JERSEY

Job No. 2.8387.03
File No. 838703AB01.dwg

AB.06

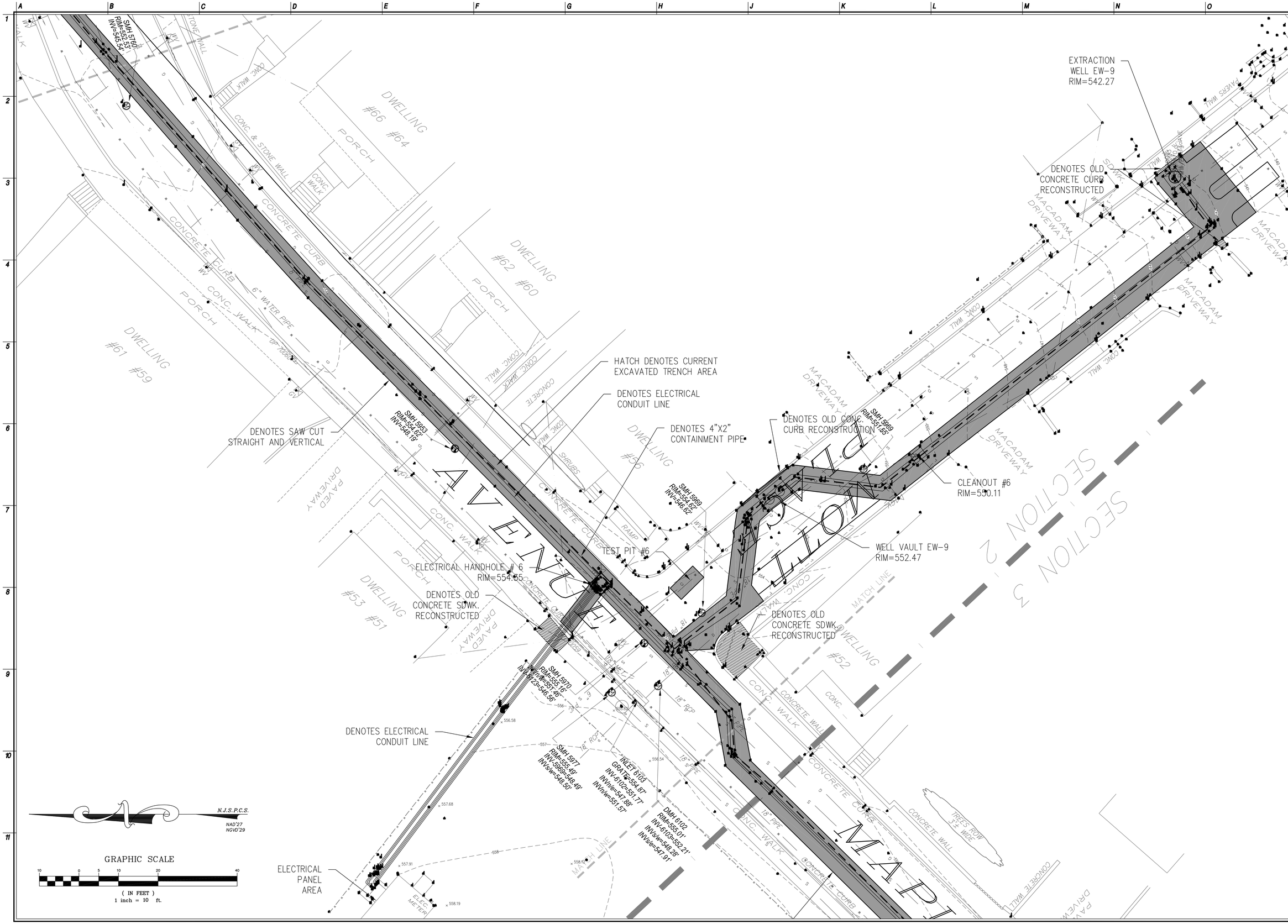

NJ Certificate of Authorization	
Eng'r. Nos.	GA276878
Arch. Nos.	AC124
Date	09/02/11
Checked	MMW
Drawn	ER

MATTHEW M. WEBB, PLS
Title PROFESSIONAL LAND SURVEYOR License No. NJ 24GS043330200

Revisions:

LAN ASSOCIATES
engineering • planning • architecture • surveying INC
445 GODWIN AVENUE, MIDLAND PARK, N.J. 07432 (201)447-6400

FINAL TRENCH LAYOUT AS-BUILT
WELL FIELD SUPERFUND SITE
BOROUGH OF ROCKAWAY
BOROUGH OF ROCKAWAY, NEW JERSEY

Job No. 2.8387.03
File No. 838703AB01.dwg

AB.07

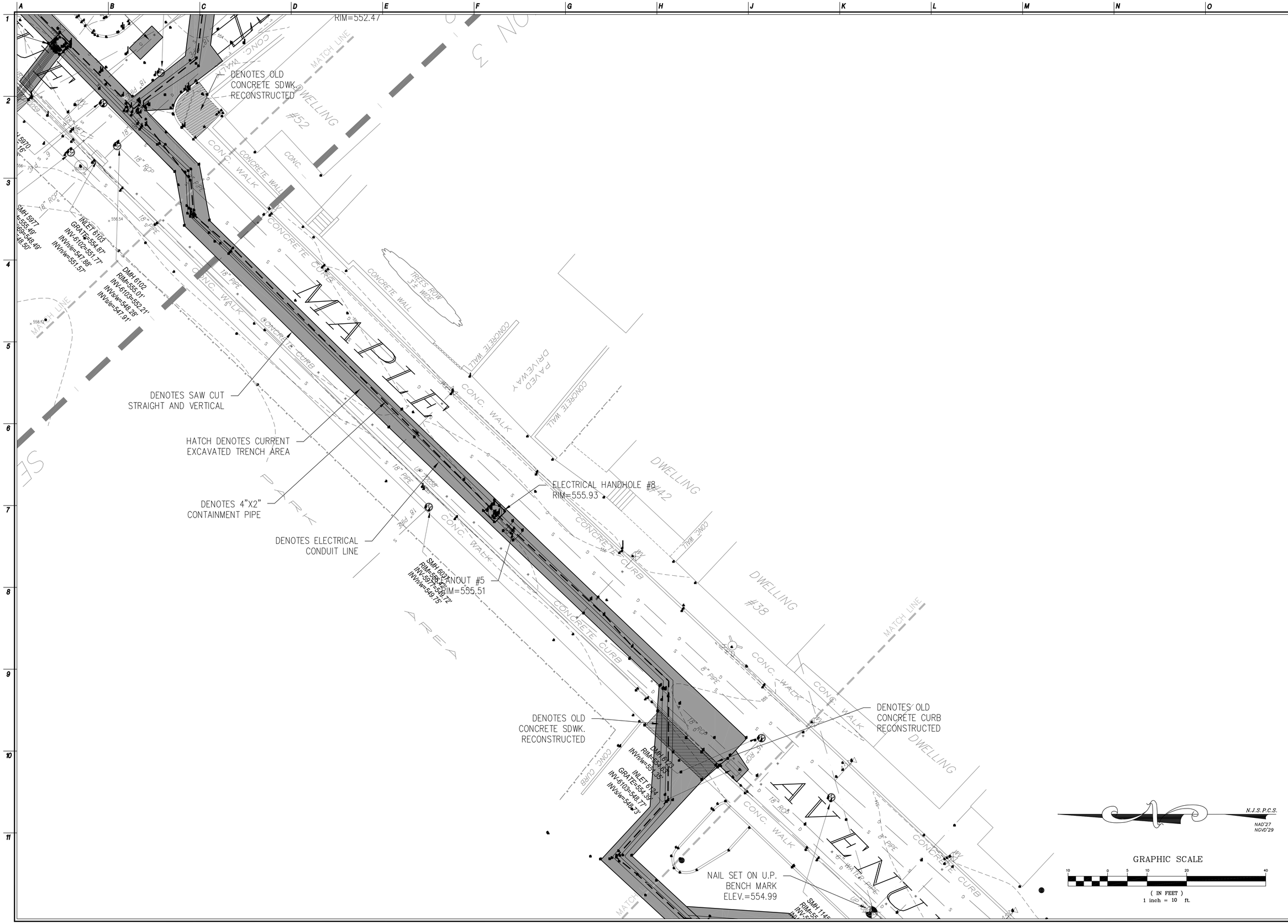

NJ Certificate of Authorization	
Eng'r. Nos.	GA276878
Arch. Nos.	AC124
Date	09/02/11
Checked	MMW
Drawn	ER

MATTHEW M. WEBB, PLS
Title PROFESSIONAL LAND SURVEYOR License No. NJ 24GS043430200

Revisions:

LAN ASSOCIATES
engineering • planning • architecture • surveying
445 GODWIN AVENUE, MIDLAND PARK, N.J. 07432 (201)447-6400

FINAL TRENCH LAYOUT AS-BUILT
WELL FIELD SUPERFUND SITE
BOROUGH OF ROCKAWAY
BOROUGH OF ROCKAWAY, NEW JERSEY

Job No. 2.8387.03
File No. 838703AB01.dwg

AB.08

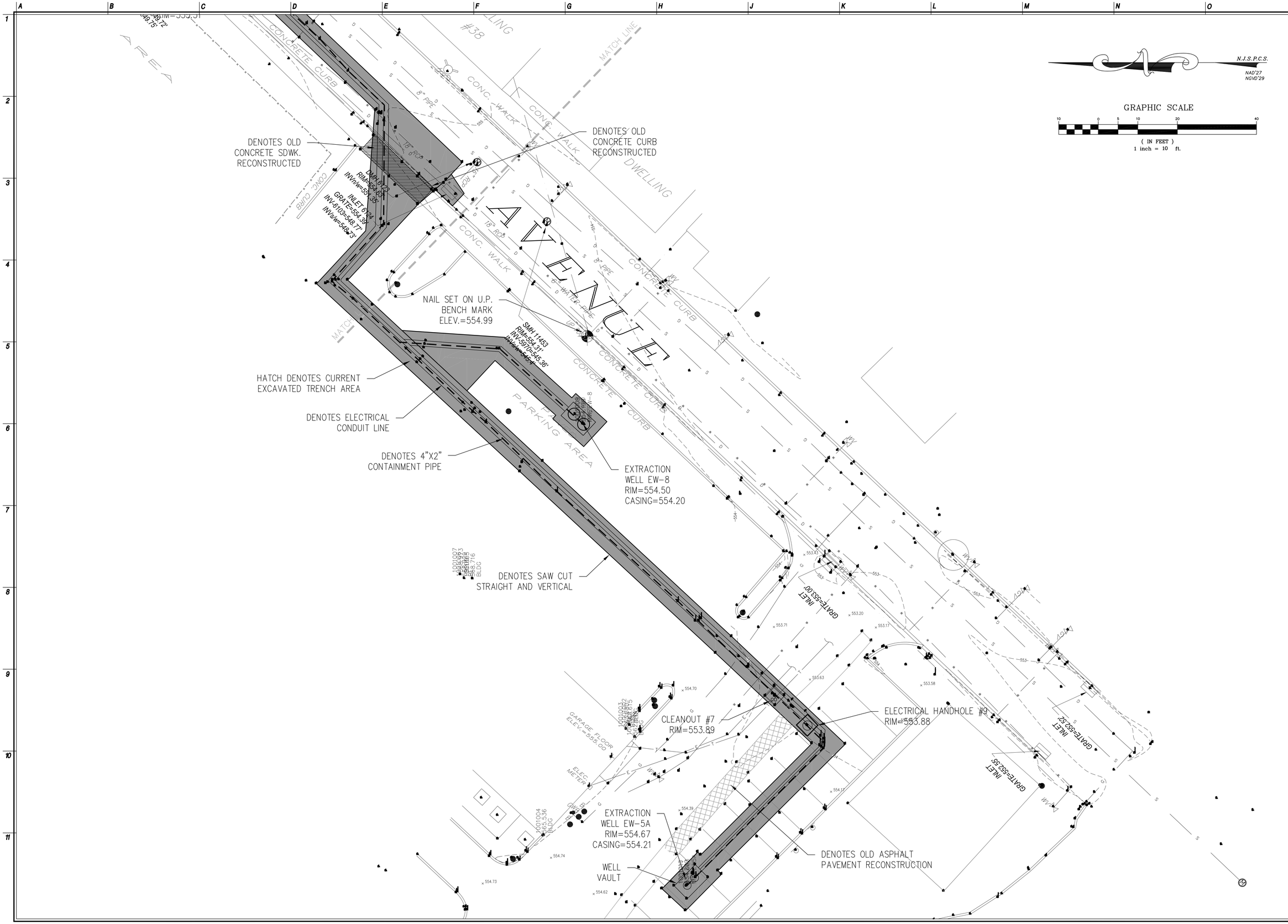

NJ Certificate of Authorization	
Eng'r. Nos.	GA276878
Arch. Nos.	AC124
Date	09/02/11
Checked	MMW
Drawn	ER

MATTHEW M. WEBB, PLS
Title PROFESSIONAL LAND SURVEYOR License No. NJ 24GS04330200

Revisions:

LAN ASSOCIATES
engineering • planning • architecture • surveying
445 GODWIN AVENUE, MIDLAND PARK, N.J. 07432 (201)447-6400

FINAL TRENCH LAYOUT AS-BUILT
WELL FIELD SUPERFUND SITE
BOROUGH OF ROCKAWAY
BOROUGH OF ROCKAWAY, NEW JERSEY

Job No. 2.8387.03
File No. 838703AB01.dwg

AB.09

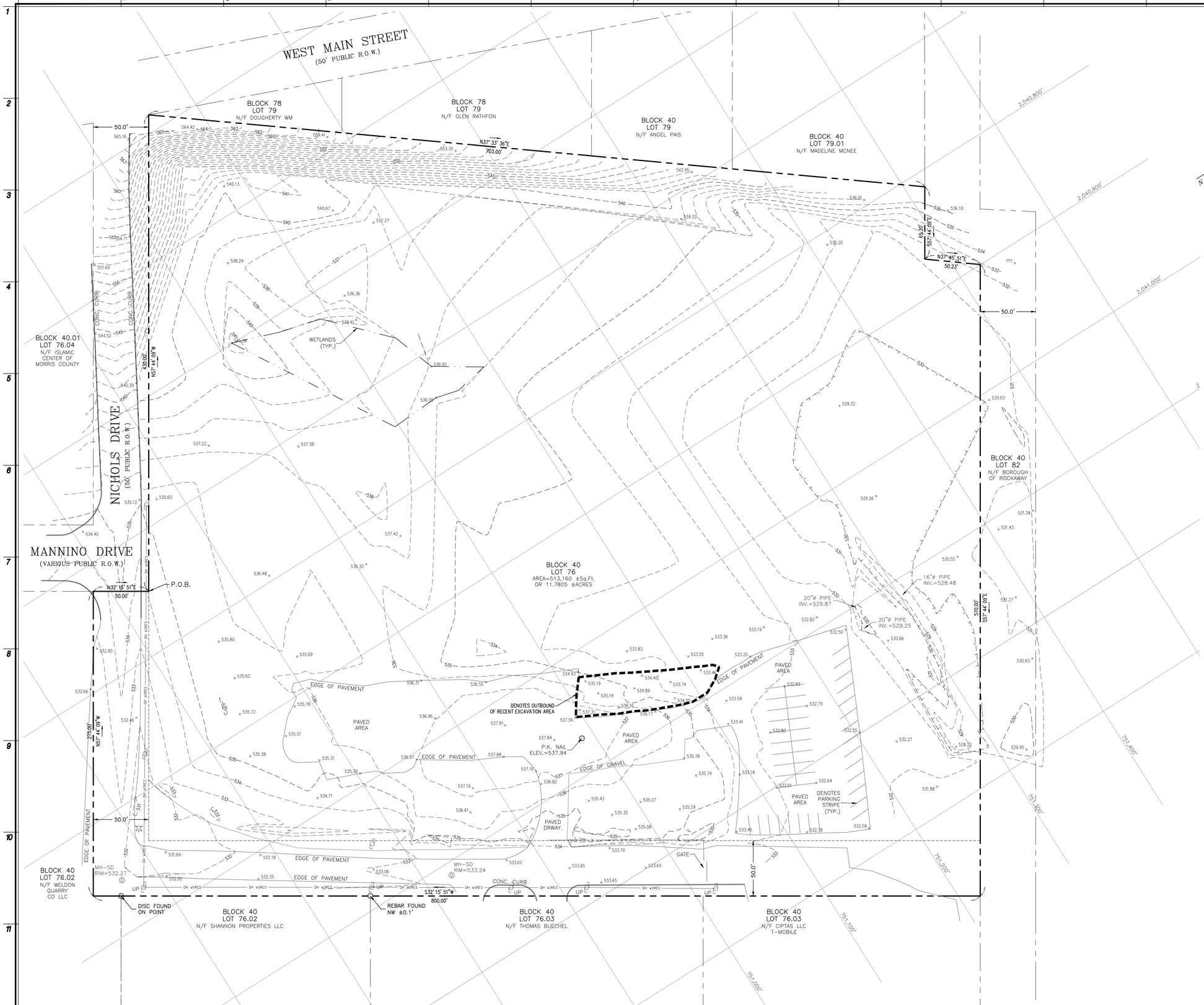

LEGEND

	EXISTING
WATER LINE	
FIRE HYDRANT	
WATER SHUTOFF	
UTILITY METER	GW WM
VALVE	
GAS LINE	G
ELECTRIC BOX	ELEC
ELECTRIC LINE	E
OVERHEAD WIRES	OH WIRES
UTILITY POLE	
GUY WIRE	
LIGHT POLE	
TELEPHONE LINE	T
STORM SEWER	ST
CATCH BASIN	
MANHOLES	
FOOTING DRAIN	FD FD
ROOF DRAIN	RD RD
SANITARY SEWER	SAN
CLEAN OUT	
SIGN	
FLAGPOLE	
MAILBOX	MAIL
DUMPSTER	DUMPSTER
TREE	
TREE LINE	
BUSH	
GUIDERAIL	
WALLS	
FENCE	
SPOT ELEVATION	× 19.80 × 19.80 19.80 ×
CONTOUR LINE	
SOIL BORING LOCATION	B-1
FIRST FLOOR ELEVATION	F.F.=

SURVEY REFERENCES

T.M. BLOCK 40 - LOT 76

1) DEED BOOK 21191 PAGE1992 DEED BOOK 20741 PAGE 157

2) MAP ENTITLED "SURVEY OF BLOCK 40 LOT 76.02, BOROUGH OF ROCKAWAY, MORRIS COUNTY, N.J." PERFORMED BY SPILANE ENGINEERING ASSOCIATES L.L.C., MICHAEL J. SPILLANE P.E. & L.S. LIC.# 17560, DATED 07/31/07.

3) TAX MAP SHEETS No. 13, 14 OF THE BOROUGH OF ROCKAWAY, MORRIS COUNTY, NEW JERSEY.

GENERAL NOTES

T.M. BLOCK 40 - LOT 76

1. PROPERTY SUBJECT TO DOCUMENTS OF RECORD.

2. THE SUBJECT PROPERTY IS SUBJECT TO EASEMENTS, RESTRICTIONS, OR EXCEPTIONS, OR CONVEYANCES THAT MAY EXIST.

3. ONLY SURFACE CONDITIONS ARE SHOWN, NO RESPONSIBILITY IS TAKEN FOR BURIED PIPES, WIRES, SEPTIC, WELLS, UST'S, ETC.

4. THE SUBJECT PROPERTY IS SUBJECT TO THE RIGHTS OF THE PUBLIC IN ANY PORTION OF SAID PROPERTY LYING WITHIN THE RIGHTS OF WAY OF THE ROADS SHOWN.

5. PROPERTY SUBJECT TO AN ACCURATE TITLE SEARCH.

6. ELEVATION DATUM IS NGVD'29

7. TO CONVERT EXISTING ELEVATIONS INSIDE THE AREA OF THE TOPOGRAPHIC SURVEY FROM NGVD'29 DATUM INTO AN APPROXIMATE NAVD'88 DATUM, ADD 0.802' TO THE EXISTING ELEVATIONS.

NJ Certificate of Authorization	
Eng'r. Nos.	GA27687B
Arch. Nos.	AC124
Date	11/28/11
Checked	MW
Drawn	ER

MATTHEW M. WEBB, PLS
The PROFESSIONAL LAND SURVEYOR License No. NJ24GS04330200

Revisions:

LAN ASSOCIATES
engineering • planning • architecture • surveying
445 GODWIN AVENUE, MIDLAND PARK, N.J. 07432 (201)447-6400

TOPOGRAPHIC AS-BUILT SURVEY
T.M. BLOCK 40 – LOT 76
A.K.A. 311 W. MAIN STREET
BOROUGH OF ROCKAWAY
MORRIS COUNTY, NEW JERSEY

Job No. 2.8387.03.1

File No. 83870301S1

S.01

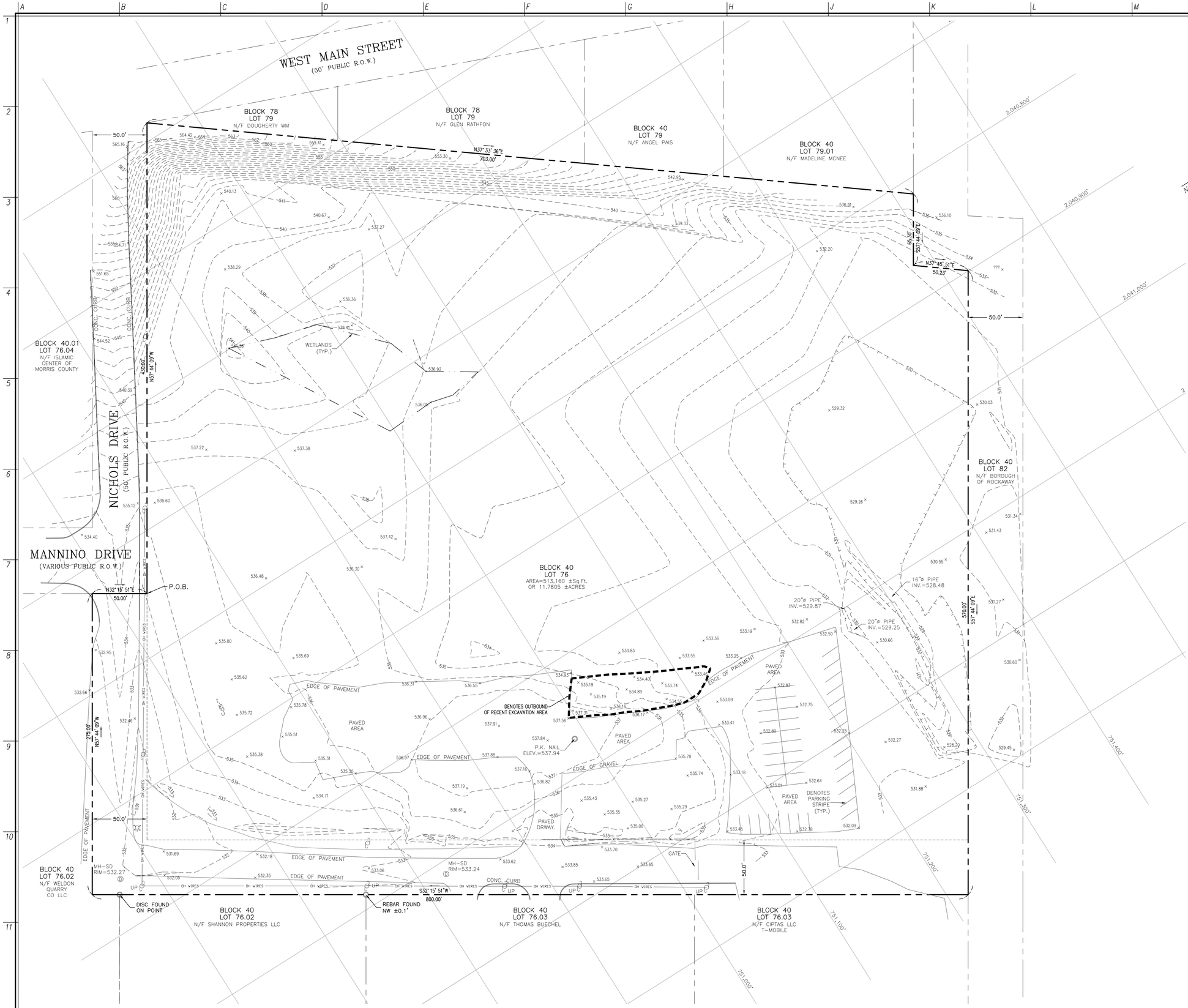

N.J.S.P.C.S.
NAD'27
NGVD'29

GRAPHIC SCALE

40 0 20 40 80 160

(IN FEET)
1 inch = 40 ft.

LEGEND

EXISTING

- WATER LINE
- FIRE HYDRANT
- WATER SHUTOFF
- UTILITY METER (CM, WM)
- VALVE (G, W)
- GAS LINE — G —
- ELECTRIC BOX (EB)
- ELECTRIC LINE — E —
- OVERHEAD WIRES — OH WIRES —
- UTILITY POLE
- GUY WIRE
- LIGHT POLE
- TELEPHONE LINE — T —
- STORM SEWER — ST —
- CATCH BASIN
- MANHOLES (M) (E) (S) (T) (D)
- FOOTING DRAIN — FD — FD —
- ROOF DRAIN — RD — RD —
- SANITARY SEWER — SAN —
- CLEAN OUT
- SIGN
- FLAGPOLE
- MAILBOX
- DUMPSTER
- TREE
- TREE LINE
- BUSH
- GUIDERAIL
- WALLS
- FENCE
- SPOT ELEVATION × 19.80 × 19.80 × 19.80 ×
- CONTOUR LINE
- SOIL BORING LOCATION B-1
- FIRST FLOOR ELEVATION F.F.=

SURVEY REFERENCES

T.M. BLOCK 40 - LOT 76

1) DEED BOOK 21191 PAGE1992 DEED BOOK 20741 PAGE 157

2) MAP ENTITLED "SURVEY OF BLOCK 40 LOT 76.02, BOROUGH OF ROCKAWAY, MORRIS COUNTY, N.J." PERFORMED BY SPILANE ENGINEERING ASSOCIATES L.L.C., MICHAEL J. SPILLANE P.E. & L.S. LIC.# 17560, DATED 07/31/07.

3) TAX MAP SHEETS No. 13, 14 OF THE BOROUGH OF ROCKAWAY, MORRIS COUNTY, NEW JERSEY.

GENERAL NOTES

T.M. BLOCK 40 - LOT 76

1. PROPERTY SUBJECT TO DOCUMENTS OF RECORD.

2. THE SUBJECT PROPERTY IS SUBJECT TO EASEMENTS, RESTRICTIONS, OR EXCEPTIONS, OR CONVEYANCES THAT MAY EXIST.

3. ONLY SURFACE CONDITIONS ARE SHOWN, NO RESPONSIBILITY IS TAKEN FOR BURIED PIPES, WIRES, SEPTIC, WELLS, UST'S, ETC.

4. THE SUBJECT PROPERTY IS SUBJECT TO THE RIGHTS OF THE PUBLIC IN ANY PORTION OF SAID PROPERTY LYING WITHIN THE RIGHTS OF WAY OF THE ROADS SHOWN.

5. PROPERTY SUBJECT TO AN ACCURATE TITLE SEARCH.

6. ELEVATION DATUM IS NGVD'29

7. TO CONVERT EXISTING ELEVATIONS INSIDE THE AREA OF THE TOPOGRAPHIC SURVEY FROM NGVD'29 DATUM INTO AN APPROXIMATE NAVD'88 DATUM, ADD 0.802' TO THE EXISTING ELEVATIONS.

NJ Certificate of Authorization	
Eng'r. Nos.	GA276878
Arch. Nos.	AC124
Date	11/28/11
Checked	MW
Drawn	ER

MATTHEW M. WEBB, PLS
Title PROFESSIONAL LAND SURVEYOR License No. NJ24GS04330200

Revisions:

LAN ASSOCIATES
engineering • planning • architecture • surveying
445 GODWIN AVENUE, MIDLAND PARK, N.J. 07432 (201)447-8400

TOPOGRAPHIC AS-BUILT SURVEY
T.M. BLOCK 40 - LOT 76
A.K.A. 311 W. MAIN STREET
BOROUGH OF ROCKAWAY
MORRIS COUNTY, NEW JERSEY

Job No. 2.8387.03.1
File No. 83870301S1

S.01

US Army Corps
of Engineers
Kansas City District

TRENCH PACKAGE
ROCKAWAY BOROUGH SUPERFUND SITE
EAST MAIN/WALL STREET PLUME - OU2
ROCKAWAY BOROUGH, NEW JERSEY

FINAL AS-BUILT
JUNE 2013

Pre□are□ B□:

CAPE Environmental Management, Inc.

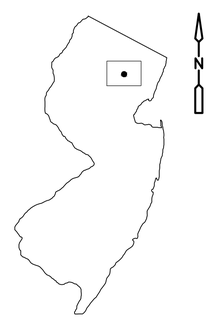

NEW JERSEY

LOCATION MAP
NTS

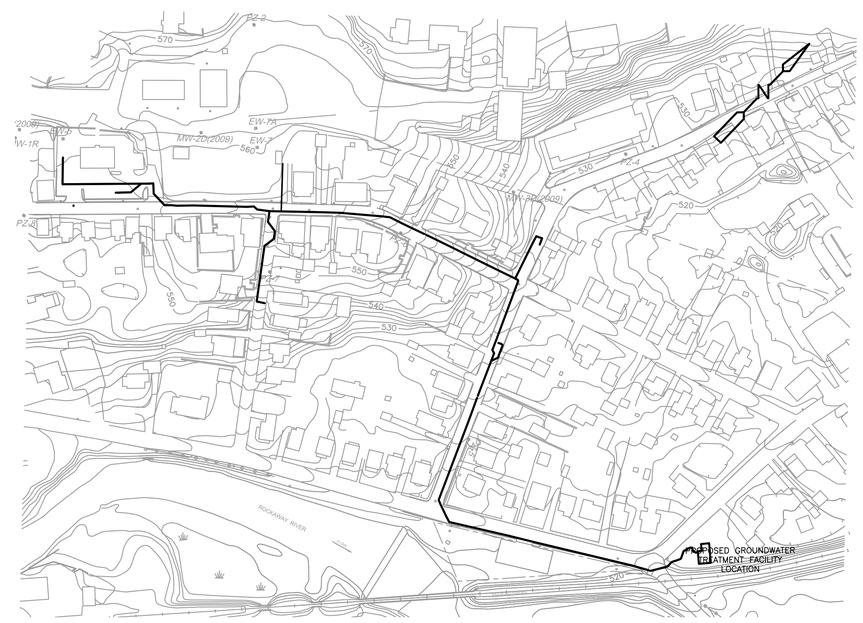

SITE PLAN
NOT TO SCALE

USACE CONTRACT NO.:
W912D□-05-D-0001 - DELIVERY ORDER No. 0005

XREFS: CSTPL002

DRAWING INDEX

DRAWING NO.	DESCRIPTION
	COVER SHEET / DRAWING INDEX
G-1	DRAWING INDEX, ABBREVIATIONS, GENERAL NOTES AND SYMBOLS
G-2	EXISTING SITE CONDITIONS
G-3	SITE PLAN
AB.01	FINAL TRENCH LAYOUT AS-BUILT
AB.02	FINAL TRENCH LAYOUT AS-BUILT
AB.03	FINAL TRENCH LAYOUT AS-BUILT
AB.04	FINAL TRENCH LAYOUT AS-BUILT
AB.05	FINAL TRENCH LAYOUT AS-BUILT
AB.06	FINAL TRENCH LAYOUT AS-BUILT
AB.07	FINAL TRENCH LAYOUT AS-BUILT
AB.08	FINAL TRENCH LAYOUT AS-BUILT
AB.09	FINAL TRENCH LAYOUT AS-BUILT
C-1	FORCE MAIN PLAN AND PROFILE STATION 0+00 TO 5+22
C-2	FORCE MAIN PLAN AND PROFILE STATION 5+22 TO 9+35
C-3	FORCE MAIN PLAN AND PROFILE STATION 9+35 TO 13+35
C-4	FORCE MAIN PLAN AND PROFILE STATION 13+35 TO 17+35
C-5	FORCE MAIN PLAN AND PROFILE STATION 17+35 TO 19+53
C-6	FORCE MAIN PLAN AND PROFILE EW-6 & EW-9
C-7	EW-5A AND EW-8 EXTRACTION WELL DETAILS
C-8	EW-6 EXTRACTION WELL DETAILS
C-9	EW-9 EXTRACTION WELL DETAILS
C-10	EW-10 EXTRACTION WELL DETAILS
C-11	FORCE MAIN DETAILS I
C-12	FORCE MAIN DETAILS II
E-1	ELECTRICAL LEGEND AND ABBREVIATIONS I
E-2	ELECTRICAL LEGEND AND ABBREVIATIONS II
E-3	ELECTRICAL SITE PLAN
E-4	ELECTRICAL CONDUIT AND FORCE MAIN TRENCH SECTIONS I
E-5	ELECTRICAL CONDUIT AND FORCE MAIN TRENCH SECTIONS II
E-6	ELECTRICAL MOTOR ELEMENTARY DIAGRAM I
E-7	ELECTRICAL PUMP PANEL PLC WIRING DIAGRAM I
E-8	ELECTRICAL PUMP PANEL PLC WIRING DIAGRAM II
E-9	ELECTRICAL PUMP PANEL PLC WIRING DIAGRAM III
ED-1	EXTRACTION WELL DETAILS I EAST MAIN/WALL STREET AREA I
ED-2	EXTRACTION WELL DETAILS I EAST MAIN/WALL STREET AREA II
ED-3	EXTRACTION WELL DETAILS I EAST MAIN/WALL STREET AREA III
ED-4	EXTRACTION WELL DETAILS I EAST MAIN/WALL STREET AREA IV
ED-5	EXTRACTION WELL DETAILS I EAST MAIN/WALL STREET AREA V
ED-6	HEAT TRACE, SECTION & DETAILS EAST MAIN/WALL STREET AREA

ABBREVIATIONS – CIVIL/MECHANICAL

APPROX	APPROXIMATELY
A/V	AIR VACUUM
AVG	AVERAGE
B	BOLLARD
BFV	BUTTERFLY VALVE
BTWN	BETWEEN
BV	BALL VALVE
CL OR ℄	CENTERLINE
CMU	CONCRETE MASONRY UNTIT
CON	CONCENTRIC
CONC	CONCRETE
CPLG	COUPLING
CPVC	CHLORINATED POLYVINYL CHLORIDE
CU	COPPER
CV	CHECK VALVE
DDCV	DUAL DISC CHECK VALVE
DI	DUCTILE IRON
DIA	DIAMETER
DICL	DUCTILE IRON CEMENT LINED
DIP	DUCTILE IRON PIPE
DISCH	DISCHARGE
DMH	DRAIN MANHOLE
DR	DRAIN
DWG	DRAWING
E	EAST/UNDERGROUND ELECTRICAL CONDUIT
EFF	EFFLUENT
EL	ELEVATION
ELEC	ELECTRICAL
ELEV	ELEVATION
ELL	ELBOW
EW	EXTRACTION WELL
FCV	FLOW CONTROL VALVE
FIN	FINISHED
FLG	FLANGE
FM	FORCE MAIN
FT	FEET
G	GAS LINE
GAC	GRANULAR ACTIVATED CARBON
GALV	GALVANIZE/GALVANIZED
GR	GRADE
GV	GAS VALVE
GW	GROUNDWATER/GUY WIRE
GWTF	GROUNDWATER TREATMENT FACILITY
HDPE	HIGH DENSITY POLYETHYLENE
HVAC	HEATING, VENTILATING, AND AIR CONDITIONING
HYD	HYDRANT
ID	IDENTIFICATION DATA
IN	INCH
INV	INVERT
LB	POUND
MAX	MAXIMUM
MIN	MINIMUM
NAD	NORTH AMERICAN DATUM
NGVD	NATIONAL GEODETIC VERTICAL DATUM
NTS	NOT TO SCALE
O.C.	ON CENTER
O.D.	OUTER DIAMETER
OED	OPEN END DRAIN
P & ID	PROCESS & INSTRUMENTATION DRAWING
PLC	PROGRAMMABLE LOGIC CONTROLLER
PSI	POUNDS PER SQUARE INCH
PVC	POLYVINYL CHLORIDE
PW	POTABLE WATER
RCP	REINFORCED CONCRETE PIPE
RED	REDUCER
REINF	REINFORCED
REQ'D	REQUIRED
RPZ	REDUCED PRESSURE ZONE
RV	RELIEF VALVE
S	SLOPE/SANITARY SEWER LINE/SOUTH
S & D	SURVEY AND DEED
SCH	SCHEDULE
SD	STORM DRAIN LINE
SF	SQUARE FEET
SHT	SHEET
SMH	SANITARY MANHOLE
SS	STAINLESS STEEL
STL	STEEL
STRU	STRUCTURAL
T	THICKNESS
THD	THREAD/THREADED
THK	THICK
TOC	TOP OF CASING
TR	TREE
TYP	TYPICAL
UNC	UNIFIED INCH COARSE THREAD SERIES
UP	UTILITY POLE
VPGAC	VAPOR PHASE GRANULAR ACTIVATED CARBON
W	WATER/WEST
W/	WITH
WV	WATER VALVE
WWF	WELDED WIRE FABRIC

VALVE AND APPURTENANCE SYMBOLS

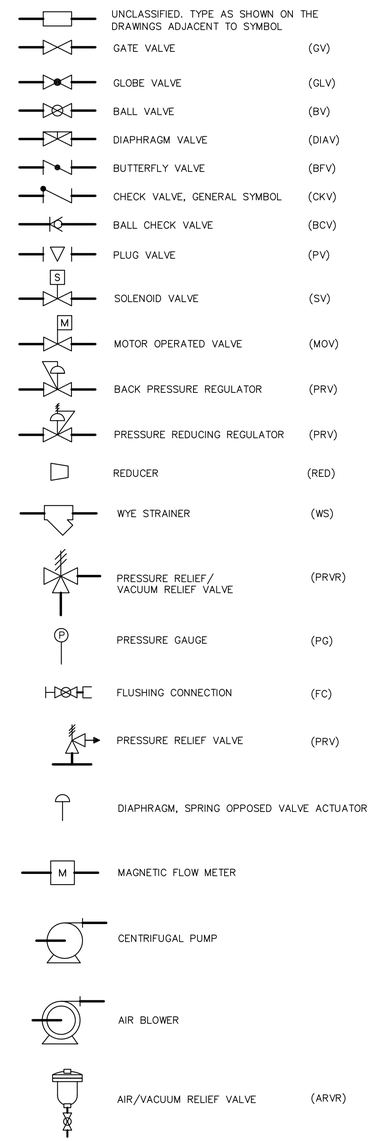

GENERAL NOTES

1. THE CONTRACTOR PROTECTED ALL EXISTING SITE FEATURES DESIGNATED TO REMAIN DURING SITE CONSTRUCTION.

2. THE CONTRACTOR WAS RESPONSIBLE FOR VERIFYING ALL EXISTING CONDITIONS WITHIN OR ADJACENT TO THE WORK AREA THAT MAY BE DISTURBED DURING THE WORK.

3. LOCATIONS OF ALL UTILITIES, STRUCTURES, PROPERTY LINES, AND SUBSURFACE SOIL CONDITIONS ARE BASED ON THE BEST AVAILABLE INFORMATION AND ARE NOT WARRANTED TO BE EXACT, NOR IS IT WARRANTED THAT ALL ARE SHOWN.

4. THE CONTRACTOR VERIFIED LOCATIONS OF ALL PROPERTY LINES, EASEMENTS AND EXISTING UTILITES AND OTHER EXISTING ITEMS.

5. ALL WORK WAS PERFORMED IN ACCORDANCE WITH APPROVED SITE SPECIFIC SOIL EROSION AND SEDIMENT CONTROL PLAN.

6. THE CONTRACTOR COMPLIED WITH ALL FEDERAL, STATE AND LOCAL REQUIREMENTS AND SHALL OBTAIN THE NECESSARY PERMITS.

7. THE CONTRACTOR COORDINATED WITH ALL UTILITES.

8. EXISTING SITE CONDITIONS ARE SHOWN AS GREY WITH ITALICIZED TEXT. PROPOSED WORK IS SHOWN AS BLACK WITH NON-ITALICIZED TEXT.

9. SEE INDIVIDUAL SHEETS FOR ADDITIONAL NOTES AND LEGENDS.

10. THE SITE IS LOCATED WITHIN THE FLOOD HAZARD AREA. THE CONTRACTOR SHALL COMPLY WITH A PORTION OF NEW JERSEY DEPARTMENT OF ENVIRONMENTAL PROTECTION FLOOD HAZARD AREA REGULATIONS. THE FLOOD HAZARD AREA FLOOD ELEVATION FOR THE SITE IS 516.00 FEET NGVD 1929.

PIPE TAG

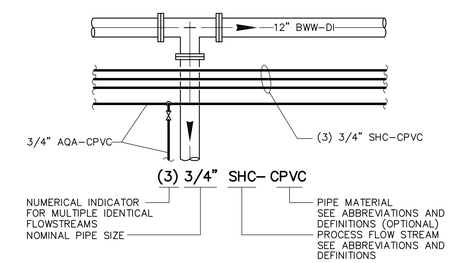

SECTION SYMBOLS

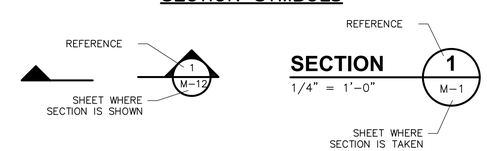

DETAIL SYMBOLS

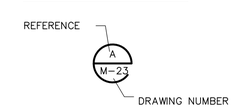

FINAL AS-BUILT

XREFS: RWYBDRTR

REV. NO.	DATE	DRWN	CHKD	REMARKS

DESIGNED BY:
DRAWN BY:
SHEET CHK'D BY:
CROSS CHK'D BY:
APPROVED BY:
DATE: MARCH 2012

PREPARED BY:
CAPE
CAPE Environmental Management, Inc.

US Army Corps of Engineers Kansas City District
TRENCH PACKAGE
ROCKAWAY BOROUGH SUPERFUND SITE
EAST MAIN/WALL STREET PLUME - OU2
ROCKAWAY BOROUGH, NEW JERSEY

DRAWING INDEX, ABBREVIATIONS, GENERAL NOTES, AND SYMBOLS

PROJECT 50001.005
FILE NAME: GINDX001 AS-BUILT
SHEET NO.
G-1

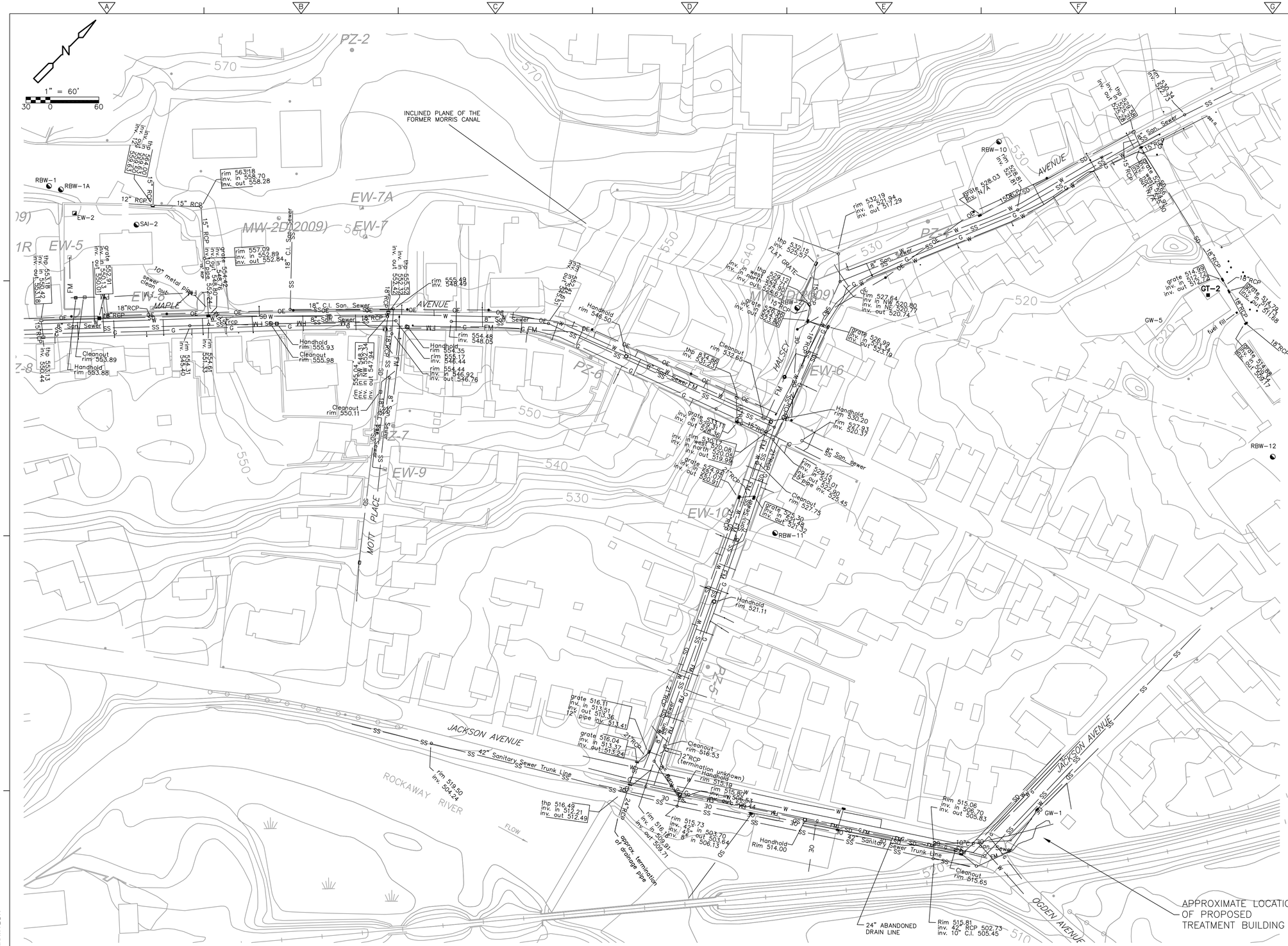

LEGEND

- FENCE LINE
- POWER POLE
- MONITORING WELL LOCATION
- EXTRACTION WELL LOCATION
- EXISTING GROUNDWATER EXTRACTION WELL
- EXISTING PIEZOMETER
- EXISTING MONITORING WELL
- W — WATER LINE
- G — GAS LINE
- SS — SANITARY SEWER LINE
- SD — STORM SEWER
- OE — OVERHEAD ELECTRICAL LINE

FINAL AS-BUILT

REV. NO.	DATE	DRWN	CHKD	REMARKS

DESIGNED BY:
DRAWN BY:
SHEET CHK'D BY:
CROSS CHK'D BY:
APPROVED BY:
DATE: MARCH 2012

PREPARED BY:
CAPE Environmental Management, Inc.

US Army Corps of Engineers Kansas City District
TRENCH PACKAGE
ROCKAWAY BOROUGH SUPERFUND SITE
EAST MAIN/WALL STREET PLUME - OU2
ROCKAWAY BOROUGH, NEW JERSEY

EXISTING SITE CONDITIONS

PROJECT 50001.005
FILE NAME: CSTPL001 AS-BUILT
SHEET NO.
G-2

XREFS: RKAWYBDR
C:\cd

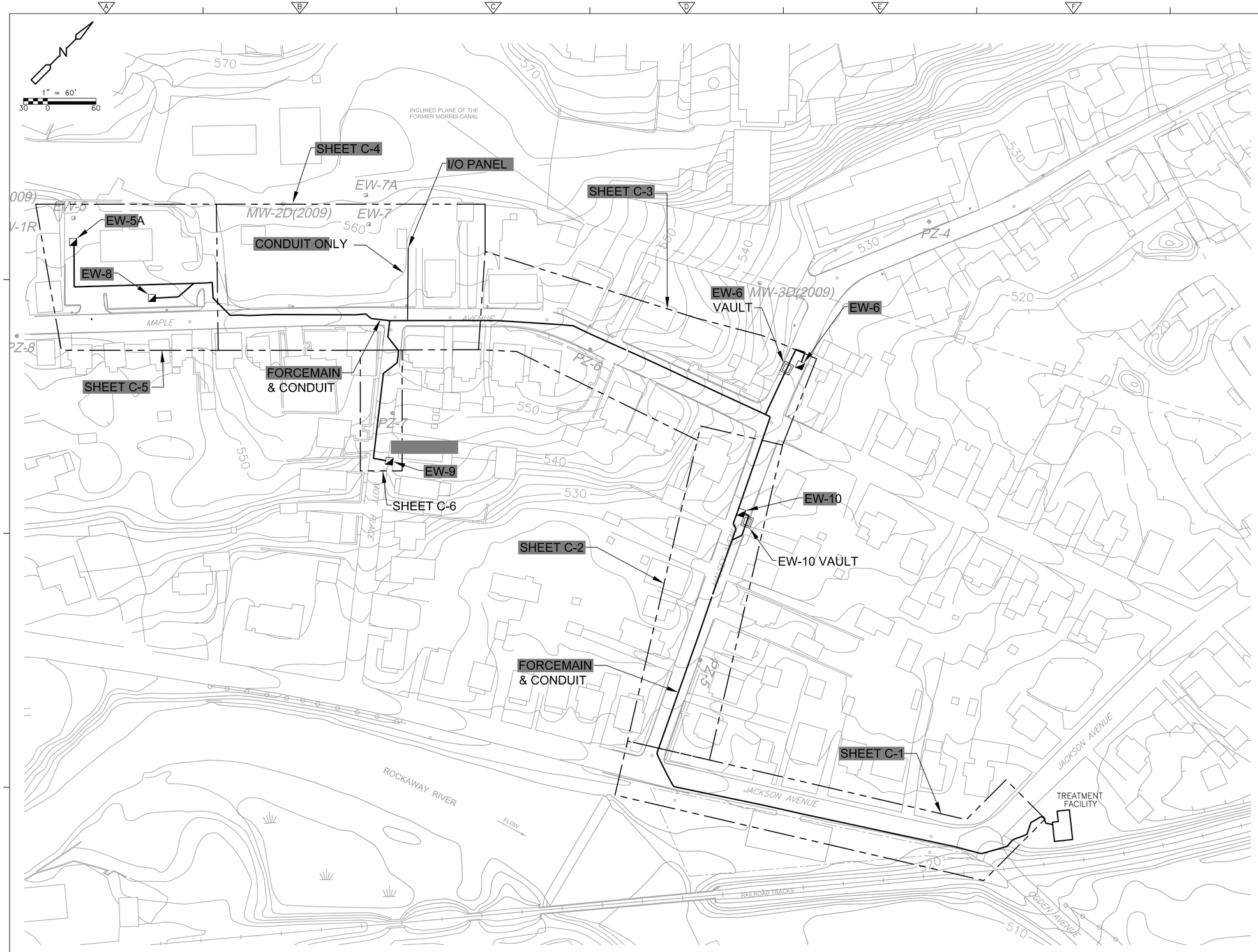

LEGEND

- NEW FORCE MAIN LINE
- NEW GROUNDWATER EXTRACTION WELL
- SHEET LIMITS
- EXISTING GROUNDWATER EXTRACTION WELL
- EXISTING PIEZOMETER
- EXISTING MONITORING WELL

NOTES

1. DRAWINGS ARE BASED ON SURVEY PREPARED BY STEWART SURVEYING & ENGINEERING LLC DATED AUGUST 2004 AND JULY 2005 AND LAN ASSOCIATES AUGUST 2007.
2. HORIZONTAL COORDINATE SYSTEM IS NEW JERSEY STATE PLANE NAD27. VERTICAL COORDINATE SYSTEM IS NGVD 1929.
3. INSTALLED SEDIMENT CONTROL MEASURES IN WORK AREA BEFORE BEGINNING WORK IN ACCORDANCE WITH SECTION 02370 AND THE SITE SOIL EROSION & SEDIMENT CONTROL PLAN. MAINTAIN SEDIMENT CONTROL MEASURES AND DID NOT REMOVE UNTIL GROUND SURFACE IS RESTORED AND STABILIZED.
4. PRIOR TO COMMENCEMENT OF WORK CONTACTED THE NEW JERSEY ONE-CALL SYSTEM TO LOCATE UTILITIES WITHIN THE WORK AREA.
5. RESTORED GRADE TO ORIGINAL ELEVATIONS FOLLOWING INSTALLATION OF THE FORCEMAIN UNLESS OTHERWISE NOTED.
6. VEHICLE AND EQUIPMENT STAGING, SOIL, STOCKPILE AREA AND TEMPORARY STORAGE FOR EXCESS EXCAVATED AND/OR WASTE MATERIALS WAS AT LOCATIONS DESIGNATED BY THE CONTRACTING OFFICER. NO SOIL, EQUIPMENT, OR MATERIALS WAS STORED BENEATH OVERHEAD ELECTRICAL TRANSMISSION LINES.
7. TRAFFIC CONTROL WAS PERFORMED IN ACCORDANCE WITH THE TRAFFIC CONTROL SECTION OF THE WORK PLAN.

FINAL AS-BUILT

XREFS: RKAWYBDR

REV. NO.	DATE	DRWN	CHKD	REMARKS

DESIGNED BY:
DRAWN BY:
SHEET CHK'D BY:
CROSS CHK'D BY:
APPROVED BY:
DATE: MARCH 2012

PREPARED BY:
CAPE
CAPE Environmental Management, Inc.

US Army Corps of Engineers Kansas City District
TRENCH PACKAGE
ROCKAWAY BOROUGH SUPERFUND SITE
EAST MAIN/WALL STREET PLUME - OU2
ROCKAWAY BOROUGH, NEW JERSEY

SITE PLAN

PROJECT 50001.005
FILE NAME: CSTPL002 AS-BUILT
SHEET NO.
G-3

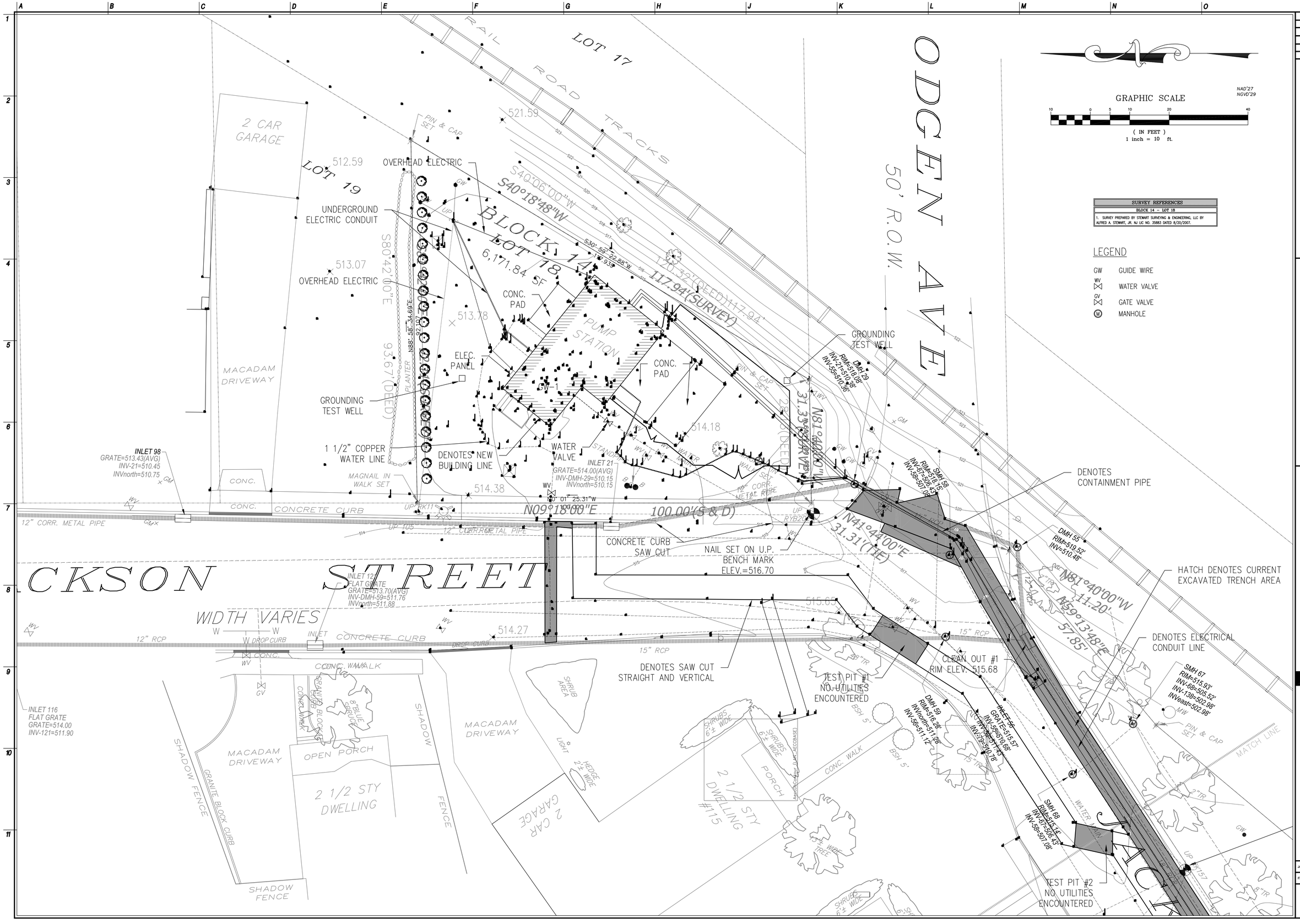

SURVEY REFERENCES
BLOCK 14 – LOT 18
1. SURVEY PREPARED BY STEWART SURVEYING & ENGINEERING, LLC BY ALFRED A. STEWART, JR. NJ LIC NO. 35883 DATED 8/20/2007.

LEGEND

- GW — GUIDE WIRE
- WV — WATER VALVE
- GV — GATE VALVE
- (M) — MANHOLE

NJ Certificate of Authorization	
Eng'r. Nos.	GA276878
Arch. Nos.	AC124
Date	09/02/11
Checked	MMW
Drawn	ER

MATTHEW M. WEBB, PLS
Title PROFESSIONAL LAND SURVEYOR License No. NJ 24GS04330200

Revisions:

LAN ASSOCIATES
engineering • planning • architecture • surveying
445 GODWIN AVENUE, MIDLAND PARK, N.J. 07432 (201)447-6400

FINAL TRENCH LAYOUT AS-BUILT
WELL FIELD SUPERFUND SITE
BOROUGH OF ROCKAWAY
BOROUGH OF ROCKAWAY, NEW JERSEY

Job No. 2.8387.03
File No. 838703AB01.dwg

AB.01

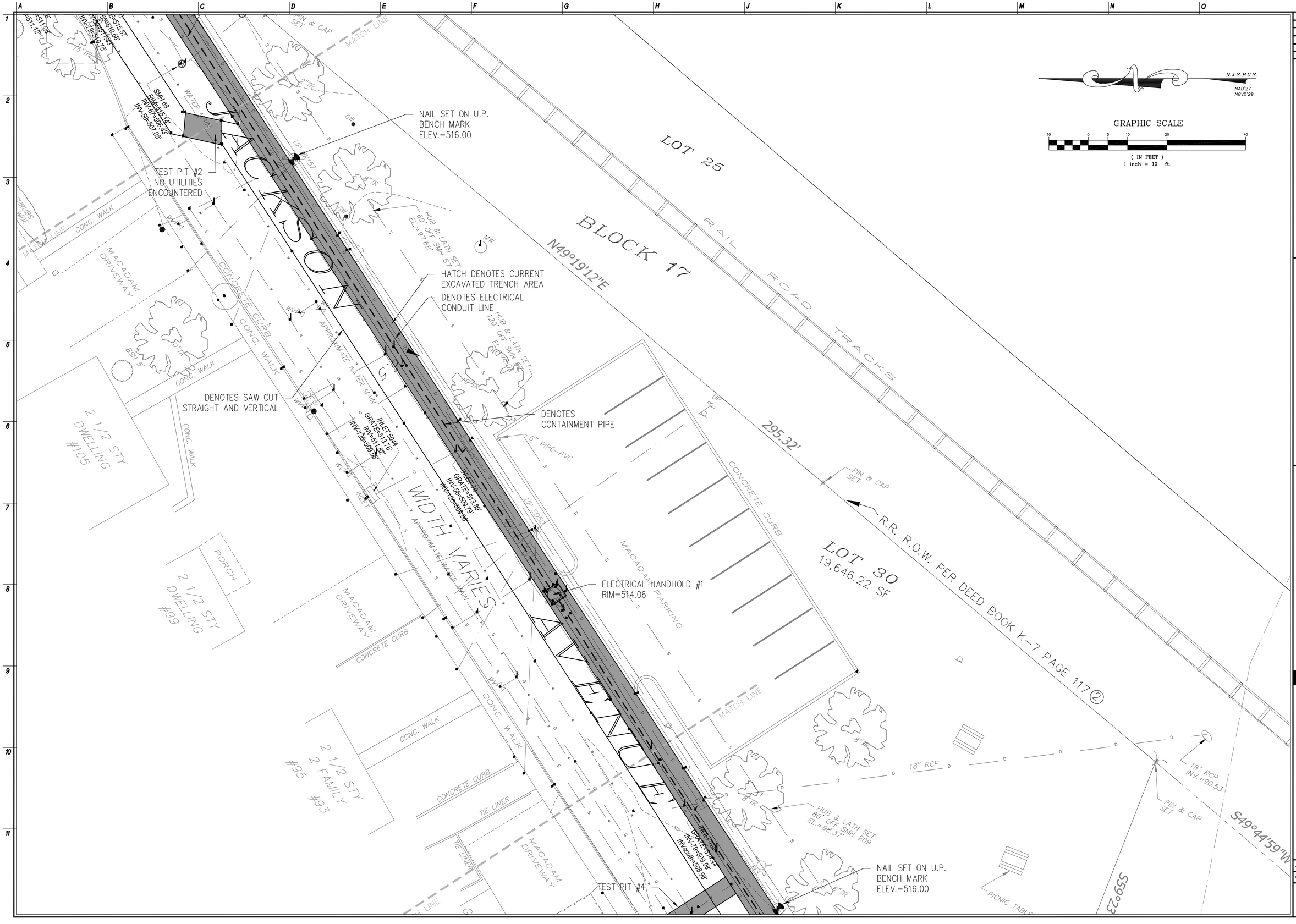

NJ Certificate of Authorization	
Eng'r. Nos.	GA276878
Arch. Nos.	AC124
Date	09/02/11
Checked	MWW
Drawn	ER

MATTHEW M. WEBB, PLS
Title PROFESSIONAL LAND SURVEYOR License No. NJ 24GS04330200

Revisions:

LAN ASSOCIATES
engineering • planning • architecture • surveying
445 GODWIN AVENUE, MIDLAND PARK, N.J. 07432 (201)447-6400

FINAL TRENCH LAYOUT AS-BUILT
WELL FIELD SUPERFUND SITE
BOROUGH OF ROCKAWAY
BOROUGH OF ROCKAWAY, NEW JERSEY

Job No. 2.8387.03
File No. 838703AB01.dwg

AB.02

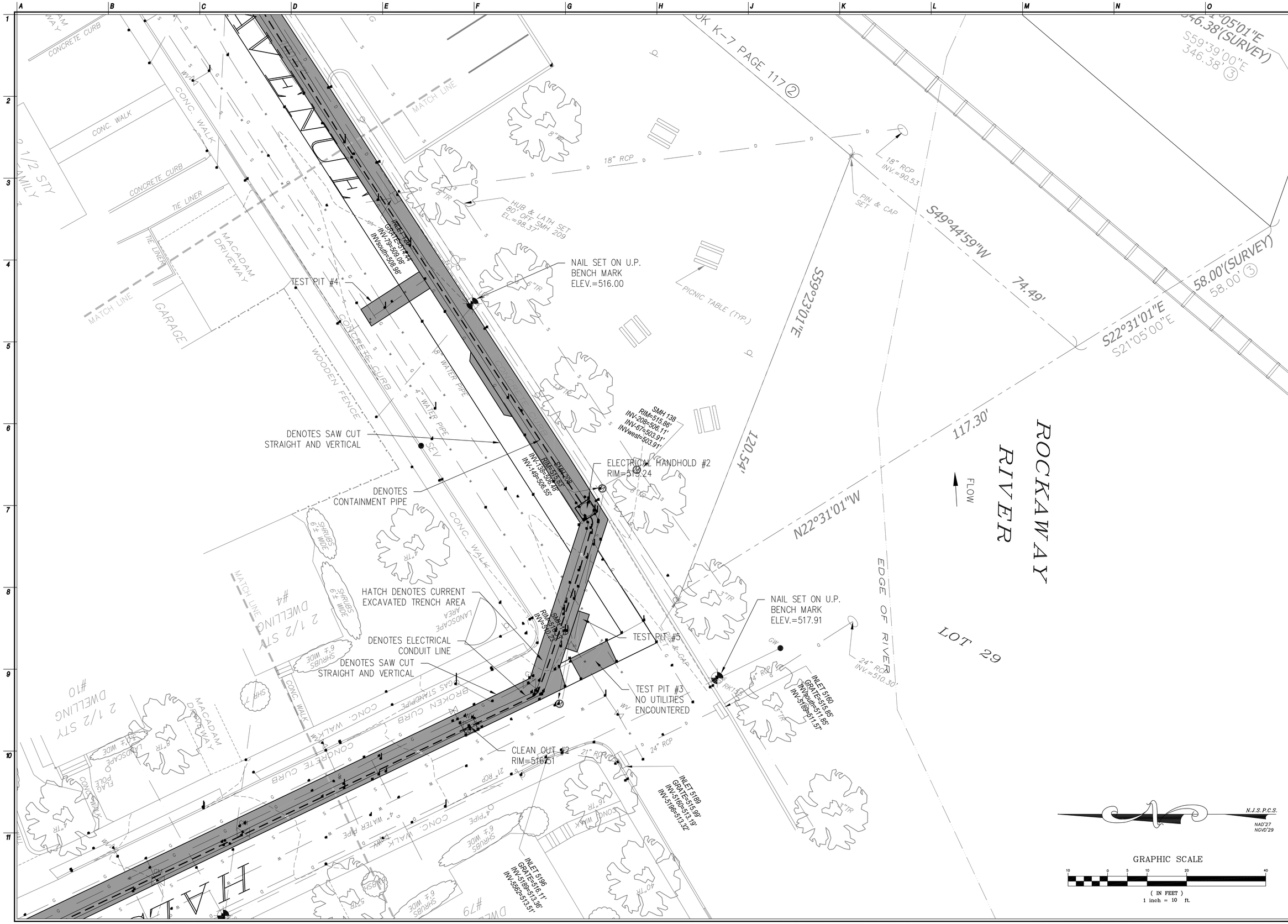

NJ Certificate of Authorization	
Eng'r. Nos.	GA276878
Arch. Nos.	AC124
Date	09/02/11
Checked	MMW
Drawn	ER

MATTHEW M. WEBB, PLS
Title PROFESSIONAL LAND SURVEYOR License No. NJ 24GS04330200

Revisions:

LAN ASSOCIATES
engineering • planning • architecture • surveying
445 GODWIN AVENUE, MIDLAND PARK, N.J. 07432 (201)447-6400

FINAL TRENCH LAYOUT AS-BUILT
WELL FIELD SUPERFUND SITE
BOROUGH OF ROCKAWAY
BOROUGH OF ROCKAWAY, NEW JERSEY

Job No. 2.8387.03
File No. 838703AB01.dwg

AB.03

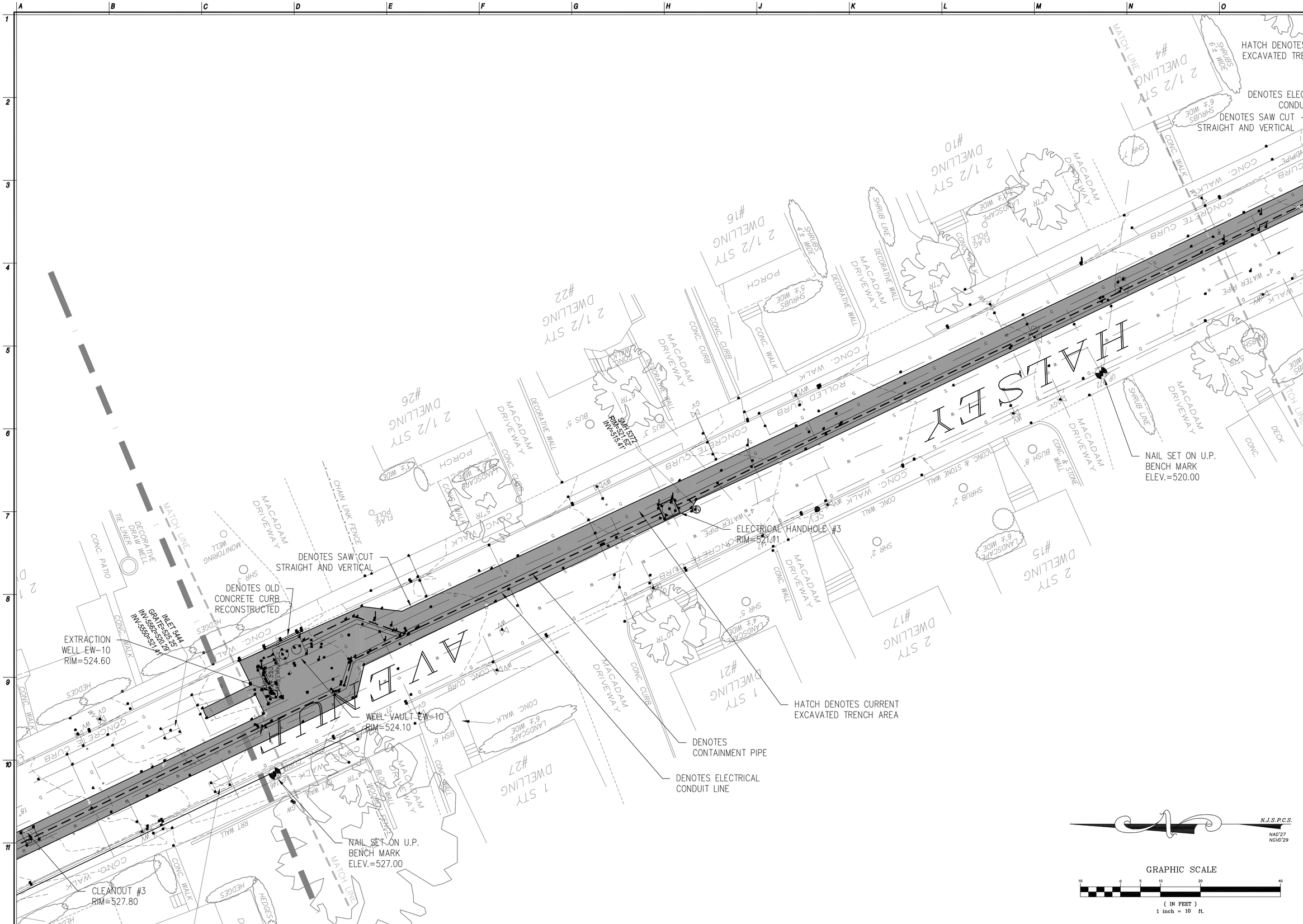

NJ Certificate of Authorization	
Eng'r. Nos.	GA276878
Arch. Nos.	AC124
Date	09/02/11
Checked	MMW
Drawn	ER

MATTHEW M. WEBB, PLS

Title PROFESSIONAL LAND SURVEYOR License No. NJ 24GS04330200

Revisions:

LAN ASSOCIATES

engineering • planning • architecture • surveying INC.

445 GODWIN AVENUE, MIDLAND PARK, N.J. 07432 (201)447-6400

FINAL TRENCH LAYOUT AS-BUILT

WELL FIELD SUPERFUND SITE

BOROUGH OF ROCKAWAY
BOROUGH OF ROCKAWAY, NEW JERSEY

Job No. 2.8387.03

File No. 838703AB01.dwg

AB.04

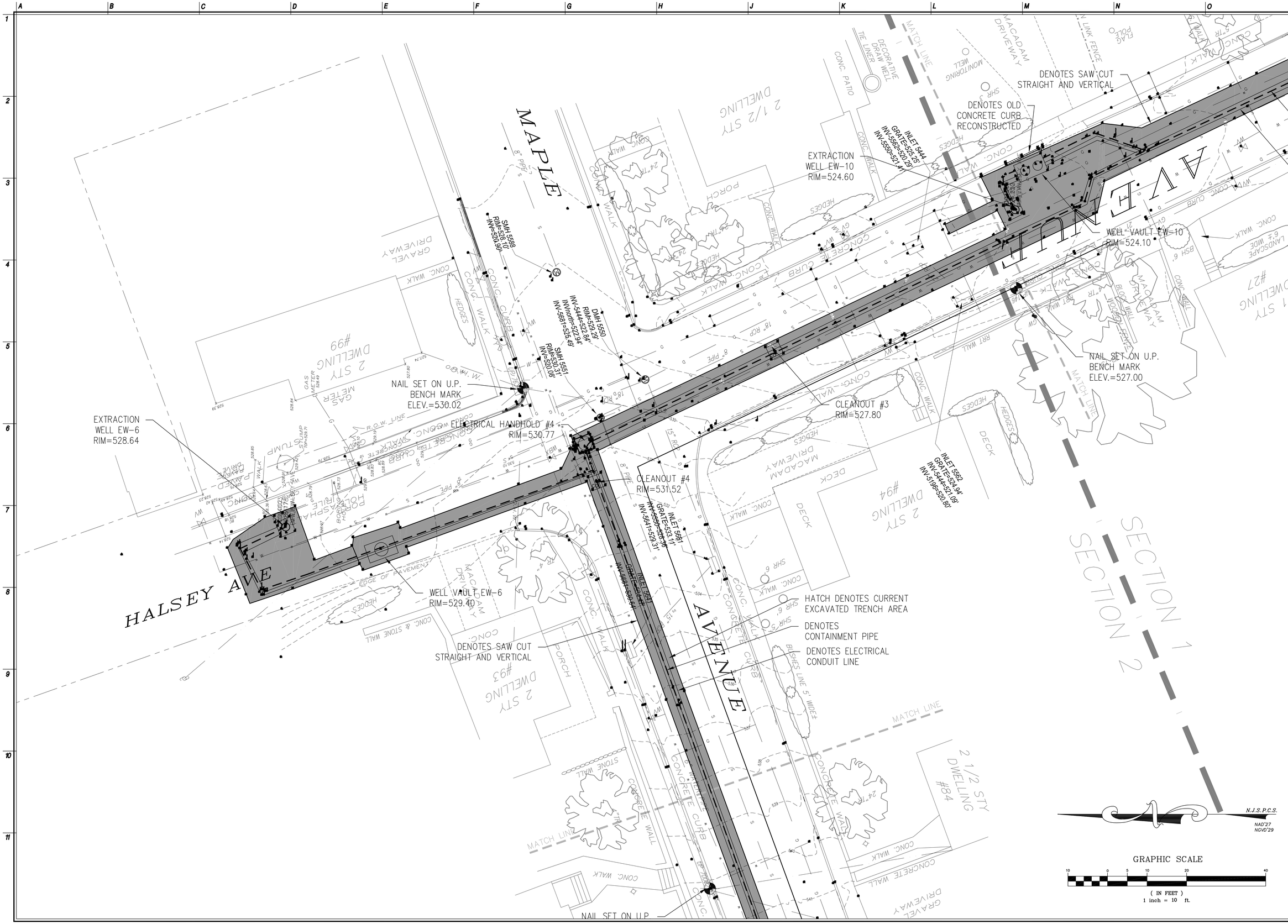

NJ Certificate of Authorization	
Eng'r. Nos.	GA276878
Arch. Nos.	AC124
Date	09/02/11
Checked	MMW
Drawn	ER

MATTHEW M. WEBB, PLS
Title PROFESSIONAL LAND SURVEYOR License No. NJ 24GS04330200

Revisions:

LAN ASSOCIATES
engineering • planning • architecture • surveying
445 GODWIN AVENUE, MIDLAND PARK, N.J. 07432 (201)447-8400

FINAL TRENCH LAYOUT AS-BUILT
WELL FIELD SUPERFUND SITE
BOROUGH OF ROCKAWAY
BOROUGH OF ROCKAWAY, NEW JERSEY

Job No. 2.8387.03
File No. 838703AB01.dwg

AB.05

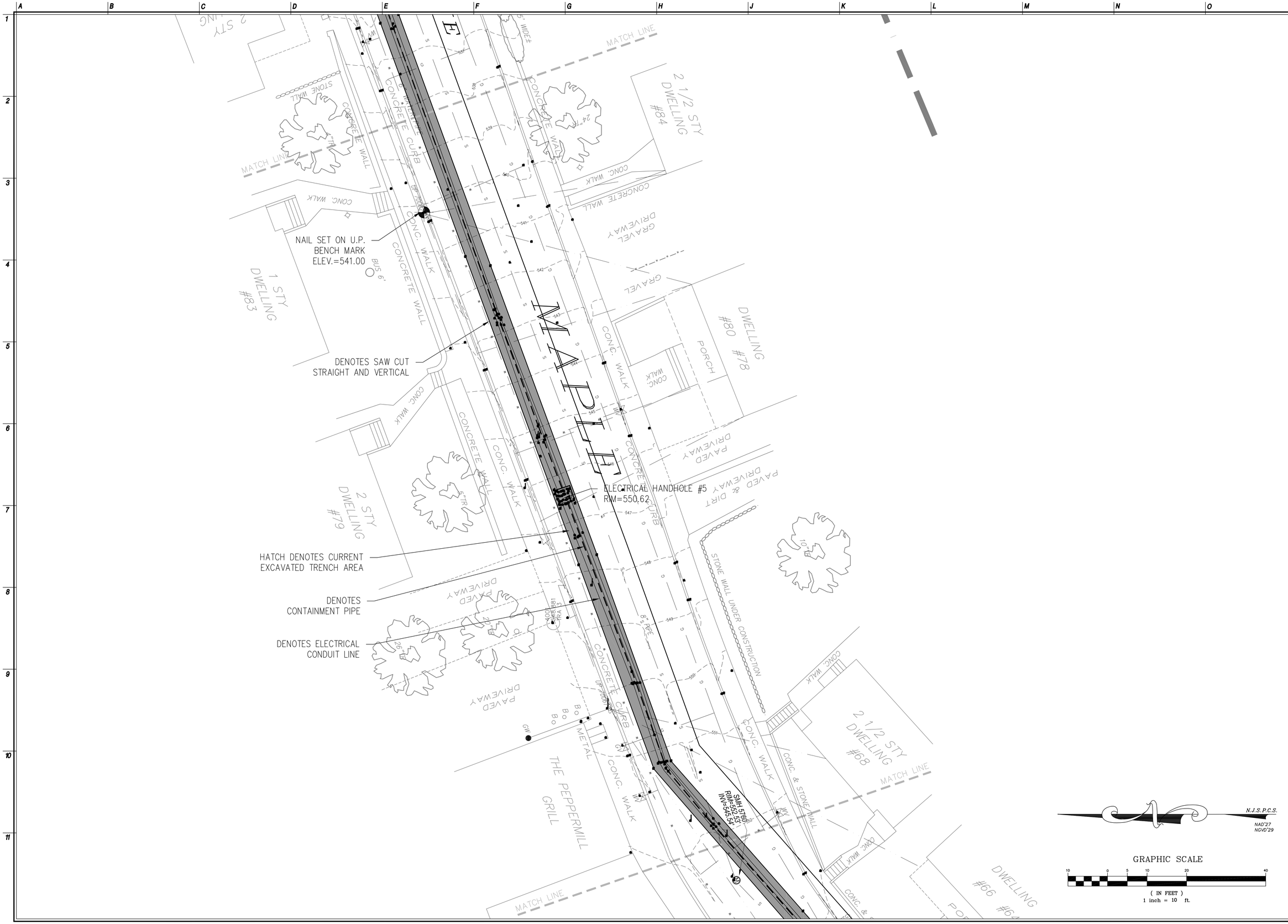

NJ Certificate of Authorization	
Eng'r. Nos.	GA276878
Arch. Nos.	AC124
Date	09/02/11
Checked	MMW
Drawn	ER

MATTHEW M. WEBB, PLS
Title PROFESSIONAL LAND SURVEYOR License No. NJ 24GS043330200

Revisions:

LAN ASSOCIATES
engineering • planning • architecture • surveying INC
445 GODWIN AVENUE, MIDLAND PARK, N.J. 07432 (201)447-6400

FINAL TRENCH LAYOUT AS-BUILT
WELL FIELD SUPERFUND SITE
BOROUGH OF ROCKAWAY
BOROUGH OF ROCKAWAY, NEW JERSEY

Job No. 2.8387.03
File No. 838703AB01.dwg

AB.06

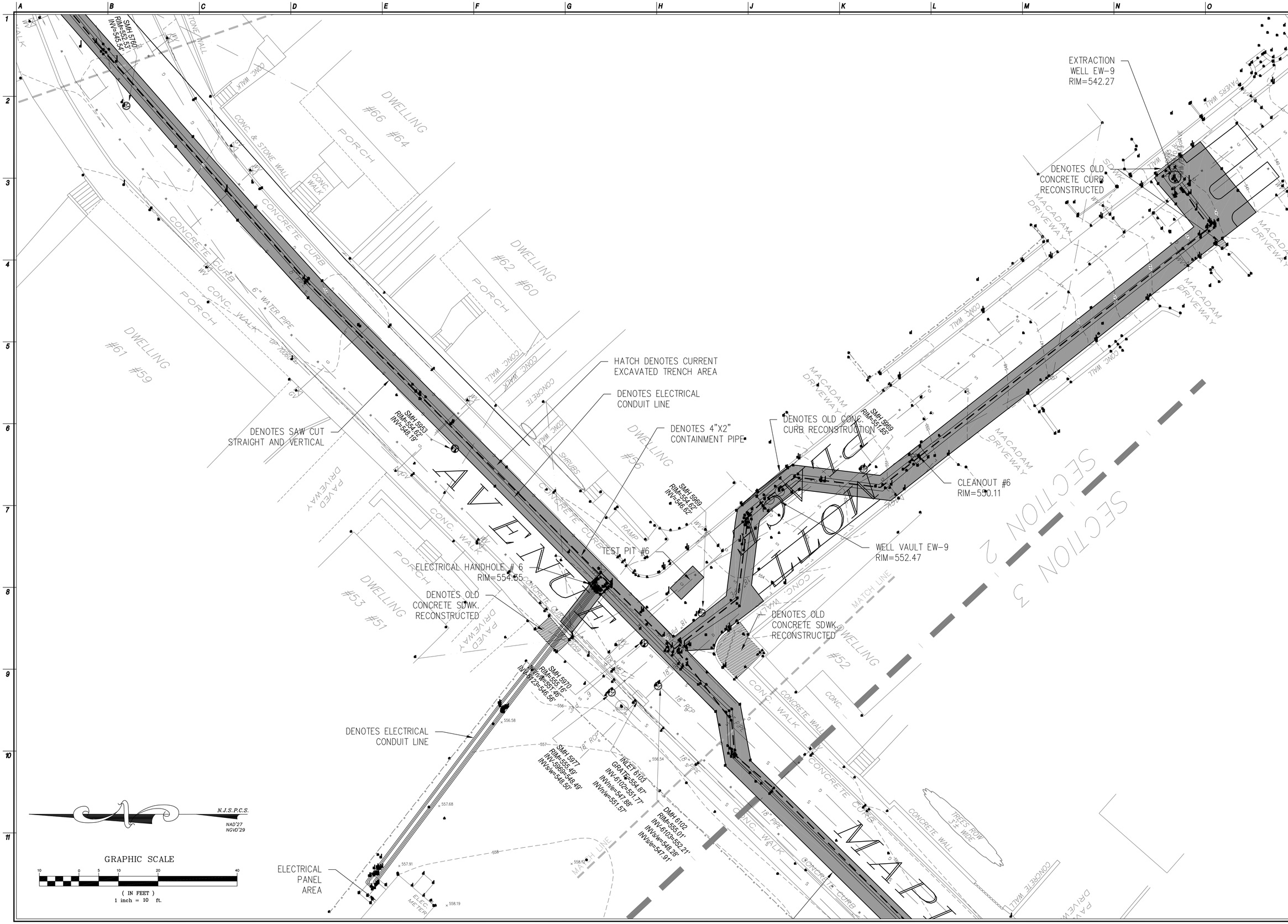

NJ Certificate of Authorization	
Eng'r. Nos.	GA276878
Arch. Nos.	AC124
Date	09/02/11
Checked	MMW
Drawn	ER

MATTHEW M. WEBB, PLS
Title PROFESSIONAL LAND SURVEYOR License No. NJ 24GS043330200

Revisions:

LAN ASSOCIATES
engineering • planning • architecture • surveying INC
445 GODWIN AVENUE, MIDLAND PARK, N.J. 07432 (201)447-6400

FINAL TRENCH LAYOUT AS-BUILT
WELL FIELD SUPERFUND SITE
BOROUGH OF ROCKAWAY
BOROUGH OF ROCKAWAY, NEW JERSEY

Job No. 2.8387.03
File No. 838703AB01.dwg

AB.07

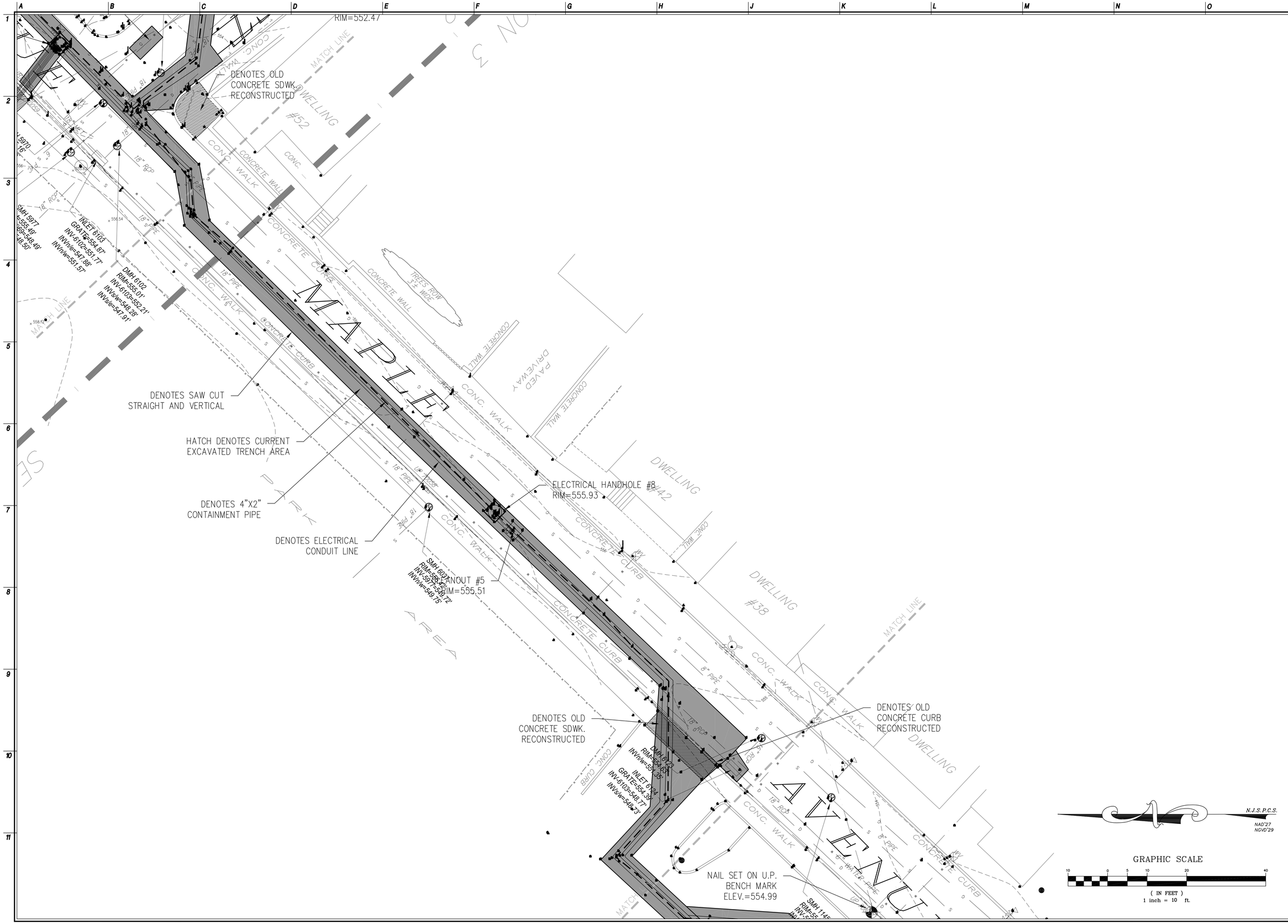

NJ Certificate of Authorization	
Eng'r. Nos.	GA276878
Arch. Nos.	AC124
Date	09/02/11
Checked	MMW
Drawn	ER

MATTHEW M. WEBB, PLS
Title PROFESSIONAL LAND SURVEYOR License No. NJ 24GS043430200

Revisions:

LAN ASSOCIATES
engineering • planning • architecture • surveying
445 GODWIN AVENUE, MIDLAND PARK, N.J. 07432 (201)447-6400

FINAL TRENCH LAYOUT AS-BUILT
WELL FIELD SUPERFUND SITE
BOROUGH OF ROCKAWAY
BOROUGH OF ROCKAWAY, NEW JERSEY

Job No. 2.8387.03
File No. 838703AB01.dwg

AB.08

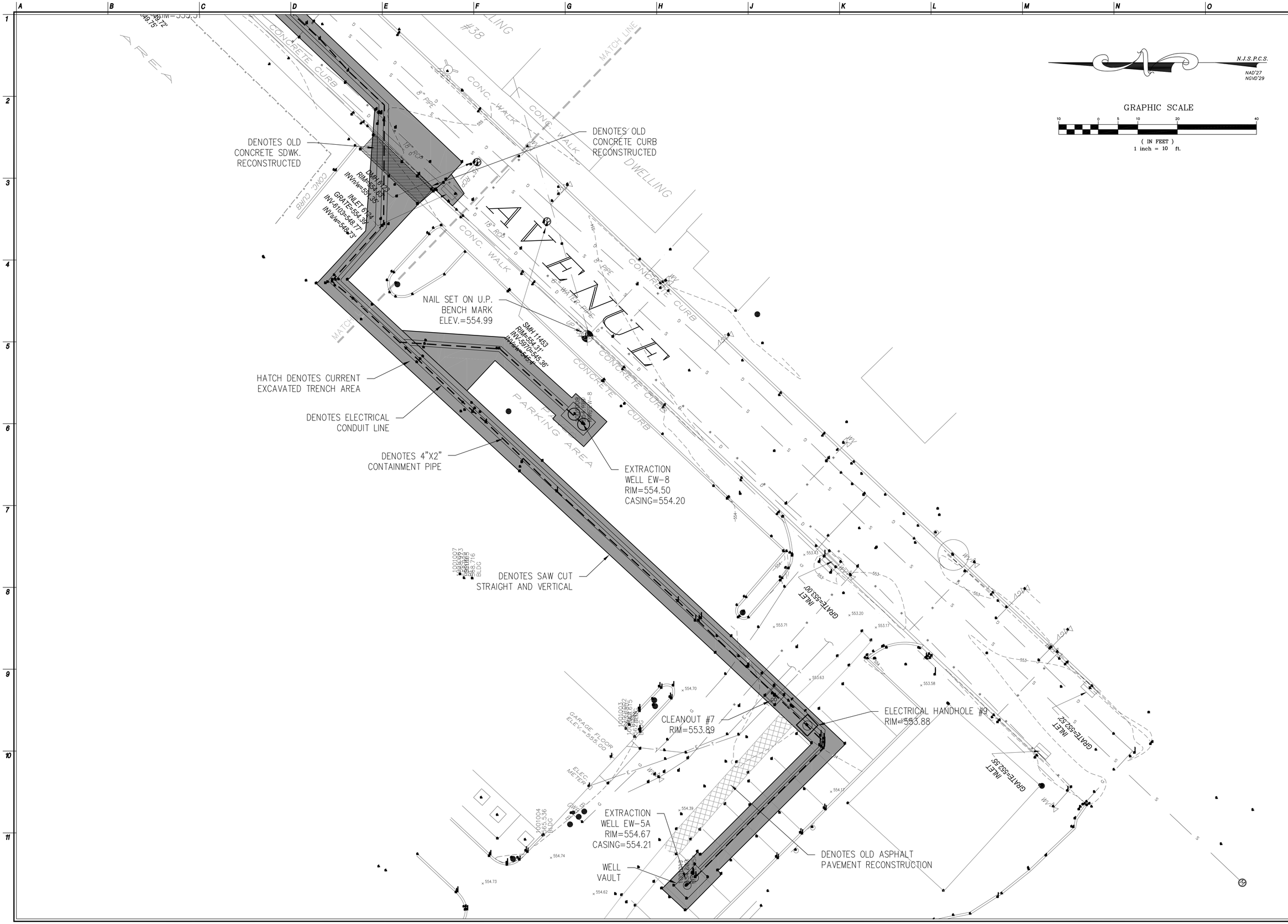

NJ Certificate of Authorization	
Eng'r. Nos.	GA276878
Arch. Nos.	AC124
Date	09/02/11
Checked	MMW
Drawn	ER

MATTHEW M. WEBB, PLS
Title PROFESSIONAL LAND SURVEYOR License No. NJ 24GS04330200

Revisions:

LAN ASSOCIATES
engineering • planning • architecture • surveying
445 GODWIN AVENUE, MIDLAND PARK, N.J. 07432 (201)447-6400

FINAL TRENCH LAYOUT AS-BUILT
WELL FIELD SUPERFUND SITE
BOROUGH OF ROCKAWAY
BOROUGH OF ROCKAWAY, NEW JERSEY

Job No. 2.8387.03
File No. 838703AB01.dwg

AB.09

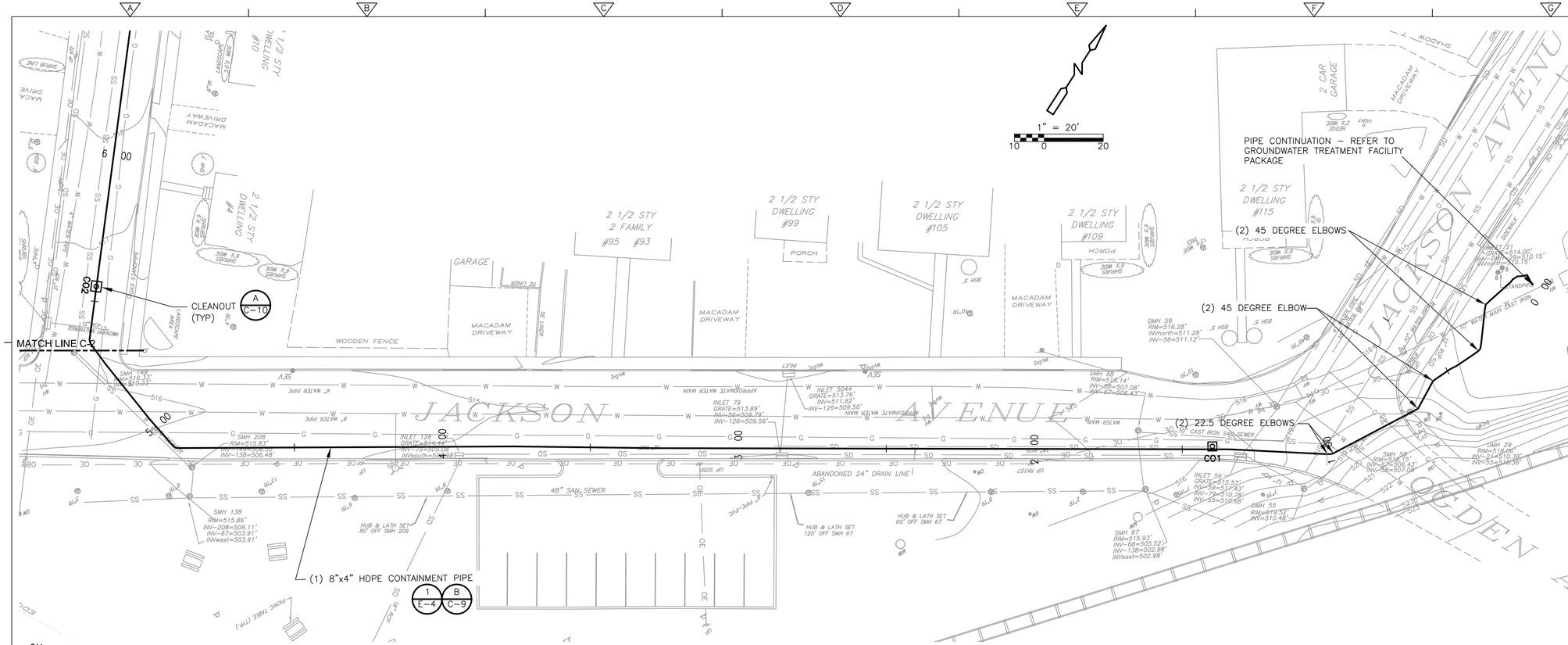

PLAN

SCALE: 1" = 20'

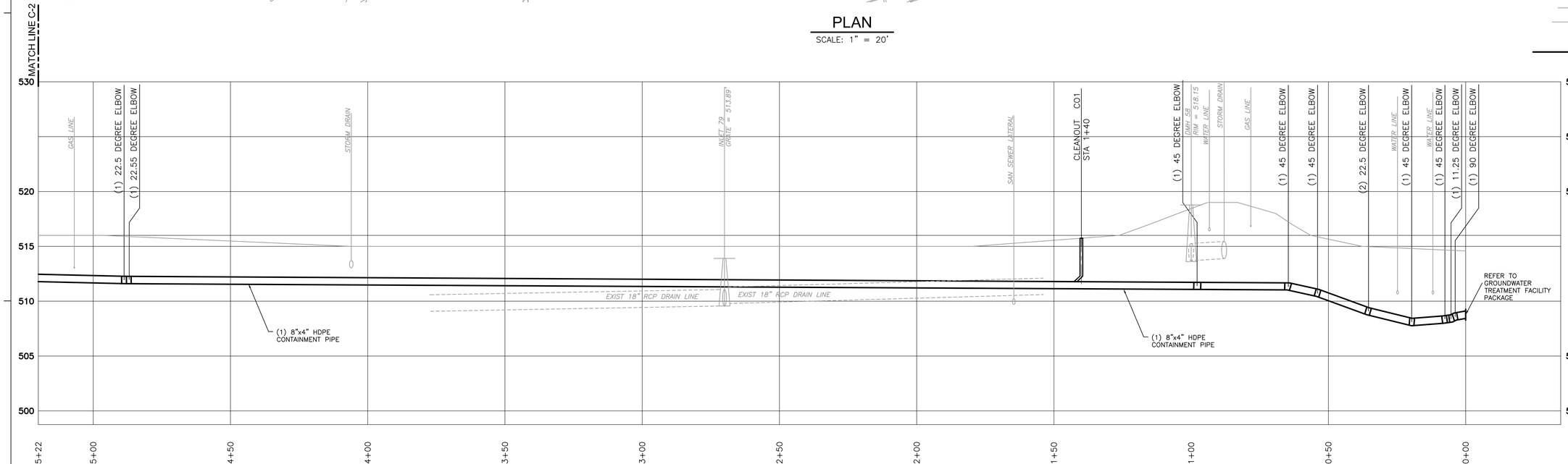

PROFILE

VERTICAL 1" = 5' (2.5 0 5)

HORIZONTAL 1" = 20' (10 0 20)

NOTES

1. EXISTING BURIED GAS AND ELECTRIC UTILITIES ARE ASSUMED TO HAVE 2'± OF COVER, EXISTING WATER LINES ARE ASSUMED TO HAVE 4'± OF COVER. CONTRACTOR TO VERIFY LOCATION, DEPTH AND SIZE OF ALL BURIED UTILITIES PRIOR TO COMMENCING EXCAVATION.
2. HAND DUG WITHIN 1' OF UTILITIES.
3. THE LOCATION, TYPE AND SIZE OF UTILITIES SHOWN ON THE DRAWINGS IS TAKEN FROM INFORMATION GIVEN BY THE VARIOUS UTILITIES AND IS TO BE USED AS A GUIDE ONLY.
4. PROVIDED VERTICAL AND HORIZONTAL BENDS OR DEFLECT PIPE AS SHOWN ON THE DRAWINGS IN ACCORDANCE WITH MANUFACTURER'S RECOMMENDATIONS TO MAINTAIN STATIONING AND ELEVATION OF PIPE. USED MANUFACTURER'S STANDARD BENDS. THE CONTRACTOR MAY ELIMINATE SPECIFIED ELBOWS IF THE PIPE CAN MEET THE SPECIFIED DEFLECTIONS AS LONG AS THE PIPE IS INSTALLED IN ACCORDANCE WITH THE MANUFACTURER'S RECOMMENDATIONS.
5. SUPPORTED BURIED UTILITIES AT ALL UTILITY CROSSINGS.
6. TOP OF THE FORCEMAINS WERE MINIMUM 4 FT. BELOW GROUND SURFACE AS INDICATED ON THE DRAWINGS.
7. THE CONTRACTOR FURNISHED AND INSTALLED PROTECTIVE COVERING/SECURE THE WORK AREA AS NECESSARY FOR TRENCHES THAT REMAIN OPEN OVERNIGHT.
8. PIPING MATERIALS AND INSTALLATION MET THE REQUIREMENTS IN SPECIFICATION SECTION 15200.
9. CONDUIT MATERIALS AND INSTALLATION MET THE REQUIREMENTS IN SPECIFICAITON SECTION 16375.
10. THE CONTRACTOR PROTECTED AND SUPPORTED EXISTING UTILITIES DURING EXCAVATION. IF DAMAGE OCCURS TO AN EXISTING UTILITY LINE, THE UTILITY AUTHORITY WAS NOTIFIED IMMEDIATELY. REPAIR TO DAMAGED WATER LINES WAS PERFORMED BY THE BOROUGH OF ROCKAWAY.
11. FOR ALL UTILITY CROSSINGS OTHER THAN WATER MAINS, THE MINIMUM VERTICAL CLEARANCE BETWEEN THE FORCE MAIN AND EXISTING UTILITY WAS 6 INCHES AND FLOWABLE FILL WAS USED BETWEEN THE FORCE MAIN AND EXISTING UTILITY FOR STRUCTURAL SUPPORT.
12. THE LOCATION OF THE FORCE MAIN MAY BE RE–ROUTED IN THE FIELD TO AVOID CONFLICTS WITH EXISTING UTILITIES. THE NEW LOCATION SHALL MEET THE SPECIFIED CLEARANCE REQUIREMENTS.
13. TRENCH OPERATIONS REQUIRED THE CONTRACTOR TO WORK IN PROXIMITY TO OVERHEAD ELECTRIC, TELEPHONE AND CABLE SERVICE AND MAIN LINES. THE CONTRACTOR COMPLIED WITH THE REQUIREMENTS OF OSHA 1926.550(a)(15).
14. HANDHOLE LOCATIONS ARE SHOWN ON SHEET E–1.

LEGEND

- FENCE LINE
- POWER POLE
- MONITORING WELL
- EXTRACTION WELL
- EXISTING GROUNDWATER EXTRACTION WELL
- EXISTING PIEZOMETER
- EXISTING MONITORING WELL
- SD — STORM DRAIN LINE
- G — GAS LINE
- OE — OVERHEAD ELECTRICAL LINE
- SS — SANITARY SEWER LINE
- W — WATER LINE
- CO1 — CLEANOUT LOCATION
- NEW FORCEMAIN LINE
- M — MANHOLE
- CATCH BASIN
- HYDRANT
- TREE
- WV — WATER VALVE
- GV — GAS VALVE
- GW — GUY WIRE
- SEV — SEWER CLEANOUT
- X/X — DETAIL LETTER / SHEET NUMBER

FINAL AS-BUILT

REV. NO.	DATE	DRWN	CHKD	REMARKS

DESIGNED BY:
DRAWN BY:
SHEET CHK'D BY:
CROSS CHK'D BY:
APPROVED BY:
DATE: MARCH 2012

PREPARED BY:
CAPE Environmental Management, Inc.

US Army Corps of Engineers Kansas City District
TRENCH PACKAGE
ROCKAWAY BOROUGH SUPERFUND SITE
EAST MAIN/WALL STREET PLUME - OU2
ROCKAWAY BOROUGH, NEW JERSEY

FORCE MAIN
PLAN
STATION 0+00 TO 5+33

PROJECT 50001.005
FILE NAME: CSTPL003 AS–BUILT
SHEET NO.
C-1

XREFS: RKANYBDR, XSTPL001

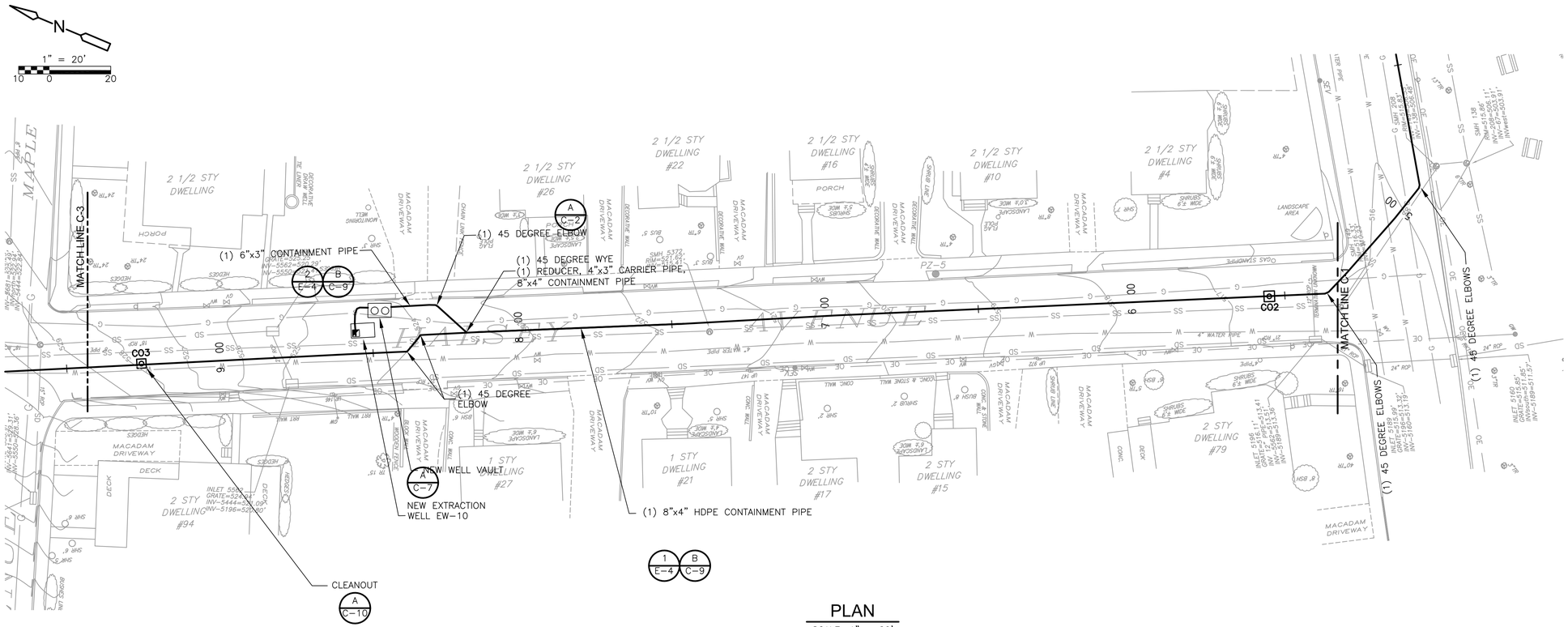

PLAN

SCALE: 1" = 20'

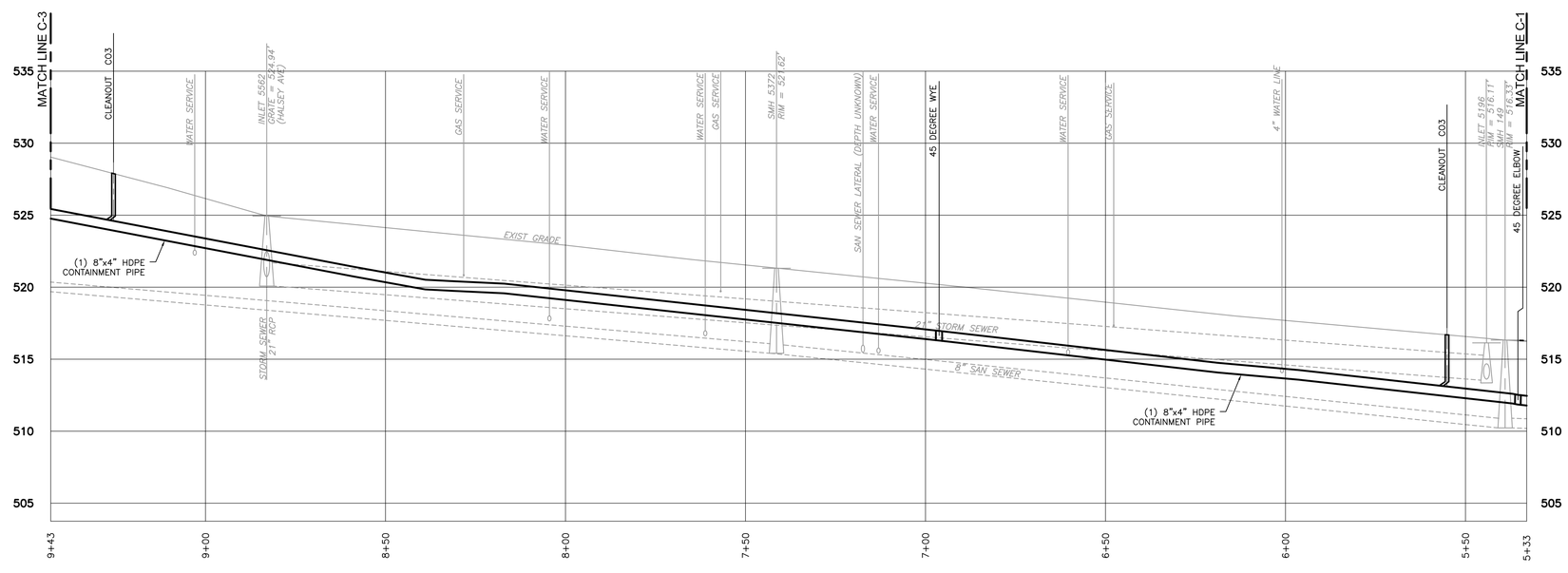

PROFILE

VERTICAL 1" = 5' (2.5 0 5)

HORIZONTAL 1" = 20' (10 0 20)

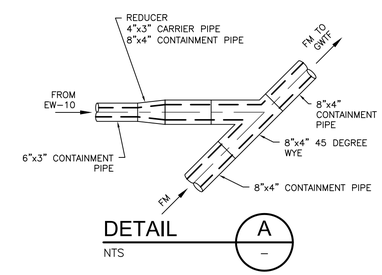

DETAIL A

NTS

NOTES

1. EXISTING BURIED GAS AND ELECTRIC UTILITIES ARE ASSUMED TO HAVE 2'± OF COVER, EXISTING WATER LINES ARE ASSUMED TO HAVE 4'± OF COVER. CONTRACTOR TO VERIFY LOCATION, DEPTH AND SIZE OF ALL BURIED UTILITIES PRIOR TO COMMENCING EXCAVATION.

2. HAND DUG WITHIN 1' OF UTILITIES.

3. THE LOCATION, TYPE AND SIZE OF UTILITIES SHOWN ON THE DRAWINGS IS TAKEN FROM INFORMATION GIVEN BY THE VARIOUS UTILITIES AND IS TO BE USED AS A GUIDE ONLY.

4. PROVIDED VERTICAL AND HORIZONTAL BENDS OR DEFLECT PIPE AS SHOWN ON THE DRAWINGS IN ACCORDANCE WITH MANUFACTURER'S RECOMMENDATIONS TO MAINTAIN STATIONING AND ELEVATION OF PIPE. USED MANUFACTURER'S STANDARD BENDS. THE CONTRACTOR MAY ELIMINATE SPECIFIED ELBOWS IF THE PIPE CAN MEET THE SPECIFIED DEFLECTIONS AS LONG AS THE PIPE IS INSTALLED IN ACCORDANCE WITH THE MANUFACTURER'S RECOMMENDATIONS.

5. SUPPORTED BURIED UTILITIES AT ALL UTILITY CROSSINGS.

6. TOP OF THE FORCEMAINS WERE MINIMUM 4 FT. BELOW GROUND SURFACE AS INDICATED ON THE DRAWINGS.

7. THE CONTRACTOR FURNISHED AND INSTALEDL PROTECTIVE COVERING/SECURE THE WORK AREA AS NECESSARY FOR TRENCHES THAT REMAIN OPEN OVERNIGHT.

8. PIPING MATERIALS AND INSTALLATION MET THE REQUIREMENTS IN SPECIFICATION SECTION 15200.

9. CONDUIT MATERIALS AND INSTALLATION MET THE REQUIREMENTS IN SPECIFICAITON SECTION 16375.

10. THE CONTRACTOR PROTECTED AND SUPPORTO EXISTING UTILITIES DURING EXCAVATION. IF DAMAGE OCCURED TO AN EXISTING UTILITY LINE, THE UTILITY AUTHORITY WAS NOTIFIED IMMEDIATELY. REPAIR TO DAMAGED WATER LINES WAS PERFORMED BY THE BOROUGH OF ROCKAWAY.

11. FOR ALL UTILITY CROSSINGS OTHER THAN WATER MAINS, THE MINIMUM VERTICAL CLEARANCE BETWEEN THE FORCE MAIN AND EXISTING UTILITY WAS 6 INCHES AND FLOWABLE FILL WAS USED BETWEEN THE FORCE MAIN AND EXISTING UTILITY FOR STRUCTURAL SUPPORT.

12. THE LOCATION OF THE FORCE MAIN MAY BE RE-ROUTED IN THE FIELD TO AVOID CONFLICTS WITH EXISTING UTILITIES. THE NEW LOCATION SHALL MEET THE SPECIFIED CLEARANCE REQUIREMENTS.

13. TRENCH OPERATIONS WILL REQUIRE THE CONTRACTOR TO WORK IN PROXIMITY TO OVERHEAD ELECTRIC, TELEPHONE AND CABLE SERVICE AND MAIN LINES. THE CONTRACTOR COMPLIED WITH THE REQUIREMENTS OF 1926.550(a)(15).

14. HANDHOLE LOCATIONS ARE SHOWN ON SHEET E-1.

LEGEND

- FENCE LINE
- POWER POLE
- MONITORING WELL
- EXTRACTION WELL
- EXISTING GROUNDWATER EXTRACTION WELL
- EXISTING PIEZOMETER
- EXISTING MONITORING WELL
- SD — STORM DRAIN LINE
- G — GAS LINE
- OE — OVERHEAD ELECTRICAL LINE
- SS — SANITARY SEWER LINE
- W — WATER LINE
- CO1 — CLEANOUT LOCATION
- NEW FORCEMAIN LINE
- MANHOLE
- CATCH BASIN
- HYDRANT
- TREE
- WV — WATER VALVE
- GV — GAS VALVE
- GW — GUY WIRE
- SEV — SEWER CLEANOUT
- X/X — DETAIL LETTER / SHEET NUMBER

FINAL AS-BUILT

REV. NO.	DATE	DRWN	CHKD	REMARKS

DESIGNED BY:
DRAWN BY:
SHEET CHK'D BY:
CROSS CHK'D BY:
APPROVED BY:
DATE: MARCH 2012

PREPARED BY:
CAPE
CAPE Environmental Management, Inc.

US Army Corps of Engineers Kansas City District
TRENCH PACKAGE
ROCKAWAY BOROUGH SUPERFUND SITE
EAST MAIN/WALL STREET PLUME - OU2
ROCKAWAY BOROUGH, NEW JERSEY

FORCE MAIN
PLAN
STATION 5+33 TO 9+43

PROJECT 50001.005
FILE NAME: CSTPL004 AS-BUILT
SHEET NO.
C-2

XREFS: RKAWYBDR, XSTPL001

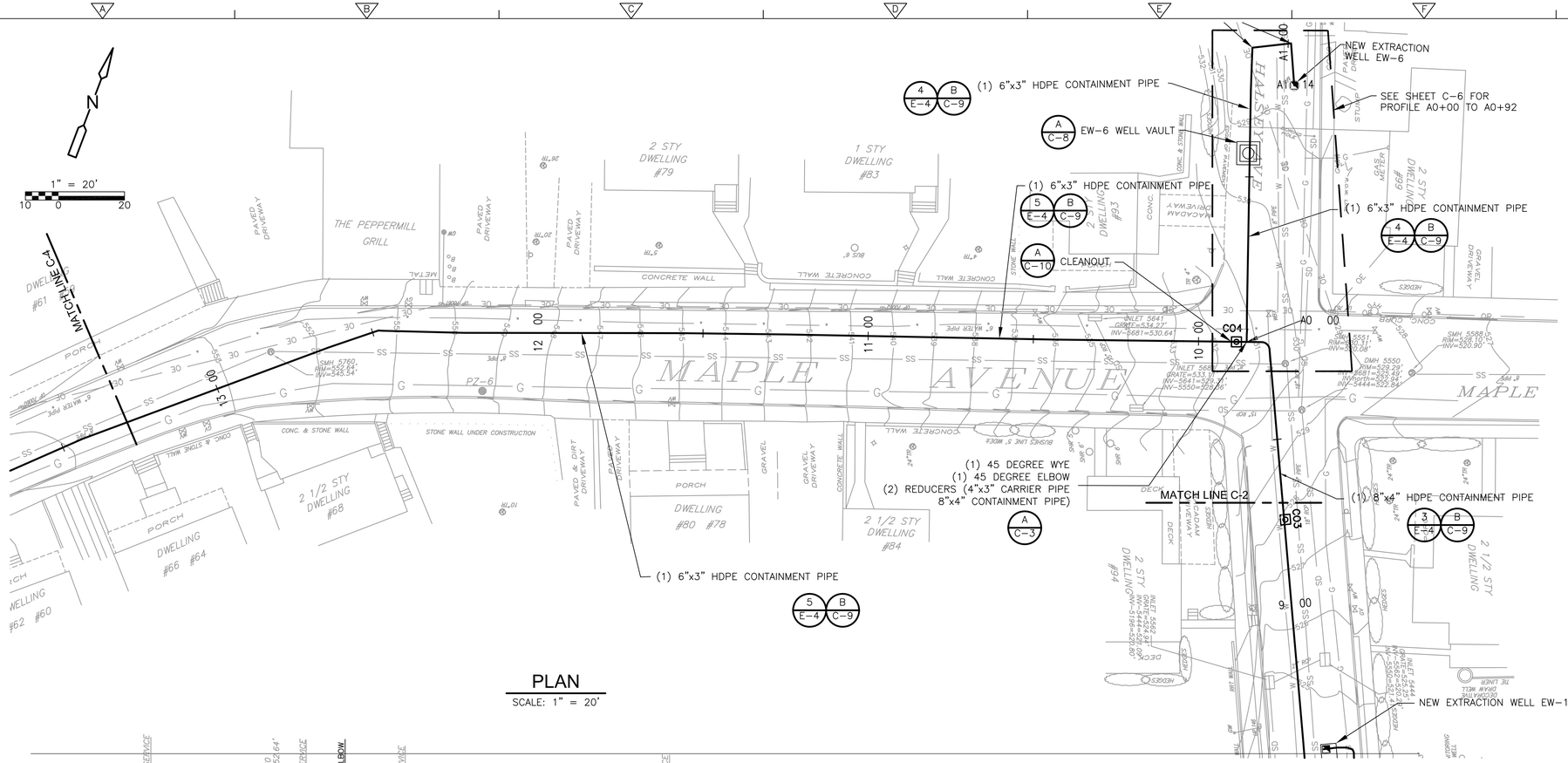

PLAN

SCALE: 1" = 20'

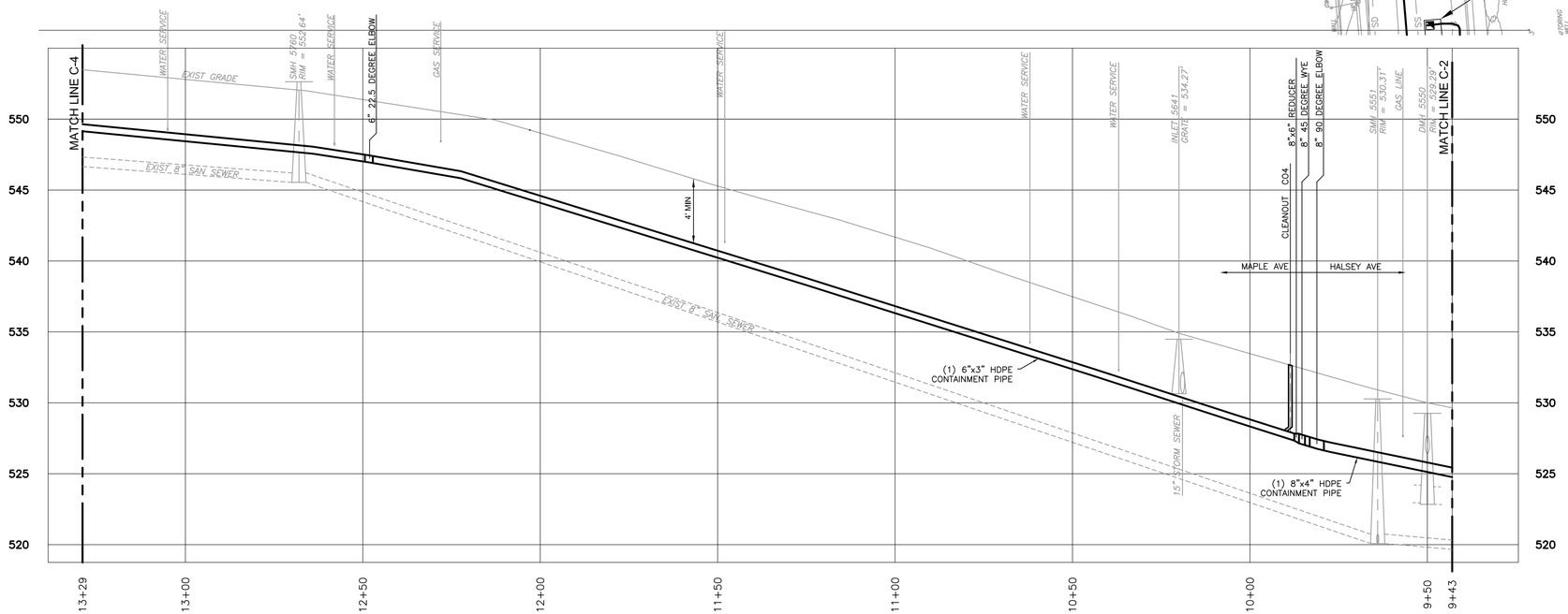

PROFILE

VERTICAL 1" = 5' (2.5 0 5)

HORIZONTAL 1" = 20' (10 0 20)

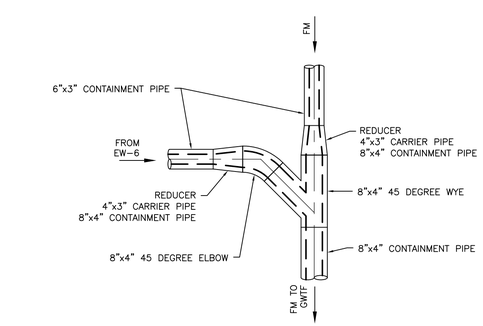

NOTE:
A REDUCING WYE MAY BE USED IN PLACE OF A WYE AND REDUCER

DETAIL A

NTS

NOTES

1. EXISTING BURIED GAS AND ELECTRIC UTILITIES ARE ASSUMED TO HAVE 2'± OF COVER, EXISTING WATER LINES ARE ASSUMED TO HAVE 4'± OF COVER. CONTRACTOR TO VERIFY LOCATION, DEPTH AND SIZE OF ALL BURIED UTILITIES PRIOR TO COMMENCING EXCAVATION.
2. HAND DUG WITHIN 1' OF UTILITIES.
3. THE LOCATION, TYPE AND SIZE OF UTILITIES SHOWN ON THE DRAWINGS IS TAKEN FROM INFORMATION GIVEN BY THE VARIOUS UTILITIES AND IS TO BE USED AS A GUIDE ONLY.
4. PROVIDED VERTICAL AND HORIZONTAL BENDS OR DEFLECT PIPE AS SHOWN ON THE DRAWINGS IN ACCORDANCE WITH MANUFACTURER'S RECOMMENDATIONS TO MAINTAIN STATIONING AND ELEVATION OF PIPE. USED MANUFACTURER'S STANDARD BENDS. THE CONTRACTOR MAY ELIMINATE SPECIFIED ELBOWS IF THE PIPE CAN MEET THE SPECIFIED DEFLECTIONS AS LONG AS THE PIPE IS INSTALLED IN ACCORDANCE WITH THE MANUFACTURER'S RECOMMENDATIONS.
5. SUPPORTED BURIED UTILITIES AT ALL UTILITY CROSSINGS.
6. TOP OF THE FORCEMAINS WERE MINIMUM 4 FT. BELOW GROUND SURFACE AS INDICATED ON THE DRAWINGS.
7. THE CONTRACTOR FURNISHED AND INSTALLED PROTECTIVE COVERING/SECURE THE WORK AREA AS NECESSARY FOR TRENCHES THAT REMAIN OPEN OVERNIGHT.
8. PIPING MATERIALS AND INSTALLATION MET THE REQUIREMENTS IN SPECIFICATION SECTION 15200.
9. CONDUIT MATERIALS AND INSTALLATION MET THE REQUIREMENTS IN SPECIFICAITON SECTION 16375.
10. THE CONTRACTOR PROTECTED AND SUPPORTED EXISTING UTILITIES DURING EXCAVATION. IF DAMAGE OCCURED TO AN EXISTING UTILITY LINE, THE UTILITY AUTHORITY WAS NOTIFIED IMMEDIATELY. REPAIR TO DAMAGED WATER LINES WAS PERFORMED BY THE BOROUGH OF ROCKAWAY.
11. FOR ALL UTILITY CROSSINGS OTHER THAN WATER MAINS, THE MINIMUM VERTICAL CLEARANCE BETWEEN THE FORCE MAIN AND EXISTING UTILITY WAS 6 INCHES AND FLOWABLE FILL WAS USED BETWEEN THE FORCE MAIN AND EXISTING UTILITY FOR STRUCTURAL SUPPORT.
12. THE LOCATION OF THE FORCE MAIN MAY BE RE-ROUTED IN THE FIELD TO AVOID CONFLICTS WITH EXISTING UTILITIES. THE NEW LOCATION SHALL MEET THE SPECIFIED CLEARANCE REQUIREMENTS.
13. TRENCH OPERATIONS REQUIRED THE CONTRACTOR TO WORK IN PROXIMITY TO OVERHEAD ELECTRIC, TELEPHONE AND CABLE SERVICE AND MAIN LINES. THE CONTRACTOR COMPLIED WITH THE REQUIREMENTS OF 1926.550(a)(15).
14. HANDHOLE LOCATIONS ARE SHOWN ON SHEET E-1.

LEGEND

- FENCE LINE
- POWER POLE
- MONITORING WELL
- EXTRACTION WELL
- EXISTING GROUNDWATER EXTRACTION WELL
- EXISTING PIEZOMETER
- EXISTING MONITORING WELL
- SD — STORM DRAIN LINE
- G — GAS LINE
- OE — OVERHEAD ELECTRICAL LINE
- SS — SANITARY SEWER LINE
- W — WATER LINE
- CO1 — CLEANOUT LOCATION
- NEW FORCEMAIN LINE
- M — MANHOLE
- CATCH BASIN
- HYDRANT
- TREE
- WV — WATER VALVE
- GV — GAS VALVE
- GW — GUY WIRE
- SEV — SEWER CLEANOUT
- X/X — DETAIL LETTER / SHEET NUMBER

FINAL AS-BUILT

REV. NO.	DATE	DRWN	CHKD	REMARKS

DESIGNED BY:
DRAWN BY:
SHEET CHK'D BY:
CROSS CHK'D BY:
APPROVED BY:
DATE: MARCH 2012

PREPARED BY:
CAPE
CAPE Environmental Management, Inc.

US Army Corps of Engineers Kansas City District
TRENCH PACKAGE
ROCKAWAY BOROUGH SUPERFUND SITE
EAST MAIN/WALL STREET PLUME - OU2
ROCKAWAY BOROUGH, NEW JERSEY

FORCE MAIN
PLAN
STATION 9+43 TO 13+29

PROJECT 50001.005
FILE NAME: CSTPL005 AS-BUILT
SHEET NO.
C-3

XREFS: RKAWYBDR, XSTPL001

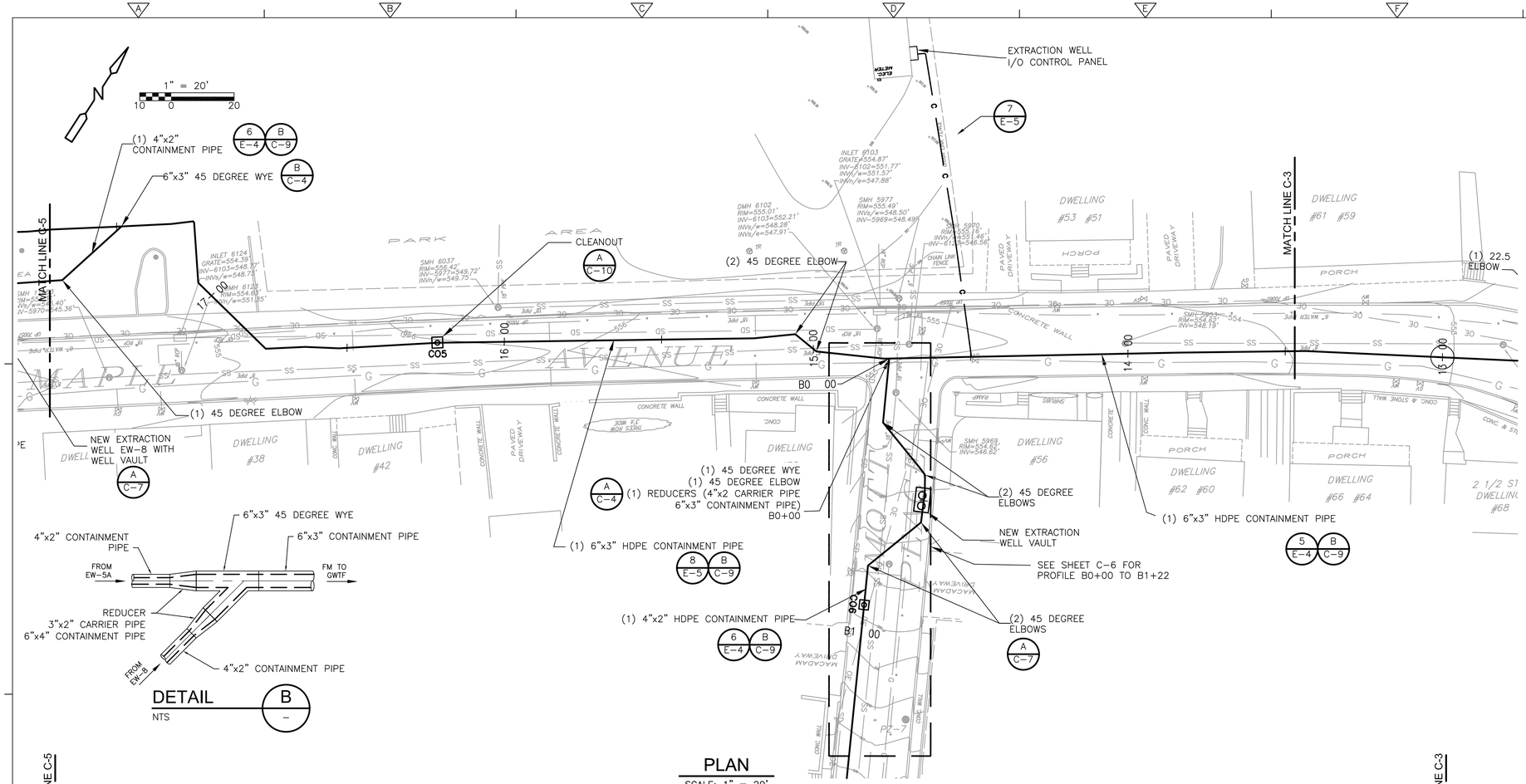

DETAIL B
NTS

PLAN
SCALE: 1" = 20'

NOTES

1. EXISTING BURIED GAS AND ELECTRIC UTILITIES ARE ASSUMED TO HAVE 2'± OF COVER, EXISTING WATER LINES ARE ASSUMED TO HAVE 4'± OF COVER. CONTRACTOR TO VERIFY LOCATION, DEPTH AND SIZE OF ALL BURIED UTILITIES PRIOR TO COMMENCING EXCAVATION.
2. HAND DUG WITHIN 1' OF UTILITIES.
3. THE LOCATION, TYPE AND SIZE OF UTILITIES SHOWN ON THE DRAWINGS IS TAKEN FROM INFORMATION GIVEN BY THE VARIOUS UTILITIES AND IS TO BE USED AS A GUIDE ONLY.
4. PROVIDED VERTICAL AND HORIZONTAL BENDS OR DEFLECT PIPE AS SHOWN ON THE DRAWINGS IN ACCORDANCE WITH MANUFACTURER'S RECOMMENDATIONS TO MAINTAIN STATIONING AND ELEVATION OF PIPE. USED MANUFACTURER'S STANDARD BENDS. THE CONTRACTOR MAY ELIMINATE SPECIFIED ELBOWS IF THE PIPE CAN MEET THE SPECIFIED DEFLECTIONS AS LONG AS THE PIPE IS INSTALLED IN ACCORDANCE WITH THE MANUFACTURER'S RECOMMENDATIONS.
5. SUPPORTED BURIED UTILITIES AT ALL UTILITY CROSSINGS.
6. TOP OF THE FORCEMAINS WERE MINIMUM 4 FT. BELOW GROUND SURFACE AS INDICATED ON THE DRAWINGS.
7. THE CONTRACTOR FURNISHED AND INSTALLED PROTECTIVE COVERING/SECURE THE WORK AREA AS NECESSARY FOR TRENCHES THAT REMAIN OPEN OVERNIGHT.
8. PIPING MATERIALS AND INSTALLATION MET THE REQUIREMENTS IN SPECIFICATION SECTION 15200.
9. CONDUIT MATERIALS AND INSTALLATION MET THE REQUIREMENTS IN SPECIFICAITON SECTION 16375.
10. THE CONTRACTOR PROTECTED AND SUPPORTED EXISTING UTILITIES DURING EXCAVATION. IF DAMAGE OCCURED TO AN EXISTING UTILITY LINE, THE UTILITY AUTHORITY WAS NOTIFIED IMMEDIATELY. REPAIR TO DAMAGED WATER LINES WAS PERFORMED BY THE BOROUGH OF ROCKAWAY.
11. FOR ALL UTILITY CROSSINGS OTHER THAN WATER MAINS, THE MINIMUM VERTICAL CLEARANCE BETWEEN THE FORCE MAIN AND EXISTING UTILITY WAS 6 INCHES AND FLOWABLE FILL SWAS USED BETWEEN THE FORCE MAIN AND EXISTING UTILITY FOR STRUCTURAL SUPPORT.
12. THE LOCATION OF THE FORCE MAIN MAY BE RE-ROUTED IN THE FIELD TO AVOID CONFLICTS WITH EXISTING UTILITIES. THE NEW LOCATION SHALL MEET THE SPECIFIED CLEARANCE REQUIREMENTS.
13. TRENCH OPERATIONS WILL REQUIRED THE CONTRACTOR TO WORK IN PROXIMITY TO OVERHEAD ELECTRIC, TELEPHONE AND CABLE SERVICE AND MAIN LINES. THE CONTRACTOR COMPLIED WITH THE REQUIREMENTS OF 1926.550(a)(15).
14. HANDHOLE LOCATIONS ARE SHOWN ON SHEET E-1.

LEGEND

- FENCE LINE
- POWER POLE
- MONITORING WELL
- EXTRACTION WELL
- EXISTING GROUNDWATER EXTRACTION WELL
- EXISTING PIEZOMETER
- EXISTING MONITORING WELL
- SD — STORM DRAIN LINE
- G — GAS LINE
- OE — OVERHEAD ELECTRICAL LINE
- SS — SANITARY SEWER LINE
- W — WATER LINE
- CO1 — CLEANOUT LOCATION
- NEW FORCEMAIN LINE
- M — MANHOLE
- CATCH BASIN
- HYDRANT
- TREE
- WV — WATER VALVE
- GV — GAS VALVE
- GW — GUY WIRE
- SEV — SEWER CLEANOUT
- X/X — DETAIL LETTER / SHEET NUMBER

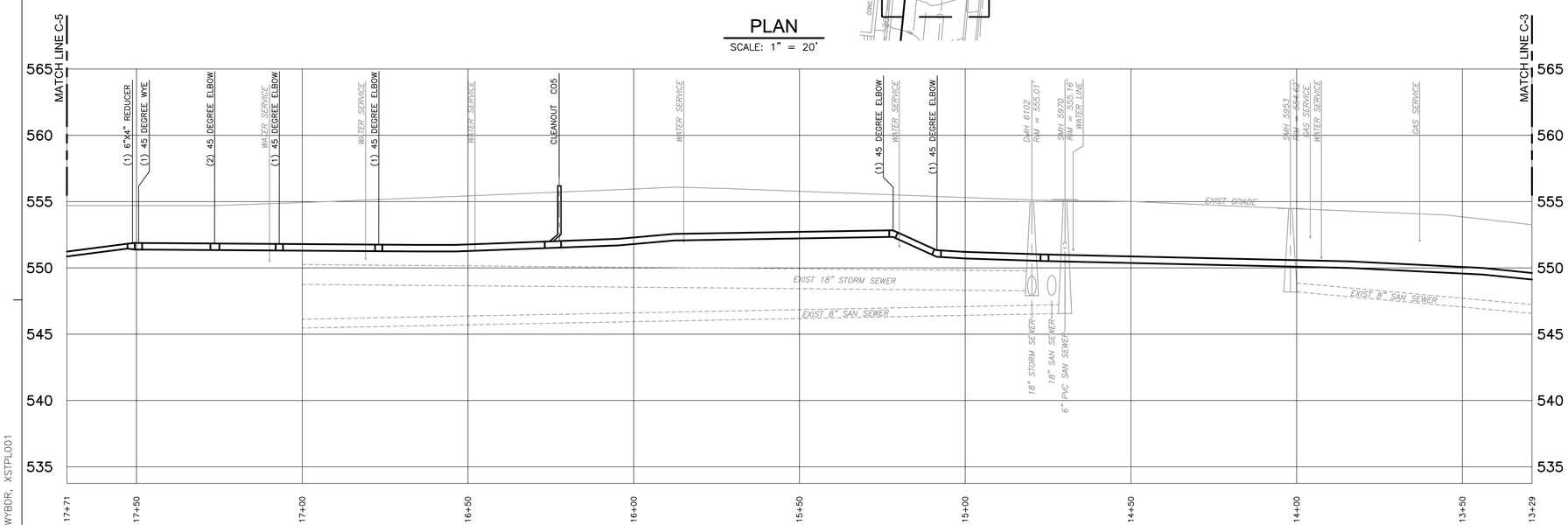

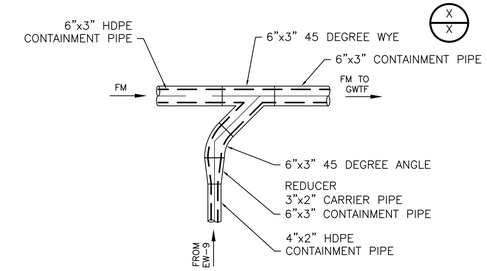

DETAIL A
NTS

PROFILE
VERTICAL 1" = 5' (2.5 0 5)
HORIZONTAL 1" = 20' (10 0 20)

FINAL AS-BUILT

REV. NO.	DATE	DRWN	CHKD	REMARKS

DESIGNED BY:
DRAWN BY:
SHEET CHK'D BY:
CROSS CHK'D BY:
APPROVED BY:
DATE: MARCH 2012

PREPARED BY:
CAPE Environmental Management, Inc.

US Army Corps of Engineers Kansas City District
TRENCH PACKAGE
ROCKAWAY BOROUGH SUPERFUND SITE
EAST MAIN/WALL STREET PLUME - OU2
ROCKAWAY BOROUGH, NEW JERSEY

FORCE MAIN PLAN STATION 13+29 TO 17+71

PROJECT 50001.005
FILE NAME: CSTPL006 AS-BUILT
SHEET NO. C-4

XREFS: RKAWYBDR, XSTPL001

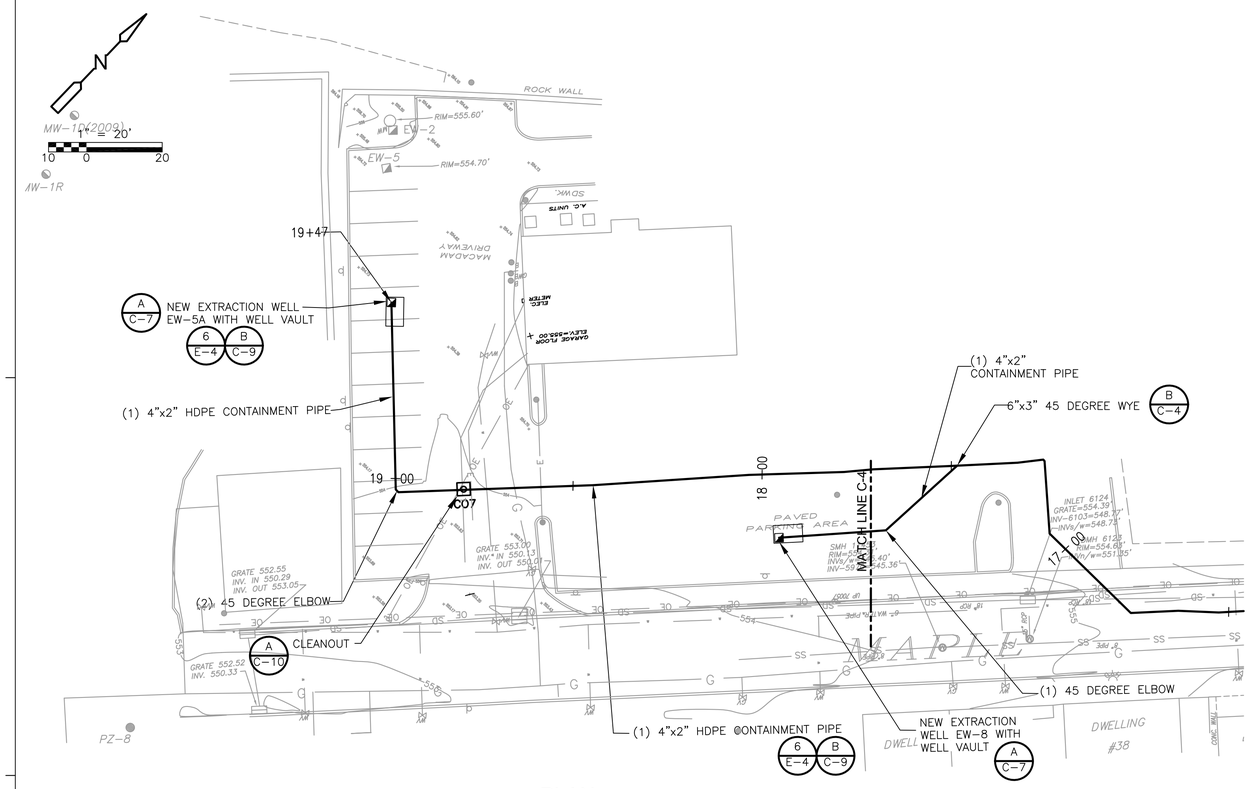

PLAN

SCALE: 1" = 20'

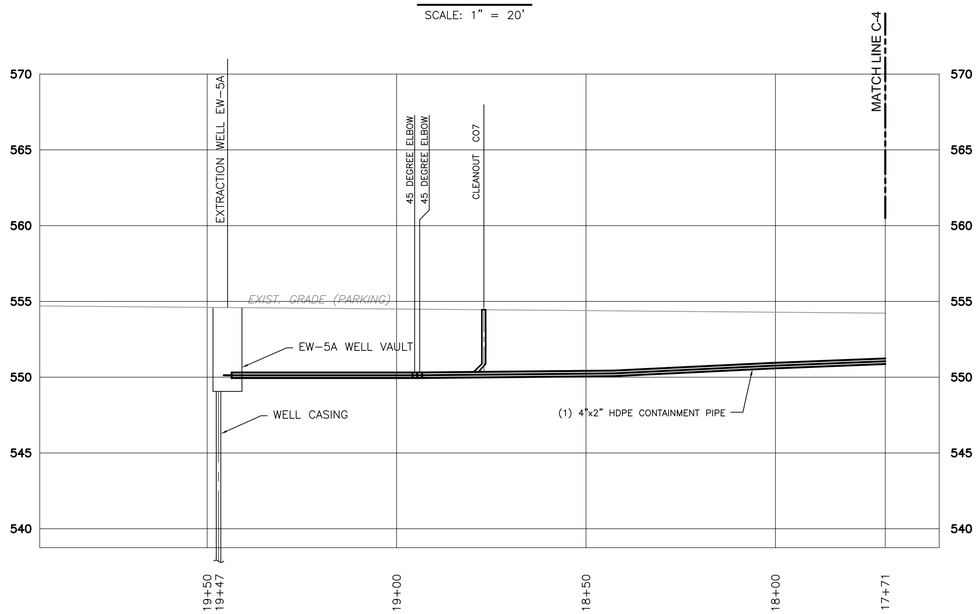

PROFILE

VERTICAL 1" = 5' (2.5 0 5)

HORIZONTAL 1" = 20' (10 0 20)

NOTES

1. EXISTING BURIED GAS AND ELECTRIC UTILITIES ARE ASSUMED TO HAVE 2'± OF COVER, EXISTING WATER LINES ARE ASSUMED TO HAVE 4'± OF COVER. CONTRACTOR TO VERIFY LOCATION, DEPTH AND SIZE OF ALL BURIED UTILITIES PRIOR TO COMMENCING EXCAVATION.

2. HAND DUG WITHIN 1' OF UTILITIES.

3. THE LOCATION, TYPE AND SIZE OF UTILITIES SHOWN ON THE DRAWINGS IS TAKEN FROM INFORMATION GIVEN BY THE VARIOUS UTILITIES AND IS TO BE USED AS A GUIDE ONLY.

4. PROVIDED VERTICAL AND HORIZONTAL BENDS OR DEFLECT PIPE AS SHOWN ON THE DRAWINGS IN ACCORDANCE WITH MANUFACTURER'S RECOMMENDATIONS TO MAINTAIN STATIONING AND ELEVATION OF PIPE. USED MANUFACTURER'S STANDARD BENDS. THE CONTRACTOR MAY ELIMINATE SPECIFIED ELBOWS IF THE PIPE CAN MEET THE SPECIFIED DEFLECTIONS AS LONG AS THE PIPE IS INSTALLED IN ACCORDANCE WITH THE MANUFACTURER'S RECOMMENDATIONS.

5. SUPPORTED BURIED UTILITIES AT ALL UTILITY CROSSINGS.

6. TOP OF THE FORCEMAINS WERE MINIMUM 4 FT. BELOW GROUND SURFACE AS INDICATED ON THE DRAWINGS.

7. THE CONTRACTOR FURNISHED AND INSTALLED PROTECTIVE COVERING/SECURE THE WORK AREA AS NECESSARY FOR TRENCHES THAT REMAIN OPEN OVERNIGHT.

8. PIPING MATERIALS AND INSTALLATION MET THE REQUIREMENTS IN SPECIFICATION SECTION 15200.

9. CONDUIT MATERIALS AND INSTALLATION MET THE REQUIREMENTS IN SPECIFICAITON SECTION 16375.

10. THE CONTRACTOR PROTECTED AND SUPPORTED EXISTING UTILITIES DURING EXCAVATION. IF DAMAGE OCCURED TO AN EXISTING UTILITY LINE, THE UTILITY AUTHORITY WAS NOTIFIED IMMEDIATELY. REPAIR TO DAMAGED WATER LINES WAS PERFORMED BY THE BOROUGH OF ROCKAWAY.

11. FOR ALL UTILITY CROSSINGS OTHER THAN WATER MAINS, THE MINIMUM VERTICAL CLEARANCE BETWEEN THE FORCE MAIN AND EXISTING UTILITY WAS 6 INCHES AND FLOWABLE FILL WAS USED BETWEEN THE FORCE MAIN AND EXISTING UTILITY FOR STRUCTURAL SUPPORT.

12. THE LOCATION OF THE FORCE MAIN MAY BE RE-ROUTED IN THE FIELD TO AVOID CONFLICTS WITH EXISTING UTILITIES. THE NEW LOCATION SHALL MEET THE SPECIFIED CLEARANCE REQUIREMENTS.

13. TRENCH OPERATIONS REQUIRED THE CONTRACTOR TO WORK IN PROXIMITY TO OVERHEAD ELECTRIC, TELEPHONE AND CABLE SERVICE AND MAIN LINES. THE CONTRACTOR COMPLIED WITH THE REQUIREMENTS OF 1926.550(a)(15).

14. HANDHOLE LOCATIONS ARE SHOWN ON SHEET E-1.

LEGEND

- FENCE LINE
- POWER POLE
- MONITORING WELL
- EXTRACTION WELL
- EXISTING GROUNDWATER EXTRACTION WELL
- EXISTING PIEZOMETER
- EXISTING MONITORING WELL
- SD — STORM DRAIN LINE
- G — GAS LINE
- OE — OVERHEAD ELECTRICAL LINE
- SS — SANITARY SEWER LINE
- W — WATER LINE
- CO1 — CLEANOUT LOCATION
- NEW FORCEMAIN LINE
- MANHOLE
- CATCH BASIN
- HYDRANT
- TREE
- WV — WATER VALVE
- GV — GAS VALVE
- GW — GUY WIRE
- SEV — SEWER CLEANOUT
- X/X — DETAIL LETTER / SHEET NUMBER

FINAL AS-BUILT

REV. NO.	DATE	DRWN	CHKD	REMARKS

DESIGNED BY:
DRAWN BY:
SHEET CHK'D BY:
CROSS CHK'D BY:
APPROVED BY:
DATE: MARCH 2012

PREPARED BY:
CAPE
CAPE Environmental Management, Inc.

US Army Corps of Engineers Kansas City District
TRENCH PACKAGE
ROCKAWAY BOROUGH SUPERFUND SITE
EAST MAIN/WALL STREET PLUME - OU2
ROCKAWAY BOROUGH, NEW JERSEY

FORCE MAIN
PLAN
STATION 17+71 TO 19+47

PROJECT 50001.005
FILE NAME: CSTPL007 AS-BUILT
SHEET NO.
C-5

XREFS: RKAWYBDR, XSTPL001

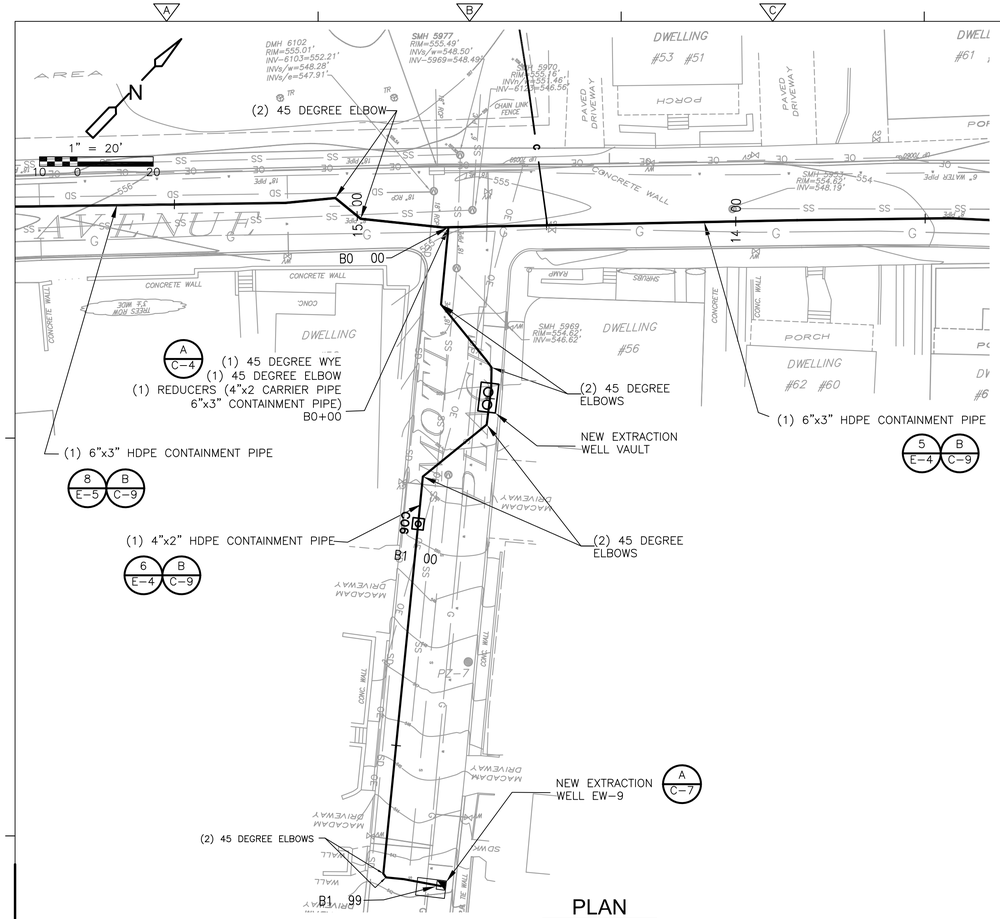

PLAN

SCALE: 1" = 20'

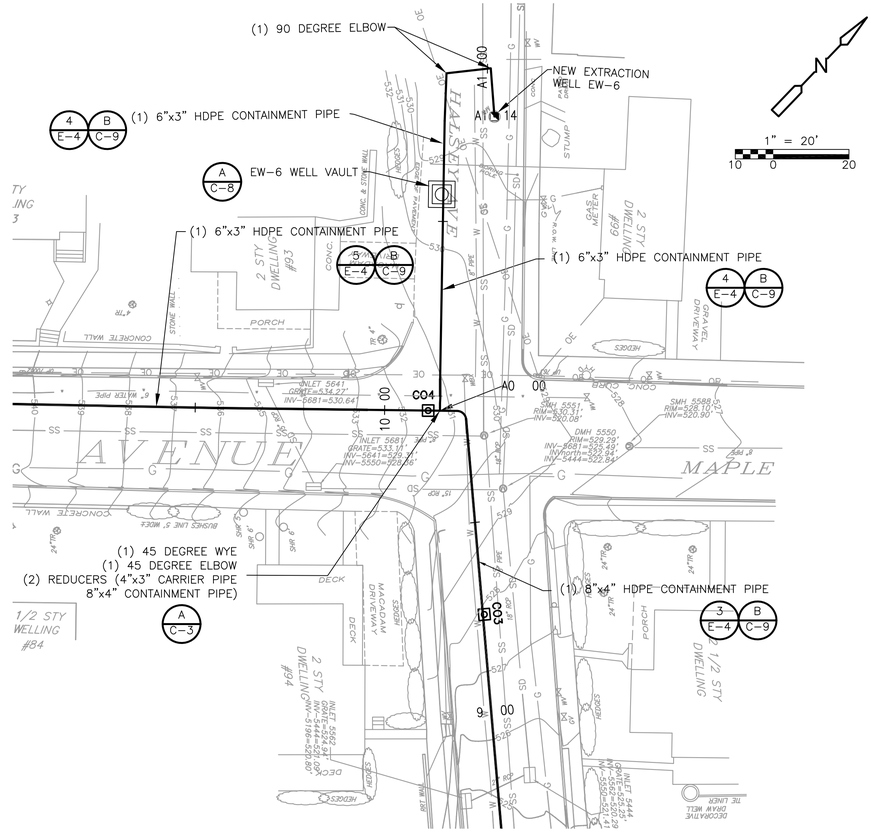

PLAN

SCALE: 1" = 20'

NOTES

1. EXISTING BURIED GAS AND ELECTRIC UTILITIES ARE ASSUMED TO HAVE 2'± OF COVER, EXISTING WATER LINES ARE ASSUMED TO HAVE 4'± OF COVER. CONTRACTOR TO VERIFY LOCATION, DEPTH AND SIZE OF ALL BURIED UTILITIES PRIOR TO COMMENCING EXCAVATION.

2. HAND DUG WITHIN 1' OF UTILITIES.

3. THE LOCATION, TYPE AND SIZE OF UTILITIES SHOWN ON THE DRAWINGS IS TAKEN FROM INFORMATION GIVEN BY THE VARIOUS UTILITIES AND IS TO BE USED AS A GUIDE ONLY.

4. PROVIDED VERTICAL AND HORIZONTAL BENDS OR DEFLECT PIPE AS SHOWN ON THE DRAWINGS IN ACCORDANCE WITH MANUFACTURER'S RECOMMENDATIONS TO MAINTAIN STATIONING AND ELEVATION OF PIPE. USED MANUFACTURER'S STANDARD BENDS. THE CONTRACTOR MAY ELIMINATE SPECIFIED ELBOWS IF THE PIPE CAN MEET THE SPECIFIED DEFLECTIONS AS LONG AS THE PIPE IS INSTALLED IN ACCORDANCE WITH THE MANUFACTURER'S RECOMMENDATIONS.

5. SUPPORTED BURIED UTILITIES AT ALL UTILITY CROSSINGS.

6. TOP OF THE FORCEMAINS WERE MINIMUM 4 FT. BELOW GROUND SURFACE AS INDICATED ON THE DRAWINGS.

7. THE CONTRACTOR FURNISHED AND INSTALLED PROTECTIVE COVERING/SECURE THE WORK AREA AS NECESSARY FOR TRENCHES THAT REMAIN OPEN OVERNIGHT.

8. PIPING MATERIALS AND INSTALLATION MET THE REQUIREMENTS IN SPECIFICATION SECTION 15200.

9. CONDUIT MATERIALS AND INSTALLATION MET THE REQUIREMENTS IN SPECIFICAITON SECTION 16375.

10. THE CONTRACTOR PROTECTED AND SUPPORTED EXISTING UTILITIES DURING EXCAVATION. IF DAMAGE OCCURED TO AN EXISTING UTILITY LINE, THE UTILITY AUTHORITY WAS NOTIFIED IMMEDIATELY. REPAIR TO DAMAGED WATER LINES WAS PERFORMED BY THE BOROUGH OF ROCKAWAY.

11. FOR ALL UTILITY CROSSINGS OTHER THAN WATER MAINS, THE MINIMUM VERTICAL CLEARANCE BETWEEN THE FORCE MAIN AND EXISTING UTILITY WAS 6 INCHES AND FLOWABLE FILL WAS USED BETWEEN THE FORCE MAIN AND EXISTING UTILITY FOR STRUCTURAL SUPPORT.

12. THE LOCATION OF THE FORCE MAIN MAY BE RE-ROUTED IN THE FIELD TO AVOID CONFLICTS WITH EXISTING UTILITIES. THE NEW LOCATION SHALL MEET THE SPECIFIED CLEARANCE REQUIREMENTS.

13. TRENCH OPERATIONS REQUIRED THE CONTRACTOR TO WORK IN PROXIMITY TO OVERHEAD ELECTRIC, TELEPHONE AND CABLE SERVICE AND MAIN LINES. THE CONTRACTOR SHALL

14. HANDHOLE LOCATIONS ARE SHOWN ON SHEET E-1.

LEGEND

- FENCE LINE
- POWER POLE
- MONITORING WELL
- EXTRACTION WELL
- SD — STORM DRAIN LINE
- G — GAS LINE
- OE — OVERHEAD ELECTRICAL LINE
- SS — SANITARY SEWER LINE
- W — WATER LINE
- CO1 — CLEANOUT LOCATION
- NEW FORCEMAIN LINE
- MANHOLE
- CATCH BASIN
- HYDRANT
- TREE
- WV — WATER VALVE
- GV — GAS VALVE
- GW — GUY WIRE
- SEV — SEWER CLEANOUT
- X/X — DETAIL LETTER / SHEET NUMBER

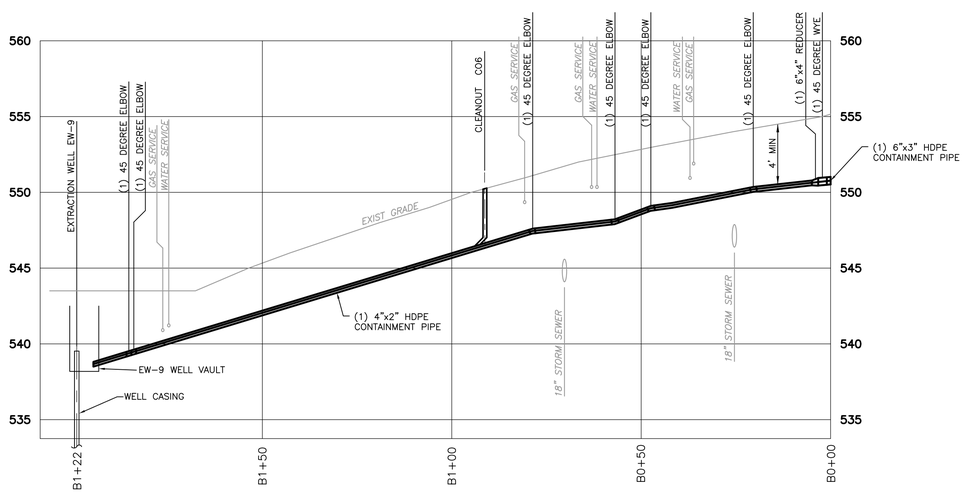

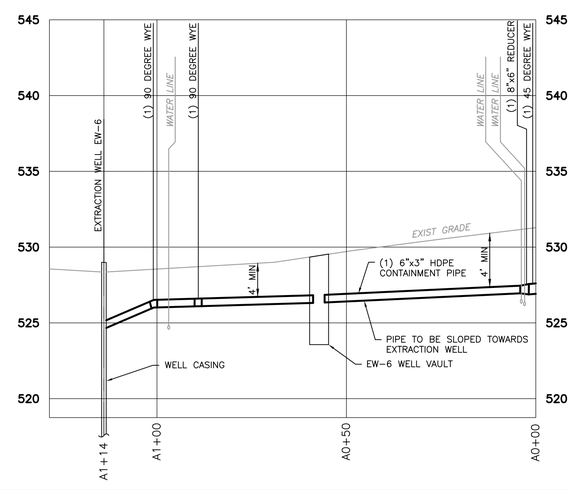

PROFILE

VERTICAL 1" = 5' (2.5 0 5)

HORIZONTAL 1" = 20' (10 0 20)

FINAL AS-BUILT

REV. NO.	DATE	DRWN	CHKD	REMARKS

DESIGNED BY:
DRAWN BY:
SHEET CHK'D BY:
CROSS CHK'D BY:
APPROVED BY:
DATE: MARCH 2012

PREPARED BY:
CAPE Environmental Management, Inc.

US Army Corps of Engineers Kansas City District
TRENCH PACKAGE
ROCKAWAY BOROUGH SUPERFUND SITE
EAST MAIN/WALL STREET PLUME - OU2
ROCKAWAY BOROUGH, NEW JERSEY

FORCE MAIN PLANS EW-6 & EW-9

PROJECT 50001.005
FILE NAME: CSTPL008 AS-BUILT
SHEET NO.
C-6

XREFS: RKAWYBDR, XSTPL001

EXTRACTION WELL DATA

WELL ID	TOP OF CASING ELEVATION AMSL (FT)	GROUND ELEVATION AMSL (FT)	WELL DIAMETER (INCH)	BOREHOLE DIAMETER (INCH)	TOTAL WELL DEPTH BGS (FT)	SCREEN INTERVAL AMSL (FT) & SLOT SIZE	PUMP MODEL & MAKE	TARGET FLOW RANGE (GPM)	TOTAL DYNAMIC HEAD (FT)		MOTOR (HP)	PUMP INLET DEPTH AMSL (FT)	RISER PIPE DIAMETER (INCH)	BAKER MONITOR PS PITLESS ADAPTER
									MIN.	MAX.				
EW-5A	~ 549	~ 552	6	10	90	479 - 489 # 25	SCHAEFER 60 GPM	20-60	78	190	5	495	2 HDPE	1PS67WBWE03F3SP
EW-8	551.2	554.2	6	10	90	473.7 - 488.7 # 30	SCHAEFER 60 GPM	20-60	77	184	5	493	2 HDPE	1PS67WBWE03F3SP
EW-9	~ 540	~ 543	6	10	90	478 - 488 # 30	SCHAEFER 60 GPM	20-60	52	183	5	490	2 HDPE	1PS67WBWE03F3SP
EW-6	528	529	10	14	81	483-456* # 40	SCHAEFER 90 GPM	40-100	42	113	5	486	3 HDPE	3PS1012WBWE06F6SP
EW-10	~ 521	~ 524	6	10	90	457 - 472 # 30	SCHAEFER 90 GPM	40-100	40	102	5	476	3 HDPE	3PS1012WBWE06F6SP

NOTES

1. WELL IS BLANKED BETWEEN ELEVATIONS 478 - 468 AND 465 - 461
2. PUMPS SHALL BE RETROFITTED FOR PUMPING CONTAMINATED GROUNDWATER.
3. RISER PIPE SHALL BE FURNISHED WITH SUITABLE TORQUE ARRESTOR PER MANUFACTURERS RECOMMENDATIONS.
4. CONNECTION TO PITLESS ADAPTER AND WELL RISER PIPE SHALL BE MADE WITH SUITABLE HDPE BY 316SS TRANSITION FITTINGS BY INDUSTRIAL PIPE FITTINGS (IPF), HOUSTON, TX, (800-241-4175) AND CONCENTRIC REDUCERS BY IPF. CONTRACTOR SHALL PROVIDE SUITABLE THREADED COUPLING EVERY 20-FEET.
5. EACH EXTRACTION WELL SHALL BE PROVIDED WITH LEVEL TRANSDUCER INSTALLED WITHIN PVC TUBING WHICH SHALL BE STRAPPED TO THE RISER PIPE. EACH EXTRACTION WELL SHALL ALSO BE PROVIDED WITH M-SCOPE TUBING
6. FLOW METERS, LEVEL TRANSMITTERS, AND PRESSURE GAUGES TO BE FURNISHED AND INSTALLED UNDER THE ROCKAWAY BOROUGH SUPERFUND SITE GROUNDWATER TREATMENT FACILITY DESIGN.
7. EW-6 WELL WAS INSTALLED IN 2007.
8. FOR ADEQUATE MOTOR COOLING AT LOW FLOW TARGET RANGE, CONTRACTOR SHALL FURNISH AND INSTALL AN 8" FLOW INDUCER SLEEVE (I. D. SHROUD).

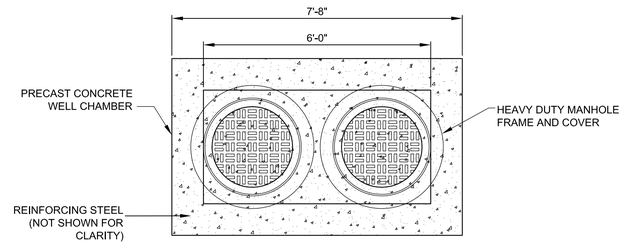

TOP VIEW

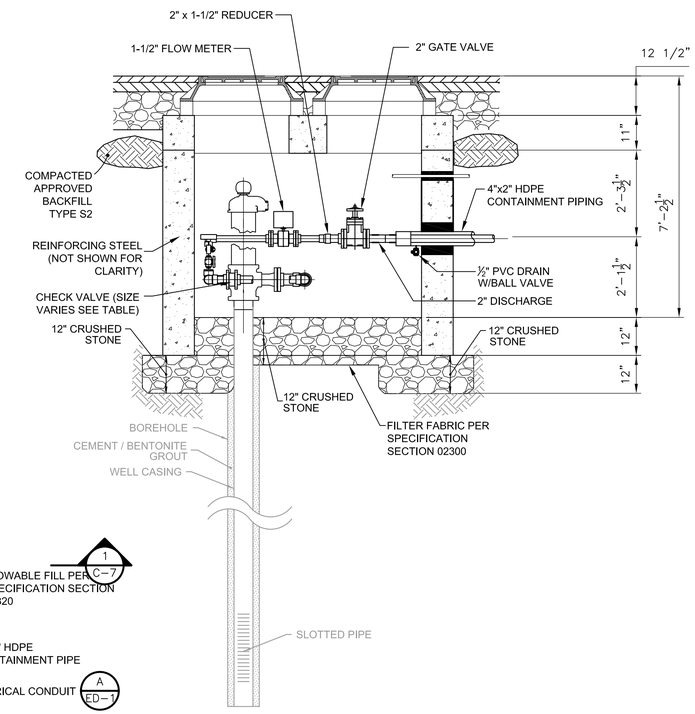

SECTION 1
1/2" = 1'-0"

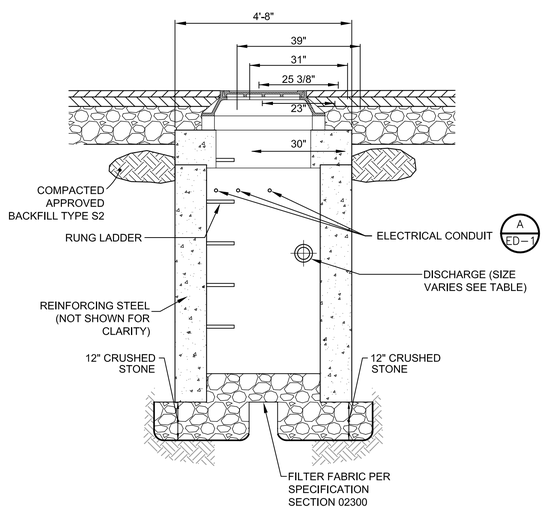

SECTION 2
1/2" = 1'-0"

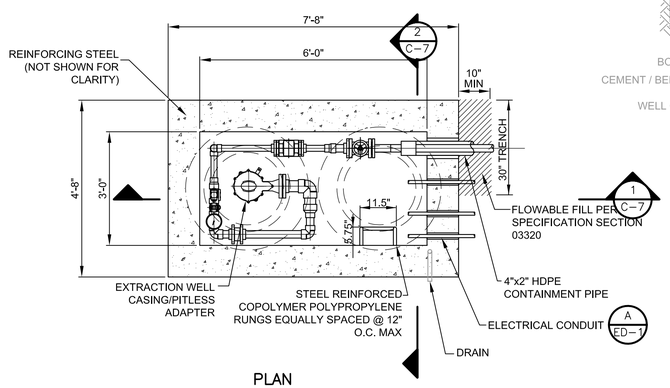

PLAN

EXTRACTION WELL CHAMBER – EW–5A AND EW–8,

DETAIL A
1/2" = 1'-0"

EXTRACTION WELL VAULT - PIPE AND EQUIPMENT SIZING DATA				
WELL #	CHECK VALVE	REDUCER	FLOW METER	GATE VALVE
EW-5A	2"	2"x1-1/2"	1-1/2"	2"
EW-6	3"	3"x2"	2"	3"
EW-8	2"	2"x1-1/2"	1-1/2"	2"
EW-9	2"	2"x1-1/2"	1-1/2"	2"
EW-10	3"	3"x2"	2"	3"

NOTES

1. PIPING WITHIN EXTRACTION WELL VAULT SHALL BE INSTALLED TO PROVIDE A MINIMUM STRAIGHT LENGTH OF PIPE OF 6-DIAMETERS UPSTREAM AND 3-DIAMETERS DOWNSTREAM OF THE MAGMETER FLOW METER.

FINAL AS-BUILT

REV. NO.	DATE	DRWN	CHKD	REMARKS

DESIGNED BY:
DRAWN BY:
SHEET CHK'D BY:
CROSS CHK'D BY:
APPROVED BY:
DATE: MARCH 2012

PREPARED BY:
CAPE
CAPE Environmental Management, Inc.

US Army Corps of Engineers Kansas City District
TRENCH PACKAGE
ROCKAWAY BOROUGH SUPERFUND SITE
EAST MAIN/WALL STREET PLUME - OU2
ROCKAWAY BOROUGH, NEW JERSEY

EXTRACTION WELL DETAILS I

PROJECT 50001.005
FILE NAME: CSTDT009 AS-BUILT
SHEET NO.
C-7

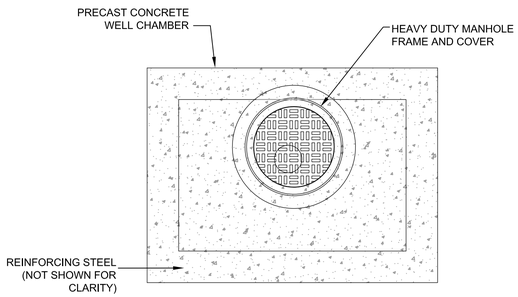

TOP VIEW

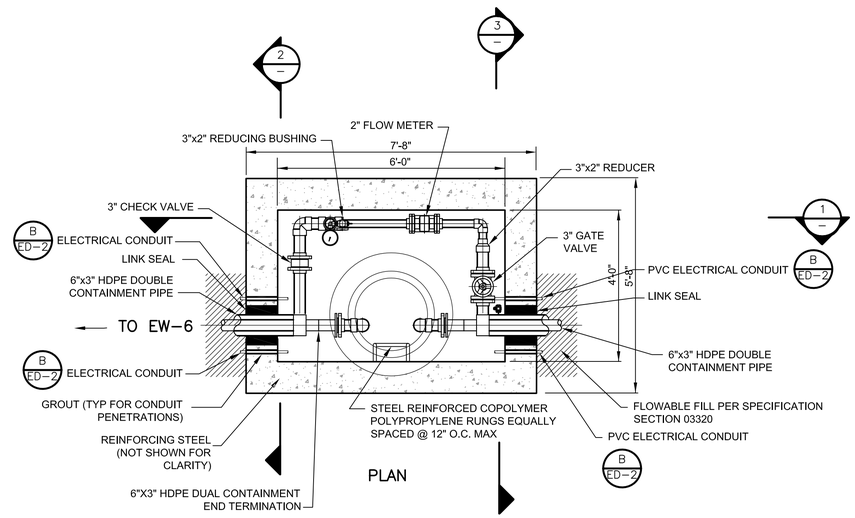

PLAN

EXTRACTION WELL CHAMBER – EW-6

DETAIL A – 1/2" = 1'-0"

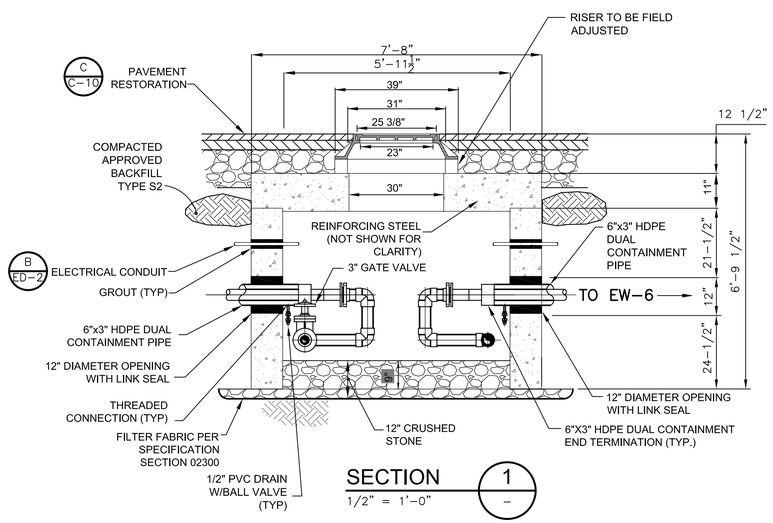

SECTION 1 – 1/2" = 1'-0"

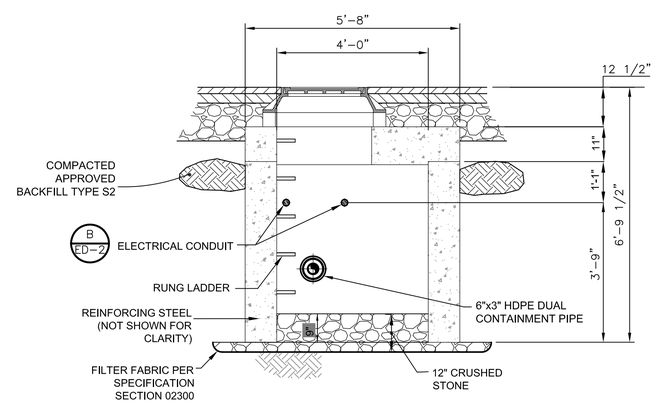

SECTION 2 – 1/2" = 1'-0"

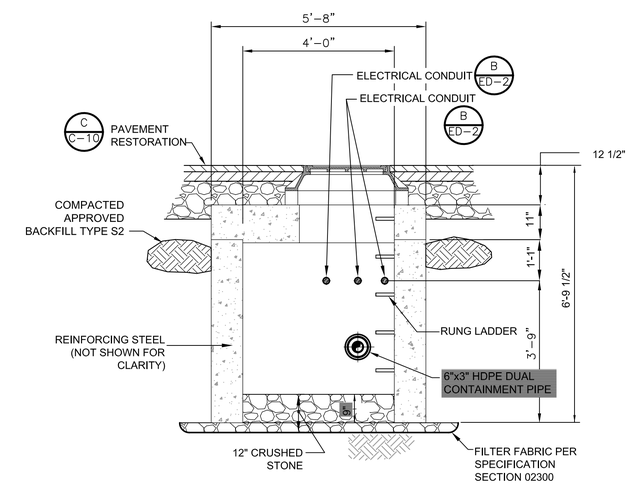

SECTION 3 – 1/2" = 1'-0"

FINAL AS-BUILT

XREFS: RKAWYBDR

REV. NO.	DATE	DRWN	CHKD	REMARKS

DESIGNED BY:
DRAWN BY:
SHEET CHK'D BY:
CROSS CHK'D BY:
APPROVED BY:
DATE: MARCH 2012

PREPARED BY:
CAPE
CAPE Environmental Management, Inc.

US Army Corps of Engineers Kansas City District
TRENCH PACKAGE
ROCKAWAY BOROUGH SUPERFUND SITE
EAST MAIN/WALL STREET PLUME - OU2
ROCKAWAY BOROUGH, NEW JERSEY

EW-6 EXTRACTION WELL DETAILS

PROJECT 50001.005
FILE NAME: CSTDT010 AS-BUILT
SHEET NO.
C-8

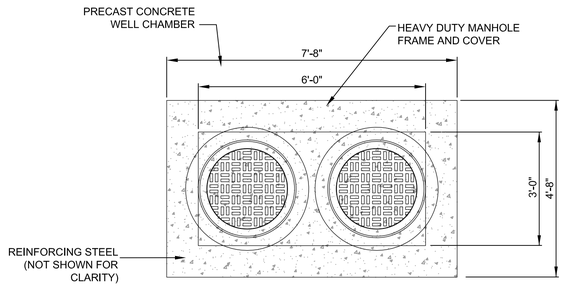

TOP VIEW

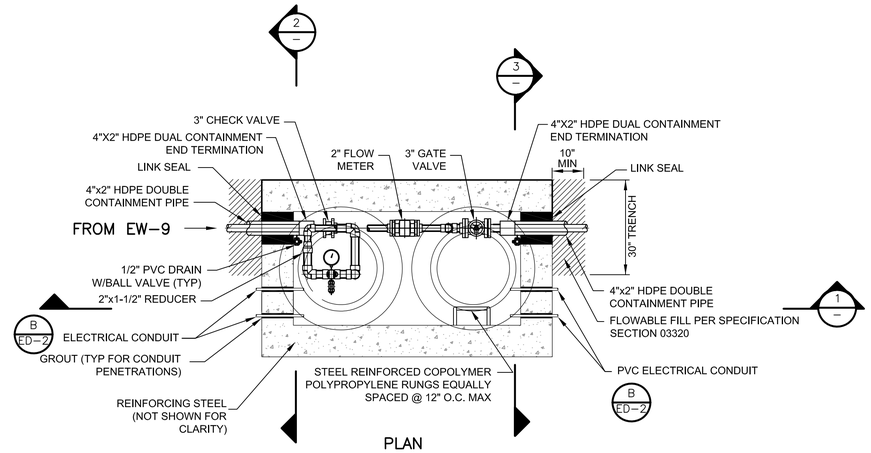

PLAN

EXTRACTION WELL CHAMBER – EW–9

DETAIL A – 1/2" = 1'–0"

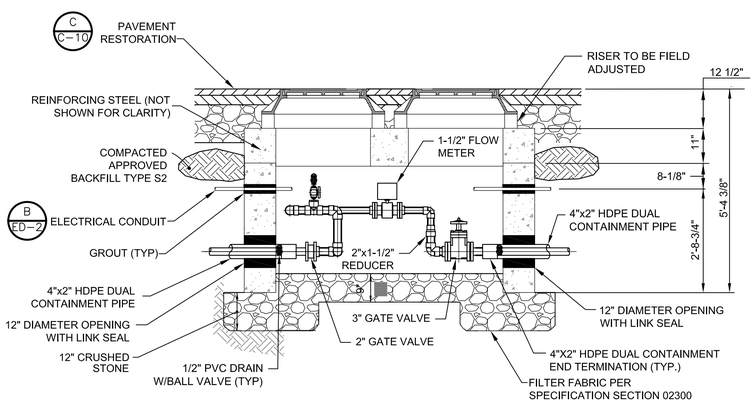

SECTION 1 – 1/2" = 1'–0"

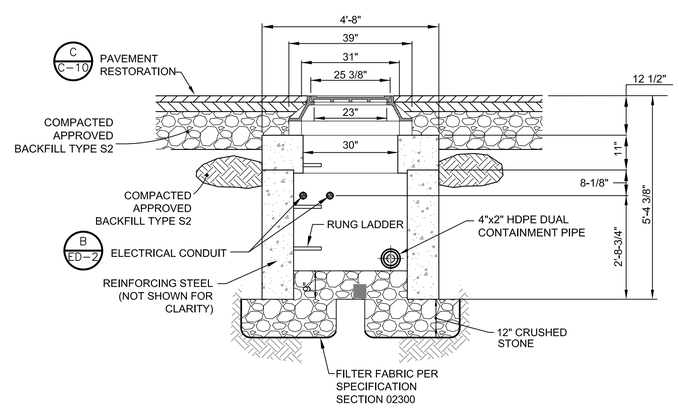

SECTION 2 – 1/2" = 1'–0"

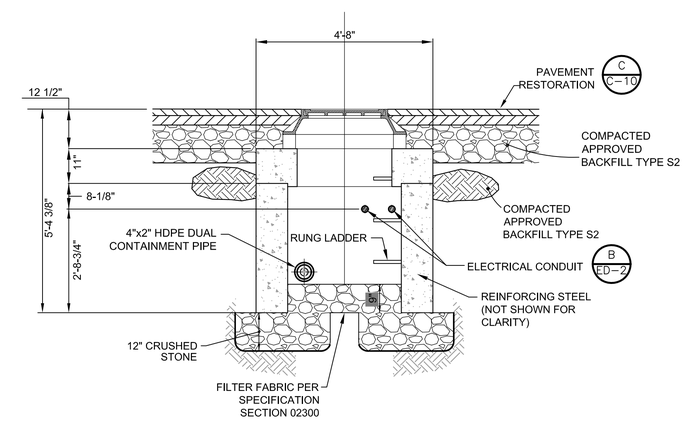

SECTION 3 – 1/2" = 1'–0"

FINAL AS-BUILT

XREFS: RKAWYBDR

REV. NO.	DATE	DRWN	CHKD	REMARKS

DESIGNED BY:
DRAWN BY:
SHEET CHK'D BY:
CROSS CHK'D BY:
APPROVED BY:
DATE: MARCH 2012

PREPARED BY:
CAPE
CAPE Environmental Management, Inc.

US Army Corps of Engineers Kansas City District
TRENCH PACKAGE
ROCKAWAY BOROUGH SUPERFUND SITE
EAST MAIN/WALL STREET PLUME - OU2
ROCKAWAY BOROUGH, NEW JERSEY

EW-9 EXTRACTION WELL DETAILS

PROJECT 50001.005
FILE NAME: CSTDT011 AS–BUILT
SHEET NO.
C-9

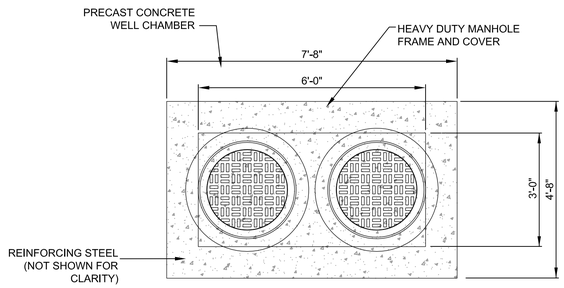

TOP VIEW

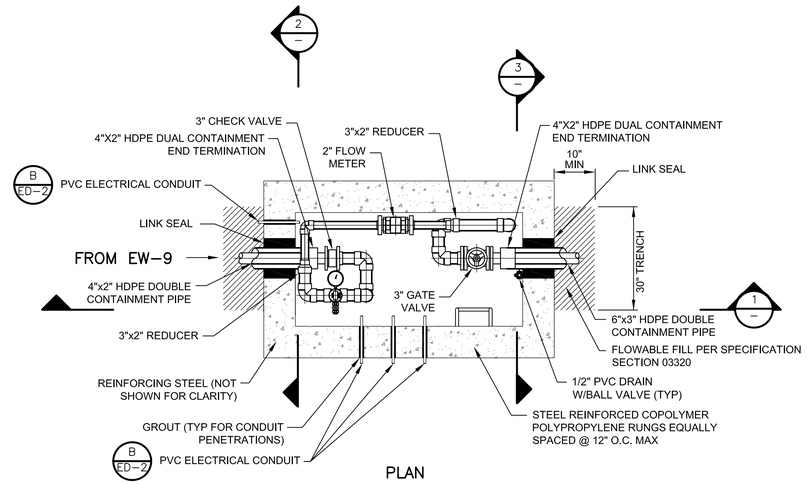

PLAN

EXTRACTION WELL CHAMBER – EW–10

DETAIL A
1/2" = 1'–0"

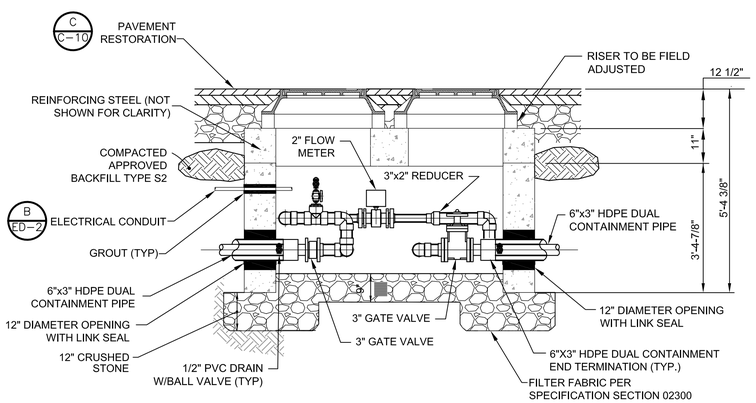

SECTION 1
1/2" = 1'–0"

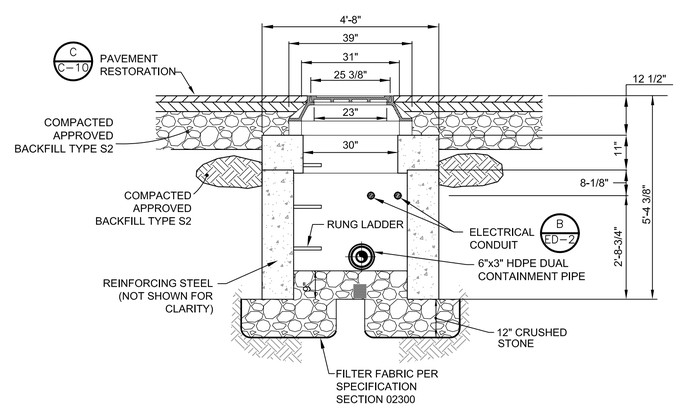

SECTION 2
1/2" = 1'–0"

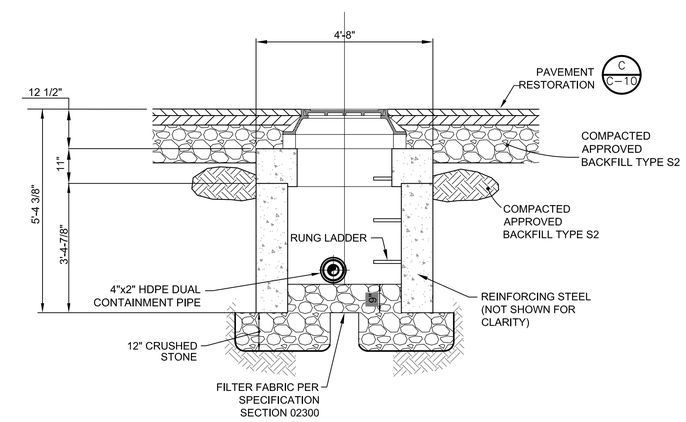

SECTION 3
1/2" = 1'–0"

FINAL AS-BUILT

XREFS: RKAWYBDR

REV. NO.	DATE	DRWN	CHKD	REMARKS

DESIGNED BY:
DRAWN BY:
SHEET CHK'D BY:
CROSS CHK'D BY:
APPROVED BY:
DATE: MARCH 2012

PREPARED BY:
CAPE
CAPE Environmental Management, Inc.

US Army Corps of Engineers Kansas City District
TRENCH PACKAGE
ROCKAWAY BOROUGH SUPERFUND SITE
EAST MAIN/WALL STREET PLUME - OU2
ROCKAWAY BOROUGH, NEW JERSEY

EW-10 EXTRACTION WELL DETAILS

PROJECT 50001.005
FILE NAME: CSTDT012 AS-BUILT
SHEET NO.
C-10

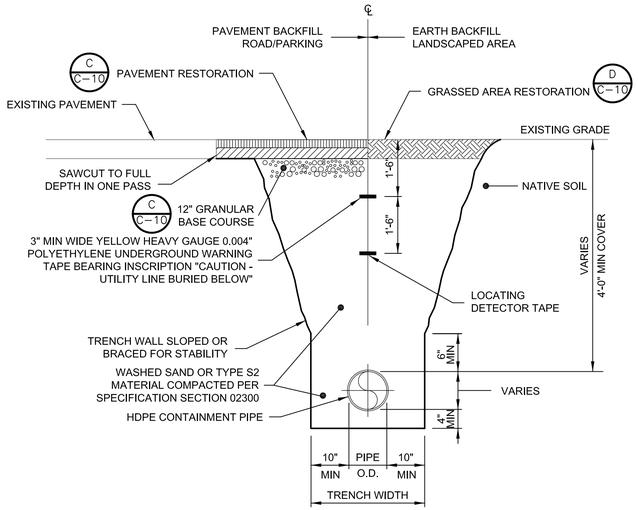

TYPICAL UTILITY TRENCH

DETAIL A/–

NTS

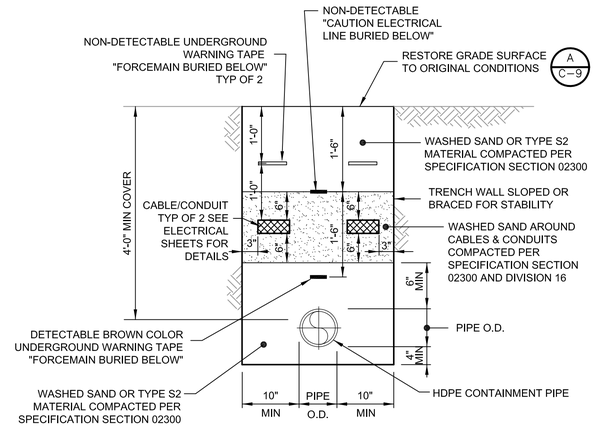

TYPICAL PIPE AND CABLE/CONDUIT TRENCH

DETAIL B/–

NTS

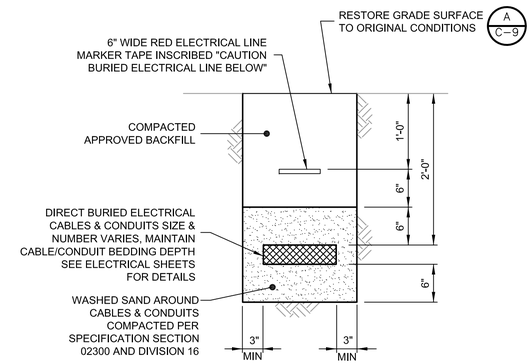

TYPICAL CABLE/CONDUIT TRENCH

DETAIL C/–

NTS

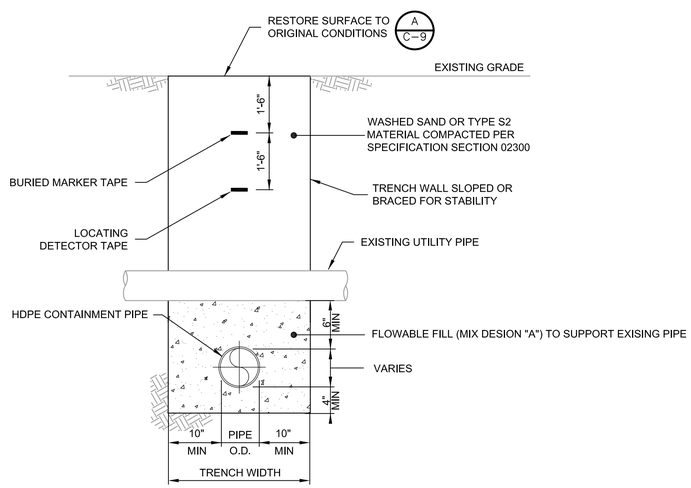

PIPE SUPPORT FOR EXISTING UTILITY

DETAIL D/–

NTS

FINAL AS-BUILT

XREFS: RKAWYBDR

REV. NO.	DATE	DRWN	CHKD	REMARKS

DESIGNED BY:
DRAWN BY:
SHEET CHK'D BY:
CROSS CHK'D BY:
APPROVED BY:
DATE: MARCH 2012

PREPARED BY:
CAPE
CAPE Environmental Management, Inc.

US Army Corps of Engineers Kansas City District
TRENCH PACKAGE
ROCKAWAY BOROUGH SUPERFUND SITE
EAST MAIN/WALL STREET PLUME - OU2
ROCKAWAY BOROUGH, NEW JERSEY

FORCE MAIN DETAILS I

PROJECT 50001.005
FILE NAME: CSTDT013 AS-BUILT
SHEET NO.
C-11

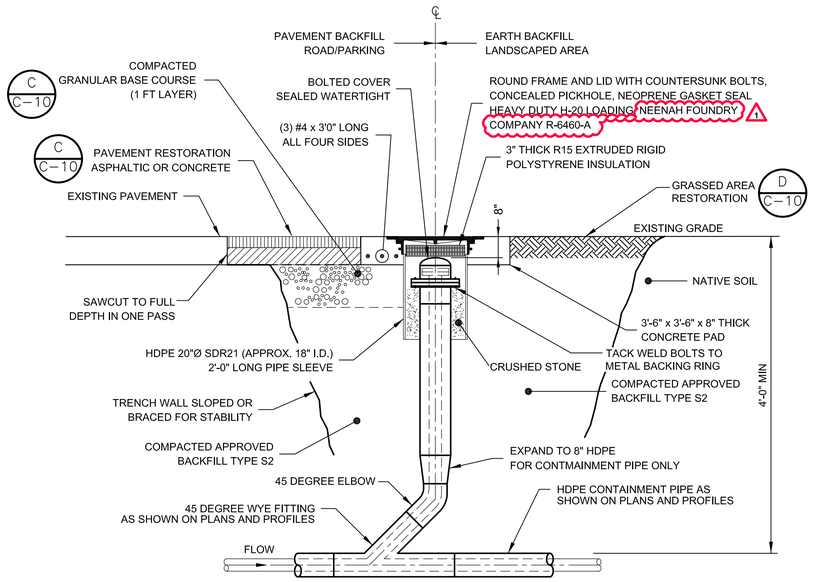

CLEANOUT

DETAIL A

NTS

NOTE:

COMPACTION TO BE PERFORMED PER SPECIFICATION SECTION 02300.

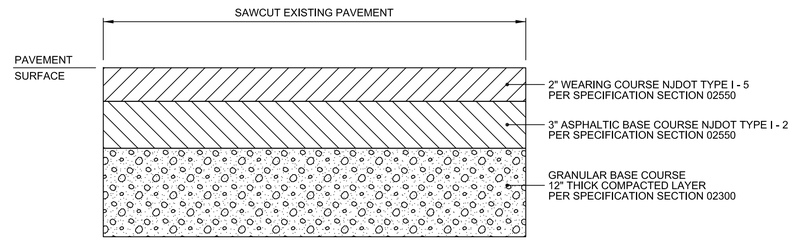

ROAD RESTORATION

DETAIL C

NTS

NOTE:

SAWCUT PAVEMENT AS NECESSARY TO PROVIDE A SMOOTH TRANSITION TO EXISTING PAVEMENT.

GENERAL NOTE:

RESTORE GRADES TO ORIGINAL ELEVATIONS UNLESS OTHERWISE NOTED.

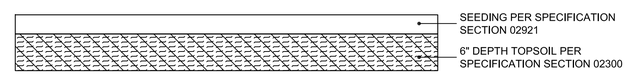

GRASSED AREA RESTORATION

DETAIL D

NTS

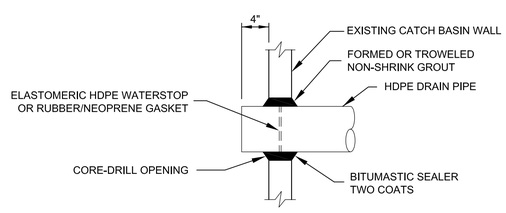

CONTRACTOR MAY USE A-LOK COMPRESSION TYPE FLEXIBLE CONNECTOR INSTALLED PER MANUFACTURER'S REQUIREMENTS

CONNECTION TO EXISTING CATCH BASIN

DETAIL B

NTS

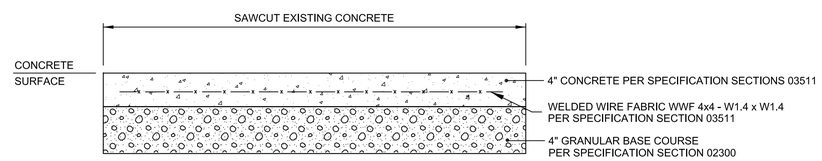

SIDEWALK RESTORATION

DETAIL E

NTS

NOTES:

1. SAWCUT JOINTS AT ⅓ DEPTH OF CONCRETE SLAB AT EVERY 4 FEET ON CENTER.

2. PROVIDE ½" EXPANSION JOINTS WHERE NEW SIDEWALK MEETS EXISTING SIDEWALK OR EVERY 12 FEET MAXIMUM.

3. CURBS AND SIDEWALKS TO BE RESTORED TO MATCH EXISTING CONDITIONS.

4. SIDEWALKS AND CURBS TO BE RESTORED IN ACCORDANCE WITH SPECIFICATION SECTION 03511.

FINAL AS-BUILT

REV. NO.	DATE	DRWN	CHKD	REMARKS
1	6/10/13	CR	BW	REPLACED NEOPRENENE GASKET SEAL WITH FAIRFIELD INDUSTRIES, INC MODEL 18 DWT

DESIGNED BY:
DRAWN BY:
SHEET CHK'D BY:
CROSS CHK'D BY:
APPROVED BY:
DATE: MARCH 2012

PREPARED BY:
CAPE
CAPE Environmental Management, Inc.

US Army Corps of Engineers Kansas City District
TRENCH PACKAGE
ROCKAWAY BOROUGH SUPERFUND SITE
EAST MAIN/WALL STREET PLUME - OU2
ROCKAWAY BOROUGH, NEW JERSEY

FORCE MAIN DETAILS II

PROJECT 50001.005
FILE NAME: CSTDT014 AS-BUILT
SHEET NO.
C-12

XREFS: RKAWYBDR

ONE LINE OR CONTROL DIAGRAM	PLAN	DESCRIPTION
52 CS	—	MEDIUM VOLTAGE DRAWOUT TYPE POWER CIRCUIT BREAKER CS=CONTROL SWITCH
FRAME TRIP	CB	LOW VOLTAGE AIR OR MOLDED CASE CIRCUIT BREAKER, 3 POLE UNLESS OTHERWISE NOTED.
*		COMBINATION MOTOR CIRCUIT PROTECTOR AND MAGNETIC MOTOR STARTER, FULL VOLTAGE NON-REVERSING UNLESS OTHERWISE NOTED: * FVR- FULL VOLTAGE REVERSING RVNR- REDUCED VOLTAGE NON-REVERSING 2S1W- TWO SPEED, ONE WINDING 2S2W- TWO SPEED, TWO WINDING RVAT- REDUCED VOLTAGE AUTOTRANSFORMER RVSS- REDUCED VOLTAGE, SOLID STATE
*		NON-FUSIBLE DISCONNECT SWITCH, 600 VOLT, 3 POLE * AMPERE RATING NOTED IF OTHER THAN 30A
* *	F	FUSIBLE DISCONNECT SWITCH, 600 VOLT, 3 POLE, AMPERE RATING AND FUSE SIZE AS NOTED * AMPERE RATING NOTED IF OTHER THAN 30A * FUSE RATING
	P 2	MANUAL MOTOR STARTER WITH THERMAL OVERLOAD HEATER, 1 POLE UNLESS OTHERWISE NOTED "P" INDICATES WITH PILOT LIGHT "2" INDICATES TWO POLE
	—	DRAWOUT TYPE EQUIPMENT OR DEVICE
	—	MEDIUM VOLTAGE CABLE TERMINATION
	—	MEDIUM VOLTAGE AIR INTERRUPTER SWITCH
*	—	MEDIUM VOLTAGE FUSED AIR INTERRUPTER SWITCH * FUSE RATING
	—	MEDIUM VOLTAGE FUSED MOTOR CONTROLLER
480V Δ TO 120/208Y 30 KVA K-*	T	TRANSFORMER, RATINGS AND CONNECTIONS AS NOTED. UNLESS OTHERWISE NOTED ON THE SINGLE LINE DIAGRAMS, ALL DRY TYPE TRANSFORMERS SERVICING ADMINISTRATIVE AND LABORATORY SPACES SHALL HAVE A K FACTOR OF 4. ISOLATION TRANSFORMERS SHALL HAVE A K-20 RATING
* A TO 5	—	CURRENT TRANSFORMER * QUANTITY A = PRIMARY AMPERES
* V TO 120	—	POTENTIAL TRANSFORMER * QUANTITY V = PRIMARY VOLTAGE
	G	GENERATOR, RATINGS AND CONNECTIONS AS NOTED
100A ATS-1 N S	—	AUTOMATIC OR MANUAL TRANSFER SWITCH NO.1 (ATS-1), (MTS-1) "N" INDICATES NORMAL OR PREFERRED SOURCE "S" INDICATES STANDBY OR ALTERNATE SOURCE 100A INDICATES CONTINUOUS CURRENT RATING
*	*	VARIABLE SPEED DRIVE CONTROLLER * D.C.= D.C. DRIVE CONTROLLER SCR= SILICON CONTROLLED RECTIFIER VFD= VARIABLE FREQUENCY DRIVE
#KW	E	UNIT HEATER - ELECTRIC HEATING COIL AND FAN # - RATING
—	U	UNIT HEATER - STEAM OR WATER HEATING COIL AND FAN
S	M	MOTOR, NUMERAL INDICATES HORSEPOWER
VS VM *	—	VOLTMETER WITH SWITCH, 3 PHASE
AS AM *	—	AMMETER WITH SWITCH, 3 PHASE

ONE LINE OR CONTROL DIAGRAM	PLAN	DESCRIPTION
*	—	METER * WM - WATTMETER WHM - WATTHOUR METER WHDM - WATTHOUR DEMAND METER WHDR - WATTHOUR DEMAND RECORDER PF - POWER FACTOR METER ETM - ELAPSED TIME METER TRANSDUCER AX - CURRENT TRANSDUCER WX - WATT TRANSDUCER WHX - WATTHOUR TRANSDUCER
#	#	RELAY, NO. AS INDICATED 25 - SYNCHRONISM CHECK RELAY 27 - UNDERVOLTAGE RELAY 32 - DIRECTIONAL POWER RELAY 38 - BEARING PROTECTIVE DEVICE 40 - LOSS OF EXCITATION RELAY 42 - RUNNING CONTACTOR/PILOT RELAY 46 - REVERSE PHASE/PHASE BALANCE/CURRENT RELAY 47 - PHASE SEQUENCE VOLTAGE RELAY 49 - MACHINE OR TRANSFORMER THERMAL RELAY 50/51 -INSTANTANEOUS/TIME OVERCURRENT RELAY 50G -INSTANTANEOUS GROUND 51 - TIME OVERCURRENT RELAY 51G - TIME OVERCURRENT RELAY, GROUNDING RESISTOR TYPE 51N - TIME OVERCURRENT RELAY, RESIDUAL TYPE 51V - TIME OVERCURRENT RELAY WITH VOLTAGE RESTRAINT 51X - AUXILIARY RELAY (TRIPS CB AND ALARMS) 59 - OVERVOLTAGE RELAY 60 - NEGATIVE SEQUENCE VOLTAGE RELAY 62 - TIME DELAY RELAY 63 - OVERPRESSURE RELAY 64 - GENERATOR FIELD GROUND RELAY 67 - AC DIRECTIONAL OVERCURRENT RELAY 74 - ALARM LATCHING RELAY 83 - AUTOMATIC SELECTIVE CONTROL OR TRANSFER RELAY 86 - LOCKING-OUT RELAY 87 - DIFFERENTIAL PROTECTIVE RELAY B - SUFFIX INDICATES "BUS" G - SUFFIX INDICATES "GENERATOR" GF - GROUND FAULT ST - SHUNT TRIP T - SUFFIX INDICATES "TRANSFORMER" X - SUFFIX INDICATES "AUXILIARY"
*	—	SPECIAL CAPACITOR * SC - SURGE CAPACITOR PF - POWER FACTOR CORRECTION CAPACITOR
*	—	TUNED POWER FACTOR CORRECTION CAPACITOR
	—	PUSHBUTTON, MOMENTARY CONTACT, SPRING RETURN, NORMALLY CLOSED
	—	PUSHBUTTON, MOMENTARY CONTACT, SPRING RETURN, NORMALLY OPEN
	ES	EMERGENCY STOP PUSHBUTTON WITH RED MUSHROOM HEAD OPERATOR (MAINTAINED CONTACT)
STOP START	PBL	START-STOP PUSHBUTTON CONTROL STATION (MOMENTARY CONTACT) WITH LOCKOUT DEVICE ON STOP
STOP START	PBM	START-STOP PUSHBUTTON CONTROL STATION, MAINTAINED CONTACT WITH LOCKOUT DEVICE ON STOP
ON OFF	S/S	OFF/ON SELECTOR SWITCH
L R (XO) (OX)	LR	LOCAL/REMOTE SELECTOR SWITCH
B A C * (XOO) (OXO) (OOX)	*	3 POSITION SELECTOR SWITCH, MAINTAINED CONTACT O-OPEN X-CLOSED POSITION / TOP CONTACT / MIDDLE CONTACT / BOTTOM CONTACT A / X / O / O B / O / X / O C / O / O / X * NAMEPLATE (A/B/C) HOA - HAND/OFF/AUTO HOR - HAND/OFF/REMOTE LOR - LOCAL/OFF/REMOTE RSL - RAISE/STOP/LOWER TOA - TEST/OFF/AUTO

GD/VF #	GD/VF #	GAS DETECTOR / VENTILATION FAILURE ALARM
		# INDICATES TYPE OF UNIT
		1=MASTER, 2=REMOTE

GENERAL NOTE

THIS IS A STANDARD LEGEND.
SOME SYMBOLS MAY NOT APPEAR
ON THE DRAWINGS.

ONE LINE OR CONTROL DIAGRAM	PLAN	DESCRIPTION
42 #	—	MOTOR STARTER COIL, NUMBER AS INDICATED TO DENOTE INTERLOCKING ONLY
CR #	—	CONTROL RELAY COIL, NUMBER AS INDICATED
*	—	PILOT LIGHT, COLOR AS NOTED * R - RED G - GREEN B - BLUE W - WHITE A - AMBER
*	—	PILOT LIGHT, PUSH-TO-TEST TYPE, COLOR AS NOTED ABOVE.
* # RANGE SETPOINT * NOTC NCTO NOTO NCTC	—	TIME DELAY RELAY RANGE AS NOTED SETPOINT AS NOTED #NUMBER AS INDICATED *TDE-TIME DELAY AFTER ENERGIZATION-ON DELAY TDD-TIME DELAY AFTER DE-ENERGIZATION-OFF DELAY NOTC-NORMALLY OPEN, TIMED CLOSING WHEN ENERGIZED NCTO-NORMALLY CLOSED, TIMED OPENING WHEN ENERGIZED NOTO-NORMALLY OPEN, TIMED OPENING WHEN DE-ENERGIZED NCTC-NORMALLY CLOSED, TIMED CLOSING WHEN DE-ENERGIZED
—	* - ##	FIELD INSTRUMENT, TAG NO. AS INDICATED * - INDICATES INSTRUMENT TYPE DEFINED ON LOOP SHEETS OR P & ID ## - INDICATES LOOP NO.
	LS OR ■	LIQUID LEVEL (FLOAT) SWITCH NORMALLY OPEN, CLOSES ON RISING LEVEL NORMALLY CLOSED, OPENS ON RISING LEVEL
	PS OR ■	PRESSURE OR VACUUM SWITCH NORMALLY OPEN, CLOSES ON RISING PRESSURE NORMALLY OPEN, CLOSES ON DROPPING PRESSURE NORMALLY CLOSED, OPENS ON RISING PRESSURE NORMALLY CLOSED, OPENS ON DROPPING PRESSURE
	TS OR T OR ■	TEMPERATURE SWITCH OR THERMOSTAT NORMALLY OPEN, CLOSES ON RISING TEMPERATURE NORMALLY OPEN, CLOSES ON DROPPING TEMP. NORMALLY CLOSED, OPENS ON RISING TEMPERATURE NORMALLY CLOSED, OPENS ON DROPPING TEMP.
	FS OR ■	FLOW SWITCH (AIR, WATER, ETC.) NORMALLY OPEN, CLOSES ON INCREASED FLOW NORMALLY CLOSED, OPENS ON INCREASED FLOW
	ZS OR ■	POSITION (LIMIT) SWITCH NORMALLY OPEN NORMALLY OPEN - HELD CLOSED NORMALLY CLOSED NORMALLY CLOSED - HELD OPEN
	TQ OR ■	TORQUE SWITCH NORMALLY OPEN, CLOSES ON HIGH TORQUE NORMALLY CLOSED, OPENS ON HIGH TORQUE
#	—	UTILIZED IN CONJUNCTION WITH OTHER CONTROL SCHEMATIC SYMBOLS TO DEPICT THE PHYSICAL LOCATION OF THE DEVICE # REPRESENTS LOCATION SEE LOCATION LEGEND ON DRAWING

ONE LINE OR CONTROL DIAGRAM	PLAN	DESCRIPTION
	—	CONDUCTORS OR CONDUITS CROSSING PATHS BUT NOT CONNECTED
	—	CONDUCTORS ELECTRICALLY CONNECTED
	—	INDICATES LIMITS OF ELECTRICAL EQUIPMENT OR WIRING ENCLOSURE
LA	—	LIGHTNING ARRESTER
		GROUND OR GROUND ROD
30A	—	FUSE, AMPERE RATING AS NOTED
	HTR	STRIP HEATER OR HEATING ELEMENT
	—	INDUCTOR
TG	TG	TACHOMETER GENERATOR
	—	CONTACT, NORMALLY OPEN (NO)
	—	CONTACT, NORMALLY CLOSED (NC)
	—	OVERLOAD RELAY HEATER
K	—	KEY INTERLOCK
TB	—	TERMINAL OR TEST BLOCK
RTD	—	RESISTANCE TEMPERATURE DETECTOR
VE OR VE	—	VIBRATION DETECTOR
DM	DM	DAMPER MOTOR
ETM	—	ELAPSED TIME METER
MO M BY DIV. 16 BY OTHERS	MO M BY DIV. 16 BY OTHERS	MOTOR OPERATED VALVE OR GATE

ABBREVIATIONS (CONTINUED)

PCP	PUMP CONTROL PANEL
PH	PHASE
PMH	POWER MANHOLE
PNL	PANEL OR PANELBOARD
PR	PAIR
PRI	PRIMARY
PT	POTENTIAL TRANSFORMER
PVC	POLYVINYL CHLORIDE
RECPT	RECEPTACLE
REQD	REQUIRED
QTY	QUANTITY
SA	SURGE ARRESTER
SC	SURGE CAPACITOR
SEC	SECONDS OR SECONDARY
SH	SHIELDED
SHH	SIGNAL HANDHOLE
SHT	SHEET
SN	SOLID NEUTRAL
SS	STAINLESS STEEL
SV	SOLENOID VALVE
SW	SWITCH

ABBREVIATIONS (CONTINUED)

SWBD	SWITCHBOARD
SWGR	SWITCHGEAR
TC	TIME TO CLOSE OR TRAY CABLE
TEL	TELEPHONE
THH	TELEPHONE HANDHOLE
TM	TELEPHONE BACKBOARD
TO	TIME TO OPEN
TVSS	TRANSIENT VOLTAGE SURGE SUPRESSOR
TS	TWISTED SHIELDED
TYP	TYPICAL
UG	UNDERGROUND
UON	UNLESS OTHERWISE NOTED
UPS	UNINTERRUPTIBLE POWER SUPPLY
V	VOLTS
VA	VOLT AMPS
VAR	VOLT AMPS REACTIVE
VFD	VARIABLE FREQUENCY DRIVE
W	WIRE, WATTS, WITH, WIDTH
WP	WEATHERPROOF
XP	EXPLOSION PROOF
XFMR	TRANSFORMER

ABBREVIATIONS

A	AMPS
AC	ALTERNATING CURRENT
AFF	ABOVE FINISHED FLOOR
AFG	ABOVE FINISHED GRADE
AL	ALUMINUM
AIC	AMPERE INTERRUPTING CAPACITY
AMP	AMPERE
ATS	AUTOMATIC TRANSFER SWITCH
AUTO	AUTOMATIC
AUX	AUXILIARY
AWG	AMERICAN WIRE GAUGE
BKR	BREAKER
BLDG	BUILDING
C	CONDUIT
CB	CIRCUIT BREAKER
CKT	CIRCUIT
CLB	CURRENT LIMITING BREAKER
CLF	CURRENT LIMITING FUSE
CP	CONTROL PANEL
CPT	CONTROL POWER TRANSFORMER
CR	CONTROL RELAY
CS	CONTROL SWITCH
CT	CURRENT TRANSFORMER
CU	COPPER
CWS	CONDUIT WALL SEAL
DC	DIRECT CURRENT
DIA	DIAMETER
DMU	DIGITAL METERING UNIT
DN	DOWN
EC	EMPTY CONDUIT
ELEC	ELECTRICAL
ELEV	ELEVATION
EM	EMERGENCY
ENCL	ENCLOSURE OR ENCLOSED
EQUIP	EQUIPMENT
EWC	ELECTRIC WATER COOLER
EWH	ELECTRIC WATER HEATER
EX	EXISTING
FBO	FURNISHED BY OTHERS
FLS	FLOAT LEVEL SWITCH
FO	FIBER OPTIC
FU	FUSE
GCP	GENERATOR CONTROL PANEL
GEN	GENERATOR
GB	GROUND BAR
G , GRD	GROUND
GFI	GROUND FAULT INTERRUPTER
GRS	GALVANIZED RIGID STEEL
HH	HANDHOLE
HT	HEIGHT
HID	HIGH INTENSITY DISCHARGE
HP	HORSEPOWER
HZ	HERTZ
INST	INSTANTANEOUS
INSTR	INSTRUMENT OR INSTRUMENTATION
K	KILO (PREFIX)
KCMIL	1000 CIRCULAR MILS
KVA	KILOVOLT AMPERES
KW	KILOWATTS
LA	LIGHTNING ARRESTER
LGTS	LIGHTS
LTG	LIGHTING
LP	LIGHTING PANEL
LV	LOW VOLTAGE
MAX	MAXIMUM
MCB	MAIN CIRCUIT BREAKER
MCC	MOTOR CONTROL CENTER
MCP	MOTOR CIRCUIT PROTECTOR
MCM	1000 CIRCULAR MILS
MFR	MANUFACTURER
MH	MANHOLE
MIN	MINIMUM
MLO	MAIN LUGS ONLY
MMU	MICROPROCESSOR METERING UNIT
MTG	MOUNTING
MTD	MOUNTED
MTS	MANUAL TRANSFER SWITCH
MV	MEDIUM VOLTAGE
N	NEUTRAL
NC	NORMALLY CLOSED
NIC	NOT IN CONTRACT
NO	NORMALLY OPEN OR NUMBER
NTS	NOT TO SCALE
OH	OVERHEAD
PB	PULL BOX
OL	OVERLOAD

FINAL AS-BUILT

REV. NO.	DATE	DRWN	CHKD	REMARKS

DESIGNED BY:
DRAWN BY:
SHEET CHK'D BY:
CROSS CHK'D BY:
APPROVED BY:
DATE: MARCH 2012

PREPARED BY:
CAPE
CAPE Environmental Management, Inc.

US Army Corps of Engineers Kansas City District
TRENCH PACKAGE
ROCKAWAY BOROUGH SUPERFUND SITE
EAST MAIN/WALL STREET PLUME - OU2
ROCKAWAY BOROUGH, NEW JERSEY

ELECTRICAL
LEGEND AND ABBREVIATIONS I

PROJECT 50001.005
FILE NAME: E001SY00 AS-BUILT
SHEET NO.
E-1

XREFS: RKAWYBDR

SYMBOL	DESCRIPTION
A 3 b	INCANDESCENT, COMPACT FLUORESCENT OR H.I.D. TYPE LIGHTING FIXTURE "A" – FIXTURE TYPE (SEE LIGHTING FIXTURE SCHEDULE) "b" – CONTROLLED BY SWITCH "b" "3" – CIRCUIT NUMBER
A 3 b	FLUORESCENT TYPE LIGHTING FIXTURE, NOTATIONS SAME AS ABOVE
A 3 b	WALL MOUNTED INCANDESCENT, COMPACT FLUORESCENT OR H.I.D. TYPE LIGHTING FIXTURE, NOTATIONS SAME AS ABOVE
A 3 b OR A 3 b	CROSS HATCH INDICATES LIGHTING FIXTURE FOR EMERGENCY EGRESS LIGHTING. SEE CONTROL DIAGRAM FOR SWITCHING ARRANGEMENT.
BU–1 3 (*)	EMERGENCY LIGHTING BATTERY UNIT WITH TWO LAMP HEADS "BU–1" – FIXTURE TYPE (SEE LIGHTING FIXTURE SCHEDULE) "3" – SUPERVISORY CIRCUIT * – FIXTURE TAG #
R–2 BU–1(*)	REMOTE EMERGENCY ADJUSTABLE WALL LIGHTING FIXTURE WITH TWO LAMP HEADS "R–2" – FIXTURE TYPE (SEE LIGHTING FIXTURE SCHEDULE) * – HOME RUN TO BATTERY UNIT INDICATED. CONDUIT SHALL BE 3/4" AND CONTAIN 2 NO. 12 AWG BRANCH CIRCUIT CONDUCTORS AND 1 NO. 12 AWG GROUND CONDUCTOR UNLESS OTHERWISE INDICATED.
	COMBINATION BATTERY UNIT AND EXIT SIGN
A 3	CEILING MOUNTED EXIT SIGN, NOTATIONS SAME AS ABOVE. WHEN USED, ARROW INDICATES DIRECTION OF EGRESS
A 3	WALL MOUNTED EXIT SIGN, NOTATIONS SAME AS ABOVE. WHEN USED, ARROW INDICATES DIRECTION OF EGRESS.
RH–3 E 3 BU–1(*)	REMOTE EMERGENCY CEILING LIGHTING FIXTURE. "RH–3" – FIXTURE TYPE (SEE LIGHTING FIXTURE SCHEDULE) "3" – SUPERVISORY CIRCUIT * – HOME RUN TO BATTERY UNIT INDICATED. CONDUIT SHALL BE 3/4" AND CONTAIN 2 NO. 12 AWG BRANCH CIRCUIT CONDUCTORS AND 1 NO. 12 AWG GROUND CONDUCTOR UNLESS OTHERWISE INDICATED.
	BRANCH CIRCUIT CONDUIT WITH 2 NO. 12 AWG BRANCH CIRCUIT CONDUCTORS AND 1 NO. 12 AWG GROUND CONDUCTOR UON INSTALLED EXPOSED. FOR MINIMUM SIZE CONDUIT PERMITTED REFER TO THE SPECIFICATIONS. ALSO INDICATES UNDERGROUND DUCT BANK ON SITE PLANS.
	BRANCH CIRCUIT CONDUIT WITH 2 NO. 12 AWG BRANCH CIRCUIT CONDUCTORS AND 1 NO. 12 AWG GROUND CONDUCTOR UON INSTALLED CONCEALED IN CEILING, WALL, FLOOR OR ABOVE SUSPENDED CEILING. FOR MINIMUM SIZE CONDUIT PERMITTED REFER TO THE SPECIFICATIONS.
	BRANCH CIRCUIT CONDUIT INSTALLED EXPOSED TURNING UP. CONDUIT TO CONTAIN 2 NO. 12 AWG BRANCH CIRCUIT CONDUCTORS AND 1 NO. 12 AWG GROUND CONDUCTOR UON. FOR MINIMUM SIZE CONDUIT PERMITTED REFER TO THE SPECIFICATIONS.
	BRANCH CIRCUIT CONDUIT INSTALLED EXPOSED TURNING DOWN. CONDUIT TO CONTAIN 2 NO. 12 AWG BRANCH CIRCUIT CONDUCTORS AND 1 NO. 12 AWG GROUND CONDUCTOR UON. FOR MINIMUM SIZE CONDUIT PERMITTED REFER TO THE SPECIFICATIONS.
	BRANCH CIRCUIT CONDUIT INSTALLED CONCEALED TURNING UP. CONDUIT TO CONTAIN 2 NO. 12 AWG BRANCH CIRCUIT CONDUCTORS AND 1 NO. 12 AWG GROUND CONDUCTOR UON. FOR MINIMUM SIZE CONDUIT PERMITTED REFER TO THE SPECIFICATIONS.
	BRANCH CIRCUIT CONDUIT INSTALLED CONCEALED TURNING DOWN. CONDUIT TO CONTAIN 2 NO. 12 AWG BRANCH CIRCUIT CONDUCTORS AND 1 NO. 12 AWG GROUND CONDUCTOR UON. FOR MINIMUM SIZE CONDUIT PERMITTED REFER TO THE SPECIFICATIONS.
	CONDUIT STUBBED OUT AND CAPPED
2(3"C., 3#3/0, 1#2G)	DENOTES A QUANTITY OF TWO (2) 3–INCH CONDUITS EACH CONTAINING THREE NO. 3/0 AWG CONDUCTORS AND 1 NO. 2 AWG GROUND CONDUCTOR.
2–2/C#16TS	DENOTES A QUANTITY OF TWO INSTRUMENT CABLES. EACH CABLE TO CONSIST OF TWO NO. 16 AWG CONDUCTORS TWISTED TOGETHER AND COVERED WITH A METALLIC SHIELD AND AN OVERALL PROTECTIVE JACKET. REFER TO THE SPECIFICATIONS FOR THE EXACT CABLE TO BE PROVIDED.
2–3/C#16TS	SAME AS ABOVE EXCEPT CABLE TO CONSIST OF THREE NO. 16 AWG CONDUCTORS TWISTED, SHIELDED AND COVERED WITH AN OVERALL PROTECTIVE JACKET. REFER TO THE SPECIFICATIONS FOR THE EXACT CABLE TO BE PROVIDED.
3(4"C)	THREE 4–INCH CONDUITS
	FLEXIBLE METAL CONDUIT "WHIP" (2#12, 1#12G, ?" C. UNLESS OTHERWISE NOTED) FOR RECESSED LIGHTING FIXTURES AND LIQUID TIGHT MOTOR CONNECTIONS
3 LP1	HOMERUN, CIRCUIT NO.3 RUN TO PANEL LP1 OR EQUIPMENT AS NOTED. CONDUIT SHALL BE 3/4" WITH 2 NO. 12 AWG AND 1 NO. 12 AWG GROUND UNLESS OTHERWISE INDICATED.
	CONDUIT SEAL FITTING SHOWN IN OTHER THAN CODE REQUIRED LOCATIONS.
	INDICATES MOTOR STARTER AND/OR MOTOR CONTROL EQUIPMENT WITHIN THE ENCLOSURE.

SYMBOL	DESCRIPTION
$b	SINGLE POLE SWITCH "b" INDICATES FIXTURES CONTROLLED.
$a 2	DOUBLE POLE SWITCH "a" INDICATES FIXTURES CONTROLLED.
$c 3	THREE WAY SWITCH "c" INDICATES FIXTURES CONTROLLED.
$a 4	FOUR WAY SWITCH "a" INDICATES FIXTURES CONTROLLED.
$M	SINGLE POLE, DOUBLE THROW MOMENTARY CONTACT SWITCH, CENTER OFF
$P	SINGLE POLE SWITCH AND PILOT LIGHT
D	DIMMER LIGHTING CONTROL SWITCH
C 3	LIGHTING CONTACTOR WITH NUMBER OF POLES AS INDICATED
TM	TIME SWITCH
TYPE A	INDICATES ALL LIGHTING FIXTURES WITHIN THE ROOM OR AREA IN WHICH THIS NOTATION APPEARS SHALL BE TYPE "A" UNLESS OTHERWISE NOTED. SEE LIGHTING FIXTURE SCHEDULE FOR TYPES
LPXX OR LPXX	LIGHTING PANELBOARD (LP)
PPXX OR PPXX	POWER PANELBOARD (PP) OR DISTRIBUTION PANELBOARD (DP)
* 4	DUPLEX RECEPTACLE, 20A, 120V, 2P, 3W * C – MOUNTED ABOVE COUNTER–TOP GF – GROUND FAULT INTERRUPTER TYPE WP – WEATHERPROOF T – TRANSIENT VOLTAGE SURGE SUPPRESSOR IC – ISOLATED GROUND 4 – CIRCUIT NUMBER
* 4	SIMPLEX RECEPTACLE, 20A, 120V, 2P, 3W, NOTATIONS SAME AS ABOVE FOR DUPLEX RECEPTACLE
* 3 60 4W	SPECIAL PURPOSE RECEPTACLE * – VOLT RATING – 3 INDICATES NUMBER OF POLES – 60 INDICATES AMPERE RATING – 4W INDICATES4 WIRES IN ADDITION TO GROUND
	COMBINATION 20A, 120V, 2P, 3W DUPLEX AND 20A, 240V, 2P, 3W SINGLE RECEPTACLES UNDER COMMON PLATE
*	SINGLE FACE, SINGLE GANG PEDESTAL WITH 20A, 120V, 2P, 3W DUPLEX RECEPTACLE, FURNISHED AND INSTALLED UNDER DIVISION 16 UNLESS OTHERWISE NOTED. * DENOTES FURNISHED UNDER OTHER DIVISIONS OF THE SPECIFICATIONS BUT INSTALLED UNDER DIVISION 16
D *	DOUBLE FACE, SINGLE GANG PEDESTAL WITH 20A, 120V, 2P, 3W DUPLEX RECEPTACLE AND 20A, 240V, 2P, 3W SINGLE RECEPTACLE, FURNISHED AND INSTALLED UNDER DIVISION 16 UNLESS OTHERWISE NOTED. * DENOTES FURNISHED UNDER OTHER DIVISIONS OF THE SPECIFICATIONS BUT INSTALLED UNDER DIVISION 16
	DOUBLE RECEPTACLE, 20A, 120V, 2P, 3W MOUNTED IN BOX CURB FURNISHED UNDER OTHER DIVISIONS OF THE SPECIFICATIONS BUT INSTALLED UNDER DIVISION 16
	MULTI–OUTLET ASSEMBLY, SYMBOL DENOTES RECEPTACLE TYPE
	FLOOR OUTLET BOX WITH TYPE OUTLET INDICATED
	UNDERFLOOR DUCT SYSTEM WITH TYPE OUTLETS INDICATED
	THREE CELL UNDERFLOOR DUCT SYSTEM JUNCTION BOX
J J	JUNCTION BOX
P	PULL BOX
TC	TERMINAL CABINET

SYMBOL	DESCRIPTION
OS	OCCUPANCY SENSOR
PC	PHOTOCELL
FS ESA LP LCP	EMERGENCY SHOWER ALARM STATION WITH FLOW SWITCH(ES)
C	SINGLE FACE CLOCK AND CLOCK HANGER OUTLET

GD/VF #	GAS DETECTOR/VENTILATION FAILURE ALARM,
	# INDICATES TYPE OF UNIT.
	1 = MASTER, 2 = REMOTE

DAMP	INDICATES THAT ALL ELECTRICAL EQUIPMENT AND MATERIALS INSTALLED WITHIN THE ROOM OR AREA IN WHICH THIS NOTATION APPEARS SHALL BE OF NEMA 12 CONSTRUCTION (OR GASKETED AND SUITABLE FOR USE IN A WET LOCATION WHERE NEMA STANDARDS DO NOT APPLY) UNLESS OTHERWISE NOTED.
WET	INDICATES THAT ALL ELECTRICAL EQUIPMENT AND MATERIALS INSTALLED WITHIN THE ROOM OR AREA IN WHICH THIS NOTATION APPEARS SHALL BE OF NEMA 4 CONSTRUCTION (OR GASKETED AND SUITABLE FOR USE IN A WET LOCATION WHERE NEMA STANDARDS DO NOT APPLY) UNLESS OTHERWISE NOTED.
CORROSIVE	INDICATES THAT ALL ELECTRICAL EQUIPMENT AND MATERIALS INSTALLED WITHIN THE ROOM OR AREA IN WHICH THIS NOTATION APPEARS SHALL BE OF NEMA 4X CONSTRUCTION (OR CORROSION RESISTANT CONSTRUCTION SUITABLE FOR USE IN A WET LOCATION WHERE NEMA STANDARDS DO NOT APPLY) UNLESS OTHERWISE NOTED.
CLASS 1, DIV. 1, GROUP D	INDICATES THAT ALL ELECTRICAL EQUIPMENT AND MATERIALS INSTALLED WITHIN THE ROOM OR AREA IN WHICH THIS NOTATION APPEARS SHALL CONFORM TO N.E.C. REQUIREMENTS FOR THE HAZARDOUS AREA CLASSIFICATION SHOWN.
	GROUND SYSTEM GRID OR LOOP, 36" BELOW FINISHED GRADE UNLESS OTHERWISE NOTED.
	INDICATED EQUIPMENT AND MATERIALS TO BE DEMOLISHED
	EXOTHERMIC WELD CONNECTION
COMMUNICATIONS SYSTEMS	
K	TELEPHONE OUTLET FOR DESK TYPE HANDSET K = KEY SYSTEM
K	TELEPHONE OUTLET FOR WALL TYPE HANDSET (MOUNT UP 4'–6") K = KEY SYSTEM
	PAGE/PARTY TELEPHONE OUTLET FOR DESK TYPE HANDSET
	PAGE/PARTY TELEPHONE OUTLET FOR WALL TYPE HANDSET (MOUNT UP 4'–6")
S H W	PAGING SPEAKER, WALL MOUNTED H = DENOTES HORN TYPE W = DENOTES WIDE ANGLE TYPE
S W	PAGING SPEAKER, WALL MOUNTED, BI–DIRECTIONAL, HORN TYPE W = DENOTES WIDE ANGLE TYPE
S	PAGING SPEAKER, FLUSH MOUNTED CEILING TYPE
S	PAGING SPEAKER, SURFACE MOUNTED CEILING TYPE
VC	REMOTE WALL MOUNTED VOLUME CONTROL FOR CEILING SPEAKER (MOUNT UP 5'–0")
A	PAGING SPEAKER AMPLIFIER ASSEMBLY
TM	TELEPHONE CABINET OR BACKBOARD AS NOTED
P	DATA INPUT/OUTPUT CABLE OUTLET. "P" DENOTES PROCESS COMPUTER SYSTEM

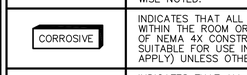

SYMBOL WHERE THERE IS A DETAIL

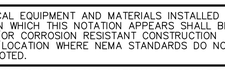

SYMBOL WHERE THERE IS A SECTION

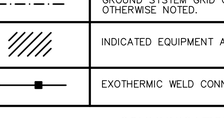

SYMBOL WHERE DETAIL IS DRAWN

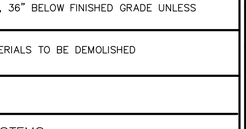

SYMBOL WHERE SECTION IS DRAWN

DETAIL SYMBOL

SECTION SYMBOL

SYMBOL	DESCRIPTION
SECURITY SYSTEMS	
SACP	SECURITY ALARM CONTROL PANEL
DS	SECURITY ALARM DOOR SWITCH
K	SECURITY ALARM KEY PAD
R	SECURITY SYSTEM CARD ACCESS READER
WS	SECURITY ALARM WINDOW SWITCH
	SECURITY ALARM MOTION DETECTOR
CCTV	CLOSED CIRCUIT TV CAMERA
PTZ	PAN, TILT, ZOOM CAMERA LENS CONTROLS
GB	GLASS BREAK DETECTOR
FIRE ALARM SYSTEMS	
H 200 R	FIRE ALARM HEAT DETECTOR 135ŶF FIXED TEMPERATURE UNLESS OTHERWISE NOTED. "200" DENOTES 200ŶF FIXED TEMPERATURE, "R" DENOTES FIXED TEMPERATURE RATE–OF–RISE TYPE.
? I	FIRE ALARM SMOKE DETECTOR PHOTOELECTRIC TYPE UNLESS OTHERWISE NOTED. "I" DENOTES IONIZATION TYPE.
? D	FIRE ALARM DUCT SMOKE DETECTOR
FACP	FIRE ALARM CONTROL PANEL
FV	FIRE ALARM VENTILATION PANEL WITH GRAPHIC PANEL
FA	REMOTE FIRE ALARM ANNUNCIATOR PANEL
F	FIRE ALARM MASTER BOX
F	FIRE ALARM HORN, MOUNT UP 7'–6".
15 F	FIRE ALARM STROBE, MOUNT UP 6'–8". 15 = CANDELA RATING
15 F	FIRE ALARM HORN AND STROBE LIGHT COMBINATION, MOUNT UP 6'–8". 15 = CANDELA RATING
F	FIRE ALARM MANUAL PULL STATION, MOUNT UP 4'–0".
VSS	SPRINKLER VALVE SUPERVISORY SWITCH.
SFS	SPRINKLER FLOW ALARM SWITCH
F	FIRE ALARM BELL
FB	WEATHERPROOF HI–INTENSITY FIRE ALARM STROBE LIGHT WITH HORN
PIR	PASSIVE INFRARED DETECTOR
R	SMOKE BEAM DETECTOR (RECEIVER)
T	SMOKE BEAM DETECTOR (TRANSMITTER)
	FIRE ALARM SMOKE DETECTOR REMOTE INDICATOR AND TEST SWITCH

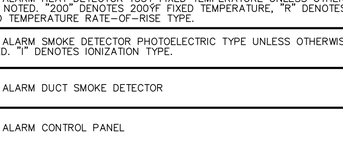

EXISTING CONDITION DESIGNATION

GENERAL NOTES:

1. THE PLANS DO NOT SHOW RACEWAYS AND CONDUCTORS BETWEEN RECEPTACLES, LIGHTING FIXTURES AND SWITCHES. HOWEVER, THE CONTRACTOR FURNISHED AND INSTALLED THESE CONNECTIONS IN ACCORDANCE WITH THE ASSIGNED FIXTURE OR RECEPTACLE CIRCUIT NUMBER AND SWITCH DESIGNATIONS. HOMERUNS SHOWN CONCEALED WERE INDICATIVE OF ENTIRE CIRCUIT INSTALLATION. THE SAME APPLIED FOR HOME-RUNS SHOWN EXPOSED. REFER TO SPECIFICATIONS FOR MATERIALS AND INSTALLATION REQUIREMENTS.

2. CONDUIT AND WIRE IS NOT SHOWN FOR FIXTURES, SWITCHES AND/OR RECEPTACLES, HOWEVER, IT WAS PROVIDED BY THE ELECTRICAL CONTRACTOR AND WAS:
   A. 3/4" (MIN) CONDUIT RUN:
      1. EXPOSED IN UNFINISHED AREAS
      2. CONCEALED ABOVE HUNG CEILINGS
      3. IN WALLS AND SLABS IN FINISHED AREAS
   B. NO OF WIRES AS REQUIRED
      1. NO 12 COPPER (MIN) TYPE "THWN/THHN"
      2. NO 10 COPPER TYPE "THWN/THHN" IF LENGTH OF RUN EXCEEDS 100 FEET TO REDUCE VOLTAGE DROP

3. THE WIRING DIAGRAMS, QUANTITY AND SIZE OF WIRES AND CONDUIT REPRESENT A SUGGESTED ARRANGEMENT BASED UPON SELECTED STANDARD COMPONENTS OF ELECTRICAL EQUIPMENT. MODIFICATIONS ACCEPTABLE TO THE ENGINEER MAY BE MADE BY THE CONTRACTOR TO ACCOMMODATE EQUIPMENT ACTUALLY PURCHASED. THE BASIC SEQUENCE AND METHOD OF CONTROL MUST BE MAINTAINED AS INDICATED ON THE DRAWINGS AND/OR SPECIFICATIONS.

4. THE CONTRACTOR COORDINATED THIS DRAWING WITH ALL ELECTRICAL DRAWINGS AND ALL OTHER ASSOCIATED DISCIPLINES.

5. THE CONTRACTOR FIELD VERIFIED ALL LOCATIONS AND EQUIPMENT FOR EXACT LOCATIONS AND ROUTING.

6. THE CONTRACTOR CHECKED ALL LOCAL CONDITIONS AFFECTING THE WORK AND MADE A THROUGH EXAMINATION OF THE ROUTE OF THE LINES, PLANS AND PREMISES IN ORDER TO BE ENTIRELY FAMILIAR WITH THE INSTALLATION.

7. NOTIFIED THE OWNER REPRESENTATIVE IN WRITING OF ANY DISCREPANCIES OR NECESSARY MODIFICATIONS PRIOR TO PROCEEDING WITH CONSTRUCTION.

GENERAL NOTE
THIS IS A STANDARD LEGEND.
SOME SYMBOLS MAY NOT APPEAR
ON THE DRAWINGS.

FINAL AS-BUILT

XREFS: RKANYBDR

REV. NO.	DATE	DRWN	CHKD	REMARKS

DESIGNED BY:
DRAWN BY:
SHEET CHK'D BY:
CROSS CHK'D BY:
APPROVED BY:
DATE: MARCH 2012

PREPARED BY:
CAPE
CAPE Environmental Management, Inc.

US Army Corps of Engineers Kansas City District
TRENCH PACKAGE
ROCKAWAY BOROUGH SUPERFUND SITE
EAST MAIN/WALL STREET PLUME - OU2
ROCKAWAY BOROUGH, NEW JERSEY

ELECTRICAL
LEGEND AND ABBREVIATIONS II

PROJECT 50001.005
FILE NAME: E002SY00 AS-BUILT
SHEET NO.
E-2

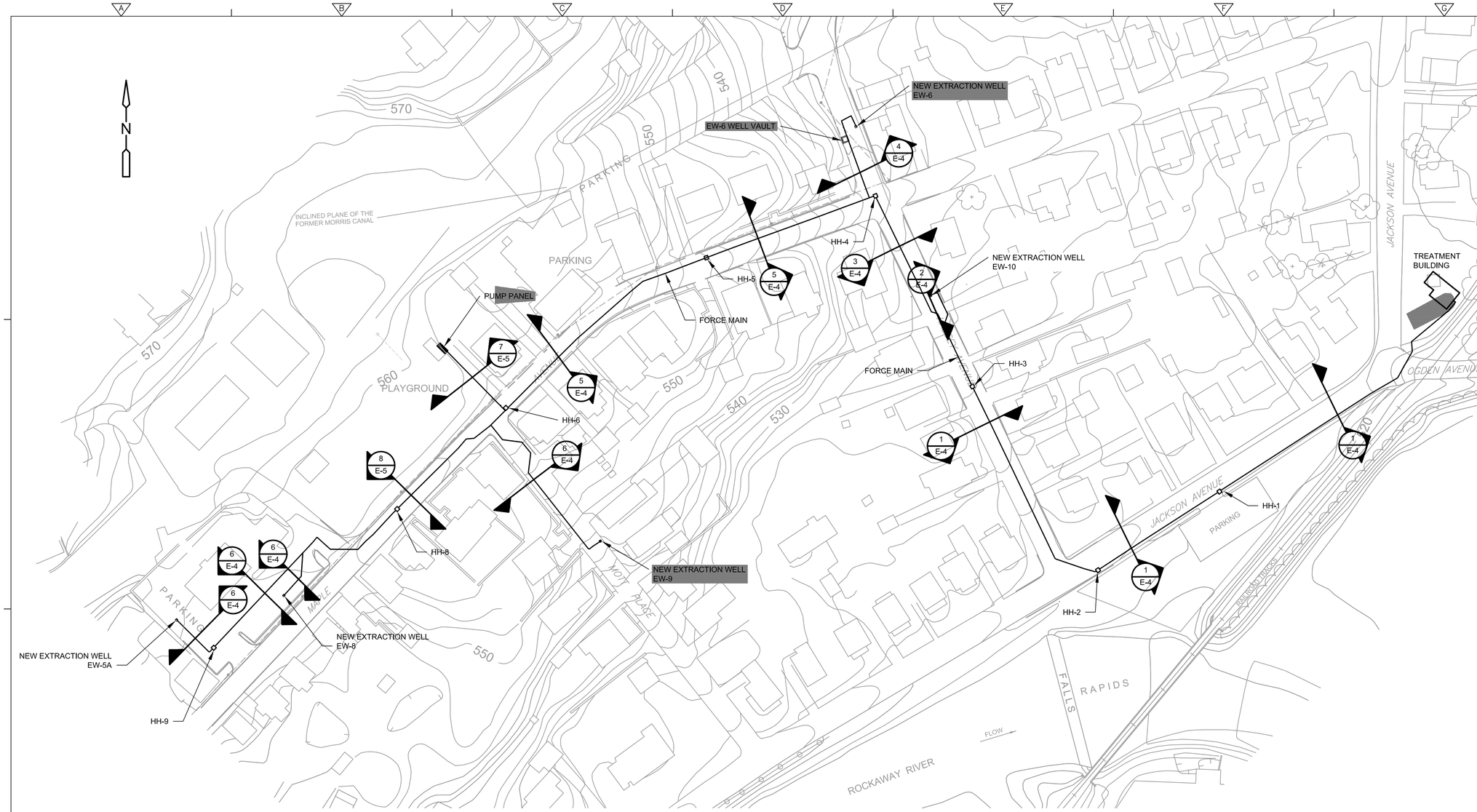

ELECTRICAL SITE

PLAN

1" = 60'-0"

LEGEND

APPROXIMATE LOCATION OF CONDUIT

HANDHOLE (HH)

NOTES

1. DRAWINGS ARE BASED ON SURVEY PREPARED BY STEWART SURVEYING & ENGINEERING LLC AUGUST 2004 AND JULY 2005 AND LAN ASSOCIATES AUGUST 2007.
2. LOCATION OF CONDUITS ARE APPROXIMATE. SEE SHEETS C-1 THROUGH C-6 AND SHEETS E-4 AND E-5 FOR DETAILS.
3. INSTALLED CONDUITS IN ACCORDANCE WITH SPECIFICATION SECTION 16600.
4. THE CONTRACTOR COORDINATED NEW ELECTRICAL WORK WITH ALL OTHER ASSOCIATED DISCIPLINES.
5. THE CONTRACTOR FIELD VERIFIED ALL NEW UNDERGROUND CONDUIT ROUTING AND CROSSINGS WITH ALL OTHER NEW AND EXISTING UTILITIES INCLUDING UNDERGROUND EXISTING ELECTRICAL UTILITIES.
6. ALL SLAB PENETRATIONS USED SCHEDULE 40 PVC SLEEVE.
7. PITCHED UNDERGROUND CONDUITS TO DRAIN TO MANHOLES AND HANDHOLES. MINIMUM PITCH 1" PER 100'.
8. NO CONDUIT HAD MORE THAN THE EQUIVALENT OF THREE 90 DEGREE BENDS IN ANY ONE RUN. PULL BOXES WERE PROVIDED AS REQUIRED BY THE NEC AFTER EVERY 270 DEGREES OF BENDS. POWER CONDUITS HAD SEPARATE PULL BOXES FROM INSTRUMENTATION CONDUITS. INSTRUMENTATION IS DEFINED AS BUT NOT LIMITED TO THE FOLLOWING CABLE DESIGNATIONS: DIGTIAL, ANALOG, FIBER OPTIC, PHONE, AND FIRE PROTECTION.
9. POWER AND COMMUNICATION FROM TREATMENT BUILDING DISTRIBUTION AND PLC PANELS.

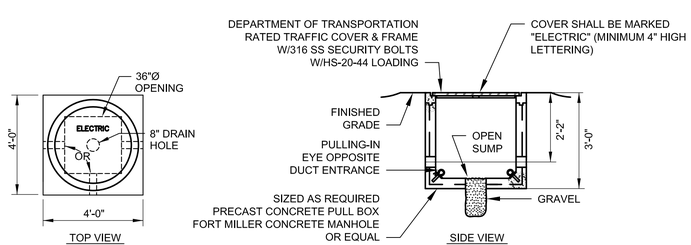

HANDHOLE

DETAIL A

NTS

1" = 60'

30 0 60

FINAL AS-BUILT

REV. NO.	DATE	DRWN	CHKD	REMARKS

DESIGNED BY:
DRAWN BY:
SHEET CHK'D BY:
CROSS CHK'D BY:
APPROVED BY:
DATE: MARCH 2012

PREPARED BY:
CAPE
CAPE Environmental Management, Inc.

US Army Corps of Engineers Kansas City District
TRENCH PACKAGE
ROCKAWAY BOROUGH SUPERFUND SITE
EAST MAIN/WALL STREET PLUME - OU2
ROCKAWAY BOROUGH, NEW JERSEY

ELECTRICAL SITE PLAN

PROJECT 50001.005
FILE NAME: ESTPL003
SHEET NO.
E-3

XREFS: RKAWYBDR, ESTWP001, XSTPL001

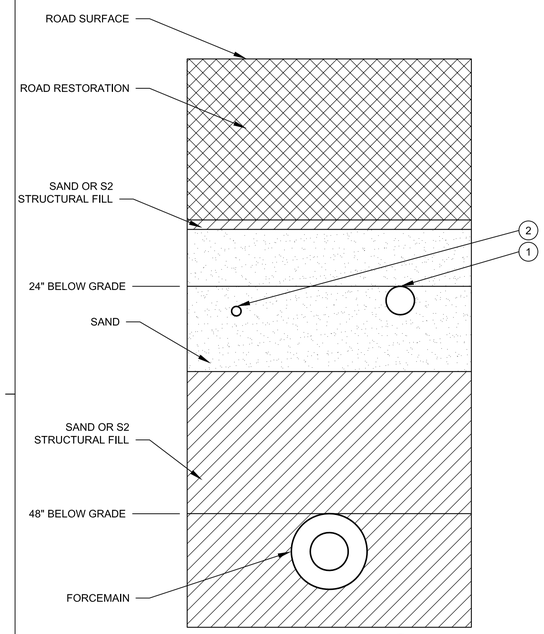

SECTION 1
1 1/2"=1'-0" E-3

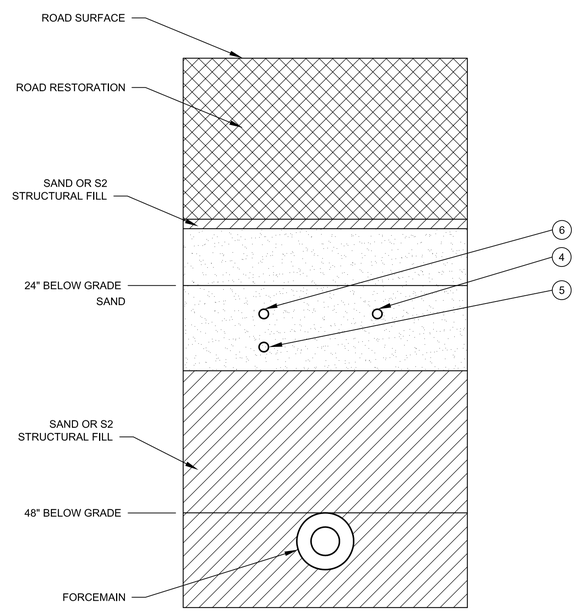

SECTION 2
1 1/2"=1'-0" E-3

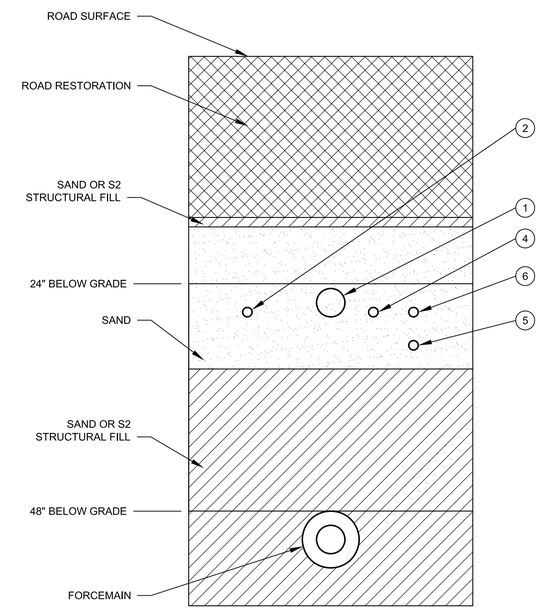

SECTION 3
1 1/2"=1'-0" E-3

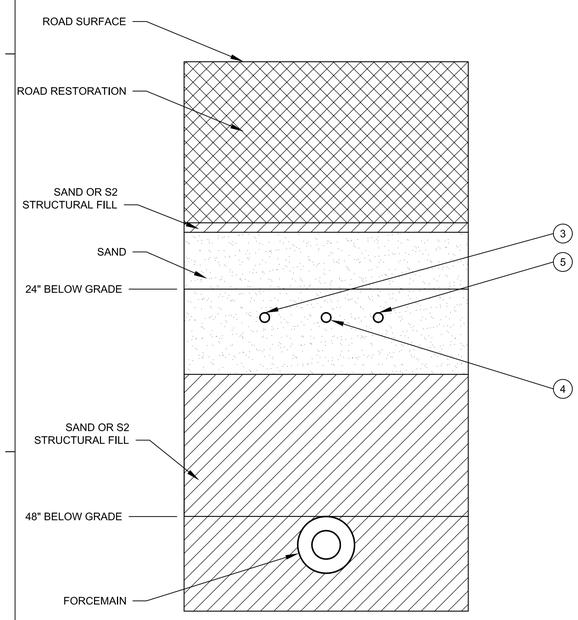

SECTION 4
1 1/2"=1'-0" E-3

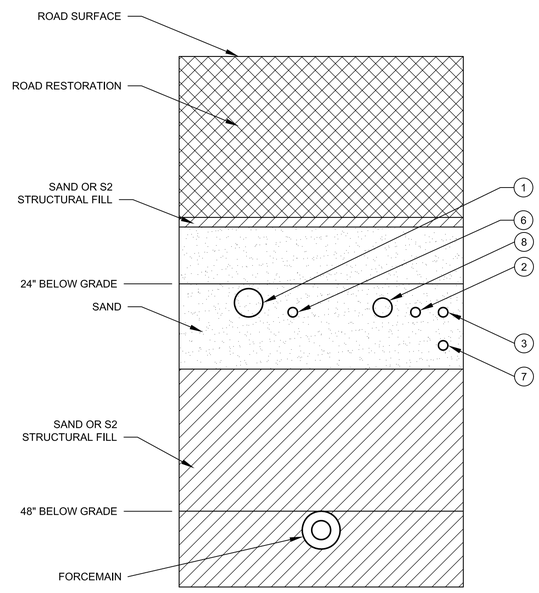

SECTION 5
1 1/2"=1'-0" E-3

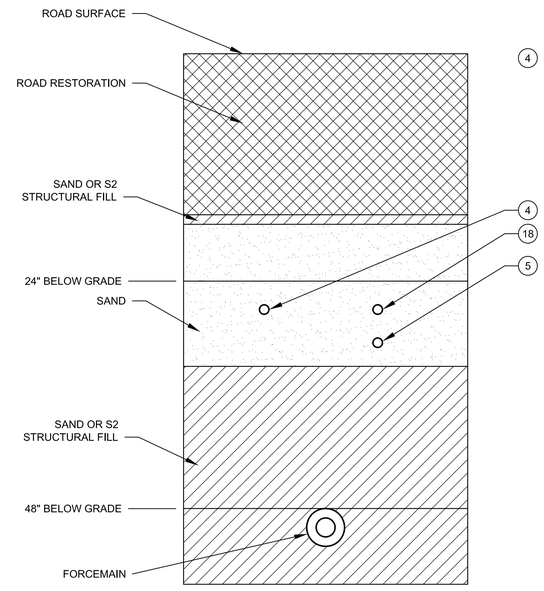

SECTION 6
1 1/2"=1'-0" E-3

NOTES

1. FOR ADDITIONAL TRENCH REQUIREMENTS SEE DETAILS B AND C ON CIVIL DRAWING C-9.

2. INSTALLED CONDUITS IN ACCORDANCE WITH SPECIFICATION SECTION 16600.

3. THE CONTRACTOR ENSURED 6" SEPARATION BETWEEN CONDUITS CONTAINING ANALOG SIGNALS AND ADJACENT CONDUITS CONTAINING POWER CIRCUITS.

Conduit #	Section 1	Description
1	3" C, 3#4/O, 1#4G	Main Power
2	1" C, 3 pair fiber	System Network
	Section 2 EW-10	
6	1" C, 3#8 AWG, 1#10G VFD Cable	EW-10 Pump Leads
4	1" C, 2#10 AWG, 1#10G	Heat Trace Circuit
5	1" C, 1-2/C#16 TSP, 1 Flow Meter Vendor Cable,	Flow Meter Analog, Level Analog,
	1 Flow Meter Power Vendor Cable,	Flow Meter Power Cable,
	6#12 AWG	Pump Temperature, Moisture Switches
	Section 3	
1	3" C, 3#4/O, 1#4G	Main Power
2	1" C, 3 pair fiber	System Network
6	1" C, 3#8 AWG, 1#10G VFD Cable	EW-10 Pump Leads
4	1" C, 2#10 AWG, 1#10G	Heat trace Circuit
5	1" C, 1-2/C#16 TSP, 1 Flow Meter Vendor Cable,	Flow Meter Analog, Level Analog,
	1 Flow Meter Power Vendor Cable,	Flow Meter Power Cable,
	6#12 AWG	Pump Temperature, Moisture Switches
	Section 4 EW-6	
3	1" C, 3#8 AWG, 1#10G VFD Cable	EW-6 Pump Leads
4	1" C, 2#10 AWG, 1#10G	Heat Trace Circuit
5	1" C, 1-2/C#16 TSP, 1 Flow Meter Vendor Cable,	Flow Meter Analog, Level Analog,
	1 Flow Meter Power Vendor Cable,	Flow Meter Power Cable,
	6#12 AWG	Pump Temperature, Moisture Switches
	Section 5	
1	3" C, 3#4/O, 1#4G	Main Power
2	1" C, 3 pair fiber	System Network
6	1" C, 3#8 AWG, 1#10G VFD Cable	EW-10 Pump Leads
3	1" C, 3#8 AWG, 1#10G VFD Cable	EW-6 Pump Leads
7	1" C, 2#10 AWG, 1#10G	EW-10, EW-6 Heat Trace Circuit
8	2" C, 2-2/C#16 TSP, 1 Flow Meter Vendor Cable,	Flow Meter Analog, Level Analog,
	1 Flow Meter Power Vendor Cable,	Flow Meter Power Cable,
	12#12 AWG	Pump Temperature, Moisture Switches
	Section 6 EW-5A, EW-8, EW-9	
18	1" C, 3#10AWG, 1#10G VFD Cable	Pump Leads
4	1" C, 2#10 AWG, 1#10G	Heat Trace Circuit
5	1" C, 1-2/C#16 TSP, 1 Flow Meter Vendor Cable,	Flow Meter Analog, Level Analog,
	1 Flow Meter Power Vendor Cable,	Flow Meter Power Cable,
	6#12 AWG	Pump Temperature, Moisture Switches
	Section 7	
1	3" C, 3#4/O, 1#4G	Main Power
2	1" C, 3 pair fiber	System Network
6	1" C, 3#8 AWG, 1#10G VFD Cable	EW-10 Pump Leads
3	1" C, 3#8 AWG, 1#10G VFD Cable	EW-6 Pump Leads
9	1" C, 3#8 AWG, 1#10G VFD Cable	EW-9 Pump Leads
10	1" C, 3#8 AWG, 1#10G VFD Cable	EW-8 Pump Leads
11	1" C, 3#8 AWG, 1#10G VFD Cable	EW-5A Pump Leads
12	2" C, 10#10 AWG, 5#10G	Heat Trace Circuit
13	2" C, 5-2/C#16 TSP, 5 Flow Meter Vendor Cable,	Flow Meter Analog, Level Analog,
	5 Flow Meter Power Vendor Cable,	Flow Meter Power Cable,
	30#12 AWG	Pump Temperature, Moisture Switches
	Section 8	
11	1" C, 3#8 AWG, 1#10G VFD Cable	EW-5A Pump Leads
10	1" C, 3#8 AWG, 1#10G VFD Cable	EW-8 Pump Leads
14	1" C, 4#10 AWG, 2#10G	EW-8 Heat Trace Circuit
15	1" C, 4#10 AWG, 2#10G	EW-5A Heat Trace Circuit
16	1" C, 1-2/C#16 TSP, 1 Flow Meter Vendor Cable,	EW-8 Flow Meter Analog, Level Analog,
	1 Flow Meter Power Vendor Cable,	EW-8 Flow Meter Power Cable,
17	1" C, 1-2/C#16 TSP, 1 Flow Meter Vendor Cable,	EW-5A Flow Meter Analog, Level Analog,
	1 Flow Meter Power Vendor Cable,	EW-5A Flow Meter Power Cable,

1 1/2" = 1'- 0"
.5 0 .5 1

FINAL AS-BUILT

XREFS: RKAWYBDR

REV. NO.	DATE	DRWN	CHKD	REMARKS

DESIGNED BY:
DRAWN BY:
SHEET CHK'D BY:
CROSS CHK'D BY:
APPROVED BY:
DATE: MARCH 2012

PREPARED BY:
CAPE
CAPE Environmental Management, Inc.

US Army Corps of Engineers Kansas City District
TRENCH PACKAGE
ROCKAWAY BOROUGH SUPERFUND SITE
EAST MAIN/WALL STREET PLUME - OU2
ROCKAWAY BOROUGH, NEW JERSEY

ELECTRICAL CONDUIT AND FORCE MAIN TRENCH SECTIONS I

PROJECT 50001.005
FILE NAME: ESTSC004 AS-BUILT
SHEET NO.
E-4

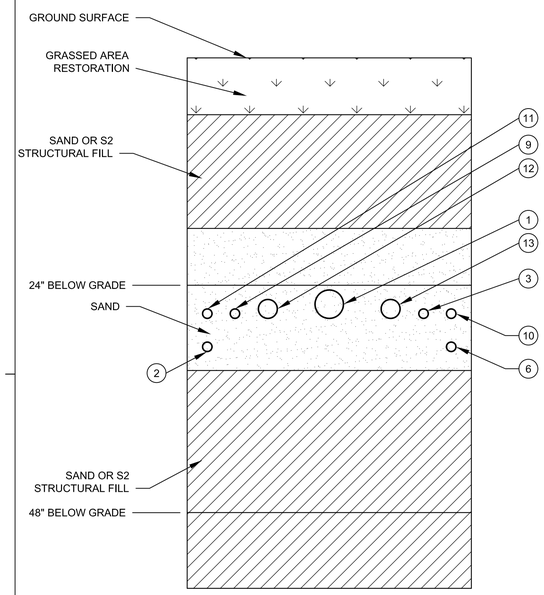

SECTION 7
1 1/2"=1'-0"
E-3

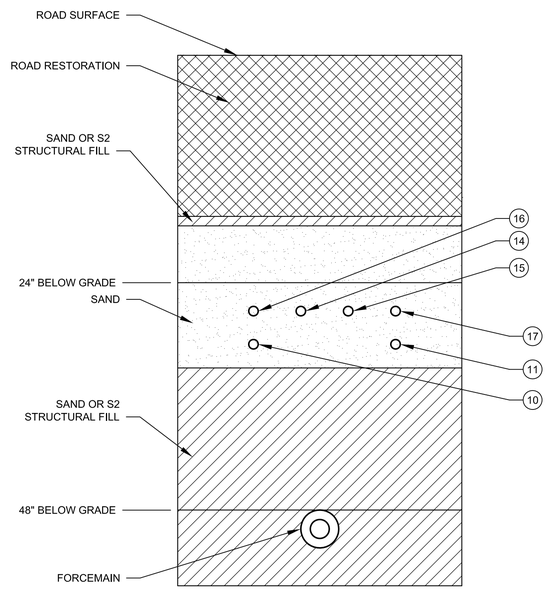

SECTION 8
1 1/2"=1'-0"
E-3

NOTES

1. FOR ADDITIONAL TRENCH REQUIREMENTS SEE DETAILS B AND C ON CIVIL DRAWING C-9.

2. INSTALLED CONDUITS IN ACCORDANCE WITH SPECIFICATION SECTION 16600.

FINAL AS-BUILT

1 1/2" = 1'- 0"
.5 0 .5 1

XREFS: RKAWYBDR

REV. NO.	DATE	DRWN	CHKD	REMARKS

DESIGNED BY:
DRAWN BY:
SHEET CHK'D BY:
CROSS CHK'D BY:
APPROVED BY:
DATE: MARCH 2012

PREPARED BY:
CAPE
CAPE Environmental Management, Inc.

US Army Corps of Engineers Kansas City District
TRENCH PACKAGE
ROCKAWAY BOROUGH SUPERFUND SITE
EAST MAIN/WALL STREET PLUME - OU2
ROCKAWAY BOROUGH, NEW JERSEY

ELECTRICAL CONDUIT AND FORCE MAIN TRENCH SECTIONS II

PROJECT 50001.005
FILE NAME: ESTSC005 AS-BUILT
SHEET NO.
E-5

LEGEND

- AI — ANALOG INPUT
- AO — ANALOG OUTPUT
- DI — DIGITAL INPUT
- DO — DIGITAL OUTPUT
- X2 — ALLEN BRADLEY MOTOR STARTER CONNECTION POINT
- ▲ DEVICE LOCATED IN FIELD
- ■ DEVICE LOCATED IN PUMP PANEL

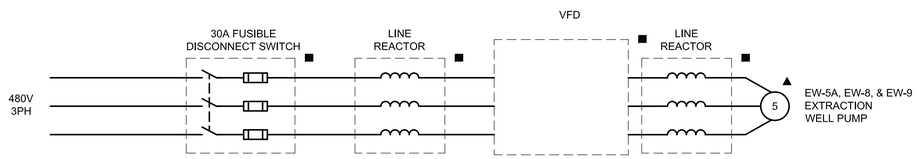

EW-5A, EW-8, AND EW-9 MOTOR ELEMENTARY

DIAGRAM 1 / -

NTS

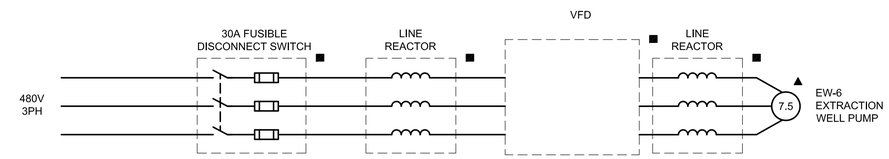

EW-6 MOTOR ELEMENTARY

DIAGRAM 2 / -

NTS

NOTES:

1. EW-8 INSTRUMENTS ARE 700 SERIES.
2. EW-9 INSTRUMENTS ARE 200 SERIES.
3. EW-5A INSTRUMENTS ARE 100 SERIES
4. EW-6 INSTRUMENTS ARE 300 SERIES
5. EW-10 INSTRUMENTS ARE 800 SERIES.

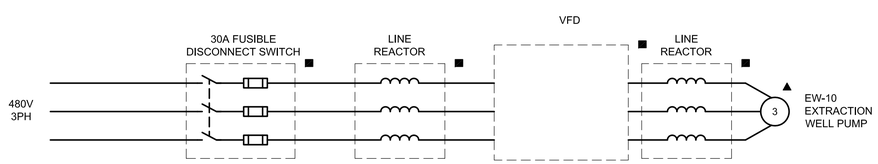

EW-10 MOTOR ELEMENTARY

DIAGRAM 3 / -

NTS

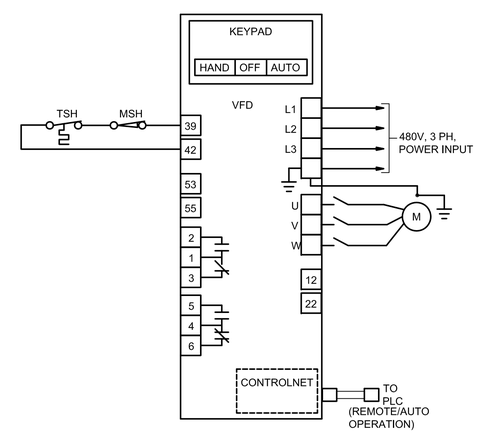

VFD

WIRING DIAGRAM

NTS

FINAL AS-BUILT

REV. NO.	DATE	DRWN	CHKD	REMARKS

DESIGNED BY:
DRAWN BY:
SHEET CHK'D BY:
CROSS CHK'D BY:
APPROVED BY:
DATE: MARCH 2012

PREPARED BY:
CAPE
CAPE Environmental Management, Inc.

US Army Corps of Engineers Kansas City District
TRENCH PACKAGE
ROCKAWAY BOROUGH SUPERFUND SITE
EAST MAIN/WALL STREET PLUME - OU2
ROCKAWAY BOROUGH, NEW JERSEY

ELECTRICAL MOTOR ELEMENTARY DIAGRAM I

PROJECT 50001.005
FILE NAME: ESTDI006 AS-BUILT
SHEET NO.
E-6

XREFS: RKAWYBD2

LEGEND:

⊠ - TERMINAL BLOCK (TB)

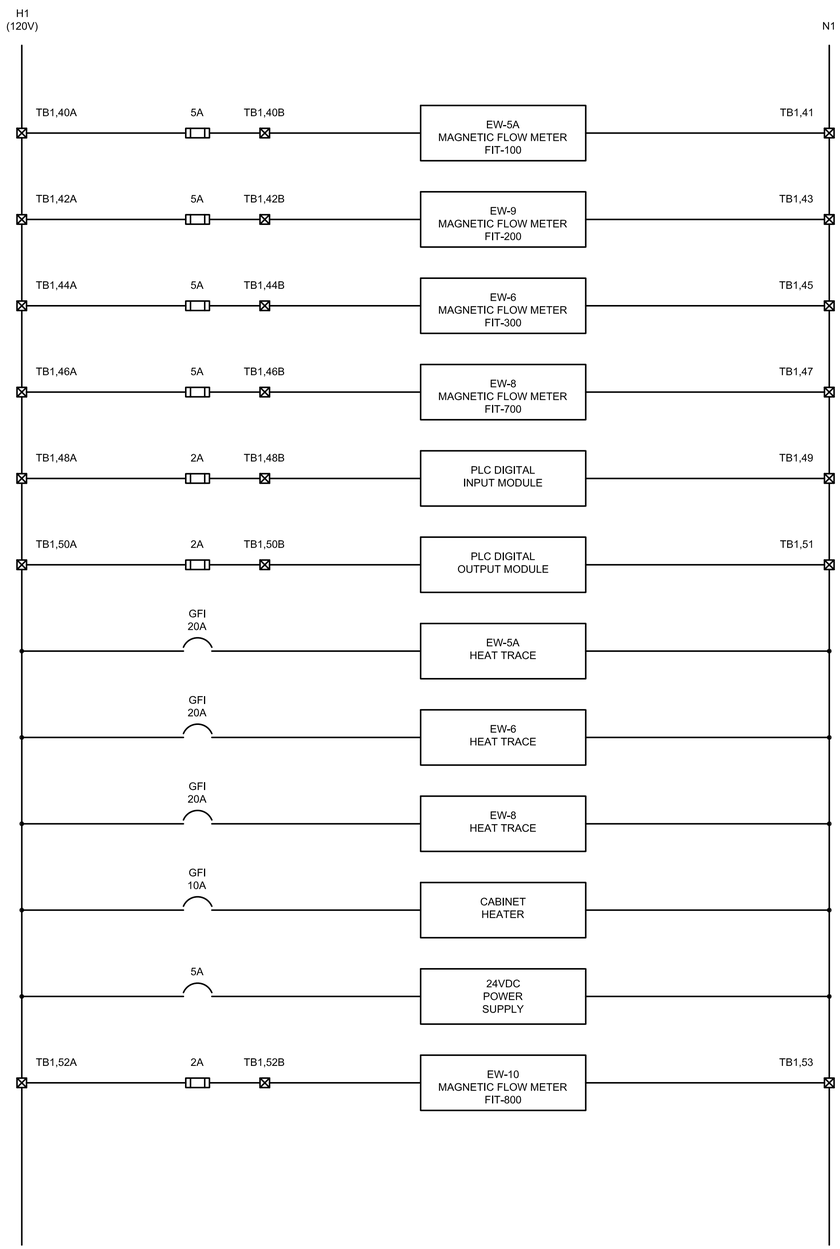

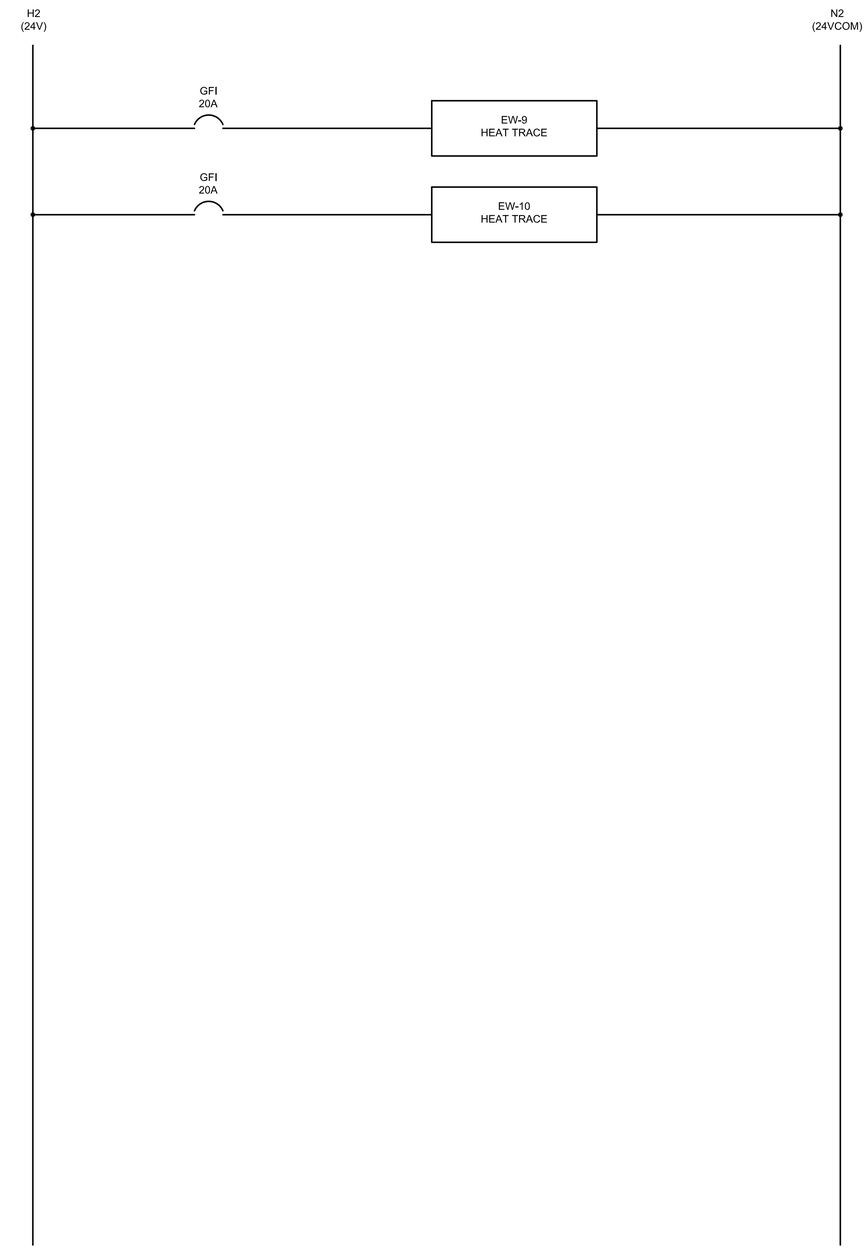

FINAL AS-BUILT

XREFS: RKAWYBD2

REV. NO.	DATE	DRWN	CHKD	REMARKS

DESIGNED BY:
DRAWN BY:
SHEET CHK'D BY:
CROSS CHK'D BY:
APPROVED BY:
DATE: MARCH 2012

PREPARED BY:
CAPE
CAPE Environmental Management, Inc.

US Army Corps of Engineers Kansas City District
TRENCH PACKAGE
ROCKAWAY BOROUGH SUPERFUND SITE
EAST MAIN/WALL STREET PLUME - OU2
ROCKAWAY BOROUGH, NEW JERSEY

ELECTRICAL
I/O PUMP PANEL PLC WIRING
DIAGRAM I

PROJECT 50001.005
FILE NAME: ESTDI007 AS-BUILT
SHEET NO.
E-7

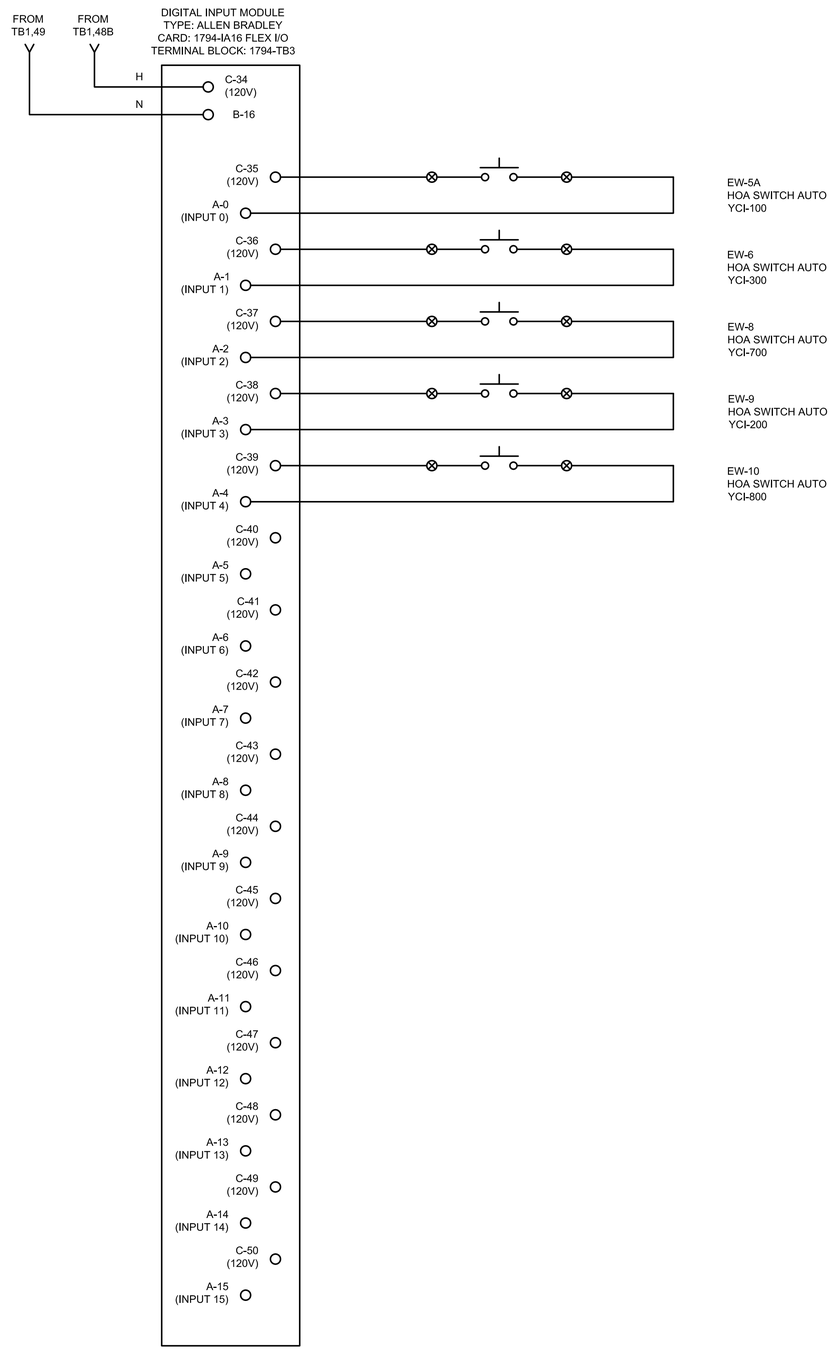

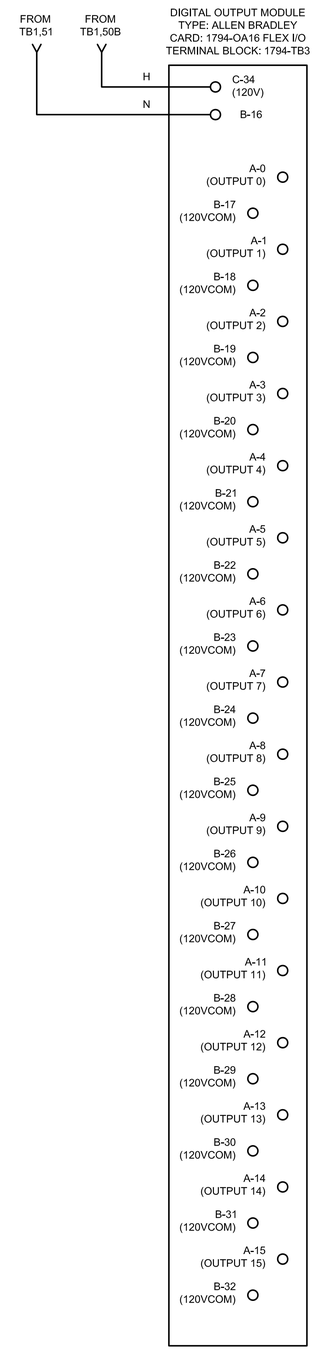

LEGEND:

○ - IFM TERMINAL

⊗ - FIELD DEVICE TERMINAL

FINAL AS-BUILT

XREFS: RKAWYBD2

REV. NO.	DATE	DRWN	CHKD	REMARKS

DESIGNED BY:
DRAWN BY:
SHEET CHK'D BY:
CROSS CHK'D BY:
APPROVED BY:
DATE: MARCH 2012

PREPARED BY:
CAPE
CAPE Environmental Management, Inc.

US Army Corps of Engineers Kansas City District
TRENCH PACKAGE
ROCKAWAY BOROUGH SUPERFUND SITE
EAST MAIN/WALL STREET PLUME - OU2
ROCKAWAY BOROUGH, NEW JERSEY

ELECTRICAL
PUMP PANEL PLC WIRING
DIAGRAM II

PROJECT 50001.005
FILE NAME: ESTDI008 AS-BUILT
SHEET NO.
E-8

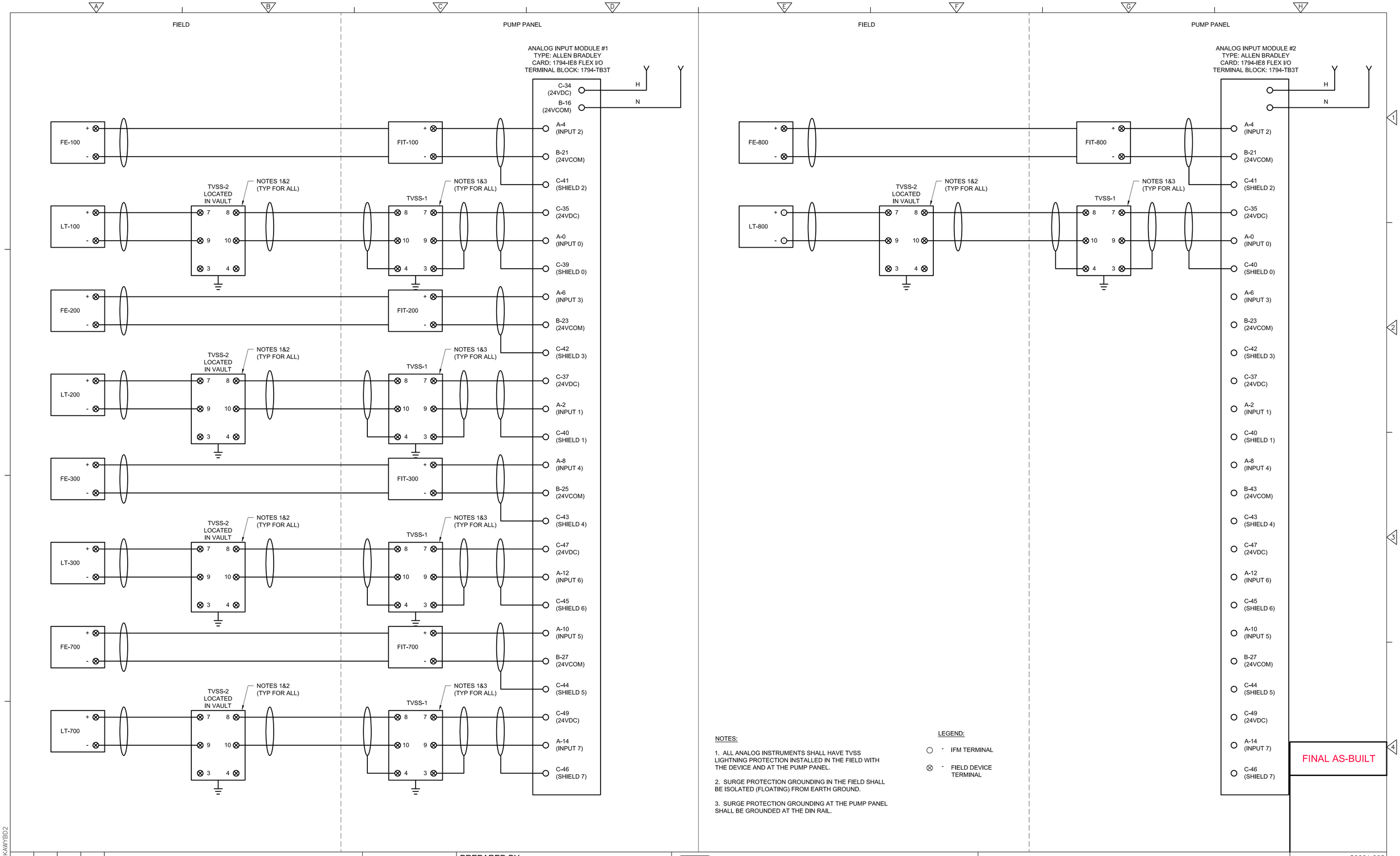

NOTES:

1. ALL ANALOG INSTRUMENTS SHALL HAVE TVSS LIGHTNING PROTECTION INSTALLED IN THE FIELD WITH THE DEVICE AND AT THE PUMP PANEL.

2. SURGE PROTECTION GROUNDING IN THE FIELD SHALL BE ISOLATED (FLOATING) FROM EARTH GROUND.

3. SURGE PROTECTION GROUNDING AT THE PUMP PANEL SHALL BE GROUNDED AT THE DIN RAIL.

LEGEND:

○ - IFM TERMINAL

⊗ - FIELD DEVICE TERMINAL

XREFS: RKAWYB02

REV. NO.	DATE	DRWN	CHKD	REMARKS

DESIGNED BY:
DRAWN BY:
SHEET CHK'D BY:
CROSS CHK'D BY:
APPROVED BY:
DATE: MARCH 2012

PREPARED BY:
CAPE
CAPE Environmental Management, Inc.

US Army Corps of Engineers Kansas City District
TRENCH PACKAGE
ROCKAWAY BOROUGH SUPERFUND SITE
EAST MAIN/WALL STREET PLUME - OU2
ROCKAWAY BOROUGH, NEW JERSEY

ELECTRICAL PUMP PANEL PLC WIRING DIAGRAM III

PROJECT 50001.005
FILE NAME: ESTDI009 AS-BUILT
SHEET NO.
E-9

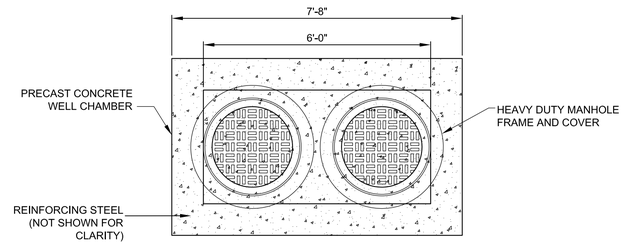

TOP VIEW

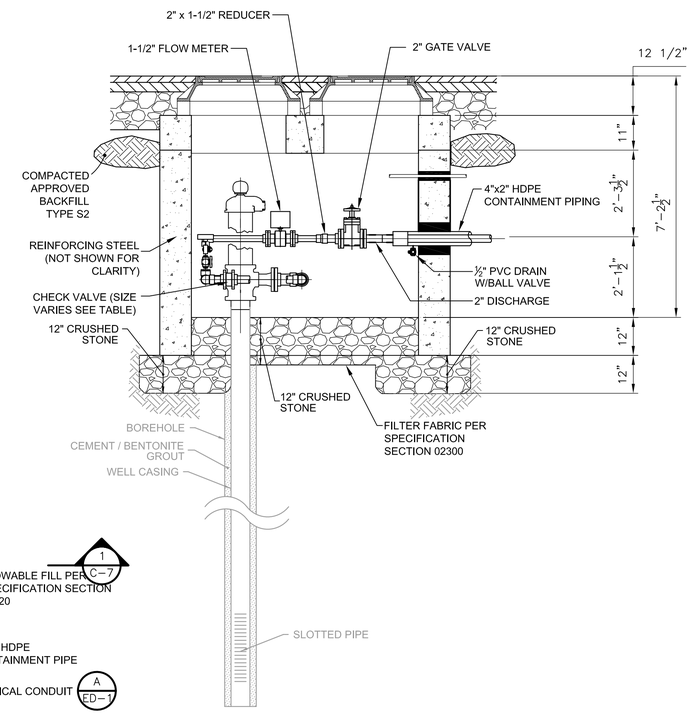

SECTION 1
1/2" = 1'-0"

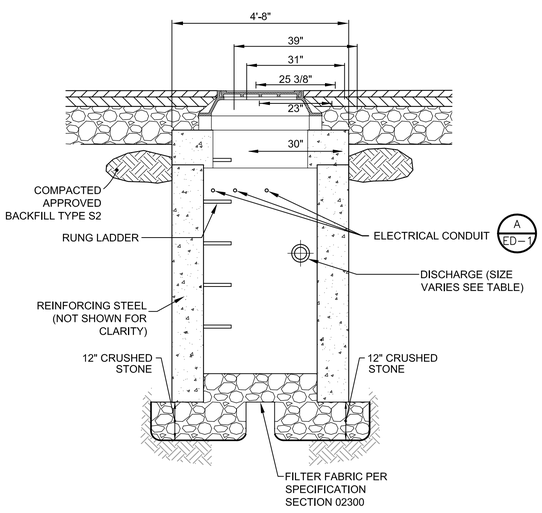

SECTION 2
1/2" = 1'-0"

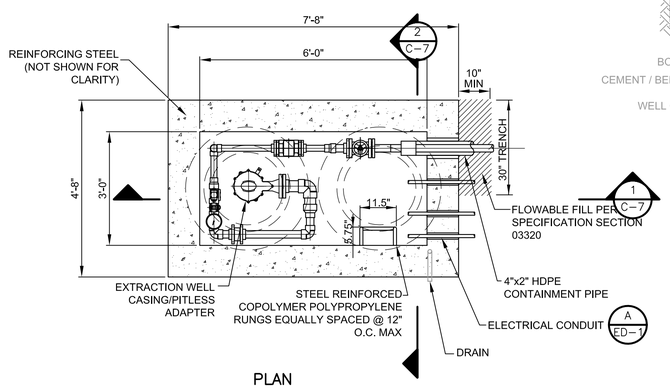

PLAN

EXTRACTION WELL CHAMBER – EW-5A AND EW-8,

DETAIL A
1/2" = 1'-0"

FINAL AS-BUILT

REV. NO.	DATE	DRWN	CHKD	REMARKS

DESIGNED BY:
DRAWN BY:
SHEET CHK'D BY:
CROSS CHK'D BY:
APPROVED BY:
DATE: MARCH 2012

PREPARED BY:
CAPE
CAPE Environmental Management, Inc.

US Army Corps of Engineers Kansas City District
TRENCH PACKAGE
ROCKAWAY BOROUGH SUPERFUND SITE
EAST MAIN/WALL STREET PLUME - OU2
ROCKAWAY BOROUGH, NEW JERSEY

EXTRACTION WELL VAULT DETAILS I
EAST MAIN/WALL STREET AREA

PROJECT 50001.005
FILE NAME: CSTDT009 AS-BUILT
SHEET NO.
ED-1

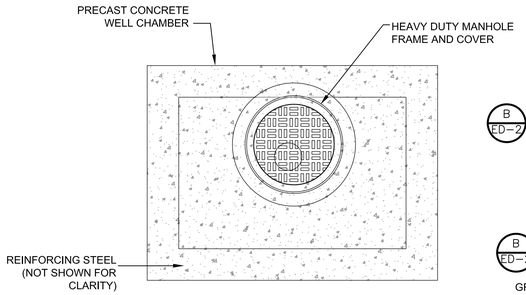

TOP VIEW

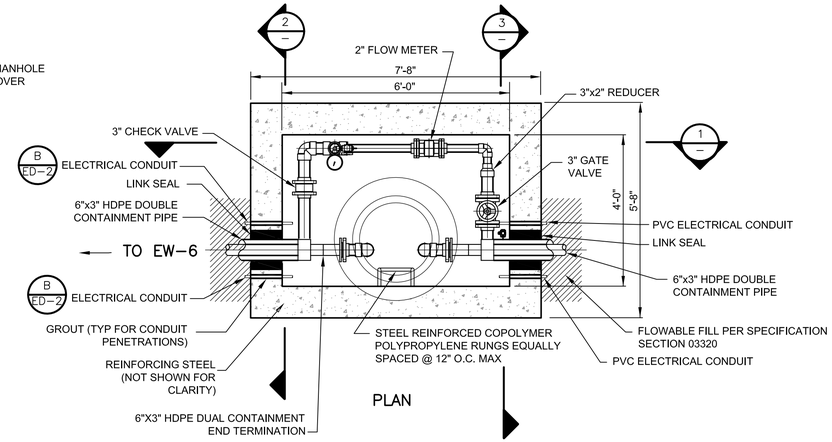

EXTRACTION WELL VAULT – EW–6

DETAIL A
1/2" = 1'–0"

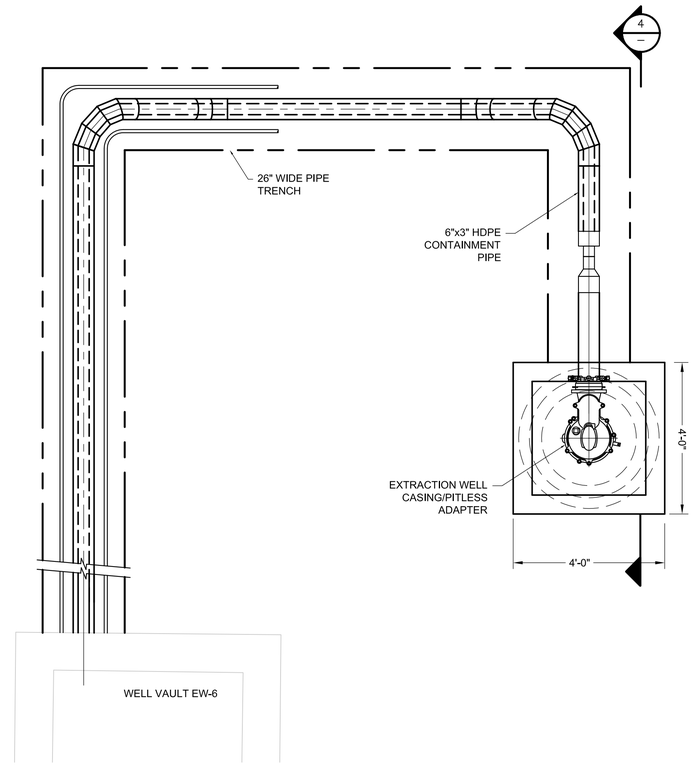

EXTRACTION WELL CHAMBER – EW–6

DETAIL B
1/2" = 1'–0"

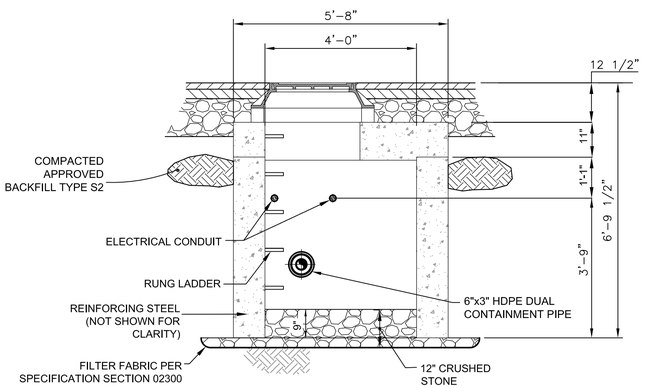

SECTION 2
1/2" = 1'–0"

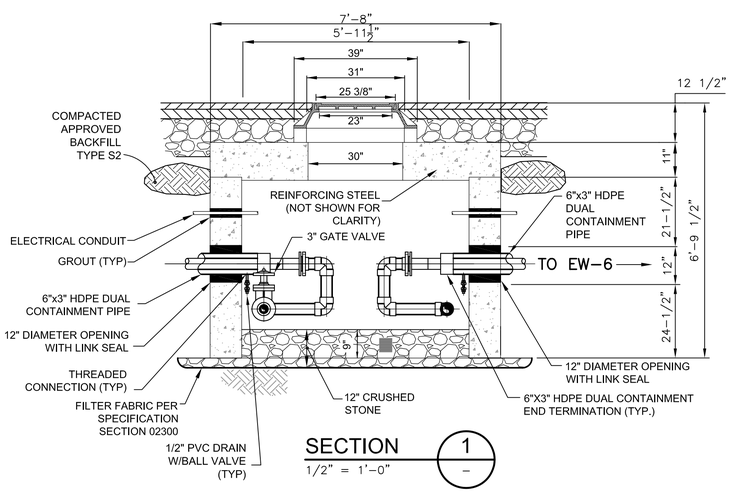

SECTION 1
1/2" = 1'–0"

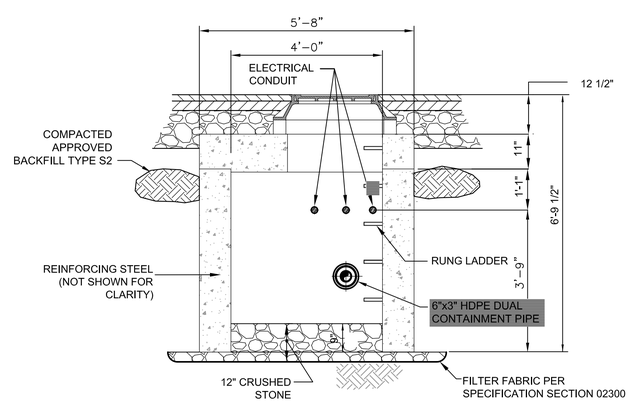

SECTION 3
1/2" = 1'–0"

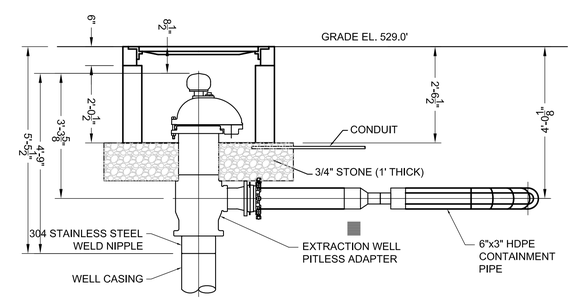

SECTION 4
1/2" = 1'–0"

FINAL AS-BUILT

XREFS: RKAWYBDR

REV. NO.	DATE	DRWN	CHKD	REMARKS

DESIGNED BY:
DRAWN BY:
SHEET CHK'D BY:
CROSS CHK'D BY:
APPROVED BY:
DATE: MARCH 2012

PREPARED BY:
CAPE
CAPE Environmental Management, Inc.

US Army Corps of Engineers Kansas City District
TRENCH PACKAGE
ROCKAWAY BOROUGH SUPERFUND SITE
EAST MAIN/WALL STREET PLUME - OU2
ROCKAWAY BOROUGH, NEW JERSEY

EXTRACTION WELL DETAILS II
EAST MAIN/WALL STREET AREA

PROJECT 50001.005
FILE NAME: CSTDT010 AS–BUILT
SHEET NO.
ED-2

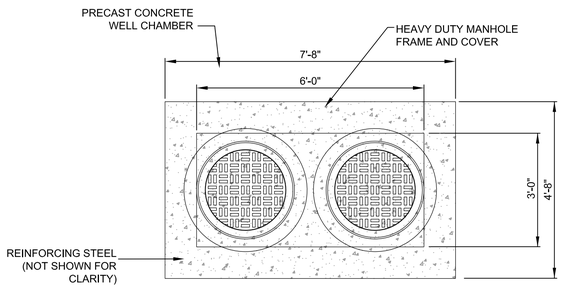

TOP VIEW

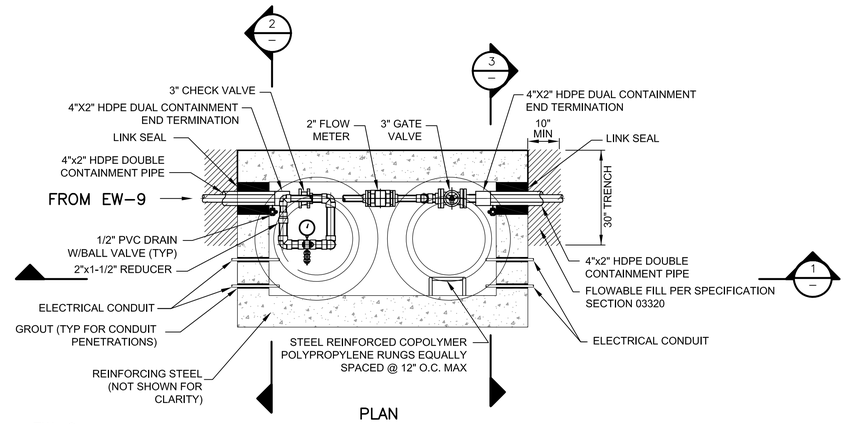

PLAN

EXTRACTION WELL VAULT – EW–9

DETAIL A
1/2" = 1'–0"

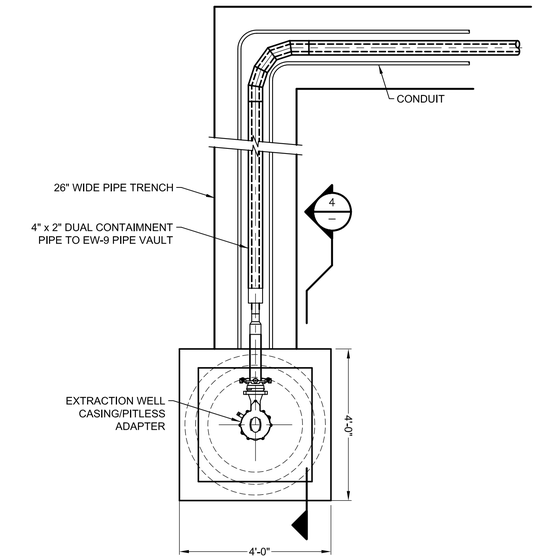

EXTRACTION WELL CHAMBER – EW–9

DETAIL B
1/2" = 1'–0"

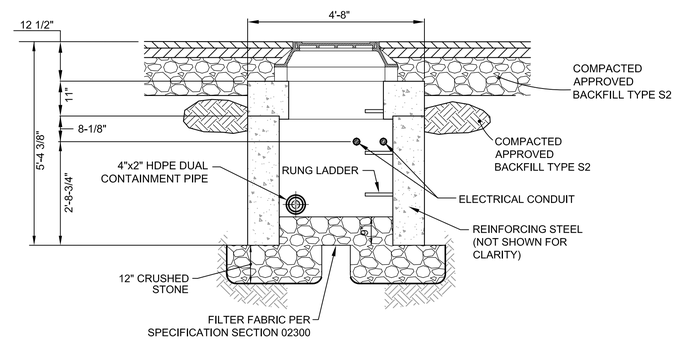

SECTION 3
1/2" = 1'–0"

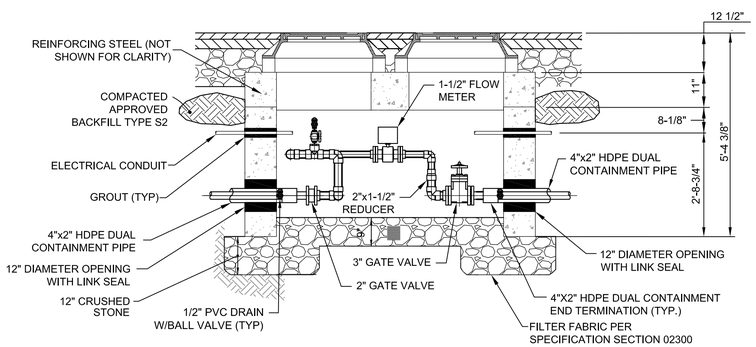

SECTION 1
1/2" = 1'–0"

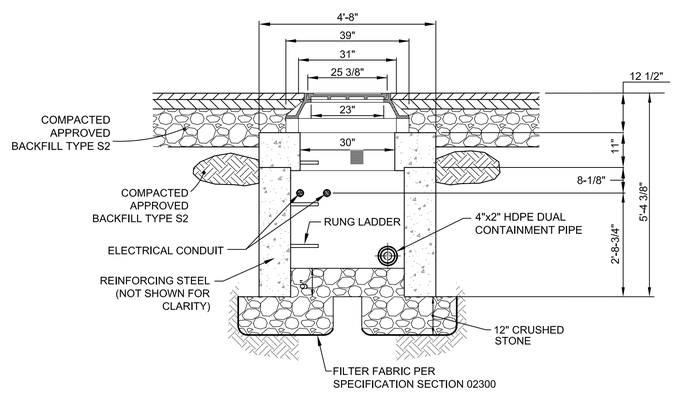

SECTION 2
1/2" = 1'–0"

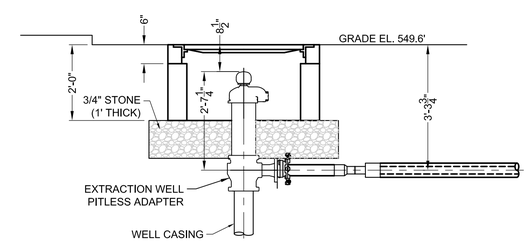

SECTION 4
1/2" = 1'–0"

FINAL AS-BUILT

XREFS: RKAWYBDR

REV. NO.	DATE	DRWN	CHK'D	REMARKS

DESIGNED BY:
DRAWN BY:
SHEET CHK'D BY:
CROSS CHK'D BY:
APPROVED BY:
DATE: MARCH 2012

PREPARED BY:
CAPE
CAPE Environmental Management, Inc.

US Army Corps of Engineers Kansas City District
TRENCH PACKAGE
ROCKAWAY BOROUGH SUPERFUND SITE
EAST MAIN/WALL STREET PLUME - OU2
ROCKAWAY BOROUGH, NEW JERSEY

EXTRACTION WELL DETAILS III
EAST MAIN/WALL STREET AREA

PROJECT 50001.005
FILE NAME: CSTDT011 AS–BUILT
SHEET NO.
ED-3

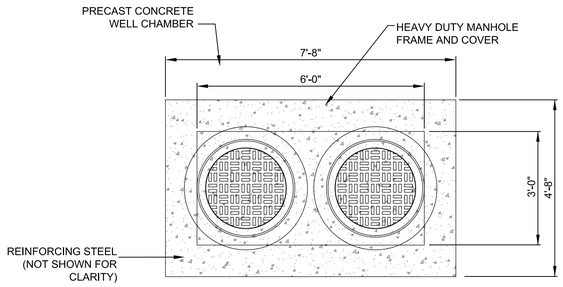

TOP VIEW

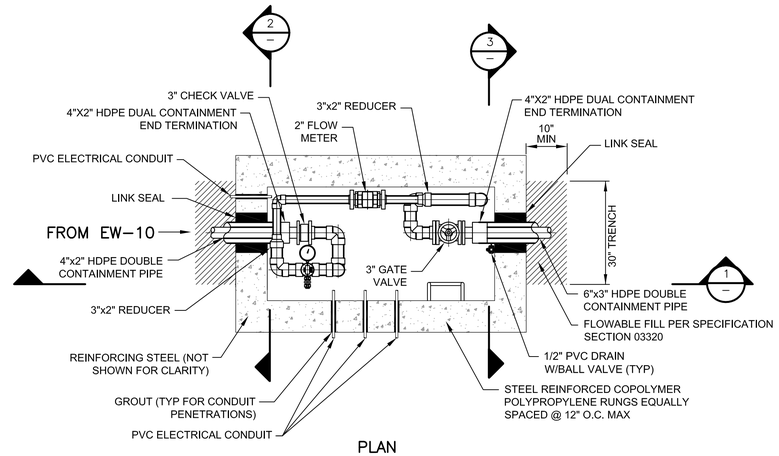

PLAN

EXTRACTION WELL CHAMBER – EW–10

DETAIL A
1/2" = 1'–0"

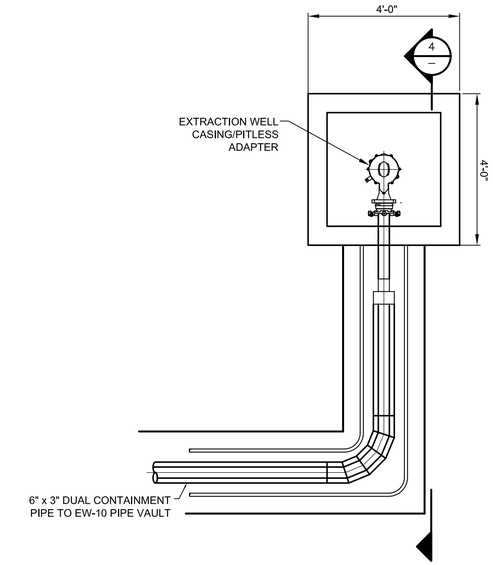

EXTRACTION WELL CHAMBER – EW–10

DETAIL B
1/2" = 1'–0"

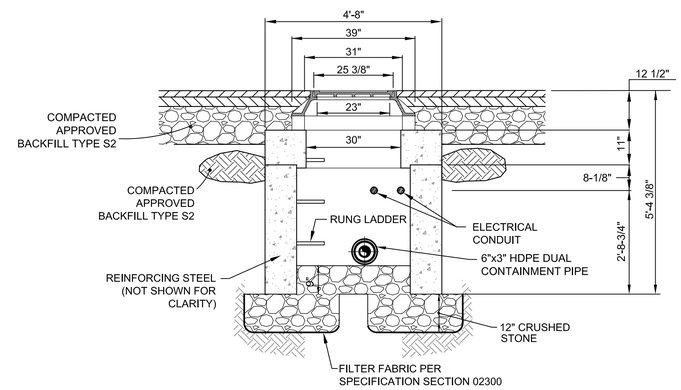

SECTION 2
1/2" = 1'–0"

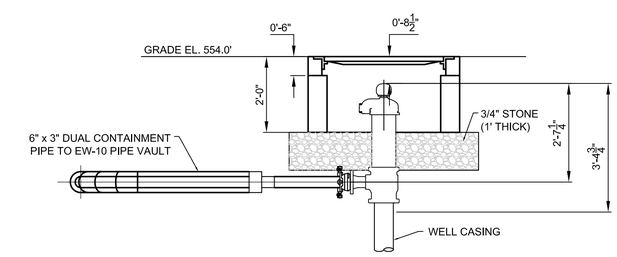

SECTION 4
1/2" = 1'–0"

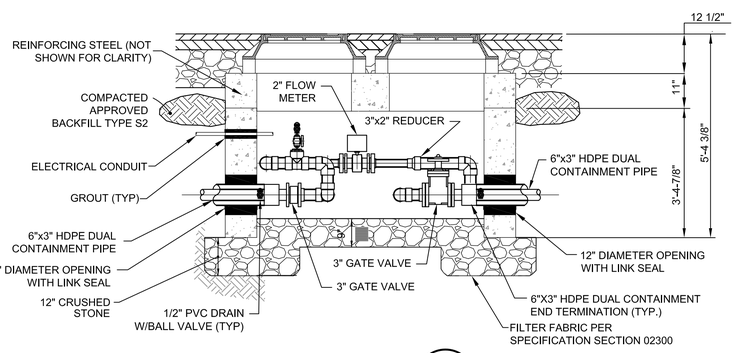

SECTION 1
1/2" = 1'–0"

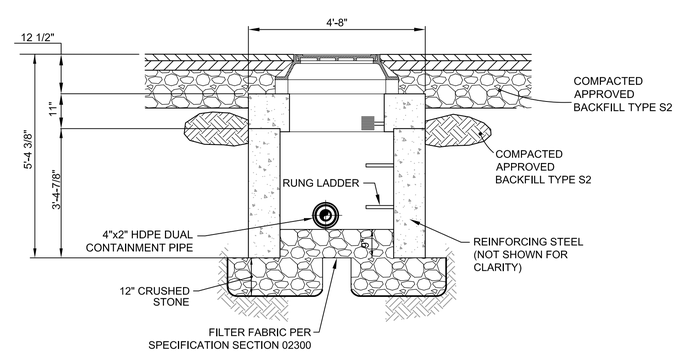

SECTION 3
1/2" = 1'–0"

FINAL AS-BUILT

REV. NO.	DATE	DRWN	CHKD	REMARKS

DESIGNED BY:
DRAWN BY:
SHEET CHK'D BY:
CROSS CHK'D BY:
APPROVED BY:
DATE: MARCH 2012

PREPARED BY:
CAPE
CAPE Environmental Management, Inc.

US Army Corps of Engineers Kansas City District
TRENCH PACKAGE
ROCKAWAY BOROUGH SUPERFUND SITE
EAST MAIN/WALL STREET PLUME - OU2
ROCKAWAY BOROUGH, NEW JERSEY

EXTRACTION WELL DETAILS IV
EAST AMIN/WALL STREET AREA

PROJECT 50001.005
FILE NAME: CSTDT012 AS–BUILT
SHEET NO.
ED-4

XREFS: RKAWYBDR

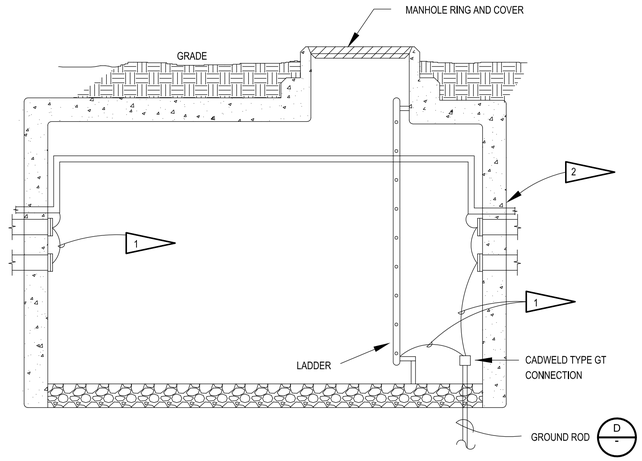

TYPICAL VAULT GROUNDING

DETAIL C
NTS

ITEM NUMBER	QUANTITY	DESCRIPTION	MANUFACTURER	CAT #
1	1	CADWELD CABLE TO ROD	CADWELD	TYPE GT
2	1	GROUND ROD, COPPER CLAD, 8 FT MIN.	ERITECH	
3	1	CADWELD CABLE TO ROD	CADWELD	TYPE GS

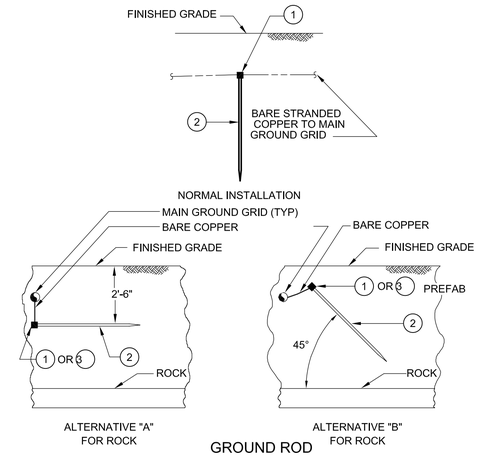

GROUND ROD

DETAIL D
NTS

1 ELECTRICAL CONTRACTOR GROUNDED ALL METAL ITEMS IN EACH EXTRACTION WELL CHAMBER WITH 4/0 BARE STRANDED CONDUCTORS FROM THE GROUND ROD. CONNECTED NEW 4/0 FEEDER GROUND CONDUCTORS TO EXTRACTION WELL CHAMBER GROUND CONDUCTORS.

2 CONTRACTOR DAMP-PROOFED EXTERIOR OF VAULT IN THE AREAS DISTURBED BY THE INSTALLATION OF THE NEW DUCTS PER SPECIFICATION 16660.

NOTES

1. REFER TO SPECIFICATION SECTION 03410 FOR PRECAST CONCRETE WELL VAULT AND MANHOLE FRAME AND COVER DESIGN CRITERIA AND REQUIREMENTS.

2. THE MINIMUM CLEARANCE BETWEEN CONDUIT PENETRATIONS WASE 6 INCHES EXCEPT WHERE A GREATER CLEARANCE IS SPECIFIED AS SHOWN ON SHEETS E-4 AND E-5.

FINAL AS-BUILT

XREFS: RKAWYBD2, CSTDT010

REV. NO.	DATE	DRWN	CHKD	REMARKS

DESIGNED BY:
DRAWN BY:
SHEET CHK'D BY:
CROSS CHK'D BY:
APPROVED BY:
DATE: MARCH 2012

PREPARED BY:
CAPE
CAPE Environmental Management, Inc.

US Army Corps of Engineers Kansas City District
TRENCH PACKAGE
ROCKAWAY BOROUGH SUPERFUND SITE
EAST MAIN/WALL STREET PLUME - OU2
ROCKAWAY BOROUGH, NEW JERSEY

EXTRACTION WELL DETAILS II
EAST MAIN/WALL STREET AREA

PROJECT 50001.005
FILE NAME: ESDDT002 AS-BUILT
SHEET NO.
ED-5

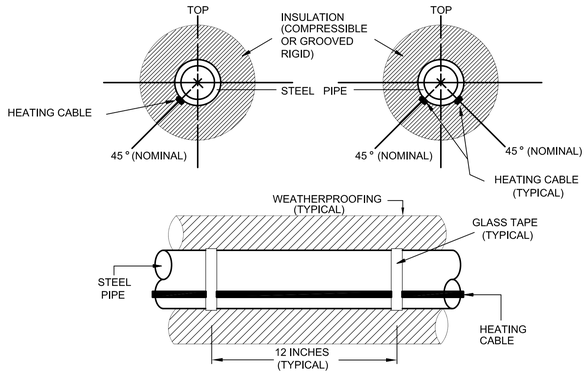

DETAIL E

TYPICAL PLACEMENT OF HEATING CABLE WITH COMPRESSIBLE INSULATION

N.T.S.

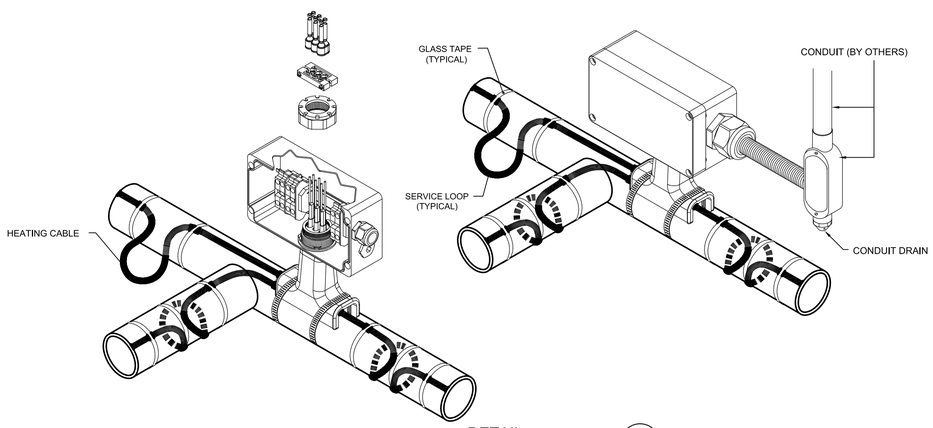

DETAIL F

JBM-100-A POWER CONNECTION KIT

GENERAL INSTALLATION REQUIREMENTS:

1. SUPPLY AND INSTALL ALL HEAT TRACING AS SHOWN ON THE DRAWINGS AND RECOMMENDED BY THE HEATING CABLE MANUFACTURER.
2. CONTRACTOR SHALL BE RESPONSIBLE FOR OBTAINING THE MANUFACTURER'S INSTALLATION RECOMMENDATIONS AND TRAINING IF NECESSARY.

INSTALLATION NOTES:

1. ALL HEAT TRACE ELEMENTS SHALL BE TAPE FASTENED TO THE PIPE AS SHOWN ON THE DETAILS. THE INSULATION SHALL NOT BE USED TO HOLD THE ELEMENT ON THE PIPE.
2. ALL POWER CONNECTION KITS SHALL BE MOUNTED ON THE PIPE UNLESS SPECIFICALLY NOTED OTHERWISE.
3. ALL HEATER CABLE SHALL BE ONE (1) CONTINUOUS LENGTH WITHOUT SPLICES, UNLESS SPECIFICALLY INDICATED OTHERWISE.
4. THE HEAT TRACE ELEMENT SHALL BE INSTALLED IN STRAIGHT RUNS. SPIRALING SHALL NOT BE PERMITTED UNLESS NOTED OTHERWISE.
5. ALL HEAT TRACING CABLE SHALL BE TESTED BEFORE AND AFTER INSULATION IS APPLIED AS FOLLOWS:
    1. USE 2500 VDC MEGGER. MINIMUM ACCEPTABLE READING SHALL BE 20 MEGOHMS REGARDLESS OF HEATER LENGTH.
    2. TWIST BOTH HEATING CABLE BUSSES TOGETHER.
    3. CONNECT (-) LEAD TO BRAID AND (+) LEAD TO TWISTED BUSSES.
    4. AFTER TEST IS COMPLETED AND READING IS RECORDED, TURN OFF THE MEGGER, DISCHARGE BUSSES TO LOCAL GROUND AND AFTER THAT DISCONNECT THE MEGGER.
6. WARNING SIGNS SHALL BE PLACED EVERY TEN FEET MINIMUM, ON THE INSULATION EXTERIOR, IN EASY READABLE LOCATION. THE SIGN SHALL STATE 'DANGER - ELECTRICALLY HEATED - 120 VOLTS'.

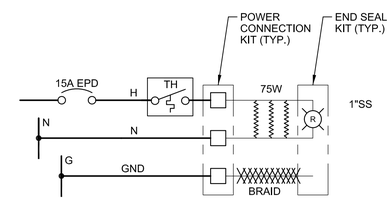

HEAT TRACING SCHEMATIC DIAGRAM

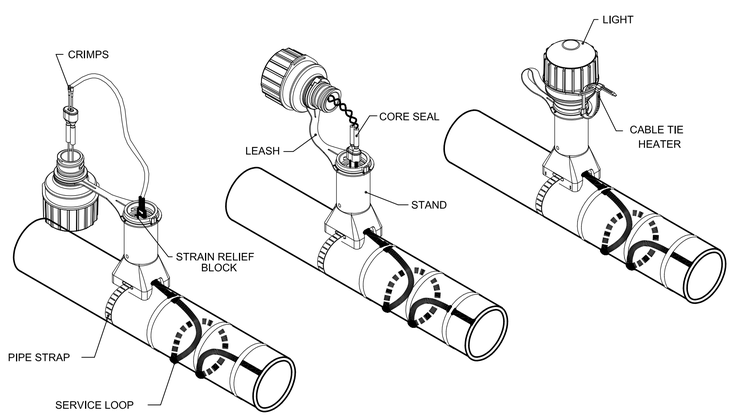

DETAIL G

E-100-L END SEAL KIT

N.T.S.

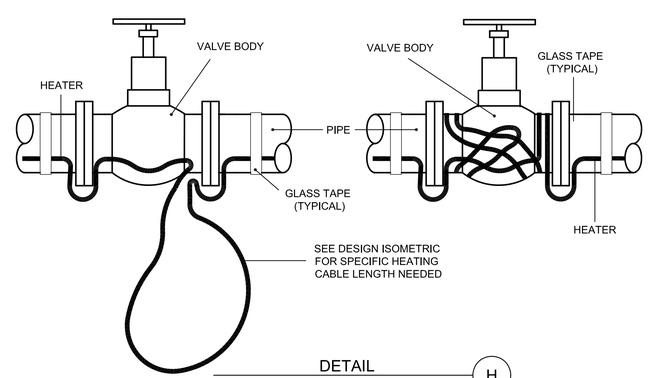

DETAIL H

TYPICAL BALL VALVE INSTALLATION

N.T.S.

DESIGN DATA		
LOCATION: OUTDOORS		
ELECT. CLASSIFICATION: NON-HAZARDOUS		
TEMPERATURES:		
• Min./Max. Ambient:	0 °F	95 °F
• Min./Max. Maintenance:	40 °F	50 °F
• Max. Htr. Exposure:		150 °F
• Start-Up:		40 °F
INSULATION: 1.0 IN. FIBERGLASS		
VOLTAGE: 120 VAC		
Start Amps @ 0 °F: 1.5	Maint. Amps @ 0 °F: 1.0	

MATERIAL LIST

Item	Qty.	Cat. No.	Description
1	1	AMC-1A	THERMOSTAT
2	"	AMC-1H	THERMOSTAT
3	1	JBM-100-A	RAYCHEM PWR. CONNECTION KIT
4	2	E-100-L1-A	RAYCHEM END CONNECTION
5	"	T-100	RAYCHEM TEE KIT
6	"	3BTV1-CR	RAYCHEM TRACE CABLE
7	25'	5BTV1-CR	RAYCHEM TRACE CABLE
8	REQ'D	ETL	LABEL "ELECTRIC TRACED"
9	REQ'D	AT-180	RAYCHEM ALUM. TAPE
10	"	GS 54	RAYCHEM FIBERGLASS TAPE

HEAT TRACING DESIGN DATA AND BILL OF MATERIAL

FINAL AS-BUILT

XREFS: RKAWYBD2

REV. NO.	DATE	DRWN	CHKD	REMARKS

DESIGNED BY:
DRAWN BY:
SHEET CHK'D BY:
CROSS CHK'D BY:
APPROVED BY:
DATE: MARCH 2012

PREPARED BY:
CAPE
CAPE Environmental Management, Inc.

US Army Corps of Engineers Kansas City District
TRENCH PACKAGE
ROCKAWAY BOROUGH SUPERFUND SITE
EAST MAIN/WALL STREET PLUME - OU2
ROCKAWAY BOROUGH, NEW JERSEY

HEAT TRACE, SECTION & DETAILS EAST MAIN/WALL STREET AREA

PROJECT 50001.005
FILE NAME: ESDDT003 AS-BUILT
SHEET NO.
ED-6

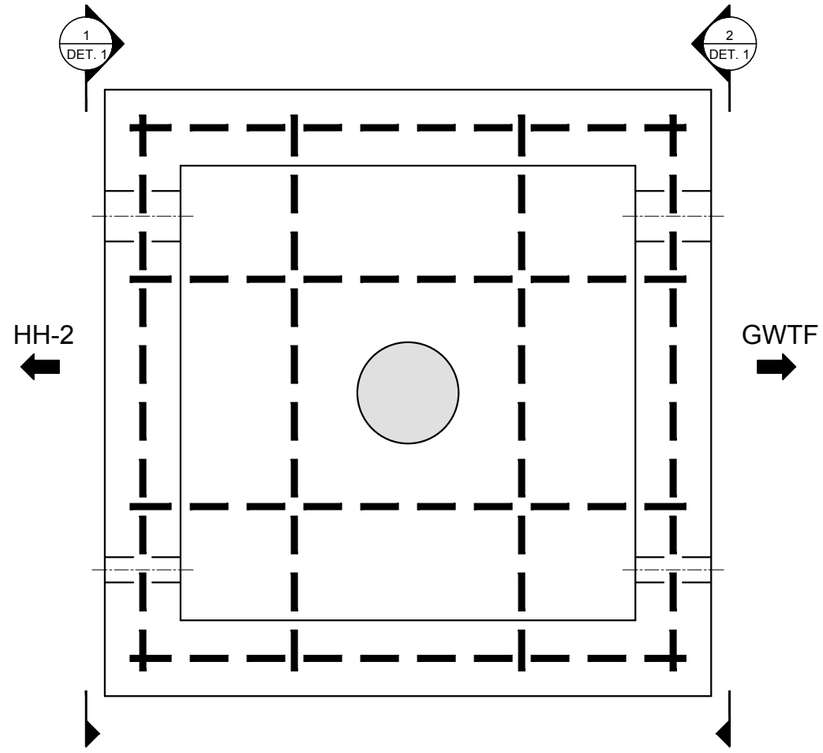

HAND HOLE HH-1 - PLAN VIEW
SCALE: 1"=1'-0"

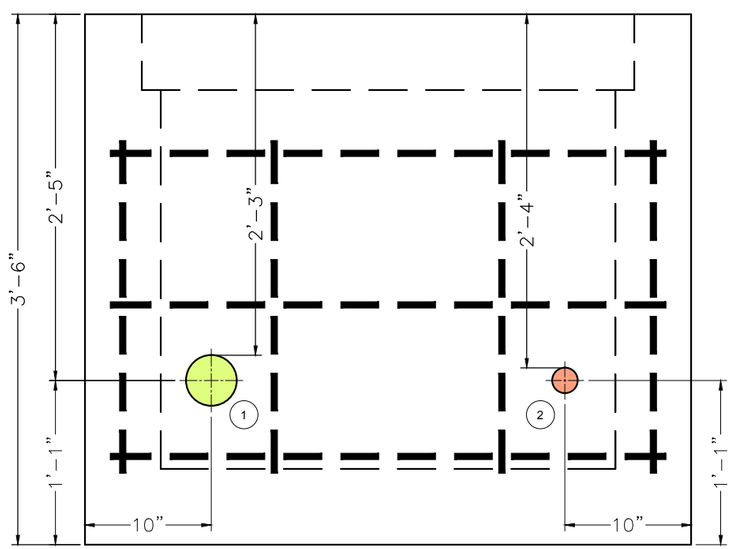

SIDE VIEW 1
SCALE: 1"=1'-0"

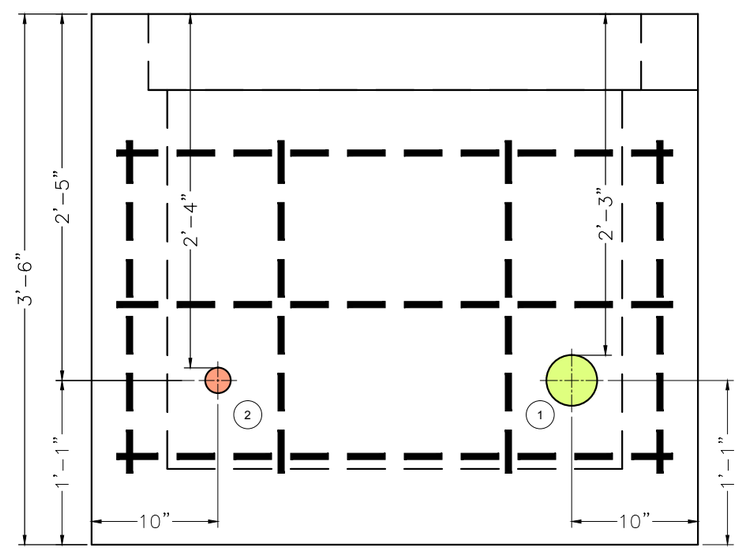

SIDE VIEW 2
SCALE: 1"=1'-0"

1 3" PVC CONDUIT – MAIN POWER
2 1" PVC CONDUIT – FIBER OPTIC

LEGEND

- 2" CORE HOLE
- 4" CORE HOLE
- 8" DRAIN HOLE
- #4 (1/2" DIA.) REBAR

AS-BUILT

GRAPHIC SCALE
1' 6" 0 1'
SCALE: 1"= 1'-0"

CAPE
180 Gordon Drive
Suite 105
Exton, PA 19341
(610) 594-8606

REVISIONS:

No.	Date	Remarks

U.S. Army Corps of Engineers
NEW YORK DISTRICT

PROJECT NAME
REMEDIAL ACTION ACTIVITIES
FOR THE EAST MAIN/WALL STREET
PLUME OF THE ROCKAWAY BOROUGH
WELL FIELD SUPERFUND SITE
MORRIS COUNTY, NEW JERSEY

SHEET TITLE
HANDHOLES HH-1
CORE HOLE DRAWING

CONTRACT NO: W912DQ-05-D-0001 TO-0005
JOB NO: 50001.005.001.001
CHECKED BY: M. LAMON
DRAWN BY: B DAVIS
DATE: APRIL 2011
FILE NAME: ROCKWY_HHOLE
SHEET NUMBER: DETAIL 1

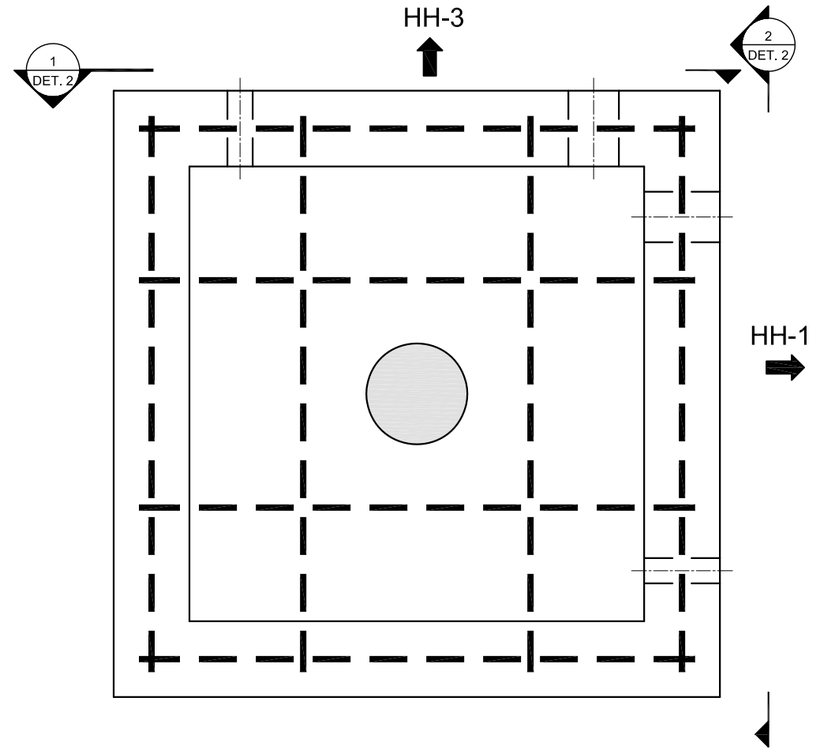

HAND HOLE HH-2 - PLAN VIEW
SCALE: 1"=1'-0"

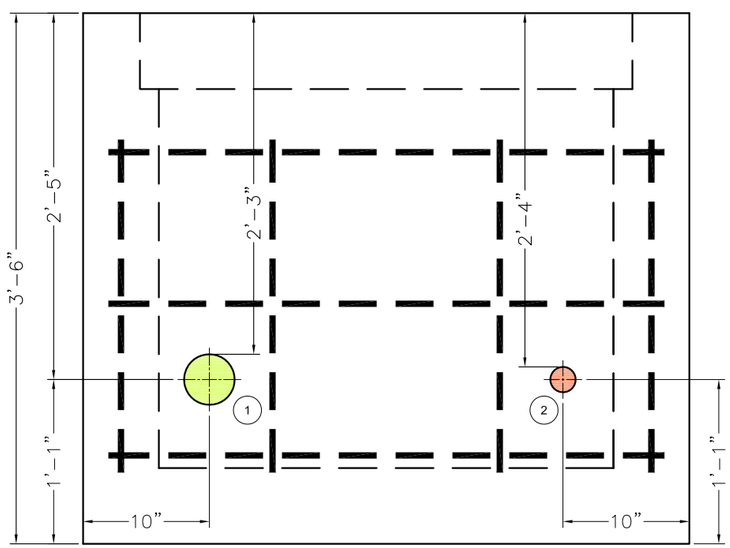

SIDE VIEW 1
SCALE: 1"=1'-0"

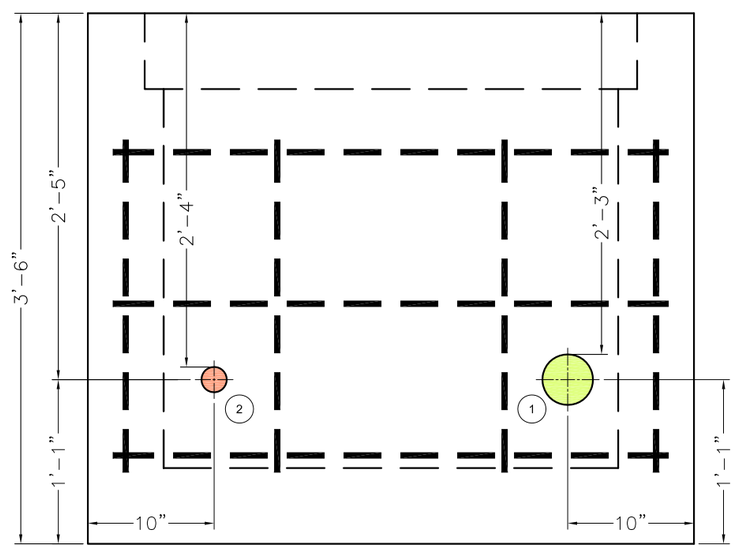

SIDE VIEW 2
SCALE: 1"=1'-0"

1. 3" PVC CONDUIT – MAIN POWER
2. 1" PVC CONDUIT – FIBER OPTIC

LEGEND

- 2" CORE HOLE
- 4" CORE HOLE
- 8" DRAIN HOLE
- #4 (1/2" DIA.) REBAR

AS-BUILT

GRAPHIC SCALE
1' 6" 0 1'
SCALE: 1"= 1'-0"

CAPE
180 Gordon Drive
Suite 105
Exton, PA 19341
(610) 594-8606

REVISIONS:

No.	Date	Remarks

U.S. Army Corps of Engineers
NEW YORK DISTRICT

PROJECT NAME
REMEDIAL ACTION ACTIVITIES
FOR THE EAST MAIN/WALL STREET
PLUME OF THE ROCKAWAY BOROUGH
WELL FIELD SUPERFUND SITE
MORRIS COUNTY, NEW JERSEY

SHEET TITLE
HANDHOLES HH-2
CORE HOLE DRAWING

CONTRACT NO: W912DQ-05-D-0001 TO-0005
JOB NO: 50001.005.001.001
CHECKED BY: M. LAMON
DRAWN BY: B DAVIS
DATE: APRIL 2011
FILE NAME: ROCKWY_HHOLE
SHEET NUMBER: DETAIL 2

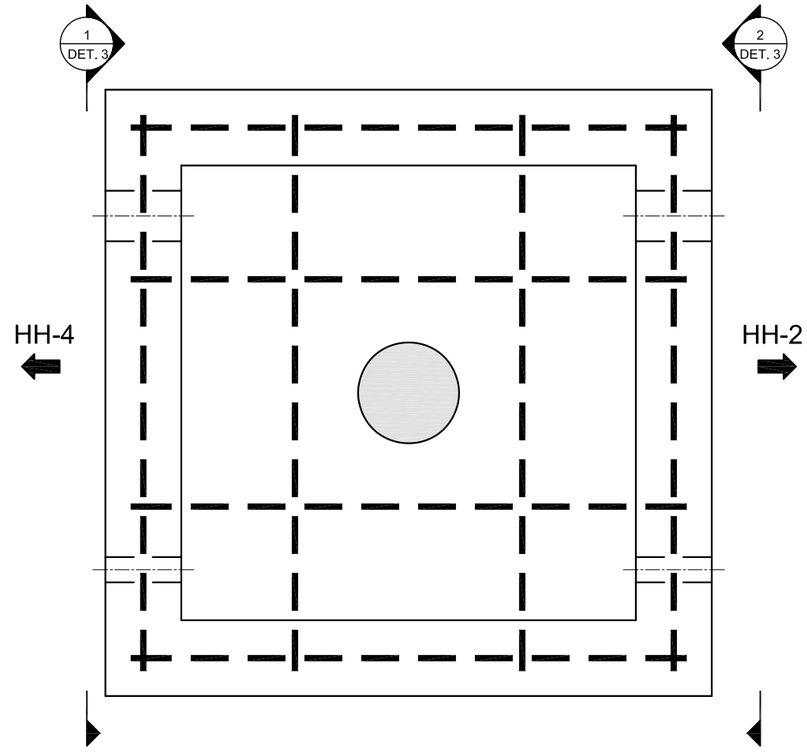

HAND HOLE HH-3 - PLAN VIEW
SCALE: 1"=1'-0"

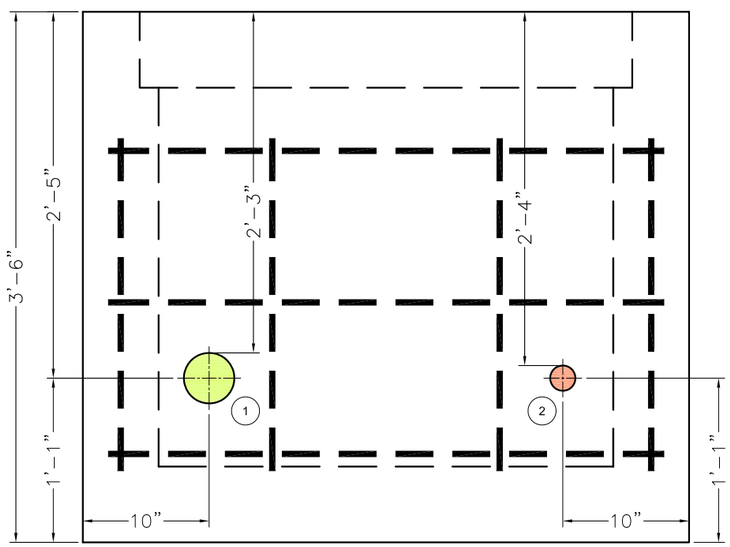

SIDE VIEW 1
SCALE: 1"=1'-0"

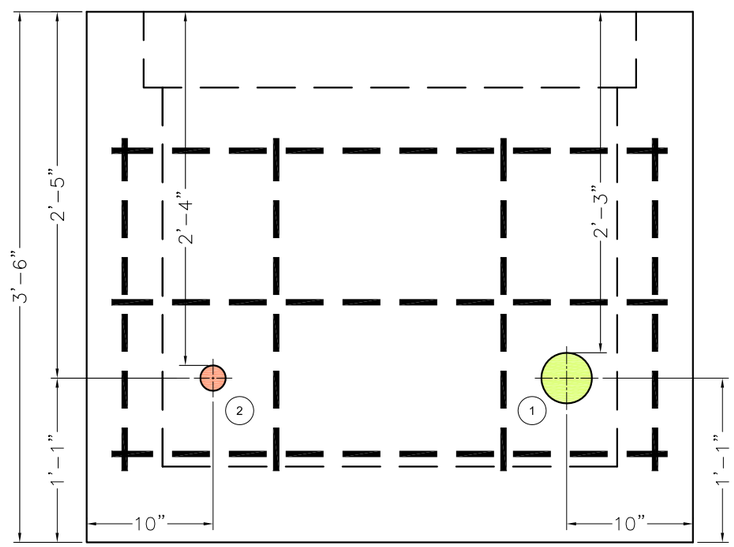

SIDE VIEW 2
SCALE: 1"=1'-0"

1 3" PVC CONDUIT – MAIN POWER
2 1" PVC CONDUIT – FIBER OPTIC

LEGEND

- 2" CORE HOLE
- 4" CORE HOLE
- 8" DRAIN HOLE
- #4 (1/2" DIA.) REBAR

AS-BUILT

GRAPHIC SCALE
1' 6" 0 1'
SCALE: 1"= 1'-0"

CAPE
180 Gordon Drive
Suite 105
Exton, PA 19341
(610) 594-8606

REVISIONS:

No.	Date	Remarks

U.S. Army Corps of Engineers
NEW YORK DISTRICT

PROJECT NAME
REMEDIAL ACTION ACTIVITIES
FOR THE EAST MAIN/WALL STREET
PLUME OF THE ROCKAWAY BOROUGH
WELL FIELD SUPERFUND SITE
MORRIS COUNTY, NEW JERSEY

SHEET TITLE
HANDHOLES HH-3
CORE HOLE DRAWING

CONTRACT NO: W912DQ-05-D-0001 TO-0005
JOB NO: 50001.005.001.001
CHECKED BY: M. LAMON
DRAWN BY: B DAVIS
DATE: APRIL 2011
FILE NAME: ROCKWY_HHOLE
SHEET NUMBER: DETAIL 3

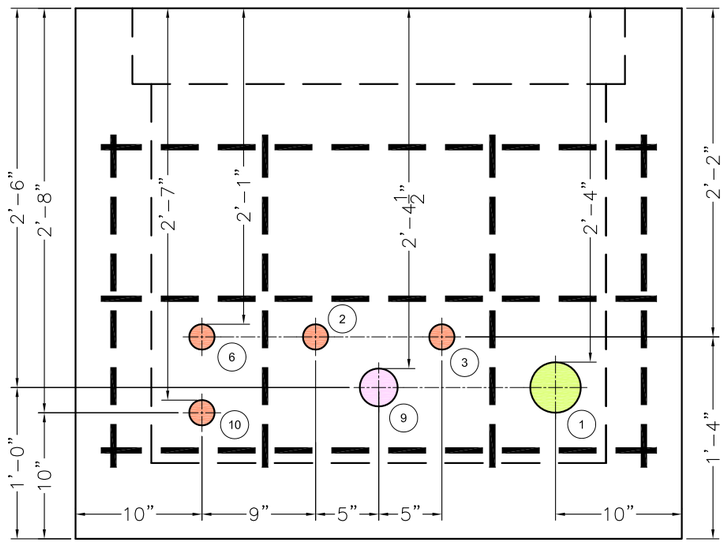

SIDE VIEW 1 / -
SCALE: 1"=1'-0"

1" PVC CONDUIT – MAIN POWER
1" PVC CONDUIT – FIBER OPTIC
1" PVC CONDUIT – EW–6 PUMP LEADS
1" PVC CONDUIT – EW–6 HEAT TRACE
1" RGS CONDUIT – EW–6 FLOW METER ANALOG, LEVEL ANALOG, FLOW METER POWER CABLE, PUMP TEMPERATURE, MOISTURE SWITCHES
1"PVC CONDUIT – EW–10 PUMP LEAD
1" RGS CONDUIT – EW–10 FLOW METER ANALOG, LEVEL ANALOG, FLOW METER POWER CABLE, PUMP TEMPERATURE, MOISTURE SWITCHES
1"PVC CONDUIT – EW–10 HEAT TRACE
2" RGS CONDUIT – EW–6 & EW–10 FLOW METER ANALOG, LEVEL ANALOG, FLOW METER POWER CABLE, PUMP TEMPERATURE, MOISTURE SWITCHES
1" PVC CONDUIT – EW–6 & EW–10 HEAT TRACE

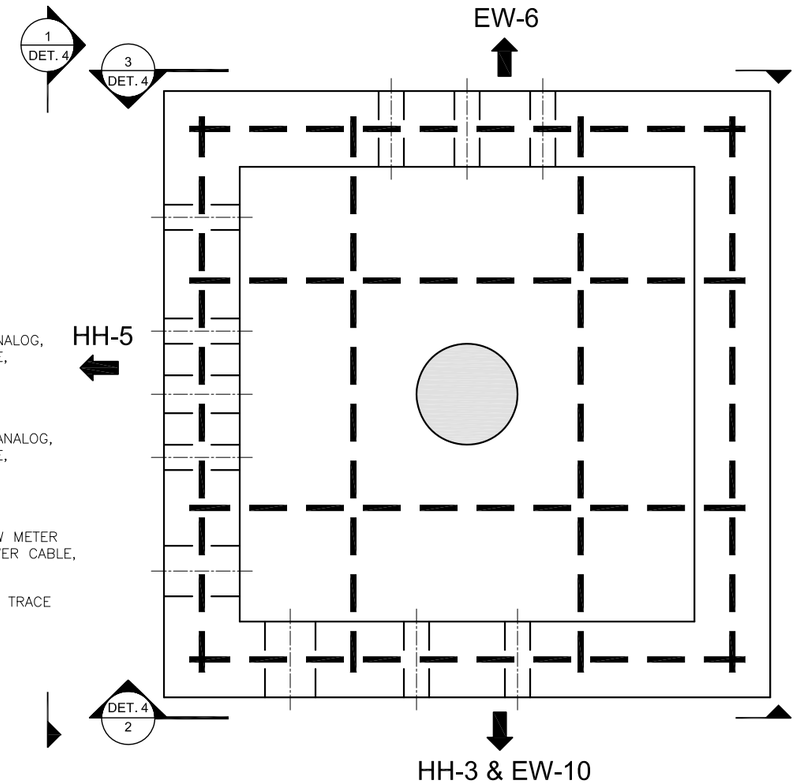

HAND HOLE HH-4 - PLAN VIEW
SCALE: 1"=1'-0"

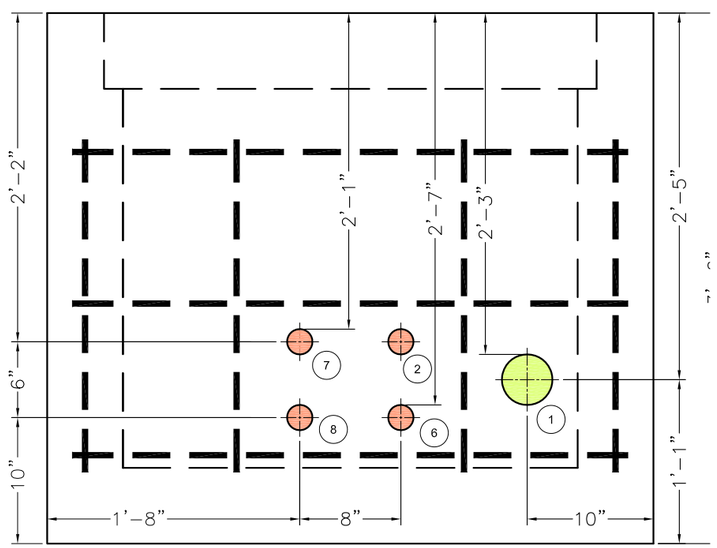

SIDE VIEW 2 / -
SCALE: 1"=1'-0"

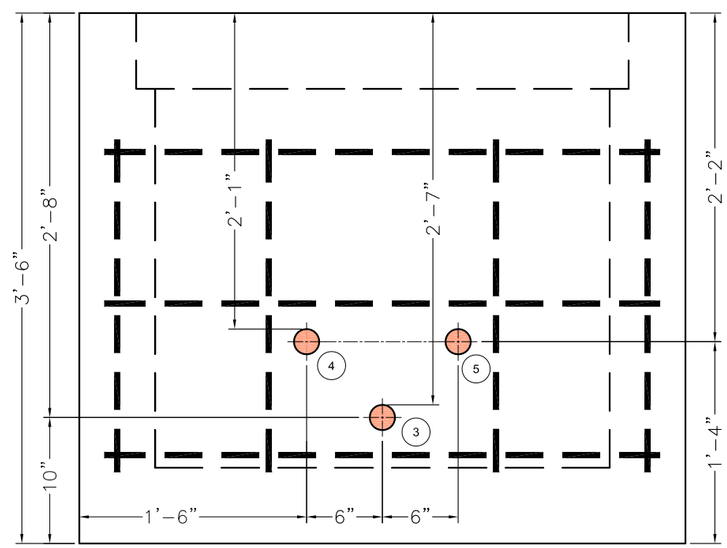

SIDE VIEW 3 / -
SCALE: 1"=1'-0"

LEGEND

- 2" CORE HOLE
- 4" 3ORE HOLE
- 4" CORE HOLE
- 8" DRAIN HOLE
- #4 (1/2" DIA.) REBAR

AS-BUILT

GRAPHIC SCALE
1' 6" 0 1'
SCALE: 1"= 1'-0"

CAPE
180 Gordon Drive
Suite 105
Exton, PA 19341
(610) 594-8606

REVISIONS:

No.	Date	Remarks

U.S. Army Corps of Engineers
NEW YORK DISTRICT

PROJECT NAME
REMEDIAL ACTION ACTIVITIES
FOR THE EAST MAIN/WALL STREET
PLUME OF THE ROCKAWAY BOROUGH
WELL FIELD SUPERFUND SITE
MORRIS COUNTY, NEW JERSEY

SHEET TITLE
HANDHOLES HH-4
CORE HOLE DRAWING

CONTRACT NO: W912DQ-05-D-0001 TO-0005
JOB NO: 50001.005.001.001
CHECKED BY: M. LAMON
DRAWN BY: B DAVIS
DATE: APRIL 2011
FILE NAME: ROCKWY_HHOLE
SHEET NUMBER: DETAIL 4

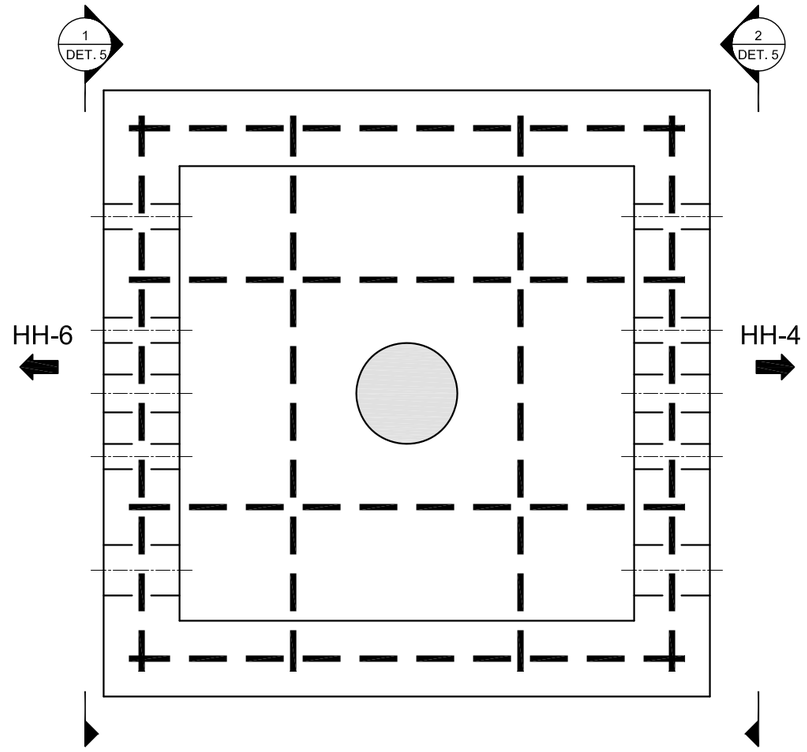

HAND HOLE HH-5- PLAN VIEW

SCALE: 1"=1'-0"

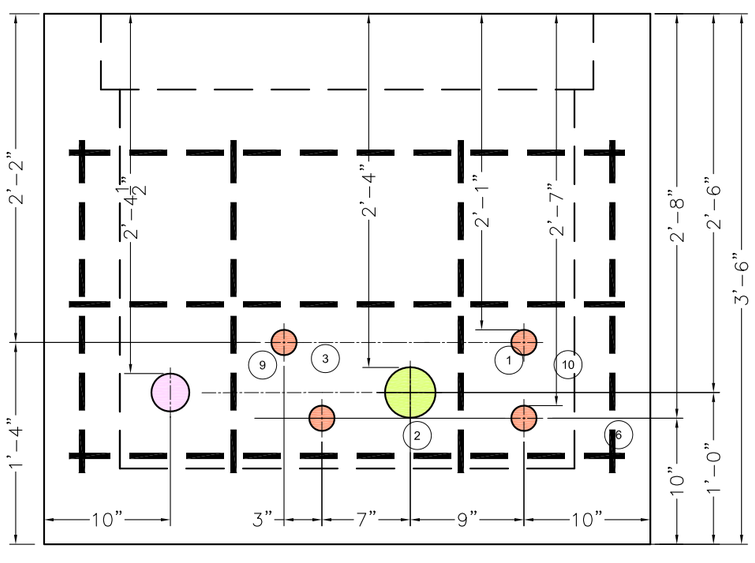

SIDE VIEW 1

SCALE: 1"=1'-0"

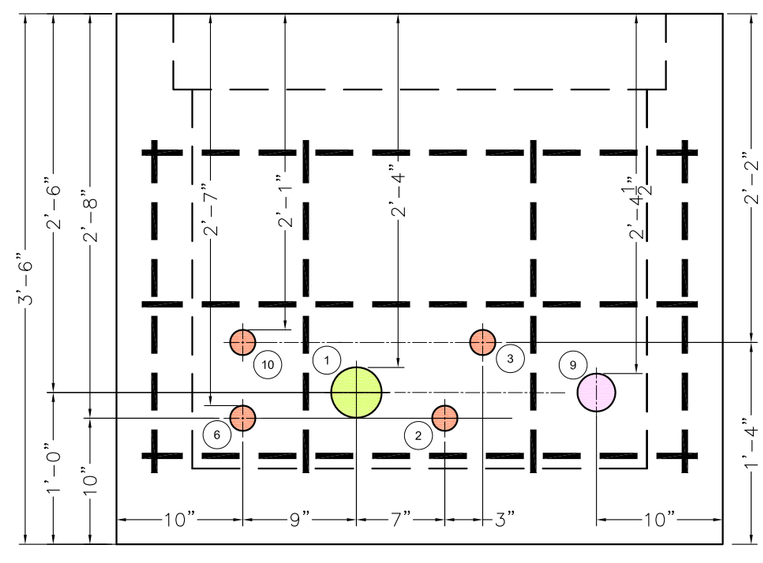

SIDE VIEW 2

SCALE: 1"=1'-0"

1. 1" PVC CONDUIT – MAIN POWER
2. 1" PVC CONDUIT – FIBER OPTIC
3. 1" PVC CONDUIT – EW-6 PUMP LEADS
6. 1"PVC CONDUIT – EW-10 PUMP LEAD
9. 2" RGS CONDUIT – EW-6 & EW-10 FLOW METER ANALOG, LEVEL ANALOG, FLOW METER POWER CABLE, PUMP TEMPERATURE, MOISTURE SWITCHES
10. 1" PVC CONDUIT – EW-6 & EW-10 HEAT TRACE

LEGEND

- 2" CORE HOLE
- 3" CORE HOLE
- 4" CORE HOLE
- 8" DRAIN HOLE
- #4 (1/2" DIA.) REBAR

AS-BUILT

GRAPHIC SCALE

1' 6" 0 1'

SCALE: 1"= 1'-0"

CAPE
180 Gordon Drive
Suite 105
Exton, PA 19341
(610) 594-8606

REVISIONS:

No.	Date	Remarks

U.S. Army Corps of Engineers
NEW YORK DISTRICT

PROJECT NAME
REMEDIAL ACTION ACTIVITIES
FOR THE EAST MAIN/WALL STREET
PLUME OF THE ROCKAWAY BOROUGH
WELL FIELD SUPERFUND SITE
MORRIS COUNTY, NEW JERSEY

SHEET TITLE
HANDHOLES HH-5
CORE HOLE DRAWING

CONTRACT NO: W912DQ-05-D-0001 TO-0005
JOB NO: 50001.005.001.001
CHECKED BY: M. LAMON
DRAWN BY: B DAVIS
DATE: APRIL 2011
FILE NAME: ROCKWY_HHOLE
SHEET NUMBER: DETAIL 5

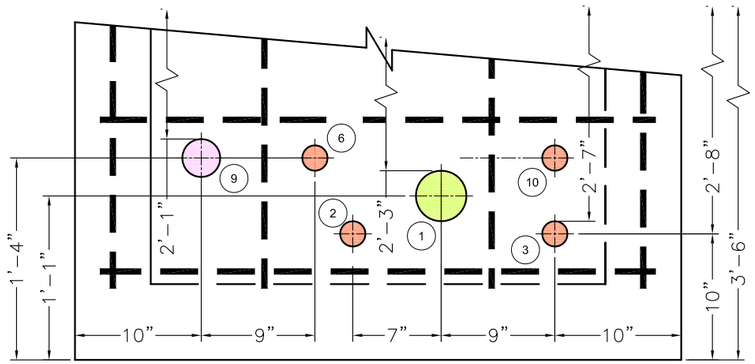

SIDE VIEW 1
SCALE: 1"=1'-0"

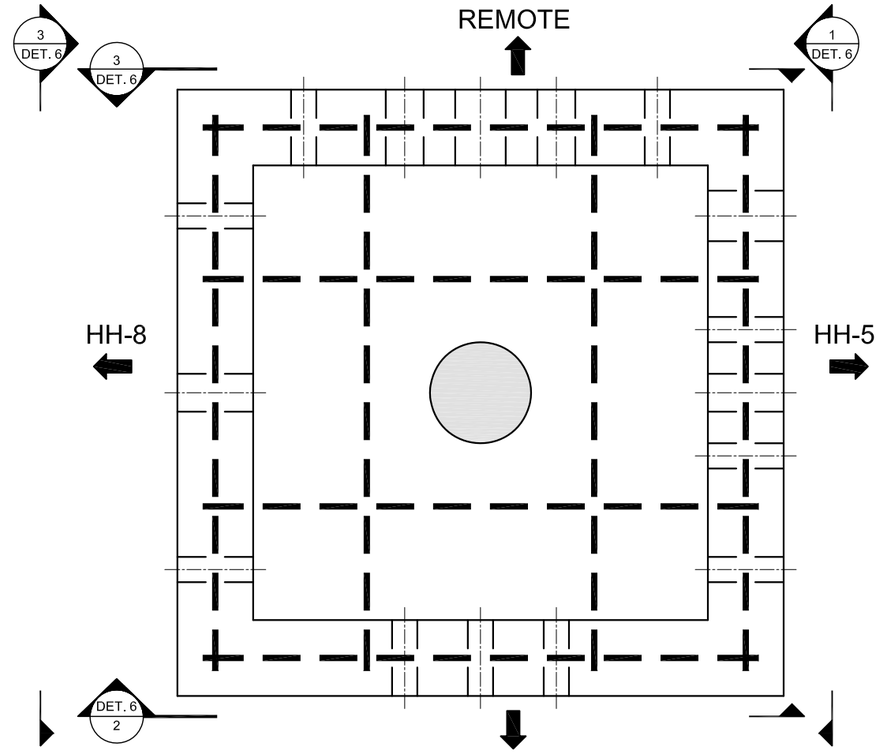

HAND HOLE HH-6- PLAN VIEW
SCALE: 1"=1'-0"

LEGEND

- 2" CORE HOLE
- 3" CORE HOLE
- 4" CORE HOLE
- 8" DRAIN HOLE
- #4 (1/2" DIA.) REBAR

1. 1" PVC CONDUIT – MAIN POWER
2. 1" PVC CONDUIT – FIBER OPTIC
3. 1" PVC CONDUIT – EW-6 PUMP LEADS
6. 1"PVC CONDUIT – EW-10 PUMP LEAD
9. 2" RGS CONDUIT – EW-6 & EW-10 FLOW METER ANALOG, LEVEL ANALOG, FLOW METER POWER CABLE, PUMP TEMPERATURE, MOISTURE SWITCHES
10. 1" PVC CONDUIT – EW-6 & EW-10 HEAT TRACE
11. 1" PVC CONDUIT – EW-9 PUMP LEAD
12. 1" CONDUIT – EW-9 HEAT TRACE
13. 1" RGS CONDUIT – EW-9 FLOW METER ANALOG, LEVEL ANALOG, FLOW METER POWER CABLE, PUMP TEMPERATURE, MOISTURE SWITCHES
14. 1" PVC CONDUIT – EW-8 PUMP LEAD
15. 1" PVC CONDUIT – EW-5A PUMP LEAD
16. 1" CONDUIT – EW-5A & EW-8 HEAT TRACE
17. 2" RGS CONDUIT – EW-5A & EW-8 FLOW METER ANALOG, LEVEL ANALOG, FLOW METER POWER CABLE, PUMP TEMPERATURE, MOISTURE SWITCHES
18. 2' PVC CONDUIT – HEAT TRACE ALL WELLS
19. 2" RGS CONDUIT – LOW METER ANALOG, LEVEL ANALOG, FLOW METER POWER CABLE, PUMP TEMPERATURE, MOISTURE SWITCHES ALL WELLS

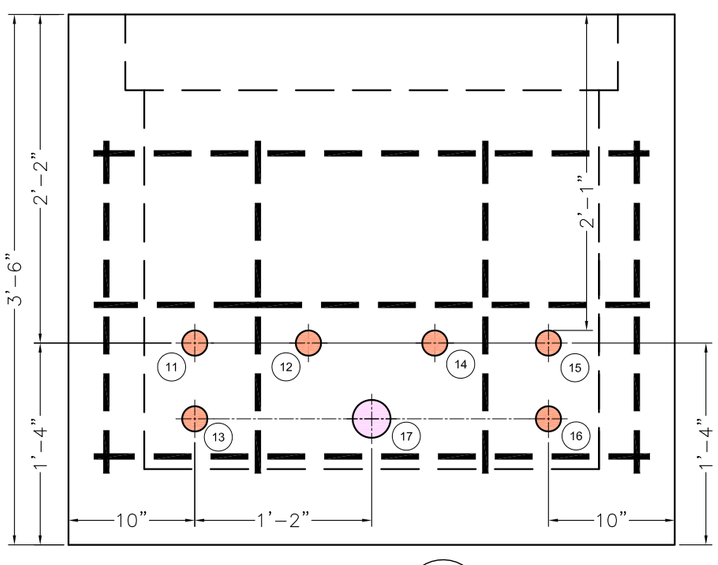

SIDE VIEW 2
SCALE: 1"=1'-0"

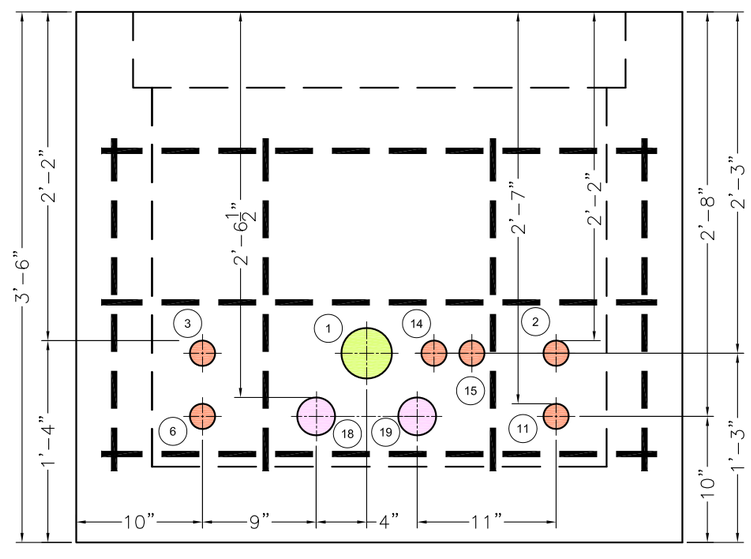

SIDE VIEW 3
SCALE: 1"=1'-0"

AS-BUILT

GRAPHIC SCALE
1' 6" 0 1'
SCALE: 1"= 1'-0"

CAPE
180 Gordon Drive
Suite 105
Exton, PA 19341
(610) 594-8606

REVISIONS:

No.	Date	Remarks

U.S. Army Corps of Engineers
NEW YORK DISTRICT

PROJECT NAME
REMEDIAL ACTION ACTIVITIES FOR THE EAST MAIN/WALL STREET PLUME OF THE ROCKAWAY BOROUGH WELL FIELD SUPERFUND SITE MORRIS COUNTY, NEW JERSEY

SHEET TITLE
HANDHOLES HH-6 CORE HOLE DRAWING

CONTRACT NO: W912DQ-05-D-0001 TO-0005
JOB NO: 50001.005.001.001
CHECKED BY: M. LAMON
DRAWN BY: B DAVIS
DATE: APRIL 2011
FILE NAME: ROCKWY_HHOLE
SHEET NUMBER: DETAIL 6

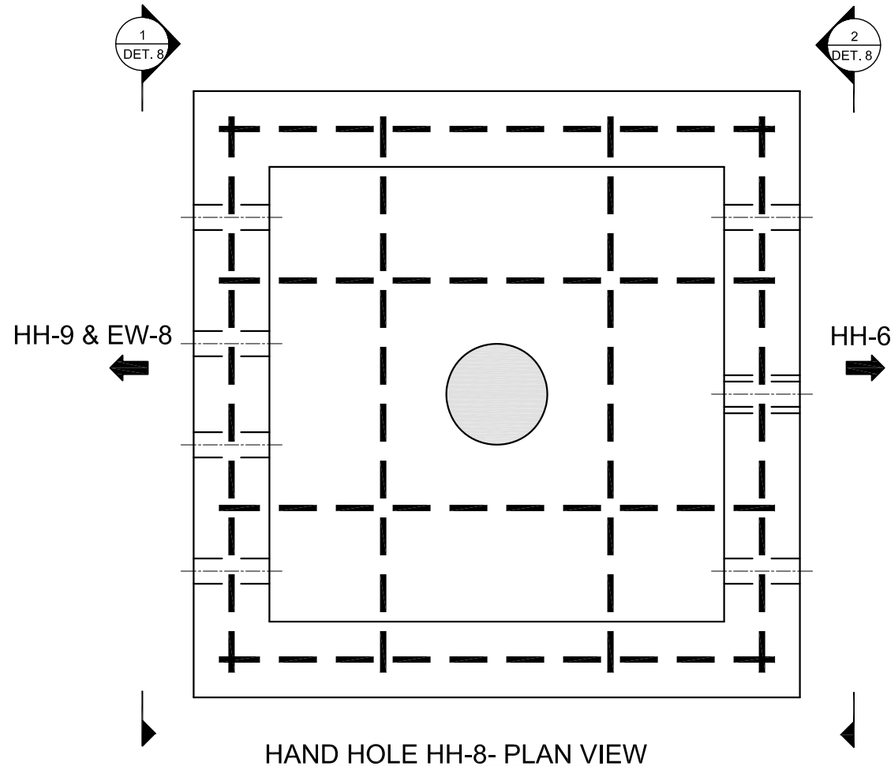

HAND HOLE HH-8- PLAN VIEW
SCALE: 1"=1'-0"

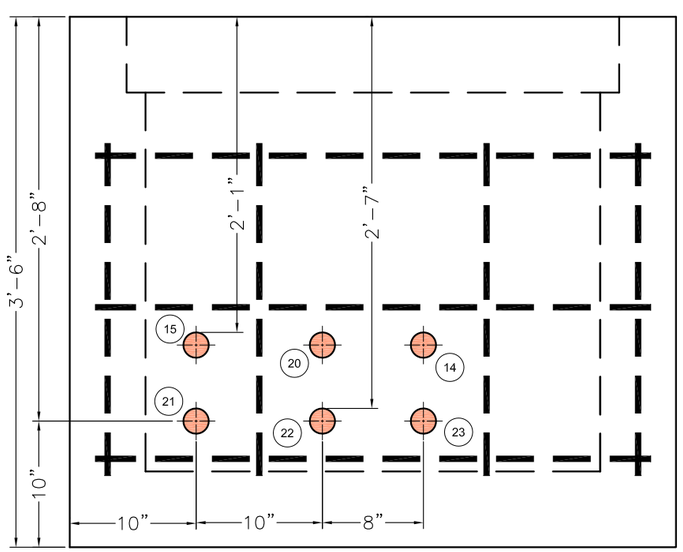

SIDE VIEW 1
SCALE: 1"=1'-0"

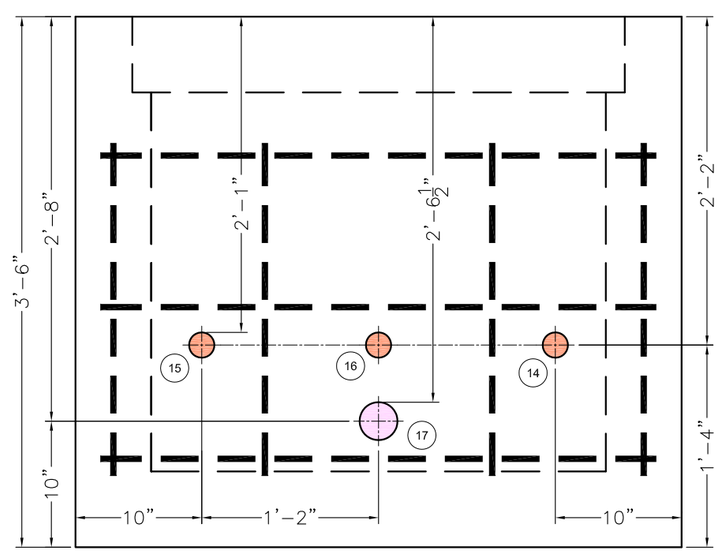

SIDE VIEW 2
SCALE: 1"=1'-0"

(14) 1" PVC CONDUIT – EW-8 PUMP LEAD

(15) 1" PVC CONDUIT – EW-5A PUMP LEAD

(16) 1" CONDUIT – EW-5A & EW-8 HEAT TRACE

(17) 2" RGS CONDUIT – EW-5A & EW-8 FLOW METER ANALOG, LEVEL ANALOG, FLOW METER POWER CABLE, PUMP TEMPERATURE, MOISTURE SWITCHES

(20) 1' PVC CONDUIT – EW-5A HEAT TRACE

(21) 1" RGS CONDUIT – EW-5A LOW METER ANALOG, LEVEL ANALOG, FLOW METER POWER CABLE, PUMP TEMPERATURE, MOISTURE SWITCHES

(22) 1' PVC CONDUIT – EW-8 HEAT TRACE

(23) 1" RGS CONDUIT – EW-8 LOW METER ANALOG, LEVEL ANALOG, FLOW METER POWER CABLE, PUMP TEMPERATURE, MOISTURE SWITCHES

LEGEND

- 2" CORE HOLE
- 3" CORE HOLE
- 4" CORE HOLE
- 8" DRAIN HOLE
- #4 (1/2" DIA.) REBAR

AS-BUILT

GRAPHIC SCALE

1' 6" 0 1'

SCALE: 1"= 1'-0"

CAPE
180 Gordon Drive
Suite 105
Exton, PA 19341
(610) 594-8606

REVISIONS:

No.	Date	Remarks

U.S. Army Corps of Engineers
NEW YORK DISTRICT

PROJECT NAME
REMEDIAL ACTION ACTIVITIES
FOR THE EAST MAINWALL STREET
PLUME OF THE ROCKAWAY BOROUGH
WELL FIELD SUPERFUND SITE
MORRIS COUNTY, NEW JERSEY

SHEET TITLE
HANDHOLES HH-8
CORE HOLE DRAWING

CONTRACT NO: W912DQ-05-D-0001 TO-0005
JOB NO: 50001.005.001.001
CHECKED BY: M. LAMON
DRAWN BY: B DAVIS
DATE: APRIL 2011
FILE NAME: ROCKWY_HHOLE
SHEET NUMBER: DETAIL 8

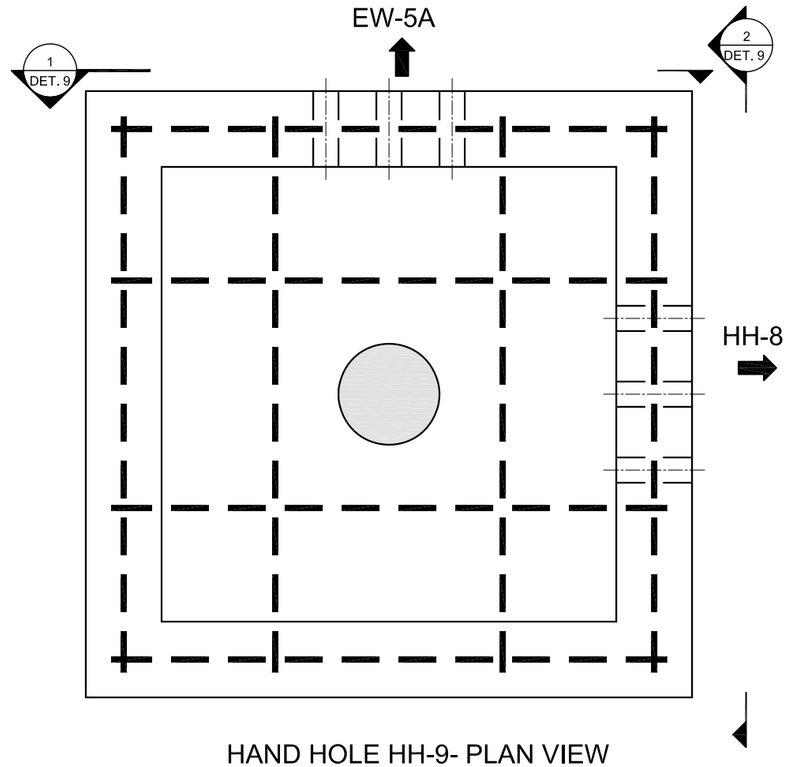

HAND HOLE HH-9- PLAN VIEW
SCALE: 1"=1'-0"

15 1" PVC CONDUIT – EW–5A PUMP LEAD

20 1' PVC CONDUIT – EW–5A HEAT TRACE

21 1" RGS CONDUIT – EW–5A LOW METER ANALOG, LEVEL ANALOG, FLOW METER POWER CABLE, PUMP TEMPERATURE, MOISTURE SWITCHES

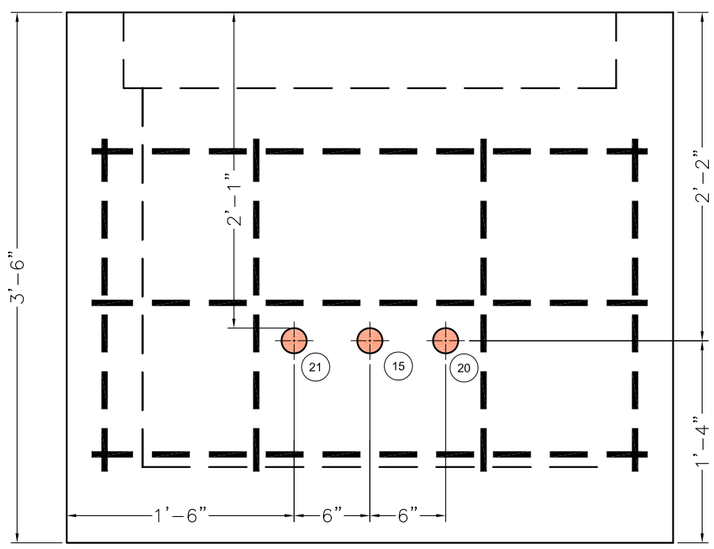

SIDE VIEW 1
SCALE: 1"=1'-0"

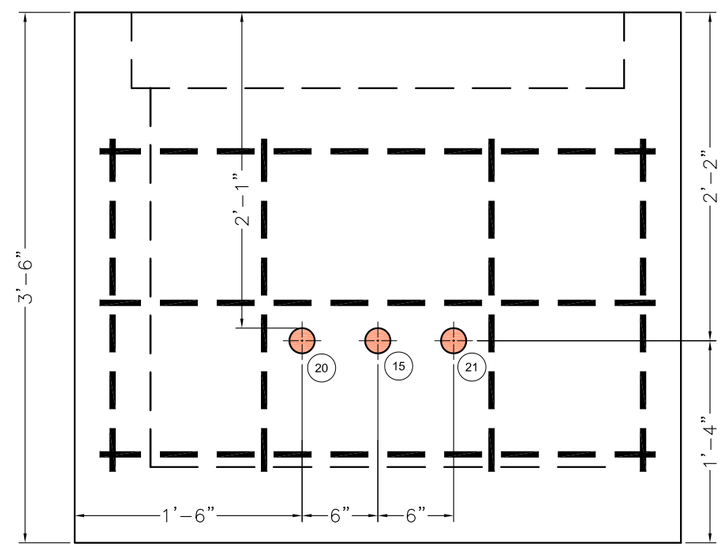

SIDE VIEW 2
SCALE: 1"=1'-0"

LEGEND

- 2" CORE HOLE
- 3" CORE HOLE
- 4" CORE HOLE
- 8" DRAIN HOLE
- #4 (1/2" DIA.) REBAR

AS-BUILT

GRAPHIC SCALE

1' 6" 0 1'

SCALE: 1"= 1'-0"

CAPE
180 Gordon Drive
Suite 105
Exton, PA 19341
(610) 594-8606

REVISIONS:

No.	Date	Remarks

U.S. Army Corps of Engineers
NEW YORK DISTRICT

PROJECT NAME
REMEDIAL ACTION ACTIVITIES
FOR THE EAST MAINWALL STREET
PLUME OF THE ROCKAWAY BOROUGH
WELL FIELD SUPERFUND SITE
MORRIS COUNTY, NEW JERSEY

SHEET TITLE
HANDHOLES HH-9
CORE HOLE DRAWING

CONTRACT NO: W912DQ-05-D-0001 TO-0005
JOB NO: 50001.005.001.001
CHECKED BY: M. LAMON
DRAWN BY: B DAVIS
DATE: APRIL 2011
FILE NAME: ROCKWY_HHOLE
SHEET NUMBER: DETAIL 9

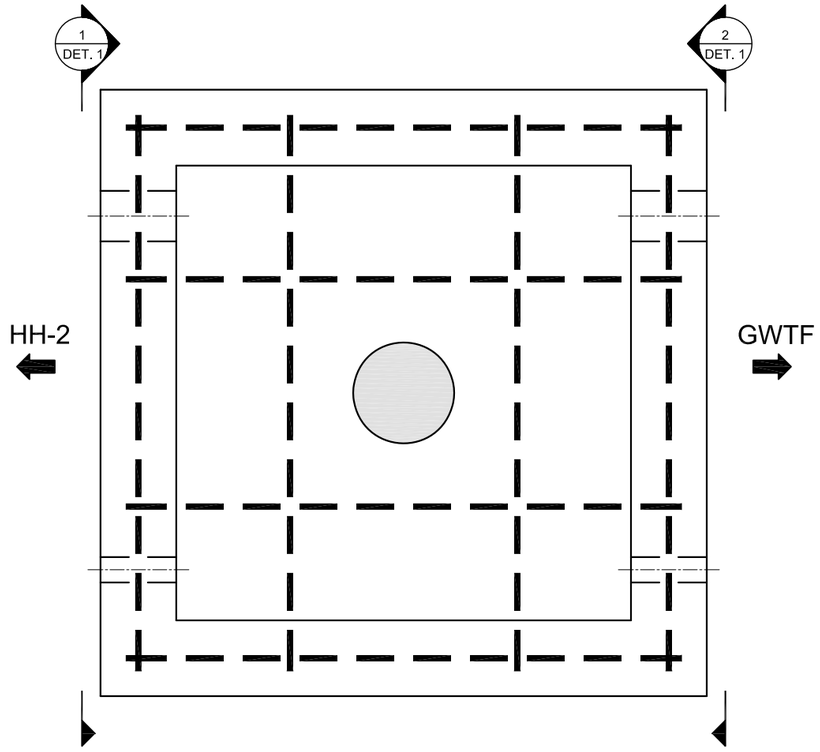

HAND HOLE HH-1 - PLAN VIEW
SCALE: 1"=1'-0"

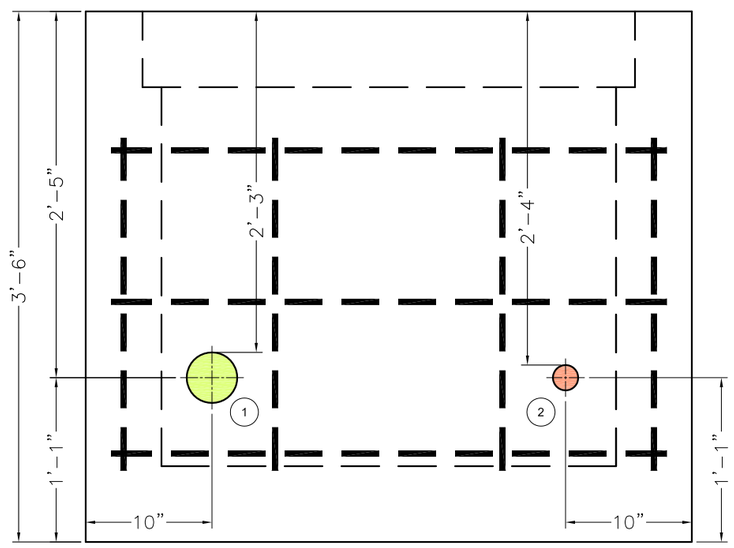

SIDE VIEW 1
SCALE: 1"=1'-0"

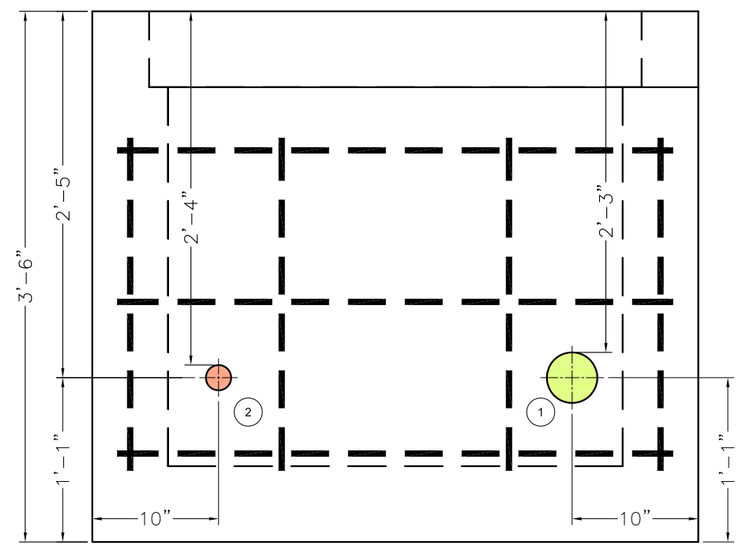

SIDE VIEW 2
SCALE: 1"=1'-0"

1 3" PVC CONDUIT – MAIN POWER
2 1" PVC CONDUIT – FIBER OPTIC

LEGEND

- 2" CORE HOLE
- 4" CORE HOLE
- 8" DRAIN HOLE
- #4 (1/2" DIA.) REBAR

AS-BUILT

GRAPHIC SCALE
1' 6" 0 1'
SCALE: 1"= 1'-0"

CAPE
180 Gordon Drive
Suite 105
Exton, PA 19341
(610) 594-8606

REVISIONS:

No.	Date	Remarks

U.S. Army Corps of Engineers
NEW YORK DISTRICT

PROJECT NAME
REMEDIAL ACTION ACTIVITIES
FOR THE EAST MAIN/WALL STREET
PLUME OF THE ROCKAWAY BOROUGH
WELL FIELD SUPERFUND SITE
MORRIS COUNTY, NEW JERSEY

SHEET TITLE
HANDHOLES HH-1
CORE HOLE DRAWING

CONTRACT NO: W912DQ-05-D-0001 TO-0005
JOB NO: 50001.005.001.001
CHECKED BY: M. LAMON
DRAWN BY: B DAVIS
DATE: APRIL 2011
FILE NAME: ROCKWY_HHOLE
SHEET NUMBER: DETAIL 1

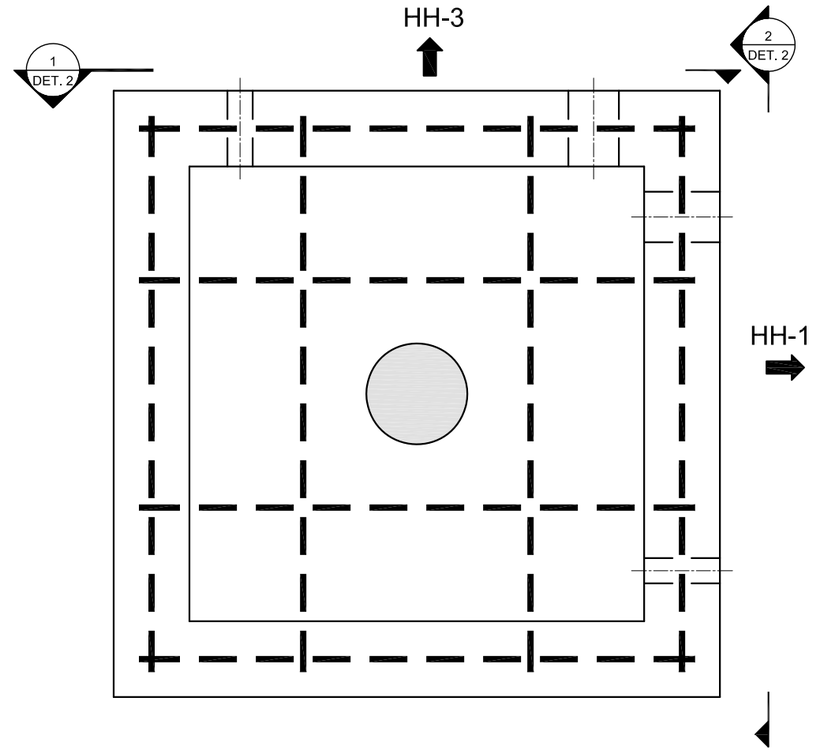

HAND HOLE HH-2 - PLAN VIEW
SCALE: 1"=1'-0"

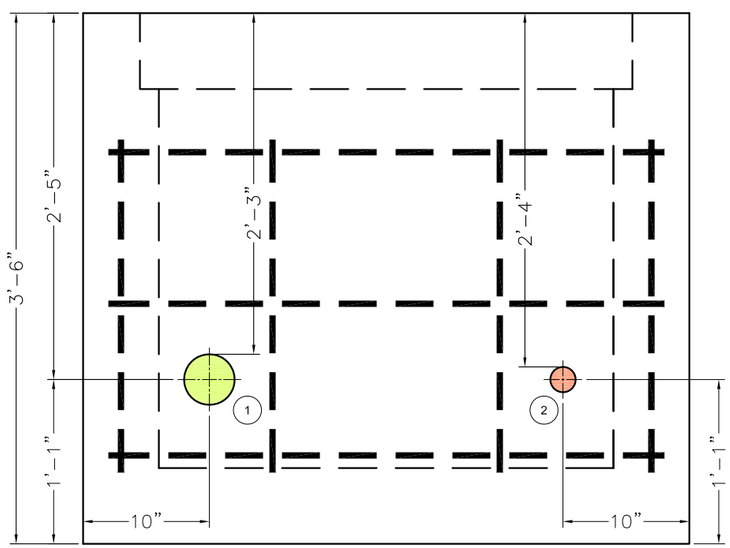

SIDE VIEW 1
SCALE: 1"=1'-0"

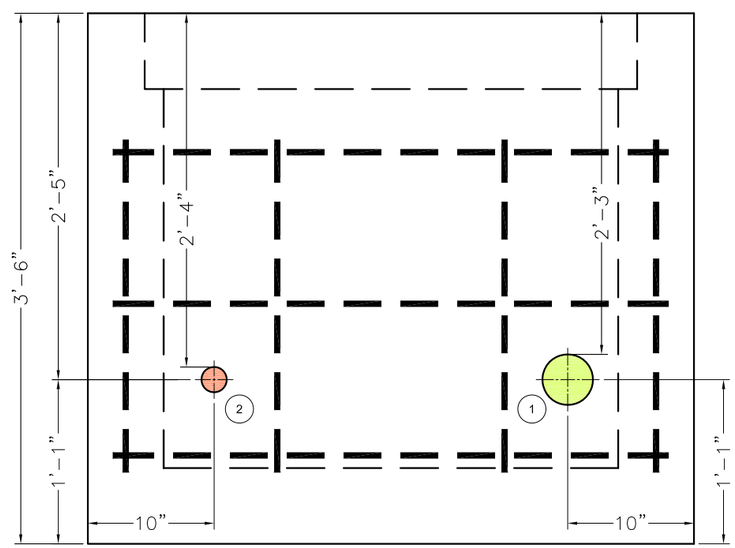

SIDE VIEW 2
SCALE: 1"=1'-0"

1. 3" PVC CONDUIT – MAIN POWER
2. 1" PVC CONDUIT – FIBER OPTIC

LEGEND

- 2" CORE HOLE
- 4" CORE HOLE
- 8" DRAIN HOLE
- #4 (1/2" DIA.) REBAR

AS-BUILT

GRAPHIC SCALE
1' 6" 0 1'
SCALE: 1"= 1'-0"

CAPE
180 Gordon Drive
Suite 105
Exton, PA 19341
(610) 594-8606

REVISIONS:

No.	Date	Remarks

U.S. Army Corps of Engineers
NEW YORK DISTRICT

PROJECT NAME
REMEDIAL ACTION ACTIVITIES
FOR THE EAST MAIN/WALL STREET
PLUME OF THE ROCKAWAY BOROUGH
WELL FIELD SUPERFUND SITE
MORRIS COUNTY, NEW JERSEY

SHEET TITLE
HANDHOLES HH-2
CORE HOLE DRAWING

CONTRACT NO: W912DQ-05-D-0001 TO-0005
JOB NO: 50001.005.001.001
CHECKED BY: M. LAMON
DRAWN BY: B DAVIS
DATE: APRIL 2011
FILE NAME: ROCKWY_HHOLE
SHEET NUMBER: DETAIL 2

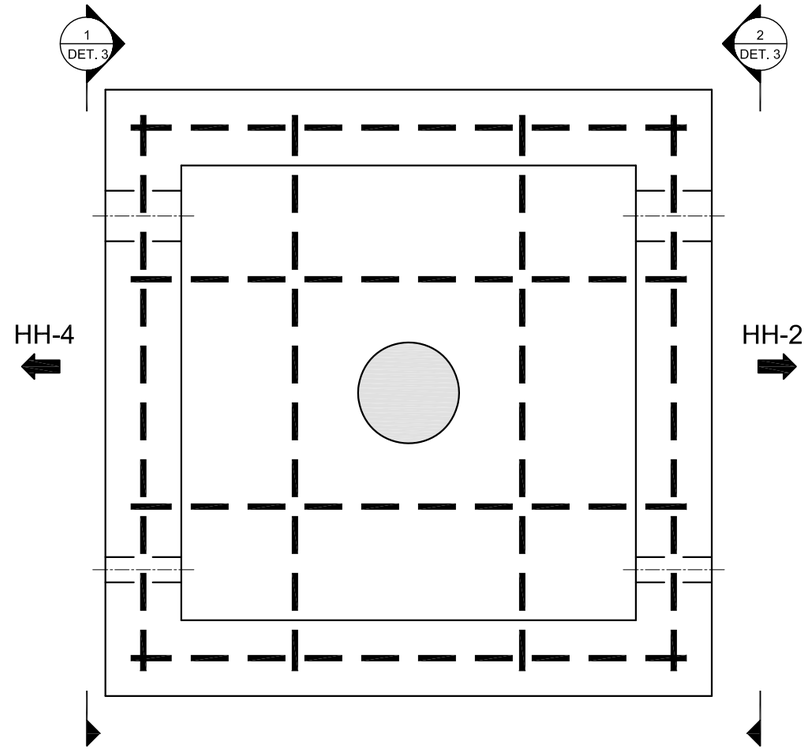

HAND HOLE HH-3 - PLAN VIEW
SCALE: 1"=1'-0"

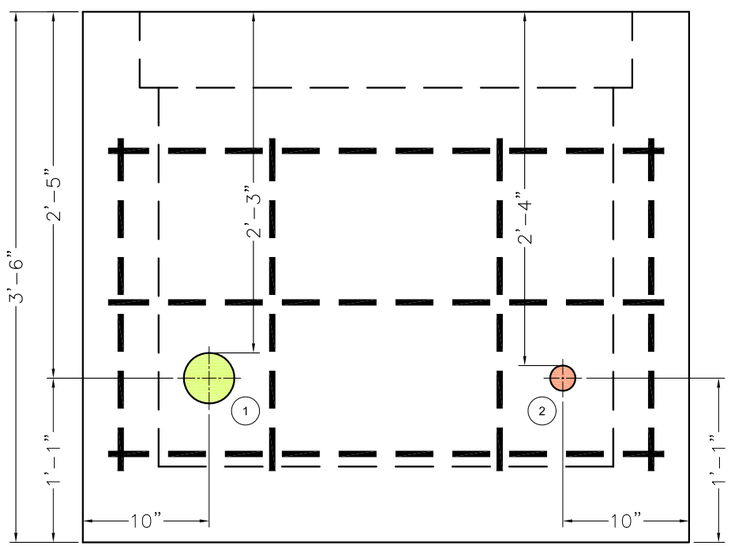

SIDE VIEW 1
SCALE: 1"=1'-0"

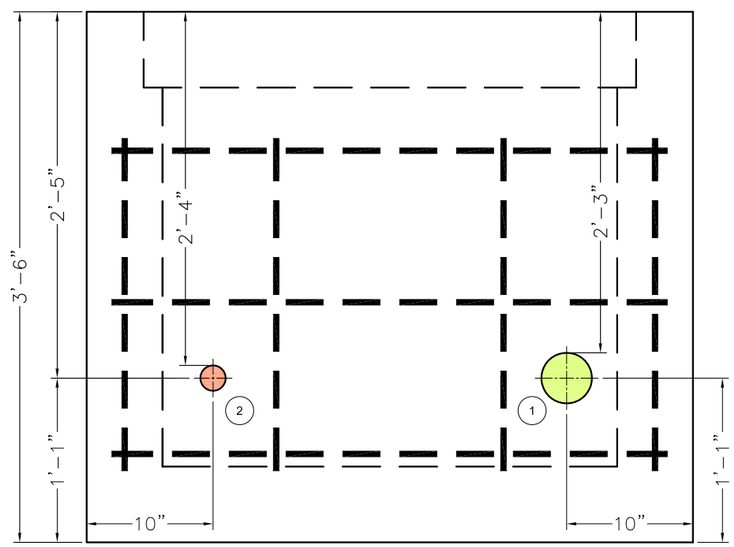

SIDE VIEW 2
SCALE: 1"=1'-0"

1 3" PVC CONDUIT – MAIN POWER
2 1" PVC CONDUIT – FIBER OPTIC

LEGEND

- 2" CORE HOLE
- 4" CORE HOLE
- 8" DRAIN HOLE
- #4 (1/2" DIA.) REBAR

AS-BUILT

GRAPHIC SCALE
1' 6" 0 1'
SCALE: 1"= 1'-0"

CAPE
180 Gordon Drive
Suite 105
Exton, PA 19341
(610) 594-8606

REVISIONS:

No.	Date	Remarks

U.S. Army Corps of Engineers
NEW YORK DISTRICT

PROJECT NAME
REMEDIAL ACTION ACTIVITIES
FOR THE EAST MAIN/WALL STREET
PLUME OF THE ROCKAWAY BOROUGH
WELL FIELD SUPERFUND SITE
MORRIS COUNTY, NEW JERSEY

SHEET TITLE
HANDHOLES HH-3
CORE HOLE DRAWING

CONTRACT NO: W912DQ-05-D-0001 TO-0005
JOB NO: 50001.005.001.001
CHECKED BY: M. LAMON
DRAWN BY: B DAVIS
DATE: APRIL 2011
FILE NAME: ROCKWY_HHOLE
SHEET NUMBER: DETAIL 3

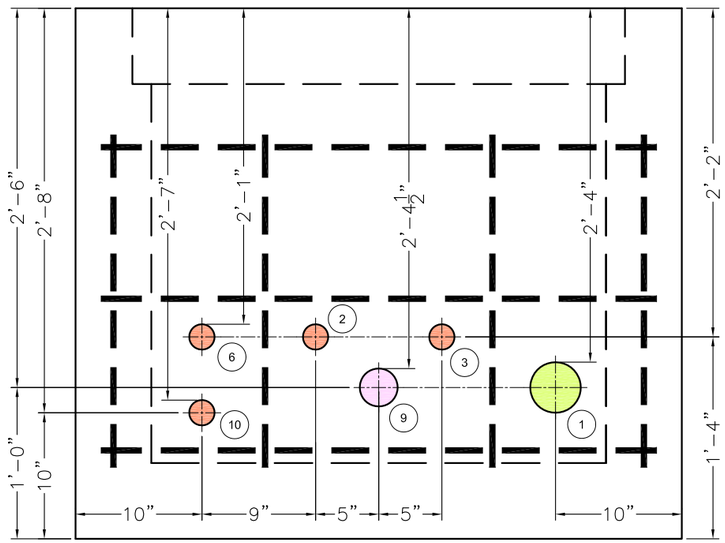

SIDE VIEW 1 / -
SCALE: 1"=1'-0"

1" PVC CONDUIT – MAIN POWER
1" PVC CONDUIT – FIBER OPTIC
1" PVC CONDUIT – EW–6 PUMP LEADS
1" PVC CONDUIT – EW–6 HEAT TRACE
1" RGS CONDUIT – EW–6 FLOW METER ANALOG, LEVEL ANALOG, FLOW METER POWER CABLE, PUMP TEMPERATURE, MOISTURE SWITCHES
1"PVC CONDUIT – EW–10 PUMP LEAD
1" RGS CONDUIT – EW–10 FLOW METER ANALOG, LEVEL ANALOG, FLOW METER POWER CABLE, PUMP TEMPERATURE, MOISTURE SWITCHES
1"PVC CONDUIT – EW–10 HEAT TRACE
2" RGS CONDUIT – EW–6 & EW–10 FLOW METER ANALOG, LEVEL ANALOG, FLOW METER POWER CABLE, PUMP TEMPERATURE, MOISTURE SWITCHES
1" PVC CONDUIT – EW–6 & EW–10 HEAT TRACE

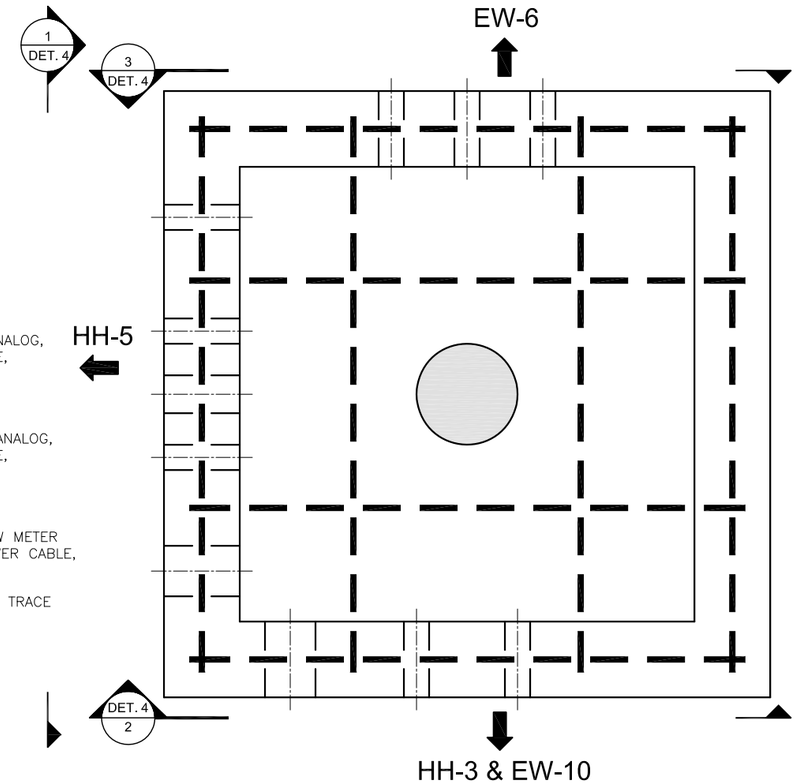

HAND HOLE HH-4 - PLAN VIEW
SCALE: 1"=1'-0"

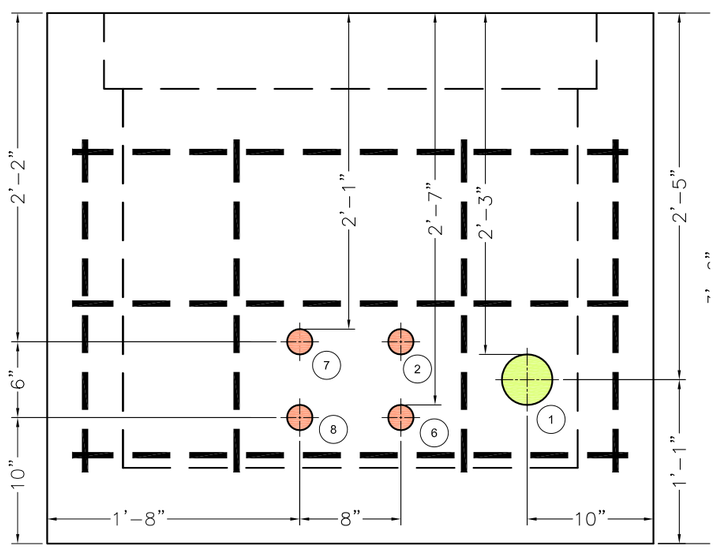

SIDE VIEW 2 / -
SCALE: 1"=1'-0"

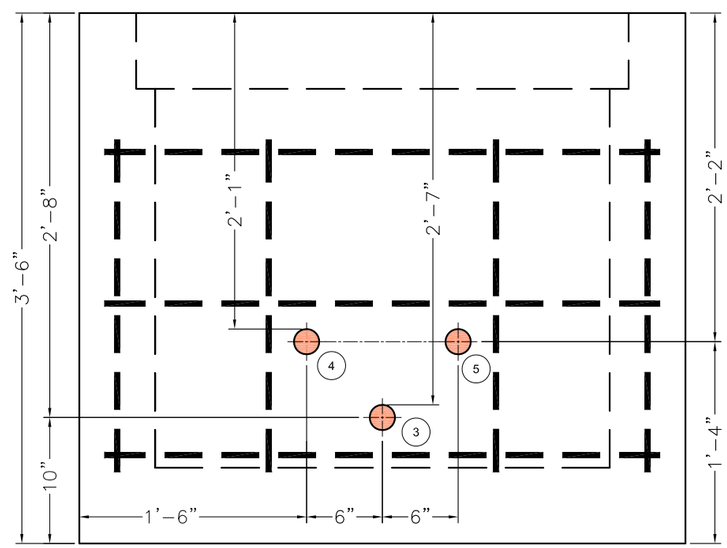

SIDE VIEW 3 / -
SCALE: 1"=1'-0"

LEGEND

- 2" CORE HOLE
- 4" 3ORE HOLE
- 4" CORE HOLE
- 8" DRAIN HOLE
- #4 (1/2" DIA.) REBAR

AS-BUILT

GRAPHIC SCALE
1' 6" 0 1'
SCALE: 1"= 1'-0"

CAPE
180 Gordon Drive
Suite 105
Exton, PA 19341
(610) 594-8606

REVISIONS:

No.	Date	Remarks

U.S. Army Corps of Engineers
NEW YORK DISTRICT

PROJECT NAME
REMEDIAL ACTION ACTIVITIES
FOR THE EAST MAIN/WALL STREET
PLUME OF THE ROCKAWAY BOROUGH
WELL FIELD SUPERFUND SITE
MORRIS COUNTY, NEW JERSEY

SHEET TITLE
HANDHOLES HH-4
CORE HOLE DRAWING

CONTRACT NO: W912DQ-05-D-0001 TO-0005
JOB NO: 50001.005.001.001
CHECKED BY: M. LAMON
DRAWN BY: B DAVIS
DATE: APRIL 2011
FILE NAME: ROCKWY_HHOLE
SHEET NUMBER: DETAIL 4

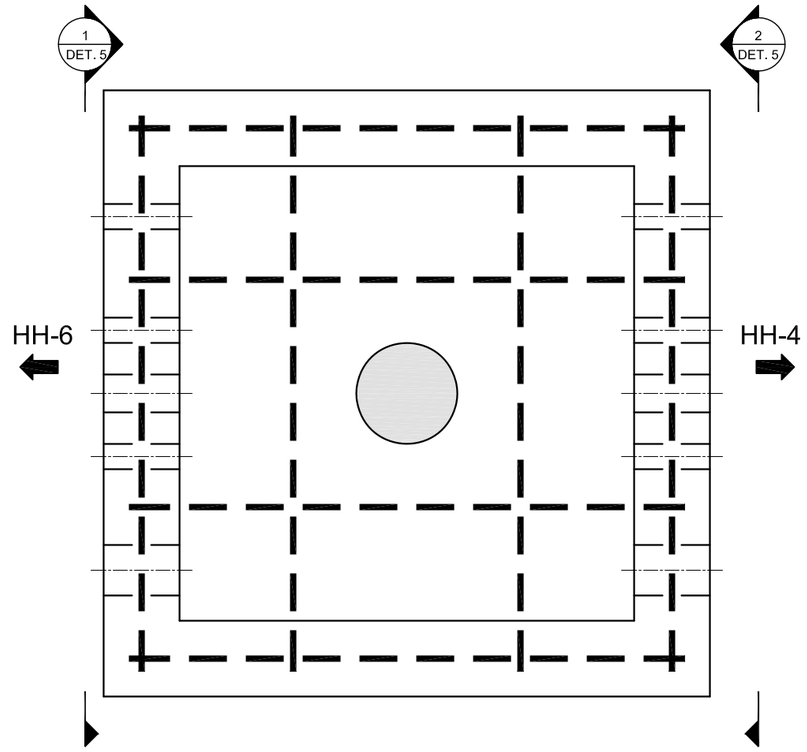

HAND HOLE HH-5- PLAN VIEW

SCALE: 1"=1'-0"

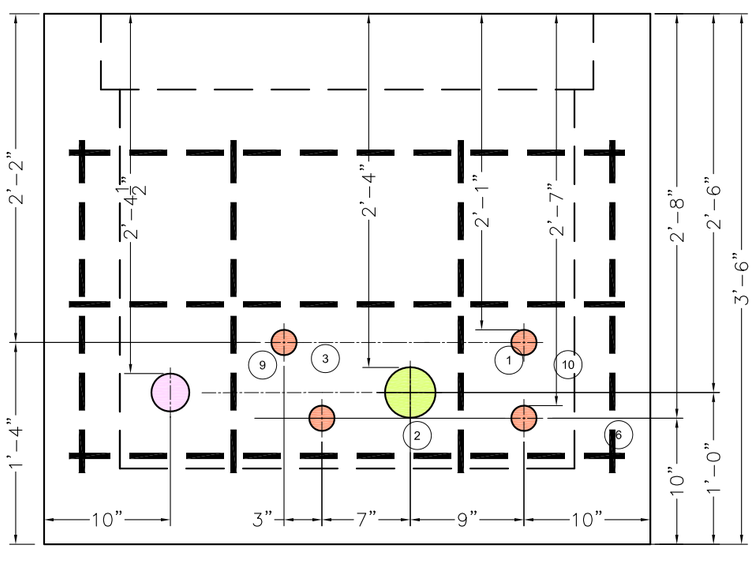

SIDE VIEW 1

SCALE: 1"=1'-0"

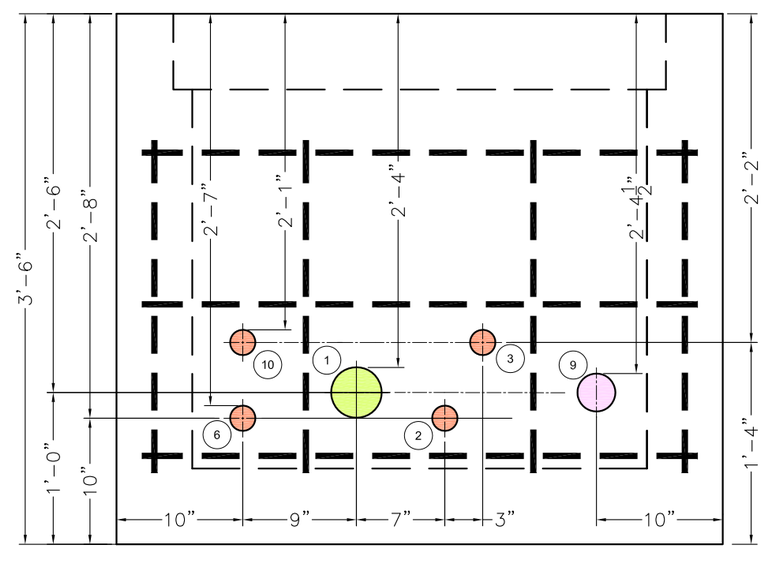

SIDE VIEW 2

SCALE: 1"=1'-0"

1. 1" PVC CONDUIT – MAIN POWER
2. 1" PVC CONDUIT – FIBER OPTIC
3. 1" PVC CONDUIT – EW-6 PUMP LEADS
6. 1"PVC CONDUIT – EW-10 PUMP LEAD
9. 2" RGS CONDUIT – EW-6 & EW-10 FLOW METER ANALOG, LEVEL ANALOG, FLOW METER POWER CABLE, PUMP TEMPERATURE, MOISTURE SWITCHES
10. 1" PVC CONDUIT – EW-6 & EW-10 HEAT TRACE

LEGEND

- 2" CORE HOLE
- 3" CORE HOLE
- 4" CORE HOLE
- 8" DRAIN HOLE
- #4 (1/2" DIA.) REBAR

AS-BUILT

GRAPHIC SCALE

1' 6" 0 1'

SCALE: 1"= 1'-0"

CAPE
180 Gordon Drive
Suite 105
Exton, PA 19341
(610) 594-8606

REVISIONS:

No.	Date	Remarks

U.S. Army Corps of Engineers
NEW YORK DISTRICT

PROJECT NAME
REMEDIAL ACTION ACTIVITIES
FOR THE EAST MAIN/WALL STREET
PLUME OF THE ROCKAWAY BOROUGH
WELL FIELD SUPERFUND SITE
MORRIS COUNTY, NEW JERSEY

SHEET TITLE
HANDHOLES HH-5
CORE HOLE DRAWING

CONTRACT NO: W912DQ-05-D-0001 TO-0005
JOB NO: 50001.005.001.001
CHECKED BY: M. LAMON
DRAWN BY: B DAVIS
DATE: APRIL 2011
FILE NAME: ROCKWY_HHOLE
SHEET NUMBER: DETAIL 5

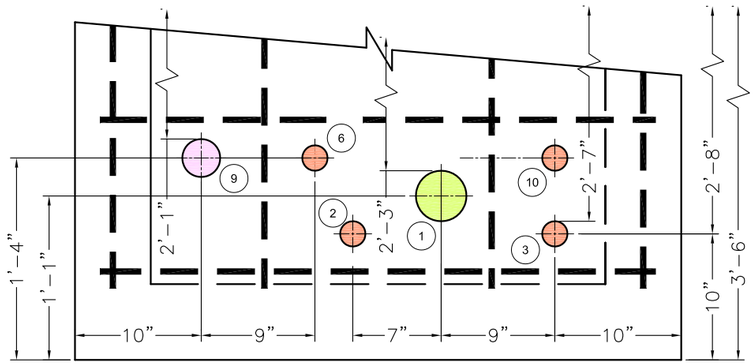

SIDE VIEW 1 / -
SCALE: 1"=1'-0"

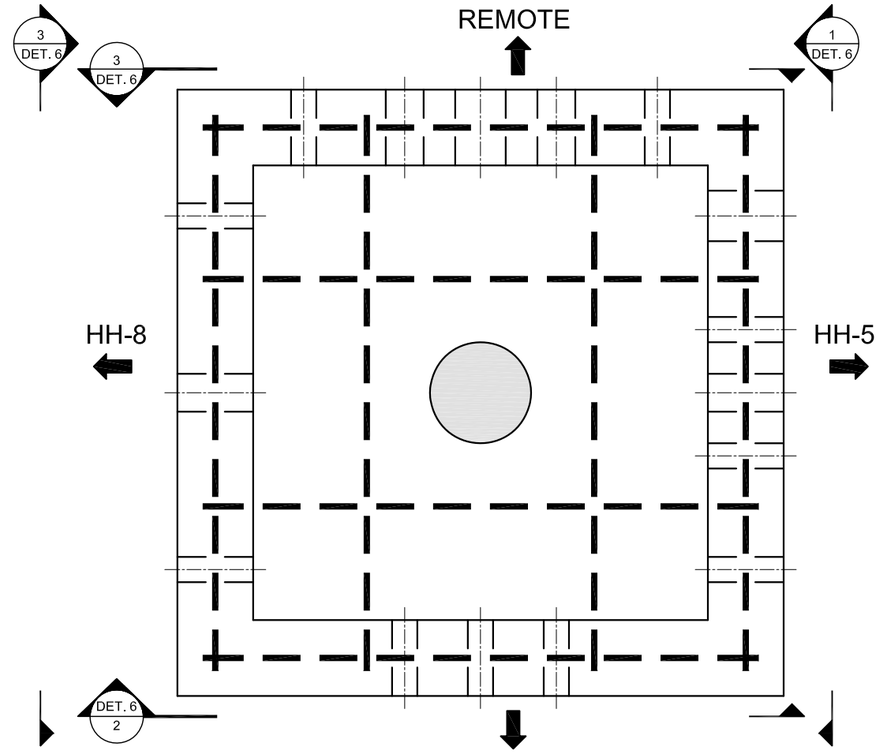

HAND HOLE HH-6- PLAN VIEW
SCALE: 1"=1'-0"

LEGEND

- 2" CORE HOLE
- 3" CORE HOLE
- 4" CORE HOLE
- 8" DRAIN HOLE
- #4 (1/2" DIA.) REBAR

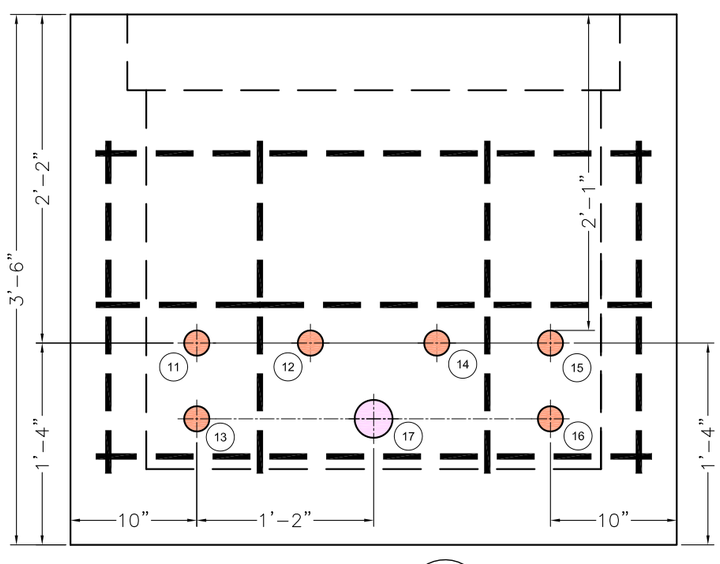

SIDE VIEW 2 / -
SCALE: 1"=1'-0"

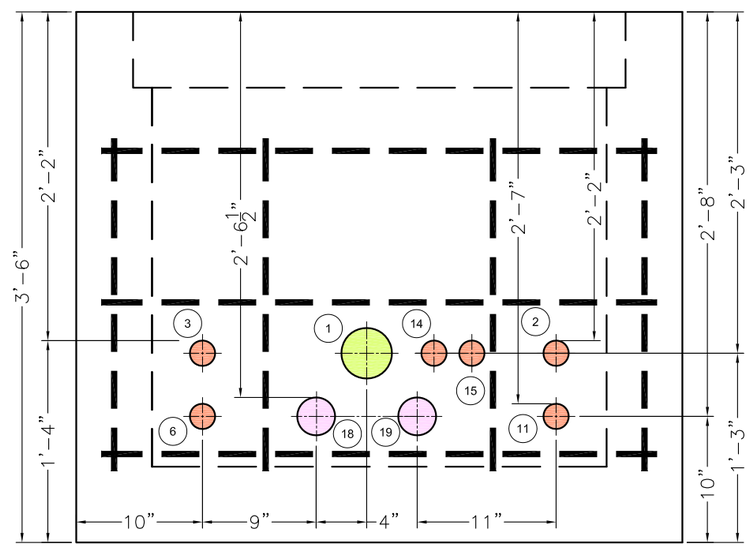

SIDE VIEW 3 / -
SCALE: 1"=1'-0"

1. 1" PVC CONDUIT – MAIN POWER
2. 1" PVC CONDUIT – FIBER OPTIC
3. 1" PVC CONDUIT – EW-6 PUMP LEADS
6. 1"PVC CONDUIT – EW-10 PUMP LEAD
9. 2" RGS CONDUIT – EW-6 & EW-10 FLOW METER ANALOG, LEVEL ANALOG, FLOW METER POWER CABLE, PUMP TEMPERATURE, MOISTURE SWITCHES
10. 1" PVC CONDUIT – EW-6 & EW-10 HEAT TRACE
11. 1" PVC CONDUIT – EW-9 PUMP LEAD
12. 1" CONDUIT – EW-9 HEAT TRACE
13. 1" RGS CONDUIT – EW-9 FLOW METER ANALOG, LEVEL ANALOG, FLOW METER POWER CABLE, PUMP TEMPERATURE, MOISTURE SWITCHES
14. 1" PVC CONDUIT – EW-8 PUMP LEAD
15. 1" PVC CONDUIT – EW-5A PUMP LEAD
16. 1" CONDUIT – EW-5A & EW-8 HEAT TRACE
17. 2" RGS CONDUIT – EW-5A & EW-8 FLOW METER ANALOG, LEVEL ANALOG, FLOW METER POWER CABLE, PUMP TEMPERATURE, MOISTURE SWITCHES
18. 2' PVC CONDUIT – HEAT TRACE ALL WELLS
19. 2" RGS CONDUIT – LOW METER ANALOG, LEVEL ANALOG, FLOW METER POWER CABLE, PUMP TEMPERATURE, MOISTURE SWITCHES ALL WELLS

AS-BUILT

GRAPHIC SCALE
1' 6" 0 1'
SCALE: 1"= 1'-0"

CAPE
180 Gordon Drive
Suite 105
Exton, PA 19341
(610) 594-8606

REVISIONS:

No.	Date	Remarks

U.S. Army Corps of Engineers
NEW YORK DISTRICT

PROJECT NAME
REMEDIAL ACTION ACTIVITIES FOR THE EAST MAIN/WALL STREET PLUME OF THE ROCKAWAY BOROUGH WELL FIELD SUPERFUND SITE MORRIS COUNTY, NEW JERSEY

SHEET TITLE
HANDHOLES HH-6 CORE HOLE DRAWING

CONTRACT NO: W912DQ-05-D-0001 TO-0005
JOB NO: 50001.005.001.001
CHECKED BY: M. LAMON
DRAWN BY: B DAVIS
DATE: APRIL 2011
FILE NAME: ROCKWY_HHOLE
SHEET NUMBER: DETAIL 6

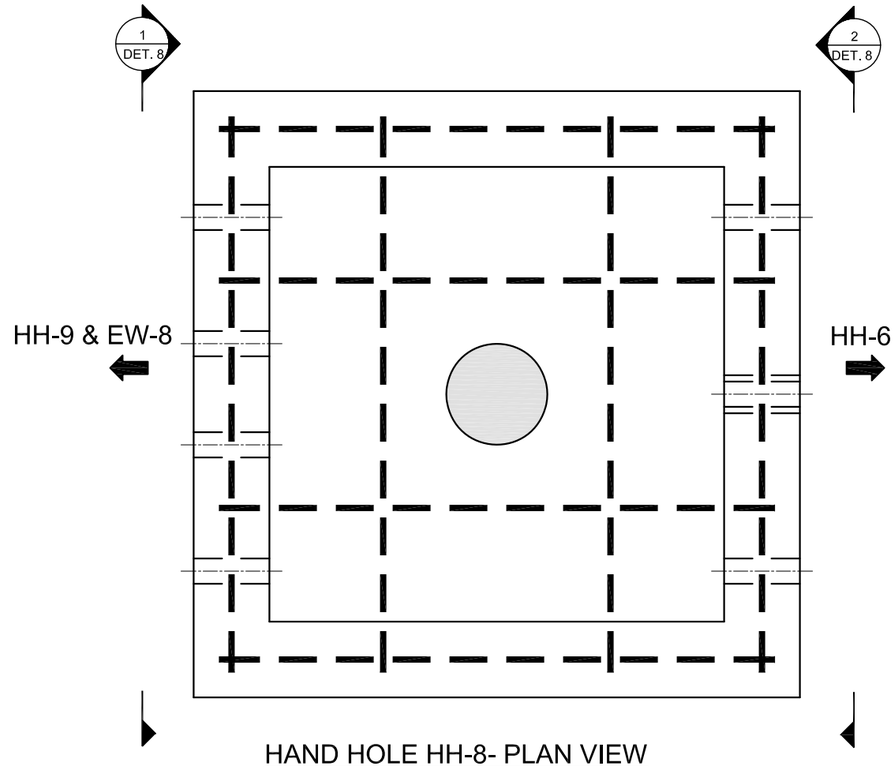

HAND HOLE HH-8- PLAN VIEW
SCALE: 1"=1'-0"

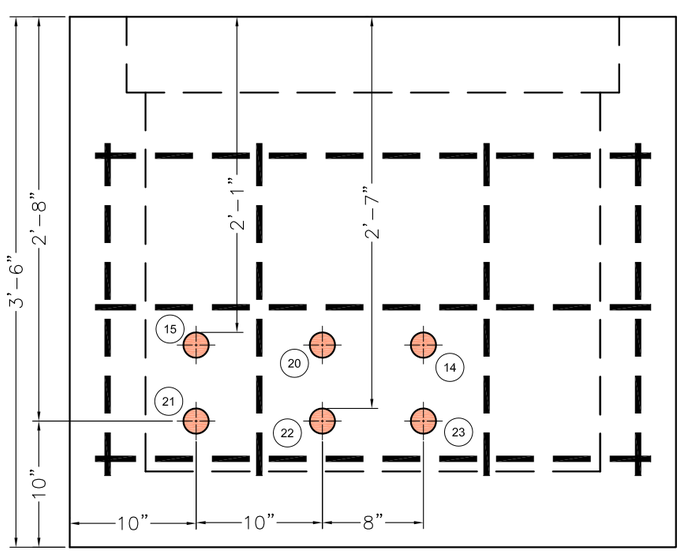

SIDE VIEW 1
SCALE: 1"=1'-0"

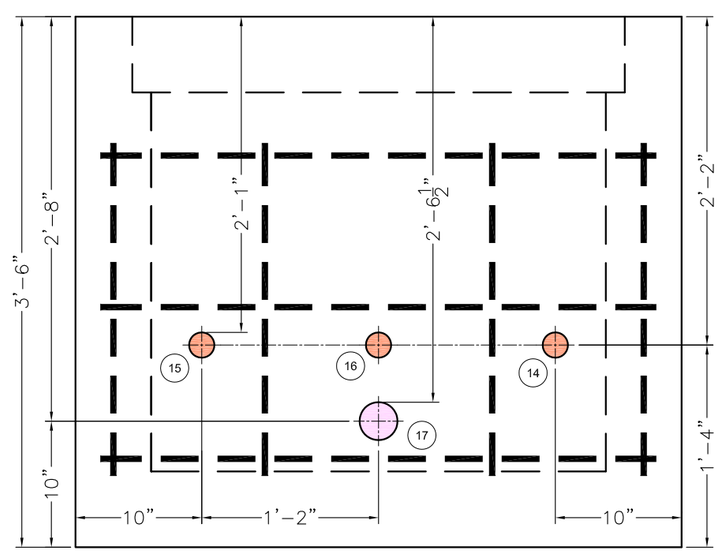

SIDE VIEW 2
SCALE: 1"=1'-0"

(14) 1" PVC CONDUIT – EW-8 PUMP LEAD

(15) 1" PVC CONDUIT – EW-5A PUMP LEAD

(16) 1" CONDUIT – EW-5A & EW-8 HEAT TRACE

(17) 2" RGS CONDUIT – EW-5A & EW-8 FLOW METER ANALOG, LEVEL ANALOG, FLOW METER POWER CABLE, PUMP TEMPERATURE, MOISTURE SWITCHES

(20) 1' PVC CONDUIT – EW-5A HEAT TRACE

(21) 1" RGS CONDUIT – EW-5A LOW METER ANALOG, LEVEL ANALOG, FLOW METER POWER CABLE, PUMP TEMPERATURE, MOISTURE SWITCHES

(22) 1' PVC CONDUIT – EW-8 HEAT TRACE

(23) 1" RGS CONDUIT – EW-8 LOW METER ANALOG, LEVEL ANALOG, FLOW METER POWER CABLE, PUMP TEMPERATURE, MOISTURE SWITCHES

LEGEND

- 2" CORE HOLE
- 3" CORE HOLE
- 4" CORE HOLE
- 8" DRAIN HOLE
- #4 (1/2" DIA.) REBAR

AS-BUILT

GRAPHIC SCALE

1' 6" 0 1'

SCALE: 1"= 1'-0"

CAPE
180 Gordon Drive
Suite 105
Exton, PA 19341
(610) 594-8606

REVISIONS:

No.	Date	Remarks

U.S. Army Corps of Engineers
NEW YORK DISTRICT

PROJECT NAME
REMEDIAL ACTION ACTIVITIES
FOR THE EAST MAINWALL STREET
PLUME OF THE ROCKAWAY BOROUGH
WELL FIELD SUPERFUND SITE
MORRIS COUNTY, NEW JERSEY

SHEET TITLE
HANDHOLES HH-8
CORE HOLE DRAWING

CONTRACT NO: W912DQ-05-D-0001 TO-0005
JOB NO: 50001.005.001.001
CHECKED BY: M. LAMON
DRAWN BY: B DAVIS
DATE: APRIL 2011
FILE NAME: ROCKWY_HHOLE
SHEET NUMBER: DETAIL 8

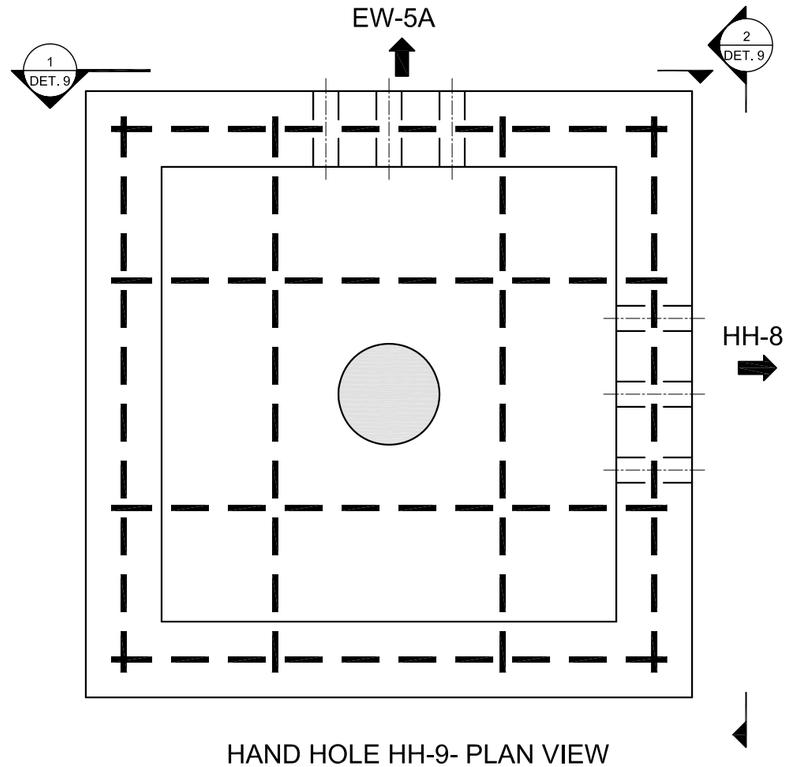

HAND HOLE HH-9- PLAN VIEW
SCALE: 1"=1'-0"

15 1" PVC CONDUIT – EW–5A PUMP LEAD

20 1' PVC CONDUIT – EW–5A HEAT TRACE

21 1" RGS CONDUIT – EW–5A LOW METER ANALOG, LEVEL ANALOG, FLOW METER POWER CABLE, PUMP TEMPERATURE, MOISTURE SWITCHES

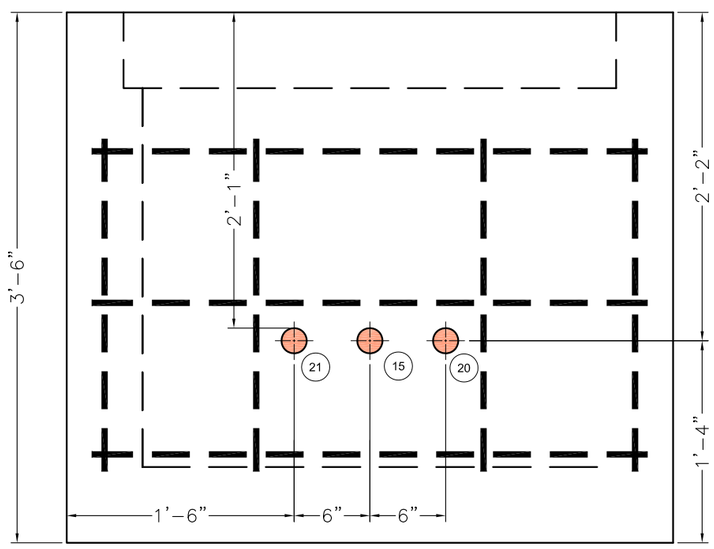

SIDE VIEW 1
SCALE: 1"=1'-0"

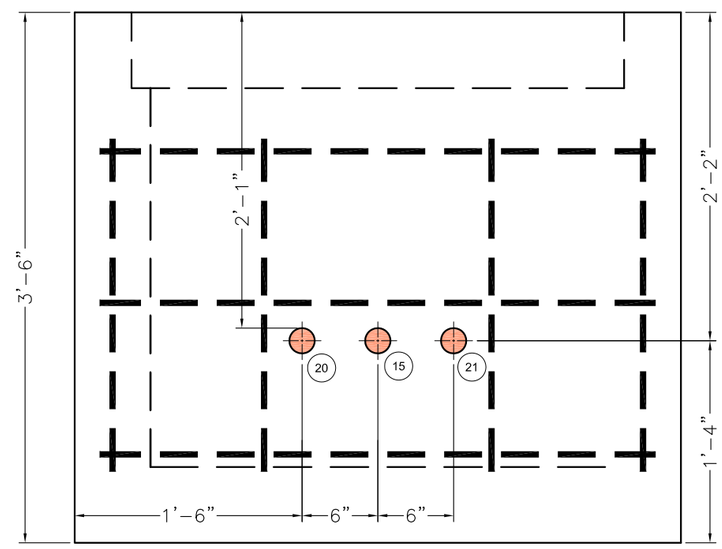

SIDE VIEW 2
SCALE: 1"=1'-0"

LEGEND

- 2" CORE HOLE
- 3" CORE HOLE
- 4" CORE HOLE
- 8" DRAIN HOLE
- #4 (1/2" DIA.) REBAR

AS-BUILT

GRAPHIC SCALE

1' 6" 0 1'

SCALE: 1"= 1'-0"

CAPE
180 Gordon Drive
Suite 105
Exton, PA 19341
(610) 594-8606

REVISIONS:

No.	Date	Remarks

U.S. Army Corps of Engineers
NEW YORK DISTRICT

PROJECT NAME
REMEDIAL ACTION ACTIVITIES
FOR THE EAST MAINWALL STREET
PLUME OF THE ROCKAWAY BOROUGH
WELL FIELD SUPERFUND SITE
MORRIS COUNTY, NEW JERSEY

SHEET TITLE
HANDHOLES HH-9
CORE HOLE DRAWING

CONTRACT NO: W912DQ-05-D-0001 TO-0005
JOB NO: 50001.005.001.001
CHECKED BY: M. LAMON
DRAWN BY: B DAVIS
DATE: APRIL 2011
FILE NAME: ROCKWY_HHOLE
SHEET NUMBER: DETAIL 9

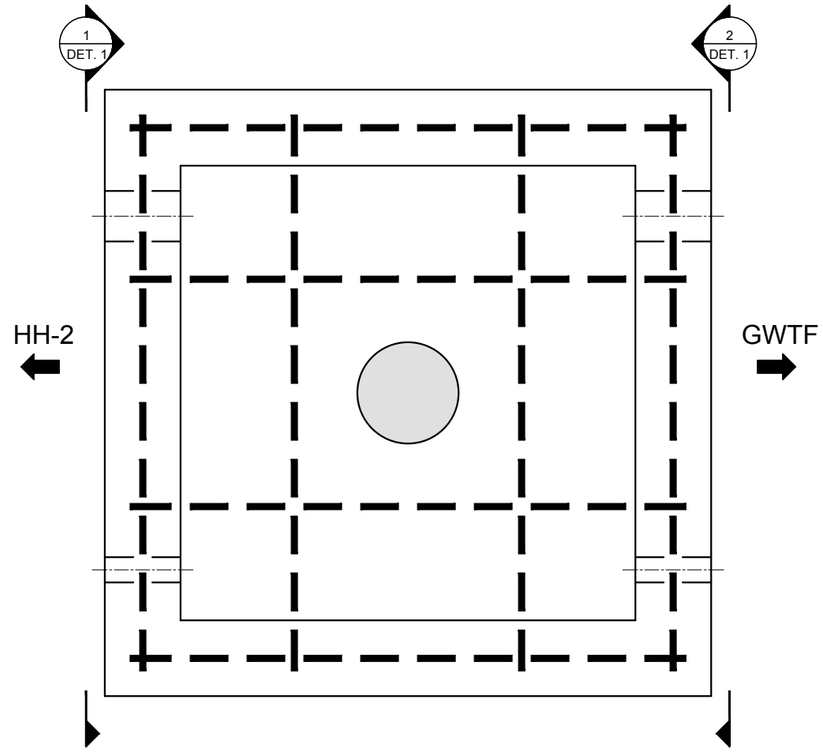

HAND HOLE HH-1 - PLAN VIEW
SCALE: 1"=1'-0"

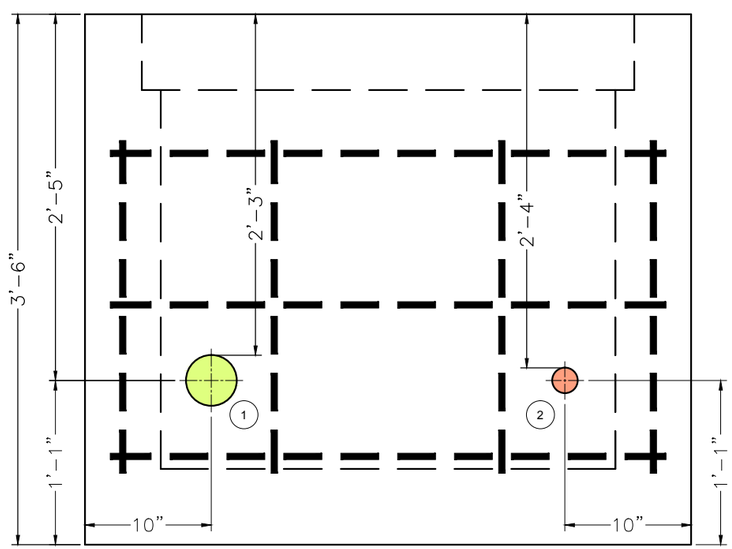

SIDE VIEW 1
SCALE: 1"=1'-0"

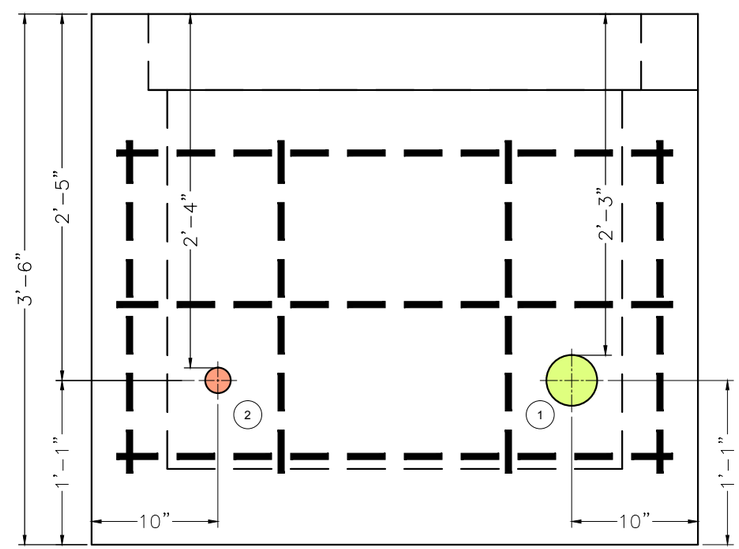

SIDE VIEW 2
SCALE: 1"=1'-0"

1 3" PVC CONDUIT – MAIN POWER
2 1" PVC CONDUIT – FIBER OPTIC

LEGEND

- 2" CORE HOLE
- 4" CORE HOLE
- 8" DRAIN HOLE
- #4 (1/2" DIA.) REBAR

AS-BUILT

GRAPHIC SCALE
1' 6" 0 1'
SCALE: 1"= 1'-0"

CAPE
180 Gordon Drive
Suite 105
Exton, PA 19341
(610) 594-8606

REVISIONS:

No.	Date	Remarks

U.S. Army Corps of Engineers
NEW YORK DISTRICT

PROJECT NAME
REMEDIAL ACTION ACTIVITIES
FOR THE EAST MAIN/WALL STREET
PLUME OF THE ROCKAWAY BOROUGH
WELL FIELD SUPERFUND SITE
MORRIS COUNTY, NEW JERSEY

SHEET TITLE
HANDHOLES HH-1
CORE HOLE DRAWING

CONTRACT NO: W912DQ-05-D-0001 TO-0005
JOB NO: 50001.005.001.001
CHECKED BY: M. LAMON
DRAWN BY: B DAVIS
DATE: APRIL 2011
FILE NAME: ROCKWY_HHOLE
SHEET NUMBER: DETAIL 1

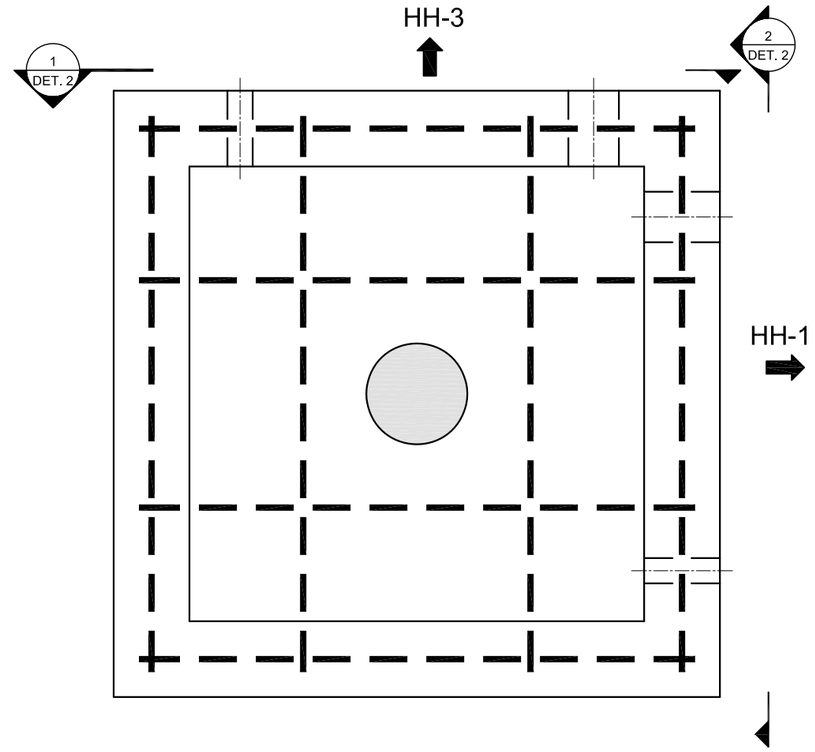

HAND HOLE HH-2 - PLAN VIEW
SCALE: 1"=1'-0"

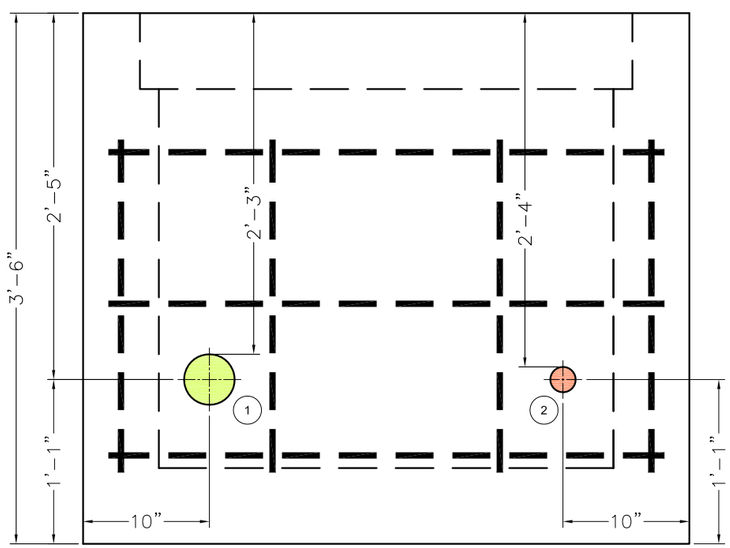

SIDE VIEW 1
SCALE: 1"=1'-0"

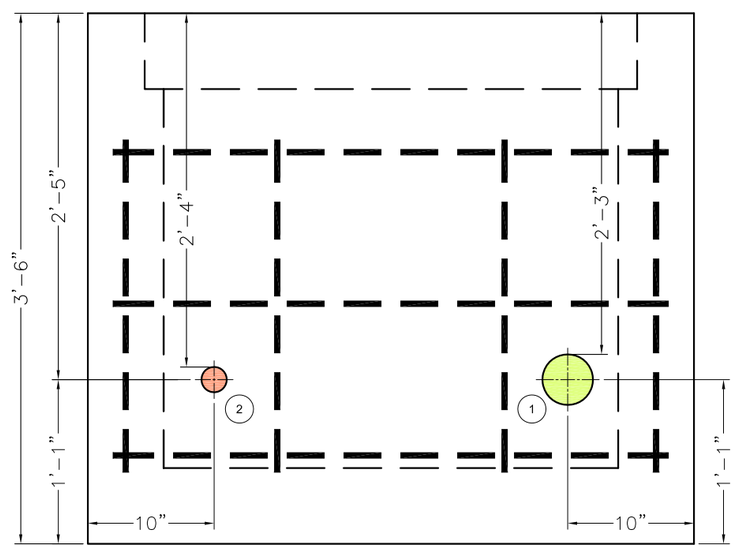

SIDE VIEW 2
SCALE: 1"=1'-0"

1. 3" PVC CONDUIT – MAIN POWER
2. 1" PVC CONDUIT – FIBER OPTIC

LEGEND

- 2" CORE HOLE
- 4" CORE HOLE
- 8" DRAIN HOLE
- #4 (1/2" DIA.) REBAR

AS-BUILT

GRAPHIC SCALE
1' 6" 0 1'
SCALE: 1"= 1'-0"

CAPE
180 Gordon Drive
Suite 105
Exton, PA 19341
(610) 594-8606

REVISIONS:

No.	Date	Remarks

U.S. Army Corps of Engineers
NEW YORK DISTRICT

PROJECT NAME
REMEDIAL ACTION ACTIVITIES
FOR THE EAST MAIN/WALL STREET
PLUME OF THE ROCKAWAY BOROUGH
WELL FIELD SUPERFUND SITE
MORRIS COUNTY, NEW JERSEY

SHEET TITLE
HANDHOLES HH-2
CORE HOLE DRAWING

CONTRACT NO: W912DQ-05-D-0001 TO-0005
JOB NO: 50001.005.001.001
CHECKED BY: M. LAMON
DRAWN BY: B DAVIS
DATE: APRIL 2011
FILE NAME: ROCKWY_HHOLE
SHEET NUMBER: DETAIL 2

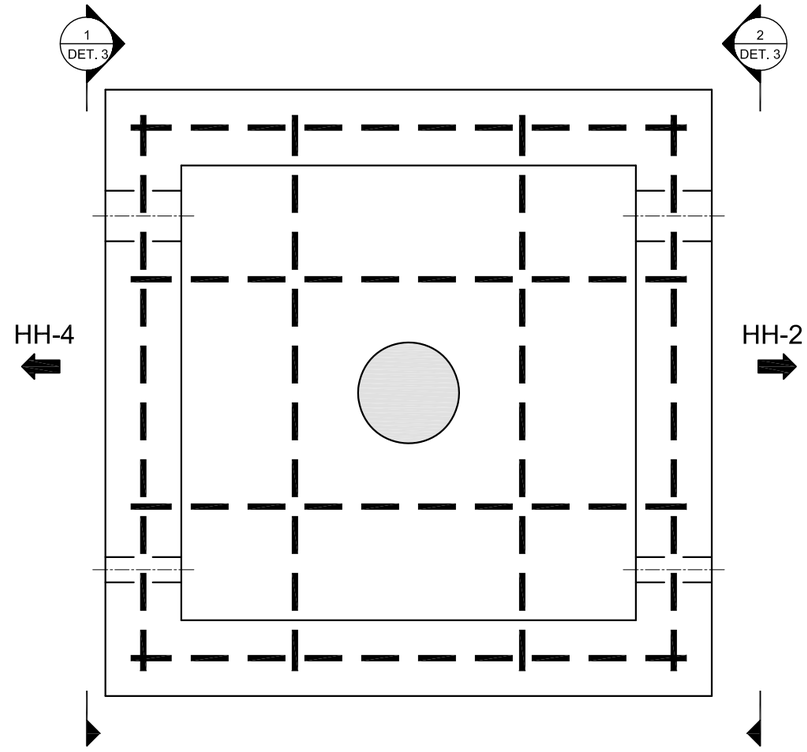

HAND HOLE HH-3 - PLAN VIEW
SCALE: 1"=1'-0"

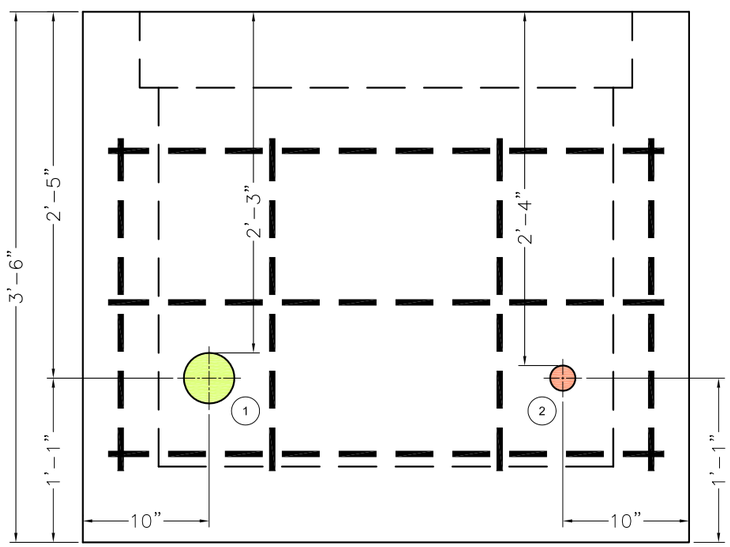

SIDE VIEW 1
SCALE: 1"=1'-0"

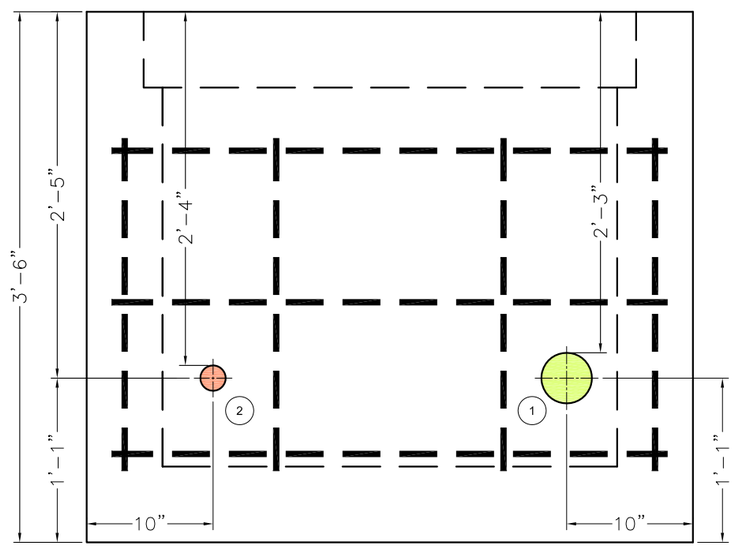

SIDE VIEW 2
SCALE: 1"=1'-0"

1 3" PVC CONDUIT – MAIN POWER
2 1" PVC CONDUIT – FIBER OPTIC

LEGEND

- 2" CORE HOLE
- 4" CORE HOLE
- 8" DRAIN HOLE
- #4 (1/2" DIA.) REBAR

AS-BUILT

GRAPHIC SCALE
1' 6" 0 1'
SCALE: 1"= 1'-0"

CAPE
180 Gordon Drive
Suite 105
Exton, PA 19341
(610) 594-8606

REVISIONS:

No.	Date	Remarks

U.S. Army Corps of Engineers
NEW YORK DISTRICT

PROJECT NAME
REMEDIAL ACTION ACTIVITIES
FOR THE EAST MAIN/WALL STREET
PLUME OF THE ROCKAWAY BOROUGH
WELL FIELD SUPERFUND SITE
MORRIS COUNTY, NEW JERSEY

SHEET TITLE
HANDHOLES HH-3
CORE HOLE DRAWING

CONTRACT NO: W912DQ-05-D-0001 TO-0005
JOB NO: 50001.005.001.001
CHECKED BY: M. LAMON
DRAWN BY: B DAVIS
DATE: APRIL 2011
FILE NAME: ROCKWY_HHOLE
SHEET NUMBER: DETAIL 3

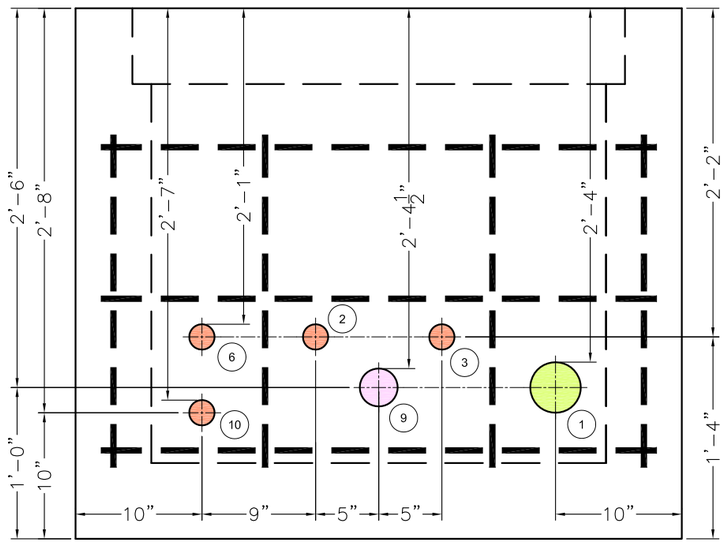

SIDE VIEW 1 / -
SCALE: 1"=1'-0"

1" PVC CONDUIT – MAIN POWER
1" PVC CONDUIT – FIBER OPTIC
1" PVC CONDUIT – EW–6 PUMP LEADS
1" PVC CONDUIT – EW–6 HEAT TRACE
1" RGS CONDUIT – EW–6 FLOW METER ANALOG, LEVEL ANALOG, FLOW METER POWER CABLE, PUMP TEMPERATURE, MOISTURE SWITCHES
1"PVC CONDUIT – EW–10 PUMP LEAD
1" RGS CONDUIT – EW–10 FLOW METER ANALOG, LEVEL ANALOG, FLOW METER POWER CABLE, PUMP TEMPERATURE, MOISTURE SWITCHES
1"PVC CONDUIT – EW–10 HEAT TRACE
2" RGS CONDUIT – EW–6 & EW–10 FLOW METER ANALOG, LEVEL ANALOG, FLOW METER POWER CABLE, PUMP TEMPERATURE, MOISTURE SWITCHES
1" PVC CONDUIT – EW–6 & EW–10 HEAT TRACE

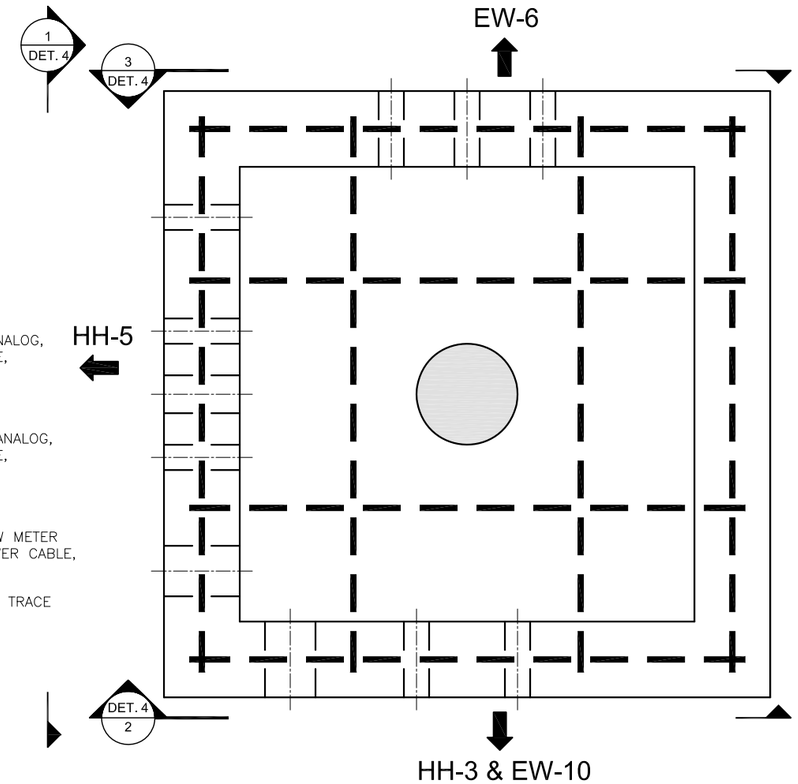

HAND HOLE HH-4 - PLAN VIEW
SCALE: 1"=1'-0"

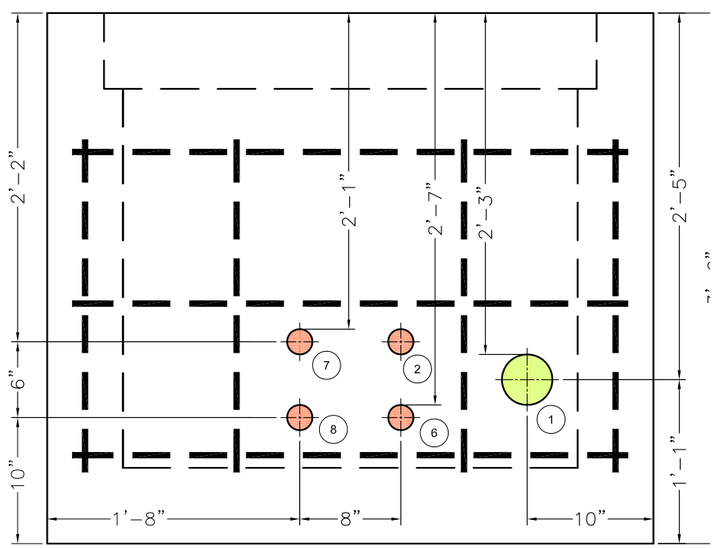

SIDE VIEW 2 / -
SCALE: 1"=1'-0"

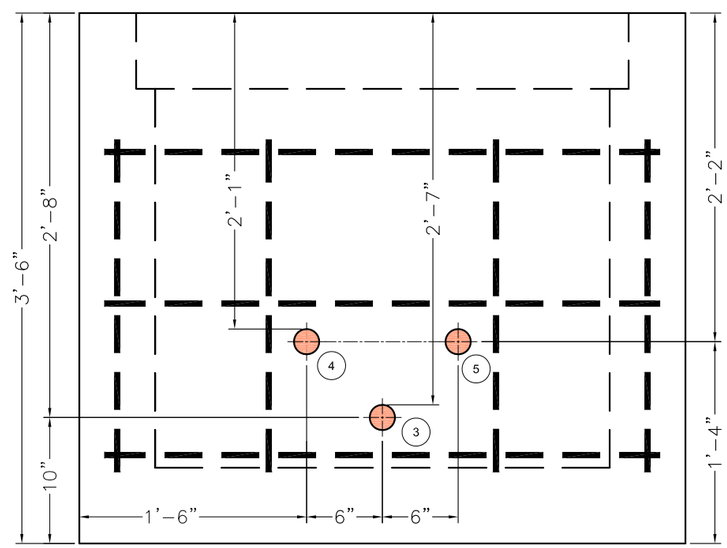

SIDE VIEW 3 / -
SCALE: 1"=1'-0"

LEGEND

- 2" CORE HOLE
- 4" 3ORE HOLE
- 4" CORE HOLE
- 8" DRAIN HOLE
- #4 (1/2" DIA.) REBAR

AS-BUILT

GRAPHIC SCALE
1' 6" 0 1'
SCALE: 1"= 1'-0"

CAPE
180 Gordon Drive
Suite 105
Exton, PA 19341
(610) 594-8606

REVISIONS:

No.	Date	Remarks

U.S. Army Corps of Engineers
NEW YORK DISTRICT

PROJECT NAME
REMEDIAL ACTION ACTIVITIES
FOR THE EAST MAIN/WALL STREET
PLUME OF THE ROCKAWAY BOROUGH
WELL FIELD SUPERFUND SITE
MORRIS COUNTY, NEW JERSEY

SHEET TITLE
HANDHOLES HH-4
CORE HOLE DRAWING

CONTRACT NO: W912DQ-05-D-0001 TO-0005
JOB NO: 50001.005.001.001
CHECKED BY: M. LAMON
DRAWN BY: B DAVIS
DATE: APRIL 2011
FILE NAME: ROCKWY_HHOLE
SHEET NUMBER: DETAIL 4

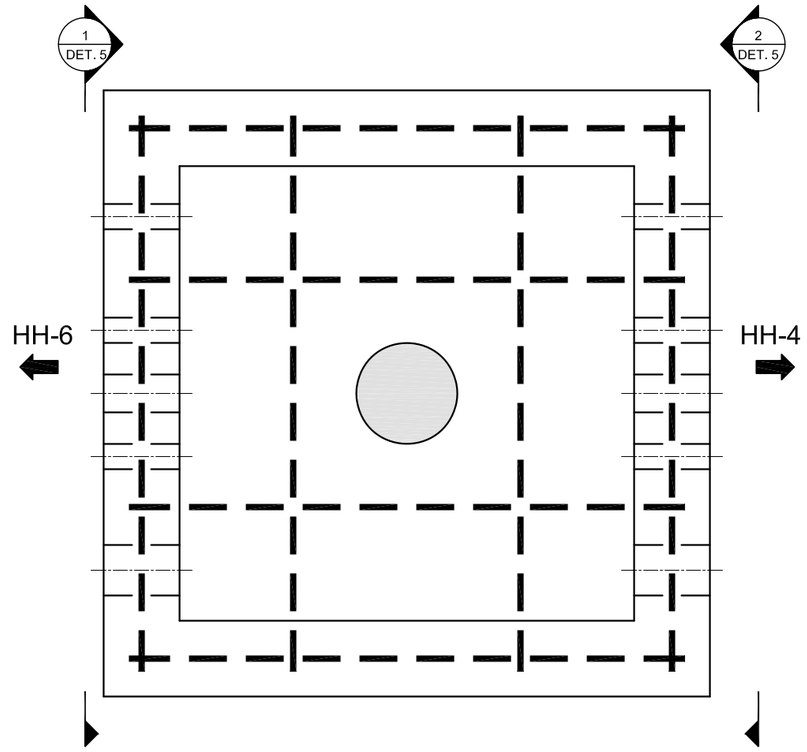

HAND HOLE HH-5- PLAN VIEW

SCALE: 1"=1'-0"

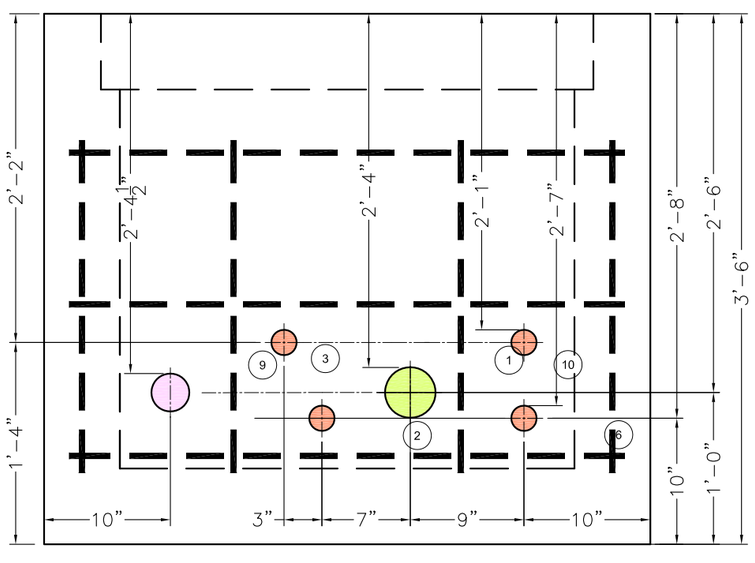

SIDE VIEW 1

SCALE: 1"=1'-0"

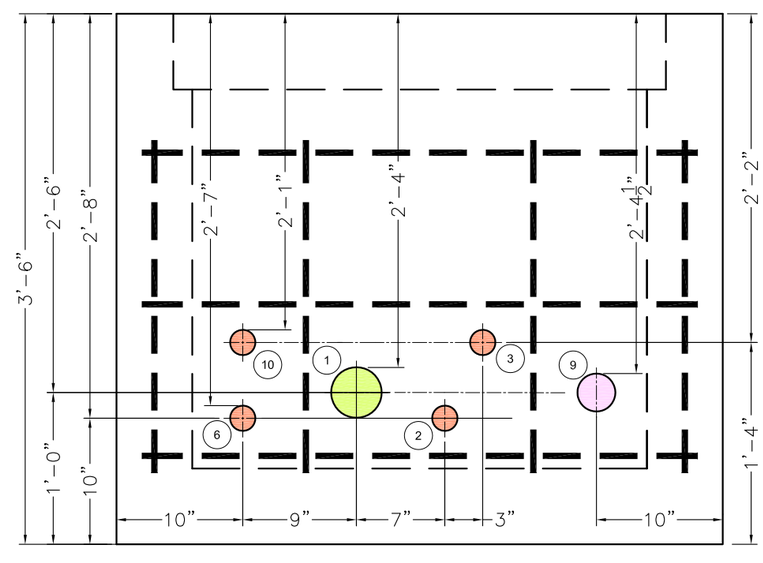

SIDE VIEW 2

SCALE: 1"=1'-0"

1. 1" PVC CONDUIT – MAIN POWER
2. 1" PVC CONDUIT – FIBER OPTIC
3. 1" PVC CONDUIT – EW-6 PUMP LEADS
6. 1"PVC CONDUIT – EW-10 PUMP LEAD
9. 2" RGS CONDUIT – EW-6 & EW-10 FLOW METER ANALOG, LEVEL ANALOG, FLOW METER POWER CABLE, PUMP TEMPERATURE, MOISTURE SWITCHES
10. 1" PVC CONDUIT – EW-6 & EW-10 HEAT TRACE

LEGEND

- 2" CORE HOLE
- 3" CORE HOLE
- 4" CORE HOLE
- 8" DRAIN HOLE
- #4 (1/2" DIA.) REBAR

AS-BUILT

GRAPHIC SCALE

1' 6" 0 1'

SCALE: 1"= 1'-0"

CAPE
180 Gordon Drive
Suite 105
Exton, PA 19341
(610) 594-8606

REVISIONS:

No.	Date	Remarks

U.S. Army Corps of Engineers
NEW YORK DISTRICT

PROJECT NAME
REMEDIAL ACTION ACTIVITIES
FOR THE EAST MAIN/WALL STREET
PLUME OF THE ROCKAWAY BOROUGH
WELL FIELD SUPERFUND SITE
MORRIS COUNTY, NEW JERSEY

SHEET TITLE
HANDHOLES HH-5
CORE HOLE DRAWING

CONTRACT NO: W912DQ-05-D-0001 TO-0005
JOB NO: 50001.005.001.001
CHECKED BY: M. LAMON
DRAWN BY: B DAVIS
DATE: APRIL 2011
FILE NAME: ROCKWY_HHOLE
SHEET NUMBER: DETAIL 5

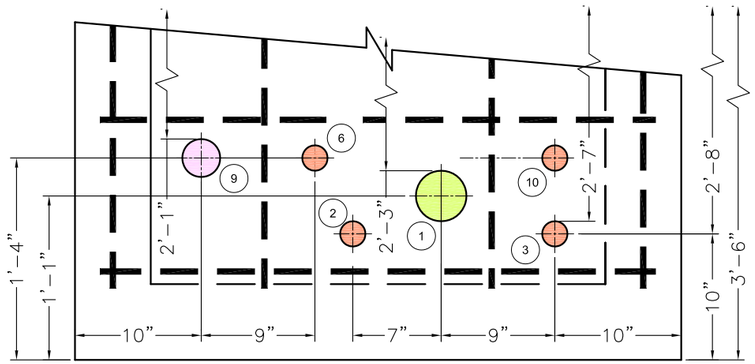

SIDE VIEW 1
SCALE: 1"=1'-0"

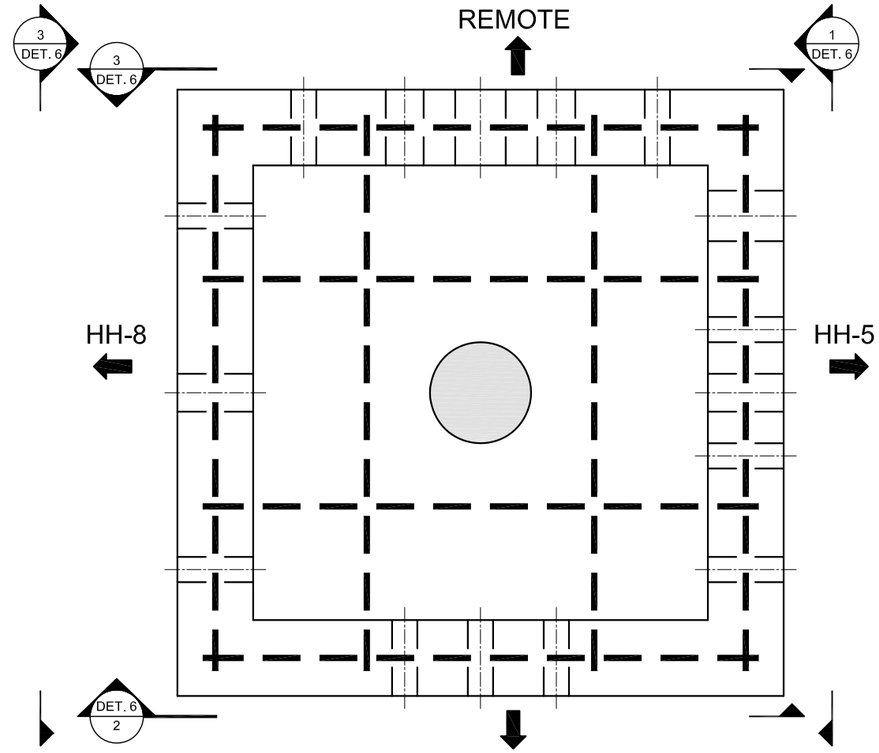

HAND HOLE HH-6- PLAN VIEW
SCALE: 1"=1'-0"

LEGEND

- 2" CORE HOLE
- 3" CORE HOLE
- 4" CORE HOLE
- 8" DRAIN HOLE
- #4 (1/2" DIA.) REBAR

1. 1" PVC CONDUIT – MAIN POWER
2. 1" PVC CONDUIT – FIBER OPTIC
3. 1" PVC CONDUIT – EW-6 PUMP LEADS
6. 1"PVC CONDUIT – EW-10 PUMP LEAD
9. 2" RGS CONDUIT – EW-6 & EW-10 FLOW METER ANALOG, LEVEL ANALOG, FLOW METER POWER CABLE, PUMP TEMPERATURE, MOISTURE SWITCHES
10. 1" PVC CONDUIT – EW-6 & EW-10 HEAT TRACE
11. 1" PVC CONDUIT – EW-9 PUMP LEAD
12. 1" CONDUIT – EW-9 HEAT TRACE
13. 1" RGS CONDUIT – EW-9 FLOW METER ANALOG, LEVEL ANALOG, FLOW METER POWER CABLE, PUMP TEMPERATURE, MOISTURE SWITCHES
14. 1" PVC CONDUIT – EW-8 PUMP LEAD
15. 1" PVC CONDUIT – EW-5A PUMP LEAD
16. 1" CONDUIT – EW-5A & EW-8 HEAT TRACE
17. 2" RGS CONDUIT – EW-5A & EW-8 FLOW METER ANALOG, LEVEL ANALOG, FLOW METER POWER CABLE, PUMP TEMPERATURE, MOISTURE SWITCHES
18. 2' PVC CONDUIT – HEAT TRACE ALL WELLS
19. 2" RGS CONDUIT – LOW METER ANALOG, LEVEL ANALOG, FLOW METER POWER CABLE, PUMP TEMPERATURE, MOISTURE SWITCHES ALL WELLS

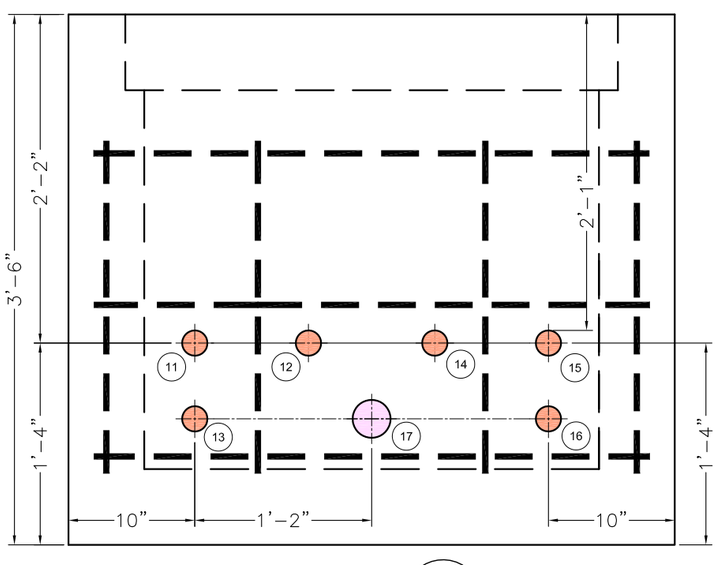

SIDE VIEW 2
SCALE: 1"=1'-0"

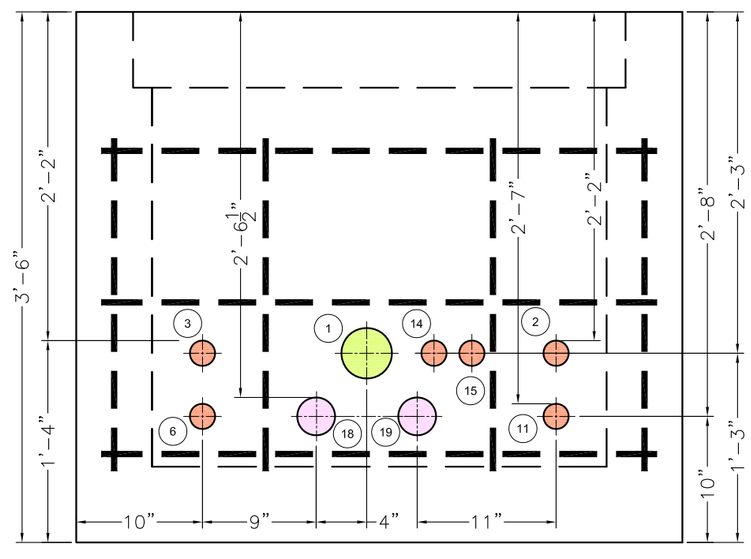

SIDE VIEW 3
SCALE: 1"=1'-0"

AS-BUILT

GRAPHIC SCALE
1' 6" 0 1'
SCALE: 1"= 1'-0"

CAPE
180 Gordon Drive
Suite 105
Exton, PA 19341
(610) 594-8606

REVISIONS:

No.	Date	Remarks

U.S. Army Corps of Engineers
NEW YORK DISTRICT

PROJECT NAME
REMEDIAL ACTION ACTIVITIES FOR THE EAST MAIN/WALL STREET PLUME OF THE ROCKAWAY BOROUGH WELL FIELD SUPERFUND SITE MORRIS COUNTY, NEW JERSEY

SHEET TITLE
HANDHOLES HH-6 CORE HOLE DRAWING

CONTRACT NO: W912DQ-05-D-0001 TO-0005
JOB NO: 50001.005.001.001
CHECKED BY: M. LAMON
DRAWN BY: B DAVIS
DATE: APRIL 2011
FILE NAME: ROCKWY_HHOLE
SHEET NUMBER: DETAIL 6

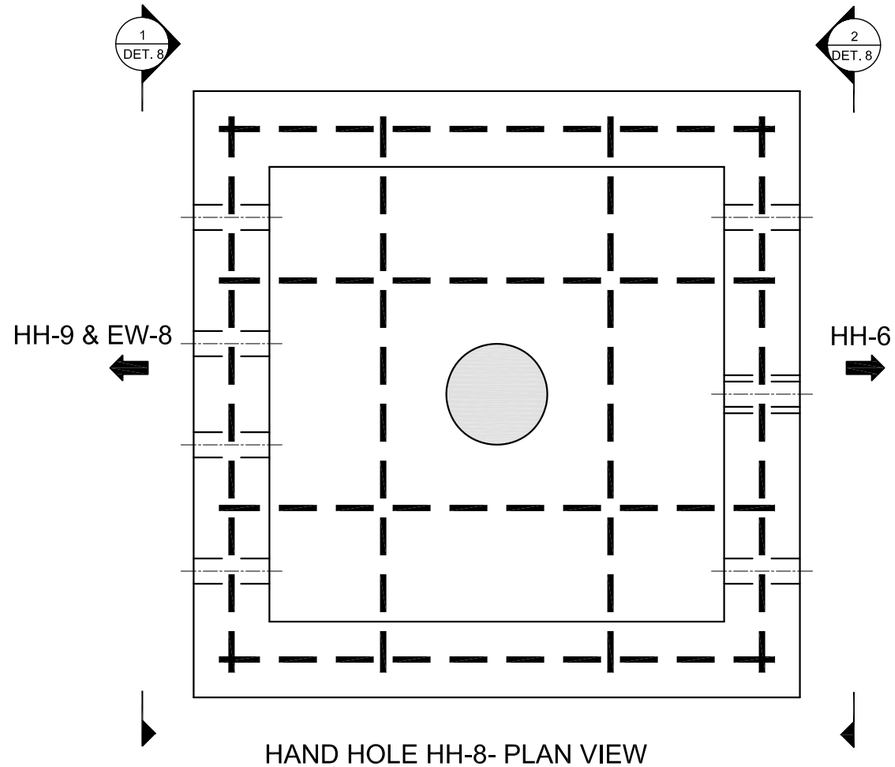

HAND HOLE HH-8- PLAN VIEW
SCALE: 1"=1'-0"

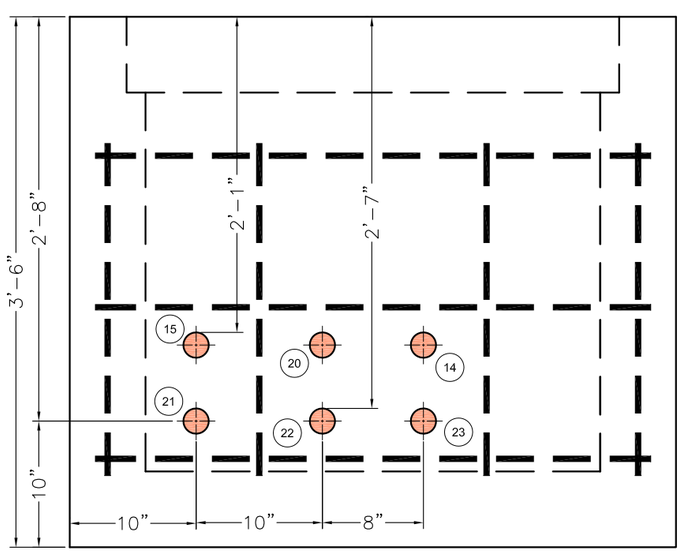

SIDE VIEW 1
SCALE: 1"=1'-0"

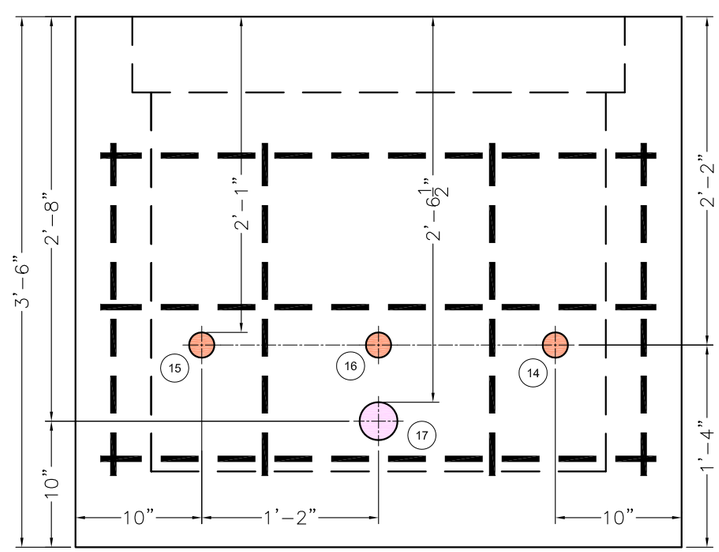

SIDE VIEW 2
SCALE: 1"=1'-0"

(14) 1" PVC CONDUIT – EW-8 PUMP LEAD

(15) 1" PVC CONDUIT – EW-5A PUMP LEAD

(16) 1" CONDUIT – EW-5A & EW-8 HEAT TRACE

(17) 2" RGS CONDUIT – EW-5A & EW-8 FLOW METER ANALOG, LEVEL ANALOG, FLOW METER POWER CABLE, PUMP TEMPERATURE, MOISTURE SWITCHES

(20) 1' PVC CONDUIT – EW-5A HEAT TRACE

(21) 1" RGS CONDUIT – EW-5A LOW METER ANALOG, LEVEL ANALOG, FLOW METER POWER CABLE, PUMP TEMPERATURE, MOISTURE SWITCHES

(22) 1' PVC CONDUIT – EW-8 HEAT TRACE

(23) 1" RGS CONDUIT – EW-8 LOW METER ANALOG, LEVEL ANALOG, FLOW METER POWER CABLE, PUMP TEMPERATURE, MOISTURE SWITCHES

LEGEND

- 2" CORE HOLE
- 3" CORE HOLE
- 4" CORE HOLE
- 8" DRAIN HOLE
- #4 (1/2" DIA.) REBAR

AS-BUILT

GRAPHIC SCALE

1' 6" 0 1'

SCALE: 1"= 1'-0"

CAPE
180 Gordon Drive
Suite 105
Exton, PA 19341
(610) 594-8606

REVISIONS:

No.	Date	Remarks

U.S. Army Corps of Engineers
NEW YORK DISTRICT

PROJECT NAME
REMEDIAL ACTION ACTIVITIES
FOR THE EAST MAINWALL STREET
PLUME OF THE ROCKAWAY BOROUGH
WELL FIELD SUPERFUND SITE
MORRIS COUNTY, NEW JERSEY

SHEET TITLE
HANDHOLES HH-8
CORE HOLE DRAWING

CONTRACT NO: W912DQ-05-D-0001 TO-0005
JOB NO: 50001.005.001.001
CHECKED BY: M. LAMON
DRAWN BY: B DAVIS
DATE: APRIL 2011
FILE NAME: ROCKWY_HHOLE
SHEET NUMBER: DETAIL 8

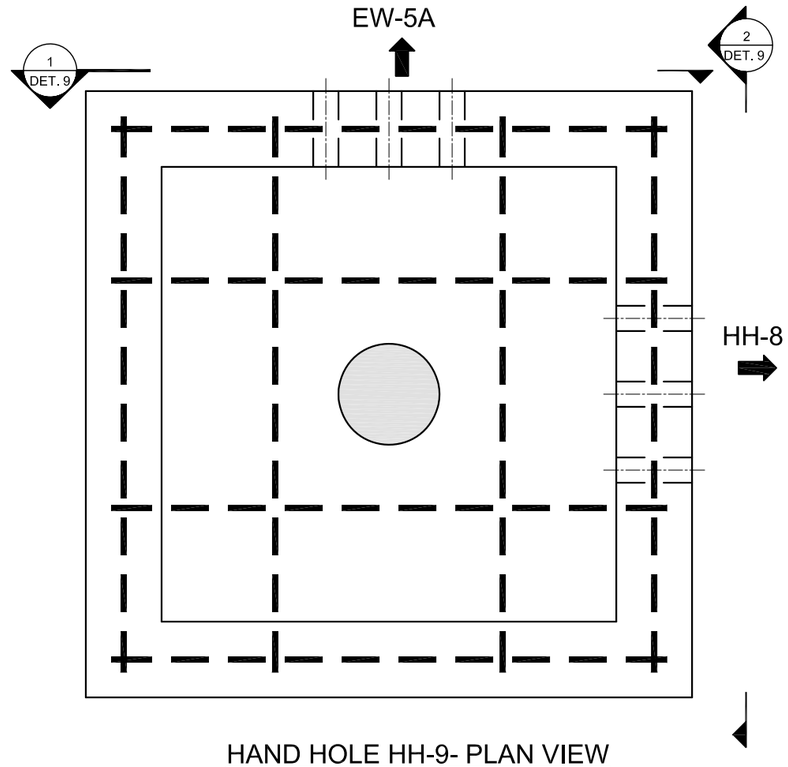

HAND HOLE HH-9- PLAN VIEW
SCALE: 1"=1'-0"

15 1" PVC CONDUIT – EW–5A PUMP LEAD

20 1' PVC CONDUIT – EW–5A HEAT TRACE

21 1" RGS CONDUIT – EW–5A LOW METER ANALOG, LEVEL ANALOG, FLOW METER POWER CABLE, PUMP TEMPERATURE, MOISTURE SWITCHES

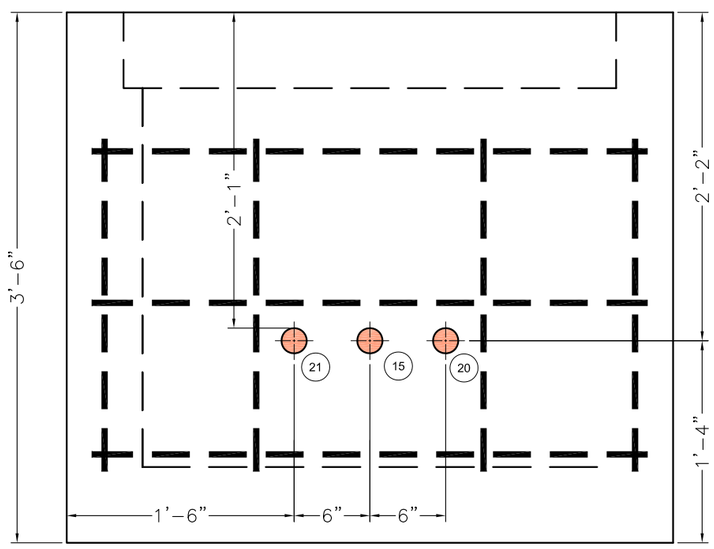

SIDE VIEW 1
SCALE: 1"=1'-0"

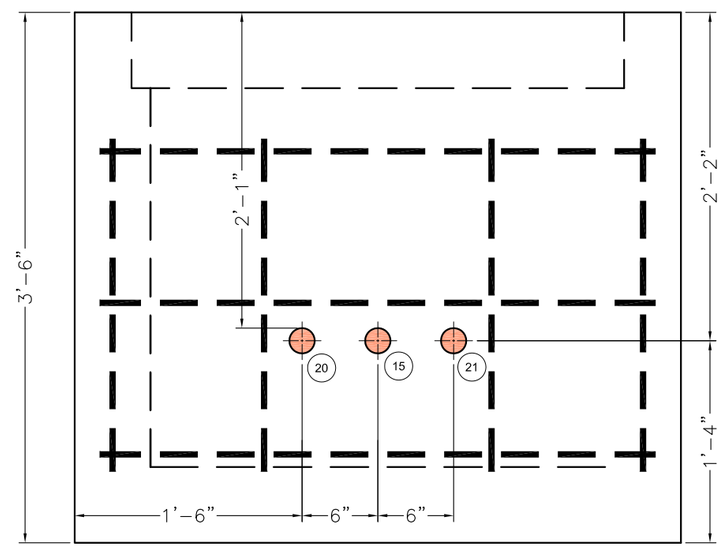

SIDE VIEW 2
SCALE: 1"=1'-0"

LEGEND

- 2" CORE HOLE
- 3" CORE HOLE
- 4" CORE HOLE
- 8" DRAIN HOLE
- #4 (1/2" DIA.) REBAR

AS-BUILT

GRAPHIC SCALE

1' 6" 0 1'

SCALE: 1"= 1'-0"

CAPE
180 Gordon Drive
Suite 105
Exton, PA 19341
(610) 594-8606

REVISIONS:

No.	Date	Remarks

U.S. Army Corps of Engineers
NEW YORK DISTRICT

PROJECT NAME
REMEDIAL ACTION ACTIVITIES
FOR THE EAST MAINWALL STREET
PLUME OF THE ROCKAWAY BOROUGH
WELL FIELD SUPERFUND SITE
MORRIS COUNTY, NEW JERSEY

SHEET TITLE
HANDHOLES HH-9
CORE HOLE DRAWING

CONTRACT NO: W912DQ-05-D-0001 TO-0005
JOB NO: 50001.005.001.001
CHECKED BY: M. LAMON
DRAWN BY: B DAVIS
DATE: APRIL 2011
FILE NAME: ROCKWY_HHOLE
SHEET NUMBER: DETAIL 9

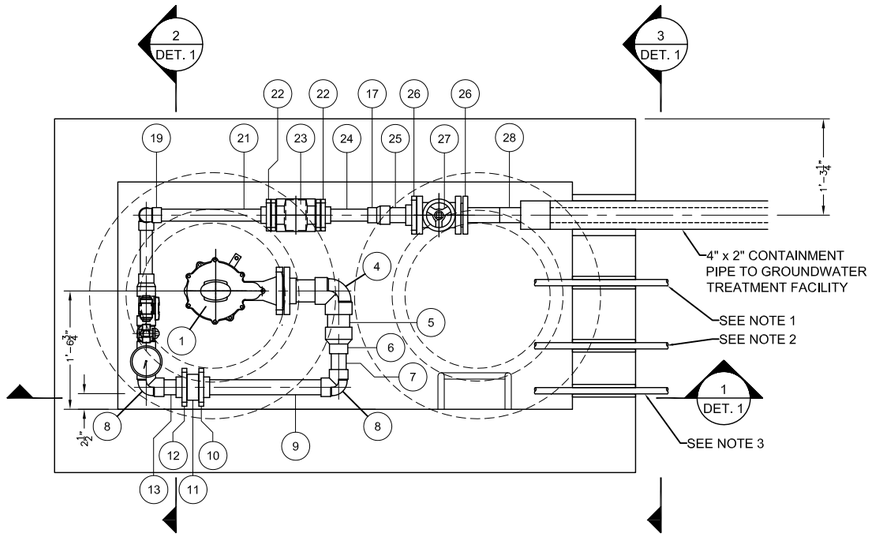

EW-5A PLAN VIEW

SCALE: 1/2"=1'-0"

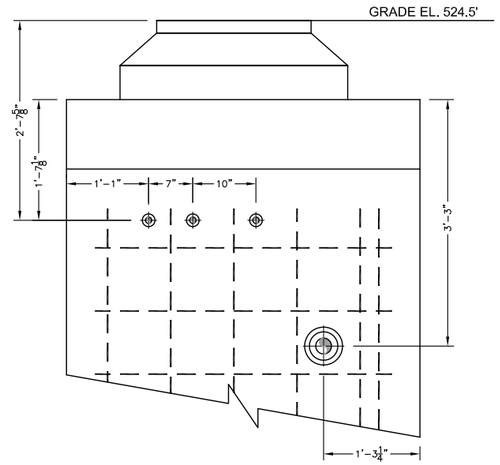

SECTION VIEW

SCALE: 1/2"=1'-0"

3 / -

ITEM	QTY	U/M	DESCRIPTION
1	1	EA	PITLESS ADAPTER (BAKER 1PS67WBWE03F3SP)
2	1	EA	3" PVC FLANGE, VAN STONE STYLE (IPEX PART No. 36351) WITH 3" VITON GASKET AND BOLT KIT FOR 3" FLANGE (BOLTS 3-1/2")
3	6-3/4"	FT	3" PVC, SCHED 80, PIPE
4	1	EA	3" PVC, SCHED 80, 90° ELBOW (IPEX PART No. 36188)
5	5-3/4"	FT	3" PVC, SCHED 80, PIPE
6	1	EA	3" x 2" PVC, SCHED 80, REDUCER COUPLING (IBEX PART No. 36735)
7	5-1/2"	FT	2" PVC, SCHED 80, PIPE
8	2	EA	2" PVC, SCHED 80, 90° ELBOW (IPEX PART No. 36186)
9	1'-8-5/8"	FT	2" PVC, SCHED 80, PIPE
10	1	EA	2" PVC FLANGE, VAN STONE STYLE (IPEX PART No. 36349) WITH 2" VITON GASKET AND BOLT KIT FOR 2" FLANGE (BOLTS 5-1/4" LG)
11	1	EA	2" WAFER CHECK VALVE (CHEMLINE WP SERIES) (CH-2"-101)
12	1	EA	2" PVC FLANGE, VAN STONE STYLE (IPEX PART No. 36349) WITH 2" VITON GASKET
13	5"	FT	2" PVC, SCHED 80, PIPE
14	5-7/8"	FT	2" PVC, SCHED 80, PIPE
15	1	EA	2" PVC, SCHED 80, TEE (IPEX PART No. 36775)
16	6"	FT	2" PVC, SCHED 80, PIPE
17	2	EA	2" x 1-1/2" PVC, SCHED 80, REDUCER COUPLING (IBEX PART No. 36731)
18	9-3/4"	FT	1-1/2" PVC, SCHED 80, PIPE
19	2	EA	1-1/2" PVC, SCHED 80, 90° ELBOW (IBEX PART No. 36185)
20	11"	FT	1-1/2" PVC, SCHED 80, PIPE
21	1-6-1/2"	FT	1-1/2" PVC, SCHED 80, PIPE
22	2	EA	1-1/2" PVC FLANGE, VAN STONE STYLE (IPEX PART No. 36348) WITH 1-1/2" VITON GASKET AND BOLT KIT FOR 1-1/2" FLAANGE (BOLTS 2-1/2" LG)
23	1	EA	1-1/2" FLANGED FLOW METER (SIEMENS 7ME6910-1AA10-1AA0 MAG 5000 W/ MAG 3100 SENSOR)
24	8-5/8"	FT	1-1/2" PVC, SCHED 80, PIPE
25	5-1/2"	FT	2" PVC, SCHED 80, PIPE
26	2	EA	2" PVC FLANGE, VAN STONE STYLE (IPEX PART No. 36349) WITH 2" VITON GASKET AND BOLT KIT FOR 2" FLANGE (BOLTS 3" LG)
27	1	EA	2" FLANGED GATE VALVE (ASAHI TYPE P) (GL-2"-102)
28	1	EA	4" x 2" DUAL CONTAINMENT TERMINATION ASSEMBLY (END TERMINATION, IPS FLANGE ADAPTER, AND CONVOLUTED FLANGE) WITH 2" VITON GASKET AND BOLT KIT FOR 2" FLANGE (BOLTS 3" LG)
29	1	EA	2" x 1/2" PVC, SCHED 80, REDUCER BUSHING (IPEX PART No. 36695)
30	4	EA	1/2" x 1-1/8" PVC, SCHED 80, NIPPLE (IPEX PART No. 36436)
31	1	EA	1/2" PVC, SCHED 80, TEE (FPT x FPT x FPT) (IBEX PART No. 36819)
32	1	EA	1/2" BALL VALVE (ASAHI AMERICA TYPE 21) (BA-1/2"-104)
33	1	EA	1/2" BALL VALVE (ASAHI AMERICA TYPE 21) (BA-1/2"-103)
34	1	EA	PRESSURE INDICATOR (ASCROFT MODEL 45-1279-AS-100#)
35	1	EA	1/2" BALL VALVE (BA-1/2"-105)
36	1	EA	1/2" x 1-1/8" PVC, SCHED 80, NIPPLE (IPEX PART No. 36436)
37	1	EA	1/2" PVC, SCHED 80, 90° ELBOW

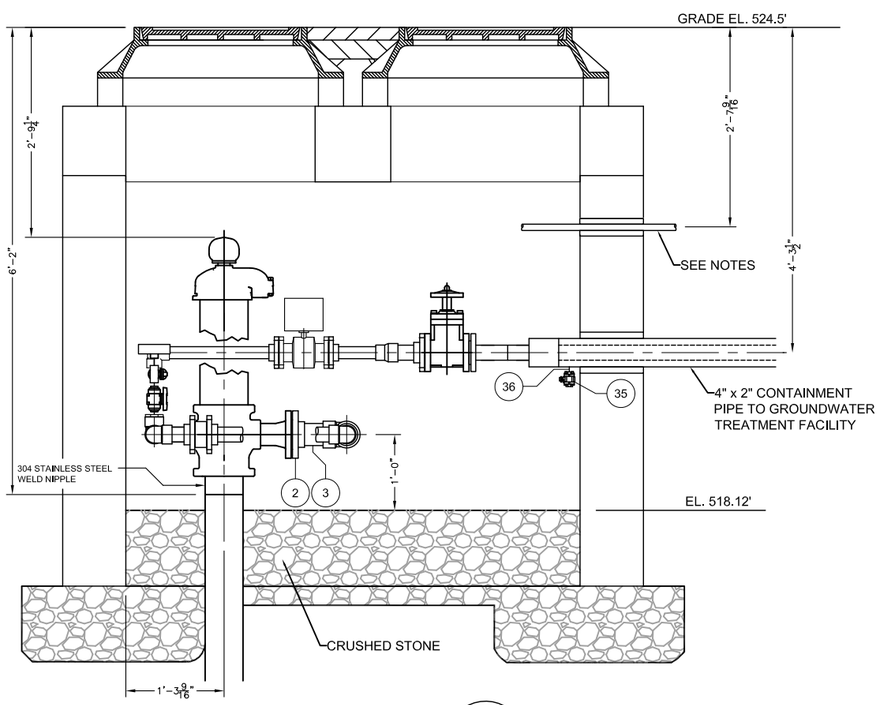

SECTION VIEW

SCALE: 1/2"=1'-0"

1 / -

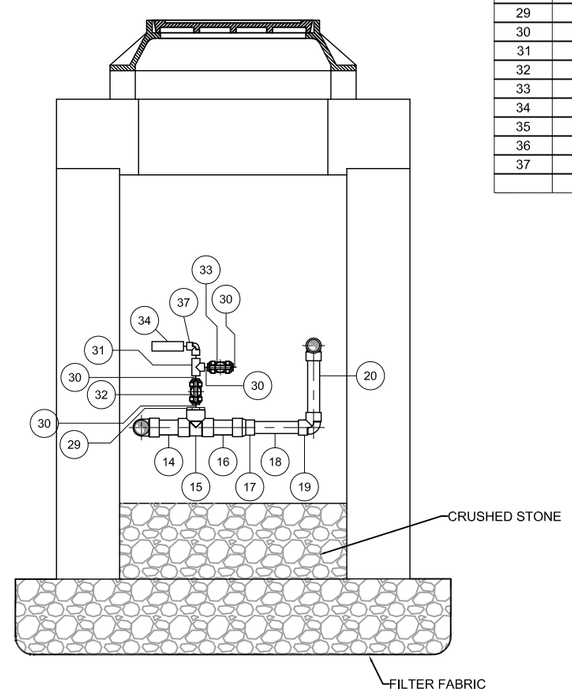

SECTION VIEW

SCALE: 1/2"=1'-0"

2 / -

NOTES:

1. 1" RGS CONDUIT (FLOW METER ANALOG, LEVEL ANALOG/PUMP TEMPERATURE MOISTURE SWITCHES)
2. 1" PVC CONDUIT (PUMP LEADS)
3. 1" PVC CONDUIT (HEAT TRACE)

AS-BUILT

GRAPHIC SCALE

2' 1' 0 2'

SCALE: 1/2"= 1'-0"

CAPE

180 Gordon Drive
Suite 105
Exton, PA 19341
(610) 594-8606

REVISIONS:

No.	Date	Remarks
1	7/18/11	REVISED FINAL
2	1/13/12	FINAL AS-BUILT

U.S. Army Corps of Engineers
NEW YORK DISTRICT

PROJECT NAME

REMEDIAL ACTION ACTIVITIES
FOR THE EAST MAIN/WALL STREET
PLUME OF THE ROCKAWAY BOROUGH
WELL FIELD SUPERFUND SITE
MORRIS COUNTY, NEW JERSEY

SHEET TITLE

VAULT PIPING FOR EW-5A

CONTRACT NO: W912DQ-05-D-0001 TO-0005

JOB NO: 50001.005.001.001

CHECKED BY: M. LAMON

DRAWN BY: B DAVIS

DATE: JUNE 2011

FILE NAME: DETAIL 1 - EW-5A AS-BUILT

SHEET NUMBER: DETAIL 1

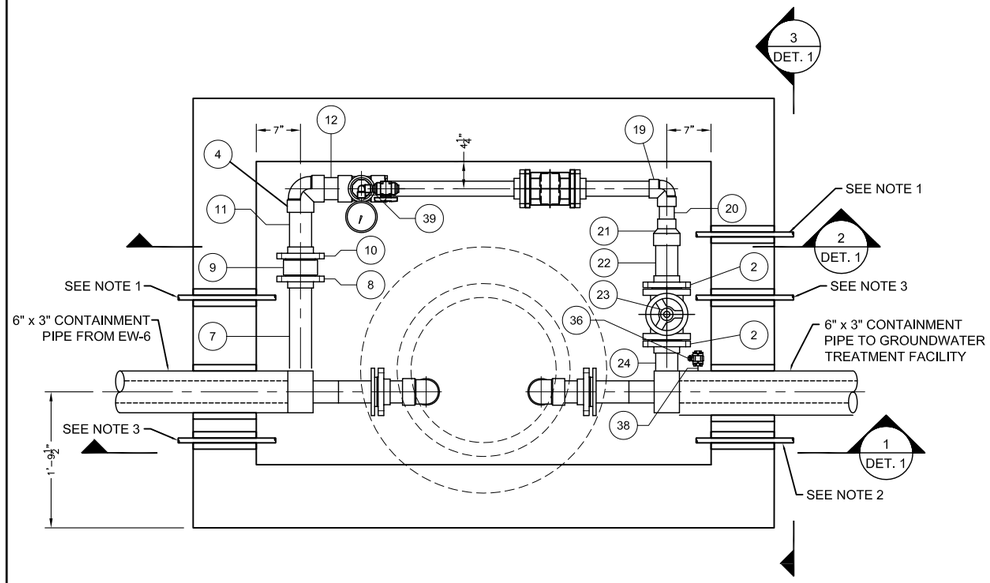

WELL VAULT EW-6 PLAN VIEW

SCALE: 1/2"=1'-0"

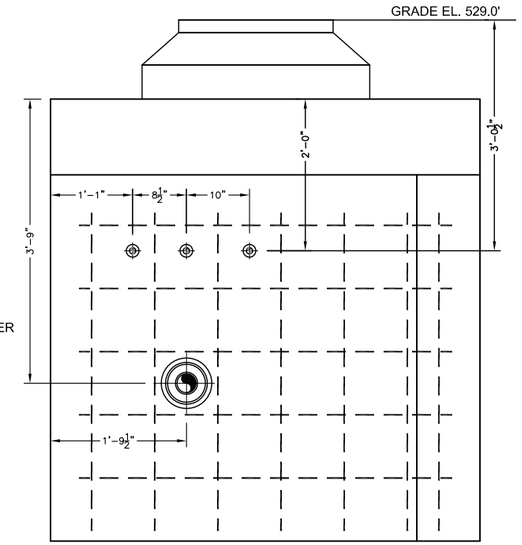

SECTION VIEW 3 / -

SCALE: 1/2"=1'-0"

ITEM	QTY	U/M	DESCRIPTION
1	2	EA	6" x 3" DUAL CONTAINMENT TERMINATION ASSEMBLY (END TERMINATION, IPS FLANGE ADAPTER, AND CONVOLUTED FLANGE)
2	4	EA	3" PVC FLANGE, VAN STONE STYLE (IPEX PART No. 36351) WITH 3" VITON GASKET AND BOLT KIT FOR 3" FLANGE (BOLTS 3-1/2")
3	5-3/4"	FT	3" PVC, SCHED 80, PIPE
4	7	EA	3" PVC, SCHED 80, 90° ELBOW (IPEX PART No. 36188)
5	5-3/4"	FT	3" PVC, SCHED 80, PIPE
6	1'-4-1/4"	FT	3" PVC, SCHED 80, PIPE
7	1'-4-3/8"	FT	3" PVC, SCHED 80, PIPE
8	1	EA	3" PVC FLANGE, VAN STONE STYLE (IPEX PART No. 36351) WITH 3 VITON GASKET AND BOLT KIT FOR 3" FLANGE (BOLTS 6" LG)
9	1	EA	3" WAFER CHECK VALVE (CHEMLINE WP SERIES) (CH-3"-301)
10	1	EA	3" PVC FLANGE, VAN STONE STYLE (IPEX PART No. 36351) WITH 3" VITON GASKET
11	9-1/4"	FT	3" PVC, SCHED 80, PIPE
12	6"	FT	3" PVC, SCHED 80, PIPE
13	1	EA	3" PVC, SCHED 80, TEE (IBEX PART No. 36777)
14	1	EA	3" x 2" PVC, SCHED 80, REDUCER BUSHING (IPEX 36625)
15	1'-11"	FT	2" PVC, SCHED 80, PIPE
16	2	EA	2" PVC FLANGE, VAN STONE STYLE (IPEX PART No. 36349) WITH 2" VITON GASKET AND BOLT KIT FOR 2" FLAANGE (BOLTS 3" LG)
17	1	EA	1-1/2" FLANGED FLOW METER (SIEMENS 7ME6910-1AA10-1AA0 MAG 5000 W/ MAG 3100 SENSOR)
18	1'-1"	FT	2" PVC, SCHED 80, PIPE
19	1	EA	2" PVC, SCHED 80, 90° ELBOW (IPEX PART No. 36186)
20	5"	FT	2" PVC, SCHED 80, PIPE
21	1	EA	3" x 2" PVC, SCHED 80, REDUCER COUPLING (IBEX PART No. 36735)
22	8-1/2"	FT	3" PVC, SCHED 80, PIPE
23	1	EA	3" FLANGED GATE VALVE (ASAHI TYPE P) (GL-3"-302)
24	6-1/8"	FT	3" PVC, SCHED 80, PIPE
25	1'-4-1/4	FT	3" PVC, SCHED 80, PIPE
26	5-3/4"	FT	3" PVC, SCHED 80, PIPE
27	5-3/4	FT	3" PVC, SCHED 80, PIPE
28	1	EA	3" x 1" PVC, SCHED 80, REDUCER BUSHING (IPEX PART No. 36623)
29	1	EA	1" x 1/2" PVC, SCHED 80, REDUCER BUSHING (IPEX PART No. 36686)
30	4	EA	1/2" x 1-1/8" PVC, SCHED 80, NIPPLE (IPEX PART No. 36436)
31	1	EA	1/2" PVC, SCHED 80, TEE (FPT x FPT x FPT) (IBEX PART No. 36819)
32	1	EA	1/2" BALL VALVE (ASAHI AMERICA TYPE 21) (BA-1/2"-304)
33	1	EA	1/2" BALL VALVE (ASAHI AMERICA TYPE 21) (BA-1/2"-303)
34	1	EA	PRESSURE INDICATOR (ASCROFT MODEL 45-1279-AS-100#)
35	2	EA	1" x 1/2" PVC, SCHED 80, T T BUSHING (IPEX PART No. 36656)
36	1	EA	1/2" BALL VALVE (BA-1/2"-305)
37	1	EA	1/2" BALL VALVE (BA-1/2"-306)
38	2	EA	1/2" x 1-1/8" PVC, SCHED 80, NIPPLE (IPEX PART No. 36436)
39	1	EA	1/2" PVC, SCHED 80, 90° ELBOW

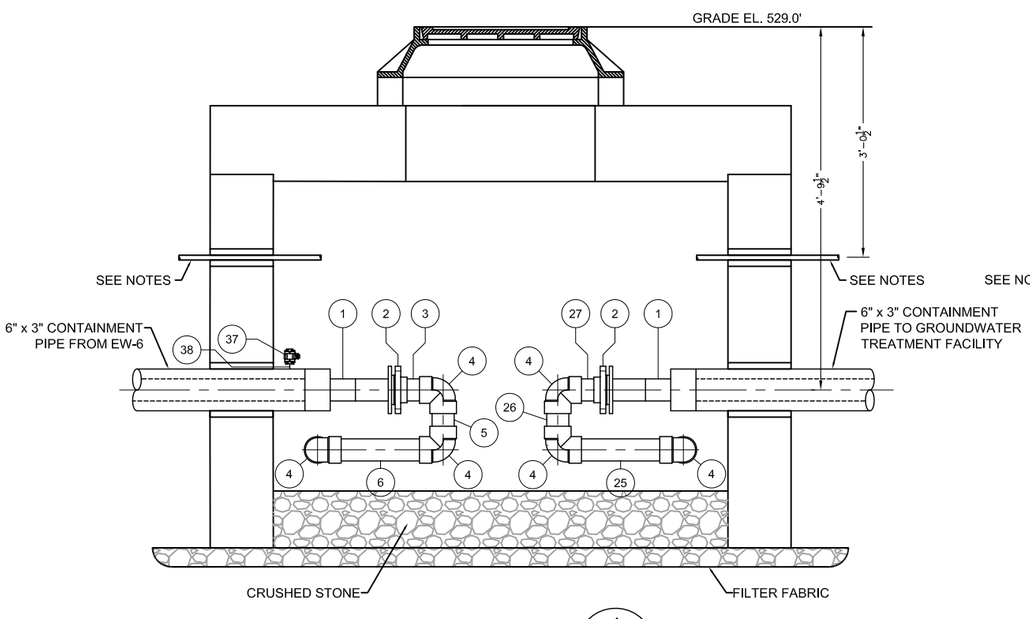

SECTION VIEW 1 / -

SCALE: 1/2"=1'-0"

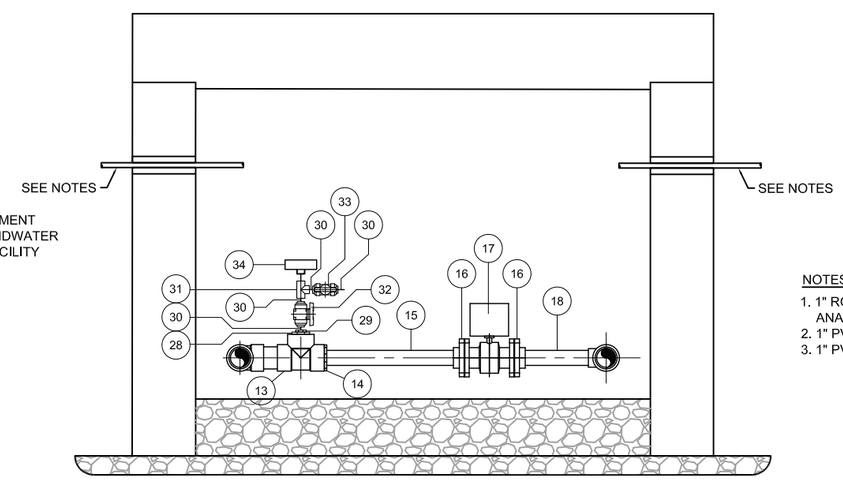

SECTION VIEW 2 / -

SCALE: 1/2"=1'-0"

NOTES:

1. 1" RGS CONDUIT (FLOW METER ANALOG, LEVEL ANALOG/PUMP TEMPERATURE MOISTURE SWITCHES)
2. 1" PVC CONDUIT (HEAT TRACE)
3. 1" PVC CONDUIT (PUMP LEADS)

AS-BUILT

GRAPHIC SCALE

2' 1' 0 2'

SCALE: 1/2"= 1'-0"

CAPE

180 Gordon Drive
Suite 105
Exton, PA 19341
(610) 594-8606

REVISIONS:

No.	Date	Remarks
1	7/18/11	REVISED FINAL
2	1/13/12	FINAL AS-BUILT

U.S. Army Corps of Engineers
NEW YORK DISTRICT

PROJECT NAME
REMEDIAL ACTION ACTIVITIES
FOR THE EAST MAIN/WALL STREET
PLUME OF THE ROCKAWAY BOROUGH
WELL FIELD SUPERFUND SITE
MORRIS COUNTY, NEW JERSEY

SHEET TITLE
VAULT PIPING FOR EW-6

CONTRACT NO: W912DQ-05-D-0001 TO-0005
JOB NO: 50001.005.001.001
CHECKED BY: M. LAMON
DRAWN BY: B DAVIS
DATE: JUNE 2011
FILE NAME: DETAIL 1 - EW-6
SHEET NUMBER: DETAIL 1

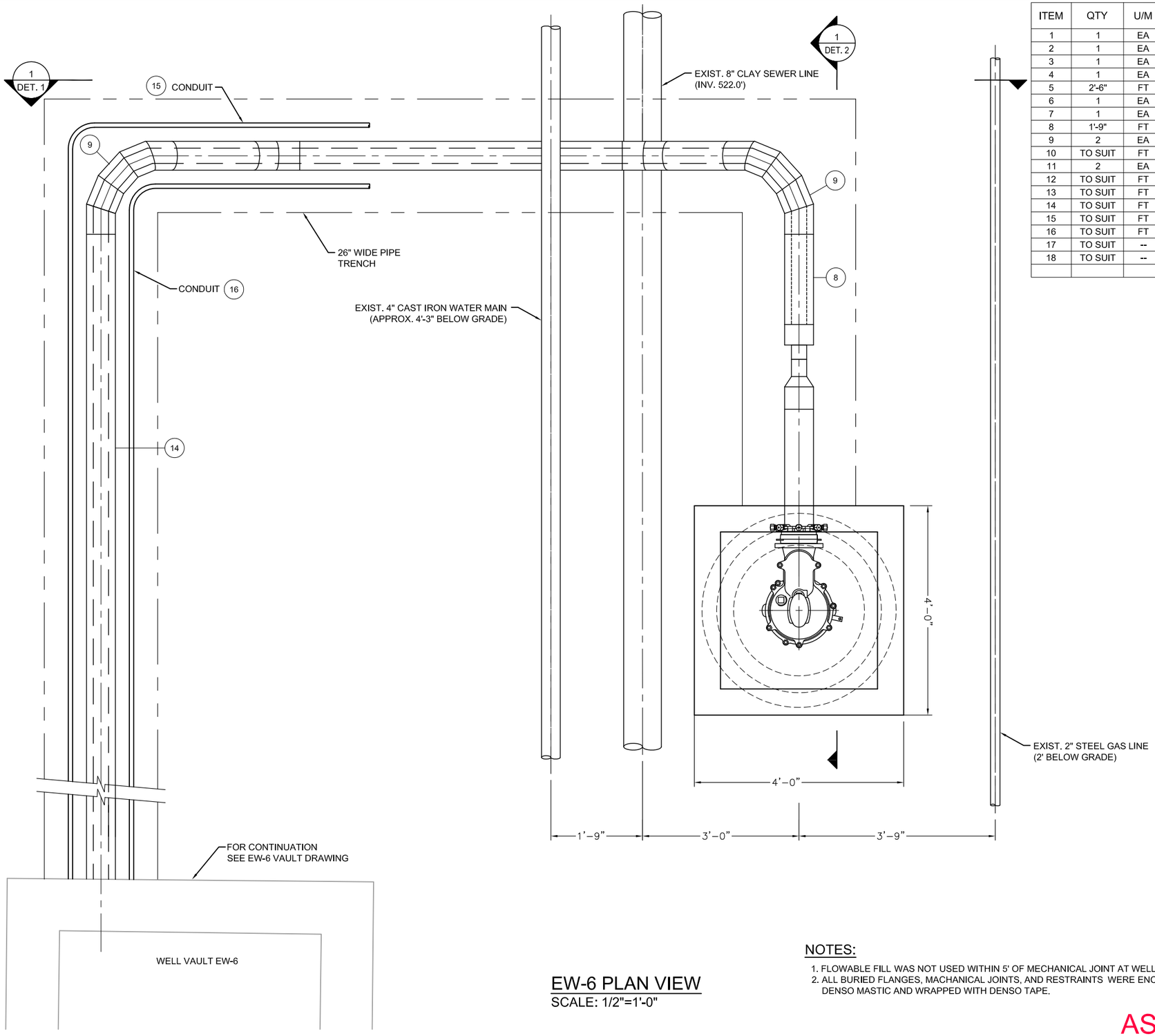

ITEM	QTY	U/M	DESCRIPTION
1	1	EA	PS PITLESS ADAPTER (BAKER MODEL No. 3PS1012WBWE06F6SP)
2	1	EA	6" VITON OR TEFLON TRANSITION GASKET
3	1	EA	6" RESTRAINED FLANGE ADAPTER (EBAA IRON MODEL 2106)
4	1	EA	6" PIPE STIFFENER
5	2'-6"	FT	6" HDPE PIPE
6	1	EA	6" x 3" HDPE MOLDED REDUCER
7	1	EA	6" x 3" HDPE DUAL CONTAINMENT END TERMINATION PIECE
8	1'-9"	FT	6" (SDR17) x 3" (SDR11) HDPE, DUAL CONTAINMENT PIPE
9	2	EA	6" (SDR17) x 3" (SDR11) HDPE, DUAL CONTAINMENT 90° ELBOW
10	TO SUIT	FT	6" (SDR17) x 3" (SDR11) HDPE, DUAL CONTAINMENT PIPE
11	2	EA	6" (SDR17) x 3" (SDR11) HDPE, DUAL CONTAINMENT 22-1/2° ELBOW
12	TO SUIT	FT	6" (SDR17) x 3" (SDR11) HDPE, DUAL CONTAINMENT PIPE
13	TO SUIT	FT	6" (SDR17) x 3" (SDR11) HDPE, DUAL CONTAINMENT PIPE
14	TO SUIT	FT	6" (SDR17) x 3" (SDR11) HDPE, DUAL CONTAINMENT PIPE
15	TO SUIT	FT	1" PVC , CONDUIT
16	TO SUIT	FT	1" RGS , CONDUIT
17	TO SUIT	--	DENSO MASTIC
18	TO SUIT	--	DENSO TAPE

EW-6 PLAN VIEW

SCALE: 1/2"=1'-0"

NOTES:

1. FLOWABLE FILL WAS NOT USED WITHIN 5' OF MECHANICAL JOINT AT WELL HEAD.
2. ALL BURIED FLANGES, MACHANICAL JOINTS, AND RESTRAINTS WERE ENCASED IN DENSO MASTIC AND WRAPPED WITH DENSO TAPE.

AS-BUILT

GRAPHIC SCALE

2' 1' 0 2'

SCALE: 1/2"= 1'-0"

CAPE
180 Gordon Drive
Suite 105
Exton, PA 19341
(610) 594-8606

REVISIONS:

No.	Date	Remarks
0	7/8/11	ISSUED AS FINAL
1	7/18/11	REVISED FINAL
2	1/13/12	FINAL AS-BUILT

U.S. Army Corps of Engineers
NEW YORK DISTRICT

PROJECT NAME
REMEDIAL ACTION ACTIVITIES
FOR THE EAST MAIN/WALL STREET
PLUME OF THE ROCKAWAY BOROUGH
WELL FIELD SUPERFUND SITE
MORRIS COUNTY, NEW JERSEY

SHEET TITLE
MANHOLE FOR EW-6

CONTRACT NO: W912DQ-05-D-0001 TO-0005
JOB NO: 50001.005.001.001
CHECKED BY: M. LAMON
DRAWN BY: B DAVIS
DATE: JUNE 2011
FILE NAME: ROCKWY EW-6 MANHOLE AS-BUILT
SHEET NUMBER: DETAIL 1

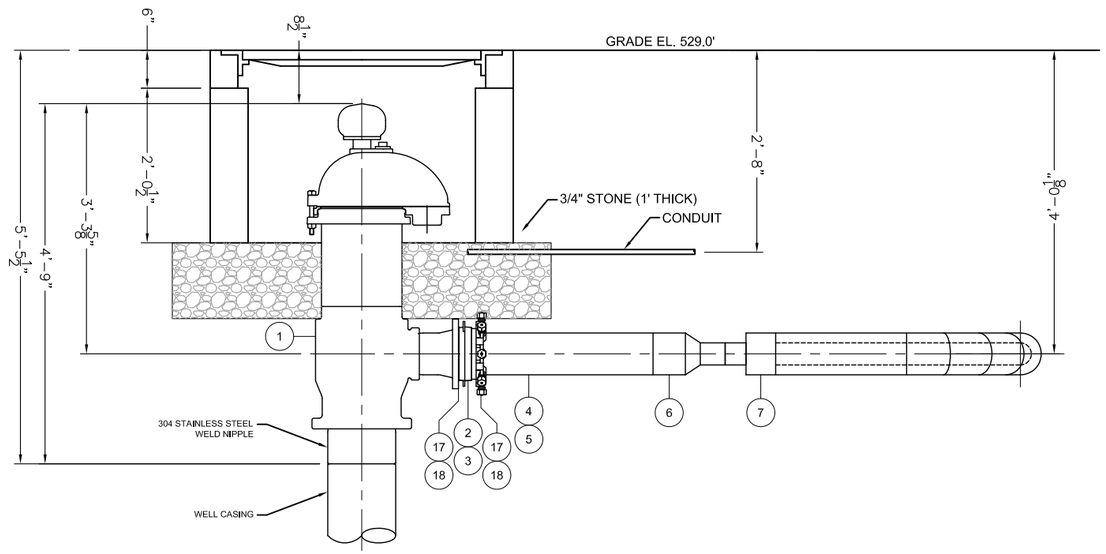

SECTION VIEW 1 / -

SCALE: 1/2"=1'-0"

ITEM	QTY	U/M	DESCRIPTION
1	1	EA	PS PITLESS ADAPTER (BAKER MODEL No. 3PS1012WBWE06F6SP)
2	1	EA	6" VITON OR TEFLON TRANSITION GASKET
3	1	EA	6" RESTRAINED FLANGE ADAPTER (EBAA IRON MODEL 2106)
4	1	EA	6" PIPE STIFFENER
5	2'-6"	FT	6" HDPE PIPE
6	1	EA	6" x 3" HDPE MOLDED REDUCER
7	1	EA	6" x 3" HDPE DUAL CONTAINMENT END TERMINATION PIECE
8	1'-9"	FT	6" (SDR17) x 3" (SDR11) HDPE, DUAL CONTAINMENT PIPE
9	2	EA	6" (SDR17) x 3" (SDR11) HDPE, DUAL CONTAINMENT 90° ELBOW
10	TO SUIT	FT	6" (SDR17) x 3" (SDR11) HDPE, DUAL CONTAINMENT PIPE
11	2	EA	6" (SDR17) x 3" (SDR11) HDPE, DUAL CONTAINMENT 22-1/2° ELBOW
12	TO SUIT	FT	6" (SDR17) x 3" (SDR11) HDPE, DUAL CONTAINMENT PIPE
13	TO SUIT	FT	6" (SDR17) x 3" (SDR11) HDPE, DUAL CONTAINMENT PIPE
14	TO SUIT	FT	6" (SDR17) x 3" (SDR11) HDPE, DUAL CONTAINMENT PIPE
15	TO SUIT	FT	1" PVC , CONDUIT
16	TO SUIT	FT	1" RGS , CONDUIT
17	TO SUIT	--	DENSO MASTIC
18	TO SUIT	--	DENSO TAPE

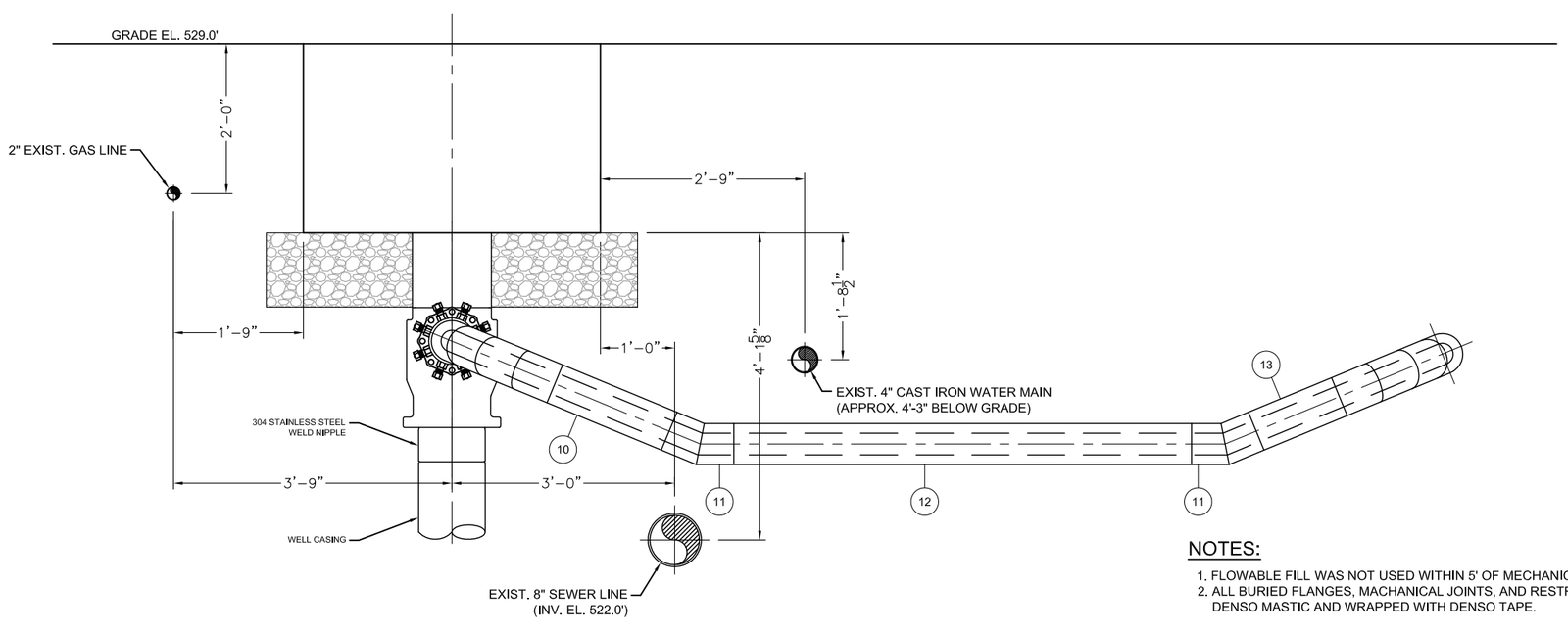

SECTION VIEW 2 / -

SCALE: 1/2"=1'-0"

NOTES:

1. FLOWABLE FILL WAS NOT USED WITHIN 5' OF MECHANICAL JOINT AT WELL HEAD.
2. ALL BURIED FLANGES, MACHANICAL JOINTS, AND RESTRAINTS WERE ENCASED IN DENSO MASTIC AND WRAPPED WITH DENSO TAPE.

AS-BUILT

GRAPHIC SCALE

2' 1' 0 2'

SCALE: 1/2"= 1'-0"

CAPE

180 Gordon Drive
Suite 105
Exton, PA 19341
(610) 594-8606

REVISIONS:

No.	Date	Remarks
0	7/8/11	ISSUED AS FINAL
1	7/18/11	REVISED FINAL
2	1/13/12	FINAL AS-BUILT

U.S. Army Corps of Engineers
NEW YORK DISTRICT

PROJECT NAME
REMEDIAL ACTION ACTIVITIES
FOR THE EAST MAIN/WALL STREET
PLUME OF THE ROCKAWAY BOROUGH
WELL FIELD SUPERFUND SITE
MORRIS COUNTY, NEW JERSEY

SHEET TITLE
MANHOLE FOR EW-6

CONTRACT NO: W912DQ-05-D-0001 TO-0005
JOB NO: 50001.005.001.001
CHECKED BY: M. LAMON
DRAWN BY: B DAVIS
DATE: JUNE 2011
FILE NAME: ROCKWY EW-6 MANHOLE Rev3
SHEET NUMBER: DETAIL 2

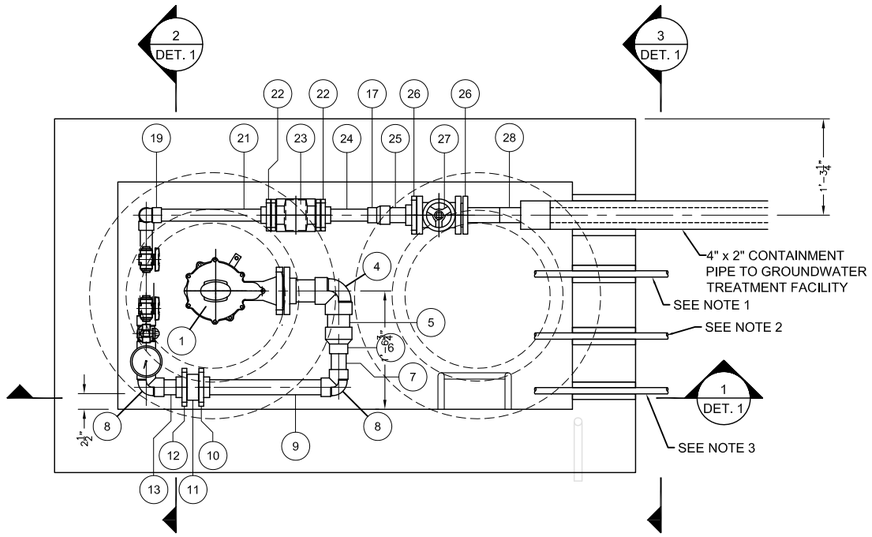

EW-8 PLAN VIEW

SCALE: 1/2"=1'-0"

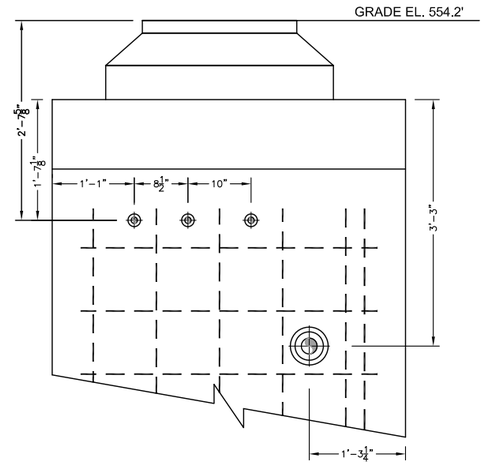

SECTION VIEW 3

SCALE: 1/2"=1'-0"

ITEM	QTY	U/M	DESCRIPTION
1	1	EA	PITLESS ADAPTER (BAKER 1PS67WBWE03F3SP)
2	1	EA	3" PVC FLANGE, VAN STONE STYLE (IPEX PART No. 36351) WITH 3" VITON GASKET AND BOLT KIT FOR 3" FLANGE (BOLTS 3-1/2")
3	6-3/4"	FT	3" PVC, SCHED 80, PIPE
4	1	EA	3" PVC, SCHED 80, 90° ELBOW (IPEX PART No. 36188)
5	5-3/4"	FT	3" PVC, SCHED 80, PIPE
6	1	EA	3" x 2" PVC, SCHED 80, REDUCER COUPLING (IBEX PART No. 36735)
7	5-1/2"	FT	2" PVC, SCHED 80, PIPE
8	2	EA	2" PVC, SCHED 80, 90° ELBOW (IPEX PART No. 36186)
9	1'-8-5/8"	FT	2" PVC, SCHED 80, PIPE
10	1	EA	2" PVC FLANGE, VAN STONE STYLE (IPEX PART No. 36349) WITH 2" VITON GASKET AND BOLT KIT FOR 2" FLANGE (BOLTS 5-1/4" LG)
11	1	EA	2" WAFER CHECK VALVE (CHEMLINE WP SERIES) (CH-2"-701)
12	1	EA	2" PVC FLANGE, VAN STONE STYLE (IPEX PART No. 36349) WITH 2" VITON GASKET
13	5"	FT	2" PVC, SCHED 80, PIPE
14	5-7/8"	FT	2" PVC, SCHED 80, PIPE
15	1	EA	2" PVC, SCHED 80, TEE (IPEX PART No. 36775)
16	6"	FT	2" PVC, SCHED 80, PIPE
17	2	EA	2" x 1-1/2" PVC, SCHED 80, REDUCER COUPLING (IBEX PART No. 36731)
18	9-3/4"	FT	1-1/2" PVC, SCHED 80, PIPE
19	2	EA	1-1/2" PVC, SCHED 80, 90° ELBOW (IBEX PART No. 36185)
20	11"	FT	1-1/2" PVC, SCHED 80, PIPE
21	1-6-1/2"	FT	1-1/2" PVC, SCHED 80, PIPE
22	2	EA	1-1/2" PVC FLANGE, VAN STONE STYLE (IPEX PART No. 36348) WITH 1-1/2" VITON GASKET AND BOLT KIT FOR 1-1/2" FLAANGE (BOLTS 2-1/2" LG)
23	1	EA	1-1/2" FLANGED FLOW METER (SIEMENS 7ME6910-1AA10-1AA0 MAG 5000 W/ MAG 3100 SENSOR)
24	8-5/8"	FT	1-1/2" PVC, SCHED 80, PIPE
25	5-1/2"	FT	2" PVC, SCHED 80, PIPE
26	2	EA	2" PVC FLANGE, VAN STONE STYLE (IPEX PART No. 36349) WITH 2" VITON GASKET AND BOLT KIT FOR 2" FLANGE (BOLTS 3" LG)
27	1	EA	2" FLANGED GATE VALVE (ASAHI TYPE P) (GL-2"-702)
28	1	EA	4" x 2" DUAL CONTAINMENT TERMINATION ASSEMBLY (END TERMINATION, IPS FLANGE ADAPTER, AND CONVOLUTED FLANGE) WITH 2" VITON GASKET AND BOLT KIT FOR 2" FLANGE (BOLTS 3" LG)
29	1	EA	2" x 1/2" PVC, SCHED 80, REDUCER BUSHING (IPEX PART No. 36695)
30	4	EA	1/2" x 1-1/8" PVC, SCHED 80, NIPPLE (IPEX PART No. 36436)
31	1	EA	1/2" PVC, SCHED 80, TEE (FPT x FPT x FPT) (IBEX PART No. 36819)
32	1	EA	1/2" BALL VALVE (ASAHI AMERICA TYPE 21) (BA-1/2"-704)
33	1	EA	1/2" BALL VALVE (ASAHI AMERICA TYPE 21) (BA-1/2"-703)
34	1	EA	PRESSURE INDICATOR (ASCROFT MODEL 45-1279-AS-100#)
35	1	EA	1/2" BALL VALVE (ASAHI AMERICA TYPE 21) (BA-1/2"-105)
36	1	EA	1/2" x 1-1/8" PVC, SCHED 80, NIPPLE (IPEX PART No. 36436)
37	1	EA	1/2" PVC, SCHED 80, 90° ELBOW

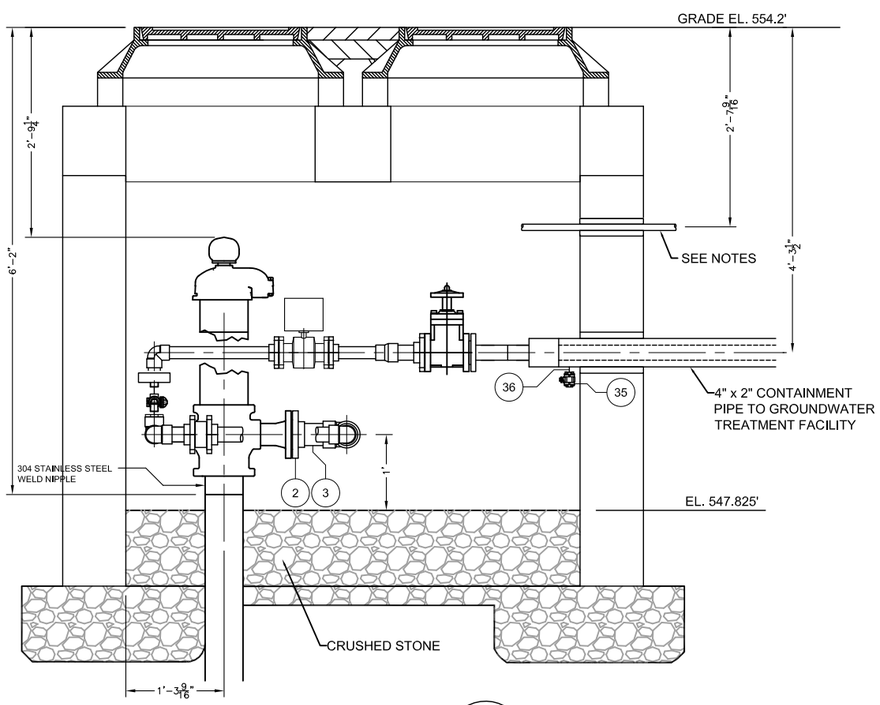

SECTION VIEW 1

SCALE: 1/2"=1'-0"

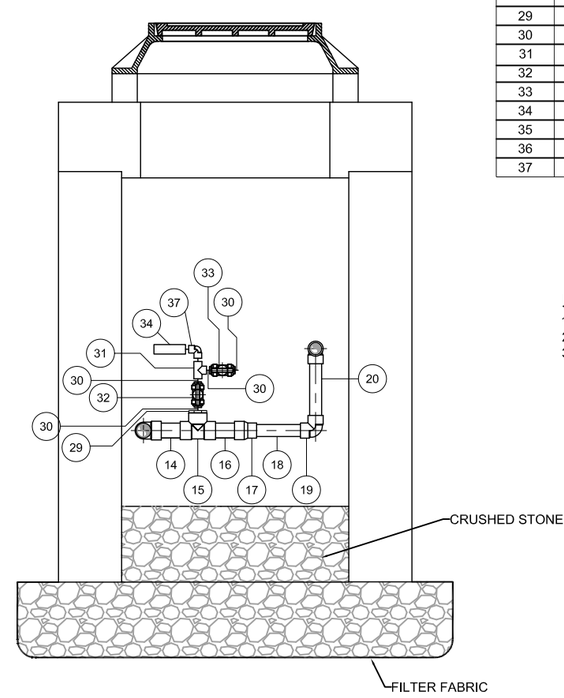

SECTION VIEW 2

SCALE: 1/2"=1'-0"

NOTES:

1. 1" PVC CONDUIT (HEAT TRACE)
2. 1" PVC CONDUIT (PUMP LEADS)
3. 1" RGS CONDUIT (FLOW METER ANALOG, LEVEL ANALOG/PUMP TEMPERATURE MOISTURE SWITCHES)

AS-BUILT

GRAPHIC SCALE

2' 1' 0 2'

SCALE: 1/2"= 1'-0"

CAPE
180 Gordon Drive
Suite 105
Exton, PA 19341
(610) 594-8606

REVISIONS:

No.	Date	Remarks
1	7/18/11	REVISED FINAL
2	1/13/12	FINAL AS-BUILT

U.S. Army Corps of Engineers
NEW YORK DISTRICT

PROJECT NAME
REMEDIAL ACTION ACTIVITIES
FOR THE EAST MAIN/WALL STREET
PLUME OF THE ROCKAWAY BOROUGH
WELL FIELD SUPERFUND SITE
MORRIS COUNTY, NEW JERSEY

SHEET TITLE
VAULT PIPING FOR EW-8

CONTRACT NO: W912DQ-05-D-0001 TO-0005
JOB NO: 50001.005.001.001
CHECKED BY: M. LAMON
DRAWN BY: B DAVIS
DATE: JUNE 2011
FILE NAME: DETAIL 1 - EW-8
SHEET NUMBER: DETAIL 1

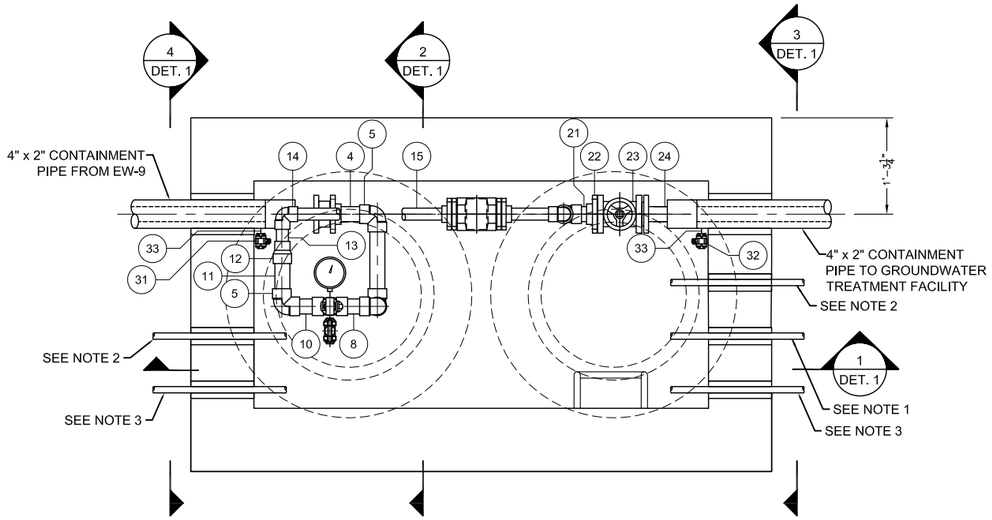

WELL VAULT EW-9 PLAN VIEW

SCALE: 1/2"=1'-0"

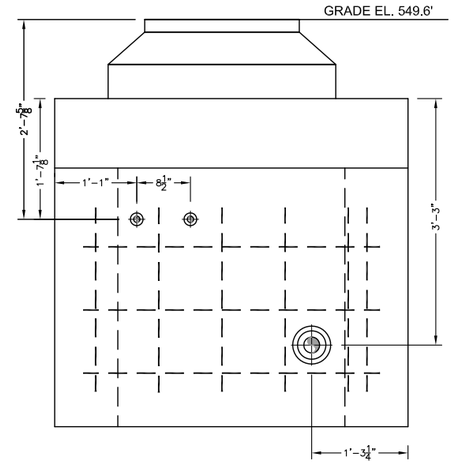

SECTION VIEW 3 / -

SCALE: 1/2"=1'-0"

NOTES:

1. 1" PVC CONDUIT (HEAT TRACE)
2. 1" PVC CONDUIT (PUMP LEADS)
3. 2" RGS CONDUIT (FLOW METER ANALOG, LEVEL ANALOG/PUMP TEMPERATURE MOISTURE SWITCHES)

ITEM	QTY	U/M	DESCRIPTION
1	1	EA	4" x 2" DUAL CONTAINMENT TERMINATION ASSEMBLY (END TERMINATION, IPS FLANGE ADAPTER, AND CONVOLUTED FLANGE) WITH 2" VITON GASKET
2	1	EA	2" WAFER CHECK VALVE (CHEMLINE WP SERIES) (CH-2"-201)
3	1	EA	2" PVC FLANGE, VAN STONE STYLE (IPEX PART No. 36349) WITH 2" VITON GASKET AND BOLT KIT FOR 2" FLANGE (BOLTS 5-1/4" LG)
4	6"	FT	2" PVC, SCHED 80, PIPE
5	5	EA	2" PVC, SCHED 80, 90° ELBOW (IPEX PART No. 36186)
6	1'-0"	FT	2" PVC, SCHED 80, PIPE
7	10-1/2"	FT	2" PVC, SCHED 80, PIPE
8	5"	FT	2" PVC, SCHED 80, PIPE
9	1	EA	2" PVC, SCHED 80, TEE (IPEX PART No. 36775)
10	5"	FT	2" PVC, SCHED 80, PIPE
11	7"	FT	2" PVC, SCHED 80, PIPE
12	2	EA	2" x 1-1/2" PVC, SCHED 80, REDUCER COUPLING (IBEX PART No. 36731)
13	4-3/4"	FT	1-1/2" PVC, SCHED 80, PIPE
14	2	EA	1-1/2" PVC, SCHED 80, 90° ELBOW (IPEX PART No. 36185)
15	2'-1/2"	FT	1-1/2" PVC, SCHED 80, PIPE
16	2	EA	1-1/2" PVC FLANGE, VAN STONE STYLE (IPEX PART No. 36348) WITH 1-1/2" VITON GASKET AND BOLT KIT FOR 1-1/2" FLAANGE (BOLTS 2-1/2" LG)
17	1	EA	1-1/2" FLANGED FLOW METER (SIEMENS 7ME6910-1AA10-1AA0 MAG 5000 W/ MAG 3100 SENSOR)
18	8-1/2"	FT	1-1/2" PVC, SCHED 80, PIPE
19	5"	FT	1-1/2" PVC, SCHED 80, PIPE
20	5"	FT	2" PVC, SCHED 80, PIPE
21	3-1/2"	FT	2" PVC, SCHED 80, PIPE
22	1	EA	2" PVC FLANGE, VAN STONE STYLE (IPEX PART No. 36349) WITH 2" VITON GASKET AND BOLT KIT FOR 2" FLANGE (BOLTS 3" LG)
23	1	EA	2" FLANGED GATE VALVE (ASAHI TYPE P) (GL-2"-202)
24	1	EA	4" x 2" DUAL CONTAINMENT TERMINATION ASSEMBLY (END TERMINATION, IPS FLANGE ADAPTER, AND CONVOLUTED FLANGE) WITH 2" VITON GASKET AND BOLT KIT FOR 2" FLANGE (BOLTS 3" LG)
25	1	EA	2" x 1/2" PVC, SCHED 80, REDUCER BUSHING (IPEX PART No. 36695)
26	4	EA	1/2" x 1-1/8" PVC, SCHED 80, NIPPLE (IPEX PART No. 36436)
27	1	EA	1/2" PVC, SCHED 80, TEE (FPT x FPT x FPT) (IBEX PART No. 36819)
28	1	EA	1/2" BALL VALVE (ASAHI AMERICA TYPE 21) (BA-1/2"-204)
29	1	EA	1/2" BALL VALVE (ASAHI AMERICA TYPE 21) (BA-1/2"-203)
30	1	EA	PRESSURE INDICATOR (ASCROFT MODEL 45-1279-AS-100#)
31	1	EA	1/2" BALL VALVE (BA-1/2"-205)
32	1	EA	1/2" BALL VALVE
33	2	EA	1/2" x 1-1/8" PVC, SCHED 80, NIPPLE (IPEX PART No. 36436)

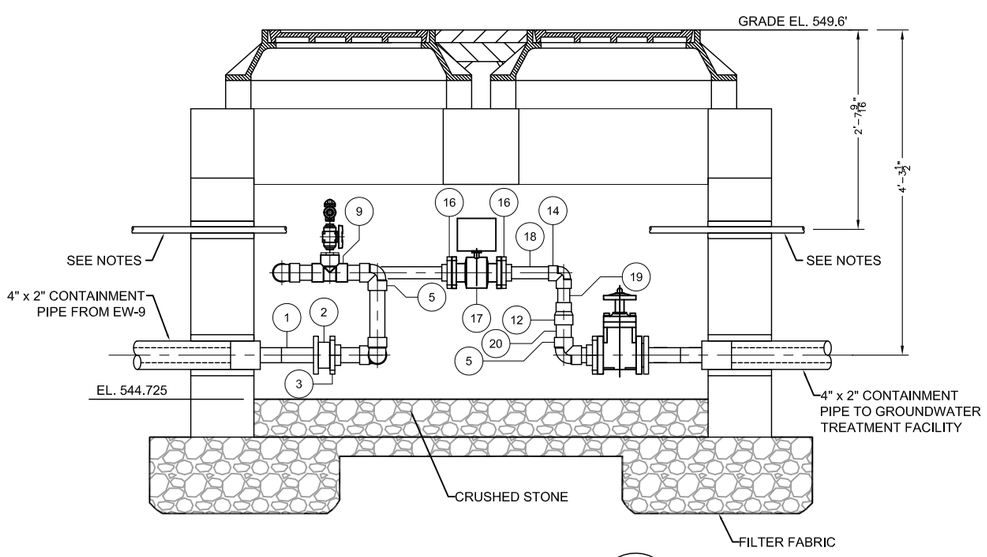

SECTION VIEW 1 / -

SCALE: 1/2"=1'-0"

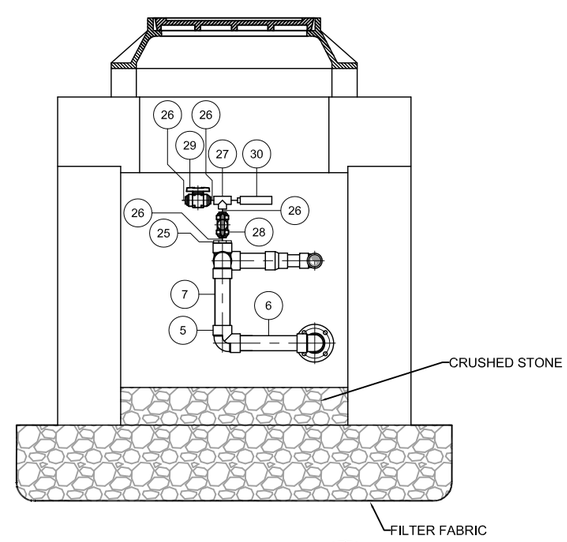

SECTION VIEW 2 / -

SCALE: 1/2"=1'-0"

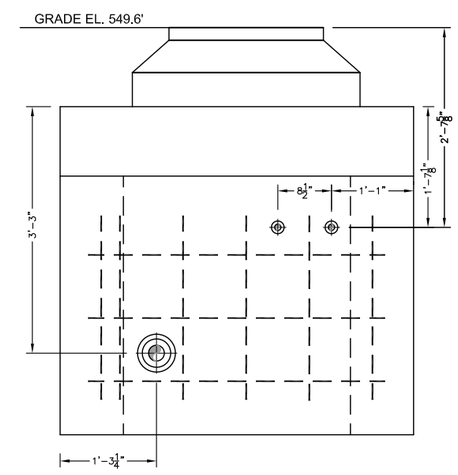

SECTION VIEW 4 / -

SCALE: 1/2"=1'-0"

AS-BUILT

GRAPHIC SCALE

2' 1' 0 2'

SCALE: 1/2"= 1'-0"

CAPE
180 Gordon Drive
Suite 105
Exton, PA 19341
(610) 594-8606

REVISIONS:

No.	Date	Remarks
1	7/18/11	REVISED FINAL
2	1/13/12	FINAL AS-BUILT

U.S. Army Corps of Engineers
NEW YORK DISTRICT

PROJECT NAME
REMEDIAL ACTION ACTIVITIES FOR THE EAST MAIN/WALL STREET PLUME OF THE ROCKAWAY BOROUGH WELL FIELD SUPERFUND SITE MORRIS COUNTY, NEW JERSEY

SHEET TITLE
VAULT PIPING FOR EW-9

CONTRACT NO: W912DQ-05-D-0001 TO-0005
JOB NO: 50001.005.001.001
CHECKED BY: M. LAMON
DRAWN BY: B DAVIS
DATE: JUNE 2011
FILE NAME: ROCKWY_EW-9 AS-BUILT
SHEET NUMBER: DETAIL 1

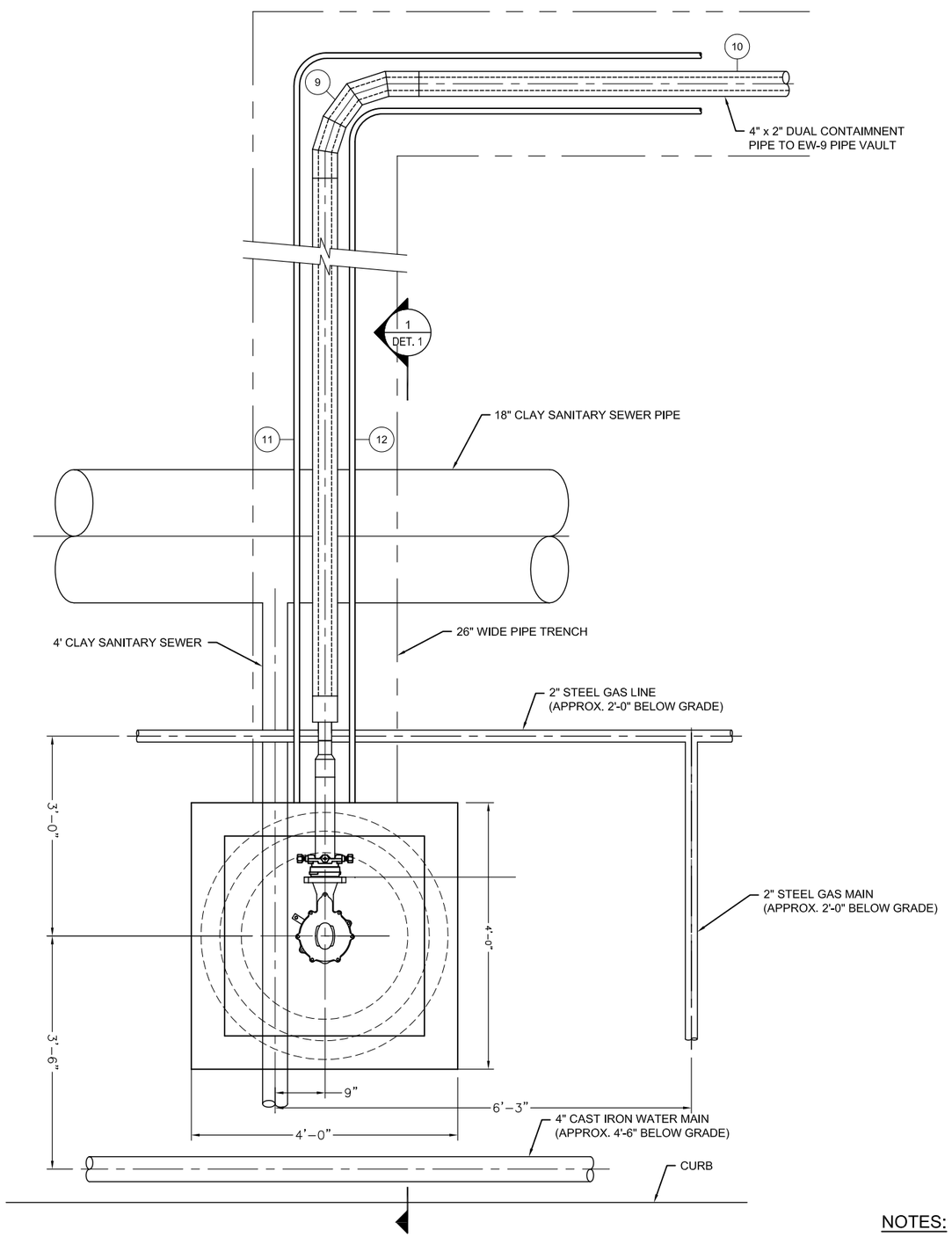

EW-9 PLAN VIEW

SCALE: 1/2"=1'-0"

ITEM	QTY	U/M	DESCRIPTION
1	1	EA	PITLESS ADAPTER (BAKER 1PS67NBWE03F3SP)
2	1	EA	3" VITON OR TEFLON TRANSITION GASKET
3	1	EA	3" RESTRAINED FLANGE ADAPTER (EBAA IRON MODEL 2103)
4	1	EA	3" PIPE STIFFENER
5	1'-6"	FT	3" HDPE PIPE
6	1	EA	3" x 2" HDPE MOLDED REDUCER
7	1	EA	4" x 2" DUAL CONTAINMENT END TERMINATION PIECE
8	TO SUIT	FT	4" (SDR17) x 2" (SDR11) HDPE, DUAL CONTAINMENT PIPE
9	1	EA	4" (SDR17) x 2" (SDR11) HDPE, DUAL CONTAINMENT 90° ELBOW
10	TO SUIT	FT	4" (SDR17) x 2" (SDR11) HDPE, DUAL CONTAINMENT PIPE
11	TO SUIT	FT	1" PVC , CONDUIT
12	TO SUIT	FT	1" RGS , CONDUIT
13	TO SUIT	--	DENSO MASTIC
14	TO SUIT	--	DENSO TAPE

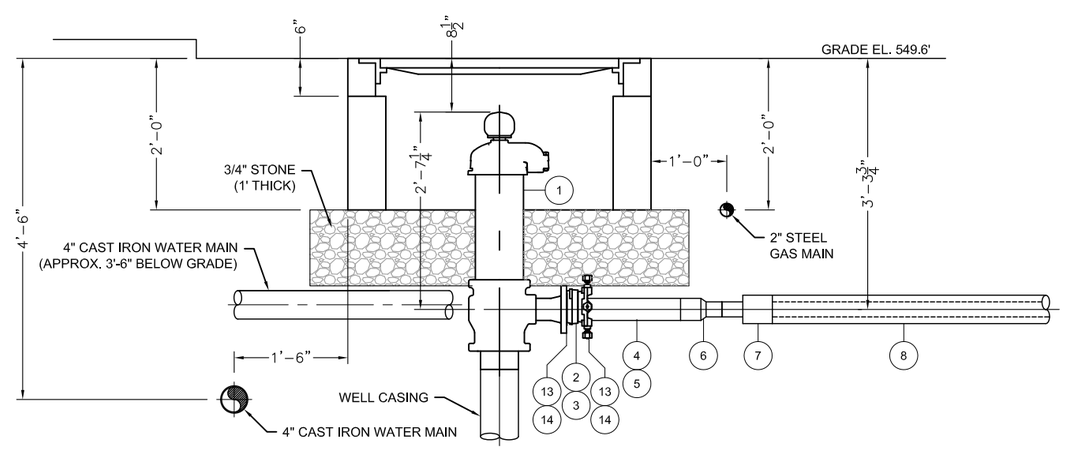

SECTION VIEW 1 / -

SCALE: 1/2"=1'-0"

NOTES:

1. FLOWABLE FILL WAS NOT USED WITHIN 5' OF MECHANICAL JOINT AT WELL HEAD.
2. ALL BURIED FLANGES, MACHANICAL JOINTS, AND RESTRAINTS WERE ENCASED IN DENSO MASTIC AND WRAPPED WITH DENSO TAPE.

AS-BUILT

GRAPHIC SCALE

2' 1' 0 2'

SCALE: 1/2"= 1'-0"

CAPE

180 Gordon Drive
Suite 105
Exton, PA 19341
(610) 594-8606

REVISIONS:

No.	Date	Remarks
1	7/18/11	REVISED FINAL
2	1/13/12	FINAL AS-BUILT

U.S. Army Corps of Engineers
NEW YORK DISTRICT

PROJECT NAME
REMEDIAL ACTION ACTIVITIES
FOR THE EAST MAIN/WALL STREET
PLUME OF THE ROCKAWAY BOROUGH
WELL FIELD SUPERFUND SITE
MORRIS COUNTY, NEW JERSEY

SHEET TITLE
MANHOLE FOR EW-9

CONTRACT NO: W912DQ-05-D-0001 TO-0005
JOB NO: 50001.005.001.001
CHECKED BY: M. LAMON
DRAWN BY: B DAVIS
DATE: JUNE 2011
FILE NAME: ROCKWY EW-9 MANHOLE AS-BUILT
SHEET NUMBER: DETAIL 1

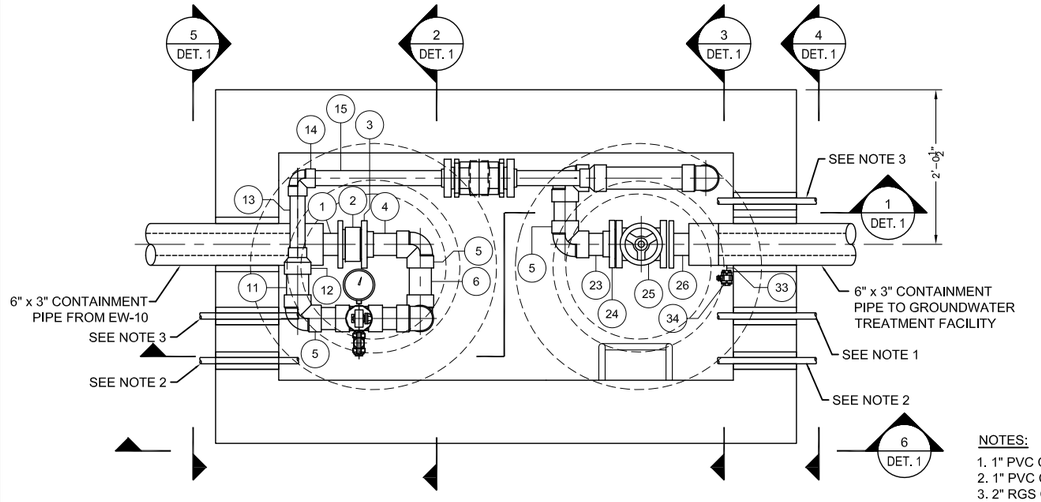

WELL VAULT EW-10 PLAN VIEW

SCALE: 1/2"=1'-0"

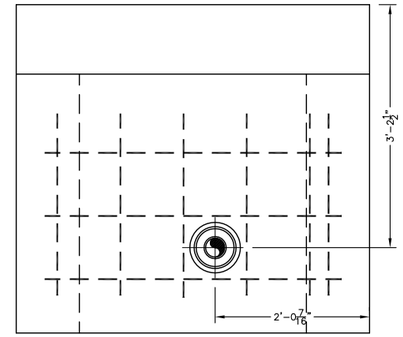

SECTION VIEW 4 / -

SCALE: 1/2"=1'-0"

NOTES:

1. 1" PVC CONDUIT (HEAT TRACE)
2. 1" PVC CONDUIT (PUMP LEADS)
3. 2" RGS CONDUIT (FLOW METER ANALOG, LEVEL ANALOG/PUMP TEMPERATURE MOISTURE SWITCHES)

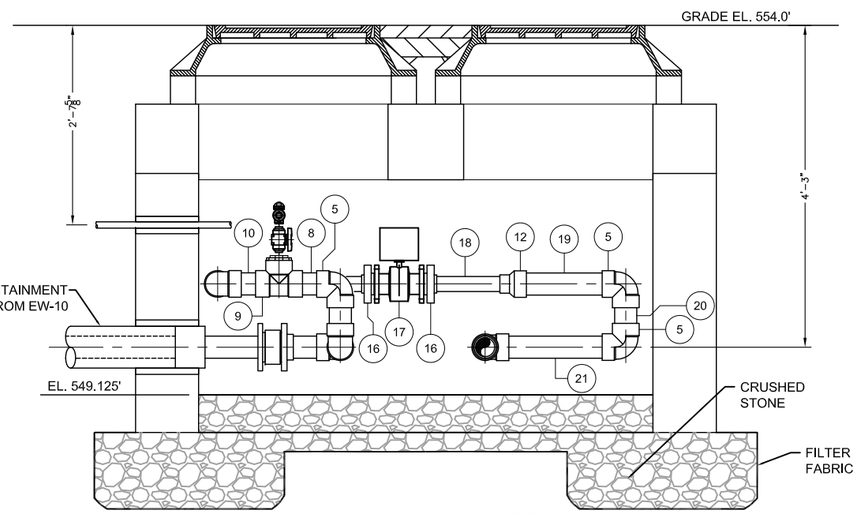

SECTION VIEW 1 / -

SCALE: 1/2"=1'-0"

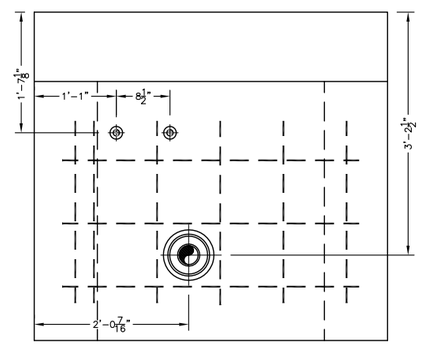

SECTION VIEW 5 / -

SCALE: 1/2"=1'-0"

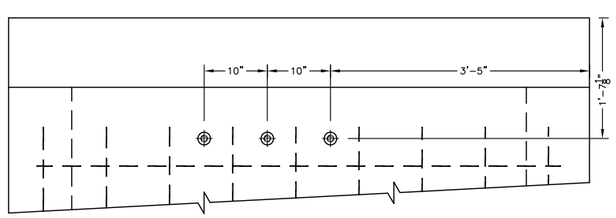

SECTION VIEW 6 / -

SCALE: 1/2"=1'-0"

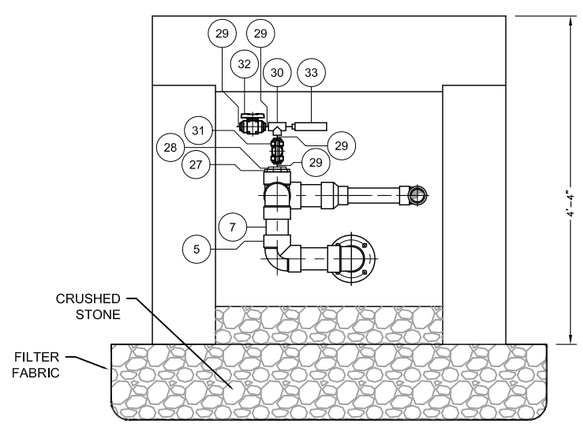

SECTION VIEW 2 / -

SCALE: 1/2"=1'-0"

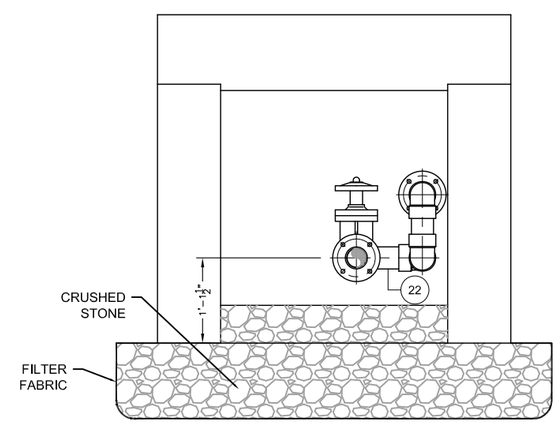

SECTION VIEW 3 / -

SCALE: 1/2"=1'-0"

AS-BUILT

GRAPHIC SCALE

2' 1' 0 2'

SCALE: 1/2"= 1'-0"

ITEM	QTY	U/M	DESCRIPTION
1	1	EA	6" x 3" DUAL CONTAINMENT TERMINATION ASSEMBLY (END TERMINATION, IPS FLANGE ADAPTER, AND CONVOLUTED FLANGE) WITH 3" VITON GASKET
2	1	EA	3" WAFER CHECK VALVE (CHEMLINE WP SERIES) (CH-3"-801)
3	1	EA	3" PVC FLANGE, VAN STONE STYLE (IPEX PART No. 36351) WITH 3" VITON GASKET AND BOLT KIT FOR 3" FLANGE (BOLTS 6")
4	7-7/16"	FT	3" PVC, SCHED 80, PIPE
5	8	EA	3" PVC, SCHED 80, 90° ELBOW (IPEX PART No. 36188)
6	8"	FT	3" PVC, SCHED 80, PIPE
7	6-1/4"	FT	3" PVC, SCHED 80, PIPE
8	6"	FT	3" PVC, SCHED 80, PIPE
9	1	EA	3" PVC, SCHED 80, TEE (IPEX PART No. 36777)
10	6"	FT	3" PVC, SCHED 80, PIPE
11	7"	FT	3" PVC, SCHED 80, PIPE
12	2	EA	3" x 2" PVC, SCHED 80, REDUCER COUPLING (IBEX PART No. 36735)
13	11-3/16"	FT	2" PVC, SCHED 80, PIPE
14	1		2" PVC, SCHED 80, 90° ELBOW (IPEX PART No. 36186)
15	1'-11"	FT	2" PVC, SCHED 80, PIPE
16	2	EA	2" PVC FLANGE, VAN STONE STYLE (IPEX PART No. 36349) WITH 2" VITON GASKET AND BOLT KIT FOR 2" FLANGE (BOLTS 3" LG)
17	1	EA	2" FLANGED FLOW METER (SIEMENS 7ME6910-1AA10-1AA0 MAG 5000 W/ MAG 3100 SENSOR)
18	1'-1"	FT	2" PVC, SCHED 80, PIPE
19	1'-3-3/4"	FT	3" PVC, SCHED 80, PIPE
20	6-1/4"	FT	3" PVC, SCHED 80, PIPE
21	1'-6-1/2"	FT	3" PVC, SCHED 80, PIPE
22	6-3/4"	FT	3" PVC, SCHED 80, PIPE
23	6"	FT	3" PVC, SCHED 80, PIPE
24	1	EA	3" PVC FLANGE, VAN STONE STYLE (IPEX PART No. 36351) WITH 3" VITON GASKET AND BOLT KIT FOR 3" FLANGE (BOLTS 3-1/2")
25	1	EA	3" FLANGED GATE VALVE (ASAHI TYPE P) (GL-3"-802)
26	1	EA	6" x 3" DUAL CONTAINMENT TERMINATION ASSEMBLY (END TERMINATION, IPS FLANGE ADAPTER, AND CONVOLUTED FLANGE)
27	1	EA	3" x 1" PVC, SCHED 80, REDUCER BUSHING (IPEX PART No. 35669)
28	1	EA	1" x 1/2" PVC, SCHED 80, REDUCER BUSHING (IPEX PART No. 35724)
29	4	EA	1/2" x 1-1/8" PVC, SCHED 80, NIPPLE (IPEX PART No. 36436)
30	1	EA	1/2" PVC, SCHED 80, TEE (FPT x FPT x FPT) (IBEX PART No. 36819)
31	1	EA	1/2" BALL VALVE (ASAHI AMERICA TYPE 21) (BA-1/2"-804)
32	1	EA	1/2" BALL VALVE (ASAHI AMERICA TYPE 21) (BA-1/2"-803)
33	1	EA	PRESSURE INDICATOR (ASCROFT MODEL 45-1279-AS-100#)
34	1	EA	1/2" BALL VALVE (BA-1/2"-805)
35	1	EA	1/2" BALL VALVE (BA-1/2"-806)
36	2	EA	1/2" x 1-1/8" PVC, SCHED 80, NIPPLE (IPEX PART No. 36436)

CAPE

180 Gordon Drive
Suite 105
Exton, PA 19341
(610) 594-8606

REVISIONS:

No.	Date	Remarks
1	7/18/11	REVISED FINAL
2	1/13/12	FINAL AS-BUILT

U.S. Army Corps of Engineers
NEW YORK DISTRICT

PROJECT NAME

REMEDIAL ACTION ACTIVITIES
FOR THE EAST MAIN/WALL STREET
PLUME OF THE ROCKAWAY BOROUGH
WELL FIELD SUPERFUND SITE
MORRIS COUNTY, NEW JERSEY

SHEET TITLE

VAULT PIPING FOR EW-10

CONTRACT NO: W912DQ-05-D-0001 TO-0005

JOB NO: 50001.005.001.001

CHECKED BY: M. LAMON

DRAWN BY: B DAVIS

DATE: JUNE 2011

FILE NAME: DETAIL 1 - EW-10 AS-BUILT

SHEET NUMBER: DETAIL 1

ITEM	QTY	U/M	DESCRIPTION
1	1	EA	PITLESS ADAPTER (BAKER 1PS67NBWE03F3SP)
2	1	EA	3" VITON OR TEFLON TRANSITION GASKET
3	1	EA	3" RESTRAINED FLANGE ADAPTER (EBAA IRON MODEL 2103)
4	1	EA	3" PIPE STIFFENER
5	2'-0"	FT	3" HDPE PIPE
6	1	EA	6" x 3" DUAL CONTAINMENT END TERMINATION PIECE
7	TO SUIT	FT	6" (SDR17) x 3" (SDR11) HDPE, DUAL CONTAINMENT PIPE
8	1	EA	6" (SDR17) x 3" (SDR11) HDPE, DUAL CONTAINMENT 90° ELBOW
9	TO SUIT	FT	6" (SDR17) x 3" (SDR11) HDPE, DUAL CONTAINMENT PIPE
10	TO SUIT	FT	1" PVC , CONDUIT
11	TO SUIT	FT	1" RGS , CONDUIT
12	TO SUIT	--	DENSO MASTIC
13	TO SUIT	--	DENSO TAPE

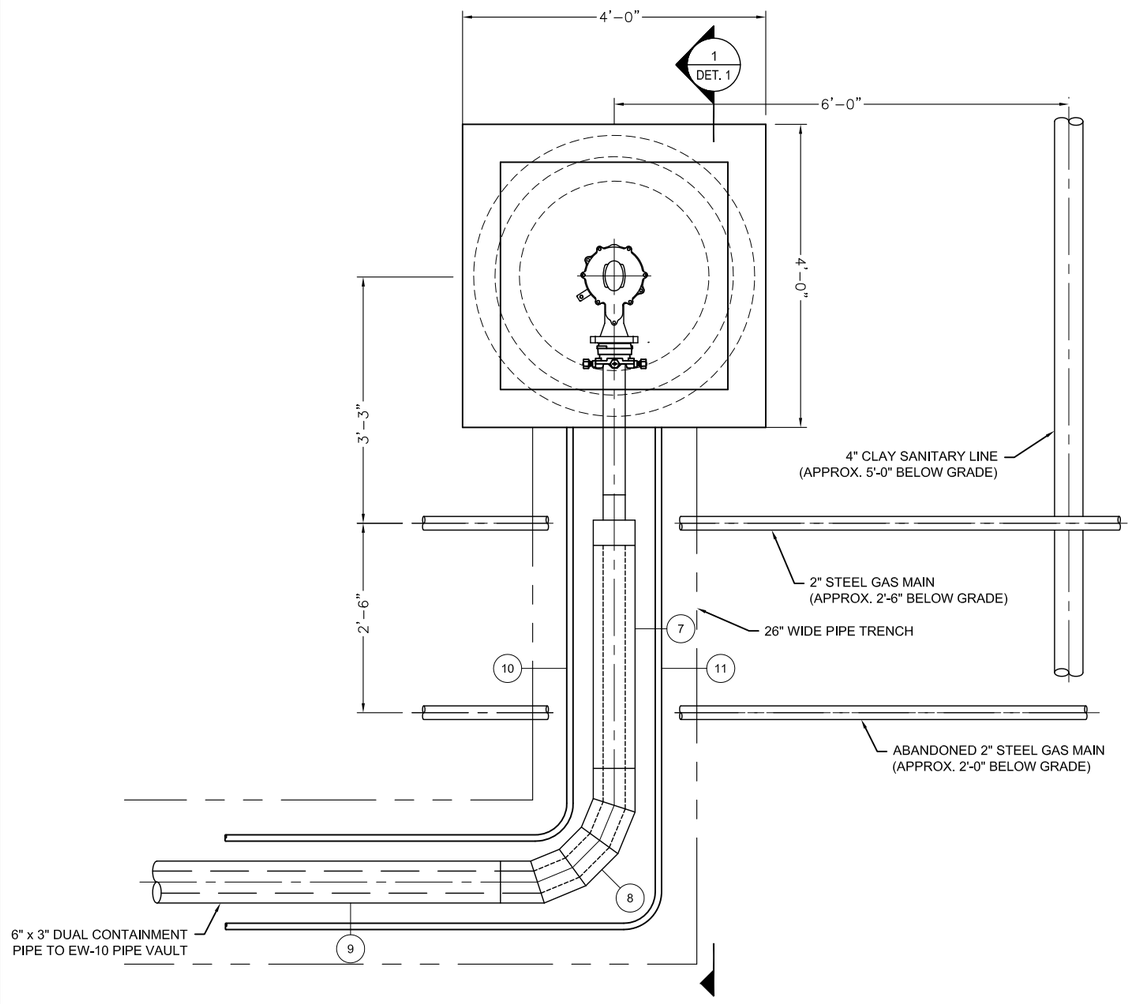

EW-10 PLAN VIEW

SCALE: 1/2"=1'-0"

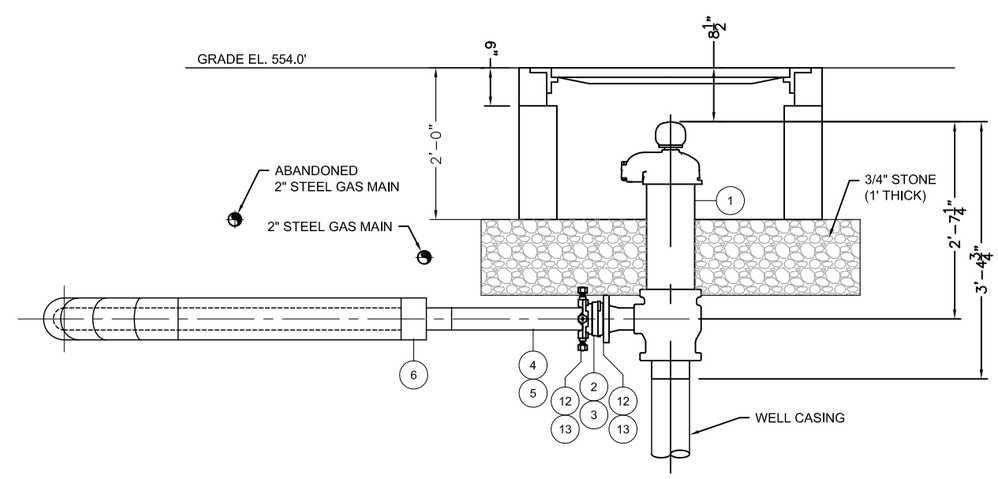

SECTION VIEW

SCALE: 1/2"=1'-0"

1
-

NOTES:

1. FLOWABLE FILL WAS NOT USED WITHIN 5' OF MECHANICAL JOINT AT WELL HEAD.
2. ALL BURIED FLANGES, MACHANICAL JOINTS, AND RESTRAINTS WERE ENCASED IN DENSO MASTIC AND WRAPPED WITH DENSO TAPE.

AS-BUILT

GRAPHIC SCALE

2' 1' 0 2'

SCALE: 1/2"= 1'-0"

CAPE
180 Gordon Drive
Suite 105
Exton, PA 19341
(610) 594-8606

REVISIONS:

No.	Date	Remarks
1	7/18/11	REVISED FINAL
2	1/13/12	FINAL AS-BUILT

U.S. Army Corps of Engineers
NEW YORK DISTRICT

PROJECT NAME
REMEDIAL ACTION ACTIVITIES
FOR THE EAST MAINWALL STREET
PLUME OF THE ROCKAWAY BOROUGH
WELL FIELD SUPERFUND SITE
MORRIS COUNTY, NEW JERSEY

SHEET TITLE
MANHOLE FOR EW-10

CONTRACT NO: W912DQ-05-D-0001 TO-0005
JOB NO: 50001.005.001.001
CHECKED BY: M. LAMON
DRAWN BY: B DAVIS
DATE: JUNE 2011
FILE NAME: ROCKWY EW-10 MANHOLE AS-BUILT
SHEET NUMBER: DETAIL 1

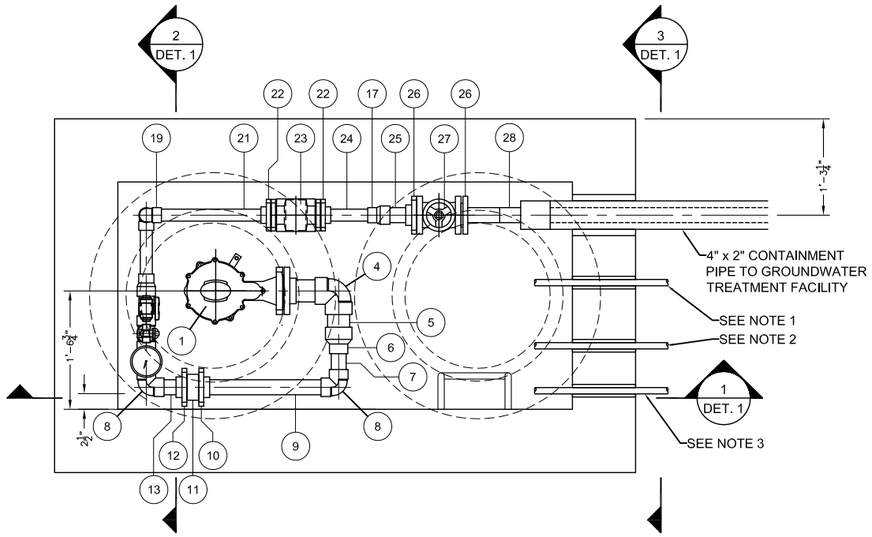

EW-5A PLAN VIEW

SCALE: 1/2"=1'-0"

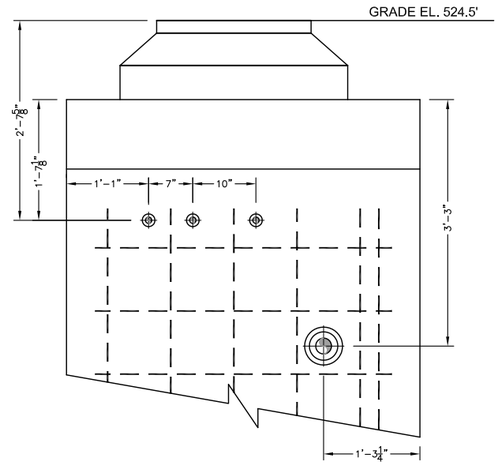

SECTION VIEW

SCALE: 1/2"=1'-0"

3 / -

ITEM	QTY	U/M	DESCRIPTION
1	1	EA	PITLESS ADAPTER (BAKER 1PS67WBWE03F3SP)
2	1	EA	3" PVC FLANGE, VAN STONE STYLE (IPEX PART No. 36351) WITH 3" VITON GASKET AND BOLT KIT FOR 3" FLANGE (BOLTS 3-1/2")
3	6-3/4"	FT	3" PVC, SCHED 80, PIPE
4	1	EA	3" PVC, SCHED 80, 90° ELBOW (IPEX PART No. 36188)
5	5-3/4"	FT	3" PVC, SCHED 80, PIPE
6	1	EA	3" x 2" PVC, SCHED 80, REDUCER COUPLING (IBEX PART No. 36735)
7	5-1/2"	FT	2" PVC, SCHED 80, PIPE
8	2	EA	2" PVC, SCHED 80, 90° ELBOW (IPEX PART No. 36186)
9	1'-8-5/8"	FT	2" PVC, SCHED 80, PIPE
10	1	EA	2" PVC FLANGE, VAN STONE STYLE (IPEX PART No. 36349) WITH 2" VITON GASKET AND BOLT KIT FOR 2" FLANGE (BOLTS 5-1/4" LG)
11	1	EA	2" WAFER CHECK VALVE (CHEMLINE WP SERIES) (CH-2"-101)
12	1	EA	2" PVC FLANGE, VAN STONE STYLE (IPEX PART No. 36349) WITH 2" VITON GASKET
13	5"	FT	2" PVC, SCHED 80, PIPE
14	5-7/8"	FT	2" PVC, SCHED 80, PIPE
15	1	EA	2" PVC, SCHED 80, TEE (IPEX PART No. 36775)
16	6"	FT	2" PVC, SCHED 80, PIPE
17	2	EA	2" x 1-1/2" PVC, SCHED 80, REDUCER COUPLING (IBEX PART No. 36731)
18	9-3/4"	FT	1-1/2" PVC, SCHED 80, PIPE
19	2	EA	1-1/2" PVC, SCHED 80, 90° ELBOW (IBEX PART No. 36185)
20	11"	FT	1-1/2" PVC, SCHED 80, PIPE
21	1-6-1/2"	FT	1-1/2" PVC, SCHED 80, PIPE
22	2	EA	1-1/2" PVC FLANGE, VAN STONE STYLE (IPEX PART No. 36348) WITH 1-1/2" VITON GASKET AND BOLT KIT FOR 1-1/2" FLAANGE (BOLTS 2-1/2" LG)
23	1	EA	1-1/2" FLANGED FLOW METER (SIEMENS 7ME6910-1AA10-1AA0 MAG 5000 W/ MAG 3100 SENSOR)
24	8-5/8"	FT	1-1/2" PVC, SCHED 80, PIPE
25	5-1/2"	FT	2" PVC, SCHED 80, PIPE
26	2	EA	2" PVC FLANGE, VAN STONE STYLE (IPEX PART No. 36349) WITH 2" VITON GASKET AND BOLT KIT FOR 2" FLANGE (BOLTS 3" LG)
27	1	EA	2" FLANGED GATE VALVE (ASAHI TYPE P) (GL-2"-102)
28	1	EA	4" x 2" DUAL CONTAINMENT TERMINATION ASSEMBLY (END TERMINATION, IPS FLANGE ADAPTER, AND CONVOLUTED FLANGE) WITH 2" VITON GASKET AND BOLT KIT FOR 2" FLANGE (BOLTS 3" LG)
29	1	EA	2" x 1/2" PVC, SCHED 80, REDUCER BUSHING (IPEX PART No. 36695)
30	4	EA	1/2" x 1-1/8" PVC, SCHED 80, NIPPLE (IPEX PART No. 36436)
31	1	EA	1/2" PVC, SCHED 80, TEE (FPT x FPT x FPT) (IBEX PART No. 36819)
32	1	EA	1/2" BALL VALVE (ASAHI AMERICA TYPE 21) (BA-1/2"-104)
33	1	EA	1/2" BALL VALVE (ASAHI AMERICA TYPE 21) (BA-1/2"-103)
34	1	EA	PRESSURE INDICATOR (ASCROFT MODEL 45-1279-AS-100#)
35	1	EA	1/2" BALL VALVE (BA-1/2"-105)
36	1	EA	1/2" x 1-1/8" PVC, SCHED 80, NIPPLE (IPEX PART No. 36436)
37	1	EA	1/2" PVC, SCHED 80, 90° ELBOW

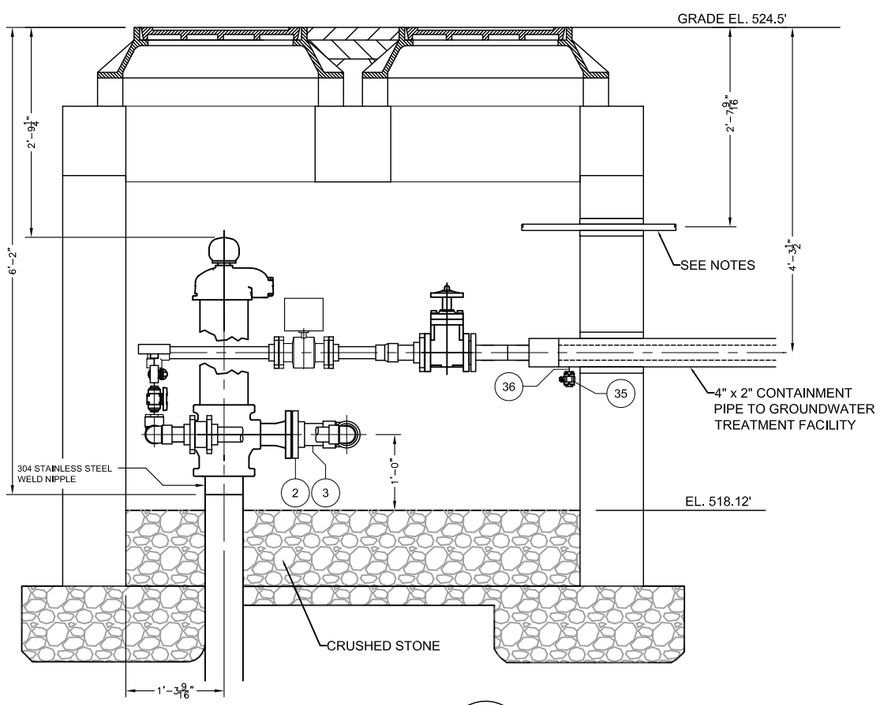

SECTION VIEW

SCALE: 1/2"=1'-0"

1 / -

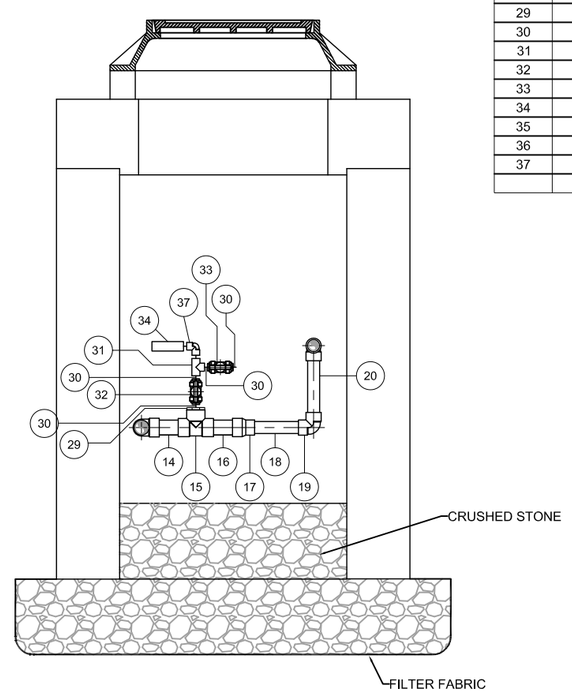

SECTION VIEW

SCALE: 1/2"=1'-0"

2 / -

NOTES:

1. 1" RGS CONDUIT (FLOW METER ANALOG, LEVEL ANALOG/PUMP TEMPERATURE MOISTURE SWITCHES)
2. 1" PVC CONDUIT (PUMP LEADS)
3. 1" PVC CONDUIT (HEAT TRACE)

AS-BUILT

GRAPHIC SCALE

2' 1' 0 2'

SCALE: 1/2"= 1'-0"

CAPE

180 Gordon Drive
Suite 105
Exton, PA 19341
(610) 594-8606

REVISIONS:

No.	Date	Remarks
1	7/18/11	REVISED FINAL
2	1/13/12	FINAL AS-BUILT

U.S. Army Corps of Engineers
NEW YORK DISTRICT

PROJECT NAME

REMEDIAL ACTION ACTIVITIES
FOR THE EAST MAIN/WALL STREET
PLUME OF THE ROCKAWAY BOROUGH
WELL FIELD SUPERFUND SITE
MORRIS COUNTY, NEW JERSEY

SHEET TITLE

VAULT PIPING FOR EW-5A

CONTRACT NO: W912DQ-05-D-0001 TO-0005

JOB NO: 50001.005.001.001

CHECKED BY: M. LAMON

DRAWN BY: B DAVIS

DATE: JUNE 2011

FILE NAME: DETAIL 1 - EW-5A AS-BUILT

SHEET NUMBER: DETAIL 1

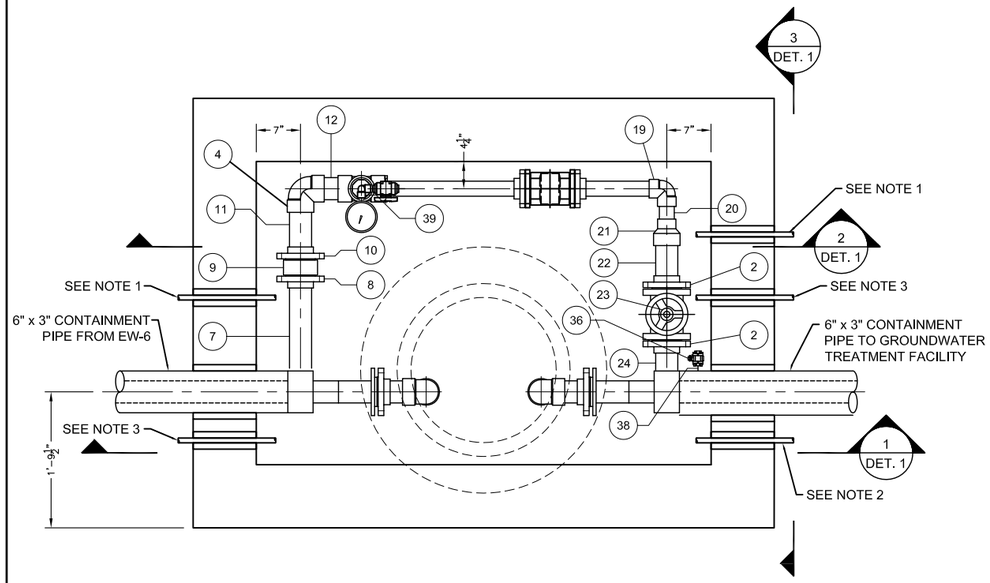

WELL VAULT EW-6 PLAN VIEW

SCALE: 1/2"=1'-0"

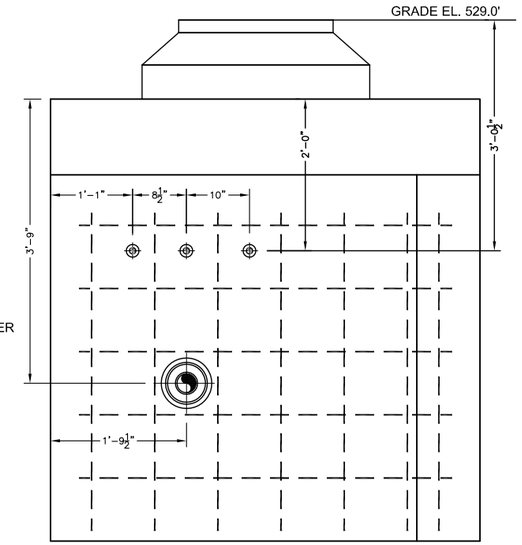

SECTION VIEW

SCALE: 1/2"=1'-0"

3 / -

ITEM	QTY	U/M	DESCRIPTION
1	2	EA	6" x 3" DUAL CONTAINMENT TERMINATION ASSEMBLY (END TERMINATION, IPS FLANGE ADAPTER, AND CONVOLUTED FLANGE)
2	4	EA	3" PVC FLANGE, VAN STONE STYLE (IPEX PART No. 36351) WITH 3" VITON GASKET AND BOLT KIT FOR 3" FLANGE (BOLTS 3-1/2")
3	5-3/4"	FT	3" PVC, SCHED 80, PIPE
4	7	EA	3" PVC, SCHED 80, 90° ELBOW (IPEX PART No. 36188)
5	5-3/4"	FT	3" PVC, SCHED 80, PIPE
6	1'-4-1/4"	FT	3" PVC, SCHED 80, PIPE
7	1'-4-3/8"	FT	3" PVC, SCHED 80, PIPE
8	1	EA	3" PVC FLANGE, VAN STONE STYLE (IPEX PART No. 36351) WITH 3 VITON GASKET AND BOLT KIT FOR 3" FLANGE (BOLTS 6" LG)
9	1	EA	3" WAFER CHECK VALVE (CHEMLINE WP SERIES) (CH-3"-301)
10	1	EA	3" PVC FLANGE, VAN STONE STYLE (IPEX PART No. 36351) WITH 3" VITON GASKET
11	9-1/4"	FT	3" PVC, SCHED 80, PIPE
12	6"	FT	3" PVC, SCHED 80, PIPE
13	1	EA	3" PVC, SCHED 80, TEE (IBEX PART No. 36777)
14	1	EA	3" x 2" PVC, SCHED 80, REDUCER BUSHING (IPEX 36625)
15	1'-11"	FT	2" PVC, SCHED 80, PIPE
16	2	EA	2" PVC FLANGE, VAN STONE STYLE (IPEX PART No. 36349) WITH 2" VITON GASKET AND BOLT KIT FOR 2" FLAANGE (BOLTS 3" LG)
17	1	EA	1-1/2" FLANGED FLOW METER (SIEMENS 7ME6910-1AA10-1AA0 MAG 5000 W/ MAG 3100 SENSOR)
18	1'-1"	FT	2" PVC, SCHED 80, PIPE
19	1	EA	2" PVC, SCHED 80, 90° ELBOW (IPEX PART No. 36186)
20	5"	FT	2" PVC, SCHED 80, PIPE
21	1	EA	3" x 2" PVC, SCHED 80, REDUCER COUPLING (IBEX PART No. 36735)
22	8-1/2"	FT	3" PVC, SCHED 80, PIPE
23	1	EA	3" FLANGED GATE VALVE (ASAHI TYPE P) (GL-3"-302)
24	6-1/8"	FT	3" PVC, SCHED 80, PIPE
25	1'-4-1/4	FT	3" PVC, SCHED 80, PIPE
26	5-3/4"	FT	3" PVC, SCHED 80, PIPE
27	5-3/4	FT	3" PVC, SCHED 80, PIPE
28	1	EA	3" x 1" PVC, SCHED 80, REDUCER BUSHING (IPEX PART No. 36623)
29	1	EA	1" x 1/2" PVC, SCHED 80, REDUCER BUSHING (IPEX PART No. 36686)
30	4	EA	1/2" x 1-1/8" PVC, SCHED 80, NIPPLE (IPEX PART No. 36436)
31	1	EA	1/2" PVC, SCHED 80, TEE (FPT x FPT x FPT) (IBEX PART No. 36819)
32	1	EA	1/2" BALL VALVE (ASAHI AMERICA TYPE 21) (BA-1/2"-304)
33	1	EA	1/2" BALL VALVE (ASAHI AMERICA TYPE 21) (BA-1/2"-303)
34	1	EA	PRESSURE INDICATOR (ASCROFT MODEL 45-1279-AS-100#)
35	2	EA	1" x 1/2" PVC, SCHED 80, T T BUSHING (IPEX PART No. 36656)
36	1	EA	1/2" BALL VALVE (BA-1/2"-305)
37	1	EA	1/2" BALL VALVE (BA-1/2"-306)
38	2	EA	1/2" x 1-1/8" PVC, SCHED 80, NIPPLE (IPEX PART No. 36436)
39	1	EA	1/2" PVC, SCHED 80, 90° ELBOW

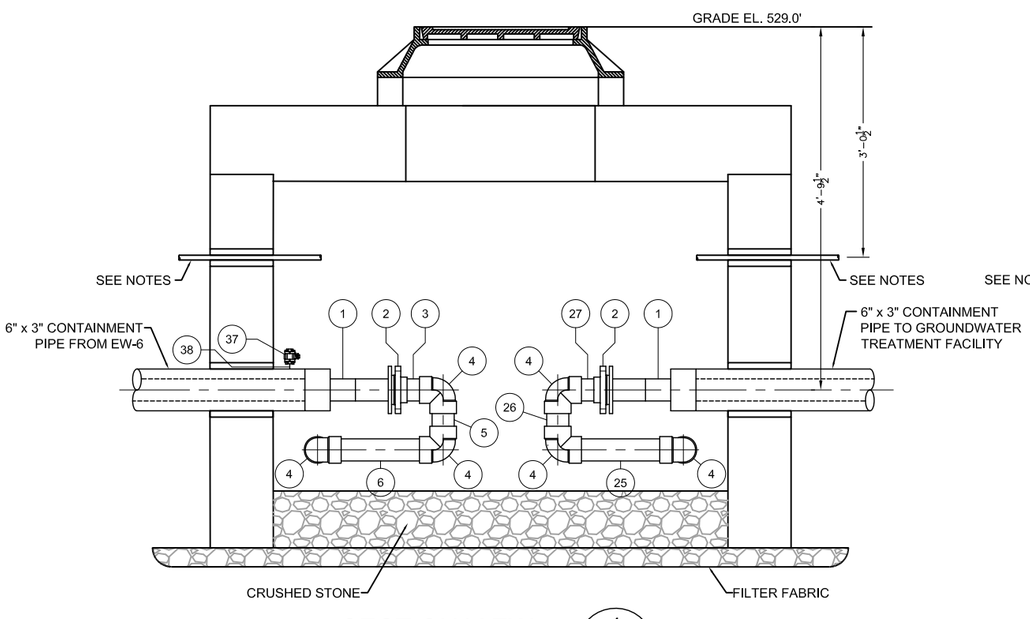

SECTION VIEW

SCALE: 1/2"=1'-0"

1 / -

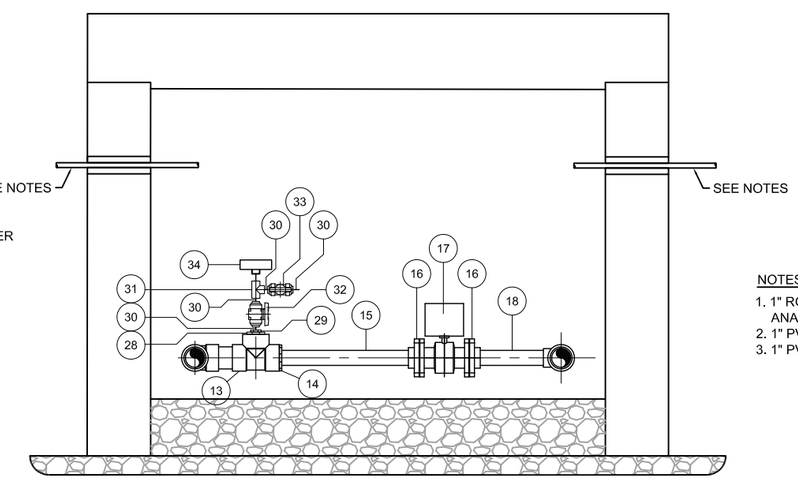

SECTION VIEW

SCALE: 1/2"=1'-0"

2 / -

NOTES:

1. 1" RGS CONDUIT (FLOW METER ANALOG, LEVEL ANALOG/PUMP TEMPERATURE MOISTURE SWITCHES)
2. 1" PVC CONDUIT (HEAT TRACE)
3. 1" PVC CONDUIT (PUMP LEADS)

AS-BUILT

GRAPHIC SCALE

2' 1' 0 2'

SCALE: 1/2"= 1'-0"

CAPE

180 Gordon Drive
Suite 105
Exton, PA 19341
(610) 594-8606

REVISIONS:

No.	Date	Remarks
1	7/18/11	REVISED FINAL
2	1/13/12	FINAL AS-BUILT

U.S. Army Corps of Engineers
NEW YORK DISTRICT

PROJECT NAME
REMEDIAL ACTION ACTIVITIES
FOR THE EAST MAIN/WALL STREET
PLUME OF THE ROCKAWAY BOROUGH
WELL FIELD SUPERFUND SITE
MORRIS COUNTY, NEW JERSEY

SHEET TITLE
VAULT PIPING FOR EW-6

CONTRACT NO: W912DQ-05-D-0001 TO-0005
JOB NO: 50001.005.001.001
CHECKED BY: M. LAMON
DRAWN BY: B DAVIS
DATE: JUNE 2011
FILE NAME: DETAIL 1 - EW-6
SHEET NUMBER: DETAIL 1

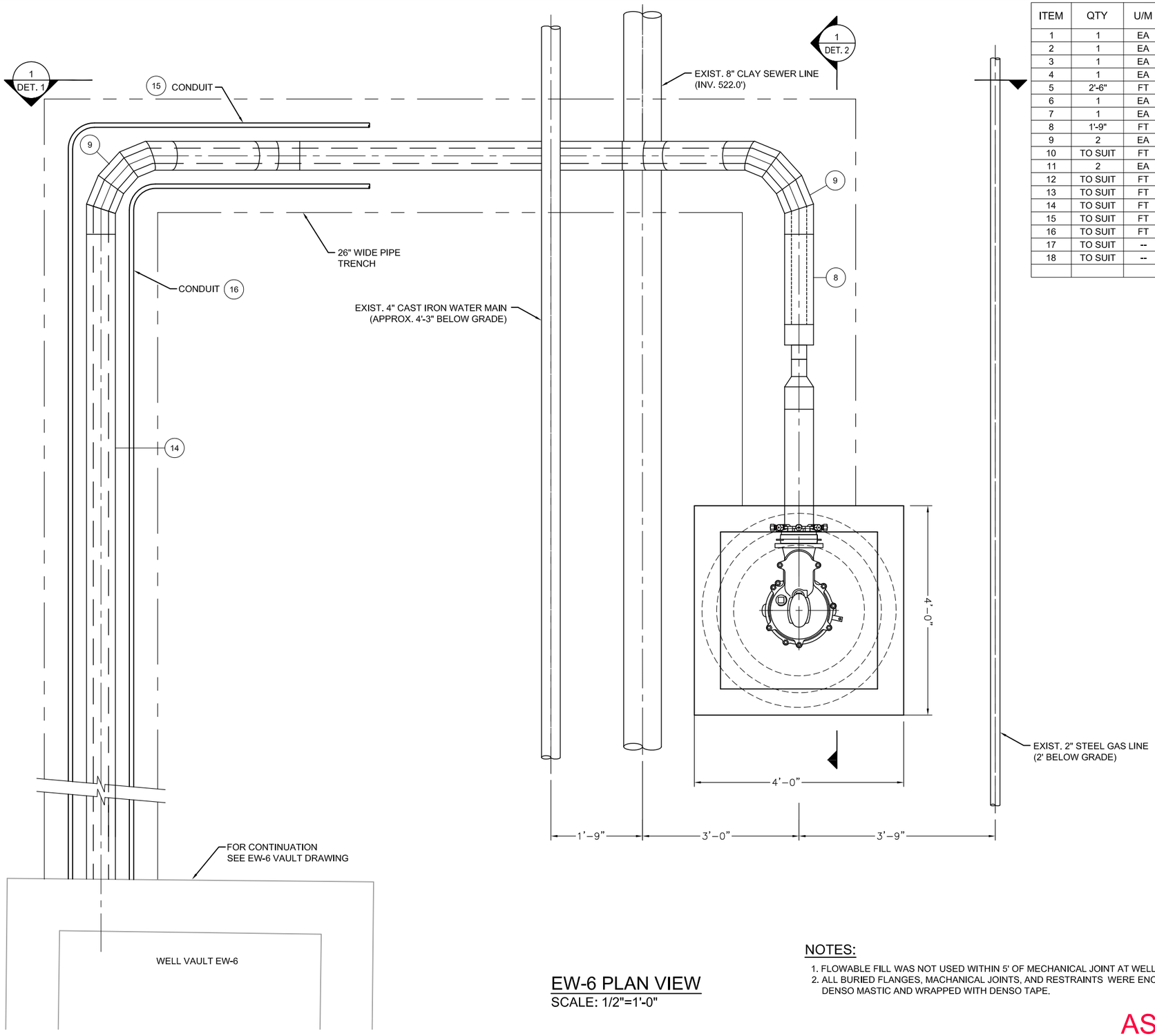

ITEM	QTY	U/M	DESCRIPTION
1	1	EA	PS PITLESS ADAPTER (BAKER MODEL No. 3PS1012WBWE06F6SP)
2	1	EA	6" VITON OR TEFLON TRANSITION GASKET
3	1	EA	6" RESTRAINED FLANGE ADAPTER (EBAA IRON MODEL 2106)
4	1	EA	6" PIPE STIFFENER
5	2'-6"	FT	6" HDPE PIPE
6	1	EA	6" x 3" HDPE MOLDED REDUCER
7	1	EA	6" x 3" HDPE DUAL CONTAINMENT END TERMINATION PIECE
8	1'-9"	FT	6" (SDR17) x 3" (SDR11) HDPE, DUAL CONTAINMENT PIPE
9	2	EA	6" (SDR17) x 3" (SDR11) HDPE, DUAL CONTAINMENT 90° ELBOW
10	TO SUIT	FT	6" (SDR17) x 3" (SDR11) HDPE, DUAL CONTAINMENT PIPE
11	2	EA	6" (SDR17) x 3" (SDR11) HDPE, DUAL CONTAINMENT 22-1/2° ELBOW
12	TO SUIT	FT	6" (SDR17) x 3" (SDR11) HDPE, DUAL CONTAINMENT PIPE
13	TO SUIT	FT	6" (SDR17) x 3" (SDR11) HDPE, DUAL CONTAINMENT PIPE
14	TO SUIT	FT	6" (SDR17) x 3" (SDR11) HDPE, DUAL CONTAINMENT PIPE
15	TO SUIT	FT	1" PVC , CONDUIT
16	TO SUIT	FT	1" RGS , CONDUIT
17	TO SUIT	--	DENSO MASTIC
18	TO SUIT	--	DENSO TAPE

EW-6 PLAN VIEW

SCALE: 1/2"=1'-0"

NOTES:

1. FLOWABLE FILL WAS NOT USED WITHIN 5' OF MECHANICAL JOINT AT WELL HEAD.
2. ALL BURIED FLANGES, MACHANICAL JOINTS, AND RESTRAINTS WERE ENCASED IN DENSO MASTIC AND WRAPPED WITH DENSO TAPE.

AS-BUILT

GRAPHIC SCALE

2' 1' 0 2'

SCALE: 1/2"= 1'-0"

CAPE
180 Gordon Drive
Suite 105
Exton, PA 19341
(610) 594-8606

REVISIONS:

No.	Date	Remarks
0	7/8/11	ISSUED AS FINAL
1	7/18/11	REVISED FINAL
2	1/13/12	FINAL AS-BUILT

U.S. Army Corps of Engineers
NEW YORK DISTRICT

PROJECT NAME
REMEDIAL ACTION ACTIVITIES
FOR THE EAST MAIN/WALL STREET
PLUME OF THE ROCKAWAY BOROUGH
WELL FIELD SUPERFUND SITE
MORRIS COUNTY, NEW JERSEY

SHEET TITLE
MANHOLE FOR EW-6

CONTRACT NO: W912DQ-05-D-0001 TO-0005
JOB NO: 50001.005.001.001
CHECKED BY: M. LAMON
DRAWN BY: B DAVIS
DATE: JUNE 2011
FILE NAME: ROCKWY EW-6 MANHOLE AS-BUILT
SHEET NUMBER: DETAIL 1

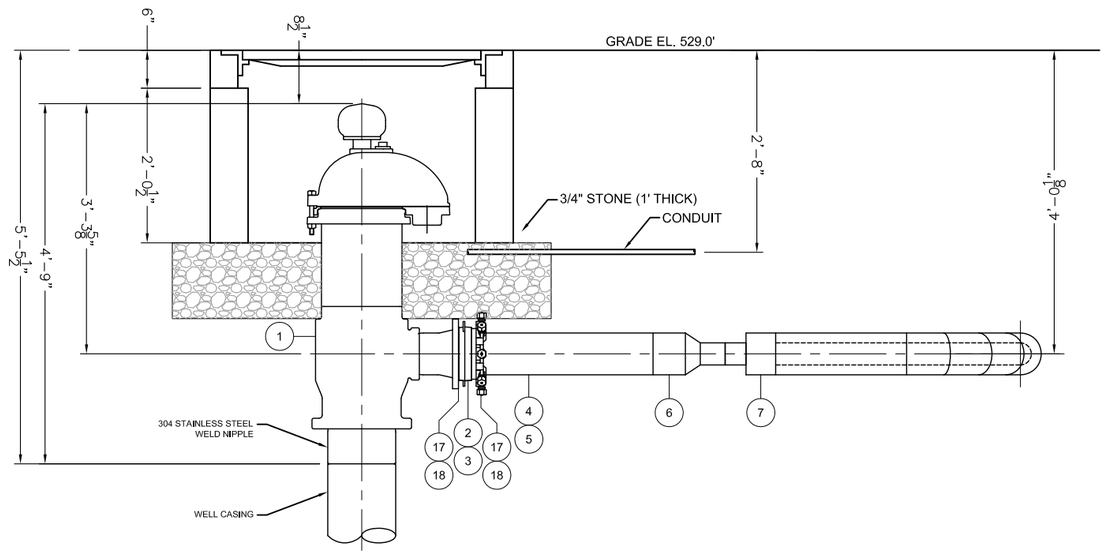

SECTION VIEW 1 / -

SCALE: 1/2"=1'-0"

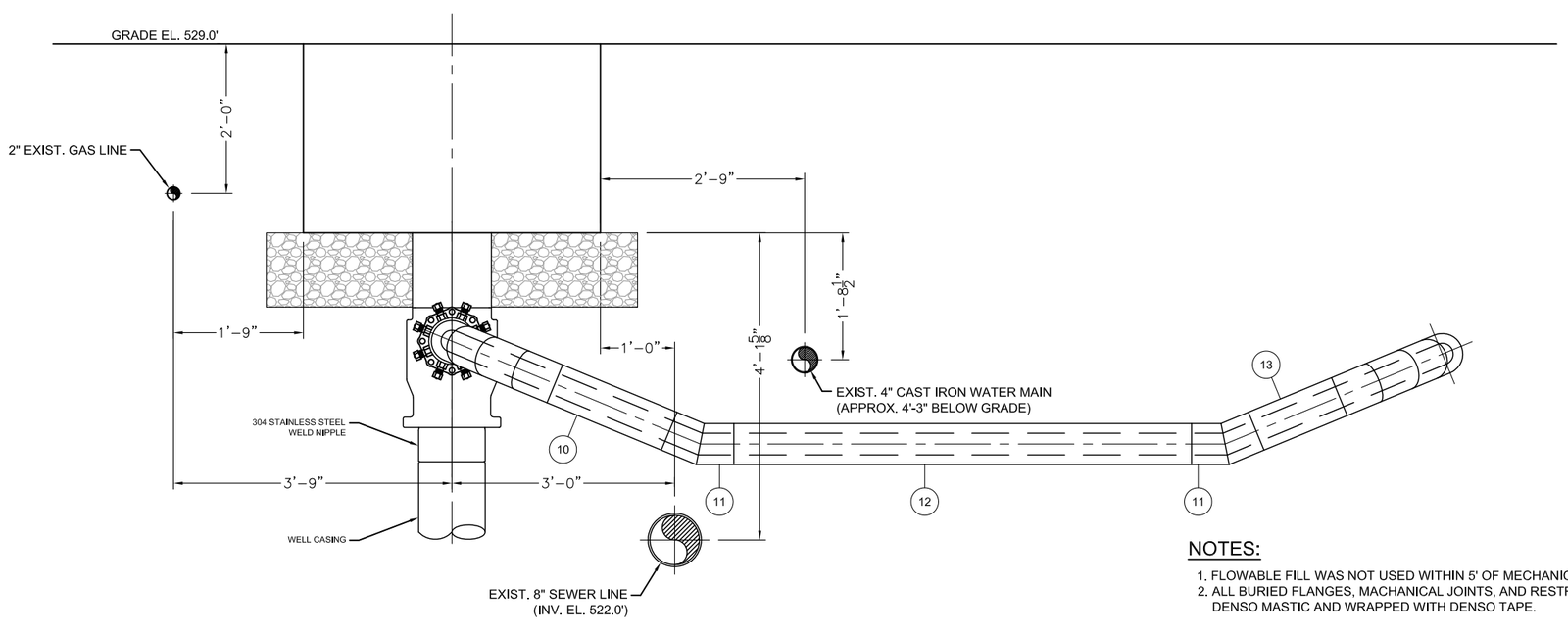

SECTION VIEW 2 / -

SCALE: 1/2"=1'-0"

ITEM	QTY	U/M	DESCRIPTION
1	1	EA	PS PITLESS ADAPTER (BAKER MODEL No. 3PS1012WBWE06F6SP)
2	1	EA	6" VITON OR TEFLON TRANSITION GASKET
3	1	EA	6" RESTRAINED FLANGE ADAPTER (EBAA IRON MODEL 2106)
4	1	EA	6" PIPE STIFFENER
5	2'-6"	FT	6" HDPE PIPE
6	1	EA	6" x 3" HDPE MOLDED REDUCER
7	1	EA	6" x 3" HDPE DUAL CONTAINMENT END TERMINATION PIECE
8	1'-9"	FT	6" (SDR17) x 3" (SDR11) HDPE, DUAL CONTAINMENT PIPE
9	2	EA	6" (SDR17) x 3" (SDR11) HDPE, DUAL CONTAINMENT 90° ELBOW
10	TO SUIT	FT	6" (SDR17) x 3" (SDR11) HDPE, DUAL CONTAINMENT PIPE
11	2	EA	6" (SDR17) x 3" (SDR11) HDPE, DUAL CONTAINMENT 22-1/2° ELBOW
12	TO SUIT	FT	6" (SDR17) x 3" (SDR11) HDPE, DUAL CONTAINMENT PIPE
13	TO SUIT	FT	6" (SDR17) x 3" (SDR11) HDPE, DUAL CONTAINMENT PIPE
14	TO SUIT	FT	6" (SDR17) x 3" (SDR11) HDPE, DUAL CONTAINMENT PIPE
15	TO SUIT	FT	1" PVC , CONDUIT
16	TO SUIT	FT	1" RGS , CONDUIT
17	TO SUIT	--	DENSO MASTIC
18	TO SUIT	--	DENSO TAPE

NOTES:

1. FLOWABLE FILL WAS NOT USED WITHIN 5' OF MECHANICAL JOINT AT WELL HEAD.
2. ALL BURIED FLANGES, MACHANICAL JOINTS, AND RESTRAINTS WERE ENCASED IN DENSO MASTIC AND WRAPPED WITH DENSO TAPE.

AS-BUILT

GRAPHIC SCALE

2' 1' 0 2'

SCALE: 1/2"= 1'-0"

CAPE

180 Gordon Drive
Suite 105
Exton, PA 19341
(610) 594-8606

REVISIONS:

No.	Date	Remarks
0	7/8/11	ISSUED AS FINAL
1	7/18/11	REVISED FINAL
2	1/13/12	FINAL AS-BUILT

U.S. Army Corps of Engineers
NEW YORK DISTRICT

PROJECT NAME
REMEDIAL ACTION ACTIVITIES
FOR THE EAST MAIN/WALL STREET
PLUME OF THE ROCKAWAY BOROUGH
WELL FIELD SUPERFUND SITE
MORRIS COUNTY, NEW JERSEY

SHEET TITLE
MANHOLE FOR EW-6

CONTRACT NO: W912DQ-05-D-0001 TO-0005
JOB NO: 50001.005.001.001
CHECKED BY: M. LAMON
DRAWN BY: B DAVIS
DATE: JUNE 2011
FILE NAME: ROCKWY EW-6 MANHOLE Rev3
SHEET NUMBER: DETAIL 2

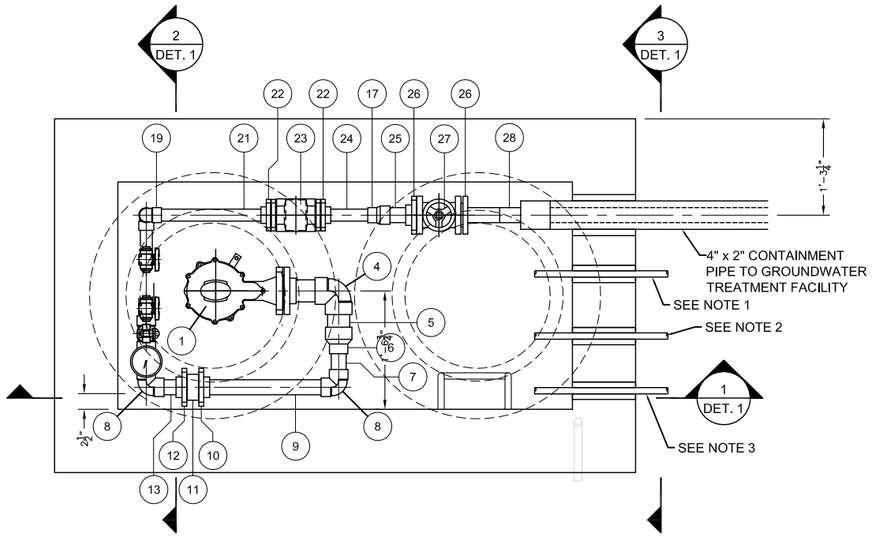

EW-8 PLAN VIEW

SCALE: 1/2"=1'-0"

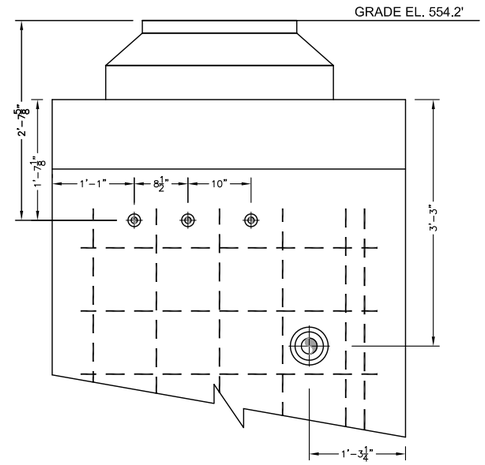

SECTION VIEW 3 / -

SCALE: 1/2"=1'-0"

ITEM	QTY	U/M	DESCRIPTION
1	1	EA	PITLESS ADAPTER (BAKER 1PS67WBWE03F3SP)
2	1	EA	3" PVC FLANGE, VAN STONE STYLE (IPEX PART No. 36351) WITH 3" VITON GASKET AND BOLT KIT FOR 3" FLANGE (BOLTS 3-1/2")
3	6-3/4"	FT	3" PVC, SCHED 80, PIPE
4	1	EA	3" PVC, SCHED 80, 90° ELBOW (IPEX PART No. 36188)
5	5-3/4"	FT	3" PVC, SCHED 80, PIPE
6	1	EA	3" x 2" PVC, SCHED 80, REDUCER COUPLING (IBEX PART No. 36735)
7	5-1/2"	FT	2" PVC, SCHED 80, PIPE
8	2	EA	2" PVC, SCHED 80, 90° ELBOW (IPEX PART No. 36186)
9	1'-8-5/8"	FT	2" PVC, SCHED 80, PIPE
10	1	EA	2" PVC FLANGE, VAN STONE STYLE (IPEX PART No. 36349) WITH 2" VITON GASKET AND BOLT KIT FOR 2" FLANGE (BOLTS 5-1/4" LG)
11	1	EA	2" WAFER CHECK VALVE (CHEMLINE WP SERIES) (CH-2"-701)
12	1	EA	2" PVC FLANGE, VAN STONE STYLE (IPEX PART No. 36349) WITH 2" VITON GASKET
13	5"	FT	2" PVC, SCHED 80, PIPE
14	5-7/8"	FT	2" PVC, SCHED 80, PIPE
15	1	EA	2" PVC, SCHED 80, TEE (IPEX PART No. 36775)
16	6"	FT	2" PVC, SCHED 80, PIPE
17	2	EA	2" x 1-1/2" PVC, SCHED 80, REDUCER COUPLING (IBEX PART No. 36731)
18	9-3/4"	FT	1-1/2" PVC, SCHED 80, PIPE
19	2	EA	1-1/2" PVC, SCHED 80, 90° ELBOW (IBEX PART No. 36185)
20	11"	FT	1-1/2" PVC, SCHED 80, PIPE
21	1-6-1/2"	FT	1-1/2" PVC, SCHED 80, PIPE
22	2	EA	1-1/2" PVC FLANGE, VAN STONE STYLE (IPEX PART No. 36348) WITH 1-1/2" VITON GASKET AND BOLT KIT FOR 1-1/2" FLAANGE (BOLTS 2-1/2" LG)
23	1	EA	1-1/2" FLANGED FLOW METER (SIEMENS 7ME6910-1AA10-1AA0 MAG 5000 W/ MAG 3100 SENSOR)
24	8-5/8"	FT	1-1/2" PVC, SCHED 80, PIPE
25	5-1/2"	FT	2" PVC, SCHED 80, PIPE
26	2	EA	2" PVC FLANGE, VAN STONE STYLE (IPEX PART No. 36349) WITH 2" VITON GASKET AND BOLT KIT FOR 2" FLANGE (BOLTS 3" LG)
27	1	EA	2" FLANGED GATE VALVE (ASAHI TYPE P) (GL-2"-702)
28	1	EA	4" x 2" DUAL CONTAINMENT TERMINATION ASSEMBLY (END TERMINATION, IPS FLANGE ADAPTER, AND CONVOLUTED FLANGE) WITH 2" VITON GASKET AND BOLT KIT FOR 2" FLANGE (BOLTS 3" LG)
29	1	EA	2" x 1/2" PVC, SCHED 80, REDUCER BUSHING (IPEX PART No. 36695)
30	4	EA	1/2" x 1-1/8" PVC, SCHED 80, NIPPLE (IPEX PART No. 36436)
31	1	EA	1/2" PVC, SCHED 80, TEE (FPT x FPT x FPT) (IBEX PART No. 36819)
32	1	EA	1/2" BALL VALVE (ASAHI AMERICA TYPE 21) (BA-1/2"-704)
33	1	EA	1/2" BALL VALVE (ASAHI AMERICA TYPE 21) (BA-1/2"-703)
34	1	EA	PRESSURE INDICATOR (ASCROFT MODEL 45-1279-AS-100#)
35	1	EA	1/2" BALL VALVE (ASAHI AMERICA TYPE 21) (BA-1/2"-105)
36	1	EA	1/2" x 1-1/8" PVC, SCHED 80, NIPPLE (IPEX PART No. 36436)
37	1	EA	1/2" PVC, SCHED 80, 90° ELBOW

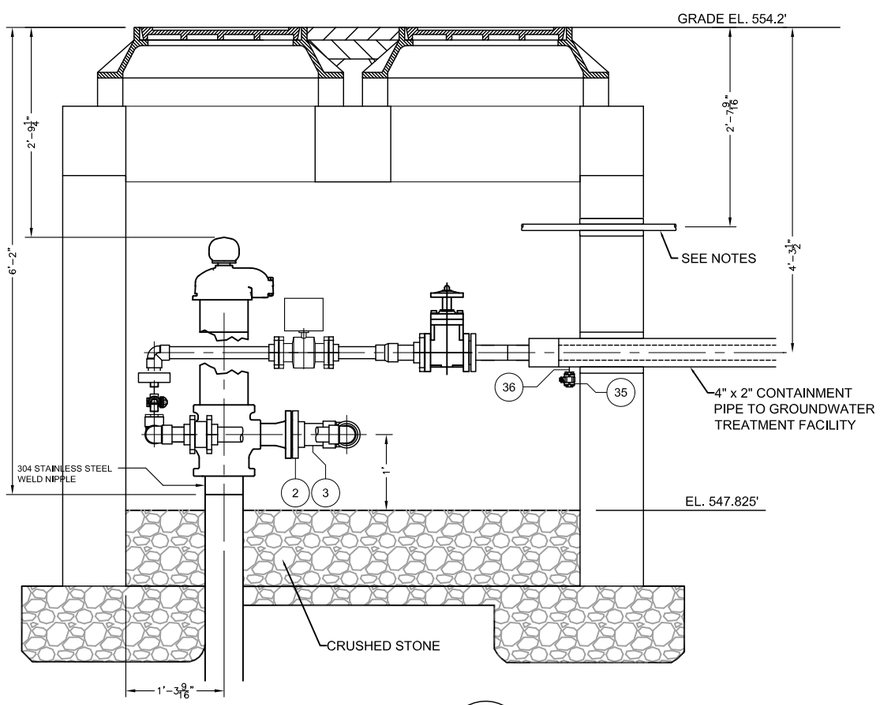

SECTION VIEW 1 / -

SCALE: 1/2"=1'-0"

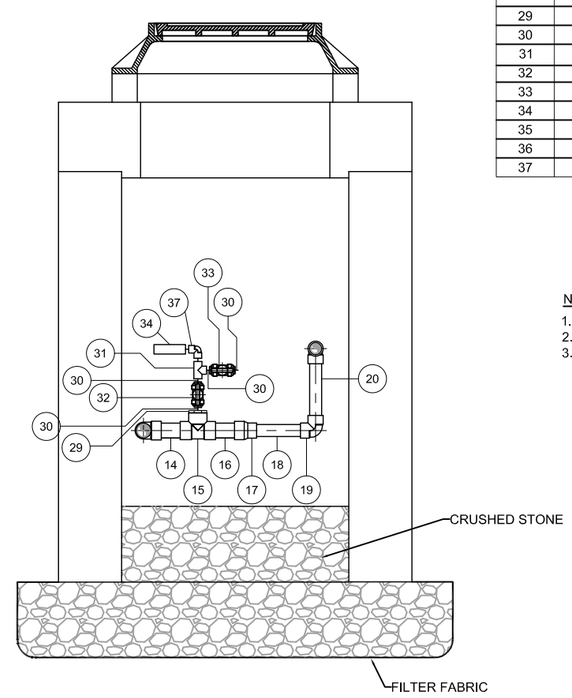

SECTION VIEW 2 / -

SCALE: 1/2"=1'-0"

NOTES:

1. 1" PVC CONDUIT (HEAT TRACE)
2. 1" PVC CONDUIT (PUMP LEADS)
3. 1" RGS CONDUIT (FLOW METER ANALOG, LEVEL ANALOG/PUMP TEMPERATURE MOISTURE SWITCHES)

AS-BUILT

GRAPHIC SCALE

2' 1' 0 2'

SCALE: 1/2"= 1'-0"

CAPE

180 Gordon Drive
Suite 105
Exton, PA 19341
(610) 594-8606

REVISIONS:

No.	Date	Remarks
1	7/18/11	REVISED FINAL
2	1/13/12	FINAL AS-BUILT

U.S. Army Corps of Engineers
NEW YORK DISTRICT

PROJECT NAME
REMEDIAL ACTION ACTIVITIES
FOR THE EAST MAIN/WALL STREET
PLUME OF THE ROCKAWAY BOROUGH
WELL FIELD SUPERFUND SITE
MORRIS COUNTY, NEW JERSEY

SHEET TITLE
VAULT PIPING FOR EW-8

CONTRACT NO: W912DQ-05-D-0001 TO-0005
JOB NO: 50001.005.001.001
CHECKED BY: M. LAMON
DRAWN BY: B DAVIS
DATE: JUNE 2011
FILE NAME: DETAIL 1 - EW-8
SHEET NUMBER: DETAIL 1

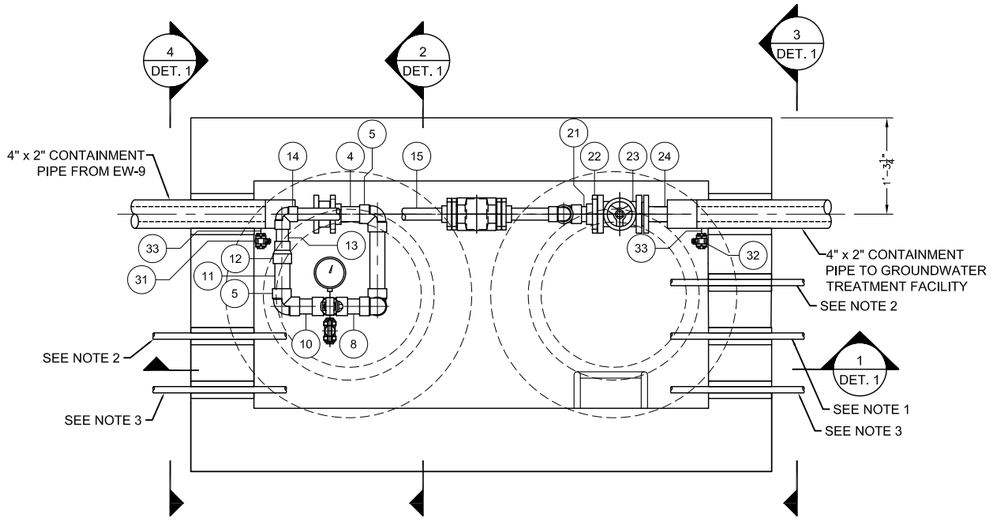

WELL VAULT EW-9 PLAN VIEW

SCALE: 1/2"=1'-0"

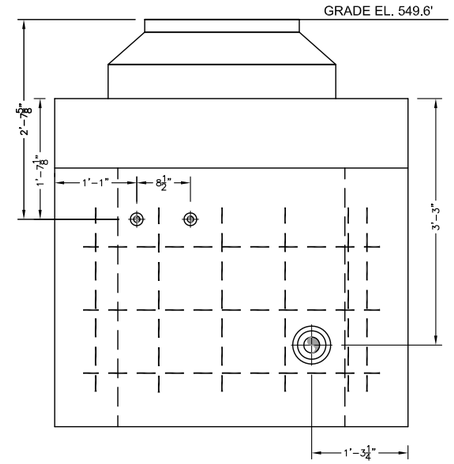

SECTION VIEW 3 / -

SCALE: 1/2"=1'-0"

NOTES:

1. 1" PVC CONDUIT (HEAT TRACE)
2. 1" PVC CONDUIT (PUMP LEADS)
3. 2" RGS CONDUIT (FLOW METER ANALOG, LEVEL ANALOG/PUMP TEMPERATURE MOISTURE SWITCHES)

ITEM	QTY	U/M	DESCRIPTION
1	1	EA	4" x 2" DUAL CONTAINMENT TERMINATION ASSEMBLY (END TERMINATION, IPS FLANGE ADAPTER, AND CONVOLUTED FLANGE) WITH 2" VITON GASKET
2	1	EA	2" WAFER CHECK VALVE (CHEMLINE WP SERIES) (CH-2"-201)
3	1	EA	2" PVC FLANGE, VAN STONE STYLE (IPEX PART No. 36349) WITH 2" VITON GASKET AND BOLT KIT FOR 2" FLANGE (BOLTS 5-1/4" LG)
4	6"	FT	2" PVC, SCHED 80, PIPE
5	5	EA	2" PVC, SCHED 80, 90° ELBOW (IPEX PART No. 36186)
6	1'-0"	FT	2" PVC, SCHED 80, PIPE
7	10-1/2"	FT	2" PVC, SCHED 80, PIPE
8	5"	FT	2" PVC, SCHED 80, PIPE
9	1	EA	2" PVC, SCHED 80, TEE (IPEX PART No. 36775)
10	5"	FT	2" PVC, SCHED 80, PIPE
11	7"	FT	2" PVC, SCHED 80, PIPE
12	2	EA	2" x 1-1/2" PVC, SCHED 80, REDUCER COUPLING (IBEX PART No. 36731)
13	4-3/4"	FT	1-1/2" PVC, SCHED 80, PIPE
14	2	EA	1-1/2" PVC, SCHED 80, 90° ELBOW (IPEX PART No. 36185)
15	2'-1/2"	FT	1-1/2" PVC, SCHED 80, PIPE
16	2	EA	1-1/2" PVC FLANGE, VAN STONE STYLE (IPEX PART No. 36348) WITH 1-1/2" VITON GASKET AND BOLT KIT FOR 1-1/2" FLAANGE (BOLTS 2-1/2" LG)
17	1	EA	1-1/2" FLANGED FLOW METER (SIEMENS 7ME6910-1AA10-1AA0 MAG 5000 W/ MAG 3100 SENSOR)
18	8-1/2"	FT	1-1/2" PVC, SCHED 80, PIPE
19	5"	FT	1-1/2" PVC, SCHED 80, PIPE
20	5"	FT	2" PVC, SCHED 80, PIPE
21	3-1/2"	FT	2" PVC, SCHED 80, PIPE
22	1	EA	2" PVC FLANGE, VAN STONE STYLE (IPEX PART No. 36349) WITH 2" VITON GASKET AND BOLT KIT FOR 2" FLANGE (BOLTS 3" LG)
23	1	EA	2" FLANGED GATE VALVE (ASAHI TYPE P) (GL-2"-202)
24	1	EA	4" x 2" DUAL CONTAINMENT TERMINATION ASSEMBLY (END TERMINATION, IPS FLANGE ADAPTER, AND CONVOLUTED FLANGE) WITH 2" VITON GASKET AND BOLT KIT FOR 2" FLANGE (BOLTS 3" LG)
25	1	EA	2" x 1/2" PVC, SCHED 80, REDUCER BUSHING (IPEX PART No. 36695)
26	4	EA	1/2" x 1-1/8" PVC, SCHED 80, NIPPLE (IPEX PART No. 36436)
27	1	EA	1/2" PVC, SCHED 80, TEE (FPT x FPT x FPT) (IBEX PART No. 36819)
28	1	EA	1/2" BALL VALVE (ASAHI AMERICA TYPE 21) (BA-1/2"-204)
29	1	EA	1/2" BALL VALVE (ASAHI AMERICA TYPE 21) (BA-1/2"-203)
30	1	EA	PRESSURE INDICATOR (ASCROFT MODEL 45-1279-AS-100#)
31	1	EA	1/2" BALL VALVE (BA-1/2"-205)
32	1	EA	1/2" BALL VALVE
33	2	EA	1/2" x 1-1/8" PVC, SCHED 80, NIPPLE (IPEX PART No. 36436)

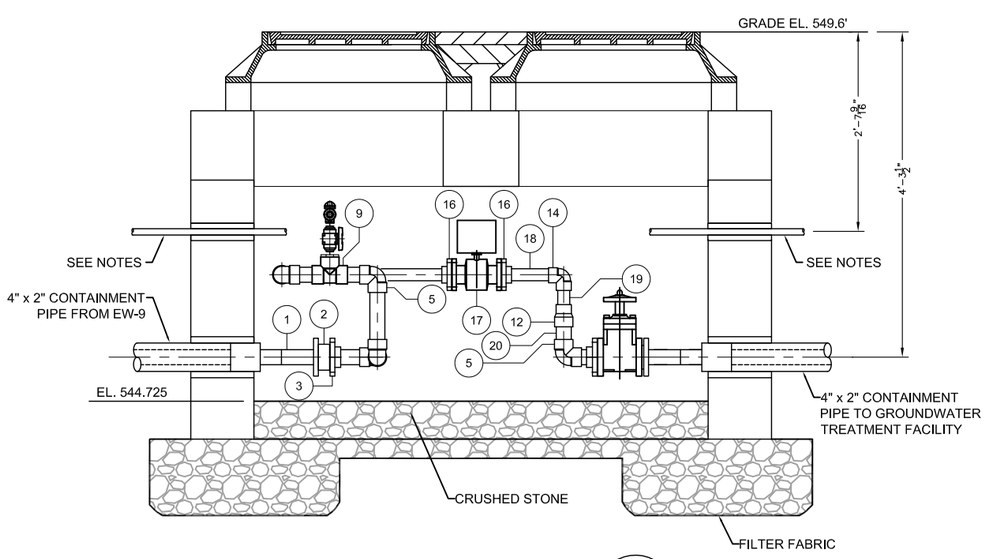

SECTION VIEW 1 / -

SCALE: 1/2"=1'-0"

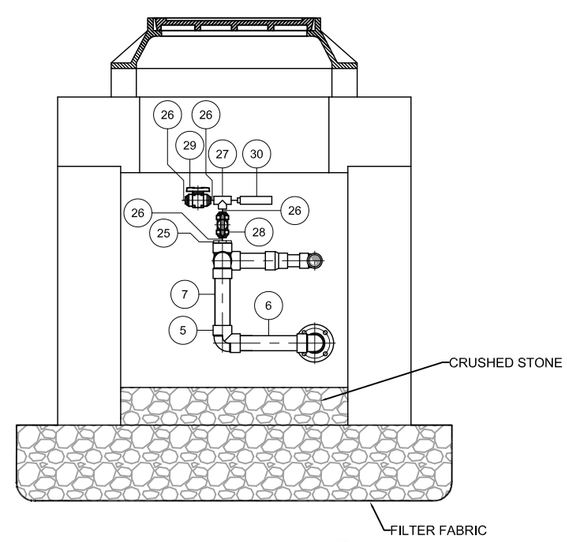

SECTION VIEW 2 / -

SCALE: 1/2"=1'-0"

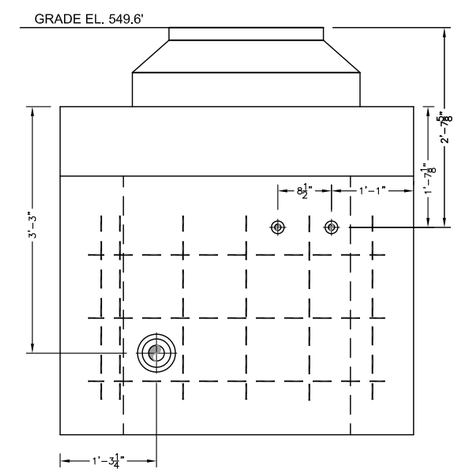

SECTION VIEW 4 / -

SCALE: 1/2"=1'-0"

AS-BUILT

GRAPHIC SCALE

2' 1' 0 2'

SCALE: 1/2"= 1'-0"

CAPE
180 Gordon Drive
Suite 105
Exton, PA 19341
(610) 594-8606

REVISIONS:

No.	Date	Remarks
1	7/18/11	REVISED FINAL
2	1/13/12	FINAL AS-BUILT

U.S. Army Corps of Engineers
NEW YORK DISTRICT

PROJECT NAME
REMEDIAL ACTION ACTIVITIES FOR THE EAST MAIN/WALL STREET PLUME OF THE ROCKAWAY BOROUGH WELL FIELD SUPERFUND SITE MORRIS COUNTY, NEW JERSEY

SHEET TITLE
VAULT PIPING FOR EW-9

CONTRACT NO: W912DQ-05-D-0001 TO-0005
JOB NO: 50001.005.001.001
CHECKED BY: M. LAMON
DRAWN BY: B DAVIS
DATE: JUNE 2011
FILE NAME: ROCKWY_EW-9 AS-BUILT
SHEET NUMBER: DETAIL 1

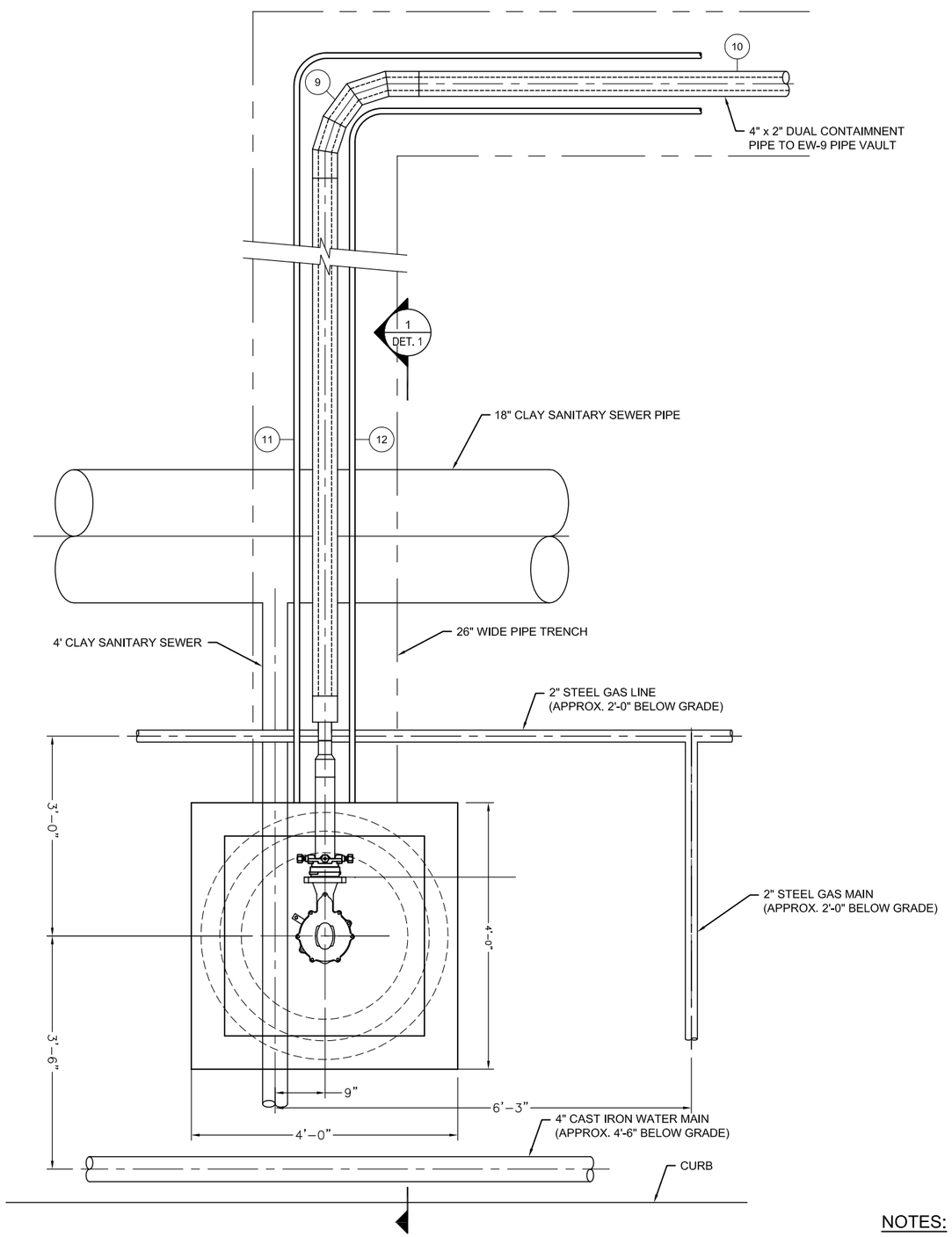

EW-9 PLAN VIEW

SCALE: 1/2"=1'-0"

ITEM	QTY	U/M	DESCRIPTION
1	1	EA	PITLESS ADAPTER (BAKER 1PS67NBWE03F3SP)
2	1	EA	3" VITON OR TEFLON TRANSITION GASKET
3	1	EA	3" RESTRAINED FLANGE ADAPTER (EBAA IRON MODEL 2103)
4	1	EA	3" PIPE STIFFENER
5	1'-6"	FT	3" HDPE PIPE
6	1	EA	3" x 2" HDPE MOLDED REDUCER
7	1	EA	4" x 2" DUAL CONTAINMENT END TERMINATION PIECE
8	TO SUIT	FT	4" (SDR17) x 2" (SDR11) HDPE, DUAL CONTAINMENT PIPE
9	1	EA	4" (SDR17) x 2" (SDR11) HDPE, DUAL CONTAINMENT 90° ELBOW
10	TO SUIT	FT	4" (SDR17) x 2" (SDR11) HDPE, DUAL CONTAINMENT PIPE
11	TO SUIT	FT	1" PVC , CONDUIT
12	TO SUIT	FT	1" RGS , CONDUIT
13	TO SUIT	--	DENSO MASTIC
14	TO SUIT	--	DENSO TAPE

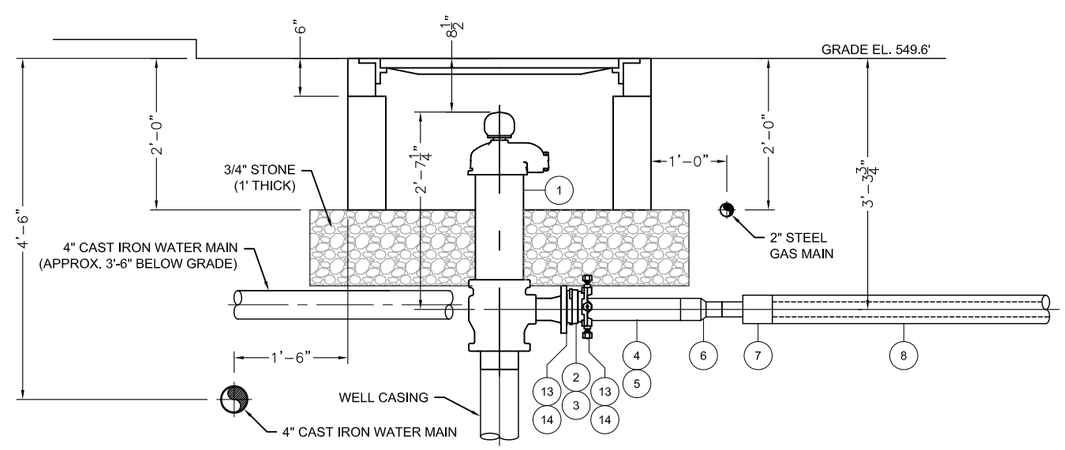

SECTION VIEW 1 / -

SCALE: 1/2"=1'-0"

NOTES:

1. FLOWABLE FILL WAS NOT USED WITHIN 5' OF MECHANICAL JOINT AT WELL HEAD.
2. ALL BURIED FLANGES, MACHANICAL JOINTS, AND RESTRAINTS WERE ENCASED IN DENSO MASTIC AND WRAPPED WITH DENSO TAPE.

AS-BUILT

GRAPHIC SCALE

2' 1' 0 2'

SCALE: 1/2"= 1'-0"

CAPE

180 Gordon Drive
Suite 105
Exton, PA 19341
(610) 594-8606

REVISIONS:

No.	Date	Remarks
1	7/18/11	REVISED FINAL
2	1/13/12	FINAL AS-BUILT

U.S. Army Corps of Engineers
NEW YORK DISTRICT

PROJECT NAME
REMEDIAL ACTION ACTIVITIES
FOR THE EAST MAIN/WALL STREET
PLUME OF THE ROCKAWAY BOROUGH
WELL FIELD SUPERFUND SITE
MORRIS COUNTY, NEW JERSEY

SHEET TITLE
MANHOLE FOR EW-9

CONTRACT NO: W912DQ-05-D-0001 TO-0005
JOB NO: 50001.005.001.001
CHECKED BY: M. LAMON
DRAWN BY: B DAVIS
DATE: JUNE 2011
FILE NAME: ROCKWY EW-9 MANHOLE AS-BUILT
SHEET NUMBER: DETAIL 1

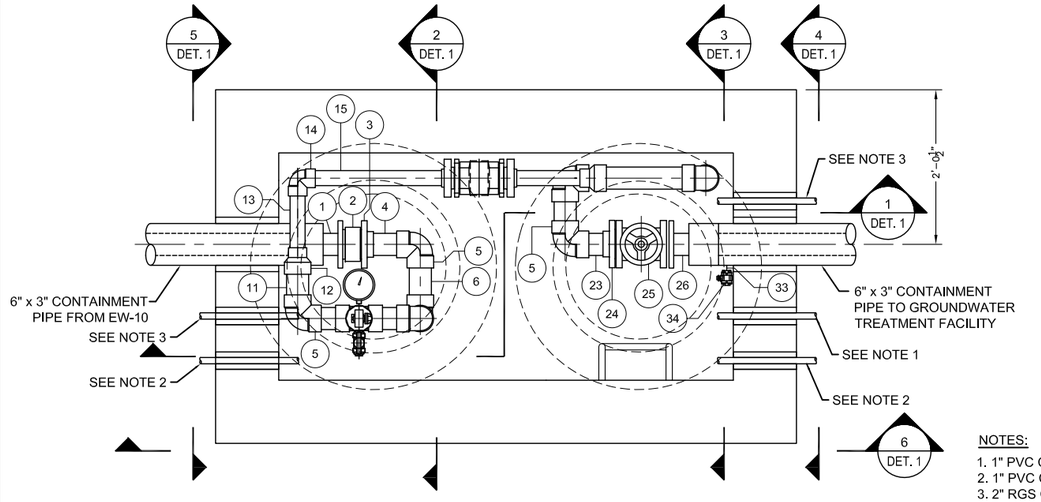

WELL VAULT EW-10 PLAN VIEW

SCALE: 1/2"=1'-0"

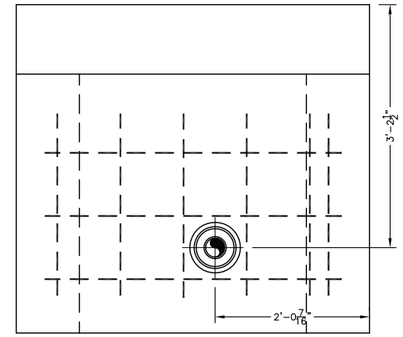

SECTION VIEW 4 / -

SCALE: 1/2"=1'-0"

NOTES:

1. 1" PVC CONDUIT (HEAT TRACE)
2. 1" PVC CONDUIT (PUMP LEADS)
3. 2" RGS CONDUIT (FLOW METER ANALOG, LEVEL ANALOG/PUMP TEMPERATURE MOISTURE SWITCHES)

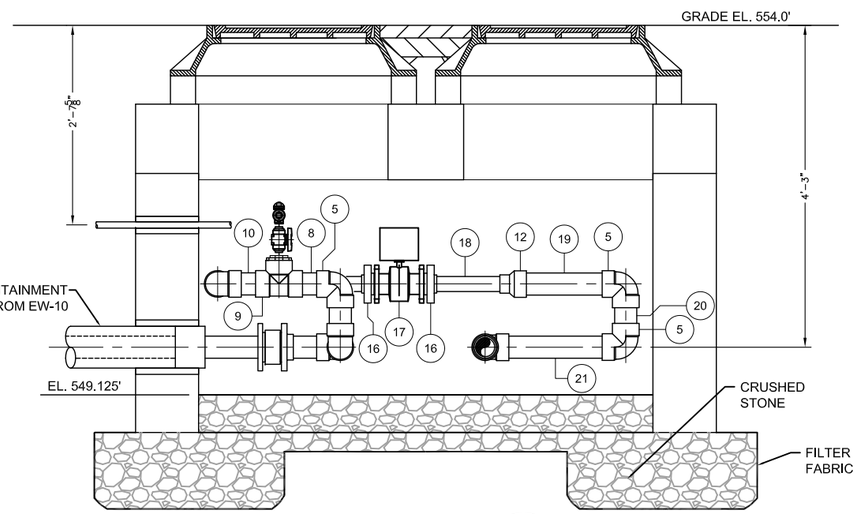

SECTION VIEW 1 / -

SCALE: 1/2"=1'-0"

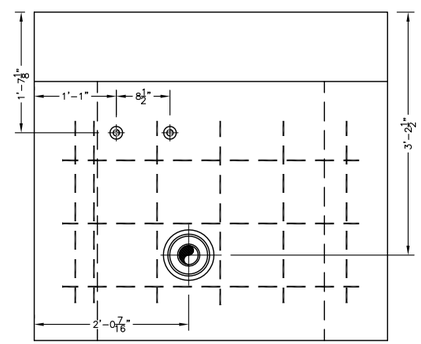

SECTION VIEW 5 / -

SCALE: 1/2"=1'-0"

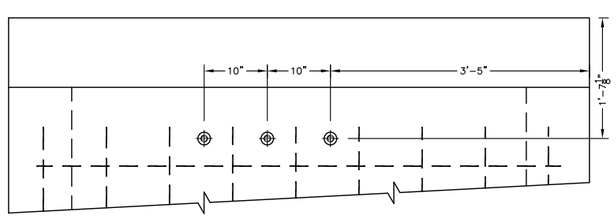

SECTION VIEW 6 / -

SCALE: 1/2"=1'-0"

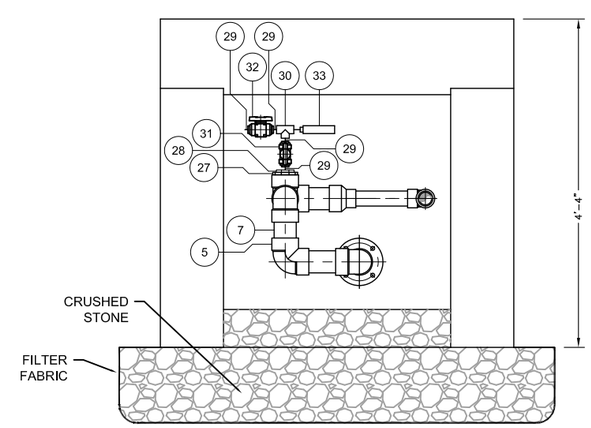

SECTION VIEW 2 / -

SCALE: 1/2"=1'-0"

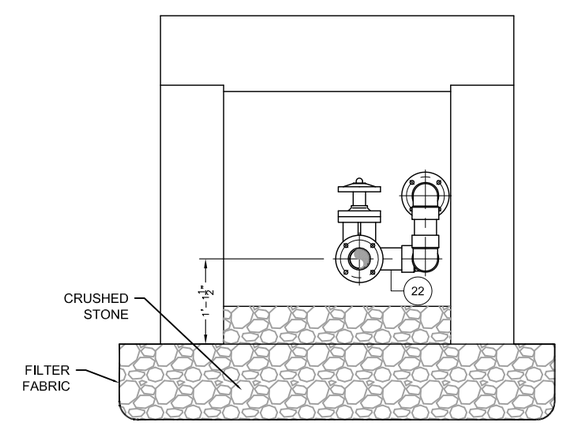

SECTION VIEW 3 / -

SCALE: 1/2"=1'-0"

AS-BUILT

GRAPHIC SCALE

2' 1' 0 2'

SCALE: 1/2"= 1'-0"

ITEM	QTY	U/M	DESCRIPTION
1	1	EA	6" x 3" DUAL CONTAINMENT TERMINATION ASSEMBLY (END TERMINATION, IPS FLANGE ADAPTER, AND CONVOLUTED FLANGE) WITH 3" VITON GASKET
2	1	EA	3" WAFER CHECK VALVE (CHEMLINE WP SERIES) (CH-3"-801)
3	1	EA	3" PVC FLANGE, VAN STONE STYLE (IPEX PART No. 36351) WITH 3" VITON GASKET AND BOLT KIT FOR 3" FLANGE (BOLTS 6")
4	7-7/16"	FT	3" PVC, SCHED 80, PIPE
5	8	EA	3" PVC, SCHED 80, 90° ELBOW (IPEX PART No. 36188)
6	8"	FT	3" PVC, SCHED 80, PIPE
7	6-1/4"	FT	3" PVC, SCHED 80, PIPE
8	6"	FT	3" PVC, SCHED 80, PIPE
9	1	EA	3" PVC, SCHED 80, TEE (IPEX PART No. 36777)
10	6"	FT	3" PVC, SCHED 80, PIPE
11	7"	FT	3" PVC, SCHED 80, PIPE
12	2	EA	3" x 2" PVC, SCHED 80, REDUCER COUPLING (IBEX PART No. 36735)
13	11-3/16"	FT	2" PVC, SCHED 80, PIPE
14	1		2" PVC, SCHED 80, 90° ELBOW (IPEX PART No. 36186)
15	1'-11"	FT	2" PVC, SCHED 80, PIPE
16	2	EA	2" PVC FLANGE, VAN STONE STYLE (IPEX PART No. 36349) WITH 2" VITON GASKET AND BOLT KIT FOR 2" FLANGE (BOLTS 3" LG)
17	1	EA	2" FLANGED FLOW METER (SIEMENS 7ME6910-1AA10-1AA0 MAG 5000 W/ MAG 3100 SENSOR)
18	1'-1"	FT	2" PVC, SCHED 80, PIPE
19	1'-3-3/4"	FT	3" PVC, SCHED 80, PIPE
20	6-1/4"	FT	3" PVC, SCHED 80, PIPE
21	1'-6-1/2"	FT	3" PVC, SCHED 80, PIPE
22	6-3/4"	FT	3" PVC, SCHED 80, PIPE
23	6"	FT	3" PVC, SCHED 80, PIPE
24	1	EA	3" PVC FLANGE, VAN STONE STYLE (IPEX PART No. 36351) WITH 3" VITON GASKET AND BOLT KIT FOR 3" FLANGE (BOLTS 3-1/2")
25	1	EA	3" FLANGED GATE VALVE (ASAHI TYPE P) (GL-3"-802)
26	1	EA	6" x 3" DUAL CONTAINMENT TERMINATION ASSEMBLY (END TERMINATION, IPS FLANGE ADAPTER, AND CONVOLUTED FLANGE)
27	1	EA	3" x 1" PVC, SCHED 80, REDUCER BUSHING (IPEX PART No. 35669)
28	1	EA	1" x 1/2" PVC, SCHED 80, REDUCER BUSHING (IPEX PART No. 35724)
29	4	EA	1/2" x 1-1/8" PVC, SCHED 80, NIPPLE (IPEX PART No. 36436)
30	1	EA	1/2" PVC, SCHED 80, TEE (FPT x FPT x FPT) (IBEX PART No. 36819)
31	1	EA	1/2" BALL VALVE (ASAHI AMERICA TYPE 21) (BA-1/2"-804)
32	1	EA	1/2" BALL VALVE (ASAHI AMERICA TYPE 21) (BA-1/2"-803)
33	1	EA	PRESSURE INDICATOR (ASCROFT MODEL 45-1279-AS-100#)
34	1	EA	1/2" BALL VALVE (BA-1/2"-805)
35	1	EA	1/2" BALL VALVE (BA-1/2"-806)
36	2	EA	1/2" x 1-1/8" PVC, SCHED 80, NIPPLE (IPEX PART No. 36436)

CAPE
180 Gordon Drive
Suite 105
Exton, PA 19341
(610) 594-8606

REVISIONS:

No.	Date	Remarks
1	7/18/11	REVISED FINAL
2	1/13/12	FINAL AS-BUILT

U.S. Army Corps of Engineers
NEW YORK DISTRICT

PROJECT NAME
REMEDIAL ACTION ACTIVITIES FOR THE EAST MAIN/WALL STREET PLUME OF THE ROCKAWAY BOROUGH WELL FIELD SUPERFUND SITE MORRIS COUNTY, NEW JERSEY

SHEET TITLE
VAULT PIPING FOR EW-10

CONTRACT NO: W912DQ-05-D-0001 TO-0005
JOB NO: 50001.005.001.001
CHECKED BY: M. LAMON
DRAWN BY: B DAVIS
DATE: JUNE 2011
FILE NAME: DETAIL 1 - EW-10 AS-BUILT
SHEET NUMBER: DETAIL 1

ITEM	QTY	U/M	DESCRIPTION
1	1	EA	PITLESS ADAPTER (BAKER 1PS67NBWE03F3SP)
2	1	EA	3" VITON OR TEFLON TRANSITION GASKET
3	1	EA	3" RESTRAINED FLANGE ADAPTER (EBAA IRON MODEL 2103)
4	1	EA	3" PIPE STIFFENER
5	2'-0"	FT	3" HDPE PIPE
6	1	EA	6" x 3" DUAL CONTAINMENT END TERMINATION PIECE
7	TO SUIT	FT	6" (SDR17) x 3" (SDR11) HDPE, DUAL CONTAINMENT PIPE
8	1	EA	6" (SDR17) x 3" (SDR11) HDPE, DUAL CONTAINMENT 90° ELBOW
9	TO SUIT	FT	6" (SDR17) x 3" (SDR11) HDPE, DUAL CONTAINMENT PIPE
10	TO SUIT	FT	1" PVC , CONDUIT
11	TO SUIT	FT	1" RGS , CONDUIT
12	TO SUIT	--	DENSO MASTIC
13	TO SUIT	--	DENSO TAPE

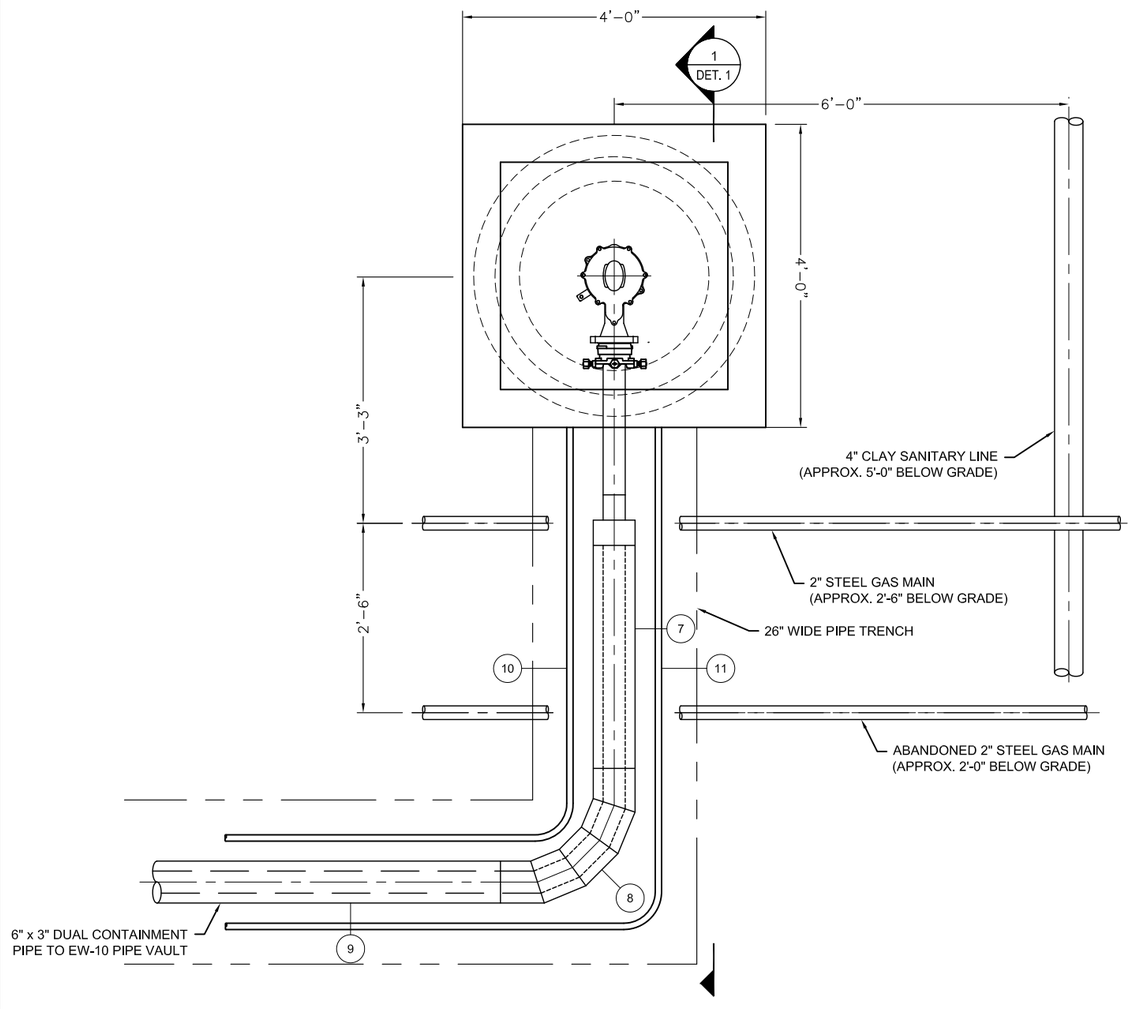

EW-10 PLAN VIEW

SCALE: 1/2"=1'-0"

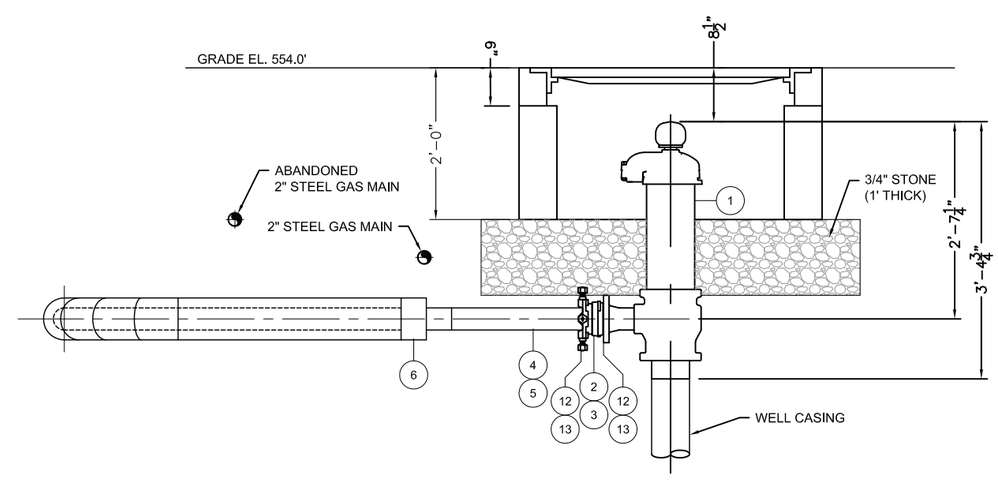

SECTION VIEW

SCALE: 1/2"=1'-0"

1
-

NOTES:

1. FLOWABLE FILL WAS NOT USED WITHIN 5' OF MECHANICAL JOINT AT WELL HEAD.
2. ALL BURIED FLANGES, MACHANICAL JOINTS, AND RESTRAINTS WERE ENCASED IN DENSO MASTIC AND WRAPPED WITH DENSO TAPE.

AS-BUILT

GRAPHIC SCALE

2' 1' 0 2'

SCALE: 1/2"= 1'-0"

CAPE
180 Gordon Drive
Suite 105
Exton, PA 19341
(610) 594-8606

REVISIONS:

No.	Date	Remarks
1	7/18/11	REVISED FINAL
2	1/13/12	FINAL AS-BUILT

U.S. Army Corps of Engineers
NEW YORK DISTRICT

PROJECT NAME
REMEDIAL ACTION ACTIVITIES
FOR THE EAST MAINWALL STREET
PLUME OF THE ROCKAWAY BOROUGH
WELL FIELD SUPERFUND SITE
MORRIS COUNTY, NEW JERSEY

SHEET TITLE
MANHOLE FOR EW-10

CONTRACT NO: W912DQ-05-D-0001 TO-0005
JOB NO: 50001.005.001.001
CHECKED BY: M. LAMON
DRAWN BY: B DAVIS
DATE: JUNE 2011
FILE NAME: ROCKWY EW-10 MANHOLE AS-BUILT
SHEET NUMBER: DETAIL 1